CHAPTER 3

TABLE OF CONTENTS

Section	Title	Page
3	DESIGN OF STRUCTURES, COMPONENTS, EQUIPMENT, AND SYSTEMS	3.1-1
3.1	CONFORMANCE WITH U.S. NUCLEAR REGULATORY COMMISSION GENERAL DESIGN CRITERIA	3.1-1
3.1.1	Conformance with Single Failure Criterion	3.1-1
3.1.2	Criterion Conformance	3.1-3
3.1.3	References for Section 3.1	3.1-45
3.2	CLASSIFICATION OF STRUCTURES, COMPONENTS, AND SYSTEMS	3.2-1
3.2.1	Seismic Classification	3.2-1
3.2.2	System Quality Group Classifications	3.2-3
3.2.3	Tabulation of Codes and Classifications	3.2-7
3.3	WIND AND TORNADO LOADINGS	3.3-1
3.3.1	Wind Loadings	3.3-1
3.3.2	Tornado Loadings	3.3-2
3.3.3	References for Section 3.3	3.3-4
3.4	WATER LEVEL (FLOOD) DESIGN	3.4-1
3.4.1	Flood Protection	3.4-1
3.4.2	Analytical and Test Procedures	3.4-2
3.5	MISSILE PROTECTION	3.5-1
3.5.1	Missile Selection and Description	3.5-1
3.5.2	Structures, Systems, and Components to be Protected from Externally Generated Missiles	3.5-19
3.5.3	Barrier Design Procedures	3.5-20
3.5.4	References for Section 3.5	3.5-22
3.6	PROTECTION AGAINST DYNAMIC EFFECTS ASSOCIATED WITH THE POSTULATED RUPTURE OF PIPING	3.6-1
3.6B	PROTECTION AGAINST DYNAMIC EFFECTS ASSOCIATED WITH THE POSTULATED RUPTURE OF PIPING	3.6-1
3.6B.1	Postulated Piping Failures in Fluid Systems Outside of Containment	3.6-1
3.6B.2	Determination of Break Locations and Dynamic Effects Associated with the Postulated Rupture of Piping	3.6-16a
3.6N	PROTECTION AGAINST DYNAMIC EFFECTS ASSOCIATED WITH THE POSTULATED RUPTURE OF PIPING	3.6-49

TABLE OF CONTENTS (Cont)

Section	Title	Page
3.6N.1	Postulated Piping Failures in Fluid Systems Outside of Containment	3.6-49
3.6N.2	Determination of Break Locations and Dynamic Effects Associated with Postulated Rupture of Piping	3.6-50
3.6.3	Reference for Section 3.6	3.6-56
3.7	SEISMIC DESIGN	3.7-1
3.7B	SEISMIC DESIGN	3.7-1
3.7B.1	Seismic Input	3.7-1
3.7B.2	Seismic System Analysis	3.7-3
3.7B.3	Seismic Subsystem Analysis	3.7-13
3.7B.4	Seismic Instrumentation	3.7-43
3.7N	SEISMIC DESIGN	3.7-46
3.7N.1	Seismic Input	3.7-47
3.7N.2	Seismic System Analysis	3.7-48
3.7N.3	Seismic Subsystem Analysis	3.7-61
3.7N.4	Seismic Instrumentation	3.7-64
3.7.5	References for Sections 3.7B and 3.7N	3.7-64
3.8	DESIGN OF SEISMIC CATEGORY I STRUCTURES	3.8-1
3.8.1	Concrete Containment	3.8-1
3.8.2	Steel Containment	3.8-29
3.8.3	Concrete and Structural Steel Internal Structures of Steel or Concrete Containments	3.8-31
3.8.4	Other Seismic Category I Structures	3.8-38
3.8.5	Foundations	3.8-48
3.8.6	References for Section 3.8	3.8-49
3.9	MECHANICAL SYSTEMS AND COMPONENTS	3.9-1
3.9B	MECHANICAL SYSTEMS AND COMPONENTS	3.9-1
3.9B.1	Special Topics for Mechanical Components	3.9-1
3.9B.2	Dynamic Testing and Analysis	3.9-3
3.9B.3	ASME Code Class 1, 2, and 3 Components, Component Supports, and Core Support Structures	3.9-8
3.9B.6	Inservice Testing of Pumps and Valves	3.9-22
3.9N	MECHANICAL SYSTEMS AND COMPONENTS	3.9-23
3.9N.1	Special Topics for Mechanical Components	3.9-23
3.9N.2	Dynamic Testing and Analysis	3.9-35

TABLE OF CONTENTS

Section	Title	Page
3.9N.3	ASME Code Class 1, 2, and 3 Components, Component Supports, and Core Support Structures	3.9-45
3.9N.4	Control Rod Drive Systems	3.9-52
3.9N.5	Reactor Vessel Internals	3.9-63
3.9N.6	References for Section 3.9	3.9-70
3.10	SEISMIC QUALIFICATION OF SEISMIC CATEGORY I INSTRUMENTATION AND ELECTRICAL EQUIPMENT	3.10-1
3.10B.1	Seismic Qualification Criteria	3.10-1
3.10B.2	Methods and Procedures for Qualifying Electrical Equipment and Instrumentation	3.10-1
3.10B.3	Methods and Procedures of Analysis or Testing of Supports of Electrical Equipment and Instrumentation	3.10-1
3.10B.4	Operating License Review	3.10-2
3.10N	SEISMIC QUALIFICATION OF CATEGORY 1 INSTRUMENTATION and Electrical Equipment	3.10-2
3.10N.1	Seismic Qualification Criteria	3.10-2
3.10N.2	Methods and Procedures for Qualifying Electrical Equipment and Instrumentation	3.10-10
3.10N.3	Method and Procedure for Qualifying Supports of Electrical Equipment and Instrumentation	3.10-5
3.10N.4	Operating License Review	3.10-5
3.10N.5	References for Section 3.10N	3.10-5
3.11	ENVIRONMENTAL QUALIFICATION OF MECHANICAL AND ELECTRICAL EQUIPMENT	3.11-1
3.11.1	Equipment Identification and Environmental Conditions	3.11-1
APPENDIX 3A	COMPUTER PROGRAMS FOR DYNAMIC AND STATIC ANALYSIS OF SEISMIC CATEGORY I STRUCTURES, EQUIPMENT, AND COMPONENTS	
APPENDIX 3B	A STUDY OF THE PROBABILITY OF AN AIRCRAFT COLLISION WITH THE BEAVER VALLEY POWER STATION - UNIT 2	

LIST OF TABLES

Table Number	Title
3.2-1	Quality Assurance Category I and Seismic Category I Systems and Components
3.2-2	Classification of Structures
3.2-3	Diagrams Showing Quality Group Classification
3.3-1	Gust Factors and Coefficients
3.3-2	Design Normal Wind Loadings for Rectangular Buildings (P) Design Wind Velocity Pressure (PSF)
3.5-1	Valve Missile Characteristics
3.5-2	Summary of Control Rod Drive Mechanism Missile Analysis
3.5-3	This table has been intentionally deleted from the FSAR
3.5-4	Characteristics of Other Missiles Postulated Within Reactor Containment
3.5-5	Tornado-Generated External Missiles
3.5-6	List of Hazardous Materials with the Potential for Producing Significant Missiles
3.5-7	Summary of Exposure Distance Calculations
3.5-8	Aggregate Probability of Explosion or Violent Rupture Capable of Missile Generation
3.5-9	Tank Car Fragment Range (Feet) for 10° Launch Angle
3.5-10	Types of Tank Car Missiles
3.5-11	Deleted
3.5-12	Missile Shields on Axial Fans
3.6B-1	High-Energy Piping Systems
3.6B-2	Essential Structures, Systems, and Components Required for Safe Shutdown
3.6B-3	Energy-Absorbing Capacity of 10-inch Pipes
3.6B-4	Piping Lines Included in the LBB Program
3.7B-1	Damping Values

LIST OF TABLES (Cont)

Table Number	Title
3.7B-2	Foundation Information and Structural Dimensions for Seismic Category I Structures
3.7B-3	Methods of Seismic Analysis Used for Seismic Category I Structures
3.7B-4	Containment and Internal Structures Representative Modal Frequencies and Participation Factors Uncracked Model, Median Soil, Safe Shutdown Earthquake
3.7B-5	Containment and Internal Structures Representative Modal Frequencies and Participation Factors Cracked Model, Median Soil, Safe Shutdown Earthquake
3.7B-6	Containment and Internal Structures Representative Mode Shapes (Eigenvectors) Uncracked Model, Median Soil
3.7B-7	Containment and Internal Structures Representative Mode Shapes (Normalized Eigenvectors) Cracked Model, Median Soil, Safe Shutdown Earthquake
3.7B-8	Containment and Internal Structures SRSS Accelerations and Displacements for Safe Shutdown Earthquake Uncracked Model, Median Soil, Response Spectrum Analysis
3.7B-9	Containment and Internal Structures SRSS Accelerations and Displacements for Safe Shutdown Earthquake Cracked Model, Median Soil, Response Spectrum Analysis
3.7B-10	Containment and Internal Structures Degrees of Freedom
3.7B-11	Containment and Internal Structures Enveloped Accelerations and Displacements Horizontal Motion
3.7B-12	Containment and Internal Structures Enveloped Accelerations and Displacements Vertical Motion
3.7B-13	Fuel Building Representative Modal Frequencies and Participation Factors
3.7B-14	Fuel Building Representative Mode Shapes (Eigenvectors)
3.7B-15	Fuel Building CSM Accelerations for Safe Shutdown Earthquake from Response Spectrum Analysis
3.7B-16	Fuel Building Closely Spaced Modes Displacements for Safe Shutdown Earthquake From Response Spectrum Analysis

LIST OF TABLES (Cont)

Table Number	Title
3.7B-17	Fuel Building Square Root of the Sum of the Squares Safe Shutdown Earthquake Responses
3.7B-18	Fuel Building Degrees of Freedom
3.7B-19	Cable Vault Building Representative Modal Frequencies and Participation Factors
3.7B-20	Cable Vault Building Representative Mode Shapes (Eigenvectors)
3.7B-21	Cable Vault Building Degrees of Freedom
3.7B-22	Cable Vault Building CSM Acceleration for Safe Shutdown Earthquake From Response Spectrum Analysis
3.7B-23	Cable Vault Building CSM Displacements for Safe Shutdown Earthquake from Response Spectrum Analysis
3.7B-24	Cable Vault Building SRSS of Safe Shutdown Earthquake
3.7B-25	Comparison of Response Spectra and Time History Analysis Results Containment and Internal Structures (Uncracked Properties)
3.7B-26	Comparison of Response Spectra and Time History Analysis Results Containment and Internal Structures (Cracked Properties)
3.7B-27	Comparison of Response Spectra and Time History Analysis Results Fuel Building - Safe Shutdown Earthquake Accelerations
3.7B-28	Comparison of Response Spectra and Time History Analysis Results Cable Vault Building Safe Shutdown Earthquake Accelerations
3.7B-29	Equipment and Components 1G Flat Response
3.7B-30	Modal Density, n
3.7B-31	Amplified Response Dynamic Factor Study
3.7B-32	Piping System Seismic Design and Analysis Criteria

LIST OF TABLES (Cont)

Table Number	Title
3.7N-1	Damping Valves Used for Seismic Systems Analysis for Westinghouse Supplied Equipment Damping
3.8-1	American Concrete Institute Codes, Standards, and Specifications
3.8-2	American Society of Mechanical Engineers Specifications
3.8-3	American National Standards Institute Codes, Standards, and Specifications
3.8-4	American Society for Testing and Materials Specifications
3.8-5	USNRC Regulatory Guides
3.8-6	Principal Plant Structural Specifications for Seismic Category I Materials
3.8-7	Steel Liner, Penetrations, and Access Opening Codes, Standards, and Specifications
3.8-8	Summary of Materials Called for in Specifications for Steel Liner, Penetrations, and Access Openings
3.8-9	Load Combinations for Liner Plate and Anchors
3.8-10	ASTM A615 Reinforcing Steel Grade 50, Stone & Webster Special Chemistry Chemical and Mechanical Properties
3.8-11	Containment Internal Structure Concrete Structures Load Combinations Comparison
3.8-12	Seismic Category I Structures and Equipment for Other Than the Containment Structure
3.8-13	Criteria for Stability Factors Against Sliding and Overturning
3.9B-1	Systems and Types of Tests Conducted
3.9B-2	Deleted from the FSAR
3.9B-3	Piping Snubbers Monitored During Preoperational Testing
3.9B-4	Deleted from the FSAR
3.9B-5	Load Combinations for ASME III Class 1 Piping

LIST OF TABLES (Cont)

Table Number	Title
3.9B-6	Comparison of ASME III Class 1 Piping Requirements, Regulatory Guide 1.48 vs. Table 3.9B-5
3.9B-7	Stress Limits for ASME Section III Class 2 and 3 Components (Elastic Analysis)
3.9B-8	Load Combinations for ASME III Class 2 and 3 Piping Except Quench Spray, Recirculation Spray, and Safety Injection Systems
3.9B-9	Loading Combinations for ASME III Class 2 and 3 Piping on Quench Spray, Recirculation Spray and Safety Injection Systems
3.9B-10	Comparison of Class 2 and 3 Requirements - Regulatory Guide 1.48 vs. Tables 3.9B-7, 3.9B-8, and 3.9B-9
3.9B-11	Definitions of Loadings Applicable to Piping Systems
3.9B-12	Deleted from the FSAR
3.9B-13	Deleted
3.9B-14	Load Combinations for Pipe Supports except QSS, RSS, and SIS
3.9B-15	Load Combinations for Pipe Supports for QSS, RSS, and SIS
3.9B-16	Loads, Load Combinations, and Stress Limits for S&W Designed ASME III, Class 2 and 3 Equipment Supports
3.9B-17	Methods of Load Combinations
3.9B-18	Active Pumps (BOP)
3.9B-19	Active Valves (BOP)
3.9N-1	Summary of Reactor Coolant System Design Transients
3.9N-2	Loading Combinations for ASME Class 1 Components
3.9N-3	Allowable Stresses for ASME Section III Class 1 Components
3.9N-4	Design Loading Combinations for ASME Code Class 2 and 3 Components and Supports
3.9N-5	Stress Criteria for Safety Related ASME Class 2 and Class 3 Tanks

LIST OF TABLES (Cont)

Table Number	Title
3.9N-6	Stress Criteria for ASME Code Class 2 and Class 3 Inactive Pumps
3.9N-7	Design Criteria for Active Pumps
3.9N-8	Stress Criteria for Safety-Related ASME Code Class 2 and Class 3 Valves
3.9N-9	Active Pumps (W Scope)
3.9N-10	Active Valves (W Scope)
3.9N-11	Maximum Deflections Allowed for Reactor Internal Support
3.9N-12	Stress Limits for Reactor Vessel Internal Structures
3.9N-13	Loading Combinations for Core Support Structures
3.9N-14	Allowable Stresses for Core Support Structures
3.10B-1	Deleted
3.10N-1	Deleted
3.11-1	Deleted
3.11-2	Deleted

LIST OF FIGURES

Figure Number	Title
3.5-1	Plot Plan Orientation of Impact Areas for Turbine Missiles
3.5-2	BB281-13.9m^2 Design - Comparison of External Missile Probabilities Including Overspeed with NRC Limit
3.5-3	Deleted
3.5-4	Deleted
3.6B-1	Areas of Analysis
3.6B-2	Steady State Blowdown Forces vs. Friction Parameter
3.6B-3	South Loop Strap Restraint PRR-811
3.6B-4	Dynamic Analysis Model, South Loop Strap Restraint, PRR-811
3.6B-5	Fluid Blowdown Forces Used in Mathematical Model
3.6B-6	Restraint Reaction Loads
3.6B-7	Energy Balance Sample Problem
3.6B-8	Pipe Crush Bumper
3.6B-9	Pipe Crush Bumper
3.6B-10	Two-Pin Laminated Pipe Rupture Restraint
3.6B-11	Omni Directional Pipe Rupture Restraint
3.6B-12	Pipe Break/Restraint Locations Feedwater System (FWS) Inside Reactor Containment
3.6B-13	Feedwater System (FWS) Outside Containment
3.6B-14	Main Steam System (MSS) Outside Containment

LIST OF FIGURES (Cont)

Figure Number	Title
3.6B-15	Pipe Break and Restraint Locations - Main Steam Piping Inside Containment
3.6B-16A	Reactor Coolant System (RCS) (Pressurizer/Auxiliary Spray) Inside Reactor Containment
3.6B-16B	Reactor Coolant System (Loop Drain/Excess Letdown) Inside Reactor Containment
3.6B-16C	Reactor Coolant System (Pressurizer Safety/Relief Valve) Inside Reactor Containment
3.6B-16D	Reactor Coolant System (Loop Fill Piping) Inside Reactor Containment
3.6B-16E	Two-Inch RCS Bypass-Loop 21, 22, 23 Inside Reactor Containment
3.6B-16F	Deleted
3.6B-16G	Deleted
3.6B-17A	Main Steam West Loop Break Exclusion Pipe Outside Containment
3.6B-17B	Main Steam South Loop Break Exclusion Pipe Outside Containment
3.6B-17C	Main Steam East Loop Break Exclusion Pipe Outside Containment
3.6B-18A	Chemical/Charging and Volume Control System (CHS) Pressure/ Auxiliary Spray and Normal Charging Inside Reactor Containment
3.6B-18B	Chemical/Charging and Volume Control System (Normal Charging) Inside Reactor Containment
3.6B-18C	Chemical/Charging and Volume Control System (Coolant Letdown to Non-Regenerative Heat Exchanger) Inside Reactor Containment
3.6B-18D	Chemical/Charging and Volume Control System (Loop Fill Piping) Inside Reactor Containment

LIST OF FIGURES (Cont)

Figure Number	Title
3.6B-18E	Chemical/Charging and Volume Control System (CHS) (RCP Seal Water Piping) Inside Reactor Containment
3.6B-19A	Chemical/Charging and Volume Control System (CHS) HHSI Charging Pumps Outside Reactor Containment
3.6B-19B	Chemical/Charging and Volume Control System (CHS) RCP Seal Water Piping Outside Reactor Containment
3.6B-19C	Chemical/Charging and Volume Control System (CHS) (Coolant Letdown) Outside Reactor Containment
3.6B-20A	Auxiliary Steam Supply (ASS) System Outside Reactor Containment
3.6B-20B	Auxiliary Steam Supply (ASS) System Outside Reactor Containment
3.6B-21A	Safety Injection System (SIS) Low/High Head Inside Reactor Containment
3.6B-21B	Safety Injection System (SIS) Low Head Accumulator Inside Reactor Containment
3.6B-22	Safety Injection System (SIS) Outside Reactor Containment
3.6B-23	Emergency Feedwater System (FWE) Inside Reactor Containment
3.6B-24	Steam Generator Blowdown System (BDG) Inside Reactor Containment
3.6B-25A	Steam Generator Blowdown System (BDG) Outside Reactor Containment
3.6B-25B	Steam Generator Blowdown System Pipe Rupture Restraints (PRR)
3.6B-26	Nitrogen Gas Supply (GNS) System Outside Reactor Containment
3.6N-1	Deleted
3.6N-2	Loss of Reactor Coolant Accident Boundary Limits
3.7B-1	Design Response Spectra Safe Shutdown Earthquake
3.7B-2	Design Response Spectra 1/2 Safe Shutdown Earthquake

LIST OF FIGURES (Cont)

Figure Number	Title
3.7B-3	Time History Response Spectra, 1/2% Damping Value
3.7B-4	Time History Response Spectra, 1% Damping Value
3.7B-5	Time History Response Spectra, 2% Damping Value
3.7B-6	Time History Response Spectra, 5% Damping Value
3.7B-7	Time History Response Spectra, 7% Damping Value
3.7B-8	Time History Response Spectra, 10% Damping Value
3.7B-9	Dynamic Model of the Containment Structure
3.7B-10	Dynamic Model of the Fuel Building
3.7B-11	Dynamic Model of the Cable Vault Building
3.7B-12	Eigenvectors for Containment and Internal Structures Uncracked Model, Median Soil
3.7B-13	Eigenvectors for Containment and Internal Structures Uncracked Model, Median Soil
3.7B-14	Eigenvectors for Containment and Internal Structures Uncracked Model, Median Soil
3.7B-15	Eigenvectors for Containment and Internal Structures Uncracked Model, Median Soil
3.7B-16	Response Spectrum Analysis, Containment and Internal Structures, Springline Horizontal SSE
3.7B-17	Response Spectrum Analysis, Containment and Internal Structures, Mat Horizontal SSE
3.7B-18	Response Spectrum Analysis, Containment and Internal Structures, Operating Floor Horizontal SSE
3.7B-19	Response Spectrum Analysis, Containment and Internal Structures, Springline Vertical SSE
3.7B-20	Response Spectrum Analysis, Containment and Internal Structures, Mat Vertical SSE
3.7B-21	Response Spectrum Analysis, Containment and Internal Structures, Operating Floor Vertical SSE

LIST OF FIGURES (Cont)

Figure Number	Title
3.7B-22	Response Spectrum Analysis, Containment and Internal Structures, Springline Horizontal SSE
3.7B-23	Response Spectrum Analysis Containment and Internal Structures Mat Horizontal SSE
3.7B-24	Response Spectrum Analysis, Containment and Internal Structures, Operating Floor Horizontal SSE
3.7B-25	Response Spectrum Analysis, Containment and Internal Structures, Springline Vertical SSE
3.7B-26	Response Spectrum Analysis Containment and Internal Structures, Mat Vertical SSE
3.7B-27	Response Spectrum Analysis, Containment and Internal Structures, Operating Floor Vertical SSE
3.7B-28	Amplified Response Spectra, Reactor Containment, Horizontal Excitation SSE at El. 813.62', External Structure
3.7B-29	Amplified Response Spectra, Reactor Containment, Horizontal Excitation SSE at El. 691.0', Mat
3.7B-30	Amplified Response Spectra, Reactor Containment, Horizontal Excitation SSE at El. 767.83', Internal Structure
3.7B-31	Amplified Response Spectra, Reactor Containment, Vertical Excitation SSE at El. 818.00' Internal Structure
3.7B-32	Amplified Response Spectra, Reactor Containment, Vertical Excitation SSE at El. 691.0', Mat
3.7B-33	Amplified Response Spectra, Reactor Containment, Vertical Excitation SSE at El. 854.22', External Structure
3.7B-34	Time History of Acceleration at the Operating Floor, Containment, Horizontal SSE
3.7B-35	Time History of Acceleration at the Springline Containment, Horizontal SSE
3.7B-36	Site Artificial Time History, Horizontal SSE
3.7B-37	Amplified Response Spectra By Time History, Fuel Building N-S SSE at El. 729.50'

LIST OF FIGURES (Cont)

Figure Number	Title
3.7B-38	Amplified Response Spectra By Time History, Fuel Building, E-W SSE at El. 729.50'
3.7B-39	Amplified Response Spectra By Time History, Fuel Building, Vertical SSE at El. 729.50'
3.7B-40	Amplified Response Spectra By Time History, Fuel Building, N-S SSE at El. 767.33'
3.7B-41	Amplified Response Spectra By Time History, Fuel Building, E-W SSE at El. 767.33'
3.7B-42	Amplified Response Spectra By Time History, Fuel Building, Vertical SSE at El. 767.33'
3.7B-43	Amplified Response Spectra By Time History, Fuel Building Crane Rail Structure, N S SSE at El. 798.00'
3.7B-44	Amplified Response Spectra By Time History, Fuel Building Crane Rail Structure, E-W SSE at El. 798.00'
3.7B-45	Amplified Response Spectra By Time History, Fuel Building Crane Rail Structure, Vertical SSE at El. 798.00'
3.7B-46	Amplified Response Spectra By Time History, Cable Vault Building, N-S Excitation SSE at El. 718.5'
3.7B-47	Amplified Response Spectra By Time History, Cable Vault Building, N-S Excitation SSE at El. 735.5'
3.7B-48	Amplified Response Spectra By Time History, Cable Vault Building, N-S Excitation SSE at El. 805.04'
3.7B-49	Amplified Response Spectra By Time History, Cable Vault Building, E-W Excitation SSE at El. 718.5
3.7B-50	Amplified Response Spectra By Time History, Cable Vault Building, E-W Excitation SSE at El. 735.50'
3.7B-51	Amplified Response Spectra By Time History, Cable Vault Building, E-W Excitation SSE at El. 805.04'
3.7B-52	Amplified Response Spectra By Time History, Cable Vault Building, Vertical Excitation SSE at El. 718.50'
3.7B-53	Amplified Response Spectra By Time History, Cable Vault Building, Vertical Excitation SSE at El. 805.04'

LIST OF FIGURES (Cont)

Figure Number	Title
3.7B-54	Containment-Finite Element Mode
3.7B-55	Containment-Fuel Building Structure Interaction Model
3.7B-56	A.R.S. Comparison-Finite Element vs. Lumped Mass-Spring Containment External Structure El. 854.0', Horizontal, SSE
3.7B-57	A.R.S. Comparison-Finite Element vs. Lumped Mass-Spring Containment Mat El. 681.0' to 691.0' Horizontal, SSE
3.7B-58	A.R.S. Comparison-Finite Element vs. Lumped Mass-Spring Containment Internal Structure El. 818.0', Horizontal, SSE
3.7B-59	A.R.S. Comparison-Finite Element vs. Lumped Mass-Spring Containment External Structure El. 854.0', Vertical, SSE
3.7B-60	A.R.S. Comparison-Finite Element vs. Lumped Mass-Spring Containment Mat El. 681.0' To 691.0', Vertical, SSE
3.7B-61	A.R.S. Comparison-Finite Element vs. Lumped Mass-Spring Containment, Internal Structure El. 818.0' Vertical, SSE
3.7B-62	A.R.S. Comparison-Finite Element vs. Lumped Mass-Spring Fuel Building El. 729.50' E-W, SSE
3.7B-63	A.R.S. Comparison-Finite Element vs. Lumped Mass-Spring Fuel Building, el. 729.50' Vertical, SSE
3.7B-64	A.R.S. Comparison-Finite Element vs. Lumped Mass-Spring Fuel Building, El. 767.33' E-W, SSE
3.7B-65	A.R.S. Comparison-Finite Element vs. Lumped Mass-Spring Fuel Building, El. 767.33' Vertical, SSE
3.7B-66	Ground Response Spectra vs. Response Spectra Resulting From Site Artificial Time History
3.7B-67	Typical Mathematical Model of A Piping System
3.7B-68	Representation of Family of Peak Response Curves Within Broadened Resonant Peak
3.7B-69	Hypothetical vs. Actual Response of Multiple Modes Within Broadened Response Peak
3.7B-70	Justification of Static Load Factor
3.7B-71	Typical Amplified Response Spectra

LIST OF FIGURES (Cont)

Figure Number	Title
3.7B-72	Model Beams
3.7N-1	Multi-Degree of Freedom System
3.8-1	Reactor Containment Machine Locations, Plant El. 767'-10"
3.8-2	Reactor Containment Machine Locations, Plant El. 738'-10"
3.8-3	Reactor Containment Machine Locations, Plant El. 718'-6"
3.8-4	Reactor Containment Machine Locations, Plant El. 692'-11"
3.8-5	Reactor Containment Machine Locations, Sections 1-1, 6-6, 7-7, & 10-10
3.8-6	Reactor Containment Machine Locations, Sections 2-2, 5-5, & 9-9
3.8-7	Reactor Containment Machine Locations, Sections 3-3 & 4-4
3.8-8	Plot Plan
3.8-9	Reactor Containment Waterproofing
3.8-10	Foundation Mat & Wall Base
3.8-11	Concentric Ring at Apex of Dome
3.8-12	Typical Detail of Dome-Cylinder Junction
3.8-13	Personnel Hatch Reinforcing Details
3.8-14	Equipment Hatch Reinforcing Details
3.8-15	Typical Liner Details
3.8-16	Wall and Mat Joint
3.8-17	Section-Typical Bottom Liner Bridging Plate
3.8-18	Section-Typical Bridging Bar
3.8-19	Section-Shield Wall Base
3.8-20	Typical Piping Penetrations
3.8-21	Typical Electrical Penetration

LIST OF FIGURES (Cont)

Figure Number	Title
3.8-22	DELETED
3.8-23	DELETED
3.8-24	Fuel Transfer Tube Enclosure
3.8-25	Plant Arrangement at Plan El. 735'-6"
3.8-26	Plant Arrangement at Plan El. 752'-6"
3.8-27	Plant Arrangement at Plan El. 760'-6"
3.8-28	Plant Arrangement at Plan El. 774'-6"
3.8-29	Plant Arrangement Part Plan
3.8-30	Auxiliary Building Arrangement Plan El. 710'-6" and 718'-6"
3.8-31	Auxiliary Building Arrangement Plan El. 735'-6"
3.8-32	Auxiliary Building Arrangement Plan El. 755'-6"
3.8-33	Auxiliary Building Arrangement Plan El. 773'-6"
3.8-34	Auxiliary Building Arrangement Sections 1-1 and 2-2
3.8-35	Auxiliary Building Arrangement Sections 3-3 and 4-4
3.8-36	Auxiliary Building Arrangement Sections 5-5, Plan El. 710'-6"
3.8-37	Main Steam & Cable Vault Area Plan El. 755'-6", 798'-0", 808'-6"
3.8-38	DELETED
3.8-39	DELETED
3.8-40	Control Building Plan El. 735'-6"
3.8-41	Control Building Plan El. 707'-6"
3.8-42	Control Building Sections 1-1 and 2-2
3.8-43	Diesel Generator Building Arrangement
3.8-44	Service Building Plan El. 745'-6" and 730'-6"

LIST OF FIGURES (Cont)

Figure Number	Title
3.8-45	Service Building Plan El. 760'-6" and 780'-6"
3.8-46	Service Building Sections 1-1 and 2-2
3.8-47	Electrical Cable Tunnel
3.8-48	Pipe Trench for BVPS-1 and -2 Crosstie Piping-Sheet 1
3.8-49	Pipe Trench for BVPS-1 and -2 Crosstie Piping-Sheet 2
3.8-50	Emergency Service Water Overflow Structure
3.8-51	Waste Handling Building Arrangement
3.8-52	Condensate Polishing Building Plan El. 722'-6" and 735'-6"
3.8-53	Condensate Polishing Building Plan El. 752'-6" and 774'-6"
3.8-54	Condensate Polishing Building Sections 1-1, 2-2, 3-3, 4-4, 5-5
3.8-55	Condensate Polishing Building (non-Category I) Plan El. 762'-6" and 794'-6", Section 6-6
3.8-56	Gaseous Waste Storage Tank
3.9B-1	DELETED
3.9N-1	Reactor Coolant Pump Casing With Support Feet
3.9N-2	Vibration Check-out Function Test Inspection Points
3.9N-3	Control Rod Drive Mechanism
3.9N-4	Schematic Control Rod Drive Mechanism
3.9N-5	Nominal Latch Clearance Minimum and Maximum Temperature
3.9N-6	Control Rod Drive Mechanism Latch Clearance Thermal Effect
3.9N-7	Lower Core Support Assembly (Core Barrel Assembly)
3.9N-8	Upper Core Support Structure
3.9N-9	Plan View of Upper Core Support Structure

CHAPTER 3

DESIGN OF STRUCTURES, COMPONENTS, EQUIPMENT, AND SYSTEMS

3.1 CONFORMANCE WITH U.S. NUCLEAR REGULATORY COMMISSION GENERAL DESIGN CRITERIA

This section describes how the design of Beaver Valley Power Station - Unit 2 (BVPS-2) conforms with the U.S. Nuclear Regulatory Commission (USNRC) General Design Criteria (GDC), Appendix A of 10 CFR 50, as amended through October 27, 1978. The GDC establish minimum requirements for the design of nuclear power plants.

The GDC are intended to guide design of all water-cooled nuclear power plants. The GDC are generic in nature and subject to a variety of interpretations. For this reason, some cases will show that conformance to a particular criteria is not directly measurable. For these cases, the conformance of plant design to the interpretation of the GDC is discussed. For each of the 55 criteria promulgated, a specific assessment of the plant design is made. The final safety analysis report (FSAR) section that contains the detailed design information pertinent to that criterion is given, in addition to applicable references. For the purpose of this report, the terms "important to safety," "safety related," and "safety systems" are synonymous.

Based on the contents herein, it can be concluded that the nuclear power plant known as BVPS-2 fully satisfies and is in compliance with the GDC.

3.1.1 Conformance with Single Failure Criterion

3.1.1.1 Single Failure Criterion

Appendix A to 10 CFR 50 defines single failure criterion as follows:

"A single failure means an occurrence which results in the loss of capability of a component to perform its intended safety functions. Multiple failures resulting from a single occurrence are considered to be a single failure. Fluid and electric systems are considered to be designed against an assumed single failure if neither (1) a single failure of any active component (assuming passive components function properly) nor (2) a single failure of a passive component (assuming active components function properly) results in a loss of the capability of the system to perform its safety functions."

3.1.1.2 Definition of Terms Used in Single Failure Criterion

3.1.1.2.1 Active Component Failure

An active component failure is the failure of a powered component to act on command to perform its design function. Examples of active component failures include the failure of a powered valve to move to its correct position, the failure of an electrical breaker or relay to respond, or the failure of a pump, fan, or emergency diesel generator to start.

3.1.1.2.2 Passive Component Failure

A passive component failure is the structural failure of a static component so that it does not perform its intended function. For fluid pressure-boundary components, a passive component failure results in a breech of the pressure boundary. Typical passive components include piping, cables, valve bodies, etc.

3.1.1.2.3 Short Term

The short term is defined as that period of operation up to 24 hours following an initiating event, except for the emergency core cooling system (ECCS) following a loss-of-coolant accident (LOCA) which considers the short term as terminating after the system is transferred from the injection mode to the recirculation mode.

3.1.1.2.4 Long Term

The long term is defined as the period following the short term (that is, greater than 24 hours) during which time the system safety function is still required.

3.1.1.3 Application of Single Failure Criterion

The single failure criterion must be applied to all fluid systems, electrical power sources, control circuits, etc, which are essential to shut down the reactor and to mitigate the consequences of postulated events, as defined in American National Standards Institute (ANSI) Standard N18.2 for Conditions II, III, and IV. The following guidelines are used with regard to specific applications:

1. The most limiting single failure must be assumed in addition to the postulated event and the direct consequences of the postulated event, including loss of offsite power if the initiating event or its effects result in a reactor or turbine trip. Fluid systems required to shut down the reactor and to mitigate the event must be designed to accept either a single active failure in the short term, or a single passive failure in the long term, with no previous active failure in the short term. Passive failure need not be considered in the short term. Specific

details on how to apply single failure criteria to high energy line breaks are provided in Section 3.6B.1.3.1.

2. Although all systems required to shut down the reactor and to mitigate the consequences of the postulated event must be designed to the single failure criterion, only one single failure and its consequences need be assumed to occur in the aggregate of safety-related plant systems.

3. Passive failure in fluid systems required to shut down the reactor and to mitigate the consequences of the postulated event are limited to 50-gpm

leaks, provided the system is designed to Seismic Category I requirements. This leak rate is based on assumed maximum pump seal leakage, flange failures, or similar system pressure-boundary violations. A double-ended piping rupture or crack exceeding this leak rate is not assumed, provided the Seismic Category I design requirements are met. High-energy piping failures and the effects on safety systems are discussed further in Section 3.6.

4. The emergency onsite electrical power sources (both ac and dc) and their associated distribution systems are designed to have sufficient independence, redundancy, and testability to perform their safety functions assuming a single failure, as defined in GDC 17. The protection systems, as defined in GDC 20 with regard to failure, are designed in accordance with Regulatory Guide 1.53.

5. All safety-related electrical/control systems are designed to ensure that a single failure cannot cause mechanical motion of a passive component of a fluid system in such a way that its motion results in total loss of the system safety function.

3.1.2 Criterion Conformance

3.1.2.1 Quality Standards and Records (Criterion 1)

3.1.2.1.1 Criterion

"Structures, systems, and components important to safety shall be designed, fabricated, erected, and tested to quality standards commensurate with the importance of the safety functions to be performed. Where generally recognized codes and standards are used, they shall be identified and evaluated to determine their applicability, adequacy, and sufficiency, and shall be supplemented or modified as necessary to assure a quality product in keeping with the required safety function. A quality assurance program shall be established and implemented in order to provide adequate assurance that these structures, systems, and components will satisfactorily perform their safety functions. Appropriate records of the design, fabrication, erection, and testing of structures, systems, and components important to safety shall be maintained by or under the control of the nuclear power unit licensee throughout the life of the unit."

3.1.2.1.2 Design Conformance

Structures, systems, and components important to safety are designed, fabricated, erected, and tested to quality standards commensurate with the importance of the safety functions to be performed.

Quality standards relating to safety-related structures, systems, and components are generally contained in codes such as the American Society of Mechanical Engineers (ASME) Boiler and Pressure Vessel Code. The applicability of these codes to structures, systems, and components identified throughout this report is summarized in Section 3.2.

Chapter 17 describes the quality assurance program established to provide adequate assurance that safety-related structures, systems, and components satisfactorily perform their safety functions.

3.1.2.2 Design Bases for Protection Against Natural Phenomena (Criterion 2)

3.1.2.2.1 Criterion

"Structures, systems, and components important to safety shall be designed to withstand the effects of natural phenomena, such as earthquakes, tornadoes, hurricanes, floods, tsunami, and seiches, without loss of capability to perform their safety functions. The design bases for these structures, systems, and components shall reflect: (1) appropriate consideration of the most severe of the natural phenomena that have been historically reported for the site and surrounding area, with sufficient margin for the limited accuracy, quantity, and period of time in which the historical data have been accumulated, (2) appropriate combinations of the effects of normal and accident conditions with the effects of the natural phenomena, and (3) the importance of the safety functions to be performed."

3.1.2.2.2 Design Conformance

The structures, systems, and components important to safety are designed to withstand, or be protected from, the effects of natural phenomena without loss of capability to perform their safety functions. Those structures, systems, and components important to safety are designed to withstand the maximum probable natural phenomena expected at the site, determined from recorded data for the site vicinity, with appropriate margin to account for uncertainties in historical data. Appropriate combinations of the effects of normal and accident conditions with the effects of natural phenomena are considered in the plant design.

The nature and magnitudes of the natural phenomena considered in the design of BVPS-2 are discussed in Sections 2.3, 2.4, and 2.5. Sections 3.3 through 3.7 discuss the design of BVPS-2 in relation to natural events. Seismic and safety classifications, as well as other pertinent standards and information, are given in the sections discussing individual structures and components.

3.1.2.3 Fire Protection (Criterion 3)

3.1.2.3.1 Criterion

"Structures, systems, and components important to safety shall be designed and located to minimize, consistent with other safety requirements, the probability and effect of fires and explosions. Noncombustible and heat-resistant materials shall be used wherever practical throughout the unit, particularly in locations such as the containment and control room. Fire detection and fighting systems of appropriate capacity and capability shall be provided and designed to minimize the adverse effects of fires on structures, systems, and components important to safety. Firefighting systems shall be designed to assure that their rupture or inadvertent operation does not significantly impair the safety capability of these structures, systems, and components."

3.1.2.3.2 Design Conformance

The BVPS-2 structures, systems, and components are designed and located to minimize the probability and effect of fires and explosions. Noncombustibles and fire-resistant materials are used wherever practicable.

The requirements of NUREG-0800, (USNRC 1981) Standard Review Plan Section 9.5.1 and its Branch Technical Position CMEB 9.5-1, the National Fire Protection Association, the American Nuclear Insurers, and other applicable codes and regulations were originally considered in the design, installation, and testing of the system and components. By issuance of License Amendment No. 190, the NRC permitted NFPA 805 to be implemented as an acceptable means for satisfying Criterion 3. The previous fire protection program is now superseded by an NFPA 805 program.

The fire protection system (FPS) is designed to detect, annunciate, and extinguish postulated fires. A suitable combination of electrical isolation, physical distance, barriers, resistance to combustion, and automatic and/or manual protection is applied to adequately maintain effective independence of redundant safety-related equipment (the availability of safety functions in spite of postulated fires).

The FPS in safety-related areas is seismically supported to assure that it does not impair the function of safety-related structures, systems, and components.

The FPS is designed in such a manner that the failure of a part, or any of its components, or inadvertent operation does not impair the safety-related structures, systems, and components. Fire detection, annunciation, and extinguishing systems are periodically tested and inspected to assure reliability and to protect against the adverse effects of fires on structures, systems, and components important to safety. The FPS is discussed in Section 9.5.1.

3.1.2.4 Environmental and Missile Design Bases (Criterion 4)

3.1.2.4.1 Criterion

"Structures, systems, and components important to safety shall be designed to accommodate the effects of and to be compatible with the environmental conditions associated with normal operation, maintenance, testing, and postulated accidents, including loss-of-coolant accidents. These structures, systems, and components shall be appropriately protected against dynamic effects, including the effects of missiles, pipe whipping, and discharging fluids, that may result from equipment failures and from events and conditions outside the nuclear power unit."

3.1.2.4.2 Design Conformance

Structures, systems, and components important to safety are designed to accommodate the effects of, and to be compatible with, the environmental conditions associated with normal operation, maintenance, testing, and postulated accidents, including LOCA. Criteria are presented in Sections 3.5 through 3.10; environmental conditions are described in Section 3.11.

These structures, systems, and components are appropriately protected against or designed to accommodate dynamic effects, including the effects of missiles, pipe whipping, and discharging fluids, that may result from equipment failures, and from events and conditions outside the nuclear power unit. Details of the design, testing, and construction of these systems, structures, and components are included in Chapters 3, 5, 6, 7, 9, 10, and 15. Evaluation of the performance of safety features is contained in Chapter 6.

3.1.2.5 Sharing of Structures, Systems, and Components (Criterion 5)

3.1.2.5.1 Criterion

"Structures, systems, and components important to safety shall not be shared between nuclear power units unless it is shown that such sharing does not significantly impair their ability to perform their safety functions, including, in the event of an accident in one unit, an orderly shutdown and cooldown of the remaining units."

3.1.2.5.2 Design Conformance

Systems, structures, and components shared by Beaver Valley Power Station - Unit 1 (BVPS-1) and BVPS-2 are presented in Section 1.2.1.

Sharing of any of these systems, structures, and components does not impair the safety of the reactor facilities in accordance with GDC 5.

3.1.2.6 Criterion 6

This criterion has not been promulgated by the USNRC.

3.1.2.7 Criterion 7

This criterion has not been promulgated by the USNRC.

3.1.2.8 Criterion 8

This criterion has not been promulgated by the USNRC.

3.1.2.9 Criterion 9

This criterion has not been promulgated by the USNRC.

3.1.2.10 Reactor Design (Criterion 10)

3.1.2.10.1 Criterion

"The reactor core and associated coolant, control, and protection systems shall be designed with appropriate margin to assure that specified acceptable fuel design limits are not exceeded during any condition of normal operation, including the effects of anticipated operational occurrences."

3.1.2.10.2 Design Conformance

The reactor core and associated coolant, control, and protection systems are designed with adequate margins to:

1. Assure that fuel damage (defined as penetration of the fission product barrier, that is the fuel rod clad) is not expected during normal core operation and operational transients (Condition I) or any transient conditions arising from occurrences of moderate frequency (Condition II). (Conditions I and II are defined by ANSI N18.2-73.) It is not possible, however, to preclude a very small number of rod failures. These are within the capability of the BVPS-2 cleanup system and are consistent with BVPS-2 design bases.

2. Ensure return of the reactor to a safe state following a Condition III (as defined by ANSI-N18.2-73) event with only a small fraction of fuel rods damaged although sufficient fuel damage might occur to preclude immediate resumption of operation.

3. Assure that the core is intact with acceptable heat transfer geometry following transients arising from occurrences of limiting faults (Condition IV as defined by ANSI-N18.2-73).

Chapter 4 discusses the design bases and design evaluation of core components. Details of the control and protection systems instrumentation design and logic are discussed in Chapter 7. This information supports the accident analyses of Chapter 15 which show that the acceptable fuel design limits are not exceeded for Conditions I and II occurrences.

3.1.2.11 Reactor Inherent Protection (Criterion 11)

3.1.2.11.1 Criterion

"The reactor core and associated coolant systems shall be designed so that in the power operating range the net effect of the prompt inherent nuclear feedback characteristics tends to compensate for a rapid increase in reactivity."

3.1.2.11.2 Design Conformance

When the reactor is critical, prompt compensatory reactivity feedback effects are assured by the negative fuel temperature effect (Doppler effect) and by the operational limit on moderator temperature coefficient of reactivity at 100 percent power, and less than +2.0 pcm/°F below 70 percent power. From 70 percent power to 100 percent power, the limit on the moderator temperature coefficient of reactivity decreases linearly from +2.0 pcm/°F to 0.0 pcm/°F. The negative Doppler coefficient of reactivity is assured by the inherent design using low-enrichment fuel. The moderator temperature coefficient limits of reactivity are assured by administratively controlling either the dissolved absorber concentration, burnable poison, and/or rod withdrawal limits.

These reactivity coefficients are discussed in Section 4.3.

3.1.2.12 Suppression of Reactor Power Oscillations (Criterion 12)

3.1.2.12.1 Criterion

"The reactor core and associated coolant, control, and protection systems shall be designed to assure that power oscillations which can result in conditions exceeding specified acceptable fuel design limits are not possible or can be reliably and readily detected and suppressed."

3.1.2.12.1.2 Design Conformance

Power oscillations of the fundamental mode are inherently eliminated by the negative Doppler and the moderator temperature coefficient limits of reactivity.

Oscillations, due to xenon spatial effects in the radial, diametral, and azimuthal overtone modes are heavily damped due to the inherent design and due to the negative Doppler and the moderator temperature coefficient limits of reactivity.

Oscillations, due to xenon spatial effects in the axial first overtone mode may occur. Assurance that fuel design limits are not

exceeded by xenon axial oscillations is provided by reactor trip functions using the measured axial power imbalance as an input.

Oscillations, due to xenon spatial effects, in axial modes higher than the first overtone, are heavily damped due to the inherent design and due to the negative Doppler coefficient of reactivity. Xenon stability control is discussed in Section 4.3.

3.1.2.13 Instrumentation and Control (Criterion 13)

3.1.2.13.1 Criterion

"Instrumentation and control shall be provided to monitor variables and systems over their anticipated ranges for normal operation, for anticipated operational occurrences, and for accident conditions as appropriate to assure adequate safety, including those variables and systems that can affect the fission process, the integrity of the reactor core, the reactor coolant pressure boundary, and the containment and its associated systems. Appropriate controls shall be provided to maintain these variables and systems within prescribed operating ranges."

3.1.2.13.2 Design Conformance

Instrumentation and controls are provided to monitor and control neutron flux, control rod position, temperature, pressures, flows, and levels as necessary to assure that adequate plant safety can be maintained. Instrumentation is provided in the reactor coolant system (RCS), steam and power conversion system, the containment, engineered safety features (ESF) systems, and other auxiliaries. Parameters that must be provided for operator use under normal operating and accident conditions are indicated in the control room in proximity to the controls for maintaining the indicated parameter in the proper range.

The quantity and types of process instrumentation provided ensure safe and orderly operation of all systems over the full design range of BVPS-2. These systems are described in Chapters 6, 7, 8, 9, 11, and 12.

3.1.2.14 Reactor Coolant Pressure Boundary (Criterion 14)

3.1.2.14.1 Criterion

"The reactor coolant pressure boundary shall be designed, fabricated, erected, and tested so as to have an extremely low probability of abnormal leakage, of rapidly propagating failure, and of gross rupture."

3.1.2.14.2 Design Conformance

The RCS boundary is designed to accommodate the system pressures and temperatures attained under all expected modes of BVPS-2 operation, including all anticipated transients, and to maintain the stresses within applicable stress limits. Refer to Section 3.9 for details. Reactor coolant pressure boundary (RCPB) materials selection and fabrication techniques ensure a low probability of gross rupture or significant leakage.

In addition to the loads imposed on the system under normal operating conditions, consideration is also given to abnormal loading conditions, such as seismic and pipe rupture as discussed in Sections 3.6 and 3.7. The system is protected from overpressure by means of pressure relieving devices as required by applicable codes. Refer to Section 5.2.2.

The RCS boundary has provisions for inspection, testing, and surveillance of critical areas to assess the structural and leaktight integrity. Details are given in Section 5.2. For the reactor vessel, a material surveillance program conforming to applicable codes is provided. Section 5.3 gives details.

3.1.2.15 Reactor Coolant System Design (Criterion 15)

3.1.2.15.1 Criterion

"The reactor coolant system and associated auxiliary, control, and protection systems shall be designed with sufficient margin to assure that the design conditions of the reactor coolant pressure boundary are not exceeded during any condition of normal operation, including anticipated operational occurrences."

3.1.2.15.2 Design Conformance

The design pressure and temperature for each component in the reactor coolant and associated auxiliary, control, and protection systems are selected to be above the maximum coolant pressure and temperature under all normal and anticipated transient load conditions.

Additionally, RCPB components achieve a large margin of safety by the use of proven ASME materials and design codes, use of proven fabrication techniques, nondestructive shop testing, and integrated hydrostatic testing of assembled components. Chapter 5 discusses the RCS design.

3.1.2.16 Containment Design (Criterion 16)

3.1.2.16.1 Criterion

"Reactor containment and associated systems shall be provided to establish an essentially leaktight barrier against the uncontrolled

release of radioactivity to the environment and to assure that the containment design conditions important to safety are not exceeded for as long as postulated accident conditions require."

3.1.2.16.2 Design Conformance

A steel-lined, reinforced concrete containment structure, maintained at subatmospheric pressure, encloses the entire RCS and provides an essentially leaktight barrier. The containment structure and the engineered safety features are designed to withstand internal and external environmental conditions that may reasonably be expected during the life of the BVPS-2 and to ensure that the short and long term conditions following a LOCA do not exceed the design bases. Following a design basis accident (DBA), the recirculation and quench spray systems (QSS) cool and depressurize the containment atmosphere to maintain the pressure and temperature below the containment design values.

Reference Sections

Title	Section
Concrete Containment	3.8.1
Containment Functional Design	6.2.1
Quench Spray System	6.2.2.2.1
Recirculation Spray System	6.2.2.2.2

3.1.2.17 Electric Power Systems (Criterion 17)

3.1.2.17.1 Criterion

"An onsite electric power system and an offsite electric power system shall be provided to permit functioning of structures, systems, and components important to safety. The safety function for each system (assuming the other system is not functioning) shall be to provide sufficient capacity and capability to assure that (1) specified acceptable fuel design limits and design conditions of the reactor coolant pressure boundary are not exceeded as a result of anticipated operational occurrences, and (2) the core is cooled and containment integrity and other vital functions are maintained in the event of postulated accidents.

"The onsite electric power sources, including the batteries, and the onsite electric distribution system, shall have sufficient independence, redundancy, and testability to perform their safety functions assuming a single failure.

"Electric power from the transmission network to the onsite electric distribution system shall be supplied by two physically independent circuits (not necessarily on separate rights of way) designed and located so as to minimize to the extent practical the likelihood of their simultaneous failure under operating and postulated accident and environmental conditions. A switchyard common to both circuits is acceptable. Each of these circuits shall be designed to be available in sufficient time following a loss of all onsite alternating current power supplies and the other offsite electric power circuit, to assure that specified acceptable fuel design limits and design conditions of the reactor coolant pressure boundary are not exceeded. One of these circuits shall be designed to be available within a few seconds following a loss-of-coolant accident to assure that core cooling, containment integrity, and other vital safety functions are maintained.

"Provisions shall be included to minimize the probability of losing electric power from any of the remaining sources as a result of, or coincident with, the loss of power generated by the nuclear power unit, the loss of power from the transmission network, or the loss of power from the onsite electric power sources."

3.1.2.17.2 Design Conformance

The electric power system (EPS) design includes two offsite power systems and two onsite power systems. Each system provides sufficient capability for operating all safety-related equipment which must be operated in the event of postulated accidents.

The onsite emergency power system consists of an ac emergency power system, a 125 V dc power system, and a 120 V ac vital bus system, as described in Section 8.3.

The ac emergency power system consists of two separate, physically independent, 4,160 V, 3-phase, 60 Hz, diesel-driven, synchronous generators, and their associated control, distribution, and auxiliary equipment, as shown on Figure 8.3-1. Each emergency diesel generator accelerates to speed and is capable of accepting load within 10 seconds.

Four 125 V dc systems, complete with batteries, charging equipment, switchgear, and distribution equipment, are provided for safety-related equipment. These systems are described in Section 8.3.2.

A safety-related 120 V ac vital bus system is provided to supply power for the engineered safeguards protection channels. This very stable and reliable system consists of four single-phase inverters and the necessary switchgear and distribution equipment. This system is described more fully in Section 8.3.1.

The onsite emergency power system has sufficient independence, redundancy, and testability, as discussed in Sections 1.8.6,

3.1.2.18, 8.3.1, and 8.3.2, to perform its safety function assuming a single failure.

Two physically separate offsite station power systems are fed by two independent circuits from separate buses in a switchyard common to both, as shown on Figures 8.1-1, 8.1-2, and 1.2-1.

Both offsite power systems are normally energized and are designed to be available immediately upon loss of all onsite ac power sources, since an automatic transfer scheme is provided for this purpose at the 4 kV bus level. This scheme is described in Section 8.3.

3.1.2.18 Inspection and Testing of Electric Power Systems (Criterion 18)

3.1.2.18.1 Criterion

"Electric power systems important to safety shall be designed to permit appropriate periodic inspection and testing of important areas and features, such as wiring, insulation, connections, and switchboards, to assess the continuity of the systems and the condition of their components. The systems shall be designed with a capability to test periodically (1) the operability and functional performance of the components of the systems, such as onsite power sources, relays, switches, and buses, and (2) the operability of the systems as a whole and, under conditions as close to design as practical, the full operation sequence that brings the systems into operation, including operation of applicable portions of the protection system, and the transfer of power among the nuclear power unit, the offsite power system, and the onsite power system."

3.1.2.18.2 Design Conformance

3.1.2.18.2.1 Preservice

Electrical equipment is specified for manufacture and testing in accordance with the requirements of the National Electrical Manufacturers Association, the Institute of Electrical and Electronics Engineers (IEEE), or the ANSI standards, where applicable, as listed in Section 8.1.

Electrical equipment is properly protected during shipment and storage.

Special attention is given to mechanical alignment and electrical ground connections. The di-electric of insulation is measured and corrected, if necessary, before equipment is energized.

Tests and inspections will be conducted to ensure that all components are correct and properly mounted, connections are correct, circuits are continuous, and components are operational.

Tests will be conducted to determine that emergency loads do not exceed the diesel generator rating and that each diesel generator is suitable for starting and for accepting and operating the required loads.

Protective relays are set and calibrated, and metering devices have calibration checked by the Applicant's trained personnel.

3.1.2.18.2.2 Inservice

The availability and proper action of safety-related EPSs can be tested periodically.

Testing of the automatic bus transfer scheme at the 4,160 V level is performed periodically.

The station batteries which supply control power for operating major motor starters and nuclear safety protection systems are kept at a constant voltage and are monitored continuously for voltage variations or undesired ground connections. Station batteries are subjected to periodic inspection.

The loading and automatic starting features of the emergency diesel generators are tested periodically.

Electrical equipment and circuits are subjected to a periodic preventive maintenance program as appropriate.

The inspection and testing of the EPS is discussed more fully in Section 8.3.

3.1.2.19 Control Room (Criterion 19)

3.1.2.19.1 Criterion

"A control room shall be provided from which actions can be taken to operate the nuclear power unit safely under normal conditions and to maintain it in a safe condition under accident conditions, including loss-of-coolant accident. Adequate radiation protection shall be provided to permit access and occupancy of the control room under accident conditions without personnel receiving radiation exposures in excess of 5 rem whole body, or its equivalent to any part of the body, for the duration of the accident.

"Equipment at appropriate locations outside the control room shall be provided with a design capability for prompt hot shutdown of the reactor, including necessary instrumentation and controls to maintain the unit in a safe condition during hot shutdown, and with a potential capability for subsequent cold shutdown of the reactor through the use of suitable procedures."

Design Conformance

A control room is provided and equipped to operate BVPS-2 safely under normal and accident conditions. Control room shielding and ventilation are designed to permit continuous occupancy of the control room for the duration of any accident, including LOCA.

An emergency shutdown panel with equipment, controls, and instrumentation is provided to accomplish, in conjunction with other controls outside the control room, a prompt hot or subsequent cold shutdown in a safe manner.

The emergency shutdown panel is located in the control building in a room physically isolated from the control room, so that any occurrence which could cause the control room to become uninhabitable has no effect on the availability of the emergency shutdown panel and other controls. Also, equipment, controls, and instrumentation are located throughout BVPS-2 and the emergency shutdown panel to provide capability for a subsequent cold shutdown of the reactor.

The design of the control building, which houses the control room and the emergency shutdown panel area, conforms with GDC 19.

Reference Sections

Title	Section
Habitability Systems	6.4
Systems Required for a Safe Shutdown	7.4
Control Building Heating, Ventilation, and Air-Conditioning Systems	9.4.1

3.1.2.20 Protection System Functions (Criterion 20)

3.1.2.20.1 Criterion

"The protection system shall be designed (1) to initiate automatically the operation of appropriate systems including the reactivity control systems, to assure that specified acceptable fuel design limits are not exceeded as a result of anticipated operational occurrences and, (2) to sense accident conditions and to initiate the operation of systems and components important to safety."

3.1.2.20.2 Design Conformance

A fully automatic protection system with appropriate redundant channels is provided to cope with transients where insufficient time is available for manual corrective action. The design basis for all

protection systems is in accordance with the intent of IEEE Standard 279-1971 and IEEE Standard 379-1972. The reactor protection system automatically initiates a reactor trip when any variable monitored by the system or combination of monitored variables exceeds the normal operating range. Set points are designed to provide an envelope of safe operating conditions with adequate margin for uncertainties to ensure that fuel design limits are not exceeded.

Reactor trip is initiated by removing power to the rod drive mechanisms of all full length rod cluster control assemblies (RCCAs). This causes the rods to insert by gravity and rapidly reduces the reactor power output. The response and adequacy of the protection system has been verified by analysis of anticipated transients.

The engineered safety features actuation system (ESFAS) automatically initiates emergency core cooling, and other safeguards functions, by sensing accident conditions using redundant analog channels measuring diverse variables. Manual actuation of safeguards may be performed where ample time is available for operator action. The ESFAS automatically trips the reactor on manual or automatic safety injection signal generation.

3.1.2.21 Protection System Reliability and Testability (Criterion 21)

3.1.2.21.1 Criterion

"The protection system shall be designed for high functional reliability and inservice testability commensurate with the safety functions to be performed. Redundancy and independence designed into the protection system shall be sufficient to assure that (1) no single failure results in loss of the protection function and (2) removal from service of any component or channel does not result in loss of the required minimum redundancy unless the acceptable reliability of operation of the protection system can be otherwise demonstrated. The protection system shall be designed to permit periodic testing of its functioning when the reactor is in operation, including a capability to test channels independently to determine failures and losses of redundancy that may have occurred."

3.1.2.21.2 Design Conformance

The protection system is designed for high functional reliability and inservice testability.

Compliance with this criterion is discussed in Sections 7.2.2.2.3 and 7.3.2.2.5.

3.1.2.22 Protection System Independence (Criterion 22)

3.1.2.22.1 Criterion

"The protection system shall be designed to assure that the effects of natural phenomena, and of normal operating, maintenance, testing, and postulated accident conditions on redundant channels do not result in loss of the protection function, or shall be demonstrated to be acceptable on some other defined basis. Design techniques, such as functional diversity or diversity in component design and principles of operation, shall be used to the extent practical to prevent loss of the protection function."

3.1.2.22.2 Design Conformance

Protection system components are designed and arranged so that the environment accompanying any emergency situation in which the components are required to function does not result in loss of the safety function. Various means are used to accomplish this. Functional diversity has been designed into the system. The extent of this functional diversity has been evaluated for a wide variety of postulated accidents. Diverse protection functions will automatically terminate an accident before intolerable consequences can occur. Each parameter is also provided with redundant channels, which are physically separated from each other. Manual initiation of reactor trip and safety injection is also provided. The reactor trip system (RTS) is discussed in Section 7.2. The ESF system is discussed in Section 7.3.

High quality components, conservative design and applicable quality control, inspection, calibration, and tests are utilized to guard against common-mode failure. Qualification testing is performed on the various safety systems to demonstrate functional operation at normal and postaccident conditions of temperature, humidity, pressure, and radiation for specified periods if required. Typical protection system equipment is subjected to type tests under simulated seismic conditions using conservatively large accelerations and applicable frequencies. The test results indicate no loss of the protection function. Further details are given in Section 3.10.

3.1.2.23 Protection System Failure Modes (Criterion 23)

3.1.2.23.1 Criterion

"The protection system shall be designed to fail into a safe state or into a state demonstrated to be acceptable on some other defined basis if conditions such as disconnection of the system, loss of energy (e.g., electric power, instrument air), or postulated adverse environments (e.g., extreme heat or cold, fire, pressure, steam, water, and radiation) are experienced."

3.1.2.23.2 Design Conformance

The protection system is designed with due consideration of the most probable failure modes of the components under various perturbations of the environment and of energy sources. Each reactor trip channel is designed on the deenergize-to-trip principle so loss of power, disconnection, open-channel faults, and the majority of internal channel short-circuit faults cause the channel to go into its tripped mode. The protection system is discussed in Sections 7.2 and 7.3

3.1.2.24 Separation of Protection and Control Systems (Criterion 24)

3.1.2.24.1 Criterion

"The protection system shall be separated from control systems to the extent that failure of any single control system component or channel, or failure or removal from service of any single protection system component or channel which is common to the control and protection systems leaves intact a system satisfying all reliability, redundancy, and independence requirements of the protection system. Interconnection of the protection and control systems shall be limited so as to assure that safety is not significantly impaired."

3.1.2.24.2 Design Conformance

The protection system is separate and distinct from the control systems. Control systems may be dependent on the protection system in that control signals are derived from protection system measurements where applicable. These signals are transferred to the control system by isolation amplifiers, which are classified as protection components. The adequacy of system isolation has been verified by testing under conditions of postulated credible faults. The failure of any single control system component or channel, or failure or removal from service of any single protection system component or channel, which is common to the control and protection system, leaves intact a system which satisfies the requirements of the protection system. Distinction between channel and train is made in this discussion. The removal of a train from service is allowed only during testing of the train.

3.1.2.25 Protection System Requirements or Reactivity Control Malfunctions (Criterion 25)

3.1.2.25.1 Criterion

"The protection system shall be designed to assure that specified acceptable fuel design limits are not exceeded for any single malfunction of the reactivity control systems, such as accidental withdrawal (not ejection or dropout) of control rods."

3.1.2.25.2 Design Conformance

The protection system is designed to limit reactivity transients so that fuel design limits are not exceeded. Reactor shutdown by full length rod insertion is completely independent of the normal control function since the trip breakers interrupt power to the rod mechanisms regardless of existing control signals. Thus, in the postulated accidental withdrawal, (assumed to be initiated by a control malfunction) flux, temperature, pressure, level, and flow signals would be independently generated. Any of these signals (trip demands) would operate the breakers to trip the reactor.

Analyses of the effects of possible malfunctions are discussed in Chapter 15. These analyses show that for postulated dilution during refueling, start-up, or manual or automatic operation at power, the operator has ample time to determine the cause of dilution, terminate the source of dilution, and initiate reboration before the shutdown margin is lost. The analyses show that acceptable fuel damage limits are not exceeded even in the event of a single malfunction of either system.

3.1.2.26 Reactivity Control System Redundancy and Capability (Criterion 26)

3.1.2.26.1 Criterion

"Two independent reactivity control systems of different design principles shall be provided. One of the systems shall use control rods, preferably including a positive means for inserting the rods, and shall be capable of reliably controlling reactivity changes to assure that under conditions of normal operation, including anticipated operational occurrences, and with appropriate margin for malfunctions such as stuck rods, specified acceptable fuel design limits are not exceeded. The second reactivity control system shall be capable of reliably controlling the rate of reactivity changes resulting from planned, normal power changes (including xenon burnout) to assure acceptable fuel design limits are not exceeded. One of the systems shall be capable of holding the reactor core subcritical under cold conditions."

3.1.2.26.2 Design Conformance

Two reactivity control systems are provided. These are rod cluster control assemblies (RCCAs) and chemical shim (boric acid). The RCCAs are inserted into the core by the force of gravity.

During operation, the shutdown rod banks are fully withdrawn. The full length control rod system automatically maintains a programmed average reactor temperature and compensates for reactivity effects associated with scheduled and transient load changes. The shutdown rod banks along with the full length control banks are designed to shut down the reactor with adequate margin under conditions of normal

operation and anticipated operational occurrences, thereby ensuring that specified fuel design limits are not exceeded. The most restrictive period in core life is assumed in all analyses and the most reactive rod cluster is assumed to be in the fully withdrawn position.

Boric acid from the chemical and volume control system (CVCS) will maintain the reactor in the cold shutdown state independent of the position of the control rods and can compensate for xenon burnout transients.

Details of the construction of the RCCAs are presented in Chapter 4 and their operations are discussed in Chapter 7. The means of controlling the boric acid concentration are described in Chapter 9. Performance analyses under accident conditions are included in Chapter 15.

3.1.2.27 Combined Reactivity Control Systems Capability (Criterion 27)

3.1.2.27.1 Criterion

"The reactivity control systems shall be designed to have a combined capability, in conjunction with poison addition by the emergency core cooling system, of reliably controlling reactivity changes to assure that under postulated accident conditions and with appropriate margin for stuck rods the capability to cool the core is maintained."

3.1.2.27.2 Design Conformance

Beaver Valley Power Station - Unit 2 is provided with means of making and holding the core subcritical under any anticipated conditions and with appropriate margin for contingencies. These means are discussed in detail in Chapters 4 and 9. Combined use of the rod cluster control system and the chemical shim control system permits the necessary shutdown margin to be maintained during long term xenon decay and BVPS-2 cooldown. The single highest worth control cluster is assumed to be stuck full out upon trip for this determination.

3.1.2.28 Reactivity Limits (Criterion 28)

3.1.2.28.1 Criterion

"The reactivity control systems shall be designed with appropriate limits on the potential amount and rate of reactivity increase to assure that the effects of postulated reactivity accidents can neither (1) result in damage to the reactor coolant pressure boundary greater than limited local yielding nor (2) sufficiently disturb the core, its support structures or other reactor pressure vessel internals to impair significantly the capability to cool the core. These postulated reactivity accidents shall include consideration of rod ejection (unless prevented by positive means), rod dropout, steam

line rupture, changes in reactor coolant temperature and pressure, and cold water addition."

3.1.2.28.2 Design Conformance

The maximum reactivity worth of control rods and the maximum rates of reactivity insertion employing control rods are limited to values that prevent rupture of the RCS boundary or disruptions of the core or vessel internals to a degree that could impair the effectiveness of emergency core cooling.

The maximum positive reactivity insertion rates for the withdrawal of RCCAs and the dilution of the boric acid in the RCS are limited by the physical design characteristics of the RCCAs and of the CVCS. Technical Specifications on shutdown margin and on RCCA insertion limits and bank overlaps as functions of power provide additional assurance that the consequences of the postulated accidents are no more severe than those presented in the analyses of Chapter 15. Reactivity insertion rates, dilution, and withdrawal limits are also discussed in Section 4.3. The capability of the CVCS to avoid an inadvertent excessive rate of boron dilution is discussed in Chapter 15.

Assurance of core cooling capability following Condition IV accidents, such as rod ejections, steam line break, etc., is given in keeping the RCPB stresses within faulted condition limits as specified by applicable ASME Codes. Structural deformations are checked also and limited to values that do not jeopardize the operation of necessary safety features.

3.1.2.29 Protection Against Anticipated Operational Occurrences (Criterion 29)

3.1.2.29.1 Criterion

"The protection and reactivity control systems shall be designed to assure an extremely high probability of accomplishing their safety functions in the event of anticipated operational occurrences."

3.1.2.29.2 Design Conformance

The protection and reactivity control systems are designed to assure extremely high probability of performing their required safety functions in any anticipated operational occurrences. Likely failure modes of system components are designed to be safe modes. Equipment used in these systems is designed, constructed, operated, and maintained with a high level of reliability. Loss of power to the protection system results in a reactor trip. Details of system design are covered in Chapter 7. Refer to GDC 20 through 25 for further discussion.

3.1.2.30 Quality of Reactor Coolant Pressure Boundary (Criterion 30)

3.1.2.30.1 Criterion

"Components which are part of the reactor coolant pressure boundary shall be designed, fabricated, erected, and tested to the highest quality standards practical. Means shall be provided for detecting and, to the extent practical, identifying the location of the source of reactor coolant leakage."

3.1.2.30.2 Design Conformance

Reactor coolant pressure boundary components are designed, fabricated, inspected and tested in conformance with ASME Nuclear Power Plant Components Code, Section III. All components are classified according to ANSI N18.2-1973 and are accorded the quality measures appropriate to the classification. The design bases and evaluations of RCPB components are discussed in Chapter 5.

Leakage is detected by an increase in the amount of makeup of water required to maintain a normal level in the pressurizer. The reactor vessel closure joint is provided with a temperature monitored leak-off between double gaskets. Leakage into the reactor containment is drained to the reactor building sump where it is monitored.

Leakage is also detected by measuring the airborne activity. Monitoring the inventory of reactor coolant in the system at the pressurizer, volume control tank, and coolant drain collection tanks provides an accurate indication of integrated leakage.

The RCPB leakage detection system is discussed in Section 5.2.5.

3.1.2.31 Fracture Prevention of Reactor Coolant Pressure Boundary (Criterion 31)

3.1.2.31.1 Criterion

"The reactor coolant pressure boundary shall be designed with sufficient margin to assure that when stressed under operating, maintenance, testing, and postulated accident conditions (1) the boundary behaves in a nonbrittle manner and (2) the probability of rapidly propagating fracture is minimized. The design shall reflect consideration of service temperatures and other conditions of the boundary material under operating, maintenance, testing and postulated accident conditions and the uncertainties in determining (1) material properties, (2) the effects of irradiation on material properties, (3) residual, steady-state and transient stresses, and (4) size of flaws."

3.1.2.31.2 Design Conformance

Close control is maintained over material selection and fabrication for the RCS to assure that the boundary behaves in a nonbrittle manner. The RCS materials, which are exposed to the coolant, are corrosion resistant stainless steel or Inconel. The reference temperature (RT_{NDT}) of the reactor vessel structural steel is established by Charpy V notch and drop weight tests in accordance with 10 CFR 50, Appendix G.

As part of the reactor vessel specification certain requirements, which are not specified by the applicable ASME Codes, are performed as follows:

1. Ultrasonic Testing - In addition to code requirements, the performance of a 100 percent volumetric ultrasonic test of reactor vessel plate for shear wave and a posthydro test ultrasonic map of all welds in the pressure vessel are required. Cladding bond ultrasonic inspection to more restrictive requirements than those specified in the code is also required to preclude interpretation problems during inservice inspection.

2. Radiation Surveillance Program - In the surveillance programs, the evaluation of the radiation damage is based on pre-irradiation and postirradiation testing of Charpy V notch and tensile specimens. These programs are directed toward evaluation of the effect of radiation on the fracture toughness of reactor vessel steels based on the reference transition temperature approach and the fracture mechanics approach, and are in accordance with the requirements of 10 CFR 50, Appendix H.

3. Reactor vessel core region material chemistry (copper and phosphorous) is controlled to reduce sensitivity to embrittlement due to irradiation over the life of BVPS-2.

The fabrication and quality control techniques used in the fabrication of the RCS are equivalent to those used for the reactor vessel. The inspections of reactor vessel, pressurizer, piping, pumps, and steam generators are governed by ASME Code requirements. Details are provided in Chapter 5.

Allowable pressure-temperature relationships for BVPS-2 heatup and cooldown rates are calculated using methods derived from the ASME Code, Section III, Appendix G, Protection Against Non-Ductile Failure. The approach specifies that allowed stress intensity factors for all vessel operating conditions shall not exceed the reference stress intensity factor for the metal temperature at any time. Operating specifications include conservative margins for

predicted changes in the material reference temperatures (RT_{NDT}) due to irradiation. These pressure-temperature relationships are in accordance with 10 CFR 50, Appendix G.

3.1.2.32 Inspection of Reactor Coolant Pressure Boundary (Criterion 32)

3.1.2.32.1 Criterion

"Components which are part of the reactor coolant pressure boundary shall be designed to permit (1) periodic inspection and testing of important areas and features to assess their structural and leaktight integrity, and (2) an appropriate material surveillance program for the reactor pressure vessel."

3.1.2.32.2 Design Conformance

The design of the RCPB provides the capability for accessibility during service life to the internal surfaces of the reactor vessel, certain external zones of the vessel (including the nozzle to reactor coolant piping welds and the top and bottom heads), and external surfaces of the reactor coolant piping except for the area of pipe within the primary shielding concrete. The inspection capability complements the leakage detection systems in assessing the integrity of pressure boundary components. The RCPB will be periodically inspected under the provisions of the ASME Boiler and Pressure Vessel Code, Section XI. Details of the inservice inspection program are presented in Section 5.2.4.

Monitoring of changes in the fracture toughness properties of the reactor vessel core region plates forging, weldment, and associated heat-affected zones are performed in accordance with 10 CFR 50, Appendix H, Reactor Vessel Material Surveillance Program Requirements. Samples of reactor vessel plate materials are retained and cataloged in case future engineering development shows the need for further testing.

The material properties surveillance program includes not only the conventional tensile and impact tests, but also fracture mechanics specimens. The observed shifts in RT_{NDT} of the core region materials with irradiation will be used to confirm the allowable limits calculated for all operational transients. Further details are given in Section 5.3.

3.1.2.33 Reactor Coolant Makeup [Criterion 33)

3.1.2.33.1 Criterion

"A system to supply reactor coolant makeup for protection against small breaks in the reactor coolant pressure boundary shall be provided. The system safety function shall be to assure that specified acceptable fuel design limits are not exceeded as a result

of reactor coolant loss due to leakage from the reactor coolant pressure boundary and rupture of small piping or other small components which are part of the boundary. The system shall be designed to assure that for onsite electric power system operation (assuming offsite power is not available) and for offsite electric power system operation (assuming onsite power is not available) the system safety function can be accomplished using the piping, pumps, and valves used to maintain coolant inventory during normal reactor operation."

3.1.2.33.2 Design Conformance

The CVCS provides a means of reactor coolant makeup and adjustment of the boric acid concentration. Makeup is added automatically if the level in the volume control tank falls below the preset level. The high-pressure centrifugal charging pumps provided are capable of supplying the required makeup and reactor coolant pump seal injection flow when power is available from either onsite or offsite EPSs. These pumps also serve as high head safety injection pumps. Functional reliability is assured by provision of standby components assuring a safe response to probable modes of failure. Details of system design are included in Sections 6.3 and 9.3 with details of the EPS included in Chapter 8.

3.1.2.34 Residual Heat Removal (Criterion 34)

3.1.2.34.1 Criterion

"A system to remove residual heat shall be provided. The system safety function shall be to transfer fission product decay heat and other residual heat from the reactor core at a rate such that specified acceptable fuel design limits and the design conditions of the reactor coolant pressure boundary are not exceeded.

"Suitable redundancy in components and features, and suitable interconnections, leak detection, and isolation capabilities shall be provided to assure that for onsite electric power system operation (assuming offsite power is not available) and for offsite electric power system operation (assuming onsite power is not available) the system safety function can be accomplished, assuming a single failure."

3.1.2.34.2 Design Conformance

The RHR system is a reliable and preferred means of residual heat removal but not the method used to meet GDC-34. BVPS-2 meets GDC-34 by providing systems to transfer fission product decay heat and other residual heat from the reactor core at a rate within acceptable design limits.

In the event the RHR system is unavailable, qualified safety grade systems are available to perform the function of removing residual

heat from the reactor core for normal, abnormal, and design basis accident conditions. These qualified safety grade systems include ECCS, AFWS, along with the main steam safety valves and the atmospheric dump and residual heat release valves.

Details of the systems' design are in Sections 5.1, 5.4.2, Appendix 5A, 6.3, and 10.4.9.

3.1.2.35 Emergency Core Cooling (Criterion 35)

3.1.2.35.1 Criterion

"A system to provide abundant emergency core cooling shall be provided. The system safety function shall be to transfer heat from the reactor core following any loss of reactor coolant at a rate such that (1) fuel and clad damage that could interfere with continued effective core cooling is prevented and (2) clad metal-water reaction is limited to negligible amounts.

"Suitable redundancy in components and features, and suitable interconnections, leak detection, isolation, and containment capabilities shall be provided to assure that for onsite electric power system operation (assuming offsite power is not available) and for offsite electric power system operation (assuming onsite power is not available) the system safety function can be accomplished, assuming a single failure."

3.1.2.35.2 Design Conformance

An ECCS is provided to cope with any LOCA in the BVPS-2 design basis. Abundant cooling water is available in an emergency to transfer heat from the core at a rate sufficient to maintain the core in a coolable geometry and to assure that clad metal-water reaction is limited to less than 1 percent. Adequate design provisions are made to assure performance of the required safety functions even with a single failure.

Details of the capability of the systems are included in Section 6.3. An evaluation of the adequacy of the system functions is included in Chapter 15. Performance evaluations have been conducted in accordance with 10 CFR 50.46 and Appendix K to 10 CFR 50.

3.1.2.36 Inspection of Emergency Core Cooling System (Criterion 36)

3.1.2.36.1 Criterion

"The emergency core cooling system shall be designed to permit appropriate periodic inspection of important components, such as spray rings in the reactor pressure vessel, water injection nozzles, and piping, to assure the integrity and capability of the system."

3.1.2.36.2 Design Conformance

Design provisions facilitate access to the critical parts of the injection nozzles, pipes, and valves for visual inspection and for nondestructive inspection where such techniques are desirable and appropriate. The design is in accordance with ASME Section XI requirements.

The components outside the containment are accessible for leaktightness inspection during operation of the reactor.

Details of the inspection program for the ECCS are discussed in Sections 6.3, 6.6, and in Chapter 16.

3.1.2.37 Testing of Emergency Core Cooling System (Criterion 37)

3.1.2.37.1 Criterion

"The emergency core cooling system shall be designed to permit appropriate periodic pressure and functional testing to assure (1) the structural and leaktight integrity of its components, (2) the operability and performance of the active components of the system, and (3) the operability of the system as a whole and, under conditions as close to design as practical, the performance of the full operational sequence that brings the system into operation, including operation of applicable portions of the protection system, the transfer between normal and emergency power sources, and the operation of the associated cooling water system."

3.1.2.37.2 Design Conformance

The BVPS-2 design conforms to the guidelines of GDC 37. During appropriate periodic tests, the components of the system located outside the containment are accessible for leaktightness inspection.

Each active component of the ECCS may be individually actuated on the normal power source (or transferred to the emergency power source) at any time during unit operation to demonstrate operability.

Individual ECCS pumps and valves may be tested for proper operation during normal BVPS-2 conditions. Tests may be performed during shutdown to demonstrate proper automatic operation of the ECCS.

These tests, including ASME OM Code requirements are described in Chapters 6, 7, and 9. The switching sequence from normal to emergency power is described in Chapter 8.

Design provisions include special instrumentation, testing, and sampling lines to perform the tests during BVPS-2 shutdown to demonstrate proper automatic operation of the ECCS.

3.1.2.38 Containment Heat Removal (Criterion 38)

3.1.2.38.1 Criterion

"A system to remove heat from the reactor containment shall be provided. The system safety function shall be to reduce rapidly, consistent with the functioning of other associated systems, the containment pressure and temperature following any loss-of-coolant accident and maintain them at acceptably low levels.

"Suitable redundancy in components and features, and suitable interconnections, leak detection, isolation, and containment capabilities shall be provided to assure that for onsite electrical power system operation (assuming offsite power is not available) and for offsite electric power system operation (assuming onsite power is not available) the system safety function can be accomplished, assuming a single failure."

3.1.2.38.2 Design Conformance

The containment depressurization system containment heat removal system conforms to GDC 38 and consists of the following:

1. Two 100-percent capacity recirculation spray subsystems (Section 6.2.2) which remove heat from the containment following a containment isolation phase B (CIB) signal via the recirculation spray heat exchangers.

2. Two 100-percent capacity quench spray subsystems (Section 6.2.2.2.1) are also provided to remove heat from the containment atmosphere.

Each recirculation system and each quench spray subsystem receives power from an independent electrical bus. Each electrical bus is connected to both offsite and onsite power.

Leak detection capabilities are discussed in Section 9.3.3 and Section 3.6B.1. Containment isolation is discussed in Section 6.2.4.

In accordance with the GDC, containment isolation valves provide containment isolation at the penetrations.

3.1.2.39 Inspection of Containment Heat Removal System (Criterion 39)

3.1.2.39.1 Criterion

"The containment heat removal system shall be designed to permit appropriate periodic inspection of important components, such as the torus, sumps, spray nozzles, and piping to assure the integrity and capability of the system."

3.1.2.39.2 Design Conformance

The containment depressurization system is designed to permit appropriate periodic inspection of its components (Section 6.2.2) in accordance with GDC 39.

3.1.2.40 Testing of Containment Heat Removal System (Criterion 40)

3.1.2.40.1 Criterion

"The containment heat removal system shall be designed to permit appropriate periodic pressure and functional testing to assure (1) the structural and leaktight integrity of its components, (2) the operability and performance of the active components of the system, and (3) the operability of the system as a whole, and, under conditions as close to the design as practical, the performance of the full operational sequence that brings the system into operation, including operation of applicable portions of the protection system, the transfer between normal and emergency power sources, and the operation of the associated cooling water system."

3.1.2.40.2 Design Conformance

The containment depressurization system (Section 6.2.2) is designed to permit periodic pressure and functional tests of the system as a whole, and of major components (pumps, valves, control systems, etc.) in accordance with GDC 40. Full flow and initiation tests after installation verify structural and leaktight integrity, operability, and performance of major components and operability of the system as a whole. The containment depressurization tests (Chapter 14) include operability tests of pumps and motor-operated valves every three months as required by the ASME OM Code. Tests of the recirculation spray system (RSS) pumps will be performed at each refueling outage. Inspections of RSS component and piping welds will be performed as required by Inspection Plan B of ASME XI, shown in Table IWB-2412-1 of the ASME XI Code. Periodic activation of the containment depressurization signals ensures operability of the initiation signals and control circuitry ESF system activation signal testing described in Section 7.3.2.2.5.

3.1.2.41 Containment Atmosphere Cleanup (Criterion 41)

3.1.2.41.1 Criterion

"Systems to control fission products, hydrogen, oxygen, and other substances which may be released into the reactor containment shall be provided as necessary to reduce, consistent with the functioning of other associated systems, the concentration and quantity of fission products released to the environment following postulated accidents, and to control the concentration of hydrogen or oxygen and other substances in the containment atmosphere following postulated accidents to assure that containment integrity is maintained."

"Each system shall have suitable redundancy in components and features, and suitable interconnections, leak detection, isolation, and containment capabilities to assure that for onsite electrical power system operation (assuming offsite power is not available) and for offsite electrical power system operation (assuming onsite power is not available) its safety function can be accomplished, assuming a single failure."

3.1.2.41.2 Design Conformance

Systems are provided in accordance with GDC 41 to control hydrogen generated, and fission products released, by a DBA which are the only significant gaseous releases post accident. Containment atmosphere purge capabilities are provided.

Leak detection capability is provided in Section 9.3.3 for liquid released and Section 11.5 for effluent monitoring. Containment isolation provisions are discussed in Section 6.2.4.

3.1.2.42 Inspection of Containment Atmosphere Cleanup Systems (Criterion 42)

3.1.2.42.1 Criterion

"The containment atmosphere cleanup systems shall be designed to permit appropriate periodic inspection of important components, such as filter frames, ducts, and piping to assure the integrity and capability of the systems."

3.1.2.42.2 Design Conformance

Both the post-DBA hydrogen control system (HCS) and the containment spray system are designed to permit appropriate periodic inspection of the important components, as described in Sections 6.2.2.2, 6.5, and 6.6.

3.1.2.43 Testing of Containment Atmosphere Cleanup Systems (Criterion 43)

3.1.2.43.1 Criterion

"The containment atmosphere cleanup systems shall be designed to permit appropriate periodic pressure and functional testing to assure (1) the structural and leaktight integrity of its components, (2) the operability and performance of the active components of the systems such as fans, filters, dampers, pumps, and valves, and (3) the operability of the systems as a whole and, under conditions as close to design as practical, the performance of the full operational sequence that brings the systems into operation, including operation of applicable portions of the protection system, the transfer between normal and emergency power sources, and the operation of associated systems."

3.1.2.43.2 Design Conformance

The containment atmosphere cleanup systems are designed to permit periodic testing of components and systems in accordance with GDC 43 to ensure their complete and reliable functioning during normal operation and in the event of a postulated accident. Specific means are provided for periodic testing of pumps and valves in accordance with the ASME OM Code. Transfer between normal and emergency power sources is accomplished during the emergency power tests as discussed in the Technical Specifications, Chapter 16. Testing of containment atmosphere cleanup systems is discussed in Sections 6.2, 6.5, and 6.6.

3.1.2.44 Cooling Water (Criterion 44)

3.1.2.44.1 Criterion

"A system to transfer heat from structures, systems, and components important to safety, to an ultimate heat sink shall be provided. The system safety function shall be to transfer the combined heat load of these structures, systems, and components under normal operating and accident conditions."

"Suitable redundancy in components and features, and suitable interconnections, leak detection, and isolation capabilities shall be provided to assure that for onsite electric power system operation (assuming offsite power is not available) and for offsite electric power system operation (assuming onsite power is not available) the system safety function can be accomplished, assuming a single failure."

3.1.2.44.2 Design Conformance

The service water system (SWS) and the primary component cooling water system (CCWS) provide heat removal from various structures, systems, and components important to safety and nonsafety systems.

The primary CCWS transfers heat from heat exchangers containing reactor coolant and from auxiliary heat exchangers associated with the primary plant to the SWS. The SWS transfers heat from the primary CCWS, other closed loop cooling systems, and certain individual components important to safety (diesel generator cooling water heat exchangers and charging pump lube oil coolers).

The detail systems designs are described in Sections 9.2.1 and 9.2.2. Suitable redundancy and isolation capabilities are provided to accomplish the system safety function, assuming a single failure.

The Seismic Category I intake structure, shared with BVPS-1, is subdivided so that each of the three service water pumps is separated and protected from floods and missiles. A discussion of BVPS-2 conformance with Regulatory Guide 1.27, "Ultimate Heat Sink for Nuclear Power Plants," is provided in FSAR Section 1.8. The intake for each of these pumps is independent with separate screen and suction arrangements. Two 30-inch, physically separated and protected service water headers in the intake structure provide redundancy. Each header runs underground until it reaches the auxiliary building basement.

In the event of a CIB signal, service water is automatically diverted from the 30-inch component cooling water headers to the two 24-inch headers which supply the recirculation spray heat exchangers. Service water is available at all times for the control room air conditioners, charging pump lube oil coolers, emergency diesel generators, safeguards area air conditioners, and rod control area air conditioners. Redundant Seismic Category I discharge lines are provided to direct the service water from this equipment to the Ohio River.

The recirculation spray heat exchangers and pumps serve to reduce the containment pressure and remove long term heat in the event of a DBA. The cooling water valving of the recirculation spray heat exchangers are automatically opened to allow operation of both 100-percent portions of the recirculation spray system during a DBA.

Two independent standby diesel generators provide emergency onsite power in the event of a loss of normal power. Each generator supplies one train of components essential to the safety-related operations of the cooling systems.

The cooling system safety function is assured with only onsite emergency power available.

Reference Sections

Title	Section
AC Power Systems	8.3.1
Service Water System	9.2.1
Primary Component Cooling Water System	9.2.2.1
Ultimate Heat Sink	9.2.5

3.1.2.45 Inspection of Cooling Water System (Criterion 45)

3.1.2.45.1 Criterion

"The cooling water system shall be designed to permit appropriate periodic inspection of important components, such as heat exchangers and piping, to assure the integrity and capability of the system."

3.1.2.45.2 Design Conformance

The cooling water systems (CWSs) are in continuous use during the life of the unit. Normal operational inspections and monitoring of parameters are carried out in the course of operation. In addition, periodic inspections are conducted during planned outages in accordance with the requirements of ASME Section XI, Code for Inservice Inspection, and 10 CFR 50, Appendix J for containment isolation valves, Type C testing. These inspections meet with the guidelines of GDC 45. Sections 9.2.1 and 9.2.2 discuss CWS designs and testing.

3.1.2.46 Testing of Cooling Water System (Criterion 46)

3.1.2.46.1 Criterion

"The cooling water system shall be designed to permit appropriate periodic pressure and functional testing to assure (1) the structural and leaktight integrity of its components, (2) the operability and performance of the active components of the system, and (3) the operability of the system as a whole and, under conditions as close to design as practical, the performance of the full operational sequence that brings the system into operation for reactor shutdown and for loss-of-coolant accident, including operation of applicable portions of the protection system and the transfer between normal and emergency power sources. "

3.1.2.46.2 Design Conformance

The station service water system and the component cooling water system are in continuous use during the life of the unit. Thus, the

structural and leaktight integrity of the system components, and the operability of the system as a whole are continuously demonstrated. The active components that cannot be tested during normal system operation are tested during shutdown. Specific means are provided for periodic testing pumps during their normal operational mode in compliance with the ASME OM Code. Transfer between normal and emergency power sources is discussed in the Technical Specifications, Chapter 16. The systems are thus designed to allow periodic testing of the operability of the systems as required for operation during a LOCA, reactor shutdown, and/or a loss of unit power. These inspections meeting with guidelines of GDC 46. Testing of the system components is described in detail in Sections 9.2.1 and 9.2.2.

3.1.2.47 Criterion 47

This criterion has not been promulgated by the USNRC.

3.1.2.48 Criterion 48

This criterion has not been promulgated by the USNRC.

3.1.2.49 Criterion 49

This criterion has not been promulgated by the USNRC.

3.1.2.50 Containment Design Basis (Criterion 50)

3.1.2.50.1 Criterion

"The reactor containment structure, including access openings, penetrations, and the containment heat removal system, shall be designed so that the containment structure and its internal compartments can accommodate, without exceeding the design leakage rate and, with sufficient margin, the calculated pressure and temperature conditions resulting from any loss-of-coolant accident. This margin shall reflect consideration of (1) the effects of potential energy sources which have not been included in the determination of the peak conditions, such as energy in steam generators and, as required by 50.44, energy from metal-water and other chemical reactions that may result from degradation but not total failure of emergency core cooling functioning, (2) the limited experience and experimental data available for defining accident phenomena and containment responses, and (3) the conservatism of the calculational model and input parameters."

3.1.2.50.2 Design Conformance

The containment structure, including personnel and equipment hatches, piping and electrical penetrations, and recirculation and QSSs, is designed such that the containment structure's design leakage rate is not exceeded under post-LOCA conditions. In addition, the containment structure is designed to withstand, by a sufficient

margin, those pressure and temperature conditions resulting from a DBA. This margin reflects all potential energy sources not included in the conservative calculation of peak conditions.

Reference Sections

Title	Section
Concrete Containment	3.8.1
Containment Functional Design	6.2.1
Quench Spray System	6.2.2.2.1
Recirculation Spray System	6.2.2.2.2

3.1.2.51 Fracture Prevention of Containment Pressure Boundary (Criterion 51)

3.1.2.51.1 Criterion

"The reactor containment boundary shall be designed with sufficient margin to assure that under operating, maintenance, testing, and postulated accident conditions, (1) its ferritic materials behave in a nonbrittle manner, and (2) the probability of rapidly propagating fracture is minimized. The design shall reflect consideration of service temperatures and other conditions of the containment boundary material during operation, maintenance, testing, and postulated accident conditions, and the uncertainties in determining (1) material properties, (2) residual, steady-state, and transient stresses, and (3) size of flaws."

3.1.2.51.2 Design Conformance

The design of the reactor containment pressure boundary is in conformance with General Design Criterion 51, as addressed in the DLC letter (DLC 1983).

3.1.2.52 Capability for Containment Leakage Rate Testing (Criterion 52)

3.1.2.52.1 Criterion

"The reactor containment and other equipment which may be subjected to containment test conditions shall be designed so that periodic integrated leakage rate testing can be conducted at containment design pressure."

3.1.2.52.2 Design Conformance

The containment structure and safety-related equipment which will be subjected to the containment test conditions are designed so that the periodic integrated leakage rate testing can be conducted at calculated peak containment pressure, as per Appendix J of 10 CFR 50, Reactor Containment Leakage Testing for Water Cooled Power Reactors.

Reference Section

Title	Section
Containment Functional Design	6.2.1

3.1.2.53 Provisions for Containment Testing and Inspection (Criterion-53)

3.1.2.53.1 Criterion

"The reactor containment shall be designed to permit (1) appropriate periodic inspection of all important areas, such as penetrations, (2) an appropriate surveillance program, and (3) periodic testing at containment design pressure of the leaktightness of penetrations which have resilient seals and expansion bellows."

3.1.2.53.2 Design Conformance

The design of the reactor containment provides for access to all important areas for periodic inspection. The reactor containment design allows local testing of the liner seam welds, penetration liner welds, and the electrical penetrations.

Personnel and equipment access hatches have also been designed to allow free volume and local periodic testing of access volumes and resilient seals.

Piping systems penetrating the containment (Type C as defined by Appendix J of 10 CFR 50) have been designed to allow local periodic testing of containment isolation valves.

Reference Sections

Title	Section
Containment Functional Design	6.2.1
Containment Leakage Testing	6.2.6

3.1.2.54 Piping Systems Penetrating Containment (Criterion 54)

3.1.2.54.1 Criterion

"Piping systems penetrating primary reactor containment shall be provided with leak detection, isolation, and containment capabilities having redundancy, reliability, and performance capabilities which reflect the importance to safety of isolating these piping systems. Such piping systems shall be designed with a capability to test periodically the operability of the isolation valves and associated apparatus and to determine if valve leakage is within acceptable limits."

3.1.2.54.2 Design Conformance

Piping systems penetrating the reactor containment conform with GDC 54 as described in the design bases set forth for the containment isolation system (Section 6.2.4). This ensures redundancy, reliability, and performance capabilities which reflect the importance to safety of isolating the piping systems. Special test connections, where required, ensure the capability to determine if individual isolation valve leakage is within acceptable limits.

3.1.2.55 Reactor Coolant Pressure Boundary Penetrating Containment (Criterion 55)

3.1.2.55.1 Criterion

"Each line that is part of the reactor coolant pressure boundary and that penetrates primary reactor containment shall be provided with containment isolation valves as follows, unless it can be demonstrated that the containment isolation provisions for a specific class of lines, such as instrument lines, are acceptable on some other defined basis:

1. One locked closed isolation valve inside and one locked closed isolation valve outside containment; or

2. One automatic isolation valve inside and one locked closed isolation valve outside containment; or

3. One locked closed isolation valve inside and one automatic isolation valve outside containment. A simple check valve may not be used as the automatic isolation valve outside containment; or

4. One automatic isolation valve inside and one automatic isolation valve outside containment. A simple check valve may not be used as the automatic isolation valve outside containment.

"Isolation valves outside containment shall be located as close to containment as practical and upon loss of actuating power, automatic isolation valves shall be designed to take the position that provides greater safety."

"Other appropriate requirements to minimize the probability or consequences of an accidental rupture of these lines or of lines connected to them shall be provided as necessary to assure adequate safety. Determination of the appropriateness of these requirements, such as higher quality in design, fabrication, and testing, additional provisions for inservice inspection, protection against more severe natural phenomena, and additional isolation valves and containment, shall include consideration of the population density, use characteristics, and physical characteristics of the site environs."

3.1.2.55.2 Design Conformance

The containment isolation arrangements for all lines that are part of the RCPB and that penetrate the primary reactor containment conform with the design bases listed in Section 6.2.4. These design bases require that one of the arrangements listed in items 1 through 4 of this criterion be utilized, unless other provisions for containment isolation are acceptable on some other defined basis (Section 6.2.4).

Table 6.2-60 lists the specific GDC met by piping systems penetrating containment, where locked closed, administratively-controlled, normally-closed, manually-operated valves are provided.

The requirements of GDC 55 are met, with the exception of the following penetrations in the safety injection system which are excepted from GDC 55:

1. X-61 (low-head safety injection to hot legs),

2. X-7, X-17 (high-head safety injection to hot legs),

3. X-60, X-62 (low-head safety injection to cold leg),

4. X-34 (high-head safety injection to cold leg),

5. X-113 (high-head safety injection to cold leg).

The bases and justification for these exceptions are further described in Section 6.2.4.

3.1.2.56 Primary Containment Isolation (Criterion 56)

3.1.2.56.1 Criterion

"Each line that connects directly to the containment atmosphere and penetrates primary reactor containment shall be provided with containment isolation valves as follows, unless it can be demonstrated that the containment isolation provisions for a specific class of lines, such as instrument lines, are acceptable on some other defined basis:

1. One locked closed isolation valve inside and one locked closed isolation valve outside containment; or

2. One automatic isolation valve inside and one locked closed isolation valve outside containment; or

3. One locked closed isolation valve inside and one automatic isolation valve outside containment. A simple check valve may not be used as the automatic isolation valve outside containment; or

4. One automatic isolation valve inside and one automatic isolation valve outside containment. A simple check valve may not be used as the automatic isolation valve outside containment.

"Isolation valves outside containment shall be located as close to the containment as practical and upon loss of actuating power, automatic isolation valves shall be designed to take the position that provides greater safety."

3.1.2.56.2 Design Conformance

The containment isolation arrangements for all lines that connect directly to the containment atmosphere and penetrate primary reactor containment conform with the design bases listed in Section 6.2.4. Unless an acceptable, or otherwise defined, basis is prescribed (Section 6.2.4), these design bases require that one of the arrangements listed in items 1 through 4 of this criterion be utilized.

Table 6.2-60 lists the specific GDC met by piping systems penetrating containment, where locked closed, administratively-controlled, normally-closed, manually-operated valves are provided.

The requirements of GDC 56 are met except for the following penetrations:

1. Recirculation spray system - X-66, X-67, X-68, X-69 (recirculation spray pump suction from containment sump),

2. Containment leakage monitoring system - X-55b, X-57b, X-97a, X-105c, X-105d (containment leakage monitoring open taps), and

3. Containment vacuum system - X-92, X-93 (containment vacuum pump suction penetrations are shared with the post-DBA HCS).

4. Post DBA hydrogen control system - X-87, X-88 (hydrogen recombine return lines).

The bases and justification for these exceptions are further described in Section 6.2.4.

3.1.2.57 Closed System Isolation Valves (Criterion 57)

3.1.2.57.1 Criterion

"Each line that penetrates primary reactor containment and is neither part of the reactor coolant pressure boundary nor connected directly to the containment atmosphere shall have at least one containment isolation valve which shall be either automatic, or locked closed, or capable of remote manual operation. This valve shall be outside containment and located as close to the containment as practical. A simple check valve may not be used as the automatic isolation valve."

3.1.2.57.2 Design Conformance

All lines connected to closed systems are provided with at least one isolation valve on the outside of the containment (Section 6.2.4).

The containment isolation arrangements for all lines that penetrate reactor containment and are neither part of the RCPB nor connected directly to the containment atmosphere conform with the design bases listed in Section 6.2.4. These design bases require that:

1. The outside isolation valve for such closed systems is either automatic, or normally-closed, administratively-controlled, manually-operated, or for normally open lines, capable of remote manual operation,

2. This valve is located as close to the containment as practical,

3. Piping associated with the CIS is designed, fabricated, and tested in accordance with the requirements of

ASME Section III, Class 2, as applicable (Sections 3.9B.3 and 3.9N.3), and

4. Simple check valves are not used as the automatic isolation valve.

The following penetrations meeting the requirements of GDC 57, however, receive a signal for automatic closure other than from containment isolation:

1. Main steam system - X-73, X-74, X-75,

2. Feedwater system - X-76, X-77, X-78,

3. Steam generator blowdown system - X-39, X-40, X-41, and

4. Auxiliary feedwater system - X-79, X-80, X-83.

The bases and justification for these penetrations are further described in Section 6.2.4.

3.1.2.58 Criterion 58

This criterion has not been promulgated by the USNRC.

3.1.2.59 Criterion 59

This criterion has not been promulgated by the USNRC.

3.1.2.60 Control of Releases of Radioactive Materials to the Environment (Criterion 60)

3.1.2.60.1 Criterion

"The nuclear power unit design shall include means to control suitably the release of radioactive materials in gaseous and liquid effluents and to handle radioactive solid wastes produced during normal reactor operation, including anticipated operational occurrences. Sufficient holdup capacity shall be provided for retention of gaseous and liquid effluents containing radioactive materials, particularly where unfavorable site environmental conditions can be expected to impose unusual operational limitations upon the release of such effluents to the environment."

3.1.2.60.2 Design Conformance

In all cases, the design for radioactivity control is based on the following which comply with the guidelines of GDC 60.

1. 10 CFR 20 and 10 CFR 50 requirements for normal operations and for any transient situation that might reasonably be anticipated to occur, and

2. 10 CFR 50.67 dose limit guidelines for potential accidents of exceedingly low probability of occurrence (Chapter 15).

Radioactive waste systems are described in Chapter 11. The radiation monitoring system (RMS) is described in Sections 11.5 and 12.3.4. Waste gas effluents are controlled by charcoal delay beds and, when necessary, waste gases are held in decay tanks until their activity and existing environmental conditions permit their discharge within 10 CFR 20 and 10 CFR 50 requirements. In addition, waste gas effluents are monitored prior to discharge for radioactivity and rate of flow (Section 12.3.4). Section 11.3.4 describes the results of a rupture of a gas waste storage tank and verifies that the applicable release limits are not exceeded.

Beaver Valley Power Station - Unit 2 liquid waste effluents (Section 11.2) are controlled by batch processing of station radioactive liquids, if necessary, in either BVPS-1 or BVPS-2, sampling before discharge, controlling the rate of release, and prevention of inadvertent tank discharge. Liquid effluents are monitored for radioactivity and rate of flow. Liquid waste disposal system tankage, BVPS-2 steam generator blowdown evaporator capacity, and BVPS-1 liquid waste evaporator capacity are sufficient to handle any expected transient in liquid waste volume.

Station solid wastes (Section 11.4) are prepared in batches in 55-gallon drums and other approved packages for offsite disposal by approved contractors. Solid wastes are shielded for shipment, when necessary, to meet federal regulations.

3.1.2.61 Fuel Storage and Handling and Radioactivity Control (Criterion 61)

3.1.2.61.1 Criterion

"The fuel storage and handling, radioactive waste, and other systems which may contain radioactivity shall be designed to assure adequate safety under normal and postulated accident conditions. These systems shall be designed (1) with a capability to permit appropriate periodic inspection and testing of components important to safety, (2) with suitable shielding for radiation protection, (3) with appropriate containment, confinement, and filtering systems, (4) with a residual heat removal capability having reliability and testability that reflects the importance to safety of decay heat and other residual heat removal, and (5) to prevent significant reduction in fuel storage coolant inventory under accident conditions."

3.1.2.61.2 Design Conformance

Beaver Valley Power Station - Unit 2 design conforms to the guidelines of GDC 61.

Safety-related components of the systems that contain radioactivity and fuel storage systems are designed to allow periodic inspection and testing.

Process radiation monitors and flow measuring equipment are provided for surveillance of various station waste process streams. In addition, these systems are designed to protect the health of station operating personnel, and to limit discharge of radioactive materials from the station so as not to exceed the limits of 10 CFR 20. The waste disposal systems are discussed in detail in Chapter 11.

The spent fuel storage pool is designed to meet the requirements of 10 CFR 20, by shielding operating personnel from radiation during fuel transfer and spent fuel storage. Work areas adjacent to the spent fuel pool transfer canal wall are shielded to allow personnel access during actual fuel transfers. The spent fuel pool is permanently flooded with water during all normal operations to ensure a dose rate above the pool to operating personnel of no more than 15 mRem/hr. Fuel handling shielding is discussed in Section 12.3.

The refueling cavity above the reactor vessel is flooded during refueling such that the dose rate is less than 15 mRem/hr at the water surface.

To avoid significant radioactivity releases, the spent fuel handling system is designed to preclude gross mechanical failures. Floor and trench drain systems provide backup by collecting leakage which might occur. Fuel storage pool design ensures that a significant amount of fuel storage coolant is not lost under accident conditions. Decay heat from spent fuel is dissipated in the storage pool water and subsequently removed by a cooling system (Section 9.1.3). Makeup water is provided by means of a connection from the primary grade water system (Section 9.2.8). The SWS provides a safety related source of makeup. Radioactive gases, which may leak from spent fuel, are collected by the supplementary leak collection and release system described in Section 6.5.3.2 and the vent and drain system described in Section 9.3.3. All discharges from these systems are monitored. These monitoring systems are discussed in Section 12.3.

3.1.2.62 Prevention of Criticality in Fuel Storage and Handling (Criterion 62)

3.1.2.62.1 Criterion

"Criticality in the fuel storage and handling system shall be prevented by physical systems or processes, preferably by use of geometrically safe configurations."

3.1.2.62.2 Design Conformance

The new and spent fuel storage racks are designed in accordance with GDC 62 and NUREG-0800, Sections 9.1.1 and 9.1.2. The new fuel storage rack accommodates 1/3 of a core plus 17 spare assemblies. The spent fuel storage pool accommodates the spent fuel rack and the required spent fuel shipping cask area.

The spent fuel racks are arranged so that the spacing between fuel elements cannot be less than that prescribed. Borated water is maintained in the spent fuel pool. Even if fully flooded with unborated water, the spacing and fuel storage configurations ensure $K_{eff} < 1.0$. Spent fuel rack design and criticality prevention are fully discussed in Section 9.1.2.

The new fuel assemblies are stored dry in a steel and concrete structure within the fuel building. They are arranged vertically in racks in parallel rows. The steel rack construction prevents possible criticality by requiring that the spacing between fuel elements be not less than that prescribed. The new fuel rack design and criticality prevention is discussed in detail in Section 9.1.1.

Safeguards are provided during handling so that the consequences of the hypothetical worst-case accident meet 10 CFR 50.67 guidelines. Chapter 15 provides a complete description of this worst-case accident.

3.1.2.63 Monitoring Fuel and Waste Storage (Criterion 63)

3.1.2.63.1 Criterion

"Appropriate systems shall be provided in fuel storage and radioactive waste systems and associated handling areas (1) to detect conditions that may result in loss of residual heat removal capability and excessive radiation levels, and (2) to initiate appropriate safety actions."

3.1.2.63.2 Design Conformance

The BVPS-2 design conforms to GDC 63 as follows: Gamma radiation levels in the containment and fuel storage areas are continuously monitored as described in Section 11.5. These monitors provide an audible alarm at the initiating detector indicating an unsafe condition. The fuel pool water temperature is continuously monitored. The temperature is displayed in the main control room where an audible alarm sounds if the water temperature increases above a preset level. Continuous surveillance of radiation levels in the waste storage and handling areas is maintained by ventilation-duct-mounted radiation detectors described in Section 11.5.

Radiation levels in excess of preset levels initiate audible and visible alarms locally and in the control room.

Radiological control procedures, including appropriate radiation control surveys, are initiated as necessary to decontaminate affected areas. Chapter 12 provides a more detailed description of emergency procedures.

3.1.2.64 Monitoring Radioactivity Releases (Criterion 64)

3.1.2.64.1 Criterion

"Means shall be provided for monitoring the reactor containment atmosphere, spaces containing components for recirculation of loss-of-coolant accident fluids, effluent discharge paths, and the plant environs for radioactivity that may be released from normal operations, including anticipated operational occurrences, and from postulated accident conditions."

3.1.2.64.2 Design Conformance

The containment air particulate and gas monitor monitors the containment atmosphere during normal unit operations and accident conditions as required by GDC 64. During accident conditions, samples of the containment atmosphere provide data on existing airborne radioactivity concentrations within the containment as described in Sections 11.5 and 12.3.4. The safeguards areas are monitored by the ventilation vent air particulate and gas monitors. Radioactivity levels in the normal facility radioactive effluent discharge paths and in the environs are continually monitored during normal and accident conditions by the unit radiation monitoring system (Section 11.5) and by the environmental radiological safety program for BVPS-2.

3.1.3 References for Section 3.1

Pellini, W. S. and Loss, F. J. 1969. Integration of Metallurgical and Fracture Mechanics Concepts of Transition Temperature Factors Relating to Fracture-Safe Design for Structural Steel. NRL Report 6900, April 1969.

USNRC 1981. Standard Review Plan for the Review of Safety Analysis Reports for Nuclear Power Plants (formerly issued as NUREG 75/087). NUREG-0800.

DLC 1983. Duquesne Light Company Letter 2NRC-3-087, dated November 14, 1983, from E. J. Woolever to H. R. Denton, USNRC.

3.2 CLASSIFICATION OF STRUCTURES, COMPONENTS, AND SYSTEMS

3.2.1 Seismic Classification

3.2.1.1 Nuclear Steam Supply System Components

Section 3.2.2 identifies the system, based on the guidelines of Regulatory Guide 1.29, for classifying fluid system components. Based on evaluation of seismic requirements, Westinghouse applies a rule that each component classified as Safety Class 1, 2, or 3 shall be qualified to remain functional in the event of the safe shutdown earthquake (SSE). This rule applies except when all the conditions listed as follows are met. Portions of systems required to perform the same safety function as required of a safety class component which is a part of that system shall be likewise qualified or granted exemption. The following four conditions must be met for exemption:

1. Failure would not directly cause an American Nuclear Society (ANS) Condition III or IV event (as defined in ANSI N18.2-1973).

2. There is no safety function to mitigate, nor could failure prevent mitigation of, the consequences of an ANS Condition III or IV event.

3. Failure during or following any ANS Condition II event would result in consequences no more severe than allowed for an ANS Condition III event.

4. Routine post-seismic procedures would disclose any loss of the safety function.

The following lines of reasoning apply when using the above conditions for exemption and the safety class categories to determine if a component must be seismically qualified.

1. All Safety Class 1 components must be seismically qualified because a failure of any one can directly cause an ANS Condition III or IV event, thus failing the first condition.

2. Safety Class 2 components that are a part of the reactor coolant pressure boundary must be seismically qualified because the failure of those components due to the seismic event could directly result in an ANS Condition III or IV event.

3. All other Safety Class 2 components must also be seismically qualified because they are required to mitigate, or their failure could prevent mitigation of, the consequences of an ANS Condition III or IV event, thus failing the second condition for exemption.

4. Components placed in Safety Class 3 whose failure would result in release to the environment of radioactive gasses normally required to be held for decay (ANSI N18.2, Paragraph 2.2.3(l)), or which control outside the containment airborne radioactivity released (ANSI N18.2, Paragraph 2.2.3(3)), or which remove decay heat from spent fuel (ANSI N18.2, Paragraph 2.2.3(4)), will always meet conditions 1, 2, and 4 for granting the seismic design exemption.

   Thus, they need not be seismically qualified if they meet condition 3 for granting the seismic design exemption. Release of radioactive material due to ANS Condition III incidents may exceed guidelines of 10 CFR 20, Standards for Protection Against Radiation, but shall not be sufficient to interrupt or restrict public use of those areas beyond the exclusion radius.

5. Components placed in Safety Class 3 which provide or support any safety system function (ANSI N18.2, Paragraph 2.2.3(2)), must be seismically qualified for the same reason as given in item 3 (above) for ANS Condition III or IV events.

6. The NSSS components that are non-nuclear safety (NNS) class are classified Seismic Category II, as described in Sections 3.2.1.2 and 3.2.2.2.

3.2.1.2 Balance of Plant Components

Each component required to mitigate the consequences of an accident, ANS Condition IV event (as defined in ANSI N18.2), is classified Seismic Category I. As interpreted in Section 1.8, the seismic design classification of structures, systems, and components is in agreement with Regulatory Guide 1.29 and with Regulatory Guide 1.143, as applicable to radwaste handling systems. In addition, all components classified as Safety Class 1, 2, or 3 are designated Seismic Category I. Seismic Category I structures, systems, and components are designed to remain functional in the event of the SSE. All Seismic Category I components, systems, and structures are designed and constructed to Quality Assurance (QA) Category I requirements. QA categories are described in Section 3.2.3. QA Category I and Seismic Category I systems and components are shown in Table 3.2-1. QA Category I and Seismic Category I structures are shown in Table 3.2-2.

A Seismic Category II classification is identified for those portions of structures, systems, and components which are not required to perform safety functions but whose failure, including becoming a gravity missile, could adversely affect safety-related, Seismic Category I components. These structures, systems, or components shall either be seismically designed, located to preclude interactions, further restrained, structurally upgraded, or provenincapable to affecting safety. The items are designated non-nuclear safety and either QA Category II or III based on their function as defined in Section 3.2.2.3. A Seismic Category II classification is applied to the structures housing radwaste components, as defined in Regulatory Guide 1.143. A Seismic Category II designation is applied to those portions of the radwaste systems and components which are

specific radwaste equipment classifications and their seismic design are described in Sections 11.2, 11.3, and 11.4, and structure designs are described in Sections 3.7B.2.8 and 3.8.3.

Seismic Category I design requirements extend to the first seismic restraint beyond the seismic boundary and include the interface portion of the boundary itself.

For example, for piping systems, the isolation valve which forms the boundary between Seismic Category I and the nonseismic portions is designed to Seismic Category I requirements. The piping from the valve, including the first seismic restraint beyond the valve, is seismically designed in the same manner as the Seismic Category I portion; however, since the piping is not required to be ASME III, Safety Class 1, 2, or 3, this part of the system is not designated Seismic Category I. This design exceeds Seismic Category II requirements for the piping between the isolation valve and the first restraint.

By this means, the Seismic Category I boundary is defined with respect to functional capability in the event of a safe shutdown earthquake, and the interfacing portions are designed to ensure the integrity of the boundary.

3.2.2 System Quality Group Classifications

3.2.2.1 General

Fluid system components are classified in accordance with Regulatory Guide 1.26 in general, and Regulatory Guide 1.143 in particular, for radwaste handling systems. The criteria for classifying Safety Class 1 systems is also based on 10 CFR 50.55a as referenced in Regulatory Guide 1.26. Table 3.2-1 lists the safety classes of all plant components which are either Safety Class 1, 2, or 3. The classification of piping, tubing, and valves, and interfaces from one safety class to another are shown on the individual system piping and instrumentation diagrams identified on Table 3.2-3. Classification of structures is identified in Table 3.2-2.

3.2.2.2 Safety Class Definitions

Components are classified as Safety Class 1, Safety Class 2, Safety Class 3, and NNS class in accordance with their importance to nuclear safety. These safety classes correspond to the "Group" described in Regulatory Guide 1.26 as follows: Safety Class 1 is equivalent to "Group A," Safety Class 2 to "Group B," Safety Class 3 to "Group C," and NNS to "Group D." The NNS Category is also applied to those components required for reliable power generation. This order of importance, as established by the assigned safety class, is applied to the design, materials, manufacture or fabrication, assembly, erection, construction, and operation of the components. A single system may have components in more than one safety class.

The definitions of safety classes listed as follows apply to fluid pressure-boundary components. The reactor containment design and applicable codes are described in Section 3.8. Supports that have a nuclear safety function shall be the same safety class as the components that they support.

3.2.2.2.1 Safety Class 1

Safety Class 1 applies to components whose failure could cause an ANS Condition III or Condition IV loss of reactor coolant. (ANS Condition III occurrences include incidents which may occur during the lifetime of a particular plant. ANS Condition IV occurrences are faults that are not expected to occur, but are postulated because their consequences would include the potential for the release of significant amounts of radioactive material. ANS Condition IV faults are the most severe which must be designed against, and thus represent the limiting design case.)

Reactor coolant pressure boundary components are also designated Safety Class 1 if their failure during normal operation would prevent orderly reactor shutdown, assuming makeup coolant is available from normally operating systems only.

3.2.2.2.2 Safety Class 2

Safety Class 2 applies to the following:

1. The reactor coolant pressure boundary components not in Safety Class 1.

2. Safety systems that are necessary to remove heat directly from the reactor or reactor containment, or to circulate reactor coolant for any safety system purpose. (A safety system, in this context, is any system that is necessary to shut down the reactor, cool the core, cool another safety system, or, after an accident, cool the reactor containment. Furthermore, a safety system is any system that contains, controls, or reduces radioactivity released in an accident. Only those portions of a system that are designed primarily to accomplish one of the previous functions, or the failure of which could prevent accomplishing one of the previously mentioned functions, are included.)

3. Portions of the containment atmosphere purification and cleanup systems used to clean up the containment atmosphere by reducing the radioactivity present in the leakage from the containment structure. These components are located inside the containment structure or serve as an extension of the containment structure.

4. Portions of the main steam system, feedwater system and auxiliary feedwater system (AFWS) extending from and including the secondary side of the steam generator up to and including the outermost containment isolation valves. Isolation valves may include stop check valves, check valves, pressure relief valves, and safety valves.

5. Systems required to control hydrogen accumulation inside the containment.

6. Portions of the reactor coolant auxiliary systems that form a reactor coolant letdown and makeup loop.

3.2.2.2.3 Safety Class 3

Safety Class 3 applies to those components, not in Safety Class 1 or Safety Class 2, whose failure would result in release to the environment of radioactive gases normally required to be held for decay.

This safety class also applies to those components, not in Safety Classes 1 or 2, that are necessary to:

1. Provide or support any safety system function.

2. Provide reactor coolant boric acid makeup for reactivity control.

3. Control airborne radioactivity released outside the containment.

4. Remove decay heat from spent fuel.

5. The portion of the AFWS which is not Safety Class 2.

3.2.2.2.4 Non-Nuclear Safety

Non-nuclear (NNS) safety applies to those portions of the nuclear power plant not covered by Safety Classes 1, 2, or 3 that can influence safe normal operation or that may contain radioactive fluids. Non-nuclear safety components shall be designed to applicable industry codes and standards. Non-nuclear safety components may be designed to Quality Assurance (QA) Category II or III, and Seismic Category II criteria, either due to their function in a radwaste handling system or, as described in the following paragraph, to protect other safety-related components.

Where practical, plant design provides physical separation or barriers between NNS and safety-related components. In those areas where the failure of NNS components could affect safety-related components, other measures, as discussed in Section 3.2.1.2, shall be taken to preclude damage by NNS components to the safety-related components. For example, NNS piping in these areas is seismically

designed to Seismic Category II and QA Category II or III requirements.

3.2.2.3 Quality Assurance Categories

The following structures, systems, and components are classified as QA Category I:

1. Plant structures, systems, and components whose failure or malfunction could cause a release of radioactivity that would exceed design criteria.

2. Structures, systems, and components that are vital for a safe shutdown of the plant and for the removal of decay and sensible heat.

3. Equipment which is necessary to mitigate consequences to the public of a postulated accident.

All major QA Category I components are listed in Table 3.2-1.

A QA Category II classification is applied to those plant systems, portions of systems, structures and equipment that are not essential for a safe shutdown, but are essential for reliable generation of electric power. A QA Category II designation is also applied to those systems and components which contain radioactive materials but whose failure would not prejudice public safety. See also Section 1.8, BVPS-2 position on Regulatory Guide 1.143 for exceptions to the Regulatory Guide requirements for radwaste QA programs. This QA Category II classification ensures that the design, manufacture, procurement, storage, and handling, etc., are of a high quality to assure that the design requirements are met.

A QA Category III classification is applied to those plant systems or portions of systems, structures, and equipment which are not essential for a safe shutdown or the reliable generation of electric power.

3.2.2.4 Other Classification Systems

3.2.2.4.1 ASME Code Classes

ASME Code Classes 1, 2, and 3 are used in the ASME Boiler and Pressure Vessel Code, Section III (Nuclear Power Plant Components) and are referred to in this FSAR as ASME III, Classes 1, 2, and 3. Components are purchased with the objective of full compliance with the requirements of ASME III and its addenda in accordance with 10 CFR 50.55a. With regard to pumps, valves, piping, tanks, and pressure vessels, there is a direct one-for-one correlation between Code Classes 1, 2, and 3 and Safety Classes 1, 2, and 3 (Section 3.2.2).

Specific code editions and addenda used for pressure vessels, piping, pumps, and valves that are part of the reactor coolant pressure boundary are in accordance with the requirements of 10 CFR 50.55a.

Piping, tanks, heat exchangers, and miscellaneous equipment for safety-related ASME III systems are purchased in accordance with the ASME III Code Edition/Addenda indicated in the ASME Code Baseline Document. The basis for establishment of acceptable ASME III and ASME XI Code/Edition/Code Cases is 10 CFR 50.55a rules and limitations, referenced Regulatory Guides 1.84 and 1.85, and the specific Design Specifications utilized for ASME III components and piping.

Where Code Cases are utilized, which are not included in the issue/revision of Regulatory Guides 1.84 and 1.85 referenced in the FSAR, they will be specifically identified in the ASME Code Baseline Document.

3.2.2.4.2 Electrical/Control Classification Systems

Class 1E electric systems are defined as those systems that provide the electric power used to shut down the reactor and limit the release of radioactive material during and following a design basis accident, (postulated events used in the design to establish the performance requirements of the structures and systems as described in IEEE Standards 308.1974). All Class 1E systems are QA Category I and Seismic Category I. The designs of Class 1E control and electrical systems are in accordance with Regulatory Guide 1.32 as described in Chapters 7 and 8, respectively.

All other control and electrical systems are designated non-Class 1E. Their design is in accordance with applicable design codes as described in Chapters 7 and 8. These non-Class 1E electrical systems may be used to power those functions for which a highly reliable power source is required but for which a Class 1E classification is not necessary.

3.2.3 Tabulation of Codes and Classifications

Tables 3.2-1 and 3.2-2 identify major QA and Seismic Category I structures and components and their locations. These tables also provide the following information:

1. Safety classes,
2. Design codes,
3. Missile protection design criteria (including tornado protection), and
4. Flood design criteria.

Tables for Section 3.2

TABLE 3.2-1

QUALITY ASSURANCE CATEGORY I AND SEISMIC CATEGORY I SYSTEMS AND COMPONENTS

Item/Mark No.[16]	Location[1]	Safety Class	Code or Standard[15]	Missile Protection[2]	Flood Protection[3,4]	Remarks
Fluid Systems Components						
Reactor Coolant System (Chapter 5)						
Reactor vessel/2RCS*REV21	CS	1	ASME III	PS	PAG, PBG	
Full-length CRDM housing (Section 3.9N.4)	CS	1	ASME III	PS	PAG	
CRDM head adapter plugs	CS	1	ASME III	PS	PAG	
Steam generator/2RCS*SG21A,B,C						
(tube side)	CS	1	ASME III	PS	PAG	
(shell side)	CS	2	ASME III	PS	PAG[5]	
Pressurizer/2RCS*PRE21	CS	1	ASME III	PS	PAG[6]	
Reactor coolant hot and cold leg piping, fittings, and fabrication	CS	1	ASME III	PS	PAG	Refer to NOTES for safety class for other piping and associated valves in the reactor coolant system and other auxiliary systems[7]
Eight-inch bypass piping	CS	1	ASME III	PS	PAG	
Surge pipe, fittings, and fabrication	CS	1	ASME III	PS	PAG	
Crossover leg piping, fittings, and fabrication	CS	1	ASME III	PS	PBG	
Reactor coolant thermowell	CS	1	ASME III	PS	PAG	
Reactor coolant stop valves	CS	1	ASME III	PS	PAG	

TABLE 3.2-1 (Cont)

Item/Mark No.[16]	Location[1]	Safety Class	Code or Standard[15]	Missile Protection[2]	Flood Protection[3,4]	Remarks
Pressurizer safety valves	CS	1	ASME III	PS	PAG	
Power-operated relief valves (PORV)	CS	1	ASME III	PS	PAG	
PORV block valves	CS	1	ASME III	PS	PAG	
Reactor vessel head letdown isolation valves	CS	1	ASME III Class 1E	PS	PAG	
Reactor vessel head letdown throttling valves	CS	2	ASME III Class 1E	PS	PAG	
Valves of Safety Class 1 to Safety Class 2 interface	CS	1	ASME III Class 1E	PS	PAG, PBG	
Reactor coolant pump/2RCS*P21A,B,C	CS			PS	PBG	
Reactor coolant pump casing		1	ASME III			
Main flange		1	ASME III			
Thermal barrier		1	ASME III			
Thermal barrier heat exchanger		1	ASME III			
No. 1 seal housing		1	ASME III			
No. 2 seal housing		2	ASME III			
Pressure retaining bolting		1	ASME III			
Reactor coolant pump motor			NEMA MG1			
Motor rotor		2	[8]			
Motor shaft		1	[8]			
Shaft coupling		1	[8]			
Spool piece		2	[8]			
Flywheel		1	[8]			
Bearing (motor upper thrust)		2	[8]			

TABLE 3.2-1 (Cont)

Item/Mark No.[16]	Location[1]	Safety Class	Code or Standard[15]	Missile Protection[2]	Flood Protection[3,4]	Remarks
Motor bolting		2	[8]			Applies only to bolting involved with coastdown function
Motor stand		2	[8]			
Motor frame		2	[8]			
Upper oil reservoir (UOR) UOR cooling coil		3 3	No Code ASME III			
Lower oil reservoir (LOR) LOR cooling coil Lube-oil piping		3 3 3	No Code ASME III		[10]	
Instrumentation and controls required to perform a safety function	CS, CB	NA[17] [20]	[9]	PS	PAG, PBG	
Safety Injection System (Section 6.3)						
LHSI pumps and motors/2SIS*P21A, B	SA	2	ASME III Class 1E	PS	PBG	Refer to NOTES (10, 11, 12, 13) if applicable
Safety injection accumulators/ 2SIS*TK21A, B, C	CS	2	ASME III	PS	PBG	
Piping and valves, including valve operators, required to perform a safety function	SA, CS, AB, Y	1, 2	ASME III Class 1E	PS	PAG, PBG	Class 1 components part of reactor coolant pressure boundary
Instrumentation and controls required to perform a safety function	SA, CS, AB, CB	N/A[17] [20]	[9]	PS	PAG, PBG	
Gaseous nitrogen system (Section 9.5.9)						
SI accumulator vent lines - piping and valves, including valve operators required to perform a safety function	CS	2	ASME III Class 1E	PS	PBG	
Instrumentation and controls required to perform a safety function	CS, CV, CB	N/A[17] [20]	[9]	PS	PBG	

TABLE 3.2-1 (Cont)

Item/Mark No.[16]	Location[1]	Safety Class	Code or Standard[15]	Missile Protection[2]	Flood Protection[3,4]	Remarks
Residual Heat Removal System (Section 5.4.7)						
RHR pumps and motors/ 2RHS*P21A, B	CS	2	ASME III	PS	PBG	Includes seal cooler as part of pump. Refer to NOTES if [10, 11, 12, 13] applicable
RHR pump coolers 2RHS*E22A, B						
RHR heat exchangers/ 2RHS*E21A, B	CS			PS	PBG	[12]
(shell side)		3	ASME III			
(tube side)		2	ASME III			
Piping and valves, including valve operators, required to perform a safety function	CS	1, 2	ASME III Class 1E	PS	PBG	Class 1 components part of reactor coolant pressure boundary
Instrumentation and controls required to perform a safety function	CS, CB	NA[17] [20]	[9]	PS	PBG, PAG	Includes only pump controls and instrumentation and controls for motor- operated valves to maintain reactor coolant pressure boundary
Chemical And Volume Control System (Section 9.3.4)						
Volume control tank/2CHS*TK22	AB	2	ASME III	NR[18]	PAG	
Seal water heat exchanger/2CHS*E21	AB			NR[18]	PAG	[10]
(shell side)		3	ASME III			
(tube side)		2	ASME III			
Seal water filter/2CHS*FLT23	AB	2	ASME III	NR[18]	PBG	[10]
Nonregenerative heat exchanger/ 2CHS*E22	AB			NR[18]	PAG	
(shell side)		3	ASME III			
(tube side)		2	ASME III			

TABLE 3.2-1 (Cont)

Item/Mark No.[16]	Location[1]	Safety Class	Code or Standard[15]	Missile Protection[2]	Flood Protection[3,4]	Remarks
Reactor coolant filter/2CHS*FLT22	AB	2	ASME III	NR[18]	PBG	
Boric acid blender/2CHS*BL21	AB	3	ASME III	PS	PAG	Located in piping to volume control tank
Deborating demineralizers/ 2CHS*DEMN23A, B	AB	3	ASME III	NR[18]	PBG	
Cation bed demineralizer/2CHS*DEMN22	AB	3	ASME III	NR[18]	PBG	
Mixed bed demineralizers/ 2CHS*DEMN21A, B	AB	3	ASME III	NR[18]	PBG	
Boric acid tanks/2CHS*TK21A, B	AB	3	ASME III	PS	PAG	
Boric acid transfer pumps and motors/ 2CHS*P22A, B	AB	3	ASME III Class 1E	PS	PAG	
Boric acid filter/2CHS*FLT21	AB	3	ASME III	PS	PBG	
Excess letdown heat exchanger/2CHS*E24	CS			NR[18]	PBG	
(shell side)		2	ASME III			
(tube side)		2	ASME III			
Regenerative heat exchanger/2CHS*E23	CS			PS	PBG	
(shell side)		2	ASME III			
(tube side)		2	ASME III			
Seal water injection filters/2CHS*FLT24A, B	AB	2	ASME III	NR[18]	PBG	
Charging pumps and motor/ 2CHS*P21A, B, C	AB	2	ASME III Class 1E	PS	PAG	(10, 11, 12, 13)
Letdown orifices/2CHS*ORLD21,22,23	CS	2	ASME III	PS	PBG	
Reactor coolant pump seal bypass orifice/2CHS*ROORSB21,2,3	CS	1	ASME III	PS	PBG	

TABLE 3.2-1 (Cont)

Item/Mark No.[16]	Location[1]	Safety Class	Code or Standard[15]	Missile Protection[2]	Flood Protection[3,4]	Remarks
Piping, valves, and valve operators required to perform a safety function	CS,AB,CV	1,2,3	ASME III Class 1E	PS	PAG, PBG	Class I components part of reactor coolant pressure boundary
Tubing supplying H_2 and N_2 to the VCT, 2CHS*TK22	AB	2	[21]	PS	PAG, PBG	
Instrumentation and controls required to perform a safety function	CS,AB,CB, CV	NA[17] [20]	[9]	PS	PAG, PBG	
Main Steam System (Section 10.3)						
Main steam piping and valves from steam generators up to and including main steam isolation valves and steam drains isolation valves	MV,CS	2	ASME III Class 1E	PS[23]	PAG	
Main steam atmospheric dump valves 2SVS*PCV101A,B,C 2SVS*HCV104	MV	2	ASME III Class 1E	PS	PAG	
Main steam safety valves 2MSS*SV101A,B,C 2MSS*SV102A,B,C 2MSS*SV103A,B,C 2MSS*SV104A,B,C 2MSS*SV105A,B,C	MV	2	ASME III	PS	PAG	
Steam isolation valves to the turbine-driven auxiliary feedwater pump. Piping and valves between main steam headers and isolation valves 2MSS*SOV105A-F	MV	2	ASME III Class 1E	PS	PAG	
Piping between steam isolation valves and turbine-driven auxiliary feedwater pump, and vent piping from the turbine driver to atmosphere.	MV,CV,SA	3	ASME III Class 1E	PS	PAG, PBG	
Instrumentation and controls required to perform a safety function	CB,MV, CS,SA	NA[17] [20]	[9]	PS	PAG	

TABLE 3.2-1 (Cont)

Item/Mark No.[16]	Location[1]	Safety Class	Code or Standard[15]	Missile Protection[2]	Flood Protection[3,4]	Remarks
Auxiliary Steam System (Section 10.4.10)						
Auxiliary steam header isolation valves including operators	PT	NA	ASME III Class 1E	PS	PBG	
Instrumentation and controls required to perform a safety function	PT,AB,CB	NA[17] [20]	[9]	PS	PAG, PBG	
Feedwater and Auxiliary Feedwater Systems (Section 10.4)						
Feedwater piping and valves from steam generator to the outside containment isolation valve	CS, MV	2	ASME III Class 1E	PS	PAG	
Auxiliary feedwater piping and valves from inside containment feedwater lines to and including outside containment isolation valve	CS, SA	2	ASME III Class 1E	PS	PAG, PBG	
Auxiliary feedwater piping and manual valves from outside containment isolation valve through auxiliary feedwater pump to 2FWE*TK210 or service water system	SA, Y	3	ASME III	PS	PBG	
Auxiliary feed pump with electric motors/2FWE*P23A, B	SA	3	ASME III Class 1E[15]	PS	PBG	
Turbine-driven auxiliary feedwater pump 2FWE*P22	SA	3	ASME III	PS	PBG	
Turbine driver for auxiliary feedwater pump 2FWE*T22	SA	3	API No. 612	PS	PBG	

TABLE 3.2-1 (Cont)

Item/Mark No.[16]	Location[1]	Safety Class	Code or Standard[15]	Missile Protection[2]	Flood Protection[3,4]	Remarks
Primary plant demineralized water storage tank/2FWE*TK210 (Section 10.4.9)	Y	3	ASME III	PS	PBG	
Chemical recirculation pump suction valves	Y	3	ASME III Class 1E	PS	PBG	
Feedwater control/bypass valves 2FWS*FCV 478,479,488,489,498,499	SB	3	ASME III Class 1E	[14]	PAG	
Instrumentation and controls required to perform a safety function	MV,SB, SA,Y,CB, CS	NA[17] [20]	[9]	PS	PAG, PBG	
Service Water System (Section 9.2.1)						
Service water system piping and valves:						
Between and including containment isolation valves	CS, CV	2	ASME III	PS	PBG	
Outside containment	IS,SA,FB, DG,AB, CB,Y,CS, and CV	3	ASME III[19]	PS	PAG, PBG	
Inside containment	CS	3[22]	ASME III[22]	PS	PAG, PBG	
Service water pump and motor/ 2SWS*P21A, B, C	IS	3	ASME III Class 1E	PS	PBG	
Bearing cooling water strainers/ 2SWS*STRM-47 and 48	IS	3	ASME III Class 1E	PS	PBG	
Control room cooling water pump and motor/2SWS*P25A, B	CB	3	ASME III Class 1E	PS	PAG	
Instrumentation and controls required to perform a safety function	CS,CV,IS, SB,FB,DG, AB,CB	NA[17] [20]	[9]	PS	PAG, PBG	

TABLE 3.2-1 (Cont)

Item/Mark No.[16]	Location[1]	Safety Class	Code or Standard[15]	Missile Protection[2]	Flood Protection[3,4]	Remarks
Reactor Plant and Process Sampling System (Section 9.3.2.1)						
Piping, tubing and valves penetrating reactor containment and required to provide containment isolation	CS,AB,CV	2	ASME III Class 1E	PS	PAG, PBG	
All other tubing and valves required to maintain Safety Class 2 and 3 pressure boundary inside containment	CS,CV,AB	2,3	[21]	PS	PAG, PBG	
Piping, tubing, and valves outside containment	CV,AB	NNS	ANSI B31.1	NA	PAG, PBG	
Instrumentation and controls required to perform a safety function	CB,CS, CV,AB	NA[17] [20]	[9]	PS	PAG, PBG	
Emergency Diesel Generator Supporting Systems (Section 9.5)						
Air starting system Tanks/ 2EGA*TK21A,B 2EGA*TK22A,B Shutdown air tank	DG	3	ASME III	PS	PAG	
Piping and valves from compressor discharge check valve up to and including the air start solenoid valves, and up to the air start valves	DG	3	ASME III	PS	PAG	
Air start valves, air start distributors, and piping and valves downstream of air start valves, air start solenoid valves, and shutdown solenoid valve	DG	3	Mfr's Std	PS	PAG	

TABLE 3.2-1 (Cont)

Item/Mark No.[16]	Location[1]	Safety Class	Code or Standard[15]	Missile Protection[2]	Flood Protection[3,4]	Remarks
Air Intake and Exhaust System						
Air intake and exhaust piping outboard of turbo charger	DG	3	ASME III	PS	PAG	
Air intake filter/ 2EDG*FLTA1A 2EDG*FLTA1B	DG	3	Mfr's Std	PS	PAG	
Air intake silencer/ 2EDG*SIL2A, B 2EDG*SIL1A, B	DG	3	Mfr's Std	PS	PAG	
Turbo charger and engine-mounted air intake and exhaust piping	DG	3	Mfr's Std	PS	PAG	
Exhaust silencer/ 2EDG*SIL3A, 3B	DG	3	Mfr's Std	PS	PAG	
Cooling Water System						
Jacket water expansion tank 2EGS*TK1A,B, intercooler water heat exchanger 2EGS*E21A,B, jacket water heat exchanger 2EGS*E22A,B, jacket water keep-warm heater 2EGS*E23A,B, jacket water keep-warm pump 2EGS*P23A,B	DG	3	ASME III	PS	PAG	

TABLE 3.2-1 (Cont)

Item/Mark No.[16]	Location[1]	Safety Class	Code or Standard[15]	Missile Protection[2]	Flood Protection[3,4]	Remarks
Engine-driven jacket water pump 2EGS*P22A,B, engine-driven intercooler water pump 2EGS*P21A,B	DG	3	Mfr's Std	PS	PAG	
Cooling water piping and valves from jacket water expansion tank to diesel generator	DG	3	ASME III	PS	PAG	
Engine-mounted cooling water piping and valves	DG	3	ASME III/ Mfr's Std	PS	PAG	
Lubrication System						
Lube oil heat exchanger 2EGO*E21A,B, strainers 2EGO*STR22A,B	DG	3	ASME III	PS	PAG	
Engine driven lube oil pump 2EGO*P21A,B, strainers 2EGO*STR1A,B, keep warm and prelube pump 2EGO*P24A,B	DG	3	Mfr's Std	PS	PAG	
Keep warm heater 2EGO*E24A,B, strainers 2EGO*STR23A,B, filters 2EGO*FLT21A,B	DG	3	ASME III	PS	PAG	
Piping and valves external to the engine casting	DG	3	ASME III	PS	PAG	
Thermostatic control valves 2EGO*TCV200-1,2	DG	3	Mfr's Std	PS	PAG	
Strainers 2EGO*STR24A,B	DG	3	Mfr's Std	PS	PAG	
Rocker arm lubrication system	DG	3	Mfr's Std	PS	PAG	
Fuel Oil Supply System						
Fuel oil piping of diesel generator from oil storage tank to diesel	DG	3	ASME III	PS	PBG, PAG	

TABLE 3.2-1 (Cont)

Item/Mark No.[16]	Location[1]	Safety Class	Code or Standard[15]	Missile Protection[2]	Flood Protection[3,4]	Remarks
Diesel fuel oil storage tanks 2EGF*TK21A, B	DG	3	ASME III	PS	PBG	
Diesel fuel transfer pumps with motor 2EGF*P21A,B,C,D	DG	3	ASME III Class 1E	PS	PBG, PAG	
Strainers 2EGF*STR39, 40, 41, 42	DG	3	ASME III	PS	PAG	
Diesel fuel oil day tanks 2EGF*TK22A, B	DG	3	ASME III	PS	PAG	
Motor driven fuel oil pump 2EGF*P22A, B	DG	3	ASME III	PS	PAG	
Engine driven fuel oil pump 2EGF*P23A, B	DG	3	Mfr's Std	PS	PAG	
Fuel oil filters, accumulator tank, engine mounted piping and valves	DG	3	Mfr's Std	PS	PAG	
Instrumentation and controls for fuel oil, lube oil, air, and cooling water supply systems required to perform a safety function	DG, CB	NA[17] [20]	[9]	PS	PBG, PAG	
Primary Plant Component Cooling Water System (Section 9.2.2)						
Piping and Valves:						
Inside containment	CS	3	ASME III Class 1E	PS	PAG, PBG	
Outside containment	AB,FB,CV	3	ASME III Class 1E	PS	PAG, PBG	
Between and including containment isolation valves	CV, CS	2	ASME III[15] Class 1E	PS	PBG	
Primary component cooling water surge tanks 2CCP*TK21A, B	AB	3	ASME III	PS	PAG	

TABLE 3.2-1 (Cont)

Item/Mark No.[16]	Location[1]	Safety Class	Code or Standard[15]	Missile Protection[2]	Flood Protection[3,4]	Remarks
Primary component cooling water pumps with motors/2CCP*P21A,B,C	AB	3	ASME III Class 1E	PS	PAG	
Primary component cooling water heat exchangers	AB	3	ASME III	PS	PBG	
Instrumentation and controls required to perform a safety function	CS,AB,CB, FB	NA[17] [20]	[9]	PS	PAG, PBG	
Boron Recovery System (Section 9.3.4)						
Degasifier steam heater 2BRS*E21A, B	AB	3	ASME III	NR[18]	PBG	
Degasifier recovery exchanger 2BRS*E24A1,A2,B1,B2	AB	3	ASME III	NR[18]	PAG	
Piping and isolation valves to maintain QA Category I pressure boundary	AB	3	ASME III Class 1E	NR[18]	PAG, PBG	
Recirculation Spray System (Section 6.2.2)						
Recirculation spray pump and motor 2RSS*P21A,B,C,D	SA	2	ASME III Class 1E	PS	PAG, PBG	
Recirculation spray cooler 2RSS*E21A,B,C,D	SA	2	ASME III Class 1E	PS	PAG, PBG	
Piping and valves required to perform a safety function	SA	2	ASME III Class 1E	PS	PAG, PBG	
Instrumentation and controls required to perform a safety function	SA, CB	NA[17] [20]	[9]	PS	PAG, PBG	
Quench Spray System (Section 6.2.2)						
Quench spray pumps and motors 2QSS*P21A,B	SA	2	ASME III Class 1E	PS	PBG	
Refueling water storage tank 2QSS*TK21	Y	2	ASME III	[14]	PAG	

TABLE 3.2-1 (Cont)

Item/Mark No.[16]	Location[1]	Safety Class	Code or Standard[15]	Missile Protection[2]	Flood Protection[3,4]	Remarks
Piping and valves required to perform a safety function	SA, Y	2	ASME III Class 1E	PS	PAG, PBG	
Instrumentation and controls required to perform a safety function	SA, CB	NA[17][20]	[9]	PS	PAG, PBG	
Instrumentation and controls required to perform a safety function	Y	NA[17][20]	[9]	[14]	PAG	
Fuel Pool Cooling and Purification System (Section 9.1.3)						
Fuel pool cooling pumps and motors/ 2FNC*P21A,B	FB	3	ASME III Class 1E	PS	PBG	
Fuel pool heat exchangers/ 2FNC*E21A, B	FB	3	ASME III	PS	PAG	
Piping and valves required to perform safety function	FB	3	ASME III	PS	PAG, PBG	
Instrumentation and controls required to perform a safety function	FB, CB	NA[17][20]	[9]	PS	PAG, PBG	
Steam Generator Blowdown System (Section 10.4.8)						
Piping and valves required to maintain containment/steam generator pressure boundary or to perform a safety function	CV, CS	2,3	ASME III Class 1E	PS	PAG	
Combustible Gas Control System (Section 6.2.5)						
Hydrogen analyzers/ 2HCS*HA100A, B	CV	NA[17]	ASME III Class 1E	PS	PAG	

TABLE 3.2-1 (Cont)

Item/Mark No.[16]	Location[1]	Safety Class	Code or Standard[15]	Missile Protection[2]	Flood Protection[3,4]	Remarks
Piping and valves required to perform a safety function	SA,CS	2	ASME III Class 1E	PS	PAG	
Piping and valves penetrating reactor containment and required to provide containment isolation	SA,CS	2	ASME III Class 1E	PS	PAG	
All other tubing and valves required to maintain Safety Class 2 pressure boundary	SA,CS	2	[21]	PS	PAG	
Hydrogen recombiner inline heaters 2HCS*H24A,B	CV	2	ASME III Class 1E	PS	PAG	
Instrumentation and controls required to perform a safety function	SA, CB	NA[17] [20]	[9]	PS	PAG	
Solid Waste Disposal System (Section 11.4)						
Piping and valves connecting to CHS demineralizers	AB	3	ASME III	NR[18]	PBG	
Containment Isolation Components (All applicable fluid systems) (Section 6.2.4)						
Isolation valves	CV,SA, MV,FB	2	ASME III Class 1E	PS	PAG, PBG	
Piping between isolation valves and penetration	CV,SA, MV,FB	2	ASME III	PS	PAG, PBG	
Controls and electrical supply required to perform isolation function	CV,SA, MV,FB,CB	NA[17]	[9]	PS	PAG, PBG	

TABLE 3.2-1 (Cont)

Item/Mark No.[16]	Location[1]	Safety Class	Code or Standard[15]	Missile Protection[2]	Flood Protection[3,4]	Remarks
Containment Vacuum Leak Monitoring System (Section 6.2.6)						
Piping and valves required to perform a safety function	CS, CV	2	ASME III Class 1E	PS	PBG	
Instrumentation and controls required to perform a safety function	CV, CB	NA[17] [20]	[9]	PS	PAG, PBG	
Neutron Shield Tank Cooling System						
Neutron shield tank 2RCS*SUP21 (Section 5.4.14)	CS	Refer to Section 5.4.14		PS	PBG	
Neutron shield tank coolers/2NSS*E21 (Section 9.4)	CS	3	ASME III	PS	PAG	
Ventilation Systems						
Control Room Air Conditioning System (Section 9.4.1)						
Air conditioning units/ 2HVC*ACU201A,B	CB	3	AMCA/ASME III Class 1E	PS	PAG	
Emergency filtration fans motors/2HVC*FN241A,B	CB	3	AMCA/ANSI Class 1E	PS	PAG	
Supply fans motors/ 2HVC*FN266A,B	AB	3	AMCA/ANSI Class 1E	PS	PAG	
Return fans motors/ 2HVC*FN265A, B	AB	3	AMCA/ANSI Class 1E	PS	PAG	
Dampers and ductwork	CB	3	SMACNA	PS	PAG	
Electric duct heaters/ 2HVC*CH222A,B	CB	3	ASTM/ANSI Class 1E	PS	PAG	

TABLE 3.2-1 (Cont)

Item/Mark No.[16]	Location[1]	Safety Class	Code or Standard[15]	Missile Protection[2]	Flood Protection[3,4]	Remarks
Charcoal filters/ 2HVC*FLTA 252A,B	CB	3	ASTM/ANSI ORNL-NSIC-65	PS	PAG	
HEPA filters/ 2HVC*FLTA251A,B 2HVC*FLTA253A,B	CB	3	ASTM/ANSI ORNL-NSIC-65	PS	PAG	
Moisture separators/ 2HVC*MSP21A,B	CB	3	ASTM/ANSI	PS	PAG	
Control room refrigeration Units/2HVC*REF24A,B	CB	3	ASME III Class 1E	PS	PAG	
Piping and valves for service water supply and refrigerant system	CB	3	ASME III ANSI	PS	PAG	
Instrumentation and controls required to perform a safety function	CB	NA[17][20]	[9]	PS	PAG	
Service Building Ventilation System (Section 9.4.10)						
Emergency switchgear exhaust fans 2HVZ*FN262A,B	CV	3	AMCA/ANSI Class 1E	PS	PAG	
Emergency switchgear supply fans 2HVZ*FN261A,B	CV	3	AMCA/ANSI Class 1E	PS	PAG	
Battery room exhaust fans 2HVZ*FN216A,B	CV	3	AMCA/ANSI Class 1E	PS	PAG	
Dampers and ductwork	CV,SB	3	SMACNA	PS	PAG	
Instrumentation and controls required to perform a safety function	SB,CB,CV	NA[17][20]	[9]	PS	PAG, PBG	

TABLE 3.2-1 (Cont)

Item/Mark No.[16]	Location[1]	Safety Class	Code or Standard[15]	Missile Protection[2]	Flood Protection[3,4]	Remarks
Emergency Diesel Generator Building Ventilation System (Section 9.4.6)						
Ventilation supply fans 2HVD*FN270A,B 2HVD*FN271A,B	DG	3	AMCA/ANSI Class 1E	PS	PAG	
Dampers and ductwork	DG	3	SMACNA	PS	PAG	
Ventilation exhaust fans 2HVD*FN222A,B	DG	3	AMCA/ANSI Class 1E	PS	PAG	
Instrumentation and controls required to perform a safety function	DG,CB	NA[17] [20]	[9]	PS	PBG, PAG	
Intake Structure Ventilation System (Section 9.4.8)						
Supply fans motors 2HVW*FN257A,B,C	IS	3	AMCA/ANSI Class 1E	PS	PAG	
Dampers and ductwork	IS	3	SMACNA	PS	PAG	
Instrumentation and controls required to perform a safety function	IS	NA[17] [20]	[9]	PS	PAG	
Safeguards Area Ventilation System (Section 9.4.11)						
Air conditioning units 2HVR*ACU207A,B	SA	3	AMCA/ASME III Class 1E	PS	PAG	
Dampers and ductwork	MV	3	SMACNA	PS	PAG	
Instrumentation and controls required to perform a safety function	SA, CB	NA[17] [20]	[9]	PS	PAG	

TABLE 3.2-1 (Cont)

Item/Mark No.[16]	Location[1]	Safety Class	Code or Standard[15]	Missile Protection[2]	Flood Protection[3,4]	Remarks
Main Steam Valve Area Ventilation System (Section 9.4.9)						
Ventilation fans 2HVR*FN206A,B	MV	3	AMCA/ANSI Class 1E	PS	PAG	
Dampers and ductwork	MV	3	SMACNA	PS	PAG	
Instrumentation and controls required to perform a safety function	MV,CB	NA[17] [20]	[9]	PS	PAG	
MCC Room Ventilation System (Section 9.4.3)						
Ventilation fans 2HVP*FN265A,B	AB	3	AMCA/ANSI Class 1E	PS	PAG	
Dampers and ductwork	AB	3	SMACNA	PS	PAG	
Cooling coils/2HVP*CLC265A,B	AB	3	ASME III	PS	PAG	
Instrumentation and controls required to perform a safety function	AB,CR	NA[17] [20]	[9]	PS	PAG	
Cable Vault and Rod Control Area Ventilation System (Section 9.4.12)						
Air conditioning units 2HVR*ACU208A,B	CV	3	AMCA/ASTM Class 1E	PS	PBG	
Dampers and ductwork	CV	3	SMACNA	PS	PBG	
Instrumentation and controls required to perform a safety function	CV, CB	NA[17]	[9]	PS	PBG	

TABLE 3.2-1 (Cont)

Item/Mark No.[16]	Location[1]	Safety Class	Code or Standard[15]	Missile Protection[2]	Flood Protection[3,4]	Remarks
Auxiliary Building and Radwaste Area Ventilation System (Section 9.4.3)						
Exhaust fans motors 2HVP*FN264A,B	AB	3	AMCA/ANSI Class 1E	PS	PAG	
Dampers and ductwork	AB	3	SMACNA	PS	PAG	
Instrumentation and controls required to perform a safety function	AB	NA[17]	[9]	PS	PAG	
Supplementary Leak Collection System (Section 6.5.3.2)						
Filter exhaust fans motors 2HVS*FN204A,B	AB	3	AMCA/ANSI Class 1E	PB	PAG	
Charcoal filter assembly 2HVS*FLTA205A,B and 2HVS*FLTA208A,B	AB	3	ASTM/ANSI ORNL-NSIC-65	PB	PAG	
HEPA filters 2HVS*FLTA204A,B 2HVS*FLTA206A,B 2HVS*FLTA207A,B 2HVS*FLTA209A,B	AB	3	ASTM/ANSI ORNL-NSIC-65	PB	PAG	
Moisture separator assembly 2HVS*MSP21A,B 2HVS*CH219A,B	AB	3	ASTM/ANSI Class 1E	PB	PAG	
2HVS*FLTA250A,B			ASTM/ANSI			
Dampers and ductwork	AB,FB,CS, CV,SB, WH,SA,AB	3	SMACNA	PS	PAG	
	el 773'-6"	3	SMACNA	PB	PAG	
Instrumentation and controls required to perform a safety function	AB, CB	NA[17]	[9]	PS	PBG, PAG	
	AB el 773'-6"	NA[17]	[9]	PB	PAG	

TABLE 3.2-1 (Cont)

Item/Mark No.[16]	Location[1]	Safety Class	Code or Standard[15]	Missile Protection[2]	Flood Protection[3,4]	Remarks
Alternate Shutdown Panel Ventilation System (Section 9.4.12)						
Air conditioning units/2HVP*ACUS301	CV	3	AMCA/ASME III Class 1E	PS	PAG	
Dampers and ductwork	CV	3	SMACNA	PS	PAG	
Instrumentation and controls required to perform a safety function	CV	NA		PS	PAG	
Containment Ventilation Systems (Section 9.4.7.1)						
Dampers and ductwork	CS	3	SMACNA	PS	PAG	
CRDM shroud cooling coils 2HVR*CLC202A-1,2,B-1,2,C-1,2	CS	3	ASME III	PS	PBG	
Instrumentation and controls required to perform a safety function	CS, CB	NA		PS	PAG,PBG	
Radiation Monitoring System (Sections 11.5 and 12.3.4)						
Area Monitors:						
In containment hi-range 2RMR*RQ206, 207	CS	NA	Class 1E	PS	PAG	
Outside personnel hatch 2RMR*RQ202	AB	NA	Class 1E	PS	PAG	
Control room 2RMC*RQ201, 202	CB	NA	Class 1E	PS	PAG	
Process Monitors:						
Containment Purge	CS	NA	Class 1E	PS	PAG	

TABLE 3.2-1 (Cont)

Item/Mark No.[16]	Location[1]	Safety Class	Code or Standard[15]	Missile Protection[2]	Flood Protection[3,4]	Remarks
Containment purge 2HVR*RQ104A,B	CS	NA[17]	Class 1E	PS	PAG	
Recirculation spray heat exchanger service water 2SWS*RQI100A,B,C,D	DG	NA[17][20]	Class 1E	PS	PAG	
Airborne Monitors:						
Containment airborne 2RMR*RQI303	CV	NA[17][20]	Class 1E	PS	PAG	
Effluent Monitors:						
Elevated release 2HVS*RQI109B,C	AB	NA[17][20]	Class 1E	PS	PAG	
Main steam discharge 2MSS*RQI101	Later	NA[17][20]	Class 1E	PS	PAG	
Miscellaneous Nuclear/Mechanical Components						
Fuel handling System (Section 9.1.4)						
Spent fuel handling tool/2FNR*TL213	FB	3		PS	PAG	
RV head and upper internals lifting device/2FNR*CRN203	CS	1		PS	PAG	Only those portions that furnish support to CRDMS
Fuel transfer tube and flange/ 2FNC*TFT21	CS, FB	2	ASME III	PS	PAG	Portions of containment boundary
New and spent fuel storage racks/ 2FNR*RAK21,22	FB	3	[8]	PS	PAG, PBG	

TABLE 3.2-1 (Cont)

Item/Mark No.[16]	Location[1]	Safety Class	Code or Standard[15]	Missile Protection[2]	Flood Protection[3,4]	Remarks
Reactor Vessel or Core-Related Components (Section 3.9)						
Irradiation sample holder	CS	2		PS	PAG	
Control rod drive mechanism/ 2RCS*RDMF21 (full length)	CS	1	ASME III	PS	PAG	
Control rod drive tubes/2RCS*ROGT21	CS	2		PS	PAG	Required for reactor shutdown
CRDM seismic support/2RCS*SUP21	CS	2	ASME III	PS	PAG	
CRDM seismic support/spacer plates	CS	1	ASME III	PS	PAG	
CRDM seismic support platform/ 2RCS*SUP22	CS	1	ASME III	PS	PAG	
Reactor vessel internals	CS	2		PS	PBG, PAG	The major internals direct flow, ensure core cooling, and prevent displacement of the core.
Control rod clusters (full Length)/ 2RCS*RCC22	CS	2		PS	PAG, PBG	Required for reactor shutdown
Incore Instrumentation						
Seal table assembly/ 2RCS*STP21	CS	1	ASME III	PS	PBG	
Thimble guide couplings	CS	1	ASME III	PS	PBG	
Thimble guide tubing	CS	1	ASME III	PS	PBG	
Reactor containment crane/2CRN*201	CS	NA[17]	CMAA-70	PS	PAG	

TABLE 3.2-1 (Cont)

Item/Mark No.[16]	Location[1]	Safety Class	Code or Standard[15]	Missile Protection[2]	Flood Protection[3,4]	Remarks
Electrical Systems (Sections 8.2 and 8.3)						
Emergency diesel generators/ 2EGS*EG2-1,2	DG	NA[17]	Class 1E	PS	PAG	
4kV Switchgear/2AE;2DF	SB	NA[17]	Class 1E	PS	PBG	
480 V Substation/480VUS*2-8; 480VUS*2-9	SB	NA[17]	Class 1E	PS	PBG	
480 V Motor control centers/ MCC*2-E01,E02	IS	NA[17]	Class 1E	PS	PBG	
MCC*2-E03,E04	AB	NA[17]	Class 1E	PS	PAG	
MCC*2-E05,E13	CV	NA[17]	Class 1E	PS	PAG	
MCC*2-E06,E14	MV	NA[17]	Class 1E	PS	PAG	
MCC*2-E07,E08	DG	NA[17]	Class 1E	PS	PAG	
MCC*2-E09,E10	CB	NA[17]	Class 1E	PS	PBG	
MCC*2-E11,E12	SA	NA[17]	Class 1E	PS	PAG	
MCC*2-E15	ASP	NA[17]	Class 1E	PS	PAG	
Station batteries electrical system/ BAT*BKR2-1,2,3,4 BAT*CHG2-1,2,7 BAT*2-1,2,3,4	SB	NA[17]	Class 1E	PS	PBG, PAG	
Vital bus inverters/ UPS*VITBS2-1,2,3,4	SB	NA[17]	Class 1E	PS	PBG	
125 V dc switchboard/ DC*SWBD2-1,2	SB	NA[17]	Class 1E	PS	PBG	

TABLE 3.2-1 (Cont)

Item/Mark No.[16]	Location[1]	Safety Class	Code or Standard[15]	Missile Protection[2]	Flood Protection[3,4]	Remarks
120 V ac emergency distribution panels/ PNL*AC2-E1,E2	SB	NA[17]	Class 1E	PS	PBG	
PNL*AC2-E3,E4,	CB	NA[17]	Class 1E	PS	PBG	
PNL*AC2-E5,E6	IS	NA[17]	Class 1E	PS	PBG	
PNL*AC2-E7,E8	SB	NA[17]	Class 1E	PS	PBG	
PNL*AC2-E9	ASP	NA[17]	Class 1E	PS	PAG	
PNL*AC2-E10, E11	CV	NA[17]	Class 1E	PS	PAG	
125 V dc distribution panels/ PNL*DC2-02,03	CB	NA[17]	Class 1E	PS	PBG	
PNL*DC2-06,07,	SB	NA[17]	Class 1E	PS	PBG	
PNL*DC2-10,11	CV	NA[17]	Class 1E	PS	PAG	
PNL*DC2-15,16	CV	NA[17]	Class 1E	PS	PAG	
PNL*DC2-19, 20	SB	NA[17]	Class 1E	PS	PAG	
Vital bus distribution panels/ PNL*VITBS2-1A,2A,3A,3C,4A,4C	CB	NA[17]	Class 1E	PS	PBG	
PNL*VITBS2-1C,2C	CB	NA[17]	Class 1E	PS	PAG	
Pressurizer heater distribution panels/ PNL*2RCP H2A,H2B,H2D,H2E	CS	NA[17]	Class 1E	PS	PAG	
Vital bus voltage regulating transformers/ REG*VITBS2-1B,2B,3B,3C,4B,4C	CB	NA[17]	Class 1E	PS	PBG	
TRF*IRT-ASP	ASP	NA[17]	Class 1E	PS	PAG	

TABLE 3.2-1 (Cont)

Item/Mark No.[16]	Location[1]	Safety Class	Code or Standard[15]	Missile Protection[2]	Flood Protection[3,4]	Remarks
Emergency ac distribution						
Transformer/TRF*PWR2-E1,E2	SB	NA[17]	Class 1E	PS	PBG	
TRF*PWR2-E3, E4	CB	NA[17]	Class 1E	PS	PBG	
TRF*PWR2-E5, E6	IS	NA[17]	Class 1E	PS	PBG	
TRF*PWR2-E7, E8	SB	NA[17]	Class 1E	PS	PAG	
TRF*PWR2-E9	ASP	NA[17]	Class 1E	PS	PAG	
TRF*PWR2-E10, E11	CV	NA[17]	Class 1E	PS	PAG	
Safety related distribution panels	SB,CB,IS, CV	NA[17]	Class 1E	PS	PBG, PAG	
Class 1E cable	All	NA[17]	Class 1E	PS	PBG, PAG	
Electrical penetrations and assemblies	CS	NA[17]	Class 1E	PS	PBG, PAG	
Class 1E cable supports, cable tray, conduits and their supports; ductlines and manholes	All	NA[17]	Class 1E	PS	PBG, PAG	
Main control board/2BNCHBD*A,B, and C 2VERTBD*A,B, and C 2CES*HPW101A and B	CB	NA[17]	Class 1E	PS	PAG	
Emergency shutdown panel/PNL*2SHUTDN	CB	NA[17]	Class 1E	PS	PBG	
Post-DBA hydrogen control panel/ PNL*2HCP	SA	NA[17]	Class 1E	PS	PAG	

TABLE 3.2-1 (Cont)

Item/Mark No.[16]	Location[1]	Safety Class	Code or Standard[15]	Missile Protection[2]	Flood Protection[3,4]	Remarks
Feedwater isolation test panel/PNL*2FWIV	CV	NA[17]	Class 1E	PS	PAG	
Building service control panel/ PNL*2BLG-SER	CB	NA[17]	Class 1E	PS	PAG	
Shutdown transfer relay panels/ PNL*REL-241 and 251	SB	NA[17]	Class 1E	PS	PBG	
Auxiliary emergency relay panels/ PNL*REL-242, 252, 246, 256	SB	NA[17]	Class 1E	PS	PBG	
Emergency diesel generator protection relay panels/PNL*REL-243, 253	SB	NA[17]	Class 1E	PS	PBG	
Emergency diesel generator sequencing panels/PNL*SEQ-244, 254	SB	NA[17]	Class 1E	PS	PBG	
Bus tie differential relay panels/ PNL*REL-245, 255	SB	NA[17]	Class 1E	PS	PBG	
Emergency bus under-voltage test panels/ PNL*2UV-T-A,-B	SB	NA[17]	Class 1E	PS	PBG	
Miscellaneous Electrical Relay Panels PNL*REL-247,248,249,250,257,258, 259,269,279,280,281,282,283,285,286, 290,295,296	SB	NA[17]	Class 1E	PS	PBG	
Annunciator isolation panels/ 2IHA*OCABCB1 and 2IHA*PCABCB1	CB	NA[17]	Class 1E	PS	PBG	
2IHA*OCABAB1 and 2IHA*PCABAB1	AB	NA[17]	Class 1E	PS	PAG	
2IHA*OCABCV1 and 2IHA*PCABCV1 2IHA*OCABCV2 and 2IHA*PCABCV2	CV	NA[17]	Class 1E	PS	PAG	

TABLE 3.2-1 (Cont)

Item/Mark No.[16]	Location[1]	Safety Class	Code or Standard[15]	Missile Protection[2]	Flood Protection[3,4]	Remarks
2IHA*OCABDG1 and 2IHA*PCABDG1	DG	NA[17]	Class 1E	PS	PAG	
2IHA*OCABSB1, 2, 3 and 2IHA*PCABSB1, 2, 3	SB	NA[17]	Class 1E	PS	PAG	
Hydrogen recombiner panels/ PNL*2HCS-2A,B	SA	NA[17]	Class 1E	PS	PAG	
Hydrogen analyzer panels/ 2HCS*PNL100A,B	SB	NA[17]	Class 1E	PS	PAG	
Safety related electronic analog instrumentation racks/ RK*2SEC-PROC-A,A1,B,B1	CB	NA[17]	Class 1E	PS	PBG	
Refrigeration condenser (control room A/C) control panel/PNL*REF24A,B	CB	NA[17]	Class 1E	PS	PAG	
Solid state reactor protection racks/ RK*2RC-PRT-A, -B and 2RPS*AUX-A,B	CB	NA[17]	[15]	PS	PBG	
Reactor Protection Test Racks RK*2P-TST-A,-B	CB	NA[17]	[15]	PS	PBG	
Loop stop valve racks/RK*2VV-REL-A,-B	CB	NA[17]	[15]	PS	PBG	
Nuclear instrumentation rack/ RK*2NUC-INS	CB	NA[17]	[15]	PS	PBG	
Auxiliary relay cabinets/RK*2AUX-REL-A,B	CB	NA[17]	[15]	PS	PBG	
Transformer Switches						
2RHS*TRS-MOV701B	CV	NA[17]	Class 1E	PS	PBG	
2RHS*TRS-MOV702A	CV	NA[17]	Class 1E	PS	PBG	
2HVW*TRS-FN257C	IS	NA[17]	Class 1E	PS	PBG	

TABLE 3.2-1 (Cont)

Item/Mark No.[16]	Location[1]	Safety Class	Code or Standard[15]	Missile Protection[2]	Flood Protection[3,4]	Remarks
Diesel Generator Control Panel	DG	NA[17]	Class 1E	PS	PBG	
PNL*2DIGEN-1						
*2DIGEN-2						
Main Steam Trip Valve Panel	CV	NA[17]	Class 1E	PS	PAG	
PNL*2MSIV-A,B,C						
Auxiliary Reactor Protection Test Racks	CB	NA[17]	Class 1E	PS	PBG	
RK*2AUX-RPST-A, -B						
Radiation Monitor Racks	CB	NA[17]	Class 1E	PS	PBG	
2RMS*BAY-1						
2RMS*BAY-3						
Primary Process Racks	CB	NA[17]	Class 1E	PS	PBG	
RK*2PRI-PROC-1,2,3, and 4						
Instrument Transmitter Racks	IS	NA[17]	Class 1E	PS	PBG	
2CES*RAK 901, 902						
Containment Penetration Back-up Protection Breaker Panels						
2PNL*RCPBP-02, 03	CB	NA[17]	Class 1E	PS	PBG	
2PNL*RCPBP-06,07,09	CV	NA[17]	Class 1E	PS	PAG	
2PNL*RCPBP-08	SB	NA[17]	Class 1E	PS	PBG	
480 V Containment Back-up Protection Cabinets						
2CAB*RCPBP-04, 05,06	CV	NA[17]	Class 1E	PS	PAG	
2CAB*RCPBP-07,08	SB	NA[17]	Class 1E	PS	PBG	
Heat Tracing Equipment						
2HTS*TRFA1SG	SA	NA[17]	Class 1E	PS	PAG	
2HTS*TRFB1SG	SA	NA[17]	Class 1E	PS	PAG	
2HTS*PNLA1SG	SA	NA[17]	Class 1E	PS	PAG	
2HTS*PNLB1SG	SA	NA[17]	Class 1E	PS	PAG	

TABLE 3.2-1 (Cont)

NOTES:

1. Location symbols

   AB - Auxiliary building
   CB - Control building
   CP - Condensate polishing building
   CS - Reactor containment
   CV - Cable vault area
   DB - Decontamination building

   DG - Diesel generator building
   FB - Fuel building
   IS - Intake structure
   MV - Main steam valve area
   PT - Pipe tunnel area
   SA - Safeguards area
   SB - Service building
   TB - Turbine building
   WH - Waste handling building
   Y - Yard
   ASP - Alternate shutdown panel

2. Missile protection symbols

   PD - Designed to withstand the effects of internal or externally-generated missiles.
   PS - Protection provided from externally-generated missiles by a structure designed for this purpose or a below grade location. Protection provided from internally-generated missiles by physical separation or barriers.
   PB - Protection provided from internally-generated missiles by physical separation or barriers. Protection from externally-generated missiles is not required.

3. Flood protection symbols

   PAG - External flood protection by above grade location.
   PBG - Located below grade and external flood protected by design of enclosing structure.

4. Grade elevation is taken as el 735 feet.
5. Represents code class upgrading: As permitted by Paragraph NA-2134 of the ASME Code, Section III, this component is upgraded from the minimum required Code Class 2 to Code Class 1.
6. Service required to support a safety or other necessary function: Emergency power - manual loading, where applicable.
7. Safety classes for piping and valves are as defined by the piping and instrumentation diagrams. Code classes are those required by the safety class.

TABLE 3.2-1 (Cont)

NOTES: (Cont)

8. Parts are mechanically of safety class where applicable and must meet the structural integrity requirements of the specification and quality assurance requirements of 10 CFR 50, Appendix B.
9. Refer to Table 7.1-1 for a listing of applicable criteria.
10. Portions of equipment containing component cooling water are Safety Class 3, Code Class 3.
11. Services required to support a safety or other necessary function: Emergency power - automatic loading, where applicable.
12. Services required to support a safety or other necessary function: Component cooling water.
13. Services required to support a safety or other necessary function: Service water.
14. Components need not be missile-protected since they are used only during accident conditions for which a missile need not be postulated.
15. Seismic requirements for Class 1E components conform with or exceed those outlined in IEEE Standard-344-1975 and are in agreement with the recommendations of USNRC EICSB 10. Refer to Section 3.10 and 3.11 for further details.
16. Drawings and other detailed information are located in Section 1.7 and the appropriate equipment sections as identified.
17. NA - Not applicable
18. NR - Not required
19. Portions of the BVPS-2 Safety Class 3 service water system piping in the shared Unit 1/Unit 2 intake structure and buried lines from the intake structure to the valve pit were installed during the BVPS-1 construction effort and under BVPS-1 procedures and specifications.
20. The boundary of jurisdiction of ASME Code Section III, Class 2 and 3 process piping extends to and includes the root valve for the instrumentation tubing. The appropriate safety class extends from the root valve to the sensing instrument. Seismic Category I supports are employed for Safety Class 2 and 3 instrument tubing. The requirements for Safety Class 2 and 3 instrument tubing are listed in the ASME Code Baseline Document.
21. The tubing is classified as Quality Assurance Category I, Seismic Category I and Safety Class 2 or 3, except not ASME code stamped. However, the tubing is designed and tested in accordance with the requirements of ASME III Code Class 2 or 3. The tubing material is purchased to the requirements of ASME III. In addition, the tubing is stress analyzed and supported in accordance with ASME III.
22. The containment air recirculation system piping, valves and heat exchangers are Safety Class NNS, Non-ASME.
23. Steam discharge piping of the atmospheric dump valves (ADVs), main steam safety valves (MSSVs), and residual heat release valve (RHRV) is missile protected as described in Section 10.3.1.

TABLE 3.2-2

CLASSIFICATION OF STRUCTURES

Building	QA Category I	Seismic Category I	Tornado Protection	External Flood Protection
Reactor containment	Yes	Yes	Yes	up to el 730 feet
Service building	up to el 780 feet(6)	up to el 780 feet (6)	up to el 780 feet (6)	up to el 730 feet
Auxiliary building	up to el 773 feet -6 inches (1)	up to el 773 feet -6 inches (1)	up to el 773 feet -6 inches (1)	up to el 730 feet
Fuel and decontamination building	Yes	Yes	Yes	up to el 730 feet
Emergency diesel generator building	Yes	Yes	Yes	up to el 730 feet
Safeguards area	Yes	Yes	Yes	up to el 730 feet
Cable vault (2)	Yes (2)	Yes(2)	Yes(2)	up to el 730 feet
Main steam valve area	Yes	Yes	Yes	up to el 730 feet
Cable tunnel	Yes	Yes	Yes	up to el 730 feet
RWST/CAT pad and surrounding shield wall	Yes	Yes	No	up to el 730 feet (3)
Control building(4)	Yes	Yes	Yes	up to el 730 feet
Primary demineralized water storage tank pad and enclosure	Yes	Yes	Yes	up to el 730 feet

TABLE 3.2-2 (Cont)

Building	QA Category I	Seismic Category I	Tornado Protection	External Flood Protection
Pipe trenches (except north and south interconnecting trenches to BVPS-1)	Yes	Yes	Yes[7]	up to el 730 feet
Service water valve pits	Yes	Yes	Yes	up to el 730 feet
Emergency outfall structure	Yes	Yes	Yes	up to el 730 feet
Equipment hatch platform	Yes	Yes	Yes	up to el 730 feet
Primary intake structure[5]	Yes	Yes	Yes	up to el 737 feet

NOTES:

1. The steel frame above el 773 feet 6 inches of auxiliary building is QA Category I, Seismic Category I, but is not designed for tornado. The concrete ventilation core area, component cooling surge tank cubicle, and air conditioning room above el 773 feet 6 inches are QA Category I, Seismic Category I, and tornado-protected.

2. Structure includes pipe tunnel area at el 718 feet 6 inches from auxiliary building to reactor containment. The steel roof structure at el 797 feet and the steel structure above el 787 feet 6 inches of the cable vault are not QA Category I, Seismic Category I, or tornado-protected.

3. The surrounding shield wall is not designed to contain water level resulting from a tank rupture. The wall is designed for SSE seismic loads.

4. Extension of BVPS-1 control room.

5. Structure is a shared facility with BVPS-1 and is described in BVPS-1 FSAR.

6. Service building is Seismic Category I, QA Category I, and tornado missile-protected up to and including the floor at el 780 feet-6 inches.

TABLE 3.2-2 (Cont)

7. The QA Category I, Seismic Category I pipe trenches provide tornado protection except for approximately 103 feet of length adjacent to the fuel and decontamination building. This unprotected length of trench does not contain safety-related piping, components, or equipment.

TABLE 3.2-3

DIAGRAMS SHOWING QUALITY GROUP CLASSIFICATION

The quality group classification information shown on the station diagrams listed below are incorporated by reference into the UFSAR. Other information presented on these station diagrams is not considered part of the UFSAR. The contents of these station diagrams are controlled by station procedure.

SYSTEM	STATION DRAWING
Reactor Coolant System (Chapter 5)	RM-75A
Pressurizer Spray and Relief System	RM-75B
Safety Injection System (Section 6.3)	RM-87A RM-87B
Gaseous Nitrogen System (Section 9.5.9)	RM-71B
Miscellaneous Drains - Secondary Plant	RM-58A
Residual Heat Removal System (Section 5.4.7)	RM-76A
Chemical and Volume Control System (Section 9.3.4)	RM-79A RM-79B RM-79C RM-79D
Main Steam System (Section 10.3)	RM-41A
Feedwater and Auxiliary Feedwater Systems (Section 10.4)	RM-45A RM-45B
Service Water System (Section 9.2.1)	RM-47B RM-47C RM-47D RM-47F
Reactor Plant and Process Sampling System (Section 9.3.2.1)	RM-99F RM-99B
Post Accident Sampling System (Section 9.3.2.3)	RM-99E

TABLE 3.2-3 (Continued)

SYSTEM	STATION DRAWING
Emergency Diesel Generator Supporting Systems (Section 9.5)	RM-72A RM-72B
EDG Fuel Oil Supply System EDG Cooling Water System EDG Air Starting System EDG Lubrication System EDG Air Intake and Exhaust System	 RM-436-5A
Primary Plant Component Cooling Water System (Section 9.2.2)	RM-77A RM-77B RM-77C RM-77E
Neutron Shield Tank Cooling System	RM-77F
Nuclear Equipment Vent and Drain System	RM-89A RM-89B RM-89C
Boron Recovery System (Section 9.3.4)	RM-92A
Recirculation Spray System (Section 6.2.2)	RM-85A
Quench Spray System (Section 6.2.2)	RM-85B
Fuel Pool Cooling and Purification System (Section 9.1.3)	RM-82A
Steam Generator Blowdown System (Section 10.4.8)	RM-100A
Combustible Gas Control System (Section 6.2.5)	RM-110A
Solid Waste Disposal System (Section 11.4)	RM-97A
Containment Vacuum Leak Monitoring System	RM-88A
Control Room Air Conditioning System (Section 9.4.1)	RB-84C
Service Building Ventilation System (Section 9.4.10)	RB-84A
Emergency Diesel Generator Building Ventilation System (Section 9.4.6)	RB-84H
Intake Structure Ventilation System (Section 9.4.8)	RB-84B
MCC Room Ventilation System (Section 9.4.3)	RB-84J

TABLE 3.2-3 (Continued)

SYSTEM	STATION DRAWING
Cable Vault and Rod Control Area Ventilation System (Section 9.4.12)	RB-85K
Auxiliary Building and Radwaste Area Ventilation System (Section 9.4.3)	RB-85G RB-85C
Supplementary Leak Collection System (Section 6.5.3.2)	RB-85C RB-85F RB-136B RB-85D
Alternate Shutdown Panel Ventilation System (Section 9.4.12)	RB-85K

No. 10080-RB-84A

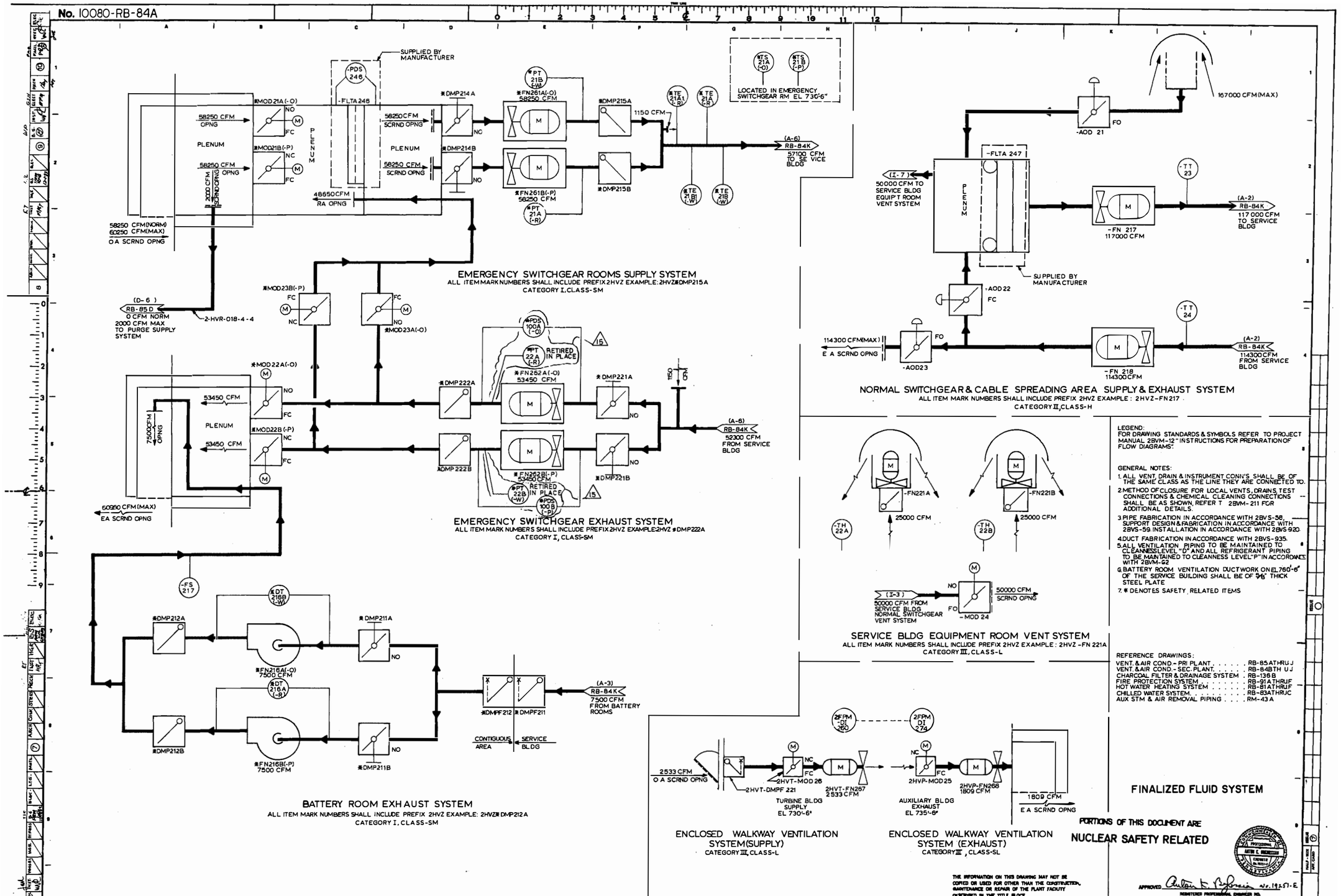

No. 10080-RB84B

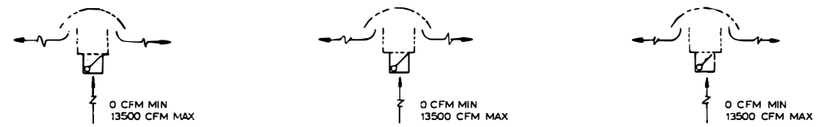

NOTE ITEMS WITHOUT MARK NOS FURNISHED WITH UNIT NO. 1

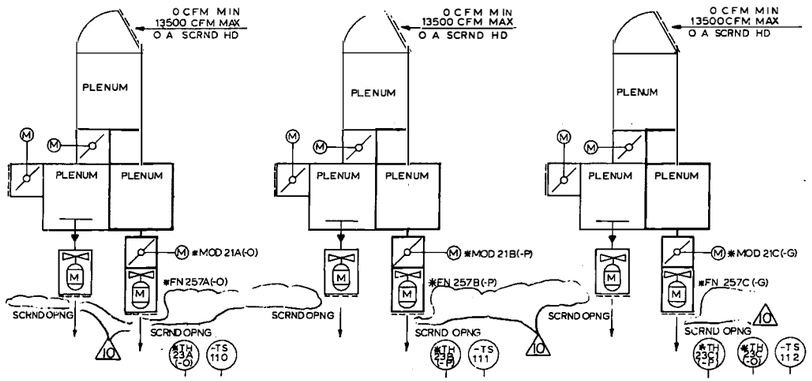

INTAKE STRUCTURE SERVICE WATER PUMP AREA SUPPLY & EXHAUST SYSTEM
ALL ITEM MARK NUMBERS SHALL INCLUDE PREFIX 2HVW EXAMPLE: 2HVW -TC2A
Q A CAT. I, CLASS-SL

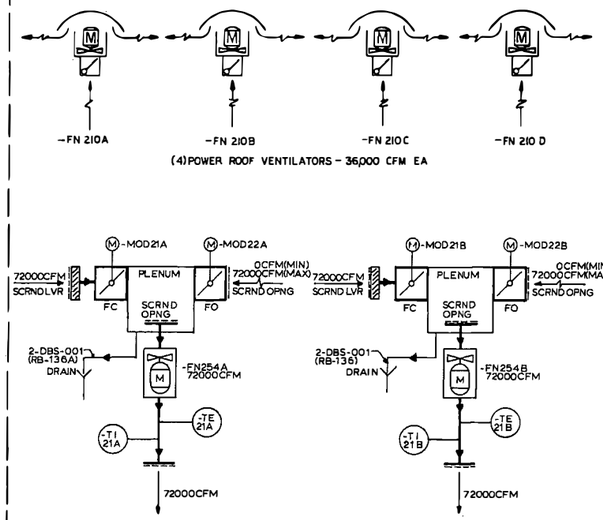

COOLING TOWER PUMP HOUSE SUPPLY & EXHAUST SYSTEM
ALL ITEM MARK NUMBERS SHALL INCLUDE PREFIX 2HVK EXAMPLE 2HVK-MOD 22B
Q A CAT. III, CLASS-L

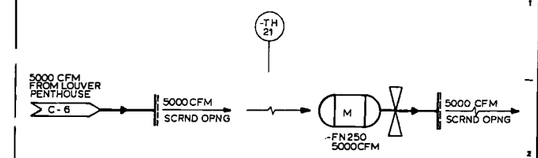

ELEVATOR MACH ROOM VENT SYSTEM
TURBINE BUILDING
ALL ITEM MARK NUMBERS SHALL INCLUDE PREFIX 2HVT
EXAMPLE: 2HVT-MOD25
Q A CAT. III, CLASS-L

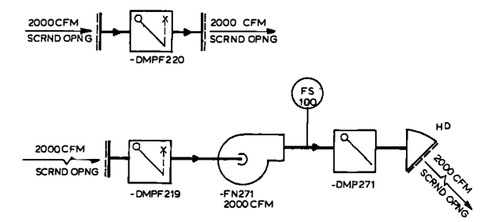

BATTERY ROOM VENT SYSTEM
TURBINE BUILDING
ALL ITEM MARK NUMBERS SHALL INCLUDE PREFIX 2HVT
EXAMPLE: 2HVT-DMP271
Q A CAT. III, CLASS-L

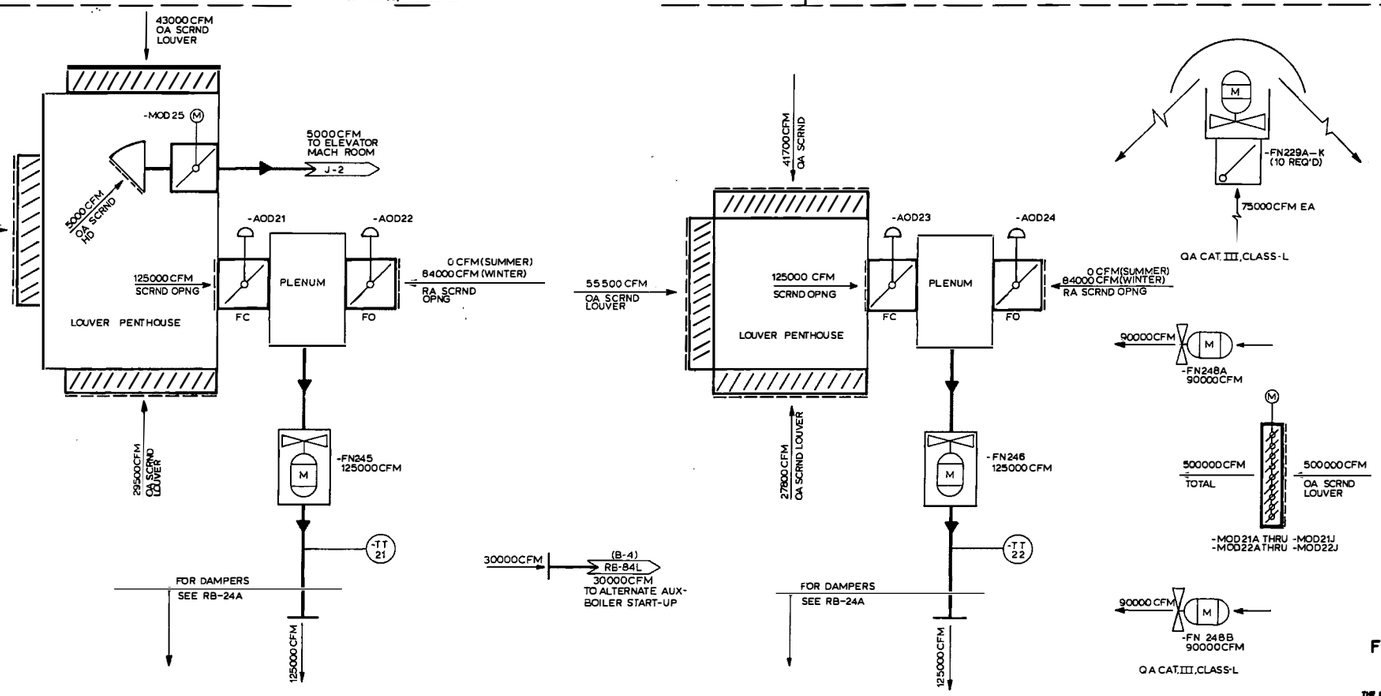

TURBINE BULDING VENTILATION SYSTEM
ALL ITEM MARK NUMBERS SHALL INCLUDE PREFIX 2HVT: EXAMPLE: 2HVT-FN25
Q A CAT. II, CLASS-M

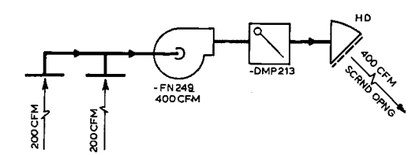

TOILET ROOM VENT SYSTEM
TURBINE BUILDING
ALL ITEM MARK NUMBERS SHALL INCLUDE PREFIX 2HVT
EXAMPLE: 2HVT-DMP 213
Q A CAT. III, CLASS-L

NOTES:
1. FOR GENERAL NOTES, LEGEND AND REFERENCE DWGS SEE RB-84A

FORTIONS OF THIS DOCUMENT ARE
NUCLEAR SAFETY RELATED

FINALIZED FLUID SYSTEM

THE INFORMATION ON THIS DRAWING MAY NOT BE COPIED OR USED FOR OTHER THAN THE CONSTRUCTION, MAINTENANCE OR REPAIR OF THE PLANT FACILITY DESCRIBED IN THE TITLE BLOCK.

APPROVED Anton T. Sylvester
REGISTERED PROFESSIONAL ENGINEER NO. 19261-E
COMMONWEALTH OF PENNSYLVANIA

REVISIONS

7	SEE RECORD OF DRAWING CHANGES 12241-BCB-84B-7	
	SEE RECORD OF DRAWING CHANGES 12241-BCB-84B-6	
5	SEE RECORD OF DRAWING CHANGES BCB-84B-5	
4	SEE RECORD OF DWG CHANGES 12241-BCB-84B-4	
3	SEE RECORD OF DWG CHANGES 12241-BCB-84B-3	
2	SEE RECORD OF CHANGES DWG: 12241-BCB-84B-2	
10	SEE RECORD OF DRAWING CHANGES 12241-BCB-84B-9	
8	SEE RECORD OF DRAWING CHANGES BCB-84B-8	
1	SEE RECORD OF DWG CHANGES 12241-BCB-84B-1	

STONE & WEBSTER ENGINEERING CORP.
BOSTON, MASS.

DUQUESNE LIGHT COMPANY
ENGINEERING & CONSTRUCTION PITTSBURGH, PA.

SCALE: NONE
DATE 7-6-73
DRAWN LAZZARO
CHECKED C TAN
INSPECTED
ARCH. APP.
ELECT. APP.
MECH. APP.
STRUCT. APP.

FLOW DIAGRAM
VENT. & AIR COND. SEC. PLANT-SH. 2
BEAVER VALLEY POWER STATION UNIT NO. 2
G.F.E. NO. 10080
C.O. NO. 6288
AA No. 10080-RB-84B

S&W DWG. NO. 12241-RB-84B-10

No. 10080-RB-84C

IDENTIFICATION	ITEM	FOR MFR & TYPE NO. SEE 2BVS-934	SIZE	QTY
V1,2,3,4,5	GLOBE VALVE		2 1/8"	5
V6,7	ANGLE VALVE		1/2"	2
V 19, 20, 21, 22	GLOBE VALVE		1/4"	4
2HVC-TI 201A,202A 203A, 204A	TEMP INDICATOR		—	4
2HVC#STR201A	Y STRAINER		2 1/8"	1
2HVC#FG240A, 241A	FLOW INDICATOR		2 1/8"	2
2HVC#FLT201A	FILTER-DRYER		2 1/8"	1
2HVC#MEJ229A	VIBRATION ELIMINATOR		2 1/8"	1
2HVC#MEJ228A	VIBRATION ELIMINATOR		3 5/8"	1
2HVC# TXV 201A, 202A,203A,204A	THERMOSTATIC EXPANSION VALVE	SEE 2BVS-179	7/8"x1 1/8"	4
2HVC#SOV 201A	SOLENOID VALVE	SEE 2BVS-719	2 1/8"	1

SEE NOTE 10

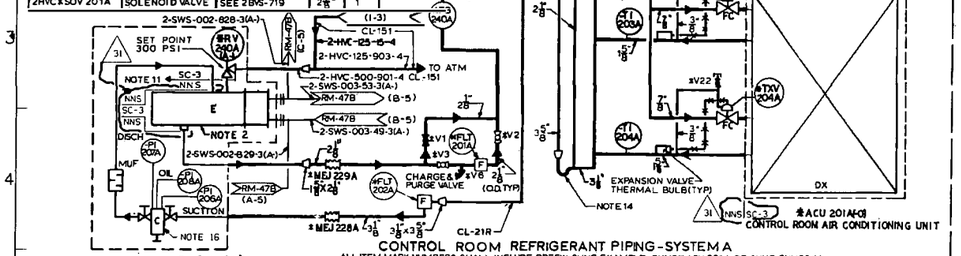

CONTROL ROOM REFRIGERANT PIPING-SYSTEM A

ALL ITEM MARK NUMBERS SHALL INCLUDE PREFIX 2HVC EXAMPLE: 2HVC#ACU 201A OR 2HVC#TXV 204A

CATEGORY-I, II.

#REF 24A(A0) REFRIGERANT CONDENSING UNIT

IDENTIFICATION	ITEM	FOR MFR&TYPE NO. SEE 2BVS-934	SIZE	QTY
V8,9,10,11,12	GLOBE VALVE		2 1/8"	5
V13,14	ANGLE VALVE		1/2"	2
V 15,16,17,18	GLOBE VALVE		1/4"	4
2HVC-TI 201B, 202B, 203B, 204B	TEMP INDICATOR		—	4
2HVC#STR201B	Y STRAINER		2 1/8"	1
2HVC#FG240B, 241B	FLOW INDICATOR		2 1/8"	2
2HVC#FLT201B	FILTER-DRYER		2 1/8"	1
2HVC#MEJ229B	VIBRATION ELIMINATOR		2 1/8"	1
2HVC#MEJ228B	VIBRATION ELIMINATOR		3 5/8"	1
2HVC # TXV 201B, 202B, 203B, 204B	THERMOSTATIC EXPANSION VALVE	SEE 2BVS-179	7/8"x1 1/8"	4
2HVC#SOV 201B	SOLENOID VALVE	SEE 2BVS-719	2 1/8"	1

SEE NOTE 10

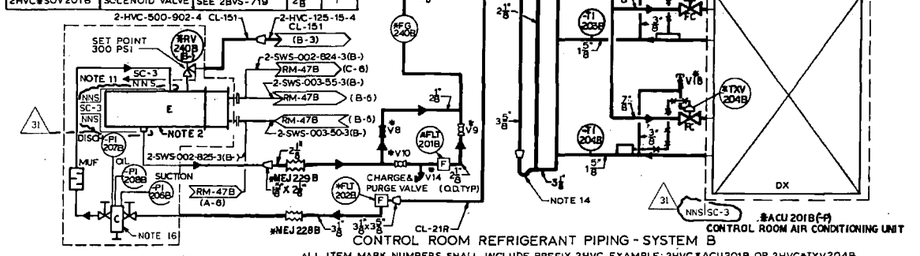

CONTROL ROOM REFRIGERANT PIPING - SYSTEM B

ALL ITEM MARK NUMBERS SHALL INCLUDE PREFIX 2HVC EXAMPLE: 2HVC#ACU201B OR 2HVC#TXV204B

CATEGORY-I, II.

#REF 24B(B-P) REFRIGERANT CONDENSING UNIT

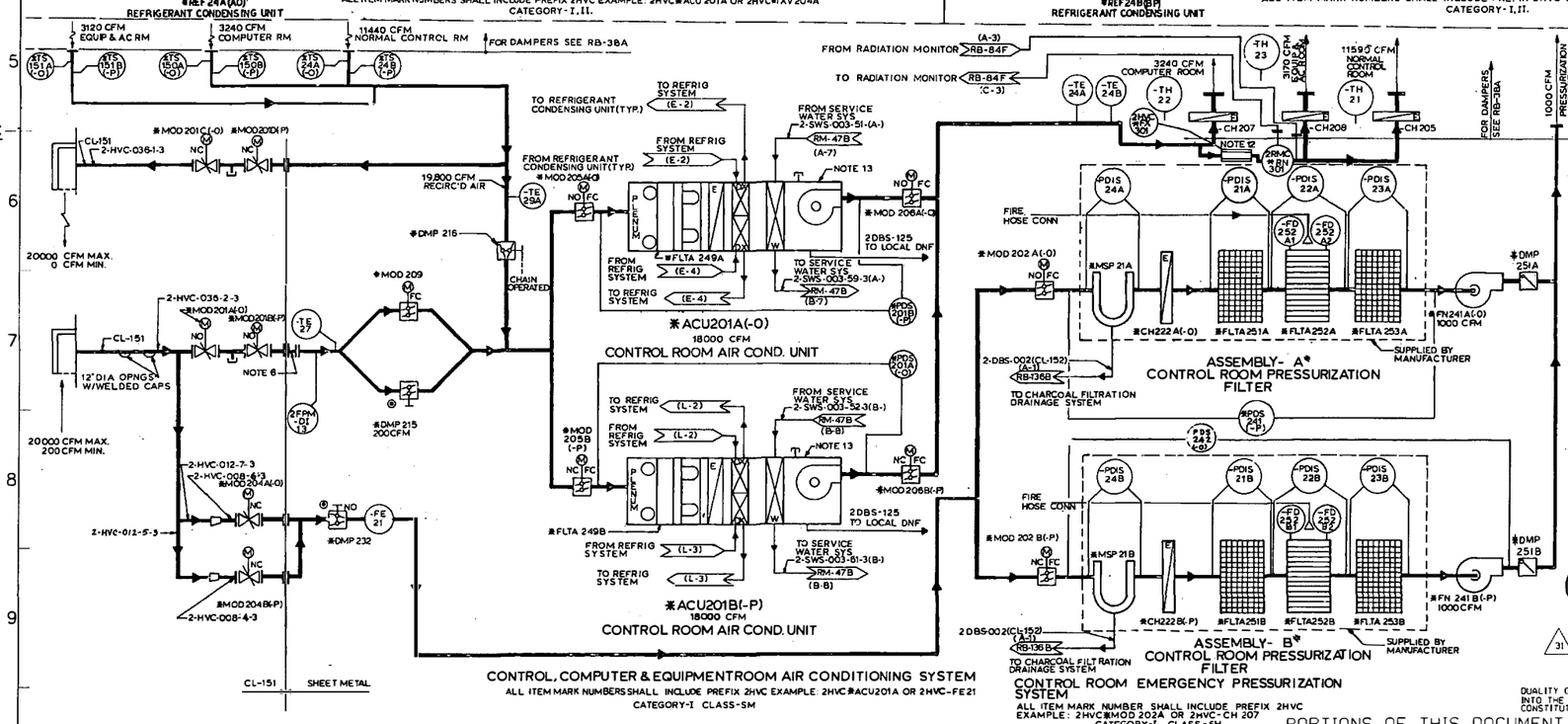

NOTES:

1. FOR LEGEND, GENERAL NOTES & REFERENCE DRAWINGS SEE RB-84A.
2. REFRIGERANT CONDENSING UNITS ARE PROVIDED WITH ASME III CL 3 CONDENSERS.
3. #EQUIPMENT FURNISHED AS FOLLOWS:
   2HVC# REF 24A & B – CARRIER AIR COND. CO.
   2HVC# ACU201A & B – CARRIER AIR COND. CO.
   CONTROL RM PRESS. FILTER ASSEM. A & B - AMERICAN AIR FILTER CO.
4.
5.
6. PROVISIONS FOR FUTURE BACKFIT OF TORNADO DAMPERS.
7. ALL PIPING FOR AIR INTAKE AND EXHAUST IN THE CONTROL, COMPUTER & EQUIPMENT ROOM AIR CONDITIONING SYSTEM SHALL BE CLEANNESS LEVEL D PER 2BVM-62
8. THE OUTLET LINES OF THE CONTROL ROOM AIR CONDITIONING UNITS 2HVC# ACU201A & B THAT TRAVEL TO THE INLET OF THE REFRIGERANT COND UNITS 2HVC# REF24A & B SHALL BE INSULATED IN ACCORDANCE WITH 2BVS-60. OUTLET LINES FROM 2HVC# REF24A & B THAT SUPPLY 2HVC# ACU201A&B SHALL NOT BE INSULATED.
9. TO FACILITATE CONNECTION OF LINE NUMBERS 2-HVC-125-903-4 & 2-HVC-125-15-4 TO RELIEF VALVES 2-HVC# RV240A & B, USE FITTINGS MFD BY PARKER FLUID CONNECTORS, HUNTSVILLE, ALA.: 37° FLARE (W/ 3/8" TUBE) PART NO. 10-10X6HBZG-B FEMALE CONNECTOR (3/8" TUBE X 1/2" NPT) PART NO. 10-8GBZ-B
10. VAPOR ACTUATED TEMPERATURE INDICATORS ARE NOT IN-LINE DEVICES
11. CATEGORY I PIPING AND COMPONENTS ARE SC-3 NON-ASME, EXCEPT THE WATER SIDE OF THE CONDENSER HEAT EXCHANGER WHICH IS ASME III, CLASS 3.
12. AIR STRAIGHTENER (2HVC#FX301) SHALL BE PROCURED BY THE FIELD. IT SHALL BE FURNISHED FROM THE AIR MONITOR CORP. MODEL NO. ASE-10SS, STAINLESS STEEL, CATEGORY I AND SEISMIC CATEGORY I
13. THE SERVICE WATER COOLING COILS ARE THE ONLY ASME III PORTION OF THESE UNITS.
14. TRAP SHALL BE CONSTRUCTED TO HAVE SMALLEST VOLUME POSSIBLE.
15. FLOWS SHOWN FOR CONTROL ROOM PRESSURIZATION FILTERS/FANS ARE THE MAXIMUM. THE MINIMUM VALUES ARE 80% OF THE GIVEN VALUES.
16. 2VC-C24A, -24B, -P1206A, -P1207A, -P1208A, -P1206B, -P1207B AND -P1208B RECLASSIFIED TO NNS BY ECR 03-0394.
17. CONTROL ROOM REFRIGERANT PIPING - SYSTEM A AND SYSTEM B HAVE BEEN DOWNGRADED TO NSS VIA ECP 06-0053 WITH THE EXCEPTION OF THE CONDENSER UNIT (2HVC-CND24A, B), WHICH REMAINS SAFETY RELATED AS A SERVICE WATER PRESSURE BOUNDARY.

31

QUALITY GROUP CLASSIFICATIONS ARE "INCORPORATED BY REFERENCE" INTO THE UFSAR. A CHANGE TO QUALITY GROUP CLASSIFICATIONS CONSTITUTES A CHANGE TO THE UFSAR.

PORTIONS OF THIS DOCUMENT ARE NUCLEAR SAFETY RELATED

REVISION 31 INCORPORATED ECP-06-0053 IDCN-2-RB-0084C-E06-0053-01

FENOC FIRSTENERGY NUCLEAR OPERATING COMPANY

SCALE	DATE	DRAWN BY	CHECKED BY	ENGR/CHR	MECH APP	ELECT APP	MECH APP	CIVIL APP	FINAL APP FOR ISSUE
NONE	2-23-06	MVF							

BEAVER VALLEY POWER STATION UNIT 2

FLOW DIAGRAM VENT & AIR COND - SEC PLANT SH 3

AA | DWG NO. 10080-RB-84C | REV 31

PREPARED ON THE BVPS CADDI SYSTEM

24-OCT-2011 14:08 Mstu2\rb0084c.dgn

No.10080-RB-84H

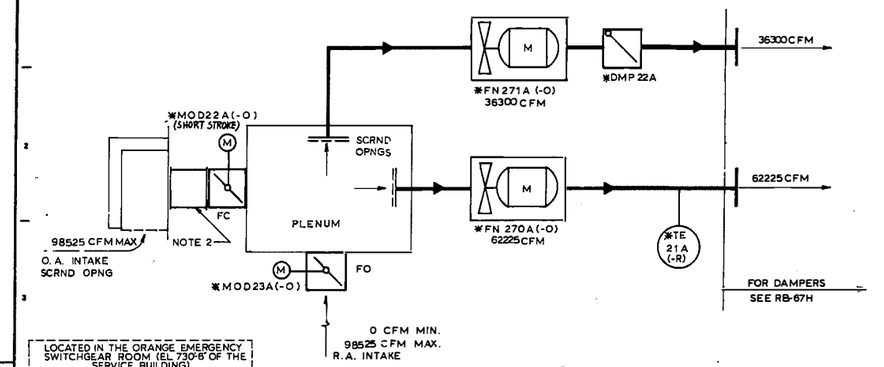

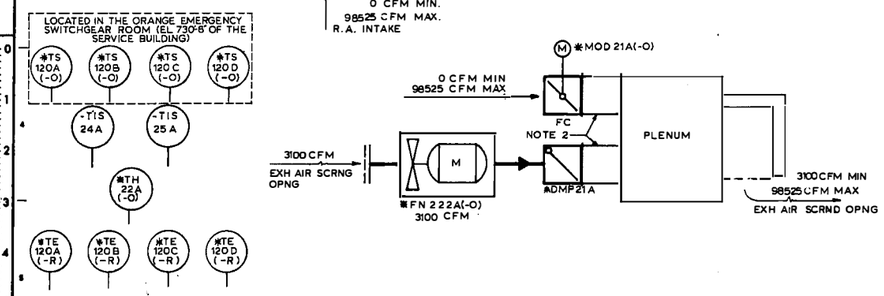

SOUTH DIESEL GENERATOR BUILDING VENTILATION SYSTEM
ALL ITEM MARK NUMBERS SHALL INCLUDE PREFIX 2HVD
EXAMPLE: 2HVD*DMP21A CATEGORY I, CLASS-SM

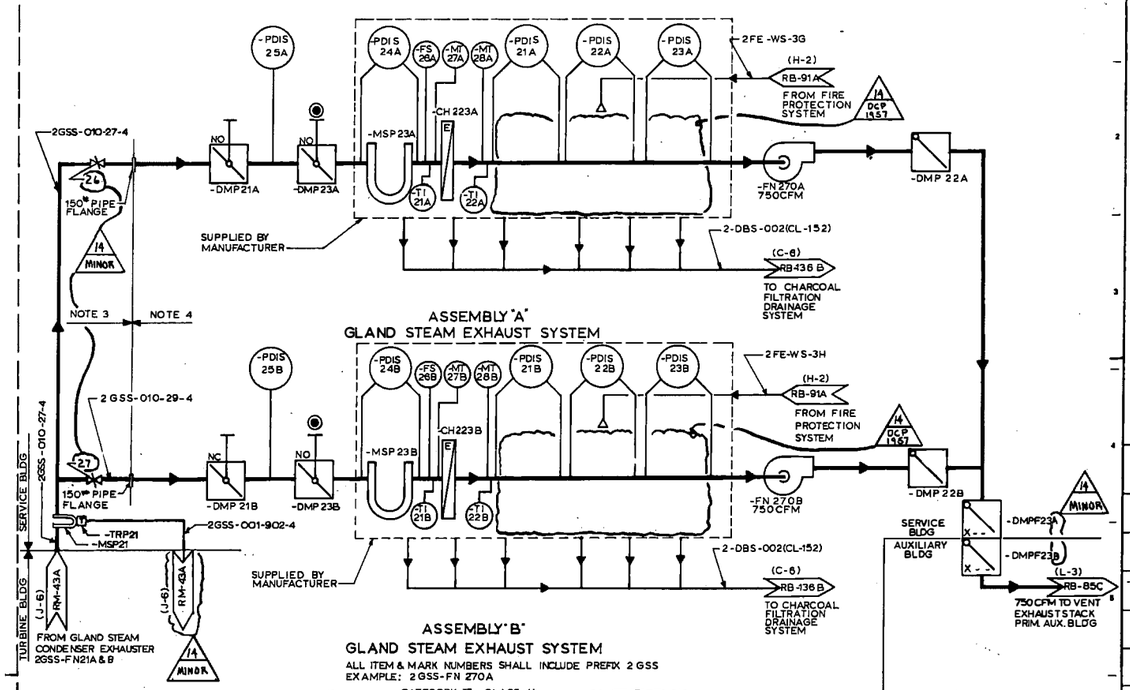

VALVE IDENTIFICATION	MARK NUMBER	PIPE SIZE	QUANTITY
2GSS-26 & 27	W1012G	10"	2

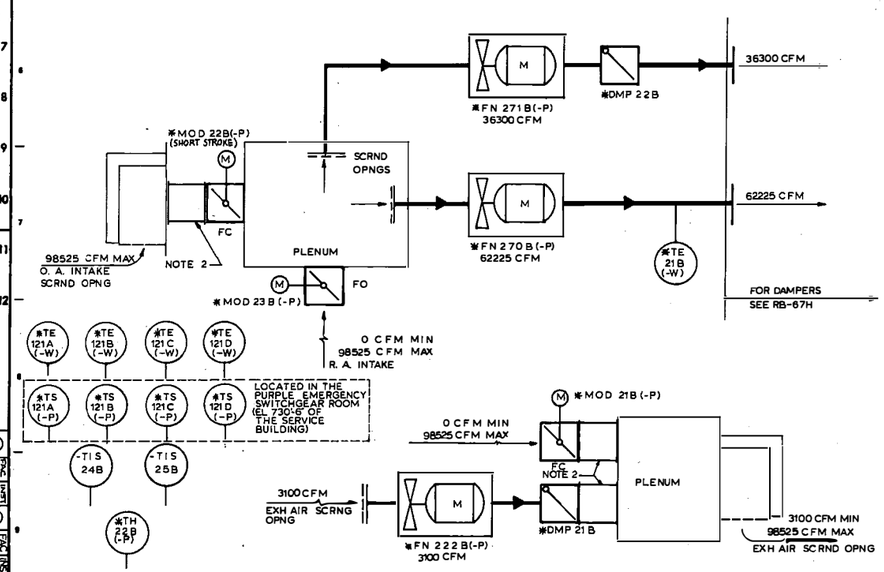

NORTH DIESEL GENERATOR BUILDING VENTILATION SYSTEM
ALL ITEM & MARK NUMBERS SHALL INCLUDE PREFIX 2HVD
EXAMPLE: 2HVD*MOD 22B
CATEGORY I, CLASS-SM

FORTIONS OF THIS DOCUMENT ARE
NUCLEAR SAFETY RELATED

NOTES:
1. FOR LEGEND, GENERAL NOTES & REFERENCE DRAWINGS SEE RB-84A
2. PROVISIONS FOR FUTURE BACKFIT OF TORNADO DAMPERS TO BE PROVIDED.
3. PIPE FABRICATION IN ACCORDANCE WITH 2BVS-58, SUPPORT DESIGN & FABRICATION IN ACCORDANCE 2BVS-59, INSTALLATION IN ACCORDANCE WITH 2BVS-920.
4. DUCT FABRICATION AND INSTALLATION IN ACCORDANCE WITH 2BVS-935

FINALIZED FLUID SYSTEM

THE INFORMATION ON THIS DRAWING MAY NOT BE COPIED OR USED FOR OTHER THAN THE CONSTRUCTION, MAINTENANCE OR REPAIR OF THE PLANT FACILITY DESCRIBED IN THE TITLE BLOCK.

APPROVED Walter Joseph Parker, Jr.
REGISTERED PROFESSIONAL ENGINEER NO. 24603-E
COMMONWEALTH OF PENNSYLVANIA

REVISIONS

11	DCP 881 INCORP EDCR 2SE-30432	MAR 6-6-80 DCHK:
12	TER 1651	ADDED SHORT STROKE NOTATION TO MARK NOS. MOD 22A(-O), MOD 22B(-P)
13	NOR. CONG. CHG. CHG. VALVE FROM SOLID TO DISCS PER	
14	DCP 1957 MINOR CHANGE	WEC 8-27-82 DTCHK:
	MINOR CHANGE	
	MINOR CHANGE	
	MINOR CHANGE	
	ADDED DMPF23A & 23B PER E&DCR NO. D-5351-501	NIL-5
	SEE RECORD OF DRAWING CHANGES 12241-BCB-84H-7	
	SEE RECORD OF DRAWING CHANGES 12241-BCB-84H-6	
	SEE RECORD OF DRAWING CHANGES 12241-BCB-84H-5	
	ADDED SCRND OPNG PER E&DCR NO. D-5052-501.	B-27
	SEE RECORD OF DRAWING CHANGES 12241-BCB-84H-3	
	SEE RECORD OF DRAWING CHANGES 12241-BCB-84H-4	
	SEE RECORD OF DRAWING CHANGES 12241-BCB-84H-1	
	INCORP EDCR 2B-33358 & 2B-33859	

STONE & WEBSTER ENGINEERING CORP
BOSTON, MASS.

DUQUESNE LIGHT COMPANY
ENGINEERING & CONSTRUCTION PITTSBURGH, PA.

SCALE NONE	DATE 9/23/82	ARCH. APP.
	DRAWN R.W.H.	ELECT. APP.
	CHECKED T.C.	MECH. APP.
	INSPECTED	STRUCT. APP.

FLOW DIAGRAM
VENT & AIR COND SEC PLANT SHB
BEAVER VALLEY POWER STATION UNIT NO.2
O.F.E. NO. 10080
C.O. NO. 1289
AA No. 10080-RB-84H.

S&W DWG. NO. 12241-RB-84H-14

No. 10080-RB-84J

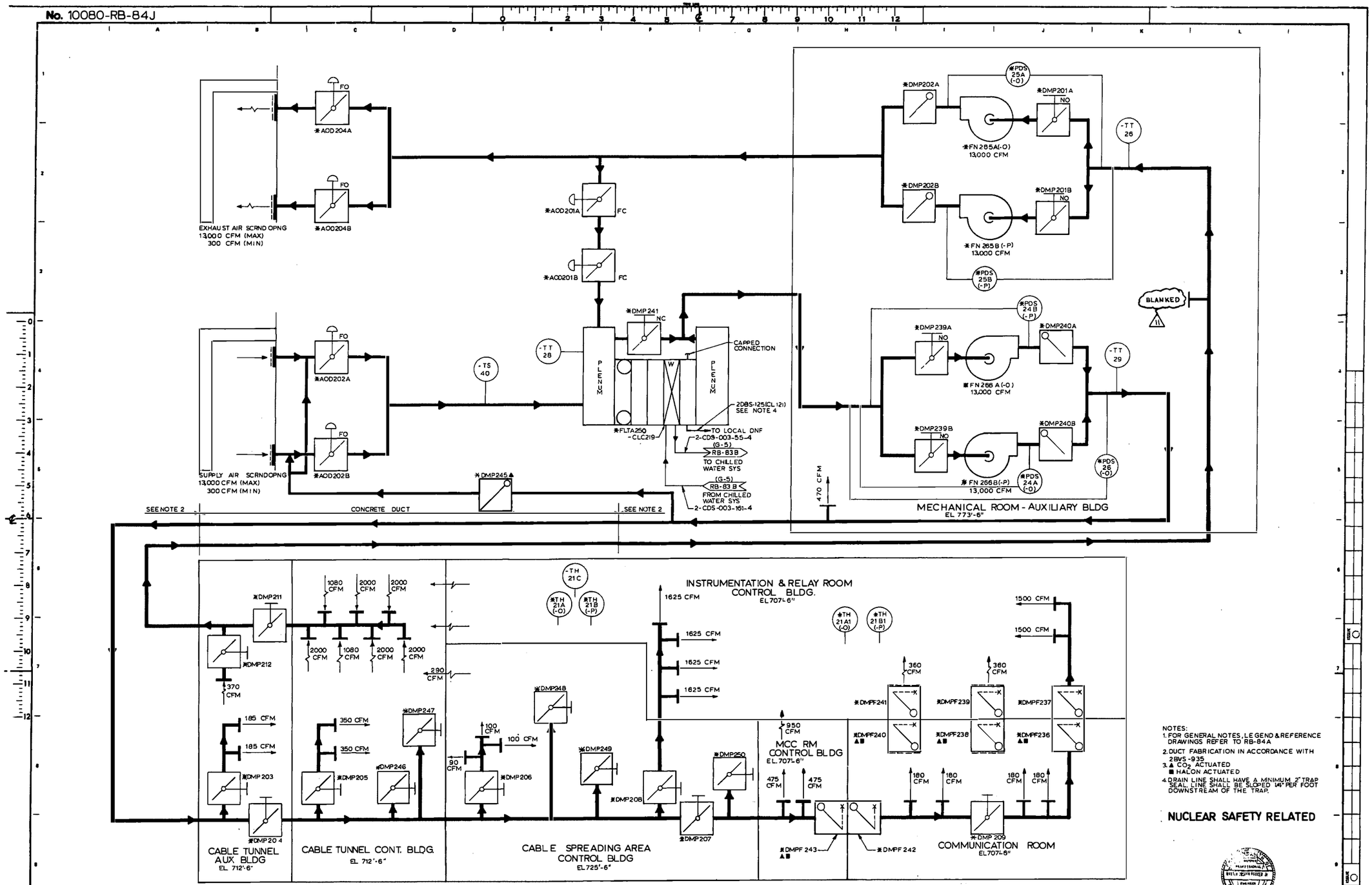

NOTES:
1. FOR GENERAL NOTES, LEGEND & REFERENCE DRAWINGS REFER TO RB-84A
2. DUCT FABRICATION IN ACCORDANCE WITH 2BVS-935
3. ▲ CO_2 ACTUATED
   ■ HALON ACTUATED
4. DRAIN LINE SHALL HAVE A MINIMUM 2" TRAP SEAL. LINE SHALL BE SLOPED 1/4" PER FOOT DOWNSTREAM OF THE TRAP.

NUCLEAR SAFETY RELATED

CONTROL BUILDING AIR CONDITIONING SYSTEM
ALL ITEM MARK NUMBERS SHALL INCLUDE PREFIX 2HVC EXAMPLE: 2HVC*AOD 204A
CATEGORY I. CLASS SM

FINALIZED FLUID SYSTEM

THE INFORMATION ON THIS DRAWING MAY NOT BE COPIED OR USED FOR OTHER THAN THE CONSTRUCTION, MAINTENANCE OR REPAIR OF THE PLANT FACILITY DESCRIBED IN THE TITLE BLOCK.

APPROVED Walter Jacobs Parker Jr.
REGISTERED PROFESSIONAL ENGINEER NO. E-9603-E
COMMONWEALTH OF PENNSYLVANIA

REVISIONS

REV	DESCRIPTION	CHKD	CONC	APPD	DATE
9	INCORP TER 538 WITH VARIOUS ECN & DCR D-5291 521				9-7
10	TER 273 CO~ DWG 246 THRD 273 MICRO				JAN 1/15/90
11	DCP 1450 INCORP INTERIM ISSUE 10A-2				DVB D/CHK: 2-3-94 MICRO
12	(F-5) REMOVED ASTERISK PER N&D NO. 34598D				
13	(F-5) RELOCATED *DMP207 PER EADR NO. 2PS-4634. FOR RECORD OF DRAWING CHANGES SEE 12241-BCB-84J6				
14	FOR RECORD OF DRAWING CHANGES SEE 12241-BCB-84J-5				
15	SEE RECORD OF DRAWING CHANGES 12241-BCB-84J-4				
16	SEE RECORD OF DRAWING CHANGES 12241-BCB-84J-3				
17	SEE RECORD OF DRAWING CHANGES 12241-BCB-84J-2				

STONE & WEBSTER ENGINEERING CORP
BOSTON, MASS.

DUQUESNE LIGHT COMPANY
ENGINEERING & CONSTRUCTION PITTSBURGH, PA.

SCALE NONE | DATE 10/15/82 | DRAWN B.HOLMES | CHECKED T.DALAL | INSPECTED | ARCH. APP. | ELECT. APP. | MECH. APP. | STRUCT. APP.

FLOW DIAGRAM
VENT. & AIR COND.-SEC. PLANT SH 9
BEAVER VALLEY POWER STATION UNIT NO. 2
O.F.E. NO. 10080 | C.O. NO. 6289 | AA | No. 10080-RB-84J

S&W DWG. NO. 12241-RB-84J-11

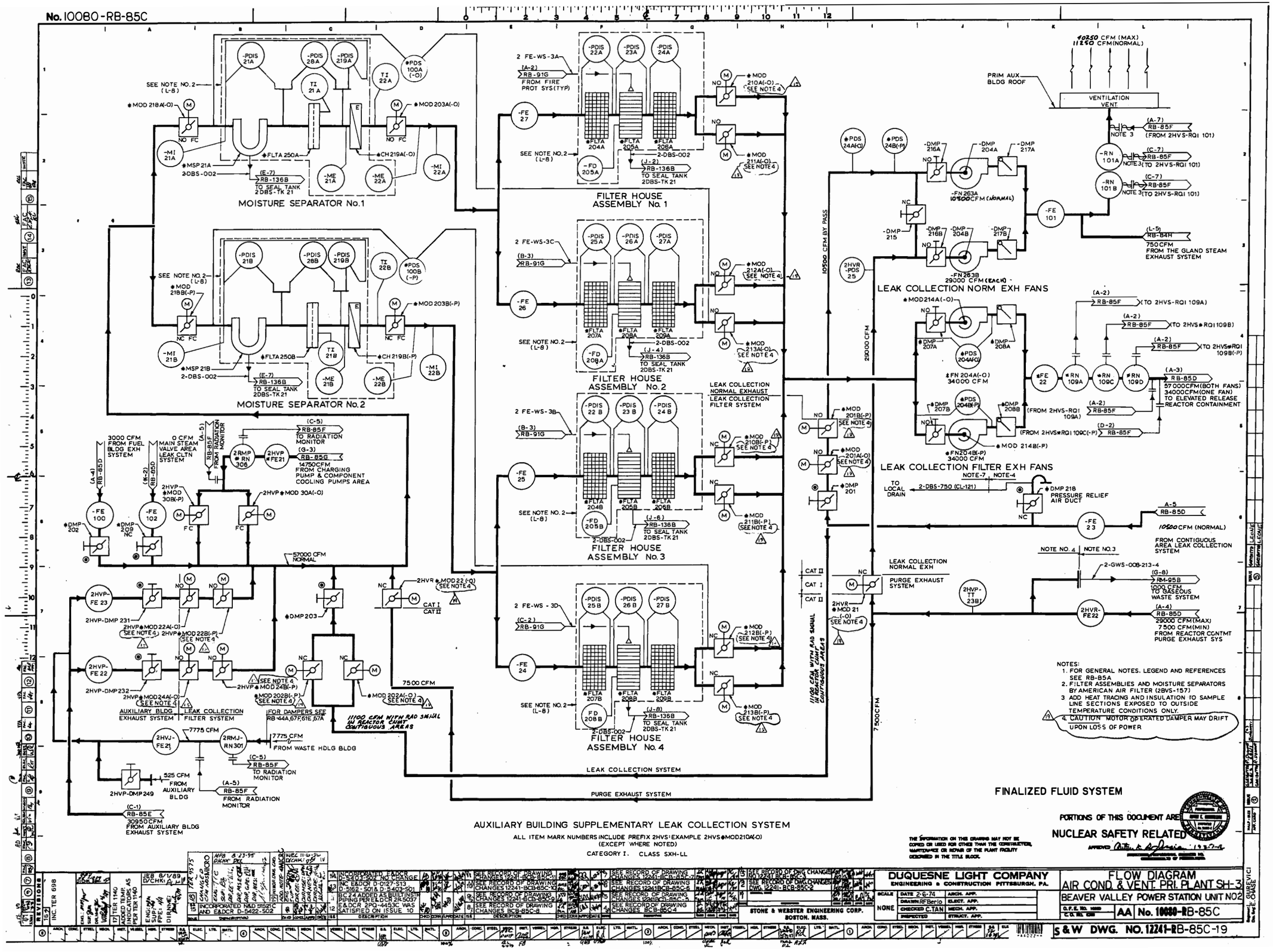
No. 10080-RB-85C
MOISTURE SEPARATOR No.1
MOISTURE SEPARATOR No.2
FILTER HOUSE ASSEMBLY No. 1
FILTER HOUSE ASSEMBLY No. 2
FILTER HOUSE ASSEMBLY No. 3
FILTER HOUSE ASSEMBLY No. 4
LEAK COLLECTION NORMAL EXHAUST
LEAK COLLECTION FILTER SYSTEM
LEAK COLLECTION NORM EXH FANS
LEAK COLLECTION FILTER EXH FANS
VENTILATION VENT
PRIM AUX BLDG ROOF
LEAK COLLECTION NORMAL EXH
PURGE EXHAUST SYSTEM
AUXILIARY BLDG EXHAUST SYSTEM
LEAK COLLECTION FILTER SYSTEM
LEAK COLLECTION SYSTEM
PURGE EXHAUST SYSTEM
NOTES:
1. FOR GENERAL NOTES, LEGEND AND REFERENCES SEE RB-85A
2. FILTER ASSEMBLIES AND MOISTURE SEPARATORS BY AMERICAN AIR FILTER (2BVS-157)
3 ADD HEAT TRACING AND INSULATION TO SAMPLE LINE SECTIONS EXPOSED TO OUTSIDE TEMPERATURE CONDITIONS ONLY.
4. CAUTION MOTOR OPERATED DAMPER MAY DRIFT UPON LOSS OF POWER
FINALIZED FLUID SYSTEM
PORTIONS OF THIS DOCUMENT ARE NUCLEAR SAFETY RELATED
AUXILIARY BUILDING SUPPLEMENTARY LEAK COLLECTION SYSTEM
ALL ITEM MARK NUMBERS INCLUDE PREFIX 2HVS: EXAMPLE 2HVS♦MOD210A(-O)
(EXCEPT WHERE NOTED)
CATEGORY I. CLASS SXH-LL
DUQUESNE LIGHT COMPANY
ENGINEERING & CONSTRUCTION PITTSBURGH, PA.
STONE & WEBSTER ENGINEERING CORP. BOSTON, MASS.
FLOW DIAGRAM
AIR COND. & VENT. PRI. PLANT SH-3
BEAVER VALLEY POWER STATION UNIT NO2
AA No. 10080-RB-85C
S & W DWG. NO. 12241-RB-85C-19

No. 10080-RB-85D

VALVE IDENTIFICATION	MARK NUMBER	PIPE SIZE	QUANTITY
*V3, *V4	V050G0-C-2	3/4"	2

NOTES:
1. FOR LEGEND, GENERAL NOTES & REFERENCE DWGS SEE RB-85A
2.
3. FLEXIBLE CONN BY SHEET METAL CONTRACTOR. NO COMPANION FLANGE REQD ON PIPE END
4. PIPE FABRICATION IN ACCORDANCE WITH 2BVS-58 SUPPORT, DESIGN & FABRICATION IN ACCORDANCE WITH 2BVS-59, INSTALLATION IN ACCORDANCE WITH 2BVS-920
5. DUCT FABRICATION AND INSTALLATION IN ACCORDANCE WITH 2BVS-935
6. AIR STRAIGHTENER (2HVR*FX301) SHALL BE PROCURED BY THE FIELD. IT SHALL BE FURNISHED FROM THE AIR MONITOR CORP-MOD NO. ASE-10SS, STAINLESS STEEL, CATEGORY I, SEISMIC CATEGORY I

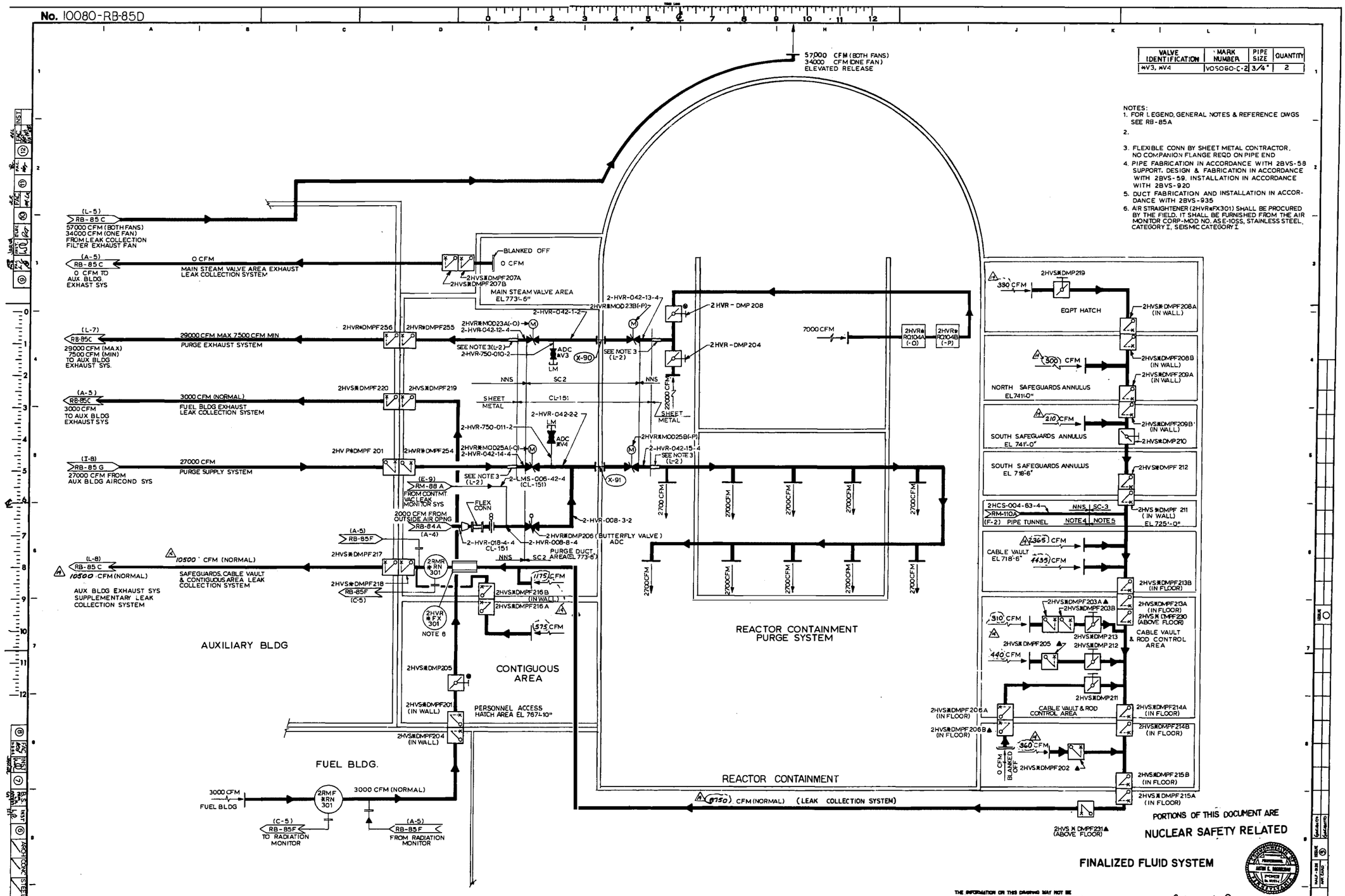

PORTIONS OF THIS DOCUMENT ARE NUCLEAR SAFETY RELATED

FINALIZED FLUID SYSTEM

THE INFORMATION ON THIS DRAWING MAY NOT BE COPIED OR USED FOR OTHER THAN THE CONSTRUCTION, MAINTENANCE OR REPAIR OF THE PLANT FACILITY DESIGNED IN THE TITLE BLOCK.

APPROVED Anton E. Rodriguez 1-8-74
REGISTERED PROFESSIONAL ENGINEER NO. COMMONWEALTH OF PENNSYLVANIA

REVISIONS: 13 INC TER 747; 12 INCORP D-5300-528, D-5423-502, & H&D 31521C (REV FLOW RATES); 11 SEE RECORD OF DRAWING CHANGES 12241-BCB-850-21; 10 SEE RECORD OF DRAWING CHANGES 12241-BCB-850-10; 9 SEE RECORD OF DRAWING CHANGES 12241-BCB-850-9; 8 SEE RECORD OF DRAWING CHANGES 12241-BCB-850-8; 7 INCORPORATED THIS ISSUE E&DCR 225-2946, 225-3091C; 6 SEE RECORD OF DRAWING CHANGES 12241-BCB-850-6; 5 SEE RECORD OF DRAWING CHANGES 12241-BCB-850-5; 4 SEE RECORD OF DRAWING CHANGES BCB-850-4; 3 SEE RECORD OF DWG CHANGES DWG. 12241-BCB-850-3; 2 SEE RECORD OF DWG CHANGES DWG. 12241-BCB-850-2; 1 ISSUE

STONE & WEBSTER ENGINEERING CORP. BOSTON, MASS.

DUQUESNE LIGHT COMPANY
ENGINEERING & CONSTRUCTION PITTSBURGH, PA.

SCALE NONE; DATE 2-6-74; DRAWN LAZZARO; CHECKED C.TAN; INSPECTED; ARCH. APP.; ELECT. APP.; MECH. APP.; STRUCT. APP.

FLOW DIAGRAM
AIR COND & VENT PRI PLANT SH-4
BEAVER VALLEY POWER STATION UNIT NO.2

O.F.E. NO. 10080; C.O. No. 6289; AA No. 10080-RB-85D

S&W DWG. NO. 12241-RB-85D-14

No. 10080-RB-85F

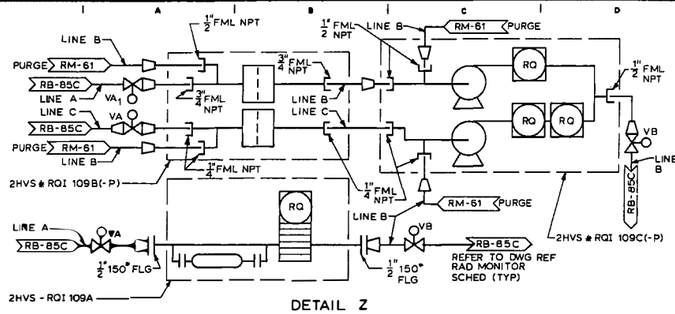

DETAIL Z
NOTE 3

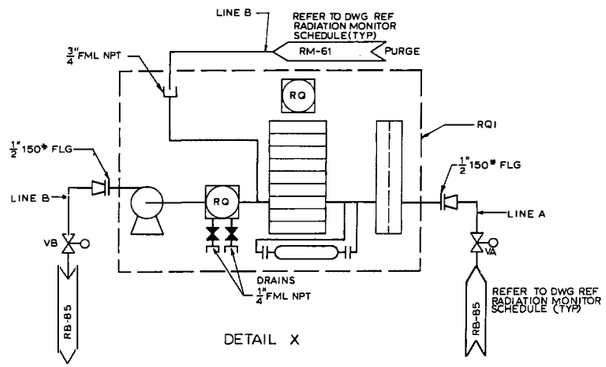

DETAIL X

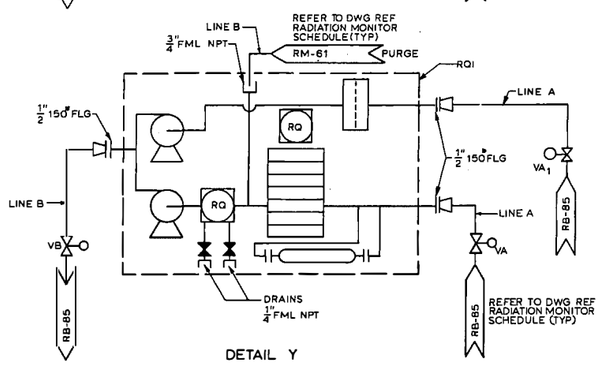

DETAIL Y

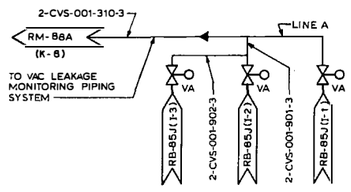

DETAIL X X

RADIATION MONITOR SCHEDULE

RN NO.	DWG REF	DET	RQI NO.	RQ NO.	RQ NO.	VA1	VA	VB	LINE A	LINE B	LINE C	PURGE LN NO.	DWG REF
2 RMO - RN 301 A, B	RB - 85H(C-6)	Y	2 RMO - RQI 301	301A	301B	V30	V5	V6	1"	3/4"	—	2-IAS-750-444	RM-61B, RK-15 SERIES
2 RMR * RN 303A	RB - 85J (1-1)	XX		303A	303B	—	V7	—			—		
2 RMR * RN 303B	RB - 85J (1-2)	XX	2 RMR * RQI 303 (-P)	—	—	—	V8	—			—		
2 RMR * RN 303C	RB - 85J (1-3)	XX		—	—	—	V9	—			—		
2 RMF * RN 301	RB - 85D(B-9)	X	2 RMF - RQI 301	301A	301B	—	V10	V11			—	2-IAS-750-445	
2 RMP - RN 302	RB - 85E(C-8)	X	2 RMP - RQI 302	302A	302B	—	V12	V13			—	2-IAS-750-460	
2 RMP - RN 300	RB - 85E(A-6)	X	2 RMP - RQI 300	300A	300B	—	V14	V15			—	2-IAS-750-462	
2 RMP - RN 304	RB - 85E(C-7)	X	2 RMP - RQI 304	304A	304B	—	V16	V17			—	2-IAS-750-461	
2 RMP - RN 308	RB - 85E(B-5)	X	2 RMP - RQI 308	308A	308B	—	V18	V19			—	2-IAS-750-443	
2 RMP - RN 310	RB - 85E(B 2)	X	2 RMP - RQI 310	310A	310B	—	V20	V21			—	2-IAS-750-942	
2 RMJ - RN 301	RB - 85C(B-8)	X	2 RMJ - RQI 301	301A	301B	—	V22	V23			—	2-IAS-750-463	
2 RMP * RN 306	RB - 85C(B-5)	X	2 RMP - RQI 306	306A	306B	—	V24	V25			—	2-IAS-750-943	
2 RMP - RN 312	RB - 85C(B-5)	X	2 RMP - RQI 312	312A	312B	—	V26	V27			—	2-IAS-750-441	
2 RMR * RN 301	RB - 85D(D-6)	X	2 RMR - RQI 301	301A	301B	—	V28	V29			—	2-IAS-750-464	
—	—		—	—	—	—	—	—	—	—	—	—	
2 HVS - RN 101 A, B	RB - 85C(L-2)	Y	2 HVS - RQI 101	101A	101B	V38	V32	V33	1"	3/4"	—	2-IAS-750-466	
2 RMO - RN 303 A, B	RB - 85H(F-6)	Y	2 RMO - RQI 303	303A	303B	V42	V34	V35			—	2-IAS-750-467	
2 HVS * RN 109A	RB - 85C(L-5)	Z	2 HVS - RQI 109A	109A	—	—	V37	V31			—	2-IAS-750-465	
2 HVS * RN 109C	RB - 85C(L-5)	Z	2 HVS * RQI 109B(-P)	—	—	V39	—	—	3/4"		—	2-IAS-750-147	
2 HVS * RN 109D	RB - 85C(L-5)	Z	2 HVS * RQI 109C(-P)	109B		—	V40	V41	—		1/4"	2-IAS-750-148	
				109C	109D	—	—		—		—	2-IAS-750-149	

NOTE: THE VALVES LISTED BELOW WERE PURCHASED BY THE POWER DIVISION & WILL BE INSTALLED BY INSTRUMENTATION

VALVE IDENTIFICATION	MARK NUMBER	VALVE SIZE	QUANTITY	PURCHASE ORDER
V7, 8, 9	VBS015-Y-3	1"	3	2BVS-67
V5, 10, 12, 14, 16, 18, 20, 22, 24, 26, 28, 30, 32, 34, 36, 37	VBS015-D-4	1"	16	2BVS-78
V11, 13, 15, 17, 21, 23, 25, 27, 29, 31, 33, 6, 35, 19	VBS015-D-4	3/4"	14	2BVS-78
V40, 41, 39	VBS015-Y-3	3/4"	3	2BVS-67

NOTES:
1. FOR GENERAL NOTES, LEGEND AND REFERENCE DWGS SEE RB-85A
2. THE INLET SAMPLE TUBING (LINE A) SHALL HAVE SMOOTH TRANSITIONS, MINIMUM 5D BENDS, WITH THE CONTINUOUS DOWNWARD SLOPE (FROM RN TO RQI) TO THE MAXIMUM EXTENT POSSIBLE TO MINIMIZE PARTICULATE PLATEOUT. THE RETURN TUBING (LINE B) SHALL BE CONFIGURED TO MINIMIZED PRESSURE DROP.
3. ALL LINES ASSOCIATED WITH RADIATION MONITORS 2HVS * RQI 109B(-P) AND C(-P) HAVE A MINIMUM SLOPE OF AT LEAST 15°.

PORTIONS OF THIS DOCUMENT ARE
NUCLEAR SAFETY RELATED

FINALIZED FLUID SYSTEM

THE INFORMATION ON THIS DRAWING MAY NOT BE COPIED OR USED FOR OTHER THAN THE CONSTRUCTION, MAINTENANCE OR REPAIR OF THE PLANT FACILITY DESCRIBED IN THE TITLE BLOCK.

PARTHO RAYSHRCAR
APPROVED
REGISTERED PROFESSIONAL ENGINEER NO. 28346-E
COMMONWEALTH OF PENNSYLVANIA

REVISIONS

REV	DESCRIPTION
11	SEE RECORD OF DRAWING CHANGES 12241-BCB-85F-11
10	SEE RECORD OF DRAWING CHANGES 12241-BCB-85F-10
9	FOR RECORD OF DRAWING CHANGES SEE 12241-BCB-85F-9
8	SEE RECORD OF DRAWING CHANGES 12241-BCB-85F-8
7	SEE RECORD OF DRAWING CHANGES 12241-BCB-85F-7
6	SEE RECORD OF DRAWING CHANGES 12241-BCB-85F-6
5	SEE RECORD OF DWG CHANGES 12241-BCB-85F-5
4	INCORP. E & DCN 2F-3365 & REV SCHED & DET XX(VAR)
3	ADDED RN 303 & DATA E-3 VALVE NWS E1428 REF LINE NWS L1223
2	C-3&6 ADDED DWG COORDINATES
1	ORIGINAL ISSUE

STONE & WEBSTER ENGINEERING CORP.
BOSTON, MASS.

DUQUESNE LIGHT COMPANY
ENGINEERING & CONSTRUCTION PITTSBURGH, PA.

SCALE NONE
DATE 10/30/79 ARCH. APP.
DRAWN R. BERLO ELECT. APP.
CHECKED J. ALLIES MECH. APP.
INSPECTED STRUCT. APP.

FLOW DIAGRAM
AIR COND & VENT PRI PLANT SH6
BEAVER VALLEY POWER STATION UNIT NO 2

O.F.E. NO. 10080
C.O. NO. 5300
AA No. 10080-RB-85F

S&W DWG. NO. 12241-RB-85F-11

Drawn L. GUREVICI
Chk E. CHASE

No. 10080-RB-85G

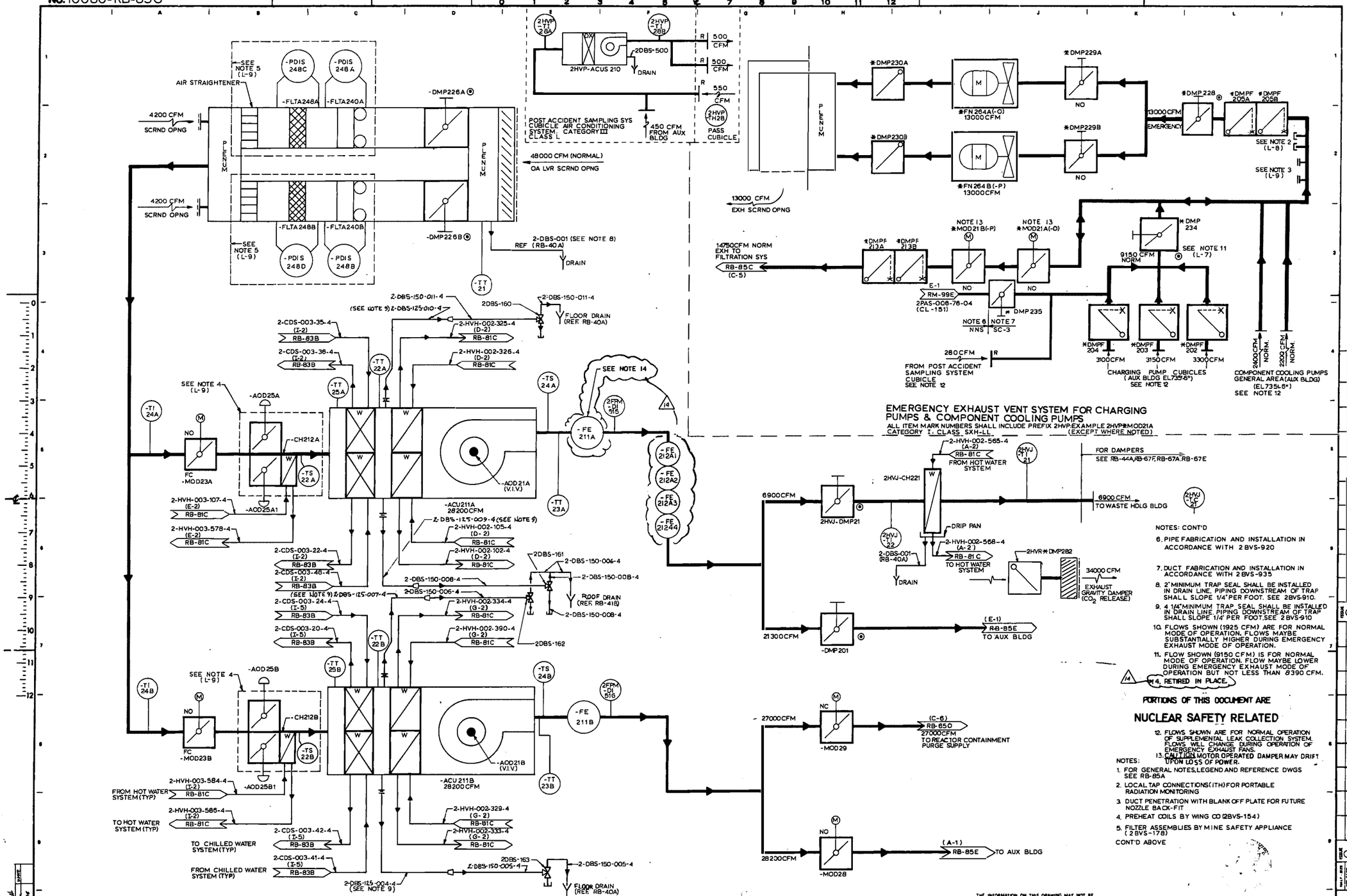

EMERGENCY EXHAUST VENT SYSTEM FOR CHARGING PUMPS & COMPONENT COOLING PUMPS

ALL ITEM MARK NUMBERS SHALL INCLUDE PREFIX 2HVP: EXAMPLE 2HVP*MOD21A
CATEGORY I, CLASS SXH-LL (EXCEPT WHERE NOTED)

AUXILIARY BUILDING AIR CONDITIONING SYSTEM

ALL ITEM MARK NUMBERS SHALL INCLUDE PREFIX 2HVP: EXAMPLE 2HVP-ACU211A
CATEGORY II, CLASS SH (EXCEPT WHERE NOTED)

FINALIZED FLUID SYSTEM

NOTES: CONT'D

6. PIPE FABRICATION AND INSTALLATION IN ACCORDANCE WITH 2BVS-920
7. DUCT FABRICATION AND INSTALLATION IN ACCORDANCE WITH 2BVS-935
8. 2" MINIMUM TRAP SEAL SHALL BE INSTALLED IN DRAIN LINE, PIPING DOWNSTREAM OF TRAP SHALL SLOPE 1/4" PER FOOT. SEE 2BVS-910.
9. 4 1/4" MINIMUM TRAP SEAL SHALL BE INSTALLED IN DRAIN LINE, PIPING DOWNSTREAM OF TRAP SHALL SLOPE 1/4" PER FOOT. SEE 2BVS-910
10. FLOWS SHOWN (1925 CFM) ARE FOR NORMAL MODE OF OPERATION. FLOWS MAYBE SUBSTANTIALLY HIGHER DURING EMERGENCY EXHAUST MODE OF OPERATION.
11. FLOW SHOWN (9150 CFM) IS FOR NORMAL MODE OF OPERATION. FLOW MAYBE LOWER DURING EMERGENCY EXHAUST MODE OF OPERATION BUT NOT LESS THAN 8390 CFM.

14 #14, RETIRED IN PLACE.

PORTIONS OF THIS DOCUMENT ARE

NUCLEAR SAFETY RELATED

12. FLOWS SHOWN ARE FOR NORMAL OPERATION OF SUPPLEMENTAL LEAK COLLECTION SYSTEM. FLOWS WILL CHANGE DURING OPERATION OF EMERGENCY EXHAUST FANS.
13. CAUTION MOTOR OPERATED DAMPER MAY DRIFT UPON LOSS OF POWER.

NOTES:

1. FOR GENERAL NOTES, LEGEND AND REFERENCE DWGS SEE RB-85A
2. LOCAL TAP CONNECTIONS (ITH) FOR PORTABLE RADIATION MONITORING
3. DUCT PENETRATION WITH BLANK OFF PLATE FOR FUTURE NOZZLE BACK-FIT
4. PREHEAT COILS BY WING CO (2BVS-154)
5. FILTER ASSEMBLIES BY MINE SAFETY APPLIANCE (2BVS-178)

CONT'D ABOVE

THE INFORMATION ON THIS DRAWING MAY NOT BE COPIED OR USED FOR OTHER THAN THE CONSTRUCTION, MAINTENANCE OR REPAIR OF THE PLANT FACILITY DESCRIBED IN THE TITLE BLOCK.

APPROVED Walter Graff Richards
REGISTERED PROFESSIONAL ENGINEER NO. E19672-E
COMMONWEALTH OF PENNSYLVANIA

REVISIONS

12	DCP 1274 INCORP. INT. ISS. 1183 MLK/KT	MP 5-9-95 CHK-PP
11	INCORP. SUPPTRP DWG RESULTS DWG. MLK/KT	WJEC 11-6-90 DICHK-KT
10	ADDED NOTE AND DWG.	
9	MINOR CHG.	
8		
7		
6		
5		
4		
3		
2		
1	DCP 2159 INCORP. KTSCHM REVISE 1341	MCG 1-21-93 DICHK-KT

ISSUE	DESCRIPTION	CHK	CONC	APPD	DATE
11	INC. N&D 5829(C(G-3,4)HL-4) (-3) & EADCR D-5300-SPECIAL				
10	INC. EADCR D-5403-S02 WAS SATISFIED ON REV. 8				
9	INC. EADCR D-5267-S05 (I-1) ADDED DRAIN 2DBS-500				
8	ADD'D NOTE 11 & 12 & REF DWG/ N&D 5157B & EADCR D-5409-S07				
7	(A-2,3,C-13) RELOC BOTH CONSOL PER EADCR NO. 2-C-332				
6	SEE RECORD OF DRAWING CHANGES 12241-BCB-85G-6				
5	SEE RECORD OF DRAWING CHANGES 12241-BCB-85G-5				
4	SEE RECORD OF DRAWING CHANGES 12241-85G-4				
3	SEE RECORD OF DRAWING CHANGES 12241-BCB-85G-3				
2	ADDED NUCLEAR SAFETY RELATED NOTE (L-8)				
1	INCORPORATED THIS ISSUE EADCR'S 2P-3662, 2P-3795A				

STONE & WEBSTER ENGINEERING CORP.
BOSTON, MASS.

DUQUESNE LIGHT COMPANY
ENGINEERING & CONSTRUCTION PITTSBURGH, PA.

SCALE NONE	DATE 9-14-82	ARCH. APP.
	DRAWN BHOLMES	ELECT. APP.
	CHECKED X.YIBUE	MECH. APP.
	INSPECTED	STRUCT. APP.

FLOW DIAGRAM AIR COND.&VENT. PRI PLANT SH-7

BEAVER VALLEY POWER STATION UNIT #2

O.F.E. NO. 10080 | C.O. NO. 6288 | AA | No. 10080-RB-85G

S&W DWG. NO. 12241-RB-85G-14

Drawn: L. GURSEVICI
Des. by: E. CHASE

No. 10080-RB-85K

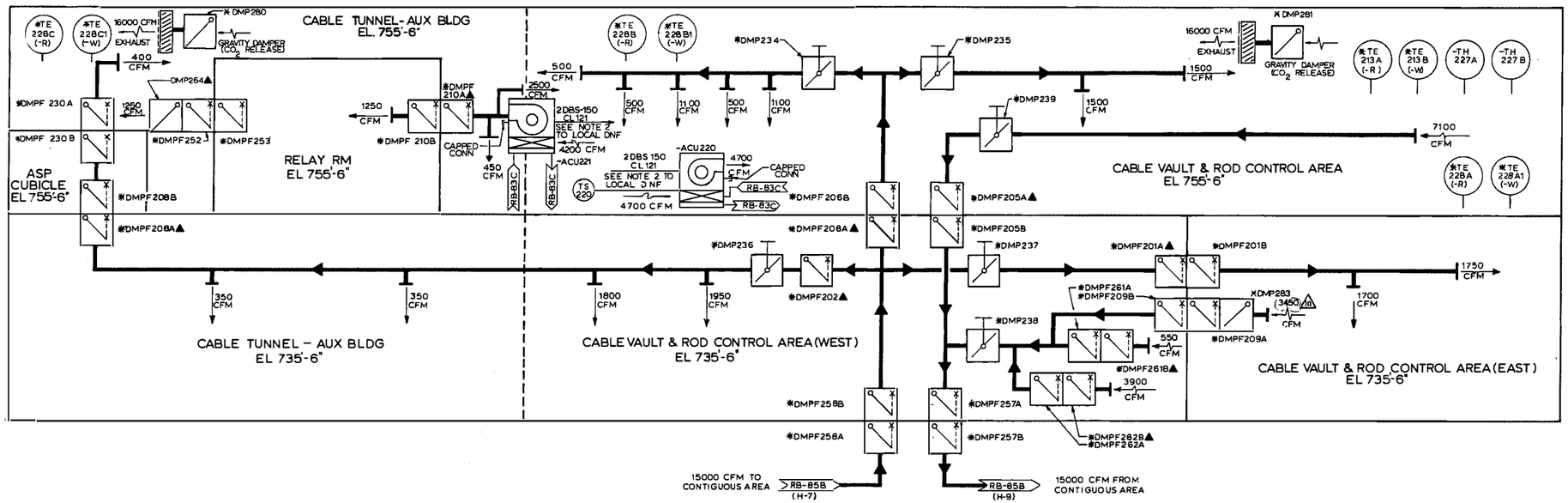

CABLE VAULT & ROD CONTROL AREA SUPPLY & RECIRCULATION SYSTEM

ALL ITEM MARK NUMBERS SHALL INCLUDE PREFIX 2HVR; EXAMPLE: 2HVR*DMPF257B

NOTES:

1. FOR LEGEND, GENERAL NOTES AND REFERENCE DRAWINGS SEE RB-85A.
2. A 2" MINIMUM TRAP SEAL SHALL BE INSTALLED IN DRAIN LINE. PIPING DOWNSTREAM OF TRAP SHALL SLOPE DOWN 1/4" PER FOOT.

PORTIONS OF THIS DOCUMENT ARE

NUCLEAR SAFETY RELATED

FINALIZED FLUID SYSTEM

THE INFORMATION ON THIS DRAWING MAY NOT BE COPIED OR USED FOR OTHER THAN THE CONSTRUCTION, MAINTENANCE OR REPAIR OF THE PLANT FACILITY DESCRIBED IN THE TITLE BLOCK.

APPROVED Walter Joseph Parker, Jr.
REGISTERED PROFESSIONAL ENGINEER NO. 29003-E
COMMONWEALTH OF PENNSYLVANIA

REVISIONS

8	INC DCP 986 & INTERIM ISSUE 7A2
9	INC TER NO. 990 (D-8934-4A) INC TER-4350
10	TER 8810 DCP 2E-FM-CP DCP 2E-FM-CD 3450 CFM

7	(B-31, K-2, K-4) INCORPORATED EA DCR D-5300-908
6	SEE RECORD OF DRAWING CHANGES 12241-BCB-85K-6
5	SEE RECORD OF DRAWING CHANGES 12241-BCB-85K-5
4	SEE RECORD OF DRAWING CHANGES 12241-BCB-85K-4
3	SEE RECORD OF DRAWING CHANGES 12241-BCB-85K-3
2	SEE RECORD OF DRAWING CHANGES 12241-RB-85K-2

STONE & WEBSTER ENGINEERING CORP BOSTON, MASS.

DUQUESNE LIGHT COMPANY
ENGINEERING & CONSTRUCTION PITTSBURGH, PA.

SCALE NONE | DATE 11/15/82 | DRAWN BHOLMES | CHECKED Seamans | INSPECTED | ARCH. APP. | ELECT. APP. | MECH. APP. | STRUCT. APP.

FLOW DIAGRAM
AIR COND & VENT. PRI. PLANT SH-10
BEAVER VALLEY POWER STATION UNIT NO. 2

O.F.E. No. 10080 | C.O. No. 6298 | AA | No. 10080-RB-85K

S&W DWG. NO. 12241-RB-85K-10

No. 10080-RB-136B

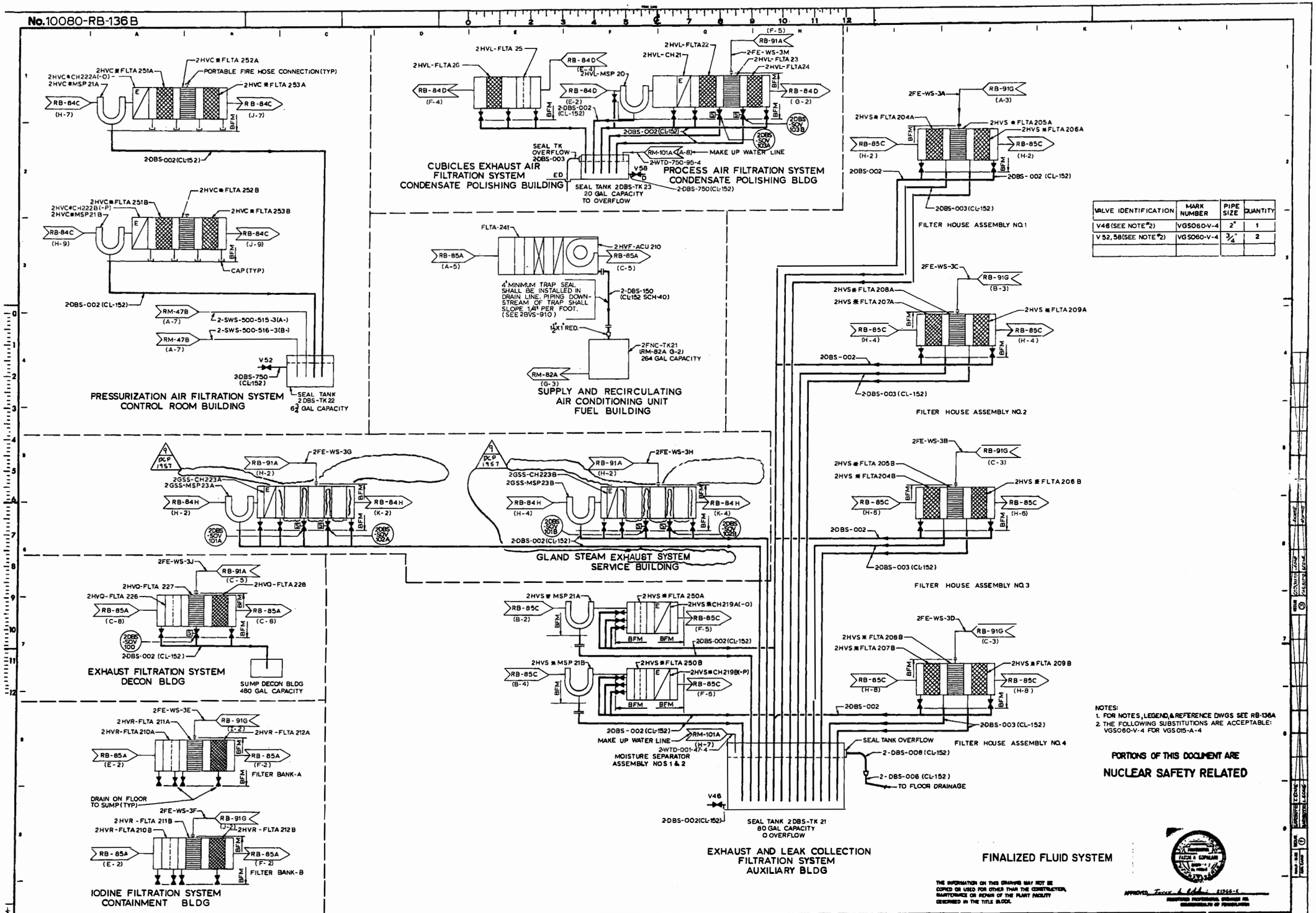

VALVE IDENTIFICATION	MARK NUMBER	PIPE SIZE	QUANTITY
V46 (SEE NOTE #2)	VGS060-V-4	2"	1
V52, 58 (SEE NOTE #2)	VGS060-V-4	3/4"	2

NOTES:
1. FOR NOTES, LEGEND, & REFERENCE DWGS SEE RB-136A
2. THE FOLLOWING SUBSTITUTIONS ARE ACCEPTABLE: VGS060-V-4 FOR VGS015-A-4

PORTIONS OF THIS DOCUMENT ARE
NUCLEAR SAFETY RELATED

FINALIZED FLUID SYSTEM

THE INFORMATION ON THIS DRAWING MAY NOT BE COPIED OR USED FOR OTHER THAN THE CONSTRUCTION, MAINTENANCE OR REPAIR OF THE PLANT FACILITY DESCRIBED IN THE TITLE BLOCK.

APPROVED

REVISIONS	
6	DCP 1957
5	REMOVED 2GSS-FLT256A & B, 2GSA415, 2GSA416, 2GSA417 & 18, REMOVED FILTRATION FROM SYSTEM NAME

7	(E-3,4) CHNG UNIONS TO FLANGES PER E&DCR 2PQ-3008		
6	(F-7,8) REVISED COORDS & ADDED FLGS PER E&DCR 2PQ-1908		
5	(E-3,4) ADDED NOTE PER E&DCR 2PS-3943		
4	SEE RECORD OF DRAWING CHANGES 12241-BCB-136B-4		
3	SEE RECORD OF DRAWING CHANGES 12241-BCB-136B-2		
2	SEE RECORD OF DRAWING CHANGES 12241-BCB-136B-1		
B	SEE RECORD OF DRAWING CHANGES 12241-BCB-136B-8		

STONE & WEBSTER ENGINEERING CORP.
BOSTON, MASS.

DUQUESNE LIGHT COMPANY
ENGINEERING & CONSTRUCTION PITTSBURGH, PA.

SCALE: NONE. DATE: 12-21-70
DR J. ARSENAULT — ELECT. APP.
CH J. HOGNIAN — MECH. APP.
INSPECTED — STRUCT. APP.

FLOW DIAGRAM
CHARCOAL FILTRATION DRAINAGE SYSTEM
BEAVER VALLEY POWER STATION UNIT NO 2
O.F.E. No. 10080 — AA — No. 10080-RB-136B
C.O. No. 1300

S & W DWG. NO. 12241-RB-136B-9

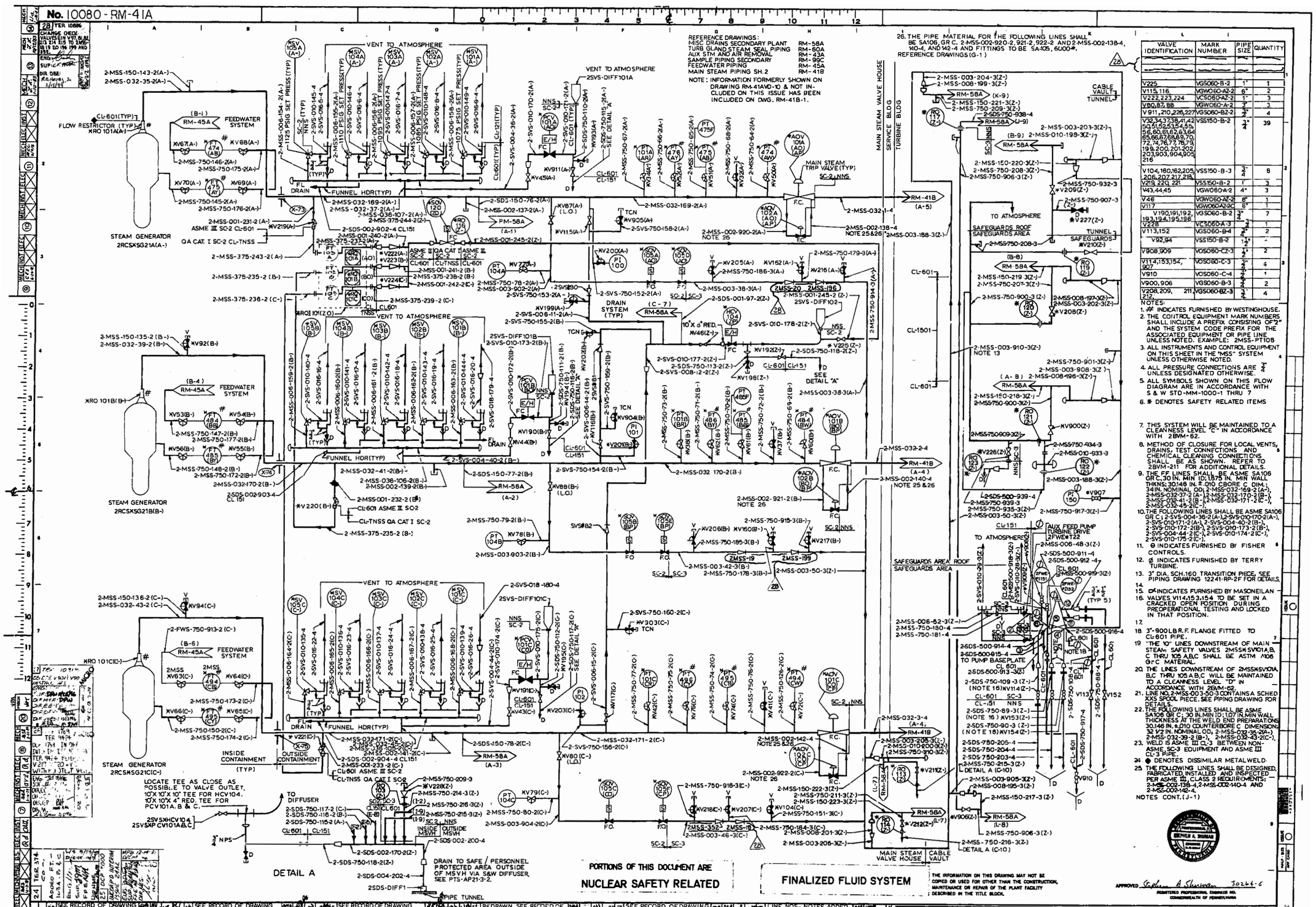

VALVE IDENTIFICATION	MARK NUMBER	PIPE SIZE	QUANTITY
V225	VGS060-B-2	1"	1
V115,116	VGW060-AZ-2	6"	2
V222,223,224	VCS080-AZ-2	1"	3
V80,87,88	VGW060-A-2	3/4"	3
V911,210,226,227	VGS060-BZ-2	3/4"	4
V32,34,37,38,41,42,50,51,52,53,54,55,56,60,61,62,63,64,65,66,67,68,69,70,72,74,76,77,78,79,199,200,201,202,203,903,904,905,216	VSS150-B-2	3/4"	39
V104,160,162,205,208,207,217,218	VSS150-B-3	3/4"	8
V219,220,221	VSS150-B-2	1"	3
V43,44,45	VGW060-A-2	4"	3
V46	VGW060-AZ-2	8"	1
V117	VGW060-AZ-2C	6"	1
V190,191,192,193,194,195,196	VGS060-B-2	3/4"	7
V228	VCS060-A-3	3/4"	1
V113,152	VGS060-B-4	3/4"	2
V92,94	VSS150-B-2	1 1/2"	-
V908,909	VOS060-CZ-3	3/4"	2
V114,153,154,907	VOS060-C-3	3/4"	4
V910	VOS060-C-4	3/4"	1
V900,906	VGS060-B-3	3/4"	2
V208,209,212,211	VGS060-BZ-3	3/4"	4

NOTES:

1. # INDICATES FURNISHED BY WESTINGHOUSE.
2. THE CONTROL EQUIPMENT MARK NUMBERS SHALL INCLUDE A PREFIX CONSISTING OF "2" AND THE SYSTEM CODE PREFIX FOR THE ASSOCIATED EQUIPMENT OR PIPE LINE UNLESS NOTED. EXAMPLE: 2MSS-PT108
3. ALL INSTRUMENTS AND CONTROL EQUIPMENT ON THIS SHEET IN THE "MSS" SYSTEM UNLESS OTHERWISE NOTED.
4. ALL PRESSURE CONNECTIONS ARE 3/4" UNLESS DESIGNATED OTHERWISE.
5. ALL SYMBOLS SHOWN ON THIS FLOW DIAGRAM ARE IN ACCORDANCE WITH S & W STD-MM-1000-1 THRU 7
6. * DENOTES SAFETY RELATED ITEMS
7. THIS SYSTEM WILL BE MAINTAINED TO A CLEANNESS LEVEL "C" IN ACCORDANCE WITH 2BVM-62.
8. METHOD OF CLOSURE FOR LOCAL VENTS, DRAINS, TEST CONNECTIONS AND CHEMICAL CLEANING CONNECTIONS SHALL BE AS SHOWN. REFER TO 2BVM-211 FOR ADDITIONAL DETAILS.
9. THE FF LINES SHALL BE ASME SA106 GR C, 30 IN. MIN ID, 1875 IN. MIN WALL THKNS; 30.148 IN. ± .010 CBORE C DIM.; 34 IN. NOMINAL OD; 2-MSS-032-169-2 (A-), 2-MSS-032-37-2 (A-), 2-MSS-032-170-2 (B-), 2-MSS-032-41-2 (B-), 2-MSS-033-171-2 (B-), 2-MSS-032-45-2 (C-).
10. THE FOLLOWING LINES SHALL BE ASME SA106 GR C 1-2-SVS-004-36-2 (A-), 2-SVS-010-170-2 (A-), 2-SVS-010-171-2 (A-), 2-SVS-004-40-2 (B-), 2-SVS-010-172-2 (B-), 2-SVS-010-173-2 (B-), 2-SVS-004-44-2 (C-), 2-SVS-010-174-2 (C-), 2-SVS-010-175-2 (C-).
11. ⊖ INDICATES FURNISHED BY FISHER CONTROLS.
12. Ø INDICATES FURNISHED BY TERRY TURBINE.
13. 3" DIA. SCH.160 TRANSITION PIECE, SEE PIPING DRAWING 12241-RP-2F FOR DETAILS.
14.
15. ⊠ INDICATES FURNISHED BY MASONEILAN
16. VALVES V114,15,3,154 TO BE SET IN A CRACKED OPEN POSITION DURING PREOPERATIONAL TESTING AND LOCKED IN THAT POSITION.
17.
18. 3"-900LB R.F. FLANGE FITTED TO CL-601 PIPE.
19. "THE "10" LINES DOWNSTREAM OF MAIN STEAM SAFETY VALVES 2MSSKSV101A,B, C THRU 105 A,B,C SHALL BE ASTM A106 GrC MATERIAL.
20. THE LINES DOWNSTREAM OF 2MSSKSV101A, B,C THRU 105 A,B,C WILL BE MAINTAINED TO A CLEANNESS LEVEL "D" IN ACCORDANCE WITH 2BVM-62.
21. LINE NO. 2-MSS-003-50-3 CONTAINS A SCHED XXS SPOOL PIECE. SEE PIPING DRAWING FOR DETAILS.
22. THE FOLLOWING LINES SHALL BE ASME SA106 GR C, 30 IN. MIN ID; 1.107 IN. MIN WALL THICKNESS AT THE WELD END PREPARATIONS; 30.146 IN. ± .010 COUNTERBORE C DIMENSION; 32 1/2 IN. NOMINAL OD, 2-MSS-032-38-2(A-), 2-MSS-032-39-2 (B-), 2-MSS-032-43-2(C-).
23. WELD IS ASME III CL-3 BETWEEN NON-ASME, SC-3 EQUIPMENT AND ASME III CL-3 PIPE.
24. ◆ DENOTES DISSIMILAR METAL WELD.
25. THE FOLLOWING LINES SHALL BE DESIGNED, FABRICATED, INSTALLED AND INSPECTED PER ASME III, CLASS 2 REQUIREMENTS: 2-MSS-002-138-4, 2-MSS-002-140-4 AND 2-MSS-002-142-4.

NOTES CONT. (J-1)

APPROVED Stephen A. Sherman 30264-6
REGISTERED PROFESSIONAL ENGINEER NO.
COMMONWEALTH OF PENNSYLVANIA

No. 10080-RM-45A

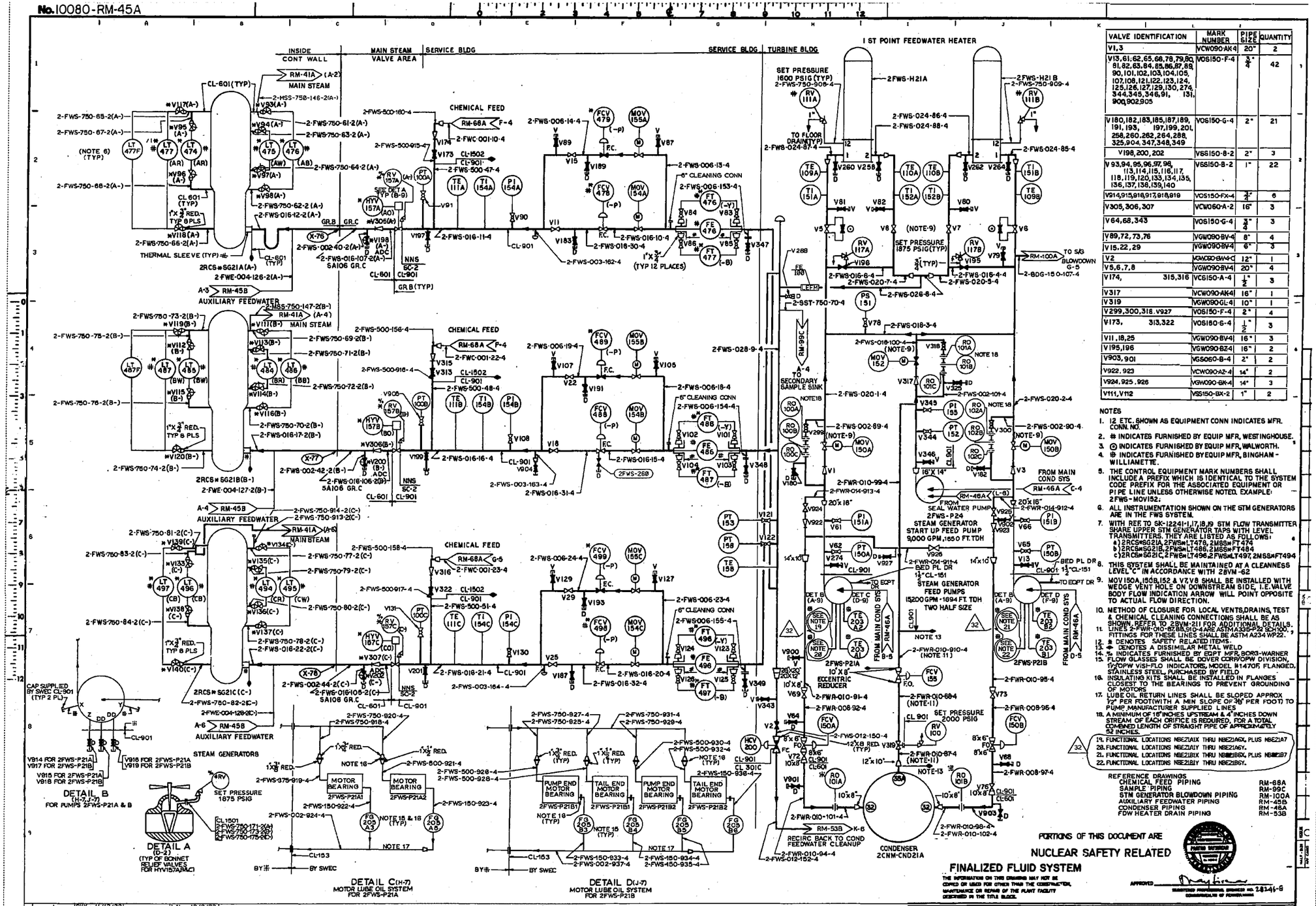

VALVE IDENTIFICATION	MARK NUMBER	PIPE SIZE	QUANTITY
V1,3	VCW090-AK4	20"	2
V13,61,62,65,66,78,79,80, 81,82,83,84,85,86,87,88, 90,101,102,103,104,105, 107,108,121,122,123,124, 125,126,127,129,130,274, 344,345,346,91, 131, 900,902,905	VGS150-F-4	3/4"	42
V180,182,183,185,187,189, 191,193, 197,199,201, 258,260,262,264,288, 325,904,347,348,349	VGS150-G-4	2"	21
V198,200,202	VGS150-B-2	2"	3
V93,94,95,96,97,98, 113,114,115,116,117, 118,119,120,133,134,135, 136,137,138,139,140	VGS150-B-2	1"	22
V914,915,916,917,918,919	VGS150-FX-4	3/4"	6
V305,306,307	VCW060-A-2	16"	3
V64,68,343	VGS150-G-4	3/4"	3
V89,72,73,76	VGW090-BV-4	8"	4
V15,22,29	VGW090-BV-4	6"	3
V2	VGW060-BW-4	12"	1
V5,6,7,8	VGW090-BV-4	20"	4
V174, 315,316	VGS150-A-4	1/2"	3
V317	VCW090-AK4	16"	1
V319	VGW090-GL-4	10"	1
V299,300,318,V927	VGS150-F-4	2"	4
V173, 313,322	VGS150-G-4	1/2"	3
V11,18,25	VGW090-BV-4	16"	3
V195,196	VGW090-BZ-4	16"	2
V903,901	VGS060-B-4	2"	2
V922,923	VCW090-AZ-4	14"	2
V924,925,926	VGW090-GK-4	14"	3
V111,V112	VSS150-BX-2	1"	2

NOTES

1. 12 ETC. SHOWN AS EQUIPMENT CONN INDICATES MFR. CONN. NO.
2. # INDICATES FURNISHED BY EQUIP MFR, WESTINGHOUSE.
3. ⊙ INDICATES FURNISHED BY EQUIP MFR, WALWORTH.
4. ⊕ INDICATES FURNISHED BY EQUIP MFR, BINGHAM - WILLIAMETTE.
5. THE CONTROL EQUIPMENT MARK NUMBERS SHALL INCLUDE A PREFIX WHICH IS IDENTICAL TO THE SYSTEM CODE PREFIX FOR THE ASSOCIATED EQUIPMENT OR PIPE LINE UNLESS OTHERWISE NOTED. EXAMPLE: 2FWS-MOV152.
6. ALL INSTRUMENTATION SHOWN ON THE STM GENERATORS ARE IN THE FWS SYSTEM.
7. WITH REF TO SK-12241-1,17,18,19 STM FLOW TRANSMITTER SHARE UPPER STM GENERATOR TAPS WITH LEVEL TRANSMITTERS. THEY ARE LISTED AS FOLLOWS:
   a) 2RCS#SG21A, 2FWS#LT476, 2MSS#FT474
   b) 2RCS#SG21B, 2FWS#LT486, 2MSS#FT484
   c) 2RCS#SG21C, 2FWS#LT496, 2MSS#FT494
8. THIS SYSTEM SHALL BE MAINTAINED AT A CLEANNESS LEVEL "C" IN ACCORDANCE WITH 28VM-62
9. MOV150A, 150B, 152 & V7, V8 SHALL BE INSTALLED WITH WEDGE VENT HOLE ON DOWNSTREAM SIDE, I.E. VALVE BODY FLOW INDICATION ARROW WILL POINT OPPOSITE TO ACTUAL FLOW DIRECTION.
10. METHOD OF CLOSURE FOR LOCAL VENTS, DRAINS, TEST & CHEMICAL CLEANING CONNECTIONS SHALL BE AS SHOWN. REFER TO 28VM-211 FOR ADDITIONAL DETAILS.
11. LINES 2-FWR-010-87, 88, 91C-4 ARE ASTM A335-P22 SCH 100, FITTINGS FOR THESE LINES SHALL BE ASTM A234 WP22.
12. ⊗ DENOTES SAFETY RELATED ITEMS.
13. ◆ DENOTES A DISSIMILAR METAL WELD
14. ⊕ INDICATES FURNISHED BY EQPT MFR, BORG-WARNER
15. FLOW GLASSES SHALL BE DOVER CORP/OPW DIVISION, 1/2" OPW VISI-FLO INDICATORS, MODEL #1470F, FLANGED, STAINLESS STEEL, PURCHASED BY FIELD
16. INSULATING KITS SHALL BE INSTALLED IN FLANGES CLOSEST TO THE BEARINGS TO PREVENT GROUNDING OF MOTORS
17. LUBE OIL RETURN LINES SHALL BE SLOPED APPROX 1/2" PER FOOT (WITH A MIN SLOPE OF 3/8" PER FOOT) TO PUMP MANUFACTURER SUPPLIED LINES
18. A MINIMUM OF 16" INCHES UPSTREAM & 4" INCHES DOWN STREAM OF EACH ORIFICE IS REQUIRED, FOR A TOTAL COMBINED LENGTH OF STRAIGHT PIPE OF APPROXIMATELY 52 INCHES.

32
19. FUNCTIONAL LOCATIONS NSE21A1X THRU NSE21A6X, PLUS NSE21A7
20. FUNCTIONAL LOCATIONS NSE21A1Y THRU NSE21A6Y.
21. FUNCTIONAL LOCATIONS NSE21B1X THRU NSE21B6X, PLUS NSE21B7
22. FUNCTIONAL LOCATIONS NSE21B1Y THRU NSE21B6Y.

REFERENCE DRAWINGS

CHEMICAL FEED PIPING	RM-68A
SAMPLE PIPING	RM-99C
STM GENERATOR BLOWDOWN PIPING	RM-100A
AUXILIARY FEEDWATER PIPING	RM-45B
CONDENSER PIPING	RM-46A
FDW HEATER DRAIN PIPING	RM-53B

PORTIONS OF THIS DOCUMENT ARE NUCLEAR SAFETY RELATED

FINALIZED FLUID SYSTEM

THE INFORMATION ON THIS DRAWING MAY NOT BE COPIED OR USED FOR OTHER THAN THE CONSTRUCTION, MAINTENANCE OR REPAIR OF THE PLANT FACILITY DESCRIBED IN THE TITLE BLOCK.

APPROVED _____ REGISTERED PROFESSIONAL ENGINEER NO. 28341-E COMMONWEALTH OF PENNSYLVANIA

REVISIONS			
31	ECP 82-0982 INCORPO TDCN 2FWS-MOV-152 2FWS-MOV-154 82-0982-82 REF: 83-09411-111 SUP: E.E. EBECK 11/12/83	DRK 11/12/83 D/CHK: MVF	
32	ECR 83-0359 CR 82-03357 ADDED NEW VIBRATION MONITORS PER NOTES 18 THRU 22	LAL 12/3/83 D/CHK:	

03-DEC-2003 14:37 m:\u2\rm0450e0.29e

FENOC FIRSTENERGY NUCLEAR OPERATING COMPANY

SCALE	DATE	ARCH. APP.
NONE	DRAWN G.SCHWARZ	ELECT. APP.
	CHECKED	MECH. APP.
	INSPECTED GUHON	STRUCT. APP.

FLOW DIAGRAM
FEEDWATER PIPING

BEAVER VALLEY POWER STATION UNIT NO 2

O.F.E. No. 10080 C.O. No. 2380 AA No. 10080-RM-45A

S&W DWG. NO. 12241-RM-45A-32

Source: J. HASLAM Date: 1/6 E. CHASE

No 10080-RM-0045B

NOTES:

1. TEMPORARY STRAINER SCREEN ELEMENTS REMOVED PRIOR TO PLANT STARTUP. 'Y' TYPE STRAINER BODIES ARE RETAINED IN THE PIPING SYSTEM.
3. THE FOLLOWING SUBSTITUTIONS ARE ACCEPTABLE: VCS015-A-4 FOR VCS060-V-4 VCS015-X-4 FOR VCS060-G-4
4. THIS SYSTEM SHALL BE MAINTAINED AT A CLEANNESS LEVEL 'C' IN ACCORDANCE WITH 28VM-62.
6. 2FWE-FE100A, 2FWE-FE100B AND 2FWE-FE100C REQUIRE 10 PIPE DIAMETERS UPSTREAM AND 5 PIPE DIAMETERS DOWNSTREAM OF STRAIGHT LENGTH OF PIPE.
7. METHOD OF CLOSURE FOR LOCAL VENTS, DRAINS, TEST CONNECTIONS AND CHEMICAL CLEANING CONNECTIONS SHALL BE AS SHOWN. REFER TO 28VM-211 FOR ADDITIONAL DETAILS.
9. ! DENOTES A DISSIMILAR METAL WELD.
10. FOR PUMP SUCTION AND DISCHARGE FLANGES, 900LB FLANGES WILL BE WELDED TO CL601 DISCHARGE PIPING AND TO CL151 SUCTION PIPING. FLANGES WILL BE PROVIDED BY S/W.
11. SC-3 PIPING AND VALVES SHOULD BE LOCATED WITHIN TANK INCLOSURE. PIPING CONNECTION SHOULD BE AS LOW AS POSSIBLE.
12. PIPELINE 2-FWE-003-167-3 CONTAINS(1) A SCHEDULE 160 SPOOL PIECE(S), PIPELINE 2-FWE-004-104-3 CONTAINS(1) A SCHEDULE 120 SPOOL PIECE(S), PIPELINE 2-FWE-004-105-3 CONTAINS(1) A SCHEDULE 120 SPOOL PIECE(S), PIPELINE 2-FWE-008-007-3 CONTAINS(1) A SCHEDULE 160 SPOOL PIECE(S). SEE PIPING DRAWINGS FOR DETAILS.
13. DRAIN VALVE 2FWE-366 WILL BE USED TO TAKE A LOCAL SAMPLE.
14. MECHANICAL SEAL FLUSH PIPING IS FURNISHED WITH A THREADED PLUG FOR VENTING.
15. 1/8 INCH DIAMETER HOLE IN CAP FOR TELLTALE DRAIN.

REFERENCE DRAWINGS:
FEEDWATER PIPING RM-0045A
CHEMICAL FEED PIPING RM-0069A
CIRCULATION AND SERVICE WATER PIPING RM-0047B
DEMIN AND CASK WASHDOWN PIPING RM-0101A

QUALITY GROUP CLASSIFICATIONS ARE "INCORPORATED BY REFERENCE" INTO THE UFSAR. A CHANGE TO QUALITY GROUP CLASSIFICATIONS CONSTITUTES A CHANGE TO THE UFSAR.
PORTIONS OF THIS DIAGRAM ARE NUCLEAR SAFETY RELATED

ALL COMPONENTS ON THIS DRAWING ARE PRECEDED BY "2FWE-" UNLESS OTHERWISE INDICATED

REVISIONS

REVISION 23 INCORPORATED
DUN 13-0565-003-002
DUN 13-0619-001-001
DUN 13-0620-001-002
DUN 15-0492-001-003

FENOC — FIRST ENERGY NUCLEAR OPERATING COMPANY

SCALE NONE | DATE 11/18/15 | DRAWN BY MVF | DESIGN BY RJH | FINAL APP FOR ISSUE 11/18/2015

BEAVER VALLEY POWER STATION UNIT 2

FLOW DIAGRAM
AUXILIARY FEEDWATER PIPING

AA | DWG NO 10080- RM-0045B | REV 23

PREPARED ON THE BVPS CADDY SYSTEM

k:\u2\RM-0045B.DGN

No. 10080-RM-47B

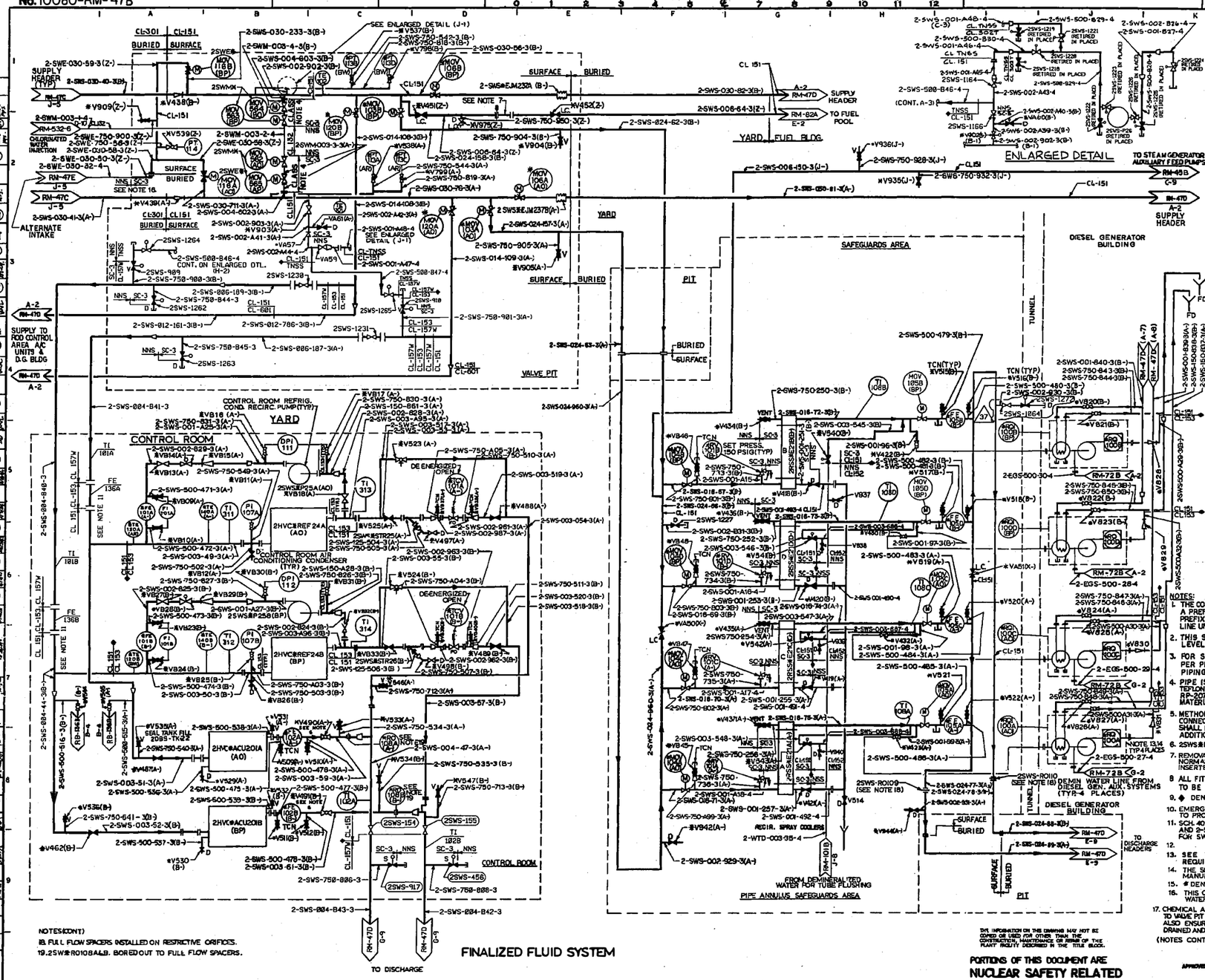

VALVE IDENTIFICATION L	MARK NUMBER J	PIPE SIZE	QUANTITY
V438,439	VC015-C-3	30"	2
V450, 451	VVF015-A-3	24"	2
V529,530	VGS060-B-3	1½"	2
V451,452	VGW060-A-3	6"	2
V488	VGW060-A-2	4"	1
V461,467,468	VGW015-A-3	4"	3
V 533,534,535, 536,537,538,539,546, 547, 909,936, 434, 435,436,437,904,905, 793,795,798,796	VOS060-C-3	¾"	21
V814,828	VBS015-Y-3	2"	2
V462,487	VGW060-A-2	3"	2
V448,419,420,421	VGS060-B-3	1"	4
V488,489,525,833	VGW015-A-3	3"	4
V815,829	VCS015-X-3	2"	2
V490,491,523,524	VOW015-A-3	3"	4
V502,503,507,508	VOS015-D-3	¾"	4
V422,423, 430, 432,	VOS060-C-3	1"	4
V828,829,830,831	VCS060-J-3	½"	4
V497,498, 935, 975	VGS060-B-3	1"	4
V540,541,542,543	VBW015-B-3	3"	4
V809,810,823,824	VOS015-A-3	¾"	4
V902,903, 904, 37 942,	VGS060-B-3	2"	4
V 937,938,939,940	VGS060-V-4	¾"	4
V 509, 510,511,512,515,516, 517,518,519,520,521, 522,531,532,544 545	VOS060-C-3	½"	16
V812,826	VGS015-A-3	¾"	2
V813,818,827,832	VGS015-A-3	2"	4
V 822,823,823, 824,825,826,827,	VOS060-CZ-3	¾"	8
VA56, VA57	VCS060-B-3	2"	2
VA58, VA59	VGS060-BZ-4	2"	2
VA60, VA61	VGS060-BZ-3	2"	2
VB11, B16, B17, B25, B30, B31	VOS015-A-3	¾"	6
VB45,VB46,VB47,VB48	VOS060-CZ-3	½"	4

REFERENCE DWGS:
UNIT NO.1
WATER TREATING PIPING 8700-RM-532-4,5,6,7N
UNIT NO.2
CIRC & SERVICE WATER PIPING — RM-47C,D&E
FUEL POOL COOLING & PURIFICATION PIPING — RM-82A
DEMIN WATER & CASK WASHDOWN SYSTEM — RM-101A
FEED WATER PIPING — RM-45A
CHARCOAL FILTER DRAINAGE SYSTEM — RB-156B

NOTES:

1. THE CONTROL EQUIPMENT MARK NUMBERS SHALL INCLUDE A PREFIX WHICH IS IDENTICAL TO THE SYSTEM CODE PREFIX FOR THE ASSOCIATED EQUIPMENT OR PIPE LINE UNLESS OTHERWISE NOTED.
2. THIS SYSTEM WILL BE MAINTAINED TO A CLEANNESS LEVEL "D" IN ACCORDANCE WITH 28VM-62
3. FOR SWS BURIED PIPING 24" AND 30" PIPING MATERIAL PER PIPING CLASS 301 MAY BE USED IN LIEU OF PIPING CLASS 151
4. PIPE IS SB-446 INCONEL 625 VALVES ARE TEFLON LINED AS DETAILED ON PIPING DRAWING 12241-RP-207A. CATHODIC PROTECTION FLANGES ARE REQUIRED. MATERIAL FOR NUTS & BOLTS IN ACCORDANCE WITH CL151
5. METHOD OF CLOSURE FOR LOCAL VENTS, DRAINS, TEST CONNECTIONS AND CHEMICAL CLEANING CONNECTIONS SHALL BE AS SHOWN REFER TO 28VM-211 FOR ADDITIONAL DETAILS.
6. 2SWS#FE102A&B BORED OUT TO FULL FLOW SPACERS.
7. REMOVABLE SPOOL PIECE WITH SPECTACLE FLANGE NORMALLY INSTALLED WITH BLIND FACE OF FLANGE INSERTED INTO FLOW PATH.
8. ALL FITTINGS ON LINE NO. 2-SWS-024-GG,77,78-3 ARE TO BE .500" WALL THICKNESS
9. ◆ DENOTES A DISSIMILAR METAL WELD
10. EMERGENCY OUTFALL STRUCTURE SAMPLING CONNECTIONS TO PROVIDE FUTURE RETROFIT CAPABILITIES IF REQUIRED.
11. SCH. 40S S.S. SPOOL PIECES ON LINES 2-SWS-004-44-3 (B-) AND 2-SWS-004-46-3 (A-) WILL BE CONSIDERED COMPONENTS FOR SWS-FE-136A & B RESPECTIVELY.
12.
13. SEE RK-15 SERIES FOR SAMPLE LINE INSTALLATION REQUIREMENTS
14. THE SC-3/NNS CLASS BREAK IS AFTER THE SKID MOUNTED MANUFACTURER SUPPLIED SOLENOID VALVE.
15. # DENOTES SAFETY RELATED ITEMS.
16. THIS CLASS BREAK APPLIES ONLY TO THE STANDBY SERVICE WATER LINES 2-SWS-030-32-4 AND 2-SWS-030-50-3(Z-)
17. CHEMICAL ADDITION CONNECTION TO BE LOCATED NEAR ENTRANCE TO VALVE PIT AREA AT GRADE ELEVATION. FOR DETAILS SEE RP-207A&B. ALSO ENSURE PORTION OF LINE LOCATED OUTSIDE BLDG IS DRAINED AND CAPPED WHEN NOT IN USE.

(NOTES CONT. A-9)

NOTES(CONT)
18. FULL FLOW SPACERS INSTALLED ON RESTRICTIVE ORIFICES.
19. 2SW#R0108A&B. BORED OUT TO FULL FLOW SPACERS.

FINALIZED FLUID SYSTEM

THE INFORMATION ON THIS DRAWING MAY NOT BE COPIED OR USED FOR OTHER THAN THE CONSTRUCTION, MAINTENANCE OR REPAIR OF THE PLANT FACILITY DESCRIBED IN THE TITLE BLOCK.

PORTIONS OF THIS DOCUMENT ARE NUCLEAR SAFETY RELATED

APPROVED: William H. Sebelle — REGISTERED PROFESSIONAL ENGINEER NO. E-0127-E, COMMONWEALTH OF PENNSYLVANIA

REVISIONS	
33	DCP 2419 INCORPORATED INTERIM ISSUE 2-SWS-004-47B-NO. 2-SWS-004-46-3 DCP 2419-RL DCP 2419-RL REF. CA 81-PIPE CLASSES
34	TER 13433 REMOVED TANK RETIRED IN PLACE. REMOVED PUMP RETIRED IN PLACE AND ASSOCIATED VALVES & FITTINGS REF. CA 81-833-22
35	ECP-82-0253 2-SWS-004-44-3(B-) 2-SWS-004-46-3(A-) 2-SWS-004-47B-NO. 2-SWS-004-47B-NO. 2-SWS-004-47B-NO.

No. 10080-RM-47C

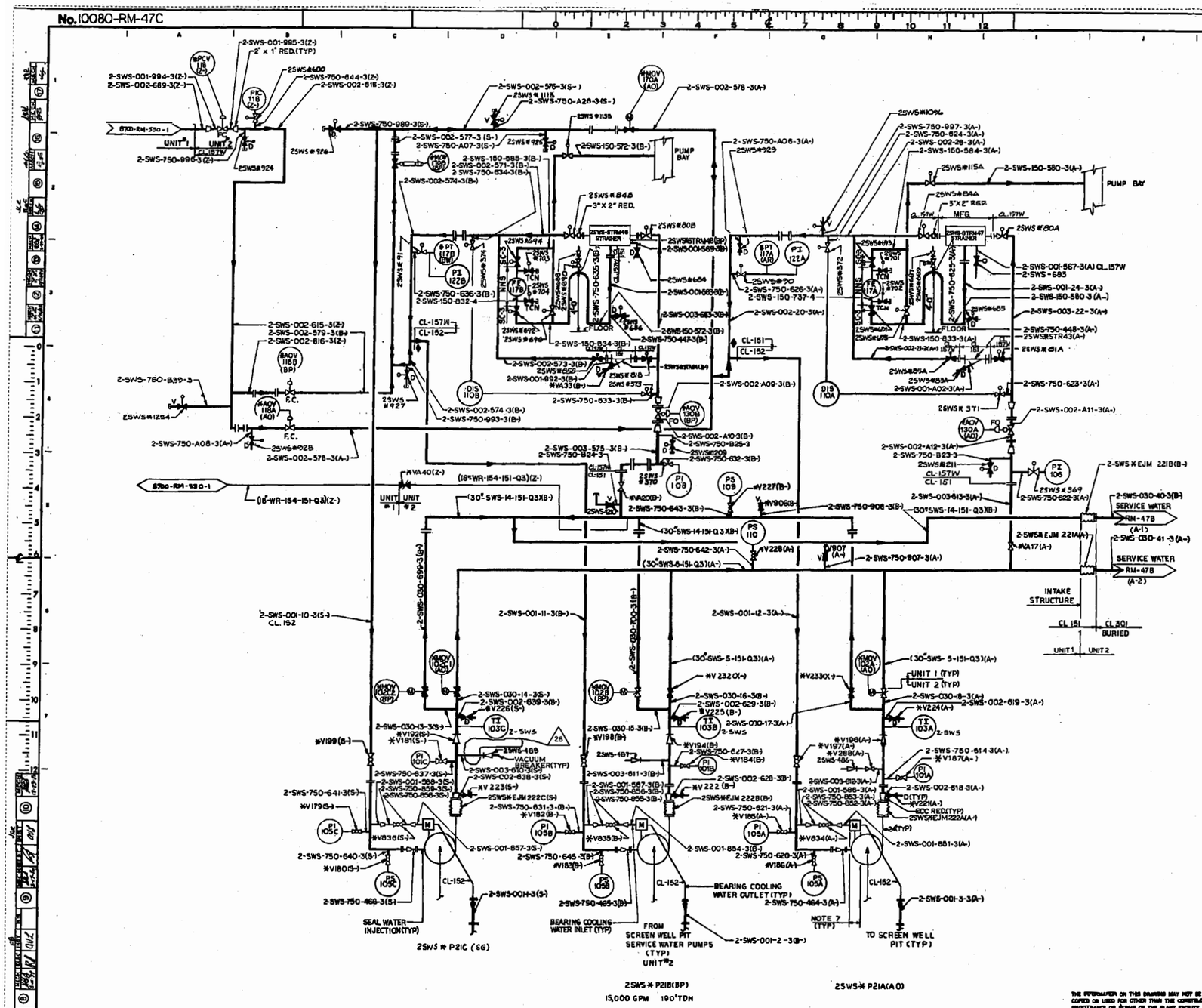

VALVE IDENTIFICATION	MARK NUMBER	PIPE SIZE	QUANTITY
V181,184, 187 227,228, 906,907	VOS060-C-3	2½" 4"	7
A33,A34,	VGS060-B-3	1"	2
V179,180,182,183,185, 186	VOS150-X-3	¾"	6
V197,198,199	VOS150-X-3	1"	3
V268 A17, A20, V221,222 223,224,225,226	VGW015-A-3	3"	3
	VGS060-B-3	2"	6
VA40	VVF015-A-3	18"	1
V834, 835, 836	VOS060-W-2	¾"	3
V232, 233	VVF015-A-3	30"	2
V192, 194, 196	VCI015-C-3	30"	3

REFERENCE DRAWINGS:
UNIT 1 INTAKE STRUCTURE 8700-RM-21C
CIRCULATING/SERVICE WTR PIPING RM-47B

NOTES:

1. THE CONTROL EQUIPMENT MARK NUMBER SHALL INCLUDE A PREFIX WHICH IS IDENTICAL TO THE SYSTEM CODE PREFIX FOR THE ASSOCIATED EQUIPMENT OR PIPE LINE UNLESS OTHERWISE NOTED. EXAMPLE: 2SWS-PI-106.
2. LINE DESIGNATIONS SHOWN IN PARENTHESES ARE UNIT 1 ASSIGNED NUMBERS.
3. THIS SYSTEM SHALL BE MAINTAINED TO A CLEANNESS LEVEL 'D' IN ACCORDANCE WITH 2BVM-62.
4. METHOD OF CLOSURE FOR LOCAL VENTS, DRAINS, TEST CONNECTIONS & CHEMICAL CONNECTIONS SHALL BE AS SHOWN. REFER TO 2BVM-211 FOR ADDITIONAL DETAILS.
5. ◊ DENOTES A DISSIMILAR METAL WELD.
6. 2SWS-FIT100-PORTABLE ULTRASONIC FLOW INDICATING TRANSMITTER TO BE USED FOR FLOW MEASUREMENT FOR ASME XI TESTING.
7. THE SERVICE WATER PUMP MOTORS ARE SC-3 NON ASME III COMPONENTS.
8. * DENOTES SAFETY RELATED ITEMS. (SEE NOTE 9)
9. ALL ASTERISKS (*) SHOULD BE DISREGARDED. REFER TO THE ASSET EQUIPMENT LIST (AEL) AS THE OFFICIAL LISTING OF ANY ASSET'S QA CATEGORY.

FINALIZED FLUID SYSTEM

NUCLEAR SAFETY RELATED

THE INFORMATION ON THIS DRAWING MAY NOT BE COPIED OR USED FOR OTHER THAN THE CONSTRUCTION, MAINTENANCE OR REPAIR OF THE PLANT FACILITY DESCRIBED IN THE TITLE BLOCK.

FENOC FIRSTENERGY NUCLEAR OPERATING COMPANY

SCALE NONE | DATE | DRAWN/CHK. PE LISO | CHECKED | DISPATCH/RELEASE | ARCH. APP. | ELECT. APP. | MECH. APP. | STRUCT. APP.

FLOW DIAGRAM
CIRCULATING & SERVICE WATER PIPING-SH3
BEAVER VALLEY POWER STATION UNIT NO. 2
O.F.E. NO. 10080 | AA | No. 10080-RM-47C
C.O. NO. 6289

S&W DWG. NO. 10080-RM-47C-28

REVISIONS: REV 2 2-28-86 DISPOSITION DCN 2-RM-0847C-03 REF. 2-RM-0835-03 DCN 84-08734-02 DKK 3/3/84 D/CHK: LRH

15-MAR-2004 13:58 m:\u2\rm0470c1.e25

No 10080-RM-0047D

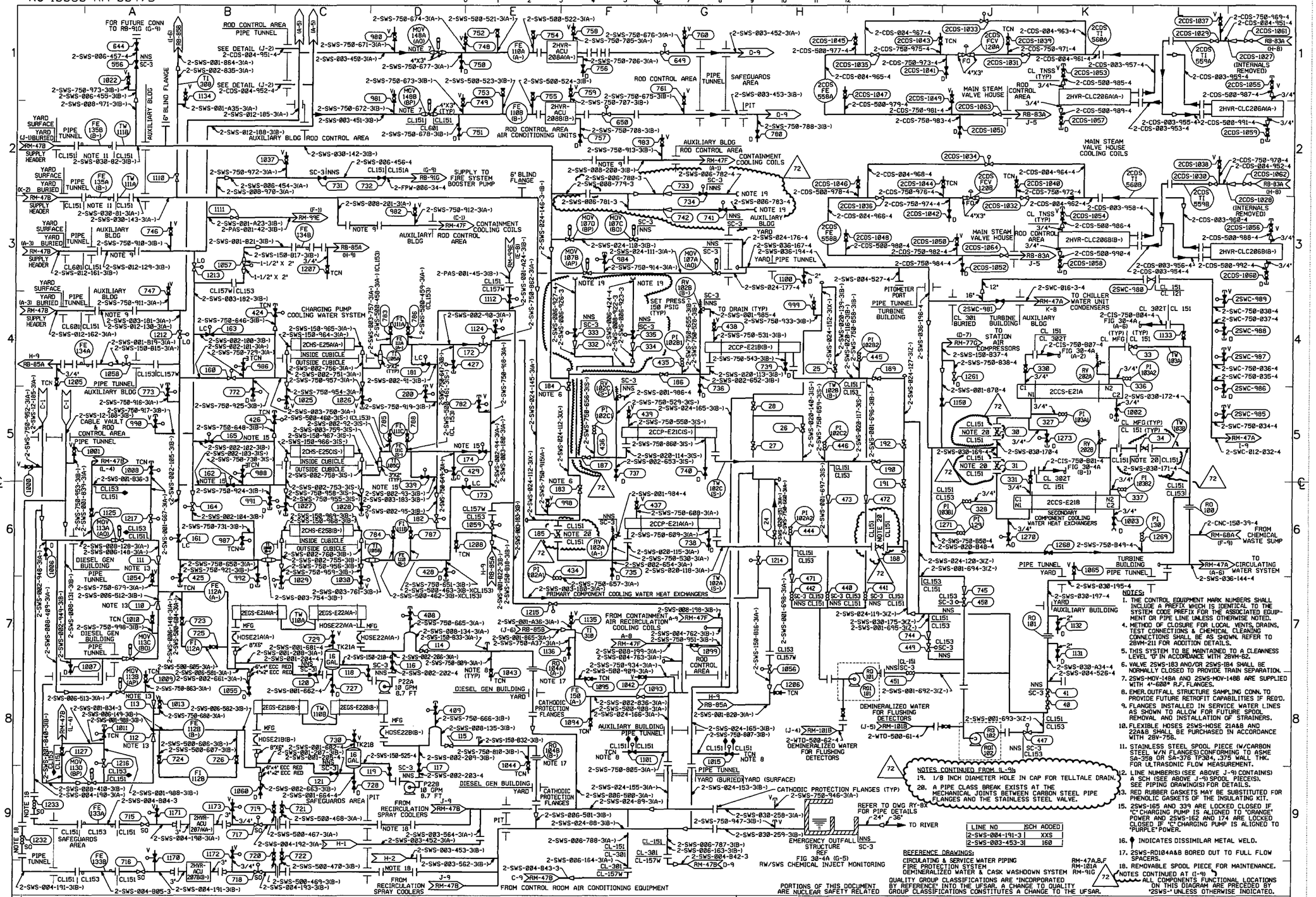

LINE NO	SCH ADDED
2-SWS-004-191-3	XXS
2-SWS-003-453-3	160

No. 10080-RM-47F

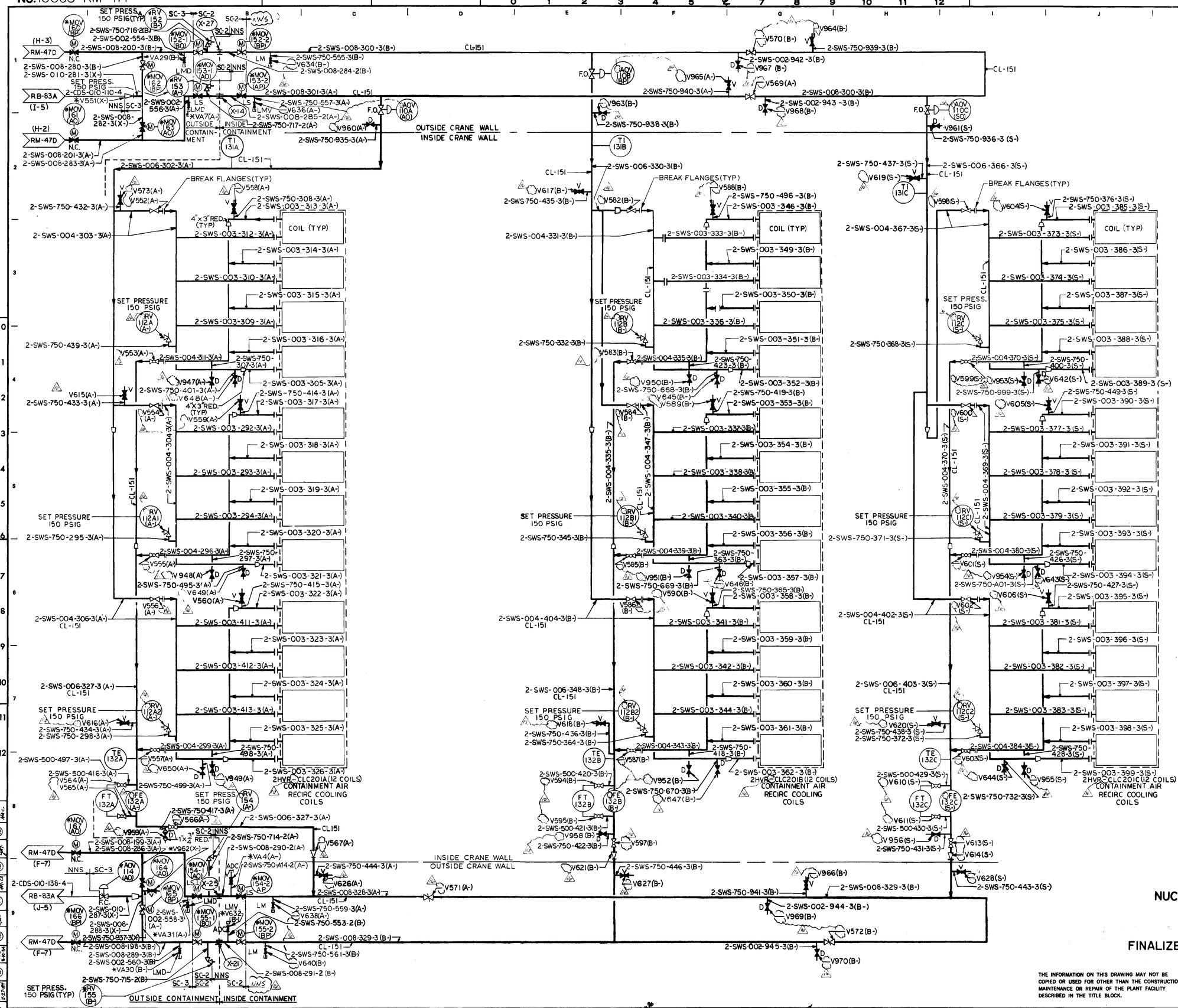

VALVE IDENTIFICATION	MARK NUMBER	PIPE SIZE	QUANTITY
V567, 614, 621	VCW015-A-3	6"	3
947, 948, 949, 950, 951, 952, 953, 954, 955, 956, 958, 960, 961, 963, 642, 643, 644, 645, 646, 647, 648, 649, 650	VGS060-B-3	3/4"	23
V552, 556, 582, 584, 586, 598, 600, 602	VGW015-A-3	4"	8
V967, 968, 969, 970	VGS060-B-3	2"	4
634, 640, 962, 964, 965, 966, 558, 559, 560, 573, 588, 589, 590, 604, 605, 606, 616, 617, 619, 626, 627, 628, 636, 638, 615, 618, 620	VOS060-C-3	3/4"	28
V554	VGW015-AZ-3	4"	1
V553, 555, 557, 583, 585, 587, 599, 601, 603	VOW015-A-3	4"	9
V566, 597, 613	VOW015-A-3	6"	3
V632, A4	VOS060-C-2	3/4"	2
V569, 570, 571, 572	VVI015-AR-3	8"	4
V551	VCI015-A-3	10"	1
V564, 565, 594, 595, 610, 611	VOS060-C-3	1 1/2"	6
VA29, A30, A31, A7	VOS060-CZ-3	2"	4
V959	VGS060-BZ-3	1"	1

NOTES:
1. THE CONTROL EQUIPMENT MARK NUMBERS SHALL INCLUDE A PREFIX WHICH IS IDENTICAL TO THE SYSTEM CODE PREFIX FOR THE ASSOCIATED EQUIPMENT OR PIPELINE UNLESS OTHERWISE NOTED. EXAMPLE: 2SWS-FE 132C.
2. ALL PIPING CLASS IS 151 UNLESS OTHERWISE NOTED.
3. THIS SYSTEM WILL BE MAINTAINED TO A CLEANNESS LEVEL "D" IN ACCORDANCE WITH 2BVM-62.
4. METHOD OF CLOSURE FOR LOCAL VENTS, DRAINS, TEST CONNECTIONS & CHEMICAL CLEANING CONNECTIONS SHALL BE AS SHOWN. REFER TO 2BVM-211 FOR ADDITIONAL DETAILS.
5. * DENOTES SAFETY RELATED ITEMS.

REFERENCE DRAWINGS:

CIRCULATING & SERVICE WATER PIPING	RM-47D
CHILLED WATER PIPING	RB-83A
NUCLEAR EQUIP. VENT & DRAIN PIPING	RM-89A

NUCLEAR SAFETY RELATED

FINALIZED FLUID SYSTEM

THE INFORMATION ON THIS DRAWING MAY NOT BE COPIED OR USED FOR OTHER THAN THE CONSTRUCTION, MAINTENANCE OR REPAIR OF THE PLANT FACILITY DESCRIBED IN THE TITLE BLOCK.

APPROVED Carl Otto Richardson
REGISTERED PROFESSIONAL ENGINEER NO. 16297-E
COMMONWEALTH OF PENNSYLVANIA

REVISIONS

ISSUE	DESCRIPTION	CHKD	CORR	APPD	DATE
14	DCP 1352 CO: ~ INC. INT. ISSUES 1342				
13	(B-B) REV (A-) WAS (A) ADD: D, (L-1) DEL V978 PER E&DCR 2PQ-5493				
12	SEE RECORD OF DRAWING CHANGES 12241-BCM-47F-12				
11	SEE RECORD OF DWG CHNG 12241-BCM-47F-11				
10	SEE RECORD OF DRAWING CHANGES 12241-BCM-47F-10				
9	SEE RECORD OF DRAWING CHANGES 12241-BCM-47F-9				
8	SEE RECORD OF DRAWING CHNGS. 12241-BCM-47F-8				
7	SEE RECORD OF DRAWING CHNGS 12241-BCM-47F-7				
6	FOR RECORD OF DWG CHNGS SEE 12241-BCM-47F-6				
5	FOR RECORD OF DWG CHNGS SEE 12241-BCM-47F-5				
4	FOR RECORD OF DWG CHNG SEE 12241-BCM-47F-4				
3	FOR RECORD OF DWG CHANGE SEE 12241-BCM-47F-3				
2	FOR RECORD OF DWG CHANGE SEE 12241 RM-47F-2 SH-1				
1	ORIGINAL ISSUE SUPERSEDES RM-77D				

STONE & WEBSTER ENGINEERING CORP.
BOSTON, MASS.

DUQUESNE LIGHT COMPANY
ENGINEERING & CONSTRUCTION PITTSBURGH, PA.

FLOW DIAGRAM
CIRCULATING & SERVICE WATER PIPING-SH.6

BEAVER VALLEY POWER STATION UNIT NO.2

SCALE: NONE | DATE 9-23-74 | DRAWN R. KENYON | CHECKED | INSPECTED R.J.P.
ARCH. APP. | ELECT. APP. | MECH. APP. | STRUCT. APP.

O.F.E. No. 10080 | C.O. No. 6289 | AA | No. 10080-RM-47F

S&W DWG. NO. 12241-RM-47F-16

Engineer J. CREAMER
Des. Eng. E.F. CHASE

No. 10080-RM-58A

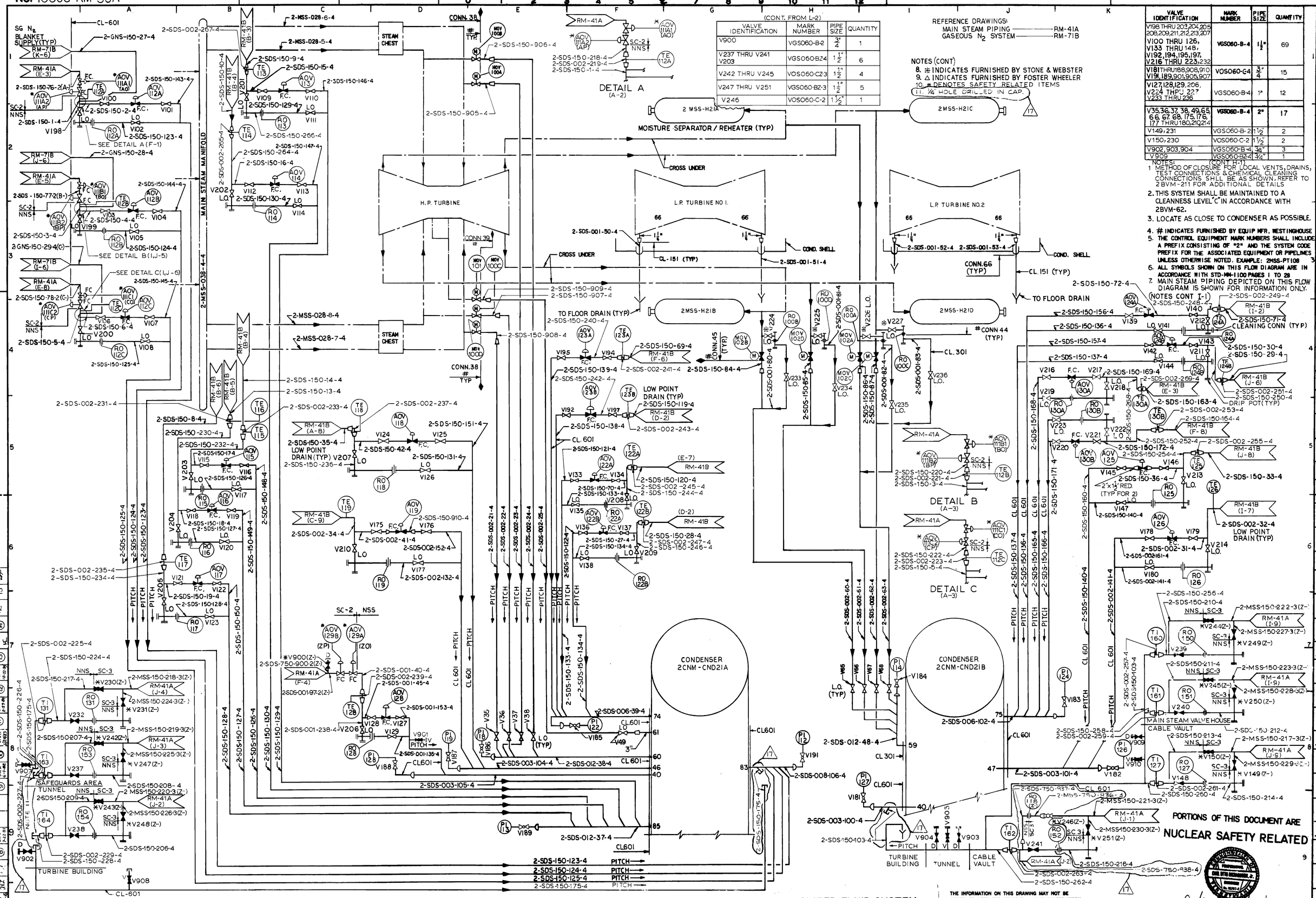

(CONT. FROM L-2)

VALVE IDENTIFICATION	MARK NUMBER	PIPE SIZE	QUANTITY
V900	VGS060-B-2	3/4"	1
V237 THRU V241 V203	VGS060-BZ-4	1½"	6
V242 THRU V245	VOS060-CZ-3	1½"	4
V247 THRU V251	VGS060-BZ-3	1½"	5
V246	VOS060-C-2	1½"	1

REFERENCE DRAWINGS:
MAIN STEAM PIPING ——— RM-41A
GASEOUS N_2 SYSTEM ——— RM-71B

NOTES (CONT)
8. # INDICATES FURNISHED BY STONE & WEBSTER
9. △ INDICATES FURNISHED BY FOSTER WHEELER
10. * DENOTES SAFETY RELATED ITEMS
11. ¼" HOLE DRILLED IN CAP.

VALVE IDENTIFICATION	MARK NUMBER	PIPE SIZE	QUANTITY
V198 THRU 203, 204, 205, 208, 209, 211, 212, 213, 207 V100 THRU 126, V133 THRU 148, V192, 194, 195, 197, V216 THRU 223, 232	VGS060-B-4	1½"	69
V181 THRU 188, 908, 910 V191, 189, 901, 905, 907	VOS060-C-4	3/4"	15
V127, 128, 129, 206, V224 THRU 227 V233 THRU 236	VGS060-B-4	1"	12
V35, 36, 37, 38, 49, 65, 66, 67, 68, 175, 176, 177 THRU 180, 210, 214	VGS060-B-4	2"	17
V149, 231	VGS060-B-2	1½"	2
V150, 230	VOS060-C-2	1½"	2
V902, 903, 904	VGS060-B-4	3/4"	3
V909	VGS060-BZ-4	3/4"	1

(CONT H-1)

NOTES:
1. METHOD OF CLOSURE FOR LOCAL VENTS, DRAINS, TEST CONNECTIONS & CHEMICAL CLEANING CONNECTIONS SHALL BE AS SHOWN. REFER TO 2BVM-211 FOR ADDITIONAL DETAILS
2. THIS SYSTEM SHALL BE MAINTAINED TO A CLEANNESS LEVEL "C" IN ACCORDANCE WITH 2BVM-62.
3. LOCATE AS CLOSE TO CONDENSER AS POSSIBLE.
4. # INDICATES FURNISHED BY EQUIP MFR, WESTINGHOUSE
5. THE CONTROL EQUIPMENT MARK NUMBERS SHALL INCLUDE A PREFIX CONSISTING OF "2" AND THE SYSTEM CODE PREFIX FOR THE ASSOCIATED EQUIPMENT OR PIPELINES UNLESS OTHERWISE NOTED. EXAMPLE: 2MSS-PT108
6. ALL SYMBOLS SHOWN ON THIS FLOW DIAGRAM ARE IN ACCORDANCE WITH STD-MM-1100 PAGES 1 TO 28
7. MAIN STEAM PIPING DEPICTED ON THIS FLOW DIAGRAM IS SHOWN FOR INFORMATION ONLY.

(NOTES CONT I-1)

PORTIONS OF THIS DOCUMENT ARE NUCLEAR SAFETY RELATED

FINALIZED FLUID SYSTEM

THE INFORMATION ON THIS DRAWING MAY NOT BE COPIED OR USED FOR OTHER THAN THE CONSTRUCTION, MAINTENANCE OR REPAIR OF THE PLANT FACILITY DESCRIBED IN THE TITLE BLOCK.

APPROVED — REGISTERED PROFESSIONAL ENGINEER NO. 16237-E COMMONWEALTH OF PENNSYLVANIA

REVISIONS

16	ADD VALVE V203 TO MTL. LIST	DEC 10/6/91 D/CHK
17	DCP-2930 INCORPORATED INTERIM ISSUE 16A5	DEC 12-13-93 D/CHK

13	SEE RECORD OF DRAWING CHANGES 12241-BCM-58A-15	
14	SEE RECORD OF DRAWING CHANGES 12241-BCM-58A14	
15	SEE RECORD OF DRAWING CHANGES 12241-BCM-58A-13	
12	SEE RECORD OF DRAWING CHANGES 12241-BCM-58A12	
11	SEE RECORD OF DRAWING CHANGES 12241-BCM-58A11	
10	SEE RECORD OF DWG CHANGES 12241-BCM-58A10	
9	SEE RECORD OF DWG CHANGES 12241-BCM-58A9	
8	SEE RECORD OF DWG CHANGES 12241-BCM-58A-8	
7	SEE RECORD OF DWG CHANGES 12241-BCM-58A-7	
6	SEE RECORD OF DWG CHANGES 12241 BCM-58A-6	
5	SEE RECORD OF DWG. CHANGES 12241 BCM-58A-5	
4	SEE RECORD OF DWG. CHANGES 12241 BCM-58A-4	
3	LINE NOS. ADDED & CHANGED. NOTES ADDED. PIPING REMOVED	
2	PSAR DWG NO'S CHANGED WAS RM-28A	
1	ORIGINAL ISSUE	

STONE & WEBSTER ENGINEERING CORP. BOSTON, MASS.

DUQUESNE LIGHT COMPANY
ENGINEERING & CONSTRUCTION PITTSBURGH, PA.

SCALE NONE
DATE 2-11-72 ARCH. APP.
DRAWN JJM ELECT. APP.
CHECKED MECH. APP.
INSPECTED RPB STRUCT. APP.

FLOW DIAGRAM
MISC. DRAINS - SECONDARY PLANT
BEAVER VALLEY POWER STATION UNIT NO. 2
O.F.E. No. 10080
C.O. No. 6289
AA No. 10080-RM-58A

S&W DWG. NO. 12241-RM-58A-17

ENGR. J. HASLAM
DES. ENG. E. F. CHASE

No. 10080-RM-71B

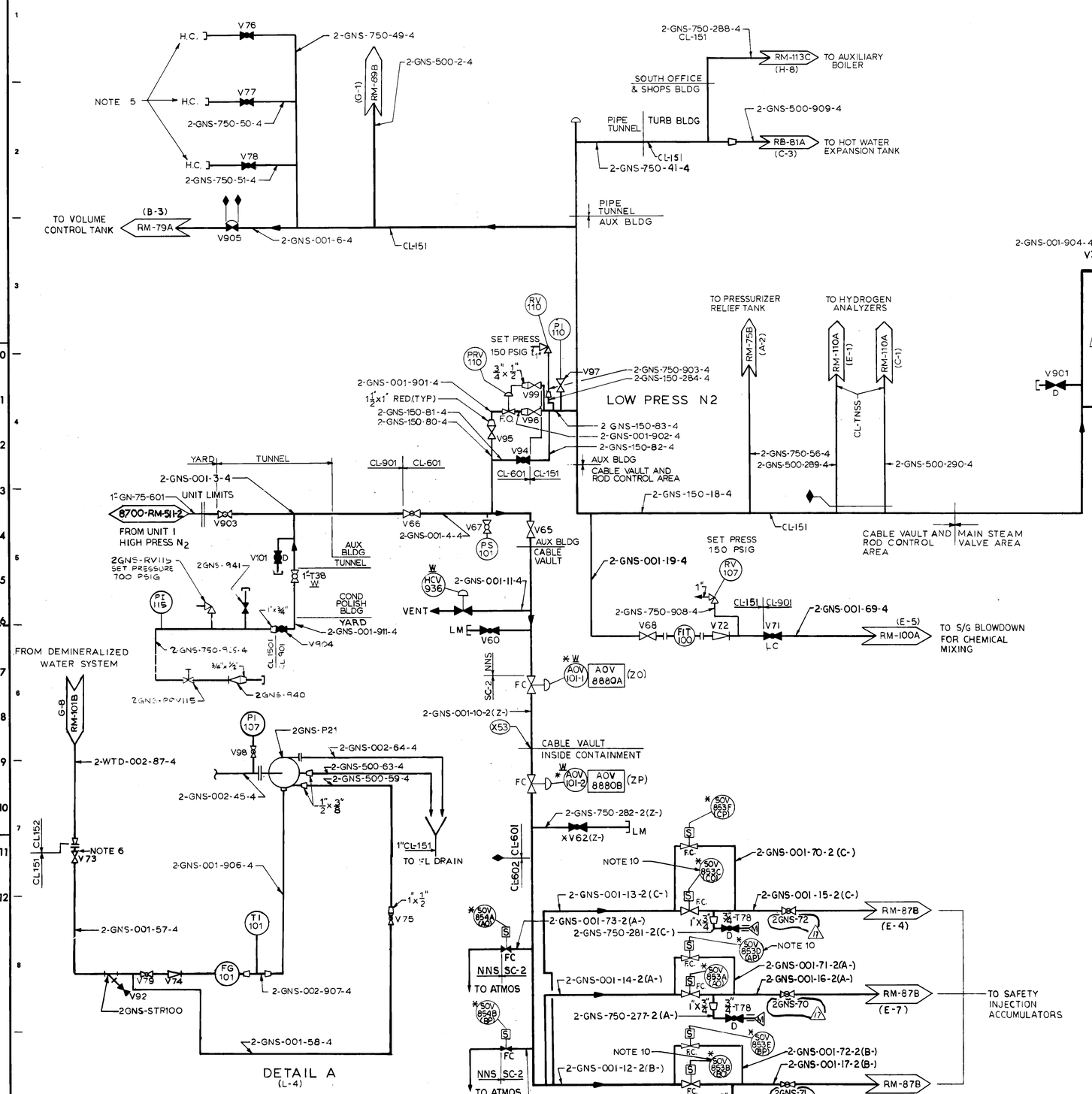

10. EXCEPT WHERE VALVES ARE SEPARATED BY WALLS, CORNERS OR ACCUMULATORS.
    a) 2-GNS*SOV853D & 2-GNS*SOV853A MUST BE AT LEAST 20FT FROM 2-SIS*MOV865A
    b) 2-GNS*SOV853B & 2-GNS*SOV853E MUST BE AT LEAST 20FT FROM 2-SIS*MOV865B
    c) 2-GNS*SOV853C & 2-GNS*SOV835F MUST BE AT LEAST 20FT FROM 2-SIS*MOV865C
    d) 2-GNS*SOV854A&B MUST BE AT LEAST 20FT FROM 2-SIS*MOV865A-C

    2-GNS*SOV853A-F & 2-GNS*SOV854A,B MUST BE ABOVE CONTAINMENT FLOOD LEVEL (EL 708'-6")

VALVE IDENTIFICATION	MARK NUMBER	PIPE SIZE	QUANTITY
V35,36,37,38,39, 84,85,86, 95,96	VGS060-B-4	1½"	10
V31,32,33,41,94	VOS060-C-4	1½"	5
V900,98	VOS060-C-4	¾"	2
V72,74	VCS060-B-4	1"	2
V44,45,46,91	VCS060-B-4	1½"	4
V71, V903 V904 V101	VOS150-F-4	1"	4
V49,50,55,56, 81, 82,93,901.97,52,53	VGS060-B-4	¾"	11
V60,62,67,76,77,78	VOS060-C-2	¾"	6
V65,68,73	VGS060-B-4	1"	3
V66,75,79	VOS060-C-4	1"	3
V99,100	VGS060-BZ-4	¾"	2
V92	VGS060-V-4	½"	1
V905	VDS015-Y-4	1"	1

NOTES:

1. W-BY WESTINGHOUSE
2. THE CONTROL EQUIPMENT VALVE IDENTIFICATION NUMBERS SHALL INCLUDE A PREFIX WHICH IS IDENTICAL TO THE SYSTEM CODE PREFIX FOR THE ASSOCIATED SYSTEM
3. THIS SYSTEM WILL BE MAINTAINED, TO CLEANNESS LEVEL B IN ACCORDANCE WITH 2BVM-62
4. METHOD OF CLOSURE FOR LOCAL VENTS, DRAINS AND TEST CONNECTIONS SHALL BE AS SHOWN REFER TO 2BVM-211 FOR ADDITIONAL DETAILS
5. HOSE CONNECTIONS ARE TO BE PROVIDED IN PRIMARY AUXILIARY BUILDING ON THE 718'-6", 735'-6" AND 755'-6" ELEVATIONS IN CLOSE PROXIMITY TO THE N_2 HOSE CONNECTIONS IN THE GASEOUS WASTE SYSTEM
6. V73 TO HAVE A SOCKET WELD FLANGE ON UPSTREAM SIDE OF VALVE
7. ⧫ INDICATES DISSIMILAR METAL WELD
8. DIFFUSER REMOVED BY DCP 2095
9. (*) DENOTES SAFETY RELATED ITEMS.

REFERENCE DRAWINGS:

MISC. DRAINS SECONDARY PLANT	RM-58A
REACTOR COOLANT PIPING	RM-75B
CHARGING & VOL. CONTROL PIPING	RM-79A
SAFETY INJECTION PIPING	RM-87B
NUCLEAR EQUIPT VENT & DRAIN PIPING	RM-89 B
STEAM GENERATOR BLOWDOWN PIPING	RM-100A
HOT WATER HEATING	RB-81A
GASEOUS WASTE STORAGE TANKS	RM-95C
DEMINERALIZED WATER	RM-101B

PORTIONS OF THIS DOCUMENT ARE

NUCLEAR SAFETY RELATED

FINALIZED FLUID SYSTEM

THE INFORMATION ON THIS DRAWING MAY NOT BE COPIED OR USED FOR OTHER THAN THE CONSTRUCTION, MAINTENANCE OR REPAIR OF THE PLANT FACILITY DESCRIBED IN THE TITLE BLOCK.

APPROVED Carl Otto Richardson
REGISTERED PROFESSIONAL ENGINEER NO. 16097-E
COMMONWEALTH OF PENNSYLVANIA

REVISIONS

17	TER 10747 REMOVED FITTING ADDED 2-GNS-70, 71, 72	DEH 5-7-99 D/CHK
13	INCORPORATES DCP 2095 INCLUDES D-5188-S09 & D-5188-S12	SUP DIR PSE DIR DSE DIR MSE ENG
14	TER 8696 REVISE CONTROL	WEC 10-3-94 D/CHK 2A ENG DIR EE DIR MSE DIR SPE DIR NES
15	DCP-2095 INCORPORATES MR-2963	FSW 4-29-96 D/CHK ENG SUP DIR EE DIR MSE DIR SPE DIR NES
16	DCP 2095 REMOVE DIFFUSER	WEC 8-14-96 D/CHK
12	FOR RECORD OF DRAWING CHANGES SEE 12241-BCM-71B-12	
11	FOR RECORD OF DRAWING CHANGES SEE 12241-BCM-71B-11	
10	SEE RECORD OF DRAWING CHGS 12241-BCM-71B-10	
9	SEE RECORD OF DRAWING CHANGES 12241-BCM-71B-9	
8	SEE RECORD OF DRAWING CHANGES 12241-BCM-71B-8	
7	SEE RECORD OF DRAWING CHANGES 12241-BCM-71B-7	
6	SEE RECORD OF DWG CHGS 12241-BCM-71B-6	
5	SEE RECORD OF DRAWING CHANGES 12241-BCM-71B-5	
4	SEE RECORD OF DRAWING CHANGES 12241-BCM-71B-4	
3	SEE RECORD OF DRAWING CHANGES 1224 BCM-71B-3	
2	SEE RECORD OF DRAWING CHANGES 12241-BCM-71B-2	
1	ORIGINAL ISSUE	

STONE & WEBSTER ENGINEERING CORP. BOSTON, MASS.

DUQUESNE LIGHT COMPANY
ENGINEERING & CONSTRUCTION PITTSBURGH, PA.

FLOW DIAGRAM
GASEOUS NITROGEN SYSTEM
BEAVER VALLEY POWER STATION UNIT 2

SCALE NONE | DATE 6-1-74 | ARCH. APP. | DRAWN R. JAROLIM | ELECT. APP. | CHECKED | MECH. APP. | INSPECTED | STRUCT. APP.

O.F.E. No. 10080 | C.O. No. 6289 | AA | No. 10080-RM-71B

S&W DWG. NO. 12241-RM-71B-17

Engineer: G. CUNNINGHAM
Des. Eng: E. CHASE

No. 10080-RM-0072A

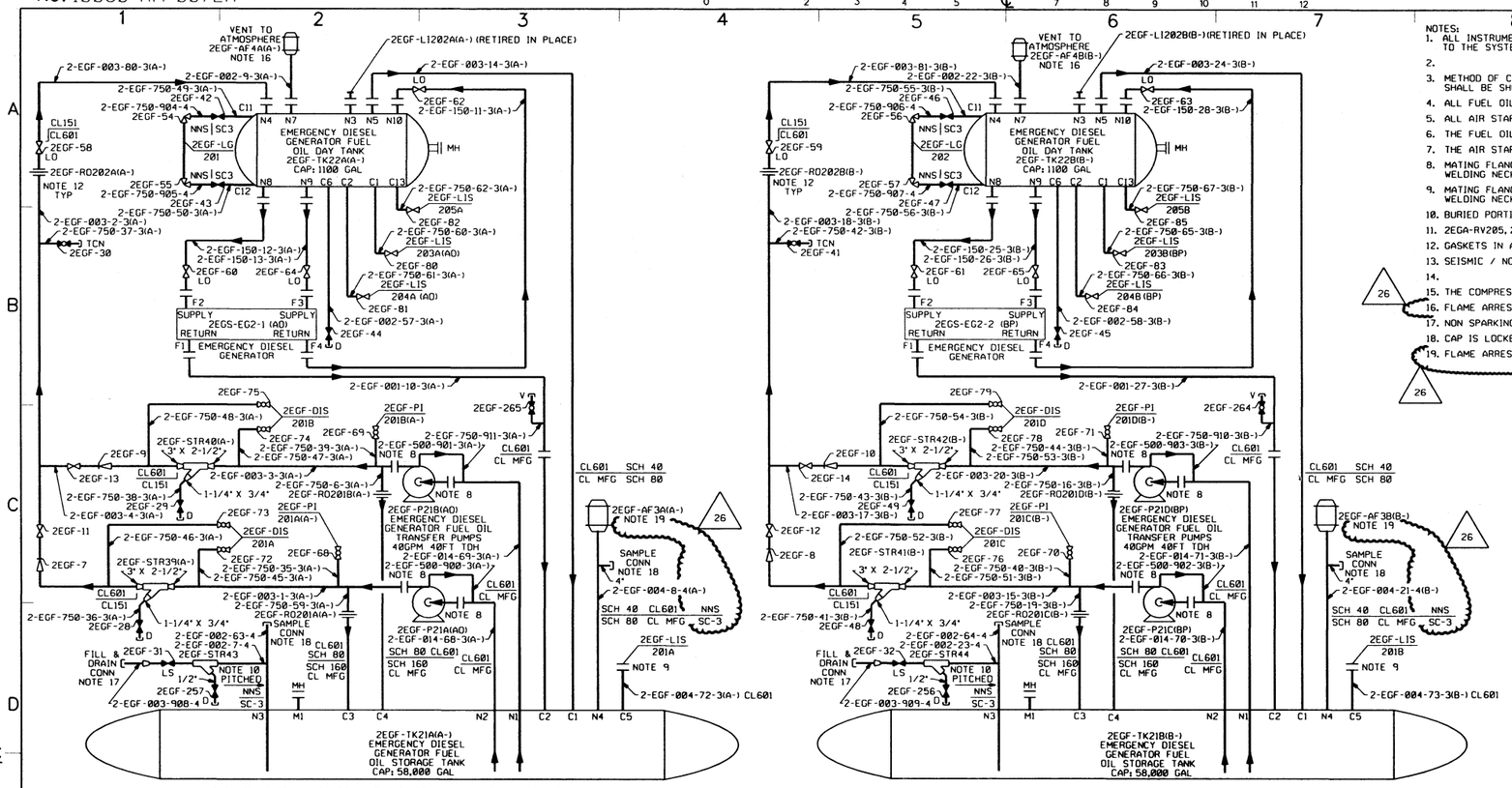

FUEL OIL SUPPLY AND RETURN FOR DIESEL GENERATOR SET 2EGS-EG2-1 | DIESEL FUEL OIL SYSTEM | FUEL OIL SUPPLY AND RETURN FOR DIESEL GENERATOR SET 2EGS-EG2-2

COMPRESSED AIR STARTING UNIT FOR DIESEL GENERATOR SET 2EGS-EG2-1 | DIESEL AIR STARTING SYSTEM | COMPRESSED AIR STARTING UNIT FOR DIESEL GENERATOR SET 2EGS-EG2-2

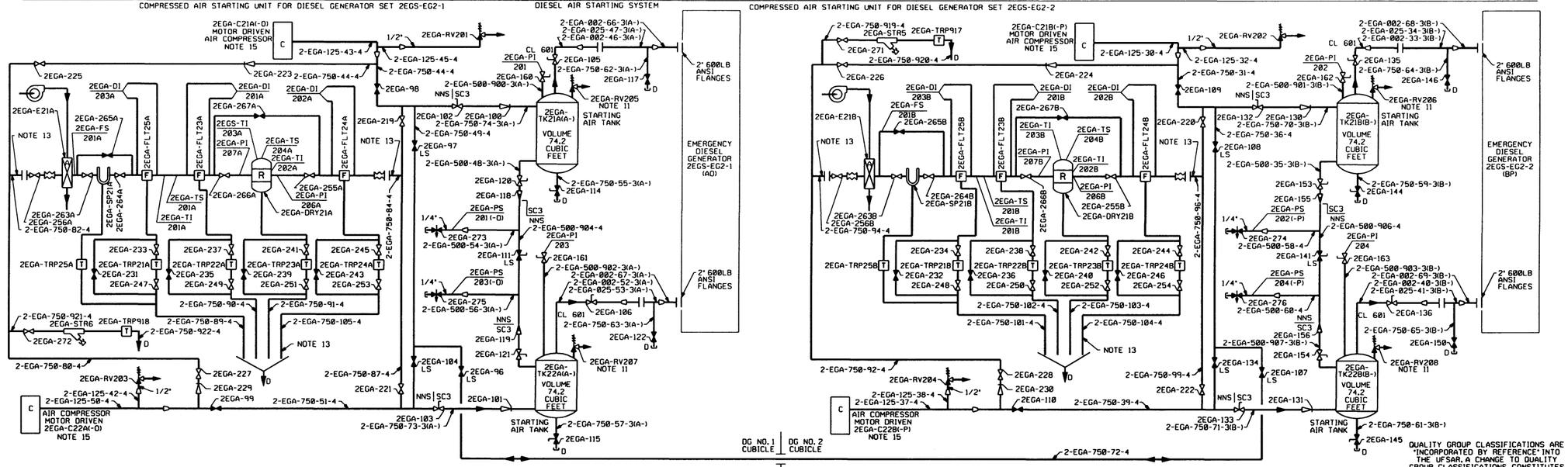

NOTES:

1. ALL INSTRUMENTS AND CONTROL EQUIPMENT MARK NUMBERS SHALL INCLUDE A PREFIX WHICH IS IDENTICAL TO THE SYSTEM CODE PREFIX FOR THE ASSOCIATED EQUIPMENT OR PIPE UNLESS OTHERWISE NOTED.
2.
3. METHOD OF CLOSURE FOR LOCAL VENTS, DRAINS, TEST CONNECTIONS AND CHEMICAL CLEANING CONNECTIONS SHALL BE SHOWN. REFER TO 2-BVM-211 FOR ADDITIONAL DETAILS.
4. ALL FUEL OIL SYSTEM PIPING IS PIPE CLASS 151 EXCEPT AS NOTED.
5. ALL AIR STARTING PIPING IS PIPE CLASS 301 EXCEPT AS NOTED.
6. THE FUEL OIL SYSTEM TO BE MAINTAINED TO CLEANNESS LEVEL "C" IN ACCORDANCE WITH 2-BVM-62.
7. THE AIR STARTING SYSTEM TO BE MAINTAINED TO CLEANNESS LEVEL "P" IN ACCORDANCE WITH 2-BVM-62.
8. MATING FLANGES TO 2EGF-P21A, B, C, D TO BE 14" 150 PSIG RAISED FACE SA181 GR 1 OR SA105, WELDING NECK FLANGES BORED TO SCHEDULE 80.
9. MATING FLANGES TO 2EGF-LIS201A, B TO BE 4" 150 PSIG RAISED FACE SA181 GR 1 OR SA105, WELDING NECK FLANGES BORED TO SCHEDULE 80.
10. BURIED PORTIONS OF THE PIPING ARE ENCASED IN CONCRETE.
11. 2EGA-RV205, 206, 207, 208 ARE THREADED (1/2" NPT) DIRECTLY INTO THEIR RESPECTIVE TANKS.
12. GASKETS IN ALL CLASS 601 EGF PIPING SHALL BE FLAT RING, 1/16" THICK VELLUMOID OR EQUAL.
13. SEISMIC / NON-SEISMIC BREAK AT EL 759'-0".
14.
15. THE COMPRESSORS WERE PURCHASED DA CAT I, BUT HAVE NO SAFETY FUNCTION.
16. FLAME ARRESTERS 2EGF-AF4A(A-), 4B(B-), ARE SC-3 NON-ASME III COMPONENTS. (26)
17. NON SPARKING (BRASS) FITTINGS SHALL BE PROVIDED FOR TANKER FILL CONNECTIONS.
18. CAP IS LOCKED CLOSED.
19. FLAME ARRESTERS 2EGF-AF3A(A-), 3B(B-), ARE SC-4 NON-ASME III COMPONENTS. (26)

PORTIONS OF THIS DIAGRAM ARE NUCLEAR SAFETY RELATED

QUALITY GROUP CLASSIFICATIONS ARE "INCORPORATED BY REFERENCE" INTO THE UFSAR. A CHANGE TO QUALITY GROUP CLASSIFICATIONS CONSTITUTES A CHANGE TO THE UFSAR.

ISSUES

REVISION 26 INCORPORATED DUN 14-0060-001-005 SATISFIED ECP 09-0197

FENOC FIRSTENERGY NUCLEAR OPERATING COMPANY

SCALE NONE	DATE 5/7/14	MECH.APP.	FINAL APP. FOR ISSUE
	DRAWN BY MVF	ELECT.APP.	
	SYS./DISC	NUCL.APP.	
	ENGR./DISC	CIVIL APP.	

BEAVER VALLEY POWER STATION UNIT NO 2

FLOW DIAGRAM - FUEL OIL & COMP AIR - EMER DIESEL GEN

DWG.NO. 10080- RM-0072A REV. 26

RM-0072A.DGN 10/30/2014 11:10:24 AM

PREPARED ON CAEDOI

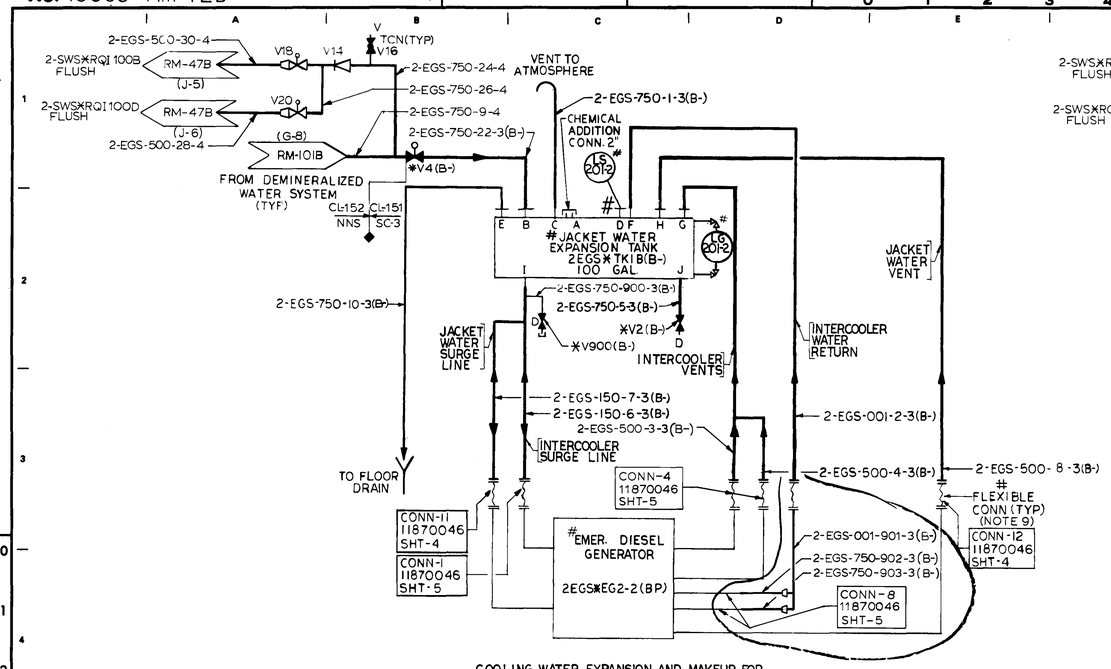

COOLING WATER EXPANSION AND MAKEUP FOR DIESEL GENERATOR SET 2EGS*EG2-2

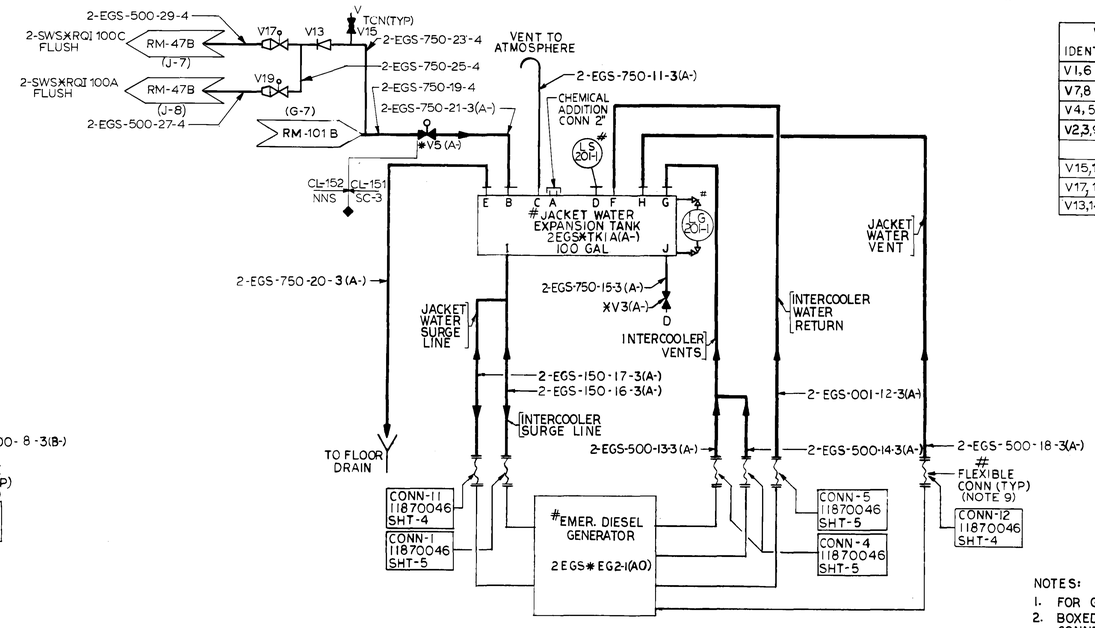

COOLING WATER EXPANSION AND MAKEUP FOR DIESEL GENERATOR SET 2EGS*EG2-1

DIESEL COOLING WATER SYSTEM

VALVE IDENTIFICATION	MARK NUMBER	PIPE SIZE	QUANTITY
V1,6	VBW015-B-4	6"	2
V7,8	VOS060-C-3	3/4"	2
V4,5	VBS015-Z-3	3/4"	2
V2,3,900	VGS060-B-3	3/4"	3
V15,16	VOS060-W-4	3/4"	2
V17,18,19,20	VBS015-D-4	3/4"	4
V13,14	VCS060-G-4	3/4"	2

NOTES:

1. FOR GENERAL NOTES SEE RM-72A
2. BOXED NUMBERS DENOTES DIESEL MFR'S CONNECTION & DRAWING NUMBER.
3. ALL COOLING WATER SYSTEM PIPING IS PIPE CLASS 151, EXCEPT AS NOTED.
4. ALL DIESEL AIR EXHAUST, AIR INTAKE & CRANKCASE VACUUM SYSTEMS PIPING IS PIPE CLASS-151, EXCEPT AS NOTED.
5. THE COOLING WATER SYSTEM TO BE MAINTAINED TO CLEANNESS LEVEL "C" IN ACCORDANCE WITH 2BVM-62
6. THE DIESEL AIR EXHAUST, AIR INTAKE & CRANKCASE VACUUM SYSTEMS TO BE MAINTAINED TO A CLEANNESS LEVEL "D" IN ACCORDANCE WITH 2BVM-62
7. ◆ DENOTES DISSIMILAR METAL WELD
8. FILL CONNECTIONS FOR LUBE OIL TO BE LOCKED CLOSED ADMINISTRATIVELY CONTROLLED.
9. THE EXHAUST AND INTAKE SILENCERS, EXPANSION JOINTS, INTAKE AIR FILTERS, AND FLEXIBLE CONNECTIONS ARE SC-3 NON-ASME III COMPONENTS.

NOTES CONT (K-7)

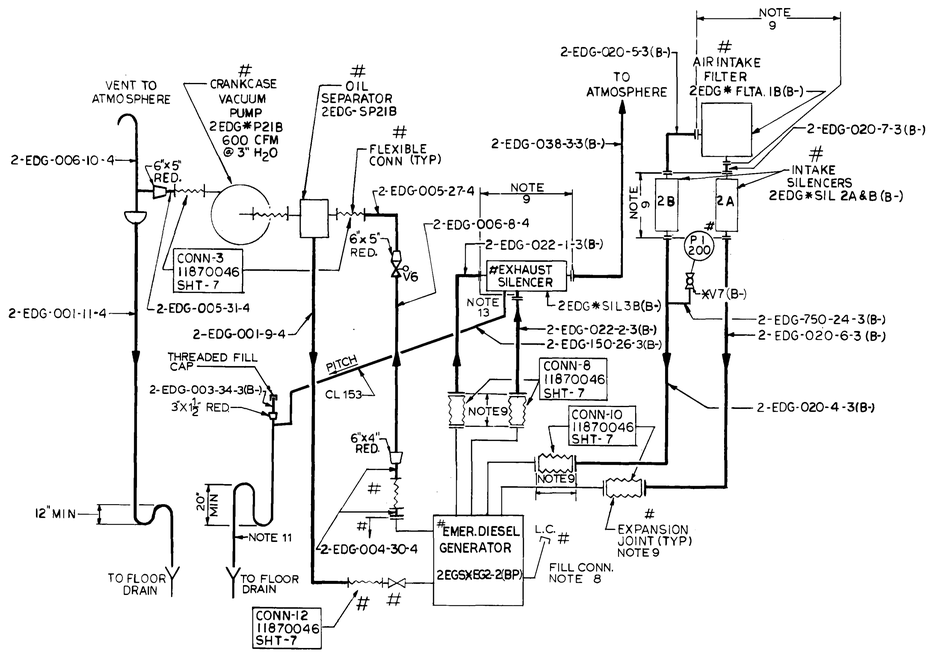

COMBUSTION AIR INTAKE AND EXHAUST AND CRANKCASE VACUUM FOR DIESEL GENERATOR SET 2EGS*EG2-2

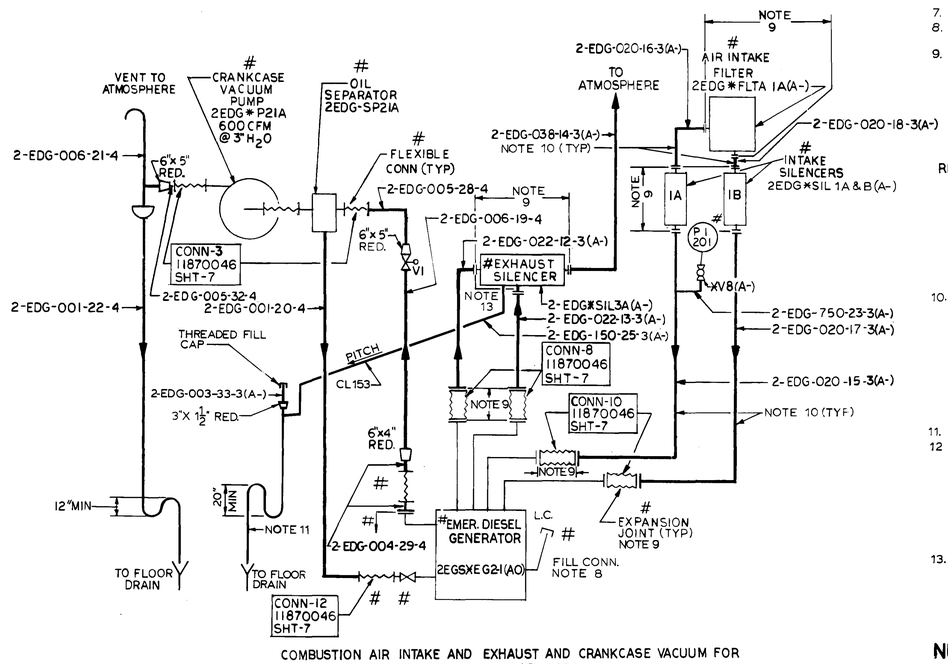

COMBUSTION AIR INTAKE AND EXHAUST AND CRANKCASE VACUUM FOR DIESEL GENERATOR SET 2EGS*EG2-1

DIESEL COMBUSTION AIR EXHAUST, COMBUSTION AIR INTAKE, & CRANKCASE VACUUM SYSTEMS

REFERENCE DRAWINGS:
MANUFACTURER'S DWGS-11870046-SHT 4,5 & 7
S/W FILE NOS. 2002.190-230-005
2002.190-230-006
2002.190-230-008
DEMINERALIZED WATER SYSTEM RM-101B

NOTES CONT

10. THE DIESEL AIR INTAKE PIPING SHALL BE PAINTED ON THE INSIDE AS FOLLOWS:
    A. PREPARE SURFACE PER CARBOLINE 193 LF PRIMER DATA SHEET
    B. APPLY A MINIMUM OF 2 COATS OF CARBOLINE 193 LF PRIMER
    C. NO SPECIFIC DFT MEASUREMENT IS REQUIRED
    D. COATING APPLICATION SHALL BE IN ACCORDANCE WITH 193 LF DATA SHEET
    E. SWAB APPLICATION IS ACCEPTABLE
    F. VISUAL INSPECTION SHALL BE PERFORMED TO ASSURE ALL BARE SPOTS ARE COATED
11. LOCATE LOOP SEAL WITHIN 4'-0" OF FLOOR EL 732-6"
12. LINE NUMBER(S) (SEE BELOW) CONTAIN (S) (A) SCH (SEE BELOW) SPOOL PIECE (S), SEE ISOMETRIC (S) FOR DETAILS.

LINE NO.	SCH. ADDED
2 EGS-750-019-4	40 S
2 EGS-750-009-4	40 S
2 EGS-750-024-4	40 S

13. LINES 2-EDG-150-25-3 AND 2-EDG-150-26-3 SHALL BE INSULATED WITH CALCIUM SILICATE ALONG THE FIRST 5 FT FROM THE EXHAUST SILENCERS.

PORTIONS OF THIS DOCUMENT ARE

NUCLEAR SAFETY RELATED

FINALIZED FLUID SYSTEM

THE INFORMATION ON THIS DRAWING MAY NOT BE COPIED OR USED FOR OTHER THAN THE CONSTRUCTION, MAINTENANCE OR REPAIR OF THE PLANT FACILITY DESCRIBED IN THE TITLE BLOCK.

APPROVED Donald W. Fitzgerald
REGISTERED PROFESSIONAL ENGINEER NO. 14-576-E
COMMONWEALTH OF PENNSYLVANIA

REVISIONS

ISSUE	DESCRIPTION	CHKD	CORR	APPD	DATE
14	SEE RECORD OF DWG CHNG 12241-BCM-72B-14				
13	SEE RECORD OF DRAWING CHANGES 12241-BCM-72B-13				
12	SEE RECORD OF DRAWING CHANGES 12241-BCM-72B-12				
11	SEE RECORD OF DRAWING CHANGES 12241-BCM-72B-11				
10	SEE RECORD OF DWG CHNG 12241-BCM-72B-10				
9	SEE RECORD OF DWG CHNG 12241-BCM-72B-9				
8	SEE RECORD OF DWG CHNG 12241-BCM-72B-8				
7	SEE RECORD OF DWG CHNG 12241-BCM-72B-7				
6	SEE RECORD OF DWG CHNG 12241-BCM-72B-6				
5	SEE RECORD OF DWG CHANGE 12241-BCM-72B-5				
4	SEE RECORD OF DWG CHNG 12241-BCM-72B-4				
3	SEE RECORD OF DWG CHANGE 12241-BCM-72B-3				
2	SEE RECORD OF DWG CHANGE 12241-BCM-72B-2				
1	ORIGINAL ISSUE				

STONE & WEBSTER ENGINEERING CORP. BOSTON, MASS.

DUQUESNE LIGHT COMPANY
ENGINEERING & CONSTRUCTION PITTSBURGH, PA.

SCALE NONE	DATE 11-2-77	ARCH. APP.
	DRAWN G.P./G.E.S.	ELECT. APP.
	CHECKED	MECH. APP.
	INSPECTED	STRUCT. APP.

FLOW DIAGRAM
DIESEL GENERATOR AUXILIARY SYSTEMS

BEAVER VALLEY POWER STATION UNIT NO. 2

O.F.E. No. 10080 C.O. No. 6289 AA No. 10080-RM-72B

Engineer J. HASLAM
Des. Eng. E. CHASE

S&W DWG. NO. 12241-RM-72B-14

No. 10080-RM-75A

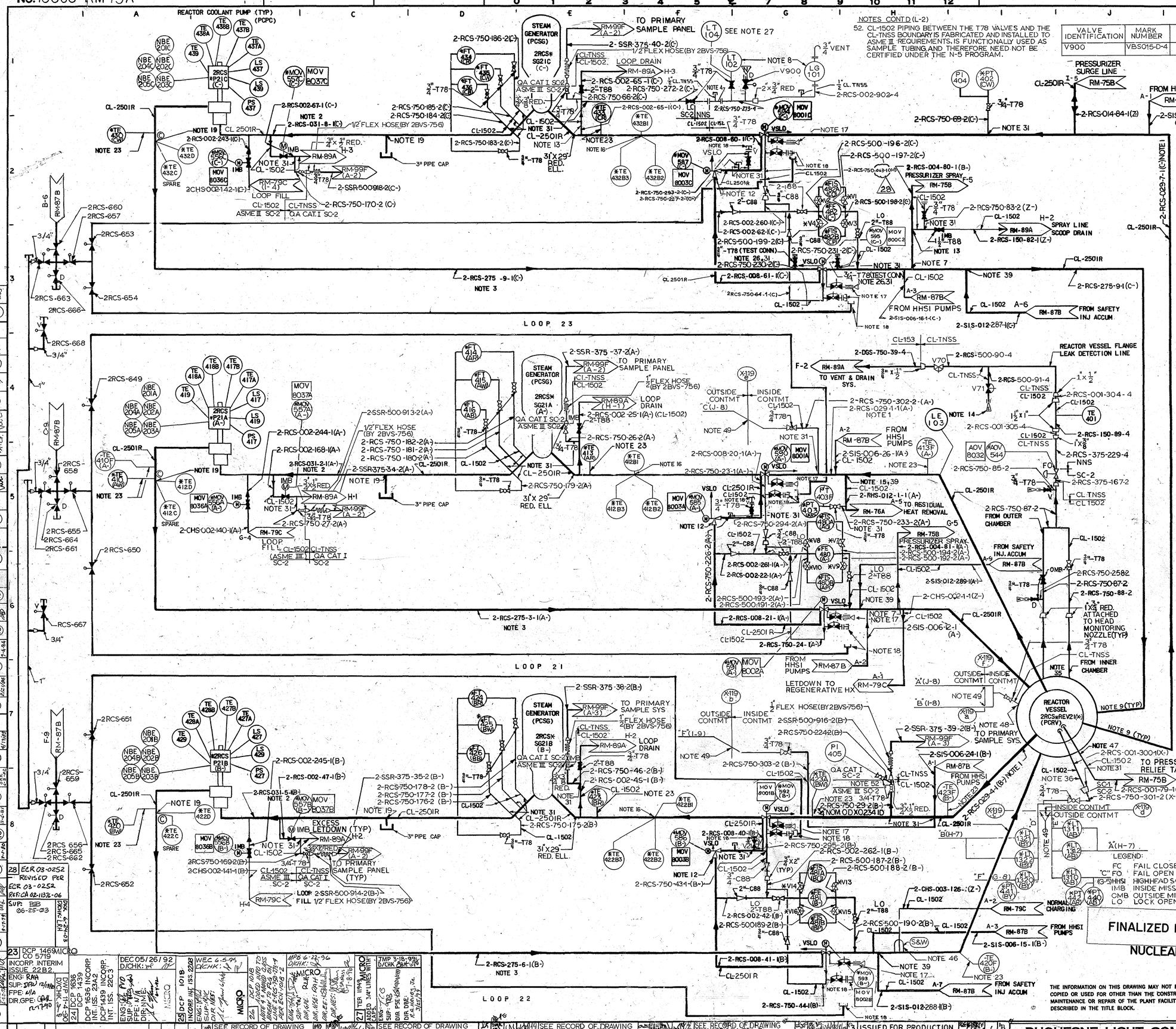

NOTES CONT'D (L-2)

52. CL-1502 PIPING BETWEEN THE T78 VALVES AND THE CL-TNSS BOUNDARY IS FABRICATED AND INSTALLED TO ASME III REQUIREMENTS. IS FUNCTIONALLY USED AS SAMPLE TUBING AND THEREFORE NEED NOT BE CERTIFIED UNDER THE N-5 PROGRAM.

VALVE IDENTIFICATION	MARK NUMBER	PIPE SIZE	QUANTITY
V900	VBS015-D-4	3/4"	1

VALVE IDENTIFICATION	MARK NUMBER	PIPE SIZE	QUANTITY
V1,2,3,4,5,6,7,8,9,10,11,12,13,14,15,16,17,18	VSS150-A-2	1/2	18
V21	VSS150-A-2	3/4	1
V70,71	VSS200-R-4	1/2	2

NOTES CONT'D (L-7)

47. PART-LENGTH CONTROL ROD DRIVE MECHANISM CONN IS FURNISHED BY WESTINGHOUSE AS THE CONN TO THE VENT PIPING.
48. CONN TO THE REACTOR VESSEL IS LOCATED OFF OF THE INCORE INSTRUMENTATION SEAL TABLE.
49. CONTAINMENT ISOLATION IS PROVIDED BY A SENSOR, A FILLED SYSTEM AND A HYDRAULIC ISOLATOR IN SERIES. FOR FURTHER INFORMATION SEE S&W DRAWINGS 12241-RK-25 SERIES.
50.
51. LINE NUMBER(S) (SEE BELOW) CONTAIN(S) (A) SCH (SEE BELOW) SPOOL PIECE(S). SEE ISOMETRIC(S) FOR DETAILS.

LINE NOS	SCH ADDED
2-RCS-750-273-4	40S

1. 29" INSIDE DIAMETER
2. 31" INSIDE DIAMETER
3. 27.5" INSIDE DIAMETER
4. SPOOL PIECE TO BE INSTALLED ONLY DURING REFUELING TO MAKE CONNECTION TO SIGHT GLASS USED FOR MONITORING REACTOR COOLANT LEVEL. BLIND FLANGES INSTALLED NORMALLY.
7. SPRAY LINE SCOOP.
8. LT&LG TO BE USED DURING REFUELING OPERATION ONLY.
9. ACCESS FOR INSERVICE INSPECTION OF REACT COOLANT PIPE TO REACT. VESSEL NOZZLE WELDS TO BE PROVIDED
12. 0.25" HOLE THROUGH VALVE PLUG.
13. LOCATE BELOW ELEVATION OF REACTOR VESSEL FLANGE.
14. LOCAL COLLECTION POINT FOR DETERMINING LEAKAGE RATE.
15. LOCATE CONNECTION 45° BELOW HORIZONTAL CENTERLINE.
16. THE BOTTOM TWO HOT LEG RTD THERMOWELLS (120°& 240°) ARE LOCATED IN THE SAME CROSSECTIONAL PLANE. THE TOP HOT LEG RTD THERMOWELL 0° IS LOCATED 1'-1" (21/2") TOWARD THE REACTOR FROM THAT CROSSECTIONAL PLANE.
17. SWAGELOK TEST CONNECTION AND PLUG.
18. 1/2" SWAGELOK CONNECTION FOR DISC PRESSURIZATION AND TEST CONNECTION.
19. LOCATE CONNECTION ON UPPER 180° OF PIPE CIRCUMFERENCE.
20.
21.
22.
23. RTD INSTALLED IN WELL.
24. PARALLEL PIPE PATHS SHOULD BE OF APPROX EQUAL EQUIV LENGTHS. FLOW PATH LENGTH OF EACH 1" PIPING SECTION SHOULD BE APPROXIMATELY 6 FEET (12'-0" MAXIMUM).
25. LE 103 INSTALLED ONLY WHEN NEEDED FOR MID-LOOP LEVEL.
26. TEST CONN FOR LOOP STOP VALVE ANALYSIS.
27. REDUCED INVENTORY/MID-LOOP LEVEL TRANS.
29. REFER TO WESTINGHOUSE MFR PRINTS FOR ALL INSTRUMENT CONNECTIONS.
30A. THE CONTROL EQUIPMENT MARK NUMBERS SHALL INCLUDE A PREFIX WHICH IS IDENTICAL TO THE SYSTEM CODE PREFIX FOR THE ASSOCIATED EQUIPMENT OR PIPE LINE UNLESS OTHERWISE NOTED. EXAMPLE: 2RCS-TE401
30B. WESTINGHOUSE CONTROL EQUIPMENT IDENTIFICATION NUMBERS ARE SHOWN IN SQUARES ADJACENT TO BALLOONED MARK NUMBERS WHERE THESE ARE DIFFERENT.
31. 3/8" FLOW RESTRICTOR REQ'D PER 2BVS-939. FLOW RESTRICTOR AND UPSTREAM OF FLOW RESTRICTOR IS SC-1 AND DOWNSTREAM OF FLOW RESTRICTOR IS SC-2
33.
34. WESTINGHOUSE VALVE NUMBERING SYS: 3/4"-T78 — VALVE SIZE; VALVE TYPE (AS SPECIFIED IN VALVE REF GUIDE)

ALL VALVES AND INSTRUMENTS SUPPLIED BY WESTINGHOUSE UNLESS OTHERWISE NOTED

NOTES CONT'D (L-9)

46. THERMAL SLEEVE IS PROVIDED BY STONE & WEBSTER PER 2BV-58.

REFERENCE DRAWINGS:

SAMPLE PIPING	RM-99F
NUCLEAR EQUIP VENT & DRAIN PIPING	RM-89A
CHARGING & VOL. CONTROL PIPING	RM-79C
SAFETY INJECTION PIPING	RM-87B
REACTOR COOLANT PIPING	RM-75B,C
RESIDUAL HEAT REMOVAL PIPING	RM-76A

NOTES CONT'D

35. HEAD GASKET MONITORING CONNECTIONS FURNISHED WITH REACTOR VESSEL.
36. VENT PIPE FURNISHED WITH REACTOR VESSEL HEAD.
37. PIPE CLASSES 250I AND 250IR ARE SUPPLIED BY WESTINGHOUSE.
38. PIPE CLASSES FOR VENTS AND DRAINS AND INSTRUMENT ROOT CONNECTIONS SHALL BE THE SAME AS THE PIPE TO WHICH THEY ARE CONNECTED UNLESS OTHERWISE NOTED.
39. NOZZLE OFF REACTOR COOLANT LOOP IS SCHEDULE 140 SCHEDULE 160 PIPE SHOULD BE WELD END PREPARED TO MATCH NOZZLE.
40. ALL CLASS I PIPING FROM 1 1/2" TO 2" DIAMETER TO BE BUTT-WELDED EXCEPT AT CONNECTIONS TO W SUPPLIED EQUIPMENT.
41. FOR FLOW DIAGRAM OF VSLO PIPING FROM VALVES, SEE RM-89A.
42. * DENOTES SAFETY RELATED ITEMS
43. THIS SYSTEM SHALL BE MAINTAINED TO A CLEANNESS LEVEL 'B' IN ACCORDANCE WITH 2BVM-62
45. METHOD OF CLOSURE FOR LOCAL VENTS, DRAINS, TEST CONNECTIONS & CHEMICAL CLEANING CONNECTIONS SHALL BE AS SHOWN. REFER TO 2BVM-211 FOR ADDITIONAL DETAILS

LEGEND:

FC	FAIL CLOSED
"C" FO	FAIL OPEN
(G-5) HHSI	HIGH HEAD SAFETY INJECTION
IMB	INSIDE MISSILE BARRIER
OMB	OUTSIDE MISSILE BARRIER
LO	LOCK OPEN

THE INFORMATION ON THIS DRAWING MAY NOT BE COPIED OR USED FOR OTHER THAN THE CONSTRUCTION, MAINTENANCE OR REPAIR OF THE PLANT FACILITY DESCRIBED IN THE TITLE BLOCK.

APPROVED William H. Bohlke
REGISTERED PROFESSIONAL ENGINEER NO. 26027-E
COMMONWEALTH OF PENNSYLVANIA

REVISIONS

28	ECR 03-0252 REVISED PER ECR 03-0252 REF: CH 02-1032-06 SUP: RB 06-25-03		
23	DCP 1469 MICRO CO 5719 INCORP. INTERIM ISSUE 22B2. ENG: RAN SUP: DPW 12/19/02 FPE: N/A DIR.GPE: CAR 12/19/02		
24	DCP 1636 INCORP. INT. ISS. 23A2 DCP 1439 INCORP. INT. ISS. 22C3	DEC 05/26/92 D/CHK:	
25	DCP 1018 INCORP. INT. ISS. 22D8	WEC 6-5-95 D/CHK:	
26	MICRO DCP 1018 INTER 4 NWD CLPS ENGR 2-25-99 PER ECN 1018-2	MPB 6-22-96 D/CHK:	
27	TER 11949 MICRO ADD 3/4" LINES WITH	JMP 3-18-99 D/CHK:	
22	(L-7) ADD REF TO RM-75C		
21	SEE RECORD OF DRAWING CHANGES 12241-BCM-75A-21		
20	SEE RECORD OF DRAWING CHANGES 12241-BCM-75A-20		
19	SEE RECORD OF DRAWING CHANGES 12241-BCM-75A-19		
18	SEE RECORD OF DRAWING CHANGES 12241-BCM-75A-18		
17	SEE RECORD OF DRAWING CHANGES 12241-BCM-75A-17		
16	SEE RECORD OF DRAWING CHANGES 12241-BCM-75A-16		
15	SEE RECORD OF DRAWING CHANGES 12241-BCM-75A-15		
14	SEE RECORD OF DRAWING CHANGES 12241-BCM-75A-14		
13	SEE RECORD OF DRAWING CHANGES BCM-75A-13		
12	SEE RECORD OF DRAWING CHNGS. 12241-BCM-75A-12		
11	SEE RECORD OF DRAWING CHANGES 12241-BCM-75A-11		
10	SEE RECORD OF DRAWING CHANGES BCM-75A-10		
9	SEE RECORD OF DRAWING CHANGES BCM-75A-9		
8	SEE RECORD OF DRAWING CHANGES BCM-75A-8		
7	SEE RECORD OF DRAWING CHANGES BCM-75A-7		
6	SEE RECORD OF DRAWING CHANGES BCM-75A-6		
5	SEE RECORD OF DRAWING CHANGES BCM-75A		
4	ISSUED FOR PRODUCTION		
3	PSAR DWG. NOS. CHANGED WAS RM-37A		
2	ORIGINAL ISSUE		

DESCRIPTION | CHKD | CORR | APPD | DATE

STONE & WEBSTER ENGINEERING CORP. BOSTON, MASS.

DUQUESNE LIGHT COMPANY
ENGINEERING & CONSTRUCTION PITTSBURGH, PA.

SCALE NONE	DATE 2-12-72	ARCH. APP.	
	DRAWN J.L.D.	ELECT. APP.	
	CHECKED	MECH. APP.	
	INSPECTED RPB	STRUCT. APP.	

FLOW DIAGRAM
REACTOR COOLANT PIPING - SHEET I

BEAVER VALLEY POWER STATION UNIT NO 2

O.F.E. No. 10080 | AA | No. 10080-RM-75A
C.O. No. 6289

S&W DWG. NO. 12241-RM-75A-28

ENG: J. HASLAM
DE: E. CHASE

No. 10080-RM-75B

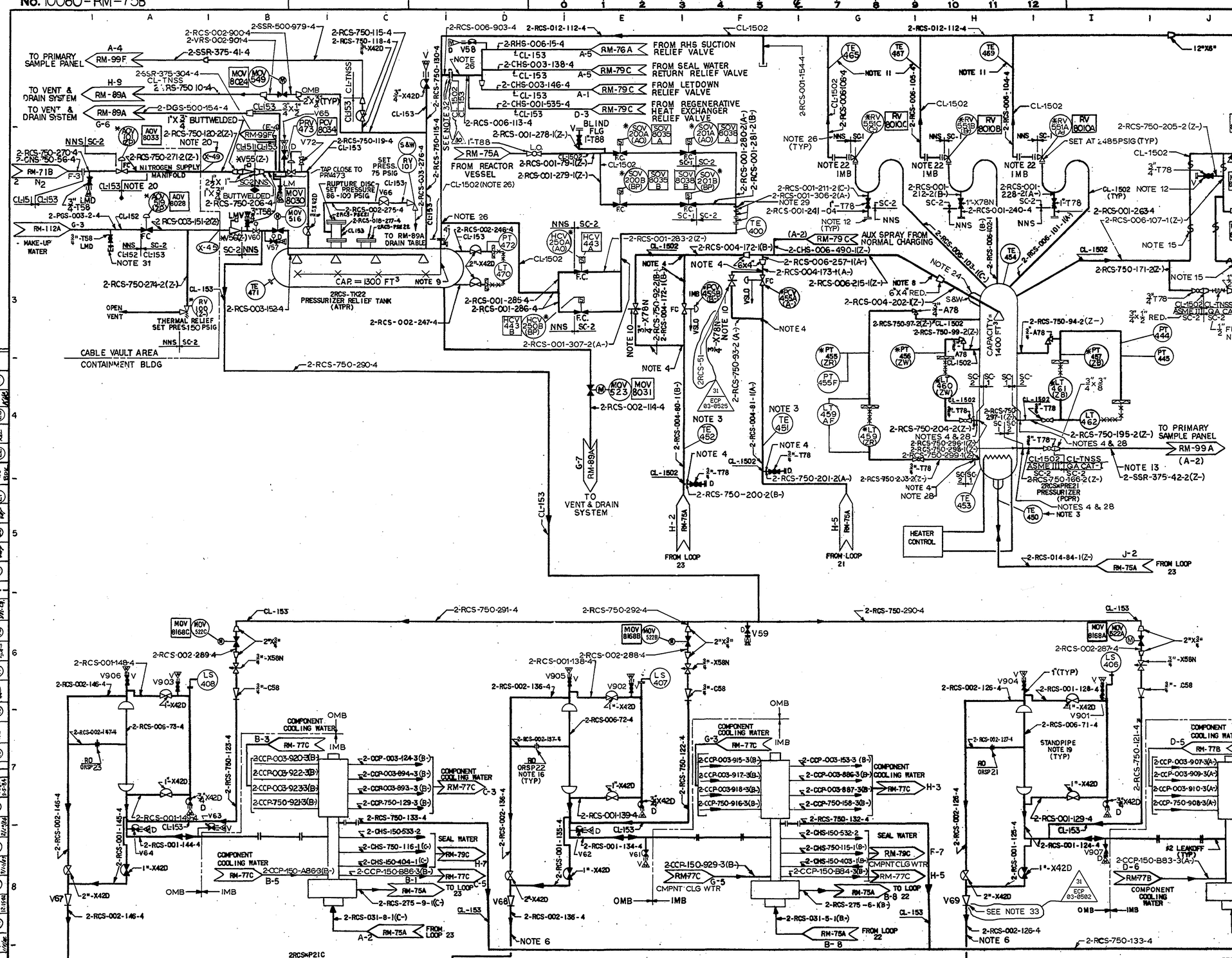

VALVE IDENTIFICATION	MARK NUMBER	PIPE SIZE	QUANTITY
V55	VCW015-B-2	2 1/2"	1
V56	VCW015-Y-2	3"	1
V57	VBS 015-D-4	3/4"	1
V25,58,61,62,63,64,65	VDS015-Y-4	3/4"	7
V59	VGS015-A-4	3/4"	1
V60	VBW015-D-4	3"	1
V67,68,69	VCS060-G-4	2"	3
V66	VDS015-X-4	2"	1
V72	VOS060-W-4	1/2"	1
V26	VCS060-G-4	3/4"	1
V901,902,903,904, 905,906	VOS060-W-4	3/4"	6
V907	VGS060-V-4	3/4"	1

NOTES:

1. ALL VALVES & INSTRUMENTS BY WESTINGHOUSE UNLESS OTHERWISE NOTED.
2. FOR GENERAL NOTES SEE RM-75A
3. LOCATE APPROXIMATELY MIDWAY BETWEEN LOOP & PRESSURIZER.
4. 3/8" FLOW RESTRICTOR REQUIRED PER 2BVS-939.
5.
6. SEAL LEAKOFF PIPING TO BE SLOPED DOWN FROM BOTTOM OF STANDPIPE.
7.
8. SLOPE SPRAY LINE DOWNWARD TO PROVIDE WATER SEAL BETWEEN PRESSURIZER AND SPRAY VALVES.
9. VENT HOLE PROVIDED.
10. ACCESS OR REACH ROD REQUIRED FOR MANUAL ADJUSTMENT DURING NORMAL PLANT OPERATION.
11. PLACE DETECTORS AT BOTTOM OF PIPE.
12. TYGON HOSE INSTALLED TO VENT PRESSURIZER DURING DRAINING AND FILLING.
13. DIGITAL PRESS. INDICATOR TO BE CONNECTED TO THIS LINE DOWNSTREAM OF THE SAMPLE HEAT EXCHANGER.
14. PIPING ARRANGEMENT MUST PROVIDE A WATER SEAL BETWEEN POWERED RELIEF VALVES AND PRESSURIZER.
15. ALL PORTIONS OF PIPE BETWEEN THE PRESSURIZER AND RELIEF VALVES, INCLUDING THE SUPPORTS, SHOULD BE INSULATED.
16. ORIFICE IS MINIMUM OF 7FT ABOVE CONNECTION TO RCP
17.
18.
19. 7FT LONG 6" SCHEDULE 40S STANDPIPE BOTH ENDS CAPPED
20. CONTAINMENT PENETRATION (X49) IS SCH. 80 CARBON STEEL PROVIDE TRANSITION WELD AT THE CONTAINMENT PENETRATION OUTSIDE CONTAINMENT. INSIDE CONTAINMENT CL151 EXTENDS TO AND INCLUDES VALVE *V55
21.
22. SPOOL PIECE PROVIDED TO FACILITATE REMOVAL OF SAFETY VALVE.
23. (S&W) DENOTES EQUIPMENT SUPPLIED BY S&W.
24. THERMAL SLEEVE ON SPRAY LINE IS TO BE PROVIDED BY S&W PER 2BVS-58, THERMAL SLEEVE INSIDE THE PRESSURIZER NOZZLE IS TO BE PROVIDED BY WESTINGHOUSE.
25.
26. PRESSURIZER SAFETY AND RELIEF VALVE DISCHARGE PIPING (6 & 12") FROM THE VALVES TO THE PRT IS SHOWN AS CLASS NNS, BUT WILL BE FABRICATED AND INSTALLED TO ASME III, CLASS 3 REQUIPEMENTS USING SA312 TP 316 MATERIAL. BRANCH CONNECTIONS 2 INCHES AND SMALLER WILL BE FABRICATED AND INSTALLED TO ANSI B31 REQUIREMENTS.

(CONT AT H-9)

NOTES: (CONT FROM K-7)

27.
28. FOR DESIGN DETAILS SEE 2BVS-920, SK-12241-P-22.
29. THE HEAD VENT SYSTEM UP TO THE FLANGE AFTER SOV201A/B IS SUPPLIED BY WESTINGHOUSE. (LINE NOS. 79, 278, 279, 280, 281)
30. FLEXIBLE HOSE PROVIDED BY 2BVS-756
31. TEST CONNECTION FLG. WITH 1/2" SWAGELOK CONNECTION.
32. BLIND SECTION OF SPECTACLE FLANGE REMOVED PER TER 10322. RING PORTION OF SPECTACLE FLANGE REMAINS.
33. THE SPRING HAS BEEN REMOVED FROM CHECK VALVE 2RCS-603. SEE ECP 03-0502 FOR DETAILS.

REFERENCE DWGS:

REACTOR COOLING PIPING	RM-75A
RESIDUAL HEAT REMOVAL PIPING	RM-76A
COMPONENT COOLING WATER PIPING	RM-77B,C
CHEM & VOL CONTROL PIPING	RM-79C
NUCLEAR EQUIP VENT & DRAIN PIPING	RM-89A
SAMPLE PIPING	RM-99A
PRIMARY GRADE WATER PIPING	RM-112A
GASEOUS NITROGEN SYSTEM	RM-71B

FINALIZED FLUID SYSTEM

NUCLEAR SAFETY RELATED

THE INFORMATION ON THIS DRAWING MAY NOT BE COPIED OR USED FOR OTHER THAN THE CONSTRUCTION, MAINTENANCE OR REPAIR OF THE PLANT FACILITY DESCRIBED IN THE TITLE BLOCK.

O.M. FIGURE 45D-17

APPROVED Richard Allan Gray — REGISTERED PROFESSIONAL ENGINEER NO. 27259-E, COMMONWEALTH OF PENNSYLVANIA

REVISIONS

30	MINOR UPDATE REMOVED SPECTACLE FLANGE REF. 98146Z. MWCRC	TMP 3-29-99 D/CHK:
31	ECP 03-0502 ECP 03-0525 INCORPORATION 2-RHR-00758-E03-0502-01 & 2-RHR-00758-E03-0525-01 CA 03-09411-162 CA 03-09411-112	DKK 11/11/03 D/CHK:

FENOC FIRSTENERGY NUCLEAR OPERATING COMPANY

STONE & WEBSTER ENGINEERING CORP. BOSTON, MASS.

SCALE NONE	DATE 2-12-72	ARCH. APP.	
	DRAWN T.H.S.T.	ELECT. APP.	
	CHECKED	MECH. APP.	
	INSPECTED RPB	STRUCT. APP.	

FLOW DIAGRAM
REACTOR COOLANT PIPING SH. 2

BEAVER VALLEY POWER STATION – UNIT NO. 2

O.F.E. No. 10080 | C.O. No. 6289 | AA | No. 10080-RM-75B

S&W DWG. NO. 12241-RM-75B-31

ENG: J. HASLAM DE: E.F. CHASE

14-NOV-2003 07:00 m:\u2\rm0750b0.e30

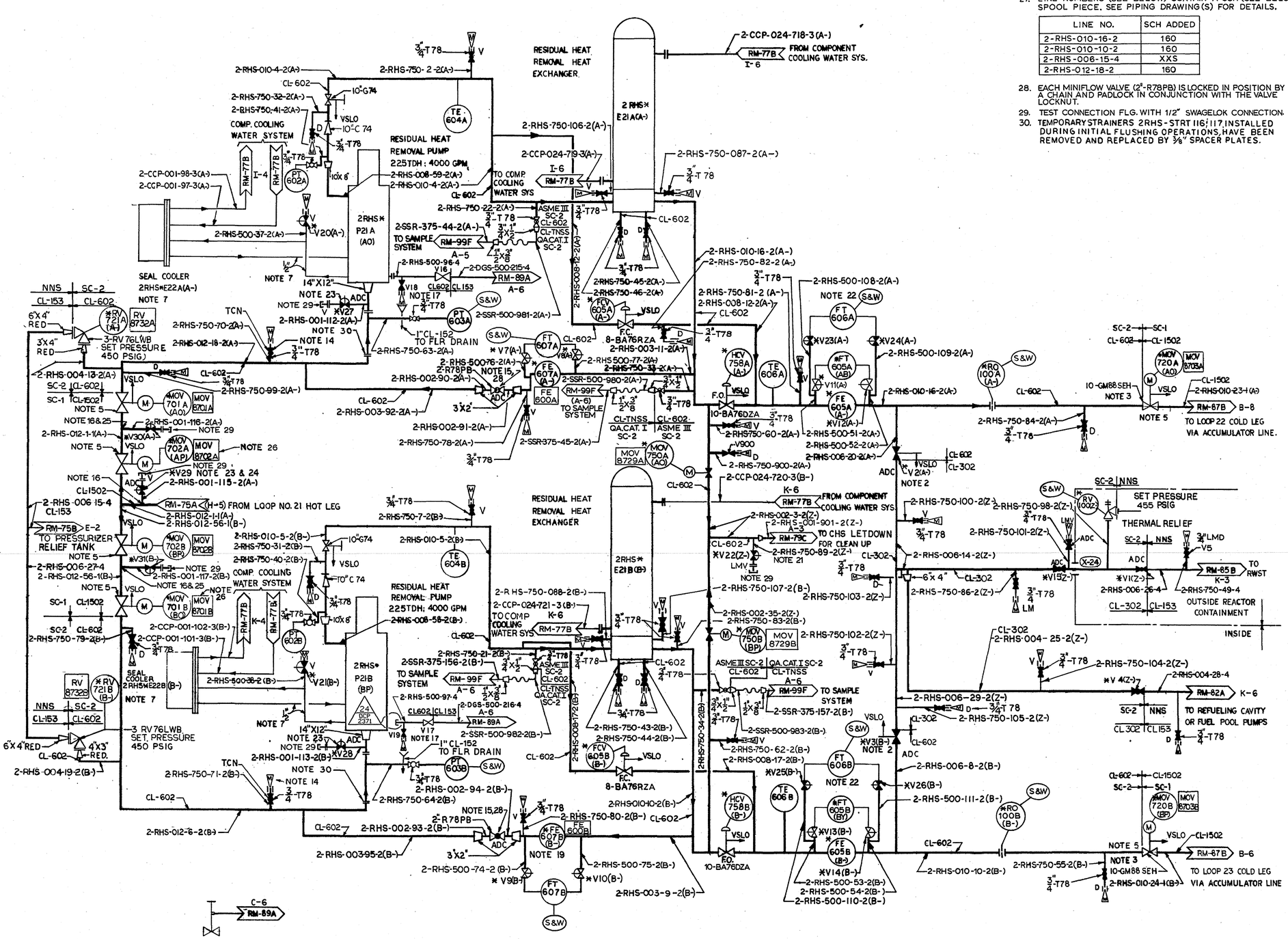

NOTES: CONT'D FROM (L-8)

26. VALVES ARE WIRED TO ENABLE MANUAL SWITCHING TO ALTERNATE CLASS 1E BUS. BUS SHOWN IS NORMALLY CONNECTED SUPPLY.
27. LINE NUMBERS (SEE BELOW) CONTAIN A SCH (SEE BELOW) SPOOL PIECE. SEE PIPING DRAWING(S) FOR DETAILS.

LINE NO.	SCH ADDED
2-RHS-010-16-2	160
2-RHS-010-10-2	160
2-RHS-006-15-4	XXS
2-RHS-012-18-2	160

28. EACH MINIFLOW VALVE (2"-R78PB) IS LOCKED IN POSITION BY A CHAIN AND PADLOCK IN CONJUNCTION WITH THE VALVE LOCKNUT.
29. TEST CONNECTION FLG. WITH 1/2" SWAGELOK CONNECTION.
30. TEMPORARY STRAINERS 2RHS-STRT 116 & 117 INSTALLED DURING INITIAL FLUSHING OPERATIONS, HAVE BEEN REMOVED AND REPLACED BY 3/8" SPACER PLATES.

S&W SUPPLIED VALVES

VALVE IDENTIFICATION	MARK NUMBER	PIPE SIZE	QUANTITY OF VALVES
V1,15	VOW030-S-2	6"	2
V2,3	VGW060-X-2-C	6"	2
V4	VOW030-S-2	4"	1
V5 NOTE 20	VOS060-W-4	3/4"	1
V7,8,9,10,11,12,13,14,20,21,23,24,25,26	VSS150-A-2	1/2"	14
V16,17,18,19	VGS060-V-4	1/2"	4
V27,28,29,30,31	VSS150-A-2	1"	5
V22	VSS150-A-2	3/4"	1
V900	VGS060-V-2	3/4"	1

NOTES:

1. THE CONTROL EQUIPMENT MARK NUMBERS SHALL INCLUDE A PREFIX WHICH IS IDENTICAL TO THE SYSTEM CODE PREFIX FOR THE ASSOCIATED EQUIPMENT OR PIPE LINE UNLESS OTHERWISE NOTED. EXAMPLE: 2 RHS*TE606A.
2. LOCATE ISOLATION VALVE CLOSE TO MAIN HDR.
3. LOCATE ISOLATION VALVE CLOSE TO ACCUMULATOR LINE.
4.
5. RCS PRESSURE INTERLOCK PREVENTS ISOL. VALVE OPENING ABOVE 425 PSIG: AUTO CLOSE ON PRESS. RISE TO 750 PSIG.
6. WESTINGHOUSE VALVE NUMBERING SYSTEM IS IN ACCORDANCE WITH VALVE REFERENCE GUIDE, EQUIPMENT SPEC. 677473.
7. SEAL COOLERS AND 1/2" PIPING INTEGRAL WITH PUMP.
8. ALL VALVES & INSTRUMENTS SUPPLIED BY WESTINGHOUSE. UNLESS OTHERWISE SHOWN.
10. WESTINGHOUSE CONTROL EQUIPMENT IDENTIFICATION NUMBERS ARE SHOWN IN SQUARES ADJACENT TO BALOONED MARK NUMBERS WHERE THEY ARE DIFFERENT.
11. * DENOTES NUCLEAR SAFETY RELATED ITEMS.
12. THIS SYSTEM WILL BE MAINTAINED TO CLEANNESS LEVEL 'B' IN ACCORDANCE WITH 2 BVM-62
13. (K) DENOTES 'CONTAINMENT PENETRATION NO
14. CONNECTIONS ON PUMP SUCTION LINES TO BE USED FOR ADDING PRESSURE INDICATORS TO MONITOR STRAINER PERFORMANCE (SEE NOTE 30 ALSO.)
15. ADJUST VALVE IN FIELD TO ESTABLISH MINIFLOW AND LOCK IN POSITION
16. 3/8" FLOW RESTRICTOR REQ'D PER 2BVS-939
17. PIPE TO TERMINATE 1" ABOVE FUNNEL TO ALLOW OBSERVATION OF PUMP SEAL LEAK OFF
18. METHOD OF CLOSURE FOR LOCAL VENTS, DRAINS, TEST CONNECTIONS & CHEMICAL CLEANING CONNECTIONS SHALL BE AS SHOWN. REFER TO 2 BVM-211 FOR ADDITIONAL DETAILS.
19. ORIFICE FLANGES WITH SOCKET WELDED TAPS ARE PROVIDED FOR ALL FE'S.
20. THE FOLLOWING SUBSTITUTION IS ACCEPTABLE VOS015-A-4 FOR VOS060-W-4
21. LOCATE LMV(*V22) AS CLOSE TO 2CHS*HCV142 AS POSSIBLE.
22. FT-606A & B ARE USED FOR RHS FLOW RATES < 2000 GPM WHEN THE RCS IS IN PARTIAL DRAIN AND ARE ISOLATED DURING NORMAL PLANT OPERATION.
23. 1" FLANGED CONNECTIONS TO BE USED FOR POSSIBLE CONNECTION OF PRIMING SYSTEM.
24. CONNECTION TO BE PLACED IN THE HORIZONTAL RUN OF PIPE AS CLOSE TO "T" AS POSSIBLE.
25. CONNECTIONS TO BE USED FOR ASME XI TESTING. LOCATE VALVE AND FLANGE SO THEY ARE ACCESSIBLE TO PLANT PERSONNEL.

CONT'D (H-1)

REFERENCE DRAWINGS:

REACTOR COOLANT PIPING	RM-75A&B
COMPONENT COOLING WATER PIPING	RM-77B
CHEMICAL & VOLUME CONT. PIPING	RM-79C
FUEL PIT COOLING & PURIF PIPING	RM-82A
CONTAINMENT DEPRESSURIZATION PIPING	RM-85B
SAFETY INJECTION PIPING	RM-87B
NUCLEAR EQUIPMENT VENT & DRAIN PIPING	RM-89A
SAMPLE PIPING	RM-99A

NUCLEAR SAFETY RELATED

FINALIZED FLUID SYSTEM

THE INFORMATION ON THIS DRAWING MAY NOT BE COPIED OR USED FOR OTHER THAN THE CONSTRUCTION, MAINTENANCE OR REPAIR OF THE PLANT FACILITY DESCRIBED IN THE TITLE BLOCK.

APPROVED Carl Otto Richards Jr. REGISTERED PROFESSIONAL ENGINEER NO. 16297-E COMMONWEALTH OF PENNSYLVANIA

FENOC FIRSTENERGY NUCLEAR OPERATING COMPANY

SCALE | DATE: 2/12/02 | DRAWN: EBH | D/CHK: DEK SWG | SUP: SWG FOR RDD 2-12-02

FLOW DIAGRAM
RESIDUAL HEAT REMOVAL PIPING

BEAVER VALLEY POWER STATION NO. 2

AA No. 10080-RM-76A

S&W DWG. NO. 12241-RM-76A-24

24	DCP 2371	INCORPORATED DCN NO. 2-RM-0076A-D2371-01

No. 10080-RM-77A

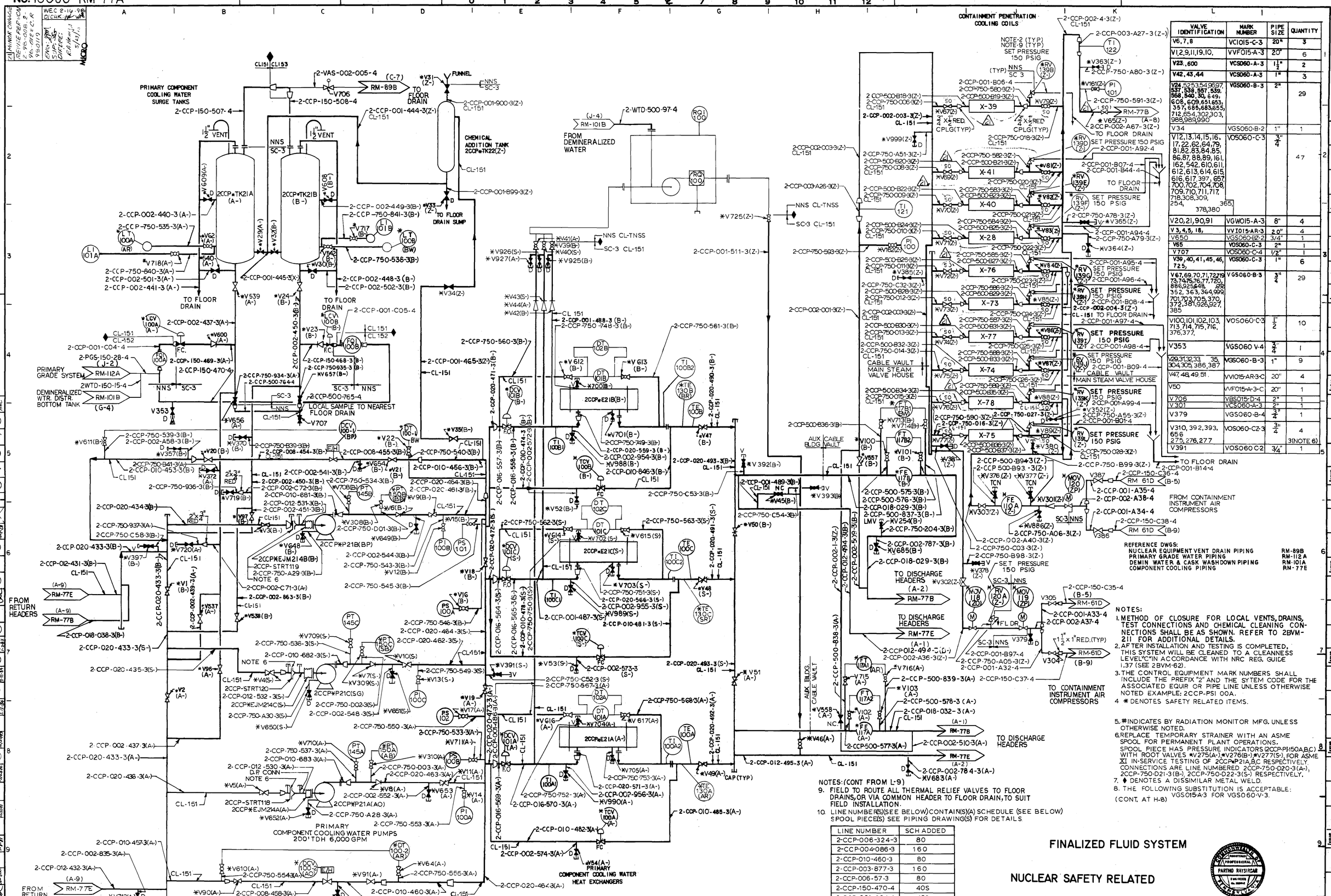

VALVE IDENTIFICATION	MARK NUMBER	PIPE SIZE	QUANTITY
V6,7,8	VC1015-C-3	20"	3
V1,2,9,11,19,10,	VVF015-A-3	20"	6
V23.,600	VCS060-A-3	1½"	2
V42,43,44	VCS060-A-3	1"	3
V24,525,3,54,9697, 537,538,557,539, 558,540,30,649, 608,609,651,653, 357,685,683,655, 712,654,302,303, 988,989,990	VGS060-B-3	2"	29
V34	VGS060-B-2	1"	1
V12,13,14,15,16, 17,22,62,64,79, 81,82,83,84,85, 86,87,88,89,161, 162,542,610,611, 612,613,614,615, 616,617,397,657, 700,702,704,708, 709,710,711,717, 718,308,309, 254, 378,380 365,	VOS060-C-3	3/4"	47
V20,21,90,91	VGW015-A-3	8"	4
V3,4,5,18,	VV1015-AR-3	2.0"	4
V650	VGS060-BZ-2	3/4"	1
V65	VOS060-C-3	2"	1
V707	VOS060-C-4	1/2"	1
V39,40,41,45,46, 725,	VOS060-C-3	1"	6
V67,69,70,71,72,719 73,74,75,76,77,720, 886,925,648, 352,363,364,999, 701,703,705,370, 372,381,926,927, 385	VGS060-B-3	3/4"	29
V100,101,102,103, 713,714,715,716, 376,377,	VOS060-C-3	1/2"	10
V353	VGS060 V-4	3/4"	1
V29,31,32,33, 35, 304,305,386,387	VGS060-B-3	1"	9
V47,48,49,51.	VV1015-AR-3-C	20"	4
V50	VVF015-A-3-C	20"	1
V706	VBS015-D-4	2"	1
V301	VCS060-A-3	2"	1
V379	VGS060-B-4	2½"	1
V310,392,393, 656 275,276,277	VOS060-CZ-3	3/4"	4 3(NOTE 6)
V391	VOS060 C-2	3/4"	1

REFERENCE DWGS:
NUCLEAR EQUIPMENT VENT DRAIN PIPING — RM-89B
PRIMARY GRADE WATER PIPING — RM-112A
DEMIN WATER & CASK WASHDOWN PIPING — RM-101A
COMPONENT COOLING PIPING — RM-77E

NOTES:
1. METHOD OF CLOSURE FOR LOCAL VENTS, DRAINS, TEST CONNECTIONS AND CHEMICAL CLEANING CONNECTIONS SHALL BE AS SHOWN. REFER TO 2BVM-211 FOR ADDITIONAL DETAILS.
2. AFTER INSTALLATION AND TESTING IS COMPLETED, THIS SYSTEM WILL BE CLEANED TO A CLEANNESS LEVEL "C" IN ACCORDANCE WITH NRC REG. GUIDE 1.37 (SEE 2BVM-62).
3. THE CONTROL EQUIPMENT MARK NUMBERS SHALL INCLUDE THE PREFIX "2" AND THE SYTEM CODE FOR THE ASSOCIATED EQUIP. OR PIPE LINE UNLESS OTHERWISE NOTED EXAMPLE; 2CCP-PSI 00A.
4. * DENOTES SAFETY RELATED ITEMS.
5. # INDICATES BY RADIATION MONITOR MFG. UNLESS OTHERWISE NOTED.
6. REPLACE TEMPORARY STRAINER WITH AN ASME SPOOL FOR PERMANENT PLANT OPERATIONS. SPOOL PIECE HAS PRESSURE INDICATORS (2CCP-PI150A,B,C) WITH ROOT VALVES *V275(A-),*V276(B-),*V277(S-), FOR ASME XI IN-SERVICE TESTING OF 2CCP*P21A,B,C RESPECTIVELY. CONNECTIONS ARE LINE NUMBERED 2CCP-750-D20-3(A-), 2CCP-750-D21-3(B-), 2CCP-750-D22-3(S-) RESPECTIVELY.
7. ♦ DENOTES A DISSIMILAR METAL WELD.
8. THE FOLLOWING SUBSTITUTION IS ACCEPTABLE: VGS015-A-3 FOR VGS060-V-3.

(CONT. AT H-8)

NOTES: (CONT FROM L-9)
9. FIELD TO ROUTE ALL THERMAL RELIEF VALVES TO FLOOR DRAINS, OR VIA COMMON HEADER TO FLOOR DRAIN, TO SUIT FIELD INSTALLATION.
10. LINE NUMBER(S) (SEE BELOW) CONTAIN(S) (A) SCHEDULE (SEE BELOW) SPOOL PIECE(S) SEE PIPING DRAWING(S) FOR DETAILS.

LINE NUMBER	SCH ADDED
2-CCP-006-324-3	80
2-CCP-004-086-3	160
2-CCP-010-460-3	80
2-CCP-003-877-3	160
2-CCP-006-57-3	80
2-CCP-150-470-4	40S
2-CCP-001-C04-4	40S

FINALIZED FLUID SYSTEM

NUCLEAR SAFETY RELATED

THE INFORMATION ON THIS DRAWING MAY NOT BE COPIED OR USED FOR OTHER THAN THE CONSTRUCTION, MAINTENANCE OR REPAIR OF THE PLANT FACILITY DESCRIBED IN THE TITLE BLOCK.

PARTHO RAYSIRCAR — REGISTERED PROFESSIONAL ENGINEER

APPROVED _____ REGISTERED PROFESSIONAL ENGINEER NO. 28241-E COMMONWEALTH OF PENNSYLVANIA

REVISIONS

ISSUE	DESCRIPTION	CHKD	CORR	APPD	DATE
20	(F,H-3) ADDED CLASS BREAKS PER E&DCR NO. 2PQ-5503				
19	SEE RECORD OF DRAWING CHANGES 12241-BCM-77A-19				
18	FOR RECORD OF DRAWING CHANGES SEE 12241-BCM-77A-18				
17	SEE RECORD OF DRAWING CHANGES 12241-BCM-77A-17				
16	SEE RECORD OF DRAWING CHANGES 12241-BCM-77A-16				
15	SEE RECORD OF DRAWING CHANGES 12241-BCM-77A-15				
14	SEE RECORD OF DRAWING CHANGES SEE 12241-BCM-77A-14				
13	SEE RECORD OF DRAWING CHANGES 12241-BCM-77A-13				
12	(F-4,6,8) DT101A,B & C WERE DIC101A,B & C E&DCR 2PS-4315 H-9, REVISED NOTE 10 PER E&DCR 2PS-2582A				
11	FOR RECORD OF DRAWING CHANGES SEE 12241-BCM-77A-11				
10	FOR RECORD OF DRAWING CHANGES SEE 12241-BCM-77A-10				
9	SEE RECORD OF DWG CHANGES 12241-BCM-77A-9				
8	SEE RECORD OF DWG CHANGE 12241-BCM-77A-8				
7	SEE RECORD OF DWG CHANGES 12241-BCM-77A-7				
6	SEE RECORD OF DWG CHANGES 12241-BCM-77A-6				
5	SEE RECORD OF DWG CHANGES 12241-BCM-77A-5 (2 SHEETS)				
4	SEE RECORD OF DRAWING CHANGES 12241-BCM-77A-4				
3	GENERAL REVISION				
2	PA SR DWG. NO'S. CHANGED WAS RM-22A				
1	ORIGINAL ISSUE				

STONE & WEBSTER ENGINEERING CORP. BOSTON, MASS.

DUQUESNE LIGHT COMPANY
ENGINEERING & CONSTRUCTION PITTSBURGH, PA.

SCALE NONE | DATE 2-14-72 | DRAWN R.D.S. | CHECKED | INSPECTED RPB | ARCH. APP. | ELECT. APP. | MECH. APP. | STRUCT. APP.

FLOW DIAGRAM
COMPONENT COOLING PIPING - SH. 1
BEAVER VALLEY POWER STATION No. 2
O.F.E. No. 10080 | C.O. No. 6289 | AA | No. 10080-RM-77A

S&W DWG. NO. 12241-RM-77A-21

ENG: J. HASLAM
DE: E. CHASE

No. 10080-RM-77B

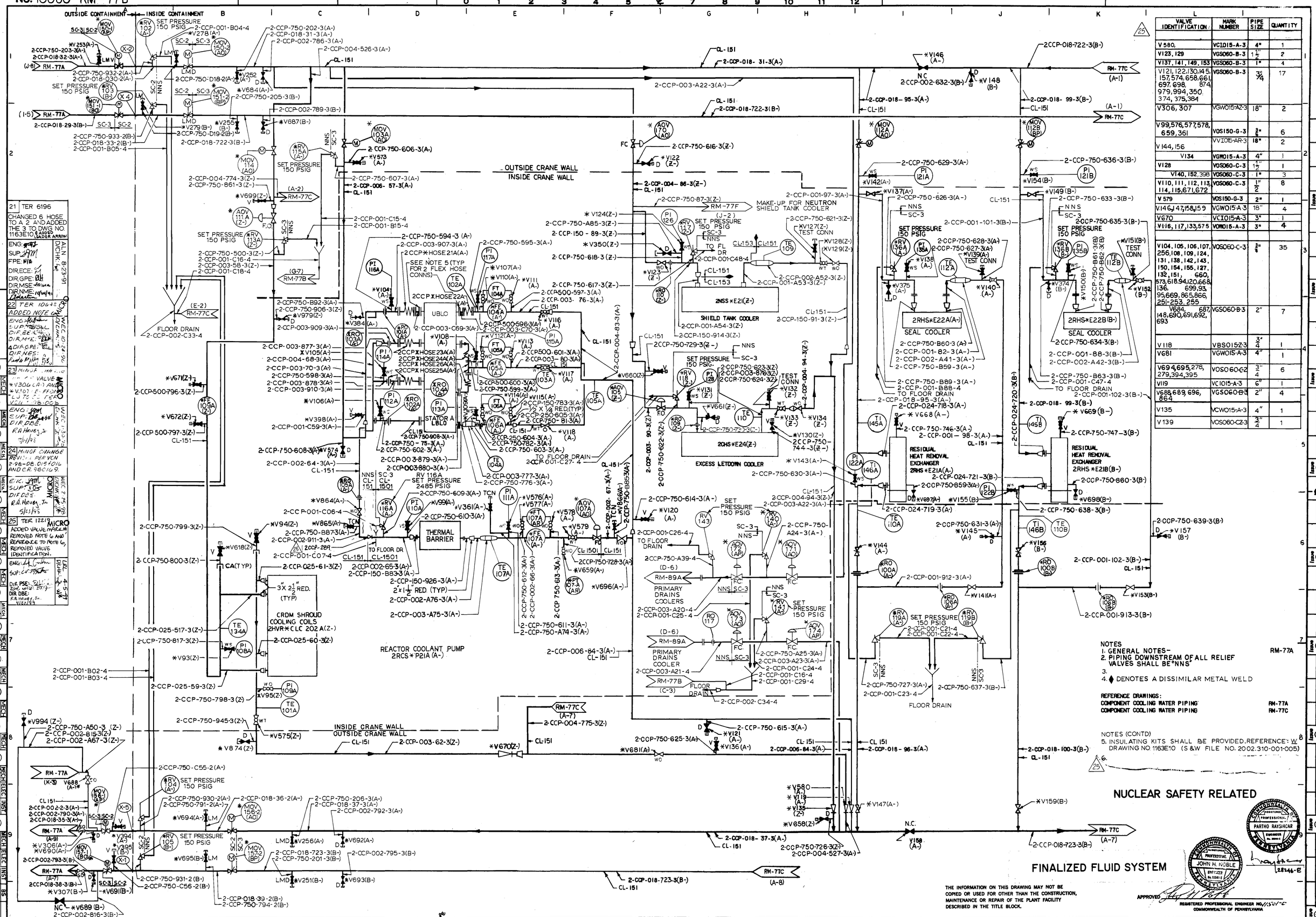

VALVE IDENTIFICATION	MARK NUMBER	PIPE SIZE	QUANTITY
V580,	VC1015-A-3	4"	1
V123, 129	VGS060-B-3	1½"	2
V137, 141, 149, 153	VGS060-B-3	1"	4
V121, 122, 130, 145, 157, 574, 658, 661, 697, 698, 874, 979, 994, 350, 374, 375, 384	VGS060-B-3	¾"	17
V306, 307	VGW015-AZ-3	18"	2
V99, 576, 577, 578, 659, 361	VOS150-G-3	¾"	6
V144, 156	VV1015-AR-3	18"	2
V134	VGW015-A-3	4"	1
V128	VOS060-C-3	1½"	1
V140, 152, 398	VOS060-C-3	1"	3
V110, 111, 112, 113, 114, 115, 671, 672	VOS060-C-3	½"	8
V579	VOS150-G-3	2"	1
V146, 147, 158, 159	VGW015-A-3	18"	4
V670	VC1015-A-3	3"	1
V116, 117, 133, 575	VOW015-A-3	3"	4
V104, 105, 106, 107, 256, 108, 109, 124, 131, 138, 142, 143, 150, 154, 155, 127, 132, 151, 660, 673, 618, 94, 120, 668, 136, 699, 93, 95, 669, 865, 866, 251-253, 255	VOS060-C-3	¾"	35
V684, 687, 148, 690, 691, 692, 693	VGS060-B-3	2"	7
V118	VBS015Z-3	¾"	1
V681	VGW015-A-3	4"	1
V694, 695, 278, 279, 394, 395	VOS060-C-2	¾"	6
V119	VC1015-A-3	6"	1
V688, 689, 696, 864	VGS060-B-3	2"	4
V135	VCW015-A-3	4"	1
V139	VOS060-CZ-3	¾"	1

NOTES
1. GENERAL NOTES- RM-77A
2. PIPING DOWNSTREAM OF ALL RELIEF VALVES SHALL BE *NNS
3.
4. ◆ DENOTES A DISSIMILAR METAL WELD

REFERENCE DRAWINGS:
COMPONENT COOLING WATER PIPING RM-77A
COMPONENT COOLING WATER PIPING RM-77C

NOTES (CONTD)
5. INSULATING KITS SHALL BE PROVIDED. REFERENCE: W DRAWING NO. 1163E10 (S&W FILE NO. 2002.310-001-005)
6.

21 TER 6196 — CHANGED 6 HOSE TO A 2. AND ADDED THE 3 TO DWG NO. 1163E10 & ADDED LEADER ARROW

22 TER 10648 — ADDED NOTE

23 MINOR CHANGE

24 MINOR CHANGE REVISION PER VCN 2-98-DB-015-1016 AND C.R. 98C16-9.

25 TER 12219 MICRO — ADDED VALVE, MARK #, REMOVED NOTE 6 AND REFERENCE TO NOTE 6, REMOVED VALVE IDENTIFICATION.

THE INFORMATION ON THIS DRAWING MAY NOT BE COPIED OR USED FOR OTHER THAN THE CONSTRUCTION, MAINTENANCE OR REPAIR OF THE PLANT FACILITY DESCRIBED IN THE TITLE BLOCK.

REVISIONS	DESCRIPTION
20	SEE RECORD OF DRAWING CHANGES 12241-BCM-77B-20
19	SEE RECORD OF DRAWING CHANGES 12241-BCM-77B-19
18	SEE RECORD OF DRAWING CHANGES 12241-BCM-77B-18
17	SEE RECORD OF DRAWING CHANGES 12241-BCM-77B-17
16	SEE RECORD OF DRAWING CHANGES 12241-BCM-77B-16
15	SEE RECORD OF DRAWING CHANGES 12241-BCM-77B-15
14	SEE RECORD OF DRAWING CHANGES 12241-BCM-77B-14
13	SEE RECORD OF DRAWING CHANGES 12241-BCM-77B-13
12	SEE RECORD OF DRAWING CHANGES 12241-BCM-77B-12
11	SEE RECORD OF DWG CHANGES 12241-BCM-77B-11
10	SEE RECORD OF DWG CHANGES 12241-BCM-77B-10
9	SEE RECORD OF DWG CHANGE 12241-BCM-77B-9
8	SEE RECORD OF DWG CHANGE 12241-BCM-77B-8
7	SEE RECORD OF DRAWING CHANGE 12241-BCM-77B-7
6	SEE RECORD OF DWG CHANGE 12241-BCM-77B-6 SH-1
5	SEE RECORD OF DWG CHANGES 12241-BCM-77B-5
4	SEE RECORD OF DWG CHANGES 12241-BCM-77B-4
3	GENERAL REVISION
2	PASR DWG. NO'S. CHANGED WAS RM-22B-1
1	ORIGINAL ISSUE

STONE & WEBSTER ENGINEERING CORP. BOSTON, MASS.

DUQUESNE LIGHT COMPANY
ENGINEERING & CONSTRUCTION PITTSBURGH, PA.

SCALE NONE | DATE 11-26-71 | DRAWN R.D.S. | CHECKED | INSPECTED RPB | ARCH. APP. | ELECT. APP. | MECH. APP. | STRUCT. APP.

FLOW DIAGRAM
COMPONENT COOLING PIPING -SH. 2
BEAVER VALLEY POWER STATION No. 2

O.F.E. No. 10080 | C.O. No. 12219 | AA | No. 10080-RM-77B

S&W DWG. NO. 12241-RM-77B-25

ENGR. J.R. HASLAM
D.E. E.F. CHASE

APPROVED — REGISTERED PROFESSIONAL ENGINEER NO. 11500-E COMMONWEALTH OF PENNSYLVANIA

No. 10080-RM-77C

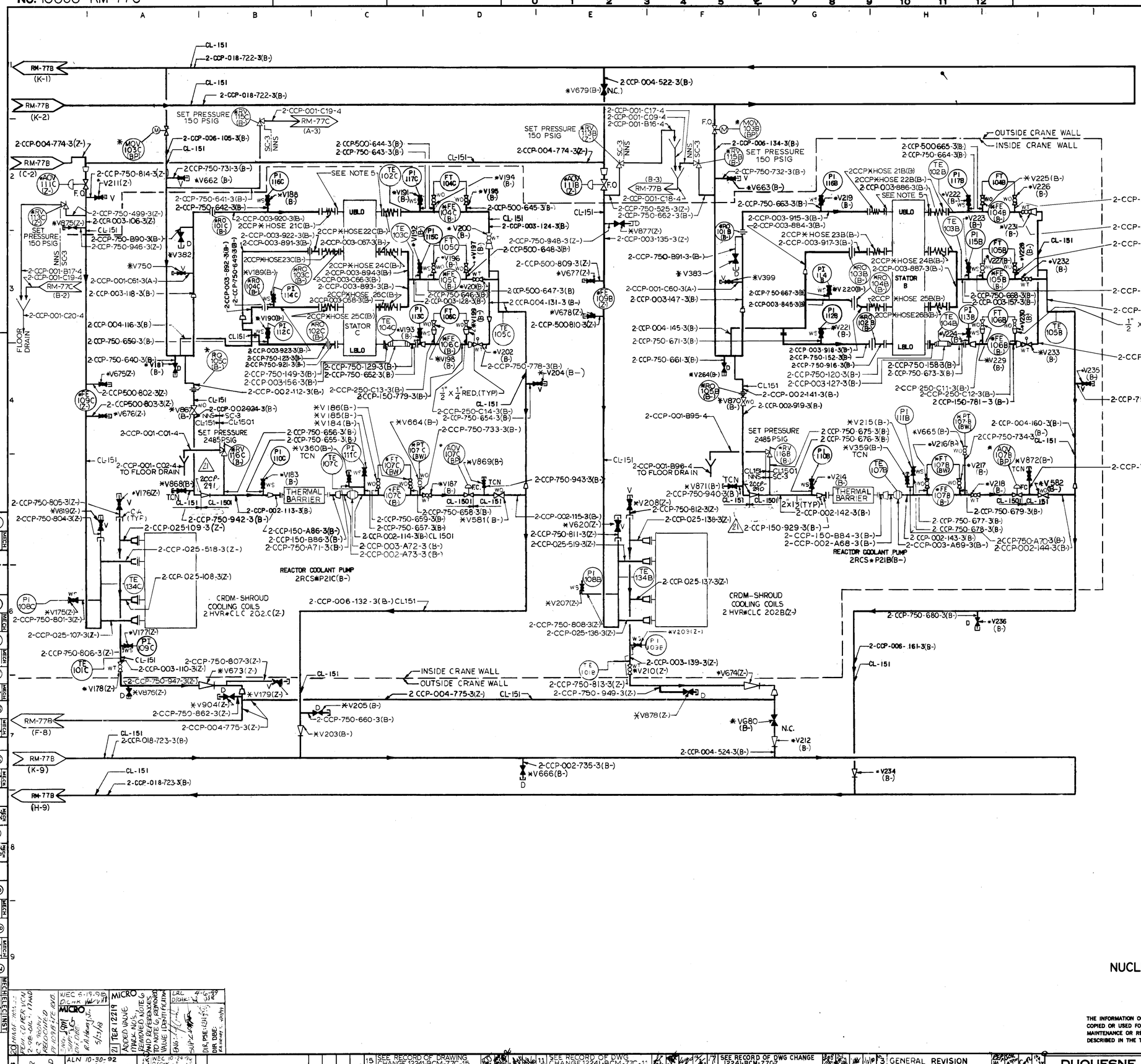
RM-77B (K-1)
RM-77B (K-2)
RM-77B (F-8)
RM-77B (K-9)
RM-77B (H-9)
RM-77C (A-3)
RM-77C (B-2)
SET PRESSURE 150 PSIG
SET PRESSURE 2485 PSIG
REACTOR COOLANT PUMP 2RCS*P21C(B-)
REACTOR COOLANT PUMP 2RCS*P21B(B-)
CRDM-SHROUD COOLING COILS 2HVR*CLC 202C(Z-)
CRDM-SHROUD COOLING COILS 2HVR*CLC 202B(Z-)
THERMAL BARRIER
STATOR C
STATOR B
UBLO
LBLO
FLOOR DRAIN
2-CCP-002-735-3(B-)
*V666(B-)
*V234 (B-)
OUTSIDE CRANE WALL
INSIDE CRANE WALL
2-CCP-004-775-3(Z-)
2-CCP-018-723-3(B-)
2-CCP-004-524-3(B-)
*V212 (B-)
N.C.
*V680 (B-)
*V203(B-)
2-CCP-750-660-3(B-)
*V205 (B-)
2-CCP-004-522-3(B-)
*V679(B-)
2-CCP-006-132-3(B-) CL151
2-CCP-006-161-3(B-)
2-CCP-750-680-3(B-)
*V236 (B-)
2-CCP-500-666-3(B-)
2-CCP-003-153-3(B-)
2-CCP-500-670-3(B-)
2-CCP-500-669-3(B-)
2-CCP-004-160-3(B-)
1/2" X 1/4" RED.(TYP)
2-CCP-750-780-3(B-)
2-CCP-750-898-3(B-)
2-CCP-750-941-3(B-)
2-CCP-750-943-3(B-)
2-CCP-750-733-3(B-)
2-CCP-750-942-3(B-)
2-CCP-025-109-3(Z-)
2-CCP-025-518-3(Z-)
2-CCP-025-108-3(Z-)
2-CCP-025-107-3(Z-)
2-CCP-750-806-3(Z-)
2-CCP-750-807-3(Z-)
2-CCP-750-947-3(Z-)
2-CCP-750-862-3(Z-)
2-CCP-004-775-3(Z-)
2-CCP-750-813-3(Z-)
2-CCP-750-949-3(Z-)
2-CCP-003-139-3(Z-)
2-CCP-750-878-3(B-)
2-CCP-750-677-3(B-)
2-CCP-750-679-3(B-)
2-CCP-750-678-3(B-)
2-CCP-750-677-3(B-)
2-CCP-750-A703(B-)
2-CCP-002-144-3(B-)
2-CCP-002-143-3(B-)
2-CCP-003-A69-3(B-)
2-CCP-002-A68-3(B-)
2-CCP-150-929-3(B-)
2-CCP-750-884-3(B-)
2-CCP-002-142-3(B-)
2-CCP-750-812-3(Z-)
2-CCP-025-138-3(Z-)
2-CCP-025-137-3(Z-)
2-CCP-750-808-3(Z-)
2-CCP-025-136-3(Z-)
2-CCP-750-811-3(Z-)
2-CCP-025-519-3(Z-)
2-CCP-750-A71-3(B-)
2-CCP-002-A73-3(B-)
2-CCP-003-A72-3(B-)
2-CCP-150-A86-3(B-)
2-CCP-150-B86-3(B-)
2-CCP-002-114-3(B-) CL 1501
2-CCP-750-659-3(B-)
2-CCP-750-657-3(B-)
2-CCP-750-658-3(B-)
*V581(B-)
2-CCP-002-113-3(B-)
2-CCP-002-115-3(B-)
2-CCP-750-943-3(B-)
2-CCP-750-656-3(B-)
2-CCP-750-655-3(B-)
*V360(B-) TCN
*V664(B-)
*V869(B-)
*V868(B-)
*V871(B-)
2-CCP-750-940-3(B-)
2-CCP-002-919-3(B-)
2-CCP-002-141-3(B-)
2-CCP-750-158-3(B-)
2-CCP-750-673-3(B-)
2-CCP-250-C11-3(B-)
2-CCP-250-C12-3(B-)
2-CCP-750-781-3(B-)
2-CCP-750-675-3(B-)
2-CCP-750-676-3(B-)
*V359(B-) TCN
*V665(B-)
*V216(B-)
*V872(B-)
*V582 (B-)
2-CCP-004-160-3(B-)
2-CCP-750-734-3(B-)
2-CCP-001-B96-4 TO FLOOR DRAIN
2-CCP-001-B95-4
2-CCP-001-C02-4 TO FLOOR DRAIN
2-CCP-750-805-3(Z-)
2-CCP-750-804-3(Z-)
*V619(Z-)
*V176(Z-)
*V175(Z-)
2-CCP-750-801-3(Z-)
*V177(Z-)
*V178(Z-)
*V876(Z-)
*V179(Z-)
*V904(Z-)
*V673(Z-)
*V674(Z-)
*V878(Z-)
*V207(Z-)
*V209(Z-)
*V210(Z-)
*V208(Z-)
*V187(B-)
*V183(B-)
*V186(B-)
*V185(B-)
*V184(B-)
*V664(B-)
*V663(B-)
*V662(B-)
*V188(B-)
*V194(B-)
*V195(B-)
*V196(B-)
*V197(B-)
*V198(B-)
*V202(B-)
*V204(B-)
*V191(B-)
*V192(B-)
*V193(B-)
*V190(B-)
*V189(B-)
*V200(B-)
*V220(B-)
*V221(B-)
*V264(B-)
*V219(B-)
*V225(B-)
*V226(B-)
*V223(B-)
*V231(B-)
*V227(B-)
*V228(B-)
*V232(B-)
*V233(B-)
*V229(B-)
*V230(B-)
*V224(B-)
*V235(B-)
*V215(B-)
*V214(B-)
*V217(B-)
*V218(B-)
*V877(Z-)
*V383
*V399
*V382
*V750
*V875(Z-)
*V677(Z-)
*V678(Z-)
*V676(Z-)
*V675(Z-)
*V661(B-)
*V671(B-)
*V645(B-)
*V646(B-)
*V647(B-)
*V648(B-)
*V649(B-)
*V650(B-)
*V651(B-)
*V652(B-)
*V653(B-)
*V654(B-)
*V655(B-)
*V656(B-)
*V657(B-)
*V658(B-)
*V659(B-)
*V660(B-)
*V661(B-)
*V662(B-)
*V663(B-)
*V664(B-)
*V665(B-)
*V666(B-)
*V667(B-)
*V668(B-)
*V669(B-)
*V670(B-)
*V671(B-)
*V672(B-)
*V673(B-)
*V674(B-)
*V675(B-)
*V676(B-)
*V677(B-)
*V678(B-)
*V679(B-)
*V680(B-)
*V681(B-)
*V682(B-)
*V683(B-)
*V684(B-)

No.10080-RM-77E

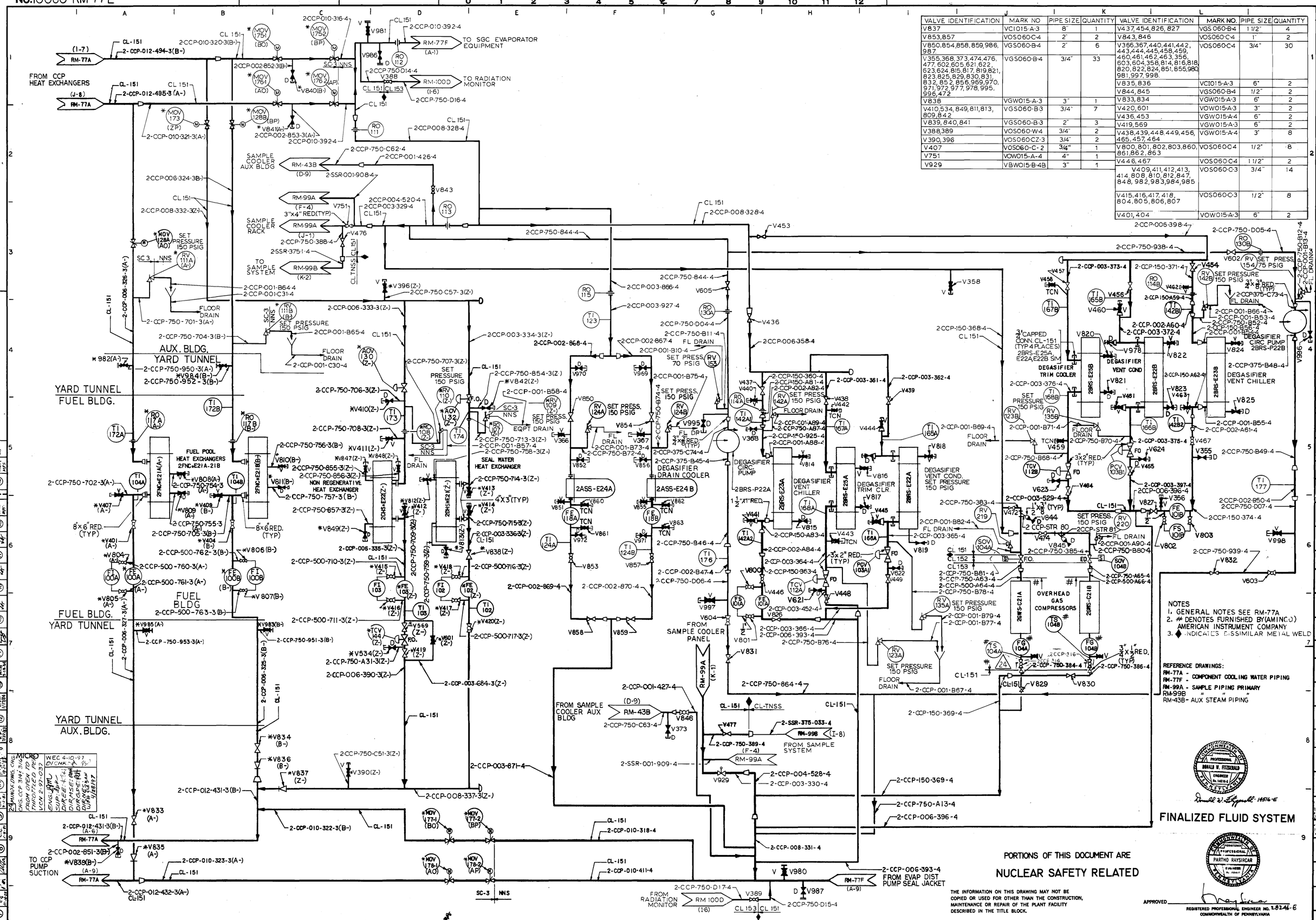

VALVE IDENTIFICATION	MARK NO	PIPE SIZE	QUANTITY
V837	VC1015-A-3	8"	1
V853,857	VOS060-C-4	2"	2
V850,854,858,859,986,987	VGS060-B-4	2"	6
V355,368,373,474,476,477,602,605,621,622,623,624,815,817,819,821,823,825,829,830,831,832,852,856,969,970,971,972,977,978,995,996,472	VGS060-B-4	3/4"	33
V838	VGW015-A-3	3"	1
V410,534,849,811,813,809,842	VGS060-B-3	3/4"	7
V839,840,841	VGS060-B-3	2"	3
V388,389	VOS060-W-4	3/4"	2
V390,396	VOS060-CZ-3	3/4"	2
V407	VOS060-C-2	3/4"	1
V751	VOW015-A-4	4"	1
V929	VBW015-B-4B	3"	1

VALVE IDENTIFICATION	MARK NO.	PIPE SIZE	QUANTITY
V437,454,826,827	VGS060-B-4	1 1/2"	4
V843,846	VOS060-C-4	1"	2
V366,367,440,441,442,443,444,445,458,459,460,461,462,463,356,603,604,358,814,816,818,820,822,824,851,855,980,981,997,998	VOS060-C-4	3/4"	30
V835,836	VC1015-A-3	6"	2
V844,845	VGS060-B-4	1/2"	2
V833,834	VGW015-A-3	6"	2
V420,601	VOW015-A-3	3"	2
V436,453	VGW015-A-4	6"	2
V419,569	VGW015-A-3	6"	2
V438,439,448,449,456,465,457,464	VGW015-A-4	3"	8
V800,801,802,803,860,861,862,863	VOS060-C-4	1/2"	8
V446,467	VOS060-C-4	1 1/2"	2
V409,411,412,413,414,808,810,812,847,848,982,983,984,985	VOS060-C-3	3/4"	14
V415,416,417,418,804,805,806,807	VOS060-C-3	1/2"	8
V401,404	VOW015-A-3	6"	2

NOTES
1. GENERAL NOTES SEE RM-77A
2. # DENOTES FURNISHED BY(AMINCO) AMERICAN INSTRUMENT COMPANY
3. ♦ INDICATES DISSIMILAR METAL WELD

REFERENCE DRAWINGS:
RM-77A - COMPONENT COOLING WATER PIPING
RM-77F - " " "
RM-99A - SAMPLE PIPING PRIMARY
RM-99B " " "
RM-43B - AUX STEAM PIPING

FINALIZED FLUID SYSTEM

PORTIONS OF THIS DOCUMENT ARE
NUCLEAR SAFETY RELATED

THE INFORMATION ON THIS DRAWING MAY NOT BE COPIED OR USED FOR OTHER THAN THE CONSTRUCTION, MAINTENANCE OR REPAIR OF THE PLANT FACILITY DESCRIBED IN THE TITLE BLOCK.

APPROVED _____
REGISTERED PROFESSIONAL ENGINEER NO. 18246-E
COMMONWEALTH OF PENNSYLVANIA

REVISIONS

REV	DESCRIPTION
20	INCORPORATED TER 303
21	INC DCP 1099 & INTERIM ISSUE 19A2
22	INCORP. TER-536
23	DCP-1511 CO 1-8-96 INCORPORATED INTERIM ISSUE 22A2
24	SEE RECORD OF DRAWING CHANGES 12241-BCM-77E-15
25	SEE RECORD OF DRAWING CHANGE 12241-BCM-77E-14
26	SEE RECORD OF DRAWING CHANGES 12241-BCM-77E-13
27	SEE RECORD OF DRAWING CHNGS 12241-BCM-77E-12
28	SEE RECORD OF DRAWING CHANGES 12241-BCM-77E-11
29	SEE RECORD OF DWG CHANGE-12241-BCM-77E-10
30	SEE RECORD OF DWG CHANGE 12241 -BCM-77E-9
31	SEE RECORD OF DWG CHANGE 12241-BCM-77E-8
32	SEE RECORD OF DRAWING CHANGES 12241-BCM-77E-7
33	SEE RECORD OF DWG CHANGES 12241-BCM-77E-6
34	SEE RECORD OF DWG CHANGES 12241-BCM-77E-5
35	SEE RECORD OF DRAWING CHANGES 12241-BCM-77E-4
1	GENERAL REVISION
2	PSAR DWG NO'S CHANGED WAS RM-22E

ORIGINAL ISSUE

STONE & WEBSTER ENGINEERING CORP. BOSTON, MASS.

DUQUESNE LIGHT COMPANY
ENGINEERING & CONSTRUCTION PITTSBURGH, PA.

SCALE NONE | DATE 2-10-72 | DRAWN R. SMYTHE | CHECKED | INSPECTED RPB | ARCH. APP. | ELECT. APP. | MECH. APP. | STRUCT. APP.

FLOW DIAGRAM
COMPONENT COOLING PIPING-SH. 5
BEAVER VALLEY POWER STATION UNIT NO.2

O.F.E. No.10080
C.O. No. 6289

AA No.10080-RM-77E

S&W DWG. NO.12241-RM-77E-24

No. 10080-RM-77F

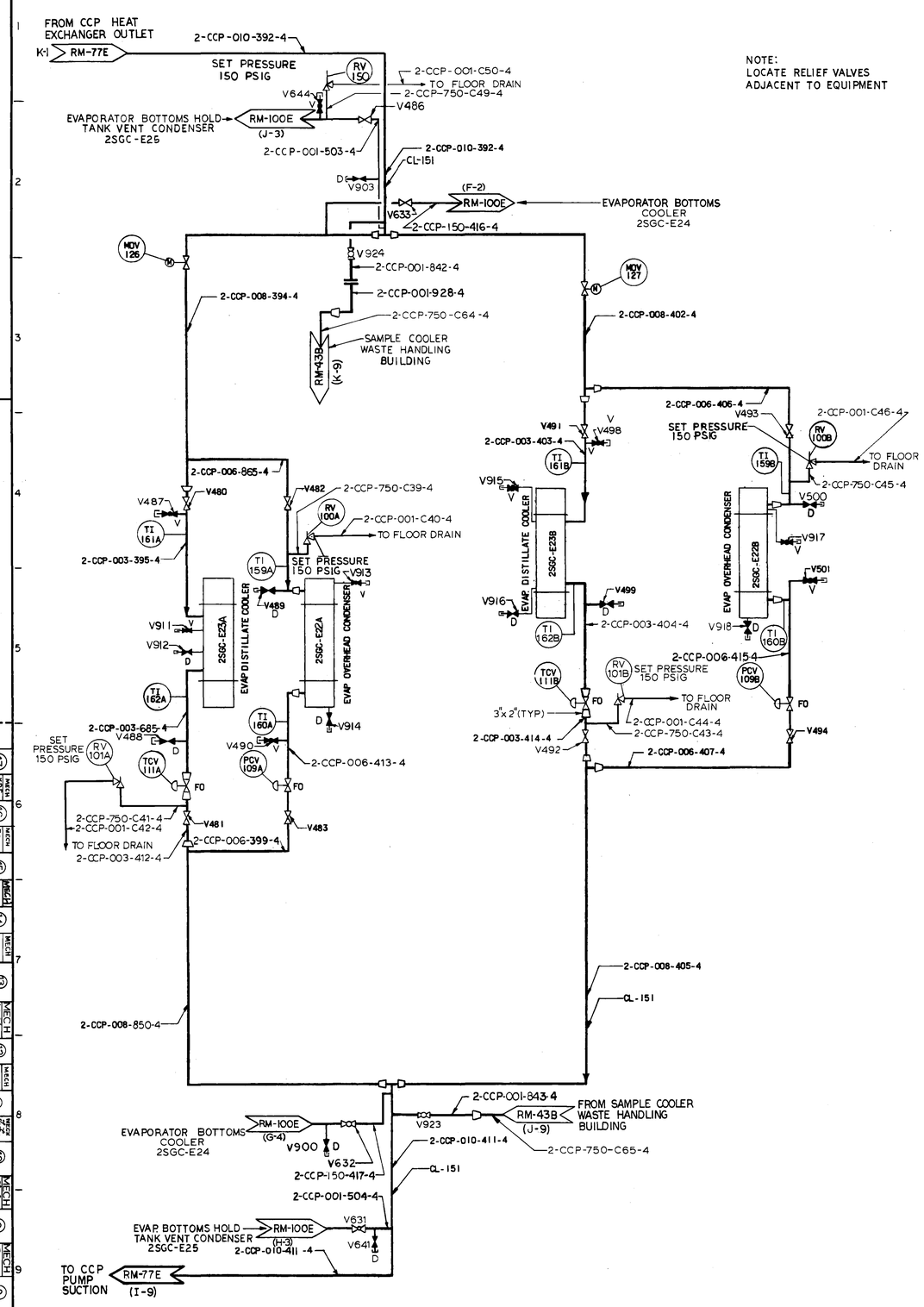

NOTE:
LOCATE RELIEF VALVES ADJACENT TO EQUIPMENT

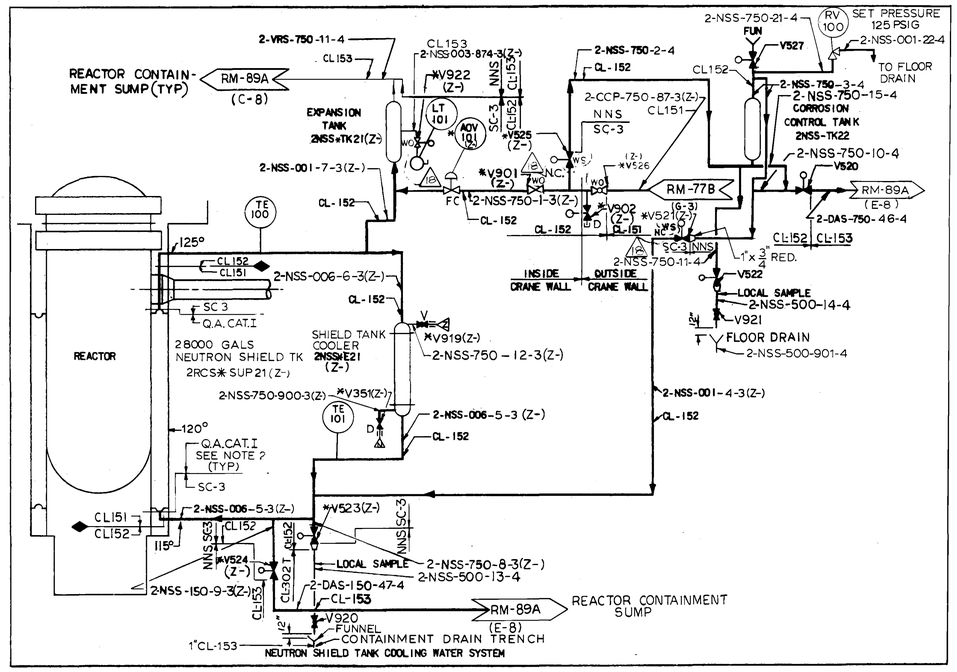

VALVE IDENTIFICATION	MARK NUMBER	PIPE SIZE	QUANTITY
V524	VBS015-Y-3	1 1/2"	1
V521	VBS015-Y-3	1"	1
V523,525,902	VBS015-Y-3	3/4"	3
V487, 490, 498, 501, 644, 911, 913, 915, 917	VOS060-C-4	3/4"	9
V482, 483, 493, 494	VGW015-A-4	6"	4
V486	VGS060-B-4	1"	1
V631, 923, 924	VOS060-C-4	1"	3
V922	VBW015-Y-3	3"	1
V480, 481, 491, 492	VGW015-A-4	3"	4
V488, 489, 499, 500, 641, 900, 903, 912, 914, 916, 918	VGS060-B-4	3/4"	11
V901 RM-77A (NOTE-8) V351	VGS060-V-3	3/4"	2
V920	VOS600-S-4	1 1/2"	1
V632	VOS060-C-4	1 1/2"	1
V633	VGS060-B-4	1 1/2"	1
V526, 919	VOS150-X-3	3/4"	2
V921	VOS060-W-4	1/2"	1
V520, 522, 527	VBS015-D-4	3/4"	3

NOTES:
1. GENERAL NOTES RM-77A
2. FABRICATED TO ASME XIII, DIVISION I GUIDELINES NO STAMP REQUIRED. SEE SPEC 2BVS-9 FOR DESIGN DETAILS.
3. LINE NUMBER(S) (SEE BELOW) CONTAIN(S) (A) SCH (SEE BELOW) SPOOL PIECE(S). SEE ISOMETRIC (S) FOR DETAILS.

LINE NO.	SCH ADDED
2-NSS-500-901-4	40S

REFERENCE DRAWINGS:

COMPONENT COOLING WATER PIPING	RM-77B
COMPONENT COOLING WATER PIPING	RM-77E
NUCLEAR EQUIPMENT VENT AND DRAIN PIPING	RM-89A
STEAM GENERATOR BLOWDOWN PIPING	RM-100A
" " " "	RM-100C
" " " "	RM-100E
AUXILIARY STEAM PIPING	RM-43B

PORTIONS OF THIS DOCUMENT ARE
NUCLEAR SAFETY RELATED

FINALIZED FLUID SYSTEM

THE INFORMATION ON THIS DRAWING MAY NOT BE COPIED OR USED FOR OTHER THAN THE CONSTRUCTION, MAINTENANCE OR REPAIR OF THE PLANT FACILITY DESCRIBED IN THE TITLE BLOCK.

COMMONWEALTH OF PENNSYLVANIA REGISTERED PROFESSIONAL ENGINEER PARTHO RAYSIRCAR

APPROVED _____
REGISTERED PROFESSIONAL ENGINEER NO. 28246-E
COMMONWEALTH OF PENNSYLVANIA

REVISIONS

ISSUE	DESCRIPTION	CHKD	CORR	APPD	DATE
18	MINOR CHANGE REVISED PER VCN 2-98-01L017 A.C. C.A. 9861-9 ENG: JDW SUP: JLD DIR/DEL: R.A. Hovey Jr. 5/16/79	WEC	5-19-98	DICHK	
17	(B-3) DELETED RO116 PER E&DCR D-5155-S02				
16	SEE RECORD OF DRAWING CHANGES 12241-BCM-77F-16				
15	SEE RECORD OF DRAWING CHANGES 12241-BCM-77F-15				
14	SEE RECORD OF DRAWING CHANGES 12241-BCM-77F-14				
13	SEE RECORD OF DRAWING CHANGES 12241-BCM-77F-13				
12	SEE RECORD OF DRAWING CHANGES 12241-BCM-77F-12				
11	SEE RECORD OF DRAWING CHANGES 12241-BCM-77F-11				
10	SEE RECORD OF DRAWING CHANGE 12241-BCM-77F-10				
9	SEE RECORD OF DRAWING CHANGE 12241-BCM-77F-9				
8	SEE RECORD OF DRAWING CHANGE 12241-BCM-77F-8				
7	SEE RECORD OF DWG. CHANGE 12241-BCM-77F-7				
6	SEE RECORD OF DWG. CHANGES 12241-BCM-77F-6 SH-1				
5	SEE RECORD OF DWG. CHANGES 12241-BCM-77F-5				
4	SEE RECORD OF DWG. CHANGES 12241-BCM-77F-4				
3	GENERAL REVISION				
2	PSAR DWG NOS. CHANGED WAS RM-22 F				
1	ORIGINAL ISSUE				

STONE & WEBSTER ENGINEERING CORP.
BOSTON, MASS.

DUQUESNE LIGHT COMPANY
ENGINEERING & CONSTRUCTION PITTSBURGH, PA.

SCALE NONE
DATE 2-10-72 ARCH. APP.
DRAWN JLD ELECT. APP.
CHECKED MECH. APP.
INSPECTED RPB STRUCT. APP.

FLOW DIAGRAM
COMPONENT COOLING PIPING-SH 6

BEAVER VALLEY POWER STATION UNIT NO.2

O.F.E. No. 10080
C.O. No. 6289
AA No 10080-RM-77F

S&W DWG. NO. 12241-RM-77F-18

ENG: J. CREAMER
DES ENG: E. CHASE

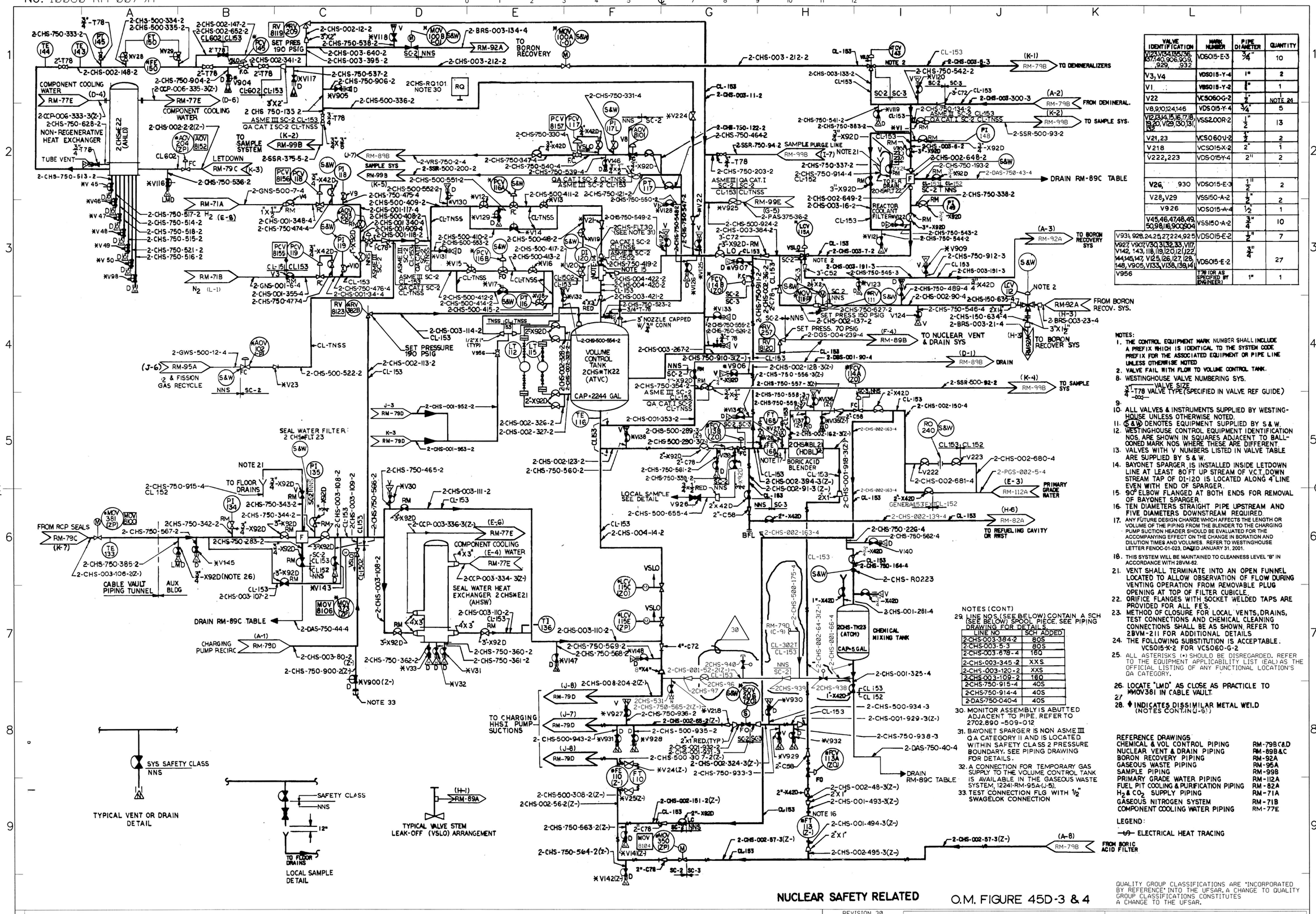

VALVE IDENTIFICATION	MARK NUMBER	PIPE DIAMETER	QUANTITY
V123,V134,V154,V156, V37,140,906,909, ,929, ,932	VDS015-E-3	3/4"	10
V3, V4	VDS015-Y-4	1"	2
V1	VBS015-Y-2	1"	1
V22	VCS060-G-2	1/2"	NOTE 24
V8,9,10,124,146	VDS015-Y-4	3/4"	5
V12,13,14,15,16,17,18, 19,20, V129,130,131, 132	VSS2.00R-2	1"	13
V21,23	VCS060-U-2	1/2"	2
V218	VCS015-X-2	2"	1
V222,223	VDS015-Y-4	2"	2
V26, 930	VDS015-E-3	1 1/2"	2
V28,V29	VSS150-A-2	1/2"	2
V926	VOS015-A-4	1/2"	1
V45,46,47,48,49, 50,98,116,900,904	VSS150-A-2	3/4"	10
V931, 928,24,25,27,224,925	VDS015-E-2	1/2"	7
V927, V907,V30,31,32,33, V117, V142, 143, 118, 119,120,121,122, 144,145,147, V125,126,127,128, 148, V905, V133, V138,139,141	VDS015-E-2	3/4"	27
V956	T78 (OR AS SPECIFIED BY ENGINEER)	1"	1

NOTES:

1. THE CONTROL EQUIPMENT MARK NUMBER SHALL INCLUDE A PREFIX WHICH IS IDENTICAL TO THE SYSTEM CODE PREFIX FOR THE ASSOCIATED EQUIPMENT OR PIPE LINE UNLESS OTHERWISE NOTED
2. VALVE FAIL WITH FLOW TO VOLUME CONTROL TANK.
8. WESTINGHOUSE VALVE NUMBERING SYS.
   3/4 — VALVE SIZE
   T78 VALVE TYPE (SPECIFIED IN VALVE REF GUIDE)
9.
10. ALL VALVES & INSTRUMENTS SUPPLIED BY WESTINGHOUSE UNLESS OTHERWISE NOTED.
11. (S&W) DENOTES EQUIPMENT SUPPLIED BY S&W.
12. WESTINGHOUSE CONTROL EQUIPMENT IDENTIFICATION NOS. ARE SHOWN IN SQUARES ADJACENT TO BALLOONED MARK NOS. WHERE THESE ARE DIFFERENT.
13. VALVES WITH V NUMBERS LISTED IN VALVE TABLE ARE SUPPLIED BY S&W.
14. BAYONET SPARGER IS INSTALLED INSIDE LETDOWN LINE AT LEAST 80 FT UP STREAM OF VCT, DOWN STREAM TAP OF DI-120 IS LOCATED ALONG 4" LINE EVEN WITH END OF SPARGER.
15. 90° ELBOW FLANGED AT BOTH ENDS FOR REMOVAL OF BAYONET SPARGER.
16. TEN DIAMETERS STRAIGHT PIPE UPSTREAM AND FIVE DIAMETERS DOWNSTREAM REQUIRED.
17. ANY FUTURE DESIGN CHANGE WHICH AFFECTS THE LENGTH OR VOLUME OF THE PIPING FROM THE BLENDER TO THE CHARGING PUMP SUCTION HEADER SHOULD BE EVALUATED FOR THE ACCOMPANYING EFFECT ON THE CHANGE IN BORATION AND DILUTION TIMES AND VOLUMES. REFER TO WESTINGHOUSE LETTER FENOC-01-023, DATED JANUARY 31, 2001.
18. THIS SYSTEM WILL BE MAINTAINED TO CLEANNESS LEVEL "B" IN ACCORDANCE WITH 2BVM-82.
21. VENT SHALL TERMINATE INTO AN OPEN FUNNEL LOCATED TO ALLOW OBSERVATION OF FLOW DURING VENTING OPERATION FROM REMOVABLE PLUG OPENING AT TOP OF FILTER CUBICLE.
22. ORIFICE FLANGES WITH SOCKET WELDED TAPS ARE PROVIDED FOR ALL FES.
23. METHOD OF CLOSURE FOR LOCAL VENTS, DRAINS, TEST CONNECTIONS AND CHEMICAL CLEANING CONNECTIONS SHALL BE AS SHOWN. REFER TO 2BVM-211 FOR ADDITIONAL DETAILS
24. THE FOLLOWING SUBSTITUTION IS ACCEPTABLE. VCS015-X-2 FOR VCS060-G-2
25. ALL ASTERISKS (*) SHOULD BE DISREGARDED. REFER TO THE EQUIPMENT APPLICABILITY LIST (EAL) AS THE OFFICIAL LISTING OF ANY FUNCTIONAL LOCATION'S QA CATEGORY.
26. LOCATE "LMD" AS CLOSE AS PRACTICLE TO *MOV381 IN CABLE VAULT.
27
28. ♦ INDICATES DISSIMILAR METAL WELD (NOTES CONT. ON U-5)

NOTES (CONT)

29. LINE NOS. (SEE BELOW) CONTAIN A SCH (SEE BELOW) SPOOL PIECE. SEE PIPING DRAWING FOR DETAILS.

LINE NO	SCH ADDED
2-CHS-003-384-2	80S
2-CHS-003-5-3	80S
2-CHS-003-678-4	160
2-CHS-003-345-2	XXS
2-CHS-003-120-2	XXS
2-CHS-003-109-2	160
2-CHS-750-915-4	40S
2-CHS-750-914-4	40S
2-DAS-750-040-4	40S

30. MONITOR ASSEMBLY IS ABUTTED ADJACENT TO PIPE. REFER TO 2702.890-509-012
31. BAYONET SPARGER IS NON ASME III QA CATEGORY II AND IS LOCATED WITHIN SAFETY CLASS 2 PRESSURE BOUNDARY. SEE PIPING DRAWING FOR DETAILS.
32. A CONNECTION FOR TEMPORARY GAS SUPPLY TO THE VOLUME CONTROL TANK IS AVAILABLE IN THE GASEOUS WASTE SYSTEM, 12241-RM-95A-(J-5).
33. TEST CONNECTION FLG WITH 1/2" SWAGELOK CONNECTION

REFERENCE DRAWINGS

CHEMICAL & VOL CONTROL PIPING	RM-79B C&D
NUCLEAR VENT & DRAIN PIPING	RM-89B&C
BORON RECOVERY PIPING	RM-92A
GASEOUS WASTE PIPING	RM-95A
SAMPLE PIPING	RM-99B
PRIMARY GRADE WATER PIPING	RM-112A
FUEL PIT COOLING & PURIFICATION PIPING	RM-82A
H_2 & CO_2 SUPPLY PIPING	RM-71A
GASEOUS NITROGEN SYSTEM	RM-71B
COMPONENT COOLING WATER PIPING	RM-77E

LEGEND:

—69— ELECTRICAL HEAT TRACING

QUALITY GROUP CLASSIFICATIONS ARE "INCORPORATED BY REFERENCE" INTO THE UFSAR. A CHANGE TO QUALITY GROUP CLASSIFICATIONS CONSTITUTES A CHANGE TO THE UFSAR.

NUCLEAR SAFETY RELATED

O.M. FIGURE 45D-3 & 4

REVISION 30 INCORPORATED
DUN 08-0728-001-003
ECP 08-0728
SATISFIED
ECP 09-0197

FENOC FIRSTENERGY NUCLEAR OPERATING COMPANY

SCALE | DATE 10/26/10 | DRAWN BY MVF | DFG/CHK | ENGR/CHK | ARCH. APP. | ELECT. APP. | MECH. APP. | CIVIL APP. | FINAL APP. FOR ISSUE

BEAVER VALLEY POWER STATION UNIT 2

FLOW DIAGRAM-CHEMICAL & VOLUME CONTROL PIPING SH 1

Q.F.E. NO. | Q.C.P. NO. | STA. NO. | AA | DWG. NO. 10080-RM-0079A | REV. 30

PREPARED ON THE BVPS CAEDDI SYSTEM

ISSUES

07-OCT-2011 09:30 MN:02\RM-0079A.DGN

TAG142968 RM-0079A 10/7/2011 9:33:36 AM

No.10080-RM-0079B

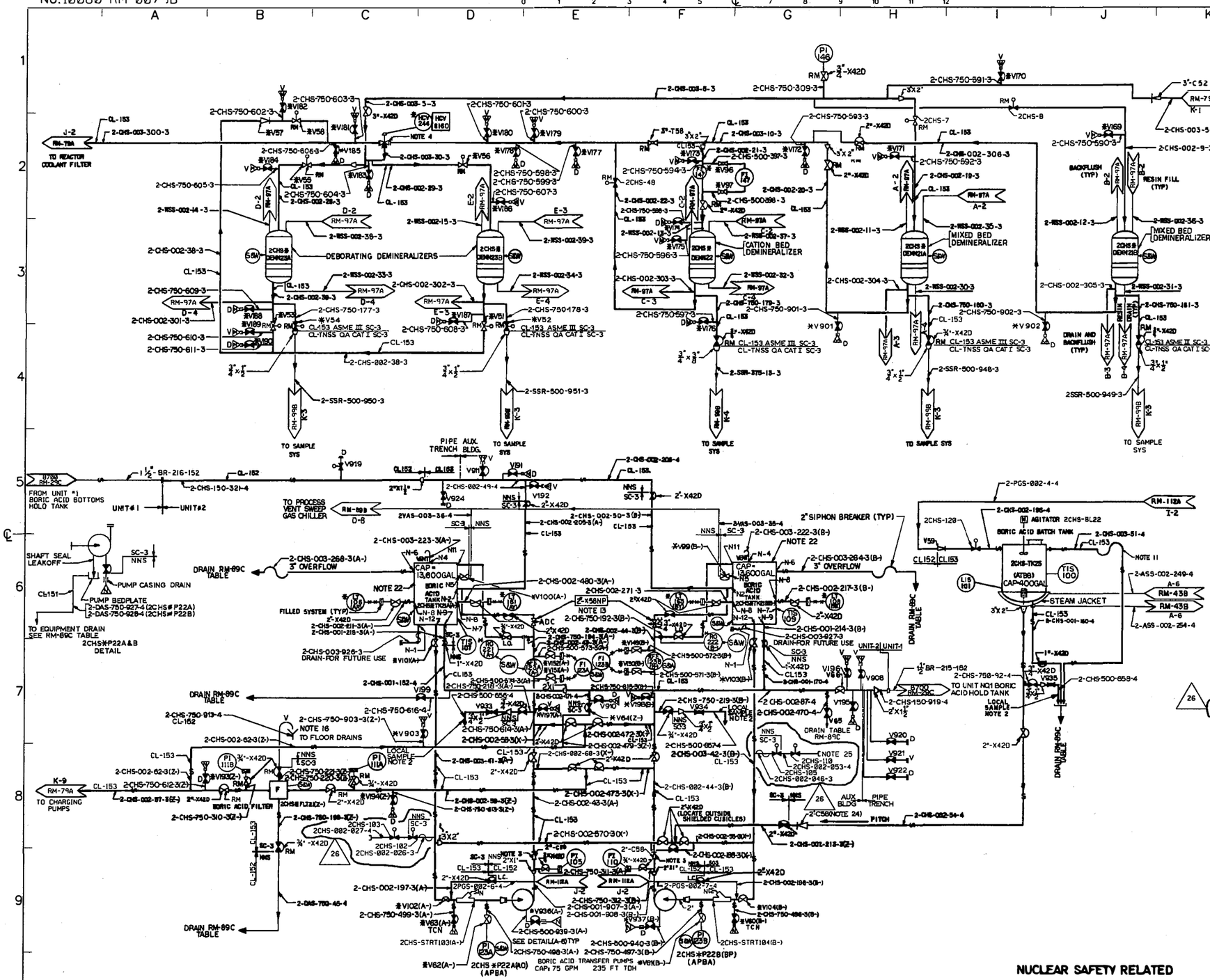

VALVE IDENTIFICATION	MARK NUMBER	PIPE SIZE	QUANTITY
V59	VC3080-0-4	3/4"	1(NOTE 20)
V51,53,54,56,58	VS8015-Y-3	2"	5
V52,54	VB8010-F-3	1"	2
V57	VC3080-0-3	2"	1(NOTE 20)
V96,97	VS5150-4-3	1/2"	2
V901,902,903	VD5015-E-3	3/4"	3
V64	VD5015-E-3	2"	1
V65,66	VD5015-Y-4	2"	2
V98,V100,V101, V102,V103,V104	VDW015YY-3	3"	6
V60,61,82,83, 169THRU190, 193,194,197,198	VD5015-E-3	3/4"	30
V191,192,195,196, 199,908,910,911, 920,921,922,924	VD5015-Y-4	3/4"	12
V149,150,151,152	VD5075-E-3	1/2"	4
V933,934,935	VD5015-A-4	1/2"	3
V936,937	VD5015-E-2	1/2"	2
V919	VB5015-D-4	3/4"	1

NOTES:

1. THE CONTROL EQUIPMENT MARK NUMBER SHALL INCLUDE A PREFIX WHICH IS IDENTICAL TO THE SYSTEM CODE PREFIX FOR THE ASSOCIATED EQUIPMENT OR PIPE LINE UNLESS OTHERWISE NOTED. EXAMPLE: 2CHS-FI147
2. LOCAL SAMPLE DETAIL SHOWN ON 796
3. .06" DIA HOLE IN CLAPPER OR CUP
4. VALVE FAILS TO BYPASS DEBORATING DEMIN
5. WESTINGHOUSE VALVE NUMBERING SYS
   VALVE SIZE
   8"-178 -VALVE TYPE (SPECIFIED IN VALVE REF GUIDE)
6. ALL VALVES & INSTRUMENTS SUPPLIED BY WESTINGHOUSE UNLESS OTHERWISE NOTED
8. WESTINGHOUSE EQUIP NO. SHOWN IN PARENTHESIS
9. WESTINGHOUSE CONTROL EQUIPMENT IDENTIFICATION NUMBERS ARE SHOWN IN SQUARES ADJACENT TO BALLOONED MARK NUMBERS WHERE THESE ARE DIFFERENT
11. LOOP SEAL TO EXTEND 12" BELOW AND ABOVE PIPE END ELEVATION.
13. VALVE IS LOCKED INTO POSITION DURING PREOPERATIONAL TESTING TO LIMIT PUMP RUNOUT TO 60 GPM WHEN TRANSFERRING BATCH CONTE TS TO BORIC ACID TANK
14. (S&W) DENOTES COMPONENTS SUPPLIED BY S&W
15. VALVES WITH V NUMBERS LISTED IN THE VALVE TABLE ARE SUPPLIED BY S&W
16. VENT SHALL TERMINATE INTO AN OPEN FUNNEL LOCATED TO ALLOW OBSERVATION OF FLOW DURING VENTING OPERATION FROM REMOVABLE PLUG OPENING AT TOP OF FILTER CUBICLE.
17. ORIFICE FLANGES WITH SOCKET WELDED TAPS ARE PROVIDED FOR ALL FE'S.
18. METHOD OF CLOSURE FOR LOCAL VENTS,DRAINS,TEST CONNECTIONS AND CHEMICAL CLEANING CONNECTIONS SHALL BE AS SHOWN. REFER TO 2BVM-211 FOR ADDITIONAL DETAILS.
19. THIS SYSTEM TO BE MAINTAINED TO CLEANNESS LEVEL "B"IN ACCORDANCE WITH 2BVM-182.
20. THE FOLLOWING SUBSTITUTIONS ARE ACCEPTABLE:
    VC8015-K-4 FOR VC3080-0-4
    VC5015-X-3 FOR VC8050-G-3
21. ALL ASTERISKS (*) SHOULD BE DISREGARDED. REFER TO SAP FUNCTIONAL LOCATION FOR QA CATEGORY.
22. BORIC ACID TANKS (2CHS#TK21A&B) TO HAVE STRIP HEATERS.
23. LINE NUMBERS(SEE BELOW) CONTAINS(A) SCH (SEE BELOW) SPOOL PIECES. SEE ISOMETRICS FOR DETAIL.

LINE NO.	SCH ADDED
2-CHS-750-913-4	40S

24. CHECK VALVE 2"-C58 LOCATED IN LINE 2-CHS-002-54-4 HAS INTERNALS PERMANENTLY REMOVED.
25. 1/8" DIAMETER HOLE IN CAP FOR TELLTALE DRAIN.

REFERENCE DRAWINGS:

CHEMICAL & VOL CONTROL PIPING	RM-79A
NUCLEAR VENT & DRAIN PIPING	RM-89A/C
SOLID WASTE DISPOSAL PIPING	RM-97A
SAMPLE PIPING	RM-98B
PRIMARY GRADE WATER PIPING	RM-112A
BORON RECOVERY PIPING	8700-RM-29C
AUX STEAM & AIR REMOVAL PIPING	RM-43B

LEGEND:

—⊗— DENOTES ELECTRICAL HEAT TRACING

QUALITY GROUP CLASSIFICATIONS ARE 'INCORPORATED BY REFERENCE' INTO THE UFSAR. A CHANGE TO QUALITY GROUP CLASSIFICATIONS CONSTITUTES A CHANGE TO THE UFSAR.

NUCLEAR SAFETY RELATED

OM FIG 45D-5 & 6

REVISION 26 INCORPORATED
DUN 13-0624-003-007
DUN 13-0624-024-001

FENOC — FIRST ENERGY NUCLEAR OPERATING COMPANY

SCALE NONE | DATE 7/10/15 | DRAWN BY MVF | ENGINEER | CHECKED

BEAVER VALLEY POWER STATION UNIT 2

FLOW DIAGRAM CHEMICAL & VOLUME CONTROL PIPING - SH 2

AA | DWG NO. 10080-RM-0079B | REV. 26

PREPARED ON THE BVPS CADDI SYSTEM

M:\U2\RM-0079B.DGN

No. 10080-RM-79C

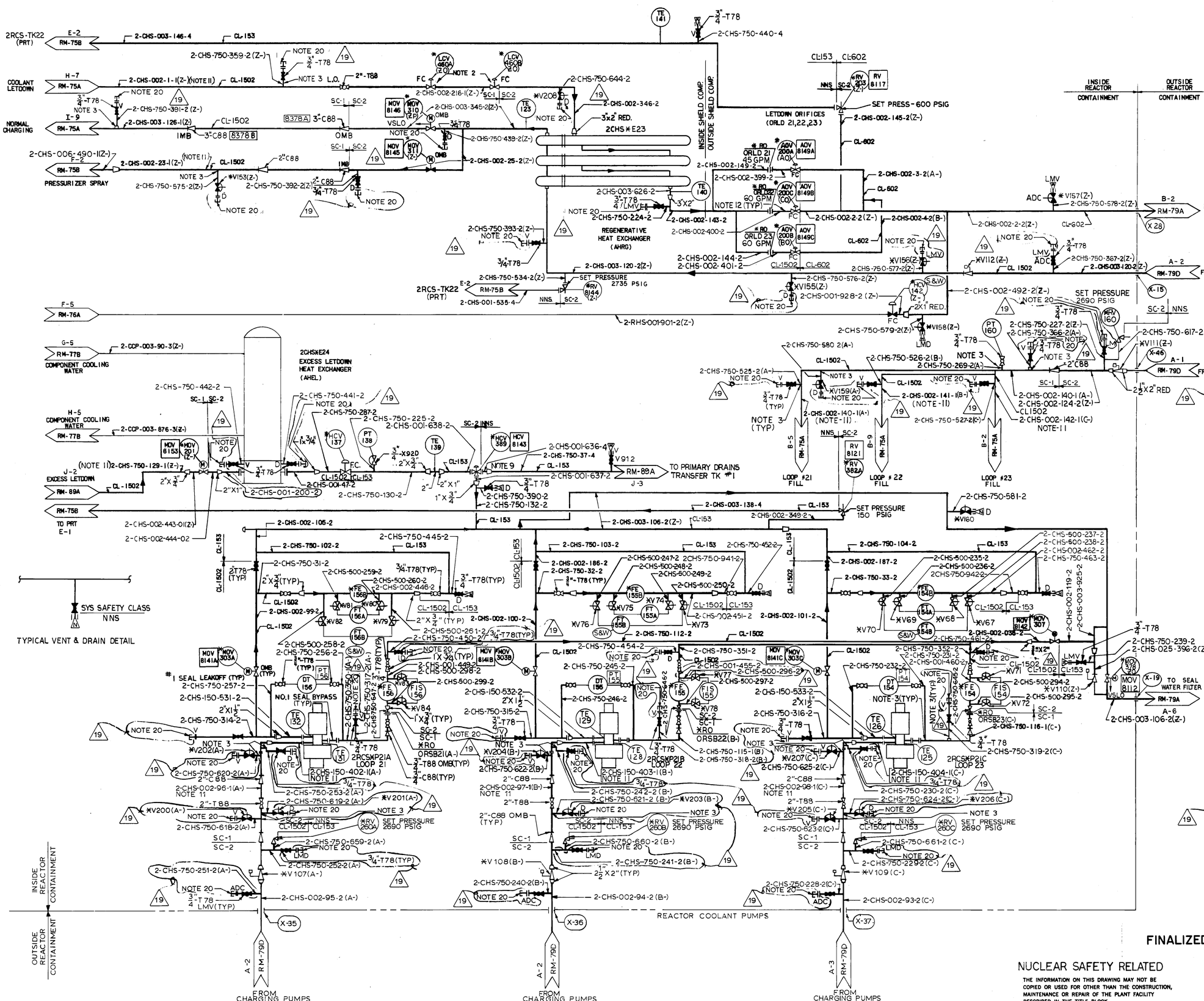

VALVE IDENTIFICATION	MARK NO	PIPE SIZE	QUANTITY
V67,68,69,70,71, 72,73,74,75,76, 77,78,79,80,81, 82,83,84	VSS150-A-2	1/2"	18
V107, 108,109, V111	VCW150-X-2	2 1/2"	4
V110	VCW015-Y-2	2 1/2"	1
V112	VCW150-X-2	3"	1
V153, 155,156,157, 158,159,160,200,201, 202,203,204,205, 206,207,208	VSS150-A-2	3/4"	16
V912	VOS060-W-4	3/4"	1

NOTES:

1. THE CONTROL EQUIPMENT MARK NUMBERS SHALL INCLUDE A PREFIX WHICH IS IDENTICAL TO THE SYSTEM CODE PREFIX FOR THE ASSOCIATED EQUIPMENT OR PIPE LINE UNLESS OTHERWISE NOTED. EXAMPLE: 2CHS-TE141
2. PRESSURIZER LOW LEVEL SIGNAL CLOSES THESE VALVES.
3. 3/8" FLOW RESTRICTER REQUIRED PER 2BVS-939
4. WESTINGHOUSE VALVE NO. SYS. —⋈— 3/4"-T78 VALVE SIZE & VALVE TYPE (SPECIFIED IN VALVE REF. GUIDE)
5.
6.
7. ALL VALVES & INSTRUMENTS SUPPLIED BY WESTINGHOUSE UNLESS OTHERWISE NOTED.
8. WESTINGHOUSE CONTROL EQUIPMENT IDENTIFICATION NUMBERS ARE SHOWN IN SQUARES ADJACENT TO BALLOONED MARK NUMBERS WHERE THESE ARE DIFFERENT.
9. FAILS WITH FLOW TO VCT
10. THIS SYSTEM SHALL BE MAINTAINED TO A CLEANNESS LEVEL "B" IN ACCORDANCE WITH 2BVM-62
11. ALL CL-1 PIPING FROM 1 1/2" TO 2" DIA TO BE BUTT WELDED EXCEPT AT CONNECTIONS TO W SUPPLIED EQUIPMENT.
12. PROVIDE A MINIMUM OF 5 FT. OF STRAIGHT RUN DOWNSTREAM OF ORIFICE.
13. VALVES WITH V NUMBERS LISTED IN THE VALVE TABLE ARE SUPPLIED BY S&W
14. ORIFICE FLANGES WITH SOCKET WELDED TAPS ARE PROVIDED FOR ALL FE'S.
15. METHOD OF CLOSURE FOR LOCAL VENTS, DRAINS, TEST CONNECTIONS AND CHEMICAL CLEANING CONNECTIONS SHALL BE AS SHOWN. REFER TO 2BVM-211 FOR ADDITIONAL DETAILS.
16. * DENOTES SAFETY RELATED ITEMS.
17. FABRICATE LINE NO'S 2-CHS-002-216-1 AND 2-CHS-002-1-1 FROM SA 312 OR SA 376 TYPE 316N MATERIAL.
18. (S&W) INDICATES FURNISHED BY STONE & WEBSTER ENGRG CORP.

LEGEND: (CONTD L-8)

IMB - INSIDE MISSILE BARRIER
OMB - OUTSIDE MISSILE BARRIER
F.C. - FAIL CLOSE
PRT - PRESSURIZER RELIEF TANK

19. LINE NUMBER 2-CHS-003-120-2 CONTAINS A SCH XXS SPOOL PIECE. SEE PIPING DWG FOR DETAILS.

NOTES (CONTD)

20. TEST CONNECTION FLGS. WITH 1/2" SWAGELOK CONNECTION.

REFERENCE DRAWINGS:

REACTOR COOLANT PIPING	RM75A&B
RESIDUAL HEAT REMOVAL PIPING	RM76A
COMPONENT COOLING WATER PIPING	RM77B
CHEMICAL & VOL. CONTROL PIPING	RM79A&D
NUCLEAR VENT & DRAIN PIPING	RM89A

FINALIZED FLUID SYSTEM

NUCLEAR SAFETY RELATED

THE INFORMATION ON THIS DRAWING MAY NOT BE COPIED OR USED FOR OTHER THAN THE CONSTRUCTION, MAINTENANCE OR REPAIR OF THE PLANT FACILITY DESCRIBED IN THE TITLE BLOCK.

APPROVED Richard Alan Berry
REGISTERED PROFESSIONAL ENGINEER NO. 27269-E
COMMONWEALTH OF PENNSYLVANIA

REVISIONS	DESCRIPTION
19	DCP 1439 CO INCORPORATED INTERIM ISSUE 18A5
18	SEE RECORD OF DRAWING CHANGES 12241-BCM-79C-18
17	SEE RECORD OF DRAWING CHANGES 12241-BCM-79C-17
16	FOR RECORD OF DRAWING CHANGES SEE 12241-BCM-79C-16
15	SEE RECORD OF DRAWING CHANGE 12241-BCM-79C-15
14	FOR RECORD OF DWG CHNGS SEE 12241-BCM-79C-14
13	SEE RECORD OF DWG CHANGES 12241-BCM-79C-13
12	SEE RECORD OF DWG CHNG 12241-BCM-79C-12
11	FOR RECORD OF DWG CHNG SEE 12241-BCM-79C-11
10	FOR RECORD OF DWG CHANGES SEE 12241-BCM-79C-10
9	FOR RECORD OF DWG CHANGES SEE 12241-BCM-79C-9
8	FOR RECORD OF DWG CHANGE SEE 12241-BCM-79C-8
7	FOR RECORD OF DWG CHANGE SEE 12241-BCM-79C-7
6	FOR RECORD OF DWG CHANGES SEE 12241-BCM-79C-6
5	FOR RECORD OF DRAWING CHANGES SEE 12241-BCM-79C-5
4	FOR RECORD OF DRAWING CHANGES SEE 12241-BCM-79C-4
1	ISSUED FOR PRODUCTION PSAR DWG. NOS. CHANGED WAS RM-39C

MAM 5-26-92 C/CHK

ENG: J. HASLAM
SUP: Gal
FPE: N/A
DR.NME: Alan Berry

STONE & WEBSTER ENGINEERING CORP. BOSTON, MASS.

DUQUESNE LIGHT COMPANY
ENGINEERING & CONSTRUCTION PITTSBURGH, PA.

SCALE NONE	DATE 2-9-72	ARCH. APP.	
	DRAWN BAKER	ELECT. APP.	
	CHECKED	MECH. APP.	
	INSPECTED RPB	STRUCT. APP.	

FLOW DIAGRAM
CHEMICAL & VOLUME CONTROL PIPING SH 3

BEAVER VALLEY POWER STATION-UNIT NO2

O.F.E. No. 10080 | AA | No. 10080-RM-79C
C.O. No. 6289

DES. ENG: J. HASLAM
DES. ENG: E.F. CHASE

S&W DWG. NO. 12241-RM-79C-19

No 10080-RM-0079D

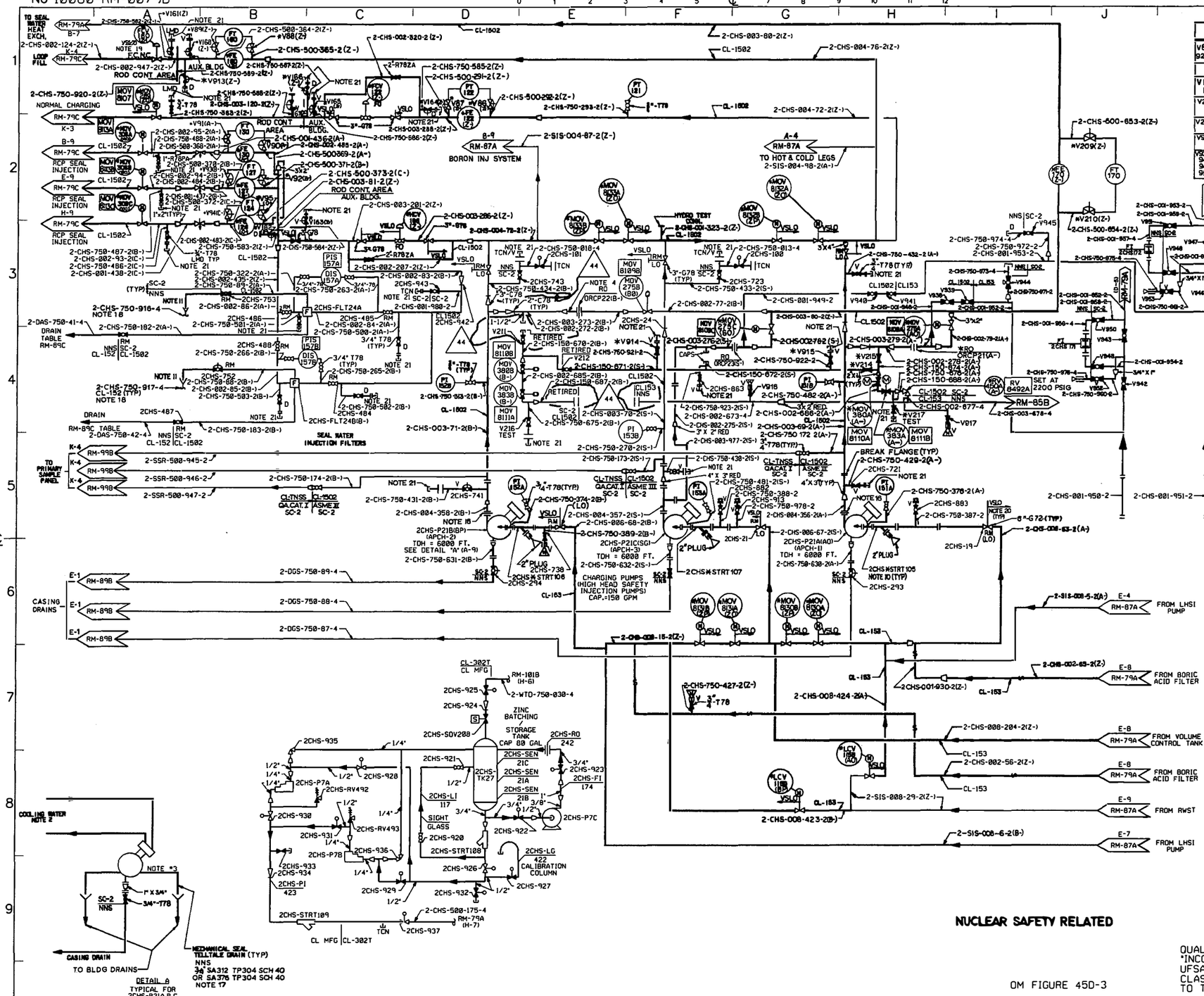

VALVE IDENTIFICATION	MARK NO	PIPE SIZE	QUANTITY
V86,87, 88, 89,90, 91, 92,93,94,95,209,210	VSS150-A-2	1/2"	12
V161,162, 163,164,165 166.167,168,913	VSS150-A-2	3/4"	9
V216,217, 914,915,	VOS150-X-2	3/4"	4
V211,212, 214,215	VOS150-X-2	1 1/2"	4
V916,917	VOS060-W-4	3/4"	2
V938, 939, 940, 941, 942, 943, 946, 947, 948,949, 950, 951, 952, 953	T78 (OR AS SPECIFIED BY ENGINEERS)	1"	14

NOTES:

1. THE CONTROL EQUIPMENT MARK NUMBER SHALL INCLUDE A PREFIX WHICH IS IDENTICAL TO THE SYSTEM CODE PREFIX FOR THE ASSOCIATED EQUIPMENT OR PIPE LINE UNLESS OTHERWISE NOTED
2. MULTIPLE COOLING WATER LINE CONNECTIONS FOR BEARING OIL COOLER ARE REQUIRED. SEE PUMP DRAWINGS & RM-47D
3. MECHANICAL SEAL TELLTALE CONNECTIONS ON AUXILIARY GLAND PLATE. VENT CONNECTIONS ON GLAND PLATE (NOT SHOWN) ARE PLUGGED
4. PROVIDE MINIMUM OF 5 PIPE DIAMETERS STRAIGHT RUN ON THE UPSTREAM SIDE OF ORIFICE.
5. WESTINGHOUSE VALVE NUMBERING SYSTEM
   - 1" — VALVE SIZE
   - T78 — VALVE TYPE (SPECIFIED IN VALVE REF GUIDE)
6. ALL VALVES & INSTRUMENTS SUPPLIED BY WESTINGHOUSE UNLESS OTHERWISE NOTED
7. (S&W) DENOTES EQUIPMENT SUPPLIED BY S&W
8. WESTINGHOUSE CONTROL EQUIPMENT IDENTIFICATION NOS. ARE SHOWN IN SQUARES ADJACENT TO BALLOONED MARK NUMBERS WHERE THESE ARE DIFFERENT
9. VALVES WITH V NUMBERS LISTED IN THE VALVE TABLE ARE SUPPLIED BY S&W.
10. STRAINER ELEMENTS HAVE BEEN REMOVED AND STRAINER BODIES HAVE BEEN ROTATED.
11. VENT SHALL TERMINATE INTO AN OPEN FUNNEL LOCATED TO ALLOW OBSERVATION OF FLOW DURING VENTING OPERATION FROM REMOVABLE PLUG OPENING AT TOP OF FILTER CUBICLE.
12. ORIFICE FLANGES WITH SOCKET WELDED TAPS ARE PROVIDED FOR ALL FE'S.
13. METHOD OF CLOSURE FOR LOCAL VENTS, DRAINS, TEST CONNECTIONS AND CHEMICAL CLEANING CONNECTIONS SHALL BE AS SHOWN. REFER TO 28VM-211 FOR ADDITIONAL DETAILS.
14. THIS SYSTEM TO BE MAINTAINED TO CLEANNESS LEVEL 'B' IN ACCORDANCE WITH 28VM-62
15. (*) DENOTES SAFETY RELATED ITEMS. (SEE NOTE 22)
16. FULL ID 1/2" THICK SPACER TO BE INSERTED BETWEEN THESE FLANGES
17. WHERE UNIONS ARE NECESSARY TO FACILITATE EQUIPMENT REMOVAL USE:
    A-182 F304 3000#
    WHERE THREADED FITTINGS ARE NECESSARY DUE TO SPACE RESTRICTIONS USE:
    "CAJON" STAINLESS STEEL TP316
    STREET ELBOW(SE) 3/4-12-SE
    ELBOW(E) 3/4-12-E
    HEX COUPLING (HCG) 3/4-12-HCG
18. LINE NUMBER(S) (SEE BELOW) CONTAIN(S)(A) SCH (SEE BELOW) SPOOL PIECE (S). SEE ISOMETRIC(S) FOR DETAILS.

LINE NO.	SCH ADDED
2-CHS-750-916-4	40S
2-CHS-750-917-4	40S

19. VSLO CONNECTION 2-DGS-500-934 FOR 2CHS*FCV160 IS NOT REQUIRED, HOWEVER, THE LINE IS INSTALLED. 2-DGS-500-934 WILL REMAIN ON THE FLOW DIAGRAM, AND WILL BE SHOWN FUNCTIONALLY DELETED.
20. FOR VSLO CONTINUATIONS SEE RM-89B
21. TEST CONNECTION FLGS. WITH 1/2" SWAGELOK CONNECTION.
22. ALL ASTERISKS (*) SHOULD BE DISREGARDED. REFER TO THE EQUIPMENT APPLICABILITY LIST (EAL) AS THE OFFICIAL LISTING OF ANY FUNCTIONAL LOCATION'S QA CATEGORY.

REFERENCE DRAWINGS:

CHEMICAL & VOLUME CONTROL PIPING	RM-79A & C
SAFETY INJECTION PIPING	RM-87A
NUCLEAR VENT & DRAIN PIPING	RM-89B
SAMPLE PIPING	RM-99B

LEGEND:
-W- - DENOTES ELECTRICAL HEAT TRACING

NUCLEAR SAFETY RELATED

QUALITY GROUP CLASSIFICATIONS ARE "INCORPORATED BY REFERENCE" INTO THE UFSAR. A CHANGE TO QUALITY GROUP CLASSIFICATIONS CONSTITUTES A CHANGE TO THE UFSAR.

OM FIGURE 45D-3

REVISIONS

REVISION 44 INCORPORATED
DUN 04-0477-002-001
DUN 15-0492-001-010

FENOC — FIRST ENERGY NUCLEAR OPERATING COMPANY

SCALE NONE	DATE 11/17/15	FINAL APP FOR ISSUE 11/17/2015
	DRAWN BY MVF	
	OPS/ENG	
	ENGR/ENG	

BEAVER VALLEY POWER STATION UNIT 2

FLOW DIAGRAM CHEMICAL & VOLUME CONTROL PIPING SH 4

DIST NO | STA NO | AA | DWG NO 10080-RM-0079D | REV 44

PREPARED ON THE BVPS CAEDD SYSTEM

M:\u2\RM-0079D.DGN

I:\0079D.DGN RM-0079D.DGN

No. 10080-RM-0082A

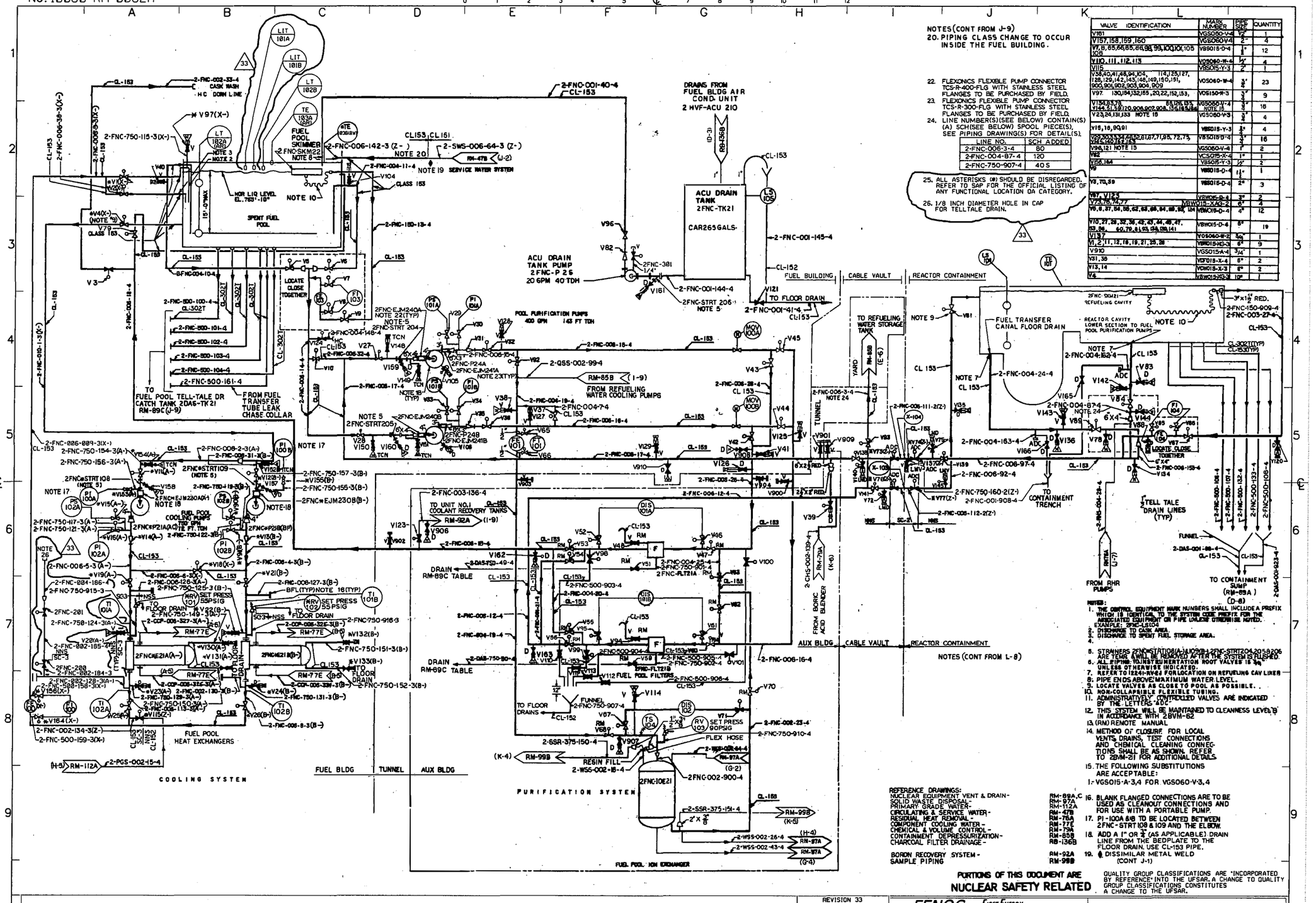

NOTES (CONT FROM J-9)

20. PIPING CLASS CHANGE TO OCCUR INSIDE THE FUEL BUILDING.

22. FLEXONICS FLEXIBLE PUMP CONNECTOR TCS-R-400-FLG WITH STAINLESS STEEL FLANGES TO BE PURCHASED BY FIELD.
23. FLEXONICS FLEXIBLE PUMP CONNECTOR TCS-R-300-FLG WITH STAINLESS STEEL FLANGES TO BE PURCHASED BY FIELD.
24. LINE NUMBER(S)(SEE BELOW) CONTAIN(S) (A) SCH(SEE BELOW) SPOOL PIECE(S), SEE PIPING DRAWING(S) FOR DETAIL(S).

LINE NO.	SCH ADDED
2-FNC-006-3-4	80
2-FNC-004-87-4	120
2-FNC-750-907-4	40S

25. ALL ASTERISKS (*) SHOULD BE DISREGARDED. REFER TO SAP FOR THE OFFICIAL LISTING OF ANY FUNCTIONAL LOCATION OA CATEGORY.
26. 1/8 INCH DIAMETER HOLE IN CAP FOR TELLTALE DRAIN.

VALVE IDENTIFICATION	MARK NUMBER	PIPE SIZE	QUANTITY
V151	VGS060-V-4	1/2"	1
V157,158,159,160	VGS060-V-4	2"	4
V7,8,85,86,85,86,90,95,100,101,105,106	VB9015-D-4	1"	12
V110,111,112,113	VGS060-W-6	1/2"	4
V115	VGS015-Y-3	2"	1
V38,40,41,88,94,104, 114,125,127, 128,129,142,143,148,149,150,151, 900,901,902,903,904,909	VGS060-W-4	3/4"	23
V97, 130,164,132,165,20,22,152,153,	VGS150-R-3	3/4"	9
V134,83,78, 88,126,135, V144,81,59,120,906,907,908,13,6,185,186	VGS060-V-4 NOTE 15	3/4"	16
V23,24,131,133 NOTE 15	VGS060-V-3	3/4"	4
V16,18,90,91	VB9015-Y-3	3/4"	4
V29,30,33,34,78,80,81,87,71,95,72,75, V84,140,162,163	VB9015-D-4	3/4"	16
V96,121 NOTE 15	VGS060-V-4	1"	2
V82	VCS095-X-4	1"	1
V158,164	VB9015-Y-3	1/2"	2
V9	VB9015-D-4	1 1/2"	1
V3,70,39	VB9015-D-4	2"	3
V87, V123	VBW015-D-4	3"	2
V73,76,74,77	VBW015-XAG-2	6"	4
V5,6,37,54,55,62,63,68,84,89,94,104	VBW015-D-4	4"	12
V10,27,28,32,36,42,43,44,46,47, 53,56, 60,79,81,93,94,106,141	VBW015-D-4	6"	19
V137	VGS060-W-2	3/4"	1
V1,2,11,12,18,19,21,23,26	VBW015-NG-3	6"	9
V910	VGS015-A-4	3/4"	1
V31,35	VEF015-X-4	6"	2
V13,14	VCW015-X-3	8"	2
V4	VBW015-NG-3	10"	1

NOTES:
1. THE CONTROL EQUIPMENT MARK NUMBERS SHALL INCLUDE A PREFIX WHICH IS IDENTICAL TO THE SYSTEM CODE PREFIX FOR THE ASSOCIATED EQUIPMENT OR PIPE UNLESS OTHERWISE NOTED. EXAMPLE: 2FNC-LS1104
2. DISCHARGE TO CASK AREA.
3. DISCHARGE TO SPENT FUEL STORAGE AREA.
4.
5. STRAINERS 2FNC-STRT108(A-)/109(B-) 2FNC-STRT204 205 206 ARE TEMP. & WILL BE REMOVED AFTER THE SYSTEM IS FLUSHED.
6. ALL PIPING HAS BOTH ORIENTATION ROOT VALVES IS 3/4" UNLESS OTHERWISE INDICATED.
7. REFER TO 12241-RW-04 FOR LOCATION ON REFUELING CAV LINER
8. PIPE END IS ABOVE MAXIMUM WATER LEVEL.
9. LOCATE VALVES AS CLOSE TO POOL AS POSSIBLE.
10. NON-COLLAPSIBLE FLEXIBLE TUBING.
11. ADMINISTRATIVELY CONTROLLED VALVES ARE INDICATED BY THE LETTERS "ADC".
12. THIS SYSTEM WILL BE MAINTAINED TO CLEANNESS LEVEL "B" IN ACCORDANCE WITH 28VM-62
13. (RM) REMOTE MANUAL
14. METHOD OF CLOSURE FOR LOCAL VENTS, DRAINS, TEST CONNECTIONS AND CHEMICAL CLEANING CONNECTIONS SHALL BE AS SHOWN. REFER TO 28VM-21 FOR ADDITIONAL DETAILS.
15. THE FOLLOWING SUBSTITUTIONS ARE ACCEPTABLE:
1:- VGS015-A-3,4 FOR VGS060-V-3,4
16. BLANK FLANGED CONNECTIONS ARE TO BE USED AS CLEANOUT CONNECTIONS AND FOR USE WITH A PORTABLE PUMP.
17. PI-100A &B TO BE LOCATED BETWEEN 2FNC-STRT108 & 109 AND THE ELBOW.
18. ADD A 1" OR 3/4" (AS APPLICABLE) DRAIN LINE FROM THE BEDPLATE TO THE FLOOR DRAIN. USE CL-153 PIPE.
19. DISSIMILAR METAL WELD (CONT J-1)

REFERENCE DRAWINGS:

NUCLEAR EQUIPMENT VENT & DRAIN-	RM-89A,C
SOLID WASTE DISPOSAL-	RM-97A
PRIMARY GRADE WATER-	RM-112A
CIRCULATING & SERVICE WATER-	RM-47B
RESIDUAL HEAT REMOVAL-	RM-76A
COMPONENT COOLING WATER-	RM-77E
CHEMICAL & VOLUME CONTROL-	RM-79A
CONTAINMENT DEPRESSURIZATION-	RM-85B
CHARCOAL FILTER DRAINAGE-	RB-136B
BORON RECOVERY SYSTEM-	RM-92A
SAMPLE PIPING	RM-99B

PORTIONS OF THIS DOCUMENT ARE NUCLEAR SAFETY RELATED

QUALITY GROUP CLASSIFICATIONS ARE "INCORPORATED BY REFERENCE" INTO THE UFSAR. A CHANGE TO QUALITY GROUP CLASSIFICATIONS CONSTITUTES A CHANGE TO THE UFSAR.

REVISIONS

REVISION 33 INCORPORATED
DUN 13-0562-001-005
DUN 13-0562-002-005
DUN 13-0626-001-002

FENOC FIRST ENERGY NUCLEAR OPERATING COMPANY

BEAVER VALLEY POWER STATION UNIT 2

FLOW DIAGRAM - FUEL POOL COOLING PURIFICATION PIPING

SCALE NONE | DATE 9/16/15 | DRAWN BY MVF | DFS/CHK | DSGN/CHK | MECH.APP. | ELECT.APP. | MEDI.APP. | CIVIL APP. | FINAL APP FOR ISSUE | 9/16/2015

DWG.NO. AA 10080- RM-0082A REV. 33

PREPARED ON THE BWPS — CAEDDI SYSTEM

M:\U2\RM-0082A.DGN

4082A.DGN RM-0082A.DGN

No. 10080-RM-85A

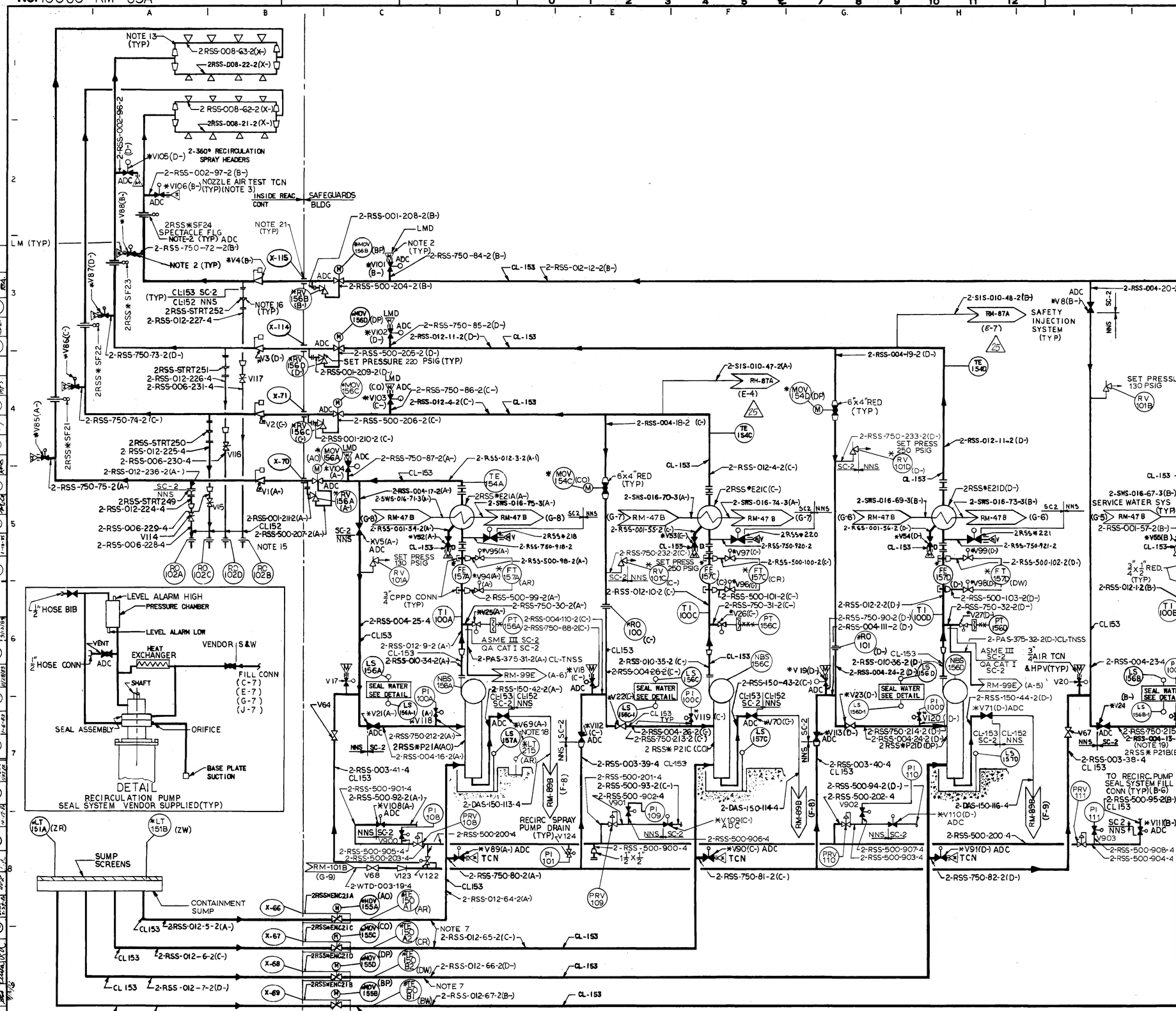

VALVE IDENTIFICATION	MARK NUMBER	PIPE SIZE	QUANTITY
V114, 115, 116, 117	VVF015-A-4	6"	4
V17,20	VBS015-D-4	3/4"	2
V25,26,27,28, 85,86,87,88,89,90, 91,92,101,102,103,104, 18,19,118,119,120,121	VBS015-Y-2	3/4"	22
V122,900,901,902, 903	VBS015-D-4	1/2"	5
V5,8,21,22,23,24, 112,113	VGW015-X-2	4"	8
V52,53,54,55 NOTE 14	VGS060-V-2	1"	4
V1,2,3,4	VCW015-Y-2 (WLC)	12"	4
V69,70,71,72 NOTE 14	VGS060-V-2	1 1/2"	4
V123	VCW015-X-4	3"	1
V64, 67, 68	VGW015-X-4	3"	3
V94,95,96,97,98, 99,100,107,108,109, 110,111,124	VBS015-Y-2	1/2"	13
V105,106	VBS015-Y-2	2"	2

NOTES (CONTD)

17. LINE NUMBER(S) (SEE BELOW) CONTAIN(S) A SCH (SEE BELOW) SPOOL PIECE(S). SEE PIPING DRAWINGS FOR DETAILS.

LINE NO.	SCH ADDED
2-RSS-003-38-4	160
2-RSS-003-40-4	160

18. THE SYSTEM CODE PREFIX FOR THIS EQUIPMENT IS '2DAS'.
19. PORTIONS OF PIPING IN THIS AREA TO BE TP 316 S/S. SEE PIPING DRAWING FOR DETAILS
20. (*) DENOTES SAFETY RELATED ITEMS.
21. INSULATION FOR LINES 2-RSS-012-3,4,11,12-2 SHALL ONLY BE PROVIDED IN THE SAFEGUARDS BLDG UP TO THE CONTAINMENT PENETRATIONS.

LEGEND:
ADC—ADMINISTRATIVELY CONTROLLED
RM—REACH ROD

REFERENCE DRAWINGS:

SAFETY INJECTION	RM-87A
VENT & DRAIN	RM-89B
FLOW DIAGRAM POST ACCIDENT SMPL. PP. DMNRLZD WATER DISTR PIPING	RM-99E RM-101A
SERVICE WATER	RM-47B
DEPRESSURIZATION PIPING	RM-85B

NOTES:

1. THE CONTROL EQUIPMENT MARK NUMBERS SHALL INCLUDE A PREFIX, WHICH IS IDENTICAL TO THE SYSTEM CODE PREFIX FOR THE ASSOCIATED EQUIPMENT OR PIPE LINE UNLESS OTHERWISE NOTED. EXAMPLE: 2RSS*MOV156A.
2. LOCATE LM CONNECTIONS AND SPECTACLE FLANGE NEAR THE OPERATING FLOOR.
3. LOCATE 2" LINE WITH PLUGGED CONN FOR AIR TEST NEAR OPERATING FLOOR LEVEL.
5. RECIRC. SPRAY COOLER SHELLS HAVE 1/4" NPT VENT THROUGH THE UPPER TUBE SHEET.
6. UNLESS OTHERWISE INDICATED, ALL ROOT CONNECTIONS SHALL BE OF THE SAME PIPE & CODE CLASSES AS THE PIPE TO WHICH CONNECTED & SHALL BE OF THE SAME DIAMETER AS THE ASSOCIATED ROOT VALVE.
7. PIPING ON DOWNSTREAM SIDE OF BUTTERFLY VALVES 2RSS*MOV155A,B,C,D WILL BE CL-153 SCHEDULE 20S.
11. THIS SYSTEM SHALL BE MAINTAINED AT CLEANNESS LEVEL "B" WITH THE EXCEPTION OF THE CONTAINMENT SUMP WHICH SHALL BE MAINTAINED AT CLEANNESS LEVEL "D". SEE 2BVM 62.
12. METHOD OF CLOSURE FOR LOCAL VENTS, DRAINS, TEST CONNECTIONS AND CHEMICAL CLEANING CONNECTIONS SHALL BE AS SHOWN. REFER TO 2BVM-211 FOR ADDITIONAL DETAILS.
13. INSTALL SPRAY RINGS WITHOUT THE NOZZLES AND WITH THE NOZZLE HOLES PLUGGED. THE LOCATION, QUANTITY AND TYPE OF SPRAY NOZZLES REQUIRED SHALL BE AS INDICATED ON THE PIPING DRAWINGS.
14. THE FOLLOWING SUBSTITUTION IS ACCEPTABLE VGS015-A-2 FOR VGS060-V-2.
15. PIPING TO BE TERMINATED OPEN AT EL 695'-0".
16. LINES 2-RSS-012-224, 225, 226, 227-4 ARE CONNECTED ONLY DURING PRE-OPERATIONAL FULL FLOW TESTING. BLANK FLANGES ARE TO BE INSERTED DURING OPERATION. BLANK FLANGES ARE TO BE FABRICATED AND INSTALLED TO ASME III

(NOTES CONT L-3)

NUCLEAR SAFETY RELATED

FINALIZED FLUID SYSTEM

THE INFORMATION ON THIS DRAWING MAY NOT BE COPIED OR USED FOR OTHER THAN THE CONSTRUCTION, MAINTENANCE OR REPAIR OF THE PLANT FACILITY DESCRIBED IN THE TITLE BLOCK.

APPROVED _____ REGISTERED PROFESSIONAL ENGINEER NO. 16297-E COMMONWEALTH OF PENNSYLVANIA

O.M. FIGURE 45D-15

REVISIONS

ISSUE	DESCRIPTION
23	MINOR UPDATE ADDED EIN MECH. ELEV. 2DWM REF. DR 96T462
24	DCP 2251 INCORPORATED INTERIM ISSUE 23 & MINOR CHANGE
25	DCP 2360 INCORPORATE INTERIM ISSUE 24
22	SEE RECORD OF DRAWING CHANGES 12241-BCM-85A-22
21	SEE RECORD OF DRAWING CHANGES 12241-BCM-85A-21
20	SEE RECORD OF DRAWING CHANGES 12241-BCM-85A-20
19	SEE RECORD OF DRAWING CHANGES 12241-BCM-85A-19
18	SEE RECORD OF DRAWING CHANGES SEE 12241-BCM-85A-18
17	SEE RECORD OF DWG CHGS 12241-BCM-85A-17
16	SEE RECORD OF DRAWING CHANGES 12241-BCM-85A-16
15	FOR RECORD OF DWG CHGS SEE 12241-BCM-85A-15
14	FOR RECORD OF DWG CHGS SEE 12241-BCM-85A-14
13	FOR RECORD OF DWG CHGS SEE BCM 12241-BCM-85A-13
12	FOR RECORD OF DWG CHGS SEE 12241-BCM-85A-12
11	FOR RECORD OF DWG CHGS SEE 12241-BCM-85A-11
10	FOR RECORD OF DWG CHGS SEE 12241-BCM-85A-10
9	FOR RECORD OF DWG CHGS SEE 12241-BCM-85A-9
8	FOR RECORD OF DWG CHGS SEE 12241-BCM-85A-8
7	FOR RECORD OF DWG CHANGES SEE 12241-BCM-85A-7
6	FOR RECORD OF DWG. CHANGES SEE 12241-BCM-85A-6
5	FOR RECORD OF DWG. CHANGES SEE 12241-BCM-85A-5
4	ADDED RECIRC SPRAY PUMP SEAL SYS, LVL SWITCHES & PITS.
3	REDRAWN SUPERSEDES RM-85ANS-3.
2	PSAR DWG. NO. CHANGED WAS RM-35A
1	ORIGINAL ISSUE

STONE & WEBSTER ENGINEERING CORP. BOSTON, MASS.

DUQUESNE LIGHT COMPANY
ENGINEERING & CONSTRUCTION PITTSBURGH, PA.

SCALE NONE

DATE 6-1-72	ARCH. APP.		
DRAWN P.T.B.	ELECT. APP.		
CHECKED	MECH. APP.		
INSPECTED RPB	STRUCT. APP.		

FLOW DIAGRAM — CONTAINMENT DEPRESSURIZATION PIPING - SH. 1

BEAVER VALLEY POWER STATION UNIT No 2

O.F.E. No. 10080 C.O. No. 6289 AA No. 10080-RM-85A

S&W DWG. NO. 12241-RM-85A-25

No. 10080-RM-85B

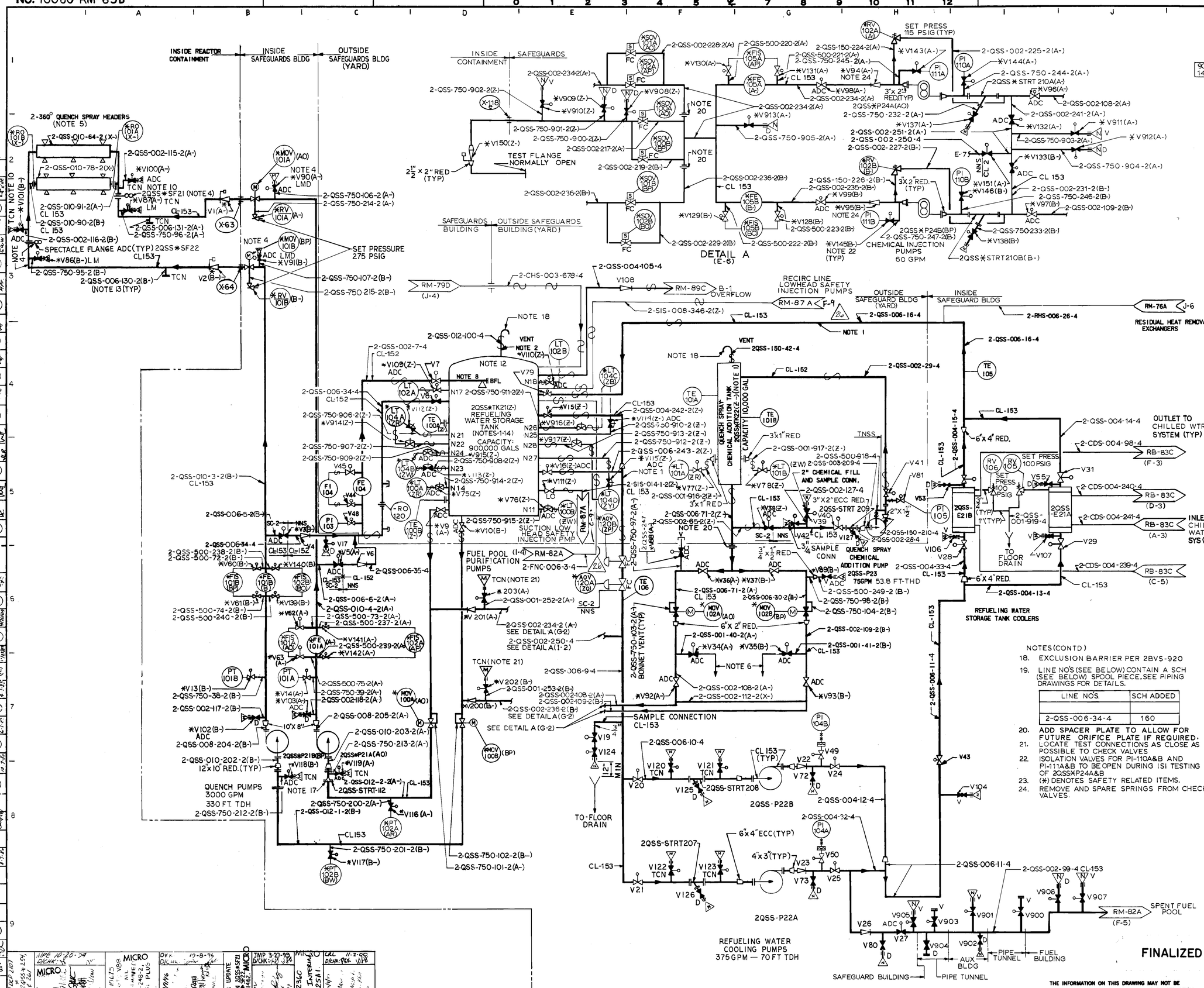

VALVE IDENTIFICATION	MARK NUMBER	PIPE SIZE	QUANTITY
V44,45,	VBS015-D-4	1/2"	2
V60,61,62,63,128,129,130,131,139,140,141,142	VBS015-Y-2	1/2"	12
909,910,911,912,913,13,14,90,91,86,87,88,143,144,145,146,908,116,117,118,119,137,138	VBS015-Y-2	3/4"	23
V904,53,55,72,73,80,125,126,127,902 NOTE 16	VGS060-V-4	3/4"	10
V19,48,49,50,17,42,81,120,121,122,123,124,900,901,903,905,906,907	VBS015-D-4	3/4"	18
V34,35,77,78,202,203	VBS015-Y2	1"	6
V109,110	VBF015-Y-2	3"	2
V39,40,41,27,7	VBS015-D-4	2"	5
V26 NOTE 16	VCS060-G-4	2"	1
V38,96,97,98,99,100,101,132,133,151	VBS015-Y-2	2"	10
V24,25,28,29,30,31	VBW015-Y-4	4"	6
V3,5,16	VBW015-XG-2	6"	3
V4,6	VCW015-X-4	6"	2
V22,23,108	VCW015-X-4	4"	3
V75,76,112,113,114,115,914,915,916,917	VSS150-A-2	3/4	10
V15	VBW015-Y-2	4"	1
V8,20,21,43,79	VBW015-Y-4	6"	5
V94,95, 200,201	VCS060-G-2	2"	4
V36,37	VGW015-X-2	6"	2
V1,2	NOTE 7	10"	2
V89	VGS015-A-2	1/2	1
V9,10	VGW015-X-2	12"	2
V92,93,102,103 NOTE 16	VGS060-V-2	2"	4
V104,106,107 NOTE 16	VOS060-W-4	3/4	3
V111	VVI015-AR-2	14"	1
V150	VCW015-Y-2	2 1/2	1

NOTES:

1. INSTRUMENTS AND OUTDOOR PORTIONS OF LINES CONNECTED TO 2QSS*TK21(Z-) AND 2QSS*TK22(Z-) TO BE PROVIDED WITH ELECTRIC HEAT TRACING.
2. THE 12" VENT ON THE REFUELING WATER STORAGE TANK WILL BE PROVIDED BY THE TANK MANUFACTURER
3. THE CONTROL EQUIPMENT MARK NUMBERS SHALL INCLUDE A PREFIX WHICH IS IDENTICAL TO THE SYSTEM CODE PREFIX FOR THE ASSOCIATED EQUIPMENT OR PIPE LINE, UNLESS OTHERWISE NOTED. EXAMPLE: 2QSS-TE101A
4. LOCATE SPECTACLE FLANGES AND LM CONNECTIONS NEAR THE OPERATING FLOOR LEVEL.
5. INSTALL PLUGS IN SPRAY NOZZLES DURING CONSTRUCTION ACTUAL NOZZLES WILL BE INSTALLED AFTER TESTING IS COMPLETED.
6. LOCATE VALVES V34 & V35 4 FT. ABOVE OPERATING FLOOR AT 718'-6" ELEVATION
7. VALVES 1 & 2 ARE WEIGHT LOADED CHECK VALVES: VCW 015-Y-2(WLC)
8. QUENCH SPRAY NOZZLES (3) ARE INSTALLED ON THE EXTENSION OF LINE 2QSS-002-7-4
9. UNLESS OTHERWISE INDICATED, ALL ROOT CONNECTIONS SHALL BE OF THE SAME PIPE & CODE CLASSES AS THE PIPE TO WHICH CONNECTED & SHALL BE OF THE SAME DIAMETER AS THE ASSOCIATED ROOT VALVE
10. VALVES V100 & V101 ARE AIR TEST CONNECTIONS, AND WILL BE LOCATED NEAR AN OPERATING FLOOR LEVEL.
11. ALL PIPING INSIDE & OUTSIDE REACTOR CONT. SHALL BE MAINTAINED TO CLEANNESS LEVEL B IN ACCORDANCE WITH 2BVM-62.
12. ALL CLASS 4 LINES ON THE REFUELING WATER STORAGE TANK AND QUENCH SPRAY CHEMICAL ADDITION TANK WILL BE ABOVE THE NORMAL LOW FLUID LEVEL.
13. DURING PLANT OPERATION LINES 2-QSS-006-130-2 AND 2-QSS-006-131-2 ARE BOLTED BLANK.
14. ALL CONNECTIONS TO THE REFUELING WATER STORAGE TANK ARE MADE DIRECTLY TO TANK NOZZLES.
15. METHOD OF CLOSURE FOR LOCAL VENTS, DRAINS, TEST CONNECTIONS SHALL BE AS SHOWN. REFER TO 2BVM-211 FOR ADDITIONAL DETAILS.
16. THE FOLLOWING SUBSTITUTIONS ARE ACCEPTABLE:
    VCS015-X-2,4 FOR VCS060-G-2,4 RESPECTIVELY
    VGS015-A-2,4 FOR VGS060-V-2,4 RESPECTIVELY
    VOS015-A-2,4 FOR VOS060-W-2,4 RESPECTIVELY
17. CONICAL STRAINER TO BE REMOVED AFTER INITIAL SYSTEM FLUSH. SPOOL PIECES FOR CONICAL STRAINER & 3/8" SPACER RINGS ARE TO BE PROVIDED BY THE PIPING FABRICATOR.

NOTES (CONTD)

18. EXCLUSION BARRIER PER 2BVS-920
19. LINE NO'S (SEE BELOW) CONTAIN A SCH (SEE BELOW) SPOOL PIECE. SEE PIPING DRAWINGS FOR DETAILS.

LINE NO'S.	SCH ADDED
2-QSS-006-34-4	160

20. ADD SPACER PLATE TO ALLOW FOR FUTURE ORIFICE PLATE IF REQUIRED.
21. LOCATE TEST CONNECTIONS AS CLOSE AS POSSIBLE TO CHECK VALVES
22. ISOLATION VALVES FOR PI-110A&B AND PI-111A&B TO BE OPEN DURING ISI TESTING OF 2QSS*P24A&B
23. (*) DENOTES SAFETY RELATED ITEMS.
24. REMOVE AND SPARE SPRINGS FROM CHECK VALVES.

(CONTD J-6)

REFERENCE DRAWINGS:

SAFETY INJECTION PIPING	RM-87A
NUCLEAR EQUIP. VENT & DRAIN PIPING	RM-89C
RESIDUAL HEAT REMOVAL PIPING	RM-76A
CHILLED WATER SYSTEM	RB-83C
FUEL POOL COOLING PURIFICATION PIPING	RM-82A

NUCLEAR SAFETY RELATED

FINALIZED FLUID SYSTEM

THE INFORMATION ON THIS DRAWING MAY NOT BE COPIED OR USED FOR OTHER THAN THE CONSTRUCTION, MAINTENANCE OR REPAIR OF THE PLANT FACILITY DESCRIBED IN THE TITLE BLOCK.

APPROVED Carl Otto Richardson Jr. REGISTERED PROFESSIONAL ENGINEER NO. 16397-E COMMONWEALTH OF PENNSYLVANIA

O.M. FIGURE 45D-7 & 8

REVISIONS

ISS	DESCRIPTION	CHKD	CORR	APPD	DATE	ISSUE	DESCRIPTION	CHKD	CORR	APPD	DATE	ISSUE	DESCRIPTION	CHKD	CORR	APPD	DATE	ISSUE	DESCRIPTION	CHKD	CORR	APPD	DATE	ISSUE	DESCRIPTION	CHKD	CORR	APPD	DATE	ISSUE	DESCRIPTION	CHKD	CORR	APPD	DATE	ISSUE
23	SEE RECORD OF DWG CHGS 12241-BCM-85B-22					19	SEE RECORD OF DRAWING CHANGES 12241-BCM-85B-19					15	FOR RECORD OF DRAWING CHANGES SEE 12241-BCM-85B-15					11	FOR RECORD OF DWG CHNGS SEE 12241-BCM-85B-11					7	FOR RECORD OF DWG CHANGES SEE 12241-BCM-85B-7					3	FOR RECORD OF DWG CHANGES SEE 12241-BCM-85B-3				
22	SEE RECORD OF DWG CHGS 12241-BCM-85B-21					18	SEE RECORD OF DRAWING CHANGES 12241-BCM-85B-18					14	FOR RECORD OF DWG CHG SEE 12241-BCM-85B-14					10	FOR RECORD OF DWG CHANGES SEE 12241-BCM-85B-10					6	FOR RECORD OF DWG CHANGES SEE 12241-BCM-85B-6					2	GENERAL REVISION				
21	SEE RECORD OF DWG CHNGS 12241-BCM-85B-20					17	FOR RECORD OF DRAWING CHANGES SEE 12241-BCM-85B-17					13	FOR RECORD OF DWG CHANGES SEE 12241-BCM-85B-13					9	FOR RECORD OF DWG CHANGES SEE 12241-BCM-85B-9					5	FOR RECORD OF DWG CHANGES SEE 12241-BCM-85B-5					1	SUPERSEDES RM-83ANS-3				
20	SEE RECORD OF DWG CHNGS 12241-BCM-85B-20					16	FOR RECORD OF DRAWING CHANGES SEE 12241-BCM-85B-16					12	FOR RECORD OF DWG CHANGES SEE 12241-BCM-85B-12					8	FOR RECORD OF DWG CHANGES SEE 12241-BCM-85B-8					4	FOR RECORD OF DWG CHANGES SEE 12241-BCM-85B-4										

STONE & WEBSTER ENGINEERING CORP. BOSTON, MASS.

DUQUESNE LIGHT COMPANY
ENGINEERING & CONSTRUCTION PITTSBURGH, PA.

SCALE NONE | DATE 6-1-72 | DRAWN R.C.G. | CHECKED | INSPECTED R.P.B. | ARCH. APP. | ELECT. APP. | MECH. APP. | STRUCT. APP.

O.F.E. No. 10080 | C.O. No. 6289 | AA | No. 10080-RM-85B

FLOW DIAGRAM
CONTAINMENT DEPRESSURIZATION PIPING-SH 2
BEAVER VALLEY POWER STATION UNIT NO 2

S&W DWG. NO. 12241-RM-85B-26

ENG. J. HASLAM
DE. E. CHASE

No 10080-RM-0087A

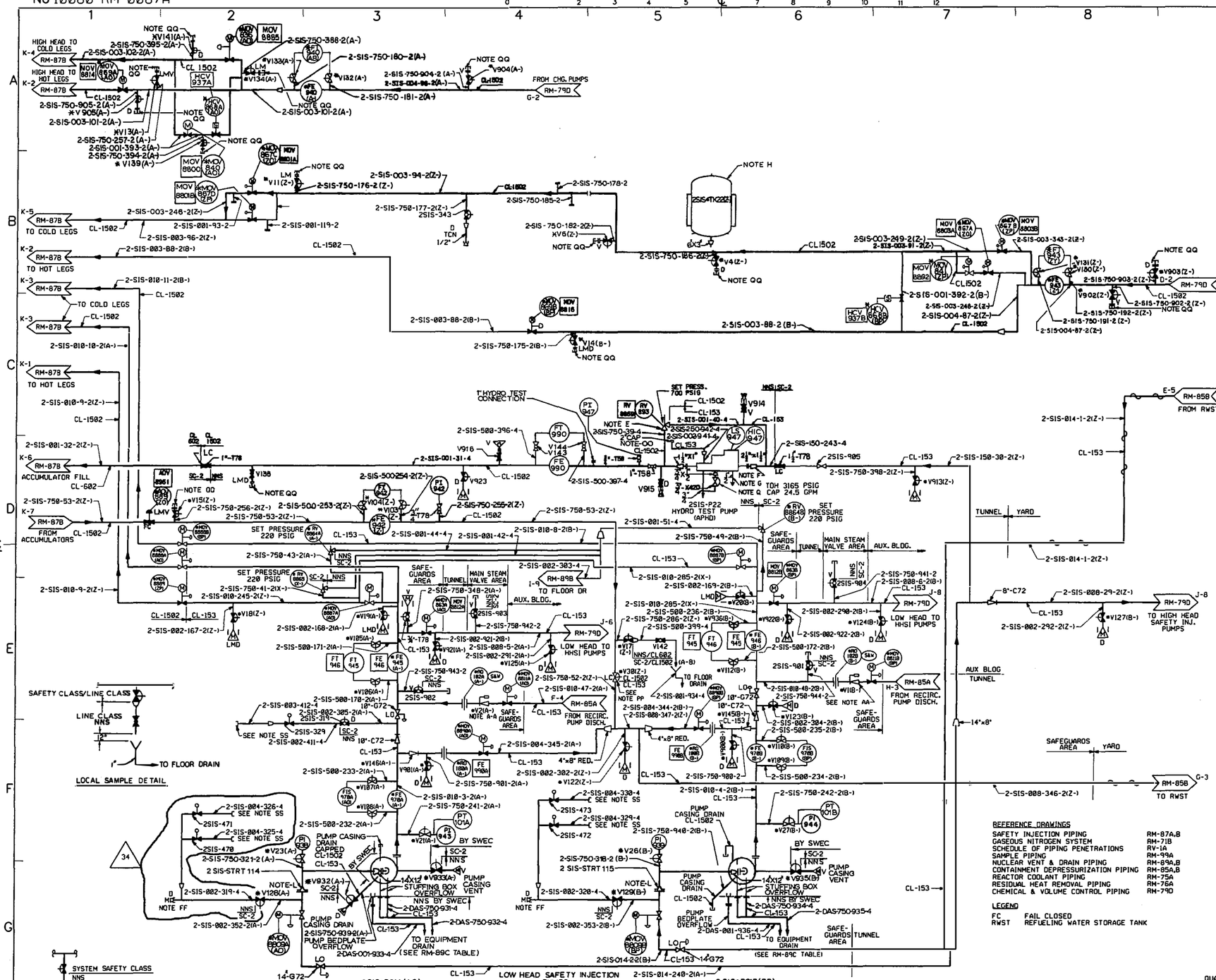

VALVE IDENTIFICATION	MARK NUMBER	PIPE SIZE	QUANTITY
V1, V2	VCW015-Y-2	10"	2
V122-125, 127-129, 18-20, 921, 922	VSS150-X-2	2"	12
V4, 6, 11, 13, 15, 17, 21, 23, 26, 27, 30, 130→134, 141, 900→905, 139, 913, 923, 932, 933, 935	VSS150A-2	3/4"	38
V103→110, 112, 936	VSS150A-2	1/2"	10
V145, 148	VCW015-X-2	4"	2
V914-916, 135	VOS150-5-4	3/4"	4
V142→144	VOS150-5-4	1/2"	3

LINE NO.	SCH.
2-SIS-008-005-2	80S
2-SIS-008-006-2	80S
2-SIS-010-285-2	80S
2-SIS-008-29-2	80S
2-SIS-008-005-2	160
2-SIS-008-006-2	160
2-SIS-010-3-2	80S

NOTES:

E. VALVE 2SIS-RV893 GAGGED DURING INITIAL HYDROTEST & RESET FOR 700 PSIG FOR NORMAL PLANT OPERATION.
F. ECCENTRIC REDUCER. STRAIGHT SIDE INSTALLED AT TOP OF PIPE RUN.
G. PLUNGER POT DRAIN.
H. BIT TANK HAS BEEN INSTALLED, WILL REMAIN ON THE FLOW DIAGRAM AND NOT BE REMOVED FROM ITS MOUNTED LOCATION.
K. LOCATE CHECK VALVE & CONN CLOSE TO RCS PIPING.
L. STRAINER ELEMENT REMOVED PER 2PO-2.11A.01
N. THE CONTROL EQUIPMENT MARK NUMBERS SHALL INCLUDE A PREFIX WHICH IS IDENTICAL TO THE SYSTEM CODE PREFIX FOR THE ASSOCIATED EQUIPMENT OR PIPE LINE UNLESS OTHERWISE NOTED EXAMPLE: 2SIS-PI947
O. 3/8" FLOW RESTRICTOR REQ'D PER 2BVS-939
Q. OVERFLOW FROM COOLANT HEAD TANK INTEGRAL TO PUMP
R. FLANGE FOR FLOW METERING ORIFICE TO VERIFY FLOW DURING PRE-OPERATIONAL TESTING
T. THE WESTINGHOUSE SPIN NUMBER FOR COMPONENTS IS SHOWN IN PARENTHESES. WESTINGHOUSE CONTROL EQUIPMENT IDENTIFICATION NUMBERS ARE SHOWN IN SQUARES ADJACENT TO BALLOONED MARK NUMBERS WHERE THESE ARE DIFFERENT.
U ALL COMPONENTS SUPPLIED BY W UNLESS NOTED BY SEW OR LISTED IN SEW VALVE TABLE
Y. * DENOTES SAFETY RELATED (SEE NOTE RR).
AA. LOCATE V1 & V2 AS CLOSE AS POSSIBLE TO MOV 8811A & B RESPECTIVELY.
BB. LOCATE AS CLOSE AS POSSIBLE TO 6" C88 NEAREST RCS
CC. THIS SYSTEM WILL BE MAINTAINED TO A CLEANNESS LVL 'B' IN ACCORDANCE WITH 2BVM-62.
EE. DENOTES ELECTRICAL HEAT TRACING.
FF. CONNECTION ON PUMP SUCTION LINE TO BE USED FOR ADDING PRESSURE INDICATORS TO MONITOR STRAINER PERFORMANCE.
GG. ORIFICE FLANGES WITH SOCKET WELDED TAPS ARE PROVIDED FOR ALL FE'S
HH. METHOD OF CLOSURE FOR LOCAL VENTS, DRAINS, TEST CONN & CHEMICAL CLEANING CONNECTIONS SHALL BE AS SHOWN REFER TO .2BVM-211 FOR ADDITIONAL DETAILS
JJ. VSLO CONNECTIONS WHICH ARE NOT PIPED UP SHALL BE CAPPED USING A 3000# SOCKET WELDED CAP (FOR EXAMPLE XMOV/8809BPP) AT (F-19)
KK. LOCKING DEVICES ADDED TO SIS THROTTLE VALVES DETAILS SHOWN IN 2BVS-939
LL. LOCATE VALVE SO IT IS ACCESSIBLE FOR MANUAL OPERATION
NN. LINE NUMBERS (ABOVE) L-3 CONTAIN A SCH (ABOVE) L-3 SPOOL PIECE. SEE PIPING DRAWING(S) FOR DETAILS.
OO. FILL CONNECTION EXCLUDING CAP FOR COOLANT HEAD TANK SHALL BE AT LEAST AS HIGH AS TOP ELEVATION OF TANK.
PP. 2SIS*V30 IS OPENED ONLY DURING TESTING OF THE ACCUMULATOR CHECK VA VES WITH FLOW TO THE RWST.
QQ. TEST CONNECTION FLGS. WITH 1/2" SWAGELOK CONNECTION.
RR. ALL ASTERISKS (*) SHOULD BE DISREGARDED. REFER TO THE ASSET EQUIPMENT LIST (AEL) AS THE OFFICIAL LISTING OF ANY ASSET'S QA CATEGORY.
SS. 1/8" DIAMETER HOLE IN CAP FOR TELLTALE DRAIN.

REFERENCE DRAWINGS

SAFETY INJECTION PIPING	RM-87A,B
GASEOUS NITROGEN SYSTEM	RM-71B
SCHEDULE OF PIPING PENETRATIONS	RV-1A
SAMPLE PIPING	RM-99A
NUCLEAR VENT & DRAIN PIPING	RM-89A,B
CONTAINMENT DEPRESSURIZATION PIPING	RM-85A,B
REACTOR COOLANT PIPING	RM-75A
RESIDUAL HEAT REMOVAL PIPING	RM-76A
CHEMICAL & VOLUME CONTROL PIPING	RM-79D

LEGEND

FC FAIL CLOSED
RWST REFUELING WATER STORAGE TANK

PORTIONS OF THIS DOCUMENT ARE NUCLEAR SAFETY RELATED

QUALITY GROUP CLASSIFICATIONS ARE 'INCORPORATED BY REFERENCE' INTO THE UFSAR. A CHANGE TO QUALITY GROUP CLASSIFICATIONS CONSTITUTES A CHANGE TO THE UFSAR.

REVISIONS

REVISION 34 INCORPORATED
OUN 13-0622-001-001
OUN 15-0499-001-002

FENOC — FIRST ENERGY NUCLEAR OPERATING COMPANY

SCALE	DATE	FINAL APP FOR ISSUE
NONE	10/30/15	11/5/2015
DRAWN BY MVF		
DESIGN		
CHECK		

BEAVER VALLEY POWER STATION UNIT NO 2

FLOW DIAGRAM
SAFETY INJECTION PIPING - SH 1

DRC NO 10080-RM-0087A AA REV 34

PREPARED ON THE BVPS CADDY SYSTEM

M:\v2\RM-0087A.DGN

0087A.DGN RM-0087A.DGN

No. 10080 - RM - 87B

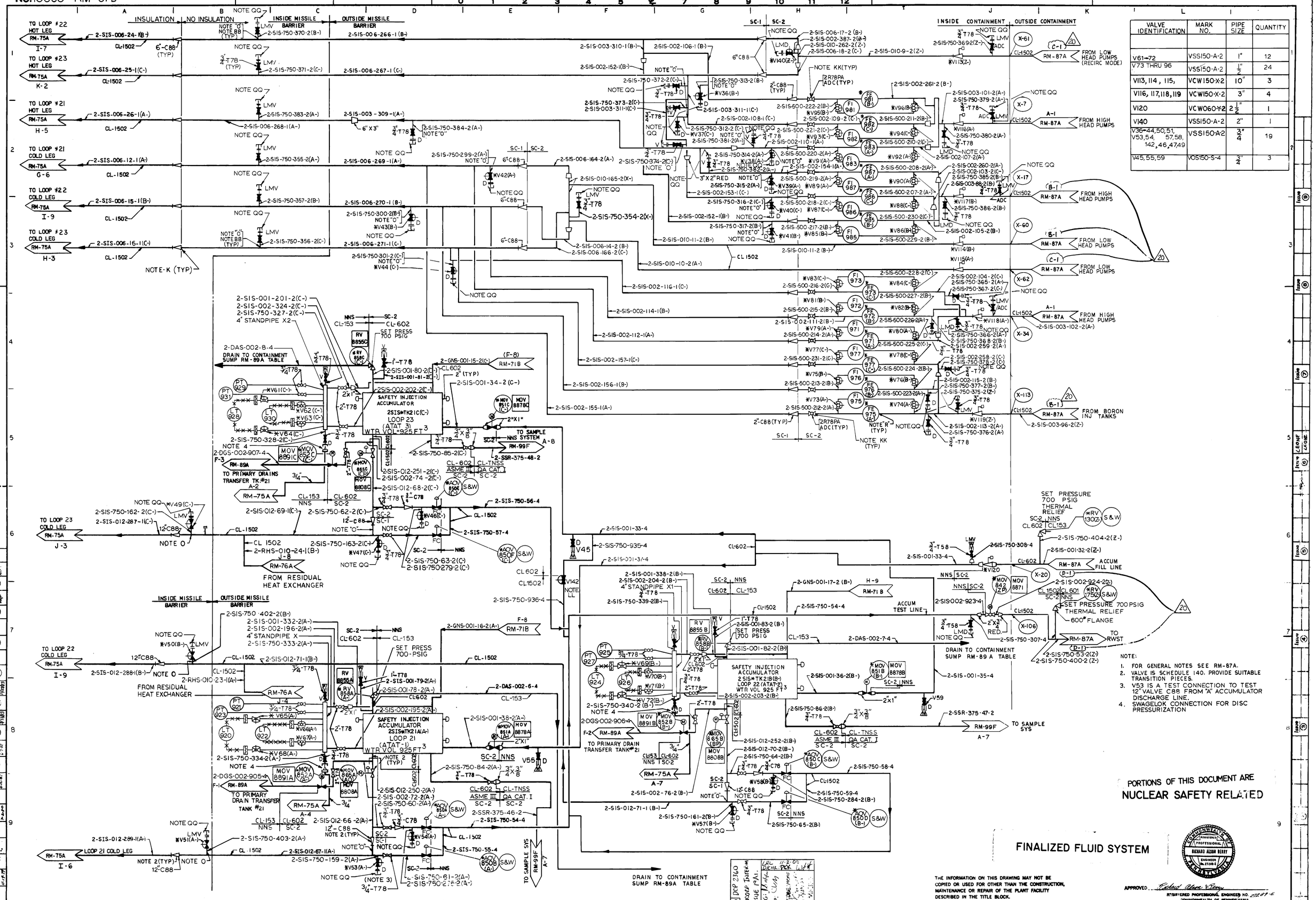

VALVE IDENTIFICATION	MARK NO.	PIPE SIZE	QUANTITY
V61-72	VSS150-A-2	1"	12
V73 THRU 96	VSS150-A-2	1/2"	24
V113, 114, 115,	VCW150-X-2	10"	3
V116, 117, 118, 119	VCW150-X-2	3"	4
V120	VCW060-X-2	2 1/2"	1
V140	VSS150-A-2	2"	1
V36-44, 50, 51, V53, 54, 57, 58, 142, 46, 47, 49	VSS150-A-2	3/4"	19
V45, 55, 59	VOS150-S-4	3/4"	3

NOTE:
1. FOR GENERAL NOTES SEE RM-87A.
2. VALVE IS SCHEDULE 140. PROVIDE SUITABLE TRANSITION PIECES.
3. V53 IS A TEST CONNECTION TO TEST 12" VALVE C88 FROM "A" ACCUMULATOR DISCHARGE LINE.
4. SWAGELOK CONNECTION FOR DISC PRESSURIZATION

PORTIONS OF THIS DOCUMENT ARE
NUCLEAR SAFETY RELATED

FINALIZED FLUID SYSTEM

THE INFORMATION ON THIS DRAWING MAY NOT BE COPIED OR USED FOR OTHER THAN THE CONSTRUCTION, MAINTENANCE OR REPAIR OF THE PLANT FACILITY DESCRIBED IN THE TITLE BLOCK.

COMMONWEALTH OF PENNSYLVANIA REGISTERED PROFESSIONAL ENGINEER RICHARD ALSON BERRY ENGINEER No. 27268-E

APPROVED: Richard Alson Berry
REGISTERED PROFESSIONAL ENGINEER NO. 27268-E
COMMONWEALTH OF PENNSYLVANIA

REVISIONS	DESCRIPTION
18	DCP 1834, DCP 1636, CO D86601, DCP 1636-1, ADDED NOTE 3, DCP 1636-2 INC-1, 1-TRIM ISSUE, 1-TB2
19	DCP 1439, CO, INCORPD INTERIM ISSUE TA2
20	DCP 2360, INCORPD INTERIM ISSUE TA3
17	SEE RECORD OF DRAWING CHANGES 12241-BCM-87B-17
16	SEE RECORD OF DRAWING CHANGES 12241-BCM-87B-16
15	SEE RECORD OF DRAWING CHANGES 12241-BCM-87B-15
14	SEE RECORD OF DWG CHANGE 12241-BCM-87B-14
13	RECORD OF DWG CHNGS 12241-BCM-87B-13
12	SEE RECORD OF DRAWING CHANGES 12241-BCM-87B12
11	SEE RECORD OF DRAWING CHANGES 12241-BCM-87B-11
10	SEE RECORD OF DWG CHANGES 12241-BCM-87B-10
9	SEE RECORD OF DWG CHANGES 12241-BCM-87B-9
8	SEE RECORD OF DWG CHANGES 12241-BCM-87B-8
7	SEE RECORD OF DWG CHANGES 12241-BCM-87B-7
6	SEE RECORD OF DWG CHANGES 12241-BCM-87B-6
5	SEE RECORD OF DWG CHANGES 12241-BCM-87B-5
4	SEE RECORD OF DWG CHANGES 12241-BCM-87B-4
3	ISSUED FOR PRODUCTION
2	PSAR DWG. NOS. CHANGED WAS RM-41B
1	ORIGINAL ISSUE

MAM 5-19-92 D/CHK: MPB 5-27-92 D/CHK:

DUQUESNE LIGHT COMPANY
ENGINEERING & CONSTRUCTION PITTSBURGH, PA.

STONE & WEBSTER ENGINEERING CORP.
BOSTON, MASS.

SCALE | DATE 2-3-72 | ARCH. APP. | DRAWN TH.ST. | ELECT. APP. | CHECKED | MECH. APP. | INSPECTED PPB | STRUCT. APP.

FLOW DIAGRAM
SAFETY INJECTION PIPING - SH 2

BEAVER VALLEY POWER STATION UNIT NO 2

O.F.E. No. 10080 | C.O. No. 6289 | AA | No. 10080-RM-87B

S&W DWG. NO. 12241-RM-87B-20

ENG.: C. HASLAM
DR: E. CHASE

No. 10080-RM-0088A

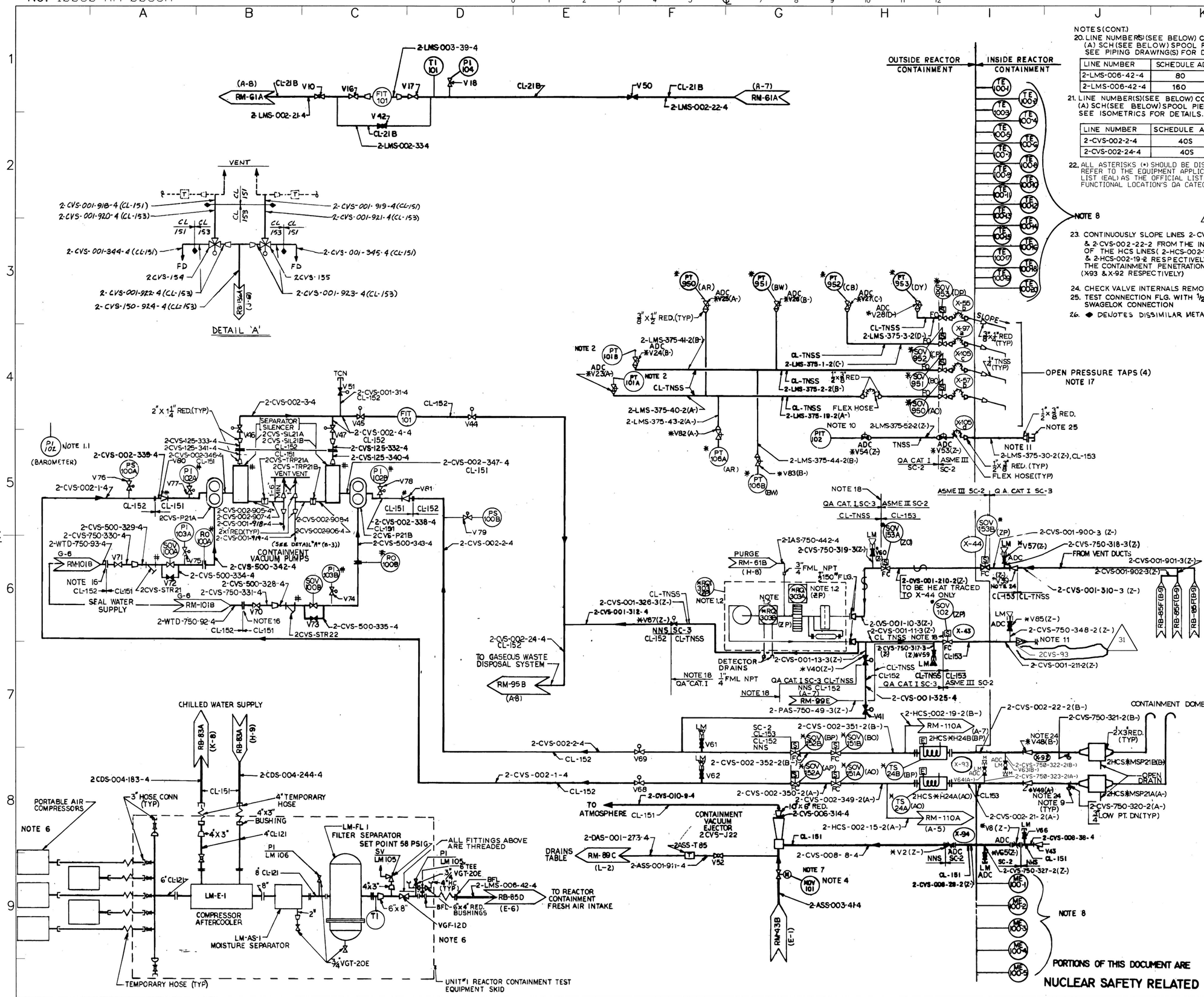

NOTES (CONT.)

20. LINE NUMBER(S) (SEE BELOW) CONTAIN(S) (A) SCH (SEE BELOW) SPOOL PIECE(S), SEE PIPING DRAWING(S) FOR DETAILS.

LINE NUMBER	SCHEDULE ADDED
2-LMS-006-42-4	80
2-LMS-006-42-4	160

21. LINE NUMBER(S) (SEE BELOW) CONTAIN(S) (A) SCH (SEE BELOW) SPOOL PIECE(S) SEE ISOMETRICS FOR DETAILS.

LINE NUMBER	SCHEDULE ADDED
2-CVS-002-2-4	40S
2-CVS-002-24-4	40S

22. ALL ASTERISKS (*) SHOULD BE DISREGARDED. REFER TO THE EQUIPMENT APPLICABILITY LIST (EAL) AS THE OFFICIAL LISTING OF ANY FUNCTIONAL LOCATION'S QA CATEGORY.

31

23. CONTINUOUSLY SLOPE LINES 2-CVS-002-21-2 & 2-CVS-002-22-2 FROM THE INTERSECTION OF THE HCS LINES (2-HCS-002-15-2 & 2-HCS-002-19-2 RESPECTIVELY) DOWN TO THE CONTAINMENT PENETRATIONS (X93 & X-92 RESPECTIVELY)
24. CHECK VALVE INTERNALS REMOVED.
25. TEST CONNECTION FLG. WITH 1/2" SWAGELOK CONNECTION
26. ◆ DENOTES DISSIMILAR METAL WELD.

VALVE IDENTIFICATION	MARK NUMBER	PIPE SIZE	QUANTITY
V40,67	VBS015-Y-2	1"	2
V65	VOS060-C-2	3/4"	1
V23,24,25,26,27,28,53,54,82,83	VSS400-S-2 SEE NOTE 19	1" 2	10
V18	VGM020-S-4	3/4"	1
V39 NOTE 12	VCS060-G-2	1"	1
V41,51	VBS015-B-4	1"	2
V44,45,46,47,68,69	VBS015-B-4	2"	6
V48,49 NOTE 24	VCS060-A-2	2"	2
V16, 17,50	VGM020-S-4	2"	3
V10,V42	VOM020-D-4	2"	2
V43	VCW015-A-4	8"	1
V2,8	VVF015-GR-2	6"	2
V59,60	VOS150-X-3	3/4"	2
V52	VOS060-C-4	1"	1
V57, 63,64,85	VOS060-W-2	3/4"	4
V61,62 NOTE 12	VOS060-W-4	3/4"	2
V66	VOS060-C-4	3/4"	1
V70,71	VGS060-B-4	3/4"	2
V72,73	VGS060-B-4	1/2"	2
V80,81	SEE NOTE 15		
V76,79	VBS015-D-4	3/4"	2
V74,75,77,78	VBS015-Z-4	3/4"	4
V 85	VOS060-W-2	3/4"	1

NOTES CONTINUED

15. # INDICATES EQUIPMENT SUPPLIED BY NASH ENGINEERING CO.
16. V70&V71 TO HAVE A SOCKET WELD FLANGE ON UPSTREAM SIDE OF VALVE
17. 3/4" TUBE .065 WALL (TNSS) SERVES AS A RESTRICTION DEVICE.
18. BY SWEC INSTRUMENTATION (SEE RK-15 SERIES DWGS)
19. BY SWEC INSTRUMENTATION (2BVS-679)

NOTES CONT @ K-1

REFERENCE DWGS (CONT)
DEMIN WATER & CASK WASHDOWN RM-101B

NOTES:

1. THE CONTROL EQUIPMENT MARK NUMBERS SHALL INCLUDE THE PREFIX "2" AND THE SYSTEM CODE FOR THE ASSOCIATED EQUIPMENT OR PIPE LINE UNLESS OTHERWISE NOTED. EX: 2LMS-PT100A.
1.1 LOCAL INDICATING BAROMETER LOCATED IN THE PIPE TUNNEL. THE CONTROL EQUIPMENT SYSTEM PREFIX IS "LMS"
1.2 THE CONTROL EQUIPMENT SYSTEM PREFIX FOR THESE PIECES IS "RMR"
2. THE CONTROL EQUIPMENT SYSTEM PREFIX FOR THESE PIECES OF EQUIPMENT IS "CVS".
3. TEMPERATURE RESISTANT BULBS LOCATED DOWNSTREAM OF EACH CONTAINMENT AIR COOLER, PREFIX IS "CVS".
4. LOCATE VALVE MOV-101 AS CLOSE AS POSSIBLE TO LINE 2-ASS-006-129-4
6. TEST EQUIPMENT SKID AND PORTABLE AIR COMPRESSORS TO BE LOCATED IN YARD, NORTH OF SAFEGUARDS AREAS, DURING CONTAINMENT TYPE A TESTING ONLY.
7. THE CONTROL PREFIX FOR THIS PIECE OF EQUIPMENT IS "ABS".
8. THE CONTROL EQUIPMENT SYSTEM PREFIX FOR THESE PIECES IS "LMS"
9. 3/4" CAP WITH A 1/16" HOLE DRILLED IN BOTTOM FOR DRAINAGE.
10. PIT-102 IS TO BE USED FOR CONTAINMENT TYPE "A" TESTING AND WILL BE REMOVED AND THE LINE CAPPED UPON COMPLETION OF TESTING.
11. LOCATE OPEN FLANGED END OF PIPE SUCH THAT IT IS EASILY ACCESSIBLE FROM A FLOOR OR PLATFORM.
12. THE FOLLOWING SUBSTITUTIONS ARE ACCEPTABLE:
VCS015-X-2 FOR VCS060-G-2
VOS015-A-4 FOR VOS060-W-4
13. THIS SYSTEM SHALL BE MAINTAINED TO CLEANNESS LEVEL "P" IN ACCORDANCE WITH 2BVM-62.
14. "METHOD OF CLOSURE FOR LOCAL VENTS, DRAINS, TEST CONNECTIONS AND CHEMICAL CLEANING CONNECTIONS SHALL BE AS SHOWN. REFER TO 2BVM-211 FOR ADDITIONAL DETAILS." (NOTES CONTINUED ABOVE)

REFERENCE DWGS:

COMPRESSED AIR PIPING	RM-61B
GASEOUS WASTE DISPOSAL	RM-95B
POST DBA HYDROGEN CONTROL	RM-110A
AIR COND & VENT PRIMARY PLANT	RB-85D
CHILLED WATER SYSTEM	RB-83A
AUX AIR & STEAM REMOVAL (REF DWGS CONT. ABOVE)	RB-43B

QUALITY GROUP CLASSIFICATIONS ARE "INCORPORATED BY REFERENCE" INTO THE UFSAR. A CHANGE TO QUALITY GROUP CLASSIFICATIONS CONSTITUTES A CHANGE TO THE UFSAR.

REVISION 31 INCORPORATED DUN 09-0091-001-001 SATISFIED ECP 09-0197

FENOC FIRSTENERGY NUCLEAR OPERATING COMPANY

SCALE	DATE	ARCH APP.	FINAL APP. FOR ISSUE
NONE	1/6/10	ELECT. APP.	
	DRAWN BY MVF	MECH APP.	
	DFG/CHK	CIVIL APP.	
	ENGR/CHK		

BEAVER VALLEY POWER STATION UNIT 2

FLOW DIAGRAM
CONT VAC LEAKAGE MONITORING PIPING

G.F.E. NO. | STA. NO. | AA | DWG. NO. 10080-RM-0088A | REV. 31

ISSUES

PREPARED ON THE BVPS — CAEDDI SYSTEM

4-OCT-2011 14:15 M:\u2\RM-0088A.DGN

TAG16748 RM-0088A 10/4/2011 2:17:56 PM

No.10080-RM-89A

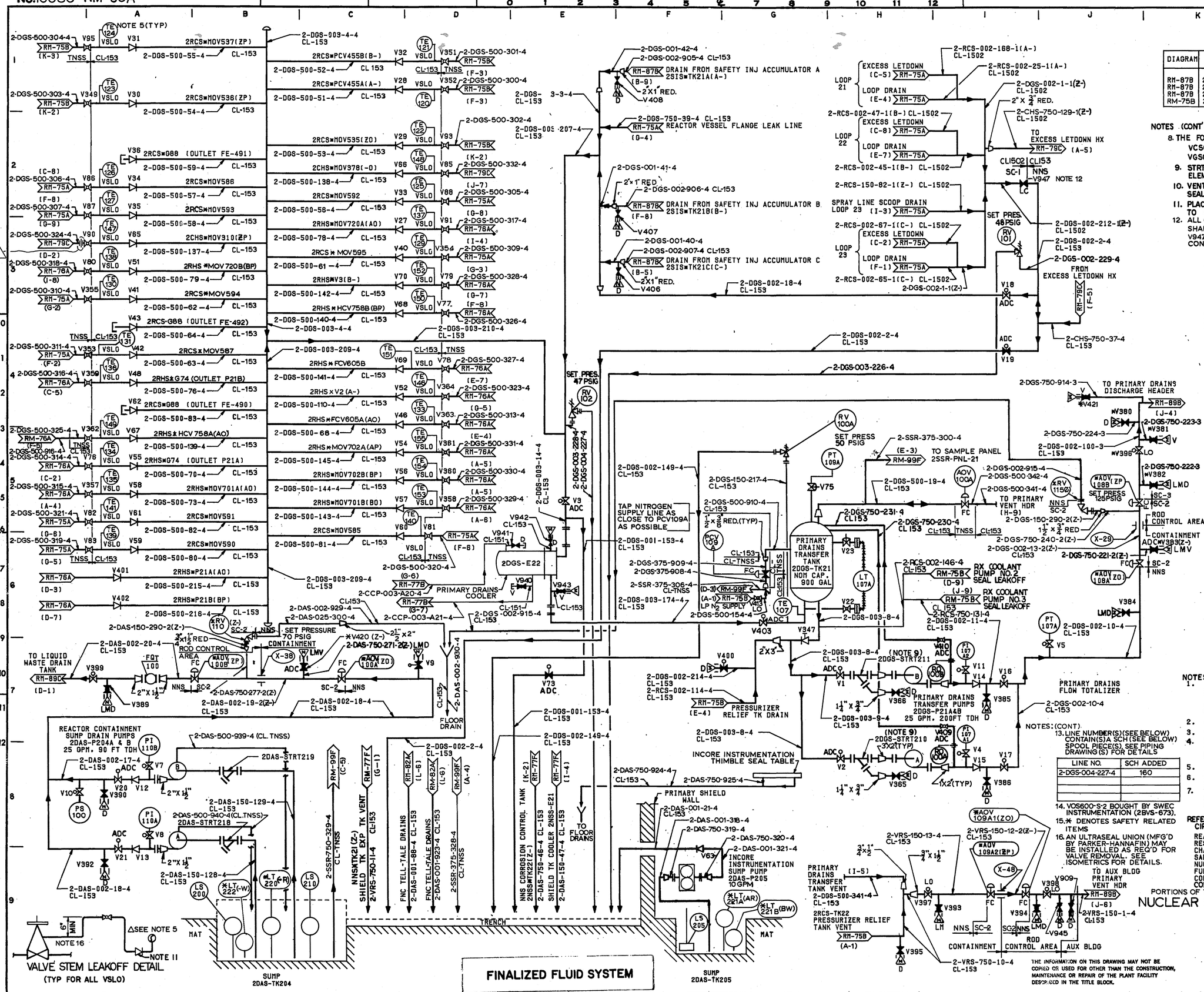

DRAINS TABLE (SEE NOTE 6)

DIAGRAM	EQUIPMENT	LINE NUMBER	VIA	SUMP TANK NUMBER
RM-87B	2SIS-TK21A	2-DAS-002-6-4	MAT	2DAS-TK204
RM-87B	2SIS-TK21B	2-DAS-002-7-4	MAT	2DAS-TK204
RM-87B	2SIS-TK21C	2-DAS-002-8-4	MAT	2DAS-TK204
RM-75B	2RCS-RV101	2-RCS-003-276-4	MAT	2DAS-TK204

NOTES (CONT'D)

8. THE FOLLOWING SUBSTITUTIONS ARE ACCEPTABLE.
   VCS015-X-4 FOR VCS060-G-4 VOS015-A-4 FOR VOS060-W-4
   VGS015-A-4 FOR VGS060-V-4 VGS015-A-3 FOR VGS060-V-3
9. STRT-210 AND STRT-211 SHALL HAVE THE STRAINER ELEMENTS REMOVED AFTER SYSTEM HAS BEEN FLUSHED.
10. VENT LINES SHALL BE ROUTED SO THAT NO LOOP SEAL IS PRODUCED.
11. PLACE VSLO CHECK VALVE AS CLOSE AS POSSIBLE TO HEADER.
12. ALL CLASS 1 CODE PIPING, FROM 1¼" TO 2" DIAMETER, SHALL BE BUTT WELDED EXCEPT AT CONNECTION TO V947
CONT'D J-8)

VALVE IDENTIFICATION	MARK NUMBER	SIZE PIPE	NUMBER OF VALES
V947	VGS187-1	2"	1
V1,2,3,403	VBW015-D-4	3"	4
V4,5,6,7,8,9,10, 11	VBS015-D-4	3/4"	8
V12,13,14,15	VCS060-G-4	2"	4
V16,17,18,19,20, 21, 399,400	VBS015-D-4	2"	8
V22,413	VOS060-W-4	1/2"	2
V397	VBS015-D-4	1 1/2"	1
V941	VGS060-B-4	3/4"	1
V942	VGS060-V-4	3/4"	1
V396	VBS015-Y-3	2"	1
V398	VBS015-D-4	1 1/2"	1
V27,28,29,30,31, 32,33,34,35,36, ,40,41, 42,43,46,48,51, 52,54,55,56,57, 58,59,60,61,62, 65,66,67,68,69, 70,401,402	VCS060-G-2	1" 2	35
V73	VBS015-D-4	1"	1
V69	VCS060-G-4	1"	1
V947	VKF015-N-4	3"	1
V76,77,78,79,80, 81,82,83 ,85, 86,87,88 ,90, 91, ,93, 95, 349, ,351,352 353,354,355, 357,358,359,360 361,362,363,364	VOS800-S-2 NOTE 14	1" 2	33
V421	VGS015-A-3	3/4"	1
V365,366, 385,386,390,392, 395,406,407,408	VGS060-V-4	3" 4	10
V389,393,384, 409,410,394,943	VOS060-W-4	3/4	7
V23,75	VSS150-A-3	1" 2	2
V381	VOS060-W-3	3/4"	1
V383,420,382	VOS060-W-2	3/4"	3
V945	VGS015-A-4	3/4	1
V380,909	VGS060-V-3	3/4	2
V940	VOS060-C-4	3/4"	1

NOTES:

1. THE CONTROL EQUIPMENT MARK NUMBERS SHALL INCLUDE A PREFIX WHICH IS IDENTICAL TO THE SYSTEM CODE PREFIX FOR THE ASSOCIATED EQUIPMENT OR PIPE, UNLESS OTHERWISE NOTED. EXAMPLE: 2DAS-P204
2. ADC INDICATES ADMINISTRATIVELY CONTROLLED
3. VSLO-VALVE STEM LEAKOFF
4. DGS LINES SHALL BE MAINTAINED AT CLEANNESS LEVEL "B" DAS, VAS, AND VRS LINES SHALL BE MAINTAINED AT CLEANNESS LEVEL "C" IN ACCORDANCE WITH 28VM-62.
5. △ -CLAMP ON THERMOCOUPLE.
6. LINE NUMBERS LISTED IN THE DRAINS TABLE ARE SHOWN ON THEIR PARENT DIAGRAMS ONLY.
7. METHOD OF CLOSURE FOR LOCAL VENTS, DRAINS, TEST CONNECTIONS AND CHEMICAL CLEANING CONNECTIONS SHALL BE AS SHOWN. REFER TO 28VM-211 FOR ADDITIONAL DETAILS.

REFERENCE DWGS:

CIRCULATING & SERVICE WATER PIPING	RM-47F
REACTOR COOLANT PIPING	RM-75A,B
RESIDUAL HEAT REMOVAL PIPING	RM-78A
CHARGING & VOLUME CONTROL PIPING	RM-79C
SAFETY INJECTION PIPING	RM-87B
NUCLEAR EQPT VENT & DRAIN PP	RM-89B,C
FUEL PIT COOLING PURIFICATION PP	RM-82A
CONTAINMENT DEPRESSURIZATION PP	RM-85B
COMPONENT COOLING PIPING	RM-77F

NOTES: (CONT)

13. LINE NUMBER(S) (SEE BELOW) CONTAIN(S) A SCH (SEE BELOW) SPOOL PIECE(S). SEE PIPING DRAWING(S) FOR DETAILS

LINE NO.	SCH ADDED
2-DGS-004-227-4	160

14. VOS600-S-2 BOUGHT BY SWEC INSTRUMENTATION (2BVS-673).
15. * DENOTES SAFETY RELATED ITEMS
16. AN ULTRASEAL UNION (MFG'D BY PARKER-HANNAFIN) MAY BE INSTALLED AS REQ'D FOR VALVE REMOVAL. SEE ISOMETRICS FOR DETAILS.

PORTIONS OF THIS DOCUMENT ARE
NUCLEAR SAFETY RELATED

THE INFORMATION ON THIS DRAWING MAY NOT BE COPIED OR USED FOR OTHER THAN THE CONSTRUCTION, MAINTENANCE OR REPAIR OF THE PLANT FACILITY DESCRIBED IN THE TITLE BLOCK.

REVISIONS
28 ECP 02-0112 INCORP. IDCN 2-RM-0089A-E02-0112-01 DEH 7/10/02 D/CHK: SUP:

FENOC FirstEnergy Nuclear Operating Company

SCALE NONE | DATE 1-8-79 | DRAWN RKN | CHECKED | INSPECTED

ARCH. APP. | ELECT. APP. | MECH. APP. | STRUCT. APP.

FLOW DIAGRAM
NUCLEAR EQPT VENT & DR PP-SH.1
BEAVER VALLEY POWER STATION NO 2
O.F.E. No. 10080 C.O. No. 6269
AA No. 10080-RM-89A

S&W DWG. NO. 12241-RM-89A-28

G. CUNNINGHAM E. CHASE

10-JUL-2002 12:57 m:\u2\rm0890a1.e27

No.10080-RM-89B

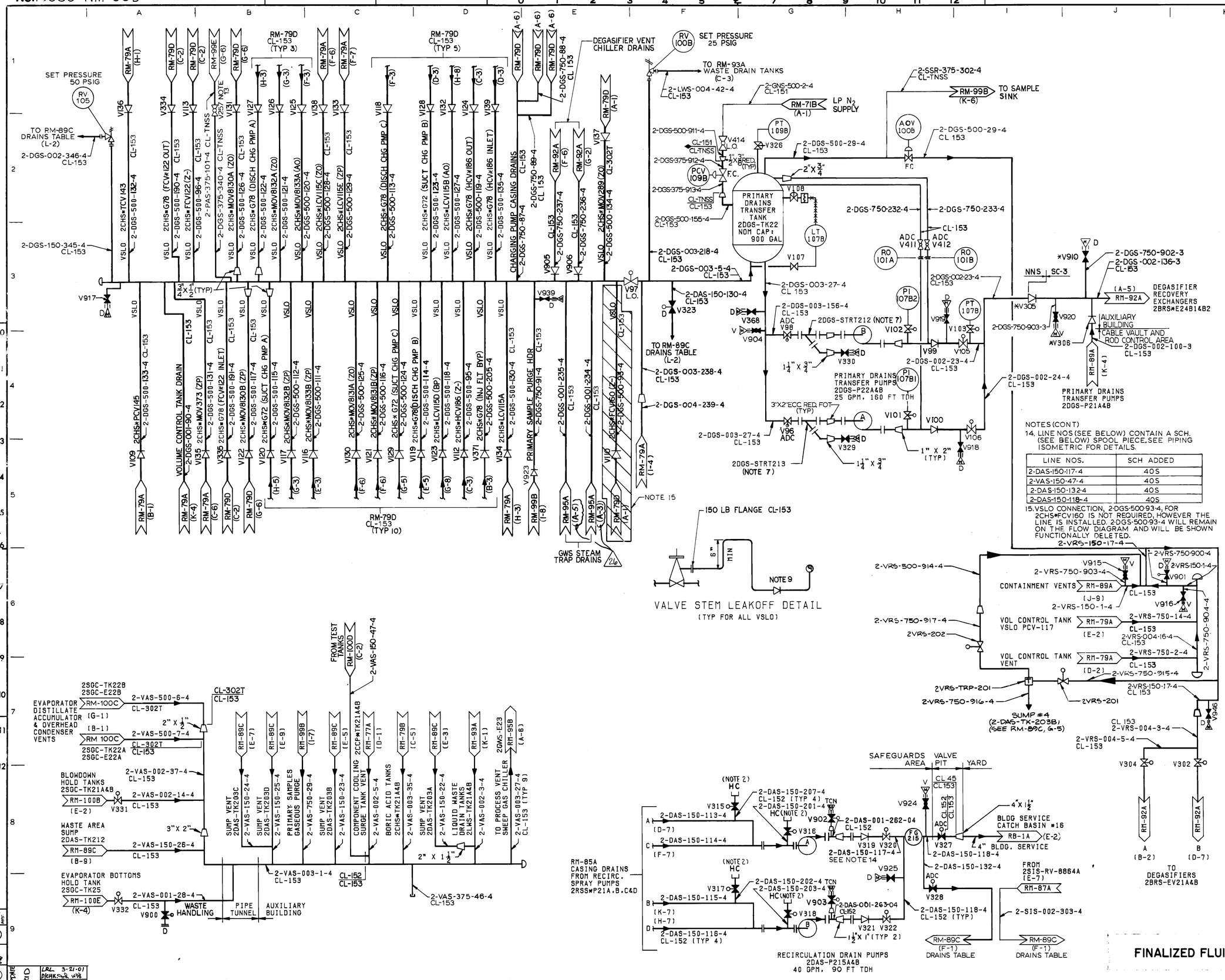

VALVE IDENTIFICATION	MARK NUMBER	PIPE SIZE	NUMBER OF VALVES
V96,97,98	VBW015-D-4	3"	3
V99,100	VCS060-G-4	2"	2
V101,102,103, 900,902,903	VBS015-D-4	3/4"	6
V257	VOS600-S-4 NOTE 13	3/8"	1
V107	VGS060-V-4	1/2"	1
V109,110, ,112, 113,116,117,118, 119,120,121,122, 123,124,125,126, 127,128,129,130, 131,132,133,134, 135,136,137,138, 139,334,335,371	VCS060-G-4	1/2"	31
V305,306	VCS060-G-3	2"	2
V319,321	VCS060-G-4	1/2"	2
V315,316,317,318, 320,322,323,327, 328	VBS015-D-4	1/2"	9
V329,330,368,917,918 919,925,939,946	VGS060-V-4	3/4"	9
V332	VBS015-B-4	1"	1
V105,106,331	VBS015-D-4	2"	3
V302,304	VBW015-Y-3	4"	2
V108,326	VSS150-A-3	1/2"	2
V904,411,412,924	VOS060-W-4	3/4"	4
V901	VBS015-D-4	3/4"	1
V414	VOS060-C-4	1/2"	1
V905,906,923	VCS060-G-4	3/4"	3
V910	VGS060-V-3	3/4"	1
V915,916	VOS060-W-4	3/4"	2
V920	VOS060-W-3	3/4"	1

NOTES:

1. THE CONTROL EQUIPMENT MARK NUMBERS SHALL INCLUDE A PREFIX WHICH IS IDENTICAL TO THE SYSTEM CODE PREFIX FOR THE ASSOCIATED EQUIPMENT OR PIPE LINE UNLESS OTHERWISE NOTED. EXAMPLE : 2DGS-LT107B
2. HOSE CONNECTION IS FOR PUMPING LIQUID FROM THE LOWER RECIRCULATION SPRAY PUMP PITS USING A TEMPORARY SUBMERSIBLE PUMP TO PROVIDE FLOW TO THE RECIRCULATION DRAINS PUMP.
3. VSLO - VALVE STEM LEAKOFF
4. DGS LINES SHALL BE MAINTAINED AT CLEANNESS LEVEL"B", DAS, VAS AND VRS LINES SHALL BE MAINTAINED AT CLEANNESS LEVEL"C" IN ACCORDANCE WITH 2BVM-12
5. METHOD OF CLOSURE FOR LOCAL VENTS AND DRAINS, TEST CONNECTIONS AND CHEMICAL CLEANING CONNECTIONS SHALL BE AS SHOWN. REFER TO 2BVM-211 FOR ADDITIONAL DETAILS.
6. THE FOLLOWING SUBSTITUTIONS ARE ACCEPTABLE
   VCS015-X-4 FOR VCS060-G-4
   VGS015-A-4 FOR VGS060-V-4
   VCS015-X-3 FOR VCS060-G-3
   VOS015-A-4 FOR VOS060-W-4
7. STRT-212 AND STRT-213 SHALL HAVE THE STRAINER ELEMENT REMOVEDAFTER SYSTEM HAS BEEN FLUSHED.
8. VENT LINES SHALL BE ROUTED SO THAT NO LOOP SEAL IS PRODUCED.
9. PLACE VSLO CHECK VALVE AS CLOSE AS POSSIBLE TO HEADER.
10. * DENOTES SAFETY RELATED ITEMS.
11. LINES 2-VRS-004-3-4, 2-VRS-004-5-4, & 2-VRS-004-16-4 WERE INSTL TO ASME III REQUIREMENTS AND WERE DOWNGRADED TO ANSI B31.1 AFTER INSTALLATION.
12. ◆ INDICATES DISSIMILAR METAL WELD.

REFERENCE DWG'S:

GASEOUS NITROGEN PIPING	RM-71B
NUCLEAR EQUIP. VENT & DRAIN PIPING	RM-89A&C
CONTAINMENT DEPRESSURIZATION PIPING	RM-85A
STEAM GENERATOR BLOWDOWN PIPING	RM-100B,C,D,E
GASEOUS WASTE DISPOSAL PIPING	RM-95A,B
SAFETY INJECTION PIPING	RM-87A
CHARGING & VOLUME CONTROL PIPING	RM-79A,B&D
SAMPLE PIPING	RM-99B
LIQUID WASTE DISPOSAL PIPING	RM-93A
BORON RECOVERY PIPING	RM-92A
COMPONENT COOLING PIPING	RM-77A
YARD STORM & SANITARY SEWERS	RB-1A

NOTES (CONT'D)

13. TO BE FIELD PURCHASED PER PEL PAGES. (NOTES CONTD J-5)
14. LINE NOS (SEE BELOW) CONTAIN A SCH. (SEE BELOW) SPOOL PIECE, SEE PIPING ISOMETRIC FOR DETAILS.

LINE NOS.	SCH ADDED
2-DAS-150-117-4	40S
2-VAS-150-47-4	40S
2-DAS-150-132-4	40S
2-DAS-150-118-4	40S

15. VSLO CONNECTION, 2-DGS-500-93-4, FOR 2CHS*FCV160 IS NOT REQUIRED, HOWEVER THE LINE IS INSTALLED. 2-DGS-500-93-4 WILL REMAIN ON THE FLOW DIAGRAM AND WILL BE SHOWN FUNCTIONALLY DELETED.

PORTIONS OF THIS DOCUMENT ARE

NUCLEAR SAFETY RELATED

FINALIZED FLUID SYSTEM

THE INFORMATION ON THIS DRAWING MAY NOT BE COPIED OR USED FOR OTHER THAN THE CONSTRUCTION, MAINTENANCE OR REPAIR OF THE PLANT FACILITY DESCRIBED IN THE TITLE BLOCK.

APPROVED — REGISTERED PROFESSIONAL ENGINEER NO. 27289-E COMMONWEALTH OF PENNSYLVANIA

REVISIONS	
26	MINOR UPDATE
25	REVISED GRID LOCATION.
24	DCP 2147 INCORP. INTERIM ISSUE 22A1 MICRO
23	SEE RECORD OF DWG CHGS 12241-BCM-89B-23
22	SEE RECORD OF DRAWING CHANGES 12241-BCM-89B-22
21	FOR RECORD OF DRAWING CHANGES SEE 12241-BCM-89-21
20	SEE RECORD OF DRAWING CHANGES 12241-BCM-89B-20
19	SEE RECORD OF DRAWING CHANGES 12241-BCM-89B-19
18	SEE RECORD OF DRAWING CHANGES 12241-BCM-89B-18
17	SEE RECORD OF DRAWING CHANGES 12241-BCM-89B-17
16	SEE RECORD OF DRAWING CHANGES 12241-BCM-89B-16
15	SEE RECORD OF DRAWING CHANGES 12241-BCM-89B-15
14	SEE RECORD OF DRAWING CHANGES 12241-BCM-89B-14
13	SEE RECORD OF DRAWING CHANGES 12241-BCM-89B-13
12	SEE RECORD OF DRAWING CHANGES 12241-BCM-89B-12
11	SEE RECORD OF DWG CHANGES 12241-BCM-89B-11
10	REDRAWN; INC E&DCR NO'S 2P-885, 1444,885B, 2209,154742PS-1121
9	DWG VOID & RENUMBERED RM-89BVD-9

STONE & WEBSTER ENGINEERING CORP. BOSTON, MASS.

DUQUESNE LIGHT COMPANY
ENGINEERING & CONSTRUCTION PITTSBURGH, PA.

SCALE: NONE
DATE / DRAWN: J. EVERY / CHECKED / INSPECTED / ARCH. APP. / ELECT. APP. / MECH. APP. / STRUCT. APP.

FLOW DIAGRAM
NUCLEAR EQUIP. VENT & DRAIN PIPING-SH.2
BEAVER VALLEY POWER STATION NO2
O. F. E. No. 10080
C. O. No. 6280
AA No. 10080-RM-89B

S&W DWG. No. 12241-RM-89B-26

Engineer: G. CUNNINGHAM
Dsn. Eng: E. CHASE

No.10080-RM-89C

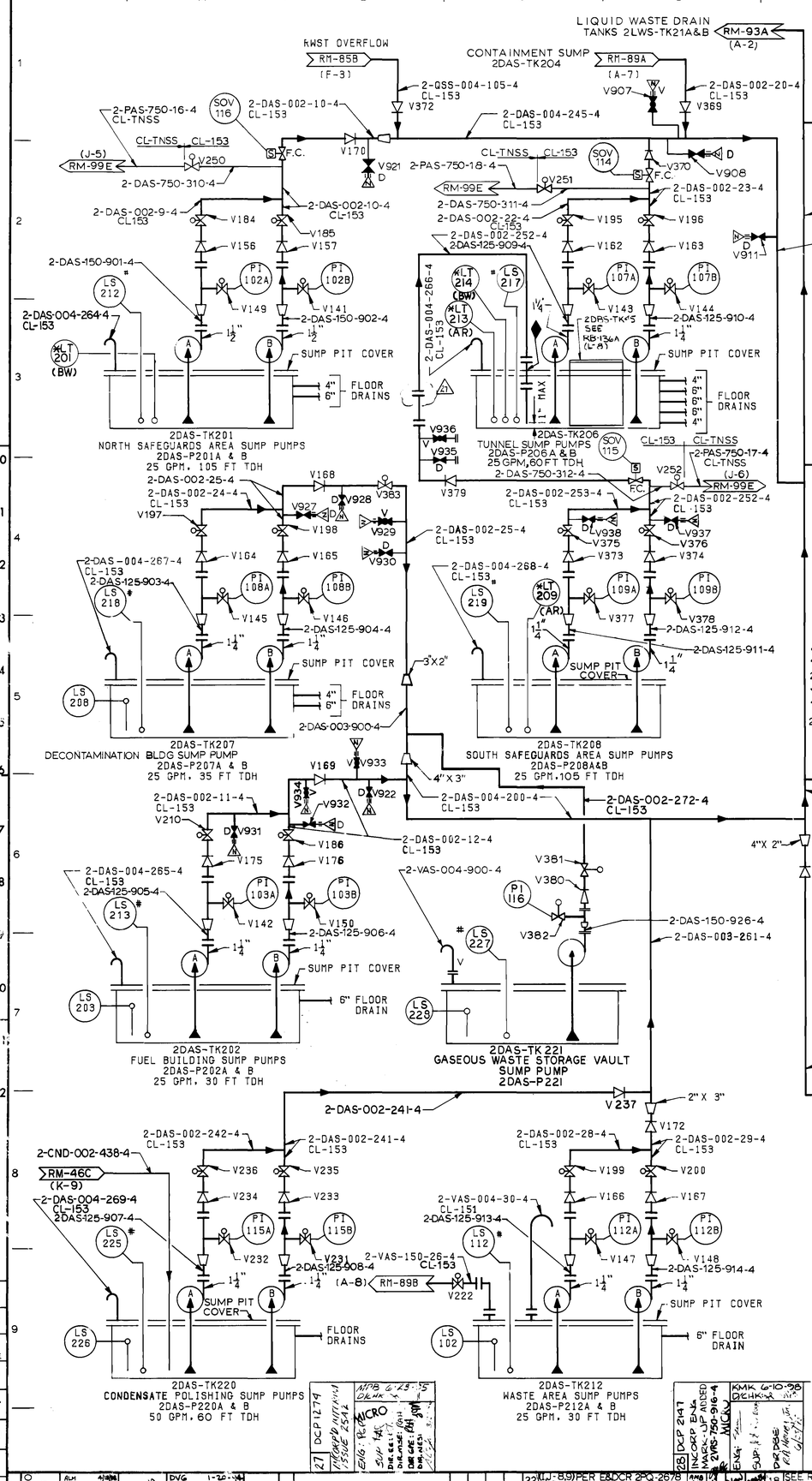

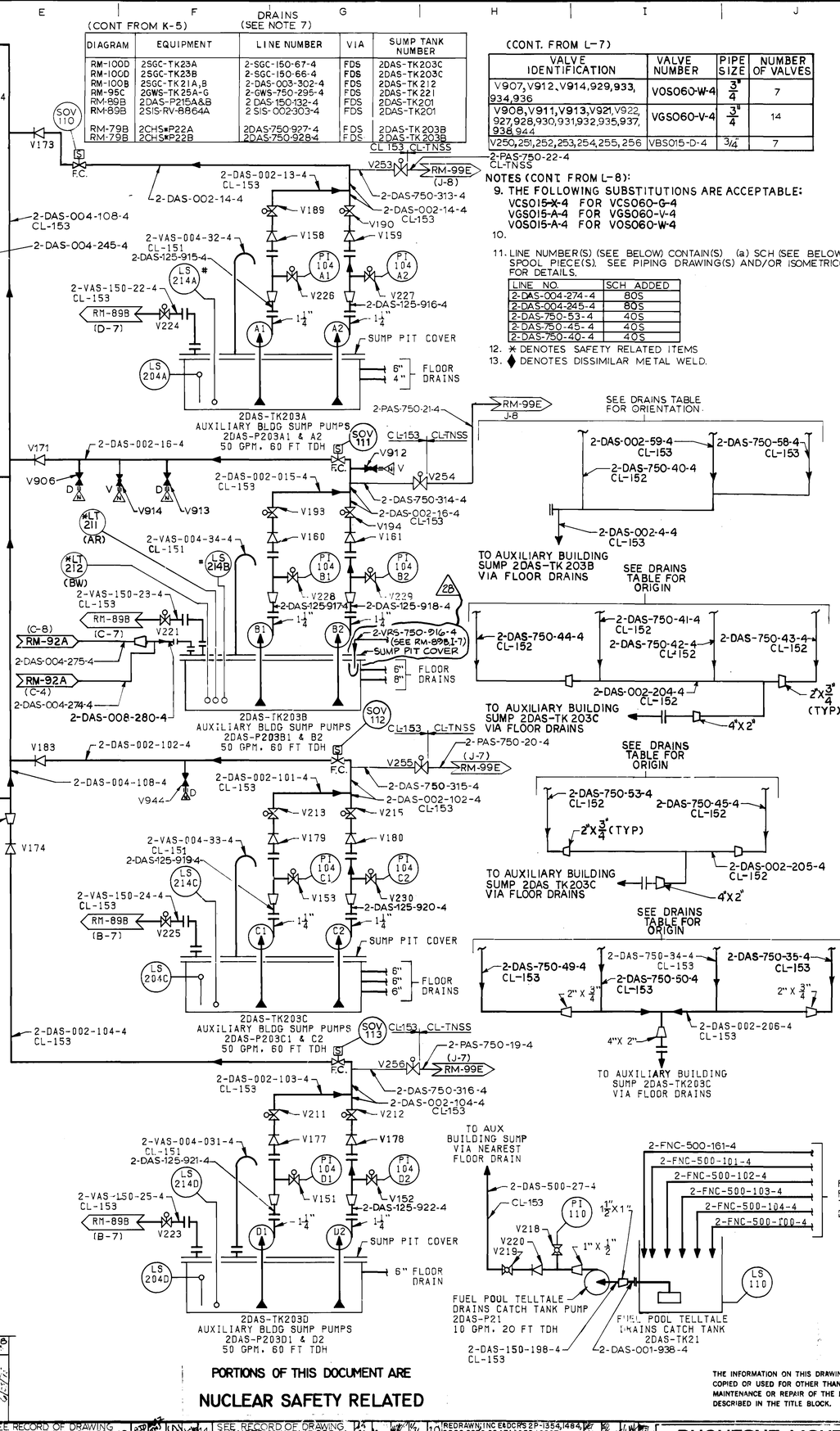

DRAINS (SEE NOTE 7)

(CONT FROM K-5)

DIAGRAM	EQUIPMENT	LINE NUMBER	VIA	SUMP TANK NUMBER
RM-100D	2SGC-TK23A	2-SGC-150-67-4	FDS	2DAS-TK203C
RM-100D	2SGC-TK23B	2-SGC-150-66-4	FDS	2DAS-TK203C
RM-100B	2SGC-TK21A,B	2-DAS-003-302-4	FDS	2DAS-TK212
RM-95C	2GWS-TK25A-G	2-GWS-750-295-4	FDS	2DAS-TK221
RM-89B	2DAS-P215A&B	2 DAS-150-132-4	FDS	2DAS-TK201
RM-89B	2SIS-RV-8864A	2 SIS-002-303-4	FDS	2DAS-TK201
RM-79B	2CHS*P22A	2DAS-750-927-4	FDS	2DAS-TK203B
RM-79B	2CHS*P22B	2DAS-750-928-4	FDS	2DAS-TK203B

(CONT. FROM L-7)

VALVE IDENTIFICATION	VALVE NUMBER	PIPE SIZE	NUMBER OF VALVES
V907,V912,V914,929,933, 934,936	VOS060-W-4	3/4"	7
V908,V911,V913,V921,V922, 927,928,930,931,932,935,937, 938,944	VGS060-V-4	3/4"	14
V250,251,252,253,254,255,256	VBS015-D-4	3/4"	7

NOTES (CONT FROM L-8):

9. THE FOLLOWING SUBSTITUTIONS ARE ACCEPTABLE:
   VCS015-X-4 FOR VCS060-G-4
   VGS015-A-4 FOR VGS060-V-4
   VOS015-A-4 FOR VOS060-W-4
10.
11. LINE NUMBER(S) (SEE BELOW) CONTAIN(S) (a) SCH (SEE BELOW) SPOOL PIECE(S). SEE PIPING DRAWING(S) AND/OR ISOMETRIC(S) FOR DETAILS.

LINE NO.	SCH ADDED
2-DAS-004-274-4	80S
2-DAS-004-245-4	80S
2-DAS-750-53-4	40S
2-DAS-750-45-4	40S
2-DAS-750-40-4	40S

12. ✱ DENOTES SAFETY RELATED ITEMS
13. ◆ DENOTES DISSIMILAR METAL WELD.

DRAINS (SEE NOTE 7)

DIAGRAM	EQUIPMENT	LINE NUMBER	VIA	SUMP TANK NUMBER
RM-79A	2CHS-TK23	2-DAS-750-40-4	DASH	2DAS-TK203B
RM-79A	2CHS-FLT22	2-DAS-750-43-4	DASH	2DAS-TK203C
RM-79A	2CHS-FLT23	2-DAS-750-44-4	DASH	2DAS-TK203C
RM-79B	2CHS-FLT21	2-DAS-750-45-4	DASH	2DAS-TK203C
RM-79B	2CHS-TK21A	2-CHS-750-616-4	FDS	2DAS-TK203A
RM-79B	2CHS-TK25	2-CHS-003-51-4	FDS	2DAS-TK203A
RM-79B	2CHS-TK25	2-CHS-500-658-4	FDS	2DAS-TK203B
RM-79B	2CHS-TK25	2-CHS-001-160-4	FDS	2DAS-TK203A
RM-79B	2CHS-TK21B	2-DAS-002-470-4	FDS	2DAS-TK203A
RM-79D	2CHS-FLT24A	2-DAS-750-41-4	DASH	2DAS-TK203C
RM-79D	2CHS-FLT24B	2-DAS-750-42-4	DASH	2DAS-TK203C
RM-82A	2FNC-FLT21A	2-DAS-750-49-4	DASH	2DAS-TK203C
RM-82A	2FNC-FLT21B	2-DAS-750-50-4	DASH	2DAS-TK203C
RM-89B	2-DGS-003-5-4	2-DGS-002-346-4	FDS	2DAS-TK203B
RM-89B	2-DGS-003-5-4	2-DAS-150-130-4	FDS	2DAS-TK203B
RM-88A	2ASS-T85	2-DAS-001-273-4	FDS	2DAS-TK206
RM-92A	2BRS-FLT21A	2-DAS-750-34-4	DASH	2DAS-TK203C
RM-92A	2BRS-FLT21B	2-DAS-750-35-4	DASH	2DAS-TK203C
RM-87A	2SIS*P21A	2-DAS-750-932-4	FDS	2DAS-TK208
RM-87A	2SIS*P21A	2-DAS-001-933-4	FDS	2DAS-TK208
RM-93A	2LWS-TK21A	2-DAS-003-30-4	FDS	2DAS-TK203A
RM-93A	2LWS-TK21B	2-DAS-003-31-4	FDS	2DAS-TK203A
RM-95A	2GWS-TK22A-D	2-DAS-500-82-4	FDS	2DAS-TK203B
RM-95B	2GWS-TRP21	2-GWS-750-167-4	FDS	2DAS-TK203B
RM-95B	2GWS-F23	2-GWS-750-132-4	FDS	2DAS-TK203B
RM-97A	2SGC-10E21A,B	2-WSS-002-56-4	FDS	2DAS-TK212
RM-97A	CHS ION EXCHS	2-WSS-002-46-4	FDS	2DAS-TK203C
RM-97A	BRS&FNC ION EXCH	2-WSS-002-53-4	FDS	2DAS-TK203C
RM-97B	2WSS-TK23	2-WSS-025-229-4	FDS	2DAS-TK212
RM-97B	2WSS-MIX21	2-WSS-025-238-4	FDS	2DAS-TK212
RM-97B	2WSS-MIX22	2-WSS-001-232-4	FDS	2DAS-TK212
RM-99A	SAMPLE SYS	2-DAS-750-58-4	DASH	2DAS-TK203B
RM-99B	SAMPLE SINK	2-DAS-002-59-4	DASH	2DAS-TK203B
RM-100B	2SGC-P22A	2-DAS-750-83-4	FDS	2DAS-TK212
RM-100B	2SGC-P22B	2-DAS-750-84-4	FDS	2DAS-TK212
RM-100B	LOCAL SAMPLE	2-DAS-001-112-4	FDS	2DAS-TK212
RM-100B	LOCAL SAMPLE	2-DAS-001-137-4	FDS	2DAS-TK212
RM-100B	2BDG-RV102	2-BDG-001-265-4	FDS	2DAS-TK212
RM-100C	2SGC-P23A	2-DAS-001-54-4	FDS	2DAS-TK212
RM-100C	2SGC-P23B	2-DAS-001-55-4	FDS	2DAS-TK212
RM-100E	2SGC-P25A	2-DAS-750-56-4	FDS	2DAS-TK212
RM-100E	2SGC-P25B	2-DAS-750-57-4	FDS	2DAS-TK212
RM-100C	2SGC-TK25	2-SGC-001-243-4	FDS	2DAS-TK212
RM-100E	2SGC-P28	2-DAS-750-254-4	FDS	2DAS-TK212
RM-100C	2SGC-P24A	2-DAS-750-255-4	FDS	2DAS-TK212
RM-100C	2SGC-P24B	2-DAS-750-256-4	FDS	2DAS-TK212
RM-100E	2SGC-P27	2-DAS-750-257-4	FDS	2DAS-TK212
RM-100D	2SGC-FLT21	2-DAS-750-53-4	DASH	2DAS-TK203C
RM-100D	2SGC-P26A	2-DAS-750-258-4	FDS	2DAS-TK203C
RM-100D	2SGC-P26B	2-DAS-750-259-4	FDS	2DAS-TK203C
RM-100D	LOCAL SAMPLE	2-DAS-001-260-4	FDS	2DAS-TK212
RM-87A	2SIS*P21B	2-DAS-750-935-4	FDS	2DAS-TK201
RM-87A	2SIS*P21B	2-DAS-001-936-4	FDS	2DAS-TK201
RM-93A	2LWS-P21A	2-DAS-750-248-4	FDS	2DAS-TK203A
RM-93A	2LWS-P21B	2-DAS-750-249-4	FDS	2DAS-TK203A
RM-93A	2LWS-TK21A	2-DAS-001-250-4	FDS	2DAS-TK203A
RM-93A	2LWS-TK21B	2-DAS-001-251-4	FDS	2DAS-TK203A

(CONT F-1)

	VALVE IDENTIFICATION	VALVE NUMBER	PIPE SIZE	NUMBER OF VALVES
	V141,142,143,144,145,146, 147,148,149,150,151,152, 153,226,227,228,229,230, 231,232,377,378,382,906	VBS015-D-4	3/4"	24
SEE NOTE 5	V156,157,158,159,160,161, 162,163,164,165,166,167, 168,169,170,171,172,173, 174,175,176,177,178,179, 180,183,233,234,237,369, 370, 373,374,379,380	VCS060-G-4	2"	35
	V184,185,186,189,190,193, 194,195,196,197,198,199, 200,210,211,212,213,215, 235,236,375,376,381,383	VBS015-D-4	2"	24
	V218,219	VOS060-W-4	1/2"	2
	V220	VCS060-G-4	1/2"	1
	V221,222,223,224,225	VBS015-D-4	1/2"	5
	V372	VCW015-X-4	4"	1

NOTES: (VALVE TABLE CONT. I-1)

1. ALL SUMP PITS WILL BE LINED WITH TYPE 304 STAINLESS STEEL SUMP LINERS.
2. THE CONTROL EQUIPMENT MARK NUMBERS SHALL INCLUDE A PREFIX WHICH IS IDENTICAL TO THE SYSTEM CODE PREFIX.
3. ROUTE INDIVIDUAL DRAINS TO SUMPS VIA EITHER FLOOR DRAIN SYSTEM (FDS) OR AERATED DRAINS HEADER
4. ✱ LEVEL SWITCHES AND PUMPS WILL BE SUPPLIED BY SUMP PUMP MANUFACTURER.
5. END TO END DIM FOR 2" VALVES SHOWN IN BRACKET ABOVE ARE SHOWN ON MFG PRINT S&W 2006.360096012.
6. DAS,WAS,AND VRS LINES SHALL BE MAINTAINED AT CLEANNESS LEVEL "C" IN ACCORDANCE WITH 2BVM-62
7. LINE NUMBERS LISTED IN THE DRAIN TABLE ARE SHOWN ON THEIR PARENT FLOW DIAGRAMS ONLY, EXCEPT THOSE LINES WHICH DRAIN TO THE FLOOR DRAIN SYSTEM VIA DAS HEADER.
8. METHOD OF CLOSURE FOR LOCAL VENTS, DRAINS, TEST CONNECTIONS, AND CHEMICAL CLEANING CONNECTIONS SHALL BE AS SHOWN. REFER TO 2BVM-211 FOR ADDITIONAL DETAILS.

REFERENCE DWGS: (NOTES CONT. I-2)

SAFETY INJECTION PIPING	RM-87A&B
FUEL POOL COOLING & PURIFICATION PIPING	RM-82A
LIQUID WASTE DISPOSAL PIPING	RM-93A
STEAM GENERATOR BLOWDOWN PIPING	RM-100A,B,C&D
DECONTAMINATION PIPING	RM-101A
NUCLEAR EQUIP. VENT & DRAIN PIPING	RM-89A&B
BORON RECOVERY PIPING	RM-92A
GASEOUS WASTE DISPOSAL PIPING	RM-95A&B
SOLID WASTE DISPOSAL PIPING	RM-97A&B
SAMPLE SYSTEM PIPING	RM-99A&B
CONDENSATE PIPING	RM-46A
CONDENSATE DEMINERALIZER PIPING	RM-46B
CHARGING VOLUME CONTROL PIPING	RM-79A, B&C

RM-82A FUEL POOL TELLTALE DRAINS

FINALIZED FLUID SYSTEM

PORTIONS OF THIS DOCUMENT ARE

NUCLEAR SAFETY RELATED

THE INFORMATION ON THIS DRAWING MAY NOT BE COPIED OR USED FOR OTHER THAN THE CONSTRUCTION, MAINTENANCE OR REPAIR OF THE PLANT FACILITY DESCRIBED IN THE TITLE BLOCK.

APPROVED Richard Alson Berry 27299-E
REGISTERED PROFESSIONAL ENGINEER NO.
COMMONWEALTH OF PENNSYLVANIA

REVISIONS

25	INC. DCP 961-10 REV'D. DRAINS	
26	DCP 2052 MINOR DCP REVISED DRAWINGS LIST	
27	DCP 1274	
28	DCP 2147 INCORP ENG MARK-UP ADDED 2WS-750-916-4	

ISSUE	DESCRIPTION	CHKD	CORR	APPD	DATE
24	SEE RECORD OF DRAWING CHANGES 12241-BCM-89C-24				
23	SEE RECORD OF DRAWING CHANGES 12241-BCM-89C-23				
22	WJ-839 PER EADCR 290-2678 ADD LINE NO. 2-FNC-500-161-4				
21	FOR RECORD OF DRAWING CHANGES SEE 1241-BCM-89C-21				
20	SEE RECORD OF DRAWING CHANGES 12241-BCM-89C20				
19	SEE RECORD OF DRAWING CHANGES 12241-BCM-89C19				
18	SEE RECORD OF DRAWING CHANGES 12241-BCM-89C-18				
17	SEE RECORD OF DRAWING CHANGES 12241-BCM-89C17				
16	REVISED REF TO RM-89B, DELETED REF TO RM-46A, 2P-4256, 4306				
15	SEE RECORD OF DRAWING CHANGES 12241-BCM-89C15				
14	SEE RECORD OF DRAWING CHANGES 12241-BMC-89C-14				
13	SEE RECORD OF DRAWING CHANGES 1224I-BCM-89C-13				
12	SEE RECORD OF DRAWING CHANGES 1224I-BCM-89C-12				
11	SEE RECORD OF DWG CHANGES 12241-BCM-89C-11				
10	REDRAWN, INC EADCRS 2P-1354,1484, 2220,2236,2247A&2P8-10297				
9	DWG VOID & RENUMBERED RM-89CVD-9				

DIGITAL ISSUE

STONE & WEBSTER ENGINEERING CORP. BOSTON, MASS

DUQUESNE LIGHT COMPANY
ENGINEERING & CONSTRUCTION PITTSBURGH, PA.

SCALE | DATE | ARCH. APP.
DRAWN J. EVERY | ELECT. APP.
CHECKED | MECH. APP.
INSPECTED | STRUCT. APP.

FLOW DIAGRAM
NUCLEAR EQUIP VENT & DRAIN PPG-SH 3
BEAVER VALLEY POWER STATION NO 2
O.F.E. No. 10080 | A4 | No. 10080-RM-89C
C.O. No. 8089

S&W DWG. NO. 12241-RM-89C-28

G.CUNNINGHAM
E. CHASE

No. 10080-RM-92A

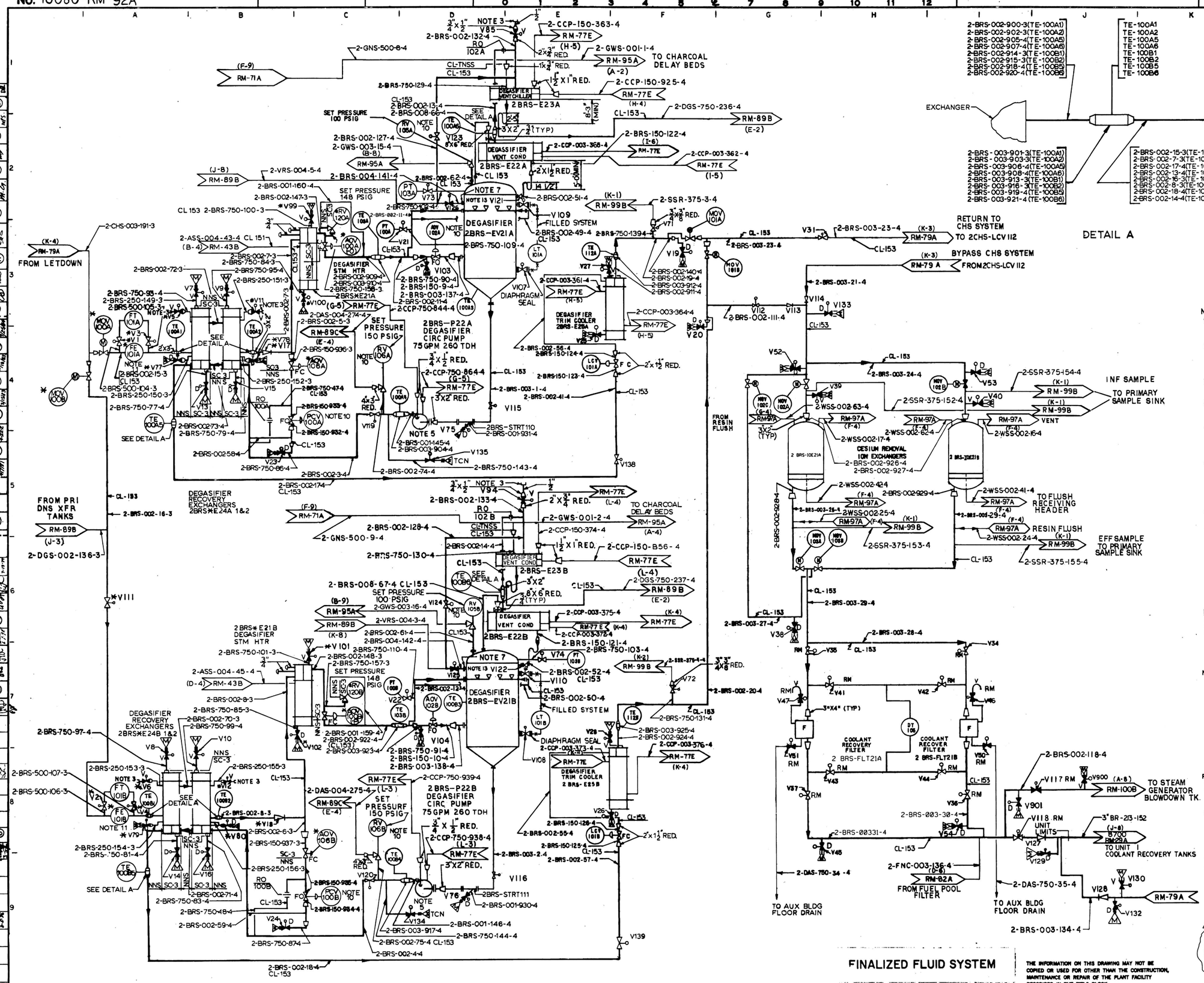

VALVE IDENTIFICATION	MARK NUMBER	PIPE SIZE	NUMBER OF VALVES
V1,2,3,4	VBS015-Y-3	1/2"	4
V7,8,9,10,13,14,15,16	VBS015-Y-4	3/4"	8
V5,6,11,12 V77 THRU 80 V99 THRU 102	VBS015-Y-3	3/4"	14
V19,20,21 THRU 24, 25 THRU 28, 38,90Q 39 THRU 47 90Q 50 THRU 54, 71, 72, 73, 74, 85, 94, 103, 104, 129, 130, 132, 133, 134, 135	VBS015-D-4	3/4"	41
V112,117,119,120,123, 124,138,139	VBS015-D-4	2"	8
V17,18 NOTE 6	VCS015-X-3	2"	2
V113	VCS060-G-4	2"	1
V107,108,109,110	VBF015-TE-4	3"	4
V31,34,35,36,37, 118	VBW015-D-4	3"	6
V114,127,128	VCW015-X-4	3"	3
V111	VBS015-Y-3	2"	1
V115,116	VBW015-W-4	3"	2
V125,126	VBW015-Y-3	4"	2
V75,76	VBS015-D-4	1"	2
V122	VCS060-Y-4	2"	1
V121	VCS015-X-4A	2"	1

NOTE CONT:

5. 3/4" DRAIN LINES ARE TO BE ADDED BETWEEN 2BRS-P22A&B BEDPLATES AND FLOOR DRAINS.
6. THE FOLLOWING SUBSTITUTIONS ARE ACCEPTABLE:
   VCS060-G-3 FOR VCS015-X-3
   VCS060-G-4 FOR VCS015-X-4
7. SINGLE BLIND TO BE INSTALLED AT DEGASIFIER NOZZLE.
8. STRAINER ELEMENTS WILL BE REMOVED AND STRAINER BODY WILL BE ROTATED 180° AFTER SYSTEM IS FLUSHED.
9. LINES 2-BRS-003-1-4, 2-BRS-003-2-4, 2-BRS-008-66-4, & 2-BRS-008-67-4 WERE INSTALLED TO ASME III REQUIREMENTS AND WERE DOWNGRADED TO ANSI B31.1 AFTER INSTALLATION.
10. THE FOLLOWING WERE PURCHASED AS QA CAT 1 AND LATER DOWNGRADED. "*" HAS BEEN DELETED BUT MAY APPEAR IN EXISTING DOCUMENTS.
    2BRS-AOV102 A, B 2BRS-RV105A, B
    2BRS-PCV100A, B 2BRS-RV106A, B
11. FLANGES FOR 2BRS-FE101A&B SHALL BE SA182 TP 316 MATERIAL.
12. ON LINES 2-BRS-002-70-3, 2-BRS-002-72-3, 2-BRS-002-71-4 & 2-BRS-002-73-4 90° S/R BUTT WELDED ELBOWS CAN BE USED IN LIEU OF SOCKET WELDED FITTINGS.
13. VALVES V121 AND V122 DO NOT HAVE SPRINGS.

LEGEND:
FO—INDICATES FAIL OPENED
FC—INDICATES FAIL CLOSED
RM—REMOTE OPERATOR
* DENOTES NUCLEAR SAFETY RELATED ITEMS

NOTES:
1. THE CONTROL EQUIPMENT SHALL INCLUDE A PREFIX WHICH IS IDENTICAL TO THE SYSTEM CODE PREFIX FOR THE ASSOCIATED EQUIPMENT OR PIPE LINE UNLESS OTHERWISE NOTED. EXAMPLE 2BRS-LT103
2. THIS SYSTEM WILL BE MAINTAINED TO CLEANNESS LEVEL "B" IN ACCORDANCE WITH 28VM-62
3. NITROGEN IS SUPPLIED FROM THE LOW PRESSURE N2 HEADER THROUGH A FLEXIBLE HOSE FOR USE DURING PURGING AND DRAINING OF THE DEGASIFIER COUPLER TO BE BRUNING SW-50-33 WITH P-50 PLUG OR APVD EQUAL
4. METHOD OF CLOSURE FOR LOCAL VENTS, DRAINS, TEST CONNECTIONS, AND CHEMICAL CLEANING CONNECTIONS SHALL BE AS SHOWN. REFER TO 28VM-211 FOR ADDITIONAL DETAILS"
6. SEE NOTES CONT ABOVE

REFERENCE DRAWINGS:

AUXILIARY STEAM & AIR REMOVAL PIPING	RM-43B
COMPONENT COOLING PIPING	RM-77E
SAMPLE PIPING	RM-99B
SOLID WASTE DISPOSAL PIPING	RM-97A
NUCLEAR EQUIP. VENT & DRAIN PIPING	RM-89 B,C
CHARGING & VOLUME CONTROL PIPING	RM-79A
GASEOUS WASTE DISPOSAL PIPING	RM-96A
BORON RECOVERY SYSTEM	8700-RM-29A
H_2 & CO_2 SUPPLY PIPING	RM-71A
FUEL POOL COOLING & PURIFICATION PIPING	RM-82A
STEAM GEN BLOWDOWN PIPING	RM-100B

PORTIONS OF THIS DOCUMENT ARE

NUCLEAR SAFETY RELATED

27

QUALITY GROUP CLASSIFICATIONS ARE 'INCORPORATED BY REFERENCE' INTO THE UFSAR. A CHANGE TO QUALITY GROUP CLASSIFICATIONS CONSTITUTES A CHANGE TO THE UFSAR.

FINALIZED FLUID SYSTEM

THE INFORMATION ON THIS DRAWING MAY NOT BE COPIED OR USED FOR OTHER THAN THE CONSTRUCTION, MAINTENANCE OR REPAIR OF THE PLANT FACILITY DESCRIBED IN THE TITLE BLOCK.

REVISIONS
27 ECR 04-0199 INCORP. ECR 04-0199 REF. CA 04-01109-02.
DEH 8-9-04 D/CHK:
SUP:

FENOC FirstEnergy Nuclear Operating Company

SCALE	DATE 2-12-72	ARCH. APP.
NONE	DRAWN H.T.C	ELECT. APP.
	CHECKED	MECH. APP.
	INSPECTED RPB	STRUCT. APP.

FLOW DIAGRAM
BORON RECOVERY PIPING

BEAVER VALLEY POWER STATION-UNIT NO. 2

O.F.E. No 10080 | C.O. No. 6289 | AA | No. 10080-RM-92A

S&W DWG. NO. 12241-RM-92A-27

E. MC. J. HASLAM
T.E. CHASE

04-OCT-2011 14:14

No. 10080-RM-97A

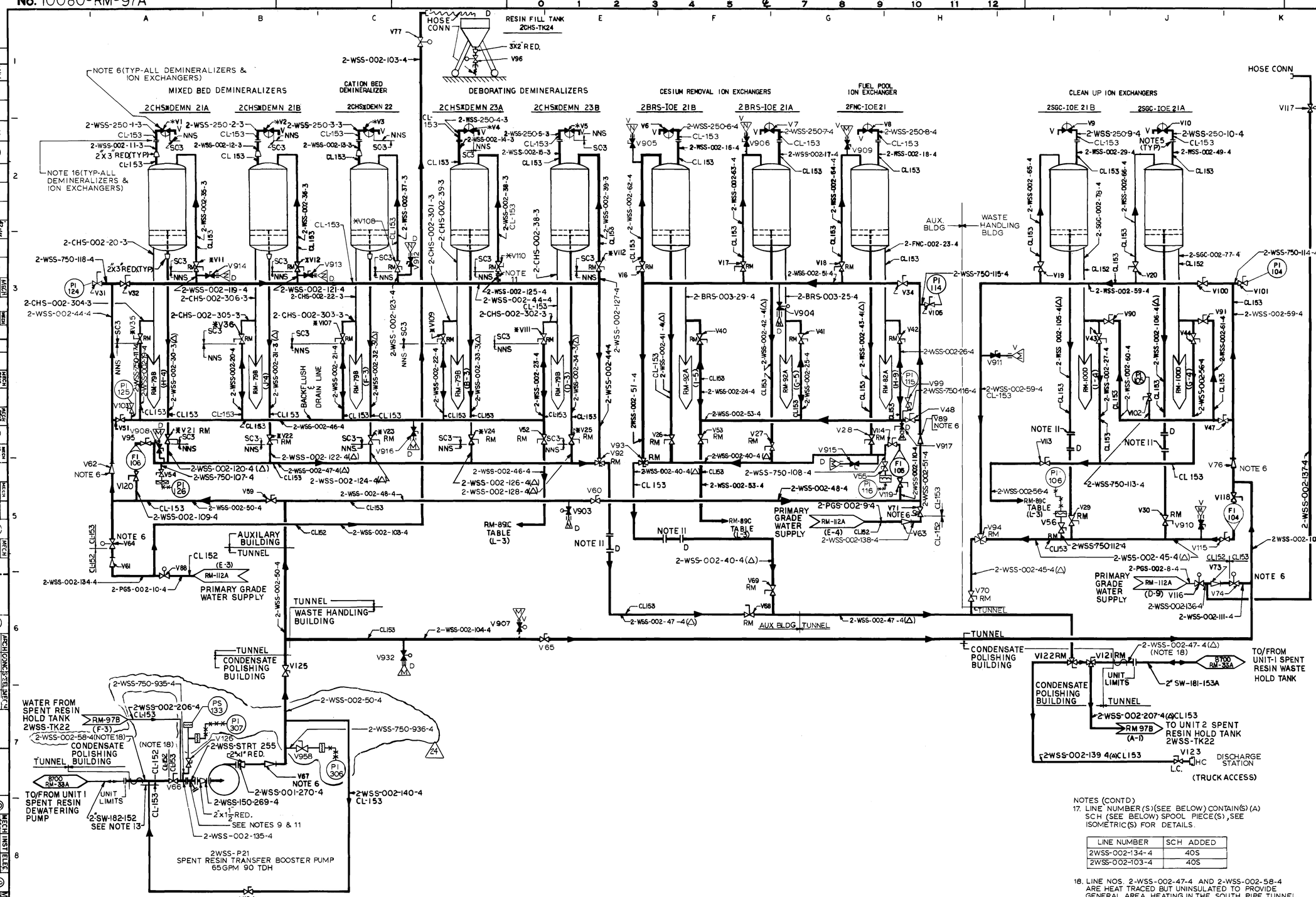

VALVE IDENTIFICATION	MARK NUMBER	PIPE SIZE	QUANTITY
V6,7,8,9,10	VSS150-X-4 (NOTE 15)	1" 1/4	5
V1,2,3,4,5	VSS150-X-3	1" 1/4	5
V61,63,73,62, 67,76,89(NOTE 8)	VCS060-G-4	2"	7
V903,904,907,932	VBS015-D-4	3/4"	4
V64,71,74,77,88, 116,117,96	VBS015-D-4	2"	8
V16,17,18,19,20,26,27,28, 29,30,32,34,40,41,42,43, 44,47,48,51,52,59,60,65, 66,68,69,70,90,91,95,100, 113,114,115,53,118,119, 120,123,124,125	VPW015-AW-4	2"	42
V11,12,21,22,23, 24,25,35,36,107,108, 109,110,111,112	VPW015-AW-3	2"	15
V905,906,908, 909,910,911,912, 913,914,915,916,917 31,54,55,56,99, 101,102,103,105, 126,958 (24)	VPW015-AW-4	3/4"	23 (24)
V92,93,94,122	VTW015-AW-4	2"	4
V121	VTW015-DW-4	2"	1

NOTES:

1. THE CONTROL EQUIPMENT VALVE IDENTIFICATION NO.'S SHALL INCLUDE A PREFIX WHICH IS IDENTICAL TO THE SYSTEM CODE PREFIX FOR THE ASSOCIATED EQUIPMENT OR PIPE LINE UNLESS OTHERWISE NOTED EX 2WSS-FI 104.
2. BUTT WELD CL-153 PIPE
3. DESIGNATED LINES (Δ) WILL UTILIZE LATERALS & BENDS INSTEAD OF TEE'S AND ELBOWS
4. THIS SYSTEM WILL BE MAINTAINED TO CLEANNESS LEVEL C IN ACCORDANCE WITH 2BVM-62
5. GRAYLOC BUTT WELDING HUB NO.2 WITH SEAL RING.
6. VALVE IS SOCKET WELDED-PROVIDE PIPE END CONNECTIONS TO MATCH.
7. VALVES WILL BE PURCHASED BY FIELD.
8. THE FOLLOWING SUBSTITUTIONS ARE ACCEPTABLE: VCS015-X-4 FOR VCS060-G-4
9. STRAINER BODY TO BE REPLACED BY CL 153 SPOOL PIECE ON COMPLETION OF SYSTEM FLUSH
10. METHOD OF CLOSURE FOR LOCAL VENTS, DRAINS, TEST CONNECTIONS AND CHEMICAL CLEANING CONNECTIONS SHALL BE AS SHOWN REFER TO 2BVM-211 FOR ADDITIONAL DETAIL.
11. REMOVABLE SPOOL PIECES SHALL BE SUBSTITUTED FOR DRAINS IN SOLID WASTE SLURRY LINES.
12. SYSTEM VALVES ONLY OPEN WHEN PROCESS LINES ARE ISOLATED.
13. PIPE CLASS BREAK OCCURS AT INTERSECTION OF TWO LINES.
14. CORROSION INSULATED JOINT PER 2BVS-920.
15. VSS150-X-3 IS AN ACCEPTABLE SUBSTITUTE.

(CONTD. L-8)

REFERENCE DWGS:

FUEL PIT COOLING & PURIFICATION PIPING	RM-82A
BORON RECOVERY PIPING	RM-92A
NUCLEAR EQUIP VENT & DRAIN PIPING	RM-89C
CHARGING & VOLUME CONTROL PIPING	RM-79B
STM GENERATOR BLOWDOWN PIPING	RM-100D
PRIMARY GRADE WATER PIPING	RM-112A
SOLID WASTE DISPOSAL PIPING	RM-33A
SOLID WASTE DISPOSAL PIPING UNIT NO.1	RM-97B

NOTES (CONTD)

16. SOCKET WELD 1/2"X1/4" REDUCING INSERT, PER PIPE-CLASS 153, INTO GRAYLOC BLIND HUB.

NOTES (CONTD)

17. LINE NUMBER(S) (SEE BELOW) CONTAIN(S) (A) SCH (SEE BELOW) SPOOL PIECE(S), SEE ISOMETRIC(S) FOR DETAILS.

LINE NUMBER	SCH ADDED
2WSS-002-134-4	40S
2WSS-002-103-4	40S

18. LINE NOS. 2-WSS-002-47-4 AND 2-WSS-002-58-4 ARE HEAT TRACED BUT UNINSULATED TO PROVIDE GENERAL AREA HEATING IN THE SOUTH PIPE TUNNEL.
19. VALVES *V1 THRU *V5 AND V6 THRU V10 SHALL NOT HAVE CLOSURES INSTALLED PER DLC OPS.

PORTIONS OF THIS DOCUMENT ARE

NUCLEAR SAFETY RELATED

FINALIZED FLUID SYSTEM

THE INFORMATION ON THIS DRAWING MAY NOT BE COPIED OR USED FOR OTHER THAN THE CONSTRUCTION, MAINTENANCE OR REPAIR OF THE PLANT FACILITY DESCRIBED IN THE TITLE BLOCK.

APPROVED: Richard Alan Kemp
REGISTERED PROFESSIONAL ENGINEER NO. 27289-E
COMMONWEALTH OF PENNSYLVANIA

REVISIONS

ISSUE	DESCRIPTION	CHKD	CORR	APPD	DATE
23	INCAD#C-94134 ADDED HOSE CONN TO LINE 2WSS-002-139-4				2-22-94
24	DCP 2-2592 INCORP'D INTERIM ISSUE 23 REV. ENG-2592 SUP-4994 FPE-VIK DR.INWE-JC				9-22-94
22	(A-1) ADD CAPILLARY TUBING PER EADCR NO. 2RQ-5046				MPB 10-7-92
21	FOR RECORD OF DRAWING CHANGES SEE 12241-BCM-97A-18				
20	(U-8) ADDED NOTE 17 PER I&E DCR 2RQ-5490				
19	FOR RECORD OF DWG CHNGS SEE 12241-BCM-97A-16				
18	SEE RECORD OF DRAWING CHNGS 12241-BCM-97A-15				
17	SEE RECORD OF DRAWING CHNGS 12241-BCM-97A-14				
16	SEE RECORD OF DRAWING CHANGES 12241-BCM-97A-13				
15	FOR RECORD OF DWG CHNGS SEE 12241-BCM-97A-12				
14	FOR RECORD OF DWG CHGS SEE 12241-BCM-97A-11				
13	FOR RECORD OF DWG CHGS SEE 12241-BCM-97A-10				
12	FOR RECORD OF DWG CHGS SEE 12241-BCM-97A-9				
11	FOR RECORD OF DWG CHGS SEE 12241-BCM-97A-8				
10	FOR RECORD OF DRAWING CHANGES SEE 12241-BCM-97A-7				
9	FOR RECORD OF DRAWING CHANGES SEE 12241-BCM-97A-6				
8	FOR RECORD OF DRAWING CHANGES SEE 12241-BCM-97A-5				
7	FOR RECORD OF DRAWING CHANGES SEE 12241-BCM-97A-4				
6	ISSUED FOR PRODUCTION				
5	PSAR DWG. NOS. CHANGED WAS RM-33A				
4	ORIGINAL ISSUE				

STONE & WEBSTER ENGINEERING CORP.
BOSTON, MASS.

DUQUESNE LIGHT COMPANY
ENGINEERING & CONSTRUCTION PITTSBURGH, PA.

SCALE NONE	DATE 2-24-72	ARCH. APP.	
	DRAWN JLD	ELECT. APP.	
	CHECKED	MECH. APP.	
	INSPECTED RPB	STRUCT. APP.	

FLOW DIAGRAM
SOLID WASTE DISPOSAL PIPING

BEAVER VALLEY POWER STATION UNIT NO-2

O.F.E. No. 10080 | AA | No. 10080-RM-97A

C.O. No. 6289

S&W DWG. NO. 12241-RM-97A-24

ENG. G. CUNNINGHAM
D.E. E. CHASE

No. 10080-RM-99B

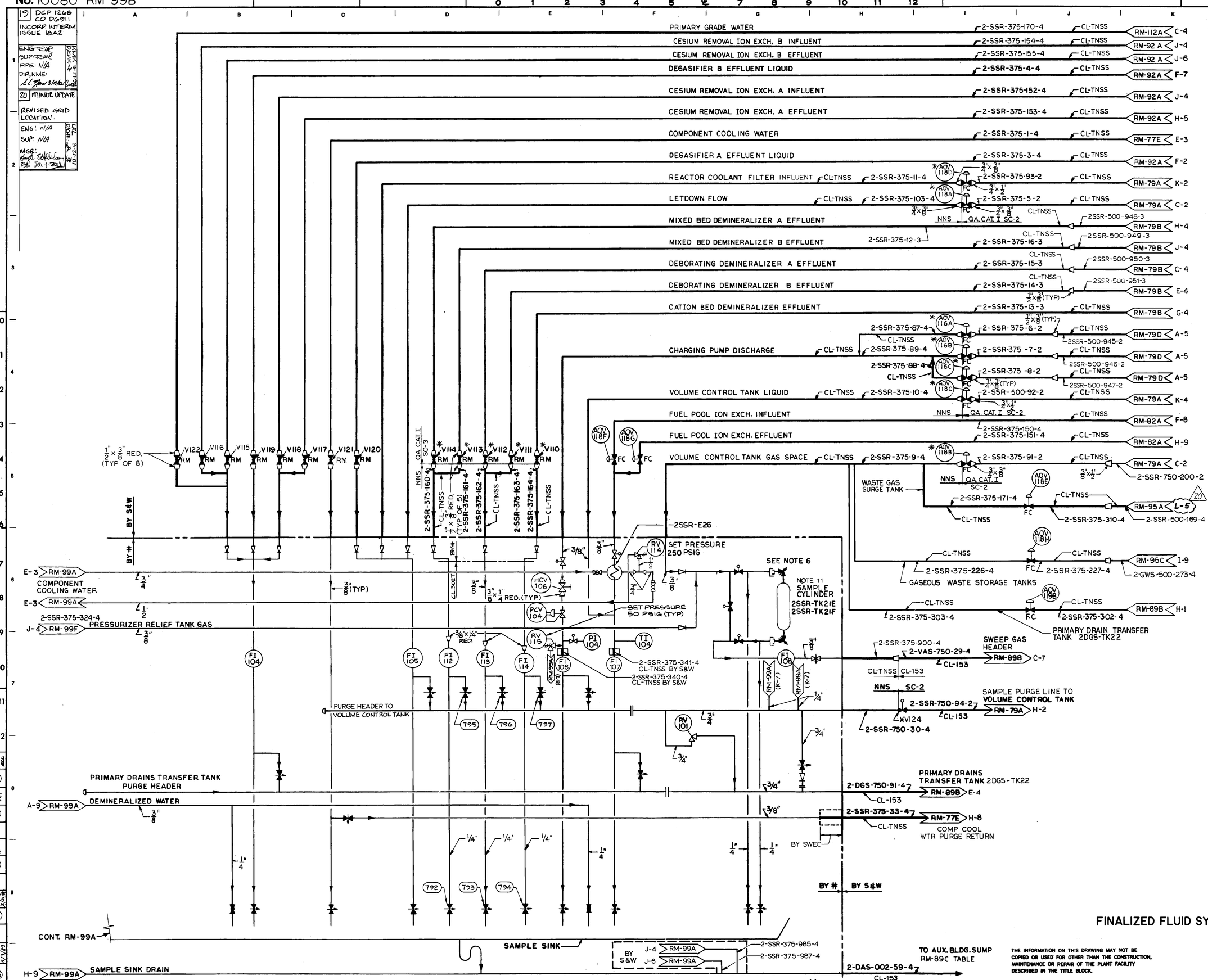

VALVE IDENTIFICATION	MARK NUMBER	PIPE SIZE	QUANTITY
V115, 116, 117, 118, 119, 120, 121, 122	VOS060-W-4	1/2"	8
V110, 111, 112, 113, 114	VOS060-W-3	1/2"	5
V124	VBS015-Y-2	3/4"	1
THE FOLLOWING VALVES HAVE BEEN ADDED BY DLCo. THEY ARE IDENTIFIED BY ( ) WHICH INDICATES VOND VALVE TAG No.			
792, 793, 794, 795, 796, 797	WHITEY SS-5LRS4	1/4" TUBE	6

NOTES

1. FOR GENERAL NOTES SEE DWG RM-99A

REFERENCE DRAWINGS

COMPONENT COOLING PIPING	RM-77E
BORON RECOVERY PIPING	RM-92A
NUCLEAR EQUIP. VENT & DRAIN PIPING	RM-89B,C
CHARGING & VOLUME CONTROL PIPING	RM-79A, B,D
FUEL POOL COOLING PURIFICATION PIPING	RM-82A
SAMPLE PIPING - SH.1	RM-99A
GASEOUS WASTE DISPOSAL PIPING	RM-95A
PRIMARY GRADE WATER PIPING	RM-112A
NUCLEAR EQUIPT VENT & DRAIN PIPING	RM-89C

PORTIONS OF THIS DOCUMENT ARE NUCLEAR SAFETY RELATED

FINALIZED FLUID SYSTEM

THE INFORMATION ON THIS DRAWING MAY NOT BE COPIED OR USED FOR OTHER THAN THE CONSTRUCTION, MAINTENANCE OR REPAIR OF THE PLANT FACILITY DESCRIBED IN THE TITLE BLOCK.

APPROVED — REGISTERED PROFESSIONAL ENGINEER NO. 16297-E COMMONWEALTH OF PENNSYLVANIA

REVISIONS

17	INCORP. TER-230	
16	SEE RECORD OF DRAWING CHANGES 12241-BCM-99B-16	
15	SEE RECORD OF DRAWING CHANGES 12241-BCM-99B-15	
14	SEE RECORD OF DRAWING CHANGES 12241-BCM-99B-14	
13	ADD 2-SSR-375-340-4, 341-4 PER EDCR 2PS-2877 (EEF-7)	
12	SEE RECORD OF DRAWING CHANGES 12241-BCM-99B-12	
11	SEE RECORD OF DRAWING CHANGE 12241-BCM-99B-11	
10	SEE RECORD OF DRAWING CHANGES 12241-BCM-99B-10	
9	SEE RECORD OF DRAWING CHANGE 12241-BCM-99B-9	
8	SEE RECORD OF DRAWING CHANGE 12241-BCM-99B-8	
7	SEE RECORD OF DRAWING CHANGE 12241-BCM-99B-7	
6	REDRAWN	
5	SUPERSEDED BY DWG. 12241-BM-99B-5	
4	SEE RECORD OF DRAWING CHANGES 12241-BCM-99B-4	
3	ISSUED FOR PRODUCTION	
2	PSAR DWG. NO'S CHANGED WAS RM-32B	

STONE & WEBSTER ENGINEERING CORP. BOSTON, MASS.

DUQUESNE LIGHT COMPANY
ENGINEERING & CONSTRUCTION PITTSBURGH, PA.

SCALE NONE

	DATE	ARCH. APP.
	DRAWN I. NEBEL	ELECT. APP.
	CHECKED	MECH. APP.
	INSPECTED	STRUCT. APP.

FLOW DIAGRAM
SAMPLE PIPING - SH. 2

BEAVER VALLEY POWER STATION UNIT NO. 2

O. F. E. No. 10060 | AA | No. 10080-RM-99B
C. O. No. 6289

S&W DWG. NO. 12241-RM-99B-20

Engineer: J. HASLAM
Des. Eng: E. CHASE

No.10080-RM-99E

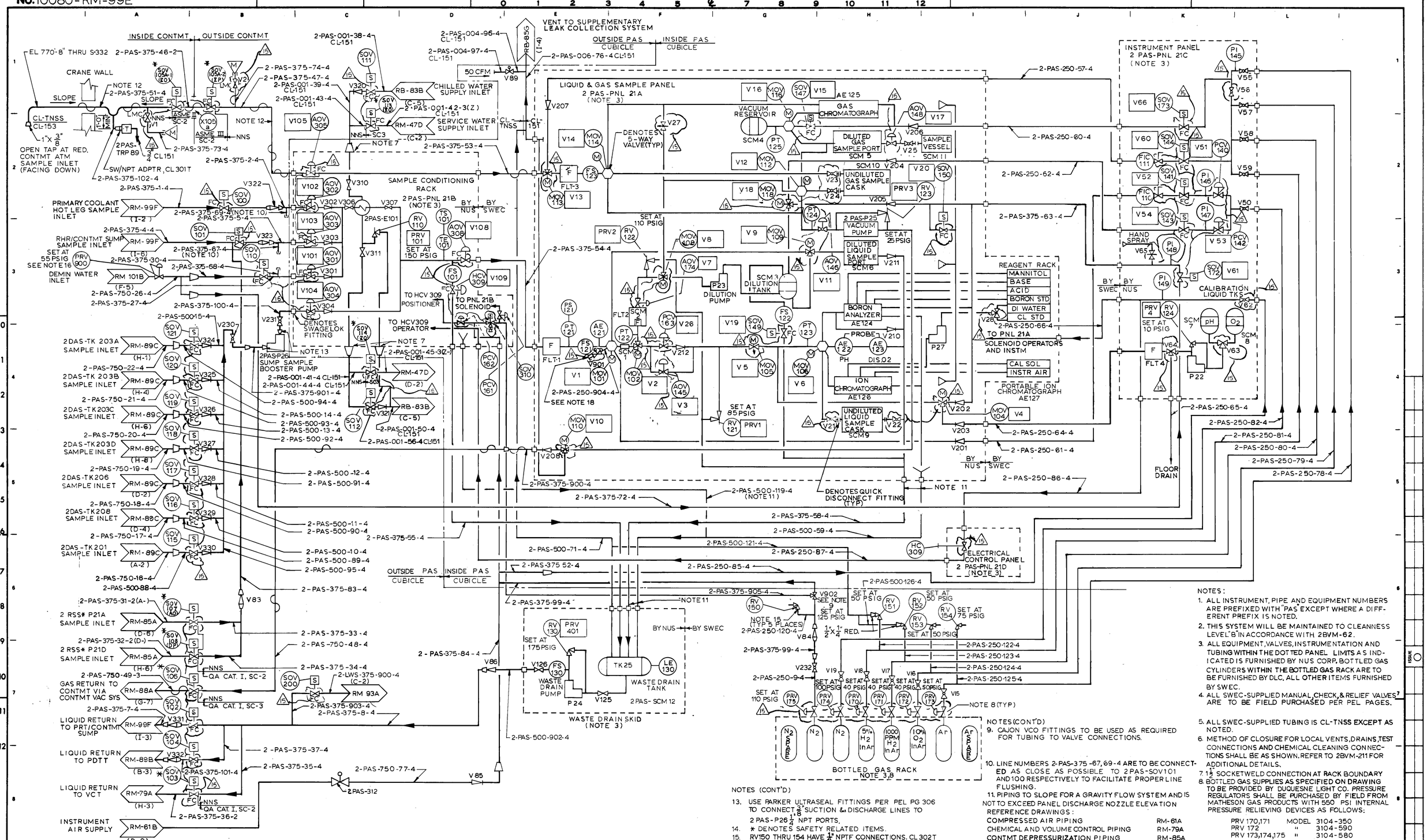

VALVE IDENTIFICATION	MARK NUMBER	PIPE SIZE	QUANTITY	VALVE IDENTIFICATION	VALVE NUMBER	PIPE SIZE	QUANTITY	VALVE IDENTIFICATION.	VALVE NUMBER	PIPE SIZE	QUANTITY	VALVE IDENTIFICATION	VALVE NUMBER	PIPE SIZE	QUANTITY
V1,2	VSS400-S-4 NOTE 4	3/8"	2	V21, V22, V23, V24, V50, V55, V56, V57, V58, V59.	HOKE 7115G4Y (NOTE 3)	1/4"	10	V205, V206	NUPRO SS-2C-1 (NOTE 3)	1/8"	2	V901	WHITEY SS-43S4	1/4" TUB	1
V83,84,86, 322,323,331,332	VCS500-Z-4 NOTE 4	1/2"	7	V63,V64	HOKE 7673G4Y (NOTE 3)	1/4"	2	V306, V307	NUPRO SS-6NBS-6 (NOTE 3)	3/8"	2	V902	WHITEY SS-44XF6	3/8"	1
V15,16,17,18,19,232	VOS600-S-4 NOTE 4	1/4"	6	V65	HOKE 03712G4S (NOTE 3)	1/4"	1	V125, V126	NUPRO SS-8UW (NOTE 3)	1/2"	2				
V85	VCS500-Z-4 NOTE 4	3/4"	1	V310, V311	ITT GRINNEL 2472-25-M (NOTE 3)	1"	2	V27	WHITEY SS-21R4 (NOTE 3)	1/4"	1				
V89	VBW015-Z-4	4"	1												
V320, 321	VCS060-BZ-4	1"	2	V201, V202, V203, V204, V207, V208, V210, V211, V212	NUPRO SS-4C-1 (NOTE 3)	1/4"	9	V28	WHITEY SS-41X52 (NOTE 3)	1/8"	1				
V230,231	VOS600-S-4 NOTE 4	1/2"	2												
V324,325,326,327, 328,329,330	VCS500-Z-4 NOTE 4	1/2"	7	V301, V302, V303, V304.	NUPRO SS-6C-1 (NOTE 3)	3/8"	4	V25	WHITEY SS-43-F4 (NOTE 3)	1/4"	1				

FINALIZED FLUID SYSTEM

NOTES (CONT'D)

13. USE PARKER ULTRASEAL FITTINGS PER PEL PG 306 TO CONNECT 3/8" SUCTION & DISCHARGE LINES TO 2 PAS-P26 1/4" NPT PORTS.
14. * DENOTES SAFETY RELATED ITEMS.
15. RV150 THRU 154 HAVE 1/4" NPTF CONNECTIONS. CL 302T COMPRESSION FITTINGS MAY BE USED AS REQUIRED TO ACCOMPLISH CONNECTIONS. EACH RELIEF VALVE IS SUPPLIED WITH (2) PORTS MKD"IN". THE EXTRA"IN" PORT IS FOR THE TEMPORARY ATTACHMENT OF A PRESSURE GAGE TO FACILITATE ADJUSTMENT OF SET PRESSURE. CLOSE PORT WITH A CLASS TNSS THREADED PLUG AFTER RV ADJUSTMENT.
16. PRV 900 TO BE PURCHASED BY THE FIELD FROM MASONEILAN, MODEL NO. 17-22, 316 STAINLESS STEEL BODY, 25-125 PSIG RANGE.
17. NUMBERS IN BOXES, [THUS], ARE NUS MARK NUMBERS OF VALVES.
18. SEPTUM INSTALLED AT OPEN END OF VALVE 2PAS-V901.

NOTES:

1. ALL INSTRUMENT, PIPE AND EQUIPMENT NUMBERS ARE PREFIXED WITH "PAS" EXCEPT WHERE A DIFFERENT PREFIX IS NOTED.
2. THIS SYSTEM WILL BE MAINTAINED TO CLEANNESS LEVEL "B" IN ACCORDANCE WITH 2BVM-62.
3. ALL EQUIPMENT, VALVES, INSTRUMENTATION AND TUBING WITHIN THE DOTTED PANEL LIMITS AS INDICATED IS FURNISHED BY NUS CORP. BOTTLED GAS CYLINDERS WITHIN THE BOTTLED GAS RACK ARE TO BE FURNISHED BY DLC. ALL OTHER ITEMS FURNISHED BY SWEC.
4. ALL SWEC-SUPPLIED MANUAL, CHECK, & RELIEF VALVES ARE TO BE FIELD PURCHASED PER PEL PAGES.
5. ALL SWEC-SUPPLIED TUBING IS CL-TNSS EXCEPT AS NOTED.
6. METHOD OF CLOSURE FOR LOCAL VENTS, DRAINS, TEST CONNECTIONS AND CHEMICAL CLEANING CONNECTIONS SHALL BE AS SHOWN. REFER TO 2BVM-211 FOR ADDITIONAL DETAILS.
7. 1 1/2 SOCKETWELD CONNECTION AT RACK BOUNDARY
8. BOTTLED GAS SUPPLIES AS SPECIFIED ON DRAWING TO BE PROVIDED BY DUQUESNE LIGHT CO. PRESSURE REGULATORS SHALL BE PURCHASED BY FIELD FROM MATHESON GAS PRODUCTS WITH 550 PSI INTERNAL PRESSURE RELIEVING DEVICES AS FOLLOWS:

PRV 170,171	MODEL	3104-350
PRV 172	"	3104-590
PRV 173,174,175	"	3104-580

NOTES (CONT'D)

9. CAJON VCO FITTINGS TO BE USED AS REQUIRED FOR TUBING TO VALVE CONNECTIONS.
10. LINE NUMBERS 2-PAS-375-67, 69-4 ARE TO BE CONNECTED AS CLOSE AS POSSIBLE TO 2PAS-SOV101 AND 100 RESPECTIVELY TO FACILITATE PROPER LINE FLUSHING.
11. PIPING TO SLOPE FOR A GRAVITY FLOW SYSTEM AND IS NOT TO EXCEED PANEL DISCHARGE NOZZLE ELEVATION

REFERENCE DRAWINGS:

COMPRESSED AIR PIPING	RM-61A
CHEMICAL AND VOLUME CONTROL PIPING	RM-79A
CONTMT DEPRESSURIZATION PIPING	RM-85A
CONTMT VACUUM LEAKAGE MONITORING PIPING.	RM-88A
NUCLEAR EQUIPMENT VENT & DRAIN PIPING	RM-89B &C
SAMPLE PIPING.	RM-99A
DEMINERALIZED WATER AND CASK WASHDOWN SYSTEM PIPING.	RM-101B
EMERGENCY EXHAUST VENT SYSTEM FOR CHARGING PUMPS & COMPONENT COOLING PUMPS	RB-85G

NOTES (CONTD)

12. FITTINGS IN ATMOSPHERE SAMPLING LINES ARE TO BE AVOIDED WHERE POSSIBLE. WHERE REQUIRED, BEND RADII SHALL BE KEPT AS LARGE AS POSSIBLE BUT NOT LESS THAN 20 DIAMETERS.

PORTIONS OF THIS DOCUMENT ARE

NUCLEAR SAFETY RELATED

ALAN J. FIORENTE — PROFESSIONAL ENGINEER — COMMONWEALTH OF PENNSYLVANIA

APPROVED Alan J. Fiorente — REGISTERED PROFESSIONAL ENGINEER NO. 032366-E COMMONWEALTH OF PENNSYLVANIA

THE INFORMATION ON THIS DRAWING MAY NOT BE COPIED OR USED FOR OTHER THAN THE CONSTRUCTION, MAINTENANCE OR REPAIR OF THE PLANT FACILITY DESCRIBED IN THE TITLE BLOCK.

O.M. FIGURE 45D-14

REVISIONS

	DESCRIPTION
12	SEE RECORD OF DRAWING CHANGES 12241-BCM-99E12
11	SEE RECORD OF DWG CHGS 12241-BCM-99E-11
10	SEE RECORD OF DRAWING CHANGES 12241-BCM-99E-10
9	(B-2) REVD PENET # X105a WAS X105. PER E&DCR 2PO-3034B
8	SEE RECORD OF DRAWING CHANGES 12241-BCM-99E-8
7	(H-6) ADDED RED TO RV151 & X192 PER E&DCR 2PS-4104
6	SEE RECORD OF DRAWING CHANGES 12241-BCM-99E-6
5	SEE RECORD OF DRAWING CHANGES 12241-BCM-99E-5
4	SEE RECORD OF DRAWING CHNGS 12241-BCM-99E-4
3	ERR RECORD OF DWG CHANGES 12241-BCM-99E-3
2	DWG VOIDED AND RENUMBERED RM-99EVD-2
1	ORIGINAL ISSUE INC E&DCR 2P-4099

STONE & WEBSTER ENGINEERING CORP. BOSTON, MASS.

DUQUESNE LIGHT COMPANY
ENGINEERING & CONSTRUCTION PITTSBURGH, PA.

SCALE NONE — DRAWN J. HUNKINS — DATE — ARCH. APP. — ELECT. APP. — CHECKED — MECH. APP. — INSPECTED — STRUCT. APP.

FLOW DIAGRAM
POST ACCIDENT SMPL PP SH-5
BEAVER VALLEY POWER STATION-UNIT NO. 2

O.F.E. NO. 10080 — C.O. No. 6289 — AA — No. 10080-RM-99E

SWEC DWG. NO. 12241-RM-99E-15

No. 10080-RM-99F

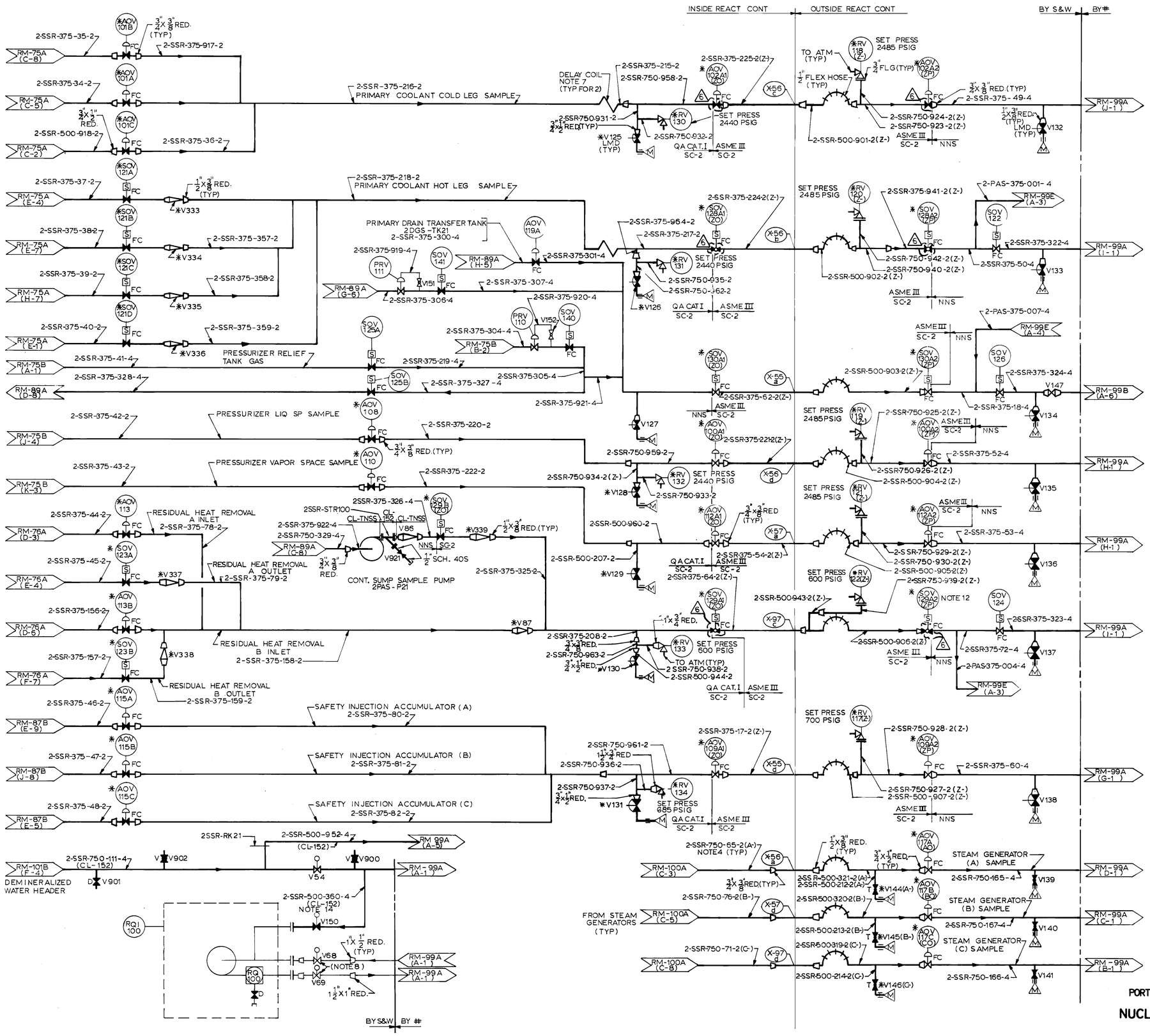

VALVE IDENTIFICATION	MARK NUMBER	PIPE SIZE	QUANTITY
V68,69	VBS015-B-4	1"	2
V54	VBS015-B-4	3/4"	1
V333,334,335,336, 337,338,339	VCS150-X-2	1/2"	7
V130,131	VSS400-S-2 (SEE NOTE 10)	1/2"	2
V127, 134, 137, 138	VSS 400-S-4 (SEE NOTE 11)	1/2"	4
V144,145,146,125, 126,128,129,132, 133,135,136	VOS600-S-2 (SEE NOTE 9)	1/2"	11
V147	VOS600-S-4 (SEE NOTE 11)	1/2"	1
V151,152		1/4"	2
V139,140,141		3/4"	3
V150	VBS015-B-4	1/2"	1
V900,902	VOS060-W-4	3/4"	2
V901	VGS060-V-4	3/4"	1
V86	VCS060-A-4	1/2"	1
V87	VCS060-G-2	1/2"	1
V921	VGS015-A-4	1/2"	1

NOTES:

1. ALL PIPING TO BE CL-TNSS EXCEPT AS NOTED.
2. THE CONTROL EQUIPMENT MARK NUMBERS SHALL INCLUDE A PREFIX WHICH IS IDENTICAL TO THE SYSTEM CODE PREFIX FOR THE ASSOCIATED EQUIPMENT OR PIPE UNLESS OTHERWISE NOTED. EXAMPLE: 2SSR-PRV111
3. FC INDICATES FAIL CLOSED.
4. STEAM GENERATOR SAMPLE LINES INSIDE REACTOR CONTAINMENT SHALL BE SHIELDED FROM MISSILES.
5. THE SYMBOL, #, DENOTES THE LIMITS OF EQUIPMENT FURNISHED BY THE SAMPLE PANEL MANUFACTURER, WATERS EQUIPMENT CO.
6. THIS SYSTEM WILL BE MAINTAINED TO CLEANNESS LEVEL "B" IN ACCORDANCE WITH 2BVM-62
7. DELAY COILS INSIDE CONTAINMENT TO BE CONSTRUCTED OF 100 FT OF 3/8" TUBING AND LOCATED INSIDE OF SHIELDED AREAS.
8. THESE VALVES WERE PURCHASED BY POWER UNDER PURCHASE ORDER 2BV-78 AND WILL BE INSTALLED BY INSTRUMENTATION.
9. VALVES SHALL BE PURCHASED ON 2BV-673
10. VALVES SHALL BE PURCHASED ON 2BV-679
11. VALVES SHALL BE PURCHASED BY THE FIELD.
12. WHEN CLOSED, SOV129A2 WILL BE EXPOSED TO A BACK PRESSURE OF 2300 PSI (RCS SAMPLE). TO AVOID OPENING, VALVE SHALL BE INSTALLED SO THAT THE FLOW ARROW ON THE VALVE BODY POINTS IN THE OPPOSITE DIRECTION OF NORMAL FLOW.
13. * DENOTES SAFETY RELATED ITEMS.
14. LINE NUMBER(S)(SEE BELOW) CONTAIN(S) (A) SCH (SEE BELOW) SPOOL PIECE(S) SEE ISOMETRIC(S) FOR DETAIL(S).

LINE NO.	SCH ADDED
2-SSR-500-360-4	40S

15. METHOD OF CLOSURE FOR LOCAL VENTS, DRAINS, TEST CONNECTIONS & CHEMICAL CLEANING CONNECTIONS SHALL BE AS SHOWN. REFER TO 2BVM-211 FOR ADDITIONAL DETAILS.
16. ELBOWS IN GASEOUS SAMPLING LINES ARE TO BE AVOIDED WHERE POSSIBLE. WHERE REQUIRED, ELBOW BEND RADII SHALL BE KEPT AS LARGE AS POSSIBLE BUT NOT LESS THAN 20 DIAMETERS TUBE BORE.

REFERENCE DRAWINGS

REACTOR COOLANT PIPING SH-1&2	RM-75A&B
RESIDUAL HEAT REMOVAL PIPING	RM-76A
SAFETY INJECTION PIPING SH-2	RM-87B
NUCLEAR EQ.PT VENT&DRAIN PIPING SH-1	RM-89A
SAMPLE PIPING SH-1&2	RM-99A&B
POST ACCIDENT SAMPLE PIPING SH-5	RM-99E
STEAM GENERATOR BLOWDOWN PIPING SH-1	RM-100A
DEMINERALIZED WTR&CASK WASHDOWN SYSTEM SH-2	RM-101B

PORTIONS OF THIS DOCUMENT ARE NUCLEAR SAFETY RELATED

THE INFORMATION ON THIS DRAWING MAY NOT BE COPIED OR USED FOR OTHER THAN THE CONSTRUCTION, MAINTENANCE OR REPAIR OF THE PLANT FACILITY DESCRIBED IN THE TITLE BLOCK.

APPROVED Alan J. Fiorente
REGISTERED PROFESSIONAL ENGINEER NO. 032366-E
COMMONWEALTH OF PENNSYLVANIA

REVISIONS

	DESCRIPTION
6	MINOR DWG. CHG. CLOSE NSA OPF VALVES 2SSR-500-OPF VALVE 2SSR-201/223 AV VALVE 12SSR-NOV-VCL VALVE FROM OPEN TO CLOSED.

WEC 5-7-97 D/CHK:

5	SEE RECORD OF DRAWING CHANGES 12241-BCM-99F-5	
4	SEE RECORD OF DWG CHNGS 12241-BCM-99F-4	
3	DRAWING ISSUED TO SATISFY 2PQ-3034B	
2	SEE RECORD OF DWG CHGS 12241-BCM-99F-2	
1	ORIGINAL ISSUE: SUPERSEDES IN PART RM-99AVD-21, SEE RECORD OF DWG CHG 12241-BCM-99F-1	

STONE & WEBSTER ENGINEERING CORP
BOSTON, MASS.

DUQUESNE LIGHT COMPANY
ENGINEERING & CONSTRUCTION PITTSBURGH, PA.

SCALE: NONE
DATE
DRAWN M. Gabra
CHECKED
INSPECTED
ARCH. APP.
ELECT. APP.
MECH. APP.
STRUCT. APP.

FLOW DIAGRAM SAMPLE PIPING SH-6

BEAVER VALLEY POWER STATION UNIT NO 2

O.F.E. NO. 10080
C.O. NO. 5289

AA No. 10080-RM-99F

SWEC DWG. NO. 12241-RM-99F-6

Engineer J. HASLAM
Dis. Eng. E.F. CHASE

No. 10080-RM-100A

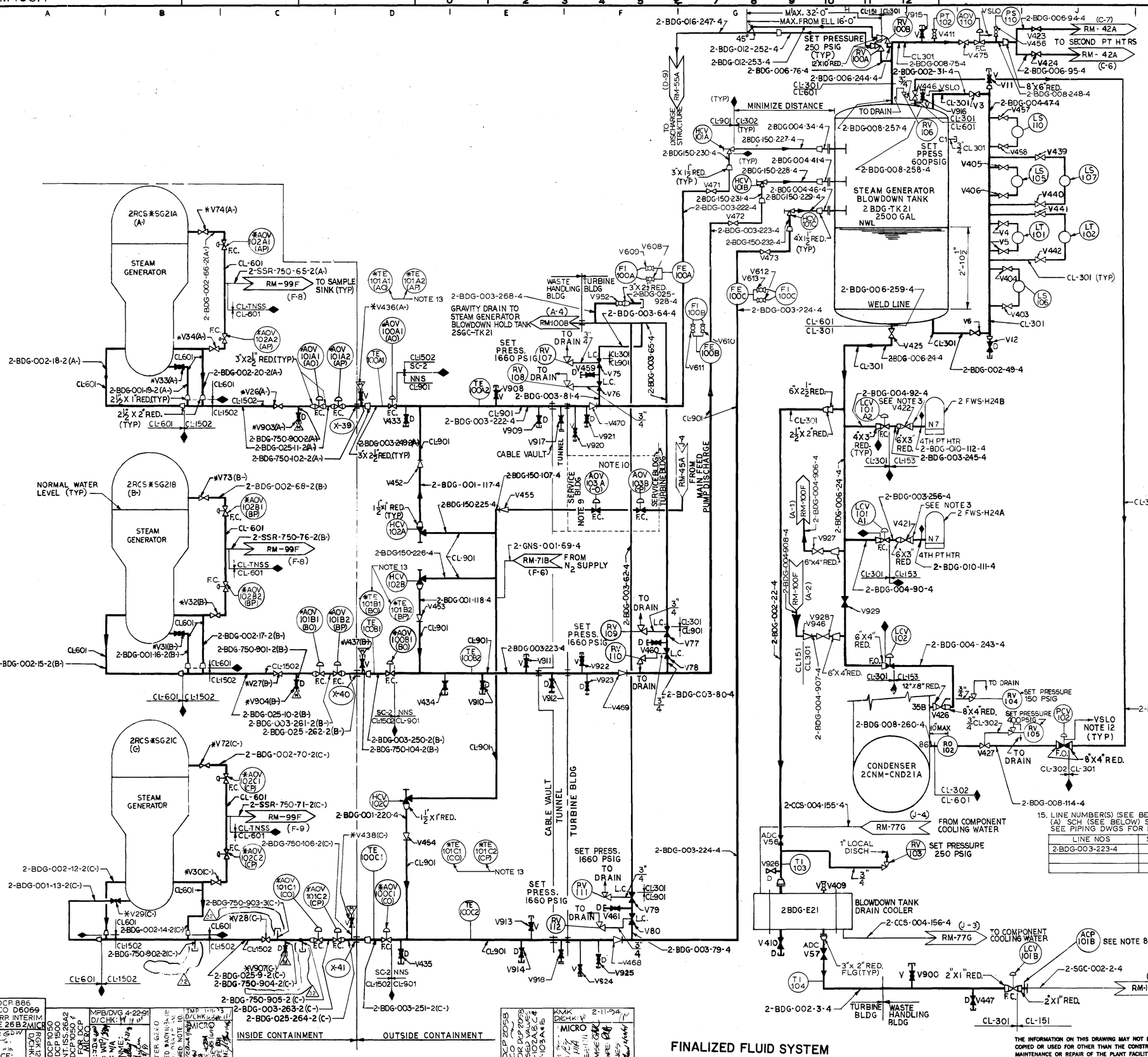

FINALIZED FLUID SYSTEM

VALVE IDENTIFICATION	MARK NUMBER	PIPE SIZE	QUANTITY
V952	VOW015-AL-4	3"	1
V436,437,438,903,904, 907	VOS150-X-2	3/4"	6
V11,409,411,456,900,915,916	VOS060-C-4	3/4"	7
V456,460,461,433,435,908,909,910,911,912,913,914,917,918,920,921,922,923,924,925	VOS150-F-4	3/4"	20
V29,31,33	VOS060-CZ-2	1"	3
V3,6,56,57	VGS060-B-4	2"	4
V30,32,34,72,73,74	VGS060-BZ-2	2"	6
V75,76,77,78,79,80	VGW090-B-4	3"	6
V608,609,610,611,612,613	VOS-600-S2	1/2"	6
V26, 27, 28	VGW150-CL-2	2 1/2"	3
V927,928	VGW030-A4-C	4"	2
V421,422	VGW015-X-4	6"	2
V423,424,425	VGW030-A-4	6"	3
V426	VGW015-XL-4	8"	1
V427	VGW030-XL-4	8"	1
V446,475	VGW030-AL-4	8"	2
V452,453,454	VCS150-C-4	1"	3
V455	VCS150-C-4	1 1/2	1
V946	VCW030-A-4	4	1
V468,469,470	VCW150-C-3	3"	3
V403,404,405,406,439,440,457,458	VGS060-B-4	1"	8
V4,5,12,410,441,442,447,926	VGS060-B-4	3/4"	8
V471,472,473	VGW060-A-4	3"	3
V929	VGW030-A-4-C	6"	1

NOTES:

1. THE CONTROL EQUIPMENT NUMBER SHALL INCLUDE A PREFIX WHICH IS IDENTICAL TO THE SYSTEM CODE PREFIX FOR THE ASSOCIATED EQUIPMENT OR PIPELINE UNLESS OTHERWISE NOTED EXAMPLE 2BDG-FIS100.
2. THIS SYSTEM WILL BE MAINTAINED TO A CLEANNESS LEVEL "C" IN ACCORDANCE WITH 2BVM-62
3. 10"X6" REDUCERS ARE TO BE INSTALLED AT LEAST 6'-0" UP STREAM OF THE HEATER NOZZLE INLET.
4. CL-1502 LINES ARE FOR EROSION CONTROL ONLY.
5. INSTRUMENT ROOT CONNECTIONS, VENTS AND DRAINS ARE 3/4" UNLESS OTHERWISE NOTED.
6. METHOD OF CLOSURE FOR LOCAL VENTS, DRAINS, TEST CONNECTIONS AND CHEMICAL CLEANING CONNECTIONS SHALL BE AS SHOWN. REFER TO 2BVM-211 FOR ADDITIONAL DETAILS.
7. V436,437,438 TO SERVE AS HIGH POINT VENTS FOR LINES 2-BDG-025-9-2, 10-2 & 11-2.
8. ANTI-CAVITATION PLATE 2BDG-ACP101B TO BE BUTT WELDED TO THE 2" END OF THE 2"X1" REDUCER AT LCV-101B ON LINE NUMBER 2-SGC-002-2-4.
9. LINE 2-BDG-150-107-4 MUST BE ROUTED THROUGH THE TOP FLOOR OF THE SERVICE BLDG.
10.
12. FOR VALVE STEM LEAKOFF CONNECTIONS (VSLO) SEE DRAWING RM-73A.
13. *TE 101 A1,A2,B1,B2,C1&C2 ARE AREA MONITORS TO DETECT HIGH ENERGY LINE BREAKS IN THE MSCV AREA, DOWNSTREAM OF *AOV 101 A2,B2 & C2
14. * DENOTES SAFETY RELATED ITEMS
15. LINE NUMBER(S) (SEE BELOW) CONTAIN(S) (A) SCH (SEE BELOW) SPOOL PIECE(S). SEE PIPING DWGS FOR DETAILS.

LINE NOS	SCH ADDED
2-BDG-003-223-4	XXS

REFERENCE DRAWINGS

STEAM GENERATOR BLOWDOWN	RM-100B
SAMPLE PIPING	RM-99A
GASEOUS NITROGEN	RM-71B
EXTRACTION STEAM	RM-42A
FEEDWATER PIPING	RM-45A
COMPONENT COOLING PIPING	RM-77G
FEEDWATER HEATER VENT PIPING	RM-55A
VALVE STEM LEAKOFF	RM-73A

PORTIONS OF THIS DOCUMENT ARE

NUCLEAR SAFETY RELATED

THE INFORMATION ON THIS DRAWING MAY NOT BE COPIED OR USED FOR OTHER THAN THE CONSTRUCTION, MAINTENANCE OR REPAIR OF THE PLANT FACILITY DESCRIBED IN THE TITLE BLOCK.

APPROVED Carl Otto Fischer
REGISTERED PROFESSIONAL ENGINEER NO. 16297-E
COMMONWEALTH OF PENNSYLVANIA

DUQUESNE LIGHT COMPANY
ENGINEERING & CONSTRUCTION PITTSBURGH, PA.

STONE & WEBSTER ENGINEERING CORP.
BOSTON, MASS.

FLOW DIAGRAM STEAM GEN. BLOWDN PIPING SH. 1

BEAVER VALLEY POWER STATION UNIT NO. 2

SCALE: NONE | DATE: 2-12-72 | DRAWN: | CHECKED: | INSPECTED: RDB | ARCH. APP. | ELECT. APP. | MECH. APP. | STRUCT. APP.

O.F.E. No. 10080 | C.O. No. 6289 | AA | No. 10080-RM-100A

S&W DWG. NO. 12241-RM-100A-32

REVISIONS

ISSUE	DESCRIPTION	DATE
23	(1-8) REVISED TI-103 LOCN PER E&DCR NO. 2PS-5562	
22	1-2 CAPPED LOC. C1 ON 2BDG-TK21 PER E&DCR D-5004-501	
21	SEE RECORD OF DRAWING CHANGES 12241-BCM-100A-21	
20	DRAWING ISSUED TO SATISFY INTENT OF E&DCR 2PQ-1681A	
19	SEE RECORD OF DWG CHANGES 12241-BCM-100A-19	
18	SEE RECORD OF DRAWING CHANGES 12241-BCM-100A-18	
17	SEE RECORD OF DRAWING CHANGES 12241-BCM-100A-17	
16	INC INTERIM ISS 15A&B WHICH INC E&DCRS 2P-4330; 2PS-3534	
15	REVISED VALVE IDENT NOS PER E & DCR 2P-4225	
14	SEE RECORD OF DRAWING CHANGES 12241-BCM-100A-14	
13	SEE RECORD OF DRAWING CHANGES 12241-BCM-100A-13	
12	SEE RECORD OF DRAWING CHANGES 12241-BCM-100A-12	
11	SEE RECORD OF DRAWING CHANGES 12241-BCM-100A-11	
10	SEE RECORD OF DRAWING CHANGES 12241-BCM-100A-10	
9	SEE RECORD OF DRAWING CHANGES 12241-BCM-100A-9 SHU	
8	SEE RECORD OF DRAWING CHANGES 12241-BCM-100A-8	
7	SEE RECORD OF DRAWING CHANGES 12241-BCM-100A-7	
6	SEE RECORD OF DRAWING CHANGES 12241-BCM-100A-6	
5	SEE RECORD OF DRAWING CHANGES 12241-BCM-100A-5	
4	SEE RECORD OF DRAWING CHANGES 12241-BCM-100A-4	
3	(VARIOUS) INCORPORATED E&DCR D-5329-S28	
2	SEE RECORD OF DRAWING CHANGES 12241-BCM-100A-25	
1	E&DCR NO 2PS-5562 SHOULD READ 2PQ-5562 IN REV BLOCK 23	

ARC. CONC. STEEL MECH. VESSEL BS ELEC. INSTR.

No. 10080-RM-0110A

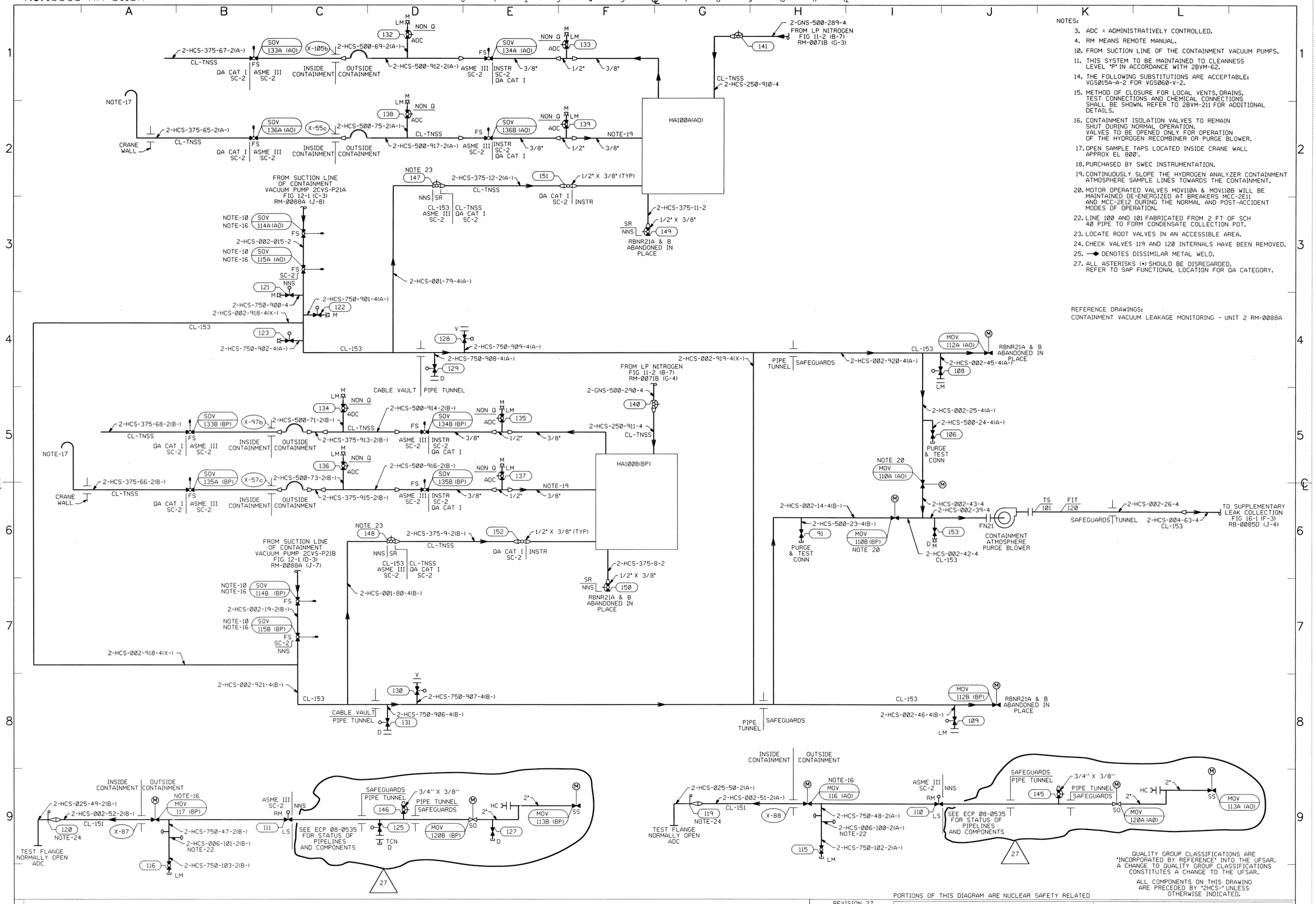

NOTES:

3. ADC = ADMINISTRATIVELY CONTROLLED.
4. RM MEANS REMOTE MANUAL.
10. FROM SUCTION LINE OF THE CONTAINMENT VACUUM PUMPS.
11. THIS SYSTEM TO BE MAINTAINED TO CLEANNESS LEVEL "P" IN ACCORDANCE WITH 2BVM-62.
14. THE FOLLOWING SUBSTITUTIONS ARE ACCEPTABLE: VGS015A-A-2 FOR VGS060-V-2.
15. METHOD OF CLOSURE FOR LOCAL VENTS, DRAINS, TEST CONNECTIONS AND CHEMICAL CONNECTIONS SHALL BE SHOWN. REFER TO 2BVM-211 FOR ADDITIONAL DETAILS.
16. CONTAINMENT ISOLATION VALVES TO REMAIN SHUT DURING NORMAL OPERATION. VALVES TO BE OPENED ONLY FOR OPERATION OF THE HYDROGEN RECOMBINER OR PURGE BLOWER.
17. OPEN SAMPLE TAPS LOCATED INSIDE CRANE WALL APPROX EL 800'.
18. PURCHASED BY SWEC INSTRUMENTATION.
19. CONTINUOUSLY SLOPE THE HYDROGEN ANALYZER CONTAINMENT ATMOSPHERE SAMPLE LINES TOWARDS THE CONTAINMENT.
20. MOTOR OPERATED VALVES MOV110A & MOV110B WILL BE MAINTAINED DE-ENERGIZED AT BREAKERS MCC-2E11 AND MCC-2E12 DURING THE NORMAL AND POST-ACCIDENT MODES OF OPERATION.
22. LINE 100 AND 101 FABRICATED FROM 2 FT OF SCH 40 PIPE TO FORM CONDENSATE COLLECTION POT.
23. LOCATE ROOT VALVES IN AN ACCESSIBLE AREA.
24. CHECK VALVES 119 AND 120 INTERNALS HAVE BEEN REMOVED.
25. —◆ DENOTES DISSIMILAR METAL WELD.
27. ALL ASTERISKS (*) SHOULD BE DISREGARDED. REFER TO SAP FUNCTIONAL LOCATION FOR QA CATEGORY.

REFERENCE DRAWINGS:
CONTAINMENT VACUUM LEAKAGE MONITORING - UNIT 2 RM-0088A

QUALITY GROUP CLASSIFICATIONS ARE "INCORPORATED BY REFERENCE" INTO THE UFSAR. A CHANGE TO QUALITY GROUP CLASSIFICATIONS CONSTITUTES A CHANGE TO THE UFSAR.

ALL COMPONENTS ON THIS DRAWING ARE PRECEDED BY "2HCS-" UNLESS OTHERWISE INDICATED.

PORTIONS OF THIS DIAGRAM ARE NUCLEAR SAFETY RELATED

ISSUES

REVISION 27 INCORPORATED
DUN 08-0535-001-004
DUN 08-0597-001-010

FENOC FIRSTENERGY NUCLEAR OPERATING COMPANY

SCALE NONE	DATE 11/10/08	ARCH APP.	FINAL APP. FOR ISSUE
	DRAWN BY MVF	ELECT APP.	
	DFG./CHK	MECH APP.	
	ENGR./CHK	CIVIL APP.	

BEAVER VALLEY POWER STATION UNIT 2

FLOW DIAGRAM
POST DBA HYDROGEN CONTROL SYSTEM

D.F.E. NO. | STA. NO. | D.C.P. NO.
AA DWG.NO. 10080- RM-0110A REV. 27

PREPARED ON THE BVPS CAEDDI SYSTEM

4-OCT-2011 14:12 K:\U2\RM-0110A.DGN

TAG167448 RM-0110A 10/4/2011 2:13:00 PM

No. 10080-RM-436-5A

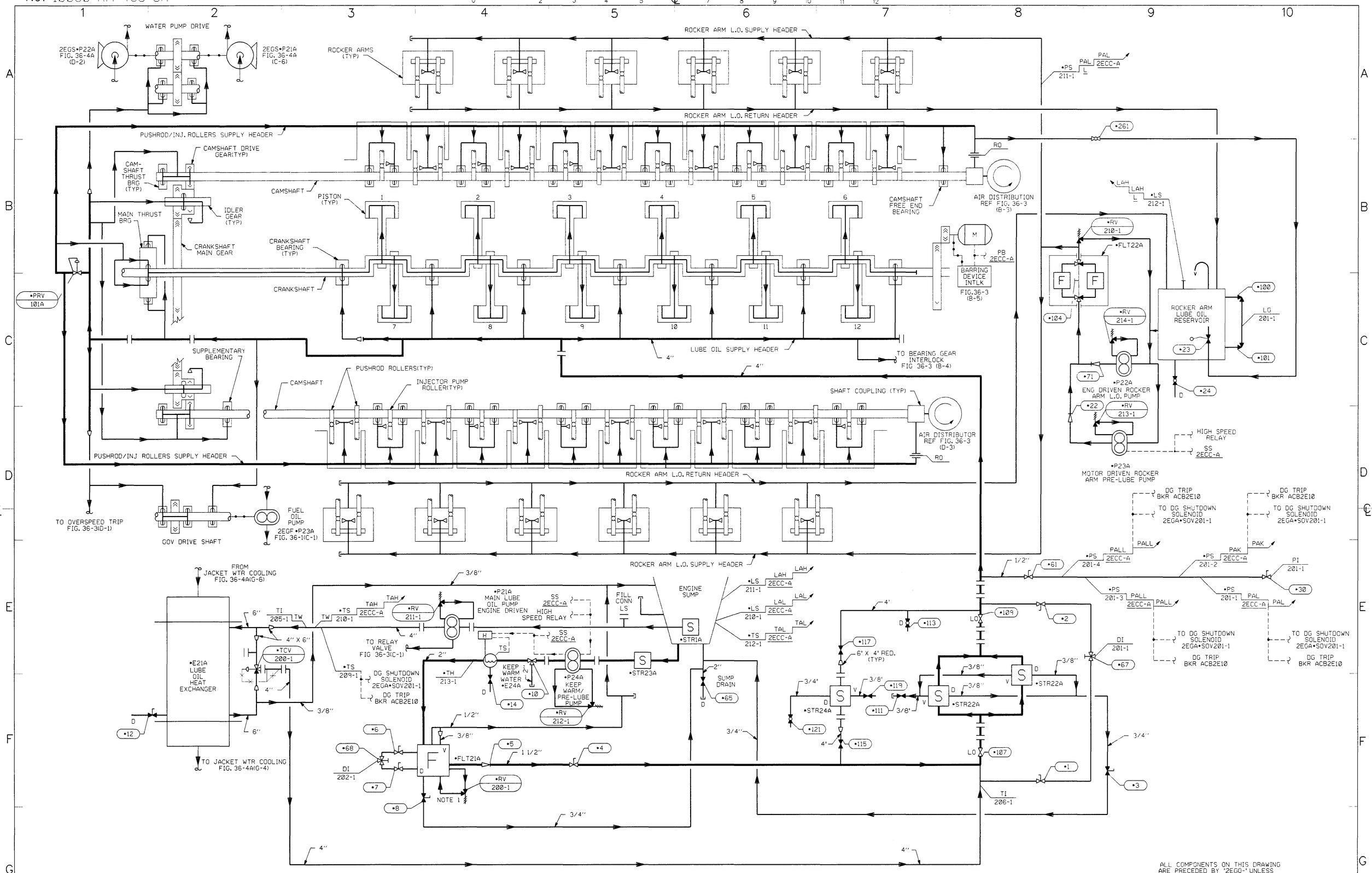

OP MANUAL FIG. NO. 36-5A

ISSUES					
1 ORIGINAL U.N.O.S. FDS 3-2-87	2 INCORP'D VDR 2-87-39 VDR 12-87-62 VDR 12-88-01 VDR 2-89-92	WBM 2-16-90 D/CHK: MVF KRV U.N.O.S. JFC FOR FDS 4-10-90	3 INCORP'D VDR 2-90-11 U.N.O.S. FDS 10-8-90	MVF 9-25-90 D/CHK: MVF KRV	4 INCORP'D VDR 2-91-168 U.O.M. JFC FOR FDS 3-30-92	MPB 12-04-91 D/CHK: MVF/FMC
5 INCORP'D VCN 2-97-39 REF CR 97-1841 SUP. CM: DMC 4-2-98	MVF 4-14-98 D/CHK: MICRO CMNO					

Duquesne Light Company
NUCLEAR GROUP
PITTSBURGH, PA

BEAVER VALLEY POWER STATION UNIT NO. 2

VALVE OPER NO. DIAGRAM
DIESEL GEN. LUBE OIL

SCALE	DATE 12-19-86	ARCH. APP.	MAT'L'S APP.	FINAL APP. FOR ISSUE
	DRAWN BY M. MURPHY	ELECT. APP.	NUC. APP.	
	DFG / CHK	MECH. APP.		
	ENGR / CHK	CIVIL APP.		

REV. NO. | STA. NO. | AA | DWG. NO. 10080-RM-436-5A | REV. 0

PREPARED ON THE NERU CAEDDI SYSTEM

3.3 WIND AND TORNADO LOADINGS

3.3.1 Wind Loadings

3.3.1.1 Design Wind Velocity

An 80-mph fastest mile wind speed, at an assumed elevation of 30 feet, is used as the design wind velocity to determine wind loadings on Seismic Category I structures, in accordance with Section 2.3.

This basic wind speed has a 100-year mean recurrence interval.

3.3.1.1.1 Basis for Wind Velocity Selection

The basic wind speed of 80 mph corresponds to the expected fastest mile of sustained wind for a 100-year mean recurrence interval in the general area of the Beaver Valley Power Station (BVPS), (Section 2.3). As noted in Section 2.3, the wind velocity design values are conservative due to the sheltered location of the site. Additional meteorological data are presented in Section 2.3.

3.3.1.1.2 Vertical Velocity Distribution and Gust Factor

The vertical velocity distribution and effect of gust factors are in accordance with ASCE Paper No. 3269. The gust factors are included in the determination of gust velocity pressures.

3.3.1.2 Determination of Applied Forces

The resultant design wind pressures (W) applied to Seismic Category I structures are determined in the following manner:

V_{30} = Fastest mile wind at 30 feet above ground (mph)

V_z = Fastest mile wind at Z feet above ground (mph) (from ASCE Paper No. 3269, Table 1 for inland areas)

f = Gust factor dependent upon building width (Table 3.3-1)

V_g = Gust velocity (mph) (used for design), $V_g = fV_z$

q_z = Dynamic pressure at Z feet above ground (psf), $q_z = 0.00256\ V_z^2$

K = Gust coefficient dependent upon building width, $K = f^2$ (Table 3.3-1)

q_g = Gust dynamic pressure, (psf) $q_g = 0.00256\ (fV_z)^2 = Kq_z$

C_d = Structure shape factor, C_d = 1.3 for rectangular buildings

P_o = Normal wind loading on rectangular buildings, (psf), $P_o = C_d q_z$

P_w = Design normal wind loading on rectangular buildings (psf), $P_w = C_d q_g = C_d K q_z = K P_o$

Based on the preceding, the design normal wind loading (P_w) for rectangular buildings is as presented in Table 3.3-2.

Where wind pressures on other than typical building walls are considered, the design normal wind loading is adjusted for the appropriate shape or drag factor (ASCE Paper No. 3269).

Design wind pressures are combined with dead and live loads and other loadings related to the structure, as presented in Section 3.8.4. Wind and earthquake loadings are not considered to apply at the same time. Structures designed for tornadoes are not checked for maximum normal wind pressures, as the tornado design causes maximum stress conditions.

3.3.2 Tornado Loadings

3.3.2.1 Applicable Design Parameters

The probability of tornado occurrence and the associated recurrence interval at the site is determined in Section 2.3.1.2. Tornado loading is not considered to be coincident with earthquake or design basis accident loadings. The following are the maximum tornado design parameters:

1.	Maximum wind speed	360 mph
2.	Rotational wind speed	290 mph
3.	Translational speed	70 mph
4.	Damage path diameter	1,000 feet
5.	Pressure drop	3 psi
6.	Average rate of pressure drop	3 psi in 3 seconds

The maximum wind speed is the sum of the rotational speed component (290 mph at 30 feet above grade) and the tornado translation (70 mph). The pressure drop of 3 psi takes place over a 3 second interval. The rate of pressure drop is not constant. The maximum rate of pressure drop is 2 psi per second. The damage path diameter

of 1,000 feet corresponds to a radius of maximum rotational speed of 150 feet. With these parameters, the site tornado model is consistent with the Region I model specified in Regulatory Guide 1.76, Design Basis Tornado for Nuclear Power Plants (USNRC 1974).

3.3.2.2 Determination of Loadings on Structures

Total tornado loads (W_t) generated by the design tornado specified for the site include loads due to tornado wind pressure (W_w), tornado-created differential pressure (W_p), and tornado-generated missiles (W_m).

Pressures and loads are determined in the manner described in the following subsections.

3.3.2.2.1 Wind Loads

The tornado wind pressure for the tornado model is determined by the formula:

$$P = 0.00256\ V^2$$

where:

P = Tornado wind pressure (in psf)

V = maximum tornado velocity (in mph)

The tornado wind pressure is assumed constant with height. This pressure is multiplied by applicable shape factors and drag coefficients (ASCE Date; Singell 1958) to provide the tornado design pressure (P_w) which is applied to the exposed surfaces of the structure.

The tornado wind pressure load (W_w) is the area integral of the tornado design pressure (P_w) acting over the exposed surface of the structure or component.

3.3.2.2.2 Differential Pressure Loads

A tornado-generated differential pressure drop of 3 psi is used in the design of tornado-resistant structures.

The differential pressure load (W_p) is the area integral of the tornado-generated pressure load acting on the structure or component.

3.3.2.2.3 Tornado-Generated Missile Loads

The structural response to tornado-generated missile loads (W_m) is determined as described in Section 3.5.

3.3.2.2.4 Total Tornado Design Loads

Seismic Category I structures are designed to withstand tornado load combinations as follows:

1. $W_t = W_w$

2. $W_t = W_p$

3. $W_t = W_m$

4. $W_t = W_w + 0.5\ W_p$

5. $W_t = W_w + W_m$

6. $W_t = W_w + 0.5W_p + W_m$

where:

W_t = Total tornado load

W_w = Tornado wind load

W_p = Tornado differential pressure load

W_m = Tornado missile load

For each particular structure, or portion thereof, the most adverse of the above combinations are used, as appropriate.

3.3.2.3 Effect of Failure of Structures of Components Not Designed for Tornado Loads

Seismic Category I structures are listed in Section 3.2 and are designed to withstand tornado-induced loads, where required, to ensure the integrity of safety-related systems. The design of all other structures allows a partial or complete structural failure under tornado conditions when safety-related structures, systems, or components are not endangered.

3.3.3 References for Section 3.3

American Society of Civil Engineers (ASCE). Wind Forces on Structures. Transactions, Paper No. 3269.

Singell, T.W. Forces on Enclosed Structures. ASCE Journal of the Structural Division, July 1958.

U.S. Nuclear Regulatory Commission (USNRC), Design Basis Tornado for Nuclear Power Plants. Regulatory Guide 1.76, Washington, D.C., 1974.

Tables for Section 3.3

TABLE 3.3-1

GUST FACTORS AND COEFFICIENTS(*)

Width of Structure (ft)	Gust Factor (f)	Gust Coefficient (K)
0-50	1.3	1.7
51-100	1.2	1.4
101-150	1.1	1.2
Greater than 150	1.0	1.0

NOTE:

*Based on: American Society of Civil Engineers. Wind Forces on Structures. Transactions, Paper No. 3269.

TABLE 3.3-2

DESIGN NORMAL WIND LOADINGS FOR RECTANGULAR BUILDINGS(*) (P_W)

DESIGN WIND VELOCITY PRESSURE (PSF)

Elevation Above Grade (ft)	Width of Structure(ft)			
	0-50	51-100	101-150	>150
0-50	36.2	29.8	25.6	21.3
51-150	51.1	42.0	36.0	30.0
151-400	68.5	56.4	48.3	40.3

NOTE:

*Based on procedure outlined in: American Society of Civil Engineers. Wind Forces on Structures. Transactions, Paper No. 3269.

3.4 WATER LEVEL (FLOOD) DESIGN

The plant finished grade (el 730 feet 4 inches to 735 feet mean sea level (msl)) is equal to or above the maximum external flood level calculated for the site. Refer to Section 2.4.2.2 for discussion of Flood Design Considerations. The determination of the probable maximum flood (PMF) originating external to plant structures (Section 2.4.3) is in compliance with Regulatory Guide 1.59, Revision 2, issued August 1977. Groundwater levels are described in Section 2.4.13. Buoyancy and static water force design for Seismic Category I structures is based on the PMF level of 730 feet msl. Flood protection for the site is in compliance with Regulatory Guide 1.102, Revision 1, issued September 1976.

The site and plant drainage system is designed to mitigate the effects of local intense precipitation (Section 2.4.2.3).

Internal flooding due to postulated piping system failures has been considered in the internal design and arrangement of structures containing safety-related components. Section 3.6B.1 describes the postulated piping failures and Section 3.6B.1.3.4 describes the environmental effects, including flooding, of these failures.

3.4.1 Flood Protection

Safety-related systems and components are protected from external floods by locating them in Seismic Category I buildings described in Sections 3.8.1.1 and 3.8.4.1.

Access to these structures is located above grade. In general, construction joints in the exterior walls and mats below el 730 feet, are provided with water stops. In addition, the containment structure has a continuous waterproof membrane below grade. Penetrations entering these buildings below grade are adequately sealed to prevent in-leakage. For example, piping penetrations in exterior walls of valve pits include flexible, water-tight boots to maintain the integrity of the building. As an added precaution, potential in-leakage to the containment structure is collected in sumps at the lower building elevation and pumped out.

The intake structure is the only safety-related structure which could be subjected to the effects of coincident waves and associated runup from external flooding. The intake structure, which is flood-protected to el 737 feet msl by extending the ventilation air intakes to this elevation, allows for a 6.7 feet runup above the standing water level of 730 feet associated with a 5 feet maximum wave (Section 2.4.3.6). The cubicles containing the service water pump motors can be completely sealed so that the entire intake structure could be under water without affecting pump operability, the cubicles are vented to the atmosphere by vent ducts that extend above maximum wave height.

A plant flood alert will be issued for an Ohio River water level of 690 feet msl or above. Actions to protect safety-related equipment are initiated when the river water level reaches 695 feet msl and water is rising upstream. Further discussion of implementation times and procedures to bring the plant to a cold shutdown is included in Section 2.4.14.

As the lowest floor levels of all Category I structures are located above ground water level, a permanent dewatering system is not required.

3.4.2 Analytical and Test Procedures

The following analyses have determined the extent of flooding external and internal to plant structures, so that adequate protection features could be designed and implemented.

Since the plant finished grade is higher than the maximum flood level, no dynamic water force is applied to Seismic Category I structures, with the exception of the intake structure.

For the intake structure design, hydrostatic forces associated with the maximum flood level are included in the fluid pressure loads to be imposed on the structure as identified in Sections 3.8.1 and 3.8.4. Forces acting on this structure are calculated on the basis of full external hydrostatic pressure and coincident wave forces, corresponding to this flood level. As discussed in Section 2.4.10, all Seismic Category I structures are designed for forces resulting from the load combinations which include the design flood.

3.5 MISSILE PROTECTION

3.5.1 Missile Selection and Description

3.5.1.1 Internally-Generated Missiles (Outside Containment)

Components outside containment but internal to plant structures have been evaluated for potential missile sources.

Valves in high pressure fluid system (P>275 psig) have been evaluated as potential missile sources. The parts which could become possible missiles are valve stems and bonnets.

Valve stems are not considered potential missiles because there is more than one feature capable of preventing stem ejection, such as face-hardened backseats and air and motor operators.

Bolted bonnets of ASME Code, Section III, valves are not considered potential missiles because they are designed against bonnet-to-body connection failure and subsequent bonnet ejection by means of the following:

1. Compliance with the ASME Code, Section III, and

2. Control of load during tightening of bonnet-to-body joints.

The proper stud torquing procedures limit the stress of the studs to the allowable limits established in the ASME Code. This stress level is far below the material yield. Pressure-retaining parts of the valves are constructed and hydrotested in accordance with the ASME Code, Section III. The bodies and bonnets are volumetrically and surface tested to verify soundness. Critical valves are in-service inspected in accordance with the ASME Code Section XI.

The failure of all other valves in high pressure systems has been evaluated and found not to affect the items required for safe shutdown.

Pumps and fans located outside containment in areas containing safety-related components have been evaluated for missiles associated with overspeed failures. The maximum no-load speed of these pumps and fans is equivalent to the maximum operating speed of their motors. Consequently, no pipe break or single failure affecting the suction line would increase pump or fan speed above that of the no-load condition. Furthermore, there are no pipe breaks plus single failure combinations which could result in a significant increase in pump suction or discharge head. Therefore, no overspeed is expected.

For axial fans, the typical failure mode is the loss of a vane. For centrifugal fans, the failure mode is the failure of the impeller rotor or an attached blade. The fan to motor coupling is also a potential missile source. In the case of four axial fans

(Table 3.5-12), missile shields have been installed to retain fan blades which could otherwise be ejected through the inlet air flex connection. For all other cases, it has been demonstrated that either the fan housing is adequate to retain the fragments or a stress analysis has determined that the safety factors against the failure of these components is acceptable.

Pump missiles may be generated by failure of either the impeller or a shaft coupling. It has been demonstrated that either the pump casing is adequate to retain the fragments or a stress analysis has determined that safety factors against the failure of these components is acceptable. This includes the turbine-driven auxiliary feedwater pump where an analysis has been completed which documents that the generated missile does not escape the pump or turbine casing.

Shaft couplings have been evaluated and it was found that no single failure mode existed that could result in a generated missile.

The rod control motor-generator sets were evaluated for potential missile generation. The fabrication specifications of the motor-generator set flywheels control the material to meet ASTM-A533-70, Grade B, Class 12, or equivalent, with inspections per MIL-I-45208A, and flame cutting and machining operations governed to prevent flaws in the material. Nondestructive testing (NDT) for nil ductility (ASTM-E-208), Charpy V-notch (ASTM-A593), ultrasonic (ASTM-A577 and A578), and magnetic particle (ASTM Section III, NB2545), is performed on each flywheel material lot. In addition to these requirements, stress calculations are performed consistent with guidelines of the ASME Code, Section III, Appendix A, to show that the combined primary stresses due to centrifugal forces and the shaft interference fit shall not exceed 1/3 of yield strength at normal operating speeds (1,800 rpm), and shall not exceed 2/3 of the yield strength at 25 percent overspeed. However, no overspeed is expected because the flywheel weighs approximately 1,300 pounds, and is 35.26 inches in diameter by 4.76 inches wide. The flywheel mounted on the generator shaft, which is directly coupled to the motor shaft, is driven by a 200 hp 1,800 rpm induction motor. The torque developed by the motor is insufficient for overspeed. Therefore, there are no credible missiles from the motor-generator sets.

Table 3.6B-2 shows the safety-related structures, systems, and components outside containment required for safe shutdown of the reactor.

There are no known missiles generated due to gravitational effects. All safety components, and those nonsafety-related components which could affect safety-related components, are seismically supported in accordance with Sections 3.2 and 3.7.

Those tanks that are in areas that contain safe shutdown systems are designed to the requirements of the ASME Code, and are therefore not considered credible sources of missiles.

Missiles produced from non-ASME Code pressurized tanks and compressed air/gas cylinders have been evaluated and will not affect the items required for safe shutdown.

Refrigeration compressors and condensing units have been evaluated and will not affect the items required for safe shutdown.

An additional credible source of jet-propelled missiles outside of the containment are temperature and pressure sensor assemblies. These have been investigated and shown not to be credible missile sources.

3.5.1.2 Internally-Generated Missiles (Inside Containment)

3.5.1.2.1 Bases for Missile Selection

Catastrophic failure of the reactor vessel, steam generators, pressurizer, and reactor coolant pump (RCP) casings leading to the generation of missiles is not considered credible. Massive and rapid failure of these components is not credible because of the material characteristics, inspections, quality control during fabrication, erection, conservative design, and prudent operation as applied to the particular component. The RCP flywheel is not considered a source of missiles for the reasons discussed in Section 5.4.1. Nuts and bolts are of negligible concern because of the small amount of stored elastic energy.

The following nuclear steam supply system components do have a potential for missile generation inside the reactor containment:

1. Control rod drive mechanism (CRDM) housing plug, drive shaft, and the drive shaft and drive mechanism latched together,

2. Valves (Table 3.5-l),

3. Temperature and pressure sensor assemblies, and

4. Pressurizer heaters.

Gross failure of a CRDM housing, sufficient to allow a control rod to be rapidly ejected from the core, is not considered credible for the following reasons:

1. Control rod drive mechanisms are shop hydrotested at 4,100 ±75 psi,

2. Control rod drive mechanism housings are individually hydrotested to 3,107 psi after they are installed on the reactor vessel to the head adapters, and checked again during the hydrotest of the completed reactor coolant system (RCS), and

3. Control rod drive mechanism housings are made of Type 304 stainless steel, which exhibits excellent notch toughness at all temperatures that will be encountered.

However, it is postulated that the top plug on the CRDM will become loose and will be forced upward by the water jet. The following sequence of events is assumed: 1) the drive shaft and control rod

cluster are forced out of the core by the differential pressure of 2,500 psi across the drive shaft (the drive shaft and control rod cluster, latched together, are assumed fully inserted when the accident starts); 2) after traveling approximately 12 feet, the rod cluster control spider hits the underside of the upper support plate; 3) upon impact, the flexure arms in the coupling joining the drive shaft and the control cluster fracture, completely freeing the drive shaft from the control rod cluster; and 4) the control cluster is completely stopped by the upper support plate; however, the drive shaft continues to accelerate upward, hitting the missile shield provided.

Valves within the reactor coolant pressure boundary (RCPB) have been examined to identify potential missiles. This review identified no credible failures that could result in missile formation. Therefore, valves within RCPB are not considered credible sources of missiles. Motor-operated valves and air-operated valves contain design features which will effectively preclude the ejection of valve stems.

Valves in high-pressure systems inside containment have been reviewed. All valves are designed against bonnet-to-body connection failure and subsequent bonnet ejection by means of the following:

1. Compliance with the ASME Code, Section III, and

2. Control of load during tightening of bonnet-to-body joints.

The proper stud torquing procedures limit the stress of the studs to the allowable limits established in the ASME Code. This stress level is far below the material yield. Pressure-retaining parts of the valves are constructed and hydrotested in accordance with the ASME Code, Section III. The bodies and bonnets are volumetrically and surface tested to verify soundness. Critical valves are in-service inspected in accordance with ASME Section XI.

Valve missiles are postulated in the region where the pressurizer extends above the operating floor. Valves in this region are the pressurizer safety valves, the motor-operated isolation valves in the relief line, and the air-operated relief valves. Although failure of these valves is not considered credible, failure of the valve bonnet body bolts is postulated. The integrity of the containment liner and safety-related equipment from the resultant bonnet missile is assured by the pressurizer cubicle walls and roof, which act as a missile barrier.

The only credible source of jet-propelled missiles from the reactor coolant piping and piping systems connected to the RCS is represented by the temperature and pressure sensor assemblies. The resistance temperature sensor assemblies can be of two types: those located in a well, and those without a well. Two rupture locations have been postulated:

1. Around the welding between the boss and the pipe wall, and

2. At the welding (or thread) between the temperature element assembly and the boss without the well element, and the welding (or thread) between the well and the boss with the well element.

A temperature sensor is installed on the RCP close to the radial bearing assembly. A hole is drilled in the gasket and sealed on the internal end of a steel plate. In evaluating missile potential, it is assumed that this plate breaks, and the pipe plug on the external end of the hole can become a missile.

In addition, a failure of the weld between the instrumentation well and the pressurizer wall is assumed, causing the well and sensor assembly to become a potential missile.

Analyses have been done to ensure that conservative factors of safety exist against the weld failure, thus concluding that missiles from temperature and pressure assemblies are not credible.

Pumps and fans located inside containment in areas containing safety-related components have been evaluated for potential missiles. In the case of one axial fan (Table 3.5-12), a missile shield was installed to retain fan blades which could otherwise be ejected through the inlet air flex connection. Three other axial fans (Table 3.5-12) missile shields were installed to retain fan blades which could otherwise be ejected through the fan housing. In all other cases, it has been demonstrated that either the fan housing or pump casing is adequate to retain the fragments, or a stress analysis has determined that the safety factors against the failure of these components is acceptable.

Finally, it is postulated that the pressurizer heaters could loosen and become jet-propelled missiles. These missiles have been analyzed and shown not to have any adverse effects on essential equipment.

3.5.1.2.2 Missile Description

The missile characteristics of the valves in the region where the pressurizer extends above the operating deck are given in Table 3.5-1.

The CRDM missiles are summarized in Table 3.5-2. The missile velocities have been calculated by balancing the forces due to the water jet. No spreading of the water jet has been assumed.

The missile characteristics of the instrumentation well of the pressurizer and the pressurizer heaters are given in Table 3.5-4.

3.5.1.2.3 Missile Protection Provided

The following comprise the principal design bases:

1. Missiles generated inside the reactor containment shall neither cause loss of function of any redundant engineered safety features nor damage the containment boundary. In addition, a missile not generated by a loss-of-coolant-accident (LOCA) shall not initiate a LOCA.

2. Missiles generated outside of containment but internal to BVPS-2 structures shall not cause loss of function of any design feature provided for either continued safe operation or shutdown during operating conditions, operational transients, and postulated accident conditions associated with the effects of missile formation.

The most positive method employed to prevent damage from internally-generated missiles is to assure design adequacy against generation of missiles, rather than allow missile formation and try to mitigate the effects. Where potential missiles are identified, safety-related structures, systems, and components whose safety function might be impaired are protected by either locating the systems or components in individual missile-proof structures, physically separating redundant systems or components of the system, or providing special localized protective shields or barriers.

The following protection is provided for the missiles described in Section 3.5.1.2.2. Since CRDM missiles travel directly upward, a concrete shield is supported above the CRDMs to limit their travel. Valve missiles in the pressurizer cubicle above the operating floor travel directly upward where they are contained by the roof of the pressurizer cubicle. Pressurizer instrument sensor missiles are contained by the pressurizer cubicle roof and walls. Since the pressurizer heater missiles have no adverse effects on essential equipment, no protection is provided.

The ability of structures or barriers to withstand the effects of potential internally-generated missiles and to minimize the production of secondary missiles is discussed in Section 3.5.3.

Table 3.6B-2 identifies essential systems, structures, and components required for safe shutdown.

There are no known missiles generated due to gravitational effects. All safety components and those nonsafety components which could affect safety components are seismically supported in accordance with Sections 3.2 and 3.7.

Missiles produced from non-ASME Code pressurized tanks and compressed air/gas cylinders have been evaluated and will not affect items required for safe shutdown.

3.5.1.3 Turbine Missiles

Postulated turbine missiles have been evaluated by considering the probabilities of missile generation and of impact to safety-related items.

The probability (P4) of damage to plant structures, systems, and components important to safety is:

$$P4 = P1 \times P2 \times P3$$

where:

P1 = the probability of generation and ejection of a high energy missile,

P2 = the probability that a missile strikes a critical plant region, given its generation and ejection, and

P3 = the probability that the missile strike damages its target in a manner leading to unacceptable consequences. Unacceptable consequences are defined here as the loss of the capacity to maintain the integrity of the RCPB, to shut down the plant, maintain it in a safe shutdown condition, and/or limit offsite radiation exposures.

3.5.1.3.1 Probability of Generation and Ejection (P1)

A turbine missile can be caused by brittle fracture of a rotating turbine part at or near turbine operating speed, or by ductile fracture upon runaway after extensive, highly improbable, control system failures.

The probabilities of such failures is, however, significantly reduced by the effects of inservice testing and inspection frequencies. Reduced probability of missile generation and ejection is the approach used by BVPS-2 for ensuring that the probability of unacceptable damage to essential structures, systems, and components is sufficiently low.

Therefore, the turbine manufacturer, Siemens, has performed an analysis of turbine reliability which considers known and likely failure mechanisms and expresses such failure probability in terms of the intervals between inservice inspection and test. Consequently, the design-speed missile generation probability is related to disk design parameters, material properties, and the inservice volumetric (ultrasonic) disk inspection interval. Further, the overspeed missile generation probability is related to the turbine governor and overspeed protection system's sensing and tripping characteristics, the design and arrangement of main steam control and stop valves and the reheat steam intercept and stop valves, and the inservice testing and inspection intervals for system components and valves. Inspection and test schedules which meet the necessary safety objectives are provided in Section 10.2.

3.5.1.3.2 Probability of Missile Strike (P2)

In the event of missile ejection, the probability of a strike on a plant region (P2) is a function of the energy and direction of an ejected missile and of the orientation of the turbine with respect to the plant region. Figure 3.5-1 shows the turbine placement and orientation for BVPS-1 and BVPS-2, as well as the ± 25 degree missile ejection zones for the low pressure turbine wheels. (Both BVPS-1 and BVPS-2 turbines are considered as possible missile sources).

The BVPS-2 target areas are identified by shaded areas in Figure 3.5-1. The target areas include all the Category I buildings that contain essential systems, as well as those essential systems outside of Category I buildings.

As shown on Figure 3.5-1, due to the plant arrangement, all cross-unit damage associated with low trajectory turbine missiles is precluded and the potential for cross-unit damage from high trajectory turbine missiles is minimized. The ability of BVPS-1 to satisfy its own plant safety objective in regard to turbine missiles provides adequate assurance that the damage probability to BVPS-2 due to the BVPS-1 turbine is also acceptably low.

3.5.1.3.3 Probability of Damage (P3)

The probability of damage (P3) is a function of the energy of the missile, its angle of impact upon the affected structure, and the ability of that structure to prevent unacceptable damage to the essential systems it protects.

3.5.1.3.4 Probability Evaluation

The probability of unacceptable damage to safety-related structures, systems and components by turbine disk fragments is less than the plant safety objective of 10^{-7} per year. This is accomplished by a sufficiently frequent turbine testing and inspection schedule which provides that the probability of turbine missile generation (P1) is maintained at 10^{-5} per year or less.

The combined probability of strike and damage (P2 P3) is considered to be 10^{-2} per year or less. This conservatively considers the unfavorable orientation of the turbine generator.

Figure 3.5-2 shows the P1 missile generation probability vs. hours of operation since the last disk inspection, with a comparison to the NRC requirements.

The P1 values are for the entire unit considering all rotors and both design and overspeed conditions. The turbine testing and inspection program is provided in Section 10.2.

A calculation was performed to determine the turbine missile ejection probability resulting from an extension of reheat stop and intercept valve test intervals. A reheat stop and intercept valve inspection interval of 60 months was assumed in the calculation. Based on the calculation, it was determined that the total turbine missile generation probability meets applicable acceptance criteria with an 18 month reheat stop and intercept valve test interval.

3.5.1.3.5 Turbine Overspeed Protection

The turbine speed control system has adequate redundancy to ensure that the turbine does not attain destructive overspeed. The standard Westinghouse analog electro-hydraulic control (EHC) system and electromechanical trip system includes three separate speed sensors mounted on the turbine stub shaft located in the turbine front pedestal. These sensors are:

1. Mechanical overspeed trip weight (spring-loaded bolt),

2. Electromagnetic pickup for main speed governing channel, and

3. Electromagnetic pickup for the overspeed protection control channel. This pickup uses the same toothed wheel as item 2.

An overspeed protection controller is provided and is activated in the event turbine speed exceeds 103 percent of rated speed (1,800 rpm), or

during a full load drop. In either event, both the governor and the interceptor valves close. The governor valves remain closed until the speed is decreased to rated speed (1,800 rpm). The interceptor valves are modulated and reopen when speed decreases to below 103 percent of rated speed to remove entrapped steam in the reheat system. If speed again increases above 103 percent, they reclose and continue to modulate until speed remains below 103 percent of 1,800 rpm.

The overspeed protection controller is the first line of overspeed protection and is designed to prevent the turbine from reaching the overspeed trip point.

Should the turbine exceed approximately 110 percent of rated speed, the throttle (stop), governor, reheat stop, and intercept valves will all be tripped closed by both the mechanical overspeed bolt and the backup electrical trip. Thus, the turbine is tripped by redundant trip systems from independent speed sensors to assure utmost safety.

The electromechanical trip system also trips the turbine generator on excessive thrust bearing wear, low bearing oil pressure, and low condenser vacuum.

The turbine is tripped by the dumping of control system hydraulic fluid from all valve pistons, causing the heavy springs to close the throttle (stop), governor, reheat stop, and intercept valves in 0.15 second. Two valves in series in each steam entrance to the turbine are closed simultaneously upon a unit trip to provide redundant steam isolation to the turbine. The turbine operation, trip, and overspeed protection are discussed in more detail in Sections 10.2.2.1.1, 10.2.2.1.2, and 10.2.2.1.3.

The redundancy, component reliability, and test procedures of the turbine control system are detailed in Section 10.2.2.1.

3.5.1.3.6 Turbine Valve Testing

Throttle, governor, interceptor, and reheat stop valves of the turbine generator are tested periodically in the single valve mode while the EHC system is in operator automatic and load first stage pressure feedback is in service.

Throttle and governor valves are tested individually. Upon completion of each test, the valve is returned to its original position before the next valve is tested. Interceptor and reheat stop valves are interlocked so that a pair of these valves in one crossover pipe is tested together. Each pair of valves is returned to the open position before the next pair is tested.

Reducing load when testing valves is not necessary since valves may be tested at any load. The maximum load reduction during any valve test occurs when the unit is at full load. Under these circumstances, a test of a governor valve results in a short-time load reduction of about 4 percent of full load. The test of a throttle valve or an interceptor-reheat stop valve pair at full load results in a load decrease of 1 to 3 percent of full load. When valve tests are made below full load, the control system acts to maintain load.

When governor valves are tested at full load, the pressure drops are those normally experienced at the 75 percent admission operating

point (that is, 3 out of 4 governor valves open). When governor valves are tested at less than full load, the pressure drops are no different than those experienced in normal operation at reduced load.

3.5.1.4 Missiles Generated by Natural Phenomena

The only missiles considered credible which are generated by natural phenomena are those generated by either tornado or flood.

Tornado-generated missiles are selected and used as a design basis for all Seismic Category I structures. These missiles have the aerodynamic characteristics necessary for flight in a tornado. Table 3.5-5 describes the characteristics of the missiles selected by the National Bureau of Standards (NBS) as being representative of construction site debris (NBS 1976).

All Seismic Category I systems and components are located in Seismic Category I structures. Those Category I structures designed to withstand the effects of tornado missiles and the systems and components thus protected are identified in Tables 3.2-1 and 3.2-2.

In general, a minimum of 2 feet thickness of reinforced concrete having a minimum strength of 3,000 psi (28 day compressive strength) was used for walls, roofs and floors designated as missile protection. A lesser concrete thickness was used in several areas where it was shown by analysis to be adequate for the postulated missiles. The minimum reinforcing steel each way in each face of any square foot of wall or slab providing missile protection is 1.85 square inches.

Ventilation or penetration openings in the various buildings housing essential shutdown equipment are protected from tornado missiles by reinforced concrete walls or labyrinths or steel missile barriers.

As discussed in Section 2.4, flood levels do not approach the site grade and, therefore, waterborne missiles are not considered, except in the case of the primary intake structure.

The alternate intake structure is designed to provide a redundant system for the primary intake structure. This was provided expressly for the purpose of providing a backup system in the event the primary intake structure is damaged due to a gasoline barge explosion.

3.5.1.5 Missiles Generated by Events Near the Site

The acceptance criteria of NUREG-0800 (USNRC 1981) state that the aggregate probability of exceeding BVPS-2 design criteria associated with all identified external man-made hazards be less than 1.0. In particular, the total probability per year of penetrating site proximity missile strikes on safety-related structures should be

shown to be less than 10^{-7} per year, or the design bases modified to accommodate them.

This report provides an analysis of nearby transportation modes of hazardous materials judged capable of generating significant missiles.

The relative importance of potential sources of missiles derives from two primary factors, the nature of the shipment lading itself, and the shipment frequency past the site. Several studies (U.S. Department of Transportation (USDOT) 1981a, 1981b; Association of American Railroads and Railway Progress Institute (AAR-RPI) 1972a and 1972b; National Transportation and Safety Board (NTSB) 1971, 1972, 1974, 1979, 1980) have borne out the historical record, which shows that shipments of flammable compressed gas are the most likely to

produce tank fragments with a range and kinetic energy of any significance to site safety-related structures. These shipments are almost exclusively limited to rail tank cars on the section of ConRail track in the Midland node to the west of the site.

A search of U.S. Army Corps of Engineers data for mile point 35 of Ohio River barge traffic showed that there are no significant shipments of liquified petroleum gas past the site. The only flammable liquid carried in bulk tank barges with a significant explosion potential is gasoline. An alternate intake structure has been provided to address this concern (Section 9.2.1.2).

Telephone and letter surveys of nearby industrial firms have shown that there are no known shipments of flammable compressed gas which use the Highway 168 bridge at Shippingport. There are occasional bulk shipments of chemicals such as solvents, and regular use of the bridge by gasoline tank trucks, but these use low pressure tank trailers of all welded ductile construction that are unlikely to produce missiles of any consequence to the site.

At intervals of about once every 18 months, for a period of one or two weeks, tank truck shipments of nonflammable compressed gas (LOX, LN_2, Argon) are received at the Crucible Plant in Midland. These are estimated at a maximum two loads per day during this period. From the historical experience with these products, the missile generating potential of the shipments is deemed negligible (USDOT 1981a, 1981b).

Hence, the following analysis concentrates primarily upon rail shipments of flammable compressed gas. The shipments of flammable compressed gas are listed in Table 3.5-6.

Rail Shipment Analysis

The following algorithm is used to estimate the aggregate probability of a violent rupture or explosion from a rail shipment of hazardous materials capable of producing large missiles able to reach safety-related structures at the site:

$$P_e = \sum_{i=1}^{R} E^{S_{i_{T_i}} L_i} \qquad (3.5\text{-}7)$$

where:

P_e = aggregate probability of missile generating ruptures or explosions from rail accidents of significance to safety-related structures (events/year).

R = number of hazardous materials likely to produce violent ruptures or explosions with significant missile generating capability (dimensionless).

E = frequency of events which result in explosions or violent ruptures capable of producing significant missiles (events/shipment).

S_i = shipment frequent of i-th hazardous material past site (shipment/year).

L_i = track exposure length for the i-th material (miles).

T_i = average shipment trip length for i-th material (miles).

Number of Hazardous Materials, R:

The hazardous materials deemed likely to produce significant missiles in terms of size and potential range were selected from the list of STCC code 4902, 4905, and 4906 hazardous materials in the ConRail (1980) Midland node report. These materials were also found to be prevalent in accident/incident data contained in special USDOT (1980, 1981) computer printouts of March 26 and April 15, 1981, and rupture data from The Railroad Tank Car Safety Research and Test Project Report RA-01-2-7 (AAR-RPI 1972a) as well as several pertinent railroad accident reports by the NTSB.

The materials selected (Table 3.5-6) were generally flammable compressed gases, and they produce a characteristic rupture event ranging from a simple overpressure and subsequent fire, to a boiling liquid expanding vapor explosion (BLEVE). Two flammable liquids, ethylene and propylene oxide, and a compressed gas that is slightly flammable, anhydrous ammonia, were added to the list because of their particular material properties and their incident rate.

Frequency of Events Resulting in Explosions or Ruptures, E:

The event incidence for significant missile-producing ruptures is infrequent enough that material specific data were not judged to be a reliable indication. In addition, ConRail-specific data for the period March 30, 1976 through December 31, 1979, contained no incidents involving explosions. Instead, a comparison was made between the risk assessment made for propane transport by Battelle Memorial Institute in PNL-3308 (Geffen 1980) and the USDOT data in accident/incident bulletins for the years 1975-1979. In terms of the incidence of tank car violent rupture or explosions per tank car mile, the predicted values were as follows:

PNL-3308 3.1×10^{-9} events/tank car-mile

USDOT ('75-'79) 1.5×10^{-9} events/tank car-mile

The Battelle report considers nonaccident related tank failures, as well as transportation accidents, and about 20 percent of ruptures occur in nonaccident situations, the Battelle event frequency was used in this analysis even though it is recognized to be demonstrably conservative. This also accounts for the contribution to the average rate from the slightly higher incidence for propane and liquid petroleum gas (LPG) shipments. The latter are not controlling for the site because approximately 3/4 of the hazardous material tank car shipments in question contain vinyl chloride monomer (Table 3.5-6).

Shipment Frequency, S_i:

Shipment frequencies are derived from applicable data in the ConRail (1980) Midland node report for the period January 1978 through June 1979. Tank cars per year and per train for the commodities in question appear in Table 3.5-6.

Track Exposure Length, L_i:

Although it is obvious from the accident data examined that the total lading from each car is not involved in producing ruptures and rupture effects, the rail line exposure distance for the i-th material was estimated using the equivalent alpha-trinitrotoluene (TNT) method to calculate radii, as suggested by Regulatory Guide 1.91. The method of Eichler and Napadensky (1977) in final report J6405 was used to estimate TNT equivalents (W) using the net or gaseous product heats of combustion for each material. The radii $R = 45W^{1/3}$ were calculated, and the corresponding exposure distances estimated from arcs intercepting the rail line from safety-related structures other than the intake structure. The closest point of approach to the site safety-related structures is then taken to be about 2,030 feet. From this analysis, summarized in Table 3.5-7, the shipments of dimethyl ether are seen to be incapable of producing a significant missile.

Average Shipment Trip Length, T_i:

The average shipment lengths for each hazardous material were derived from the One Percent Waybill Sample of U.S. Tank Car Shipments or Appendix E to the Final Phase 02 Report RA-02-2-18 (AAR-RPI 1972b).

Aggregate Probability of Missile Generating Ruptures or Explosions, P_e:

Results from the previous effort are summarized in Table 3.5-8. The aggregate probability of tank car violent ruptures or explosions which can produce significant missiles is conservatively calculated to be 4.9×10^{-6} per year. This is slightly above the NUREG-0800 (USNRC 1981) Section 3.5.1.5 suggested limit for conservatively estimated explosion probability so an assessment of potential missile ranges was made, using a simplified explosion model, and a comparison

made with accident experience contained in AAR-RPI RA-01-2-7 (1972a). These distances are contained in Table 3.5-9.

Discussion of Results

According to Mr. William F. Black, Chief of the Office of Safety, Federal Railroad Administrations (FRA), USDOT, the types "J", "S", and "T" pressure tank car retrofits, which establish such things as thermal insulation protection, head puncture shields, shelf couplers, and upgraded safety relief valve capacities, have all been installed on existing tank cars as of December 31, 1980. All new compressed gas tank cars must also meet these provisions, which were proposed under Docket No. HM 144 and modified in subsequent notices under Title 49, Parts 173 and 179. Consequently, a substantial reduction is expected in the severity and incidence of violent ruptures and explosions. Recent experience at the July 26, 1980, derailment in Muldraugh, Kentucky, which involved the shell rupture of two out of six tank cars of vinyl chloride monomer, showed that the J type modification "greatly enhanced the crashworthiness of the chemically laden tank cars during and after the derailment ... catastrophic releases of hazardous materials did not occur." "Top and bottom shelf couplers, tank head shields, and tank shell insulation were performed within design limits as intended, and prevented head punctures in all of the derailed tank cars" (NTSB 1980). The FRA believes that compressed flammable gas tank car head punctures and fire-induced violent ruptures will be greatly reduced or eliminated in nine out of ten accident cases as a result of the improvements. In fact, accident experience has already started to reflect this improvement but sufficient data are not yet available to quantify the results. It should be noted that these changes are not being uniformly applied to flammable liquid tank cars such as those used for ethylene oxide. This experience is expected to improve because the lading loss savings and cost of damage make retrofits of thermal insulation and shelf couplers attractive to shippers. However, where this analysis reflects data from past experience, the benefits from the USDOT required retrofits are not taken credit for. It also reflects, by virtue of the referenced propane risk assessment, the contribution of nonaccident ruptures (Geffen 1980). The risk to BVPS-2 is nevertheless subject to further reducing factors, according to the model used on NUREG-0800 (USNRC 1981) in Section 3.5.1.5.

$$P_T = P_m \times P_{mr} \times P_{sc} \times P_p \times N \qquad (3.5\text{-}8)$$

where:

P_T = Total probability per year of a damaging missile strike.

P_m = Probability of an explosion (capable of missile generation).

P_m = Probability of an explosion (capable of missile generation).

P_{mr} = Probability of a missile reaching the plant (distance to safety-related structures).

P_{sc} = Probability of a missile striking a critical area (safety-related structure).

P_p = Probability of a missile energy exceeding the energy required to penetrate (the safety-related structures).

N = Number of missiles per explosion.

Some perspective is in order at this point. Not all major ruptures produce missiles. In fact, the Final Phase 01 Report (AAR-RPI 1972a) shows that in about one third of major ruptures, no significant missiles are created. Therefore, a conditional probability of an explosion capable of missile generation, $P_m = 0.67$, should be added to the equation. Also, a dependency exists between the probability of a missile reaching BVPS-2 and its energy exceeding that of the design basis tornado missile, generally assumed to be the "flying telephone pole." A study of 84 tank car fragmentations by Siewert (1972) showed that for distances exceeding 2,000 feet (610 meters), there is only a probability of 0.05 that the missile will reach the BVPS-2 structures at all. In the specific case discussed here, the minimum approach distance is 2,030 feet. Hence P_{mr} could be taken as 0.05. In addition, the energy remaining in missiles exceeding this distance is believed minimal because of likely size (small) and air resistance efforts (cumulative) for a tumbling object. The punching shear characteristic of the 200 mph telephone pole is much different than the damage typically inflicted by tank car fragments, such as an elliptical head. These heads have been known to demolish brick walls, but to bounce over fieldstone walls with little damage (Black 1981). Therefore, the probability, P_p, of a tank car missile exceeding the tornado missile design basis for reinforced concrete structures is judged to be proportional to their $(\text{mass})^{1/2}$, $(\text{velocity})^1$ and $(\text{mass to aspect ratio})^{-1/2}$, or:

$$P_p = \left(\frac{3500}{1500}\right)^{1/2} \left(\frac{180}{200}\right)^1 \left(\frac{1.0}{10.5}\right)^{-1/2} = 0.42 \qquad (3.5\text{-}9)$$

The number of missiles generated per explosion is usually two parts of one tank car which head in opposing directions. From Table 3.5-6, and the number of cars of any one commodity per train, we see this as a reasonable assumption. Therefore, only one missile per explosion would be postulated to be directed at the site, hence, N = 1.

Table 3.5-6 of the U.S. Atomic Energy Commission (USAEC) Topical Meeting Report (Iotti et al 1973) gives an estimate of the hit

probability of missiles from explosion striking a critical area, which places P_{sc} in the range of .01 or less for a distance of over 2,000 feet and a multi-unit site. Hence, the calculated total probability per year of a rail accident missile causing significant damage to a safety-related structure is:

$$P_T(\text{rail}) = 4.93 \times 10^{-6} \times 0.67 \times 0.05 \times 0.01 \times 0.42 \times 1.0$$

$$= 7.0 \times 10^{-10} \qquad (3.5\text{-}10)$$

An upper bound estimate assuming $P_m = 1.0$, $P_{mr} = 0.10$,

$P_{sc} = 0.10$, $P_p = 0.6$, and $N = 2.0$ is:

$$P_T(\text{rail}) = 4.93 \times 10^{-6} \times 1.0 \times 0.10 \times 0.10 \times 0.6 \times 2.0$$

$$= 5.9 \times 10^{-8} \qquad (3.5\text{-}11)$$

From the previously mentioned analysis, we conclude that a realistic assessment of the risk of significant missile generation events from railroad traffic near the site is that they do not constitute a design basis, and pose no unacceptable hazard to the BVPS-2 safety-related structures.

Estimation of Fragment Ranges from Rail Tank Car Explosion

In an accident involving easily liquified compressed gases, for example LPG and anhydrous ammonia, large fragments (greater than one-fourth of the container size) may travel by "thrusting." These fragments travel by a process which results from changing all or part of the liquid into gas by flash vaporization. The flash vaporization occurs because the internal pressure in the container is abruptly released during fracturing of the vessel. The mechanisms of this thrusting process is fully explained in the National Aeronautics and Space Administration (NASA 1978) Contractor Report 3023 and is considered applicable for the accidents involving hazardous materials of interest in this report. According to the NASA Report, the thrusting fragments have a low launch angle (5-10 degrees).

The NASA Report 3023 computer program entitled "THRUST" was utilized in calculating the acceleration, velocity, and displacement distances of fragments propelled by a vaporizing liquid. The NASA analysis assumes that a large portion of the vessel containing a liquid/gas mixture in equilibrium at greater than atmospheric pressure will separate from the rest of the storage vessel. As the liquid under pressure converts to gas when released to atmospheric pressure, a

thrust is produced causing the fragment to move away from the scene of the accident.

The types of tank car fragments are illustrated in Table 3.5-10. In Type A, the tank is shown to rupture in two equal halves. In Type B, the tank car is assumed to split in 2:1 ratio and the smaller fragment is assumed to move away from the accident scene. Types C and D ruptures are not considered in this analysis because in Type C, the manway has no significant amount of liquid to provide it with thrust, and in Type D, the leak is relatively too slow to create a violent change in vapor/liquid equilibrium within the tank. In Table 3.5-7 the ranges of thrusting fragments generated by LPG and anhydrous ammonia are shown. We note that for the identical rupture of the tank car, the fragment ranges for ammonia are approximately twice those for LPG. The ranges are however, still well below the nearest distance (2,030 feet) to the safety-related structure from the railroad track.

Estimate of Maximum Missile Range from Gasoline Truck Explosions

Using the model presented by Rhoads (1978), an estimate was made of the maximum equivalent weight of TNT (Brasie & Simpsons method) of an explosive mixture entirely filling a gasoline tank truck trailer tank of 8,400 gallon capacity. The minimum distance from the nearest highway to the nearest safety-related structure is 760 feet, and this is outside the maximum calculated range of gasoline truck missiles (380 feet).

3.5.1.6 Aircraft Hazards

A study of the probability of aircraft which use nearby airports and airways colliding with the safety-related structures of BVPS-2 is presented in Appendix 3B. Due to the conservatism of the analysis, the values derived by the analytical model are believed to be substantially higher than the true probability. The study concludes that the aircraft accident probability would be less than 1.0×10^{-7} per year through the year 2024.

3.5.2 Structures, Systems, and Components to be Protected from Externally Generated Missiles

Missile protection is provided for all components required to achieve and maintain a safe shutdown condition and prevent the missile accident from propagating into a more serious accident. Table 3.2-1 lists all QA Category I components by systems and identifies the missile protection for those safety-related components considered. Also listed in the table are the safety class, location, design code, and flood protection provided for each component. Table 3.2-2 lists all QA Category I structures and identifies the structures for which tornado and flood protection are required. Table 3.6B-2 describes which Category I components are required for safe shutdown. Details of the component and system designs, including redundancy and extent

of safety-related requirements, are included in the sections describing each component.

As discussed in Section 3.5.1.2.3, safety components are physically separated by barriers and located in individual cubicles so that a postulated missile does not affect the minimum number of components required for safe shutdown. The general arrangement drawings in Section 3.8 show the physical separation and barriers provided.

3.5.3 Barrier Design Procedures

Missile barriers are designed to withstand the effects of missiles described in Section 3.5.1 without compromising plant safety.

Missile barrier design requirements include:

1. To prevent perforation of the missile into safety-related areas with one or more barriers,

2. Secondary missiles are not generated or are limited to energy levels which permit safe shutdown of the plant, and

3. Structural response to missile impact to permit the barrier and its supports to safely carry other design loads during and after impact. In addition, the deflection of the barrier does not impair the safety or safety function of a Seismic Category I system.

The procedure used to evaluate the local response of concrete barriers to missile impact is based on Appendix B of SWECO 7703 (SWEC 1977). The thickness of concrete barriers conforms to the minimum acceptable barrier thickness requirements specified in Table 1 of SRP 3.5.3, NUREG-0800 (USNRC 1981).

Local response of steel barriers is evaluated by using the Stanford Research Formula (Gwaltney 1968) and the Ballistics Research Laboratory Formula (Gwaltney 1968).

The overall structural response of the concrete barriers to missile impact is evaluated using methods presented in Appendix C of SWECO 7703 (SWEC 1977). Using these methods, the structural design of the barrier is controlled by the ductility factor as described herein.

If the barrier is required to carry loads during and after missile impact, the maximum allowable ductility is limited to a factor of 10. In particular:

1. For beam-column members where the compressive load is equal to or less than one-third of that which would produce balanced conditions (P_b or $0.1f_cA_g$, whichever is smaller), the allowable ductility is 10.

Where:

P_b = axial load capacity at simultaneous assumed ultimate strain of concrete and yielding of tension steel

f'_c = specified compressive strength of concrete (psi)

A_g = gross area of section (in^2).

2. For beam-column members where the design is controlled by compression, the allowable ductility is 1.3.

3. For members which are between the cases of items 1 and 2, the ductility ratio should be taken as decreasing linearly from 10 to 1.3.

The overall structural response of the steel barriers to missile impact is evaluated in accordance with the following:

1. When flexural compression or shear governs, the allowable ductility is ≤ 10.

2. For columns with slenderness ratio (l/r):

   a. equal to or less than 20, the allowable ductility is ≤ 1.3.

   b. greater than 20, the allowable ductility is ≤ 1.0.

   where:

   l = effective length of the member.

   r = least radius of gyration.

3. When the members are subjected to tension, the ductility ratio (u) is given by:

$$u = 0.5 \frac{\varepsilon\mu}{\varepsilon y} \qquad (3.5\text{-}12)$$

where:

$\varepsilon\mu$ = ultimate strain
εy = yield strain

If a concrete barrier is not required to carry other loads during and after impact, the maximum allowable ductility ratio is limited to correspond to a rebar elongation of 5 percent. Similarly, for steel

barriers not required to carry other loads, the maximum allowable ductility ratio is also limited to correspond to an elongation of 5 percent (Sihweil 1976).

3.5.4 References for Section 3.5

Association of American Railroads and Railway Progress Institute 1972a. Final Phase 01 Report on Summary of Ruptured Tank Cars Involved in Past Accidents. AAR-RPI Report No. RA-01-2-7, Chicago, Ill.

Association of American Railroads and Railway Progress Institute 1972b. Final Phase 02 Report on Accident Review. AAR-RPI Report No. RA-02-2-18, Chicago, Ill.

Black, W.F. (Federal Railroad Administration (FRA) Office of Safety) personal communication (dated April 6, 1981).

Regulatory Guide 1.115, Protection Against Low Trajectory Turbine Missiles, Revision 1, July 1977.

ConRail 1980. Hazardous Materials Node Report. Node Activity for Midland, Pa. by Type, from January 1978 through June 1979. Prepared for Stone & Webster Engineering Corporation (SWEC), Boston, Mass.

Eichler, T.V. and Napadensky, H.S. 1977. Accidental Vapor Phase Explosions on Transportation Routes Near Nuclear Power Plants. Final Report J6405.

Geffen, C.A. Project Coordinator, 1980. An Assessment of the Risk of Transporting Propane by Truck or Train. Report prepared for the U.S. Department of Energy (USDOE) by Pacific Northwest Laboratory, Battelle Memorial Institute, Richland, Wash.

Gwaltney, R. C. 1968. Missile Generation and Protection in Light Water-Cooled Reactor Power Plants. ORNL-NSIC-22.

Iotti, R.C.; Krotiuk, W.S.; and Deboisblanc, D.R. 1973. Hazards to Nuclear Plants from (or near) Site Gaseous Explosions. In: Report of Topical Meeting on Water Reactor Safety. U.S. Atomic Energy Commission (USAEC), Washington, D.C.

National Aeronautics and Space Administration (NASA) 1978. Workbook for Estimating the Effects of Accidental Explosions in Propellant Ground Handling and Transport Systems. Report 3023.

National Bureau of Standards (NBS) 1976. Tornado-Borne Missile Speeds. NBSIR 76-1050.

National Transportation Safety Board (NTSB) 1971. Railroad Accident Report for Houston, Tex. No. NTSB-RAR-72-6.

Siemens Technical Report CT-27472, Missile Report, Revision 2, August 5, 2011.

National Transportation Safety Board 1972. Railroad Accident Report for East St. Louis, Ill. No. NTSB-RAR-73-1.

National Transportation Safety Board 1974, Railroad Accident Report for Houston, Tex. No. NTSB-RAR-75-7.

National Transportation Safety Board 1979. Railroad Accident Report for Muldraugh, Ky. No. NTSB-RAR-81-1.

National Transportation Safety Board 1980. Railroad Accident Report for Crestview, Fla. No. NTSB-RAR-79-11.

Rhoads, R.E. 1978. An Assessment of the Risk of Transporting Gasoline by Truck. PNL-2133, Pacific Northwest Laboratory, Battelle Memorial Institute, Richland, Wash.

Siewert, R.D. 1972. Evacuation Areas for Transportation Accidents Involving Propellant Tank Pressure Bursts. NASA Technical Memorandum Y68277.

Sihweil, I. 1976. SEB Interim Position on Ductility Ratios of Reinforced Concrete Structural Elements. Memorandum, USNRC, (SEB:808).

Stone & Webster Engineering Corporation (SWEC) 1977. Missile Barrier Interaction, Topical Report SWECO-7703.

U.S. Nuclear Regulatory Commission (USNRC) 1981. Standard Review Plan for the Review of Safety Analysis Report for Nuclear Power Plants. Barrier Design Procedures. Revision 1, NUREG-0800.

U.S. Department of Transportation (USDOT) 1981a (Research and Special Programs Administration). Incidents Involving Deaths, Injuries, Damages Greater than $50,000 or Evacuations. Computer printout, periods covering 12/22/70 to 9/5/80, Washington, D.C.

U.S. Department of Transportation (USDOT) 1981b (Research and Special Programs Administration). Incidents Involving Fire and Explosions by Rail. Computer printout, periods covering 6/6/73 to 11/1/80, Washington, D.C.

Westinghouse Electric Corporation November 1986. Power Generation Operating Division. Turbine Missile Report, CT-25266, Revision 0, Results of Probability Analysis of Disc Rupture and Missile Generation for the Beaver Valley Partially Integral Rotors.

Westinghouse Electric Corporation April 1992. Calculation of Turbine Missile Ejection Probability Resulting From Extending The Test Intervals Of Interceptor And Reheat Stop Valves At Beaver Valley Units 1 and 2.

Sieber, J. D., May 28, 1992. Turbine Valve Surveillance Testing. Letter, Duquesne Light Company to the Nuclear Regulatory Commission (ND2NSM:5568).

Tables for Section 3.5

TABLE 3.5-1

VALVE MISSILE CHARACTERISTICS*

Missile Description	Missile Weight (lb)	Flow Discharge Area (in^2)	Thrust Area (in^2)	Impact Area (in^2)	Missile Weight to Impact Area Ratio (psi)	Velocity (fps)
Safety valve bonnet	350	2.86	80	24	14.6	110
A 3-inch motor-operated isolation valve bonnet (plus motor and stem)	400	5.5	113	28	14.1	135
A 3-inch air-operated valve bonnet (plus stem)	125	2.08	17.8	123	1.0	165

NOTE:

*For valves in the region where the pressurizer extends above the operating floor.

TABLE 3.5-2

SUMMARY OF CONTROL ROD DRIVE MECHANISM MISSILE ANALYSIS

Postulated Missile	Missile Weight (lb)	Thrust Area (in^2)	Impact Area (in^2)	Distance to Target (ft)	Impact Velocity (fps)	Kinetic Energy (ft-lb)
Mechanism housing plug	11	4.91	7.07	5	90	1,380
Drive shaft	133	2.40	2.41	5	150	46,757
Drive shaft latched to mechanism	1,295	12.57	11.04	5	12.1	1,490

TABLE 3.5-4

CHARACTERISTICS OF OTHER MISSILES
POSTULATED WITHIN REACTOR CONTAINMENT

Missile Description	Weight (lb)	Discharge Area (in^2)	Thrust Area (in^2)	Impact Area (in^2)	Missile Weight to Impact Area Ratio (psi)	Velocity (fps)
Instrument well of pressurizer	5.5	0.442	1.35	1.35	4.1	100
Pressurizer heaters	15	0.61	2.4	2.4	6.25	55

TABLE 3.5-5

TORNADO-GENERATED EXTERNAL MISSILES*

Type of Missile		Weight (lb)	Horizontal Velocity (fps)
1. Wood plank	4 in x 12 in x 12 ft	114.6	272
2. Steel rod	1 in dia x 3 ft long	8.8	167
3. Steel pipe	6 in dia, Schedule 40, 15 ft long	286.6	171
4. Steel pipe	12 in dia, Schedule 40, 15 ft long	749.6	154
5. Utility pole	13.5 in dia, 35 ft long	1124.4	180
6. Automobile	Frontal area - 28 ft^2	3990.4	194

NOTE:

* These missiles are considered to be capable of striking in all directions with vertical velocities equal to 70 percent of the acceptable horizontal velocities except for Missile 2, which is assumed to have the same speed in all directions. Missiles 5 and 6 need not be considered more than 30 feet above all grade levels within 1/2 mile of the facility structures.

TABLE 3.5-6

LIST OF HAZARDOUS MATERIALS WITH THE POTENTIAL FOR PRODUCING SIGNIFICANT MISSILES

Material	Avg No. cars/train*	Approx No. cars/yr
1. Ethylene oxide	0.097	254
2. Propylene oxide	0.040	105
3. Vinyl chloride monomer	1.150	3,035
4. Dimethyl ether	0.059	156
5. Butadiene 1, 3	0.019	48
6. Isobutane	0.004	11
7. Isobutylene	0.028	73
8. Liquified petroleum gas (LPG)	0.105	277
9. Ethylene	0.016	41
10. Anhydrous ammonia	0.023	61
	1.541	4,061

NOTE:

*Conrail Node Report: 18,075 Hazmat cars/1.5 year average.
AAR Yearbook of RR Facts: 66 cars/train average.
USDOT 1977-1979 Accident/Incident: 4.58 Hazmat cars/train average.

TABLE 3.5-7

SUMMARY OF EXPOSURE DISTANCE CALCULATIONS

	Hazardous Material	W Equiv TNT lb	$R=45W^{1/3}$ ft	S Exposure Dist;miles
1.	Ethylene oxide	206,000	2,657	0.621
2.	Propylene oxide	214,700	2,693	0.629
3.	Vinyl chloride monomer	173,400	2,508	0.508
4.	Dimethyl ether	90,450	2,019	0
5.	Butadiene 1, 3	369,600	3,229	0.850
6.	Isobutane	143,360	2,354	0.470
7.	Isobutylene	305,800	3,030	0.831
8.	LPG	328,320	3,103	0.831
9.	Ethylene	303,920	3,025	0.831
10.	Anhydrous ammonia	101,900	2,101	0.260

TABLE 3.5-8

AGGREGATE PROBABILITY OF EXPLOSION OR
VIOLENT RUPTURE CAPABLE OF MISSILE GENERATION

	Hazardous Material	P_e 10^{-6} Ruptures/Yr
1.	Ethylene oxide	0.4236
2.	Propylene oxide	0.1794
3.	Vinyl chloride monomer	3.1130
4.	Butadiene 1,3	0.1056
5.	Isobutane	0.0155
6.	Isobutylene	0.1788
7.	LPG	0.7166
8.	Ethylene	0.1022
9.	Anhydrous ammonia	0.0988
	Total	4.933×10^{-6}

TABLE 3.5-9

TANK CAR FRAGMENT RANGE (FEET) FOR 10° LAUNCH ANGLE

	Postulated Missile Type			
Chemical	Type A	Type B	Type C	Type D
1. LPG	142	370	-	-
2. Anhydrous ammonia	264	803	-	-

TABLE 3.5-10

TYPES OF TANK CAR MISSILES

Type		Description
A	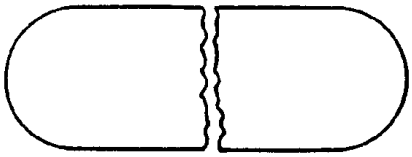	Tank splits at mid-seam
B		Tank splits in 2:1 ratio with the smaller section "thrusting"
C	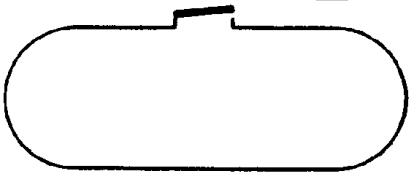	Manway separates
D	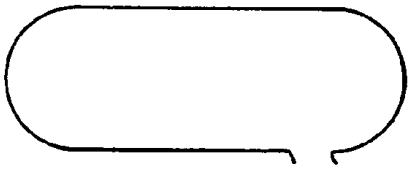	Tank punctured at head

TABLE 3.5-12

MISSILE SHIELDS ON AXIAL FANS

Axial Fan No.	Location	Elevation	Notes
2HVP*FN264A	Auxiliary Building	766′ - 6″	1
2HVP*FN264B	Auxiliary Building	766′ - 6″	1
2HVZ*FN261A	Cable Vault Building	786′ - 5 1/2″	1
2HVZ*FN261B	Cable Vault Building	777′ - 6″	1
2HVR-FN203B	Containment Structure	707′ - 8″	1
2HVR-FN201A	Containment Structure	692′ - 11″	1, 2
2HVR-FN201B	Containment Structure	692′ - 11″	1, 2
2HVR-FN201C	Containment Structure	692′ - 11″	1, 2
2HVT-FN245	Turbine Building	774′ - 6″	1
2HVT-FN246	Turbine Building	774′ - 6″	1

Notes:

1. Missile Shields added to listed fans to provide missile protection for postulated missiles ejected through their inlet air flex connections.

2. Missile Shields added to listed fans to provide missile protection for missiles ejected through the fan housing.

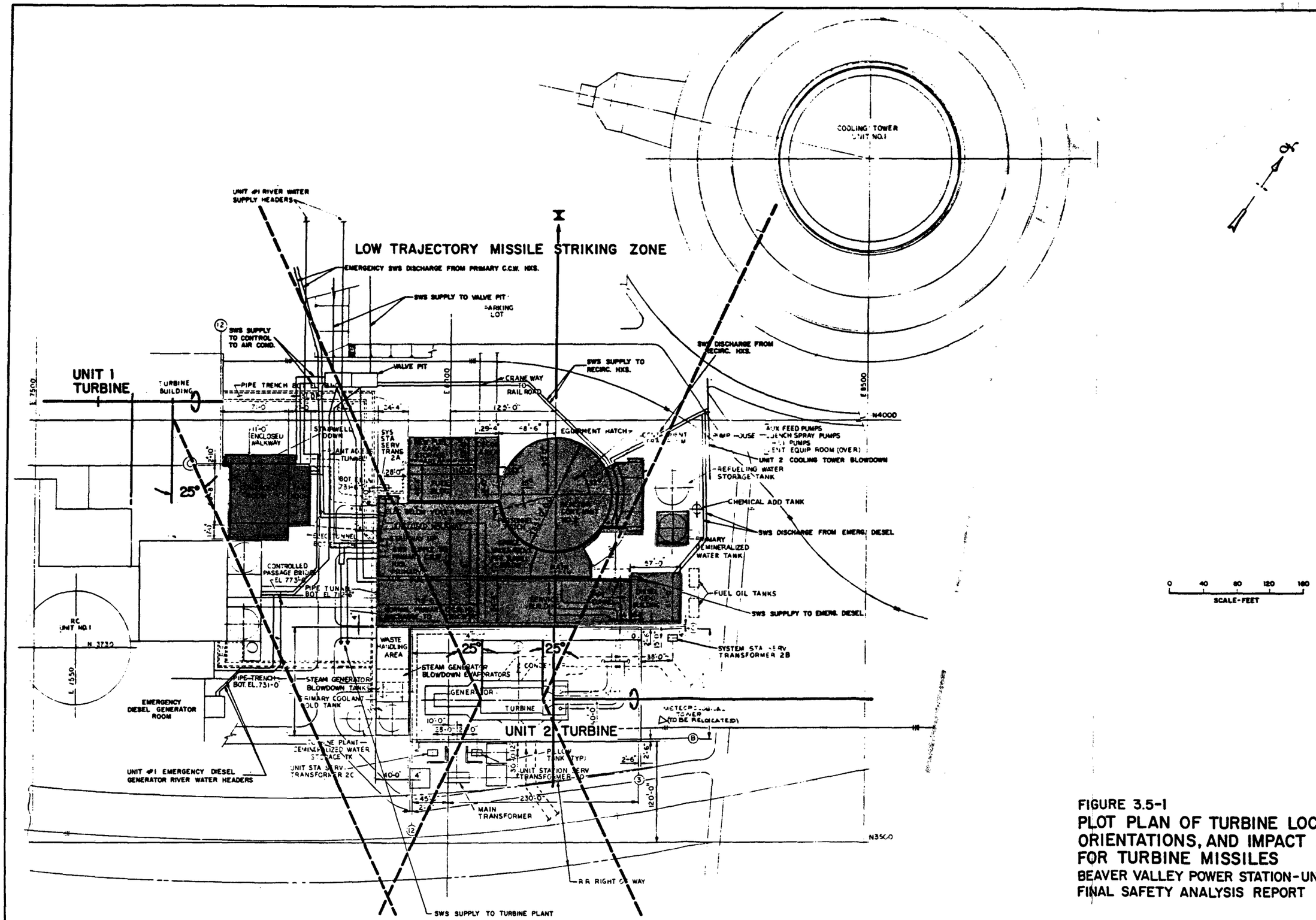

FIGURE 3.5-1
PLOT PLAN OF TURBINE LOCATIONS, ORIENTATIONS, AND IMPACT AREAS FOR TURBINE MISSILES
BEAVER VALLEY POWER STATION-UNIT 2
FINAL SAFETY ANALYSIS REPORT

BB281-13.9m^2 DESIGN

COMPARISON OF EXTERNAL MISSILE PROBABILITIES INCLUDING OVERSPEED WITH NRC LIMIT

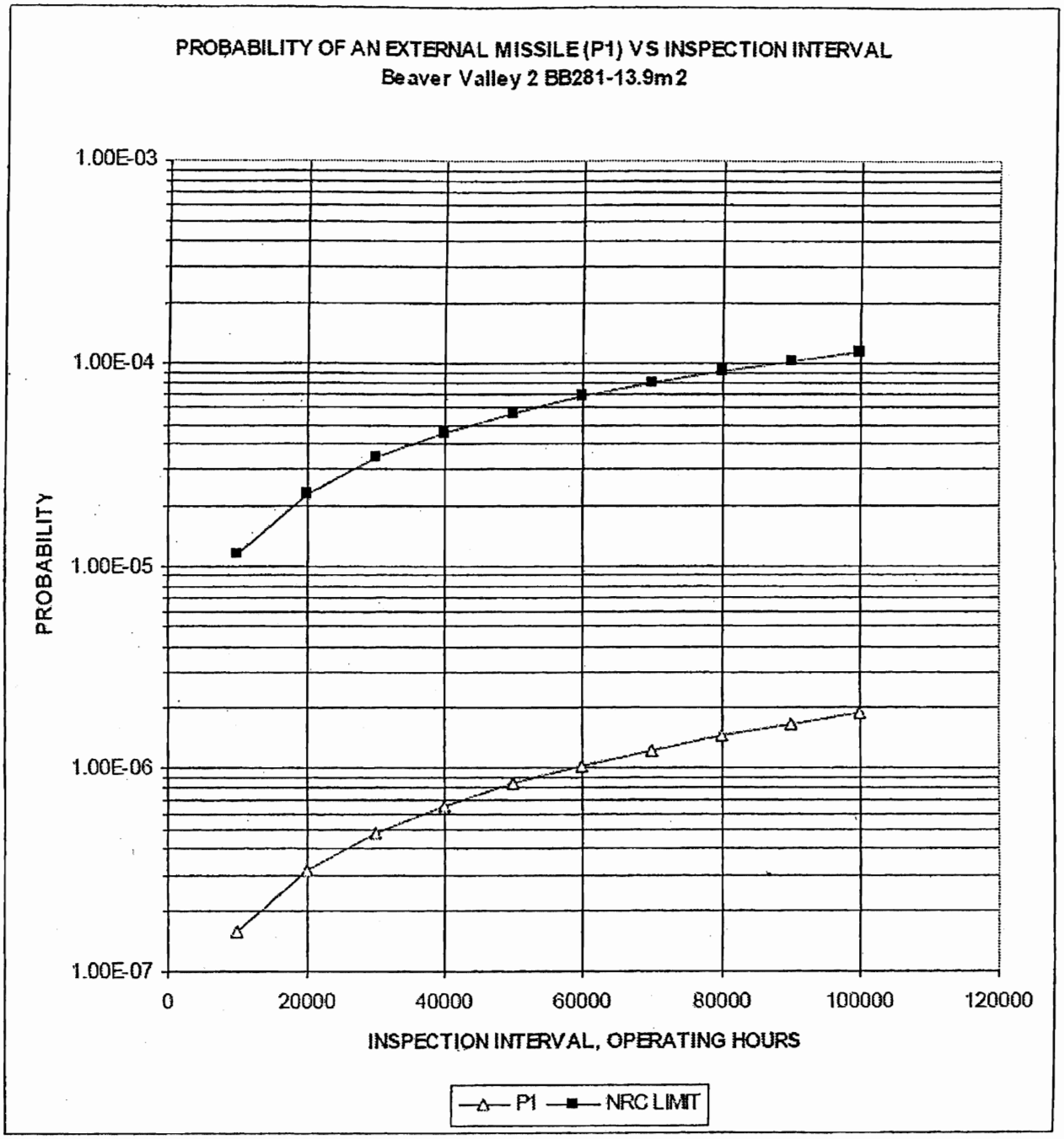

FIGURE 3.5-2

PROBABILITY OF AN EXTERNAL MISSLE (P1) VS INSPECTION INTERVAL

BEAVER VALLEY POWER STATION-UNIT 2
UPDATED FINAL SAFETY ANALYSIS REPORT

3.6 PROTECTION AGAINST DYNAMIC EFFECTS ASSOCIATED WITH THE POSTULATED RUPTURE OF PIPING

Sections whose identification number includes the letter B contain material within balance-of-plant (BOP) scope, while sections whose identification number includes the letter N contain material within the nuclear steam supply system (NSSS) scope.

3.6B PROTECTION AGAINST DYNAMIC EFFECTS ASSOCIATED WITH THE POSTULATED RUPTURE OF PIPING

The effects of piping failures inside and outside containment are evaluated to ensure:

1. That the minimum requirements of essential safety-related systems and structures are not compromised,

2. That the plant can be shut down safely, and

3. That offsite doses in excess of applicable guidelines do not occur.

3.6B.1 Postulated Piping Failures in Fluid Systems Outside of Containment

Piping failures in systems outside containment, postulated in accordance with the criteria of Section 3.6B.2, are evaluated to determine the effects of these failures on essential safety-related components. The containment boundary equipment and all systems essential for a safe shutdown are protected against the effects of a postulated piping failure. The criteria for protection against pipe failure outside the containment conform with the guidelines contained in U.S. Nuclear Regulatory Commission Branch Technical Position ASB 3-1. In addition, the environmental effects of a piping failure are determined and are used as input to the Environmental Qualification Program described in Section 3.11.

3.6B.1.1 Design Bases of Postulated Piping Failures

3.6B.1.1.1 Applicable Systems

Piping breaks are postulated to occur in high internal fluid energy level piping systems (or portions of systems) in accordance with the criteria stated in Section 3.6B.2.1. High energy piping systems are defined as fluid systems that are either in operation or maintained pressurized under conditions where either or both of the following are met; a maximum operating temperature exceeding 200°F or pressure exceeding 275 psig. Maximum operating temperature and pressure are the maximum temperature and pressure in the piping systems during normal plant conditions which are expected frequently or regularly in the course of reactor start-up, operation at power, hot standby, or reactor cooldown to a cold shutdown condition excluding refueling.

High and moderate energy systems inside and outside containment are listed in Tables 3.6B-1 and 3.6B-la, respectively.

Through-wall leakage cracks are postulated in accordance with the criteria stated in Section 3.6B.2 for piping systems outside the containment that are either in operation or maintained pressurized under conditions where both the maximum operating temperature and pressure are equal to or below 200°F and 275 psig. These piping systems are defined as moderate energy systems and generally include all systems which are not high energy.

3.6B.1.1.2 Break Exclusion

The main steam and feedwater lines in the main steam valve house and all high energy branch lines within the main steam valve house are considered break exclusion zones.

3.6B.1.2 Description of Essential Components

Table 3.6B-2 lists essential systems and components required to mitigate the consequences of accidents, defined by American National Standards Institute (ANSI) Standard N18.2, to achieve safe shutdown and maintain offsite doses within acceptable limits. Protection for all systems, structures, etc required for control room habitability is also ensured. All essential components are safety-related Class lE, and designed to ASME Section III, QA Category I, Seismic Category I requirements. Each postulated piping failure is evaluated to determine its effect on those essential structures, systems, and components required to perform a safety function following the postulated failure. Only those components required to function following a specific break are protected from the effects of that break. A detailed analysis of all postulated failures considers these effects in conjunction with single failure criteria, loss of offsite power (LOOP), seismic events, and all other design considerations chosen to maximize the deleterious effects on safety equipment. The minimum required number of safety equipment must remain operable under all postulated conditions.

3.6B.1.2.1 Design Approach

The following design features are provided to minimize the effects of piping failures.

3.6B.1.2.1.1 Separation

A primary objective in the piping layout and plant arrangement is to separate high energy fluid system from essential structures, systems, and components so that the effects of postulated piping breaks at any location are isolated or physically remote from these components. If complete separation is not possible, then redundant safety equipment is located in separate areas so a single pipe failure cannot affect both safety components simultaneously. Inside each redundant

cubicle, high-energy piping is minimized or located remotely from the safety component, to the extent practicable, so that the effects of pipe whip or jet impingement are negligible.

Safety-related electrical and control system equipment is located, whenever possible, in areas which do not have piping (the emergency switchgear area). Cable tray runs and instrumentation process lines, which cannot be separated from piping runs, are located as far as possible from postulated piping failure locations. Every attempt is made to separate redundant cable runs and instrumentation lines physically. For all safety components where physical separation is impossible, one or more of the design features described succeedingly are provided to ensure that the minimum required number of safety components remain operable.

3.6B.1.2.1.2 Enclosures

Where physical separation by distance is not practical, protective structures are used. These structures are concrete walls, cubicles, etc, which are part of the building design and as such are described in Section 3.8. For example, each charging pump is located in a separate cubicle with concrete walls between redundant pumps. Redundant electrical and control systems in the area of piping runs are provided with barriers to minimize the effects of piping failures. The arrangement drawings in Section 3.8 show the concrete walls, barriers, and cubicles around the safety-related components listed in Table 3.6B-2.

3.6B.1.2.1.3 Restraints

Where neither of the preceding design approaches is possible, protection is provided by pipe restraints to limit pipe movement following a rupture and restrict the area affected by the postulated failure. Placement of restraints is based on postulated pipe break locations. The design of the restraints for these locations limits pipe whip and jet impingement to acceptable levels, thereby preventing damage to essential equipment. The design of pipe rupture restraints is described in Section 3.6B.2.

3.6B.1.3 Safety Evaluation

3.6B.1.3.1 Operability of Systems

The operability of a component following a postulated piping failure may be dependent on one or more of the following assumptions in addition to consideration of the effects of the failure.

1. Single failure application

   In addition to the postulated piping failure and its effects, the most limiting single active failure (Section 3.1.1) must be assumed in essential structures, electrical and controls components, or fluid systems when

(a) A plant shutdown is required as a result of the postulated piping failure and its effects, or

(b) The essential structures, electrical and controls components, or fluid systems are necessary to mitigate the consequences of the postulated piping failure and its effects.

If neither (a) nor (b) are applicable, then a single active failure need not be postulated. However, the effects of the postulated piping failure must then be limited to prevent a complete loss of safe shutdown function, that is, loss of redundancy is permitted.

For all piping failures postulated to occur in one redundant train of a high or moderate energy essential fluid system, i.e., "dual purpose" nuclear safety-related system (Table 3.6B-2), a single active failure in the redundant train is not assumed provided the system is designed, constructed, operated, and inspected to Seismic Category I, Safety Class 1, 2, or 3, and QA Category I requirements.

2. Loss of offsite power (Loop)

A LOOP is considered to occur if the direct consequence of the postulated piping failure, or its effects, results in a trip of the turbine generator system or reactor protection system. A LOOP, when assumed, is considered to occur coincident with the postulated piping failure and is not part of the single failure criterion. Also, only essential components which do not depend on offsite power sources alone can be considered available, provided the failure and associated effects including single failure do not affect its operability.

3. Seismic event

Credit for mitigating the consequences of a postulated event may be taken only for those systems and components designed to Seismic Category I requirements.

To mitigate the effects of potential flooding of the cable vault air conditioning unit enclosure at elevation 718 ft-6 in, the installed building floor drain system is employed. Although not designed to Seismic Category I requirements, the drainage line is embedded in the concrete mat of the Seismic Category I cable vault structure and terminates in an open sump containing safety-related, redundant, Class lE level instrumentation. Periodic surveillance will be employed to ensure that an available flow path exists through this portion of the drainage system.

All available systems, including those actuated by operator actions, are employed to mitigate the consequences of a postulated event. In judging the availability of systems, the postulated failure and its direct consequences, unit trip, LOOP, and the assumed single active component failure and its direct consequences are taken into account. With regard to

determining the components to be protected, only those components required to function for the three design criteria listed under Section 3.6B following a specific break are evaluated for potential effects and protection/operability ensured. The feasibility of the operator taking action is judged on the basis of availability of ample time and adequate access to equipment for performing the proposed actions. Regulatory Guide 1.62 and ANSI N660 were used in evaluation of the feasibility of operator action.

3.6B.1.3.2 Failure Modes and Effects

When analyzing breaks in high-energy piping systems, cracks in moderate-energy piping systems, and the consequent failure modes and effects (for example, pipe whip, jet impingement, and environmental), their sources and targets must be considered. The source consists of the pipe which is postulated to fail and the resulting dynamic effects of the failure. The target consists of structures, systems, and components considered essential for shutting down the plant safely, maintaining the safe shutdown, maintaining acceptable offsite doses, and mitigating the effects of the postulated pipe failure.

Interactions between sources and targets are analyzed individually to determine how each affects essential equipment in the area of the source. Interactions include pipe whip, jet impingement, and environmental effects.

3.6B.1.3.2.1 Pipe Whip

Break locations in piping systems are determined as described in Section 3.6B.2.1. Pipe whip analysis to define forcing functions and pipe responses is described in Section 3.6B.2.2. The effects of a particular piping failure are evaluated for each target which is essential to mitigate the effects of the specified failure. This evaluation is based on the location of the break and the forces generated by the whipping pipe. The targets impacted by the pipe are either designed to withstand these forces or are protected by rupture restraints as described in Sections 3.6B.2.3.1 and 3.6N.2.3.4. (See special cases addressed in Section 3.6B.1.3.2.3.)

3.6B.1.3.2.2 Jet Impingement

The blowdown forces are calculated (Section 3.6B.2.2), and the location and direction of the resulting jet of fluid determined for each piping failure which could affect an essential target. Essential targets impacted by the fluid must either be designed for these jet forces or shielded as discussed in Section 3.6B.2.3. (See special cases addressed in Section 3.6B.1.3.2.3.)

3.6B.1.3.2.3 Interaction With Pipe Targets

An unrestrained whipping pipe is considered capable of causing circumferential and longitudinal breaks, individually, in impacted pipes of smaller nominal pipe size and developing through-wall cracks in equal or larger nominal pipe sizes with thinner wall thickness. The impact into pipes of equal or larger nominal pipe sizes and wall thicknesses is considered inconsequential and is not evaluated.

In all cases, the effects of jet impingement are less severe than the corresponding pipe whip impact. (In the limiting case of no clearance between the broken pipe and target pipe, the impact force equals the total thrust force and is localized whereas the jet force is less, being moderated by a shape factor, and is distributed. As the gap increases the whip impact is enhanced, but the jet forces diminishes and becomes more diffuse.) Therefore, jet impingement on pipes of equal or larger nominal pipe size and wall thickness is considered inconsequential and is not evaluated. In all other cases the jet interaction is either avoided or the target pipe and its supports are evaluated for the jet load using faulted allowables.

3.6B.1.3.2.4 Environmental Effects

The environmental effects of postulated pipe breaks and cracks are established as design basis environmental conditions for safety-related components in these areas and are included as environmental qualification criteria for these structures and equipment. Section 3.11 describes the environmental qualification of safety components. The determination of pipe break environments are not dependent on postulated break locations determined by the criteria in Section

3.6B.2. Environmental conditions are determined by postulating a high energy pipe break or moderate energy pipe crack at any location which results in the worst environment affecting safety-related components. The following environmental effects are considered.

Fluid Spray

Essential equipment and components located proximate to high- and moderate- energy fluid systems are designed to withstand the most severe environmental conditions resulting from fluid spray without loss of safety function. The most severe environmental conditions resulting from fluid spray are:

1. Humidity of 100 percent,
2. Maximum expected temperature due to the ruptured fluid system, and
3. Water of specified worst-case chemistry spraying equipment or components.

Internal Flooding

Compartments and areas containing essential equipment and components are examined for flooding potential. Flooding height is based on the particular arrangement of a cubicle with regard to hydraulic boundary, available volume to be flooded, the leak rate from the piping failure, and the time required to detect and isolate the leak. No operator action is considered until 30 minutes has elapsed from the initiation of the pipe failure with the exception of the main feedline piping failure in the service building. Service building flood heights are based on a 10 minute operator response time to trip the main feed pumps for event termination. Compartment wall structural integrity is maintained when subjected to the hydrostatic head resulting from the calculated flood level.

Pressure/Temperature Rise in Compartments

The pressure and temperature rise in compartments outside containment is calculated based on the maximum operating fluid conditions in the pipe which fails, the available vent area in the cubicle, and the size and arrangement within the cubicle. Pipe failure locations are assumed at those points which result in the most adverse environment for safety components inside the cubicle. The results of the pressure calculations indicate the differential pressure design and whether sufficient vent area is provided for building compartments. Maximum calculated temperatures and pressures are used to determine essential equipment qualification requirements (Section 3.11).

3.6B.1.3.2.5 Specific Protection Criteria - Pipe Targets

In evaluating interactions between secondary system sources and targets, propagation of damage is permitted to occur under certain conditions. The following criteria shall be adhered to in addition to any criteria specified in Section 3.6N.2.3.2.

1. Steam and Feedwater System Breaks:

   a. A steam or feedwater line break shall not propagate to a loss of coolant break.

   b. Damage to any high head safety injection lines (LOCA or non-LOCA) must be prevented.

   c. Damage to any portion of the auxiliary feedwater lines supplying the intact steam generators must be prevented.

   d. Damage to auxiliary feedwater piping of the affected steam generator is allowed downstream of the cavitating venturi (2FWE*FE101A, B, C) on the associated FWE line but is not allowed for the venturi and all upstream FWE piping, since FWE flow to the intact steam generators depends on the restriction effect of the venturi on the flow to the affected steam generator.

   e. A steam or feedwater line break is not allowed to propagate to any line connected to the intact steam generators which has a larger cross-sectional area than 2.5 sq. in.

   f. A steam or feedwater line break is allowed to propagate to any line connected to the affected steam generator except as limited in paragraph (d) above.

2. Steam Generator Blowdown (BDG) Breaks

   BDG line breaks must follow the same criteria as specified for steam and feedwater system breaks with the following additional requirements.

   a. A steam generator blowdown break occurring in a line outside containment is allowed to propagate to the blowdown lines connected to the intact steam generators. This is allowed provided the break or its consequences does not prevent the closing of the below listed valves:

      2BDG*AOV101A1, AOV101A2
      2BDG*AOV101B1, AOV101B2
      2BDG*AOV101C1, AOV101C2

      2BDG*AOV103A and B are used to assure isolation of high energy sources in the turbine building from reaching the pipe tunnel and cable vault areas.

b. A BDG break inside containment either upstream or downstream of the valves listed above cannot be allowed to propagate to the BDG lines of the intact steam generators unless the 2.5 sq. in. criterion in 1.e. above applies.

c. A BDG break inside containment cannot be allowed to propagate to the BDG containment penetration, isolation valves and interconnecting piping (i.e. piping inside and outside containment) for the intact steam generators. This is required in order to ensure adequate auxiliary feedwater supply to the intact steam generators unless the 2.5 sq. in. criterion in l.e above applies.

3.6B.1.3.3 Results of Analysis

3.6B.1.3.3.1 Pipe Whip/Jet Impingement Results

For all high energy-lines outside containment, each postulated break type and orientation is investigated to determine if the unrestrained whipping of severed pipe could impact and damage any safety components. Jet impingement from the severed pipe was also considered.

Main Steam Valve House

Piping in the main steam valve house (MSVH) includes the main steam and feedwater headers, the various branch lines from these headers such as the steam vent/relief lines, and other small diameter lines, such as steam drains and primary plant gas supply lines, not connected to the main headers.

The main steam and feedwater headers from the containment wall up to the main steam isolation valves and feedwater isolation valves and all branch lines, from these headers up to the first isolation valve on each branch are designed according to the "break exclusion" criteria described in Section 3.6B.2.1.2.1. Therefore, no pipe whip/jet impingement need be considered from these lines. The other small diameter lines, not connected to the main steam or feedwater lines, were elevated for pipe whip/jet impingement effects on safety-related equipment based on postulated break locations. These lines are separated from any essential safety components; therefore, breaks in these lines do not affect the safe shutdown capability of the plant.

Cable Vault and Rod Control Area (pipe tunnel at el 718-feet 6 inches)

Breaks in the auxiliary steam line and the steam generator blowdown (BDG) lines result in jet impingement or pipe whip effects on the containment wall, a service water supply valve for the containment air recirculation coolers, and the outside containment isolation valves on the BDG lines of all three steam generators.

The loads on the containment wall are accommodated within those allowable (Section 3.8.1) for the containment.

The service water supply valve experiences jet impingement which could affect containment cooling. No pipe whip effects are experienced by this service water supply valve. However, the calculated loads on the valve from the jet impingement of a ruptured auxiliary spray line are negligible. The outside containment isolation valves on the BDG lines may be damaged due to both pipe whip and jet impingement; however, two valves are provided on each line inside containment to provide isolation of the steam generator pressure boundary. These valves are automatically closed as described in Section 3.6B.1.3.4.3.

Service Building

The steam drain piping and main steam and feedwater headers are physically separated from any safety-related targets and no adverse pipe whip/jet impingement effects occur in this building.

Safeguards Building

There are no normally pressurized high energy pipes in this building.

Auxiliary Building

High-energy pipe breaks are postulated in the chemical and volume control system (CHS), auxiliary steam system (ASS), boron recovery system (BRS), and gaseous waste system (GWS).

All safety-related components are physically separated from the breaks postulated in the ASS, BRS, and GWS. Breaks in the CHS outside containment occur in either charging pump discharge lines or letdown piping upstream of the letdown heat exchanger. Neither of these types of breaks possess enough energy following the break to produce significant pipe whip or jet impingement effects. Charging pump runout and the pressure drop effects of the letdown orifices immediately reduce the blowdown driving force after the break. Therefore, no adverse effects on safety components occur following CHS breaks.

3.6B.1.3.4 Environmental Effects

3.6B.1.3.4.1 Fluid Spray

Fluid spray is assumed to wet the entire cubicle from a postulated piping failure near safety-related equipment. With humidity of 100 percent assumed inside the cubicle, the maximum temperature following the failure is calculated as described in Pressure/Temperature Rise as follows. Section 3.11 tabulates the environmental conditions in each area following a postulated piping failure.

3.6B.1.3.4.2 Internal Flooding

Each area which contains safety-related components has been evaluated for potential flooding due to piping failures, ruptures of large tanks, post- accident passive failures in a fluid system pressure boundary or inadvertent actuation of fire water spray/sprinkler system. The following design features protect safety components:

1. Redundant components are located in hydraulically separate areas. For example, the safeguard building is separated into two areas, each housing the low head safety injection (LHSI), auxiliary feedwater, and quench spray pumps of one safety-related flow path.
2. Wherever possible, safety components are located above the maximum internal flood level. For those components which could be affected by internal floods, sufficient system redundancy is provided to ensure availability of the required safety function, or the components are qualified for submergence.
3. Safety-related monitoring instrumentation in building sumps and fluid systems is provided to alert the operator of failures resulting in flooding conditions (for example, tank level, pump flow and pressure, sump levels).
4. Isolation valves are provided on all piping connected to large tanks which, although located outside safety-related structures, could flood the buildings due to failures in piping. Tanks located within safety structures are assumed to fail and flood the affected areas.

The flooding analysis for those areas where fluid system piping is located close to safety components is discussed subsequently, including the specific cause for the highest flood level in these areas. The resulting flood levels are provided in the Equipment Qualification Report under the accident conditions for the applicable area. All other areas containing safety components do not have fluid system piping in the same area and, therefore, are not discussed further. The flooding analysis for the auxiliary building and cable vault areas considers a double ended rupture of the main feedwater line on elevation 780'-6" of the service building as the governing flooding condition. However, when applying the criteria of Section 3.6.2, it is only necessary to consider a crack in this piping. The Environmental Qualification Report contains the flood heights for a double ended rupture event as this yields conservative results.

Below el 735 feet-6 inches, the auxiliary building arrangement provides two separate areas which could be flooded independently of one another. A wall separates the portion of the building below el 735 feet-6 inches into a north and a south cubicle. Since most floods above this elevation will drain through floor grating, stairways, pipe chases, etc, to the lower cubicles, pipe/tank failures in the upper elevations were included in the flood analysis of the north and south cubicle below el 735 feet-6 inches. The source of the highest flood level in the north cubicle is a moderate energy pipe crack in a 36-inch diameter service water line. In the south cubicle, the source of the highest level is a double-ended rupture of a main feedline occurring on el 780'-6" of the service building which drains to the lower elevation of the auxiliary building.

Elevations 735 feet-6 inches and above are comprised of general areas and equipment cubicles which were analyzed separately. Water from any system failure in the general area or component cooling water pump area on el 735 feet-6 inches will drain to lower elevations. The charging pump cubicle is subject to flooding to the curb height from a high energy pipe break in a 3-inch diameter chemical and volume control system line. Excess water would overflow the curb and drain to lower elevations.

On el 755 feet-6 inches, a double-ended rupture of a main feedline occurring on el 780'-6" of the service building produces the limiting flood level in both the general area and the HVAC cubicle. Boric acid tank ruptures account for the highest flood level in each of the boric acid tank cubicles. The volume control tank cubicle is subjected to flooding from a moderate energy pipe crack in a 4 in diameter charging system line. The highest flood levels in the boric acid transfer pump cubicles are caused by passive failures, postulated to occur post-accident and consisting of a 50 gpm leak for 30 minutes (Section 3.1.1 discusses passive failures).

In the general area of el 773 feet-6 inches, a double-ended rupture of a main feedline occurring on el 780' -6" of the service building produces the limiting flood height. Rupture of the component cooling water surge tank produces the highest flood height in the surge tank cubicle.

Suction lines running from the refueling water storage tank, located in the yard, to components inside the auxiliary building have isolation valves to prevent the entire tank contents from flooding the building. Failures (moderate energy cracks) of these suction lines were considered assuming 30 minutes for break termination. These failures were not the most limiting case in either area.

Safety-related, Class lE, redundant level instrumentation is provided in the sump in the south area of the building to detect a high water level and alert the operator. High level alarms are provided in the control room. Since the north area could flood to above the dividing wall without affecting safety components, and once above the wall would spill into the south area and be detected, no instrumentation need be provided in the north area.

Safeguards Building

The safeguard building at el 718 feet-6 inches is separated into two separate areas, north and south, each containing the LHSI quench spray, and auxiliary feedwater pumps of one redundant flow path. These north and south areas include a sump which has a safety-related, Class lE, level instrument providing a high level alarm in the control room.

There are relatively few pipes in the safeguards building which are normally pressurized. The source of the highest flood level in the north and south pump cubicles is a moderate energy pipe crack in the safety injection pump suction line from the RWST. The LHSI, quench spray, and auxiliary feedwater pumps in each area are located above the highest flood level.

The portion of the safeguards building closest to the containment houses the four recirculation spray pumps. Each pump is in a separate area from el 690 feet-11 inches down. From el 690 feet-11 inches up to el 697 feet-6 inches, the four pumps are in one open area. This area also contains the pump suction valves (2RSS*MOV155A,B,C,D). Above el 697 feet-6 inches, the four pumps are in separate areas.

Flooding in the recirculation spray pump areas was considered in two parts, above el 718 feet-6 inches where the pump motor is located, and below el 697 feet-6 inches where the pump suction valves are located. These two areas are hydraulically separate (that is, a flood in the upper area cannot reach the lower area). The source of the highest flood level in the upper area is a passive failure. Only one recirculation spray pump cubicle is affected by this failure. This failure mode and flood height is typical for the four upper cubicles. The pump motors are located well above the highest flood level.

The lower area of the pump cubicle is common to all four pumps. All piping in this area is not normally pressurized. Since all these lines are designed as Safety Class 2, Seismic Category I, and QA Category I, and are pressurized only during accident conditions, only a passive failure is considered. This failure floods the area around the pump column up to el 689 feet-4 inches. There is no adverse effect on pump operability from immersing the pump column in water. The motors of the pump suction valves (2RSS*MOV155A,B,C,D) are located well above el 689 feet-4 inches.

Redundant safety-related Class lE level instruments are provided at el 690 feet-11 inches by locating one instrument powered from one Class lE bus in each of the two sumps at this elevation.

The turbine-driven (TD) auxiliary feedwater pump cubicle is subject to flooding from a moderate energy pipe crack in the safety injection pump suction line from the RWST. The TD auxiliary feedwater pump is located above the flood level.

The safeguards building above el 738 feet-6 inches houses the hydrogen analyzers and safety-related air conditioning units in separate cubicles. Safety-related motor control centers (MCCs) are also located in these areas. There is no fluid system piping in the hydrogen recombiner or analyzer cubicles which is normally pressurized. The source of flooding in the air conditioning and MCC

cubicles is a moderate energy crack in the service water piping to the air-conditioning units. The air-conditioning units and MCC are located above the highest flood level.

Cable Vault and Rod Control Area

The cable vault and rod control area houses safety-related valves and piping which penetrate the containment and run between other safety-related areas. The source of the highest flood level at el 718 feet-6 inches is a moderate energy crack in an 18-inch primary plant component cooling water line. All safety-related valves and electrical/control equipment are located above the highest flood level. Safety-related, redundant, Class lE level instruments are located in the sump at el 718 feet-6 inches to alarm in the control room at high level. The shielded cubicle at el 718 ft-6 in is subjected to flooding from a letdown line high energy pipe break. The cooling water lines in the ACU enclosure at this elevation have been crack excluded by demonstration that stress levels in the piping are below the limits established in BTP MEB 3-1, to preclude the flooding potential in this cubicle. Leakage from mechanical joints is handled by the installed building floor drains.

The highest flood level at el 735 feet-6 inches is due to a moderate energy pipe crack in a 4-inch diameter fire water line. At el 755 feet-6 inches, water from a main feedwater high energy line break in the service building drains via a stairwell to lower elevations. The fire protection-water lines in the alternate shutdown panel room at el 755 feet-6 inches have been crack excluded so no flooding potential exists in this area. The highest flood level at el 773 feet-6 inches is from a main feedwater high energy line break in the service building.

Intake Structure

The intake structure is shared between Beaver Valley Power Station - Unit 1 (BVPS-1) and Beaver Valley Power Station - Unit 2 (BVPS-2). It has four separate cubicles, three of which contain one of the BVPS-2 service water pumps. The pump motors and all piping are located above the operating deck in each cubicle, which is capable of being sealed to protect against external floods.

The postulated piping failure, which causes the highest flood level above the operating deck, is a moderate energy crack in a 30-inch service water line. The service water pump motor in the affected cubicle would then be inoperable. However, three service water pumps are provided (Section 9.2). One service water pump is sufficient for emergency shutdown and loss of one pump during normal operation does not require immediate plant shutdown. The Technical Specifications (Chapter 16) govern the length of time BVPS-2 can operate with one of the redundant service water flow paths out of service. The length of time allowed is sufficient for the operator to align the third (spare) service water pump electrically and hydraulically to the flow path of the inoperable pump. As discussed in Section 3.6B.1.3.1, Single Failure Application, single failure of the operating service water pump during this scenario need not be assumed because the service water system (SWS) (moderate energy) is designed to QA Category I and

Seismic Category I standards and the pumps are powered from the Class 1E buses. Therefore, loss of one pump due to flooding has no adverse safety considerations.

Since the intake structure pump cubicles are shared between BVPS-1 and BVPS-2, internal flooding concerns have been evaluated. The external flood protection doors leading into each intake structure pump cubicle are normally open with their associated security/fire doors normally closed. The interconnecting flood protection doors that are located between the pump cubicles are normally closed with their seals depressurized, along with their associated security/fire doors normally closed. These door seals will be pressurized in the event of an external flood or for seal testing purposes. This arrangement is designed to protect the interconnecting cubicles from the consequences of a major pipe rubber expansion joint failure. For piping failures in systems other than service water, a single failure of the Service Water System is then considered. The Standby Service Water System is designed for automatic operation in the short term following the break.

Main Steam Valve House

The MSVH contains safety-related components required for steam and feedwater isolation, which are located in one area at el 773 feet-6 inches. The source of the highest flood level in this area is a moderate energy pipe crack in a 4-inch service water line. As discussed in Section 3.6B.1.3.4.3, a nonmechanistic break is postulated with regard to determining environmental conditions, which will result in a steam release to the cubicle following a piping failure. Other small diameter lines in the area are also high energy for which breaks are postulated resulting in steam release. No significant flood levels are experienced from any of these breaks since the steam release to the cubicle results in a pressure increase and a major portion of the released mass is vented through openings in the cubicle to reduce pressure.

Service Building

The service building houses safety-related electrical/control components associated with many different safety functions. These components are located between el 730 feet-6 inches and el 780 feet-6 inches. No piping is run in these areas except for a vertical pipe chase in the southeast corner of the building and domestic water lines to the safety showers on el 730 feet-6 inches and el 760 feet-6 inches. A pipe failure of any pipe in the chase will flood only the vertical chase and the horizontal pipe tunnel which runs below the building. A crack in a high energy main feedwater line on the top floor of the service building drains down to lower elevations and produces the limiting flood height in each area. No safety-related electrical switchgear equipment located on el 730 feet-6 inches is potentially affected by the resultant flood height. Flood heights are based on 10 minute operator action time to trip the main feedwater pumps following a reactor trip due to low-low steam generator level.

Diesel Generator Building

The diesel generator building is separated into two areas, each housing one emergency diesel generator and its associated auxiliary system and electrical/control equipment. The cubicles are hydraulically separate and a flood from a moderate energy pipe crack in an 8-inch diameter chilled water line in one area affects only one emergency diesel generator. Plant shutdown would not be immediately required as a result of the failure and Technical Specifications govern the length of time during which the plant could continue operation. One diesel generator is sufficient to shutdown the plant when required by Technical Specifications.

Control Building

The only safety-related components in the control building which are located near fluid system piping subject to moderate or high energy failures are the air-conditioning and ventilation components. These components are located in a common area separate from the remainder of the control building. Service water piping is the only fluid system in the area and is used for cooling these safety-related components. The service water system piping has been crack excluded by demonstrating that the stress levels are below the limits established in BTP MEB 3-1, in this area to preclude flooding of the HVAC equipment used to assure control room habitability. Leakage from mechanical joints can be accommodated by the control building's seismic floor drain system.

Valve Pits

Safety-related valves on SWS piping running outside of the major buildings are located in valve pits which are concrete enclosures sealed to exterior flooding. Redundant valves of the SWS are located in separate pits which are sealed from one another such that a flood in one pit cannot affect the valves of a redundant pit. As discussed in Section 3.6B.1.3.1 Single Failure Application, single failure of the redundant valves need not be assumed since the SWS (moderate

energy) is Safety Class 3, Seismic Category I and powered from the Class lE bus.

Fuel Building

The fuel pool cooling pump cubicles (el 729 feet-6 inches) are subject to flooding. The limiting flood source is a moderate energy pipe crack in a 6-inch diameter primary component cooling water line. In the event that the fuel pool cooling pumps are rendered inoperable, a Seismic Category I source of fuel pool makeup water is provided from the service water system. (Refer to Section 9.1.3).

3.6B.1.3.4.3 Pressure/Temperature Rise

A detailed thermal hydraulic analysis determines the maximum pressures resulting from high energy line breaks. These pressures and temperatures are used for safety-related equipment environmental qualification discussed in the Equipment Qualification Documentation Report. The analysis was done as follows:

1. The location of all safety-related equipment requiring environmental qualification and the routing of all high energy lines are identified.

2. These locations are evaluated to determine which high energy line breaks could affect the ambient environment at the equipment location. All possible venting paths of steam from an area containing a high energy line to an area containing safety-related equipment are identified.

3. Ambient pressure/temperature transients are calculated for all safety-related equipment locations based on the various break sizes and break locations which could affect a specific area.

4. The calculated transients initially assume that the break release lasts for between 10 and 30 minutes unless the available water inventory is exhausted prior to 30 minutes, or unless it is determined that the operator can identify and isolate the ruptured line in less than 30 minutes. Some main steam line breaks are assumed to be isolated as soon as 10 minutes. These initial transients are reviewed against equipment qualification requirements and structural differential pressure design. If unacceptable, automatic isolation of the breaks was implemented into the plant design to result in acceptable environments. All equipment to achieve isolation is considered Class lE, safety-related and is designed in accordance with ASME Class III, QA Category I, and Seismic Category I.

5. Assumptions used in the analysis are:
   a. Initial building temperature is the maximum expected during normal plant operation (Tables I and II, Appendix A, Equipment Qualification Documentation Report).

b. The effect of building heat sinks, primarily concrete, is included.

c. The pipe breaks are assumed to occur anywhere along the piping run. The worst location with regard to effects on safety-related equipment was chosen.

6. Safety-related building ventilation exhaust is incorporated in the model. It has a positive effect in reducing environmental transients in the auxiliary building (el 710 feet-6 inches through el 755 feet-6 inches) and cable vault (el 718 feet-6 inches).

7. The calculated pressure transients are compared to the design capacities for Seismic Category I structures, determined in accordance with Sections 3.8.3 and 3.8.4 to ensure that building integrity is not compromised.

All buildings containing Class lE, safety-related equipment were evaluated; however, there are no high energy lines in the following buildings or portions of buildings.

1. Control building
2. Safeguards building
3. Service building (All elevations except el 780 feet-6 inches)
4. Cable Vault/rod control (All elevations except el 718 feet-6 inches)
5. Intake structure
6. Diesel generator building
7. Fuel and decontamination building
8. Valve pits

The remaining buildings or portions of buildings are discussed subsequently. The specific temperature-pressure transients are given in the Equipment Qualification Documentation Report.

Main Steam Valve House

Although the main steam and feedwater piping in the MSVH is designed to "break exclusion" criteria of Section 3.6B.2.1.2.1, the environmental conditions resulting from up to a maximum of a one square foot area break in a main steam line are calculated. This break size conservatively envelopes all branch lines in the MSVH. The MSVH is considered a homogeneous area such that the pressure-temperature rise is relatively constant over the entire area. Blowdown from the break assumes that the affected steam generator is emptied out by the break and that blowdown continues after that time from the addition of auxiliary feedwater to the affected steam generator. Isolation of auxiliary feedwater occurs about 10 minutes after the steam generator reaches the MSIV isolation setpoint pressure. Vent panels are in the walls of a structure located near the MSVH roof. The vent panels, when in the closed position, will automatically open upon pressure increase inside to reduce pressure following the most limiting break to a value which is less than the design

capacity of the structure, determined in accordance with Sections 3.8.3 and 3.8.4. The calculated pressure temperature transient is shown on Figures IIA and B, Appendix A of the BVPS-2 Equipment Qualification Documentation Report.

Cable Vault and Rod Control Area (pipe tunnel at el 718 feet-6 inches)

The building arrangement at this elevation includes walls and doorways such that this elevation is separated into three areas (Figure IX, Appendix A, of the BVPS-2 Equipment Qualification Documentation Report) each with different environmental transients. However, the Air Conditioning Units cubicle contains no high energy lines, is sealed from the general area, and, therefore, is not included in this analysis. Vent paths between the other two areas are included in the calculation.

The high energy lines located in these areas are part of the BDG, CHS, and safety injection system. The analyses result in the most limiting environment as an envelope of short- and long-term environments. In the short-term, the limiting environment is due to a break of any one of three BDG lines directly connected to the steam generators. In the long-term, the source of the limiting environment is a letdown (CHS) line break. Due to the high energy of the blowdown fluid in the BDG lines, automatic isolation is required. Redundant, Class 1E, QA Category I temperature sensors and switches will automatically close redundant isolation valves located inside containment on each BDG line from the steam generators. The design of the sensors, switches, control circuits and isolation valves ensure that isolation occurs 20 seconds after the area temperature reaches 120°F. Also, AOVs are used to isolate the feedwater supply in the turbine building from the cable vault and pipe tunnel areas within 10 seconds. A letdown line break is detected by the operator and manually isolated within 15 minutes of the break as discussed in UFSAR Section 15.6.2. A vent panel is also provided in the wall of the pipe tunnel which automatically opens as pressure rises to reduce pressure following the most limiting break to a value which is conservatively less than the design capacity of the structure, determined in accordance with Sections 3.8.3 and 3.8.4. The calculated temperature-pressure transient is shown on Figure X, Appendix A of the Equipment Qualification Documentation Report.

Auxiliary Building

The auxiliary building is separated into 30 specific areas based on the arrangement of walls, doorways and safety equipment. Vent paths between these areas are also considered. Figures III through VII, Appendix A of the Equipment Qualification Documentation Report show the areas.

The high energy lines in this building are part of the ASS, BRS, GWS, and CHS. Breaks in all systems, except GWS, contribute to the limiting pressure/temperature transients. A break in the main ASS header is required to be automatically isolated, because of the high environmental temperature that would result from the continued release of effluent from this system. The location of redundant isolation valves is outside the auxiliary building and isolation occurs 25 seconds after the temperature in any one area reaches 120°F. (NOTE: 20 seconds for valve stroke time plus 5 seconds for sensor response time.) A break in a BRS line connected to either of the degasifiers causes the entire contents to be released. A break of a 2 inch letdown line is manually isolated within 15 minutes of the break as discussed in Section 15.6.2. The resulting differential pressures given in Appendix A of the Equipment Qualification Documentation Report are less than the design capacity of the structure, determined in accordance with Sections 3.8.3 and 3.8.4.

Service Building

A multi-node thermal hydraulic model of the service building is developed for the analysis. The main steam system (MSS) lines run through elevation 780 feet-6 inches and the most limiting environment occurs from a postulated break in one of the MSS headers. A MSS double-ended rupture and a longitudinal break are postulated to develop the most limiting environment for elevations 780 feet-6 inches, 760 feet-6 inches, and 745 feet-6 inches of the service building. The pressure-temperature transient is shown on Figures XIA B, C, and D, Appendix A of the Equipment Qualification Documentation Report. The resulting differential pressures are less than the design capacity of the Seismic Category I structure, determined in accordance with Sections 3.8.3 and 3.8.4. Analysis indicates that if non-seismic Category I portions of the structure fail, no adverse effects on adjacent Seismic Category I structures or components will occur. The resulting pressure transient for the longitudinal break is less severe than the double-ended rupture. A blowout panel to the atmosphere is installed to relieve the pressure so the harsh environment does not spread into adjacent areas containing safety-related equipment required for this event.

3.6B.1.3.5 Quality Assurance and Inspection

The quality assurance program described in Chapter 17, and the inservice inspection measures, described in Section 6.6.1, minimize the potential for a pipe break.

3.6B.2 Determination of Break Locations and Dynamic Effects Associated with the Postulated Rupture of Piping

3.6B.2.1 Criteria Used to Define Break and Crack Locations and Configurations

A combination of conventional methodology (Standard Review plan Section 3.6.2) along with an alternative leak-before-break (NUREG-1061, Volume 3) approach is used for the provision of protection from the mechanistic effects of postulated pipe rupture. The alternative approach, also known as leak-before-break (LBB), demonstrates that the fluid leakage from a postulated defect at the highest stress location concurrent with minimum material properties (in terms of normal plus Safe Shutdown Earthquake loads) in a high energy piping line can be detected well before the rupture of the pipe. Since LBB uses elastic-plastic fracture mechanics to assess the potential for pipe rupture, this approach is consistent with the procedural recommendations and analytical criteria found in NUREG-1061, Volume 3.

Portions of the reactor coolant system (RCS), residual heat removal system (RHR), and safety injection system (SIS) have been exempted from consideration of pipe whip and jet impingement effects by the application of the Leak-Before-Break Program. The original BVPS-2 LBB analyses consisted of the WHIPJET Program and a separate LBB analysis of the main reactor coolant loop piping. The pressurizer surge line was subsequently removed from the WHIPJET scope and qualified for LBB as part of surge line reanalysis for IEB 88-11. Specific lines covered by the alternative approach of SRP 3.6.3 (LBB) are listed by line number in Table 3.6B-4.

The following subsections describe the criteria used to define break and crack locations and configurations. To ensure that the pipe rupture criteria have been, properly implemented, documentation is provided which includes the following:

Figures showing the locations of the postulated pipe ruptures, including identification of longitudinal and circumferential breaks, structural barriers, restraint locations, and the constrained directions for each restraint.

The requirement for a minimum of two intermediate breaks regardless of stress, in Branch Technical Position MEB 3-1 Revision 1, July 1981 Paragraphs B.1.c(l)(d) and B.1.c(2)(b)(ii), for ASME III Code Class 1 and Code Classes 2 and 3 piping has been waived per NRC letter dated May 21, 1985 for Docket 50-412 for the following exempt high energy systems:

1. Reactor coolant system (not including the primary loop) (RCS)
2. Hydrogenated drain system (DGS)
3. Residual heat removal system (RHS)
4. Safety injection system (SIS)
5. Main steam system (MSS)
6. Main feedwater system (FWS)
7. Auxiliary feedwater system (FWE)
8. Steam generator blowdown system (BDG)

9. Chemical and volume control system (CHS)
10. Gaseous nitrogen system (GNS)
11. Auxiliary steam system (ASS)

Note: The requirement for a minimum of two intermediate breaks was removed from Branch Technical Position MEB 3-1 when that document was revised (Revision 2, June 1987). The revised BTP is endorsed in the Standard Review Plan. Postulation of intermediate breaks, that do not exceed the applicable acceptance criteria, is no longer required.

3.6B.2.1.1 Criteria for Inside the Containment

All breaks postulated are systematically analyzed to determine what potential damage may occur, due to pipe whip, jet impingement, cubicle pressurization, and environmental conditions, to systems and structures required for safe shutdown. Offsite release not exceeding the limits specified in 10 CFR 50.67 is also verified. If the potential damage or effects are unacceptable, protection is provided by either separation or enclosure, or by the installation of pipe whip restraints and jet impingement shields. Essential instrumentation and controls, electrical cabling, and valve operators are either qualified to operate or protected, as required, from the environmental effects of pipe rupture. The protection criteria are provided in Sections 3.6B.1 and 3.6N.2.2.3. The environmental qualification procedures are provided in Sections 3.10 and 3.11.

Design basis break locations and types are postulated as described in Sections 3.6B.2.1.1.1, 3.6B.2.1.1.2, and 3.6B.2.1.3.

3.6B.2.1.1.1 Break Locations - ASME Section III Class 1 Piping

The reactor coolant loop piping and large branch line piping have been excluded from consideration of dynamic effects associated with postulated pipe rupture.

The exemption of the reactor coolant loop piping is in accordance with NRC Letter Docket No. 50-412 dated October 11, 1985. Subsequent reanalysis of the reactor coolant loop piping was accepted by NRC Letter dated April 8, 1991. In 2011, the reactor coolant loop LBB analysis was revised to incorporate the latest piping loads and current operating conditions.

Branch line piping has been excluded by application of various analyses as discussed in Section 3.6B.2.1. This exception to NUREG-0800, SRP 3.6.2 is documented for the original analysis in Table 1.9-2. Subsequent reanalysis for the surge line was accepted by NRC Letter dated January 18, 1990. In 2011, the surge line LBB analysis was revised to address structural weld overlay of the surge to Pressurizer nozzle and the concerns raised by Regulatory Issue Summary (RIS) 2010-07, "Regulatory Requirements for Application of Weld Overlays and Other Mitigation Techniques in Piping Systems Approved for Leak-Before-Break."

Breaks in all other high-energy ASME Section III, Code Class 1 piping are postulated to occur at the following locations in each piping run or branch run:

1. At terminal ends of the pressurized portions of the runs.

   Terminal ends are extremities of piping runs that connect to structures, components (for example, vessels, pumps), or pipe anchors. A branch connection to a main piping run is a terminal end of the branch run. However, if the branch is included in the structural model with the main run and if the branch has a significant influence on the behavior of the main run (that is, similar piping sizes), the branch is considered part of the main run.

2. At intermediate locations between terminal ends selected by any of the following criteria:

   a. At any intermediate location between terminal ends where the maximum stress intensity range (S), for normal and upset plant conditions and for an operating basis earthquake (OBE) event transient, exceeds the allowable as identified below, when calculated by equation 10 and by either equation 12 or equation 13 in paragraph NB-3653 of the ASME Code, Section III.

      The allowable is $3.0S_m$ when the piping analysis is based on the BVPS Unit 2 original Code of Record, ASME Section III, 1971 Edition through the Winter of 1972 Addenda, or the ASME codes and addenda prior to Summer of 1979 Addenda to the 1977 Edition.

      The allowable is $2.4S_m$ when the piping analysis is based on ASME Section III Code Editions beginning with the Summer of 1979 Addenda to the 1977 Edition and including all later editions or addenda.

      (S_m is the design stress intensity as specified in Section III of the ASME Boiler and Pressure Vessel Code.)

   b. At any intermediate locations between terminal ends where the cumulative usage factor (U), derived from the piping fatigue analysis under the loadings associated with OBE and operational plant conditions, exceeds 0.1.

      (U is the cumulative usage factor as specified in Section III of the ASME Boiler and Pressure Vessel Code.)

   c. If there are no intermediate locations where S exceeds the allowable as described above or locations where U exceeds 0.1, intermediate breaks are not required.

3.6B.2.1.1.2 Break Locations - ASME Section III Class 2 and 3 Piping

Breaks in high-energy ASME Section III, Code Class 2 and 3 piping are postulated to occur at the following locations in each piping run or branch run:

1. At terminal ends of the pressurized portions of the runs.
2. At intermediate locations selected by either of the following criteria:

   a. At each pipe fitting (for example, elbow, tee, cross, flange, and nonstandard fitting), welded attachment, and valve; or

b. At each location where the maximum stress range (S), associated with normal and upset conditions and an OBE event and as calculated from the sum of Equations 9 and 10 of the ASME Code, Section III, Subsection NC, exceed the allowable as identified below:

The allowable is $0.8(1.2S_h + S_A)$ when the original code of record for BVPS Unit 2, the ASME Code, Section III, 1971 Edition up to and including the Winter 1972 Addenda is used for piping analysis.

The allowable of $0.8(1.8S_h + S_A)$ may be used if the piping analysis is performed using the ASME Code, Section III, Winter of 1981 Addenda to 1980 Edition, or later editions and addenda.

(S_h is the stress calculated by the rules of Section III to the ASME Code, subsection NC-3600 and ND-3600 for Class 2 and 3 components, respectively. S_A is the allowable stress range for expansion stress calculated by the rules of ASME Section III, subsection NC-3600 or the USA Standard Code for Pressure Piping, ANSI B31.1)

c. If there are no intermediate locations where S exceeds the allowable mentioned above, intermediate breaks are not postulated.

3.6B.2.1.1.3 This section intentionally deleted from the UFSAR.

3.6B.2.1.1.4 Separating Structure for High Energy Fluid Systems

If a structure separates a high energy line from an essential component, that separating structure is designed to withstand the consequences of the pipe break in the high energy line which produces the greatest effect at the structure irrespective of the fact that the criteria in Section 3.6B.2.1 might not require such a break location to be postulated.

3.6B.2.1.2 Criteria for Outside of the Containment

3.6B.2.1.2.1 High-Energy Fluid Systems

The following criteria are used to define break and crack locations in high-energy fluid systems outside of the containment.

1. Fluid systems separated from essential structures, systems, and components

By plant arrangement, certain high energy lines are isolated by barriers or are remote from essential structures, systems, and components. Isolation is demonstrated by the existence of barriers capable of containing the effects of a rupture and a line is determined to be remote by consideration of the distances to targets versus rupture effects. All of the preceding is done on a case by case basis. Restraint systems are not designed for lines determined to be isolated or remote.

2. Fluid system piping in containment penetration areas

Breaks are not postulated in the following portions of high energy piping, designated as break exclusion zones:

a. MSS and FWS main run lines within the Main Steam Valve House (MSVH) from the containment penetration to the MSVH/Service Building (SB) wall (Refer to Figures 3.6B-13 and 3.6B-14).

b. All MSS high-energy branch lines within the MSVH. This includes portions of the SDS, SVS, and GNS systems (Refer to Figures 3.6B-17a, 3.6B-17b and 3.6B-17c for limits of piping in break exclusion zone).

The piping within the break exclusion zones is designed to meet the following design requirements:

i. The following design stress limits are not exceeded for Class 2 piping:

(a) The maximum stress ranges, as calculated by the sum of equations 9 and 10 of the ASME Code, Section III, Subsection NC, considering normal and upset BVPS-2 conditions including an OBE event do not exceed the following limits:

The allowable is $0.8(1.2S_h + S_A)$ when the original code of record for BVPS Unit 2, the ASME Code, Section III, 1971 Edition up to and including the Winter 1972 Addenda is used for piping analysis.

The allowable of $0.8(1.8S_h + S_A)$ may be used if the piping analysis is performed using the ASME Code, Section III, Winter of 1981 Addenda to 1980 Edition, or later editions and addenda.

(b) The maximum stresses as calculated by Equation 9 of the ASME Code, Section III, Subsection NC under the loadings resulting from a postulated piping failure of fluid system piping beyond these portions of the piping do not exceed the following limits:

The allowable is $1.8\ S_h$ when the original code of record for BVPS Unit 2, the ASME Code, Section III, 1971 Edition up to and including the Winter 1972 Addenda are utilized for piping analysis.

The allowable based on the lesser of $2.25\ S_h$ and $1.8\ S_Y$ may be used if the piping analysis is performed using the ASME Code, Section III, Winter of 1981 Addenda to 1980 Edition, or later editions and addenda.

ii. Welded attachments, for pipe supports or other purposes, to these portions of piping are avoided, except where detailed stress analysis demonstrates compliance with the limits discussed in Section 3.6B.2.1.2.1, item 2.i.

iii. The number of circumferential and longitudinal piping welds and branch connections are minimized.

iv. The length of these portions of piping is reduced to the minimum length practical.

v. The design of pipe anchors or restraints (for example, connections to containment penetrations and pipe whip restraints), does not require welding directly to the outer surface of the piping (for example, fluid integrally forged pipe fittings are used), except where such welds are capable of 100-percent volumetric in-service inspection (ISI). This criterion is also applicable to the portion of piping between the containment and the inside containment isolation valves.

vi. Details of containment penetration, identification of pipe welds, access for (ISI), and points of fixity and discontinuity are provided in Section 3.8.1.

The Safety Class 2 portion of break excluded piping from the containment penetration up to and including the isolation valve is designed in accordance with ASME III Subarticle NE-1120. The piping between the isolation valve and MSVH/SB wall is classified as non-nuclear safety, and is designed in accordance with ANSI B31.1.

3. Break Locations - ASME Section III Class 2 and 3 Piping and Seismic Non-Nuclear Piping

a. Breaks in ASME Code, Section III, Class 2 and 3 piping and in non-nuclear class piping designed for seismic loading are postulated at the following locations in each piping and branch run (except those portions of fluid system piping identified in Section 3.6B.2.1.2.1, items 1 and 2):

(1) At terminal ends of the pressurized portions of the runs.

(2) At intermediate locations selected by either of the following criteria:

(a) At each pipe fitting (for example, elbow, tee, cross, and nonstandard fitting) welded attachment and valve.

(b) At each location where the stresses associated with normal and upset plant conditions including an OBE event as calculated from the sum of Equations 9 and 10 of the ASME Code, Section III, Subsection NC, exceed the allowable as identified below:

The allowable is $0.8(1.2S_h + S_A)$ when the original code of record for BVPS Unit 2, the ASME Code, Section III, 1971 Edition up to and including the Winter 1972 Addenda is used for piping analysis.

The allowable of $0.8(1.8S_h + S_A)$ may be used if the piping analysis is performed using the ASME Code, Section III, Winter of 1981 Addenda to 1980 Edition, or later editions and addenda.

(c) If there are no intermediate locations where S exceeds the above mentioned limits, intermediate breaks are not postulated.

b. Piping or support modifications, however minor, may result in a shift of the calculated highest stress points in the piping. To eliminate the unnecessary relocation of postulated intermediate breaks during the late stages of design, some practical conditions for relocation have been established. Once a high energy piping system has been analyzed and break locations selected, the postulated intermediate break locations do not vary with subsequent stress reanalysis, provided no major change has occurred in the pipe parameters such as the routing of the piping being analyzed. Less significant design modifications, such as support changes to minimize the use of snubbers, are not cause for new break postulation. However, if the reanalysis, regardless of the reason, results in stresses that exceed the threshold level defined previously, then new breaks are postulated at those points where the criteria are exceeded. Evaluation and mitigation criteria for these new breaks will be identical to that imposed on the original design.

4. Break Locations - Nonseismic, Non-Nuclear Piping

Breaks in non-nuclear safety class piping not designed for seismic loading are postulated at the following locations in each piping or branch run:

a. At terminal ends of the pressurized portions of the runs.

b. At each pipe fitting, welded attachment, and valve.

3.6B.2.1.2.2 Moderate-Energy Fluid Systems

The following criteria are used to define crack locations in moderate energy fluid systems outside of the containment.

1. For the purpose of satisfying the separation provisions of BVPS-2 arrangement, a review of the piping layout and BVPS-2 arrangement drawings is conducted. The effects of through-

wall leakage cracks are isolated or made physically remote from safe shutdown systems, to the extent that it is practical.

2. Leakage cracks are not postulated in those portions of piping between the isolation valve and the containment, provided they meet the requirements of the ASME Code, Section III, Subarticle NE-1120, and are designed such that the maximum stress range associated with normal and upset plant conditions and an OBE event does not exceed the allowable as identified below:

   The allowable is $0.4(1.2S_h + S_A)$ when the original code of record for BVPS Unit 2, the ASME Code, Section III, 1971 Edition up to and including the Winter 1972 Addenda are used for piping analysis.

   The allowable of $0.4(1.8S_h + S_A)$ may be used if the piping analysis is performed using the ASME Code, Section III, Winter of 1981 Addenda to 1980 Edition, or later editions and addenda.

3. Through-wall leakage cracks are postulated in fluid system piping, except where exempted by section 3.6B.2.1.2.2, items 2 and 4 or where the maximum stress range, associated with normal and upset plant conditions and an OBE event, in these portions of ASME Class 2 or 3 piping and non-nuclear piping is less than the allowable identified below:

   The allowable is $0.4(1.2S_h + S_A)$ when the original code of record for BVPS Unit 2, the ASME Code, Section III, 1971 Edition up to and including the Winter 1972 Addenda are utilized for piping analysis.

   The allowable of $0.4(1.8S_h + S_A)$ may be used if the piping analysis is performed using the ASME Code, Section III, Winter of 1981 Addenda to 1980 Edition, or later editions and addenda.

   The cracks are postulated to occur individually at locations that result in the maximum effects from fluid spray and flooding. Only environmental effects that develop from these cracks are considered.

4. Cracks are not postulated in moderate-energy fluid system piping located in an area in which a break in high-energy piping occurs and is more limiting. Where a postulated leakage crack in the moderate energy fluid system piping results in more limiting environmental conditions than the break in proximate high-energy fluid system piping, the provisions identified in Section 3.6B.2.1.2.2, item 3, are applied.

5. Through-wall leakage cracks, instead of breaks, are postulated in the piping of those fluid systems that qualify as high-energy fluid systems for only short operational periods, but qualify as moderate energy fluid systems for the major operational period. An operational period is considered short if the fraction of time that the system operates within the pressure-temperature conditions specified for high-energy fluid systems is less than 2 percent of the time that the system operates as a moderate-energy fluid system (for example, systems such as the reactor residual heat removal systems qualify as moderate-energy fluid systems).

3.6B.2.1.2.3 Separating Structures for High Energy Fluid System

If a structure separates a high energy line from an essential component, that separating structure is designed to withstand the consequences of the pipe break in the high energy line which produces the greatest effect at the structure irrespective of the fact that the criteria specified in Section 3.6B.2.1.2.1 might not require such a break location to be postulated.

3.6B.2.1.3 Design Basis Break/Crack Types and Orientation

3.6B.2.1.3.1 Circumferential Pipe Breaks

The following circumferential breaks are postulated in high-energy fluid system piping at the locations specified in Sections 3.6B.2.1.1 and 3.6B.2.1.2:

1. Circumferential breaks are postulated in fluid system piping runs and branches exceeding a nominal pipe size of 1 inch. However, when the maximum stress range or usage factor exceeds the limits specified for break postulation, and if it is determined by detailed stress analysis that the maximum stress range in the circumferential direction is at least 1.5 times that in the axial direction, then only longitudinal breaks will be postulated.

2. Where break locations are selected at pipe fittings without the benefit of stress calculations, breaks are postulated at the piping weld to each fitting, valve, or welded attachment. If detailed stress analyses or tests are performed, the maximum stressed location in the fitting may be selected instead of the pipe-to-fitting weld.

3. Circumferential breaks are assumed to result in pipe severance and separation amounting to a one-diameter lateral displacement of the ruptured piping sections unless physically limited by piping restraints, structural members, or piping stiffness as may be demonstrated by analysis.

4. The dynamic force of the jet discharge at the break location is based on the effective cross-sectional flow area of the pipe and on a calculated fluid pressure as modified by an analytically- or experimentally-determined thrust coefficient. Limited pipe displacement at the break location, line restrictions, flow limiters, positive pump-controlled flow, and the absence of energy reservoirs are taken into account, as applicable, in the reduction of jet discharge.

5. Pipe whipping is assumed to occur in the plane defined by the piping geometry and is assumed to cause pipe movement in the direction of the jet reaction.

3.6B.2.1.3.2 Longitudinal Pipe Breaks

The following longitudinal breaks are postulated in high-energy fluid system piping at the locations of each break specified in Sections 3.6B.2.1.1, and 3.6B.2.1.2 except as noted:

1. Longitudinal breaks in fluid system piping and branch runs are postulated in nominal pipe sizes 4 inches and larger. However, when the maximum stress range or usage factor exceeds the limits specified for break postulation, and it is determined by detailed stress analysis that the maximum stress range in the axial direction is at least 1.5 times that in the circumferential direction, then only a circumferential break will be postulated.

2. Longitudinal breaks are not postulated at:

   a. Terminal ends.

3. Longitudinal breaks are assumed to result in an axial split without pipe severance. Splits are located (but not concurrently) at two diametrically-opposed points on the piping circumference such that a jet reaction causing out-of-plane bending of the piping configuration results.

Alternately, a single split may be assumed at the section of highest stress as determined by detailed stress analysis.

4. The dynamic force of the fluid jet discharge is based on a circular break area equal to the effective cross-sectional flow area of the pipe at the break location, and on a calculated fluid pressure modified by an analytically- or experimentally-determined thrust coefficient as determined for a circumferential break at the same location. Line restrictions, flow limiters, positive pump-controlled flow, and the absence of energy reservoirs are taken into account, as applicable, in the reduction of jet discharge.

5. Pipe movement is assumed to occur in the directions defined by the stiffness of the piping configuration and jet reaction forces, unless limited by structural members or piping restraints.

3.6B.2.1.3.3 Through-Wall Leakage Cracks (Outside of the Containment Only)

The following through-wall leakage cracks are postulated in moderate-energy fluid system piping at the locations specified in Section 3.6B.2.1.2.2:

1. Cracks are postulated in moderate-energy fluid system piping and branch runs exceeding a nominal pipe size of 1 inch.

2. Fluid flow from a crack is based on a circular opening of area equal to that of a rectangle one-half the nominal pipe diameter in length and one-half pipe wall thickness in width.

3. The flow from the crack is assumed to result in an environment that wets all unprotected components within the compartment, with consequent flooding in the compartment and communicating compartments. Flooding effects are determined on the basis of a conservatively estimated time period required to effect corrective actions.

3.6B.2.1.4 Conformance with Regulatory Guide 1.46

Section 1.8 discusses conformance with Regulatory Guide 1.46.

3.6B.2.2 Analytical Methods to Define Forcing Functions and Response Models

3.6B.2.2.1 Introduction

Pipe rupture analyses consist of calculations to determine the fluid forces generated by the blowdown of pressurized lines, complemented by dynamic or energy-balance analyses to determine pipe motion,

impact effects (Figure 3.6B-1), and jet impingement effects (Paragraph 3.6B.2.3). Restraints for lines 6 inches and less in diameter are usually qualified on a generic basis using an energy balance analysis. However, restraints for larger lines are engineered individually for each system, usually using standard design concepts and worst case dynamic analysis to qualify several similar restraints in different locations. The response of unrestrained lines is analyzed by either inelastic dynamic analysis or energy balance analysis.

Criteria for the response analyses are as follows:

1. An analysis of the pipe run or branch is performed for each postulated longitudinal and circumferential rupture or, alternatively, for a worst case. Worst cases are selected on the basis of gap, fluid force, and piping system stiffness.

2. The loading condition of a pipe run or branch, prior to a postulated rupture, in terms of internal pressure, temperature, and stress state, for piping pressurized during operation at power is assumed to be either hot standby or 102 percent power, depending on which condition has the greater contained energy.

3. For a circumferential rupture, pipe whip dynamic analyses are only performed for that end (or ends) of the pipe or branch connected to a pressure source (that is, fluid reservoir or pumped flow) sufficient to cause pipe whip. For the pipe run or branch where there is no physical potential for pipe whipping because of the level of energy in the piping, such as a dead end pipe, the jet impingement effect due to blowdown flow coming from the other end shall be taken into consideration.

4. Dynamic analytical methods, used for calculating the piping or piping/restraint system response to the jet thrust developed after a postulated rupture, adequately account for the effects of the following:

   a. Mass inertia and stiffness properties of the system.

   b. Impact and rebound (if any) as permitted by gaps between piping and restraint.

   c. Elastic and inelastic deformation of piping and/or restraint.

   d. Support boundary conditions.

5. An allowable design strain limit of 0.5 ultimate uniform strain of the restraints is used for tensile energy-absorbing components. For compressive energy-absorbing

components, a design limit of 80 percent of energy absorbing capacity is used.

6. A 10-percent increase of minimum specified yield strength (Sy) may be used to account for strain rate effects in inelastic nonlinear analyses. Alternatively, experimental data may be used to determine the strain rate parameters for use in nonlinear codes which monitor strain rate.

3.6B.2.2.2 Time Dependent Blowdown Force

The blowdown force calculations, which are similar to those of Moody (1973), are based on the transient pressures, velocities, and other thermodynamic properties of the fluid. To provide the time history of pressure, velocity, etc., the method of characteristics is used to solve the continuity and momentum equations simultaneously. A general description of the method can be found in most gas dynamics textbooks (De Haller 1945; Rudinger 1969; and Owzarek 1968). For these one-dimensional fluid mechanics analyses, the pipe is regarded as straight, despite numerous bends. The calculated momentum and pressure forces are applied at changes in direction or cross-section of the piping to provide time-dependent loads for pipe dynamic analysis.

The transient forces result from wave propagation and fluid momentum. It is assumed that pipe bends and elbows neither attenuate the traveling pressure waves nor cause reflections. Immediately following the rupture of a pipe, a decompression wave travels from the break at the speed of sound relative to the fluid. The fluids ahead of and behind the wave are at different states. This initial blowdown condition will last until a return signal from a pressure reservoir reaches the break. Repeated wave reflections between the reservoir and break prevail until a steady-state flow condition is established. Boundary conditions that govern the flow at the break end and at the inlet from the vessel to the pipe are applied.

The blowdown force is a function of the pressure, mass flow rate, and other thermodynamic properties of the fluid which vary with time. The force the fluid exerts on the pipe at any point in time is calculated using the following equation:

$$F = \left[P - P_a + \frac{RU^2}{144g}\right] A \qquad (3.6B\text{-}1)$$

where:

F = Blowdown force (lb)

P = Local static pressure, (psia)

P_a = Ambient pressure (psia)

U = Velocity of fluid (fps)

R = Density of fluid (lb /ft^3)

A = Pipe break area (in^2)

g = Gravitational constant (lb_m -ft/lb_f-sec^2)

The effects of line friction are included in the evaluation of steady state blowdown. For the calculation of the transient fluid response, however, friction may or may not be considered.

3.6B.2.2.2.1 Subcooled Nonflashing Waterline Blowdown

Immediately following the postulated rupture, a flow disturbance propagates from the break at a speed of sound relative to the fluid, leaving the fluid behind the wave at a thermodynamic state of U_o and P = P_a. The governing equation across the wave is:

$$P = \pm \frac{RC}{g} \Delta U \qquad (3.6B\text{-}2)$$

where:

P = Differential pressure across wave

ΔU = Differential velocity wave

C = Speed of sound in fluid.

When the disturbance reaches a pressure reservoir, it is reflected and travels toward the break end. The boundary conditions that govern the flow at the break location and at the inlet to the pipe (from the reservoir) are:

$P_e = P_a$

$$P_i = P_o - \frac{R U_i^2}{2g} \qquad (3.6B\text{-}3)$$

where:

P_i = Pressure at pipe inlet

U_i = Velocity of fluid at pipe inlet

P_e, P_a = Pressure at the break location

P_o = Reservoir pressure.

The initial blowdown flow remains constant until the disturbance, which is reflected from the vessel, reaches the break end. Then it is reflected again, and that brings a change of blowdown flow. These repeated wave transmissions and reflections continue until the steady-state flow is established. The total initial force exerted by the fluid on the pipe is 1.0 P_oA and is comprised of forces due to the wave and the discharge of fluid at the break point.

Steady State With Friction

For steady state flow with friction, the blowdown forcing function calculations become:

$$F = \left[\frac{2(P_o - P_a)}{P_o} \frac{1}{1 + \frac{fL_e}{D}}\right] P_o A \qquad (3.6B\text{-}4)$$

which is derived by applying Bernoulli's equation across the pipe and by using the expression for the forcing function calculation, where:

L_e = Total equivalent length of pipe friction

f = Friction factor (Reynolds number and pipe surface roughness dependent)

D = Pipe inside diameter.

Transient Flow With Friction

With friction losses taken into consideration, the transient pressures and velocities of the subcooled nonflashing water line blowdown can be obtained by simultaneously solving the continuity and momentum equations. The finite difference approximation using the method of characteristics is used as a principle for numerical solution of these two governing equations (Streeter 1967).

The computations proceed in the following manner. A grid is chosen in such a way that $\Delta x = C\ t$, where Δx is a space increment, Δt a time increment, and C the propagation speed of the disturbance. Starting from the initial conditions along the pipe, the pressure and velocity at $t_{n+i} = t_n + \Delta t$, and at any interior points of the pipe, can be calculated by using two characteristic equations. Whenever a boundary point is reached, the corresponding characteristic equation and boundary condition are used. Then the process proceeds until the steady state is reached.

The friction losses are expressed in terms of pressure drop of the system. To accurately model the system with friction losses, a smaller Δx must be used. This method can be applied for flow with or without friction losses.

The transient pressures, velocities, etc, are then used to calculate the blowdown forces using the equation described previously.

3.6B.2.2.2.2 Steamline Blowdown

Transient Flow Without Friction

Steam is treated as an ideal, single-phase gas with a constant specific heat ratio, k, of 1.3. Except for the case of steady-state blowdown flow, the flow is assumed to be isentropic with negligible pipe friction. The characteristic method (Jonssen et al 1973 and Hartree 1952) which is a finite difference approximation using the principle of characteristics, is used as a basis for the numerical solution of the continuity and momentum equations. The transient pressure, mass flow rate, and other thermodynamic properties are then used to calculate the transient-state forcing function.

Immediately following the break, a decompression wave travels into the pipe toward the pressure reservoir. The fluid in front of the wave is at a state

$$U_1 = 0$$

$$C_1 = C_0$$

where:

U_1 = Velocity of fluid

C_0 = Speed of sound in fluid.

The fluid state at the exit is at the sonic condition, because the initial pressure was sufficiently high (Shapiro 1953):

$$\frac{U_e}{C_o} = \frac{C_e}{C_o} = \frac{2}{k+1} = 0.8695 \text{ for } k = 1.3 \qquad (3.6B\text{-}5)$$

The blowdown force can be calculated as:

$$F = [\frac{P_e - P_a}{P_o} + \frac{R_e C_e^2}{g P_o}] P_o A$$

$$= \left[\frac{P_e - P_a}{P_o} + \frac{R_e}{R_o}\left(\frac{C_e}{C_o}\right)^2 \frac{R_o C_o^2}{g P_o}\right] P_o A \qquad (3.6B\text{-}6)$$

where: $C_o^2 = k\ g\ P_o/R_o$

The pressure ratio across the wave is:

$$\frac{P_e}{P_o} = \left(\frac{T_e}{T_o}\right) \frac{k}{k-1} = \left(\frac{C_e}{C_o}\right) \frac{2k}{k-1} \qquad (3.6B\text{-}7)$$

$$= \left(\frac{2}{k+1}\right) \frac{2k}{k-1} = 0.298$$

where:

T = Temperature

and the density ratio is:

$$\frac{R_e}{R_o} = \left(\frac{P_e}{P_o}\right)^{\frac{1}{k}} = \left(\frac{C_e}{C_o}\right)^{\frac{2k}{k-1}\left(\frac{1}{k}\right)}$$

(3.6B-8)

$$= \left(\frac{2}{k+1}\right)^{\frac{2}{k-1}}$$

Therefore, the blowdown force can be reformulated as

$$F = (1+k)\left(\frac{2}{k+1}\right)^{\frac{2k}{k-1}} P_o A - P_a A \qquad (3.6B\text{-}9)$$

$$= 0.685\ P_o A - P_a A$$

The total initial force exerted by the fluid on the pipe is 1.0 P_oA and is comprised of forces due to the wave and the preceding force due to the discharge of fluid at the break point.

The blowdown force is constant until a return signal from the pressure source reaches the break.

When the wave reaches the reservoir, it is reflected as a compression wave. The boundary condition at the pressure source lies on the steady-state ellipse,

(3.6B-10)

$$\left(\frac{C_i}{C_o}\right)^2 + \frac{k-1}{2}\left(\frac{U_i}{C_o}\right) = 1$$

which is the energy equation applied across the vessel-pipe inlet. The boundary condition for this case is:

(3.6B-11)

$$T_o = T_i + \frac{U_i^2}{2C_\rho}$$

where:

$C\rho$ = the constant pressure specific heat of a fluid

i = the state at the inlet to the pipe.

If the steady state is reached, the flow in the pipe is uniform and, if the pressure in the pressure vessel remains high, then the boundary condition at the break always lies on the sonic line; that is,

$$\frac{U^*}{C_o} = \frac{C^*}{C_o}$$

Then from the critical flow condition,

(3.6B-12)

$$\frac{U^*}{C_o} = \frac{C^*}{C_o} = \sqrt{\frac{2}{k+1}} = 0.9325$$

where * = the critical flow condition.

Then, the steady-state blowdown force is:

(3.6B-13)

$$F = \left[\frac{P^*}{P_o} + \frac{R^*(U^*)^2}{P_o g}\right] P_o A$$

$$= (1+k)\left(\frac{2}{k+1}\right)^{\frac{k}{k-1}} P_o A = 1.2555\, P_o A$$

Steady State With Friction

For steady state flow with friction losses, the analysis is based on the theory of compressible flow with friction (Shapiro 1953). The pipe friction is the chief factor bringing about the change of fluid properties in the flow. A curve which describes the variation of steady state steam blowdown force versus friction parameter fL_e/D is shown on Figure 3.6B-2 (Moody 1973).

Transient Flow With Friction

Using a method similar to the transient flow analysis for a nonflashing waterline, a hybrid method of characteristics has been adopted from Jonssen et al (1973) to solve simultaneous one-dimensional governing equations of mass, momentum, and energy for pipe having a constant cross-sectional area with friction effects taken into consideration. The governing equations are first transformed into a system of characteristic equations, and, then, the finite difference approximation is used to integrate the fluid variables which represent the pressure, velocity, and entropy along the characteristic lines and the path line. These transient pressures, velocities, etc., are used to calculate the blowdown forcing functions using the equation described previously.

3.6B.2.2.2.3 Flashing Water Blowdown

For saturated water blowdown through a long pipe (L/D>12), a two phase annular critical flow model developed by Fauske (1962) is utilized. The Fauske model uses the assumptions of thermal equilibrium and phase slip summarized as follows:

1. Annular flow with slip occurs and the slip ratio for critical flow is:

$$S = (V_g/V_f)^{1/2} \qquad (3.6B\text{-}14)$$

where:

S = Slip ratio
V_g = Specific volume of the vapor phase
V_f = Specific volume of the liquid phase

2. Thermodynamic equilibrium and isenthalpic expansion are assumed.

3. The specific volume of the mixture (V_m) is given by:

$$V_m = \left[\frac{(1-x)^2}{(1-\alpha)} + \frac{x^2}{\alpha}\left(\frac{V_g}{V_f}\right)\right]^{V_f} \qquad (3.6B\text{-}15)$$

where:

α = The void fraction = $\left\{1 \Big/ \left[\left(\frac{1-x}{x}\right)\left(\frac{V_f}{V_g}\right)\right\}^{1/2} + 1\right]\right\}$ (3.6B-15A)

X = Mixture quality by weight

The critical mass flow rate exists when the pressure gradient along the pipe has an absolute, finite maximum value for a given flow rate and quality. This leads to the following equation for maximum mass velocity, G_c:

$$G_c = \left\{\frac{-gS}{\left[F_1\frac{dV_g}{dp} + F_2\frac{dX}{dP} + F_3\frac{dV_g}{dP}\right]}\right\}^{1/2} \qquad (3.6B\text{-}16)$$

where:

$F_1 = X[1 + (S - 1)X]$

$F_2 = V_g[1 + 2X(S - 1)] + V_f S[2(x - 1) + S(1 - 2X)]$

$F_3 = S[1 + X(S - 2) - X^2 (S - 1)]$ (3.6B-16A)

$\frac{dV_g}{dP}$, $\frac{dX}{dP}$, and $\frac{dV_f}{dP}$ can be approximated as (3.6B-16B)

$$\frac{dV_g}{dP} \approx \frac{\Delta V_g}{\Delta P}$$

$$\frac{dX}{dP} \approx \frac{\Delta X}{\Delta P} = -\frac{1}{h_{fg}}\left[\frac{\Delta h_f}{\Delta P} + X\frac{\Delta h_{fg}}{\Delta P}\right]$$

$$\frac{dV_f}{dP} \approx \frac{\Delta V_f}{\Delta P}$$

The exit quality and enthalpy relation are related by the energy equation which is written for two phase flow as:

$$h_o = (1-X)\left[h_f + \frac{V_f^2}{2g_cJ}\right] + X\left[h_g + \frac{V_g^2}{2g_cJ}\right] \qquad (3.6B\text{-}17)$$

This equation can be rewritten in terms of the mass velocity, G_c, and the slip ratio, S, as:

$$h_o = h_f + X(h_g - h_f) + \frac{G_c^2}{2g_cJ}\left[(1-x)SV_f + XV_g\right]^2\left[X + \frac{(1-X)}{S^2}\right] \qquad (3.6B\text{-}18)$$

where V_f, V_g h_f, and h_g are evaluated at the critical pressure. With the previous, the properties of the mixture at the exit can be evaluated and the critical mass velocity, G_c, can be determined.

In computing the blowdown flow rate of a saturated water blowdown through a long pipe, the pressure drops due to friction as a result of flashing, and the change of momentum become significant and should not be neglected.

The pressure drop for boiling water flowing in a long pipe in a horizontal plane can be estimated as:

$$\Delta P = \Delta P_{ACC.} + \Delta P_{FRICT.} \qquad (3.6B\text{-}19)$$

where:

$\Delta P_{ACC.}$ is the acceleration pressure drop, which is due to the change of momentum between the phases as a result of flashing. $\Delta P_{FRICT.}$ is the pressure drop due to pipe friction of a two phase flow.

The acceleration pressure drop is customarily expressed in the following form:

$$\Delta P_{ACC.} = r_2 \frac{V_f G^2}{g_c} \qquad (3.6B\text{-}20)$$

where:

r_2 = The acceleration pressure drop multiplier

$$r_2 \approx \left\{ 1+X\left[\left(\frac{V_g}{V_f}\right)^{1/2}-1\right] \right\}^2-1 \qquad (3.6B\text{-}21)$$

This pressure drop due to friction for two phase flow can be expressed as:

$$\Delta P_{FRICT.} = r_3 \frac{FL}{D} \frac{V_f G^2}{2g_c} \qquad (3.6B\text{-}22)$$

where:

r_3 = The two phase frictional pressure drop multiplier

An estimate of r_3 developed by Thorn (1964) is utilized. The following expression fits the referenced data over the range of pressures considered.

$$r_3 = 1 + X\left(\frac{V_g}{V_f} - 1\right) \qquad (3.6B\text{-}23)$$

To calculate the blowdown flow rate for two phase flow using Fauske's critical flow envelope, an iteration procedure is necessary, since the critical pressure and the percent of flashing at the discharge end are not known a priori. By using the critical flow envelope, together with the following equation, one can find the:

$$P_o = P_c\left[1 + 2r_2 + r_3\left(\frac{FL}{D}\right)\right]\left[\frac{V_f G_c^2}{2g_c}\right] \qquad (3.6B\text{-}24)$$

Exit quality and critical pressure, P_c. It is assumed that the specific volume of the liquid phase does not change drastically across the pipe.

The iteration procedure is outlined as follows:

1. Assuming a critical pressure, P_c, one can determine the critical mass velocity and the exit quality.

2. Using the exit quality and the critical pressure, one can obtain the two phase pressure drop multiplier, r_3, and the acceleration pressure drop multiplier, r_2.

3. The total pressure drop across the pipe is calculated. If the total pressure drop plus the critical pressure equals the total pressure in the pressure source, then the iteration stops. Otherwise the procedure is repeated by assuming a new critical pressure.

After obtaining the critical mass velocity, pressure, and exit quality, the blowdown thrust can be calculated as:

$$F = \left[P_c - P_a + \frac{V_m G_c^2}{g_c}\right] A \qquad (3.6B\text{-}25)$$

where:

$$V_m = (1 + r_2)^{V_f} \qquad (3.6\ B\text{-}26)$$

For short flow passages (L/D <12), the flow is characterized by non-equilibrium conditions and a metastable state results. This flow is unstable since, for initially subcooled or saturated water, the flow accelerates so rapidly as it leaves the pressure source at the pipe inlet that there is insufficient time to form any appreciable amount of vapor. Therefore, the flow has a negligible exit quality and the pressure drop due to the change of momentum between the phases is negligible. For these flow regimes, the thermodynamic fluid

properties as functions of time are predicted by the Henry-Fauske (1971) theory.

3.6B.2.2.3 Simplified Blowdown Analysis

A conservative steady state forcing function may be used for calculations based on the energy balance method. The function has a magnitude of:

$$T = KPA$$

where:

P =System pressure prior to pipe break

A =Pipe break area

K =Thrust coefficient (theoretical maximum)

K values are as follows:

1. 1.26 for saturated steam, water, and steam/water mixture

2. 2.00 for nonflashing sub-cooled water.

If pressure drop due to friction is taken into consideration, the values of K can be reduced.

An amplification factor of 1.0 or 1.1 is applied to the previous force to account for rebound. A rebound factor of 1.0 is used if the analysis is verified by a subsequent dynamic analysis; otherwise a value of 1.1 is used. After the break, there is a short period of time during which the magnitude of the fluid force (that is, until the wave passes the first elbow) is 1.0 P_oA. This is ignored since the initial pipe velocity is low and the resulting work input is inconsequential, and the magnitude of the fluid force is assumed to rise immediately to its maximum value, during the energy input phase, as determined by the detailed methods of Section 3.6B.2.2.2.

3.6B.2.2.4 Lumped-Parameter Dynamic Analysis

The piping system is modeled mathematically as a series of beam elements connected at nodes. The geometry of the model matches that of the pipe. The distributed mass of the pipe and contained fluid is modeled as lumped masses located at the nodes. The beam elements have the stiffness properties of the pipe in the elastic range and approximate the plastic behavior after yield.

Before a rupture, the pipe is stressed by internal pressure, and is in static equilibrium. This is simulated in the mathematical model by applying forces at points in the system where changes in the flow direction or changes in the flow area occur. The initial stresses contribute to the total stresses of the system and are considered in

situations where they are significant, such as ensuring that the total stresses in break exclusion zones or that the total loads on attached components are within appropriate allowables subsequent to a break or where close gapped restraints are used.

As a postulated circumferential break propagates, the load-carrying metal area of the pipe decreases so that a force unbalance results. The force initially transmitted across the break is assumed to drop linearly to zero in 1 millisecond. After the break, the forces exerted on the pipe by the fluid are determined by the time-dependent blowdown force derived in Section 3.6B.2.2.2. Similarly, for a longitudinal split, the crack propagation speed limits the rate at which the split opens, so a 1-millisecond force rise time is assumed. Other break opening times may be used if justified.

Subsequent to a postulated rupture, the inelastic system response is analyzed by the use of an elastic-plastic lumped-mass beam element computer code such as DINASAW or LIMITA (Appendix Sections 3A.2.1, 3A.2.2, and 3A.2.3). The analysis considers the free motion of the pipe through a gap, if one exists, using the appropriate initial conditions and the fluid blowdown forces as calculated in Section 3.6B.2.2.2. The mathematical model includes the restraint or barrier, and sometimes a member simulating the local crush resistance of the pipe. Rebound effects are considered by automatically connecting and disconnecting that member for impact and rebound, respectively.

3.6B.2.2.4.1 Sample Dynamic Analysis

Pipe rupture restraint 2MSS-PRR811 limits the motion of the main steam line following a postulated circumferential rupture at the top of the steam generator. The restraint is a "U" configuration with 10 layers of 11 gauge stainless steel having an 8-inch strainable width (Figure 3.6B-3). The initial clearance between the hot pipe and restraint is 0.94 inch in the outward and side directions, resulting in a total acceleration gap, after slack take-up, of 2.34 inches.

The analysis of the pipe-restraint interaction used the LIMITA3 computer code and the three-dimensional finite element model shown on Figure 3.6B-4. The restraint model is equivalent to a single member 49.06 inches long with a 20-in^2 cross section. The elastic-plastic properties of this restraint were for stainless steel, with corrections for strain variations in the arch due to friction against the pipe and in the tapered transition region at each end of the strap. A sufficient length of pipe was included in the model to minimize the effect of the boundary condition at the far end.

The fluid forces depicted on Figure 3.6B-5 were applied to nodes where the pipe is curved. First, the pipe was brought into static equilibrium with the fluid forces at time zero, considering the pipe fixed to the steam generator. Then, the mechanical forces from the steam generator were ramped down to zero in 1 millisecond to simulate

the rupture. The subsequent fluid force history represents the decompression wave traveling away from the break. No reflection wave from the other end of the pipe occurs in the time period analyzed.

The restraint reaction load is shown on Figure 3.6B-6. The stainless steel strap is stretched during the impact event, thereby absorbing energy in plastic deformation. The maximum restraint strain recorded during the impact analysis was 6 percent. The restraint force then oscillates about the value of the fluid blowdown force.

3.6B.2.2.5 Energy Balance Analysis

The energy balance technique for analyzing pipe impact equates the work done by the escaping fluid to the energy absorbed in deforming the ruptured pipe and the impacted target. A steady-state blowdown force is used for the energy balance analysis. The magnitude of the force is described in Section 3.6B.2.2.3.

The input energy of the system is determined by multiplying the pipe displacement at the break end by the component of the fluid blowdown force in the direction of the displacement.

The input energy is:

$$E = F (g + d)$$

where:

F = component of blowdown force in direction of pipe displacement (lb)

g = pipe-target gap (in)

d = displacement of break end of pipe after impact (in)

The strain energy absorbed during pipe whip and impact consists of the energy absorbed by pipe bending, E_{pb} the energy absorbed by pipe crush during impact, E_{pc} and the energy absorbed by deformation of the target, E_t.

To determine post-impact target deformation and the peak reaction force, the input energy is equated to the strain energy absorbed by the pipe and target. The energy absorption characteristics of the pipe crush and target deformation are calculated on the basis of the displacement integral of the appropriate force-deformation curves.

<u>Sample Energy Balance Analysis</u>

Analyze the impact of a 10-inch, schedule 160 pipe into a pipe crush bumper following a circumferential break at an elbow (Figure 3.6B-7). One source of energy input is recognized: the fluid blowdown force

traveling through the distance moved by the ruptured end of the pipe. The input energy is:

$$E_{in} = F_b(g+d)\left(\frac{L_h}{L_h - L}\right) \qquad (3.6B\text{-}27)$$

where:

F_b = Fluid blowdown force (lb)

g = Acceleration gap (in)

d = Restraint deflection (in)

L_h = Length from break to plastic hinge (in)

L = Length from break to restraint (in)

The ratio $L_h/(L_h-L)$ represents the increased pipe displacement at the break, compared to displacement at the restraint, due to the assumed pipe rotation about a plastic hinge.

The fluid force is calculated:

$$F_b = K_r K_f P_o A = 100.5 \text{ kips} \qquad (3.6B\text{-}28)$$

where:

K_r = Rebound factor (1.1)

K_f = Thrust coefficient (0.7)

P_o = Initial pressure (2,300 psi)

A = Pipe flow area (56.75 in^2)

The maximum thrust coefficient in the period when the energy balance occurs is 1.0. However, this drops to 0.7 as soon as the decompression wave passes the elbow ($t \leq 0.001$ second) and occurs when the pipe is just starting to accelerate. Since the displacement

and resulting energy input are negligible during this interval, 0.7 rather than 1.0 was used as the thrust coefficient. The duration of the entire energy balance event is evaluated after the restraint is sized. This permits a quick review of the fluid force history to assure that a higher thrust coefficient did not occur later in the dynamic event.

Energy may be absorbed in plastic bending of the pipe and in crush of the restraint. The energy absorbed by bending at the plastic hinge is

$$E_b = M_P\theta = M_p \ (g+d)/(L_h-L) \qquad (3.6B\text{-}29)$$

where:

M_p = Plastic moment

θ = Hinge rotation.

The value of M_p may be obtained from rigid, perfect-plastic limit theory, but, for this application, a strain hardening moment (Gerber 1974) is more correct. This requires an estimate of the hinge rotation (that is, g, d, L_h and L must be determined). The gap may be set to 3 inches (g=3 inches). The values of d and L are dependent on the bumper. Let the bumper pipe have the same diameter as the process pipe. Then let d = 0.7 x I.D. = 6.5 inches to achieve approximately 50 percent of the energy-absorbing capacity (Peach et al 1977). Set L = 27.9 inches to allow for the elbow (15 inches), the restraint half-width (5.375 inches) and access to the elbow weld for inservice inspection (6.5 inches). Using the common expression for plastic hinge length ($L = 3\ M_p/F_b$) and the method described by Gerber (1974) an iterative solution shows that

M_p = 3,363 inches kips

L_h = 100.4 in.

Thus the energy to be absorbed by the bumper pipe is:

$$E = (F_bL_h-M_p)\ (g+d)/(L_h-L)$$
$$= 882 \text{ in. kips}$$

Size the bumper pipe thickness subject to the following constraint:

$$t_b \leq 0.75 t_p \left(\frac{r_b}{r_p}\right)^{0.131} = 0.84 inch \qquad (3.6B\text{-}30)$$

where:

t_b = Bumper pipe wall thickness (in)

t_p = Process pipe wall thickness (in)

r_b = Bumper pipe radius (in)

r_p = Process pipe radius (in)

This restriction assures that the bumper pipe will crush without causing crush of the process pipe. Thus, any bumper pipe of schedule 120 or thinner is acceptable. Table 3.6B-3 presents the energy absorbing capacity of 10-inch pipes at a crush displacement of 0.7 x I.D., using a multiplier of 1.1 for strain rate effects.

Use the schedule 80 pipe for the bumper, since this comes closest to meeting the energy absorption requirements. Iterate to find the exact point of energy balance

d = 6.1 inches

E = 845 in kips
= 45 percent of capacity

F = 195 kips

The restraint reaction load is thus 1.94 times the fluid blowdown force.

Finally, determine the approximate time of peak restraint load to assure that the fluid force did not exceed 0.7 P_oA during the energy balance event:

$$t = \sqrt{\frac{2mL_h^3}{3(L_h - L)} \frac{(g+d)^2}{g} \left(\frac{1}{F_b L_h - M_p}\right)} \qquad (3.6B\text{-}31)$$

where:

m = the mass per unit length of the pipe.

thus:

t = 30.1 milliseconds

3.6B.2.2.6 Local Pipe Indentation

The local shell indentation stiffness of the pipe is usually considered where other energy-absorbing mechanisms are not available at the point of impact Examples include impacts into rigid displacement-limiting bumpers, concrete walls, and the omnidirectional restraint weldment (the latter interposes a significant mass between the impacting pipe and the energy absorbers).

Two methods have been used to determine the shell indentation stiffness. The earlier was analytical and tended to overpredict conservatively the indentation stiffness. The other was a series of pseudo-static pipe crush tests covering several crush geometries and a sufficient range of pipe thicknesses and diameters to develop parametric scaling laws (Peach 1977). This was augmented by analyses to determine the sensitivity to material strength, dynamics, and variations in loading geometry.

3.6B.2.2.7 Concrete Barrier Impact

In a pipe whip impact, the force on the barrier is a complex function of time depending primarily on the sudden deceleration of the pipe wall at the impact point (slug impact), the shell indentation of the pipe as it locally crushes against the wall, and the force transmitted to the impact point by the more gradual deceleration of the adjacent run of pipe. After impact, the pipe also transmits a more enduring force resulting from the continuing fluid blowdown. The concrete is affected by this, much like any other missile impact, the only significant difference being the long term fluid force. To evaluate this postulated event, the pipe is transformed into an equivalent missile and the concrete is analyzed for scabbing and structural response using the procedure described in Section 3.5.3. The analysis for structural response includes the impulse of the initial impact as well as the subsequent fluid blowdown force and other concurrent loads.

Four basic parameters must be determined to define the equivalent missile: the kinetic energy (or impulse), the impact velocity, the pipe crush stiffness, and the bearing area. The kinetic energy and velocity can be found by either of two methods:

1. Simplified Method - Use the total input energy (fluid blowdown force x distance of pipe travel) less the energy absorbed in pipe bending prior to impact. Compute the velocity using approximate formulae (Roemer and East 1980).

2. Lumped Parameter Dynamic Analysis (Section 3.6B.2.2.4) - This method is especially suited for evaluating the impact of piping systems with complex geometries and can even

consider multiple impact points. As an alternative to the kinetic energy, the impact force history (impulse) can be computed.

Regardless of which analysis method is used, the crush resistance of the equivalent missile and the bearing area are derived from the experimental data described in Section 3.6B.2.2.6. This data is modified to account for the effect of dynamics and internal pressure.

3.6B.2.3 Dynamic Analysis Methods to Verify Integrity and Operability

Pipe rupture loads to determine the integrity of mechanical components are determined using the analytical methods described in Section 3.6B.2.2. The applicable load combinations for the components and for break exclusion regions are presented in Sections 3.9 and 3.6B.2.1, respectively. Criteria for rupture restraints are presented in Section 3.6B.2.3.1.

Jet impingement loadings are determined as follows:

1. Jet forces are represented by time-dependent forcing functions, which are determined according to the methods presented in Section 3.6B.2.2.1. The effects of the piping geometry, capacity of the upstream energy reservoir, source pressure, and fluid enthalpy are considered in these forcing functions.

2. The steady-state jet force has a magnitude of:

$$F = K_j PA$$

where:

P = System pressure prior to pipe break (psi)

A = Pipe break area (in^2)

K_j = Jet coefficient.

The following K_j values are used whenever the reservoir pressure is constant, pipe friction is negligible, and there are no upstream flow restrictions:

a. A value of 1.26 for saturated steam, saturated water, and steam/water mixture.

b. A value of 2.00 for nonflashing subcooled water.

If pressure drop due to friction is taken into consideration, values of k_j can be reduced.

3. The jet impingement pressure on

any target is calculated assuming the jet force is constant in any plane normal to the jet stream and assuming that the jet stream diverges conically at a solid angle of 20 degrees for steam or water-steam mixtures. For those cases where the 20 degree divergence assumption is shown to be unnecessarily conservative, Moody's asymptotic jet expansion model is utilized (Moody 1969). Jet expansion is not used for cases involving saturated water or subcooled water blowdown that have an initial fluid temperature below the saturation temperature at the ambient pressure beyond the break.

4. The effective range of jet impingement force from piping containing steam or subcooled, flashing water at pressures between 870 and 2,465 psia and with no greater than 70°C subcooling may be limited to ten times the nominal pipe diameter (NUREG/CR-2913, 1983). The jet intensity within the limited jet impingement zone is determined as in Section 3.6B.2.3(3.) above.

5. The proportion of the total jet force acting on the target is determined from the fraction of the jet intercepted and by the shape factor of the target. For a target with its flat surface area normal to the center of the jet stream, the impingement load is the product of the pressure and the intercepted jet area. For those cases where the target area is such that the intercepted jet stream is deflected rather than totally stopped, a shape factor which is less than unity and which is a function of the target geometry is used in calculating the total jet impingement load.

Since the jet impingement force is a dynamically applied load, the target will be analyzed either by static methods using an appropriate dynamic load factor, or dynamically using elastic or inelastic structural response codes (Appendix 3A). The load combinations and design allowable are given in Sections 3.8.3 and 3.9.

3.6B.2.3.1 Pipe Rupture Restraints

Two basic restraint types are used: elastic and energy-absorbing. The elastic restraints are generally used where displacements subsequent to a postulated pipe rupture must be minimized to either restrict the break opening area or limit loads in the broken piping run. Energy-absorbing restraints are used where the primary objective to dissipate the energy is of a ruptured pipe.

3.6B.2.3.1.1 Elastic Restraints

Since elastic restraints are used to minimize displacements of the broken pipe, they are close gapped. For some applications, this requires that they contact the pipe during conditions other than a postulated rupture, in which case they are designed as a pipe support in accordance with the applicable code (Section 3.9.3). If an elastic restraint will only contact the pipe following a rupture, it is designed according to the criteria for structural steel (Section 3.8.3).

3.6B.2.3.1.2 Energy-Absorbing Restraints

Several approaches are used for energy absorption in pipe rupture restraints. In tension, stainless steel studs or straps are used, with a design limit of 50 percent of uniform ultimate strain. In compression, honeycomb panels or pipe sections are used. Compressive components are designed to 80 percent or less of their energy absorption capacity. Other energy-absorbing devices may be used and will be designed to these same limits.

One or more of the above energy-absorbing mechanisms are utilized in each of the typical restraints described below. When a single energy-absorbing mechanism is utilized, the design limits will be met for the design range of loading directions. Designs with more than one form of energy absorption may not fully utilize compressive absorbers for some loading directions. These are allowed to bottom out if other active energy absorbers remain within their design limit.

Elastic components of energy-absorbing restraints are designed to the criteria for structural steel (Section 3.8.3).

Pipe Crush Bumper

The pipe crush bumper absorbs impact energy in a direction toward the supporting structure. The energy absorber is a length of pipe placed normal to the axis of the process pipe. Subsequent to a rupture, the bumper pipe is crushed between its support structure and the moving process pipe. This absorbs energy and forms a retaining recess in the bumper pipe. The bumper pipe is attached to its support by welding, bolting, etc (Figures 3.6B-8 and 3.6B-9).

Laminated Strap Restraint

The laminated strap restraint is capable of absorbing impact loads in the outward direction from the supporting structure (Figure 3.6B-10). The energy-absorbing component is a U-shaped strap which consists of one or more strips (depending on energy to be absorbed) of highly ductile material (Type 304 stainless steel).

This laminated design provides great flexibility. If the process pipe contacts the sides of the restraint during an event other than pipe rupture, negligible loads result. The design also minimizes bending strains, permitting the strap to act mainly as a membrane during the postulated rupture event.

Omni-Directional Restraint

The omni-directional restraint is capable of absorbing impact loads applied in any direction in the plane of the restraint (Figure 3.6B-11). This restraint consists of a base weldment, an arch, ductile holddown studs on each side of the base weldment, and a honeycomb panel. The primary function of the studs is to absorb energy from impact loads acting outward from the support structure. The honeycomb panel absorbs energy from impact

loads acting in an inward direction. Side load impacts will be absorbed by the combined action of the studs and honeycomb.

Combinations of pipe crush bumpers and laminated straps may also be used to achieve energy absorption over a range of impact directions up to a full 360 degrees.

3.6B.2.4 Guard Pipe Assembly Design Criteria

The Beaver Valley Power Station - Unit 2 does not utilize guard pipes.

3.6B.2.5 Material to be Submitted for the Operating License Review

Pipe break and crack locations are obtained in accordance with the criteria of Section 3.6B.2.1. High-energy piping with break locations identified are provided in isometric drawings and/or system descriptive drawings (Figures 3.6B-12, 3.6B-13, 3.6B-14, 3.6B-15, 3.6B-16A, 3.6B-16B, 3.6B-16C, 3.6B-16D, 3.6B-16E, 3.6B-16F, 3.6B-17A, 3.6B-17B, 3.6B-17C, 3.6B-18A, 3.6B-18B, 3.6B-18C, 3.6B-18D, 3.6B-18E, 3.6B-19A, 3.6B-19B, 3.6B-19C, 3.6B-20A, 3.6B-20B, 3.6B-21A, 3.6B-21B, 3.6B-22, 3.6B-23, 3.6B-24, 3.6B-25A, 3.6B-25B and 3.6B-26). These figures show the locations of all break locations and corresponding pipe whip restraints where required. The following details are provided for each high-energy system:

1. Line designation numbers showing system, size, line number, and safety class of pipe.

2. Break identification numbers showing break type (i.e., longitudinal or circumferential), reason for postulation (i.e., stress or usage factor exceeds allowable (EA) or terminal end location (TE)), and plant location.

3. Pipe whip restraints showing identification number, type, and restrained direction of ruptured pipe.

4. The valves and major components in the high energy systems considered are provided for the convenience in locating break points only.

Pipe whip restraints are designed as discussed in Section 3.6B.2.3.1. Jet thrust and impingement forces are determined in accordance with Section 3.6B.2.3. Based on this approach and the case-by-case review of all postulated jet impingement events, no jet shields are required. The evaluation of all pipe break dynamic effects and the resolution of all associated safety concerns has been documented in the BVPS-2 Hazard Analysis Evaluation Report (1987).

The effects of breaks and cracks are discussed in detail in Section 3.6B.1 and they are based on the protection evaluation criteria of that section. Any protective measures to assure a safe shutdown (barriers, separation, and restraints) are also discussed.

3.6N PROTECTION AGAINST DYNAMIC EFFECTS ASSOCIATED WITH THE POSTULATED RUPTURE OF PIPING

This section describes the design bases and protective measures which are used to ensure that the containment and all vital equipment within the containment are adequately protected from the dynamic effects caused by postulated rupture of the reactor coolant system (RCS) piping. Components of the RCS system are given in Section 5.4.

3.6N.1 Postulated Piping Failures in Fluid Systems Outside of Containment

Refer to Section 3.6B.1

3.6N.2 Determination of Break Locations and Dynamic Effects Associated with Postulated Rupture of Piping

Refer to Section 3.6B.2

3.6N.2.1 Criteria Used to Determine Break and Crack Location and Configuration

Refer to Section 3.6B.2.1.

3.6N.2.2 Analytical Methods to Define Forcing Functions and Response Models

3.6N.2.2.1 Dynamic Analyses

Refer to Section 3.6B.2.2.1

3.6N.2.2.2 Time Functions of Jet Thrust Force on Ruptured and Intact Loop Piping

This section has been deleted based on the exemption to consideration of dynamic effects associated with reactor coolant loop breaks. Refer to Section 3.6B.2.1.1.1.

This page is intentionally blank.

3.6N.2.2.3 Dynamic Analysis of the Reactor Coolant Loop Piping Equipment Supports and Pipe Whip Restraints

Refer to Section 5.4.14.

3.6N.2.3 Dynamic Analysis Methods to Verify Integrity and Operability

3.6N.2.3.1 Protective Measures

The fluid discharged from the ruptured piping will produce thrust and reaction forces in the piping systems. The effects of these loadings are considered in assuring the continued integrity of the vital components and the engineered safety features (ESF).

To account for these effects in the design, a combination of component restraints, barriers, and layout is utilized to ensure that for a loss of coolant, steam line break, or feedwater line break, propagation of damage from the original event is limited, and the components as needed, are protected and available.

3.6N.2.3.2 Criteria for Protection Against Postulated Pipe Breaks in Reactor Coolant System Piping

A loss or reactor coolant accident is assumed to occur for a branch line break down to the restraint of the second normally open automatic isolation valve (Case II on Figure 3.6N-2) on outgoing lines (it is assumed that motion of the unsupported line containing the isolation valves could cause failure of the operators of both valves to function) and down to and including the second check valve (Case III on Figure 3.6N-2) on oncoming lines normally with flow. A pipe break beyond the restraint or second check valve will not result in an uncontrolled loss of reactor coolant if either of the two valves in the line close. Accordingly, both of the automatic isolation valves are suitably protected and restrained as close to the valves as possible so that a pipe break beyond the restraint will not jeopardize the integrity and operability of the valves. Further, periodic testing to ensure that the valves are capable of performing their intended function is essential. These criteria apply to all

branch lines with automatic isolation valves as the first isolation valve whether the lines are normally with or without flow (Case II on Figure 3.6N-2).

This criterion takes credit for only one of the two valves performing its intended function. For normally closed manual isolation valves or incoming check valves (Cases I and IV on Figure 3.6N-2) as the first isolation valve, a loss of reactor coolant accident is assumed to occur for pipe breaks on the reactor side of the valve.

Branch lines connected to the RCS are defined as "large" for the purpose of these criteria as having an inside diameter greater than 4 inches up to the largest connecting line, generally the pressurizer surge line. Rupture of these lines results in a rapid blowdown from the RCS and protection is basically provided by the accumulators and the low head safety injection pumps.

Branch lines connected to the RCS are defined as "small" if they have an inside diameter equal to or less than 4 inches. This size is such that emergency core cooling system (ECCS) analyses using realistic assumptions show that no clad damage is expected for a break area of up to 12.5 in^2 corresponding to 4 inch inside diameter piping.

Engineered safety features are provided for core cooling and boration, pressure reduction, and activity confinement in the event of a loss of a reactor coolant or steam line break or feedwater line break accident to ensure that the public is protected in accordance with 10 CFR 50.67 requirements. These safety systems have been designed to provide protection for a RCS pipe rupture of a size up to and including a double ended severance of the RCS main loop. In order to assure the continued integrity of the vital components and the ESF, consideration is given to the consequential effects of the break itself to the extent that:

1. The minimum performance capabilities of the ESF are not reduced below those required to protect against the postulated break;

2. The containment leak tightness is not decreased below the design value, if the break leads to a loss of reactor coolant (the containment is here defined as the containment structure liner and penetrations, the steam generator shell, the steam generator steam side instrumentation connections, and the steam, feedwater, blowdown and steam generator drain pipes within the containment structure); and

3. Propagation of damage is limited in type and/or degree to the extent that:

   a. A pipe break which is not a loss of reactor coolant will not cause a loss of reactor coolant or steam or feedwater line break. Certain limited exemptions to this rule have been granted for breaks occurring in Safety Class 2 portions of piping systems outside the reactor coolant pressure boundary which, if ruptured may result in a small LOCA or rupture of a steam generator

blowdown line. These ruptures, however, are less limiting than the bounding events considered in the Beaver Valley Unit-2 Small Break LOCA ECCS Analysis and do not seriously impact the availability of the steam generator heat sink.

b. A RCS pipe break will not cause a steam or feedwater system pipe break and vice versa.

3.6N.2.3.2.1 Large Reactor Coolant System Piping

Propagation of damage resulting from rupture of the main reactor coolant loop is permitted to occur but does not exceed the design basis for calculating containment and subcompartment pressures, loop hydraulic forces, reactor internals reactor loads, primary equipment support loads, or ECCS performance.

Large branch line piping, as defined in Section 3.6N.2.3.2, is restrained to meet the following criteria in addition to items 1 through 3 of Section 3.6N.2.3.2 for a pipe break resulting in a loss of reactor coolant with the exception of those lines considered under LBB (refer to Section 3.6B.2.1).

A break in a pressurizer safety and relief line is allowed to propagate to the other two safety or relief lines since these lines are connected to the pressurizer above the pressurizer water level and the release of saturated steam is less severe than the loss of liquid coolant through a break of equal size.

3.6N.2.3.2.2 Small Branch Lines

In the unlikely event that one of the small pressurized lines, as defined in Section 3.6N.2.3.2, should fail and result in a LOCA the piping is restrained or arranged to meet the following criteria in addition to items 1 through 3 of Section 3.6N.2.3.2.

1. Break propagation is limited to the affected leg, that is, propagation to the other leg of the affected loop and the other loops is prevented.

2. In addition to the initial failure of a small pressurized line, propagation of the break in the affected leg is permitted but is limited to a total break area of 12.5 in^2 (4 inch inside diameter). The exception to this case is when the initiating small break is a cold leg high head safety injection line. Further propagation is not permitted for this case.

3. Damage to the high head safety injection lines connected to the other leg of the affected loop or to the other loops is prevented.

4. Propagation of the break to a high head safety injection line connected to the affected leg is prevented if the line break results in a loss of core cooling capability due to a spilling injection line.

3.6N.2.3.3 Protective Provisions for Vital Equipment

In addition to pipe restraints, barriers and the arrangement of the vital equipment are used to provide protection from pipe whip, blowdown jet, and reactive forces.

The following are some of the barriers utilized for protection against pipe whip. The polar crane wall serves as a barrier between the reactor coolant loops and the containment liner. In addition, the refueling cavity walls, the operating floor, and the crane wall, enclose each reactor coolant loop into a separate compartment, thereby preventing an accident, which may occur in any loop, from affecting another loop or the containment liner. The portion of the steam and feedwater lines within the containment have been routed behind barriers which separate these lines from all reactor coolant piping. The barriers described previously will withstand loadings caused by jet forces and pipe whip impact forces.

Other than for the ECCS lines, which must circulate cooling water to the vessel, the ESFs are located outside of the crane wall. The safety injection accumulators are located at el 692 feet and are separated from the reactor coolant loops by physical barriers. The ECCS lines which penetrate the crane wall are routed around and outside the crane wall to penetrate the crane wall in the vicinity of the loop to which they are attached.

It has been demonstrated that lines hitting equal or larger size lines of the same schedule will not cause failure of the line being hit, for example, a 1 inch line, should it fail, will not cause subsequent failure of a 1 inch or larger size line. The reverse, however, is assumed to be probable, (a 4 inch line, should it fail and whip as a result of the fluid discharged through the line, could break smaller size lines such as neighboring 3 inch or 2 inch lines). In this case, the total break area is less than 12.5 in^2 (refer to Section 3.6B.1.3.2.3).

If the layout is planned such that whipping of the two free sections cannot reach equipment or other pipes for which protection is required, plastic hinge formation is permitted. As an alternative, barriers are erected to prevent the whipping pipe from impacting on equipment or piping requiring protection. Finally, tests and/or analyses are performed to demonstrate that the whipping pipe will not cause damage in excess of acceptable limits.

Whipping in bending of a broken stainless steel pipe section such as used in the RCS does not cause this section to become a missile. This design basis has been demonstrated by Westinghouse Nuclear Energy Systems bending tests on large and small diameter, heavy and thin walled stainless steel pipes.

3.6N.2.3.4 Pipe Restraints and Locations

Refer to Section 3.6B.2.5.

3.6N.2.3.5 Design Loading Combinations

Refer to Section 3.6B.2.3.

3.6N.2.4 Guard Pipe Assembly Design Criteria

Refer to Section 3.6B.2.4.

3.6N.2.5 Material to be Submitted at the Operating License Review

Refer to Section 3.6B.2.5.

3.6.3 References for Section 3.6

Bordelon, F.M. 1971. A Comprehensive Space-Time Dependent Analysis of Loss of Coolant (SATAN-IV Digital Code). WCAP-7263, (Proprietary) and WCAP-7750, (Non-Proprietary).

De Haller, P. 1945. The Application of Graphical Method to Some Dynamic Problems in Gases. Sulzer Technical Review No. 1, p 6-24.

Fauske, H.K. 1962. Contribution to the Theory of Two Phase, One-Component Critical Flow, ANL-6633, Argone National Laboratory.

Gerber, T.L. 1974. Plastic Deformation of Piping Due to Pipe Whip Loading. ASME Paper 74-NE-1.

Hartree, D.R. 1952. Some Practical Methods of Using Characteristics in the Calculation of Non-Steady Compressible Flow. Los Alamos Report LA-HU-l.

Henry, R.E. and Fauske, H.K. 1971. Two Phase Critical Flow of One-Component Mixtures in Nozzles, Orifices, and Short Tubes. Journal of Heat Transfer, ASME.

Hazard Analysis Evaluation Report 1987. Documents the Evaluation and Resolution of All Safety Issues Associated with BVPS-2 Pipe Rupture Postulated Events.

Jonssen, V.K.; Matthews, L.; and Spalding, D.B. 1973. Numerical Solution Procedure for Calculating the Unsteady, One-Dimensional Flow of Compressible Fluid with Allowance for the Effect of Heat Transfer and Friction. ASME Paper 73-FE-30.

Moody, J.F. 1969. Prediction of Blowdown Thrust and Jet Forces. ASME Paper 69-HT-31.

Owzarek, J.A. 1968. Fundamentals of Gas Dynamics. International Textbook Company, Second Printing, Scranton, Pa.

Peach, J.M.; Roemer, R.E.; Pirotin, S.D.; East, G.H., and Goldstein, N.A. 1977. Local Crush Rigidity of Pipes and Elbows. Paper F3/8, Transactions of the Fourth International Conference on Structural Mechanics in Reactor Technology, San Francisco, Calif.

Roemer, R.E. and East, G.H. 1980. Prediction of Large Deformation Pipe Whip and Barrier Impact: A Simplified Approach. ASME Paper 80 C2/PVP 48.

Rudinger, G. 1969. Nonsteady Duct Flow-Wave Diagram Analysis. Dover Publications, Inc.

Shapiro, A.H. 1953. The Dynamics and Thermodynamics of Compressible Fluid Flow, Vol. I and II. Ronald Press, New York, N.Y.

Streeter, V.L. and Wylie, E.G. 1967. Hydraulic Transients. McGraw-Hill Book Co., New York, N.Y, p 32-37.

TER 8484 Revision 1, "QA Category Downgrade of Raw Water System Piping and Appurtenances in the Intake Structure."

Thom, J.R.S. 1964. Prediction of Pressure Drops During Forced Circulation Boiling of Water, International Journal of Heat and Mass Transfer, Vol. 7, p 709-724.

Weigand, G.G.; Thompson, S.L.; and Tomasko, D. 1983. Two-Phase Jet Loads. NUREG/CR-2913.

WHIPJET Program Final Report, January 30, 1987, as amended by Letter dated February 13, 1987. Documentation of an Alternative Method for Addressing Pipe Break Concerns by a Leak-Before-Break Approach.

Sieber, J.D. (BVPS), Letter to Harold R. Denton (NRC), Beaver Valley Power Station - Unit No. 2, Docket No. 50-412, WHIPJET Program Report, February 13, 1987.

WCAP-11923, Technical Justification for Eliminating Large Primary Loop Pipe Rupture as the Structural Design Basis for Beaver Valley Unit 2 After Reduction of Snubbers, September 1988, including Supplements 1, 2 and 3.

De Agazio, Albert W. (NRC), Letter to J.D. Sieber (BVPS), Elimination of Dynamic Effects of Postulated Pressurizer Surge Line Rupture and Elimination of Reactor Coolant System Component Support Snubbers, April 8, 1991.

WCAP-12093, Evaluation of Thermal Stratification for the Beaver Valley Unit 2 Pressurizer Surge Line, December 1988.

Tam, Peter S. (NRC), Letter to J.D. Sieber (BVPS), Beaver Valley Unit 2 - Completion of Review on Pressurizer Surge Line Thermal Stratification, January 18, 1990.

Sieber, J.D. (BVPS), Letter to NRC, Beaver Valley Power Station, Unit No. 2, Docket No. 50-412, License No. NPF-73, Primary Component Support Snubber Elimination, August 10, 1990.

NUREG-1057, Supplement No. 4, Safety Evaluation Report Related to the Operation of Beaver Valley Power Station Unit 2, Docket No. 50-412 Duquesne Light Company, March 1987.

WCAP-17488-P, Leak-Before-Break Analysis Update for the Beaver Valley Unit 2 Primary Loop Piping, February 2012.

WCAP-17394-P, Leak-Before-Break Analysis Update for the Beaver Valley Unit 2 Pressurizer Surge Line, December 2011.

Tables for Section 3.6

TABLE 3.6B-1

HIGH-ENERGY PIPING SYSTEMS

System	UFSAR Section	Location: Inside Containment	Location: Outside Containment
Auxiliary steam	10.4.10		X
Blowdown - steam generator	10.4.8	X	X
Boron recovery	9.3.4.6		X
Charging and volume control	9.3.4	X	X
Condensate -aux condensate	10.4.10		X
Condensate -chemical treatment	10.3.5		X
Condensate - demineralizer	10.4.6		X
Condensate -main condensate	10.4.7		X
Condensate -makeup, drawoff, transfer, storage	10.4.7		X
Electrohydraulic control system - turbine generator	10.2		X
Extraction steam	10.3		X
Feedwater - chemical treatment	10.3.5		X
Feedwater - auxiliary feedwater	10.4.9	X	
Feedwater - main	10.4.7	X	X
Primary plant gas supply	9.5.9	X	X
Gland steam	10.4.3		X
Heater drains - high-pressure	10.4.7		X
Heater drains - low-pressure	10.4.7		X
Main steam	10.3	X	X
Reactor coolant	5.2	X	
Residual heat removal	5.4.7	X	

TABLE 3.6B-1 (Cont)

System	UFSAR Section	Location: Inside Containment	Location: Outside Containment
Service air system	9.3.1.1		X
Steam drains	10.3		X
Steam generator water cleanup	10.4.8		X
Safety injection	6.3	X	X
Steam vents	10.3		X
Hydrogenated drains	9.3.3	X	X
Sampling system (radioactive)	9.3.2	X	X
Hot water heating	10.4.10		
Emergency diesel - air start	9.5.6		X
Turbine plant sampling	9.3.2		X

TABLE 3.6B-1a

MODERATE ENERGY PIPING SYSTEMS

System	UFSAR Section	Location: Inside Containment	Location: Outside Containment
Air removal condenser	10.4.2		X
Auxiliary steam	10.4.10		X
Blowdown - steam generator	10.4.8		X
Boron recovery	9.3.4.6		X
Chilled water	9.2.2.2		X
Charging & volume control	9.3.4	X	X
Circulating water	10.4.5		X
Circulating water - condenser tube cleaning	10.4.5		X
Component cooling -primary	9.2.2.1	X	X
Component cooling -secondary	9.2.7		X
Condensate - auxiliary condensate	10.4.10		X
Condensate - chemical treatment	10.3.5		X
Condensate - demineralizer	10.4.6		X
Condensate - main condensate	10.4.7		X
Condensate - makeup, drawoff, transfer, storage	10.4.7		X
Containment vacuum	9.5.10	X	X
Decontamination	9.2.3		X
Domestic water	9.2.4.2		X
Drains - aerated	9.3.3	X	X
Drains - hydrogenated	9.3.3	X	X

TABLE 3.6B-1a (Cont)

System	UFSAR Section	Location: Inside Containment	Location: Outside Containment
Emergency diesel fuel	9.5.4		X
Emergency diesel generator system	9.5.5		X
Feedwater - chemical treatment	10.3.5		X
Feedwater - auxiliary feedwater	10.4.9	X	X
Fire protection - water	9.5.1	X	X
Fuel pool cooling and cleanup	9.1.3	X	X
Gaseous waste	11.3		X
Gland steam	10.4.3		X
Heater drains - low press.	10.4.7		X
Hot water heating system	10.4.10		X
HVAC - control building	9.4.1		X
HVAC - decontamination building	9.4.13		X
HVAC - primary auxiliary building	9.4.3		X
HVAC - reactor building	9.4.7	X	X
Hydrogen control - post-DBA	6.2.5	X	X
Instrument air - containment	9.3.1.3	X	X
Instrument air system	9.3.1.1		X
Leakage monitoring system	9.5.10	X	X
Liquid waste system	11.2		X
Main generator - hydrogen	10.2.2.5		X
Main generator - seal oil	10.2.2.4		X

TABLE 3.6B-1a (Cont)

System	UFSAR Section	Location: Inside Containment	Location: Outside Containment
Main turbine - lube oil	10.2.2		X
Neutron shield tank cooling	9.2.2.3	X	
Primary grade water	9.2.8		X
Primary plant gas supply	9.5.9		X
Quench spray system	6.3	X	X
Reactor coolant system	5.2	X	
Recirculation spray	6.3	X	X
Residual heat removal	5.4.7	X	
Safety injection	6.3	X	X
Sampling - primary plant	9.3.2.1		X
Sampling - turbine plant	9.3.2.2		X
Service air system	9.3.1.1	X	X
Service water- chilled	9.2.1.1		X
Service water- emergency	9.2.1.2		X
Service water- marine growth control	9.2.1.1		X
Service water system	9.2.1.1	X	X
Solid waste system	11.4		X
Steam generator water cleanup	10.4.8		X
Steam vents - feedwater	10.4.11		X
Vacuum priming system	10.4.5		X
Vents - aerated	9.3.3		X
Vents - gaseous	9.3.3	X	X

TABLE 3.6B-1a (Cont)

System	UFSAR Section	Location: Inside Containment	Location: Outside Containment
Water - filtered	----		X
Water treating - demineralizer	9.2.3		X

TABLE 3.6B-2

ESSENTIAL STRUCTURES, SYSTEMS, AND COMPONENTS REQUIRED FOR SAFE SHUTDOWN

Item/Mark No.	Building Location*	Associated Support System**	Required Safety Function***
REACTOR COOLANT SYSTEM			Reactor core integrity and heat removal
Reactor vessel/2RCS*REV21	CS	---	PB
Pressurizer/2RCS*PRE21	CS		PB
Steam generator/2RCS*SG21A,B,C	CS	---	PB
Reactor coolant pumps/2RCS*P21A,B,C	CS	---	PB
Control rod drive mechanisms	CS	---	PB
Safety relief valves/2RCS*RV551A,B,C	CS	---	Op.
PRESSURIZER PORVS AND BLOCK VALVES			
2RCS*PCV455C 2RCS*PCV455D 2RCS*PCV456 2RCS*MOV535 2RCS*MOV536 2RCS*MOV537	CS	E,C	Op .
REACTOR VESSEL HEAD LETDOWN VALVES			
2RCS*SOV200A 2RCS*SOV200B 2RCS*SOV201A 2RCS*SOV201B 2RCS*HCV250A 2RCS*HCV250B	CS	E,C	Provide safety grade letdown capability Op.
Piping and valves required for reactor coolant pressure boundary protection.			

TABLE 3.6B-2 (Cont)

Item/Mark No.	Building Location*	Associated Support System**	Required Safety Function***
RESIDUAL HEAT REMOVAL SYSTEM			Maintain integrity of reactor coolant pressure boundary and remove RCS decay heat (See Appendix 5A)
RHS PUMPS	CS	E,C,CW	Op.
2RHS*P21A 2RHS*P21B			
RHS ISOLATION VALVES	CS	E,C	Op.
2RHS*MOV701A 2RHS*MOV701B 2RHS*MOV702A 2RHS*MOV702B 2RHS*MOV720A 2RHS*MOV720B			
RHS FLOW CONTROL VALVES	CS	---	FO
2RHS*HCV758A 2RHS*HCV758B			
2RHS*FCV605A 2RHS*FCV605B			FC
RHS HEAT EXCHANGERS	CS	CW	PB
2RHS*E21A 2RHS*E21B			
RHS PUMP COOLERS	CS	CW	PB
2RHS*E22A 2RHS*E22B			
RHS CROSSCONNECT VALVES	CS	---	PB
2RHS*MOV750A 2RHS*MOV750B			
Piping and valves (SC-1) required for reactor coolant pressure boundary protection.	CS	---	PB

TABLE 3.6B-2 (Cont)

Item/Mark No.	Building Location*	Associated Support System**	Required Safety Function***
CHEMICAL AND VOLUME CONTROL SYSTEM	CS	---	High pressure safety injection/RCS makeup and boron addition
Charging pumps/2CHS*P21A,B,C	AB	C,E,CW	Op.
Boric acid transfer pumps/2CHS*P22A,B	AB	C,E	Op.
Boric acid tanks/2CHS*TK21A,B	AB	---	PB
Regenerative heat exchanger/2CHS*E23	CS	---	PB
Boric acid filter/2CHS*FLT21	AB	---	PB
Boric acid blender 2CHS*BL21	AB	---	PB
Valves required to operate:			
2CHS*SOV206 2CHS*MOV350 2CHS*LCV115B 2CHS*LCV115C 2CHS*LCV115D 2CHS*LCV115E 2CHS*MOV310 2CHS*MOV100A,B	AB	E,C	Op.

TABLE 3.6B-2 (Cont)

Item/Mark No.	Building Location*	Associated Support System**	Required Safety Function***
CHARGING PUMP SUCTION AND DISCHARGE VALVES			
2CHS*MOV8130A 2CHS*MOV8130B 2CHS*MOV8131A 2CHS*MOV8131B 2CHS*MOV8132A 2CHS*MOV8132B 2CHS*MOV8133A 2CHS*MOV8133B	AB	E,C	Op.
2CHS*LCV460A 2CHS*LCV460B	CS	E,C	Op./FC
Piping and valves required for essential pressure boundary (heat tracing for piping included)			
SAFETY INJECTION SYSTEM			ECCS cooling water supply to maintain reactor water level and remove heat
LHSI pumps/ 2SIS*P21A,B	SA	E,C	Op.
SI accumulators/ 2SIS*TK21A,B,C	CS	---	PB
Valves required to operate:			
Low Head Safety Injection			
2SIS*MOV8809A,B 2SIS*MOV8890A,B 2SIS*MOV8811A,B 2SIS*MOV863A,B 2SIS*MOV864A,B 2SIS*MOV8888A,B	SA	E,C	Op.

TABLE 3.6B-2 (Cont)

Item/Mark No.		Building Location*	Associated Support System**	Required Safety Function***
2SIS*MOV8889				
High Head Safety Injection				
2SIS*MOV867A,B		AB	E,C	Op.
2SIS*MOV867C,D		CV	E,C	Op.
2SIS*MOV869A,B		CV	E,C	Op.
2SIS*MOV836		CV	E,C	Op.
2SIS*HCV868A,B		CV,AB	E,C	Op.
2SIS*MOV840		AB	E,C	Op.
2SIS*MOV841		CV	E,C	Op.
Piping and valves required for essential pressure boundary (heat tracing for piping included).				
. MAIN STEAM SYSTEM				Maintain pressure boundary of steam generators and control steam release for heat removal
Valves required to operate:				
2MSS*AOV101A,B,C	Main steam isolation valves	MV	E,C	Op.
2SVS*PCV101A,B,C 2SVS*HCV104	Atmospheric steam dump valves	MV	E,C	Op.
2SDS*AOV111A1,B1,C1 2SDS*AOV111A2,B2,C2 2SDS*AOV129A,B	Steam drain lines isolation	MV	E,C	FC
2MSS*SV101A,B,C 2MSS*SV102A,B,C 2MSS*SV103A,B,C 2MSS*SV104A,B,C 2MSS*SV105A,B,C	Steam release safety valves	MV	---	Op.

TABLE 3.6B-2 (Cont)

Item/Mark No.		Building Location*	Associated Support System**	Required Safety Function***
2MSS*SOV105A-F	Steam valves to turbine driven auxiliary feedwater pump	SA	E,C	Op.
Piping and valves required for essential pressure boundary.				
AUXILIARY STEAM SYSTEM				
2ASS*AOV130A 2ASS*AOV130B	Header isolation	PT	E,C	Isolate HELB lines in auxiliary building
FEEDWATER AND AUXILIARY FEEDWATER SYSTEMS				Decay heat removal by supply of cooling water to steam generators
Auxiliary feedwater pumps/				
2FWE*P23A,B	Motor-driven	SA	E,C	Op.
2FWE*P22	Turbine-driven	SA	SS	
Primary plant demineralized water storage tank/				
2FWE*TK210		Y	---	PB
Valves required to operate:				
2FWS*HYV157A,B,C	Feedwater isolation	MV	E,C	Op.
2FWS*FCV478,479 2FWS*FCV488,489 2FWS*FCV498,499	Feedwater control/bypass valves	SB	E,C	Op.
2FWE*HCV100A - F	Auxiliary feedwater supply	SA	E,C	Op.
2FWE*SOV100A,B	Chem. recirc. pump suction valves	Y	E,C	FC
2FWE*FCV122 2FWE*FCV123A,B	Aux. feedwater pump recirc. valves	SA	---	Op.
Piping valves required for essential pressure boundary.				

TABLE 3.6B-2 (Cont)

Item/Mark No.		Building Location*	Associated Support System**	Required Safety Function***
SERVICE WATER SYSTEM				Transfer of heat from reactor cooling systems to ultimate heat sink
Service water pumps and discharge valves		IS	CW,E,C	Op.
2SWS*P21A,B,C 2SWS*MOV102A,B 2SWS*MOV102C1,C2				
Bearing cooling water strainers/ 2SWS*STR-M-47 2SWS*STR-M-48		IS	E,C	Op.
Control room cooling water pumps 2SWS*P25A,B		CB	E,C	Op.
Valves required to operate:				
2SWS*AOV118A,B,C	Bearing CW valves	IS	E,C	FC
2SWS*MOV170A,B	CW valves			
2SWS*MOV104A,B,C,D 2SWS*MOV105A,B,C,D	RSS heat exchanger isolation	SA	E,C	Op.
2SWS*MOV106A,B 2SWS*MOV103A,B	SW header isolation	Valve pit outside (yard)	E,C	Op.
2SWS*MOV148A,B	Air conditioning units and diesel generator cooling	CV	E,C	Op.
2SWS*MOV113A,B,C,D		DG	E,C	Op.

TABLE 3.6B-2 (Cont)

Item/Mark No.		Building Location*	Associated Support System**	Required Safety Function***
2SWS*MOV107A,B,C,D	Isolate NNS portion	AB	E,C	Op.
2SWS*MOV162 2SWS*MOV163 2SWS*MOV164 2SWS*MOV165	Cont. air recirc cooler operation	CV,CS	E,C	Although they do not have a safety function, they should be protected to allow for containment cooling whenever possible
2SWS*MOV160 2SWS*MOV161 2SWS*MOV166 2SWS*MOV167		CV	E,C	
2SWS*AOV114		CV	---	
2SWS*AOV110A,B,C		CS	---	
Piping and valves required for essential pressure boundary.				
2SWS*FCV120A,B	MSVH cooling coil supply valves	MV	E	Only required for cold shutdown.
GASEOUS NITROGEN SYSTEM				Maintain SI accumulator integrity and pressure
2GNS*SOV853A-F 2GNS*SOV854A,B	SI accumulator vent lines	CS	E,C	Op.
Piping and valves required for essential pressure boundary.				

TABLE 3.6B-2 (Cont)

Item/Mark No.	Building Location*	Associated Support System**	Required Safety Function***
RECIRCULATION AND QUENCH SPRAY SYSTEMS			Containment spray and recirculation of ECCS water following an accident
Recirculation spray pumps/2RSS*P21A,B,C,D	SA	E,C	Op.
Recirculation spray coolers/2RSS*E21A,B,C,D	SA	CW	PB
Quench spray pumps/2QSS*P21A,B	SA	E,C	Op.
Refueling water storage tank/2QSS*TK21	Y	---	PB
Valves required to operate:			
2QSS*MOV100A,B 2QSS*MOV101A,B	SA	E,C	Op.
2QSS*SOV101B 2QSS*SOV102B 2QSS*AOV120A,B	SA	E,C	FC
2RSS*MOV155A,B,C,D 2RSS*MOV156A,B,C,D 2RSS*MOV154C,D	SA	E,C	Op.
Piping and valves required for essential pressure boundary.			

TABLE 3.6B-2 (Cont)

Item/Mark No.	Building Location*	Associated Support System**	Required Safety Function***
PRIMARY SAMPLING SYSTEM			
2SSR*AOV117A,B,C	CV	E,C	FC
STEAM GENERATOR BLOWDOWN SYSTEM			Maintain pressure boundary integrity of steam generators
2BDG*AOV100A1,B1,C1	CV	E,C	FC
2BDG*AOV101A1,B1,C1	CS	E,C	Isolate HELB lines in cable vault
2BDG*AOV101A2,B2,C2	CS	E,C	
2BDG*AOV102A1,B1,C1 2BDG*AOV102A2,B2,C2	CS	E,C	FC
Piping and valves required for essential pressure boundary.			
POST-DBA HYDROGEN CONTROL SYSTEM			Remove hydrogen from containment following an accident

There is no safety function associated with the Hydrogen Control System.

TABLE 3.6B-2 (Cont)

Item/Mark No.	Building Location*	Associated Support System**	Required Safety Function***
Hydrogen Analyzers/2HCS*HA100A,B	CV	E,C	Op.
Valves required to operate:			
2HCS*SOV114A,B 2HCS*SOV115A,B 2HCS*SOV116 2HCS*SOV117	SA	E,C	Op.
2HCS*SOV133A 2HCS*SOV133B 2HCS*SOV134A 2HCS*SOV134B 2HCS*SOV135A 2HCS*SOV135B 2HCS*SOV136A 2HCS*SOV136B	CS CS SA SA CS SA CS SA	E,C	Op.
Piping and valves required for essential pressure boundary.			
VENTILATION SYSTEMS			Maintain environment for essential components and provide filtration of airborne radiation
CONTAINMENT AIR RECIRCULATION SYSTEM			
2HVR-CLC201A,B,C 2HVR-FN201A,B,C	CS	E,C,CW	Although they do not have a safety function, they should be protected to allow for containment cooling whenever possible
A/C CONDENSERS AND COOLING COILS - CONTROL ROOM BLDG			
2HVC*CLC219	AB	CW	PB
2HVC*REF24A,B	CB	E,C	Op.
2HVR*ACU201A,B			

TABLE 3.6B-2 (Cont)

Item/Mark No.	Building Location*	Associated Support System**	Required Safety Function***
SAFEGUARDS AREA			
2HVR*ACU207A,B	SA	E,C,CW	Op.
ROD CONTROL AREA			
2HVR*ACU208A,B	CV	E,C,CW	Op.
MCC Room - El 755'-6"			
2HVP*CLC265A,B	AB	CW	Op.
2HVP*FN265A,B		E,C	
SUPPLEMENTARY LEAK COLLECTION SYSTEM			
2HVS*FN204A,B	AB	E,C	Op.
2HVS*MSP21A,B 2HVS*CH219A,B 2HVS*FLTS250A,B 2HVS*FLTA204A,B 2HVS*FLTA205A,B 2HVS*FLTA206A,B 2HVS*FLTA207A,B 2HVS*FLTA208A,B 2HVS*FLTA209A,B			
CONTROL ROOM EMERGENCY VENTILATION SYSTEM			
2HVC*FN241A,B	CB	E,C	Op.
2HVC*CH222A,B 2HVC*FLTA251A,B 2HVC*FLTA252A,B 2HVC*FLTA253A,B 2HVC*MSP21A,B			

TABLE 3.6B-2 (Cont)

Item/Mark No.	Building Location*	Associated Support System**	Required Safety Function***
MAIN STEAM VALVE HOUSE			
2HVR*CLC206A,B 2HVR*FN206A,B	MV	CW E,C	Only required for cold shutdown
SUPPLY AND EXHAUST FANS			
2HVP*FN264A,B (Exh) 2HVD*FN270A,B (Sup) 2HVD*FN271A,B (Sup) 2HVD*FN222A,B (Exh) 2HVZ*FN261A,B (Sup) 2HVZ*FN262A,B (Exh) 2HVZ*FN262A,B (Exh) 2HVZ*FN216A,B (Exh) 2HVW*FN257A,B,C (Sup) 2HVC*FN266A,B (Sup) 2HVC*FN265A,B (Exh)	AB DG CV IS AB	E,C	Op.
Temperature and pressure sensing devices in each area for operating the above equipment	AB,CB,DG IS,SB,CV SA	E,C	Op.
Ductwork and dampers for essential flow paths			
EMERGENCY DIESEL GENERATOR FUEL OIL SYSTEM			Operation of diesel generators to supply Class 1E bus
Fuel oil storage tanks/2EGF*TK21A,B	Y,DG	---	PB
Fuel oil day tanks/2EGF*TK22A,B	DG	---	PB
14.9			
Fuel oil transfer pumps/2EGF*P21A,B,C,D	DG	E,C	Op.
Piping and valves required for essential pressure boundary.			

TABLE 3.6B-2 (Cont)

Item/Mark No.	Building Location*	Associated Support System**	Required Safety Function***
EMERGENCY DIESEL GENERATOR AIR START SYSTEM			
Air start tanks			
2EGA*TK21A,B	DG	---	PB
2EGA*TK22A,B	DG	---	PB
Piping, valves, and appurtenances required for essential pressure boundary.	DG	E,C	PB, Op.
EMERGENCY DIESEL GENERATOR AIR INTAKE AND EXHAUST SYSTEM			
Air intake filters			
2EDG*FLTA1A,1B	DG	---	PB
Air intake silencer			
2EDG*SIL2A&2B	DG	---	PB
2EDG*SIL1A&1B	DG	---	PB
Air exhaust silencer			
2EDG*SIL3A&3B	DG	---	PB
Piping required for essential pressure boundary.	DG	---	PB
EMERGENCY DIESEL GENERATOR COOLING WATER SYSTEMS			
Expansion tank 2EGS*TK1A,B	DG	---	PB
Piping, valves, and appurtenances required for essential pressure boundary.	DG	E,C	PB, Op.
CONTAINMENT ISOLATION SYSTEM			Maintain containment integrity after an accident
Piping and isolation valves for containment integrity (Table 6.2-60)	CS and connecting structures	E,C	Op.

TABLE 3.6B-2 (Cont)

Item/Mark No.	Building Location*	Associated Support System**	Required Safety Function***
COMPONENT COOLING WATER SYSTEM			
CCP pumps 2CCP*P21A,B,C	AB	E,C	Op.
CCP heat exchangers 2CCP*E21A,B,C	AB	---	PB
CCP surge tank 2CCP*TK21A,B	AB	---	PB
CCP flow control valves 2CCP*DCV100-1 2CCP*DCV100-2	AB	E,C	Op.
CCP supply valves	CV,CS	E,C	Op.
2CCP*MOV150-1 2CCP*MOV150-2 2CCP*MOV151-1 2CCP*MOV151-2 2CCP*MOV156-1 2CCP*MOV156-2 2CCP*MOV157-1 2CCP*MOV157-2 2CCP*MOV112A,B 2CCP*MOV177-1 2CCP*MOV177-2 2CCP*MOV178-1 2CCP*MOV178-2	AB		
2CCP*MOV175-1 2CCP*MOV175-2 2CCP*MOV176-1 2CCP*MOV176-2	AB	E,C	Op.
2CCP*MOV128A,B 2CCP*MOV118 2CCP*MOV119 2CCP*MOV120	CV		
2CCP*AOV171 2CCP*AOV172 2CCP*AOV173 2CCP*AOV174	CS		FC

TABLE 3.6B-2 (Cont)

Item/Mark No.	Building Location*	Associated Support System**	Required Safety Function***
2CCP*AOV107A,B,C	CS	E,C	Only required to operate after a thermal barrier rupture
CCP piping valves and components required for ESF and SS pressure boundary.			
FUEL POOL COOLING AND PURIFICATION SYSTEM			
FP Cooling Pumps 2FNC*P21A,B	FB	E,C	Op.
FP Coolers 2FNC*E21A,B	FB	---	PB
FNC piping and valves required for ESF and SS pressure boundary.			
INSTRUMENTATION			
RCS hot leg temperature	CS	E	Post-accident monitoring
RCS cold leg temperature	CS	E	Post-accident monitoring
Pressurizer level	CS	E,C	Reactor trip/Post-accident monitoring
Pressurizer pressure	CS	E,C	Initiation of safety injection/Reactor trip
RCS hot leg pressure	CS	E	Cold overpressure protection
RCS wide range pressure	CV	E	Post-accident monitoring
Steam line pressure	MV	E,C	Steam line isolation/Initiation of safety injection/Post-accident monitoring
Steam line pressure for atmospheric steam dump	MV	E,C	Control of steam dump for decay heat removal
Core exit temperature	CS	E	Post-accident monitoring
HELB temperature elements, ASS and BDG lines	AB,CV	E,C	Indicate a HELB in the aux. bldg. or cable vault, send signal to valves to isolate break

TABLE 3.6B-2 (Cont)

Item/Mark No.	Building Location*	Associated Support System	Required Safety Function***
Aux. feedwater flow transmitters	SA	E,C	Post-accident monitoring
Neutron flux detectors	CS	E	Post-accident monitoring
HVAC temperature/pressure sensors	AB,CB,CV,SB, IS,DG,SA,MV	E	Temp. monitoring to keep environments below Class 1E equipment qualification parameters or startup of redundant Cat. I HVAC equipment to account for single failure
Steam generator narrow - range level	CS	E,C	Feedwater isolation/Auxiliary feedwater pump start/Reactor trip
Steam generator wide - range level	CS	E	Post-accident monitoring
Primary plant demin. water storage tank level	Y	E	Post-accident monitoring/auxiliary feedwater supply
Containment pressure	CV	E,C	Initiation of safety injection and containment isolation signals on high and high-high containment pressure, post-accident monitoring
RWST level	Y	E	Post-accident monitoring and transfer to recirculation mode
Containment sump level	CS	E	Post-accident monitoring and reactor coolant pressure boundary leak detection
Containment sump temperature	CS	E	Post-accident monitoring
HHSI flow/RCS boration	CV,AB	E	Post-accident monitoring
RHS flow	CS	E	Post-accident monitoring
RCS flow	CS	E	Low RCS flow reactor trip
CCP flow	AB	E	Post-accident monitoring

TABLE 3.6B-2 (Cont)

Item/Mark No.	Building Location*	Associated Support System**	Required Safety Function***
Recirculation spray pump minimum flow actuation	SA	E,C	Provide pump protection during accident conditions
Fuel pool level and temperature	FB	E	Post-accident monitoring
LHSI pump recirculation control	SA	E,C	Provide pump protection during accident conditions
Recirculation spray/SWS HX radiation monitors	DG	E	Post-accident monitoring
Containment purge radiation monitor	CS	E	Post-accident monitoring controls release of radioactivity from containment
Main steam discharge radiation monitors	MV	E	Post-accident effluent release monitoring
In containment hi-range radiation monitors	CS	E	Post-accident monitoring inside containment
SW pump bearing CW supply	IS	E,C	Provide bearing cooling for SW pump operation to supply cooling water
Boric acid tank level	AB	E	Post-Accident Monitoring
D/G day oil tank level control	DG	E,C	Control fuel oil supply for D/G power to Class 1E buses
Turbine Driven Aux. Feedwater Pump discharge pressure switch	SA	E,C	Identifies failure of turbine driven pump and activates motor driven pumps
Service Water Supply Header pressure	Y	E,C	Activates standby service water pumps on low service water supply header pressure
Component cooling water flow and pressure transmitters	CS	E,C	Detect rupture in reactor coolant pump thermal barriers
CONTROL SYSTEMS			
Same as Table 3.2-1	E		Initiation and operation of essential functions and components

TABLE 3.6B-2 (Cont)

Item/Mark No.	Building Location*	Associated Support System**	Required Safety Function***
ELECTRICAL SYSTEMS			
Same as Table 3.2-1	C		Class 1E power supply for essential components
STRUCTURES			
Same as Table 3.2-2			Protection and separation of essential components

NOTES:

* Building Location Symbols

AB - Auxiliary Building
CB - Control Building
CS - Containment Structure
CV - Cable Vault and Rod Control Area
DG - Diesel Generator Building
FB - Fuel Building
IS - Intake Structure
MV - Main Steam Valve Area
PT - Pipe Tunnel Area
SA - Safeguards Area
SB - Service Building
Y - Yard

** Associated Support System Symbols

A - Air Supply
C - Controls
CW - Cooling Water
E - Electrical Power
Ht - Heat Tracing
SS - Steam Supply

*** Required Safety Function Symbols

NR - Not Required
Op. - Component Operability
PB - Pressure Boundary Only
FO - Fail Open
FC - Fail Closed

TABLE 3.6B-3

ENERGY-ABSORBING CAPACITY OF 10-INCH PIPES

Schedule	Crush Displacement d (0.7 x I.D.) (inches)	Energy (in-kips)
120	6.245	1,860
100	6.520	1,405
80	6.695	969
60	6.825	694

TABLE 3.6B-4

PIPING LINES INCLUDED IN THE LBB PROGRAM

Line Number[2]	OD	Wall	Material	Location[1]	Note
2-SIS-006-012-1	6.625	0.718	SA376 TYPE 316	CUBICLE A	3
2-SIS-006-269-1	6.625	0.718	SA376 TYPE 316	CUBICLE A	3
2-SIS-006-015-1	6.625	0.718	SA376 TYPE 316	CUBICLE B	3
2-SIS-006-270-1	6.625	0.718	SA376 TYPE 316	CUBICLE B	3
2-SIS-006-016-1	6.625	0.718	SA376 TYPE 316	CUBICLE C	3
2-SIS-006-271-1	6.625	0.718	SA376 TYPE 316	CUBICLE C	3
2-SIS-006-026-1	6.625	0.718	SA376 TYPE 316	CUBICLE A	3
2-SIS-006-268-1	6.625	0.718	SA376 TYPE 316	CUBICLE A	3
2-SIS-006-024-1	6.625	0.718	SA376 TYPE 316	CUBICLE B	3
2-SIS-006-266-1	6.625	0.718	SA376 TYPE 316	CUBICLE B	3
2-SIS-006-025-1	6.625	0.718	SA376 TYPE 316	CUBICLE C	3
2-SIS-006-267-1	6.625	0.718	SA376 TYPE 316	CUBICLE C	3
2-RCS-008-020-1	8.625	0.906	SA376 TYPE 304	CUBICLE A	3
2-RCS-008-021-1	8.625	0.906	SA376 TYPE 304	CUBICLE A	3
2-RCS-008-040-1	8.625	0.906	SA376 TYPE 304	CUBICLE B	3
2-RCS-008-041-1	8.625	0.906	SA376 TYPE 304	CUBICLE B	3
2-RCS-008-060-1	8.625	0.906	SA376 TYPE 304	CUBICLE C	3
2-RCS-008-061-1	8.625	0.906	SA376 TYPE 304	CUBICLE C	3
2-RHS-010-023-1	10.750	1.125	SA376 TYPE 316	CUBICLE B	3
2-RHS-010-024-1	10.750	1.125	SA376 TYPE 316	CUBICLE C	3
2-RHS-012-001-1	12.750	1.312	SA376 TYPE 316	CUBICLE A	3
2-RHS-012-056-1	12.750	1.312	SA376 TYPE 316	CUBICLE A	3
2-SIS-012-289-1	12.750	1.312	SA376 TYPE 316	CUBICLE A	3
2-SIS-012-067-1	12.750	1.312	SA376 TYPE 316	CUBICLE A	3
2-SIS-012-066-2	12.750	1.312	SA376 TYPE 316	CUBICLE A	3
2-SIS-012-250-2	12.750	0.375	SA376 TYPE 304	CUBICLE A	3
2-SIS-012-288-1	12.750	1.312	SA376 TYPE 316	CUBICLE B	3
2-SIS-012-071-1	12.750	1.312	SA376 TYPE 316	CUBICLE B	3
2-SIS-012-070-2	12.750	1.312	SA376 TYPE 316	CUBICLE B	3
2-SIS-012-252-2	12.750	0.375	SA376 TYPE 304	CUBICLE B	3
2-SIS-012-287-1	12.750	1.312	SA376 TYPE 316	CUBICLE C	3
2-SIS-012-069-1	12.750	1.312	SA376 TYPE 316	CUBICLE C	3
2-SIS-012-068-2	12.750	1.312	SA376 TYPE 316	CUBICLE C	3
2-SIS-012-251-2	12.750	0.375	SA376 TYPE 304	CUBICLE C	3

TABLE 3.6B-4 (Cont)

Line Number[2]	OD	Wall	Material	Location[1]	Note
2-RCS-014-084-1	14.00	1.406	SA376 TYPE 304	PRESSURIZER CUBICLE	4
2-RCS-029-1-1	29.00	2.45	SA376 TYPE 304	CUBICLE A	5
2-RCS-031-2-1	31.00	2.60	SA376 TYPE 304	CUBICLE A	5
2-RCS-275-3-1	27.50	2.32	SA376 TYPE 304	CUBICLE A	5
2-RCS-029-4-1	29.00	2.45	SA376 TYPE 304	CUBICLE B	5
2-RCS-031-5-1	31.00	2.60	SA376 TYPE 304	CUBICLE B	5
2-RCS-275-6-1	27.50	2.32	SA376 TYPE 304	CUBICLE B	5
2-RCS-029-7-1	29.00	2.45	SA376 TYPE 304	CUBICLE C	5
2-RCS-031-8-1	31.00	2.60	SA376 TYPE 304	CUBICLE C	5
2-RCS-275-9-1	27.50	2.32	SA376 TYPE 304	CUBICLE C	5

NOTES:

1. All lines located inside containment structure. See Figure 3.8-3 for location plan of cubicles.

2. These lines are exempted from consideration of pipe whip and jet impingement effects as pipe break concerns are addressed using a leak-before-break approach.

3. These pipelines are qualified for LBB by the WHIPJET Program as described in Section 3.6B-4.

4. Pipeline 2-RCS-014-084-1 (Pressurizer Surge Line) was originally part of the WHIPJET Program. As part of the reanalysis to address surge line stratification (NRC Bulletin 88-11), WCAP-12093 was developed. This reanalysis incorporated LBB for the surge line, which effectively removed it from WHIPJET.

   RIS 2010-07 describes a concern that the application of structural weld overlay may affect the results of LBB. The pressurizer surge line was reanalyzed for LBB in WCAP-17394-P to address weld overlay and RIS 2010-07.

5. The reactor coolant loop piping was originally qualified for LBB in WCAP-11923. Updated loop piping analysis for LBB can be found in WCAP-17488-P.

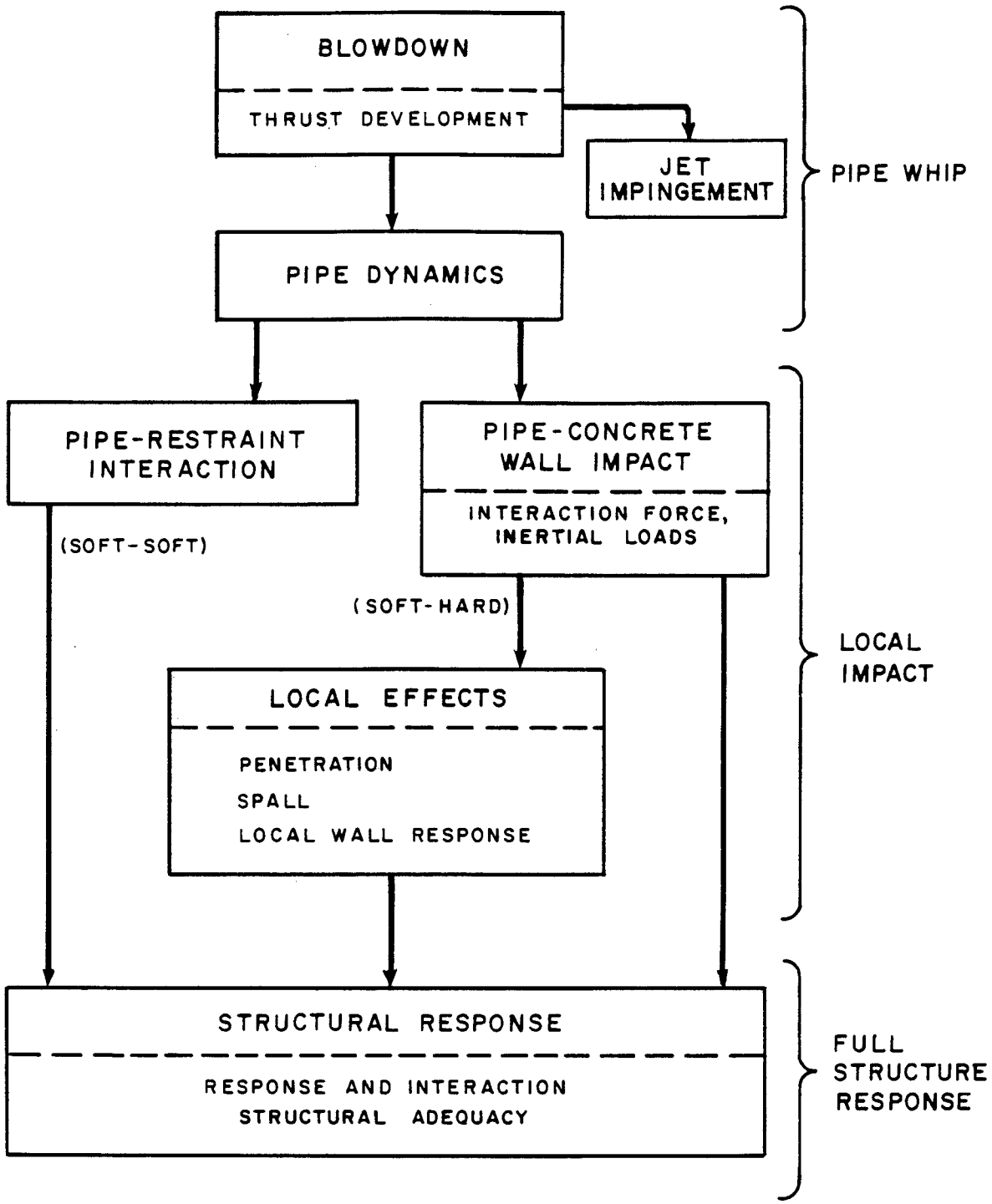

FIGURE 3.6 B-1
AREAS OF ANALYSIS
BEAVER VALLEY POWER STATION-UNIT 2
FINAL SAFETY ANALYSIS REPORT

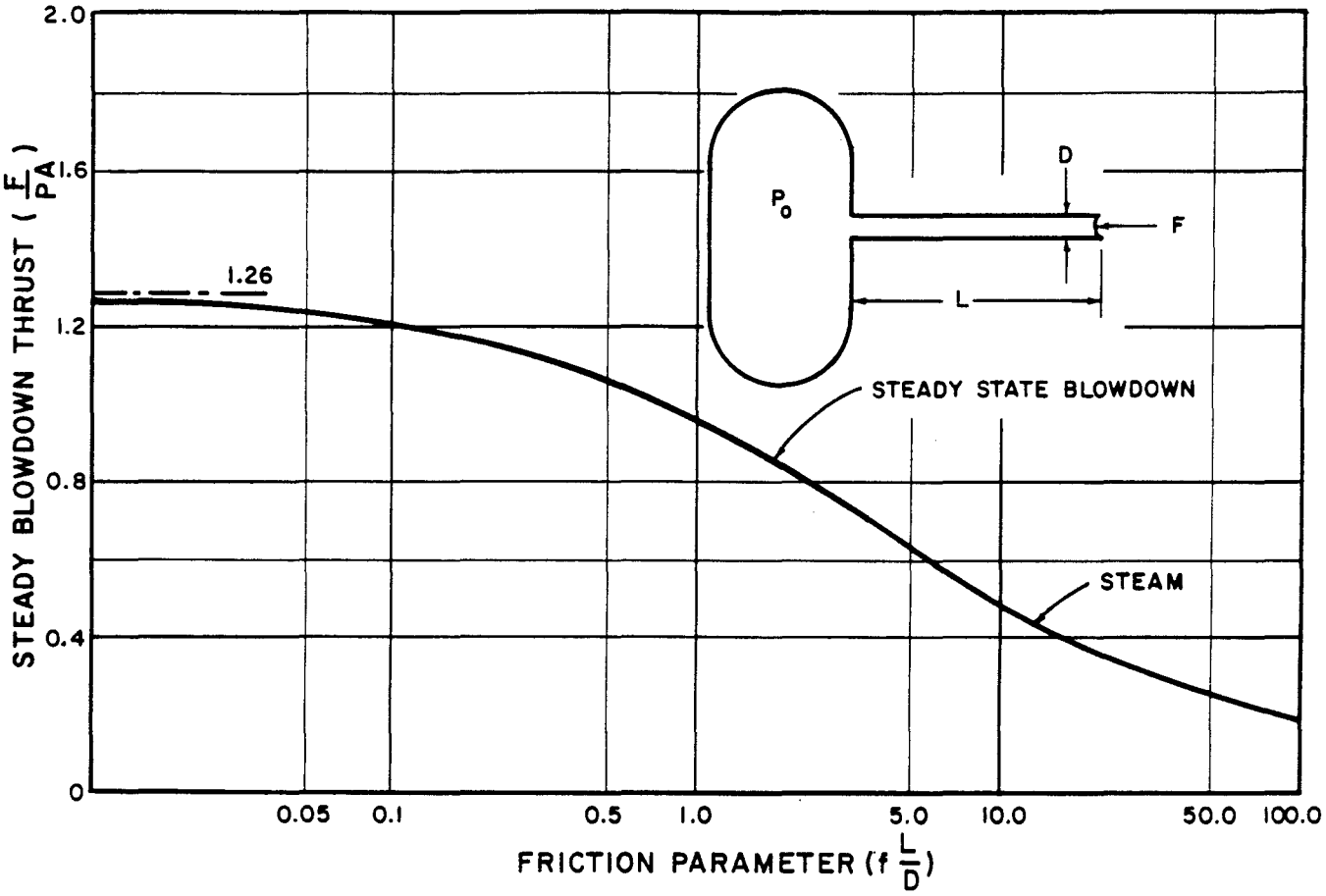

Source:
Moody, J. F.
Time-Dependent Pipe Forces Caused by Blowdown and Flow Stoppage.
ASME Paper F3-FE-23, 1973.

FIGURE 3.6B-2
STEADY STATE BLOWDOWN FORCES VS FRICTION PARAMETER
BEAVER VALLEY POWER STATION-UNIT 2
FINAL SAFETY ANALYSIS REPORT

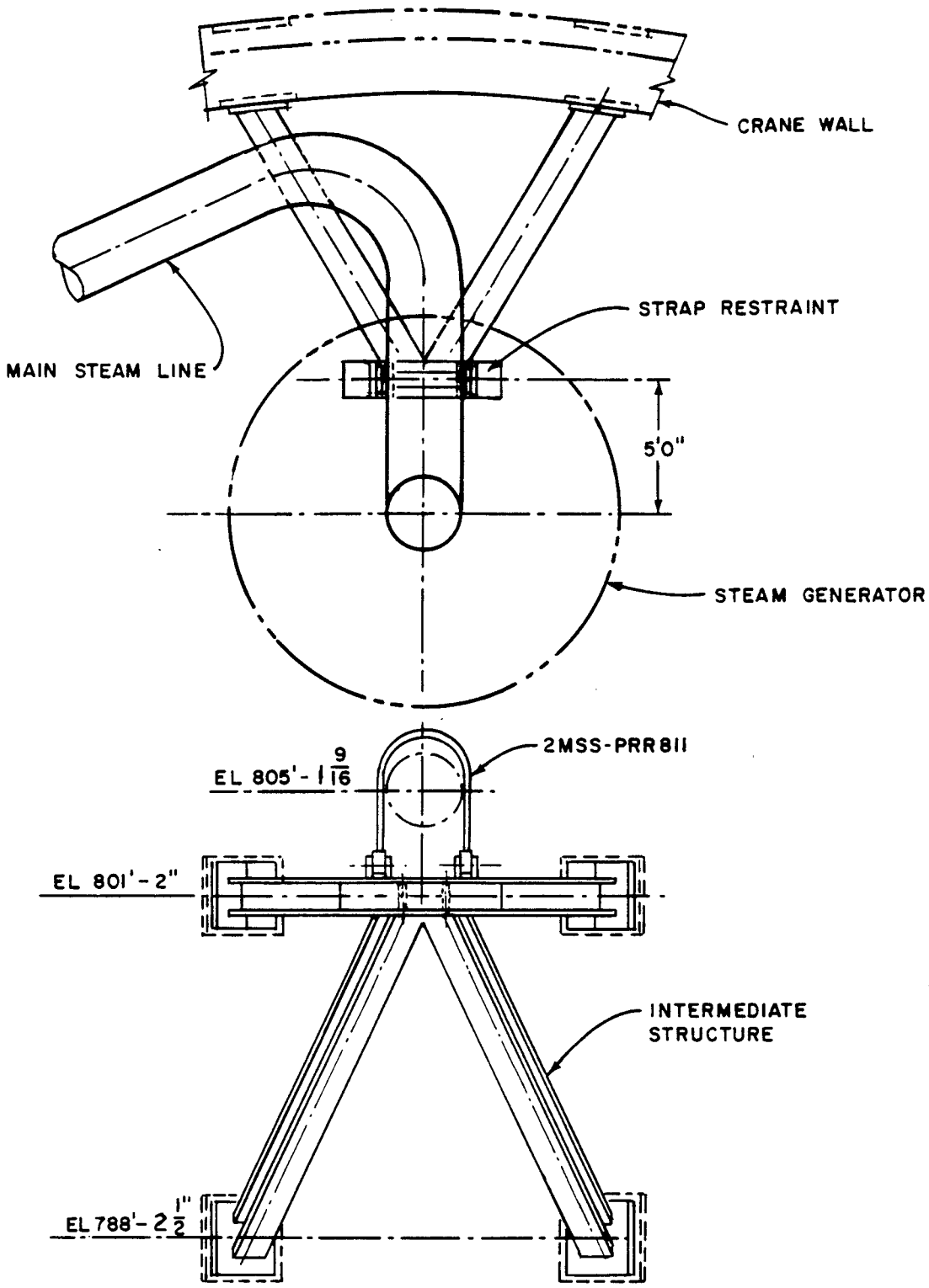

FIGURE 3.6B-3
SOUTH LOOP STRAP RESTRAINT, PRR-811
BEAVER VALLEY POWER STATION-UNIT 2
FINAL SAFETY ANALYSIS REPORT

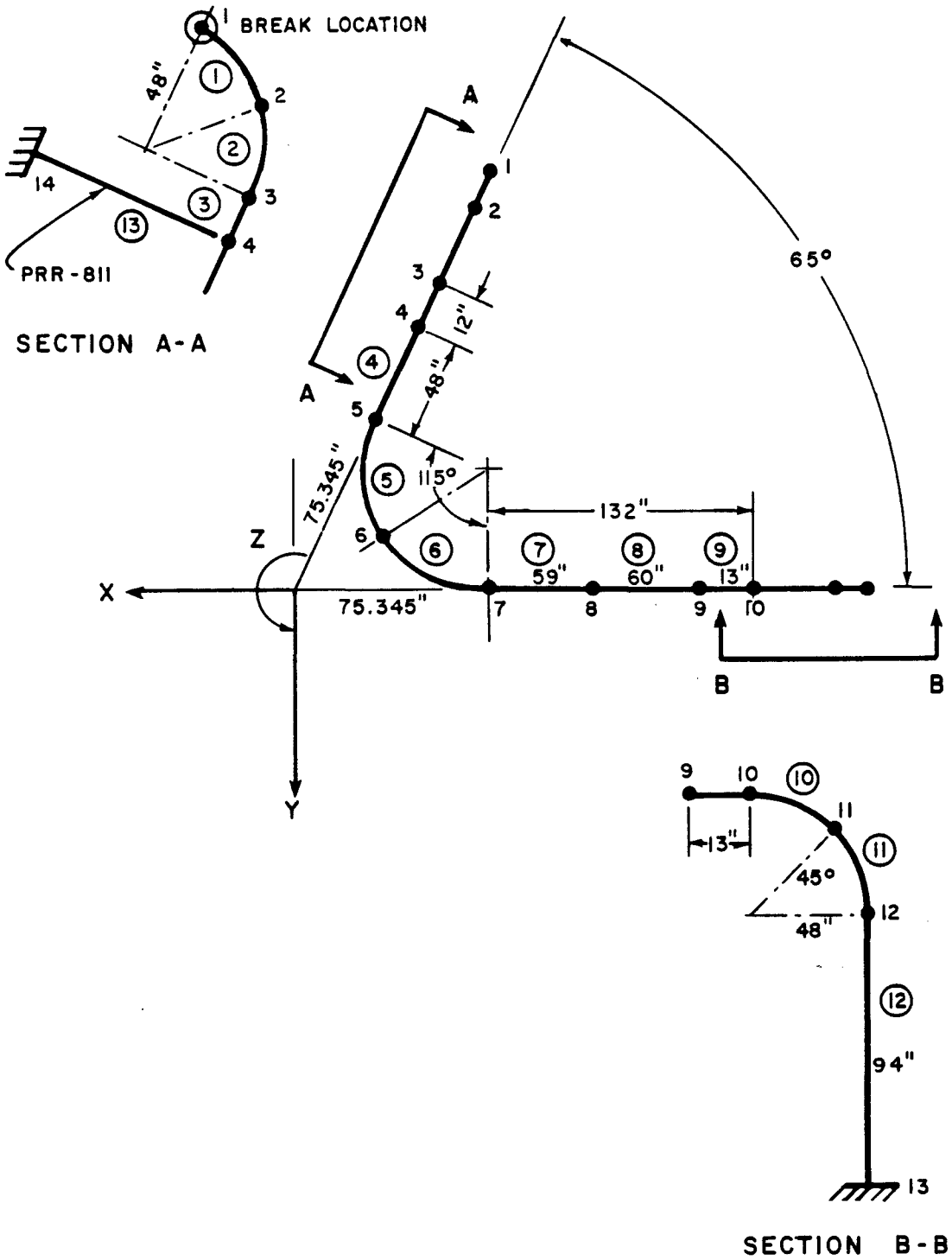

FIGURE 3.6B-4
DYNAMIC ANALYSIS MODEL, SOUTH LOOP STRAP RESTRAINT, PRR-811
BEAVER VALLEY POWER STATION-UNIT 2
FINAL SAFETY ANALYSIS REPORT

P → OPERATING PRESSURE
A → PIPE FLOW AREA } 1.0 PA = 725 kips

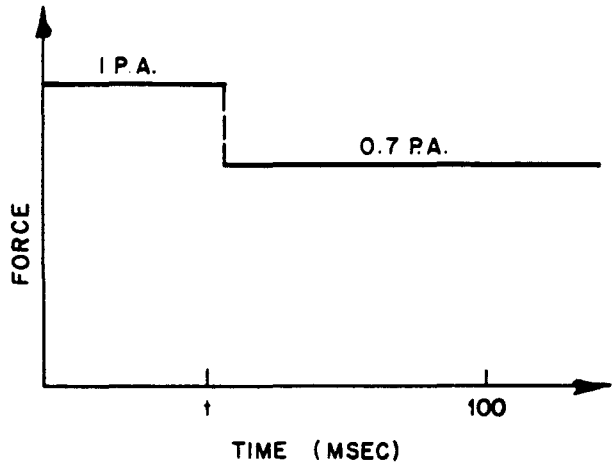

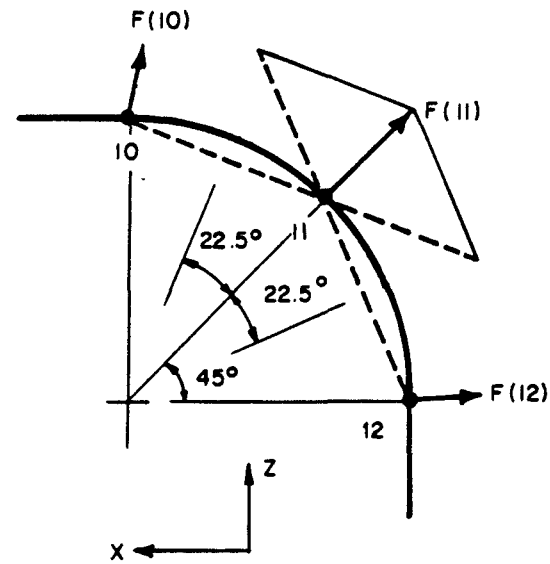

JOINT NO.	TIME, t (msec)
1	0·0
2	3.0
3	5.0
5	8.0
6	10·5
7	13·0
10	20·0
11	22·0
12	24·0

$F_x(10) = F.(\cos(22.5) - 1)$

$F_z(10) = F \cdot \sin(22.5)$

$F_x(11) = F \cdot (\cos(67.5) - \cos(22.5))$

$F_z(11) = F \cdot (\sin(67.5) - \sin(22.5))$

$F_x(12) = F \cdot \cos(67.5))$

$F_z(12) = F \cdot (1 - \sin(67.5))$

FIGURE 3.6B-5
FLUID BLOWDOWN FORCES
USED IN MATHEMATICAL MODEL
BEAVER VALLEY POWER STATION-UNIT 2
FINAL SAFETY ANALYSIS REPORT

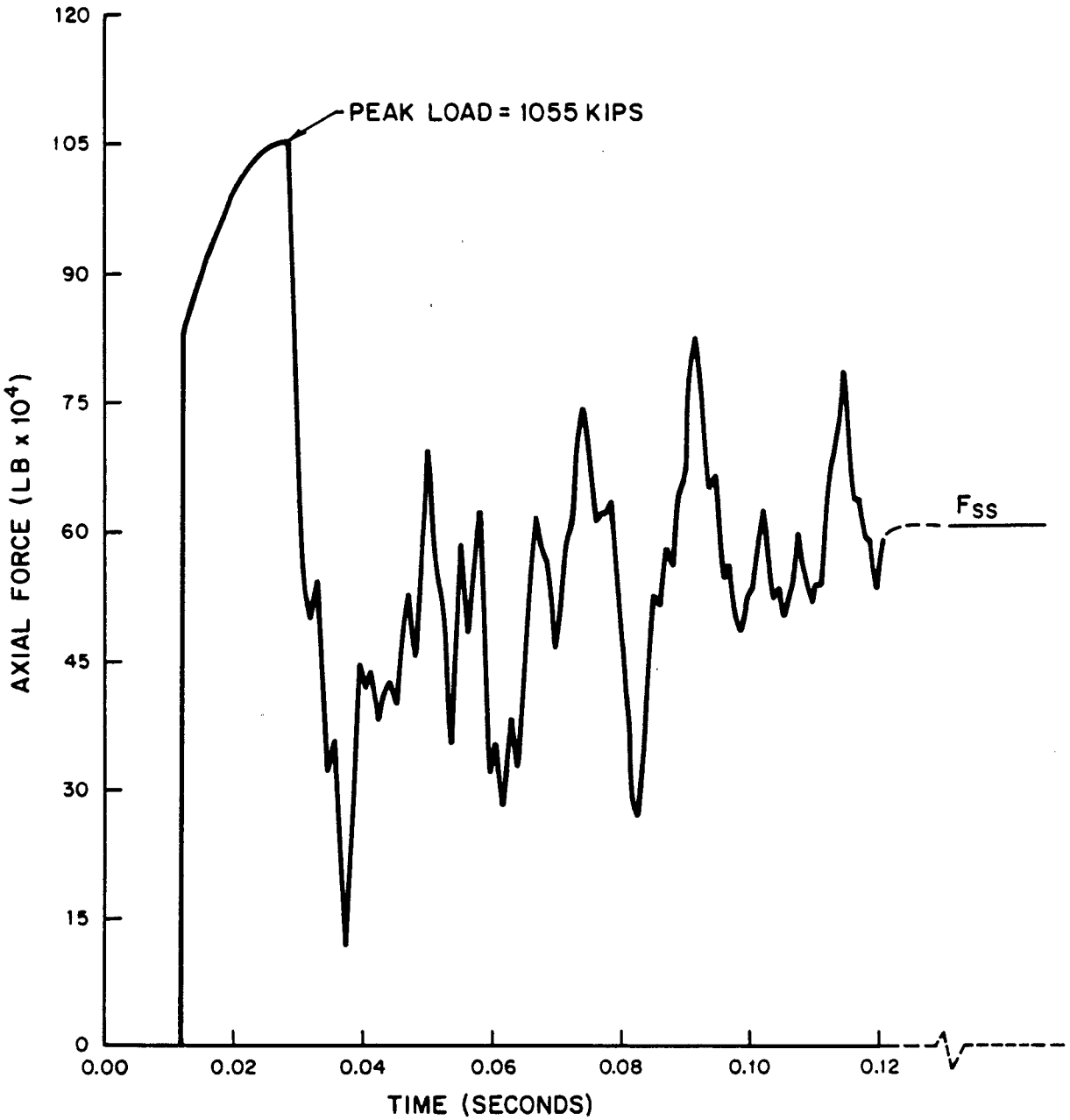

RESTRAINT LOAD-PXB } 2MSS* PRR-811 MEMBER 19, NODE 20

PIPE BREAK } 2MSS-005-C-C

FIGURE 3.6B-6
RESTRAINT REACTION LOADS
BEAVER VALLEY POWER STATION-UNIT 2
FINAL SAFETY ANALYSIS REPORT

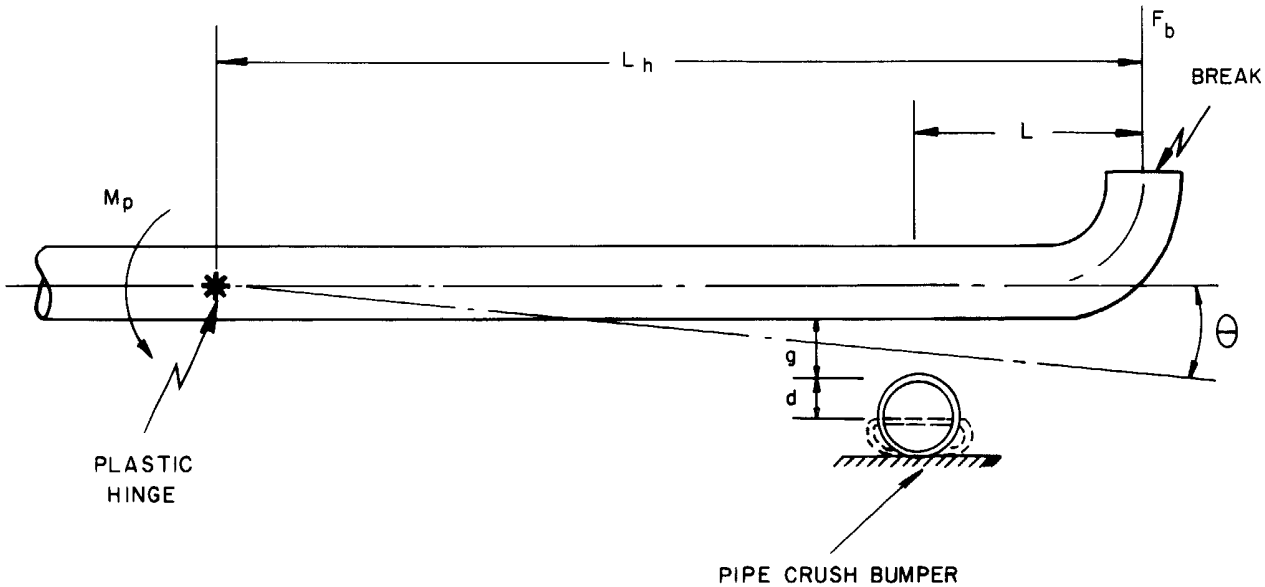

FIGURE 3.6B-7
ENERGY BALANCE SAMPLE PROBLEM
BEAVER VALLEY POWER STATION - UNIT 2
FINAL SAFETY ANALYSIS REPORT

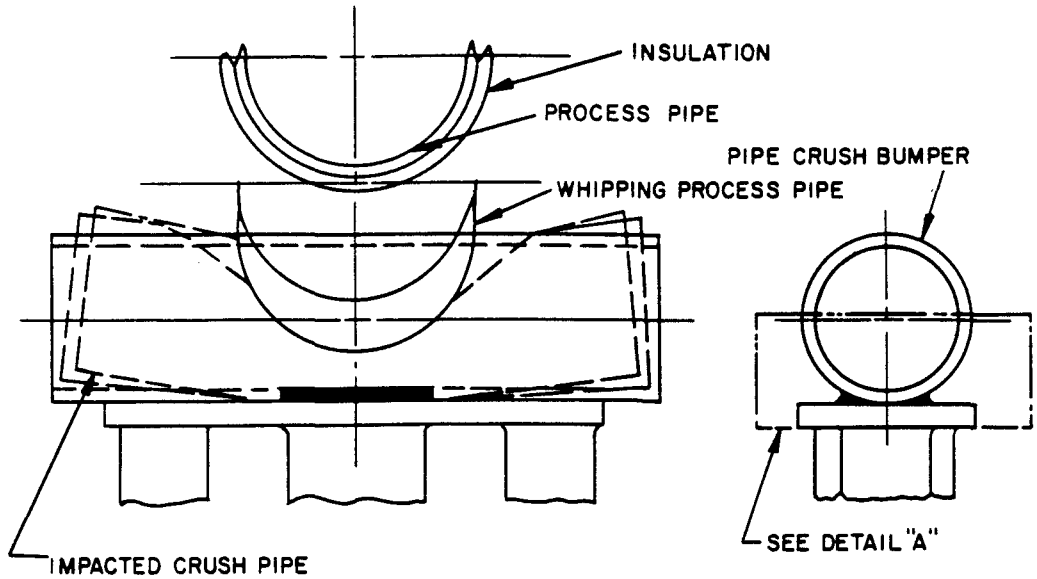

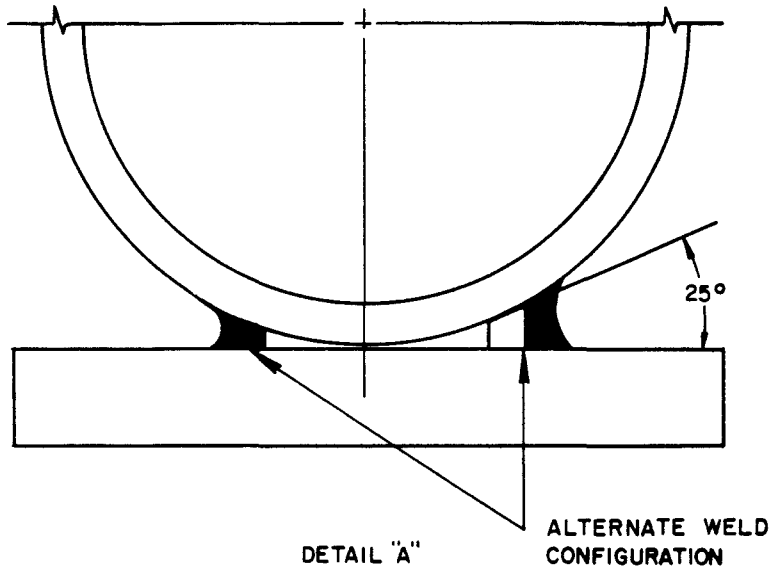

FIGURE 3.6B-8
PIPE CRUSH BUMPER
BEAVER VALLEY POWER STATION-UNIT 2
FINAL SAFETY ANALYSIS REPORT

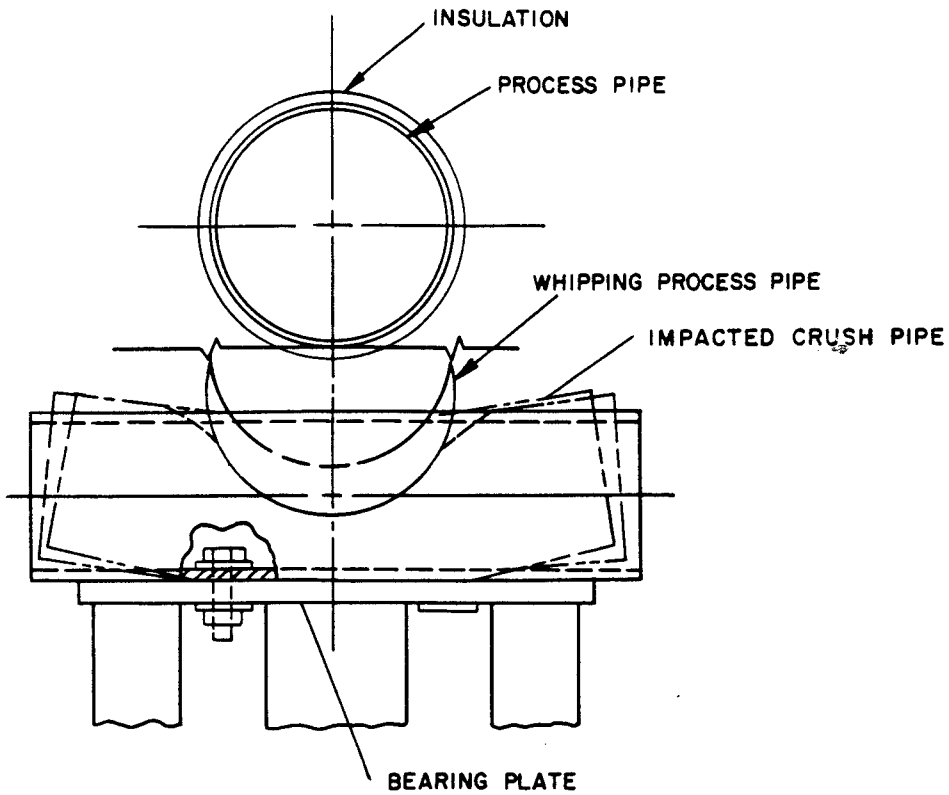

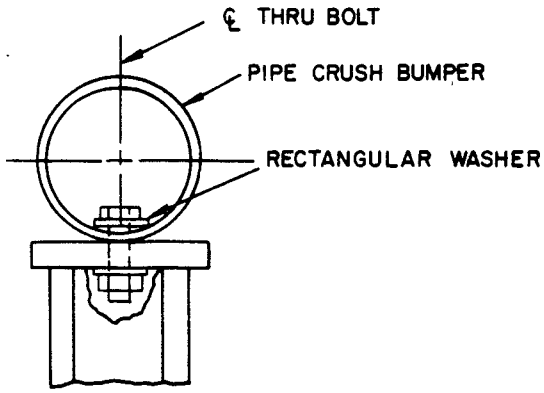

END VIEW OF PIPE

FIGURE 3.6B-9
PIPE CRUSH BUMPER
BEAVER VALLEY POWER STATION-UNIT 2
FINAL SAFETY ANALYSIS REPORT

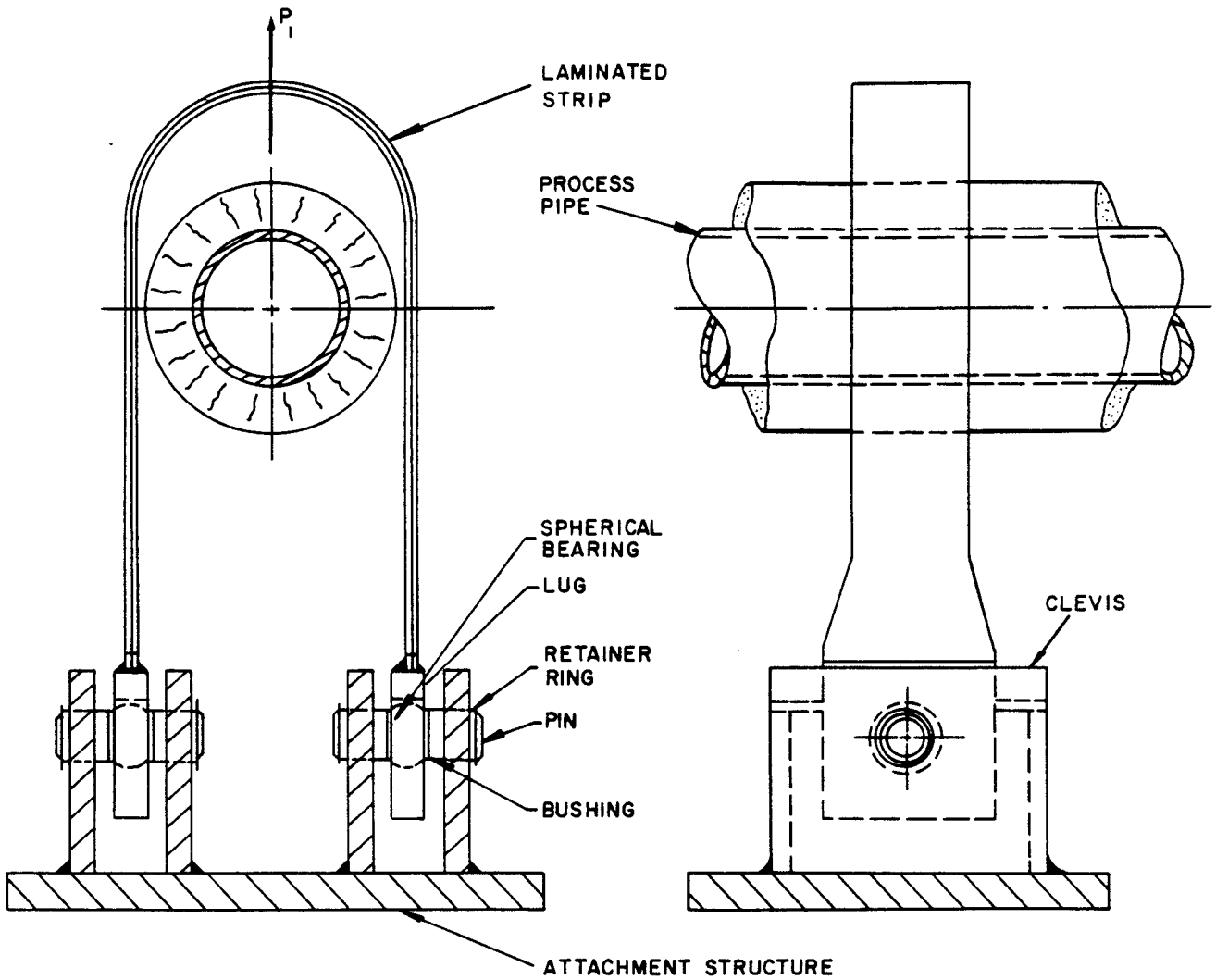

FIGURE 3.6B-10
TWO-PIN LAMINATED PIPE RUPTURE RESTRAINT
BEAVER VALLEY POWER STATION-UNIT 2
FINAL SAFETY ANALYSIS REPORT

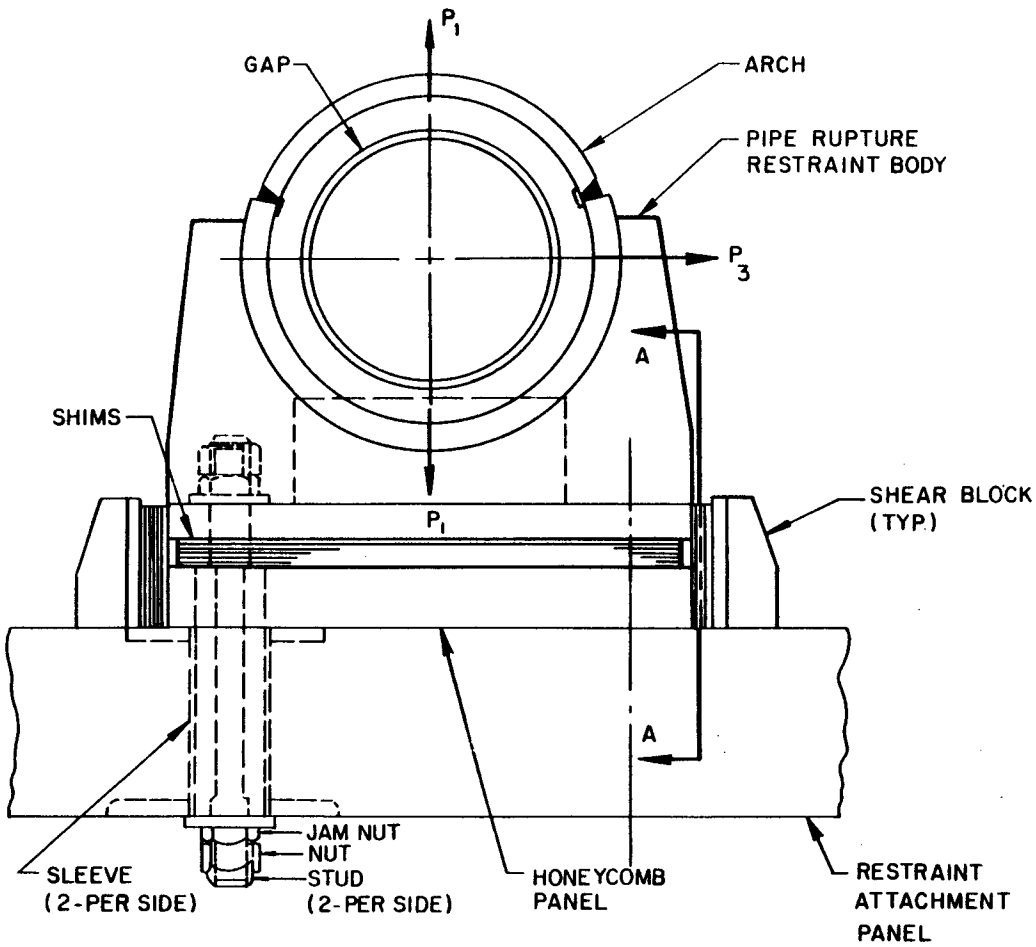

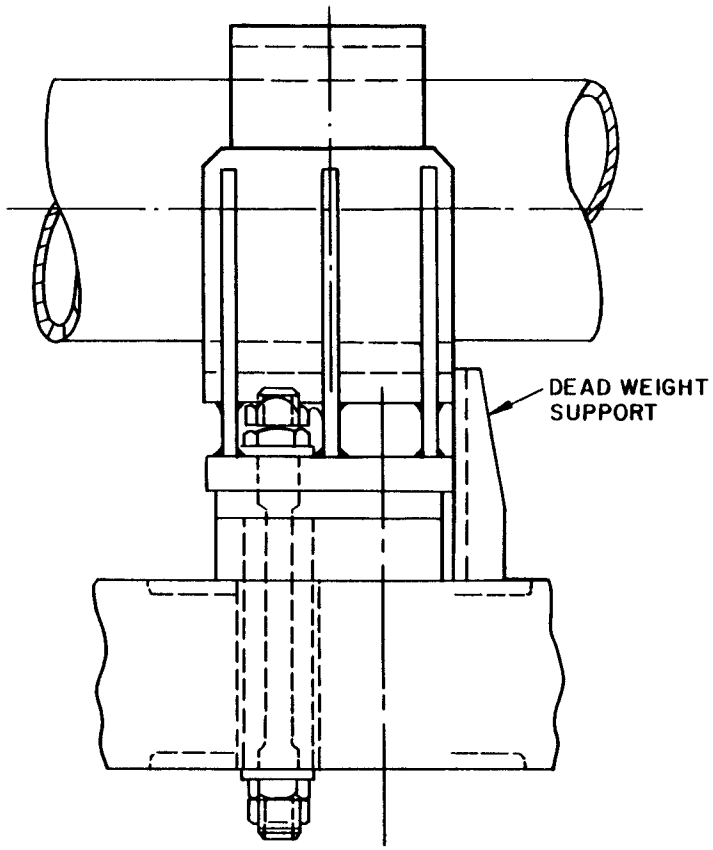

SECTION A-A

FIGURE 3.6B-11
OMNI-DIRECTIONAL PIPE
RUPTURE RESTRAINT
BEAVER VALLEY POWER STATION-UNIT 2
FINAL SAFETY ANALYSIS REPORT

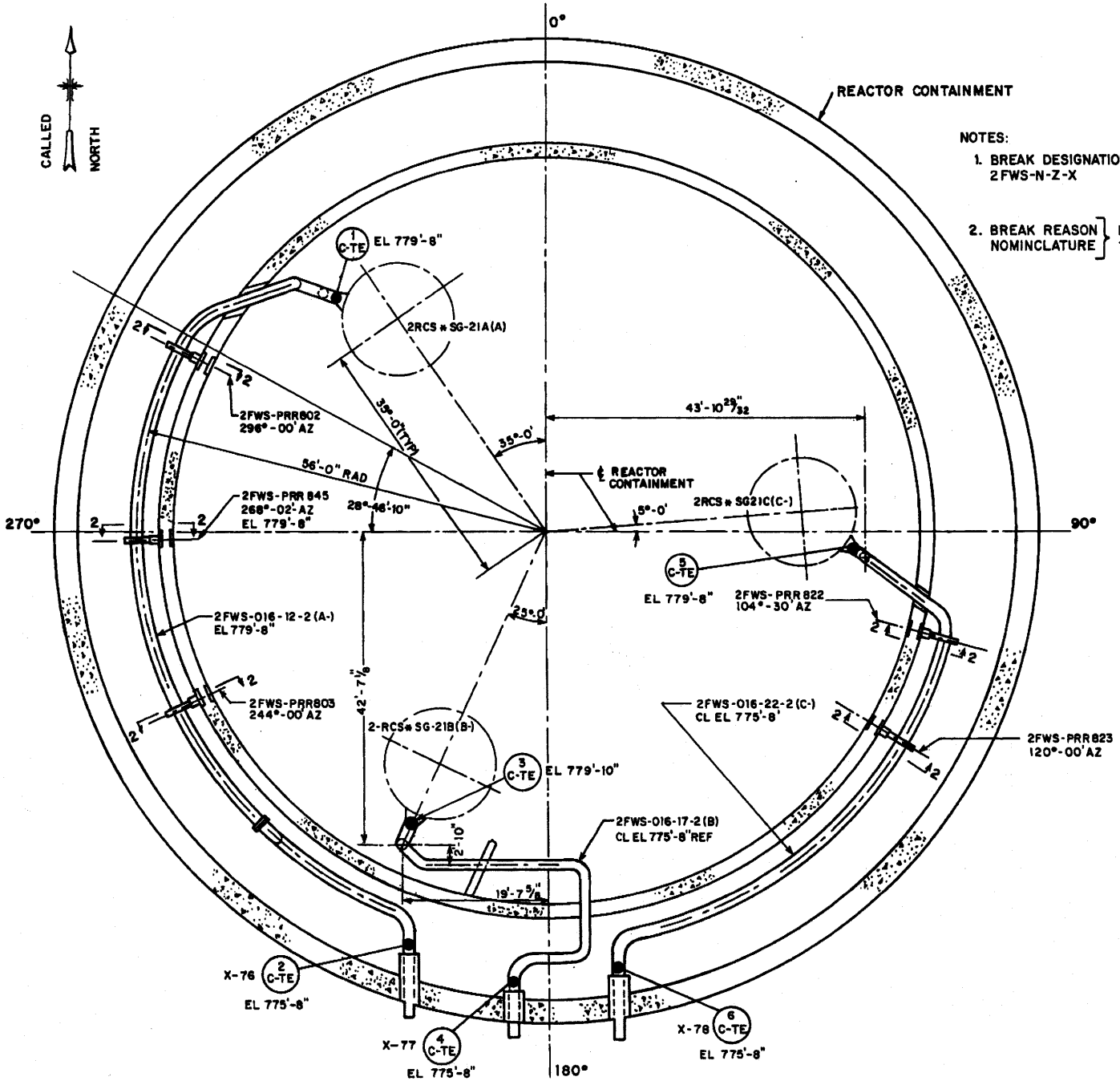

NOTES:

1. BREAK DESIGNATION 2FWS-N-Z-X } (N X-Y) WHERE,
   - N → BREAK NUMBER
   - X → TYPE C OR L (CIRCUMFERENTIAL OR LONGITUDINAL)
   - Y → REASON (EA or TE)
   - Z → LOCATION (C or A)
2. BREAK REASON NOMINCLATURE } EA=LOCATION EXCEEDS ALLOWABLE STRESS. TE= TERMINAL END @ ANCHOR/EQUIPMENT.

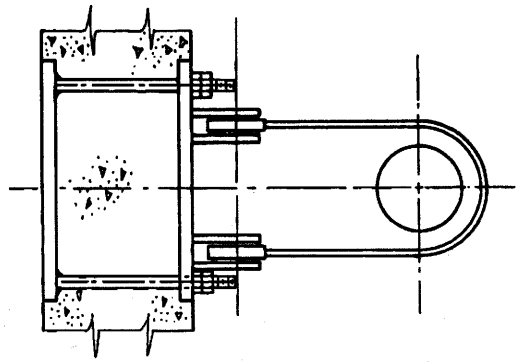

VIEW 2-2

FIGURE 3.6B-12

PIPE BREAK/RESTRAINT LOCATIONS
FEEDWATER SYSTEM (FWS)
INSIDE REACTOR CONTAINMENT

BEAVER VALLEY POWER STATION - UNIT 2
UPDATED FINAL SAFETY ANALYSIS REPORT

REV 18

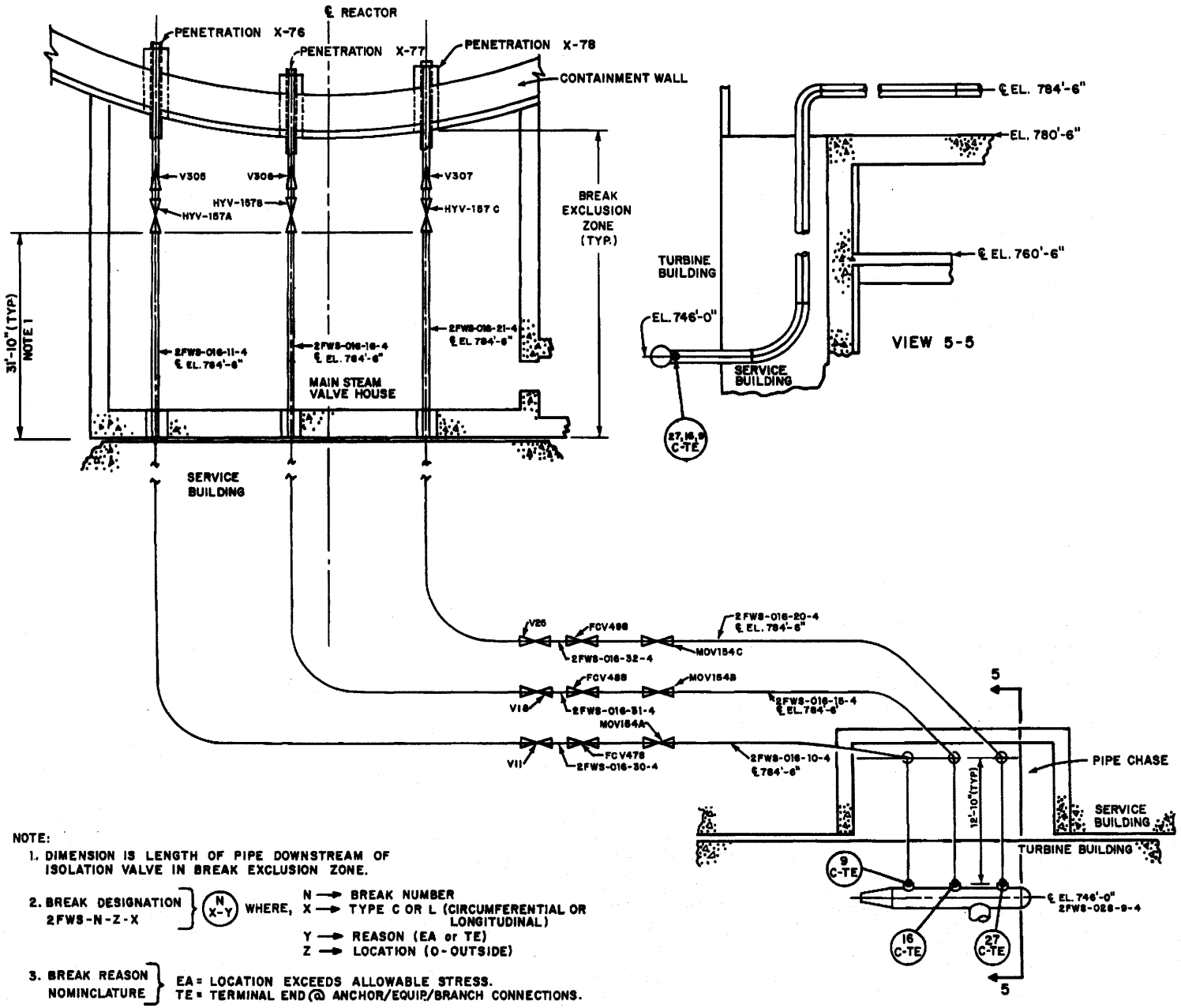

NOTE:

1. DIMENSION IS LENGTH OF PIPE DOWNSTREAM OF ISOLATION VALVE IN BREAK EXCLUSION ZONE.
2. BREAK DESIGNATION 2FWS-N-Z-X } (N X-Y) WHERE,
   - N → BREAK NUMBER
   - X → TYPE C OR L (CIRCUMFERENTIAL OR LONGITUDINAL)
   - Y → REASON (EA or TE)
   - Z → LOCATION (O-OUTSIDE)
3. BREAK REASON NOMINCLATURE } EA = LOCATION EXCEEDS ALLOWABLE STRESS. TE = TERMINAL END @ ANCHOR/EQUIP/BRANCH CONNECTIONS.

FIGURE 3.6B-13

FEEDWATER SYSTEM (FWS) OUTSIDE CONTAINMENT

BEAVER VALLEY POWER STATION - UNIT 2
UPDATED FINAL SAFETY ANALYSIS REPORT

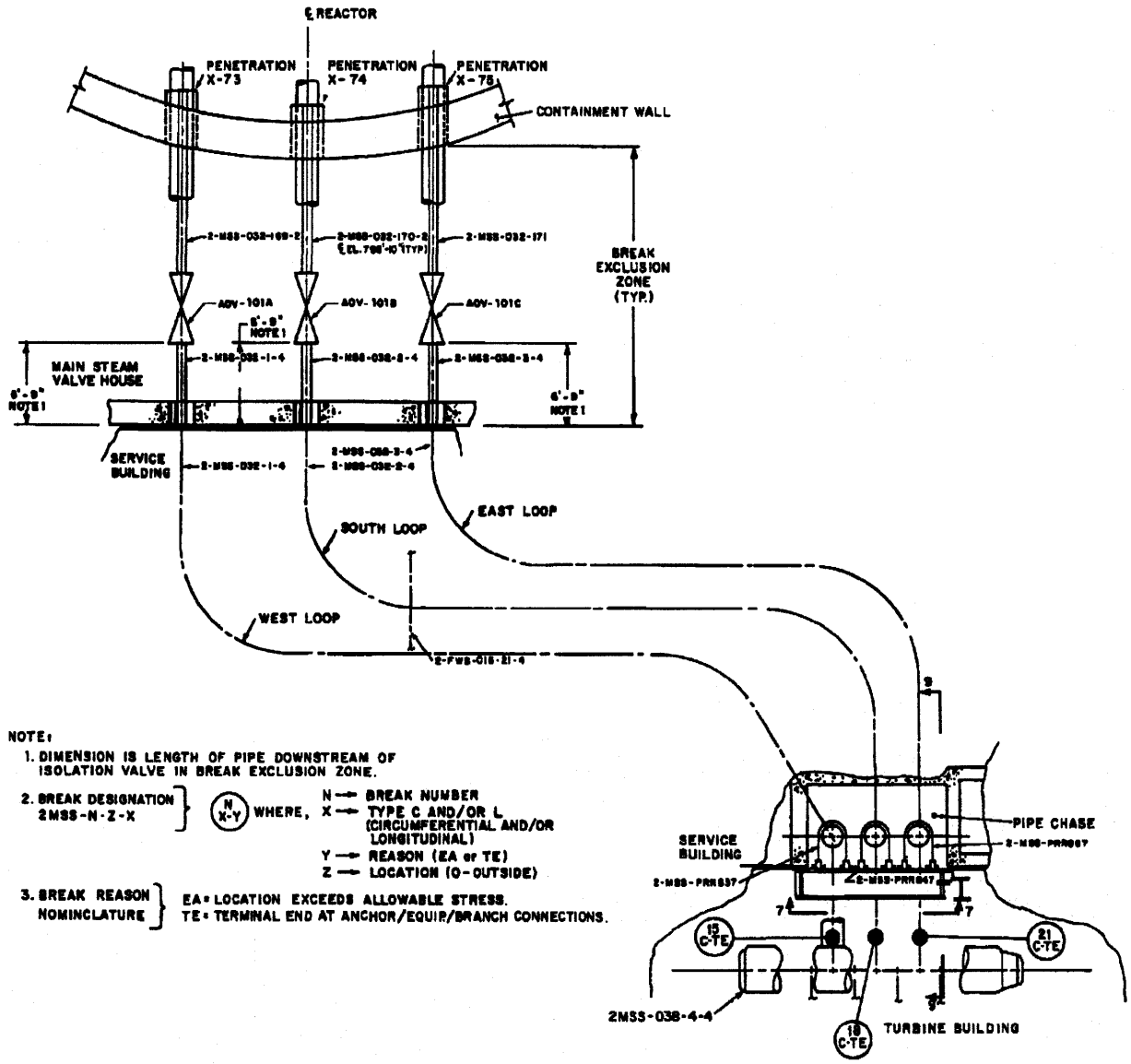

NOTE:

1. DIMENSION IS LENGTH OF PIPE DOWNSTREAM OF ISOLATION VALVE IN BREAK EXCLUSION ZONE.
2. BREAK DESIGNATION 2MSS-N-Z-X } (N / X-Y) WHERE,
   - N → BREAK NUMBER
   - X → TYPE C AND/OR L (CIRCUMFERENTIAL AND/OR LONGITUDINAL)
   - Y → REASON (EA or TE)
   - Z → LOCATION (O-OUTSIDE)
3. BREAK REASON NOMINCLATURE } EA = LOCATION EXCEEDS ALLOWABLE STRESS. TE = TERMINAL END AT ANCHOR/EQUIP/BRANCH CONNECTIONS.

FIGURE 3.6B-14 (1 OF 2)

MAIN STEAM SYSTEM (MSS) OUTSIDE CONTAINMENT

BEAVER VALLEY POWER STATION - UNIT 2
UPDATED FINAL SAFETY ANALYSIS REPORT

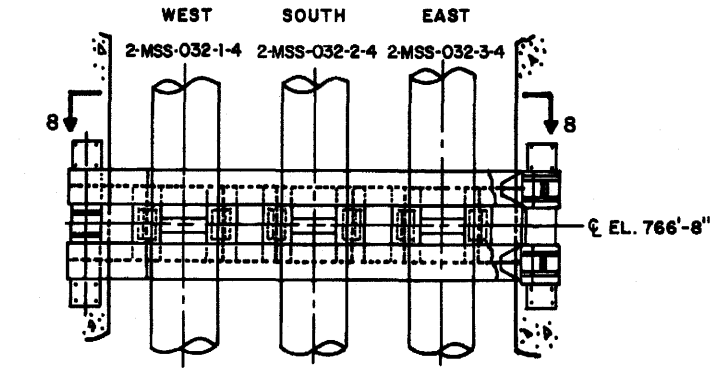

VIEW 7-7

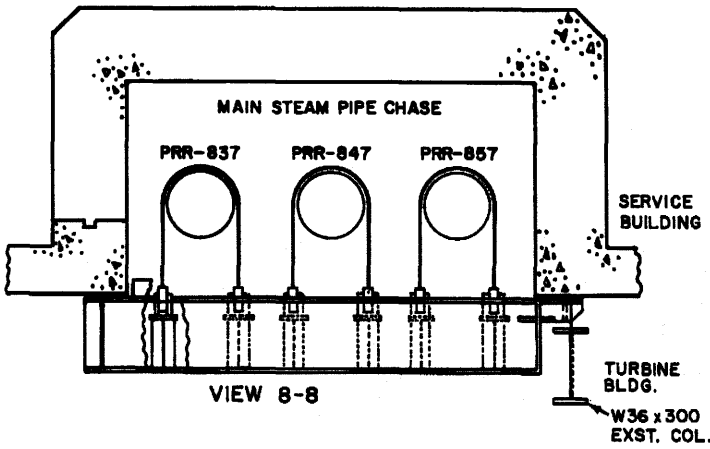

VIEW 8-8

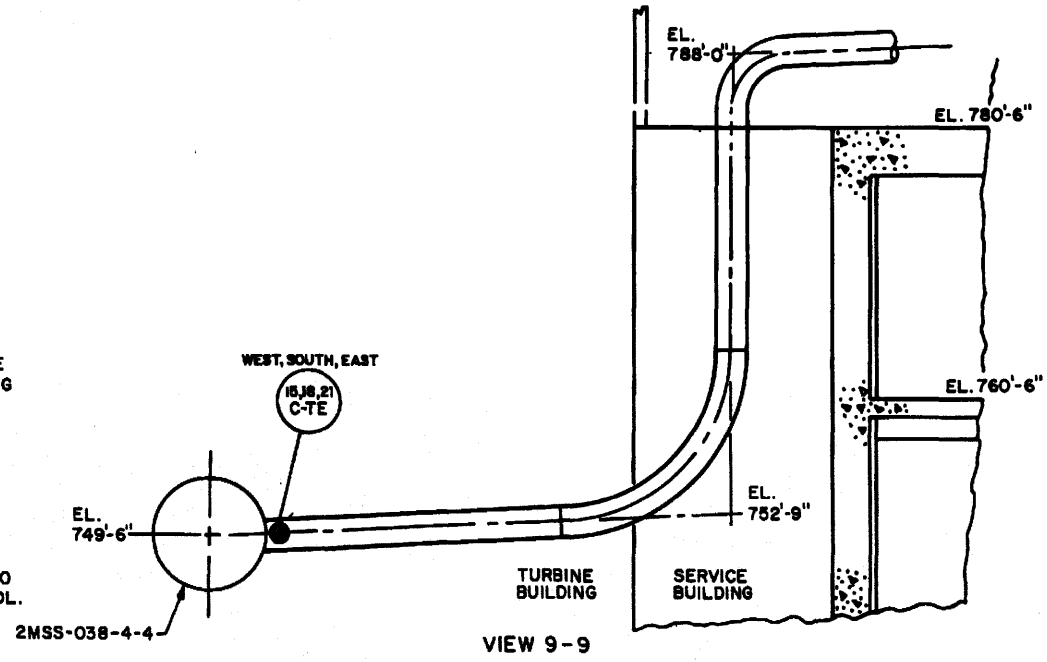

VIEW 9-9

FIGURE 3.6B-14 (2 OF 2)

MAIN STEAM SYSTEM (MSS) OUTSIDE CONTAINMENT

BEAVER VALLEY POWER STATION - UNIT 2
UPDATED FINAL SAFETY ANALYSIS REPORT

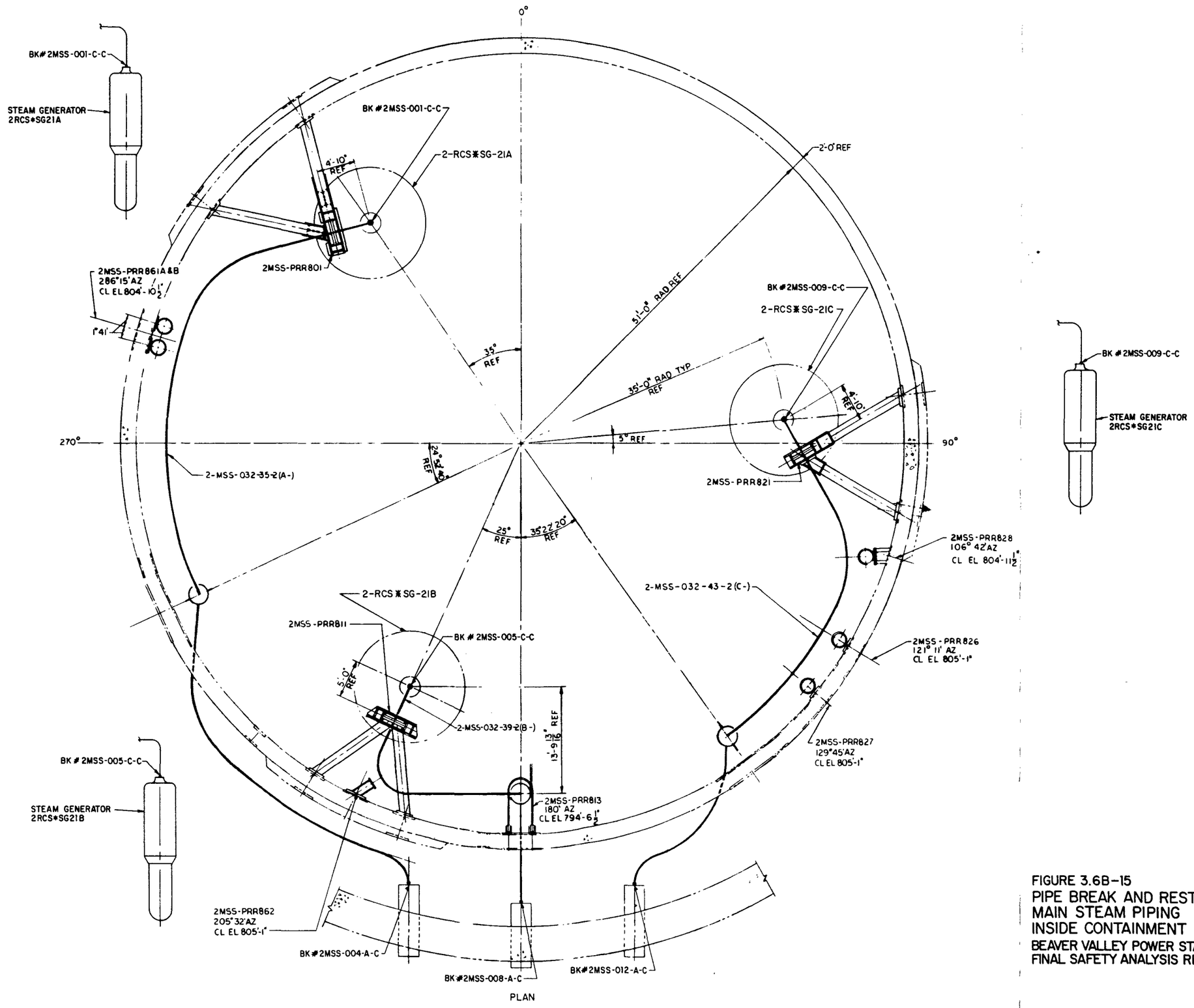

FIGURE 3.6B-15
PIPE BREAK AND RESTRAINT LOCATIONS-
MAIN STEAM PIPING
INSIDE CONTAINMENT
BEAVER VALLEY POWER STATION-UNIT 2
FINAL SAFETY ANALYSIS REPORT

REV. 18

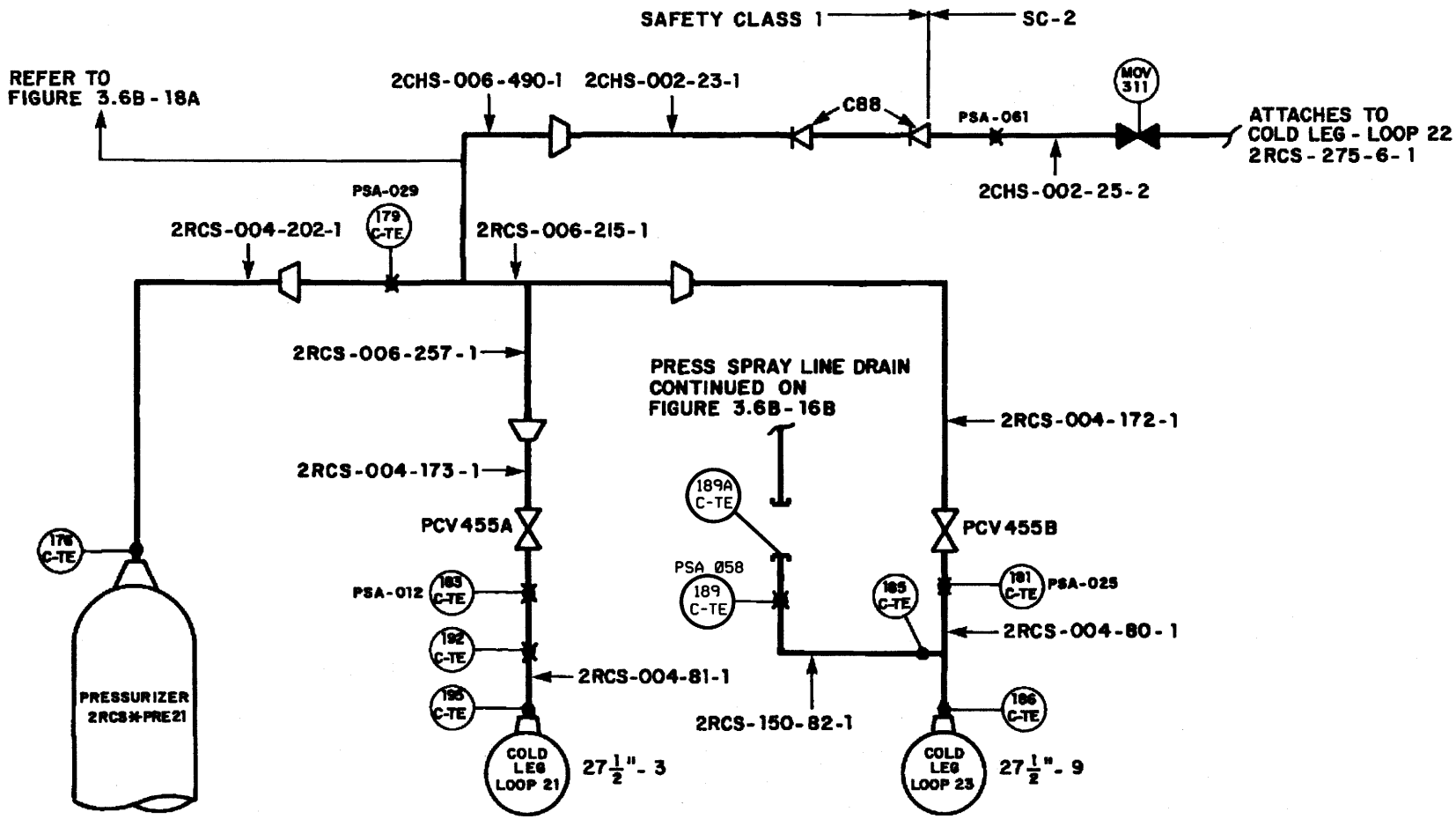

NOTES:

1. PIPING NOT TO SCALE; DIAGRAMMATIC FOR CLARITY.
2. BREAK DESIGNATION 2RCS-N-Z-X } (N X-Y) WHERE,
   - N → BREAK NUMBER
   - X → TYPE (C or L)
   - Y → REASON (TE or EA)
   - Z → LOCATION (C or A)
3. BREAK REASON NOMINCLATURE } EA= EXCEEDS ALLOWABLE STRESS. TE= TERMINAL ENDS AT ANCHOR/EQUIPMENT AND BRANCH CONNECTIONS/PRESSURE BOUNDARIES.
4. BREAKS ON THE CHS PIPING ARE SHOWN ON FIGURE 3.6B-18.

FIGURE 3.6B-16A

REACTOR COOLANT SYSTEM (RCS)
(PRESSURIZER/AUXILIARY SPRAY)
INSIDE REACTOR CONTAINMENT

BEAVER VALLEY POWER STATION UNIT NO. 2
UPDATED FINAL SAFETY ANALYSIS REPORT

PREPARED ON THE CNSU CAEDDI SYSTEM

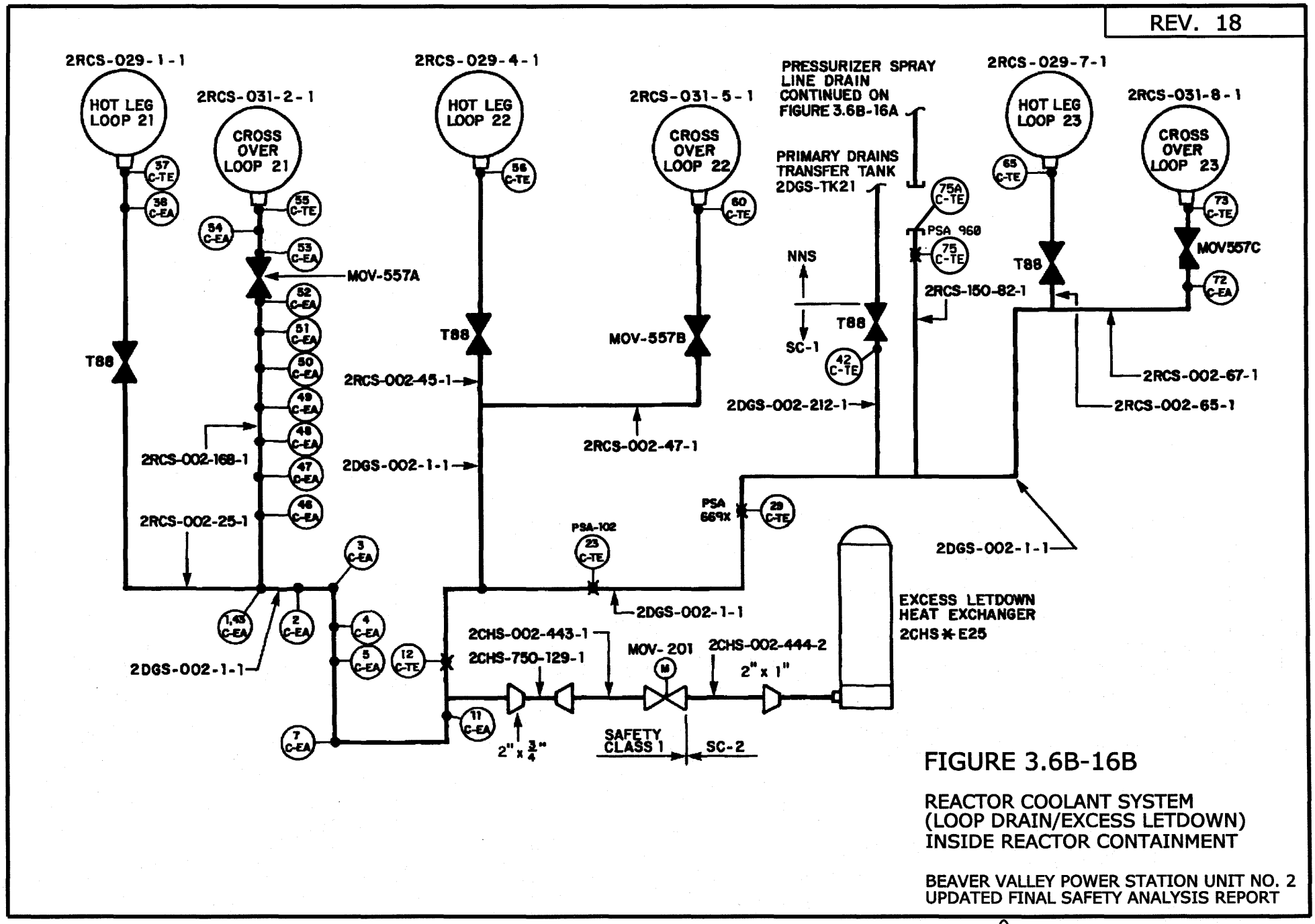

FIGURE 3.6B-16B

REACTOR COOLANT SYSTEM
(LOOP DRAIN/EXCESS LETDOWN)
INSIDE REACTOR CONTAINMENT

BEAVER VALLEY POWER STATION UNIT NO. 2
UPDATED FINAL SAFETY ANALYSIS REPORT

PREPARED ON THE CNSU CAEDDI SYSTEM

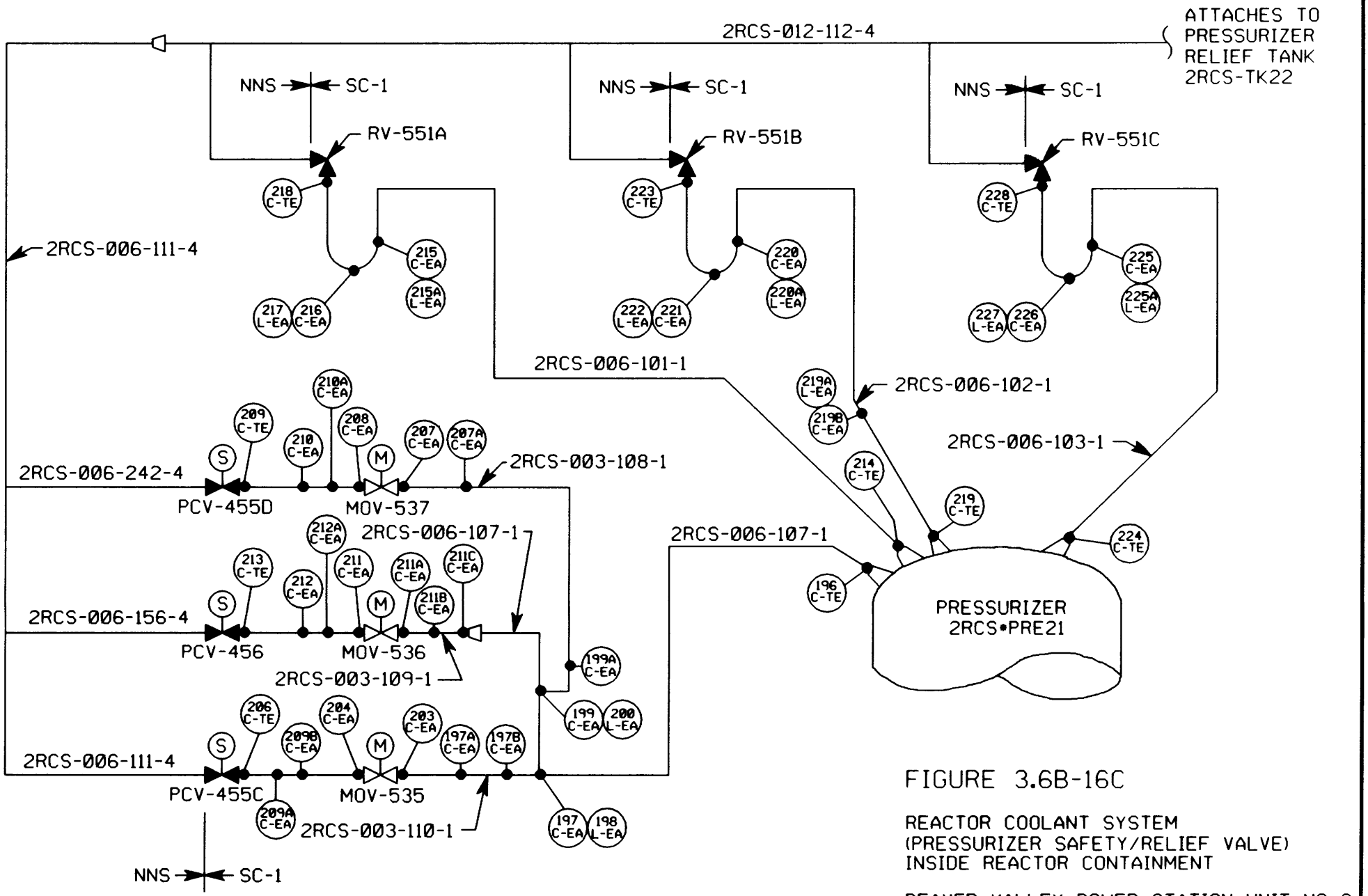

FIGURE 3.6B-16C

REACTOR COOLANT SYSTEM
(PRESSURIZER SAFETY/RELIEF VALVE)
INSIDE REACTOR CONTAINMENT

BEAVER VALLEY POWER STATION UNIT NO. 2
UPDATED FINAL SAFETY ANALYSIS REPORT

PREPARED ON THE CNSU CAEDDI SYSTEM

TAG125870 g306b016c 07/30/2007 08:07:03 AM

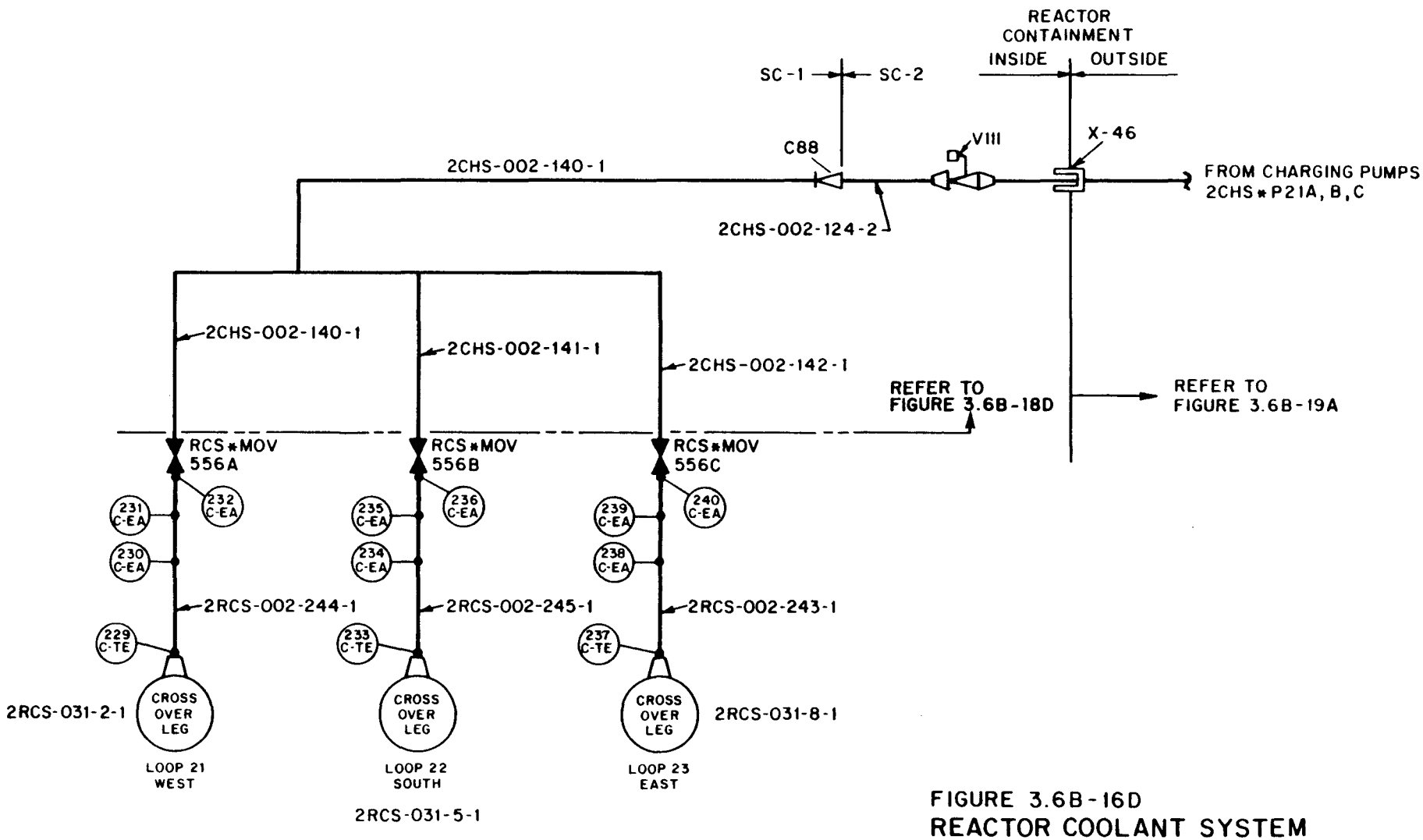

FIGURE 3.6B-16D
REACTOR COOLANT SYSTEM
(LOOP FILL PIPING)
INSIDE REACTOR CONTAINMENT
BEAVER VALLEY POWER STATION - UNIT 2
FINAL SAFETY ANALYSIS REPORT

REV. 18

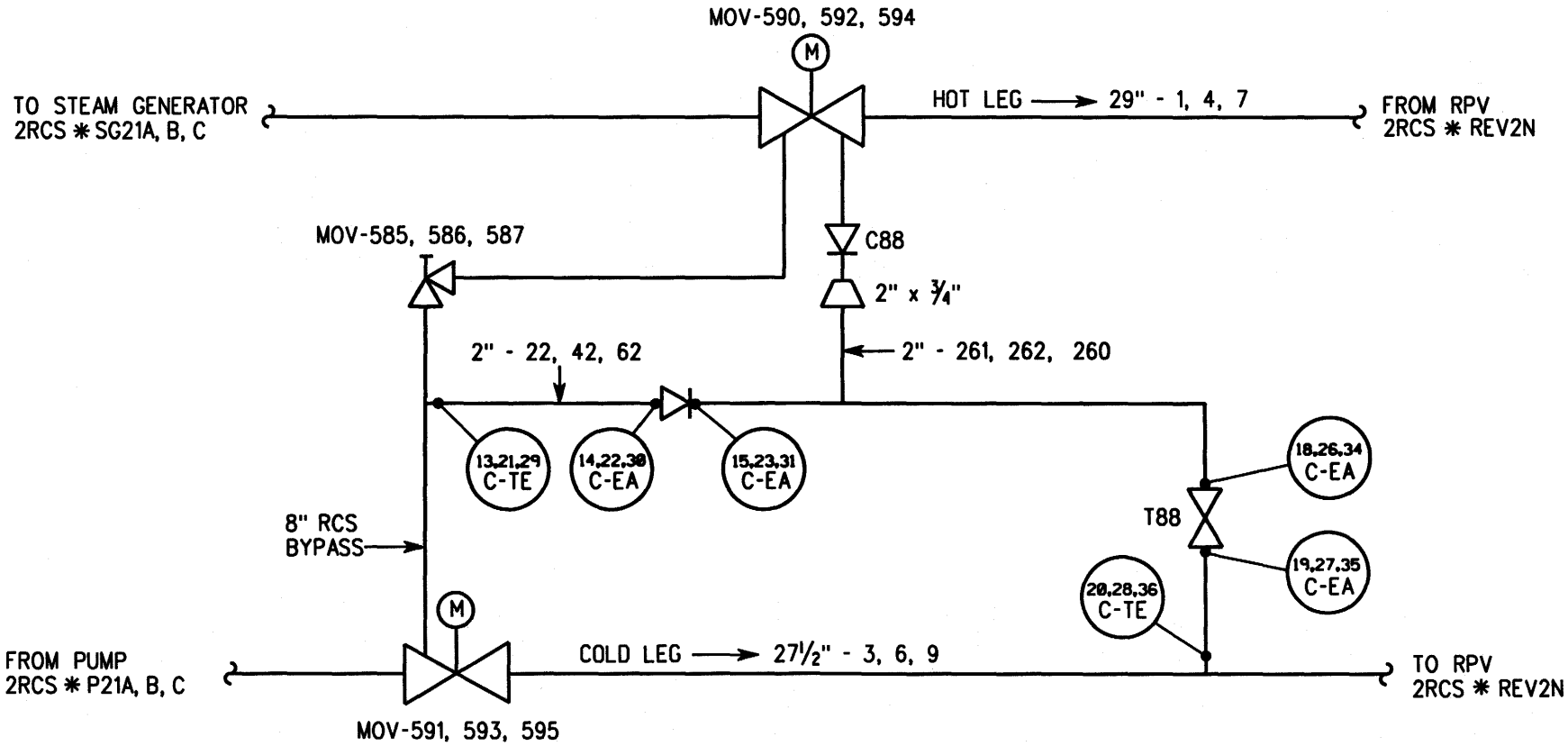

NOTES:

1. REFER TO FIGURE 3.6B-16A FOR GENERAL NOTES.
2. ALL VALVE/PIPE MARK NUMBERS ARE PRECEDED BY THE PLANT UNIT NUMBER AND SYSTEM DESIGNATION (2RCS-).
3. PIPING IS SAFETY CLASS 1 (SC-1).

FIGURE 3.6B-16E

2" RCS BYPASS - LOOP 21, 22, 23
INSIDE REACTOR CONTAINMENT

BEAVER VALLEY POWER STATION UNIT NO. 2
UPDATED FINAL SAFETY ANALYSIS REPORT

31-MAR-2010 10:41 K:\u2\UFSAR\g306b016e.dgn

PREPARED ON THE CNSU CAEDDI SYSTEM

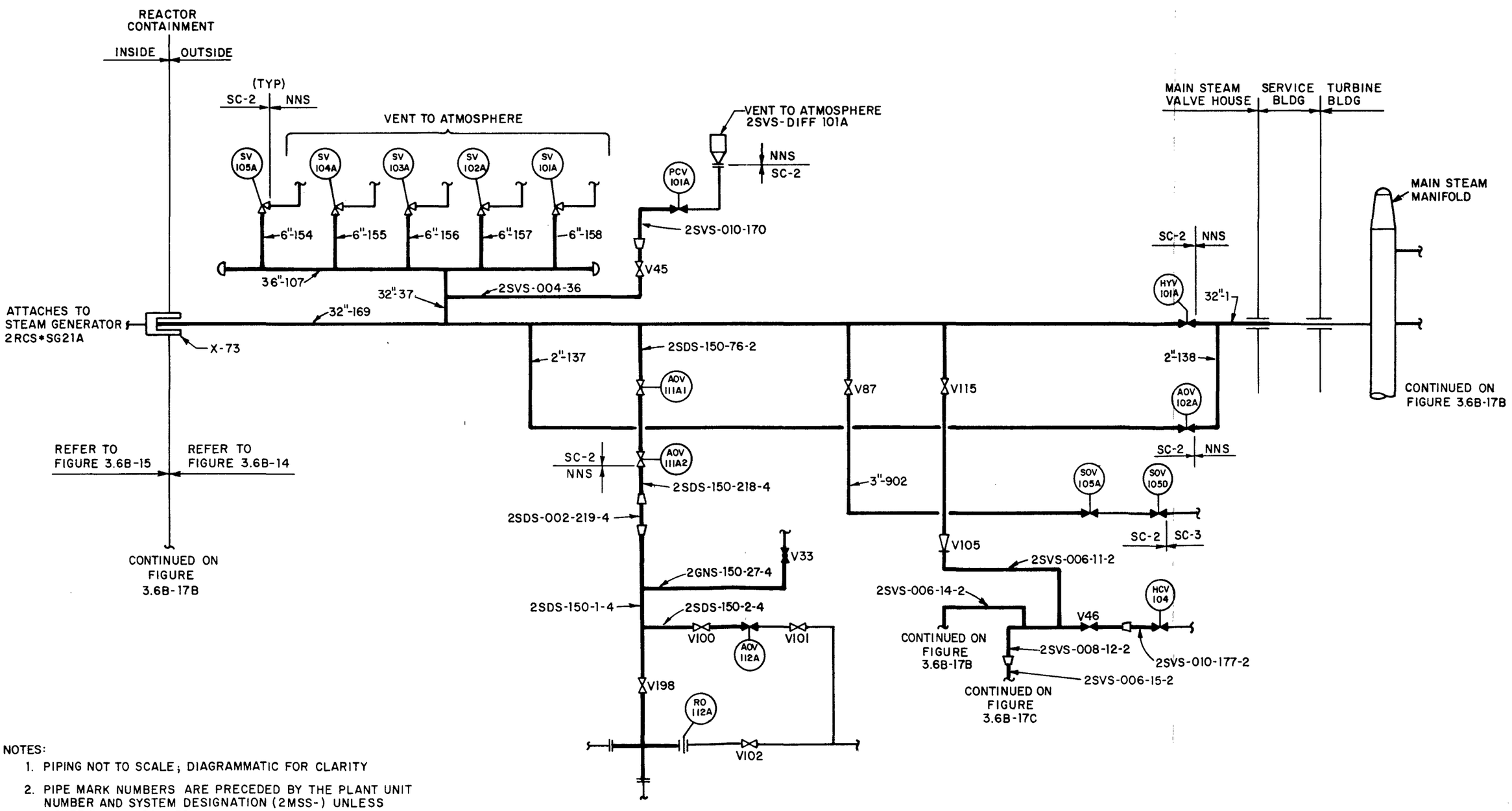

NOTES:

1. PIPING NOT TO SCALE; DIAGRAMMATIC FOR CLARITY
2. PIPE MARK NUMBERS ARE PRECEDED BY THE PLANT UNIT NUMBER AND SYSTEM DESIGNATION (2MSS-) UNLESS OTHERWISE SPECIFIED.
3. PIPING SAFETY CLASS (SC-2, SC-3, NNS) IS INDICATED ON FIGURE.
4. BOLD FACED LINES (▬) MEET THE BREAK EXCLUSION ALLOWABLES OF SECTION 3.6B.2.1.2.1.2, AND ARE SUBJECT TO ROUTINE ISI (IN-SERVICE-INSPECTION) OF ALL FIELD WELD LOCATIONS.

FIGURE 3.6B-17A
MAIN STEAM WEST LOOP BREAK EXCLUSION PIPE OUTSIDE CONTAINMENT
BEAVER VALLEY POWER STATION-UNIT 2
FINAL SAFETY ANALYSIS REPORT

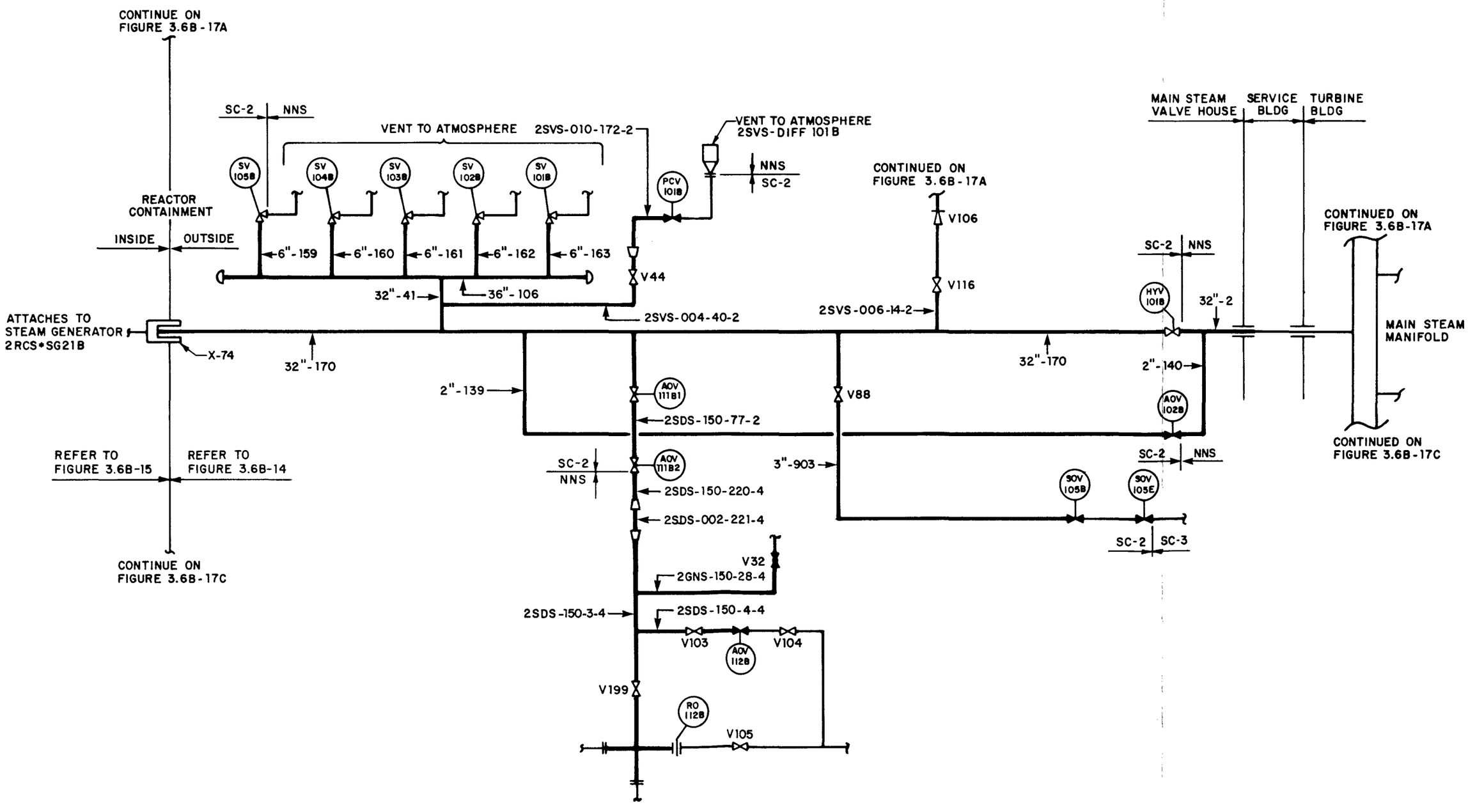

FIGURE 3.6B-17B
MAIN STEAM SOUTH LOOP
BREAK EXCLUSION PIPE
OUTSIDE CONTAINMENT
BEAVER VALLEY POWER STATION-UNIT 2
FINAL SAFETY ANALYSIS REPORT

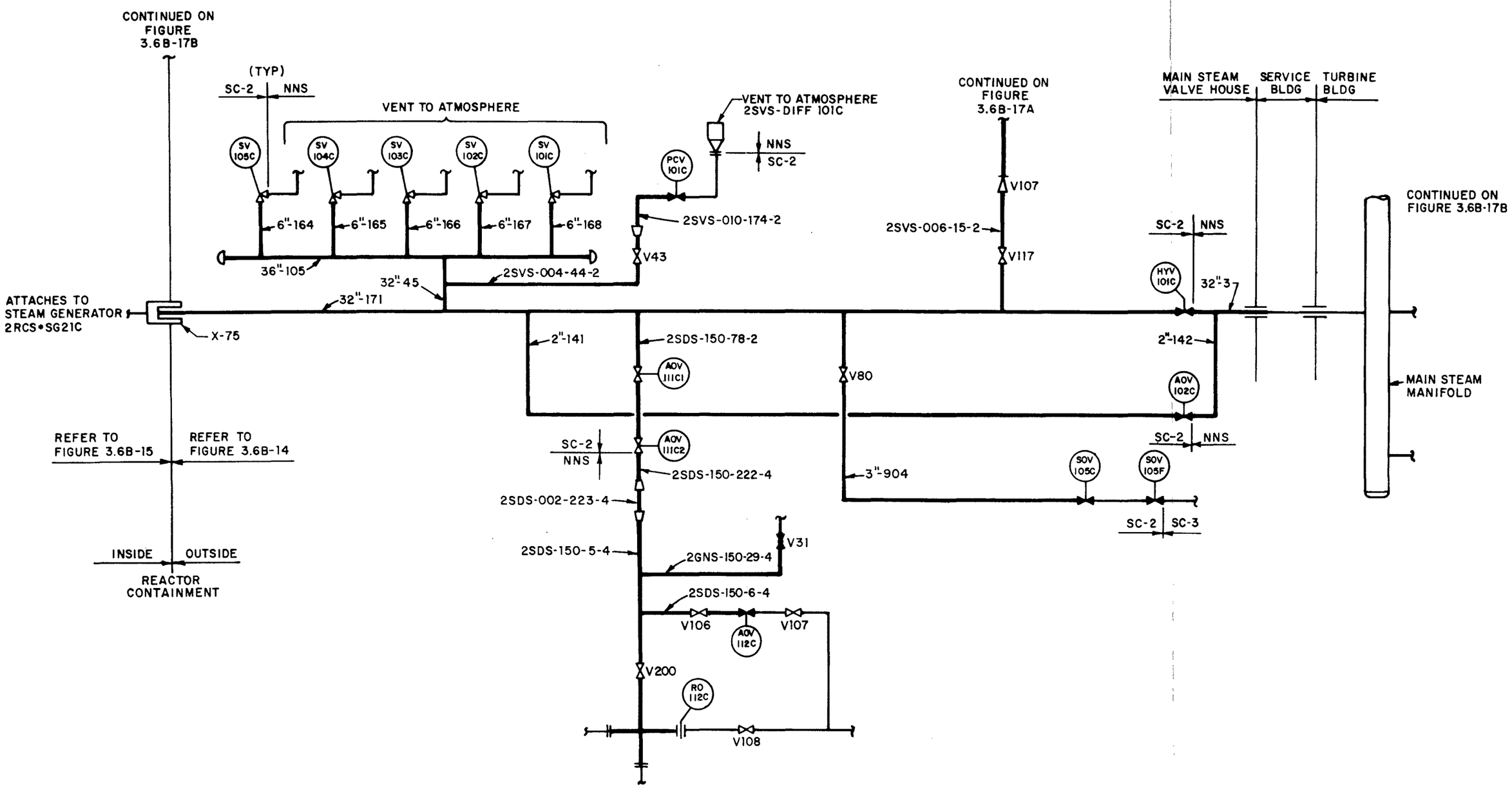

FIGURE 3.6B-17C
MAIN STEAM EAST LOOP
BREAK EXCLUSION PIPE
OUTSIDE CONTAINMENT
BEAVER VALLEY POWER STATION-UNIT 2
FINAL SAFETY ANALYSIS REPORT

REV. 18

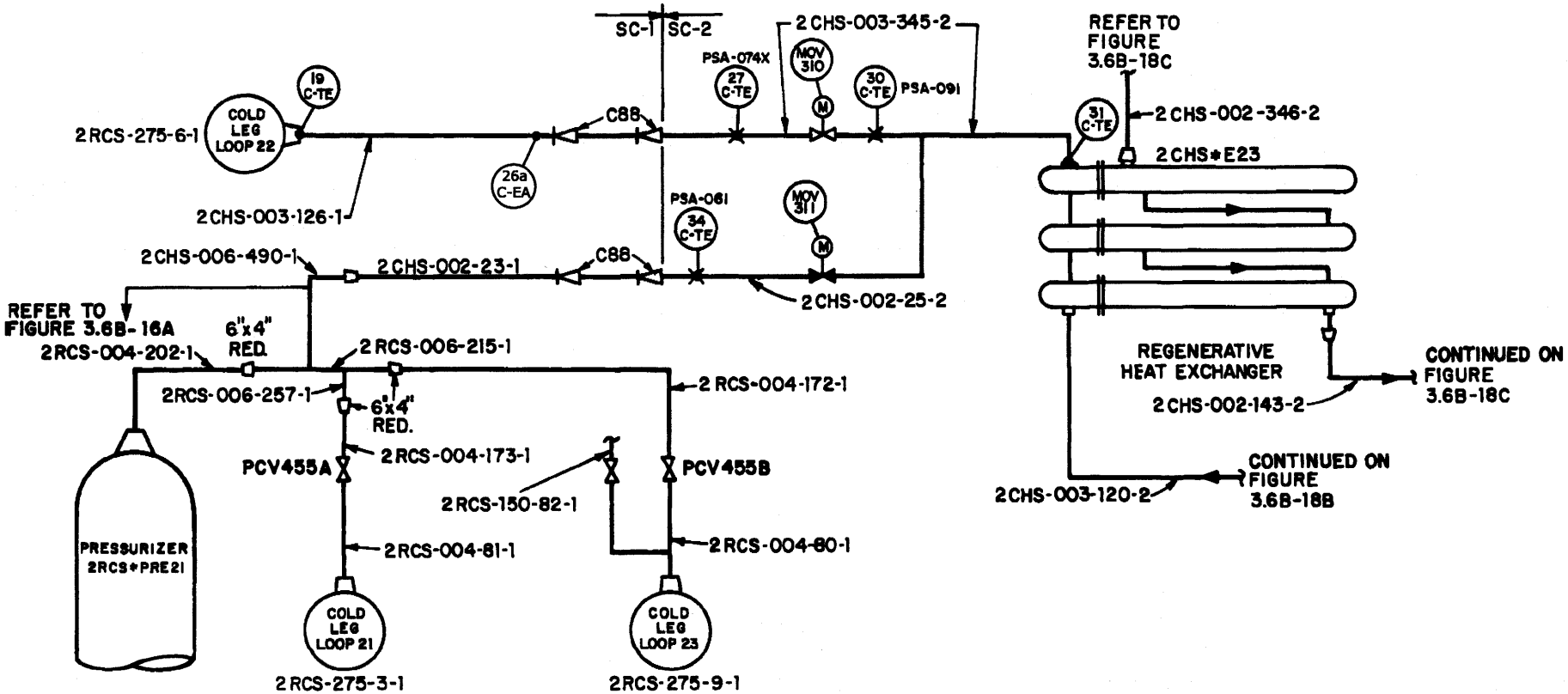

NOTES:

1. PIPING NOT TO SCALE, SHOWN DIAGRAMMATIC FOR CLARITY
2. BREAK DESIGNATION 2CHS-N-Z-X } (N X-Y) WHERE,
   - N → BREAK NUMBER
   - X → TYPE (C OR L)
   - Y → REASON (TE OR EA)
   - Z → LOCATION (C OR A)
3. BREAK REASON NOMINCLATURE } EA= EXCEEDS ALLOWABLE STRESS. TE= TERMINAL ENDS AT ANCHOR/EQUIPMENT/BRANCH CONN.
4. BREAKS ON THE RCS PIPING ARE SHOWN ON FIGURE 3.6B-16.

FIGURE 3.6B-18A

CHEM./CHARGING & VOL. CONTROL SYS. (CHS)
(PRESS./AUX.SPRAY & NORMAL CHARGING)
INSIDE REACTOR CONTAINMNET

BEAVER VALLEY POWER STATIION - UNIT 2
UPDATED FINAL SAFETY ANALYSIS REPORT

PREPARED ON THE CNSU CAEDDI SYSTEM

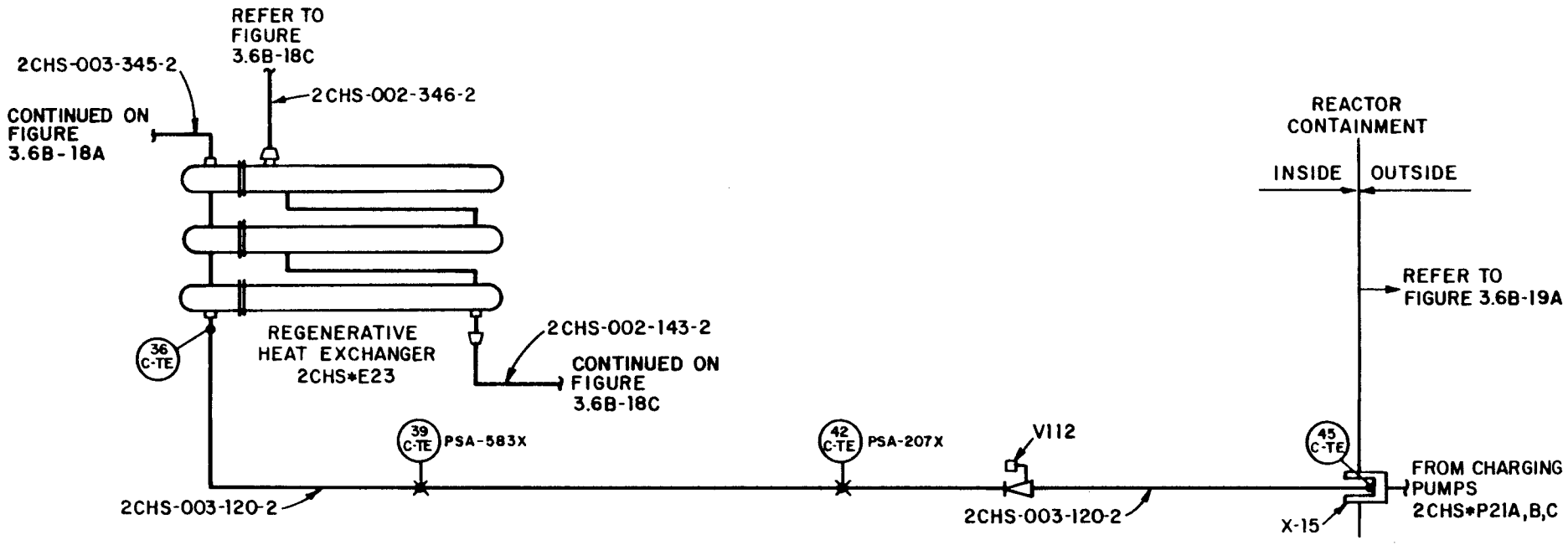

FIGURE 3.6B-18B
CHEM./CHARGING & VOL. CONTROL SYS.
(NORMAL CHARGING)
INSIDE REACTOR CONTAINMENT
BEAVER VALLEY POWER STATION-UNIT 2
FINAL SAFETY ANALYSIS REPORT

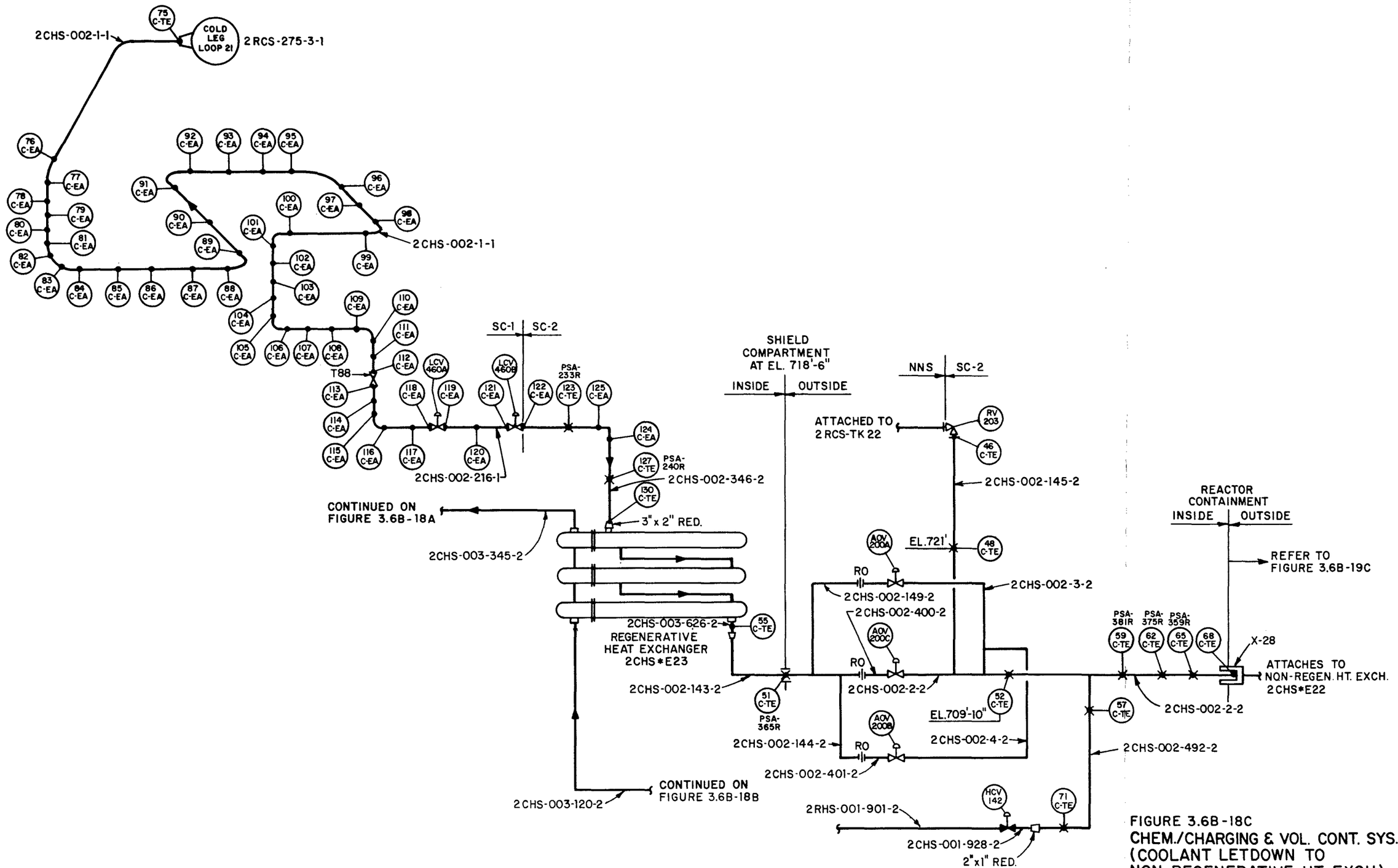

FIGURE 3.6B-18C
CHEM./CHARGING & VOL. CONT. SYS. (COOLANT LETDOWN TO NON-REGENERATIVE HT EXCH) INSIDE REACTOR CONTAINMENT
BEAVER VALLEY POWER STATION-UNIT 2
FINAL SAFETY ANALYSIS REPORT

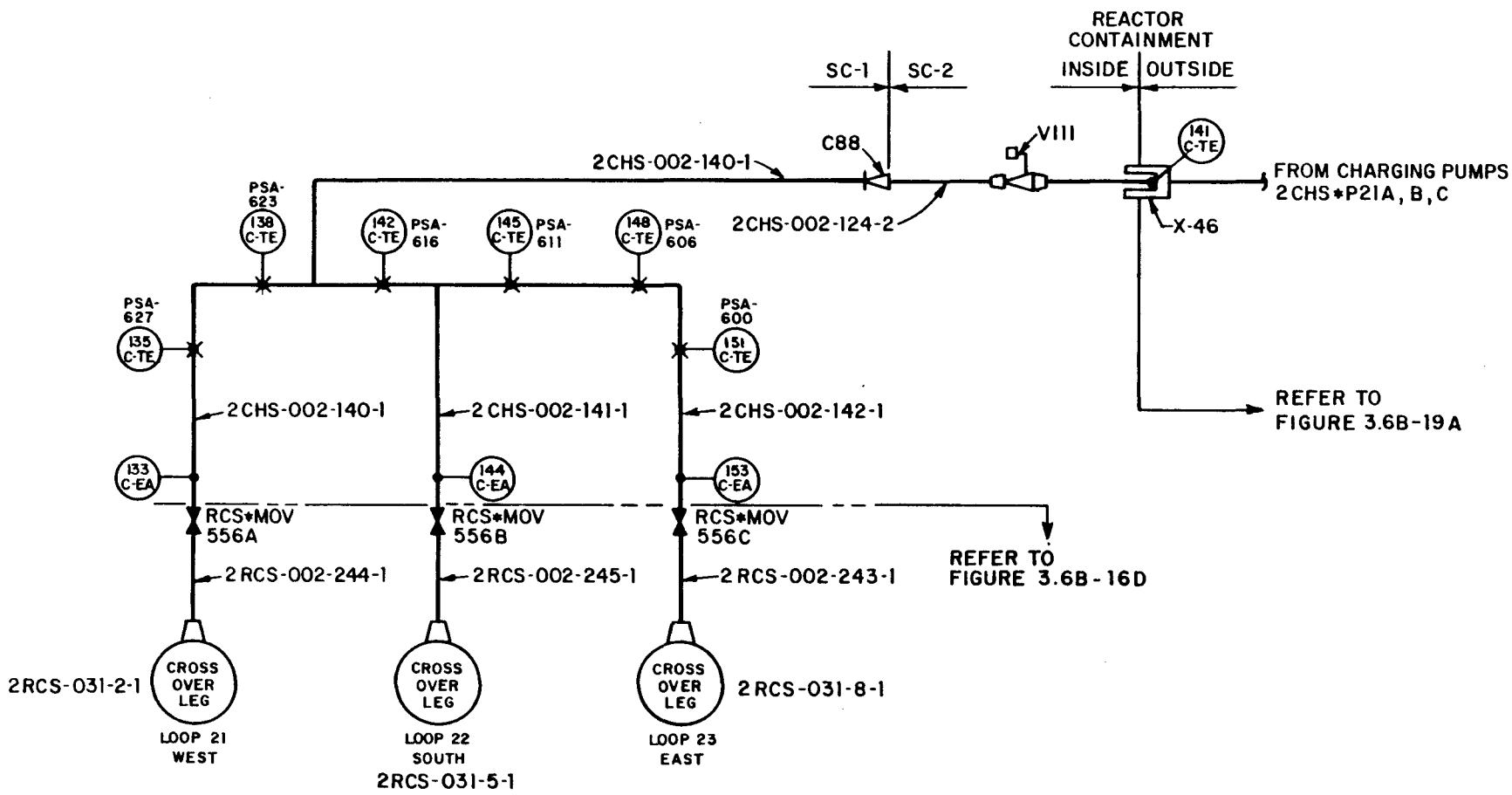

FIGURE 3.6B-18D
CHEM./CHARGING & VOL. CONTROL SYS.
(LOOP FILL PIPING)
INSIDE REACTOR CONTAINMENT
BEAVER VALLEY POWER STATION-UNIT 2
FINAL SAFETY ANALYSIS REPORT

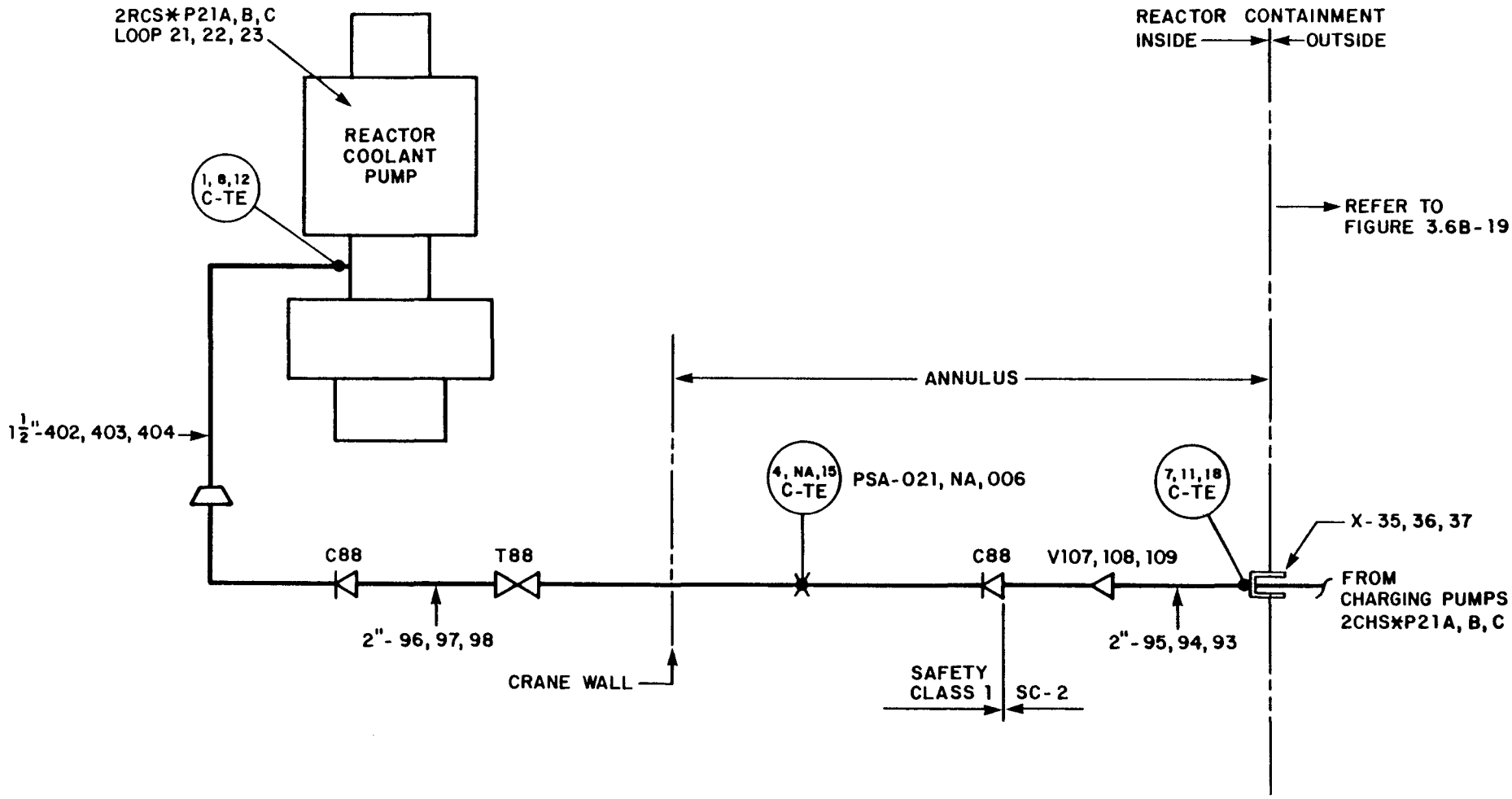

FIGURE 3.6B - 18E
CHEM./CHARGING & VOL. CONTROL SYS. (CHS)
(RCP SEAL WATER PIPING)
INSIDE REACTOR CONTAINMENT
BEAVER VALLEY POWER STATION - UNIT 2
FINAL SAFETY ANALYSIS REPORT

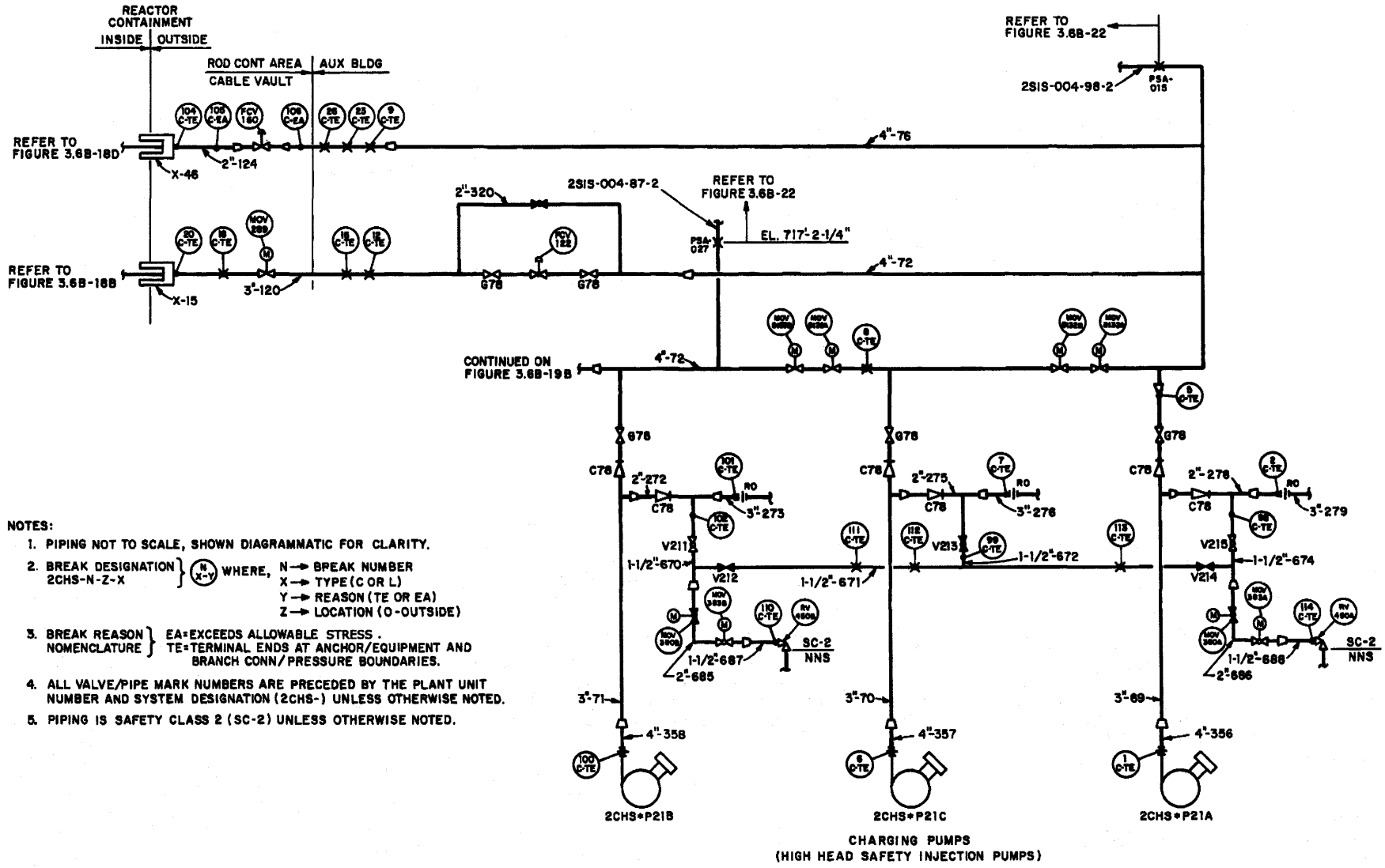

NOTES:

1. PIPING NOT TO SCALE, SHOWN DIAGRAMMATIC FOR CLARITY.
2. BREAK DESIGNATION 2CHS-N-Z-X } (N X-Y) WHERE, N → BREAK NUMBER; X → TYPE (C OR L); Y → REASON (TE OR EA); Z → LOCATION (O-OUTSIDE)
3. BREAK REASON NOMENCLATURE } EA=EXCEEDS ALLOWABLE STRESS. TE=TERMINAL ENDS AT ANCHOR/EQUIPMENT AND BRANCH CONN/PRESSURE BOUNDARIES.
4. ALL VALVE/PIPE MARK NUMBERS ARE PRECEDED BY THE PLANT UNIT NUMBER AND SYSTEM DESIGNATION (2CHS-) UNLESS OTHERWISE NOTED.
5. PIPING IS SAFETY CLASS 2 (SC-2) UNLESS OTHERWISE NOTED.

FIGURE 3.6B-19A

CHEM./CHARGING & VOL. CONT. SYS.(CHS)
HHSI CHARGING PUMPS
OUTSIDE REACTOR CONTAINMENT

BEAVER VALLEY POWER STATION - UNIT 2
UPDATED FINAL SAFETY ANALYSIS REPORT

REV. 19

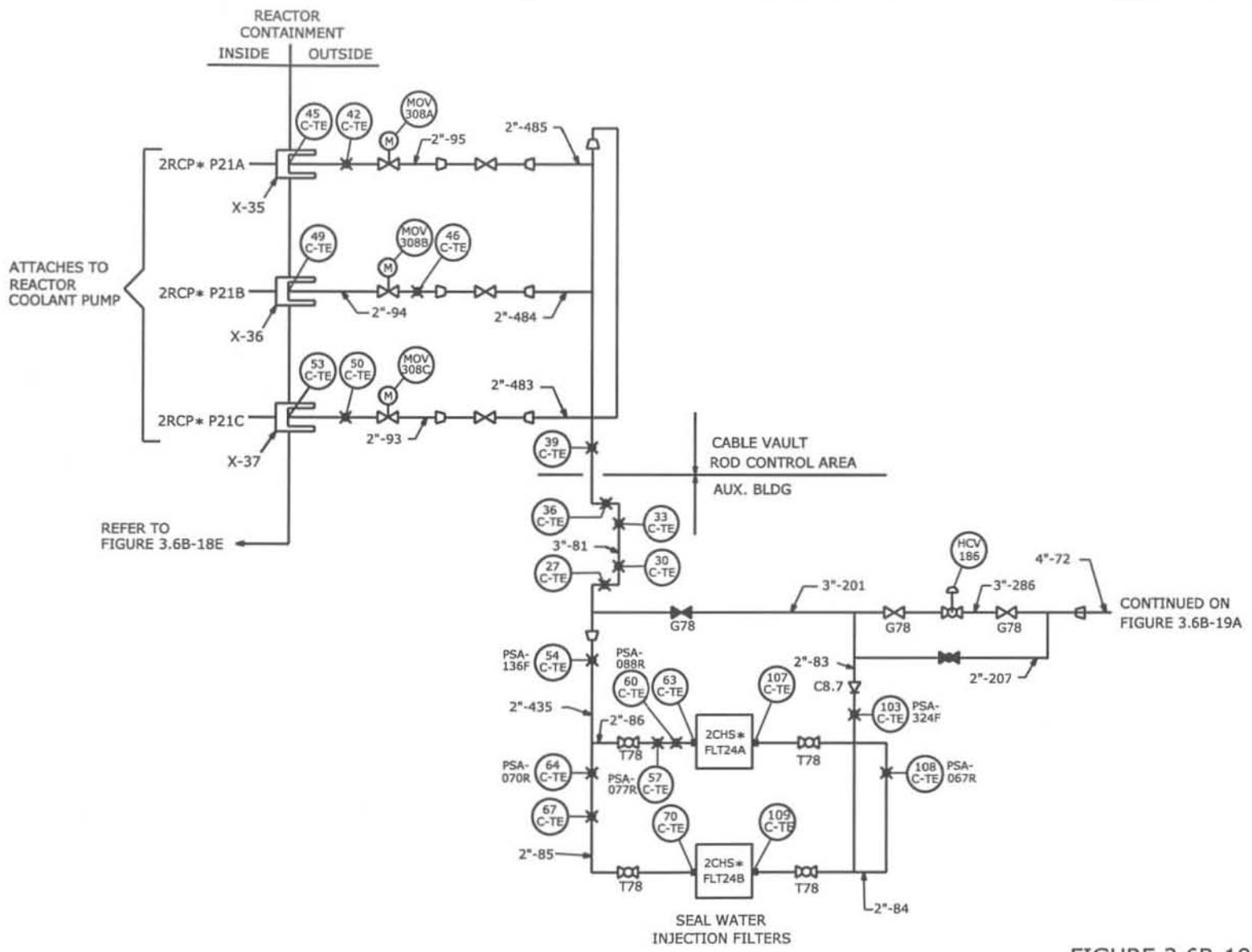

FIGURE 3.6B-19B

CHEM./CHARGING & VOL. CONT. SYS.(CHS)
RCP SEAL WATER PIPING
OUTSIDE REACTOR CONTAINMENT

BEAVER VALLEY POWER STATION - UNIT 2
UPDATED FINAL SAFETY ANALYSIS REPORT

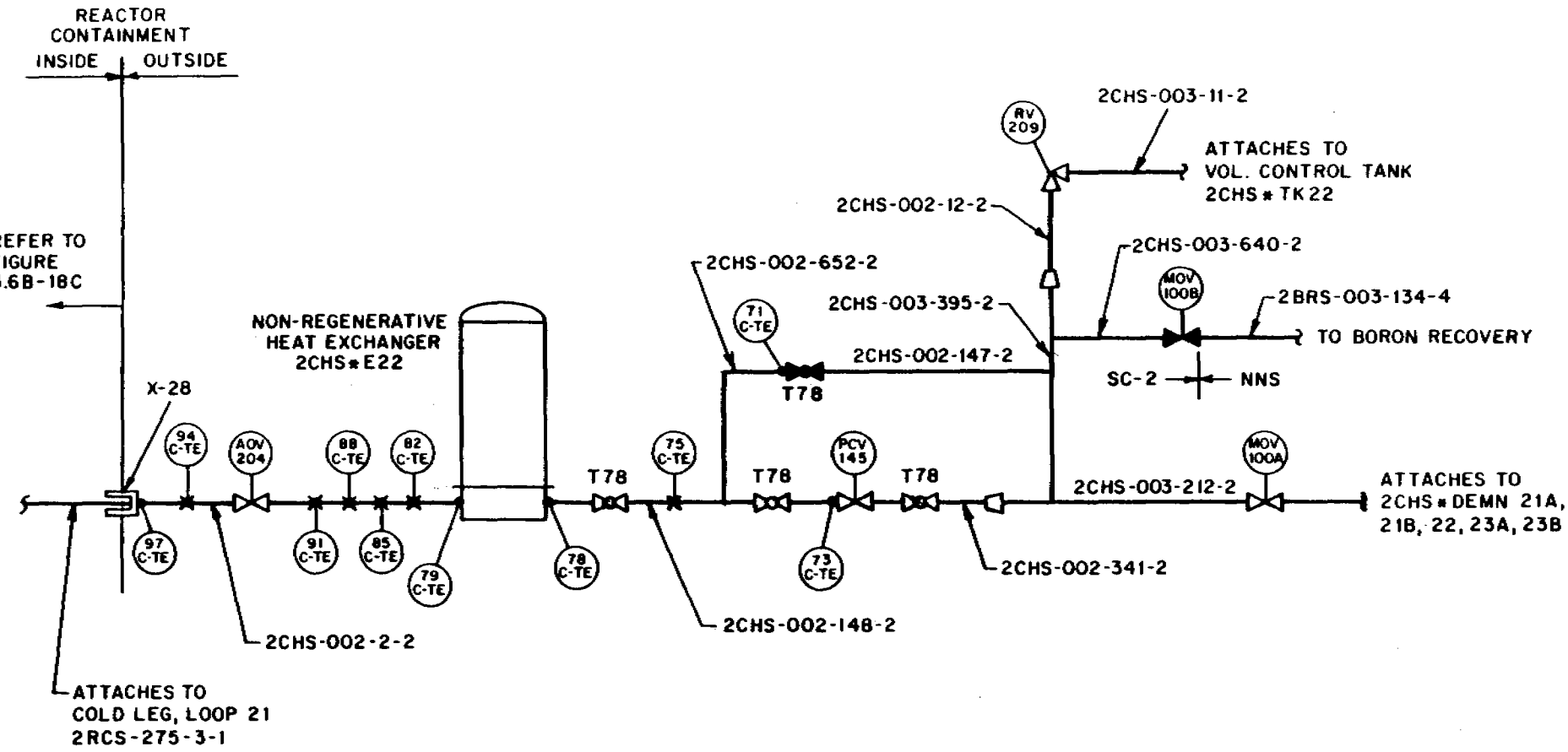

FIGURE 3.6B-19C
CHEM./CHARGING & VOL. CONT. SYS. (CHS)
(COOLANT LETDOWN)
OUTSIDE REACTOR CONTAINMENT
BEAVER VALLEY POWER STATION-UNIT 2
FINAL SAFETY ANALYSIS REPORT

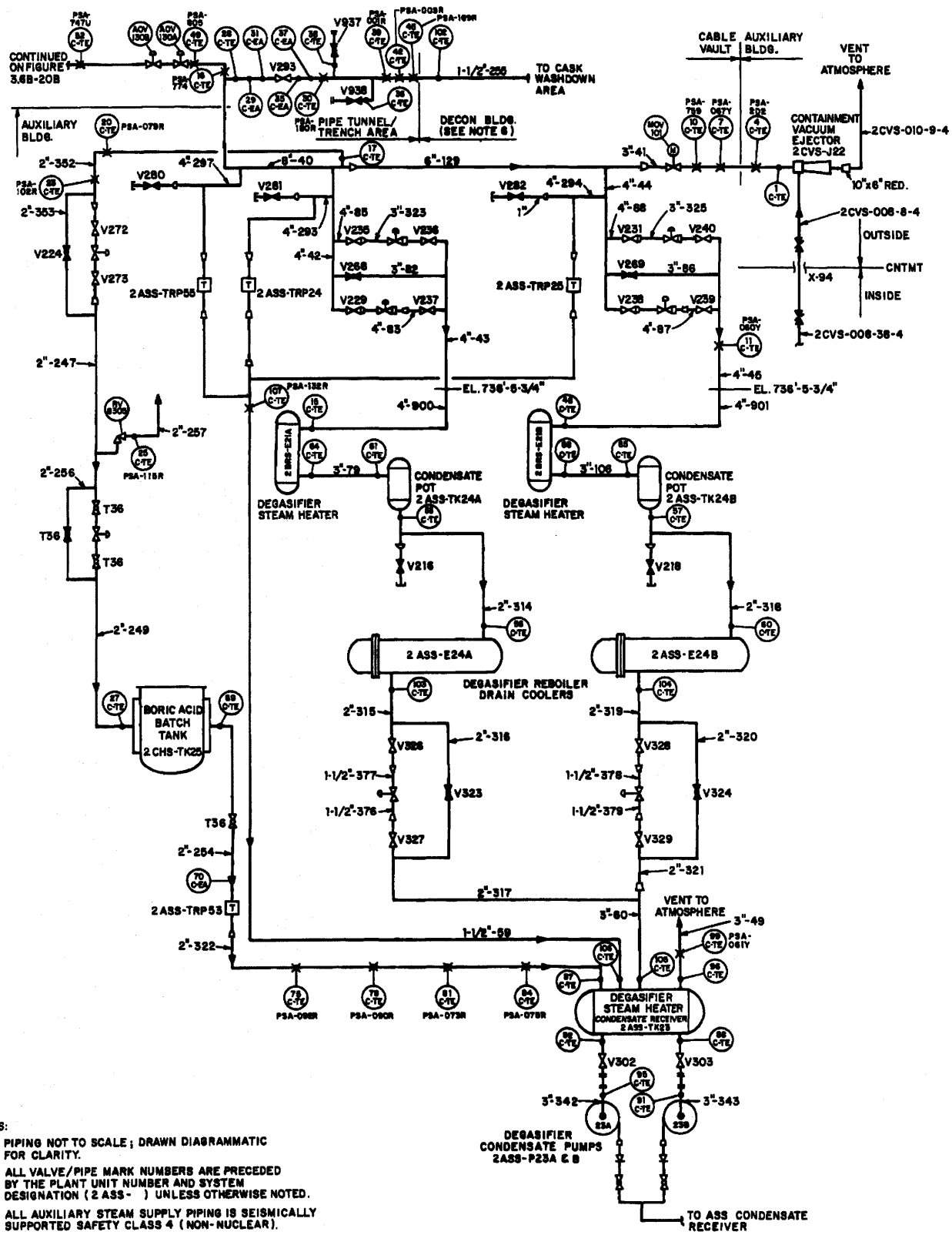

NOTES:

1. PIPING NOT TO SCALE; DRAWN DIAGRAMMATIC FOR CLARITY.
2. ALL VALVE/PIPE MARK NUMBERS ARE PRECEDED BY THE PLANT UNIT NUMBER AND SYSTEM DESIGNATION (2 ASS-) UNLESS OTHERWISE NOTED.
3. ALL AUXILIARY STEAM SUPPLY PIPING IS SEISMICALLY SUPPORTED SAFETY CLASS 4 (NON-NUCLEAR).
4. BREAK DESIGNATION 2 ASS-N-Z-X } (N X-Y) WHERE, N= BREAK NUMBER; X= BREAK TYPE (C OR L); Y= REASON (TE OR EA); Z= LOCATION (O-OUTSIDE)
5. BREAK REASON NOMINCLATURE } EA= LOCATION EXCEEDS ALLOWABLE STRESS. TE= TERMINAL END AT ANCHOR/EQUIPMENT OR BRANCH CONNECTIONS
6. THERE IS NO SAFETY RELATED EQUIPMENT LOCATED IN THE DECONTAMINATION BLDG. THEREFORE, NO PIPE BREAKS HAVE BEEN POSTULATED FOR ASS PIPING IN THIS AREA.

FIGURE 3.6B-20A

AUXILIARY STEAM SUPPLY (ASS) SYSTEM OUTSIDE REACTOR CONTAINMENT

BEAVER VALLEY POWER STATION-UNIT 2
UPDATED FINAL SAFETY ANALYSIS REPORT

PREPARED ON THE CNSU CAEDDI SYSTEM

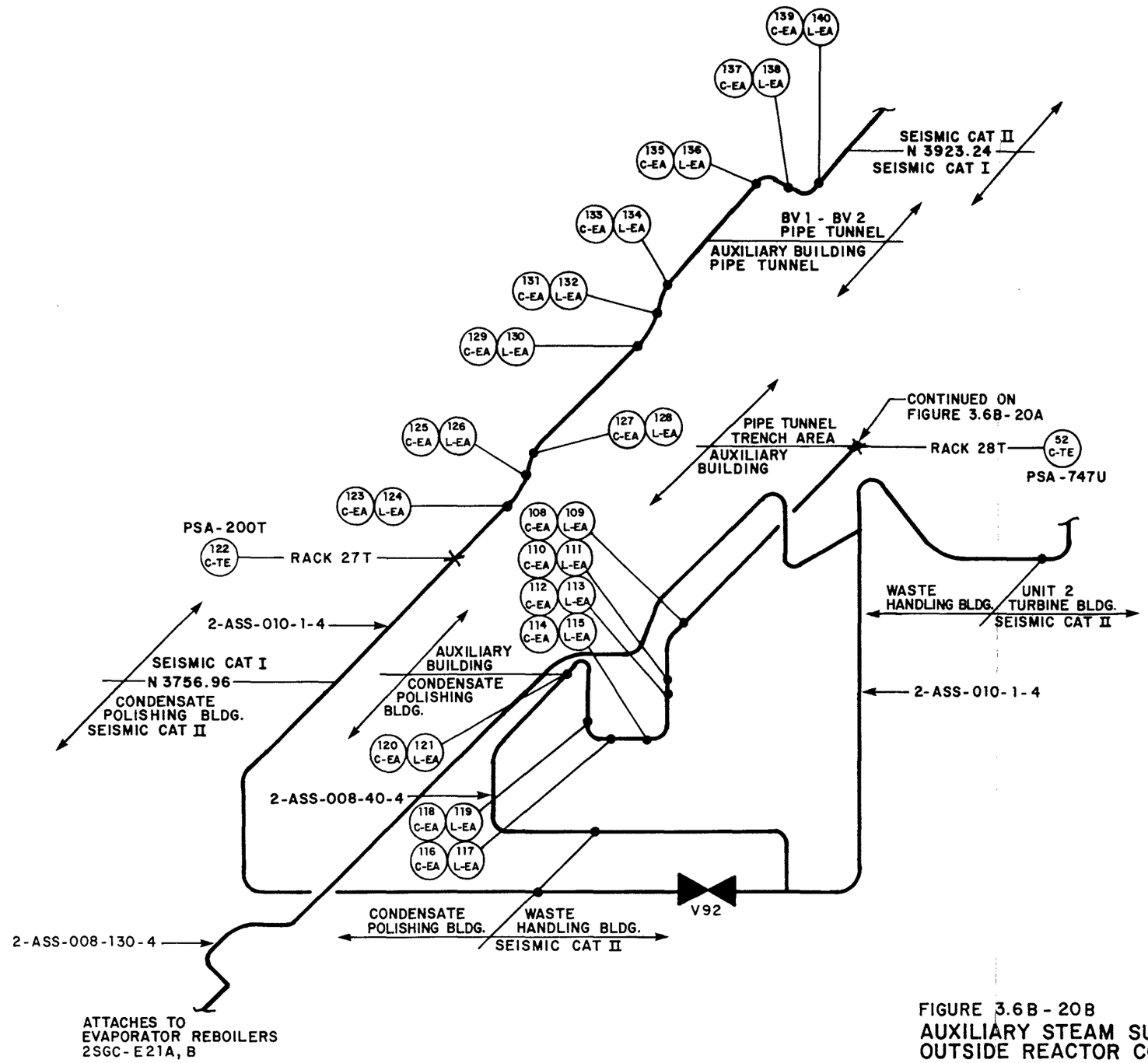

FIGURE 3.6B-20B
AUXILIARY STEAM SUPPLY (ASS) SYSTEM
OUTSIDE REACTOR CONTAINMENT
BEAVER VALLEY POWER STATION - UNIT 2
FINAL SAFETY ANALYSIS REPORT

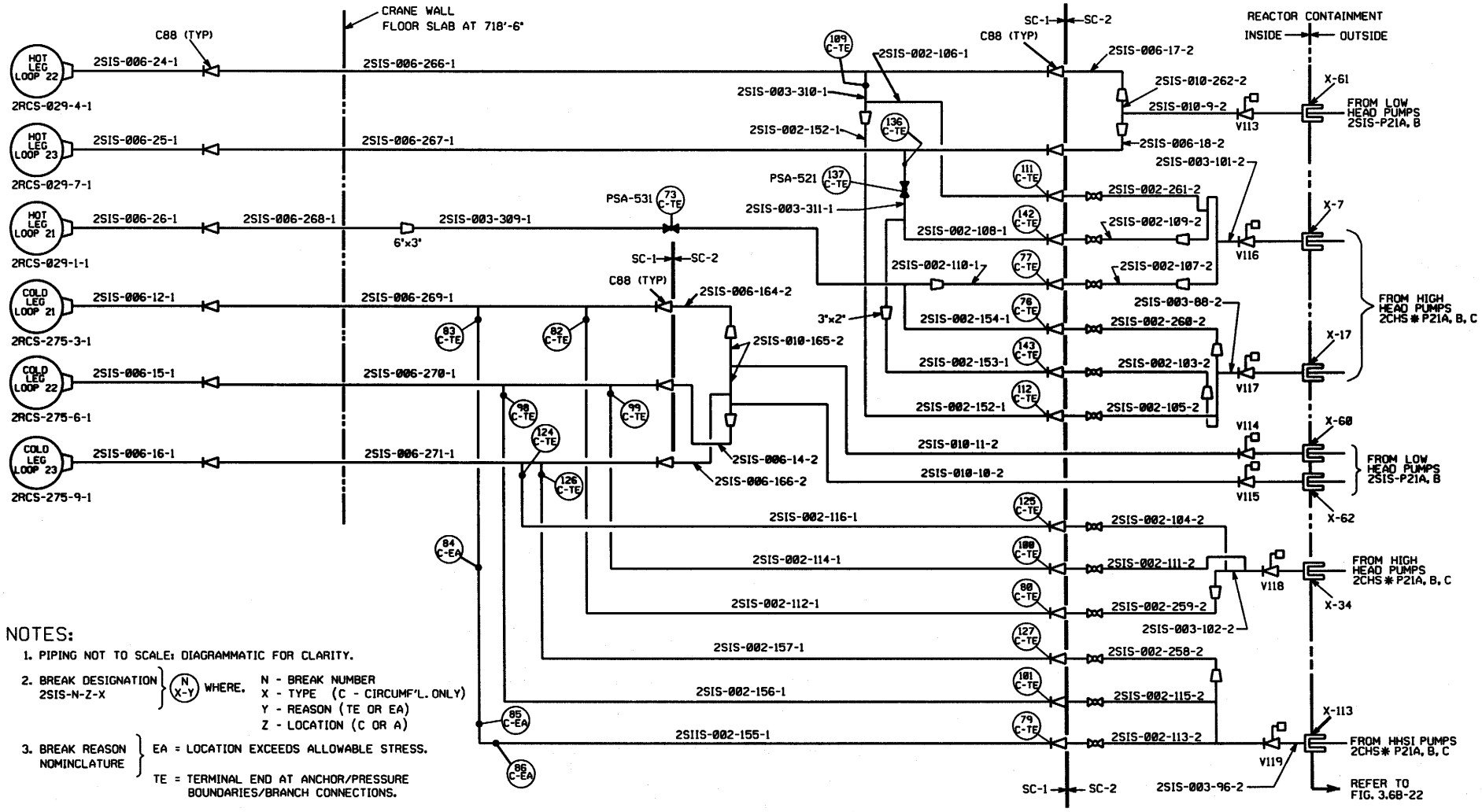

NOTES:

1. PIPING NOT TO SCALE: DIAGRAMMATIC FOR CLARITY.
2. BREAK DESIGNATION 2SIS-N-Z-X } (N X-Y) WHERE, N - BREAK NUMBER; X - TYPE (C - CIRCUMF'L. ONLY); Y - REASON (TE OR EA); Z - LOCATION (C OR A)
3. BREAK REASON NOMINCLATURE } EA = LOCATION EXCEEDS ALLOWABLE STRESS. TE = TERMINAL END AT ANCHOR/PRESSURE BOUNDARIES/BRANCH CONNECTIONS.

FIGURE 3.6B-21A

SAFETY INJECTION SYSTEM (SIS)
LOW/HIGH HEAD
INSIDE REACTOR CONTAINMENT

BEAVER VALLEY POWER STATION - UNIT 2
UPDATED FINAL SAFETY ANALYSIS REPORT

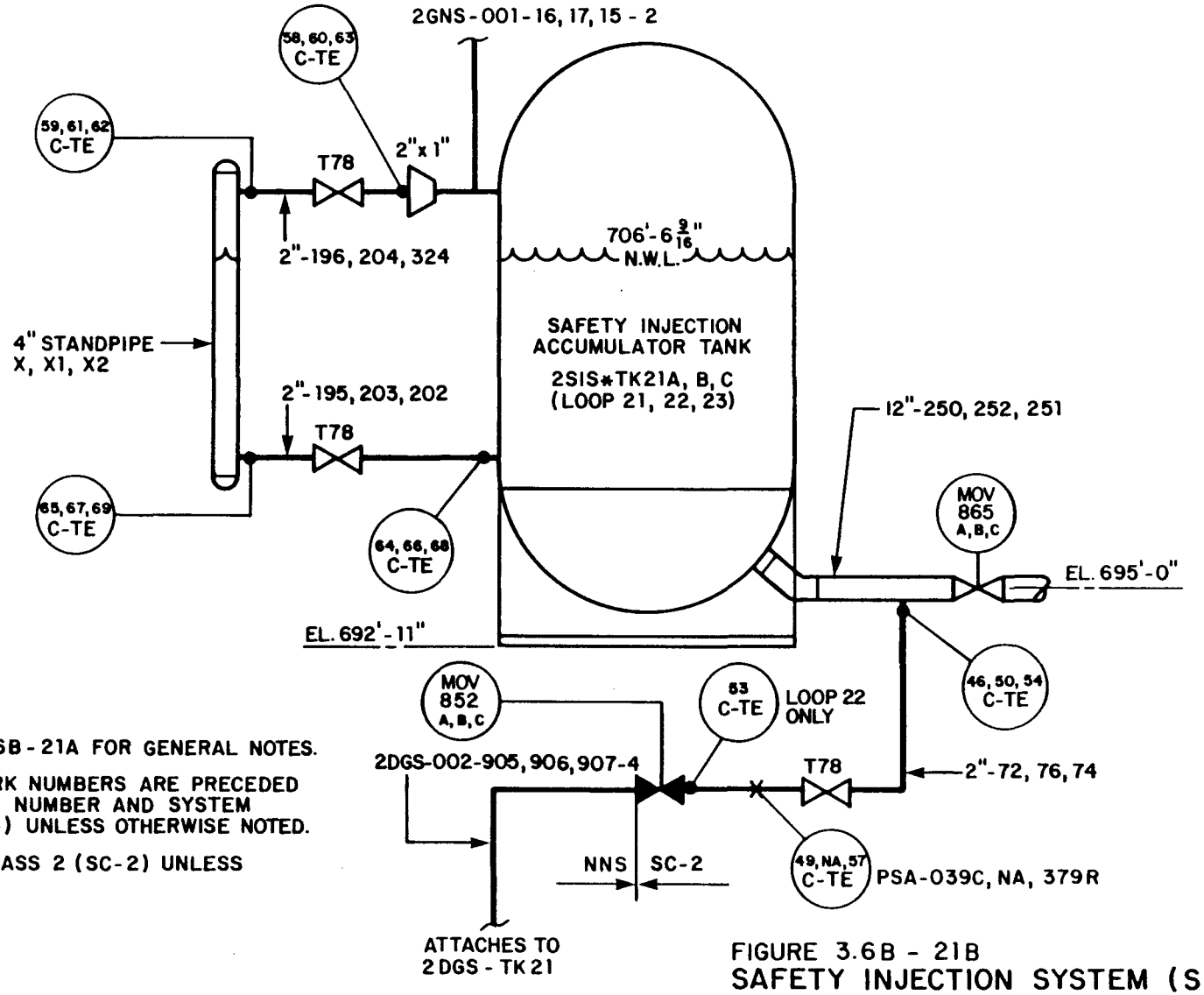

NOTES:

1. REFER TO FIGURE 3.6B-21A FOR GENERAL NOTES.
2. ALL VALVE/PIPE MARK NUMBERS ARE PRECEDED BY THE PLANT UNIT NUMBER AND SYSTEM DESIGNATION (2 SIS-) UNLESS OTHERWISE NOTED.
3. PIPING IS SAFETY CLASS 2 (SC-2) UNLESS OTHERWISE NOTED.

FIGURE 3.6B - 21B
SAFETY INJECTION SYSTEM (SIS)
LOW HEAD ACCUMULATOR
INSIDE REACTOR CONTAINMENT

BEAVER VALLEY POWER STATION - UNIT 2
FINAL SAFETY ANALYSIS REPORT

REV. 18

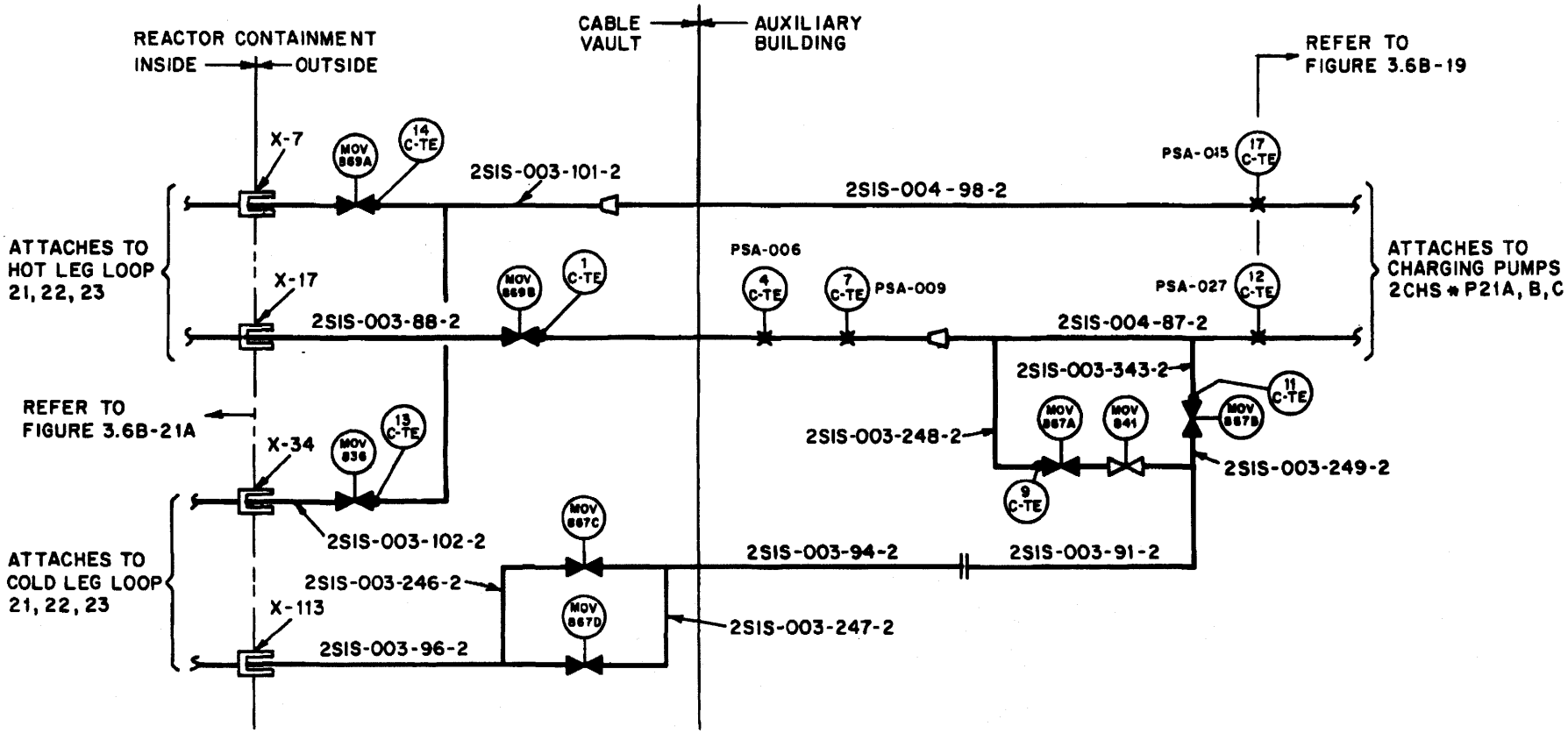

NOTES:

1. PIPING NOT TO SCALE; DIAGRAMMATIC FOR CLARITY.
2. BREAK DESIGNATION 2SIS-N-Z-X } (N X-Y) WHERE,
   - N → BREAK NUMBER
   - X → TYPE (C OR L)
   - Y → REASON (TE OR EA)
   - Z → LOCATION (O-OUTSIDE)
3. BREAK REASON NOMINCLATURE }
   - EA = EXCEEDS ALLOWABLE STRESS.
   - TE = TERMINAL ENDS AT EITHER ANCHORS OR PRESSURE BOUNDARIES.

FIGURE 3.6B-22

SAFETY INJECTION SYSTEM (SIS) OUTSIDE REACTOR CONTAINMENT

BEAVER VALLEY POWER STATION - UNIT 2
UPDATED FINAL SAFETY ANALYSIS REPORT

PREPARED ON THE CNSU CAEDDI SYSTEM

REV. 18

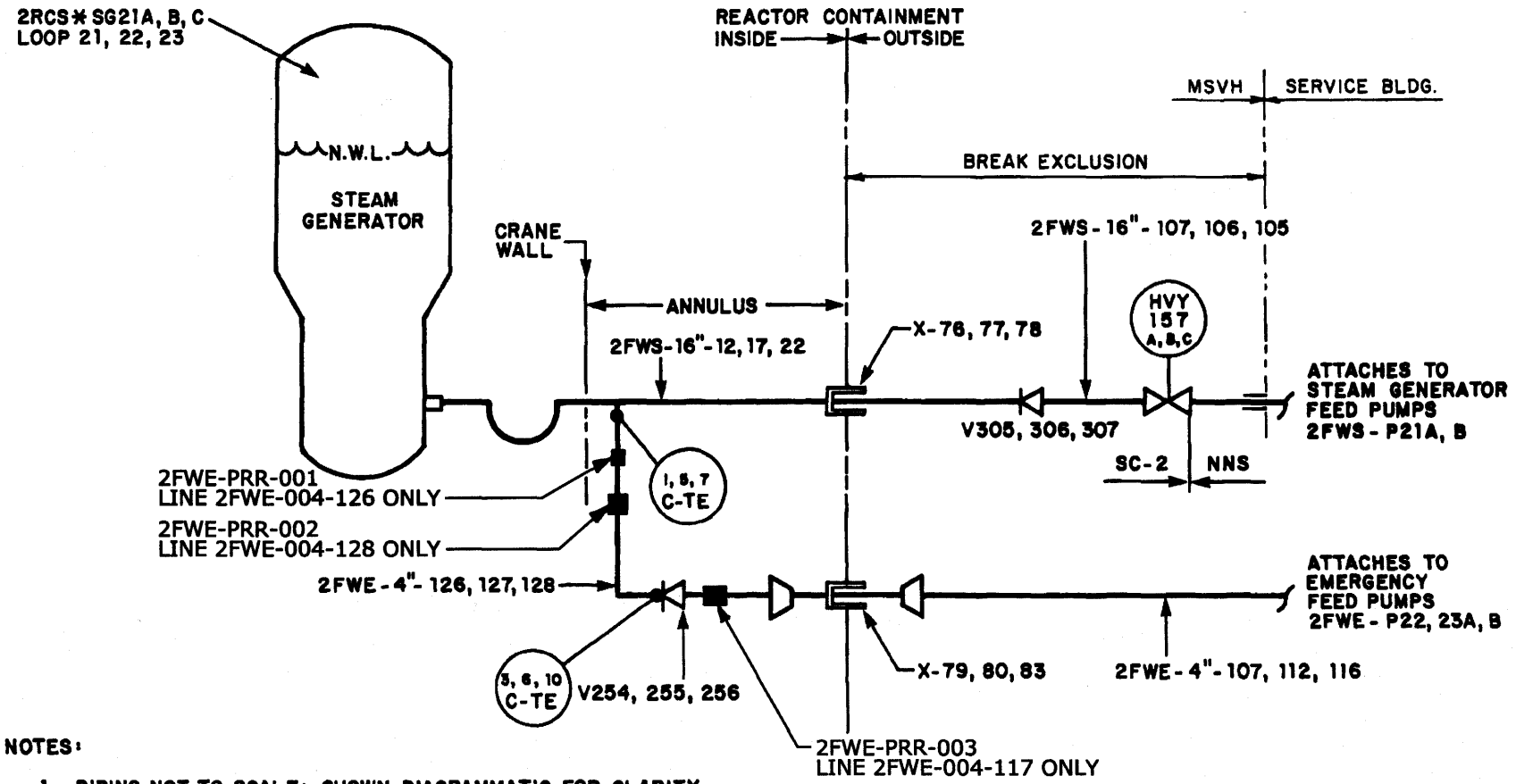

NOTES:

1. PIPING NOT TO SCALE; SHOWN DIAGRAMMATIC FOR CLARITY.
2. BREAK DESIGNATION 2FWE-N-Z-X } (N X-Y) WHERE, N → BREAK NUMBER; X → TYPE (C or L); Y → REASON (EA or TE); Z → LOCATION (C or A)
3. BREAK REASON NOMINCLATURE } EA = LOCATION EXCEEDS ALLOWABLE STRESS; TE = TERMINAL END @ BRANCH CONN./PRESSURE BOUNDARIES
4. PIPING SHOWN IS SAFETY CLASS 2.
5. BREAKS ON THE FWS PIPING ARE SHOWN ON FIGURE 3.6B-12.

FIGURE 3.6B-23

EMERGENCY FEEDWATER SYSTEM (FWE) INSIDE REACTOR CONTAINMENT

BEAVER VALLEY POWER STATION - UNIT 2
UPDATED FINAL SAFETY ANALYSIS REPORT

PREPARED ON THE CNSU CAEDDI SYSTEM

REV. 18

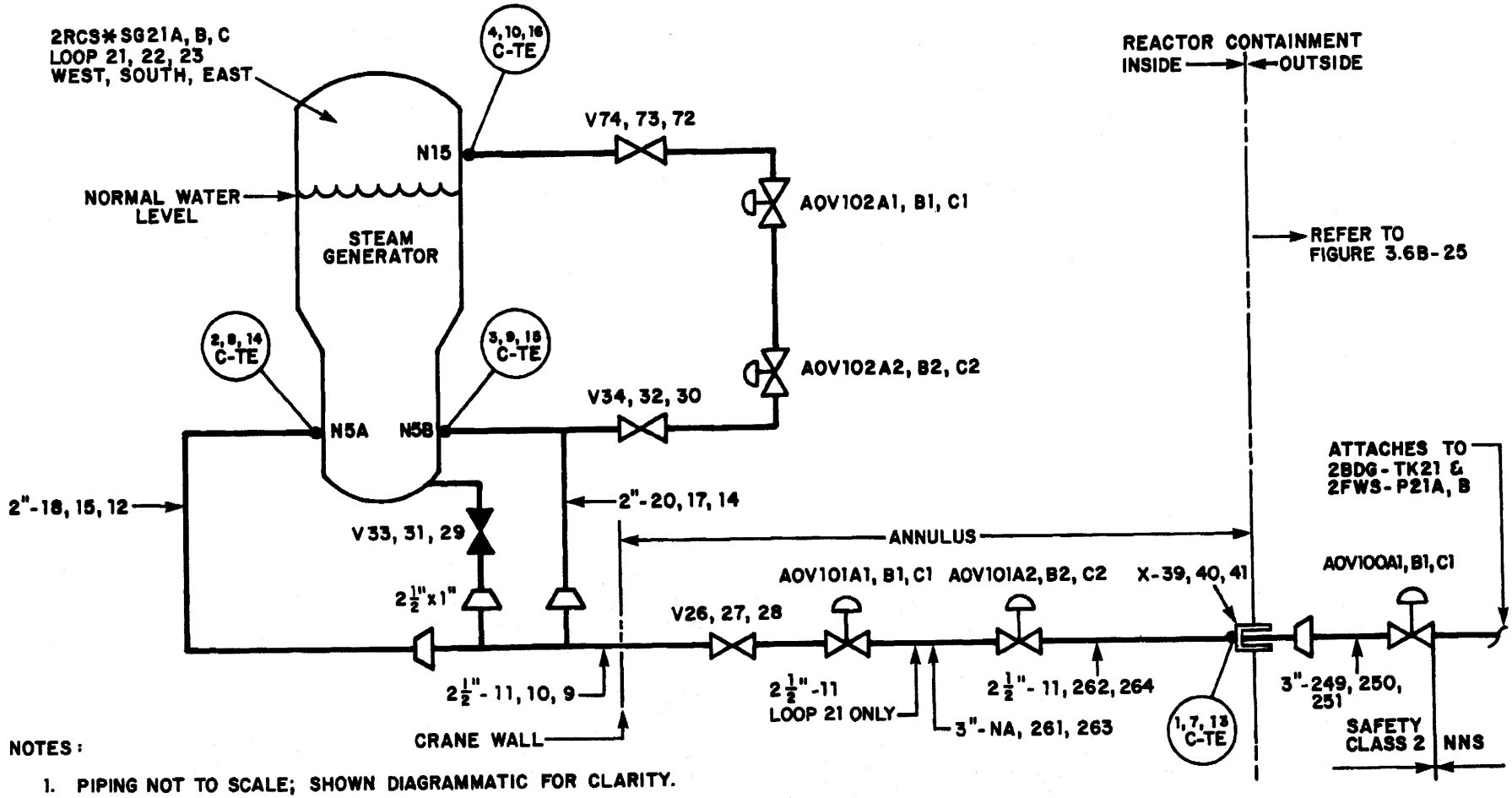

NOTES:

1. PIPING NOT TO SCALE; SHOWN DIAGRAMMATIC FOR CLARITY.
2. BREAK DESIGNATION 2BDG - N - Z - X } (N / X-Y) WHERE, N → BREAK NUMBER; X → CIRCUMFERENTIAL ONLY; Y → REASON (EA or TE); Z → LOCATION (C or A)
3. BREAK REASON NOMINCLATURE } EA = LOCATION EXCEEDS ALLOWABLE STRESS. TE = TERMINAL END @ ANCHOR/EQUIP/BRANCH CONNECTIONS.
4. ALL VALVE/PIPE MARK NUMBERS ARE PRECEDED BY THE PLANT UNIT NUMBER AND SYSTEM DESIGNATION (2BDG-) UNLESS OTHERWISE NOTED.

FIGURE 3.6B-24

STEAM GENERATOR BLOWDOWN SYSTEM (BLG) INSIDE REACTOR CONTAINMENT

BEAVER VALLEY POWER STATION - UNIT 2
UPDATED FINAL SAFETY ANALYSIS REPORT

PREPARED ON THE CNSU CAEDDI SYSTEM

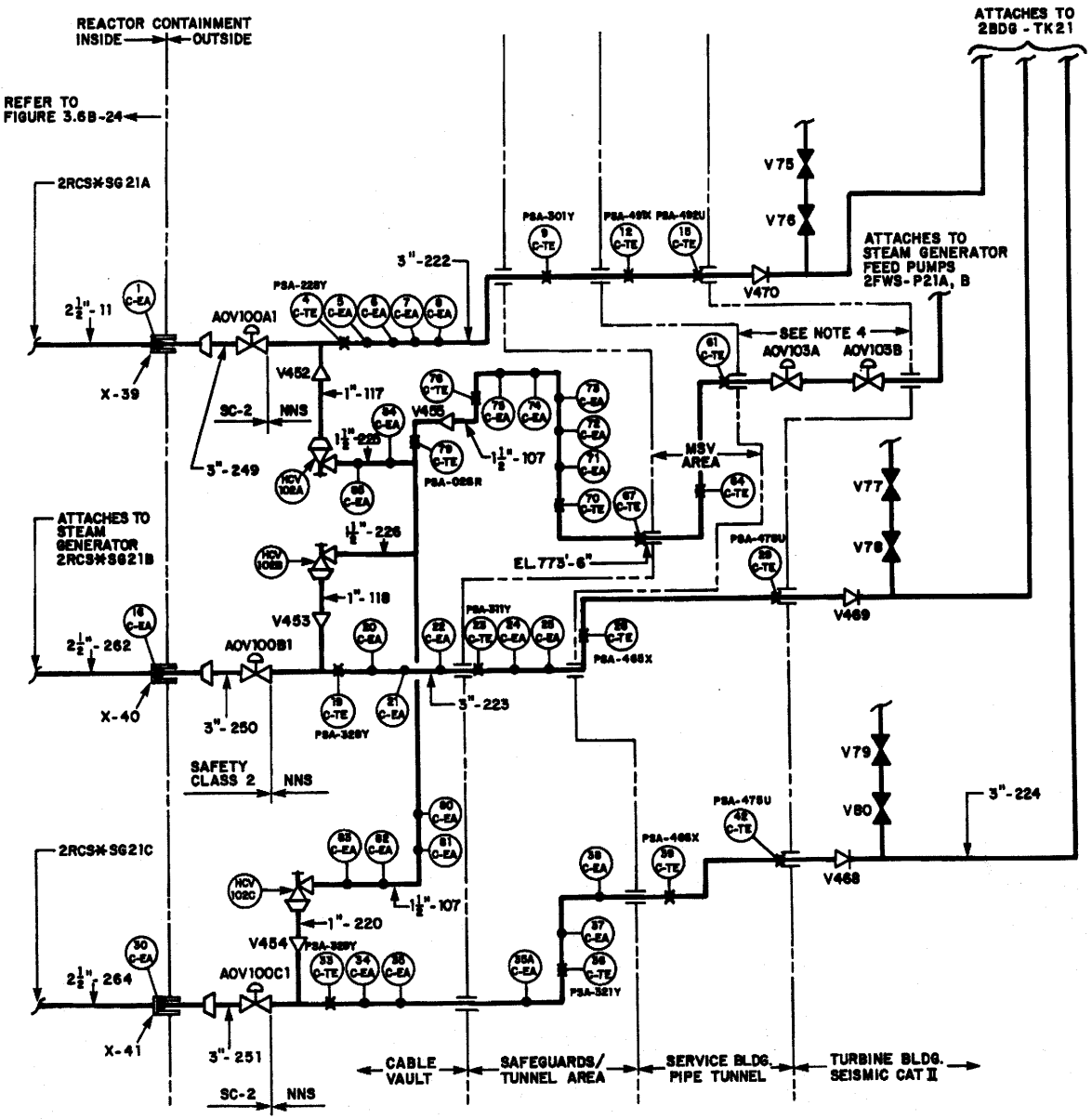

NOTES:

1. PIPING NOT TO SCALE; DIAGRAMMATIC FOR CLARITY.
2. BREAK DESIGNATION 2BDG - N - Z - X } (N X-Y) WHERE, N → BREAK NUMBER; X → TYPE (C- CIRCUMFERENTIAL); Y → REASON (EA or TE); Z → LOCATION (O - OUTSIDE)
3. BREAK REASON NOMINCLATURE } EA = LOCATION EXCEEDS ALLOWABLE STRESS. TE = TERMINAL END @ ANCHOR/EQUIP/BRANCH CONNECTIONS.
4. FOR 2BDG-150-107-4 IN THE SERVICE BLDG., 18 CIRCUMFERENTIAL BREAKS ARE POSTULATED AT EACH FITTING ALONG THE PIPE RUN.

FIGURE 3.6B-25A

STEAM GENERATOR BLOWDOWN SYSTEM (BDG) OUTSIDE REACTOR CONTAINMENT

BEAVER VALLEY POWER STATION - UNIT 2
UPDATED FINAL SAFETY ANALYSIS REPORT

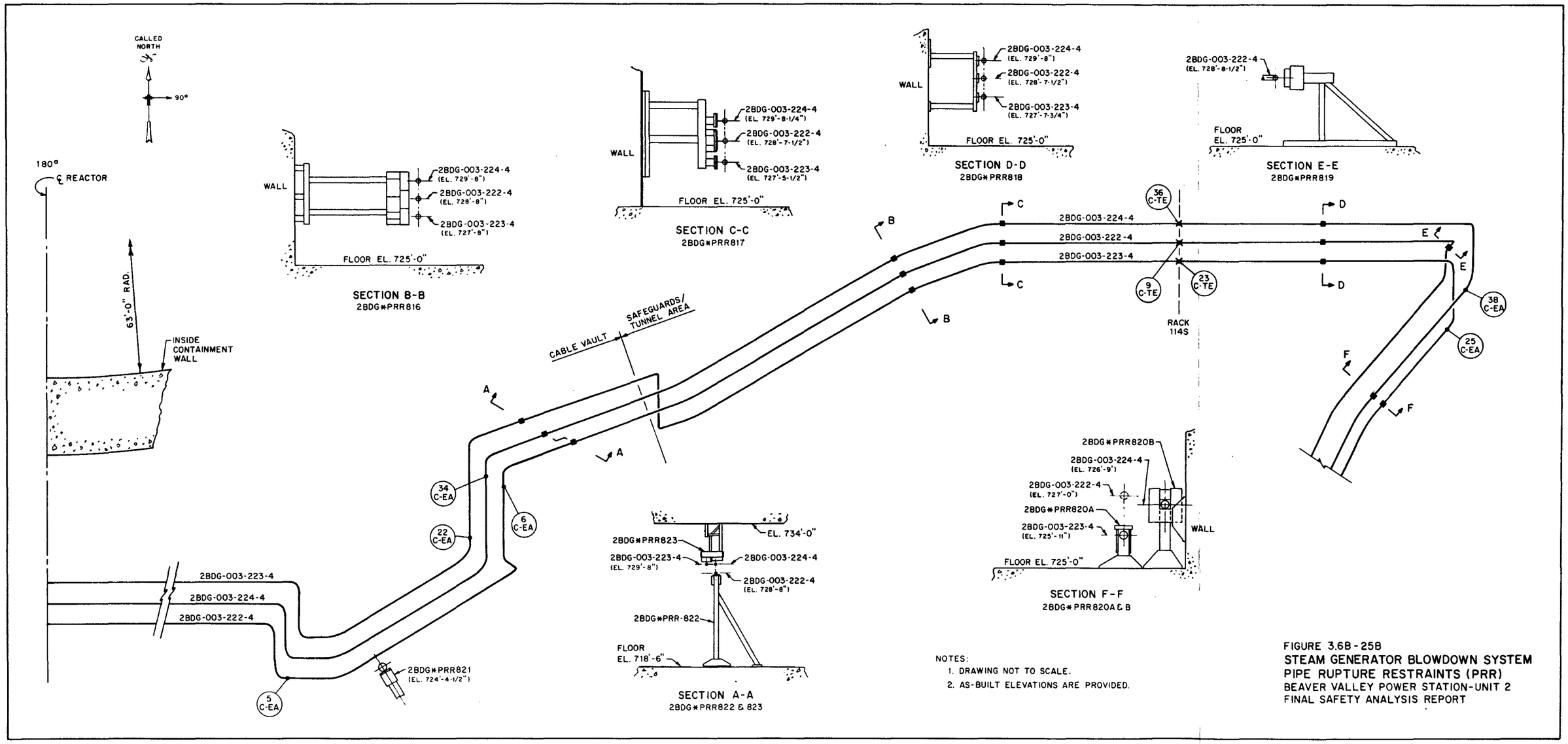

NOTES:
1. DRAWING NOT TO SCALE.
2. AS-BUILT ELEVATIONS ARE PROVIDED.

FIGURE 3.6B-25B
STEAM GENERATOR BLOWDOWN SYSTEM
PIPE RUPTURE RESTRAINTS (PRR)
BEAVER VALLEY POWER STATION-UNIT 2
FINAL SAFETY ANALYSIS REPORT

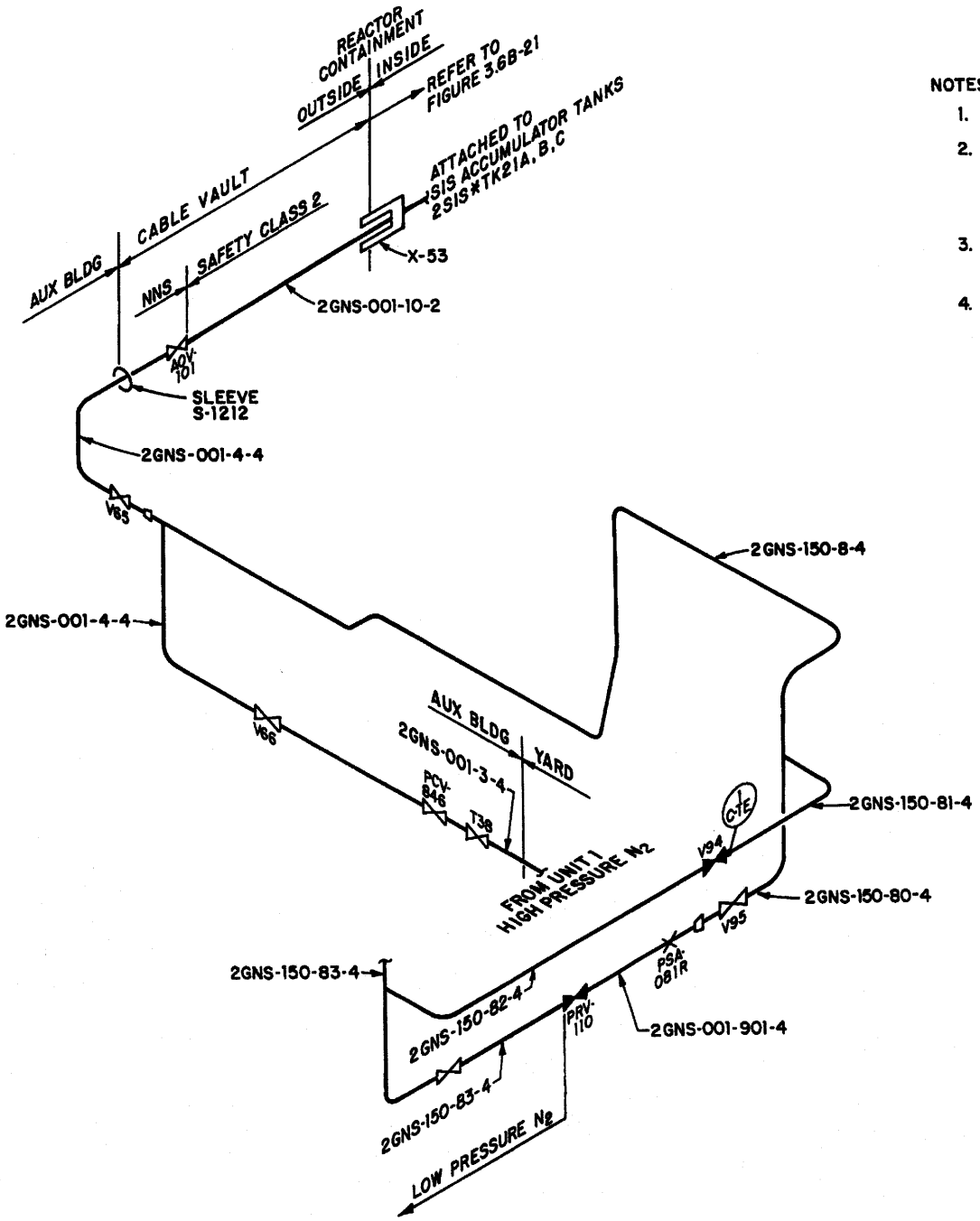

NOTES:

1. PIPING NOT TO SCALE
2. BREAK DESIGNATION 2GNS-N-Z-X } (N X-Y) WHERE, N → BREAK NUMBER; X → TYPE (C-CIRCUMFERENTIAL ONLY); Y → REASON (TE OR EA); Z → LOCATION (O-OUTSIDE)
3. BREAK REASON NOMINCLATURE } EA = LOCATION EXCEEDS ALLOWABLE STRESS. TE = TERMINAL END AT PRESSURE BOUNDARY.
4. THE SEGMENTS OF THE GNS SYSTEM IN THE AUX BLDG/CABLE VAULT AREA ARE SEISMICALLY SUPPORTED NON-NUCLEAR SAFETY CLASS (SC4) PIPING.

FIGURE 3.6B-26

NITROGEN GAS SUPPLY (GNS) SYSTEM OUTSIDE REACTOR CONTAINMENT

BEAVER VALLEY POWER STATION - UNIT 2
UPDATED FINAL SAFETY ANALYSIS REPORT

CASE I OUTGOING LINES WITH NORMALLY CLOSED VALVE

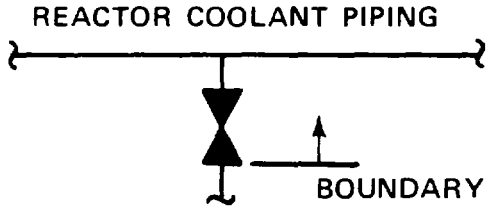

NOTE: PRESSURIZER SAFETY VALVES ARE INCLUDED UNDER THIS CASE.

CASE II OUTGOING LINES WITH NORMALLY OPEN VALVES

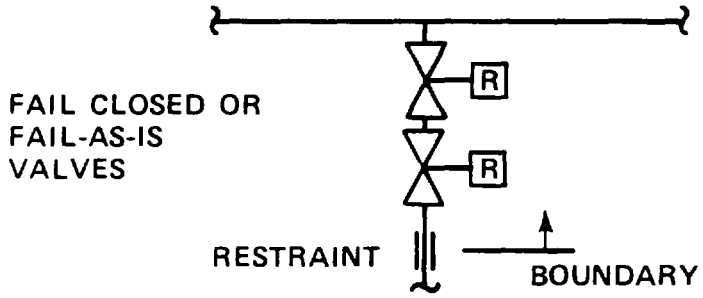

NOTE: THE REACTOR COOLANT PUMP NO. 1 SEAL IS ASSUMED TO BE EQUIVALENT TO THE FIRST VALVE.

CASE III INCOMING LINES NORMALLY WITH FLOW

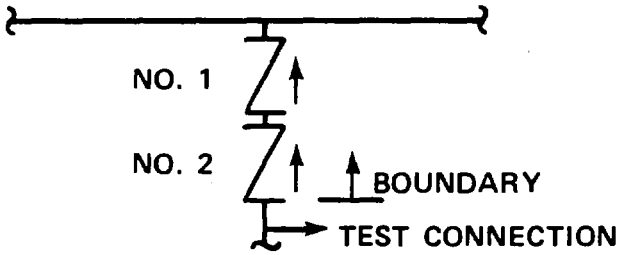

CASE IV INCOMING LINES NORMALLY WITHOUT FLOW

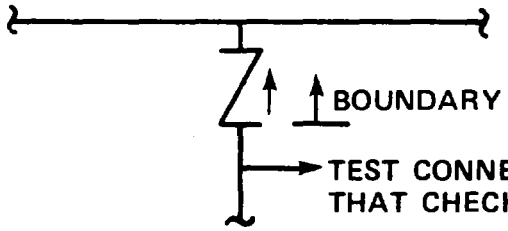

CASE V ALL INSTRUMENTATION TUBING AND INSTRUMENTS CONNECTED DIRECTLY TO THE REACTOR COOLANT SYSTEM IS CONSIDERED AS A BOUNDARY. HOWEVER, A BREAK WITHIN THIS BOUNDARY RESULTS IN A RELATIVELY SMALL FLOW WHICH CAN NORMALLY BE MADE UP WITH THE CHARGING SYSTEM.

FIGURE 3.6N-2
LOSS OF REACTOR COOLANT
ACCIDENT BOUNDARY LIMITS
BEAVER VALLEY POWER STATION-UNIT 2
FINAL SAFETY ANALYSIS REPORT

3.7 SEISMIC DESIGN

Sections whose identification numbers include the letter B contain material within balance-of-plant (BOP) scope, while sections whose identification numbers include the letter N contain material within the nuclear steam supply system scope (including material pertaining to the reactor coolant loop piping out to the first weld of any connecting piping).

3.7B.1 Seismic Input

3.7B.1.1 Design Response Spectra

The horizontal design response spectra used for seismic analysis are shown on Figures 3.7B-1 and 3.7B-2. The spectra for the safe shutdown earthquake (SSE) correspond to a maximum ground surface acceleration of 0.125g, and the spectra for the 1/2 safe shutdown earthquake (1/2 SSE) correspond to a maximum ground acceleration of 0.06g. (The operating basis earthquake, which is referenced in Section 3.2, and Regulatory Guide 1.143, is equivalent to 1/2 of the SSE.) These spectra differ from the spectra in Regulatory Guide 1.60. The Beaver Valley Power Station - Unit 2 (BVPS-2) spectra are based in Appendices 2C and 2D of the BVPS-2 PSAR, and as revised in the response to USAEC Regulatory Position 3 of May 25, 1973 (Question 3.15, BVPS-2 PSAR, Amendment 7, July 9, 1973). The vertical design response spectra are taken to be two-thirds of the horizontal design response spectra.

3.7B.1.2 Design Time History

The horizontal SSE design time histories yield response spectra which envelop the horizontal design response spectra as shown on Figures 3.7B-3, 3.7B-4, 3.7B-5, 3.7B-6, 3.7B-7 and 3.7B-8. The magnitudes of the vertical design time histories are taken to be two-thirds of that for the horizontal design time histories for both the SSE and the 1/2 SSE. A plot of the horizontal SSE time history is shown on Figure 3.7B-36.

Where finite element soil structure interaction analysis is performed, the time history is applied at grade in the free field. Where analysis is performed using frequency-independent springs representing soil stiffness, the time history is applied at the foundation level.

The horizontal design time history is checked by comparing its spectral values with those of the site design response spectra at 250 oscillator periods between 0.04 second and 5.0 seconds. The oscillator periods are distributed logarithmically according to the following expression:

$$T_i = \lambda T_{i-1}$$

$$\lambda = (T_{250}/T_1)^{1/249} = (5/.04)^{1/249}$$

$$\lambda = 1.019 \qquad (3.7B\text{-}1)$$

where:

T_i and T_{i-1} are any two consecutive oscillator periods.

T_i /T_{i-1} is the period ratio (ratio between the ith period, T_i, and the (i-1)th period, T_{i-1}).

3.7B.1.3 Critical Damping Values

The values of the percentage of critical damping used in the analysis of Seismic Category I structures, systems, and components depend on the seismic input motion used in the analysis and the type of construction or fabrication.

The values of damping used for the BVPS-2 input motion are listed in Table 3.7B-1.

3.7B.1.4 Support Media for Seismic Category I Structures

Category I structures are founded on compacted select granular fill overlying dense in situ granular soil which extends to bedrock, or directly on the in situ granular soil, with one exception. The in situ soil beneath the safeguards area and the refueling water storage tank (RWST) was excavated as shown on Figures 2.5.4-8 and 2.5.4-9, respectively, and replaced with select granular fill to the founding grades of the respective structures. Beneath the northern portions of these two structures is a layer of stiff, silty clay with a top surface at approximately el 688 feet. The layer is about 20 feet thick at the northern edge of the safeguards area and about 10 feet thick at the northern edge of the RWST. The layer thins to the south and is no longer present at about the east-west centerline of the safeguards area.

Foundation information for Category I structures is given in Table 3.7B-2. The dynamic properties of the soil and select granular fill underlying the Category I structures are discussed in Section 2.5.4.7. The use of these properties in the analysis of soil-structure interaction is discussed in Section 3.7B.2.4.

3.7B.2 Seismic System Analysis

Seismic system analyses discussed in this section are defined to be Seismic Category I structures that are considered in conjunction with the foundation media in forming a soil-structure interaction model. Other systems and components are considered seismic subsystems and are discussed in Sections 3.7B.3 and 5.4.14.

3.7B.2.1 Seismic Analysis Methods

Analysis of seismic systems was performed using either the modal analysis response spectra method or the modal analysis time history method. Response spectrum analysis uses the natural frequencies, mode shapes, and weighted modal dampings to determine the maximum seismic response of multi-degree-of-freedom systems with lumped masses and elastic connecting members. Time history modal analysis uses the same free vibration characteristics and damping factors as the spectrum analysis, primarily to determine acceleration response spectra at selected locations within the structure. The methods used for seismic analysis of particular Seismic Category I structures are summarized in Table 3.7B-3.

Mathematical models of three buildings representative of Seismic Category I structures are discussed in detail. Models selected are the containment structure (Figure 3.7B-9), the fuel building (Figure 3.7B-10), and the cable vault building (Figure 3.7B-11).

Descriptions of these buildings are provided in Sections 3.8.1 and 3.8.3.

Foundation effects, namely torsion, rocking, and translation, were included in the dynamic analysis by use of soil-structure interaction techniques discussed in Section 3.7B.2.4. The containment structure is, for the purposes of seismic analysis, axisymmetric. A planar model was thus employed for its analysis. All other Seismic Category I structures were analyzed considering six degrees-of-freedom: three translation, two rocking, and one torsional.

The containment structure was analyzed using both a discrete soil spring-dashpot model (computer programs STRUDL-II and TIME HISTORY) and a finite element soil structure interaction model computer program (PLAXLY) was used. The design of buried piping is explained in Section 3.7B.3.12. The finite element model better represents the actual conditions as described by the U.S. Nuclear Regulatory Commission (USNRC 1975) since the containment structure is deeply embedded.

A comparison of results from the two analyses show the high degree of conservatism in the discrete soil spring method (Figures 3.7B-56, 3.7B-57, 3.7B-58, 3.7B-59, 3.7B-60 and 3.7B-61).

The finite element results are applicable for the containment structure. Other structures were analyzed using the discrete springs and dashpots suggested by Whitman and Richart (1967), Richart (et al 1970), Wass (1972) and Kausel and Roesset (1975). Springs associated with the degrees-of-freedom in a global orthogonal coordinate system were used.

In developing the lumped-mass models for Seismic Category I structures, an adequate number of degrees-of-freedom was ensured by providing a lumped mass at the mat, floor, and roof elevations. Additional masses were used when changes in geometry or stiffness warranted them. In the cases of the containment shell, seven lumped masses were selected at critical points of interest. Studies have been conducted which show the difference in base shear and overturning moments between a 3-mass and a 15-mass model to be less than 3 percent. Comparisons between 3-, 5-, 10-, and 15- mass models have shown a difference in natural frequency for the first two modes of less than 1 percent.

The number of degrees of freedom considered in the seismic models is equal to approximately twice the number of modes with frequencies less than 33 Hz.

Each Seismic Category I building has a foundation mat which serves as a single structural support. Four-inch shake spaces, larger than any predicted structure-to-structure displacements, are provided between all Seismic Category I structures, Relative displacements were considered for all Category I systems and components which run between structures. Special seismic effects such as hydrodynamic loads and nonlinear responses were considered where appropriate.

3.7B.2.2 Natural Frequencies and Response Loads

Response spectrum analyses for the containment structure, the fuel building, and the cable vault building are summarized below. They are representative samples of Category I structures.

3.7B.2.2.1 Containment Summary

The response spectrum analysis of the containment and internal structures included the enveloping of six discrete analyses. The dynamic model of the containment (Figure 3.7B-9) was analyzed with cracked and uncracked concrete properties. The soil springs were analyzed for three different values of soil shear moduli. The three soils analyzed had shear moduli of 12, 18, and 24 ksi, with 18 ksi being the best estimate of the founding material (BVPS-2 PSAR Section 2.5.3).

The significant natural frequencies and modal participation factors, resulting from analyses for the cracked and uncracked containment structure with median soil stiffness, are presented in Tables 3.7B-4 and 3.7B-5. Significant mode shapes resulting from these analyses are presented in Tables 3.7B-6 and 3.7B-7 and Figures 3.7B-12, 3.7B-13, 3.7B-14 and 3.7B-15; the response loads obtained by the square root of the sum of the squares method (SRSS) are summarized in Tables 3.7B-8 and 3.7B-9. Table 3.7B-10 presents the degrees-of-freedom corresponding to x- and y-direction translation and rotation about the z axis for the containment and internal structures response loads obtained by the SRSS method. Tables 3.7B-11 and 3.7B-12 contain the maximum responses at each mass point resulting from enveloping all six analyses.

The amplified response spectra (ARS) produced using the modal analysis time history method for the median soil, cracked and uncracked containment cases are provided at the springline, mat, and operating floor for horizontal and vertical SSE excitations (Figures 3.7B-16, 3.7B-17, 3.7B-18, 3.7B-19, 3.7B-20, 3.7B-21, 3.7B-22, 3.7B-23, 3.7B-24, 3.7B-25, 3.7B-26 and 3.7B-27). Typical ARS resulting from the enveloping of all six analyses are shown on Figures 3.7B-28, 3.7B-29, 3.7B-30, 3.7B-31, 3.7B-32 and 3.7B-33.

Examples of the resulting acceleration time histories at the springline and operating floor, as well as the original input time history, are shown on Figures 3.7B-34, 3.7B-35, 3.7B-36.

3.7B.2.2.2 Fuel Building Summary

The dynamic model of the fuel building (Figure 3.7B-10) was excited separately by one vertical and two orthogonal horizontal excitations. The resulting significant natural frequencies, participation factors, and mode shapes are listed in Tables 3.7B-13 and 3.7B-14. The maximum responses due to each excitation are obtained by combining the modal responses according to the closely spaced modes modal combination method discussed in Section 3.7B.2.7. Summaries of the maximum responses due to each SSE excitation are presented in Tables 3.7B-15 and 3.7B-16. The total responses, considering all three base excitations simultaneously, are obtained by combining the maximum responses from each excitation by the SRSS method. Refer to Table 3.7B-17 for a summary of the total SSE responses.

Table 3.7B-18 presents, for the fuel building analysis, the relationship between the degrees-of-freedom and the motion of the lumped masses given in Tables 3.7B-15, 3.7B-16, and 3.7B-17.

Examples of the ARS resulting from each direction of excitation produced using the modal analysis time history method are provided at the mat (Figures 3.7B-37, 3.7B-38, 3.7B-39), the top of the fuel pool (Figures 3.7B-40, 3.7B-41, 3.7B-42, and at the top of the crane rail support structure (Figures 3.7B-43, 3.7B-44, 3.7B-45).

3.7B.2.2.3 Cable Vault Building Summary

The seismic analysis of the cable vault building was conducted in a manner identical to that of the fuel building. The dynamic model shown on Figure 3.7B-11 was excited separately by three orthogonal excitations. The significant natural frequencies, participation factors, and mode shapes resulting from these excitations are listed in Tables 3.7B-19 and 3.7B-20. The maximum responses due to each excitation are obtained by combining the modal responses according to the closely spaced modes combination method discussed in Section 3.7B.2.7. Summaries of the maximum responses due to each SSE excitation are presented in Tables 3.7B-15 and 3.7B-16. The total responses, considering all three base excitations simultaneously, are obtained by combining the maximum responses from each excitation by the SRSS method. Refer to Table 3.7B-17 for a summary of the total SSE responses.

Table 3.7B-21 presents, for the cable vault building analysis, the relationship between the degrees-of-freedom and the motion of the lumped masses given in Tables 3.7B-22, 3.7B-23, and 3.7B-24.

Typical ARS at el 718 feet-6 inches, 735 feet-6 inches, and 805 feet-5 inches, produced using the modal analysis time history method, are shown on Figures 3.7B-46, 3.7B-47, 3.7B-48, 3.7B-49, 3.7B-50, 3.7B-51, 3.7B-52 and 3.7B-53.

3.7B.2.3 Procedures Used for Analytical Modeling

The dynamic model of a Seismic Category I structure is constructed to obtain a satisfactory representation of the dynamic behavior of the structure. Major Seismic Category I structures that are considered in conjunction with foundation media in forming a soil-structure interaction model are defined as seismic systems. Other Seismic Category I systems and components that are not designated as seismic systems are considered as seismic subsystems. In most cases, equipment and components come under the definition of seismic subsystems and are analyzed as a decoupled system from the primary structure. To define criteria for decoupling subsystems, R_m, the mass ratio, and R_f, the frequency ratio, are significant. R_m and R_f are defined as:

$$R_m = \frac{\text{Total mass of the supported subsystem}}{\text{Mass that supports the subsystem}}$$

$$R_f = \frac{\text{Fundamental frequency of the supported subsystem}}{\text{Frequency of the dominant support motion}}$$

The following criteria are used.

1. If $R_m < 0.01$, decoupling is acceptable for any R_f,

2. If $0.01 \leq R_m \leq 0.1$, decoupling is acceptable if $0.8 \geq R_f \geq 1.25$,

3. If $R_m > 0.1$, an approximate model of the subsystem is included in the primary system model.

If the subsystem is comparatively rigid and also rigidly connected to the primary system, only the mass of the subsystem is included at the support point in the primary system model. In the case of a subsystem supported by very flexible connections (for example, a pipe supported by hangers), the subsystem is not included in the primary model.

In most cases, the equipment and components which come under the definition of subsystems were analyzed separately from the primary structure, and the seismic input for the subsystem is obtained from the analysis of the structure. One important exception to this procedure is the analysis of the reactor coolant system (RCS), which was considered to be a subsystem but was analyzed using a coupled model of the RCS and primary structure with ground motion as the seismic input (Section 5.4.14).

The dynamic model of a seismic system consists of a set of lumped masses, generally having 6 degrees-of-freedom per mass connected by weightless elastic members. Masses are usually lumped at floor levels and include the masses of the floors, walls, columns, equipment, and piping. The floors are treated as rigid diaphragms that transfer the earthquake inertia forces to frames and shearwalls, which in turn transfer the loads to the foundation mat and the subgrade. Beam theory, combining the effects of shear, flexure, torsion, and axial deformation, is used to establish the stiffness characteristics of the frame-wall systems. Eccentricities between the centers of mass and centers of rigidity are considered.

As an example, the lumped mass model of the containment is shown on Figure 3.7B-9. The model was constructed so that it properly represents the free vibration of a cantilevered structure in shear and flexure. The model consists of a system of lumped masses, each with 3 degrees-of-freedom, connected by weightless members. The base of the model is supported on a deformable subgrade represented by equivalent springs whose stiffness was determined as indicated in Section 3.7B.2.4. Masses M_1 through M_7 represent the dome and the cylindrical portion of the containment shell. M_8 consists of the mat and portions of the walls and columns which are attached to the mat. The internal structure, consisting of equipment, primary shield wall, cubicle walls, crane wall, etc, were modeled by masses M_9 through M_{13}.

3.7B.2.4 Soil-Structure Interaction

The site, as discussed in Section 2.5.1, is a relatively uniform gravel terrace approximately 110 feet deep resting on a Pennsylvanian-age shale bedrock. The embedment and founding elevations data presented in Table 3.7B-2 indicate that some Seismic

Category I structures are deeply embedded and some have shallow embedments as described by the USNRC (1975).

Finite element soil-structure interaction analysis is appropriate for either shallowly or deeply-embedded structures, and is required for deeply-embedded structures (USNRC 1975). The containment structure and the fuel building were analyzed using the finite element soil structure interaction method. They were also analyzed using discrete, nonfrequency-dependent soil springs, as were all other Seismic Category I structures.

For the finite element analysis, the containment lumped mass model discussed in Section 3.7B.2.3 was attached to a finite element representation of the soil subgrade, as shown on Figure 3.7B-54. For discussion of soil properties used, refer to the BVPS-2 Report on Soil Densification program (DLC 1976). This model was then subjected to horizontal and vertical excitations by means of the program PLAXLY. The bottom boundary was taken at bedrock and the side boundaries used PLAXLY'S energy transmitting boundary corresponding to layers of soil extending laterally to infinity. The material properties of the soil were assumed to be linearly viscoelastic, and the dynamic equations were solved in the frequency domain using Fourier transformation techniques. Nonlinear behavior in the subgrade was simulated by an iterative algorithm, in which the soil parameters were adjusted according to the resulting levels of strain (for a more detailed discussion of PLAXLY, refer to Appendix Section 3A.1.7).

For comparison purposes the containment and fuel buildings were also analyzed using a common finite element soil grid, as shown on Figure 3.7B-55, by means of the program FLUSH (Lysmer et al 1975). The analyses with discrete nonfrequency-dependent soil springs used spring constants calculated by equations suggested by Whitman (et al 1967), Richart (et al 1970), Wass (1972), and Kausel and Roesset (1975). A value of 10 percent maximum soil damping assured the conservatism of the discrete spring method.

Comparisons of the containment ARS generated by both analyses, (Figures 3.7B-56, 3.7B-57, 3.7B-58, 3.7B-59, 3.7B-60 and 3.7B-61) demonstrate that the discrete spring method is considerably more conservative than the finite element analysis. Similar comparisons for the fuel building are shown on Figures 3.7B-62, 3.7B-63, 3.7B-64 and 3.7B-65.

Thus, the discrete spring method, as formulated for the soil conditions described in Section 2.5.1, provides conservative results for Seismic Category I buildings, and is used in place of more extensive finite element analysis for buildings other than the containment structure. Since the containment structure is deeply embedded, the finite element method is used for its seismic analysis as described by the USNRC (1975).

3.7B.2.5 Development of Floor Response Spectra

Floor response spectra were developed separately for one vertical and two mutually perpendicular horizontal earthquake motions using the modal analysis time history method discussed in Section 3A.1.6 for all buildings except the containment structure. Floor response spectra for the containment were developed using the modal analysis method in PLAXLY, Section 3A.1.7.

Combination of the three components of floor response spectra for use in subsystem seismic analysis is discussed in Section 3.7B.3.

3.7B.2.6 Three Components of Earthquake Motion

Procedures to combine three components of earthquake motion to determine the response of seismic systems meet the recommendations of Regulatory Guide 1.92 to the extent described in Section 1.8.

3.7B.2.7 Combination of Modal Responses

In general, for those Seismic Category I systems analyzed by the modal analysis response spectrum method, the influence of closely spaced modes was considered by use of the "double sum method," described in Regulatory Guide 1.92 and in Singh (et al 1973) to the extent described in Table 1.8-1. If there are no closely spaced modes, the responses are combined by using the SRSS method.

3.7B.2.8 Interaction of Non-Category I Structures with Seismic Category I Structures

All Seismic Category I structures are separated from adjacent structures by a 4-inch shake space. The 4-inch clearance is larger than the predicted relative displacements of any adjacent buildings. Section 2.5.4 provides a discussion for determining relative displacements.

Non-Category I structures are sufficiently remote from Seismic Category I structures to preclude interaction or are designed as discussed in Section 3.8.3 to avoid collapse during an SSE, thus preventing significant damage to adjacent Category I structures.

3.7B.2.9 Effects of Parameter Variations on Floor Response Spectra

In order to consider the effects of variations of structural properties, dampings, and soil properties, peak resonant period values of the floor response spectra were spread plus 25 and minus 20 percent with vertical sides except as indicated in Section 3.7B.3.1.2. For the containment structure which experiences substantial cracking during the structural acceptance test, floor response spectra for the cracked and uncracked cases were enveloped.

The use of floor time histories in subsystem analysis is discussed in Section 5.4.14.

3.7B.2.10 Use of Constant Vertical Static Factors

Dynamic vertical responses were calculated in all seismic system analyses, precluding the need to use constant vertical static factors.

3.7B.2.11 Method Used to Account for Torsional Effects

The containment structure is axisymmetric and was analyzed using 3 degrees-of-freedom per mass. All other Seismic Category I structures were analyzed dynamically using 6 degrees-of-freedom per mass. Effects of eccentricity between centers of mass and centers of stiffness or soil contact were included in determining appropriate member stiffnesses in the dynamic models.

3.7B.2.12 Comparison of Responses

As discussed in Section 3.7B.2.1, the results of the response spectrum analysis were used for the design of all Seismic Category I structures except the containment structure, and the results of the modal time history analyses provided the floor time histories used to create floor response spectra.

The maximum responses attained from the time history analysis are compared with those resulting from the response spectrum technique in Tables 3.7B-25, 3.7B-26, 3.7B-27 and 3.7B-28 for representative structures.

The generally higher time history results are attributable to the fact that the artificial ground time history yield response spectra conservatively envelop the BVPS-2 ground response spectra. The extent of this conservatism is illustrated on Figures 3.7B-3, 3.7B-4, 3.7B-5, 3.7B-6, 3.7B-7, and 3.7B-8 which compares the BVPS-2 ground response spectra with response spectra generated by using the site artificial time history as the forcing function. The increased acceleration response, particularly in the 1.0-5.0 Hz range, resulting from the artificial time history, is comparable to the increases witnessed in Tables 3.7B-25, 3.7B-26, 3.7B-27 and 3.7B-28. The finite element studies discussed in Section 3.7B.2.4 support the conservatism of both the response spectrum and the time history analyses.

3.7B.2.13 Methods for Seismic Analysis of Category I Dams

There are no Category I dams at this site.

3.7B.2.14 Determination of Category I Structure Overturning Moments

Overturning moments for Seismic Category I structures are determined by taking the accelerations derived from combinations of the three components of earthquake motion and conservatively combining the vertical and lateral forces in order to maximize the overturning moment.

The structural overturning moment was calculated by multiplying each lumped mass and its horizontal acceleration by its distance above the founding elevation. To this moment was added the moment resulting from multiplying the lumped mass by its vertical acceleration and the horizontal eccentricity between its center of mass and the mat-soil center of contact. In order to consider the action of vertical and lateral forces conservatively, eight separate cases were generally investigated. Horizontal accelerations were studied acting in four perpendicular directions (North, South, East, and West) and each of these horizontals was combined with the vertical acceleration acting up and acting down. The resulting overturning moment was then compared with the minimum resisting moment to determine the factor of safety against overturning which was required to be greater than the value given in Table 3.8-13. The peak soil bearing pressure was then checked against the allowable value specified. Bearing capacities and required factors of safety against overturning and sliding are discussed in Section 2.5.4.

3.7B.2.15 Analysis Procedure for Damping

An equivalent viscous modal damping, reflecting the different damping rates in various portions of the structure, is computed for use in structural dynamic analysis. The modal damping ratio is a weighted average of member and support spring damping, based on the contribution of each to the total strain energy of the mode shape. The method is based on work by Roesset (et al 1973). The following discussion is meant to serve as a general description. The more theoretical derivations (Roesset et al 1973; Whitman 1970) are found in the literature.

3.7B.2.15.1 Damping and Strain Energy Methods

An important factor in determining structural response is the damping phenomenon. Two types of damping are generally recognized: viscous (in which the energy dissipated per cycle is proportional to frequency) and hysteretic (in which no frequency dependence is seen). Most structural elements display hysteretic behavior, while supporting soils appear to combine both hysteretic and viscous damping mechanisms.

For certain applications (for example, pipe breaks) in which foundation motion can be neglected, only hysteretic damping need be considered. Whitman's (1970) analysis of Biggs' formula gives a useful approximation for the damping of each mode when material damping varies from element to element. The expression for the equivalent viscous modal damping is obtained by a strain-energy weighting of element damping:

$$B_{eqv}^{j} = \frac{\sum_{i=1}^{N} D_i E_i^j}{\sum_{i=1}^{N} E_i^j} \qquad (3.7B\text{-}2)$$

where:

B_{eqv}^{j} = Equivalent viscous damping ratio (fraction of critical) for structure vibrating in mode j,

N = Number of elements,

D_i = Hysteretic damping ratio for element i,

E_i^j = Strain energy in element i when deflected into mode shape j

In particular, when damping is uniform (that is, D_i = D) then B_{eqv}^{j} = D for all modes. When damping is not uniform, modal damping is weighted toward those elements which make the largest contribution to the energy of each mode. In other applications (for example, earthquakes) in which foundation motion is significant, viscous damping also must be considered. Current practice treats the soil damping as viscous for translational motion, and hysteretic for rotational motion. Roesset (et al 1973) extended Biggs' formula to include the viscous damping contributions of the soil:

$$B_{eqv}^{j} = \frac{\sum_{i=1}^{N_H} D_i E_i^j + \sum_{k=1}^{N_V} \left(\frac{W^j}{W_k}\right) B_k E_k^j}{\sum_{i=1}^{N_H} E_i^j + \sum_{k=1}^{N_v} E_k^j} \qquad (3.7B\text{-}3)$$

where:

N_H = Number of hysteretically damped elements,

N_V = Number of viscously damped elements,

W_j = Frequency of structure mode j (radians per second),

W_k = Frequency of element k (radians per second),

B_k = Critical damping ratio of element k at frequency W_k

The square of the natural frequency W^2 of the soil element, is equal to the ratio of the soil spring stiffness to total mass of the structure plus foundation.

This formula reflects the fact that the energy dissipation per cycle by the viscous mechanism is proportional to frequency of motion. Any element which displays both hysteretic and viscous damping appears in both summations of the numerator, but is not repeated in the denominator.

Each element strain energy appearing in Equation 3.7B-2 is evaluated from the element stiffness matrix and the displacement of the element's boundary joints. After comparing the Biggs and Roesset modal damping ratios calculated from Equations 3.7B-2 and 3.7B-3, the lower value for each mode is selected for use in the dynamic analysis, thus assuring that the composite modal damping value never exceeds the hysteretic damping value. In no case do modal damping values exceed 10 percent.

3.7B.3 Seismic Subsystem Analysis

3.7B.3.1 Seismic Analysis Methods

3.7B.3.1.1 Equipment and Components

Seismic Category I equipment is documented for seismic adequacy. Depending upon equipment location, the basic source of seismic design data is either the ground response spectra, the ARS, or floor time history, derived through a dynamic analysis of the relevant structure as described in Sections 3.7B.2.5 and 3.7B.2.9.

Three principal methods of documenting adequacy for Seismic Category I equipment are:

1. Static analysis,
2. Dynamic analysis, and
3. Testing.

The effects of supports are reflected in the input to seismically qualified equipment and components. General stress limits are given in Section 3.9B.3.1. Specific component stress allowables are given in Tables 3.9B-7 and 3.9B-10. Such limits either conform to, or are more conservative than, those of ASME Section III, Subsection NF.

Laboratory tests are performed on Seismic Category I mechanical and electrical equipment, and complex instrumentation that do not lend themselves to being modeled to accurately predict response. Conversely, analytical methods are employed when mathematical modeling techniques are appropriate (as described here), or when equipment characteristics (size rating) preclude laboratory testing. Combinations of analysis and testing are also employed to ensure adequacy of Seismic Category I equipment.

The SSE is the load basis which ensures the safety function of Seismic Category I equipment. The 1/2 SSE loadings are used to ensure continued normal operation of the Seismic Category I equipment. Earthquake loadings are combined with operating loadings to ensure necessary functions during 1/2 SSE and SSE conditions.

Equipment vendors and suppliers are required to formulate programs for Seismic Category I equipment qualification in accordance with specification requirements. Documentation of the seller's qualification program is reviewed and approved by the Applicant or Agent of Applicant.

3.7B.3.1.1.1 Static Analysis

Static analysis is utilized for equipment and components that can be characterized as relatively simple structures. This type of analysis involves the multiplication of the equipment or component total weight by the specified seismic acceleration (direction dependent loading), to produce forces that are applied at the center of gravity in the horizontal and vertical directions. A stress analysis of equipment components, such as supports, holddown bolts, and other structural members, is performed to determine their adequacy.

In the specification of equipment for static analysis, two or more sets of acceleration data are provided. The choice of which set to use is dependent upon the equipment's fundamental natural frequency. The relevant response curves are reviewed to determine a cutoff frequency, which separates the rigid range from the resonance range of the response curves. Equipment and components having fundamental natural frequencies above the cutoff frequency of the relevant response curve are analyzed to rigid range response accelerations.

For components or equipment having a fundamental natural frequency below the cutoff frequency, analysis is based on response accelerations that are not less than those indicated by the amplified response curves over the full frequency range of the component. If

the fundamental mode of the component falls within any of the resonant response peaks, and if the component cannot be characterized as a single degree of freedom system, the resonant response acceleration is multiplied by a factor of 1.3 as a justified factor for conservatism, in order to account for all significant dynamic modes under a resonant situation (Section 3.7B.3.5).

Each of the three defined directions of earthquake input (two horizontal and one vertical taken orthogonally) is evaluated separately. Horizontal and vertical seismic loads are added considering a single horizontal direction earthquake acting concurrently with the vertical direction earthquake on a most severe basis. The stresses resulting from the orthogonal earthquake inputs are combined by the absolute addition of the worst horizontal plus vertical stress. Equipment is designed to withstand the combined effects of normal operating loads acting simultaneously with the earthquake loadings without loss of safety function or structural integrity.

3.7B.3.1.1.2 Dynamic Analysis

A detailed dynamic analysis is performed when equipment complexity or dynamic interaction precludes static analysis, or when static analysis is too conservative. Dynamic analysis methods include:

1. Response spectrum modal analysis,

2. Time-history by modal superposition, and

3. Time-history by numerical integration.

The response spectrum modal analysis technique is most commonly used.

Modeling

To describe fully the behavior of complex equipment subjected to dynamic loads, infinite numbers of coordinates would be required. Because calculating every point of the complex equipment model is impractical, the analysis is simplified by taking a judicious selection of a limited number of mass points. The lumped mass, or consistent mass, approach is employed in the dynamic analysis. In the lumped and the consistent mass idealizations, the main structure is divided into substructures and the masses of these substructures are concentrated at a number of discrete points. The nature of these substructures, and the stiffness properties of the corresponding modeling elements, determine the minimum spacing of the mass points and the degrees of freedom to associate to each point. In accordance with the minimum spacing requirements, the analyst can then choose, for the model, particular mass points which reflect predominant masses of subcomponents which are believed to contribute significantly to the total response.

Modeling of equipment structures for dynamic analysis starts with the calculation of lumped masses at discrete stations, and the evaluation of the elastic properties (or stiffness) of connecting members. The number of discrete mass points is selected to adequately describe the dynamic characteristics and natural frequency of the equipment. General modeling guidelines indicate that good natural frequency characteristics are obtained when the number of discrete mass or node points selected is twice the number of the highest mode of interest. Papers prepared by Lin and Hadjian (1976), Johnson and Kennedy (1977), and Lin (1974), and Sections 3.7B.2.1 and 3.7B.2.3 provide supplemental modeling guidance.

Response Spectrum Modal Analysis

The normal mode approach is employed for seismic analysis of equipment and components. Natural frequencies, eigenvectors, participation factors, and modal member-end forces and moments of the undamped structure are calculated. The system of equations which describes the free vibrations of an n-degree of freedom, undamped structure is presented in Section 3.7B.3.8.

Eigenvector-eigenvalue extraction routines, such as Householder-QR, Jacobi Reduction, and Inverse Iteration, are used, depending upon the total number of dynamic degrees of freedom and the number of modes desired.

The basis for the combination of maximum modal response is discussed in Section 3.7B.3.7.

Time-History Methods

There are two separate approaches to the solution of the equations of dynamic equilibrium for time-history motions. The modal superposition method involves the modal solution of the free vibration response of the system, and the transformation to normal coordinates utilizing the mode shapes of the system. This procedure uncouples the equations of motion so that the response of the system in each individual mode may be evaluated independently. Total system response can be determined by combining responses of individual modes oscillating simultaneously. The second method of time-history analysis is the direct integration solution that includes numerical integration of the simultaneous differential equations of dynamic equilibrium without transformation to normal coordinates. System response at each time point is evaluated by this technique.

Time-history solutions, due to their analytical complexity, are only used when results of other methods are too conservative, and when acceptable numerical solutions are available in a computer program. Computer program capability for time-history solutions is outlined in Appendix Section 3A.2.

3.7B.3.1.1.3 Testing

Equipment and components that are tested are seismically qualified in accordance with the following general instructions for earthquake testing. For tested equipment, these requirements conform with other applicable industry standards such as IEEE Standard 344-1971 (Section 3.10), or provide guidance for testing where no such standards are available. Equipment packages or components are shown to be seismically adequate by being tested individually, either as part of a simulated structural section, or part of an assembled module or unit. In any case, the minimum acceptance criteria includes:

1. No loss of safety function, or ability to function, before, during (for those components that may be required to function during a seismic event), or after the test,

2. No structural/electrical failure (connections and anchorages) that would compromise safety-related component integrity, and

3. No adverse or maloperation before, during, or after the test that could result in an improper safety action.

Equipment vendors and suppliers are required to formulate programs for qualifying the equipment in accordance with the conditions specified in the seismic design requirements contained in the equipment specifications. The vendor must submit a summary of the proposed effort for review and approval.

The characteristics of the testing input at the equipment mounting locations are defined by ARS curves, zero period response curve levels, time-history motions, or combinations of these as applicable. Equipment mounted in piping systems derive their input from piping systems analysis as described in Section 3.7B.3.3.2.

Single and multifrequency input testing are accepted as a method of seismic qualification, based upon the particular plant site, structure, and floor response characteristics. Structures, particularly at lower elevations, exhibit a broad frequency range response similar to the ground motion during an earthquake. This broad range frequency motion is filtered at higher structural elevations and response becomes more periodic in nature. Knowledge of the floor response characteristics of the structure and response characteristics of the equipment generally dictate the requirements for testing. Single frequency testing is applicable where periodic floor motion is indicated and, conversely, random input testing is most applicable for broad frequency range input to components. Single frequency testing can be used to envelop multiple peak floor responses, as well as single peak, providing sufficiently high testing input is used. For equipment exhibiting multiple response modes, single frequency input may be used, providing the input has

sufficient intensity to envelop the floor response spectra of the individual modes of the equipment.

The testing machine (fixture) setup is arranged so that the equipment tested is mounted to simulate, to the extent possible, the actual service mounting, in order to properly simulate the actual dynamic input to the tested component. Equipment is tested in the operating condition wherever possible, and functions are monitored and verified both during and after testing. However, a true operating environment is sometimes not obtainable for equipment such as pumps.

The in situ application of vibratory devices, to superimpose the seismic vibratory loadings on the complex active device for operability testing, is acceptable when application is justifiable.

A qualification test program may be based upon selectively testing a representative number of mechanical components according to type, load level, size, etc, on a prototype basis.

In addition to the single and multifrequency testing programs outlined, laboratory shock results, in-shipment shock data, or adequate historical dynamic adequacy data (previous relevant test or environmental data) are also given consideration. The test method selected must demonstrate the adequacy of principal structural and functional capability of the equipment.

General testing guidance criteria specified for equipment include the following:

1. Single Frequency Testing

   Testing is performed for as much of the range between 1 and 33 Hz as practicable or justified. Input for qualification should, as a minimum, equal the zero period response curve level.

2. Sinusoidal Input

   a. A frequency scan (two octaves per minute, maximum), at a constant acceleration level, is performed over the frequency range of interest. The objective of this test is to determine the natural frequencies and amplification factors of the tested equipment, and its critical components or appurtenances, and to ensure general seismic adequacy over the full frequency range of interest. The acceleration inputs used are the maximum rigid range accelerations indicated by the relevant response spectrum curves (damping independent).

   b. A dwell test of the equipment at its fundamental natural frequency is included at the acceleration

values specified in item a. Additionally, other frequencies are selected if amplification factors of 2.0 or more are indicated. A minimum 20-second duration is considered acceptable for each dwell.

c. Other methods of sinusoidal testing may be employed as justified. Included are exploratory tests per Item a which employ a low acceleration level input to identify equipment response characteristics, and to aid in selecting requirements for further testing. A geometrically spaced constant frequency input may be employed for further testing. Intervals of one-half octave or less are employed for this spacing.

3. Sine Beat Input

A sine beat test may be performed in conjunction with a sine scan, as an alternative to the dwell portion of the program outlined in item 2b previously listed. The sine beat test is performed at natural frequencies, and regions of large amplification identified during the sine scan. The duration and peak amplitude of the beat for each particular test frequency are chosen to produce a magnitude of equipment response most nearly equivalent to that produced by the particular floor response spectrum at justifiable damping levels.

Current practice indicates that a minimum of 10 cycles per beat should be used, unless a lower number of cycles is shown sufficient to duplicate or exceed the response spectra for the equipment at the appropriate location. Five sine beats, with a time delay between beats, are commonly used.

An alternative qualification program consists of applying a series of sine beats at geometrically-spaced frequency intervals of one-half octave or less over the frequency range of interest. The peak amplitude of the beat employed is, as a minimum, the maximum rigid range acceleration indicated by the relevant response spectrum curve.

4. Multifrequency Testing

Multifrequency testing is applicable as a general qualification method. Input excitation in this category includes time history, random, power spectral density, complex wave shapes, and others as justified. For the type of input applied, the testing machine input must equal, as a minimum, the zero period acceleration of the applicable response curve. A frequency range of 1 to 33 Hz is normally considered.

5. Time-History Input

   A time-history of the equipment support location, or one based on a synthesized response curve, may be used as testing machine input. A 15- to 30-second time-history input is normally employed. The test table input must develop a response curve, which envelops the relevant response spectrum curve when a synthesized record is used.

6. Random Motion Input

   Random input testing is performed so that the applicable response spectrum curve is enveloped by that produced by the table motion. The input is controlled by one-third octave (or less) bandwidth filters over the frequency range of interest with a minimum of 15 seconds or greater test duration. Normally, random tests are performed to produce a response curve based on test machine input, which envelops the relevant response spectrum curve. A special case random test may be performed when a power spectral density equivalent of the applicable response curve is specified.

   Tests combining random input in conjunction with other wave forms may be employed as justified.

7. Complex Wave Test

   A complex wave test may be performed by subjecting the equipment to an input motion, generated by summing a group of decaying sinusoids spaced at one-third octave, or narrower frequency intervals, over the frequency range of interest. Individual decay rate controls from 0.5 to 10 percent are used. Response curves based on test table input must be shown to envelop the relevant response curve.

3.7B.3.1.2 Piping Systems

Analyses of BOP supplied Seismic Category I and Seismic Category II piping systems are generally performed by the modal analysis response spectra method. The equivalent static load method of analysis is used primarily for small bore fire protection piping (Seismic Category II) and instrument tubing (Seismic Categories I and II). However, its applicability for applications to other piping shall remain optional. Piping which is not Seismic Category I is seismically analyzed when its failure could affect a Seismic Category I system.

The criteria and procedures used for modeling are described in Section 3.7B.3.3.2. A typical mathematical model of a piping system is shown on Figure 3.7B-67. Boundaries, such as anchors, are defined

so as to analytically isolate the piping system, treating the model as a bounded system.

The following describes input used for the design basis of nuclear safety-related piping systems that are dynamically analyzed by the modal analysis response spectra method:

1. Amplified Response Spectra

   Obtained for discrete locations in the structure proximate to the point where the piping systems are supported. Enveloping and peak broadening procedures are applied to these ARS before utilization, as described as follows. Damping values used for piping are 0.5 percent for 1/2 SSE and 1 percent for SSE, except as indicated below, as defined in Table 3.7B-1.

2. Seismic Piping Anchor Movements

   Obtained from calculated seismic displacements of structures proximate to piping anchor and support locations. These movements are used as static input to calculate the resulting internal forces and moments throughout the piping system (Section 3.7B.3.8).

Where a piping system is subjected to more than one response spectrum, as when support points are located in different parts of the structure or in separate structures, an enveloping procedure as well as a peak broadening with vertical sides (plus 25 percent and minus 20 percent of peak resonant period values, except as indicated below) is applied to generate a composite or worst-case spectrum for analysis. The response spectra modal analysis provides response quantities for each mode which are then combined over all significant modes (Section 3.7B.3.7). Significant dynamic modes under seismic excitation are defined as those modes with frequencies less than 50 cps or the first 50 modes, whichever is reached first. The combined seismic responses, together with internal forces and moments due to seismic anchor movements, are then combined with other loadings according to ASME Section III Code, Articles NB-3600 (Class 1 piping), NC-3600 (Class 2 piping), or ND-3600 (Class 3 piping).

The higher, frequency dependent damping values provided in ASME III Code Case N-411 may be used for pipe stress reconciliation and for support optimization. This code case also employs peak broadening consistent with the intent of Regulatory Guide 1.122 (plus and minus 15 percent of peak resonant period values with parallel sides).

Time history analysis is generally employed for fluid-induced transient dynamic problems (water hammer and steam hammer) in piping systems but time history analysis is not normally used for piping seismic analysis.

Detailed descriptions of analytical procedures and design criteria for Seismic Category I piping can be found in Section 3.7B.3.8.

No tests or empirical methods are utilized in lieu of analytical methods for any Seismic Category I piping.

3.7B.3.2 Determination of Number of Earthquake Cycles

3.7B.3.2.1 Equipment and Components

ASME III (NB-3112.3b) requires that the number of earthquake cycles to be used in the analysis of ASME III Code Class 1 components be specified as part of the design mechanical loads. The following criteria are used for all components within the jurisdiction of the ASME III code:

1. A total of five 1/2 SSE and one SSE is assumed.

2. A minimum of 10 maximum stress cycles per earthquake is assumed.

3.7B.3.2.2 Piping Systems

All ASME Class 1 piping systems have been designed for a minimum of 10 maximum stress cycles per seismic event in the analysis. A total of five 1/2 SSE and one SSE is assumed.

3.7B.3.3 Procedures Used for Modeling

3.7B.3.3.1 Equipment and Components

The procedures used for modeling of equipment and components are contained in Section 3.7B.3.1.

3.7B.3.3.2 Piping Systems

The basic method of analysis used is the finite element stiffness method. In accordance with this method, the piping is mathematically idealized as an assembly of elastic structural beam members connecting discrete nodal points. Nodal points are placed in such a manner as to identify particular types of piping elements, such as straight runs of pipe, elbows, valves, etc, for which force-deformation-stress characteristics can be computed. Nodal points are also placed at all discontinuities, such as piping supports, concentrated weights, branch lines, and changes in cross section. Inertial characteristics of the piping system are simulated by discrete masses of pipe and pipe components (including all concentrated and eccentric masses such as valves and valve operators) lumped at selected node points. The spacing between lumped masses for straight run of pipe is chosen to be smaller than the span of a simply supported beam with fundamental frequency of 33 cps. Generally, at least three mass points are located between pipe

supports acting in the same direction. System loads other than weights, such as thermal forces and earthquake inertial forces, are calculated and applied at the nodal points. The stiffness matrix of the piping system is calculated based upon the elastic properties of the pipe and pipe components, and includes the effects of bending,

torsional, axial, and shear deformations. The stiffness of piping elbows, and certain branch connections, is modified to account for local deformation effects by the flexibility factors published in the ASME Section III Code, Articles NB-3600 (Class 1 piping), NC-3600 (Class 2 piping), and ND-3600 (Class 3 piping).

Where the equivalent static load method of analysis is used, the modeling criterion is described in Section 3.7B.3.5.2.

3.7B.3.4 Basis for Selection of Frequencies

3.7B.3.4.1 Equipment and Components

The ARS (floor) developed for horizontal (two directions) and vertical direction earthquakes are the basic sources of seismic design accelerations. As noted in Section 3.7B.3.1.1, seismic accelerations are selected from the ARS based on natural frequency calculations for the equipment.

3.7B.3.4.2 Piping Systems

In the seismic design and multi-mass modal analysis of Seismic Category I piping systems (Section 3.7B.3.8), the practice of selecting piping fundamental natural frequencies to preclude resonance is not used. This practice is also not used in the equivalent static load method of analysis (Section 3.7B.3.5.2).

3.7B.3.5 Use of Equivalent Static Load Method of Analysis

3.7B.3.5.1 Equipment and Components

Those components which are considered relatively simple or rigid are designed, by virtue of natural frequency calculations, to withstand the effects of amplified seismic acceleration values dependent upon frequency and amplitude ranges associated with the installation, location, and corresponding relevant ARS. Analysis of components to the peak value of resonant response is considered conservative, since fundamental natural frequencies do not generally coincide with the frequency at resonance of the relevant response curve. Components having fundamental natural frequencies within the broadened response peak are designed to peak acceleration values, increased by a factor of 1.3, or as justified, to account for the contribution of all significant dynamic modes under a resonant condition. Generally, the vibratory characteristics of the components, qualified by resonant static analysis, are such that no possibility exists for adjacent or multiple modes to exist within the relatively narrow peak of a typical response spectrum.

The discussion which follows justifies the use of a factor of 1.3 as a conservative multiplier to be applied to single or multiple degree-of-freedom systems having fundamental frequencies within the broadened resonant response peak. Multiply-supported, or continuous

type, span components are not part of this proof. When multiply-supported equipment and components are analyzed by simplified methods, a factor of 1.5 times the peak resonant response is used.

3.7B.3.5.1.1 Single Deqree-of-Freedom Systems

Peak broadening is intended to reflect a range of uncertainty in the precise location of the resonant peak of the response curve, and not indicate that the multiple peak resonant response is possible within this broadened range. What is concluded is that there is a fairly equal chance that the peak of the curve (singular) would fall in the specified range and, thus, what exists, in fact, is a family of resonant response curves, each having only one point of peak resonant response (Figure 3.7B-68). If more than one system or component mode of vibration falls within the broadened peak, one and only one mode (a presumed worst case) can be presumed at an actual response peak value (Figure 3.7B-69). All other possible modes would realistically respond to lower values. Using the simple vibration theory and some simplifying assumptions, it is shown that a factor of 1.3 is conservative.

A simple damped oscillator responds with a transmissibility:

$$TR = \frac{\sqrt{1 + \left(2\beta\omega / \omega_n\right)^2}}{\sqrt{\left[1 - \left(\omega / \omega_n\right)^2\right]^2 + \left[2\beta / \omega_n\right]^2}} \qquad (3.7B\text{-}4)$$

where :

ω_n = the undamped natural circular frequency,

ω = the frequency of the exciting force,

β = ratio of damping to critical damping.

The value of TR is dependent on the damping value β, and the ratio of exciting frequency to oscillator natural frequency. When the exciting frequency equals the oscillator natural frequency, the steady state input is amplified by the value of TR and the response amplitude is maximum. In a seismic environment, maximum response is equal to the peak of the ARS curve.

If additional modes are assumed around the peak of the response curve, as illustrated on Figure 3.7B-69, values of TR can be determined for each mode and the SRSS of these values computed. It is shown that TR increases as the number of modes increase, and that

the most conservative placement of assumed modes is with one mode at the peak and other modes centered around this peak.

Data shown on Figure 3.7B-70 justify the use of a factor of 1.3 as conservative for all potential equipment applications. The curves are developed for two planes representing five modes and nine modes assumed acting within the broadened resonant peak. These numbers are intended to show an upper bound for general equipment application.

As further conservatism, all modes are considered participating equally. This is never the case in dynamic analysis. The higher frequencies of the component are given equal weight to the fundamental resonant frequency and the modes are centered on the nominal response curve. If the fundamental frequency was placed on the peak of the nominal curve, the results would show even lower transmissibilities.

The factor 1.3 is applicable only for those components whose fundamental natural frequency falls within the broadened response peak.

It has been shown that, for the range of values associated with component and system static analysis, use of the 1.3 factor is conservative. In fact, for a predominant number of likely cases, a value far less than this could be justified on the basis of the data.

For example, a value of 1.1 could easily be justified for most components which present only a few significant modes of vibration within the broadened response peak. It is further emphasized that, in reaching these conclusions, the most conservative assumptions regarding location of the nominal response curve and the placement of response modes for the arbitrary component have been made.

3.7B.3.5.1.2 Multi-Degree of Freedom Systems

As a conclusive supplement to the previous discussion, a study was performed utilizing rigorous dynamic analysis of models closely representative of typical components.

This investigation consists of computing the ratio of maximum dynamic stress to maximum static stress (the factor denoted by K) for several model beams subject to a flat response and typical ARS. Since bending stress is dominant for frame/equipment constructions, the actual ratio employed equals:

$$K = \frac{\text{maximum dynamic moment}}{\text{maximum static moment}} \qquad (3.7B\text{-}5)$$

Both SRSS and absolute moments are computed for comparison purposes, but conclusions are based solely on SRSS moments because they most closely represent actual dynamic stress.

Maximum static moment corresponds, in the case of the lg flat response, to lg static load. In the case of a typical amplified response, the maximum static load is based upon the following frequency relationships (Figure 3.7B-7):

$$f_o \leq f_p, \quad g = g_{max} \text{ (peak acceleration)}$$
$$f_o > f_p, \quad g = \text{acceleration at } f_o \qquad (3.7B\text{-}6)$$

where:

f_o = the fundamental frequency of the model beam, Hz

f_p = the frequency at which the peak acceleration occurs, Hz

The effect of peak spreading is investigated by using a flat response, thus giving all modes the same acceleration. This is equivalent to infinite peak spreading. The importance of the uncertainty in the location of the peak acceleration with respect to the fundamental mode of the model beams is examined by adjusting the fundamental frequency from well below to well above the peak resonant frequency of a typical response spectrum.

The model beams selected for this study are shown on Figure 3.7B-72. These beams are typical of the frames and equipment combinations used in nuclear power plants. All dynamic analyses were conducted using the STRUDL computer program described in Appendix 3A. Static analyses were carried out by hand, except for the simple/fixed beam with overhang. Consistent with design practice, all mountings in this study are assumed rigid.

3.7B.3.5.1.3 Results for Flat Response

Table 3.7B-29 summarizes the results for a lg flat response applied to the model beams of Figure 3.7B-72. Three K factors were computed for comparison purposes:

$$K_{s/c} = \frac{\text{Maximum SRSS dynamic moment}}{\text{Maximum static moment from concentrated load}} \qquad (3.7B\text{-}7)$$

$$K_{s/u} = \frac{\text{Maximum SRSS dynamic moment}}{\text{Maximum static moment from uniform load}} \qquad (3.7B\text{-}8)$$

$$K_{a/u} = \frac{\text{Maximum ABS dynamic moment}}{\text{Maximum static moment from uniform load}} \qquad (3.7B\text{-}9)$$

All conclusions in this study are based on $K_{s/u}$ because it most closely represents the actual ratio of dynamic moment to static moment. $K_{a/u}$ was not chosen because, as can be seen in Table 3.7B-30, modes are so widely spaced that no more than one modal frequency lies within a ±10 percent frequency band. $K_{s/c}$ is shown since this is the K factor which represents a typical simplification used in component analysis (concentrated static loads at component center of gravity).

The lg flat response was selected to give infinite peak spreading. As can be seen, $K_{s/u}$ was never greater than unity.

3.7B.3.5.1.4 Results for Amplified Response

Table 3.7B-31 presents the results for the simply supported/fixed model beam with 33 percent overhang subjected to the response spectra of Figure 3.7B-71. The 1st Mode column (Table 3.7B-31) gives the fundamental frequency, f_o, and response acceleration, g_o, at f_o. Note that f_o was adjusted (by density variation) from well below to well above the peak frequency, f_o, of the response spectra to determine the effect on K of the uncertainty in the location of the peak frequency with respect to the fundamental frequency of the model beam. Since all values of $K_{s/u}$ were less than unity, it is concluded that this uncertainty has no important effects on the K factor. Additional results are provided by Gwinn and Goldstein (1974).

3.7B.3.5.1.5 Conclusions

1. Peak acceleration times 1.3 applied as a static load to equipment whose fundamental natural frequency is within the broadened peak of the ARS curve is conservative.

2. No amount of peak spreading can itself result in a $K_{s/u}$ factor significantly greater than unity.

3. Uncertainty in the frequency at which the peak response acceleration occurs itself has no important effects on the K factor.

4. Multiply supported continuous spans are not included in the scope of this study. Components or equipment which make up a system of continuous multiple span supports utilize a factor no less than 1.5 times peak acceleration as in Item 1, if applicable.

3.7B.3.5.2 Piping Systems

Where the equivalent static load method of analysis is used, stress calculations are performed in a sectionalized (between supports) (Section 3.7B.3.1.2) manner using acceleration values from the ARS. A system with closely-spaced pipe supports represents many one-dimensional straight beam problems, wherein the coupling effects of three-dimensional piping systems can be reduced by locating restraints near elbows, tees, and concentrated masses (such as valves). These manual calculations provide a sufficient basis to satisfy requirements of Articles NC-3600 and ND-3600 of Section III of the ASME Code.

If the fundamental frequency of piping section between restraints (f_p) is less than or equal to 33 cps, simplified seismic analysis computes the seismic stress components by multiplying the deadload stresses by an equivalent load factor of 1.5 times the peak of the ARS. The SRSS of these seismic stress components in two horizontal and one vertical direction is formed to obtain the resultant seismic stress. If f_p is greater than 33 cps, an equivalent load factor of 1.0, instead of 1.5, is used. Deadload and thermal responses are also calculated using a simple beam formulation based on the length of the predetermined span.

3.7B.3.6 Three Components of Earthquake Motion

In the seismic analysis of equipment and components, each of the three defined directions of earthquake input (two horizontal and one vertical taken orthogonally) is evaluated independently. The stresses resulting from the orthogonal earthquake inputs are combined by the absolute addition of the worst horizontal plus vertical stress. Operating stresses are added to the maximum seismic stress.

In the seismic analysis of piping systems, the effects of simultaneous action of three spatial components of earthquake motion are considered. When the response spectrum modal analysis method is utilized for seismic analysis, the maximum piping modal responses (moments and displacements) due to the three spatial components of earthquake motion may be obtained by either SRSS method or by a modified SRSS method. In the modified SRSS method, when considering a particular vibration mode, responses in a particular direction due to the two horizontal direction excitations are combined by SRSS and then combined with response (in this same direction) due to the vertical direction excitation, using absolute summation. It has been

demonstrated by Chang (1973) that this modified SRSS method is always conservative compared with the SRSS method described in position C.2.1 of Regulatory Guide 1.92.

Mathematically the modified SRSS method of response can be expressed as:

$$\left(R_{ix}\right)_j = \left|\sqrt{\left(R_{ix}\right)_{jx}^2 + \left(R_{ix}\right)_{jz}^2}\right| + \left|\left(R_{ix}\right)_{jy}\right|$$

$$\left(R_{iy}\right)_j = \left|\sqrt{\left(R_{iy}\right)_{jx}^2 + \left(R_{iy}\right)_{jz}^2}\right| + \left|\left(R_{iy}\right)_{jy}\right| \qquad (3.7B\text{-}10)$$

$$\left(R_{iz}\right)_j = \left|\sqrt{\left(R_{iz}\right)_{jx}^2 + \left(R_{iz}\right)_{jz}^2}\right| + \left|\left(R_{iz}\right)_{jy}\right|$$

where:

$(R_{ix})_j$ combined response in the x, y
$(R_{iy})_j$ = or z direction, respectively,
$(R_{iz})j$ at node point i for mode j

$(R_{ix})_{jz}$ = response at node i in the x direction in mode j due to the z earthquake

$(R_{ix})_j$, $(R_{iy})_j$, and $(R_{iz})_j$ are then combined for modes 1 to N by methods described in Section 3.7B.3.7, where N is the number of significant modes considered in the modal response combination.

3.7B.3.7 Combination of Modal Responses

For equipment and components, the following methods of combination of modal responses are employed for each direction of earthquake motion:

1. When performing response spectrum modal analysis, the representative maximum value of a particular response earthquake is obtained by taking the SRSS of corresponding maximum values of the response of the element attributed to individual significant modes of the structure, system, or component. Mathematically, this can be expressed as:

$$R = \left[\sum_{k=1}^{N} R_k^2\right]^{1/2} \qquad (3.7B\text{-}11)$$

where:

R = the representative maximum value of a particular response of a given node to a given component of an earthquake,

R_k = the peak value of the response of the node due to the kth mode,

N = the number of significant modes considered in the modal response combination.

2. When performing response spectrum modal analysis, if closely spaced modes exist, the grouping method as described in Regulatory Guide 1.92 is employed to combine modal responses. Mathematically, this can be expressed as follows:

$$R = \left[\sum_{k=1}^{N} R_k^2 - \sum_{q=1}^{P} \sum_{\ell=i}^{j} \sum_{m=i}^{j} \left| R_{\ell q} R_{mq} \right| \right]^{1/2} \qquad (3.7B\text{-}12)$$

$$\ell \neq m$$

where:

$R_{\ell q}$ and R_{mq} are modal responses R_ℓ and R_m within the qth group, respectively,

i is the number of the mode where a group starts,

j is the number of the mode where a group ends,

R, R_k, and N are as defined previously in Position 1.1 of Regulatory Guide 1.92, and

P is the number of groups of closely spaced modes, excluding individual separated modes.

3. The method used for combination of three components of earthquake motion is described in Section 3.7B.3.6.

The following methods are applicable to BOP piping systems employing the modal analysis response spectra method.

1. If the modes are not closely spaced (two consecutive modes are defined as closely spaced if their frequencies differ from each other by 10 percent or less of the lower frequency), the maximum responses of piping are obtained by taking the SRSS of corresponding maximum modal responses of the piping attributed to individual significant modes. This is in agreement with Position C.1.l of Regulatory Guide 1.92, dated February 1976.

2. If closely spaced modes exist, then the grouping method is employed to combine various modal responses from a dynamic

modal analysis. This is in conformance with Position C.1.2.1 of Regulatory Guide 1.92.

3.7B.3.8 Analytical Procedures for Piping

The general analytical procedure of the modal analysis response spectra method for BOP piping systems is described in Section 3.7B.3.1.2. Basic steps and equations used in the analytical procedure are described as follows:

For dynamic analysis, the piping is represented by a lumped mass, multi-degree-of-freedom mathematical model. The distributed piping mass is lumped at the system nodal points. The equation of motion for the system is:

$$[M]\ \{\ddot{X}\} + [C]\ \{\dot{X}\} + [K]\ \{X\} = \{F\} \qquad (3.7B\text{-}13)$$

where:

$[M]$ = Mass matrix for assembled system,

$[C]$ = Damping matrix for assembled system,

$[K]$ = Stiffness matrix for assembled system,

$\{X\}$ = Nodal displacement vector $= [X(t)]$,

$\{\dot{X}\}$ = Nodal velocity vector $= \{\dot{X}(t)\}$,

$\{\ddot{X}\}$ = Nodal acceleration vector $= \{\ddot{X}(t)\}$,

$\{F\}$ = Applied dynamic force vector $= \{F(t)\}$,

= $-[M]\ \{\ddot{U}g\}$ for seismic analysis,

$\{\ddot{U}g\}$ = Seismic absolute acceleration vector for points of pipe support.

This equation is solved to determine the system dynamic response as follows: First, the frequency equation, obtained by removing the forcing and damping terms from the previous equation, is solved for the system natural frequencies and mode shapes. Next, the natural mode shapes are used to transform this equation into a series of independent equations of motion uncoupled in the system modes. Then, the uncoupled equations are solved by the response spectrum method to obtain system response in each mode, and finally the individual modal results are combined to determine the total system dynamic response.

The mathematical formulation of these steps is as described in the following sections.

3.7B.3.8.1 Natural Frequencies and Mode Shapes

First, the eigenvalues (natural angular frequencies) and the eigenvectors (mode shapes) for each of the natural modes are calculated by solving the frequency equation:

$$\left([K] - \omega_n^2 [M]\right) \{\phi\}_n = \{o\} \qquad (3.7B\text{-}14)$$

$$n = 1,2,3....,N$$

where:

ω_n = natural frequency of the nth mode,

$\{\phi\}_n$ = mode shape vector of the nth mode,

$\{O\}$ = null vector,

N = number of significant modes considered

The eigenvalues and eigenvectors are obtained using the Householder-QR algorithm.

3.7B.3.8.2 Dynamic Response

Next, let $\{\eta(t)\}$ be the generalized coordinate vector, substitute $\{X\} = [\phi] \{\eta\}$ into the equation of motion and pre-multiply by $[\phi]^T$; an orthogonal transformation results, from which the uncoupled equations of motion shown as follows are obtained.

$$\ddot{\eta}_n + 2\beta_n\omega_n\dot{\eta}_n + \omega_n^2 \eta_n = P_n \qquad (3.7B\text{-}15)$$

$$n = 1,2,3....,N$$

where:

$[\phi]$ = The square matrix of mode shape vectors,

η_n = Generalized coordinate for the nth mode

= $\eta_n(t)$,

β_n = Damping ratio of the nth mode expressed as percent of critical damping,

P_n = Generalized force of the nth mode,

= $\{\phi\}^T_n \{F\}/M_n$ for applied dynamic force $\{F\}$,

= $\{\phi\}^T_n [M] \left\{\ddot{U}_g\right\}/M_n$ for seismic analysis,

M_n = Generalized mass of the nth mode = $\{\phi\}^T_n [M] \{\phi\}_n$

Solutions to these differential equations are obtained by the method of ARS superposition, as described by the following:

3.7B.3.8.3 Response Spectrum Superposition

The response of a piping system to seismic excitations is obtained using the method of response spectrum superposition. Seismic input is represented by a set of ARS, applied in each appropriate global coordinate direction. These ARS are generated from the application of simultaneous time-history acceleration responses obtained from the structure or equipment time-history analysis. These ARS are peak broadened (Section 3.7B.2.9) to reflect variations in structure properties. Where a piping system is subject to more than one set of ARS, such as support points located in different structures or different parts of the same structure, the enveloping and peak broadening are applied to all participating sets of ARS (Section 3.7B.3.1.2). This results in a final set of ARS, one in each global coordinate direction, to be used for final design. The maximum acceleration for the nth mode of the piping system in the jth global coordinate direction due to the simultaneous action of three spatial components of an earthquake, is then given by:

$$\{\ddot{X}\}_{nj} = \{\phi\}_n \ddot{\eta}_{nj\,max} \qquad (3.7B\text{-}16)$$

where:

$$\ddot{\eta}_{nj\,max} = \frac{\Gamma_{nj}\,(S_a)_{nj}}{M_N}$$

n = 1,2,3....,N

j = 1,2,3 corresponds to response in X,Y, or Z global coordinate direction, respectively.

and:

$\{\ddot{X}\}_{nj}$ = Maximum acceleration vector of mode n, in the j direction,

$\ddot{\eta}_{nj\ max}$ = Maximum generalized coordinate acceleration of mode n, in the j direction,

Γ_{nj} = Modal participation factor for the nth mode in jth global coordinate direction,

= $\{\phi\}^T_n\ [M]\ \{e\}_j$,

$\{e\}_j$ = A vector with components of unity in all directions parallel to jth global coordinate direction and zero, otherwise,

$(S_a)_{nj}$ = Spectral acceleration for the nth mode, in jth global coordinate direction (from enveloped and peak broadened ARS),

and the maximum inertia force vector for the nth mode is given by

$$\{F\}_{nj\ max} = M_n\ \{\phi\}_n\ \ddot{\eta}_{nj\ max} \qquad (3.7B\text{-}17)$$

These inertia forces are calculated for each of the system natural modes and applied as static forces in the same manner as the weight or thermal forces, to find internal moments and forces in each mode. The total maximum member forces and moments due to seismic excitation are then obtained by combining the modal responses described in Section 3.7B.3.7. The seismic anchor displacement effect is considered separately from the seismic inertial effect as described in Section 3.7B.3.9.

Piping systems are also evaluated to assess the potential for significant flow induced dynamic loadings that could result from various modes of system operation as defined in the design specification. These dynamic force loadings are included as occasional mechanical loadings in piping analysis.

The plant design criteria, applicable to BOP Seismic Category I piping systems are tabulated in Tables 3.7B-32, 3.9B-8, 3.9B-9, 3.9B-10 and 3.9B-11.

3.7B.3.9 Multiply-Supported Equipment and Components with Distinct Inputs

To calculate the maximum inertial response of multiply-supported subsystems, an upper bound envelope of all the individual response spectra for the support locations is used. In addition, the relative displacements at the support points are considered by imposing seismic anchor displacements statically on the subsystem as described below.

For support locations attached to the same Seismic Category I structure, seismic anchor displacements are considered to be in phase. Horizontal displacements between different Seismic Category I structures on the same mat foundation are considered to be out-of-phase, and the maximum relative displacements between the structures are thus determined from absolute sums of the support displacements.

When Seismic Category I structures are not attached to the same mat foundation, additional displacements caused by the movement of the ground surface resulting from the passage of seismic waves are combined with the structural inertial displacements as shown in equation 3.7B-18.

$$\overline{X} = \sqrt{\left(|X_1| + |X_2|\right)^2 + \left[X\left(REL_{1-2}\right)\right]^2} \qquad (3.7B\text{-}18)$$

where: $\overline{X}$ = Total relative dynamic displacement (X, Y, or Z direction)

$|X_1|$ = Inertial effect of first structure, including translational and rotational displacements (X, Y, or Z direction)

$|X_2|$ = Inertial effect of second structure including translational and rotational displacements (X, Y, or Z direction)

$X(REL_{1-2})$ = Max relative ground surface displacement between structures in absence of structures (X, Y, or Z direction)

The procedures used to compute structural inertial displacements and the relative ground surface displacements are described in FSAR Sections 3.7B.2 and 2.5.4.7.4, respectively.

Each maximum relative directional component of seismic anchor displacement is treated individually as input and a static analysis is performed. The resulting member forces and moments from all three directions of seismic anchor displacement input are combined by the SRSS method. Total seismic response is developed by absolute summation of the inertia and anchor displacement effects for OBE. For SSE, anchor displacement effects are considered only for the piping systems identified in Table 3.9B-9, and for containment penetrations.

These seismic member moments and forces are then combined with loads from deadweight, pressure, other mechanical or thermal loads, to complete the stress analysis of all Seismic Category I and some non-ASME piping. For ASME Code Class 1 piping, the formulation specified in Subarticle NB-3600, ASME Section III, is employed. For ASME Code Class 2 and 3 piping, the formulations in Subarticle NC-3600 and ND-3600, respectively, are used.

3.7B.3.10 Use of Constant Vertical Static Factors

3.7B.3.10.1 Equipment and Components

Constant load factors are not utilized for vertical floor response in the design of Seismic Category I equipment and components.

3.7B.3.10.2 Piping Systems

The method of applying constant static factors as vertical response loads, based on the assumption of vertically rigid structures, for the seismic design of Seismic Category I piping is not used. However, a simplified analysis (equivalent static load method), using constant load factors for both the vertical and horizontal directions based on the peaks of applicable ARS, is used for some small bore piping systems, as described in Section 3.7B.3.5.2.

3.7B.3.11 Torsional Effects of Eccentric Masses

The effect of eccentric masses, such as valves and valve operators, is considered in the seismic piping analysis described in Section 3.7B.3.1.2. These eccentric masses are included in the mathematical model for the system analysis and the torsional effects caused by them are evaluated and included in the total system response. The total response must meet the limits of the criteria applicable to the Safety Class of the piping for ASME III piping, and the criteria described in Section 3.7B.3.13 for non-ASME III piping which is seismically analyzed.

3.7B.3.12 Buried Seismic Category I Piping Systems

In performing stress analysis of buried Seismic Category I piping systems, the following loadings are considered:

1. Internal pressure,
2. Soil pressure (includes dead load and live loads due to traffic when applicable),
3. Thermal expansion,

4. Differential movements between structures and adjacent soil or along buried piping away from structures due to settlement and seismic motion, and

5. Seismic wave effects.

Effects of loadings 1 and 2 are assessed by well-known methods (Sections 21-29 to 21-33 of the Piping Handbook) according to King and Crocker (1967). Effects of loadings 3 and 4 are accounted for by a static analysis considering piping modeled together with soil springs. This is basically a beam on elastic foundation approach. Both loadings 4 and 5 are discussed in detail in the sections immediately following.

The basic assumptions concerning buried piping stress analysis are:

1. Piping satisfies the elementary theory of beams,

2. Soil is linear elastic, homogeneous, and isotropic, and time independent

3. Piping moves with the surrounding soil during an earthquake.

4. It is assumed that the BVPS-2 site is not subjected to near field effects of earthquake shaking. That is, it is far enough away from the source so that body waves (compression and shear) have largely been attenuated and the surface waves control the amplitudes of motion. Therefore, for this procedure only, Rayleigh waves are assumed to induce stresses in the buried piping system since this type of seismic wave induces the highest axial strains.

3.7B.3.12.1 Seismic Wave Effect in the Free Field

Various seismic waves develop during an earthquake. There are compression waves (P-waves), shear waves (S-waves), and different kinds of surface waves such as Rayleigh waves (R-waves). When seismic waves propagate through the soil, responses of buried Seismic Category I piping are calculated by making use of the analytical approach proposed by Goodling (1978, 1979, 1980).

Straight portions of buried piping far from the effect of external supports, bends and tees are assumed to move with the soil when seismic waves propagate through it. Since Rayleigh waves induce the highest axial strains in buried piping, only these waves are considered in the analysis. The strains of the soil have been conservatively established as follows:

Axial strain $\varepsilon_m = \frac{V_m}{C_R}$ (3.7B-19)

Bending curvature $\chi = \frac{a_m}{C_R{}^2}$ (3.7B-20)

where:

V_m = peak ground velocity, in/sec.
a_m = peak ground acceleration, in/sec^2.
C_R = Rayleigh wave velocity, in/sec.

Therefore, the stresses on the straight portions of buried piping mentioned above are given by:

Axial stress $\sigma_a = \frac{EV_m}{C_R} \frac{F_{max}}{A} = \varepsilon_m E$ (3.7B-21)

Bending stress $\sigma_b = \frac{E\ D_o\ a_m}{2\ C_R{}^2} = \frac{ED_o\chi}{2}$ (3.7B-22)

where:

E = Young's modulus of pipe, psi.
D_o = outside diameter of pipe, in.
F_{max} = maximum axial force, lb.
A_m = cross-sectional area of pipe, in^2.

Seismic wave effect on bends and tees in the free field are considered separately. For a bend, the maximum stresses are determined by assuming that its longitudinal leg is in the direction of maximum soil strain and its transverse leg is in the perpendicular direction.

The longitudinal leg may terminate into another bend, an anchor, or a free end. The bend is classified accordingly and the actual slippage length (L') along which slippage between pipe and soil occurs is determined as outlined by Goodling (1978).

The net relative displacement Δ, between soil and pipe at the bend is given by:

$$\Delta_1 = \varepsilon_m L' - \frac{fL'^2}{2A_m E} - \frac{S_1 L'}{A_m E} \quad (3.7B\text{-}23)$$

where:

$\varepsilon_m L'$ = theoretical unrestrained relative movement at the elbow over length L';

S_1L'/A_mE = the amount of pipe elongation due to the bearing force of soil against the transient T' leg producing the shear force S_1 at the elbow and which is transformed into an axial force in the longitudinal 'P' leg.

$fL'^2/2A_mE$ = the pipe elongation due to friction along the soil/pipe interface.

S_1 = the axial force in the longitudinal leg, lb.

f = frictional force per unit length of pipe, lb/in.

The bend legs are considered as beams on elastic foundation for which its parameter λ is given by:

$$\lambda = \sqrt[4]{\frac{k}{4EI}} \qquad (3.7B\text{-}24)$$

where:

k = soil spring constant, per unit length, lb/in^2.

I = moment of inertia of pipe cross section, in^4.

In case of long-transverse leg (its length is greater than $3\pi/4\lambda$ the following equations are derived by incorporating the interdependence of forces, moments, soil deformation, and rotation of the pipe in the immediate vicinity of the bend (Goodling 1980).

$$M = \frac{\lambda \Delta_1}{R\phi / K'EI} \qquad (3.7B\text{-}25)$$

$$S_1 = \frac{k\,\Delta_1}{2\lambda} + \lambda M \qquad (3.7B\text{-}26)$$

where:

M = bending moment, in-lb/in.
φ = elbow angle, radians
R = radius of elbow in.
K' = $1 - \dfrac{9}{10 + 12\left(\dfrac{tR}{a^2}\right)^2}$
t = actual pipe wall thickness, in.
a = outside radius of pipe, in.

In case of short transverse leg, the following conservative equations derived by Goodling (1978) are used:

$$\Delta_1 = \frac{\varepsilon_m L' - \dfrac{fL'^2}{2A_m E}}{kL' \dfrac{C_3}{1 + \dfrac{2C_1C_3 - C_2^2}{A_m E\,\lambda}}} \qquad (3.7B\text{-}27)$$

$$S_1 = \frac{k\Delta_1}{\lambda} \frac{C_3}{2C_1C_3 - C_2^2} \qquad (3.7B\text{-}28)$$

$$M = \frac{k\Delta_1}{2\lambda^2} \frac{C_2}{2C_1C_3 - C_2^2} S_{in\ \phi} \qquad (3.7B\text{-}29)$$

where:

C_1, C_2 and C_3 are coefficients given by Goodling (1978)

The maximum axial force in the longitudinal leg, F_{max}, induced by the seismic motion is given by:

$$F_{max} = S_1 + fL' \qquad (3.7B\text{-}30)$$

Having determined the values of S_1, M and F_{max}, the stresses due to local deformation at the bend can be evaluated. These stresses are superimposed on stresses caused by the curvature of the pipe during seismic wave propagation. The combined stresses at the bend are multiplied by an intensification factor (0.75 i) to account for the higher intensity of stresses at the elbow.

The following expressions for stress result:

$$\underset{\text{Stress at an Elbow}}{S_{o1}\ (\text{elbow})} = 0.75i\left[ED_o\chi/2 + M/Z\right] + S_1/A_m \qquad (3.7B\text{-}31)$$

$$\underset{\text{Stress in the Longitudinal Run}}{S_{o1}\ (\text{long})} = F_{max}/A_m + ED_o\,\chi/2 \qquad (3.7B\text{-}32)$$

where:

Z = section modulus of pipe, in^3.

Occasionally, when the conservative equations used in case of short transverse leg result in unacceptable stresses, the technique

incorporating the passive resistance of soil, as presented by Goodling (1978), may be used.

A similar approach is used for analyzing tees (Goodling 1978).

3.7B.3.12.2 Effects of Differential Movement Between Structure and Adjacent Soil Due to Seismic Motion

During an earthquake, it is assumed differential seismic motions occur between structures and adjacent soils. The effect on the buried piping systems due to these differential motions can be evaluated by considering separately the effects of different components, (differential motion components transverse to the direction of the piping axis, and differential motion components parallel to the direction of the piping axis).

1. Differential motion components transverse to the direction of the piping axis:

   The subgrade reaction approach is used here to simulate the effect of soil on the deformation and stress of the buried pipe due to differential motion components transverse to the direction of piping axis.

   The approach is based on the assumption that soil subjected to pressure behaves like a system of uniformly spaced elastic springs with predetermined stiffness. The soil is thus represented by a series of orthogonal pairs of elastic springs in directions transverse to the piping axis and attached to the piping in the mathematical model. The elastic sprinqs in the vertical direction are calculated according to the Vesic equation.

$$k_{ov} = \frac{0.65}{D_o}\sqrt{\frac{E_s D_o^{\,4}}{E_p I_p}}\left(\frac{E_s}{1-\nu^2}\right) \qquad (3.7B\text{-}33)$$

where:

k_{ov} = coefficient of subgrade reaction (FL^{-3})
D_o = outside diameter of pipe (L)
E_s = Young's modulus soil (FL^{-2})
E_p = Young's modulus pipe (FL^{-2})
I_p = moment of inertia of pipe (L^4)
ν = Poisson's ratio soil

The elastic springs in the horizontal direction are calculated based on the method described by Audibert and Nyman (1977). The maximum expected transverse seismic structural displacements at the structural penetration are used as input in the calculation. The

stress computation is done by the computer program NUPIPE S-W, which is listed in Appendix 3A. In principle, this approach is basically a beam analysis on an elastic foundation (Hetenyi 1946).

2. Differential motion components parallel to the direction of piping axis.

   The effect on buried long straight piping due to differential seismic motions along the direction of piping axis at a penetration is assessed by considering the frictional force between pipe and soil, and the maximum axial stress due to this effect is (Yeh 1974):

$$S\ (\text{displ.}) = \sqrt{(2\ E\ f\ \Delta_a / A_m} \quad (3.7B\text{-}34)$$

where:

Δ_a = axial displacement of pipe at penetration point through structure, in.

When bends or tees exist close to the penetration, the effect of differential motion parallel to the direction of the piping axis is analyzed by using the NUPIPE-SW Computer Program.

3.7B.3.12.3 Effects of Differential Settlement

Three areas of concern for effects of settlement on buried piping are as follows:

1. Settlement of structures,

2. Settlement of soil adjacent to structures to which buried piping is attached, and

3. Settlement of soil in which piping is buried away from structures.

The magnitude of settlement for each of these areas is determined as described in Section 2.5.4.

Settlement of a structure can occur either due to its own weight over a period of time or due to an earthquake. The settlement of a structure where piping is connected, as well as the soil adjacent to the structure where piping is buried, are imposed on the buried piping, and the approach outlined in "differential motion components transverse to the direction of piping axis" given previously is used to evaluate stresses in the buried piping.

Generally, the piping is considered to be sufficiently flexible to withstand the gradual differential settlements that may occur along buried piping away from structures without exceeding allowable pipe stress levels. For this reason, stress analysis due to settlement of buried piping away from structures is usually unnecessary. However, analysis is performed for piping in those areas where it is anticipated that differential settlements may be of such a magnitude that the resulting pipe stress levels are potentially of concern. The method of analysis is the same as for buried piping connected to a structure.

3.7B.3.12.4 Accommodations for Buried Piping Structural Penetration

The resultant loadings imposed by thermal, structural, and seismic distortions may cause severe local stresses in buried piping at structure penetration points. The piping, if anchored at the structural wall, may be too stiff to accommodate these distortions for such locations. In such cases, the buried piping design includes

a structural penetration, consisting of a concrete box or a conduit, which is not attached to the structure, and is free to move with the soil rather than with the structure. Within the box or conduit, the piping may be provided with expansion joints or piping loops to accommodate relative displacements in both axial and transverse directions, if necessary.

3.7B.3.13 Interaction of Other Piping with Seismic Category I Piping

Non-ASME piping systems are designed to be isolated from any Seismic Category I piping system by either an anchor or barrier, or are removed from the location of the Seismic Category I piping system. If it is not feasible or practical to isolate the Seismic Category I piping system from the non-ASME, the adjacent non-ASME piping is then seismically analyzed. For the non-ASME piping systems attached to Seismic Category I piping systems, the dynamic effects of the non-ASME piping are simulated in the analysis modeling of the Seismic Category I piping and analyzed to the same criteria as the Seismic Category I piping system up to and including the first anchor beyond the ASME/non-ASME class break, except that if the non-ASME piping is connected to ASME III Class 1 piping a fatigue analysis is not required for the piping beyond the connection to the Class 1 piping.

For non-ASME piping systems which are not attached to Seismic Category I piping systems but whose failure could compromise the design and/or function of Seismic Category I components/piping due to its close proximity, the non-ASME piping is seismically analyzed and the seismic stresses are evaluated in accordance with equation 9 of Subarticle NC-3600, ASME Code, Section III but equated to faulted allowable (2.4 S_h) only to ensure that its structural integrity is maintained.

3.7B.3.14 Seismic Analyses for Reactor Internals

This information is provided in Section 3.7N.3.14.

3.7B.3.15 Analysis Procedure for Damping

The analysis procedure, which include consideration of damping, are contained in Sections 3.7B.3.1 and 3.7B.3.8. Damping values utilized in the design and analysis of equipment, components, and piping systems are provided in Section 3.7B.1.3.

3.7B.4 Seismic Instrumentation

3.7B.4.1 Comparison with Regulatory Guide 1.12

Beaver Valley Power Station - Unit 2 seismic instrumentation is provided, in accordance with the recommendations of ANSI/ANS-2.2-1978, as modified by the Regulatory Guide 1.12, Revision 1, for a SSE with the maximum acceleration less than 0.3g, with the exceptions listed in Table 1.8-1.

3.7B.4.2 Location and Description of Instrumentation

Seismic instrumentation packages are located in areas where they can be serviced during BVPS-2 shutdown.

All instruments are oriented to the same azimuths, except one remote accelerograph sensor which is mounted to the containment crane wall. It is oriented such that it will respond to horizontal motion in the radial and tangential directions of the containment. Instrument characteristics conform to the requirements of Section 5 of ANSI/ANS-2.2-1978, as modified by Regulatory Guide 1.12, Revision 1.

The seismic instrumentation system comprises the following instruments:

Time-History Accelerograph System

A triaxial time-history accelerograph system is provided to sense, record and analyze data associated with seismic events. Except for the sensors, the system is located in the BVPS-2 control room.

A seismic trigger from either the containment mat or freefield sensor initiates recording when seismic activity exceeds an established threshold. When activated by the seismic trigger, signals from the sensors on the containment mat and in the freefield are processed by a response spectrum analyzer that compares actual conditions with pre-determined building response spectra. Capability for printing event-specific response spectra from the analyzer is also provided.

Two acceleration sensors are located inside the reactor containment structure. One is mounted on the mat, between the cranewall and the exterior wall at elevation 692 feet-11 inches. The second is located directly above the first, on the operating floor at elevation 767 feet-10 inches. A free-field sensor is located on a concrete pad in the switchyard.

Triaxial Accelerograph Units

Three independent triaxial accelerograph units consisting of an accelerometer, seismic trigger, recorder, clock and auxiliary power supply are also provided. The event is recorded as acceleration versus time and can be manually transferred to a response spectrum analyzer to obtain the corresponding response spectra.

Locations of the accelerometers for the three units are as follows:

1. Reactor Containment Structure on the outside face of the crane wall above elevation 738 feet-10 inches.

2. Center of auxiliary building mat, elevation 710 feet-6 inches

3. At base of 480 V motor control center, MCC*2-E03, elevation 755 feet-6 inches

Triaxial Peak Accelerograph

Three triaxial peak accelerographs capable of measuring and permanently recording peak acceleration are provided. These units are passive and require no power input.

Two triaxial peak accelerographs are located within the reactor containment structure. One unit is mounted on the residual heat removal heat exchanger, (2RHS-E21A) at elevation 715 feet-6 inches. The other unit is attached to the 6-inch safety injection piping, (2SIS-006-269-l(A) CL 1502), at elevation 741 feet-5 inches.

The third triaxial peak accelerograph is attached to the 480 V motor control center, (MCC*2-E03), at elevation 755 feet-6 inches in the auxiliary building.

3.7B.4.3 Control Room Notification

The recorders and control unit for the triaxial time-history accelerograph system is located in the BVPS-2 control room. The seismic trigger visual signals are displayed on the control unit panel. Following an event, the recorded data can be displayed or printed to review absolute acceleration versus time at each sensor.

The response spectrum analyzer monitors input data from the sensor on the containment mat and in the switchyard. Response spectra are calculated for the event. If the specified 1/2 SSE limit is exceeded at one or more of the specified frequencies, a visual indicator is activated. Thus the operator has notification when the 1/2 SSE design response spectra have been exceeded.

3.7B.4.4 Comparison of Measured and Predicted Responses

In the event of an earthquake, the control room operator, having been informed as discussed in Section 3.7B.4.3, shall determine if the response spectra experienced at the foundation of the containment structure or in the switchyard have exceeded 1/2 SSE values.

Recorded time-history responses from the triaxial time-history accelerographs will be processed by the response spectrum analyzer thus allowing comparison of actual building response to design response spectra.

Amplified response spectra (ARS) for the floor elevations of the sensors in the containment, generated by a response spectrum analyzer using the recorded floor motion data, shall be compared with the existing containment design ARS for those locations. The comparison will establish whether design basis motion levels were exceeded in support of post-earthquake plant evaluation.

3.7B.4.5 In-Service Surveillance of Seismic Instrumentation

The in-service surveillance of the seismic monitoring instrumentation will be performed as described in the BVPS-2 Licensing Requirements Manual.

3.7N SEISMIC DESIGN

In addition to the steady state loads imposed on the system under normal operating conditions, the design of equipment and equipment supports requires that consideration also be given to abnormal loading conditions such as earthquakes. Seismic loadings are considered for earthquakes of two magnitudes: safe shutdown earthquake (SSE) and operating basis earthquake (OBE). The SSE is defined as the maximum vibratory ground motion at the plant site that can reasonably be predicted from geologic and seismic evidence. The OBE is that earthquake which, considering the local geology and seismology, can be reasonably expected to occur during the plant life.

For the OBE loading condition, the nuclear steam supply system (NSSS) is designed to be capable of continued safe operation. The design for the SSE is intended to assure:

1. That the integrity of the reactor coolant pressure boundary is not compromised,

2. That the capability to shut down the reactor and maintain it in a safe condition is not compromised, and

3. That the capability to prevent or mitigate the consequences of accidents which could result in potential offsite exposures comparable to the guideline exposures of 10 CFR 100 is not compromised.

The seismic requirements for safety-related instrumentation and electrical equipment are contained in Section 3.10. The safety class definitions, classification lists, operating condition categories, and the methods used for seismic qualification of mechanical equipment are given in Section 3.2.

3.7N.1 Seismic Input

3.7N.1.1 Design Response Spectra

Refer to Section 3.7B.1.1.

3.7N.1.2 Design Time History

Refer to Section 3.7B.1.2.

3.7N.1.3 Critical Damping Values

The damping values used in the analysis of Westinghouse equipment are given in Table 3.7N-1. These damping values are consistent with Regulatory Guide 1.61 and WCAP-7921 AR (Westinghouse 1974a) which has been approved by the U.S. Nuclear Regulatory Commission.

The damping values listed in Regulatory Guide 1.61 are acceptable to Westinghouse for plants using 3D seismic analysis. Westinghouse uses one exception to the values. A conservative value of 4 percent of critical for that of large piping systems faulted conditions is used instead of 3 percent of critical set forth in Regulatory Guide 1.61. The Westinghouse value of 4 percent has been justified by testing for the Westinghouse reactor coolant loop configuration in WCAP-8288 Report (Westinghouse 1974b) and has been approved by the staff.

Tests on fuel assembly bundles justified conservative component damping values. Documentation of the fuel assembly tests is found in WCAP-7921-AR (Westinghouse 1974a).

The damping values used in component analysis of control rod drive mechanisms (CRDMs) and their seismic supports were developed by testing programs performed by Westinghouse. The test conducted was on a full size CRDM complete with rod position indicator coils, attachment to a simulated vessel head, and variable gap between the top of the pressure housing support plate and a rigid bumper representing the support.

The program consisted of transient vibration tests in which the CRDM was deflected a specified initial amount and suddenly released. A logarithmic decrement analysis of the decaying transient provides the

effective damping of the assembly. The effect on damping of variations in the drive shaft axial position, upper seismic support clearance, and initial deflection amplitude was investigated.

The upper support clearance had the largest effect on the CRDM damping with the damping increasing with increasing clearance. With an upper clearance of 0.06 inches, the measured damping was approximately 8 percent. The clearances in a typical upper seismic CRDM support is a minimum of 0.10 inches. The increasing damping with increasing clearances trend from the test results indicated that the damping would be greater than 8 percent for both the OBE and the SSE based on a comparison between typical deflections of the mechanisms in the test. Component damping values of 5 percent are, therefore, conservative for both the OBE and the SSE.

3.7N.1.4 Supporting Media for Seismic Category I Structures

Refer to Section 3.7B.1.4.

3.7N.2 Seismic System Analysis

This section describes the methods of seismic analysis performed for safety-related components and systems within Westinghouse's scope.

3.7N.2.1 Seismic Analysis Methods

Those components and systems that must remain functional in the event of the SSE (Seismic Category I) are identified by applying the criteria of Section 3.2.1. In general, the dynamic analyses are performed using a modal analysis with either the response spectrum analysis or integration of the uncoupled modal equations as described in Sections 3.7N.2.1.3 and 3.7N.2.1.4, respectively; or by direct integration of the coupled differential equations of motion described in Section 3.7N.2.1.5.

3.7N.2.1.1 Dynamic Analysis - Mathematical Model

The first step in any dynamic analysis is to model the structure or component (convert the real structure or component into a system of masses, springs, and dashpots suitable for mathematical analysis). The essence of this step is to select a model so that the displacements obtained will be a good representation of the motion of the structure or component. Stated differently, the true inertia forces should not be altered so as to appreciably affect the internal stresses in the structure or component. Some typical modeling techniques are presented in Lin (1974).

<u>Equation of Motion</u>

Consider the multi-degree of freedom system shown on Figure 3.7N-1. Making a force balance on each mass point r, the equations of motion can be written in the form:

$$m_r \ddot{y}_r + \sum^{i} c_{ri} \ddot{u}_i + \sum^{i} k_{ri} u_i = 0 \qquad (3.7N\text{-}1)$$

where:

m_r = the value of the mass or mass moment of rotational inertia at mass point r

$\ddot{y}_r$ = absolute translational or angular acceleration of mass point r

c_{ri} = damping coefficient - external force or moment required at mass point r to produce unit translational or angular velocity at mass point i, maintaining zero translational or angular velocity at all other mass points. Force or moment is positive in the direction of positive translational or angular velocity

$\dot{u}_r$ = translational or angular velocity of mass point i relative to the base

k_{ri} = stiffness coefficient - the external force (moment) required at mass point r to produce a unit deflection (rotation) at mass point i, maintaining zero displacement (rotation) at all other mass points. Force (moment) is positive in the direction of positive displacement (rotation)

u_i = displacement (rotation) of mass point i relative to the base

As an example, note that Figure 3.7N-1 does not attempt to show all of the springs (not any of the dashpots) which are represented in Equation 3.7N-1.

Because:

$$\ddot{y}_r = \ddot{u}_r + \ddot{y}_s \qquad (3.7N\text{-}2)$$

where:

$\ddot{y}_s$ = absolute translational (angular) acceleration of the base

u_r = translational (angular) acceleration of mass point r relative to the base

Equation 3.7N-1 can be written as:

$$m_r \ddot{u}_r + \sum^{i} c_{ri} \ddot{u}_i + \sum^{i} k_{ri} u_i = -m_r \ddot{y}_s \qquad (3.7N\text{-}3)$$

For a single degree of freedom system with displacement u, mass m, damping c, and stiffness k, the corresponding equation of motion is:

$$m\ddot{u} + c\dot{u} + ku = m\ddot{y}_s \qquad (3.7N\text{-}4)$$

3.7N.2.1.2 Modal Analysis

Natural Frequencies and Mode Shapes

The first step in the modal analysis method is to establish the normal modes, which were determined by eigen solution of Equation 3.7N-3. The right hand side and the damping term are set equal to zero for this purpose as illustrated in Biggs (1964). Thus, Equation 3.7N-3 becomes:

$$m_r \ddot{u}_r + \sum^{i} k_{ri} u_i = \{0\} \qquad (3.7N\text{-}5)$$

The equation given for each mass point r in Equation 3.7N-5 can be written as a system of equations in matrix form as:

$$[M]\{\ddot{\Delta}\} + K\{\Delta\} = \{0\} \qquad (3.7N\text{-}6)$$

where:

$[M]$ = mass and rotational inertia matrix

$\{\Delta\}$ = column matrix of the general displacement and rotation at each mass point relative to the base

$[K]$ = square stiffness matrix

$\{\ddot{\Delta}\}$ = column matrix of general translational and anqular accelerations at each mass point relative to the base, $d^2 [\Delta]/dt^2$

Harmonic motion is assumed and the $[\Delta]$ is expressed as:

$$\{\Delta\} = \{\delta\} \sin \omega t \qquad (3.7N\text{-}7)$$

where:

$\{\delta\}$ = column matrix of the spatial displacement and rotationat each mass point relative to the base

ω = natural frequency of harmonic motion in radians per second

The displacement function and its second derivative are substituted into Equation 3.7N-6 and yield:

$$[K]\{\delta\} = \omega^2 [M]\{\delta\} \qquad (3.7N\text{-}8)$$

The determinant $\left|[K] - \omega^2 [M]\right|$ is set equal to zero and is then solved for the natural frequencies. The associated mode shapes are then obtained from Equation 3.7N-8. This yields n natural frequencies and mode shapes where n equals the number of dynamic degrees of freedom of the system. The mode shapes are all orthogonal to each other and sometimes referred to as normal mode vibrations. For a single degree of freedom system, the stiffness matrix and mass matrix are single terms and the determinant $\left|[K] - \omega^2 [M]\right|$ when set equal to zero yields simply:

$$k - \omega^2 m = 0$$

or

$$\omega = \sqrt{\frac{k}{m}} \qquad (3.7N\text{-}9)$$

where ω is the natural angular frequency in radians per second.

The natural frequency in cycles per second is therefore:

$$f = \frac{1}{2\pi}\sqrt{\frac{k}{m}} \qquad (3.7N\text{-}10)$$

To find the mode shapes, the natural frequency corresponding to a particular mode, ω_n can be substituted in Equation 3.7N-8.

Modal Equations

The response of a structure or component is always some combination of its normal modes. Good accuracy can usually be obtained by using only the first few modes of vibration. In the normal mode method, the mode shapes are used as principal coordinates to reduce the equations of motion to a set of uncoupled differential equations that describe the motion of each mode n. These equations may be written as described by Biggs (1964):

$$\ddot{A}_n + 2_{\omega n} p_n \dot{A}_n + n^2 \omega A_n = -\Gamma_n y_s \qquad (3.7N\text{-}11)$$

Where the modal displacement or rotation, A_n, is related to the displacement or rotation of mass point r in mode n, u_{rn}, by the equation:

$$u_{rn} = A_n \phi_{rn} \qquad (3.7N\text{-}12)$$

where :

ω_n = natural frequency of mode n in radians per second

p_n = critical damping ratio of mode n

Γ_n = modal participation factor of mode n given by:

$$\Gamma_n = \frac{\sum^{n} m_r \phi' r n}{\sum^{n} m_r \phi^2 rn} \qquad (3.7N\text{-}13)$$

where :

ϕ'_{rn} = value of ϕ_{rn} in the direction of the earthquake

ϕ_{rn} = mode shape for mode n with degree of freedom r

The essence of the modal analysis lies in the fact that Equation 3.7N-11 is analogous to the equation of motion for a single degree of freedom system that will be developed from Equation 3.7N-4. Dividing Equation 3.7N-4 by m gives:

$$\ddot{u} + \frac{c}{m}\dot{u} + \frac{k}{m}u = y_s \qquad (3.7N\text{-}14)$$

The critical damping ratio of the single degree of freedom system, p, is defined by the equation:

$$p = \frac{c}{c_c} \qquad (3.7N\text{-}15)$$

where the critical damping coefficient is given by the expression:

$$c_c = 2\,m\omega \qquad (3.7N\text{-}16)$$

Substituting Equation 3.7N-16 into Equation 3.7N-15 and solving for c/m gives:

$$\frac{c}{m} = 2\omega p \qquad (3.7N\text{-}17)$$

Substituting this expression and the expression for k/m given by Equation 3.7N-9 into Equation 3.7N-14 gives:

$$\ddot{u} + 2\omega p\dot{u} + \omega^2 u = -y_s \qquad (3.7N\text{-}18)$$

Note the similarity of Equations 3.7N-11 and 3.7N-18. Thus, each mode may be analyzed as though it were a single degree of freedom system and all modes are independent of each other. By this method a fraction of critical damping (that is, c/c_c) may be assigned to each mode, and it is not necessary to identify or evaluate individual damping coefficients, (that is, c). However, assigning only a single damping ratio to each mode has a drawback. There are three ways used to overcome this limitation when considering a slightly damped structure (such as steel) supported by a massive moderately damped structure (such as concrete).

There are several methods which can be used to incorporate damping in a structural system. The first method is to develop and analyze separate mathematical models for both structures using their respective damping values. The massive moderately damped support structure is analyzed first. The calculated response at the support points for the slightly damped structures is used as a forcing function for the subsequent detailed analysis. The second method is to inspect the mode shapes to determine which modes correspond to the slightly damped structure and then use the damping associated with the slightly damped structure having predominant motion. The third method is to use the Rayleigh damping method based on computed modal energy distribution.

3.7N.2.1.3 Response Spectrum Analysis

The response spectrum is a plot showing the variation in the maximum response (Thomas et al 1963) (displacement, velocity, and acceleration) of a single degree of freedom system versus its natural frequency of vibration when subjected to a time history motion at its base.

The response spectrum concept can be best explained by outlining the steps involved in developing a spectrum curve. Determination of a single point on the curve requires that response (displacement, velocity, and acceleration) of a single degree of freedom system with a given damping and natural frequency be calculated for a given base motion.

The variations in response are established and the maximum absolute value of each is plotted as an ordinate with natural frequency used as the abscissa. The process is repeated for other assumed values of frequency in sufficient detail to establish the complete curve. Other curves corresponding to different fractions of critical damping are obtained in a similar fashion. Thus, the determination of each point of the curve requires a complete dynamic response analysis, and the determination of a complete spectrum may be used to analyze each structure and component with the base motion. The spectral acceleration, veloctiy, and displacement are related by the equation:

$$s_{a_n} = \omega_n S_{v_n} = \omega_n^{\ 2} S_{d_n} \qquad (3.7N\text{-}19)$$

There are two types of response spectra that must be considered. If a given building is shown to be rigid and to have a hard foundation, the ground response spectrum or ground time history is used. It is referred to as a ground response spectrum. If the building is flexible and/or has a soft foundation, the ground response spectrum is modified to include these effects. The response spectrum at various support points must be developed. These are called floor response spectra.

3.7N.2.1.4 Integration of Modal Equations

This method can be separated into the following two basic parts:

1. Integration procedure for the uncoupled modal Equation 3.7N-11 to obtain the modal displacements and accelerations as a function of time.

2. Using these modal displacements and accelerations to obtain the total displacements, accelerations, forces, and stresses.

Integration Procedure

Integration of these uncoupled modal equations is done by step-by-step numerical integration. The step-by-step numerical integration procedure consists of selecting a suitable time interval, Δt, and calculating modal acceleration, $\ddot{A}_n$, modal velocity, $\dot{A}_n$, and modal displacement, A_n, at discrete time stations Δt apart, starting at $t = 0$ and continuing through the range of interest for a given time history of base acceleration.

Total Displacements, Accelerations, Forces, and Stresses

From the modal displacements and accelerations, the total displacements, accelerations, forces, and stresses can be determined as follows:

1. Displacement of mass point r in mode n as a function of time is given by Equation 3.7N-12 as:

$$u_{rn} = A_n \ \phi_{rn} \qquad (3.7N\text{-}20)$$

with the corresponding acceleration of mass point r in mode n as:

$$\ddot{u}_{rn} = \ddot{A}_n \ \phi_{rn} \qquad (3.7N\text{-}21)$$

2. The displacement and acceleration values obtained for the various modes are superimposed algebraically to give the total displacement and acceleration at each time interval.

3. The total acceleration at each time interval is multiplied by the mass to give an equivalent static force. Stresses are calculated by applying these forces to the model or from applying the deflections at each time interval.

3.7N.2.1.5 Integration of Coupled Equations of Motion

The dynamic transient analysis is a time history solution of the response of a given structure to know forces and/or displacement forcing functions. The structure may include linear or nonlinear elements, gaps, interfaces, plastic elements, and viscous and Coulomb dampers. Nodal displacements, nodal forces, pressure, and/or temperatures may be considered as forcing functions. Nodal displacements and elemental stresses for the complete structure are calculated as functions of time.

The basic equations for the dynamic analysis are as follows:

$$M \ \{\ddot{x}\} + C \ \{\dot{x}\} + K \ \{x\} = \{F(t)\} \qquad (3.7N\text{-}22)$$

where the terms are as defined earlier and $\{F(t)\}$ may include the effects of applied displacements, forces, pressures, temperature, on nonlinear effects such as plasticity and dynamic elements with gaps. Options of translational accelerations input to a structural system and the inclusion of static deformation and/or preload may be considered in nonlinear dynamic transient analysis. The option of translational input such as uniform base motion to a structural system is considered by introducing an inertia force term of - $M \ \{\ddot{z}\}$ to the right hand side of the basic Equation 3.7N-22, that is,

$$M \ \{\ddot{x}\} + C \ \{\dot{x}\} + K \ \{x\} = \{F\} - M \ \{\ddot{z}\} \qquad (3.7N\text{-}23)$$

The vector $\{\ddot{z}\}$ is defined by its components $\ddot{z}_i$ where i refers to each degree of freedom of the system. If the i-th degree of freedom is aligned with the direction of the system translational acceleration

$\ddot{a}_1$, $\ddot{a}_2$, or $\ddot{a}_3$, respectively, $\ddot{z}$ is equal to $\ddot{a}_1$, $\ddot{a}_2$, $0\,\ddot{a}_3$. If the i-th degree of freedom is not aligned with any direction of the system translational acceleration, $\ddot{z}_i = 0$. Typical application of this option is a structural system subjected to a seismic excitation of a given ground acceleration record. The displacement {x} obtained from the solution of Equation 3.7N-23 is the displacement relative to the ground.

The option of the inclusion of initial static deformation or preload in a nonlinear transient dynamic structural analysis is considered by solving the static problem prior to the dynamic analysis. At each state of integration in transient analysis, the portion of internal forces due to static deformation is always balanced by the portion of the forces which are statically applied. Hence, only the portion of the forces which deviate from the static loads will produce dynamic effects. The output of this analysis is the total result due to static and dynamic applied loads.

One available method for the numerical integration of Equations 3.7N-22 and 3.7N-23 is the Newmark Beta integration scheme proposed by Chan (et al 1962). In this integration scheme, Equations 3.7N-22 and 3.7N-23 are replaced by:

$$\frac{1}{(\Delta t)^2}\,[M]\,\{x_{n+2} - 2x_{n+1} + x_n\} + \frac{1}{2(\Delta t)}\,\{x_{n+2} - x_n\}\,[C]$$

$$+ [K]\,\{\beta x_{n+2} + (1-2\beta)x_{n+1} + \beta x_n\} \qquad (3.7N\text{-}24)$$

$$= \{\beta F_{n+2} + (1-2\beta)\,F_{n+1} + \beta F_n\}$$

where:

n, n+1, n+2 = past, present, and future (updated) values of the variables

β = parameter to be selected on the basis of numerical stability and accuracy

F = the total right hand side of the equation of motion (Equation 3.7N-22 or 3.7N-23)

$$\Delta t = t_{n+2} - t_{n+1} = t_{n+1} - t_n$$

The value of β is chosen equal to 1/3 in order to provide a margin of numerical stability for nonlinear problems. Since the numerical stability of Equation 3.7N-24 is mostly determined by the left hand side terms of that equation, the right hand side terms were replaced by F_{n+2}. Furthermore, since the time increment may vary between two successive time substeps. Equation 3.7N-24 may be modified as follows:

$$\frac{2}{(\Delta t + \Delta t_1)}\left[M\right]\left[\frac{x_{n+2} - x_{n+1}}{\Delta t}\right]$$

$$+\frac{1}{(\Delta t + \Delta t_1)}C\left[x_{n+2} - x_n\right] + \qquad (3.7N\text{-}25)$$

$$\frac{1}{3}\left[K\right]\left[x_{n+2} + x_{n+1} + x_n\right] = \left[F_{n+2}\right]$$

By factoring x_{n+2}, X_{n+1}, and X_n, and rearranging terms, Equation 3.7N-25 is obtained as follows:

$$\left[C_5\left[M\right] + C_3\ C + (1/3)\left[K\right]\right]\left[X_{n+2}\right] = \left[F_{n+2}\right]$$

$$+\left[C_7\left[M\right] - (1/3)\left[K\right]\right]\left[X_{n+1}\right] \qquad (3.7N\text{-}26)$$

$$+\left[-C_2\left[M\right] + C_3\left[C\right] - (1/3)\left[K\right]\right]\left[x_n\right]$$

where:

$$C_2 = \frac{2}{\Delta t_1\ (\Delta t + \Delta t_1)}$$

$$C_3 = \frac{1}{\Delta t + \Delta t_1}$$

$$C_5 = \frac{2}{\Delta t\ (\Delta t + \Delta t_1)}$$

$$C_7 = C_2 + C_5$$

The preceding set of simultaneous linear equations is solved to obtain the present values of nodal displacements $\{x_t\}$ in terms of the previous (known) values of the nodal displacements. Since M , C , and K are included in the equation, they can also be time or displacement dependent.

3.7N.2.2 Natural Frequencies and Response Loads

Refer to Section 3.7B.2.2.

3.7N.2.3 Procedures Used for Modeling

Procedures used for modeling are discussed in Section 3.7N.2.1.1.

3.7N.2.4 Soil/Structure Interaction

Refer to Section 3.7B.2.4.

3.7N2.5 Development of Floor Response Spectra

Refer to Section 3.7B.2.5.

3.7N.2.6 Three Components of Earthquake Motion

The seismic design of the NSSS equipment includes the effect of the seismic response of the supports, equipment, structures and components. Floor response spectra are generated for two perpendicular horizontal directions (N-S, E-W) and the vertical direction. The equipment response is determined using horizontal and vertical umbrella spectra, which envelop the appropriate floor response spectra. The damping values used in the analysis are those given in Table 3.7N-1.

The modal responses are determined by taking the absolute sum of the horizontal response and the vertical response utilizing the modal participation factors and mode shapes. The total seismic response is then obtained by combining the individual modal responses using the square root of the sum of the squares (SRSS) method endorsed by Regulatory Guide 1.92.

3.7N.2.7 Combination of Modal Response

The total unidirectional seismic response is obtained by combining the individual modal responses, utilizing the SRSS method. For systems having modes with closely-spaced frequencies, this method is modified to include the possible effect of these modes. The groups of closely spaced modes are chosen so that the difference between the frequencies of the first mode and the last mode in the group does not exceed 10 percent of the lower frequency. Groups are formed, starting from the lowest frequency and working toward successively higher frequencies. No one frequency is in more than one group. Combined total response for systems which have such closely-spaced

modal frequencies is obtained by adding to the SRSS of all modes the product of the responses of the modes in each of closely-spaced modes and a coupling factor ε. This can be represented mathematically as:

$$R_T^{\,2} = \sum_{i=1}^{N} R_i^{\,2} + 2\sum_{j=1}^{S}\sum_{K=M_j}^{N_j-1}\sum_{\ell=K+1}^{N_j} R_K R_\ell \varepsilon_{K\ell} \qquad (3.7N\text{-}27)$$

where:

R_T = total unidirectional response,

R_i = absolute value of response of mode i,

N = total number of modes considered,

S = number of groups of closely-spaced modes,

M_j = lowest modal number associated with group j of closely-spaced modes, and

N_j = highest modal number associated with group j of closely-spaced modes.

$\varepsilon_{K\ell}$ = coupling factors with:

$$\varepsilon_{K\ell} = \left\{1 + \left[\frac{\omega_K^{'} - \omega_\ell^{'}}{(\beta_K^{'}\,\omega_K + \beta_\ell^{'}\,\omega_\ell)}\right]^2\right\}^{-1}$$

$$\omega_K^{'} = \omega_K \left[1 - \left(\beta_K^{'}\right)^2\right]^{1/2}$$

$$\beta_K^{'} = \beta_K + \frac{2}{\omega_K t_d}$$

where:

ω_K = frequency of closely-spaced mode K

β_K = fraction of critical damping in closely-spaced mode K

t_d = duration of the earthquake

An example of this equation applied to a system can be supplied with the following considerations. Assume that the predominant contributing modes have frequencies as follows:

Mode	1	2	3	4	5	6	7	8
Frequency	5.0	8.0	8.3	8.6	11.0	15.5	16.0	20

There are two groups of closely-spaced modes, namely with modes {2, 3, 4} and {6, 7}. Therefore:

S = 2 number of groups of closely spaced modes,

M_1 = 2 lowest modal number associated with group 1,

N_1 = 4 highest modal number associated with group 1,

M_2 = 6 lowest modal number associated with group 2,

N_2 = 7 highest modal number associated with group 2, and

N = 8 total number of modes considered.

The total response for this system is, as derived from the expansion of Equation 3.7N-29:

$$R_T^2 = R_1^2 + R_2^2 + R_3^2 + \ldots + R_8^2 + 2\,R_2\,R_3\,\varepsilon_{23} + 2\,R_2\,R_4\,\varepsilon_{24} + 2\,R_3\,R_4\,\varepsilon_{34} + 2\,R_6\,R_7\,\varepsilon_{67} \qquad (3.7N\text{-}28)$$

3.7N.2.8 Interaction of Non-Category I Structures with Seismic Category I Structures

Refer to Section 3.7B.2.8.

3.7N.2.9 Effects of Parameter Variations on Floor Response Spectra

Refer to Section 3.7B.2.9.

3.7N.2.10 Use of Constant Vertical Static Factors

Constant vertical static factors are not used because the vertical floor response load for the seismic design of safety class systems

and components within Westinghouse's scope of responsibility is used. All such systems and components are rigorously analyzed in vertical direction.

3.7N.2.11 Methods Used to Account for Torsional Effects

Refer to Section 3.7B.2.11.

3.7N.2.12 Comparison of Responses

Refer to Section 3.7B.2.12.

3.7N.2.13 Methods for Seismic Analysis of Dams

Refer to Section 3.7B.2.13.

3.7N.2.14 Determination of Seismic Category I Structure Overturning Moments

Refer to Section 3.7B.2.14.

3.7N.2.15 Analysis Procedure for Damping

The damping values and procedures used for Westinghouse's scope of supply and analysis are discussed in Sections 3.7N.1.3 and 3.7N.2.1.

3.7N.3 Seismic Subsystem Analysis

3.7N.3.1 Seismic Analysis Methods

Seismic analysis methods for subsystems within Westinghouse's scope of responsibility are given Section 3.7N.2.1.

3.7N.3.2 Determination of Number of Earthquake Cycles

Where fatigue analyses of mechanical systems and components are required, Westinghouse specifies in the equipment specification the number of cycles of the OBE to be considered. The number of cycles for NSSS components is given in Table 3.9N-1. The fatigue analyses are performed and presented as part of the stress report.

3.7N.3.3 Procedure Used for Modeling

Section 3.7N.2.1 discusses modeling procedures for subsystems in Westinghouse's scope of responsibility.

3.7N.3.4 Basis for Selection of Frequencies

The analysis of equipment subjected to seismic loading involves several basic steps, the first of which is the establishment of the intensity of the seismic loading. Considering that the seismic input originates at the point of support, the response of the equipment,

and its associated supports based upon the mass and stiffness characteristics of the system will determine the seismic accelerations which the equipment must withstand.

Three ranges of equipment/support behavior which affect the magnitude of the seismic acceleration are possible:

1. If the equipment is rigid relative to the structure, the maximum acceleration of the equipment mass approaches that of the structure at the point of equipment support. Equipment and their support systems are considered rigid if their natural frequencies are greater than 33 Hz. The equipment acceleration value in this case corresponds to the high frequency region of the floor response spectra.

2. If the equipment is very flexible relative to the structure, the equipment will show very little response.

3. If the frequencies of the equipment and supporting structure are nearly equal, resonance may occur and must be taken into account.

In all cases, equipment under earthquake loadings is designed to be within ASME III Code.

3.7N.3.5 Use of Equivalent Static Load Method of Analysis

The static load equivalent or static analysis method involves the multiplication of the total weight of the equipment or component member by the specified seismic acceleration coefficient. The magnitude of the seismic acceleration coefficient is established on the basis of the expected dynamic response characteristics of the component. Components which can be adequately characterized as single degree of freedom systems are considered to have a modal participation factor of one. Seismic acceleration coefficients for multi-degree of freedom systems which may be in the resonance region of the amplified response spectra curves are increased by 50 percent to account conservatively for the increased modal participation.

3.7N.3.6 Three Components of Earthquake Motion

Methods used to account for the horizontal and vertical components of earthquake motion for subsystems in Westinghouse's scope of responsibility are given in Section 3.7N.2.6.

3.7N.3.7 Combination of Modal Responses

Methods used to combine modal responses for subsystems in Westinghouse's scope of responsibility are given in Section 3.7N.2.7.

3.7N.3.8 Analytical Procedures for Piping

Refer to Section 3.7B.3.8.

3.7N.3.9 Multiply Supported Equipment Components with Distinct Inputs

When response spectrum methods are used to evaluate reactor coolant system (RCS) primary components interconnected between floors, the following procedures are used. There are no components in the Westinghouse's scope of analysis which are connected between buildings. The primary components of the RCS are supported at no more than two floor elevations.

A dynamic response spectrum analysis is first made assuming no relative displacement between support points. The response spectra used in this analysis are the umbrella of the floor response spectra.

Secondly, the effect of differential seismic movement of components interconnected between floors is considered statically in the detailed component analysis. The results of the building analysis are reviewed on a mode-by-mode basis to determine the differential motion in each mode. The differential motion will be evaluated as a free end displacement, since, in accordance with Section III of the ASME Code, paragraph NB-3213.19, examples of a free end displacement are motions "that would occur because of relative thermal expansion of piping, equipment, and equipment supports, or because of rotations imposed upon the equipment by sources other than the piping." The effect of the differential motion is to impose a rotation on the component from the building. This motion, then, being a free end displacement and being similar to thermal expansion loads, will cause stresses which will be evaluated with ASME Code methods including the rules of NB-3227.5 used for stresses or originating from restrained free end displacements.

The results of these two steps, the dynamic inertia analysis and the static differential motion analysis, are combined absolutely with due consideration for the ASME classification of the stresses.

3.7N.3.10 Use of Constant Vertical Static Factors

Constant vertical load factors are not used as the vertical floor response load for the seismic design of safety-related components and equipment within Westinghouse's scope of responsibility.

3.7N.3.11 Torsional Effects of Eccentric Masses

Refer to Section 3.7B.3.11.

3.7N.3.12 Buried Seismic Category I Piping Systems

Refer to Section 3.7B.3.12.

3.7N.3.13 Interaction of Other Piping with Seismic Category I Piping

Refer to Section 3.7B.3.13.

3.7N.3.14 Seismic Analyses of Reactor Internals

Fuel assembly component stresses induced by horizontal seismic disturbances are analyzed through the use of finite element computer modeling.

The time history floor response based on a standard seismic time history normalized to SSE levels is used as the seismic input. The reactor internals and the fuel assemblies are modeled as spring and lumped mass systems or beam elements. The component seismic response of the fuel assembles is analyzed to determine design adequacy. A detailed discussion of the analyses performed for fuel assemblies is contained in WCAP 8236 (Westinghouse 1974b and Lin 1974).

Fuel assembly lateral structural damping obtained experimentally is presented on Figure B-4 of WCAP 8288 (Westinghouse 1974b). The distribution of fuel assembly amplitudes decreases as one approaches the center of the core. Fuel assembly displacement time history for the SSE seismic input is contained in WCAP 8236 (Westinghouse 1974b). The data indicate that no damping values less than 10 percent were obtained for fuel assembly displacements greater than 0.11 inch.

The CRDMS are seismically analyzed to confirm that system stresses under the combined loading conditions as described in Section 3.9N.1 do not exceed allowable levels as defined by the ASME Code, Section III for upset and faulted conditions. The CRDM is mathematically modeled as a system of lumped and distributed masses. The model is analyzed under appropriate seismic excitation and the resultant seismic bending moments along the length of the CRDM are calculated. The corresponding stresses are then combined, with the stresses from the other loadings required and the combination is shown to meet ASME Code, Section III requirements.

3.7N.3.15 Analysis Procedure for Damping

Analysis procedures for damping for subsystems in Westinghouse’s scope of responsibility are given in Sections 3.7N.1.3 and 3.7N.2.1.

3.7N.4 Seismic Instrumentation

Refer to Section 3.7B.4.

3.7.5 References for Section 3.7B

American Society of Mechanical Engineers 1984. ASME Boiler and Pressure Vessel Code, September 17, 1984. Case N-411, Alternative Damping Values for Seismic Analysis of Classes 1, 2, and 3 Piping Sections, Section III, Division 1.

Audibert, J. M. E. and Nyman, K. J. 1977. Soil Restraint Against Horizontal Motion of Pipes. Journal of the Geotechnical Engineering Division, p 1119-1142.

Biggs, J. M. 1964. Introduction to Structural Dynamics; p 83-111, 116-125; McGraw-Hill, New York, N.Y.

Chan, S. P.; Cox, H. L.; and Benfield, W. A. 1962. Transient Analysis of Forced Vibration of Complex Structural-Mechanical Systems. J. Royal Aeronautical Society.

Chang, T. Y. 1973. Comparison of Seismic Response Combination Procedures for Piping Systems. Stone & Webster Engineering Corporation (SWEC).

Duquesne Light Company 1976. Report on Soil Densification Program, Beaver Valley Power Station - Unit 2.

Goodling, E. C. 1978. Flexibility Analysis of Buried Pipe. ASME Publication 78-PVP-82 Joint ASME/CSME Pressure Vessels and Piping Conference, Montreal, Canada.

Goodling, E. C. 1979. Seismic Stresses in Buried Elbows. Preprint 3595, ASCE National Convention, Boston, Mass.

Goodling, E. C. 1980. More on Flexibility Analysis of Buried Pipe. ASME Pressure Vessels and Piping Conference, San Francisco, Calif.

Gwinn, J. H. and Goldstein, N. A. 1974. Equivalent Static Load from Amplified Response Curves. ASME Paper 74-NE-6, Presented at the Pressure Vessels and Piping Conference, Miami, Fl.

Hetenyi, M. 1946. Beams on Elastic Foundation. The University of Michigan Press, Ann Arbor, Mi.

Johnson J. J. and Kennedy, R. P. 1977. Earthquake Response of Nuclear Power Facilities. Presented at the ASCE Fall Convention and Exhibit San Francisco, Ca.

Kausel, E. and Roesset, J. 1975. Dynamic Stiffness of Circular Foundations. ASCE, Eng. Mechanics Division.

King, R. C. and Crocker, C. 1967. Piping Handbook. McGraw-Hill Book Co. New York, NY

Lin, C. W. 1974. How to Lump the Masses - A Guide to the Piping Seismic Analysis. SAME Paper 74-NE-7 presented at the Pressure Vessels and Piping Conference, Miami, F1.

Lin, Y. Y. and Hadjian, A. H. 1976. Discrete Modeling of Containment Structures. Presented at the International Symposium on Earthquake Structural Engineering, St. Louis, Mo.

Lysmer, J.; Udaka T.; Tsai, C. F.: and Seed, H. B. 1975. Flush User's Manual Based Upon Earthquake Engineering Report 75-30, Control Data Corporations Version 2.200, Scope 3.4.

Newmark, N. M. and Rosenblueth, E. 1971. Fundamentals of Earthquake Engineering, Prentice-Hall, Inc., Englewood, N.J.

Newmark, N. M. 1972. Earthquake Response Analysis of Reactor Structures. Nuclear Engineering and Design, Vol 20, p 303-322.

Richart, F. E., Jr.; Hall, J. R., Jr.; and Woods, R. D. 1970. Vibrations of Soils and Foundations. Prentice-Hall, Inc., Englewood Cliffs, N.J.

Roesset, J. M.; Whitman, R. V.; and Doby, R. 1973, Modal Analysis for Structures with Foundation Interaction. Journal of the Structural Division, Proceeding ASCE, p 399-416.

Shah, H. H. and Chu, S. L. 1974. Seismic Analysis of Underground Structural Elements. Journal of the Power Division, Proceedings of ASCE, Vol 100, No. P01, p 53-62.

Singh, A. K.; Chu, S. L.; and Singh, S. L. 1973. Influence of Closely Spaced Modes in Response Spectrum Method of Analysis. Presented at the Specialty Conference on Structural Design of Nuclear Plant Facilities, Chicago, Ill.

Thomas, T. H. et al 1963. Nuclear Reactors and Earthquakes. TID-7024, U. S. Atomic Energy Commission, P 24-51, Washington, D.C.

U.S. Nuclear Regulatory Commission (USNRC) 1975. Seismic System Analysis. Standard Review Plan, Section 3.7.2, NUREG-75/087.

Wass, G. 1972. Linar Two-Dimensional analysis of Soil Dynamics in Semi-Infinite Layered Media. PhD Thesis, presented to J. Lysmer, University of Calif., Berkeley, Calif.

Westinghouse 1974a. Damping Values of Nuclear Power Plant Components. (Class 3 WCAP-7921-AR).

Westinghouse 1974b. Safety Analysis of the 8-Grid 17 x 17 Fuel Assembly for Combined Seismic and Loss-of-Coolant Accident. WCAP-8236, Addendum 1 (Proprietary) and WCAP-8288, Addendum 1 (Non-Proprietary).

Whitman, R. V. and Richart, F. E., Jr. 1967. Design Procedures for Dynamically Loaded Foundations. Journal of the Soil Mechanics and Foundation Division, Proceedings of the ASCE.

Whitman, R. V. 1970. Soil Structure Interaction. In: Seismic Design for Nuclear Power Plants, MIT Press, Cambridge, Mass. p 241-269.

Yeh, G. C. K. 1974. Seismic Analysis of Slender Buried Beams. Bulletin of the Seismological Society of America, Vol 64, No. 5, p 1,551-1,562.

Tables for Section 3.7

TABLE 3.7B-1

DAMPING VALUES

(Percent of Critical Damping)

Structure or Component	1/2 Safe Shutdown Earthquake	Safe Shutdown Earthquake
Piping and piping components (except as listed below)	0.5	1.0
For stress reconciliation or support optimization of piping only	*	*
Reinforced concrete structures	2.0	7.0
Bolted steel structures	4.0	7.0
Welded steel structures	2.0	4.0
Cable tray and conduit systems	4.0	8.0
Soil	10.0	10.0

NOTE:

*ASME III Code Case N-411 for both 1/2 SSE and SSE.

TABLE 3.7B-2

FOUNDATION INFORMATION AND STRUCTURAL DIMENSIONS
FOR SEISMIC CATEGORY 1 STRUCTURES

Category I Structure	Foundation Embedment Depth (ft)*	Structure Founding Elevation (ft)**	Approximate Depth of Soil over Bedrock (ft)***	Approximate Dimensions of Foundation Area (ft)	Total Structural Height (ft)****	Founding Conditions
Auxiliary building	32	703	83	120 x 146	95.25	In situ soil
Cable tunnels	4-25.5	varies 709.5 to 731	89.5-111	Width varies 7 to 21	-	Select granular fill
Control room extension	32	703	83	81 x 65	48.9	Select granular fill
Demineralized water tank	5	730	110	40 x 38	59	Select granular fill
Diesel generator building	22	713	93	81 x 83	76	Select granular fill
Emergency outfall structure	21	714	35*****	25 x 30	26	In situ soil
Fuel building	11.5-17.7	717.3 & 723.5	97.3-103.5	110 x 44	75.9-94.7	Select granular fill
Main intake structure	38	637	17	88 x 84	125	In situ soil
Main steam and cable Vault	0-9.5	712.5	92.5	135 x 90	84.75	Select granular fill
Reactor containment	54.1	680.9	60.9	142 dia	195.6	In situ soil
Refueling water storage tank	5	730.5	110	57 x 58	74.0	Select granular fill
Safeguards area	20.5	714.5	94.5	96 x 60	43.5	Select granular fill
Service building	6.5-22.5	725.5	105.5	55 x 186	64.25	Select granular fill
Valve pit	18.8	716.2	96.2	35 x 23	18.8	In situ soil

NOTES:

* If the structure is surrounded by adjacent structures only, the range of embedment depth is given; otherwise the embedment from the plant grade near the structure is given.
** Mean sea level (msl).
*** Elevation of bedrock is approximately 620 in main plant area.
**** Total height from the foundation to the roof.
***** Elevation of bedrock is approximately 679.

TABLE 3.7B-3

METHODS OF SEISMIC ANALYSIS USED FOR SEISMIC CATEGORY I STRUCTURES

Structure	Response Spectrum Analysis	Modal Time History Analysis
Reactor Containment and Internals	X	X
Cable Vault and Main Steam Valve Area	X	X
Cable Tunnel	X	X
Pipe Tunnel	X	
Safeguards Area	X	X
Auxiliary Building	X	X
Fuel and Decontamination Building	X	X
Control Room Extension	X	X
Service Building	X	X
Diesel Generator Building	X	X
Service Water Valve Pit	X	X
Refueling Water Storage and Chemical Addition Tanks	X	X
Primary Plant Demineralizer Water Storage Tank and Enclosure	X	X
Primary Intake Structure (Analyzed for BVPS-1)	X	

TABLE 3.7B-4

CONTAINMENT AND INTERNAL STRUCTURES
REPRESENTATIVE MODAL FREQUENCIES AND PARTICIPATION FACTORS
UNCRACKED MODEL, MEDIAN SOIL, SAFE SHUTDOWN EARTHQUAKE

Mode	Frequency (Hz)	Participation Factors Horizontal Earthquake	Participation Factors Vertical Earthquake
1*	1.496	461.23	-1.14
2*	2.656	1.78	368.09
3*	3.679	-289.71	-0.26
4*	5.004	87.49	-2.40
5	11.096	4.61	-0.28
6	12.702	3.43	-2.19
7	13.692	12.08	1.31
8	17.189	-11.07	0.36

NOTE:

* For plots of mode shapes 1 through 4, refer to Figures 3.7B-12, 3.7B-13, 3.7B-14 and 3.7B-15.

TABLE 3.7B-5

CONTAINMENT AND INTERNAL STRUCTURES
REPRESENTATIVE MODAL FREQUENCIES AND PARTICIPATION FACTORS
CRACKED MODEL, MEDIAN SOIL, SAFE SHUTDOWN EARTHQUAKE

Mode	Frequency (Hz)	Participation Factors Horizontal Earthquake	Participation Factors Vertical Earthquake
1	1.354	422.27	1.19
2	2.515	-1.33	-544.70
3	2.905	-305.77	5.01
4	4.553	178.07	0.23
5	5.753	3.78	87.97
6	6.401	27.50	-1.78
7	10.017	-8.18	-0.23
8	10.545	-7.17	-6.39

TABLE 3.7B-6

CONTAINMENT AND INTERNAL STRUCTURES
REPRESENTATIVE MODE SHAPES (EIGENVECTORS)
UNCRACKED MODEL, MEDIAN SOIL

Mode	Mass No.	Displacement X	Displacement Y
1	1	1.0	0
	2	0.796	0
	3	0.676	0
	4	0.559	0
	5	0.437	0
	6	0.337	0
	7	0.103	0
	8	0.102	0
	9	0.334	0
	10	0.435	0
	11	0.577	0
	12	0.698	0
	13	0.816	0
2	1	0	-1.0
	2	0	-0.979
	3	0	-0.979
	4	0	-0.973
	5	0	-0.963
	6	0	-0.957
	7	0	-0.947
	8	0	-0.936
	9	0	-0.968
	10	0	-0.973
	11	0	-0.973
	12	0	-0.979
	13	0	-0.979
3	1	1.0	0
	2	0.486	0
	3	0.223	0
	4	-0.040	0
	5	-0.295	0
	6	-0.498	0
	7	-0.658	0
	8	-0.809	0
	9	-0.727	0
	10	-0.615	0
	11	-0.451	0
	12	-0.312	0
	13	-0.167	0

TABLE 3.7B-6 (Cont.)

Mode	Mass No.	Displacement X	Displacement Y
4	1	0.356	0
	2	0.318	0
	3	0.316	0
	4	0.308	0
	5	0.291	0
	6	0.275	0
	7	0.261	0
	8	0.235	0
	9	-0.177	0
	10	-0.372	0
	11	-0.542	0
	12	-0.787	0
	13	-1.0	0
5	1	-1.0	0.057
	2	-0.357	0.037
	3	-0.571	0.034
	4	-0.651	0.030
	5	-0.581	0.024
	6	-0.408	0.019
	7	-0.216	0.014
	8	0.078	0.006
	9	0.558	-0.048
	10	0.340	-0.032
	11	0.021	-0.039
	12	-0.350	-0.048
	13	-0.698	-0.011
6	1	0.209	-1.0
	2	-0.068	-0.544
	3	-0.081	-0.473
	4	-0.070	-0.380
	5	-0.036	-0.269
	6	0.004	-0.164
	7	0.038	-0.073
	8	0.072	0.059
	9	-0.092	0.399
	10	-0.072	0.453
	11	0.002	0.501
	12	0.094	0.541
	13	0.162	0.547

TABLE 3.7B-6 (Cont.)

Mode	Mass No.	Displacement X	Displacement Y
7	1	0.571	0.251
	2	-0.259	0.117
	3	-0.265	0.109
	4	-0.172	0.073
	5	-0.028	0.044
	6	0.107	0.017
	7	0.203	-0.006
	8	0.267	-0.037
	9	-0.453	-0.056
	10	-0.341	-0.090
	11	0.026	-0.089
	12	0.575	-0.081
	13	1.0	-0.126
8	1	0.956	0.123
	2	0.547	0.020
	3	0.650	0.008
	4	0.452	-0.005
	5	0.026	-0.018
	6	-0.375	-0.027
	7	-0.646	-0.034
	8	-1.0	-0.041
	9	0.505	-0.009
	10	0.349	0.004
	11	0.361	0.028
	12	0.276	0.040
	13	0.078	0.071

TABLE 3.7B-7

CONTAINMENT AND INTERNAL STRUCTURES
REPRESENTATIVE MODE SHAPES (NORMALIZED EIGENVECTORS)
CRACKED MODEL, MEDIAN SOIL, SAFE SHUTDOWN EARTHQUAKE

		Displacement	
Mode	Mass No.	X	Y
1	1	1.0	0
	2	0.717	0
	3	0.582	0
	4	0.451	0
	5	0.328	0
	6	0.234	0
	7	0.166	0
	8	0.101	0
	9	0.215	0
	10	0.284	0
	11	0.379	0
	12	0.459	0
	13	0.538	0
2	1	0	1.0
	2	0	0.926
	3	0	0.896
	4	0	0.852
	5	0	0.794
	6	0	0.733
	7	0	0.677
	8	0	0.634
	9	0	0.653
	10	0	0.655
	11	0	0.658
	12	0	0.660
	13	0	0.660
3	1	1.0	0
	2	0.304	0
	3	0.069	0
	4	-0.136	0
	5	-0.299	0
	6	-0.392	0
	7	-0.434	0
	8	-0.444	0
	9	-0.585	0
	10	-0.648	0
	11	-0.730	0
	12	-0.801	0
	13	-0.864	0
4	1	-0.200	-0.024

TABLE 3.7B-7 (Cont.)

Mode	Mass No.	Displacement X	Displacement Y
	2	-0.147	-0.018
	3	-0.188	-0.016
	4	-0.230	-0.013
	5	-0.278	-0.009
	6	-0.326	-0.005
	7	-0.377	-0.002
	8	-0.435	-0.000
	9	-0.106	0.027
	10	0.123	0.009
	11	0.444	0.012
	12	0.730	0.014
	13	1.0	-0.018
5	1	-0.0215	1.0
	2	0.0043	0.616
	3	0.0039	0.483
	4	0.0018	0.309
	5	-0.0019	0.108
	6	-0.0064	-0.069
	7	-0.0108	-0.214
	8	-0.0157	-0.310
	9	0.0000	-0.365
	10	0.0059	-0.375
	11	0.0123	-0.382
	12	0.0188	-0.387
	13	0.0261	-0.390
6	1	1.0	0.021
	2	-0.754	0.011
	3	-0.778	0.007
	4	-0.662	0.003
	5	-0.435	-0.000
	6	-0.199	-0.004
	7	-0.013	-0.007
	8	0.170	-0.009
	9	0.258	-0.006
	10	0.253	-0.004
	11	0.233	-0.002
	12	0.214	-0.001
	13	0.185	0.002

TABLE 3.7B-7 (Cont.)

Mode	Mass No.	Displacement X	Displacement Y
7	1	1.0	0.011
	2	-0.647	-0.005
	3	-0.036	-0.012
	4	0.433	-0.016
	5	0.997	-0.016
	6	0.464	-0.012
	7	0.220	-0.007
	8	-0.142	-0.003
	9	-0.453	0.018
	10	-0.342	0.003
	11	-0.103	0.004
	12	0.163	0.007
	13	0.419	-0.022
8	1	-0.011	1.0
	2	0.012	-0.290
	3	0.004	-0.512
	4	-0.001	-0.588
	5	-0.003	-0.496
	6	-0.001	-0.297
	7	0.002	-0.090
	8	0.006	0.064
	9	-0.008	0.145
	10	-0.006	0.158
	11	-0.000	0.169
	12	0.005	0.177
	13	0.008	0.180

TABLE 3.7B-8

CONTAINMENT AND INTERNAL STRUCTURES SRSS ACCELERATIONS AND DISPLACEMENTS FOR SAFE SHUTDOWN EARTHQUAKE UNCRACKED MODEL, MEDIAN SOIL, RESPONSE SPECTRUM ANALYSIS

	Acceleration**		Displacements***	
Degree of Freedom*	Horizontal Earthquake	Vertical Earthquake	Horizontal Earthquake	Vertical Earthquake
1	0.415	0.279×10^{-2}	0.137	0.427×10^{-3}
2	0.372×10^{-2}	0.180	0.137×10^{-3}	0.0208
3	0.256×10^{-2}	0.166×10^{-4}	0.655×10^{-3}	0.19×10^{-5}
4	0.313	0.225×10^{-2}	0.109	0.343×10^{-3}
5	0.228×10^{-2}	0.177	0.133×10^{-3}	0.0204
6	0.237×10^{-2}	0.104×10^{-4}	0.630×10^{-3}	0.17×10^{-5}
7	0.260	0.205×10^{-2}	0.093	0.296×10^{-3}
8	0.209×10^{-2}	0.176	0.133×10^{-3}	0.0203
9	0.235×10^{-2}	0.106×10^{-4}	0.627×10^{-3}	0.17×10^{-5}
10	0.213	0.182×10^{-2}	0.076	0.249×10^{-3}
11	0.187×10^{-2}	0.175	0.132×10^{-3}	0.0202
12	0.230×10^{-2}	0.107×10^{-4}	0.621×10^{-3}	0.17×10^{-5}
13	0.176	0.158×10^{-2}	0.060	0.202×10^{-3}
14	0.164×10^{-2}	0.174	0.131×10^{-3}	0.0201
15	0.224×10^{-2}	0.108×10^{-4}	0.611×10^{-3}	0.17×10^{-5}
16	0.156	0.139×10^{-2}	0.046	0.162×10^{-3}
17	0.148×10^{-2}	0.172	0.130×10^{-3}	0.0199
18	0.218×10^{-2}	0.110×10^{-4}	0.600×10^{-3}	0.16×10^{-5}
19	0.150	0.125×10^{-2}	0.035	0.130×10^{-3}
20	0.140×10^{-2}	0.171	0.129×10^{-3}	0.0197
21	0.212×10^{-2}	0.113×10^{-4}	0.589×10^{-3}	0.16×10^{-5}
22	0.154	0.108×10^{-2}	0.024	0.954×10^{-4}
23	0.138×10^{-2}	0.168	0.127×10^{-3}	0.0195
24	0.202×10^{-2}	0.118×10^{-4}	0.571×10^{-3}	0.15×10^{-5}
25	0.176	0.779×10^{-3}	0.046	0.122×10^{-3}
26	0.473×10^{-2}	0.174	0.133×10^{-2}	0.0201
27	0.217×10^{-2}	0.396×10^{-4}	0.627×10^{-3}	0.39×10^{-5}
28	0.198	0.110×10^{-2}	0.060	0.153×10^{-3}
29	0.186×10^{-2}	0.175	0.246×10^{-3}	0.0202

TABLE 3.7B-8 (Cont)

Degree of Freedom*	Acceleration** Horizontal Earthquake	Acceleration** Vertical Earthquake	Displacements*** Horizontal Earthquake	Displacements*** Vertical Earthquake
30	0.221×10^{-2}	0.372×10^{-4}	0.632×10^{-3}	0.34×10^{-5}
31	0.240	0.230×10^{-2}	0.079	0.250×10^{-3}
32	0.220×10^{-2}	0.176	0.289×10^{-3}	0.0203
33	0.224×10^{-2}	0.402×10^{-4}	0.637×10^{-3}	0.35×10^{-5}
34	0.285	0.349×10^{-2}	0.096	0.347×10^{-3}
35	0.244×10^{-2}	0.176	0.314×10^{-3}	0.0204
36	0.226×10^{-2}	0.426×10^{-4}	0.639×10^{-3}	0.35×10^{-5}
37	0.332	0.458×10^{-2}	0.112	0.434×10^{-3}
38	0.684×10^{-2}	0.180	0.179×10^{-2}	0.0204
39	0.226×10^{-2}	0.107×10^{-3}	0.64×10^{-3}	0.35×10^{-5}

NOTES:

* Degrees of freedom corresponding to x- and y- direction translation and rotation about the z axis are identified in Table 3.7B-10.

** Tabulated accelerations are in units of g for translational degrees of freedom, and g/feet for rotational degrees of freedom.

*** Tabulated displacements are in units of feet for translational degrees of freedom, and rads for rotational degrees of freedom.

TABLE 3.7B-9

CONTAINMENT AND INTERNAL STRUCTURES SRSS ACCELERATIONS
AND DISPLACEMENTS FOR SAFE SHUTDOWN EARTHQUAKE
CRACKED MODEL, MEDIAN SOIL, RESPONSE SPECTRUM ANALYSIS

	Acceleration(**)		Displacements(***)	
Degree of Freedom(*)	Horizontal Earthquake	Vertical Earthquake	Horizontal Earthquake	Vertical Earthquake
1	0.447	0.537×10^{-2}	0.167	0.679×10^{-3}
2	0.717×10^{-2}	0.266	0.378×10^{-3}	0.033
3	0.381×10^{-2}	0.629×10^{-4}	0.102×10^{-2}	0.630×10^{-5}
4	0.279	0.245×10^{-2}	0.119	0.354×10^{-3}
5	0.542×10^{-2}	0.243	0.322×10^{-3}	0.031
6	0.304×10^{-2}	0.399×10^{-4}	0.909×10^{-3}	0.480×10^{-5}
7	0.221	0.167×10^{-2}	0.096	0.247×10^{-3}
8	0.473×10^{-2}	0.234	0.302×10^{-3}	0.030
9	0.283×10^{-2}	0.363×10^{-4}	0.875×10^{-3}	0.44×10^{-5}
10	0.178	0.113×10^{-2}	0.075	0.165×10^{-3}
11	0.387×10^{-2}	0.221	0.275×10^{-3}	0.028
12	0.251×10^{-2}	0.315×10^{-4}	0.818×10^{-3}	0.37×10^{-5}
13	0.153	0.104×10^{-2}	0.055	0.129×10^{-3}
14	0.317×10^{-2}	0.205	0.243×10^{-3}	0.026
15	0.212×10^{-2}	0.274×10^{-4}	0.734×10^{-3}	0.28×10^{-5}
16	0.144	0.123×10^{-2}	0.040	0.130×10^{-3}
17	0.258×10^{-2}	0.189	0.214×10^{-3}	0.024
18	0.178×10^{-2}	0.249×10^{-4}	0.639×10^{-3}	0.19×10^{-5}
19	0.143	0.145×10^{-2}	0.029	0.136×10^{-3}
20	0.221×10^{-2}	0.175	0.191×10^{-3}	0.023
21	0.158×10^{-2}	0.242×10^{-4}	0.546×10^{-3}	0.12×10^{-5}
22	0.143	0.168×10^{-2}	0.020	0.136×10^{-3}
23	0.215×10^{-2}	0.165	0.176×10^{-3}	0.021
24	0.154×10^{-2}	0.244×10^{-4}	0.472×10^{-3}	0.11×10^{-5}
25	0.165	0.204×10^{-2}	0.038	0.224×10^{-3}
26	0.618×10^{-2}	0.170	0.105×10^{-2}	0.022
27	0.219×10^{-2}	0.399×10^{-4}	0.515×10^{-3}	0.48×10^{-5}
28	0.192	0.270×10^{-2}	0.049	0.317×10^{-3}
29	0.264×10^{-2}	0.171	0.188×10^{-3}	0.022

TABLE 3.7B-9 (Cont)

Degree of Freedom(*)	Acceleration(**) Horizontal Earthquake	Acceleration(**) Vertical Earthquake	Displacements(***) Horizontal Earthquake	Displacements(***) Vertical Earthquake
30	0.227×10^{-2}	0.375×10^{-4}	0.519×10^{-3}	0.43×10^{-5}
31	0.244	0.387×10^{-2}	0.065	0.47×10^{-3}
32	0.308×10^{-2}	0.172	0.215×10^{-3}	0.022
33	0.234×10^{-2}	0.398×10^{-4}	0.522×10^{-3}	0.45×10^{-5}
34	0.296	0.498×10^{-2}	0.078	0.60×10^{-3}
35	0.344×10^{-2}	0.172	0.236×10^{-3}	0.022
36	0.238×10^{-2}	0.415×10^{-4}	0.524×10^{-3}	0.45×10^{-5}
37	0.350	0.604×10^{-2}	0.091	0.713×10^{-3}
38	0.554×10^{-2}	0.172	0.150×10^{-2}	0.022
39	0.239×10^{-2}	0.421×10^{-4}	0.525×10^{-3}	0.65×10^{-5}

NOTES:

* Degrees of freedom corresponding to x- and y- direction translation and rotation about the z axis are identified in Table 3.7B.2-8.

** Tabulated accelerations are in units of g for translational degrees of freedom, and g/feet for rotational degrees of freedom.

*** Tabulated displacements are in units of feet for translational degrees of freedom, and rads for rotational degrees of freedom.

**** SRSS - square root of the sum of the squares.

TABLE 3.7B-10

CONTAINMENT AND INTERNAL STRUCTURES
DEGREES OF FREEDOM

Mass Point	Degree of Freedom	Direction of Motion (Global Coordinates)*	
1	1	Translation	X
1	2	Translation	Y
1	3	Rotation	θ_z
2	4	Translation	X
2	5	Translation	Y
2	6	Rotation	θ_z
3	7	Translation	X
3	8	Translation	Y
3	9	Rotation	θ_z
4	10	Translation	X
4	11	Translation	Y
4	12	Rotation	θ_z
5	13	Translation	X
5	14	Translation	Y
5	15	Rotation	θ_z
6	16	Translation	X
6	17	Translation	Y
6	18	Rotation	θ_z
7	19	Translation	X
7	20	Translation	Y
7	21	Rotation	θ_z
8	22	Translation	X

TABLE 3.7B-10 (Cont)

Mass Point	Degree of Freedom	Direction of Motion (Global Coordinates)*	
8	23	Translation	Y
8	24	Rotation	θ_z
9	25	Translation	X
9	26	Translation	Y
9	27	Rotation	θ_z
10	28	Translation	X
10	29	Translation	Y
10	30	Rotation	θ_z
11	31	Translation	X
11	32	Translation	Y
11	33	Rotation	θ_z
12	34	Translation	X
12	35	Translation	Y
12	36	Rotation	θ_z
13	37	Translation	X
13	38	Translation	Y
13	39	Rotation	θ_z

NOTE:

*Refer to Figure 3.7B-9.

TABLE 3.7B-11

CONTAINMENT AND INTERNAL STRUCTURES
ENVELOPED ACCELERATIONS AND DISPLACEMENTS
HORIZONTAL MOTION*

External Structure

Mass No	Elevation (ft)	Acceleration** SSE	Acceleration** OBE	Displacement*** SSE	Displacement*** OBE
1	854.22	0.473	0.239	0.189	0.099
2	813.62	0.359	0.180	0.139	0.073
3	788.62	0.300	0.151	0.114	0.060
4	763.62	0.245	0.123	0.091	0.047
5	738.62	0.198	0.100	0.068	0.036
6	717.32	0.167	0.085	0.051	0.027
7	699.72	0.151	0.078	0.039	0.020
8	680.92	0.154	0.0775	0.027	0.014
Internal Structure					
9	716.0	0.188	0.096	0.049	0.026
10	738.0	0.224	0.114	0.064	0.033
11	767.83	0.284	0.145	0.083	0.044
12	793.	0.343	0.175	0.100	0.052
13	818.0	0.402	0.206	0.117	0.061

NOTES:

*Maximum of cracked, uncracked, G = 18 ksi ± 33 percent.
**Tabulated accelerations are in units of g.
***Displacements are listed in feet.

TABLE 3.7B-12

CONTAINMENT AND INTERNAL STRUCTURES
ENVELOPED ACCELERATIONS AND DISPLACEMENTS
VERTICAL MOTION*

External Structure

Mass No.	Elevation (ft)	Acceleration** SSE	Acceleration** OBE	Displacement*** SSE	Displacement*** OBE
1	854.22	0.266	0.135	0.044	0.022
2	813.62	0.242	0.122	0.041	0.021
3	788.62	0.234	0.117	0.040	0.020
4	763.62	0.221	0.111	0.039	0.0196
5	738.62	0.205	0.102	0.037	0.019
6	717.32	0.193	0.096	0.035	0.018
7	699.72	0.188	0.095	0.034	0.017
8	680.92	0.1845	0.093	0.032	0.016
Internal Structure					
9	716.0	0.193	0.0965	0.033	0.016
10	738.0	0.194	0.097	0.033	0.0165
11	767.83	0.195	0.097	0.033	0.0165
12	793.0	0.196	0.098	0.033	0.017
13	818.0	0.196	0.098	0.033	0.017

NOTES:

*Maximum of cracked, uncracked, G = 18 ksi ± 33 percent.
**Tabulated accelerations are in units of g.
***Displacements are listed in feet.

TABLE 3.7B-13

FUEL BUILDING
REPRESENTATIVE MODAL FREQUENCIES AND
PARTICIPATION FACTORS

Mode	Frequency (Hz)	Participation Factors X-Earthquake	Y-Earthquake	Z-Earthquake
1	2.704	1.328	-8.467	201.785
2	2.881	31.494	0.506	-3.921
3	3.342	253.884	7.430	1.504
4	3.884	6.966	-349.883	-7.826
5	4.753	31.608	0.070	52.593
6	5.135	55.373	5.015	-194.360
7	5.309	128.304	1.603	67.510
8	6.722	3.226	19.865	-9.463
9	9.195	0.218	2.202	-0.856
10	13.262	0.159	-41.917	-0.401

TABLE 3.7B-14

FUEL BUILDING
REPRESENTATIVE MODE SHAPES
(EIGENVECTORS)

Mode	Mass No.	Displacement X	Displacement Y	Displacement Z
1	2	0.000	-0.005	0.137
	3	-0.002	-0.063	0.471
	4	0.001	-0.047	0.828
	5	0.025	0.170	1.0
	6	0.001	0.003	0.000
	7	0.151	0.023	0.881
2	2	0.002	0.000	-0.000
	3	0.003	0.000	-0.001
	4	0.005	0.001	-0.002
	5	0.007	-0.001	-0.000
	6	0.006	-0.000	-0.000
	7	1.0	-0.001	-0.012
3	2	0.383	0.008	0.002
	3	0.694	0.029	-0.002
	4	0.867	0.149	0.005
	5	1.0	-0.164	0.029
	6	-0.004	-0.000	-0.000
	7	-0.705	-0.002	0.050
4	2	0.028	-0.973	-0.027
	3	0.028	-0.984	-0.032
	4	0.029	-0.993	-0.045
	5	0.028	-1.0	-0.052
	6	0.000	0.000	0.000
	7	0.000	0.000	-0.051
5	2	0.159	0.000	0.229
	3	0.220	0.003	0.275
	4	0.060	-0.035	0.429
	5	-0.800	0.029	-0.943
	6	0.003	-0.004	0.000
	7	0.438	-0.003	-1.0
6	2	0.330	0.023	-1.0
	3	0.092	-0.115	-0.426
	4	-0.145	-0.177	0.292
	5	-0.364	0.563	0.395
	6	0.000	-0.011	0.000
	7	0.058	0.065	0.140

TABLE 3.7B-14 (Cont)

Mode	Mass No.	Displacement X	Displacement Y	Displacement Z
7	2	1.0	0.010	0.454
	3	0.103	-0.019	0.150
	4	-0.619	-0.343	-0.338
	5	-0.780	0.449	-0.071
	6	0.000	-0.004	0.000
	7	-0.010	-0.026	0.063
8	2	0.012	0.013	-0.029
	3	-0.003	0.008	-0.009
	4	-0.016	0.001	0.055
	5	-0.018	0.030	0.073
	6	0.002	0.179	0.000
	7	0.033	1.0	0.070
9	2	0.002	0.006	-0.006
	3	0.034	-0.050	0.403
	4	0.038	-0.001	-0.519
	5	-0.192	0.133	-0.843
	6	0.000	0.032	0.000
	7	0.016	0.146	-1.0
10	2	0.000	0.001	-0.001
	3	0.000	0.000	0.002
	4	-0.001	0.000	0.002
	5	-0.003	0.000	-0.001
	6	0.001	-0.494	0.000
	7	0.001	-1.0	0.000

TABLE 3.7B-15

FUEL BUILDING
CSM ACCELERATIONS FOR
SAFE SHUTDOWN EARTHQUAKE
FROM RESPONSE SPECTRUM ANALYSIS

Degree of Freedom*	X-Earthquake**	Y-Earthquake**	Z-Earthquake**
1	0.210	0.012	0.110
2	0.009	0.265	0.009
3	0.095	0.012	0.211
4	0.001	0.000	0.005
5	0.002	0.000	0.002
6	0.004	0.000	0.002
7	0.273	0.013	0.031
8	0.021	0.269	0.037
9	0.041	0.015	0.224
10	0.002	0.000	0.005
11	0.002	0.000	0.002
12	0.004	0.000	0.002
13	0.379	0.016	0.057
14	0.074	0.272	0.055
15	0.056	0.020	0.369
16	0.002	0.000	0.005
17	0.002	0.000	0.002
18	0.004	0.000	0.002
19	0.451	0.018	0.134
20	0.109	0.275	0.143
21	0.056	0.023	0.450
22	0.002	0.000	0.005
23	0.002	0.000	0.002
24	0.004	0.000	0.002
25	0.184	0.000	0.001
26	0.002	0.165	0.015
27	0.000	0.000	0.181
28	0.000	0.000	0.000
29	0.000	0.000	0.000
30	0.001	0.000	0.000
31	0.859	0.016	0.149
32	0.012	0.361	0.061
33	0.054	0.022	0.393
34	0.243	0.021	0.020
35	0.002	0.000	0.003
36	0.012	0.000	0.002

NOTES:

*The relationship between the degrees of freedom and the motion of the lumped masses is given in Table 3.7B-18.

**Tabulated accelerations are in units of g for translational degrees of freedom, and g/feet for rotational degrees.

TABLE 3.7B-16

FUEL BUILDING CLOSELY SPACED MODES DISPLACEMENTS
FOR SAFE SHUTDOWN EARTHQUAKE
FROM RESPONSE SPECTRUM ANALYSIS

Degree of Freedom*	X-Earthquake**	Y-Earthquake**	Z-Earthquake**
1	0.013	0.667×10^{-3}	0.337×10^{-2}
2	0.504×10^{-3}	0.014	0.516×10^{-3}
3	0.291×10^{-2}	0.550×10^{-3}	0.909×10^{-2}
4	0.456×10^{-4}	0.120×10^{-4}	0.395×10^{-3}
5	0.484×10^{-4}	0.120×10^{-5}	0.674×10^{-4}
6	0.209×10^{-3}	0.540×10^{-5}	0.689×10^{-4}
7	0.020	0.836×10^{-3}	0.103×10^{-2}
8	0.128×10^{-2}	0.015	0.320×10^{-2}
9	0.133×10^{-2}	0.934×10^{-3}	0.023
10	0.469×10^{-4}	0.127×10^{-4}	0.413×10^{-3}
11	0.593×10^{-4}	0.13×10^{-5}	0.805×10^{-4}
12	0.218×10^{-3}	0.62×10^{-5}	0.715×10^{-4}
13	0.027	0.101×10^{-2}	0.175×10^{-2}
14	0.427×10^{-2}	0.015	0.285×10^{-2}
15	0.183×10^{-2}	0.152×10^{-2}	0.040
16	0.485×10^{-4}	0.132×10^{-4}	0.422×10^{-3}
17	0.632×10^{-4}	0.33×10^{-5}	0.983×10^{-4}
18	0.224×10^{-3}	0.61×10^{-5}	0.735×10^{-4}
19	0.031	0.112×10^{-2}	0.450×10^{-2}
20	0.600×10^{-2}	0.015	0.909×10^{-2}
21	0.219×10^{-2}	0.181×10^{-2}	0.048
22	0.499×10^{-4}	0.134×10^{-4}	0.427×10^{-3}
23	0.692×10^{-4}	0.30×10^{-5}	0.972×10^{-4}
24	0.232×10^{-3}	0.63×10^{-5}	0.722×10^{-4}
25	0.815×10^{-3}	0.84×10^{-5}	0.853×10^{-4}
26	0.477×10^{-4}	0.757×10^{-3}	0.205×10^{-3}
27	0.400×10^{-6}	0.10×10^{-5}	0.605×10^{-3}
28	0.200×10^{-6}	0.4×10^{-6}	0.016×10^{-4}
29	0.000	0.000	0.000
30	0.109×10^{-3}	0.19×10^{-5}	0.209×10^{-4}
31	0.079	0.137×10^{-2}	0.015
32	0.287×10^{-3}	0.181×10^{-2}	0.129×10^{-2}
33	0.291×10^{-2}	0.166×10^{-2}	0.043
34	0.303×10^{-3}	0.699×10^{-3}	0.986×10^{-3}
35	0.848×10^{-4}	0.41×10^{-5}	0.107×10^{-3}
36	0.100×10^{-2}	0.184×10^{-4}	0.193×10^{-3}

NOTES:

*The relationship between the degrees of freedom and the motion of the lumped masses is given in Table 3.7B-18.

**Tabulated displacements are in units of feet for translational degrees of freedom, and rads for rotational degrees.

TABLE 3.7B-17

FUEL BUILDING SQUARE ROOT OF THE SUM OF THE SQUARES
SAFE SHUTDOWN EARTHQUAKE RESPONSES

Degree of Freedom*	Acceleration**	Displacement***
1	0.237	0.013
2	0.266	0.014
3	0.231	0.010
4	0.005	0.398×10^{-3}
5	0.003	0.829×10^{-4}
6	0.004	0.220×10^{-3}
7	0.276	0.020
8	0.272	0.015
9	0.228	0.023
10	0.005	0.416×10^{-3}
11	0.002	0.999×10^{-4}
12	0.004	0.230×10^{-3}
13	0.383	0.027
14	0.287	0.016
15	0.374	0.040
16	0.005	0.425×10^{-3}
17	0.003	0.117×10^{-3}
18	0.004	0.236×10^{-3}
19	0.471	0.032
20	0.329	0.019
21	0.454	0.049
22	0.005	0.430×10^{-3}
23	0.003	0.119×10^{-3}
24	0.004	0.243×10^{-3}
25	0.184	0.001
26	0.166	0.001
27	0.181	0.001
28	0.000	0.160×10^{-5}
29	0.000	0.000
30	0.001	0.111×10^{-3}
31	0.872	0.080
32	0.366	0.002
33	0.397	0.043
34	0.245	0.123×10^{-2}
35	0.004	0.137×10^{-3}
36	0.012	0.101×10^{-2}

NOTES:

* Refer to Table 3.7B-18 for definition of degrees of freedom.
** Tabulated accelerations are in units of g for translational degrees of freedom and g/feet for rotational degrees of freedom.
*** Tabulated displacements are in units of feet for translational degrees of freedom and rads for rotational degrees.

TABLE 3.7B-18

FUEL BUILDING
DEGREES OF FREEDOM

Mass Point*	Degree of Freedom	Direction of Motion	
2	1	Translation	X
2	2	Translation	Y
2	3	Translation	Z
2	4	Rotation	θ_x
2	5	Rotation	θy
2	6	Rotation	θ_z
3	7	Translation	X
3	8	Translation	Y
3	9	Translation	Z
3	10	Rotation	θ_x
3	11	Rotation	θy
3	12	Rotation	θ_z
4	13	Translation	X
4	14	Translation	Y
4	15	Translation	Z
4	16	Rotation	θ_x
4	17	Rotation	θy
4	18	Rotation	θ_z
5	19	Translation	X
5	20	Translation	Y
5	21	Translation	Z
5	22	Rotation	θ_x
5	23	Rotation	θy
5	24	Rotation	θ_z
6	25	Translation	X
6	26	Translation	Y
6	27	Translation	Z
6	28	Rotation	θ_x
6	29	Rotation	θy
6	30	Rotation	θ_z
7	31	Translation	X
7	32	Translation	Y
7	33	Translation	Z
7	34	Rotation	θ_x
7	35	Rotation	θy
7	36	Rotation	θ_z

NOTE:

*For locations of lumped masses, refer to Figure 3.7B-37.

TABLE 3.7B-19

CABLE VAULT BUILDING
REPRESENTATIVE MODAL FREQUENCIES AND PARTICIPATION FACTORS

Mode	Frequency (Hz)	Participation Factors X-Earthquake	Y-Earthquake	Z-Earthquake
1	1.963	-0.810	-6.295	207.529
2	2.997	-234.177	7.874	1.724
3	3.212	-24.874	0.106	5.900
4	5.094	-31.969	-181.426	-21.641
5	5.879	-125.582	31.608	-82.137
6	6.007	-63.890	0.108	160.797
7	12.488	-12.696	-1.885	6.856
8	14.466	-2.322	-0.627	9.237
9	15.273	-6.330	2.169	-18.060

TABLE 3.7B-20

CABLE VAULT BUILDING
REPRESENTATIVE MODE SHAPES
(EIGENVECTORS)

Mode	Mass No.	Displacements X	Displacements Y	Displacements Z
1	1	-0.000	-0.002	0.088
	2	-0.001	-0.038	0.303
	3	-0.002	-0.043	0.495
	4	-0.002	-0.023	0.688
	5	0.003	0.092	0.862
	6	-0.010	-0.150	1.000
2	1	0.300	-0.009	-0.001
	2	0.470	-0.040	-0.005
	3	0.619	-0.043	-0.007
	4	0.764	-0.049	-0.007
	5	0.884	0.169	0.042
	6	1.000	-0.264	-0.056
3	1	-0.064	0.000	0.013
	2	-0.023	-0.000	-0.049
	3	-0.055	-0.001	-0.011
	4	-0.165	0.004	0.004
	5	-0.544	-0.019	1.000
	6	0.157	0.024	-0.893
4	1	0.156	0.818	0.094
	2	0.125	0.863	0.069
	3	0.098	0.890	0.058
	4	0.066	0.917	0.052
	5	0.027	0.852	0.047
	6	0.010	1.000	0.049
5	1	1.000	-0.232	0.582
	2	0.718	-0.128	0.454
	3	0.449	-0.124	0.327
	4	0.141	-0.150	0.149
	5	-0.191	-0.850	-0.067
	6	-0.390	0.550	-0.186

TABLE 3.7B-20 (Cont)

Mode	Mass No.	Displacements X	Displacements Y	Displacements Z
6	1	-0.445	0.000	1.000
	2	-0.316	0.026	0.775
	3	-0.192	0.029	0.539
	4	-0.048	-0.027	0.209
	5	0.102	0.008	-0.140
	6	0.212	-0.039	-0.420
7	1	-0.303	-0.041	0.145
	2	-0.200	-0.008	-0.042
	3	-0.054	0.000	-0.199
	4	0.222	0.028	-0.124
	5	0.295	-0.144	-0.497
	6	0.474	0.217	1.000
8	1	0.054	0.013	-0.193
	2	-0.036	0.025	-0.059
	3	-0.109	0.022	0.149
	4	-0.175	-0.024	0.157
	5	-0.340	-0.118	0.212
	6	1.000	0.085	-0.207
9	1	-0.364	0.115	-0.926
	2	-0.174	0.158	-0.363
	3	0.060	0.123	0.697
	4	0.412	-0.148	1.000
	5	0.771	-0.732	0.143
	6	-0.544	0.440	-0.247

TABLE 3.7B-21

CABLE VAULT BUILDING
DEGREES OF FREEDOM

Mass Point	Degree of Freedom	Direction of Motion	
1	1	Translation	X
1	2	Translation	Y
1	3	Translation	Z
1	4	Rotation	θ_x
1	5	Rotation	θy
1	6	Rotation	θ_z
2	7	Translation	X
2	8	Translation	Y
2	9	Translation	Z
2	10	Rotation	θ_x
2	11	Rotation	θy
2	12	Rotation	θ_z
3	13	Translation	X
3	14	Translation	Y
3	15	Translation	Z
3	16	Rotation	θ_x
3	17	Rotation	θy
3	18	Rotation	θ_z
4	19	Translation	X
4	20	Translation	Y
4	21	Translation	Z
4	22	Rotation	θ_x
4	23	Rotation	θy
4	24	Rotation	θ_z
5	25	Translation	X
5	26	Translation	Y
5	27	Translation	Z
5	28	Rotation	θ_x
5	29	Rotation	θy
5	30	Rotation	θ_z
6	31	Translation	X
6	32	Translation	Y
6	33	Translation	Z
6	34	Rotation	θ_x
6	35	Rotation	θy
6	36	Rotation	θ_z

TABLE 3.7B-22

CABLE VAULT BUILDING
CSM ACCELERATION FOR SAFE SHUTDOWN EARTHQUAKE
FROM RESPONSE SPECTRUM ANALYSIS

Degree of Freedom*	X-Earthquake**	Y-Earthquake**	Z-Earthquake**
1	0.154	0.046	0.128
2	0.043	0.142	0.028
3	0.114	0.027	0.184
4	0.002	0.000	0.004
5	0.001	0.000	0.000
6	0.002	0.001	0.002
7	0.168	0.036	0.092
8	0.039	0.148	0.029
9	0.088	0.021	0.167
10	0.002	0.000	0.004
11	0.001	0.000	0.000
12	0.002	0.001	0.002
13	0.196	0.026	0.057
14	0.040	0.153	0.030
15	0.063	0.017	0.178
16	0.002	0.000	0.004
17	0.001	0.000	0.000
18	0.003	0.001	0.002
19	0.234	0.017	0.027
20	0.044	0.158	0.030
21	0.028	0.013	0.209

TABLE 3.7B-22 (Cont)

Degree of Freedom*	X-Earthquake**	Y-Earthquake**	Z-Earthquake**
22	0.002	0.000	0.004
23	0.001	0.000	0.000
24	0.003	0.001	0.002
25	0.277	0.014	0.030
26	0.114	0.159	0.072
27	0.035	0.013	0.259
28	0.002	0.000	0.004
29	0.001	0.000	0.000
30	0.003	0.001	0.002
31	0.308	0.016	0.057
32	0.114	0.179	0.071
33	0.057	0.016	0.307
34	0.002	0.000	0.004
35	0.001	0.000	0.001
36	0.003	0.001	0.002

NOTES:

*The relationship between the degrees of freedom and the motion of the lumped masses is given in Table 3.7B-21.

**Tabulated accelerations are in units of g for translational degrees of freedom, and g/feet for rotational degrees.

TABLE 3.7B-23

CABLE VAULT BUILDING
CSM DISPLACEMENTS FOR SAFE SHUTDOWN EARTHQUAKE
FROM RESPONSE SPECTRUM ANALYSIS

Degree of Freedom*	X-Earthquake**	Y-Earthquake**	Z-Earthquake**
1	0.833×10^{-2}	0.132×10^{-2}	0.297×10^{-2}
2	0.122×10^{-2}	0.444×10^{-2}	0.810×10^{-3}
3	0.265×10^{-2}	0.781×10^{-3}	0.694×10^{-2}
4	0.396×10^{-4}	0.207×10^{-4}	0.522×10^{-3}
5	0.783×10^{-4}	0.23×10^{-5}	0.330×10^{-4}
6	0.159×10^{-3}	0.172×10^{-4}	0.421×10^{-4}
7	0.013	0.111×10^{-2}	0.213×10^{-2}
8	0.160×10^{-2}	0.465×10^{-2}	0.255×10^{-2}
9	0.207×10^{-2}	0.818×10^{-3}	0.019
10	0.399×10^{-4}	0.199×10^{-4}	0.538×10^{-3}
11	0.764×10^{-4}	0.210×10^{-5}	0.323×10^{-4}
12	0.166×10^{-3}	0.178×10^{-4}	0.439×10^{-4}
13	0.017	0.957×10^{-3}	0.134×10^{-2}
14	0.169×10^{-2}	0.479×10^{-2}	0.286×10^{-2}
15	0.149×10^{-2}	0.105×10^{-2}	0.031
16	0.412×10^{-4}	0.195×10^{-4}	0.533×10^{-3}
17	0.753×10^{-4}	0.200×10^{-5}	0.305×10^{-4}
18	0.171×10^{-3}	0.181×10^{-4}	0.462×10^{-4}
19	0.021	0.854×10^{-3}	0.489×10^{-3}
20	0.185×10^{-2}	0.494×10^{-2}	0.170×10^{-2}
21	0.706×10^{-3}	0.136×10^{-2}	0.043
22	0.455×10^{-4}	0.185×10^{-4}	0.569×10^{-3}
23	0.702×10^{-4}	0.180×10^{-5}	0.327×10^{-4}
24	0.174×10^{-3}	0.183×10^{-4}	0.476×10^{-4}
25	0.025	0.869×10^{-3}	0.777×10^{-3}
26	0.538×10^{-2}	0.490×10^{-2}	0.606×10^{-2}
27	0.255×10^{-2}	0.168×10^{-2}	0.054
28	0.458×10^{-4}	0.185×10^{-4}	0.571×10^{-3}
29	0.692×10^{-4}	0.180×10^{-5}	0.351×10^{-4}
30	0.176×10^{-3}	0.190×10^{-4}	0.483×10^{-4}
31	0.028	0.969×10^{-3}	0.149×10^{-2}
32	0.767×10^{-2}	0.558×10^{-2}	0.963×10^{-2}
33	0.297×10^{-2}	0.195×10^{-2}	0.063
34	0.479×10^{-4}	0.187×10^{-4}	0.584×10^{-3}
35	0.553×10^{-4}	0.190×10^{-5}	0.399×10^{-4}
36	0.178×10^{-3}	0.184×10^{-4}	0.493×10^{-4}

NOTES:

*The relationship between the degrees of freedom and the motion of the lumped masses is given in Table 3.7B-3.

**Tabulated displacements are in units of feet for translational degrees of freedom and in rads for rotational degrees.

TABLE 3.7B-24

CABLE VAULT BUILDING
SRSS OF SAFE SHUTDOWN EARTHQUAKE

Degree of Freedom*	Acceleration**	Displacement***
1	0.206	0.009
2	0.152	0.005
3	0.218	0.008
4	0.004	0.554×10^{-3}
5	0.001	0.850×10^{-4}
6	0.003	0.165×10^{-3}
7	0.195	0.013
8	0.156	0.006
9	0.191	0.020
10	0.004	0.539×10^{-3}
11	0.001	0.829×10^{-4}
12	0.003	0.173×10^{-3}
13	0.206	0.017
14	0.161	0.006
15	0.189	0.031
16	0.004	0.555×10^{-3}
17	0.001	0.812×10^{-4}
18	0.004	0.178×10^{-4}
19	0.236	0.021
20	0.167	0.005
21	0.211	0.043
22	0.005	0.571×10^{-3}
23	0.001	0.774×10^{-4}
24	0.004	0.181×10^{-3}
25	0.279	0.025
26	0.208	0.010
27	0.261	0.055
28	0.005	0.573×10^{-3}
29	0.001	0.776×10^{-4}
30	0.004	0.183×10^{-3}
31	0.314	0.028
32	0.224	0.014
33	0.313	0.063
34	0.004	0.586×10^{-3}
35	0.001	0.648×10^{-4}
36	0.004	0.186×10^{-3}

NOTES:

* Table 3.7B-21 defines degrees of freedom.
** Tabulated accelerations are in units of g for translational degrees of freedom, and g/feet for rotational degrees of freedom.
*** Tabulated displacements are in units of feet for translational degrees of freedom and rads for rotational degrees.

TABLE 3.7B-25

COMPARISON OF RESPONSE SPECTRA AND TIME HISTORY
ANALYSIS RESULTS
CONTAINMENT AND INTERNAL STRUCTURES
(UNCRACKED PROPERTIES)

SSE Accelerations*

Mass	Response Spectrum		Time History	
No**	Horizontal	Vertical	Horizontal	Vertical
1	0.415	0.180	0.509	0.196
2	0.313	0.177	0.371	0.192
3	0.260	0.176	0.295	0.192
4	0.213	0.175	0.230	0.191
5	0.176	0.174	0.195	0.190
6	0.156	0.172	0.181	0.188
7	0.150	0.171	0.190	0.187
8	0.154	0.168	0.198	0.185
9	0.176	0.174	0.198	0.190
10	0.198	0.175	0.210	0.191
11	0.240	0.176	0.253	0.191
12	0.285	0.176	0.307	0.192
13	0.332	0.180	0.360	0.192

NOTES:

*Safe shutdown earthquake accelerations are in units of g.
**Figure 3.7B-3 illustrates the location of the lumped masses.

TABLE 3.7B-26

COMPARISON OF RESPONSE SPECTRA AND TIME HISTORY
ANALYSIS RESULTS
CONTAINMENT AND INTERNAL STRUCTURES
(CRACKED PROPERTIES)

SSE Accelerations*

Mass	Response Spectrum		Time History	
No**	Horizontal	Vertical	Horizontal	Vertical
1	0.447	0.266	0.580	0.296
2	0.279	0.243	0.346	0.272
3	0.221	0.234	0.257	0.263
4	0.178	0.221	0.221	0.249
5	0.153	0.205	0.199	0.230
6	0.144	0.189	0.178	0.215
7	0.143	0.175	0.160	0.202
8	0.143	0.165	0.159	0.192
9	0.165	0.170	0.185	0.196
10	0.192	0.171	0.210	0.196
11	0.244	0.172	0.255	0.197
12	0.296	0.172	0.303	0.197
13	0.350	0.172	0.363	0.197

NOTES:

*Safe shutdown earthquake accelerations are in units of g.
**Figure 3.7B-3 illustrates locations of lumped masses.

TABLE 3.7B-27

COMPARISON OF RESPONSE SPECTRA AND TIME HISTORY
ANALYSIS RESULTS
FUEL BUILDING - SAFE SHUTDOWN EARTHQUAKE ACCELERATIONS*

Mass	Response Spectra			Time History		
No**	N-S	E-W	Vertical	N-S	E-W	Vertical
2	0.231	0.237	0.266	0.258	0.283	0.332
3	0.228	0.276	0.272	0.368	0.277	0.338
4	0.374	0.383	0.287	0.520	0.340	0.341
5	0.454	0.471	0.329	0.637	0.440	0.340
6	0.181	0.184	0.166	0.168	0.171	0.158
7	0.397	0.872	0.366	0.526	0.404	0.271

NOTES:

*Safe shutdown earthquake accelerations are in units of g.
**Figure 3.7B-37 illustrates the location of the lumped masses.

TABLE 3.7B-28

COMPARISON OF RESPONSE SPECTRA
AND TIME HISTORY ANALYSIS RESULTS
CABLE VAULT BUILDING
SAFE SHUTDOWN EARTHQUAKE ACCELERATIONS*

Mass	Response Spectra			Time History		
No**	N-S	E-W	Vertical	N-S	E-W	Vertical
1	0.218	0.206	0.152	0.205	0.188	0.151
2	0.191	0.195	0.156	0.184	0.199	0.155
3	0.189	0.206	0.161	0.225	0.237	0.157
4	0.211	0.236	0.167	0.273	0.287	0.160
5	0.261	0.279	0.208	0.315	0.340	0.158
6	0.313	0.314	0.224	0.349	0.372	0.164

NOTES:

*Safe shutdown earthquake accelerations are in units of g.
**Figure 3.7B-31 illustrates the location of the lumped masses.

TABLE 3.7B-29

EQUIPMENT AND COMPONENTS
1G FLAT RESPONSE

Model Beam	Fundamental Frequency	Sum	Max Dynamic Moment (in-lb)	Max Dynamic Load Type	Max Dynamic Moment (in-lb)	Location	S/C	K S/U	A/U
Cantilever	1	SRSS	620,000	Conc	700,000	Fixed end	0.89	0.89	0.99
		ABS	649,000	Unif	700,000				
Simple-simple	1	SRSS	179,000	Conc	348,000	Midspan	0.51	1.03	1.07
		ABS	186,000	Unif	174,000				
Fixed-fixed	1	SRSS	103,000	Conc	174,000	Fixed end	0.59	0.89	0.97
		ABS	112,000	Unif	116,000				
Simple-fixed - no overhang	1	SRSS	152,000	Conc	261,000	Fixed end	0.58	0.87	0.97
		ABS	169,000	Unif	174,000				
Simple-fixed - 16% overhang	1.34	SRSS	83,200	Conc	162,000	Fixed end	0.51	0.75	1.03
		ABS	114,000	Unif	111,000				
Simple-fixed - 33% overhang	1.04	SRSS	57,000	Conc	77,400	Fixed end	0.74	0.74	1.15
		ABS	89,000	Unif	77,200				
Simple-fixed - 50% overhang	0.62	SRSS	152,000	Conc	174,000	Simple support	0.87	0.87	1.01
		ABS	176,000	Unif	174,000				

TABLE 3.7B-30

MODAL DENSITY, n*

Mode No	Cantilever Freq(Hz)	Fixed-Fixed Freq(Hz)	Simple-Fixed Freq(Hz)	Simple-Simple Freq(Hz)	Simple-Fixed 33% Overhang Freq(Hz)
1	1.0	1.0	1.0	1.0	1.0
2	5.8	2.7	3.2	3.8	2.9
3	15.3	4.9	6.3	8.2	6.5
4	28.0	7.5	10.2	13.6	8.4
5	43.2	10.2	14.0	19.5	13.3
6	59.6				

NOTE:

*Modal density based on a ± 10 percent criterion.

TABLE 3.7B-31

AMPLIFIED RESPONSE
DYNAMIC FACTOR STUDY

Model Beam	1st Mode	Dynamic Load High	Dynamic Load Low	Max Dynamic Moment Sum (S)	Max Dynamic Moment Moment (in-lb)	Location	Max Static Moment* Uniform Load (U) (in-lb)	K S/U A/U
Simple-fixed-33% overhang	g f(Hz)	g f(Hz)	g f(Hz)					
Model 6A	0.10	2.87	0.33	SRSS	20,000	Fixed	222,000 s	0.09
	0.70	3-4	20	ABS	30,000	Fixed		0.13
Model 6B	0.10	2.87	0.33	SRSS	148,000	Fixed	222,000 s	0.67
	1.0	3-4	20	ABS	157,000	Fixed		0.71
Model 6C	2.87	2.87	0.33	SRSS	102,000	Simple support	222,000 s	0.45
	3.3	3-4	20	ABS	118,000	Simple support		0.53
Model 6D	0.40	2.87	0.33	SRSS	22,000	Fixed		0.71
	10.0	3-4	20	ABS	32,000	Fixed	31,000 s	1.03
Model 6E	0.33	2.87	0.33	SRSS	20,000	Fixed	25,700 s	0.78
	20.0	3-4	20	ABS	27,000	Fixed		1.05
Model 6F	0.30	2.87	0.33	SRSS	18,000	Fixed	23,400 s	0.77
	33.0	3-4	20	ABS	25,000	Fixed		1.07

NOTE:

*g_{max}, if $f_o \leq f_p$; g at f_o if $f_o > f_p$.

TABLE 3.7B-32

PIPING SYSTEM SEISMIC DESIGN AND ANALYSIS CRITERIA

ASME Section III Code Class	Type of Earthquake	Type of Seismic Analyses	Combined Stress Calculations and Stress Criteria
Class 1 (All sizes)	SSE	Dynamic response spectra	ASME Code, Section III, Subarticle NB-3600*
	OBE	Dynamic response spectra	ASME Code, Section III, Subarticles NB-3600*
Classes 2 and 3 (All sizes)	SSE	Dynamic response spectra	ASME Code, Section III, Subarticles NC-3600 and ND-3600
	OBE	Dynamic response spectra	ASME Code, Section III, Subarticles NC-3600 and ND-3600

NOTES:

*For Class 1 piping 1 inch and below, Subarticle NC-3600 is used.

TABLE 3.7N-1

DAMPING VALVES USED FOR SEISMIC SYSTEMS
ANALYSIS FOR WESTINGHOUSE SUPPLIED EQUIPMENT DAMPING

Item	(Percent of Critical) Upset Conditions (OBE)	Faulted Condition (SSE, DBA)
Primary coolant loop system components	2	4
Welded steel structures	2	4
Bolted and/or riveted steel structures	4	7
Fuel assemblies	7	10
CRDMs/CRDM supports	4	7

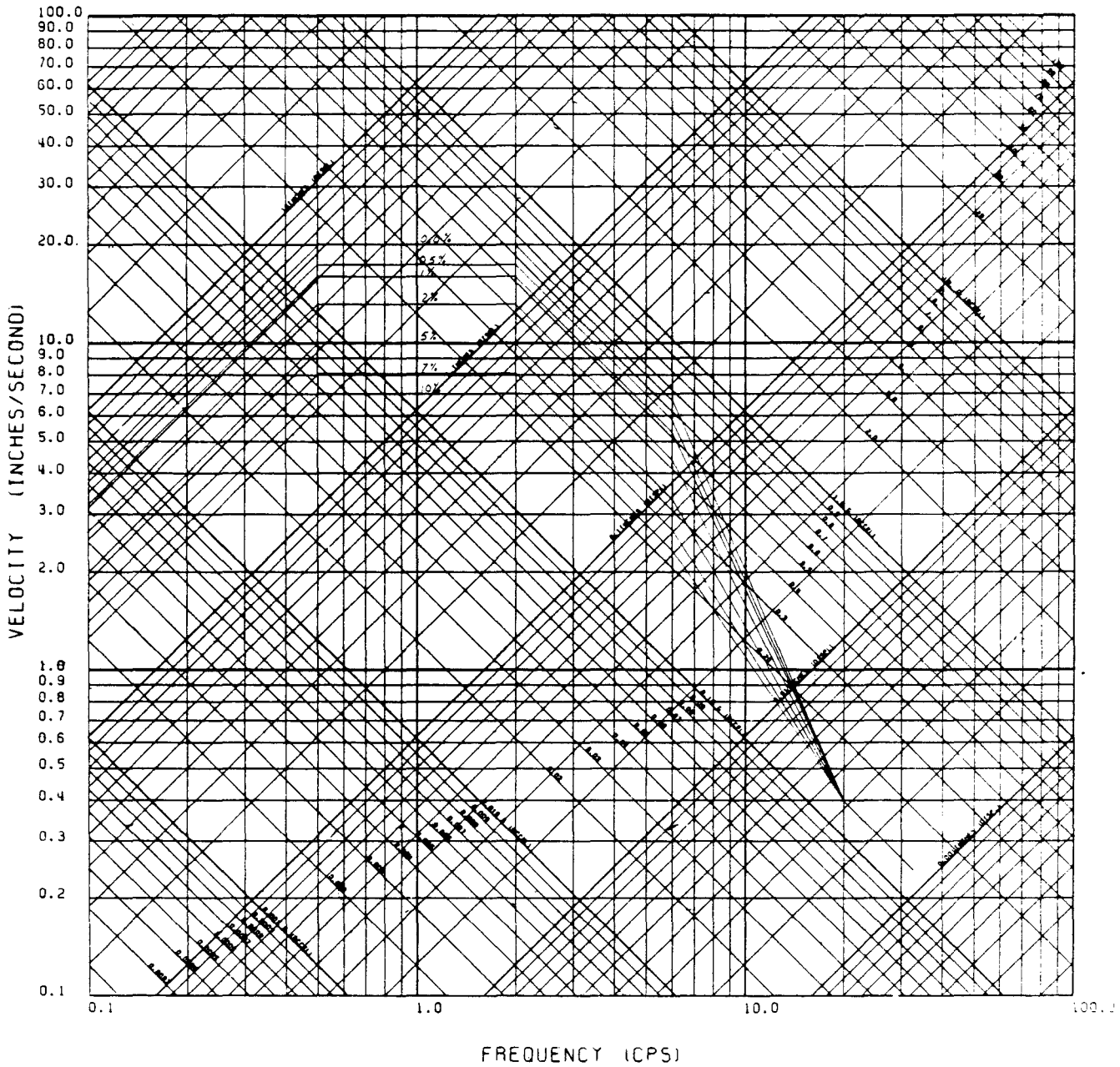

FIGURE 3.7B-1
DESIGN RESPONSE SPECTRA
SAFE SHUTDOWN EARTHQUAKE
BEAVER VALLEY POWER STATION-UNIT 2
FINAL SAFETY ANALYSIS REPORT

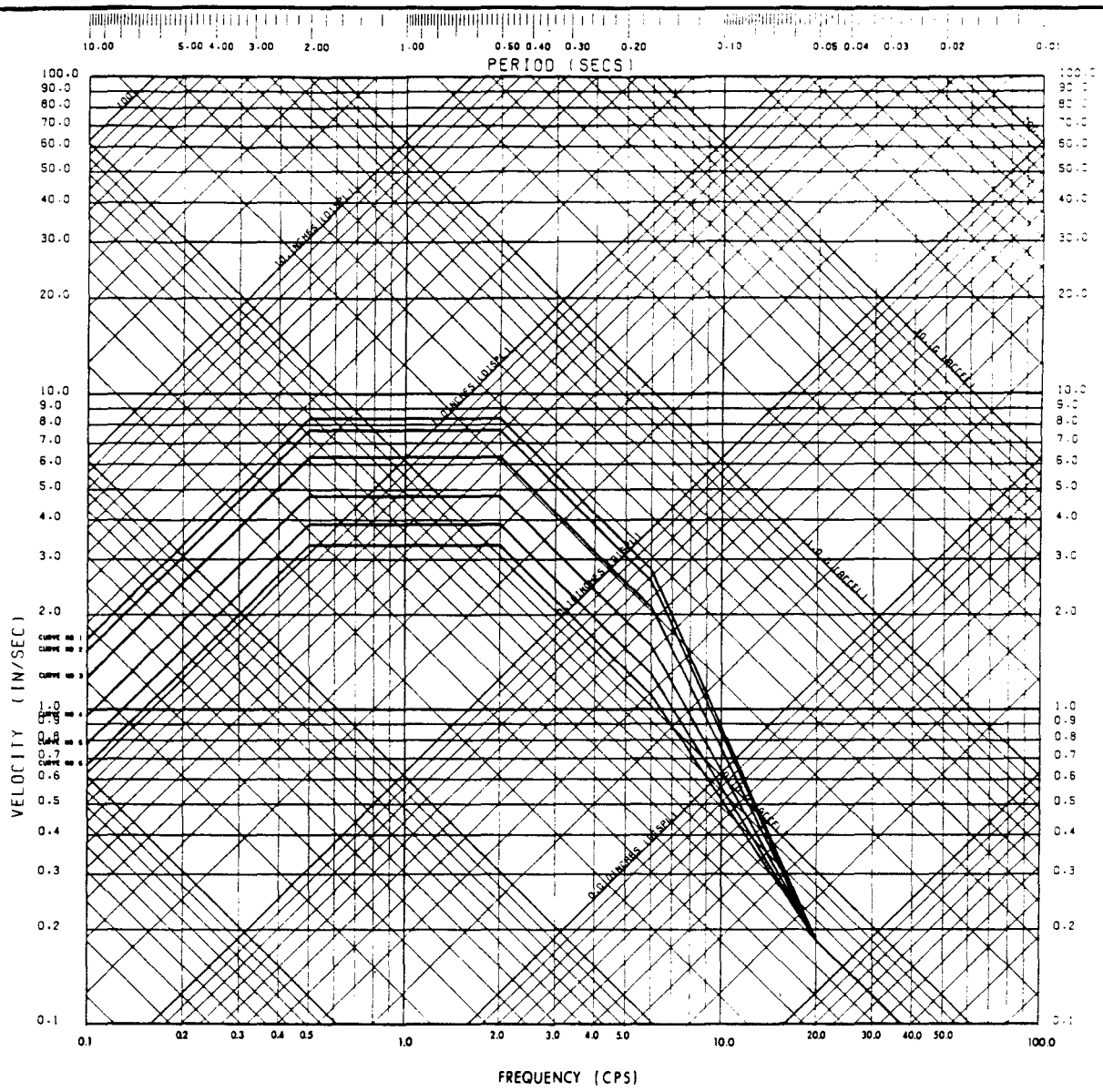

CURVE NO 1 DAMPING 0.5 PERCENT
CURVE NO 2 DAMPING 1.0 PERCENT
CURVE NO 3 DAMPING 2.0 PERCENT
CURVE NO 4 DAMPING 5.0 PERCENT
CURVE NO 5 DAMPING 7.0 PERCENT
CURVE NO 6 DAMPING 10.0 PERCENT

FIGURE 3.7B-2
DESIGN RESPONSE SPECTRA
1/2 SAFE SHUTDOWN EARTHQUAKE
BEAVER VALLEY POWER STATION-UNIT 2
FINAL SAFETY ANALYSIS REPORT

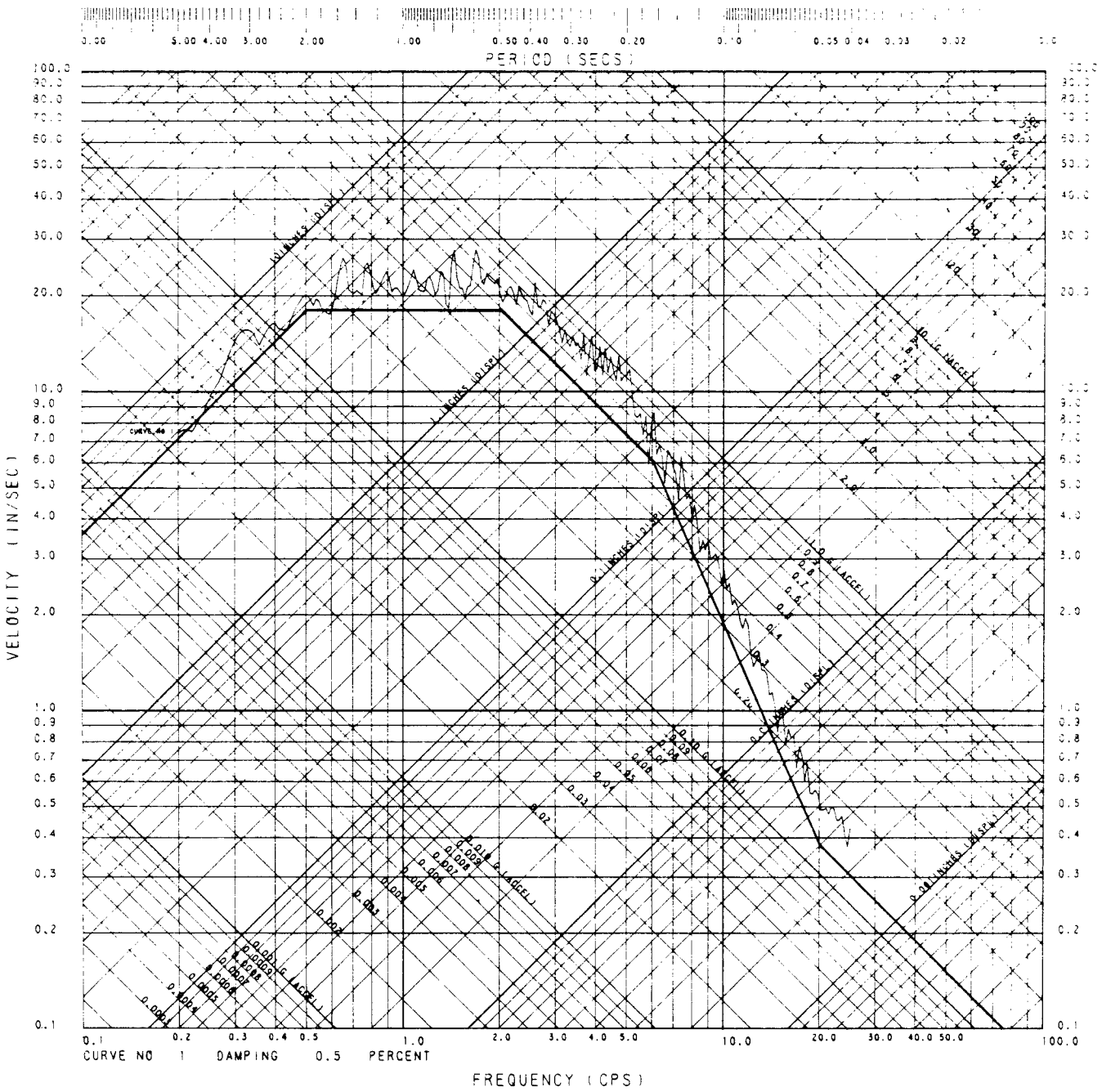

FIGURE 3.7B-3
SSE TIME HISTORY RESPONSE SPECTRA, 1/2% DAMPING VALUE
BEAVER VALLEY POWER STATION-UNIT 2
FINAL SAFETY ANALYSIS REPORT

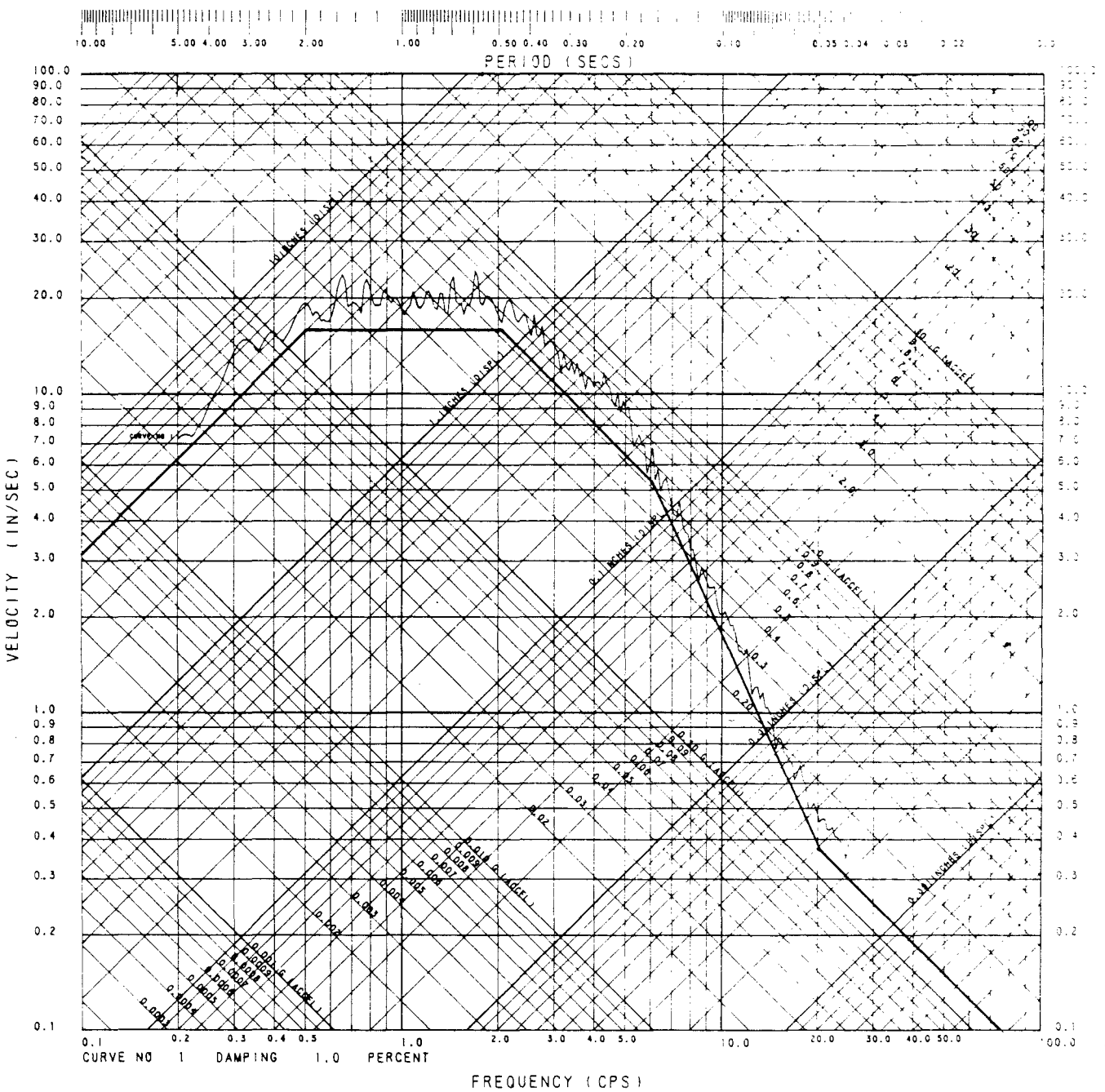

FIGURE 3.7B-4

SSE TIME HISTORY RESPONSE SPECTRA, 1% DAMPING VALUE

BEAVER VALLEY POWER STATION-UNIT 2

FINAL SAFETY ANALYSIS REPORT

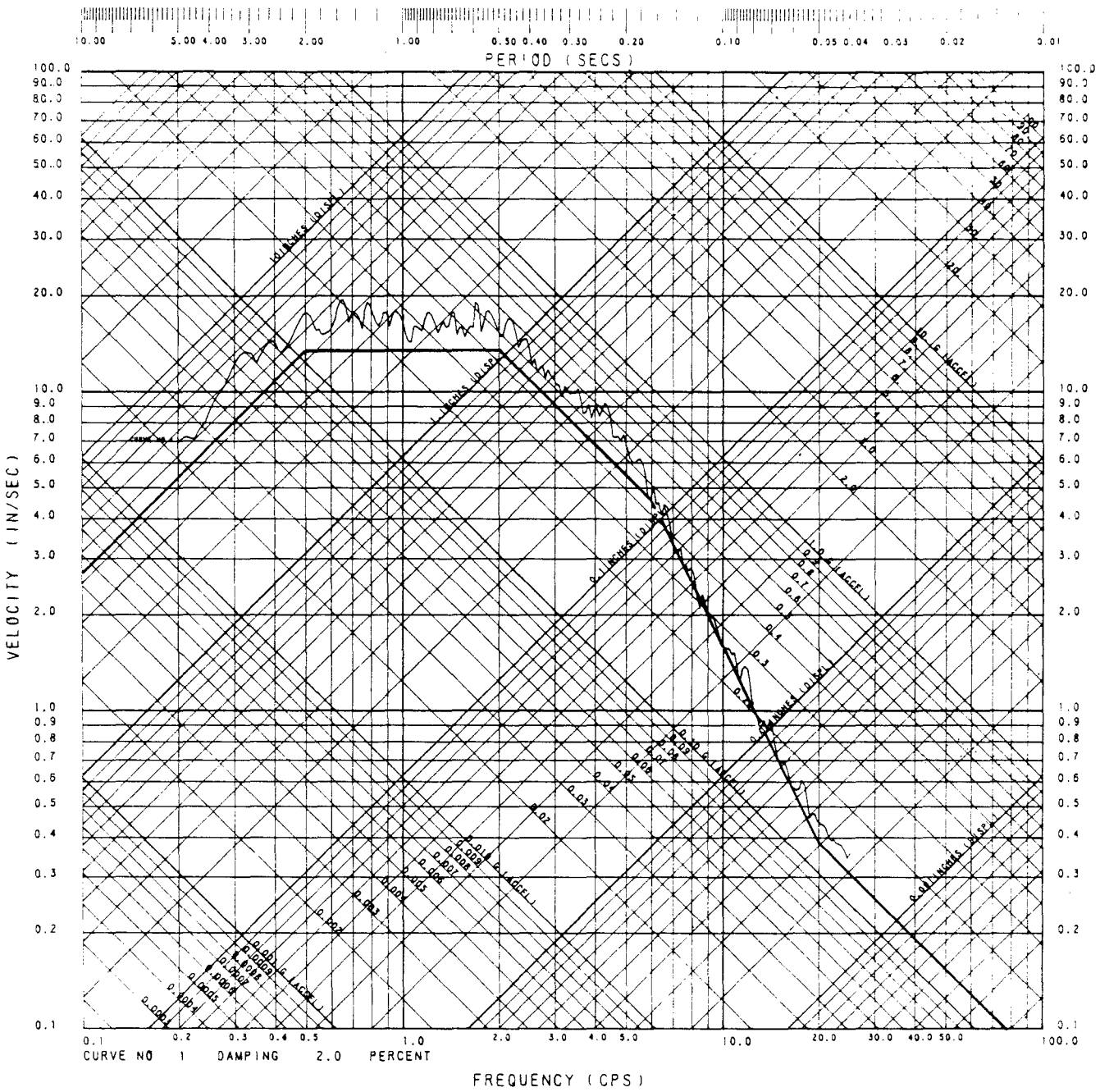

FIGURE 3.7B-5

SSE TIME HISTORY RESPONSE SPECTRA, 2% DAMPING VALUE

BEAVER VALLEY POWER STATION-UNIT 2

FINAL SAFETY ANALYSIS REPORT

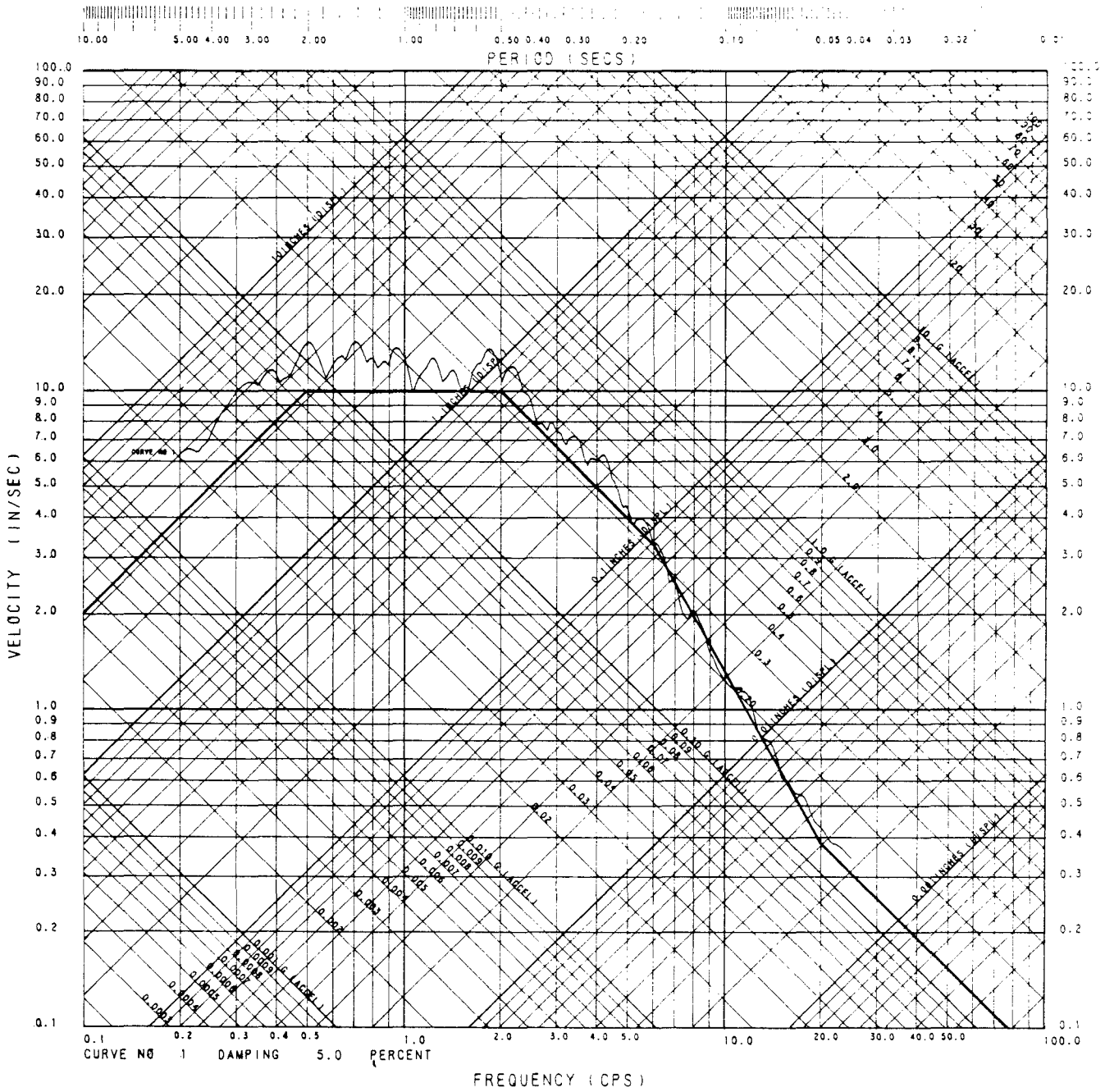

FIGURE 3.7B-6

SSE TIME HISTORY RESPONSE SPECTRA, 5% DAMPING VALUE

BEAVER VALLEY POWER STATION-UNIT 2
FINAL SAFETY ANALYSIS REPORT

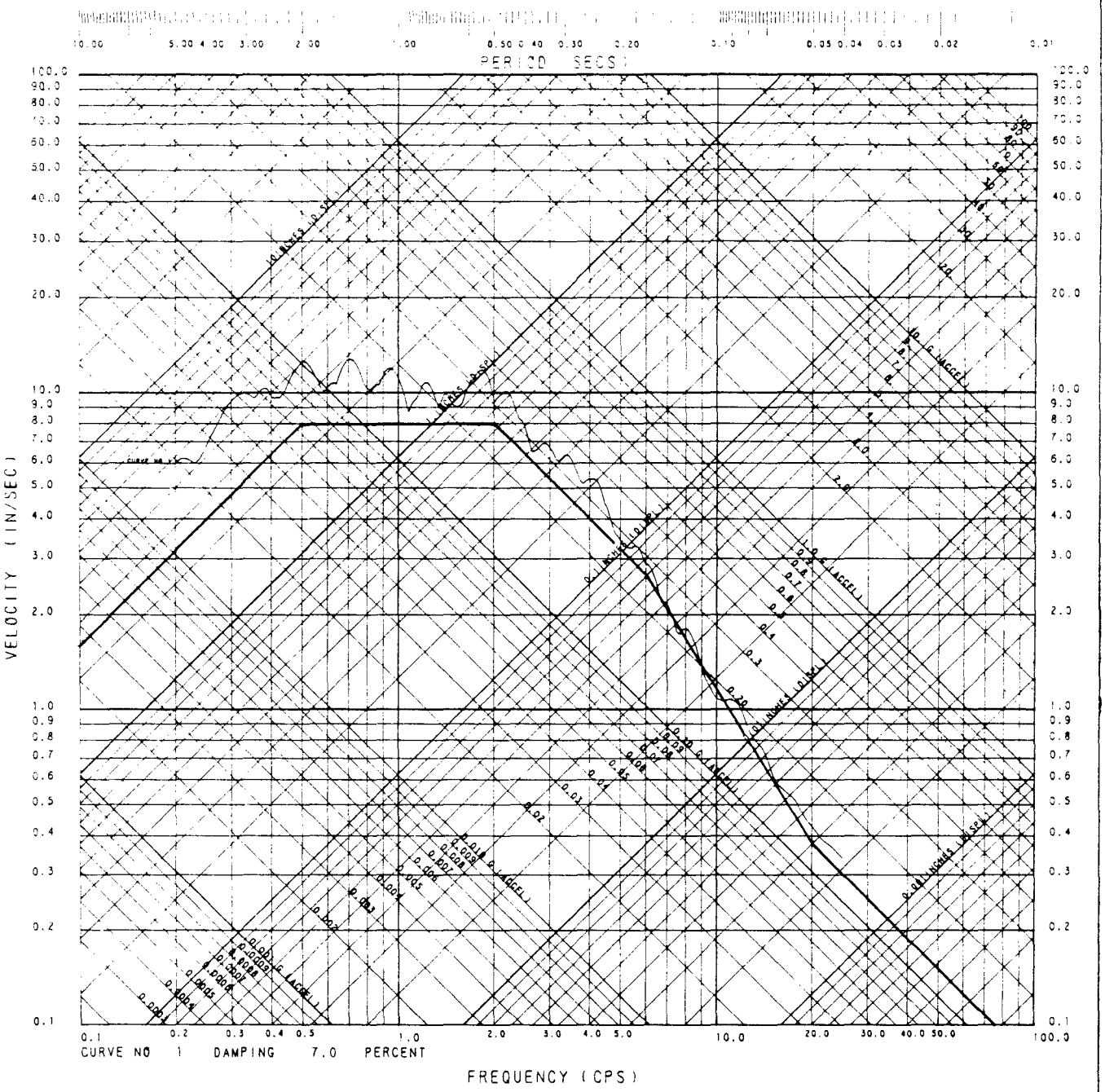

FIGURE 3.7B-7
SSE TIME HISTORY RESPONSE SPECTRA, 7% DAMPING VALUE
BEAVER VALLEY POWER STATION-UNIT 2
FINAL SAFETY ANALYSIS REPORT

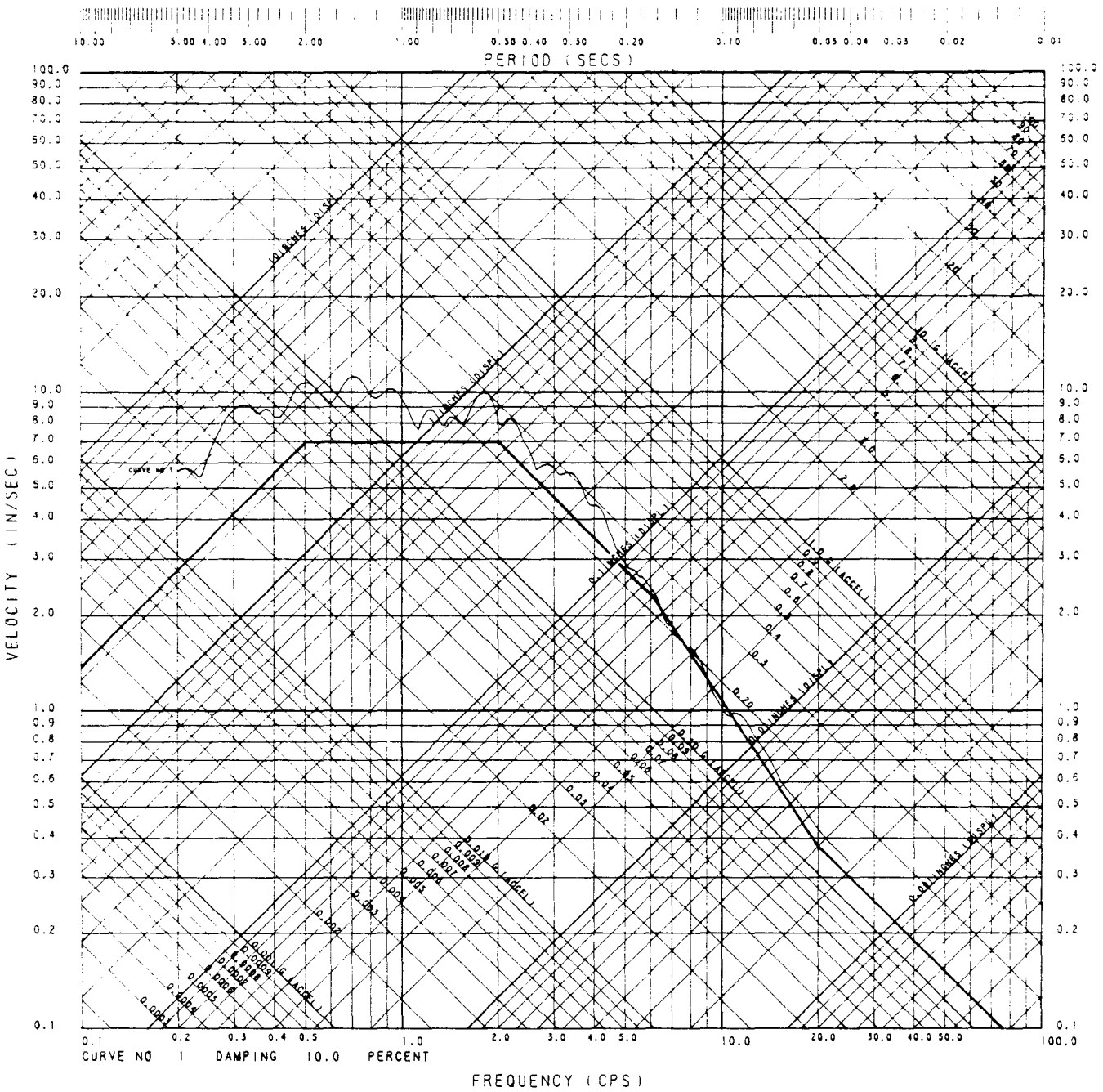

FIGURE 3.7B-8

SSE TIME HISTORY RESPONSE SPECTRA, 10% DAMPING VALUE

BEAVER VALLEY POWER STATION-UNIT 2

FINAL SAFETY ANALYSIS REPORT

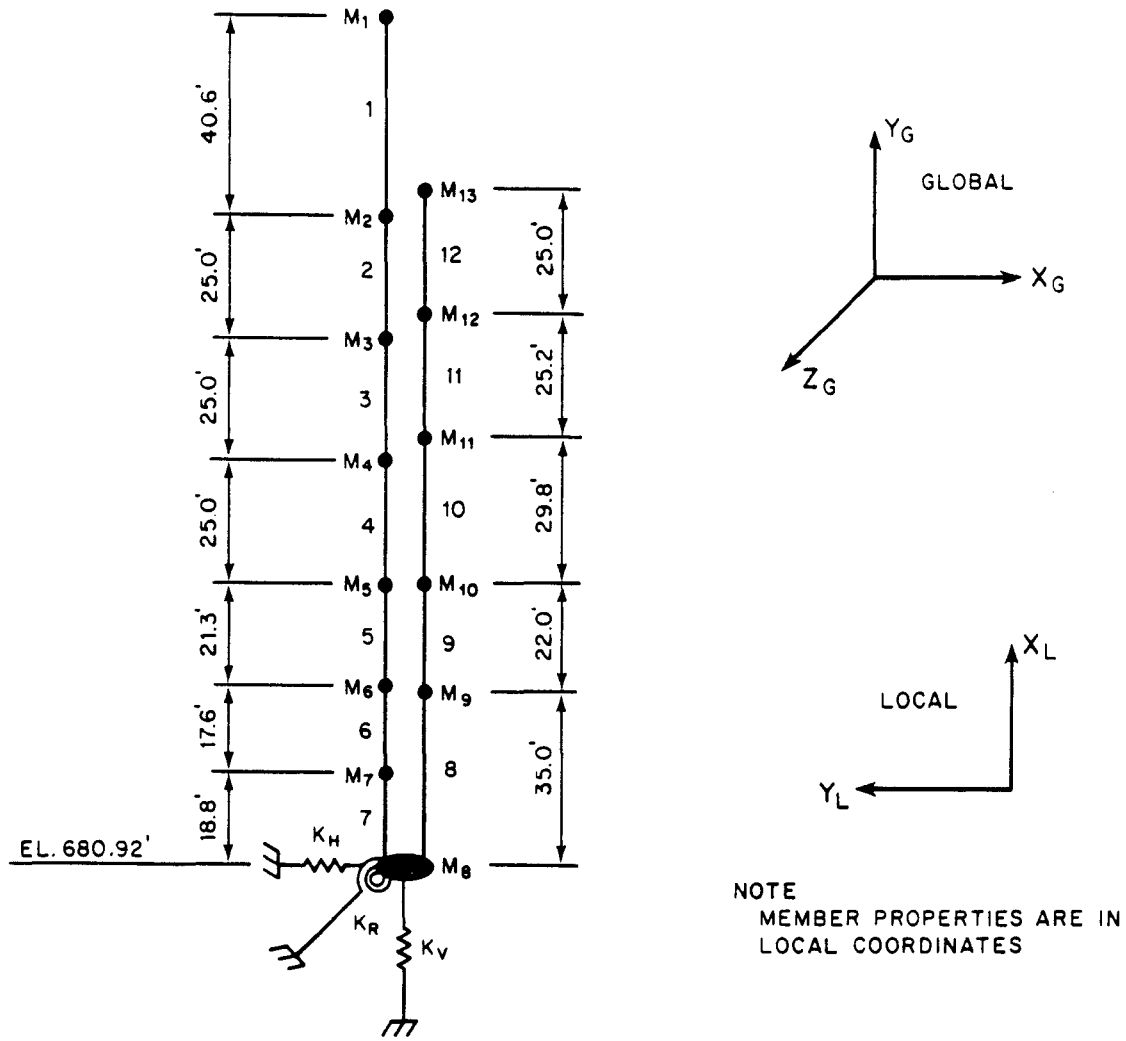

FIGURE 3.7B-9
DYNAMIC MODEL OF THE
CONTAINMENT STRUCTURE
BEAVER VALLEY POWER STATION-UNIT 2
FINAL SAFETY ANALYSIS REPORT

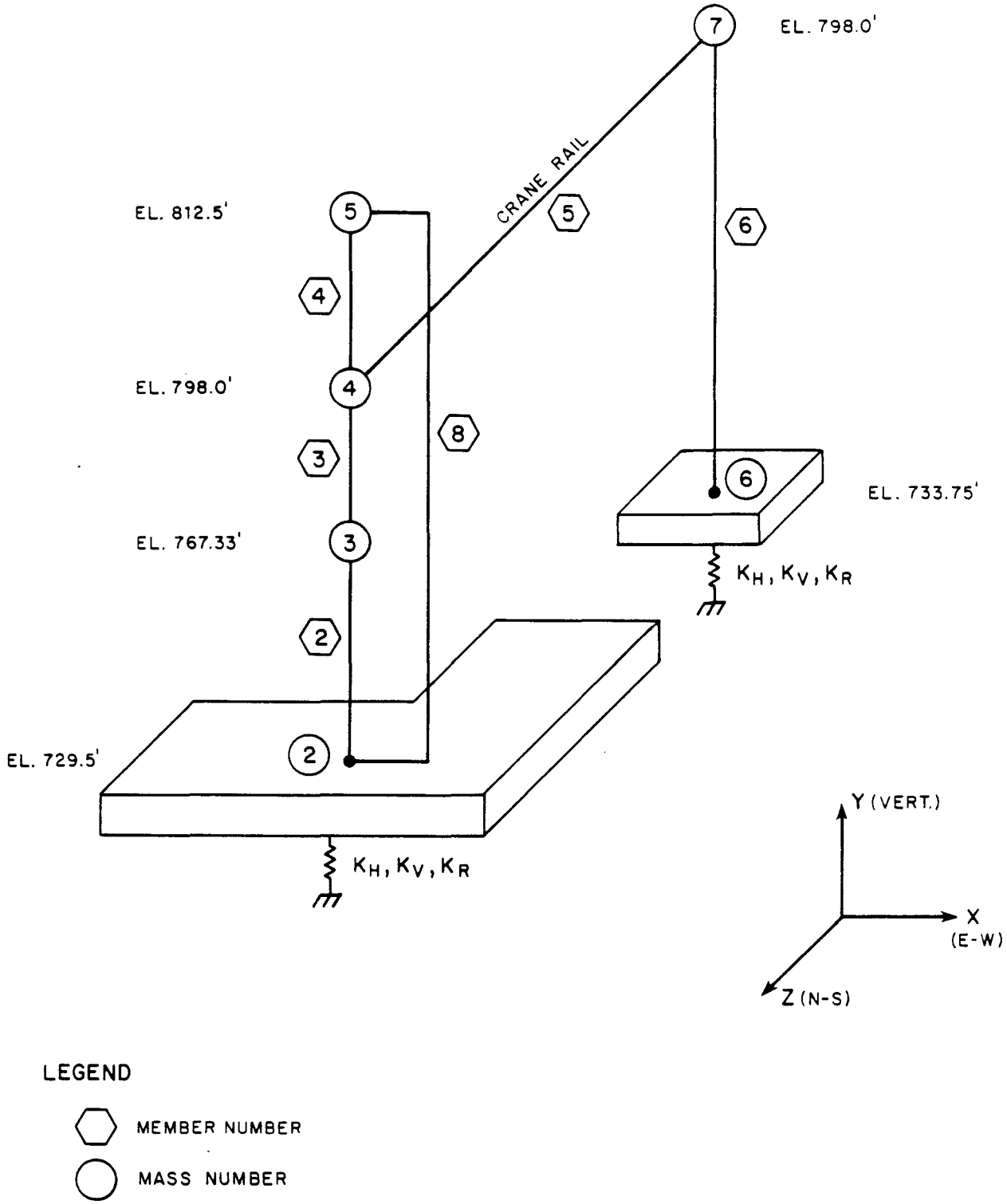

LEGEND

MEMBER NUMBER

MASS NUMBER

FIGURE 3.7B-10

DYNAMIC MODEL OF THE FUEL BUILDING

BEAVER VALLEY POWER STATION - UNIT 2
FINAL SAFETY ANALYSIS REPORT

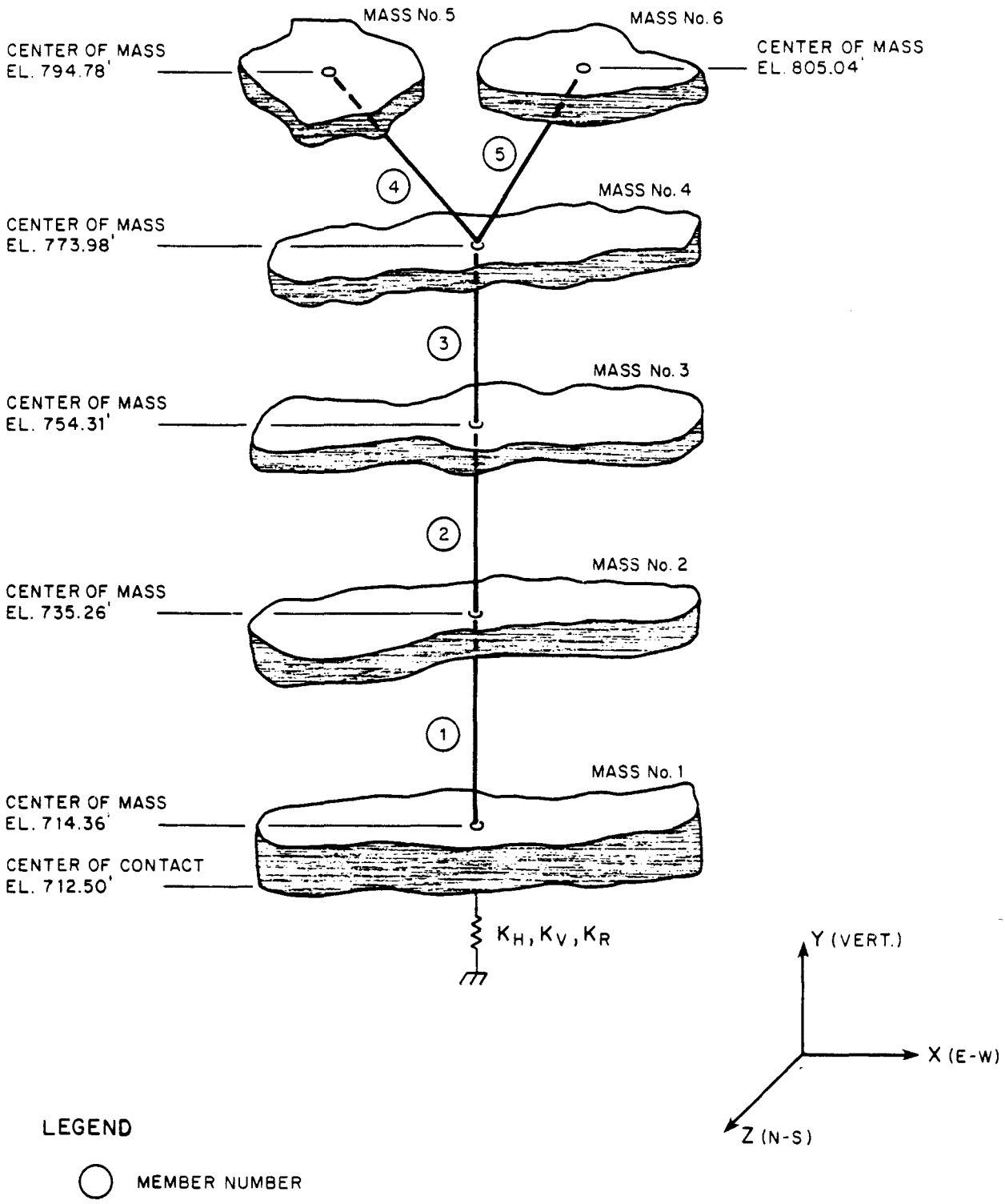

FIGURE 3.7B-11
DYNAMIC MODEL OF THE
CABLE VAULT BUILDING
BEAVER VALLEY POWER STATION-UNIT 2
FINAL SAFETY ANALYSIS REPORT

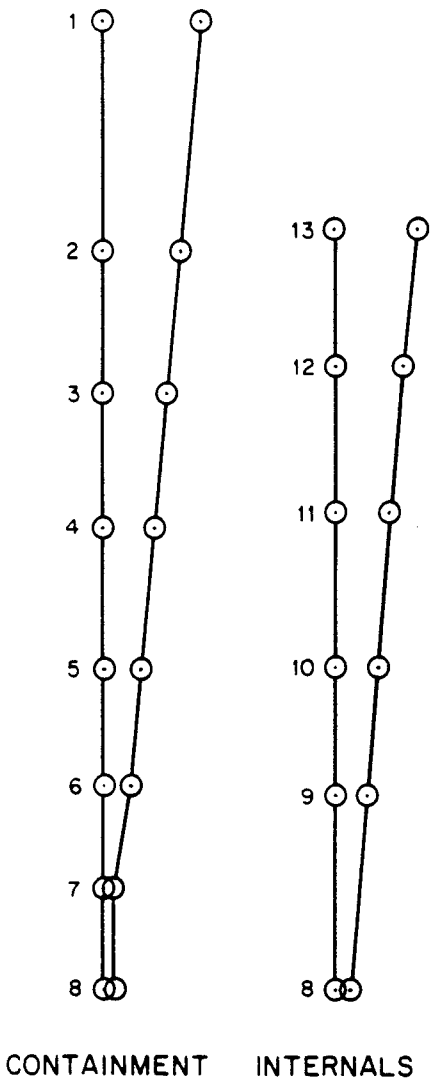

MASS	APPROX ELEVATION (FEET)	X	Y
1	854	1.0	0
2	813	0.796	0
3	788	0.676	0
4	763	0.559	0
5	738	0.437	0
6	717	0.337	0
7	699	0.103	0
8	691	0.102	0
9	716	0.334	0
10	738	0.435	0
11	767	0.577	0
12	793	0.698	0
13	818	0.816	0

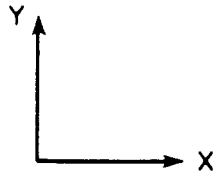

MODE 1
FREQUENCY 1.5 H_Z

NOTE
REFERENCE TABLE 3.7B-4 AND TABLE 3.7B-6

FIGURE 3.7B-12
EIGENVECTORS FOR CONTAINMENT AND INTERNAL STRUCTURES
UNCRACKED MODEL, MEDIAN SOIL
BEAVER VALLEY POWER STATION-UNIT 2
FINAL SAFETY ANALYSIS REPORT

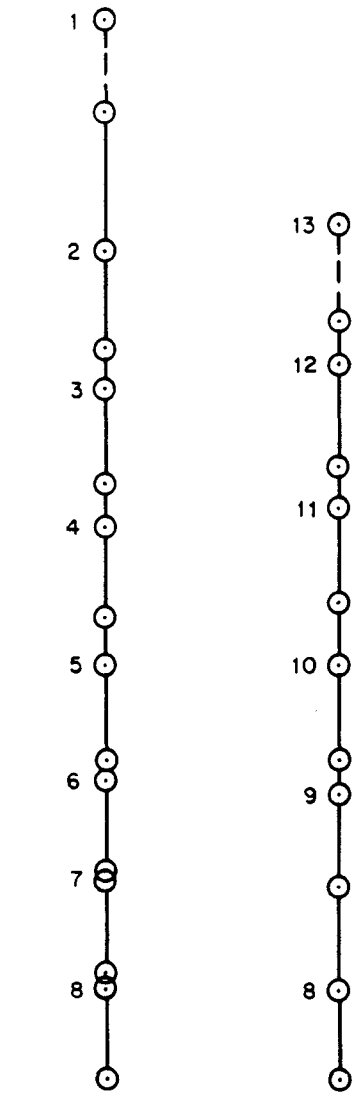

CONTAINMENT INTERNALS

MASS	APPROX. ELEVATION (FEET)	X	Y
1	854	0	-1.000
2	813	0	-0.979
3	788	0	-0.979
4	763	0	-0.973
5	738	0	-0.963
6	717	0	-0.957
7	699	0	-0.947
8	691	0	-0.936
9	716	0	-0.968
10	738	0	-0.973
11	767	0	-0.973
12	793	0	-0.979
13	818	0	-0.979

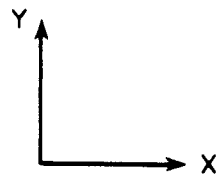

MODE 2
FREQUENCY 2.7 H_Z

NOTE
REFERENCE TABLE 3.7B-4 AND TABLE 3.7B-6

FIGURE 3.7B-13
EIGENVECTORS FOR CONTAINMENT AND INTERNAL STRUCTURES
UNCRACKED MODEL, MEDIAN SOIL
BEAVER VALLEY POWER STATION-UNIT 2
FINAL SAFETY ANALYSIS REPORT

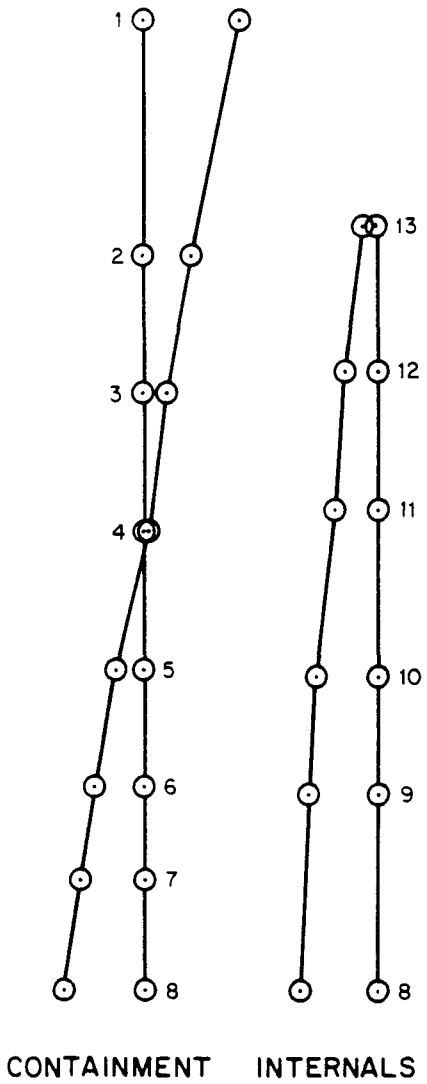

MASS	APPROX. ELEVATION (FEET)	X	Y
1	854	1.0	0
2	813	0.486	0
3	788	0.223	0
4	763	-0.040	0
5	738	-0.295	0
6	717	-0.498	0
7	699	-0.658	0
8	691	-0.809	0
9	716	-0.724	0
10	738	-0.615	0
11	767	-0.451	0
12	793	-0.312	0
13	818	-0.167	0

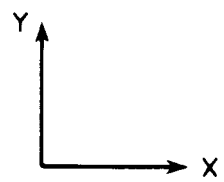

MODE 3
FREQUENCY 3.7 H_Z

NOTE
REFERENCE TABLE 3.7B-4 AND 3.7B-6

FIGURE 3.7B-14
EIGENVECTORS FOR CONTAINMENT AND INTERNAL STRUCTURES
UNCRACKED MODEL, MEDIAN SOIL
BEAVER VALLEY POWER STATION-UNIT 2
FINAL SAFETY ANALYSIS REPORT

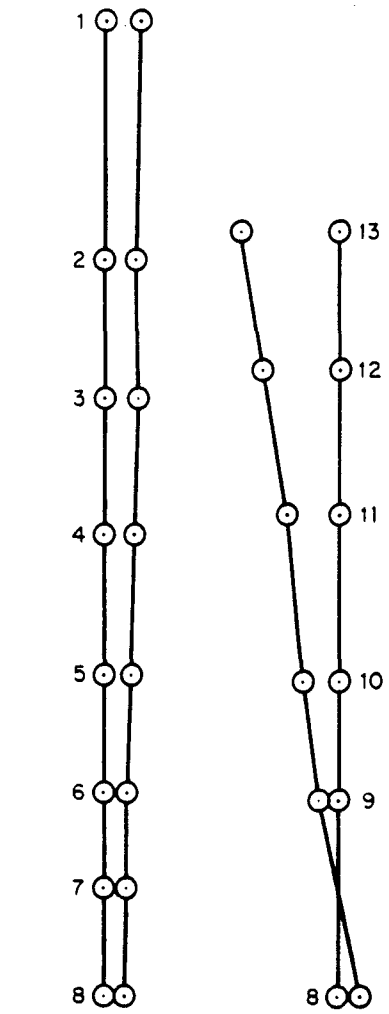

MASS	APPROX. ELEVATION (FEET)	X	Y
1	854	0.356	0
2	813	0.318	0
3	788	0.316	0
4	763	0.308	0
5	738	0.291	0
6	717	0.275	0
7	699	0.261	0
8	691	0.235	0
9	716	-0.177	0
10	738	-0.372	0
11	767	-0.542	0
12	793	-0.787	0
13	818	-1.0	0

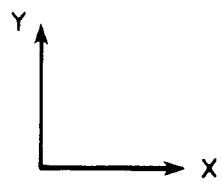

MODE 4
FREQUENCY 5.0 Hz

NOTE
REFERENCE TABLE 3.7B-4 AND TABLE 3.7B-6

FIGURE 3.7B-15
EIGENVECTORS FOR CONTAINMENT AND INTERNAL STRUCTURES UNCRACKED MODEL, MEDIAN SOIL
BEAVER VALLEY POWER STATION-UNIT 2
FINAL SAFETY ANALYSIS REPORT

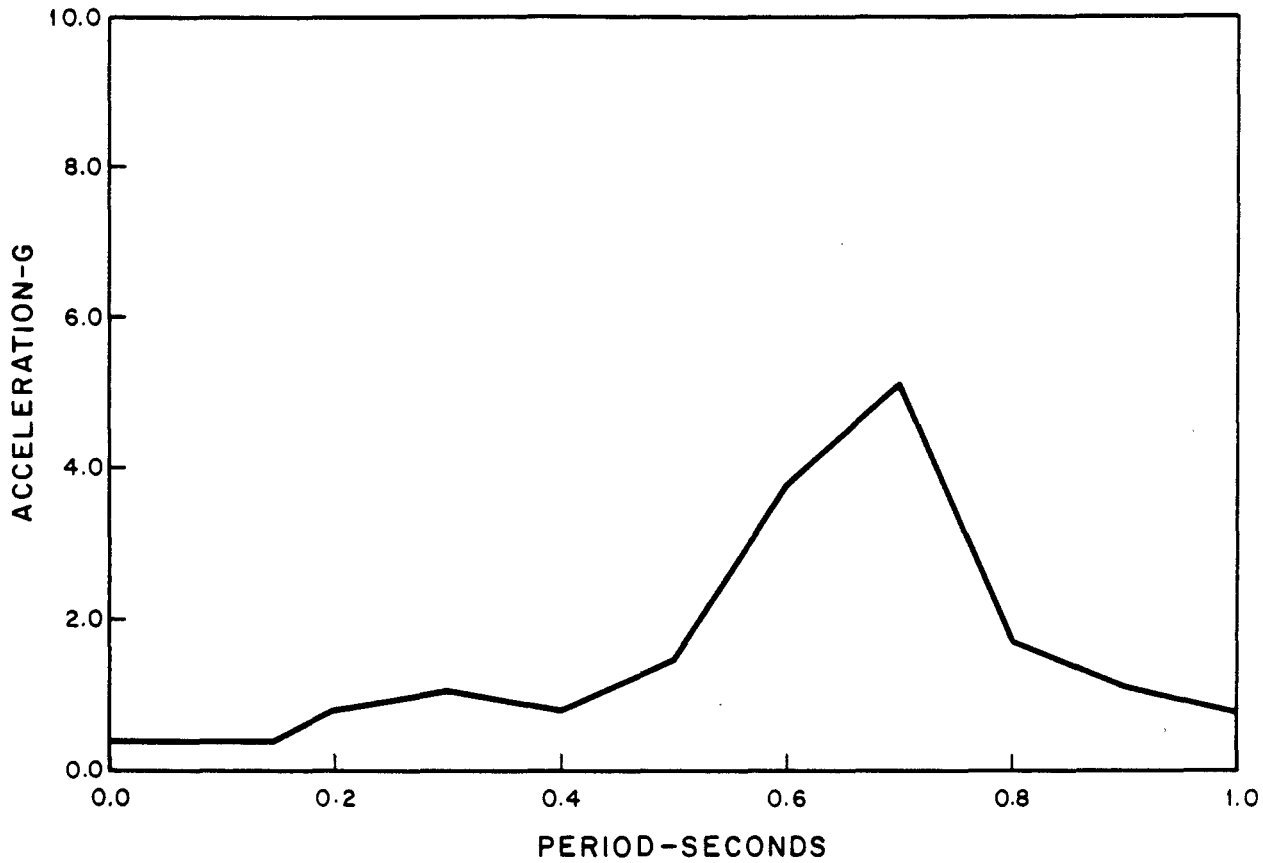

NOTE:
0.5 PERCENT DAMPING,
UNCRACKED PROPERTIES

FIGURE 3.7B-16
RESPONSE SPECTRUM ANALYSIS, CONTAINMENT AND INTERNAL STRUCTURES, SPRINGLINE HORIZONTAL SSE
BEAVER VALLEY POWER STATION-UNIT 2
FINAL SAFETY ANALYSIS REPORT

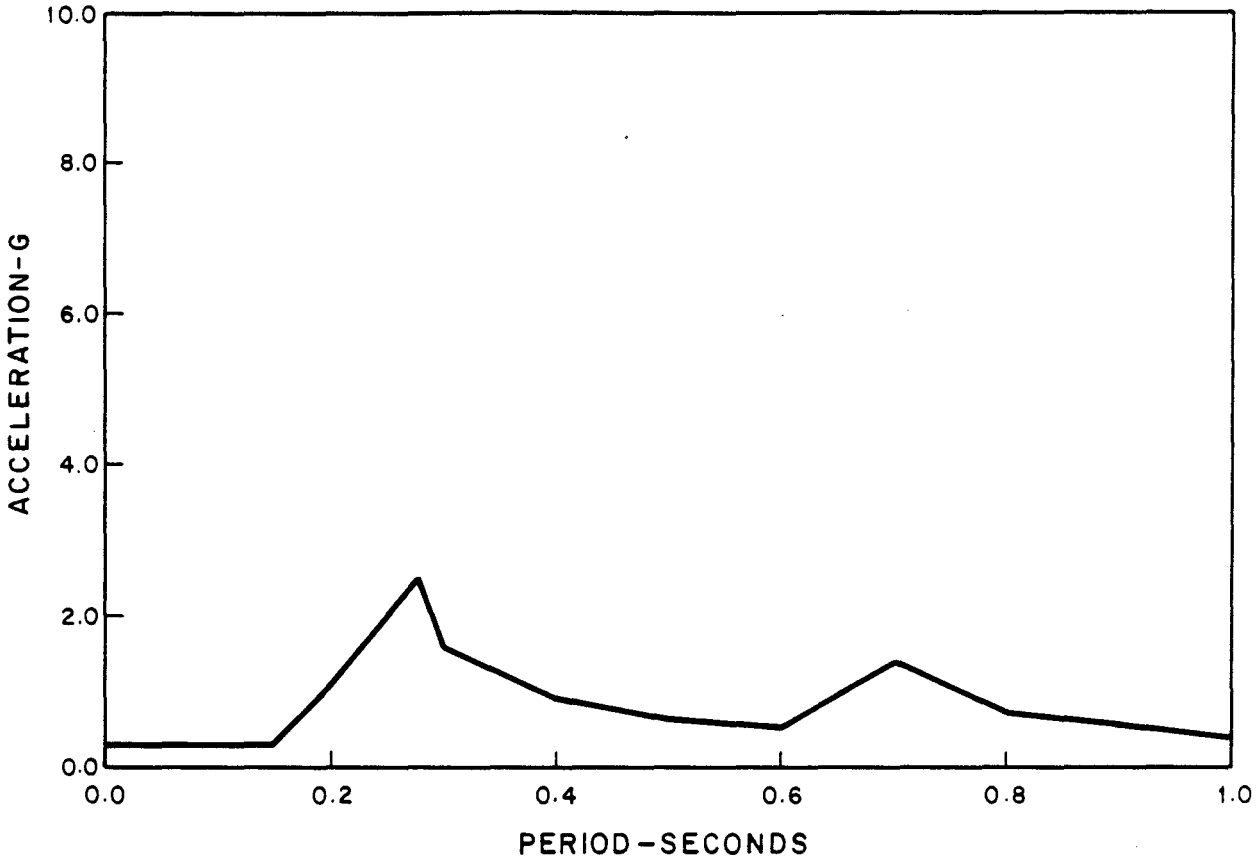

NOTE:
0.5 PERCENT DAMPING,
UNCRACKED PROPERTIES

FIGURE 3.7B-17
RESPONSE SPECTRUM ANALYSIS, CONTAINMENT AND INTERNAL STRUCTURES, MAT HORIZONTAL SSE
BEAVER VALLEY POWER STATION-UNIT 2
FINAL SAFETY ANALYSIS REPORT

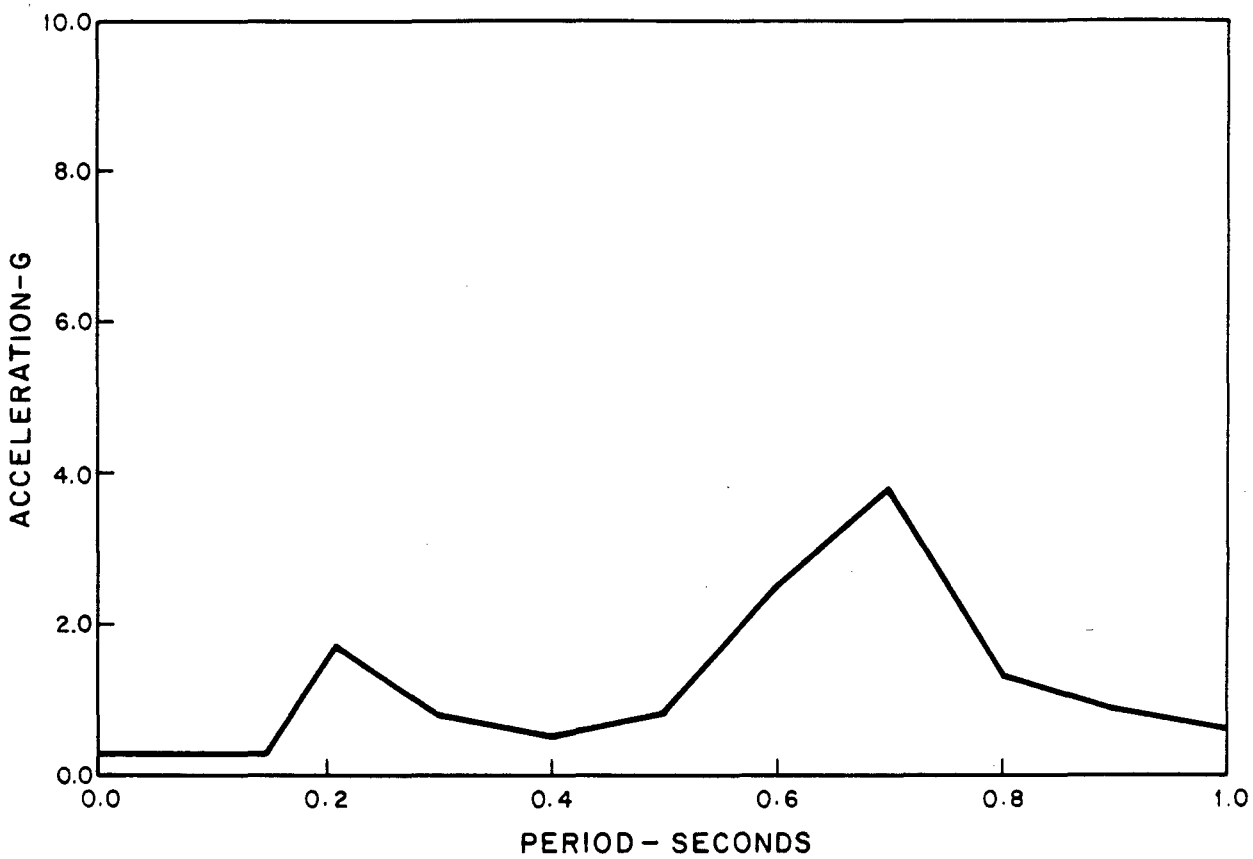

NOTE:
0.5 PERCENT DAMPING,
UNCRACKED PROPERTIES

FIGURE 3.7B-18
RESPONSE SPECTRUM ANALYSIS, CONTAINMENT AND INTERNAL STRUCTURES, OPERATING FLOOR HORIZONTAL SSE
BEAVER VALLEY POWER STATION-UNIT 2
FINAL SAFETY ANALYSIS REPORT

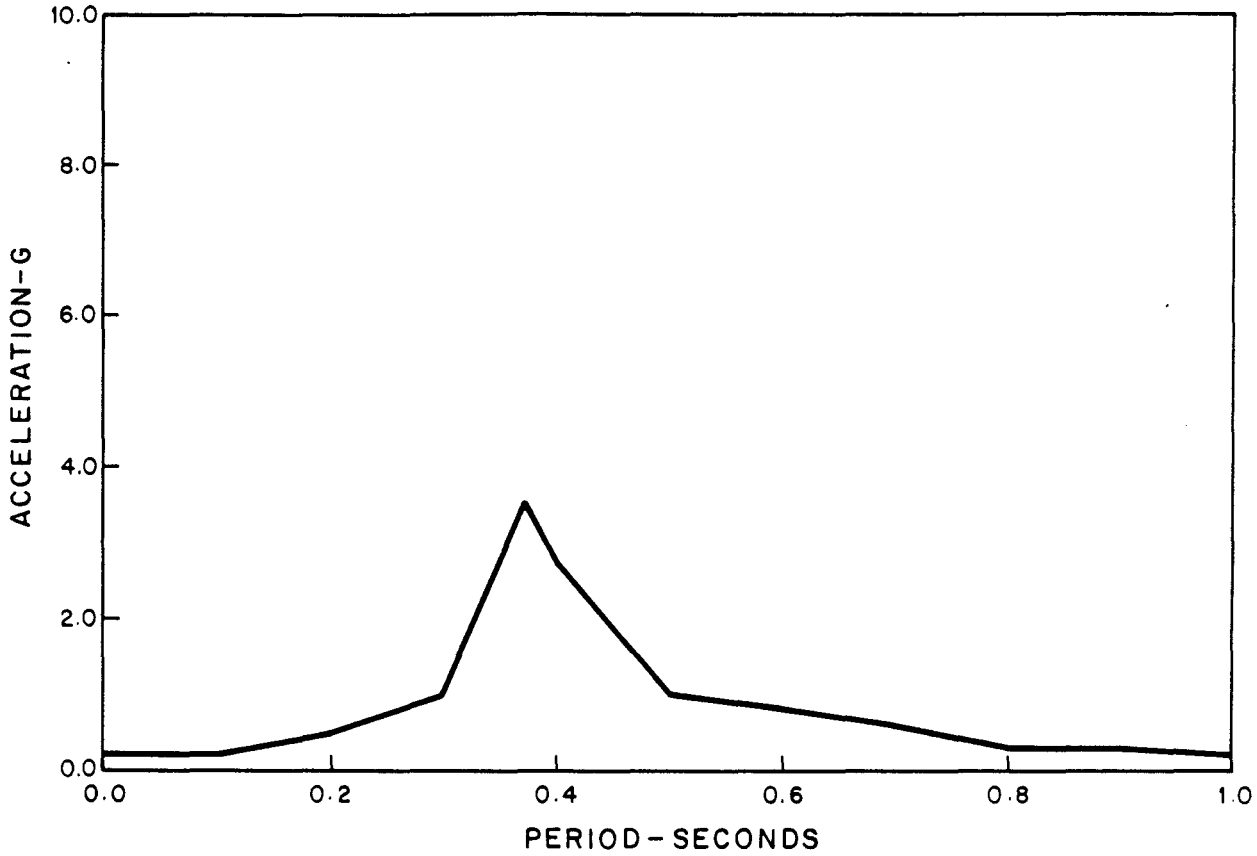

NOTE:
0.5 PERCENT DAMPING,
UNCRACKED PROPERTIES

FIGURE 3.7B-19
RESPONSE SPECTRUM ANALYSIS, CONTAINMENT AND INTERNAL STRUCTURES, SPRINGLINE VERTICAL SSE
BEAVER VALLEY POWER STATION-UNIT 2
FINAL SAFETY ANALYSIS REPORT

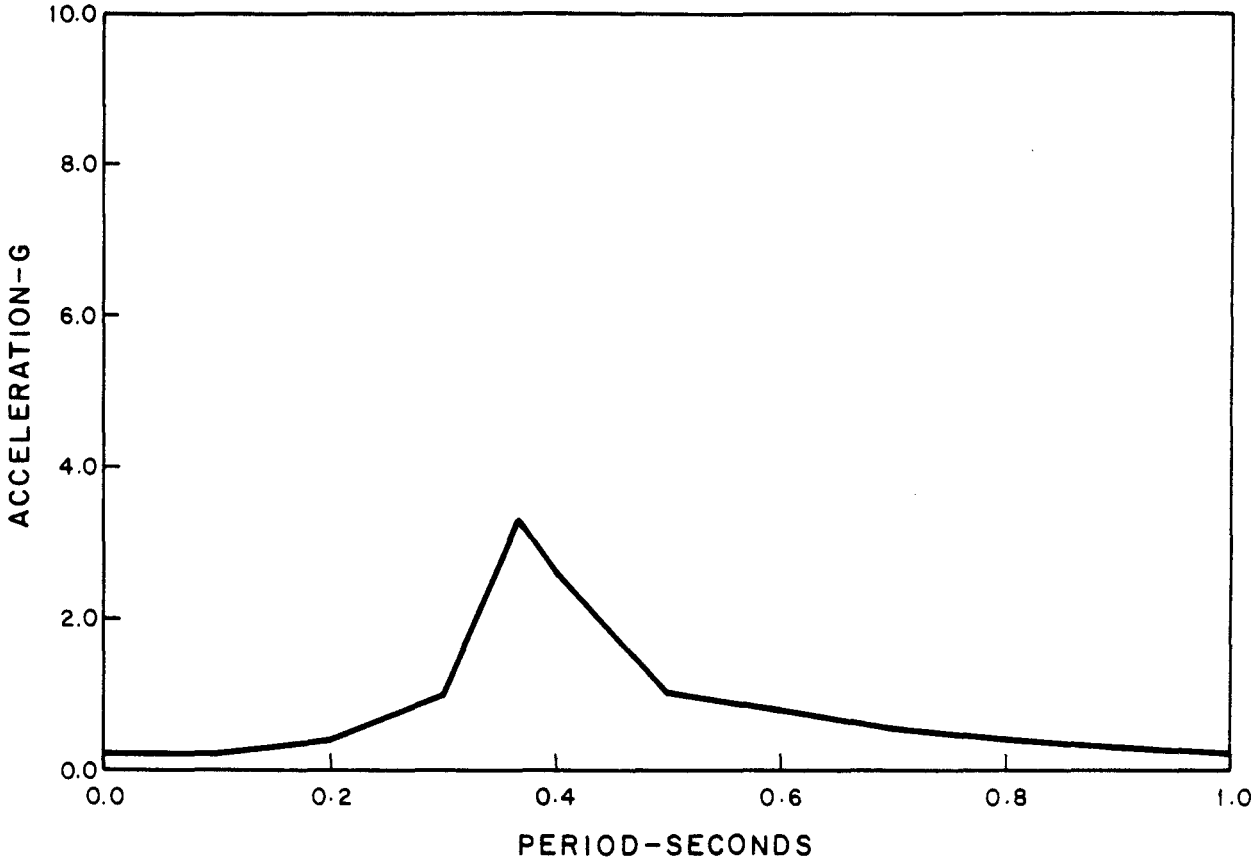

NOTE:
0.5 PERCENT DAMPING,
UNCRACKED PROPERTIES

FIGURE 3.7B-20
RESPONSE SPECTRUM ANALYSIS,
CONTAINMENT AND INTERNAL
STRUCTURES, MAT
VERTICAL SSE
BEAVER VALLEY POWER STATION-UNIT 2
FINAL SAFETY ANALYSIS REPORT

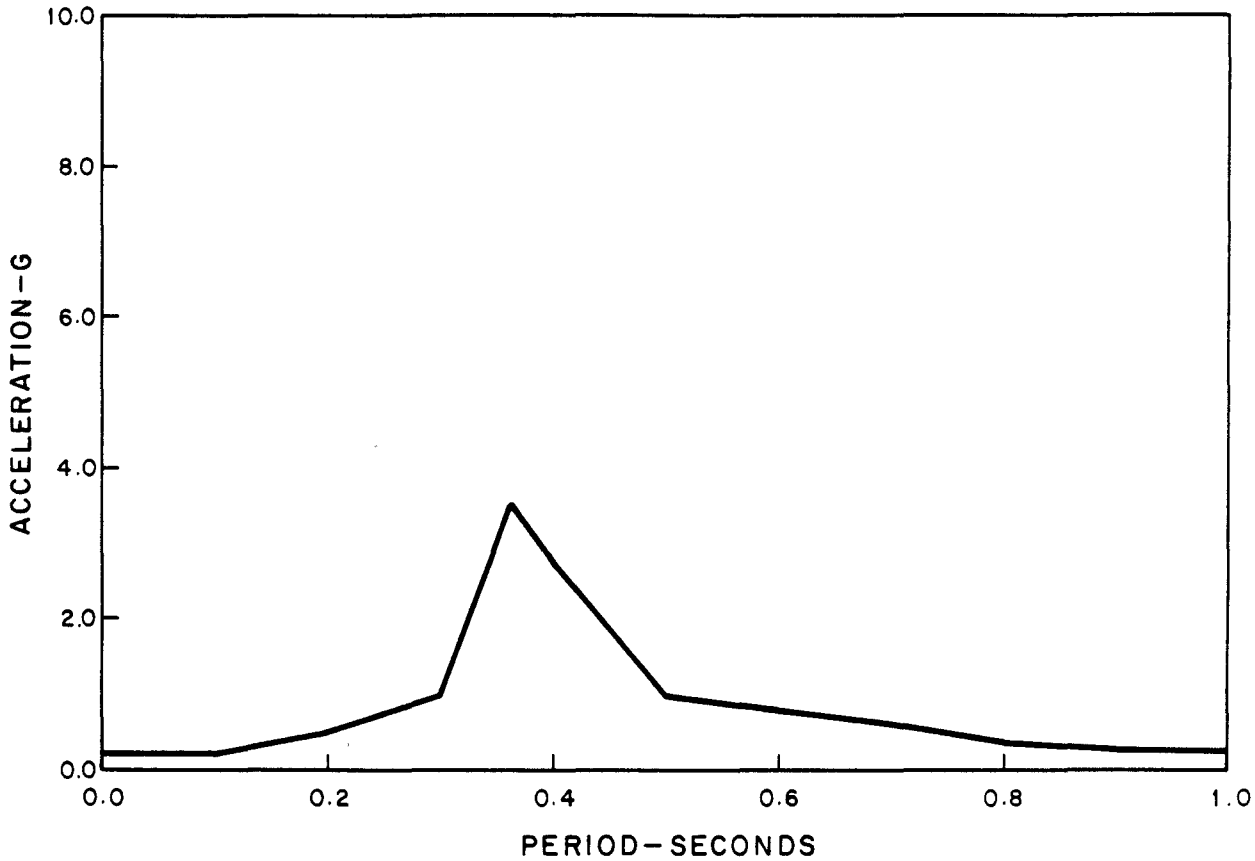

NOTE:
0.5 PERCENT DAMPING,
UNCRACKED PROPERTIES

FIGURE 3.7B-21
RESPONSE SPECTRUM ANALYSIS, CONTAINMENT AND INTERNAL STRUCTURES, OPERATING FLOOR VERTICAL SSE
BEAVER VALLEY POWER STATION-UNIT 2
FINAL SAFETY ANALYSIS REPORT

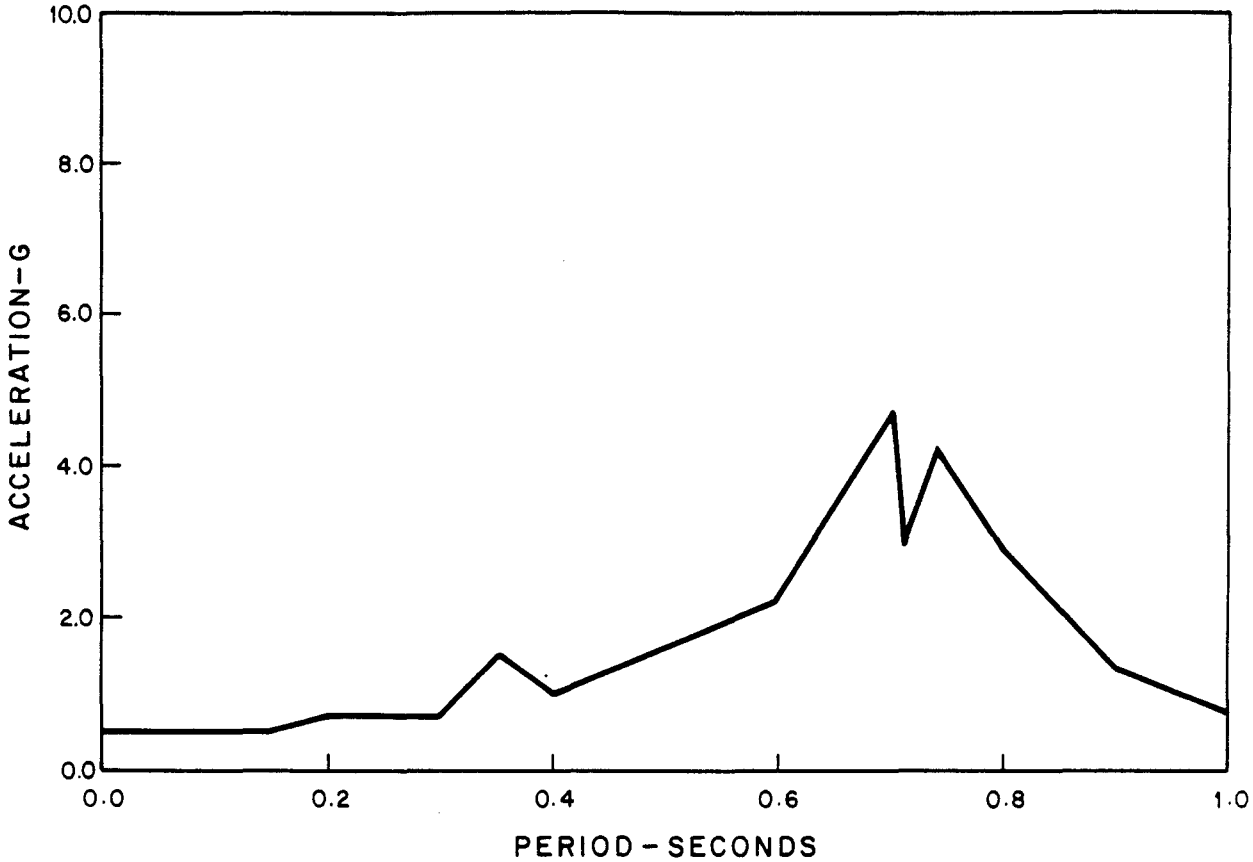

NOTE:
0.5 PERCENT DAMPING,
CRACKED PROPERTIES

FIGURE 3.7B-22
RESPONSE SPECTRUM ANALYSIS, CONTAINMENT AND INTERNAL STRUCTURES, SPRINGLINE HORIZONTAL SSE
BEAVER VALLEY POWER STATION-UNIT 2
FINAL SAFETY ANALYSIS REPORT

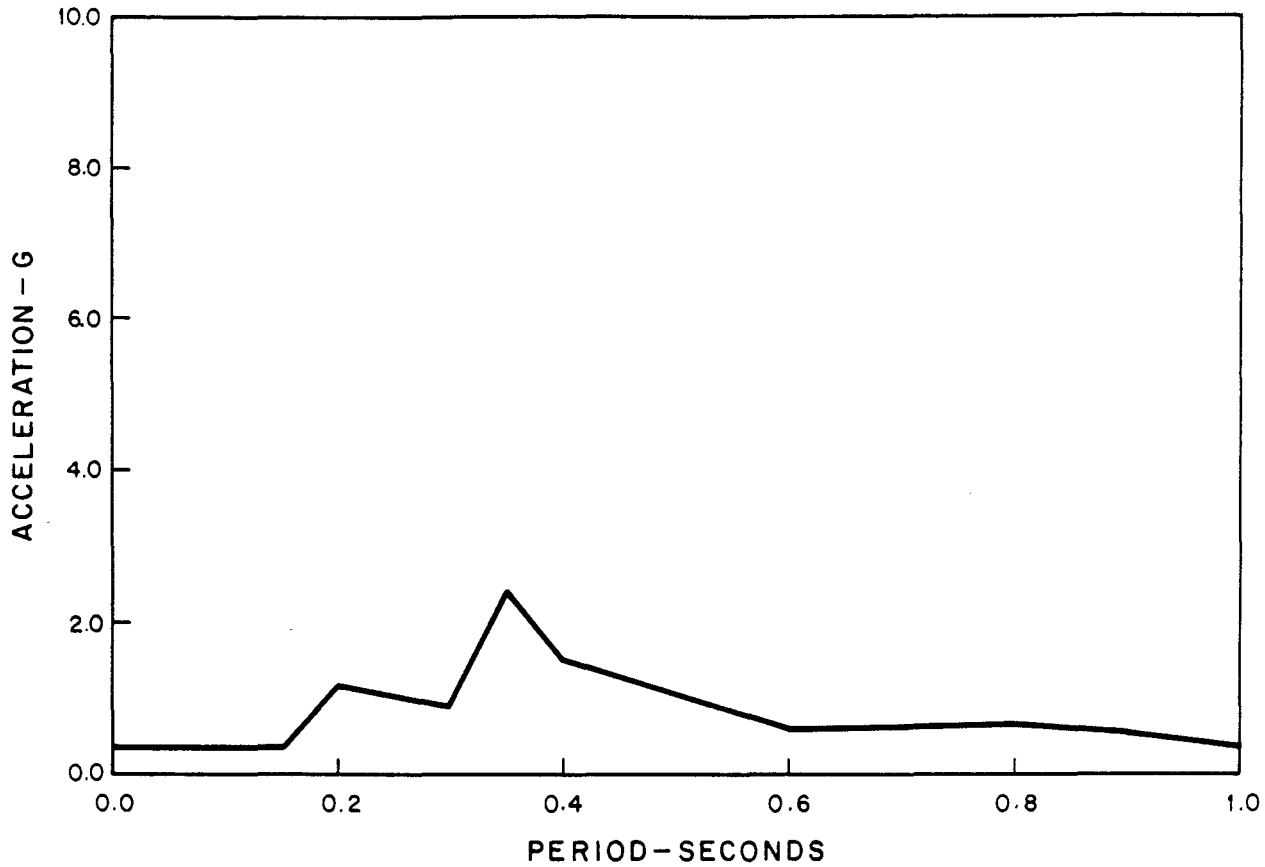

NOTE:
0.5 PERCENT DAMPING,
CRACKED PROPERTIES

FIGURE 3.7B-23
RESPONSE SPECTRUM ANALYSIS,
CONTAINMENT AND INTERNAL
STRUCTURES, MAT
HORIZONTAL SSE
BEAVER VALLEY POWER STATION-UNIT 2
FINAL SAFETY ANALYSIS REPORT

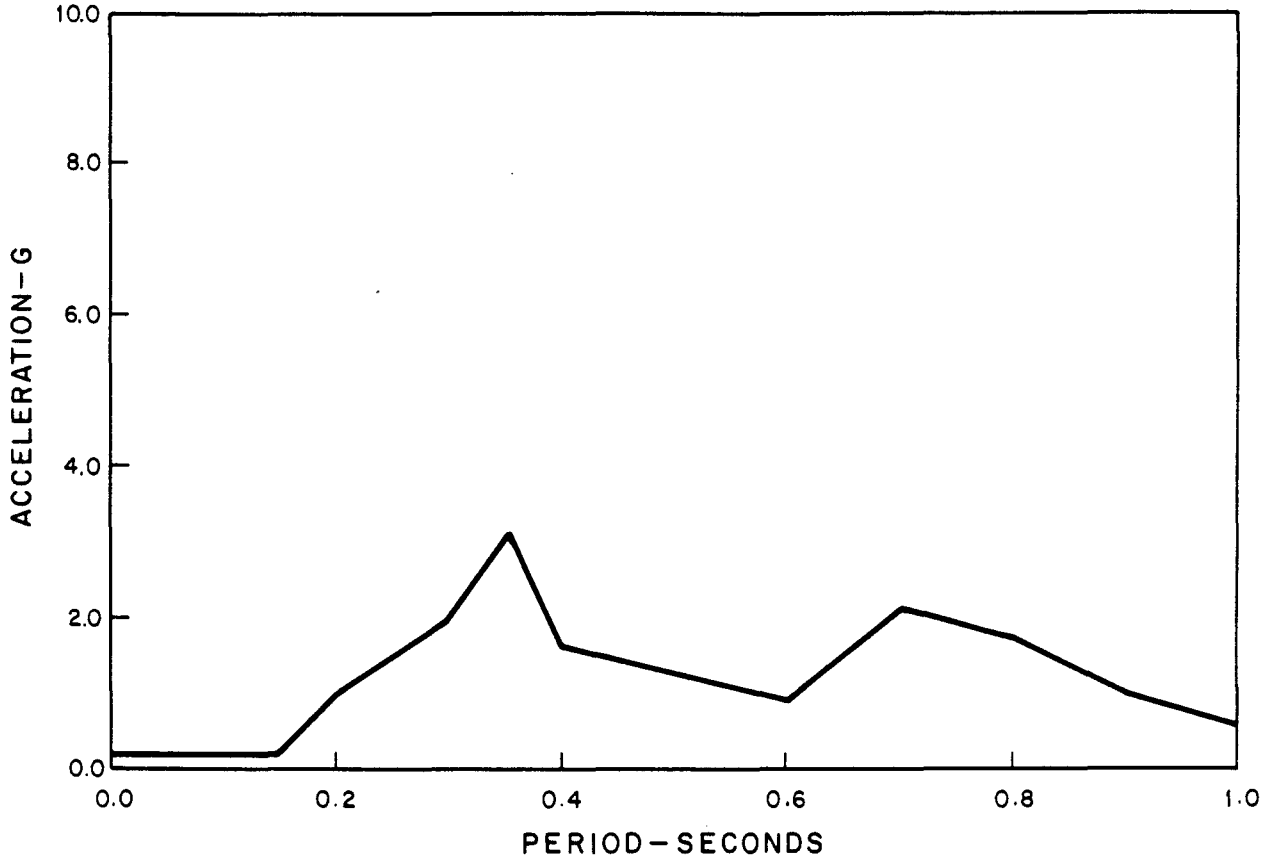

NOTE:
0.5 PERCENT DAMPING,
CRACKED PROPERTIES

FIGURE 3.7B-24
RESPONSE SPECTRUM ANALYSIS, CONTAINMENT AND INTERNAL STRUCTURES, OPERATING FLOOR HORIZONTAL SSE
BEAVER VALLEY POWER STATION-UNIT 2
FINAL SAFETY ANALYSIS REPORT

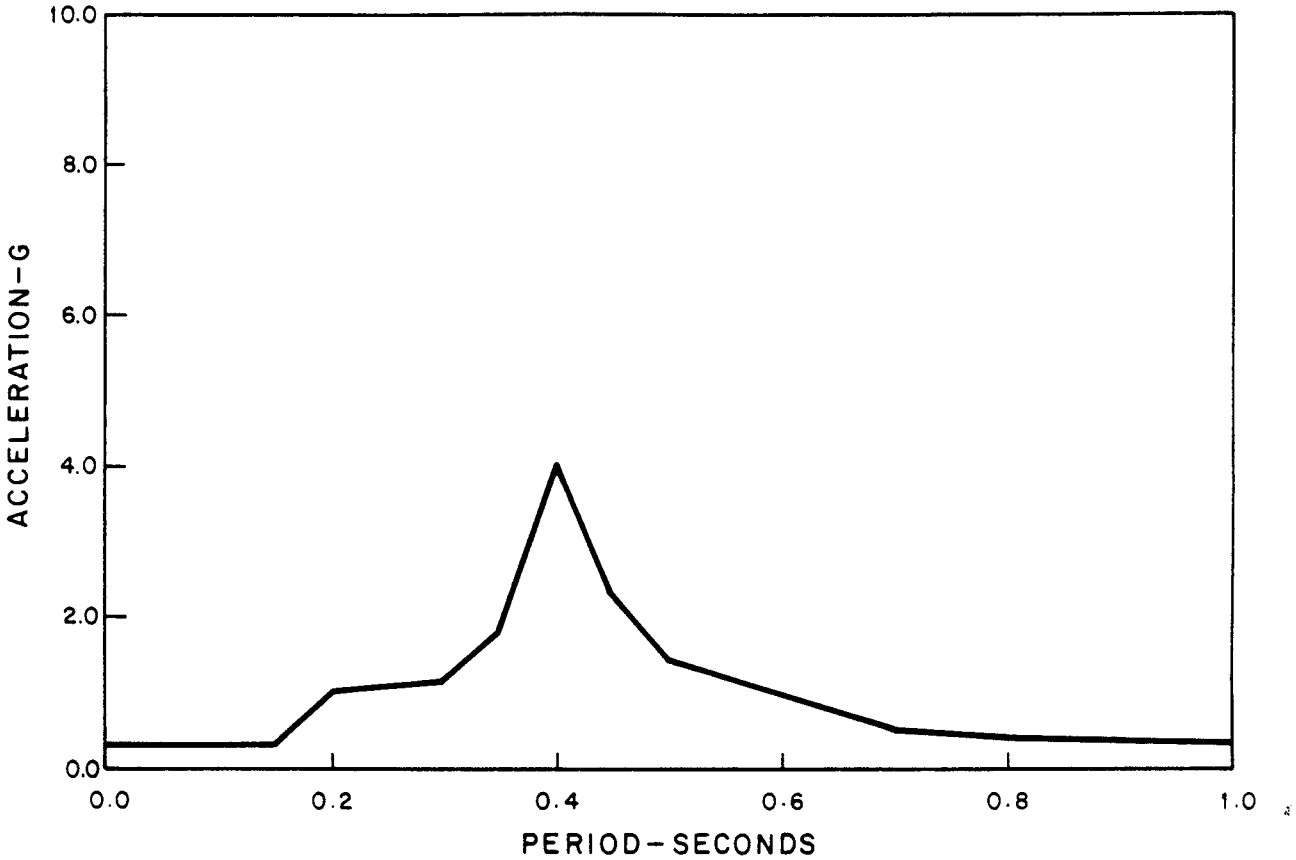

NOTE:
0.5 PERCENT DAMPING,
CRACKED PROPERTIES

FIGURE 3.7B-25
RESPONSE SPECTRUM ANALYSIS, CONTAINMENT AND INTERNAL STRUCTURES, SPRINGLINE VERTICAL SSE
BEAVER VALLEY POWER STATION-UNIT 2
FINAL SAFETY ANALYSIS REPORT

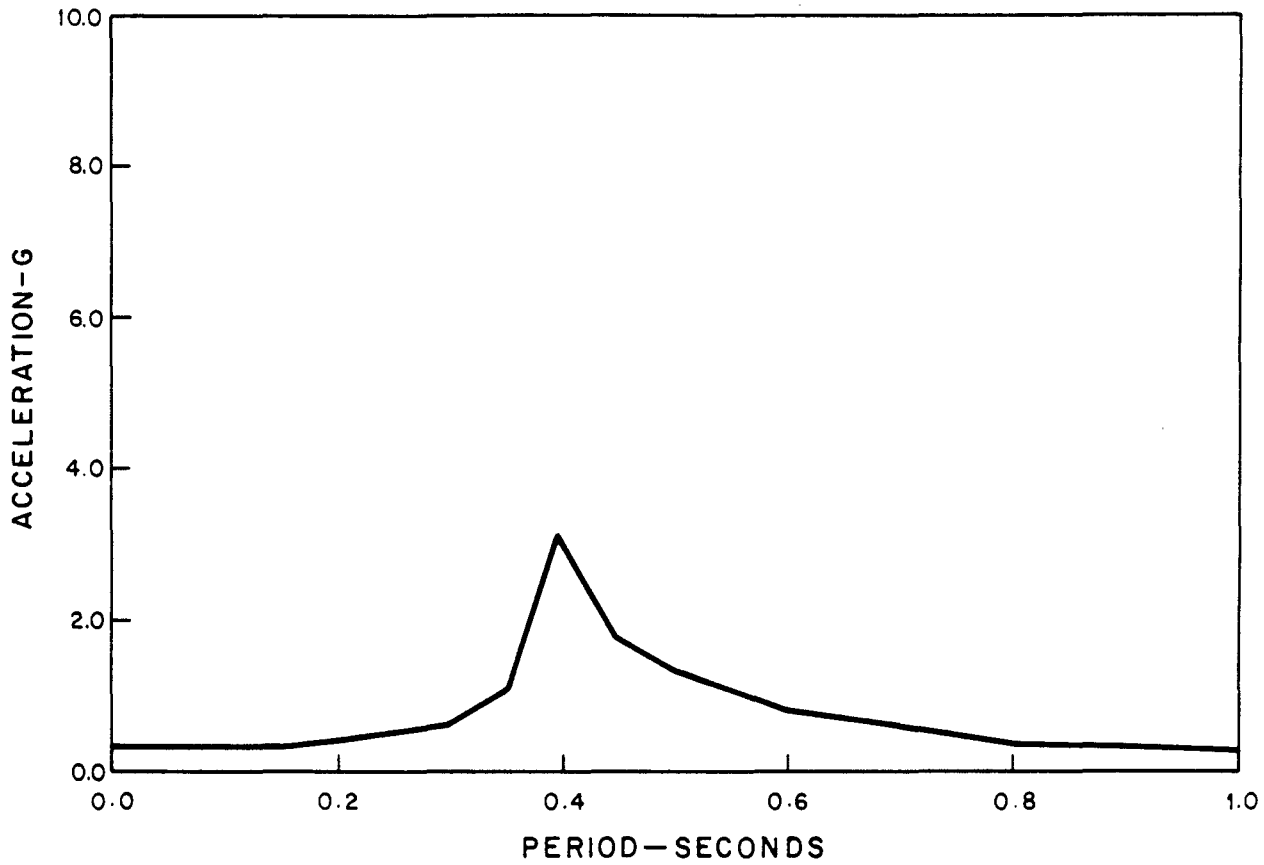

NOTE
0.5 PERCENT DAMPING,
CRACKED PROPERTIES

FIGURE 3.7B-26
RESPONSE SPECTRUM ANALYSIS,
CONTAINMENT AND INTERNAL
STRUCTURES, MAT
VERTICAL SSE
BEAVER VALLEY POWER STATION-UNIT 2
FINAL SAFETY ANALYSIS REPORT

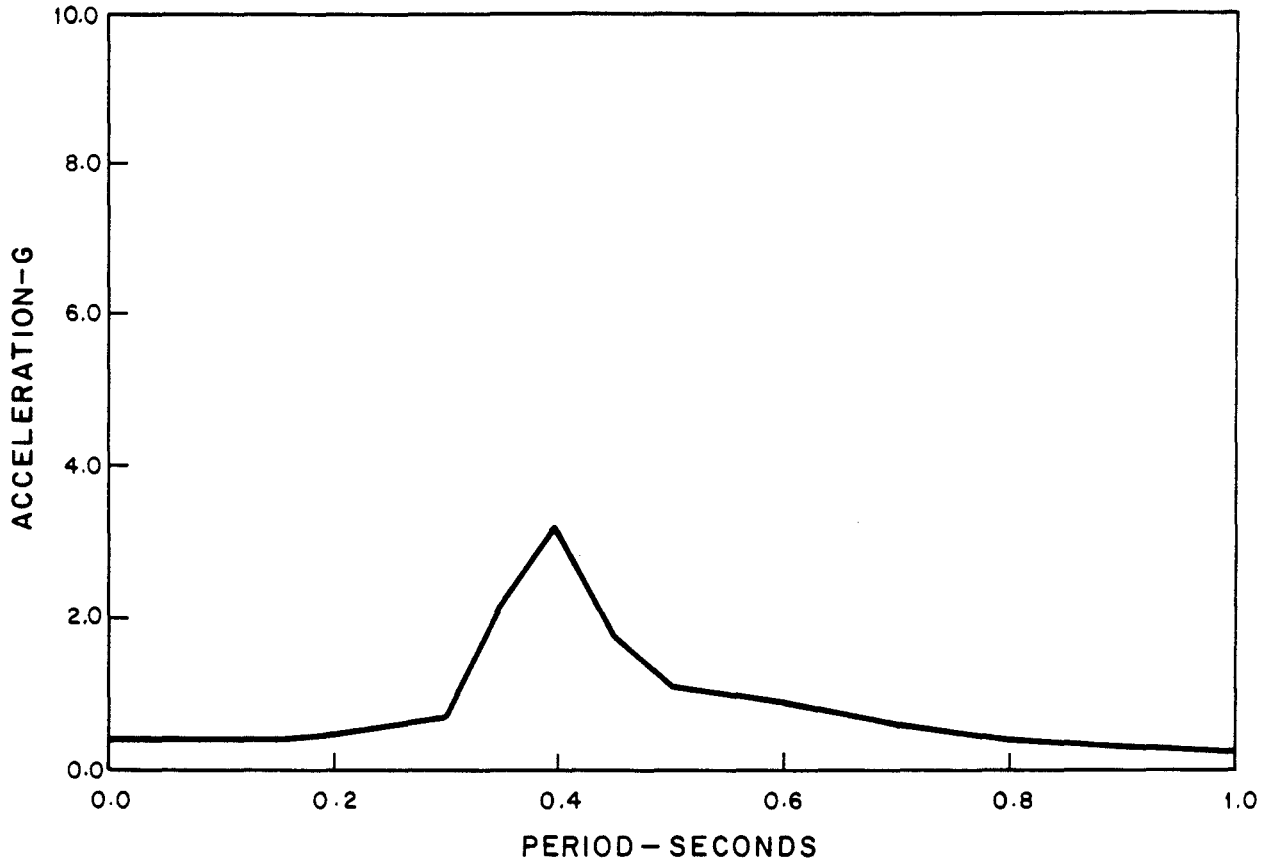

NOTE:
0.5 PERCENT DAMPING,
CRACKED PROPERTIES

FIGURE 3.7B-27
RESPONSE SPECTRUM ANALYSIS, CONTAINMENT AND INTERNAL STRUCTURES, OPERATING FLOOR VERTICAL SSE
BEAVER VALLEY POWER STATION-UNIT 2
FINAL SAFETY ANALYSIS REPORT

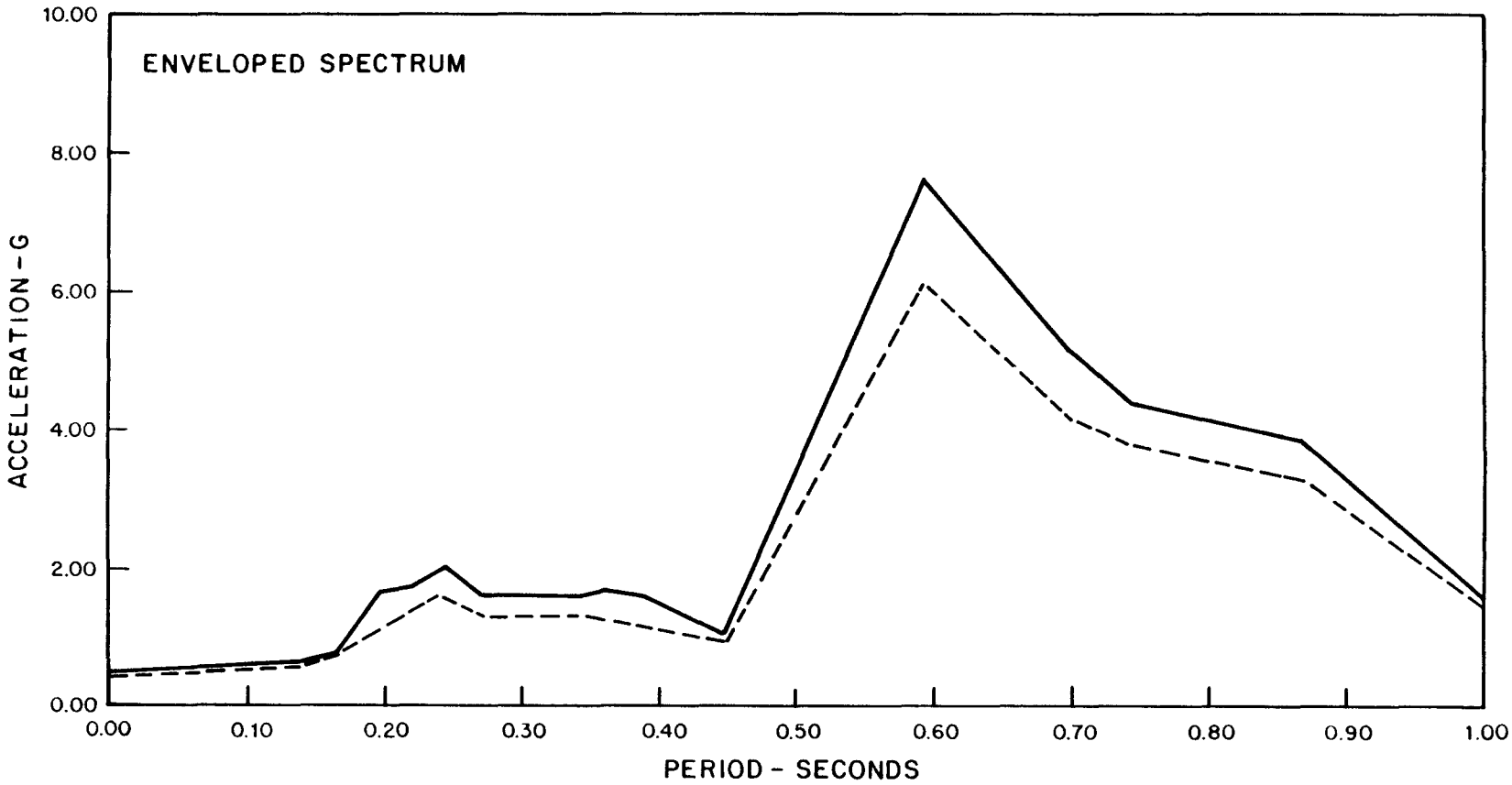

LEGEND

——— MODAL DAMPING AND 0.5 PERCENT EQUIPMENT DAMPING

– – – – MODAL DAMPING AND 1.0 PERCENT EQUIPMENT DAMPING

FIGURE 3.7B-28

AMPLIFIED RESPONSE SPECTRA, REACTOR CONTAINMENT, HORIZONTAL EXCITATION SSE AT EL. 813.62', EXTERNAL STRUCTURE

BEAVER VALLEY POWER STATION-UNIT 2
FINAL SAFETY ANALYSIS REPORT

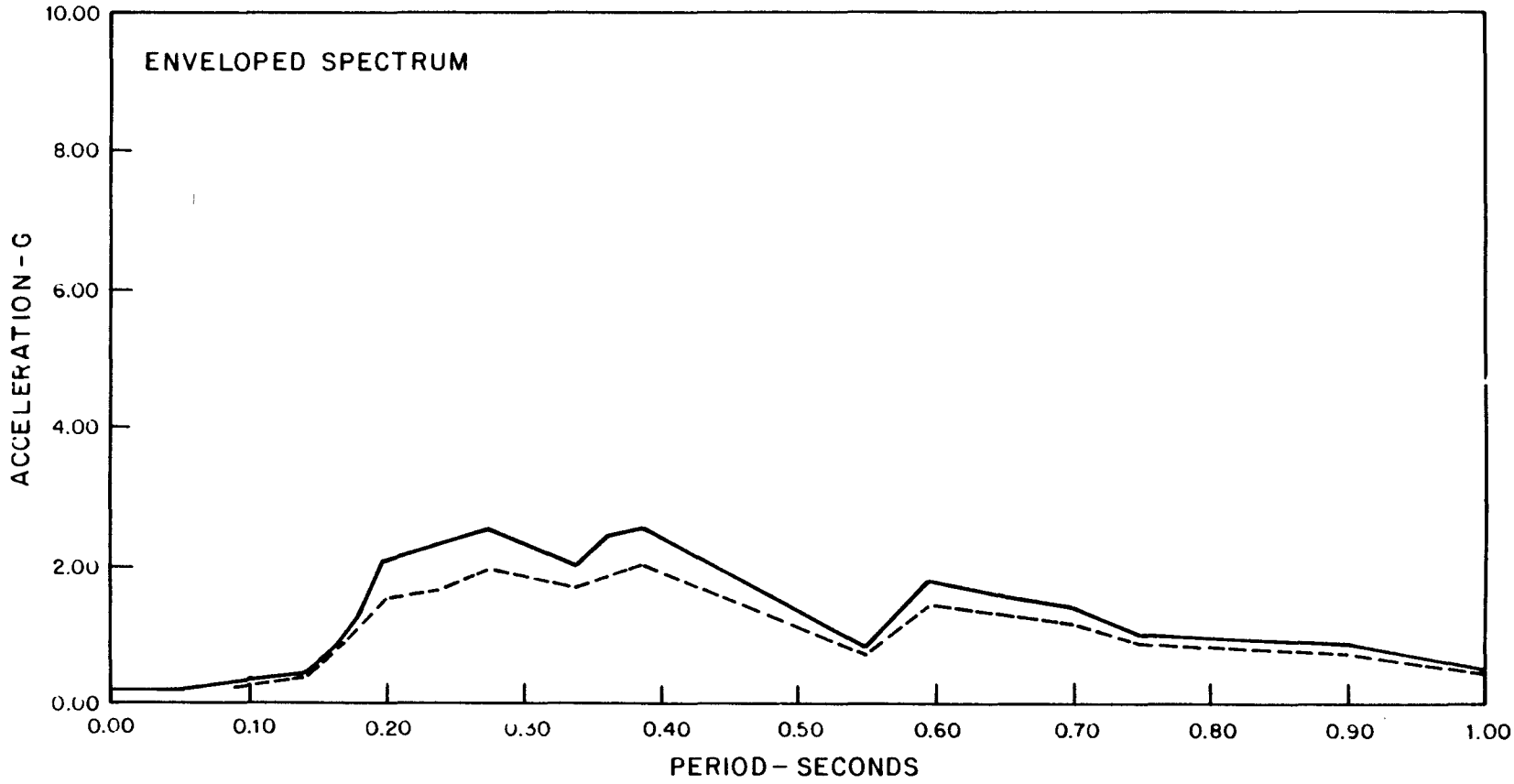

LEGEND

——— MODAL DAMPING AND 0.5 PERCENT EQUIPMENT DAMPING

– – – – MODAL DAMPING AND 1.0 PERCENT EQUIPMENT DAMPING

FIGURE 3.7B-29

AMPLIFIED RESPONSE SPECTRA, REACTOR CONTAINMENT, HORIZONTAL EXCITATION SSE AT EL. 691.0', MAT

BEAVER VALLEY POWER STATION-UNIT 2
FINAL SAFETY ANALYSIS REPORT

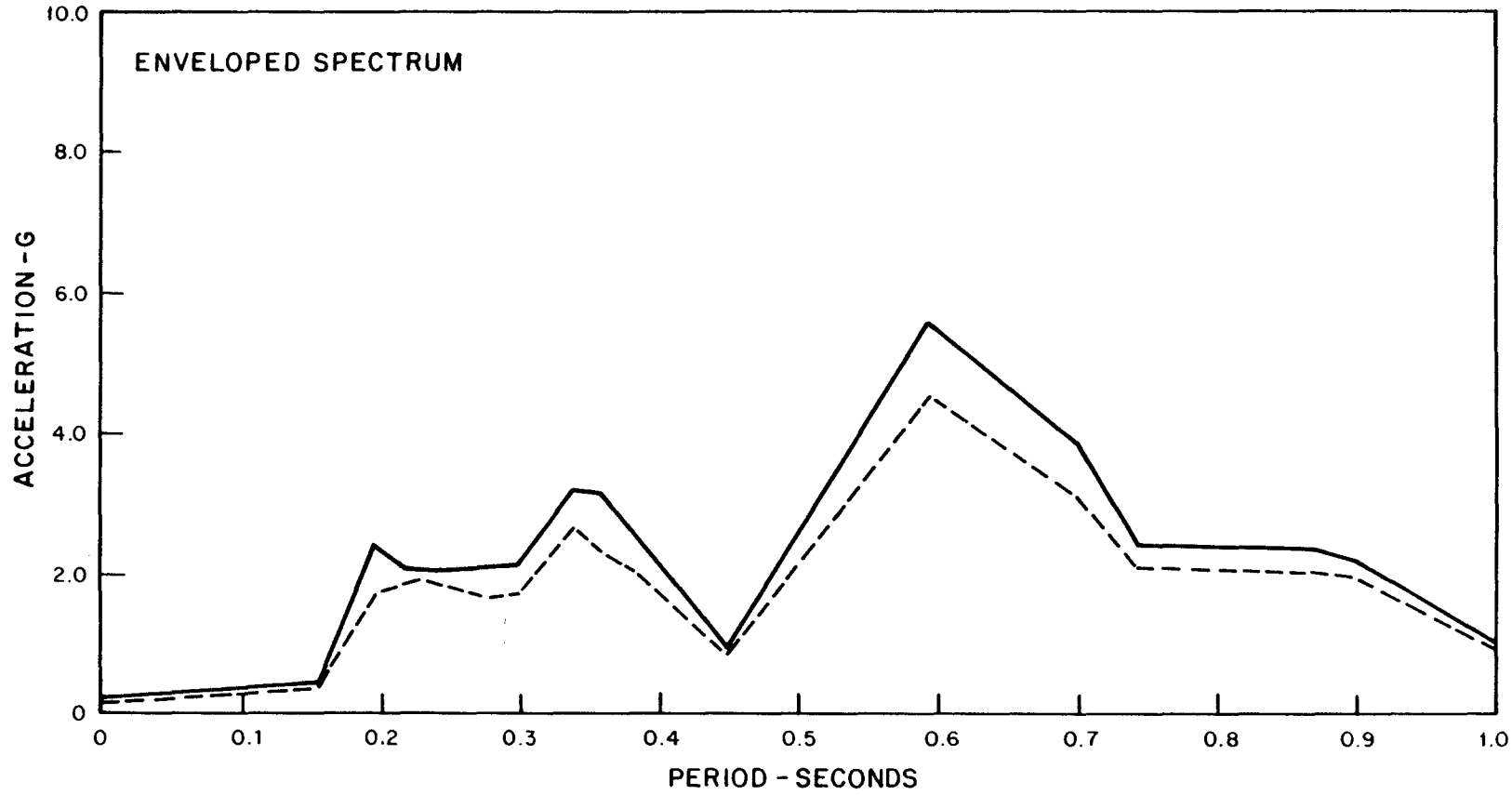

LEGEND

——— MODAL DAMPING AND 0.5 PERCENT EQUIPMENT DAMPING

– – – – MODAL DAMPING AND 1.0 PERCENT EQUIPMENT DAMPING

FIGURE 3.7B-30

AMPLIFIED RESPONSE SPECTRA, REACTOR CONTAINMENT, HORIZONTAL EXCITATION SSE AT EL. 767.83', INTERNAL STRUCTURE

BEAVER VALLEY POWER STATION-UNIT 2
FINAL SAFETY ANALYSIS REPORT

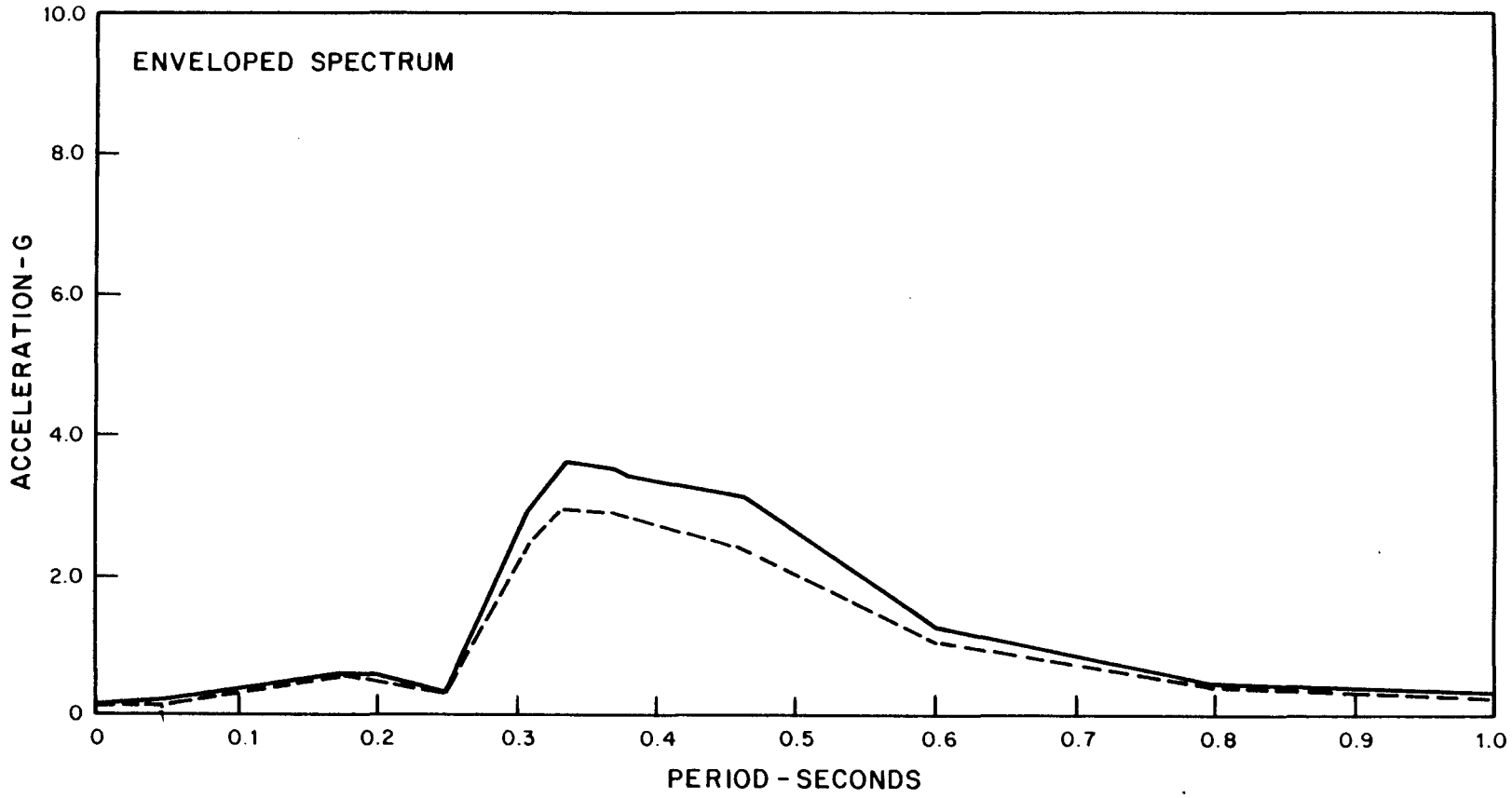

LEGEND

——— MODAL DAMPING AND 0.5 PERCENT EQUIPMENT DAMPING

— — — MODAL DAMPING AND 1.0 PERCENT EQUIPMENT DAMPING

FIGURE 3.7B-31

AMPLIFIED RESPONSE SPECTRA, REACTOR CONTAINMENT, VERTICAL EXCITATION SSE AT EL. 818.00' INTERNAL STRUCTURE

BEAVER VALLEY POWER STATION-UNIT 2
FINAL SAFETY ANALYSIS REPORT

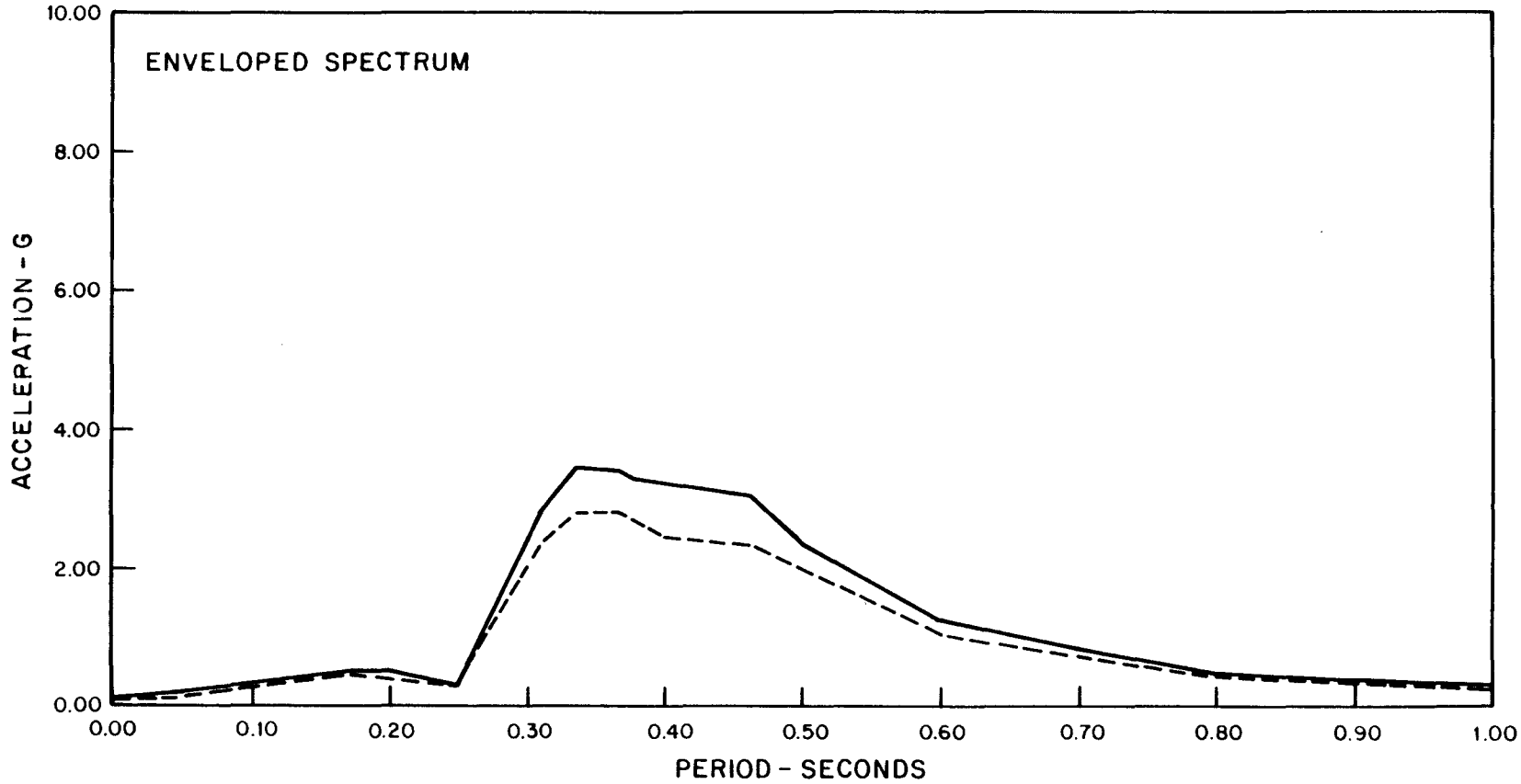

LEGEND

——— MODAL DAMPING AND 0.5 PERCENT EQUIPMENT DAMPING

– – – – MODAL DAMPING AND 1.0 PERCENT EQUIPMENT DAMPING

FIGURE 3.7B-32
AMPLIFIED RESPONSE SPECTRA, REACTOR CONTAINMENT, VERTICAL EXCITATION SSE AT EL. 691.0', MAT
BEAVER VALLEY POWER STATION-UNIT 2
FINAL SAFETY ANALYSIS REPORT

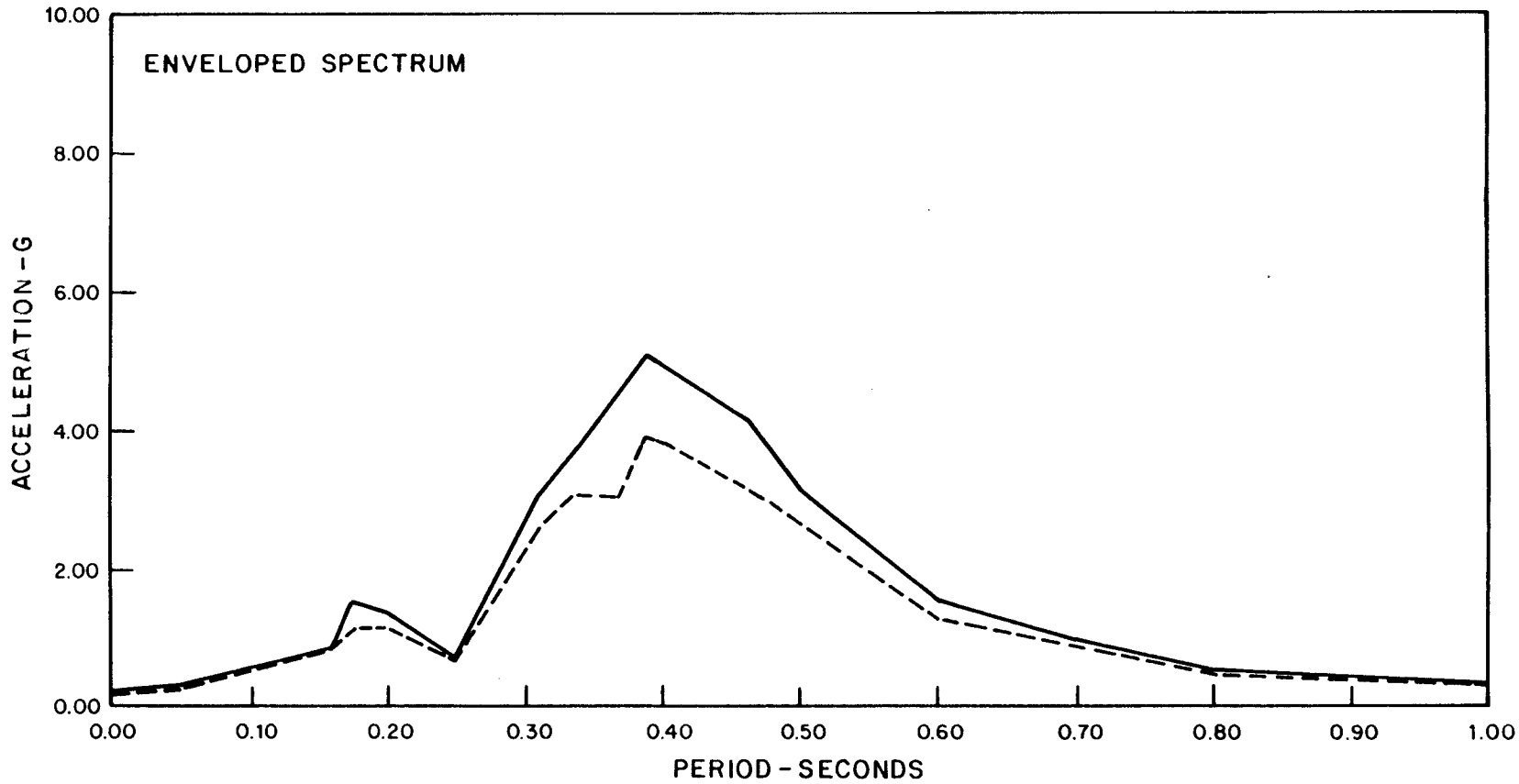

LEGEND

——— MODAL DAMPING AND 0.5 PERCENT EQUIPMENT DAMPING

– – – – MODAL DAMPING AND 1.0 PERCENT EQUIPMENT DAMPING

FIGURE 3.7B-33

AMPLIFIED RESPONSE SPECTRA, REACTOR CONTAINMENT, VERTICAL EXCITATION SSE AT EL. 854.22', EXTERNAL STRUCTURE

BEAVER VALLEY POWER STATION-UNIT 2
FINAL SAFETY ANALYSIS REPORT

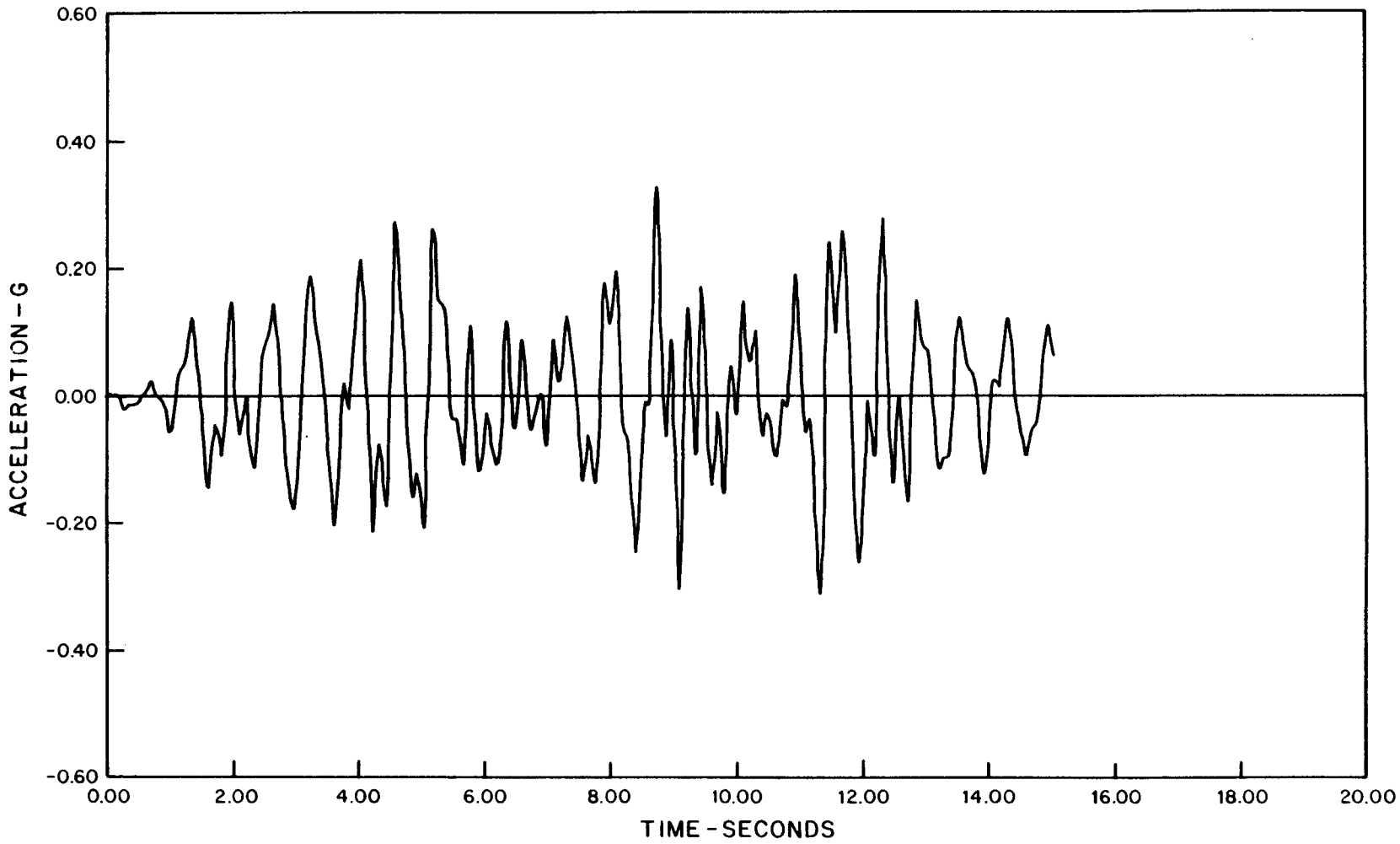

NOTES

1. MAXIMUM ACCELERATION = 0.32261 AT TIME 8.760
2. SOIL SHEAR MODULUS = 18KSI
3. UNCRACKED CONTAINMENT

FIGURE 3.7B-34

TIME HISTORY OF ACCELERATION AT THE OPERATING FLOOR, CONTAINMENT, HORIZONTAL SSE

BEAVER VALLEY POWER STATION-UNIT 2
FINAL SAFETY ANALYSIS REPORT

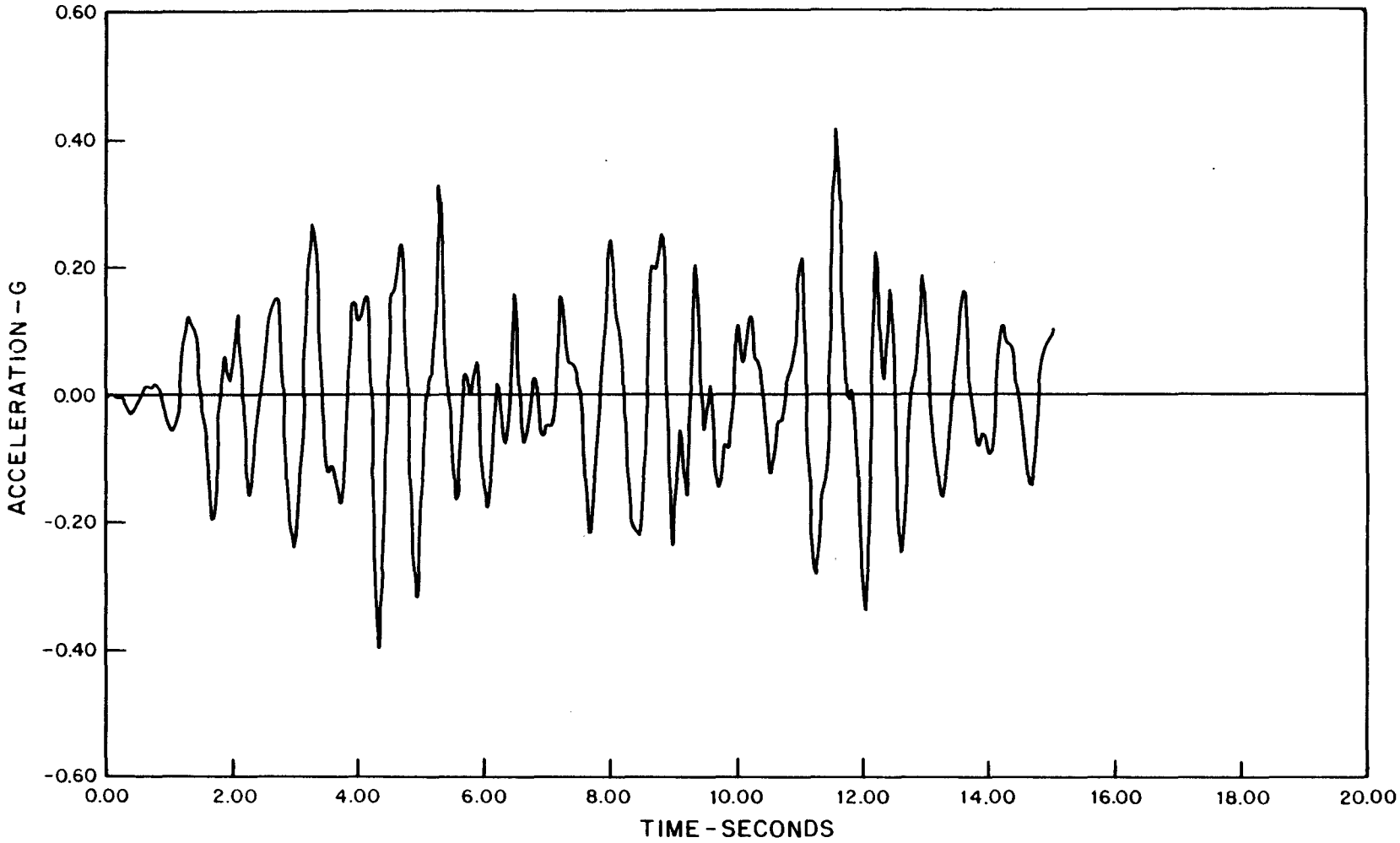

NOTES

1. MAXIMUM ACCELERATION = 0.42040 AT TIME 11.610
2. SOIL SHEAR MODULUS = 18KSI
3. UNCRACKED CONTAINMENT

FIGURE 3.7B-35

TIME HISTORY OF ACCELERATION AT THE SPRINGLINE, CONTAINMENT, HORIZONTAL SSE

BEAVER VALLEY POWER STATION-UNIT 2
FINAL SAFETY ANALYSIS REPORT

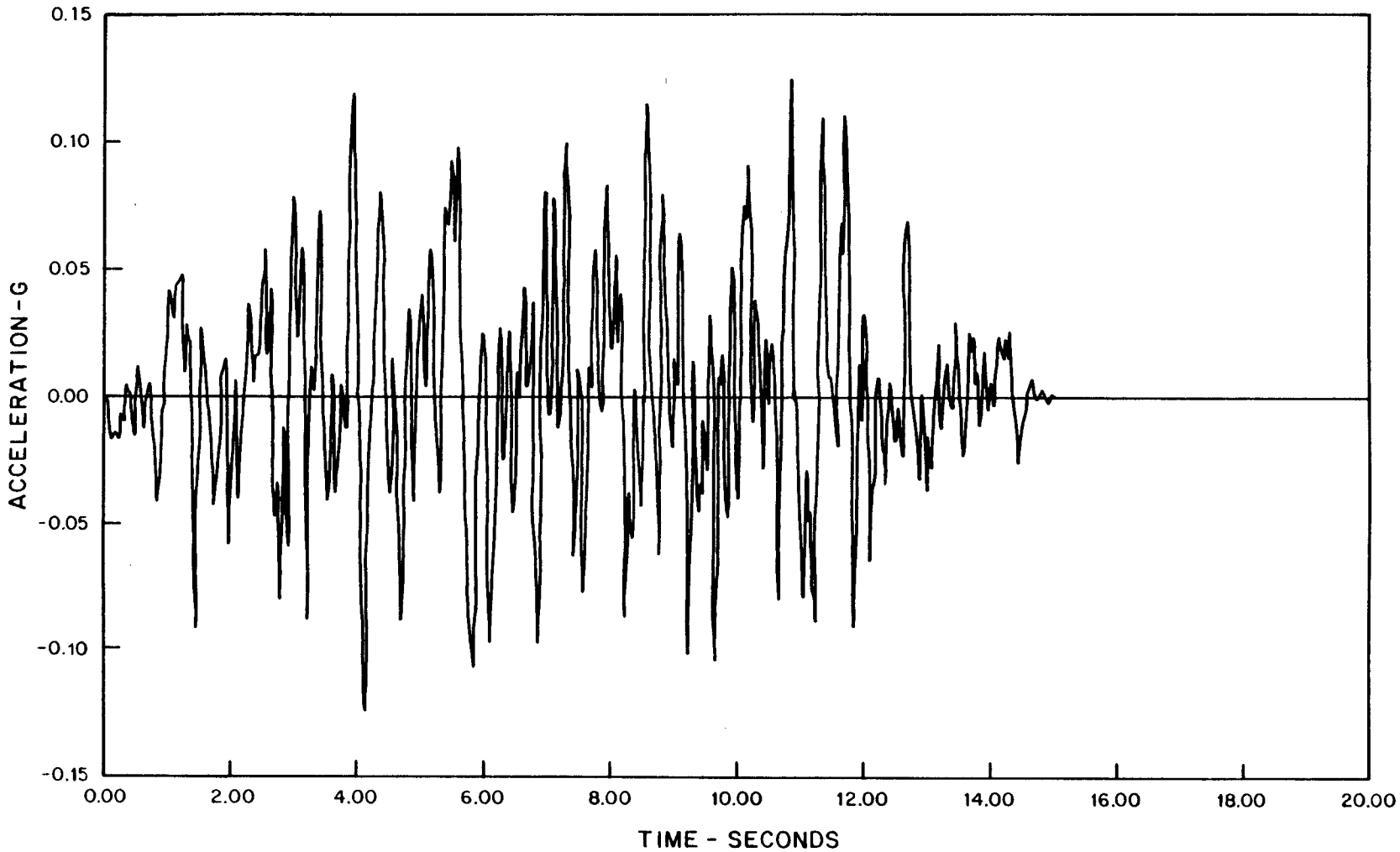

NOTES

1. MAXIMUM ACCELERATION = 0.12500 AT TIME 10.870
2. ΔT = 0.01 SECONDS

FIGURE 3.7B-36
SITE ARTIFICAL TIME HISTORY, HORIZONTAL SSE
BEAVER VALLEY POWER STATION-UNIT 2
FINAL SAFETY ANALYSIS REPORT

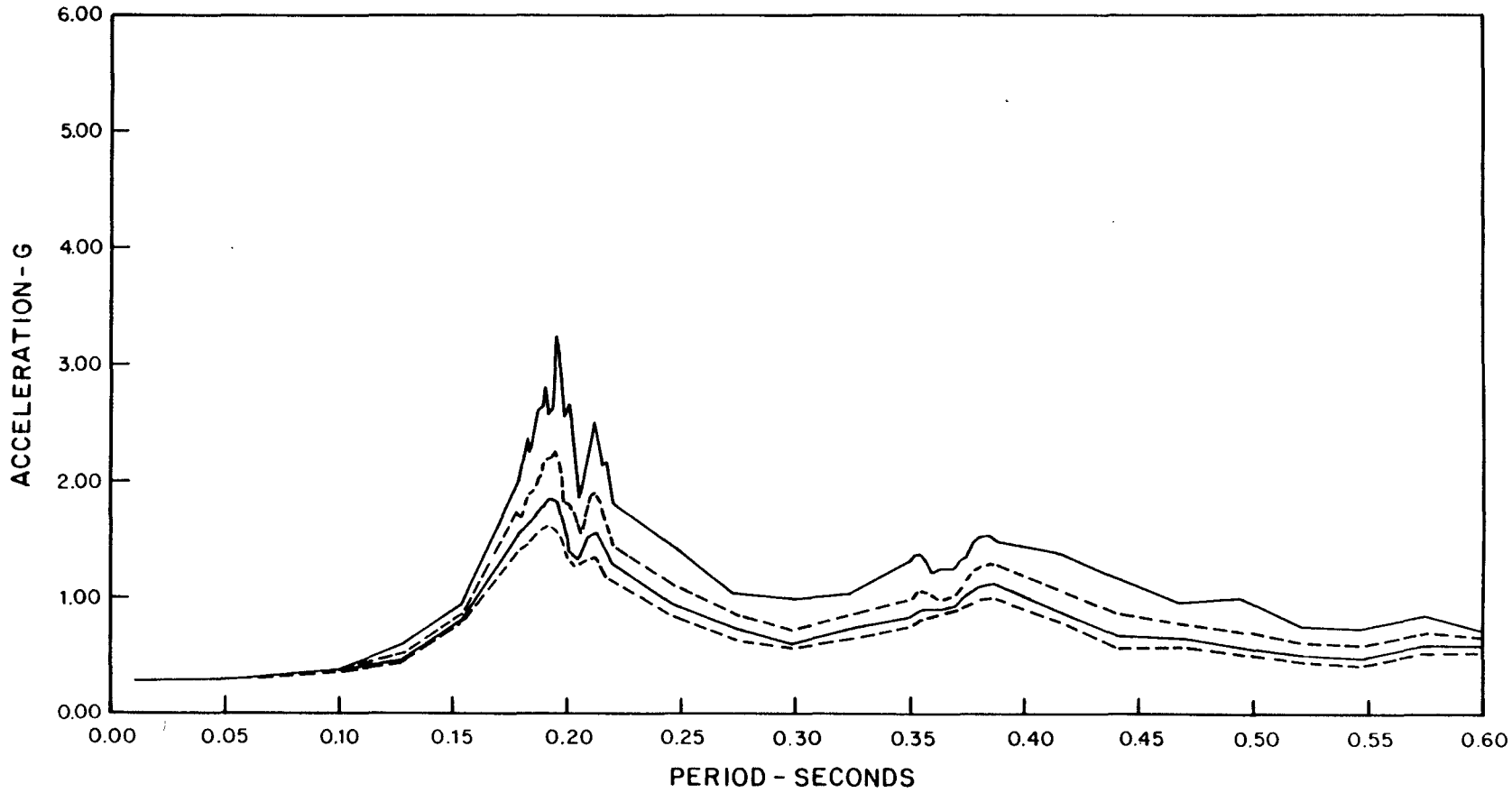

LEGEND

——— 0.010 OSCILLATOR DAMPING

– – – – – 0.020 OSCILLATOR DAMPING

——— 0.030 OSCILLATOR DAMPING

– – – – – 0.040 OSCILLATOR DAMPING

NOTE

FOR EQUIPMENT WITH A NATURAL PERIOD WITHIN +25 OR -20 PERCENT OF RESONANCE PERIOD, USE PEAK VALUES.

FIGURE 3.7B-37

AMPLIFIED RESPONSE SPECTRA BY TIME HISTORY, FUEL BUILDING, N-S SSE AT EL. 729.50'

BEAVER VALLEY POWER STATION-UNIT 2

FINAL SAFETY ANALYSIS REPORT

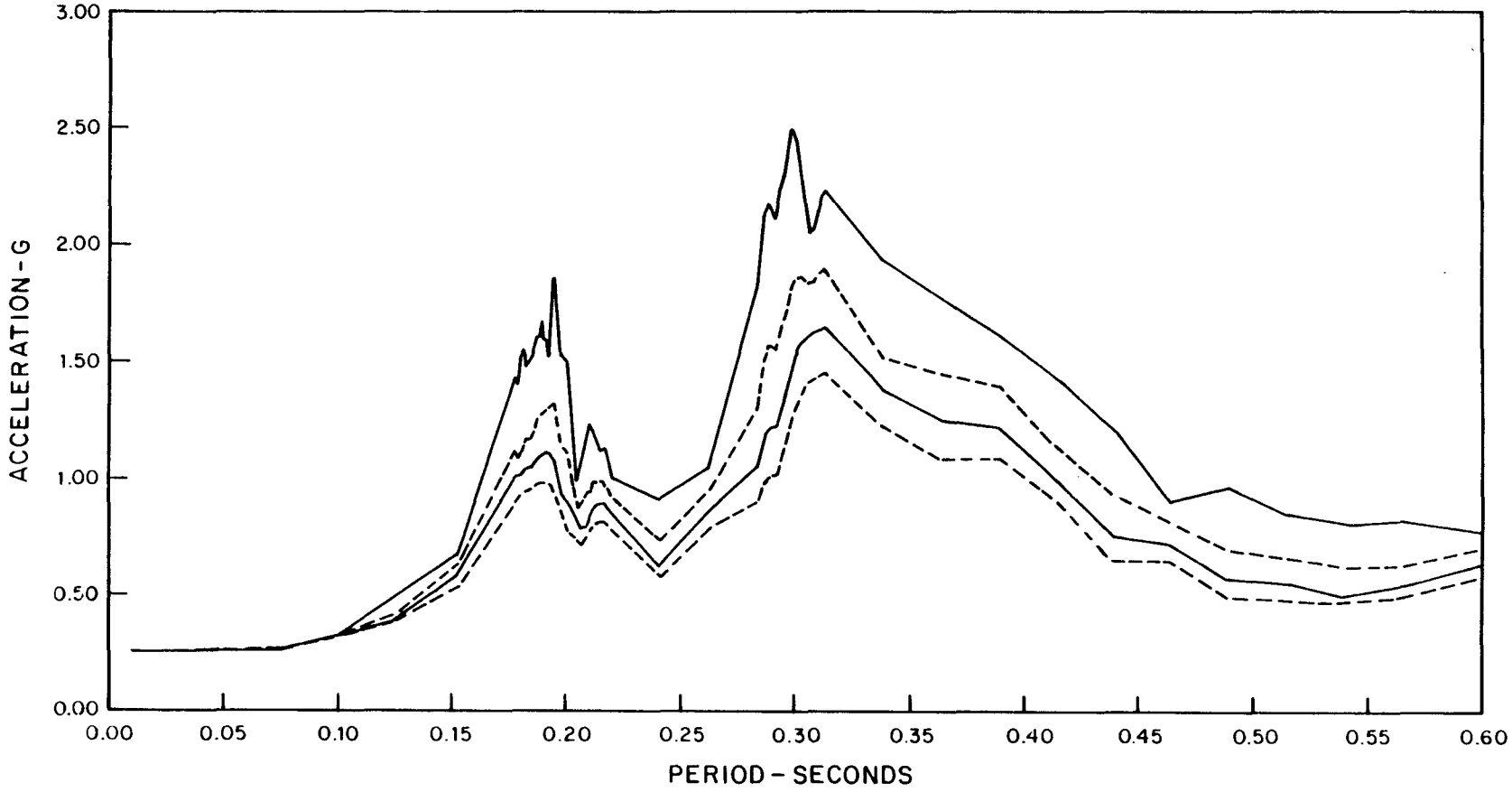

LEGEND

——— 0.010 OSCILLATOR DAMPING

– – – – – 0.020 OSCILLATOR DAMPING

——— 0.030 OSCILLATOR DAMPING

– – – – – 0.040 OSCILLATOR DAMPING

NOTE
FOR EQUIPMENT WITH A NATURAL PERIOD WITHIN +25 OR -20 PERCENT OF RESONANCE PERIOD, USE PEAK VALUES.

FIGURE 3.7B-38
AMPLIFIED RESPONSE SPECTRA BY TIME HISTORY, FUEL BUILDING, E-W SSE AT EL. 729.50'
BEAVER VALLEY POWER STATION-UNIT 2
FINAL SAFETY ANALYSIS REPORT

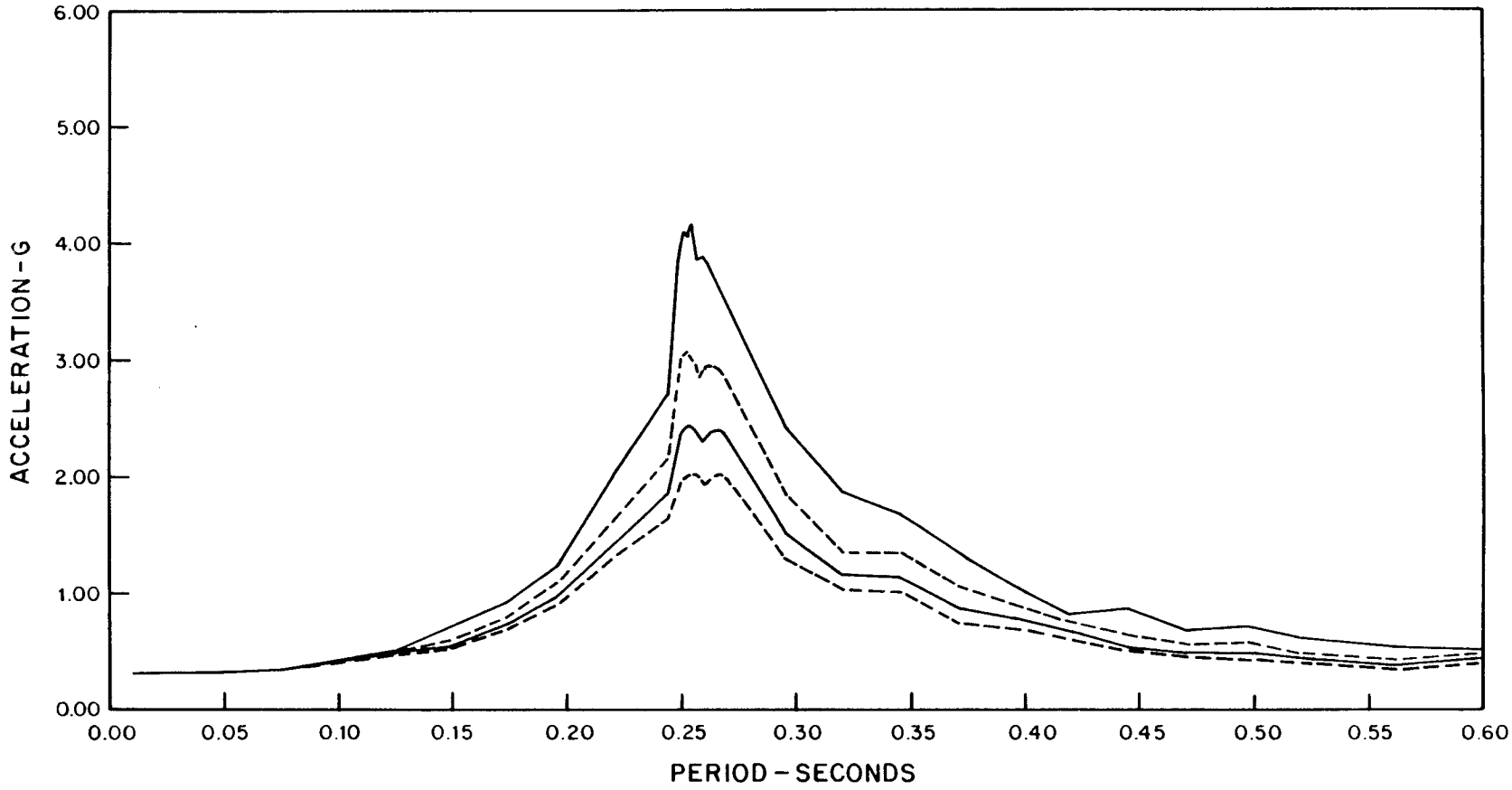

LEGEND

——— 0.010 OSCILLATOR DAMPING

– – – – – 0.020 OSCILLATOR DAMPING

——— 0.030 OSCILLATOR DAMPING

– – – – – 0.040 OSCILLATOR DAMPING

NOTE
FOR EQUIPMENT WITH A NATURAL PERIOD WITHIN +25 OR -20 PERCENT OF RESONANCE PERIOD, USE PEAK VALUES.

FIGURE 3.7B-39
AMPLIFIED RESPONSE SPECTRA BY TIME HISTORY, FUEL BUILDING, VERTICAL SSE AT EL. 729.50'
BEAVER VALLEY POWER STATION-UNIT 2
FINAL SAFETY ANALYSIS REPORT

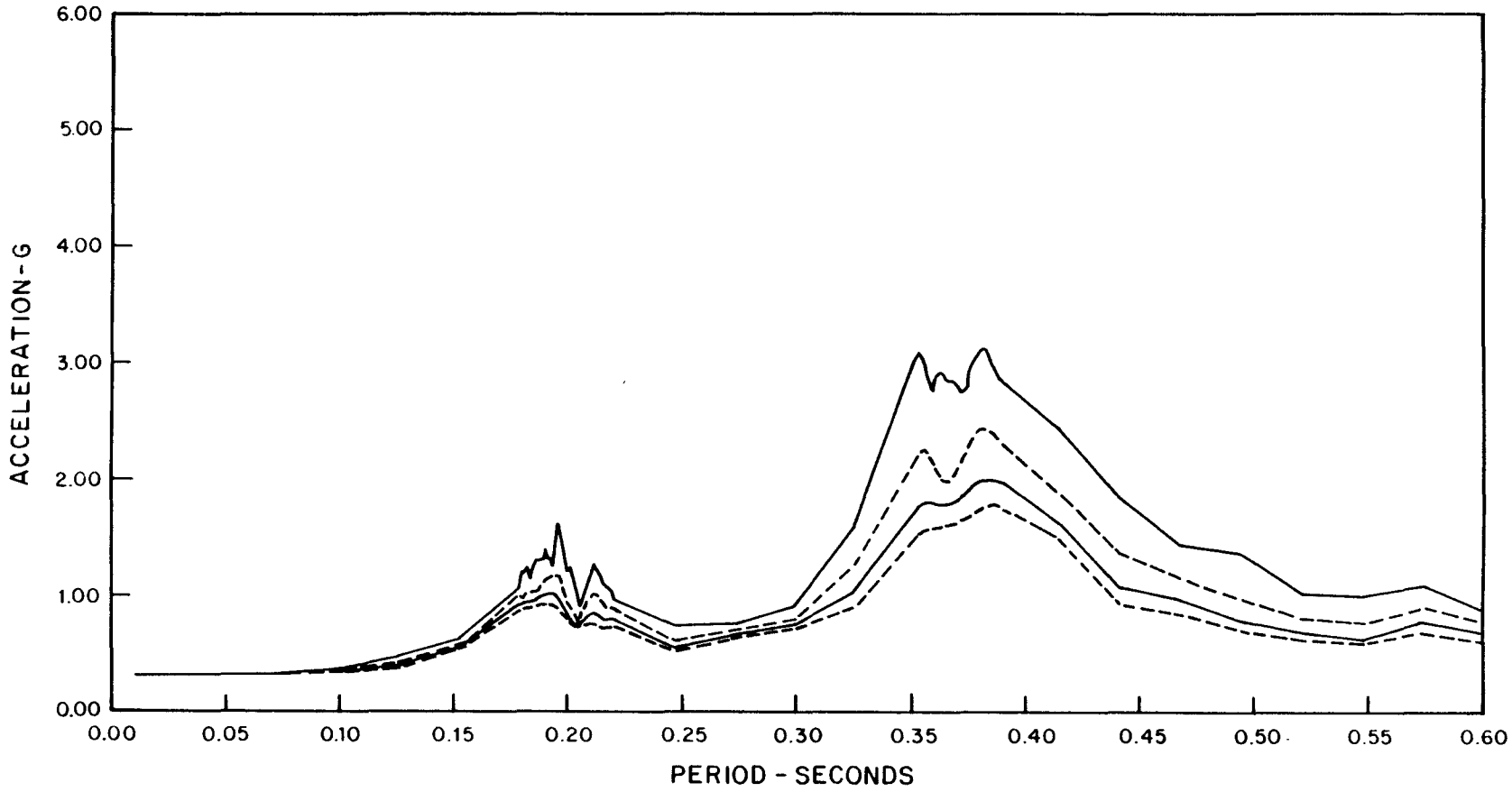

LEGEND

——— 0.010 OSCILLATOR DAMPING

– – – – – 0.020 OSCILLATOR DAMPING

——— 0.030 OSCILLATOR DAMPING

– – – – – 0.040 OSCILLATOR DAMPING

NOTE
FOR EQUIPMENT WITH A NATURAL PERIOD WITHIN +25 OR -20 PERCENT OF RESONANCE PERIOD, USE PEAK VALUES.

FIGURE 3.7B-40
AMPLIFIED RESPONSE SPECTRA BY TIME HISTORY, FUEL BUILDING, N-S SSE AT EL. 767.33'
BEAVER VALLEY POWER STATION-UNIT 2
FINAL SAFETY ANALYSIS REPORT

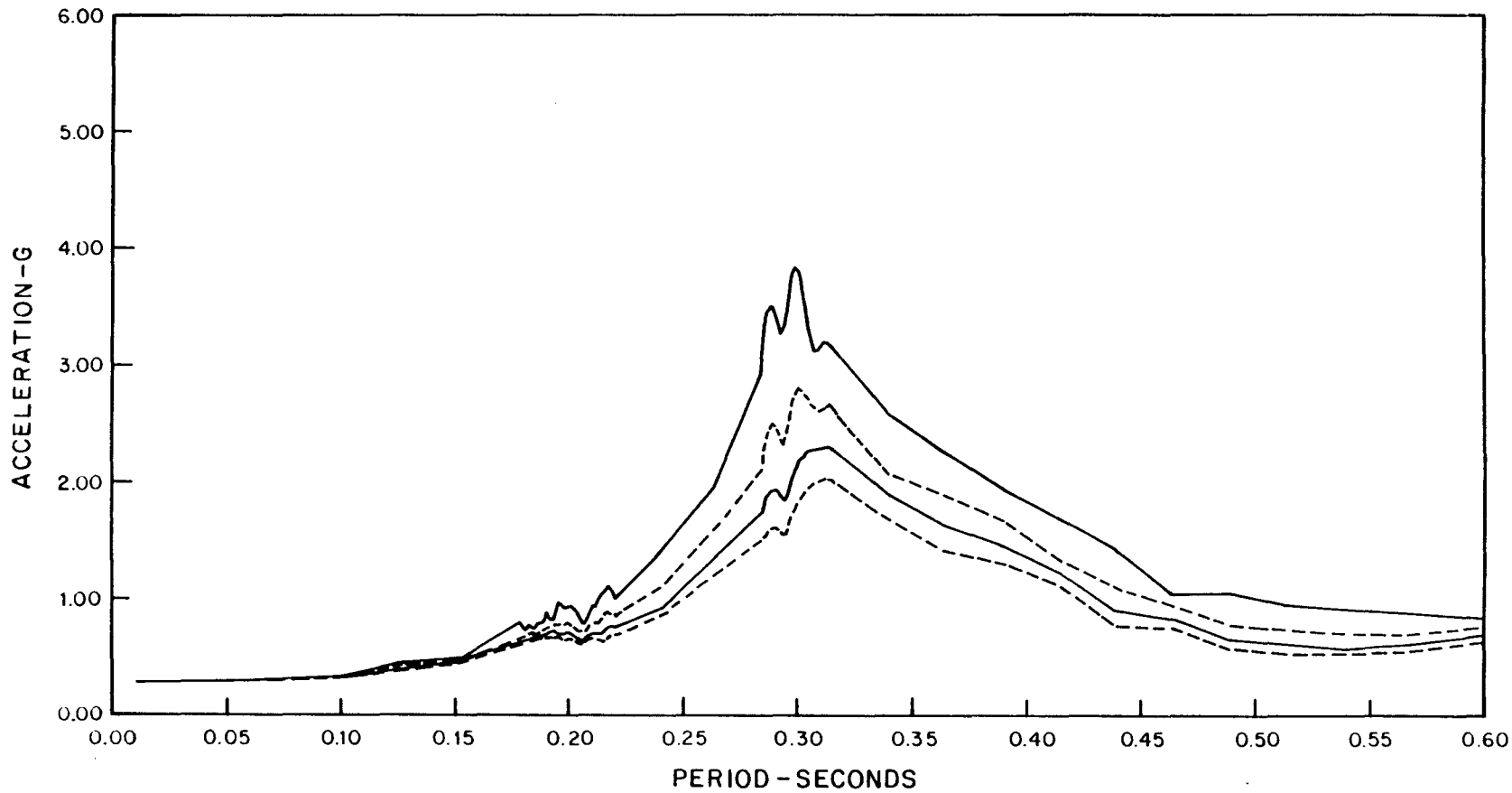

LEGEND

——— 0.010 OSCILLATOR DAMPING

– – – – – 0.020 OSCILLATOR DAMPING

——— 0.030 OSCILLATOR DAMPING

– – – – – 0.040 OSCILLATOR DAMPING

NOTE
FOR EQUIPMENT WITH A NATURAL PERIOD WITHIN +25 OR -20 PERCENT OF RESONANCE PERIOD, USE PEAK VALUES.

FIGURE 3.7B-41
AMPLIFIED RESPONSE SPECTRA BY TIME HISTORY, FUEL BUILDING, E-W SSE AT EL. 767.33'
BEAVER VALLEY POWER STATION-UNIT 2
FINAL SAFETY ANALYSIS REPORT

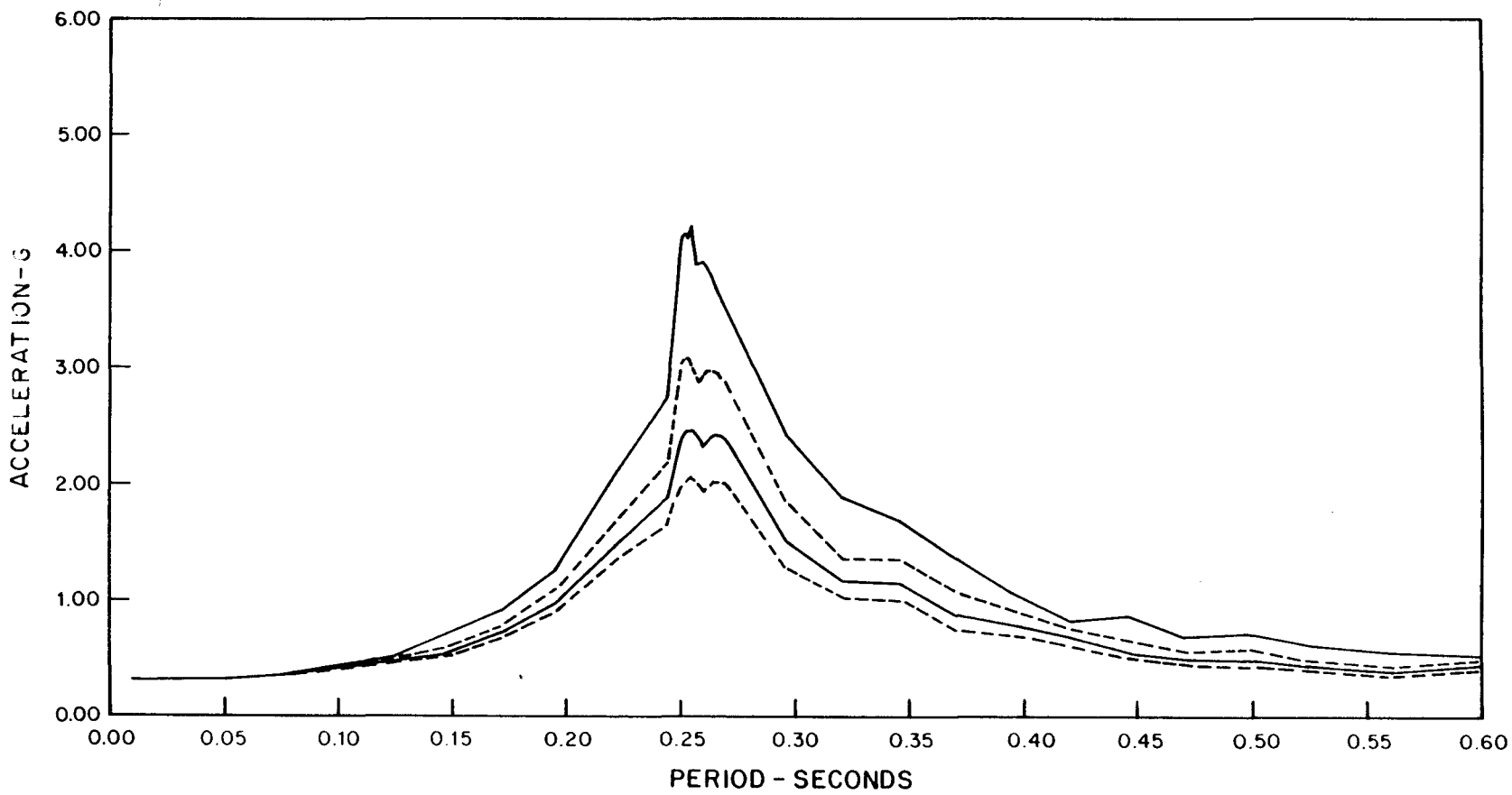

LEGEND

——— 0.010 OSCILLATOR DAMPING

– – – – – 0.020 OSCILLATOR DAMPING

——— 0.030 OSCILLATOR DAMPING

– – – – – 0.040 OSCILLATOR DAMPING

NOTE
FOR EQUIPMENT WITH A NATURAL PERIOD WITHIN +25 OR -20 PERCENT OF RESONANCE PERIOD, USE PEAK VALUES.

FIGURE 3.7B-42
AMPLIFIED RESPONSE SPECTRA BY TIME HISTORY, FUEL BUILDING, VERTICAL SSE AT EL. 767.33'
BEAVER VALLEY POWER STATION-UNIT 2
FINAL SAFETY ANALYSIS REPORT

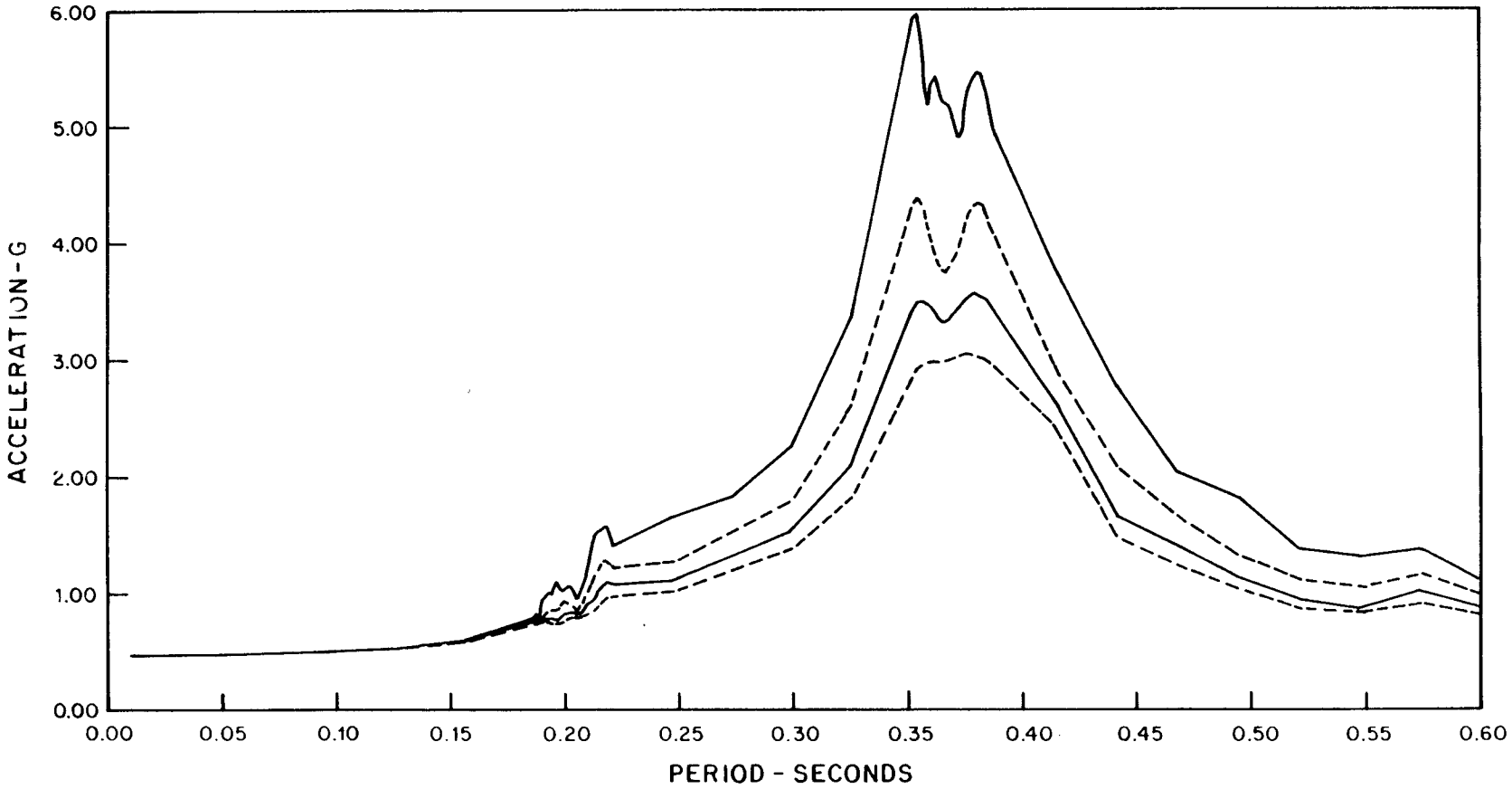

LEGEND

- ——— 0.010 OSCILLATOR DAMPING
- - - - - 0.020 OSCILLATOR DAMPING
- ——— 0.030 OSCILLATOR DAMPING
- - - - - 0.040 OSCILLATOR DAMPING

NOTE
FOR EQUIPMENT WITH A NATURAL PERIOD WITHIN +25 OR -20 PERCENT OF RESONANCE PERIOD, USE PEAK VALUES.

FIGURE 3.7B-43
AMPLIFIED RESPONSE SPECTRA BY TIME HISTORY, FUEL BUILDING CRANE RAIL STRUCTURE, N-S SSE AT EL. 798.00'
BEAVER VALLEY POWER STATION-UNIT 2
FINAL SAFETY ANALYSIS REPORT

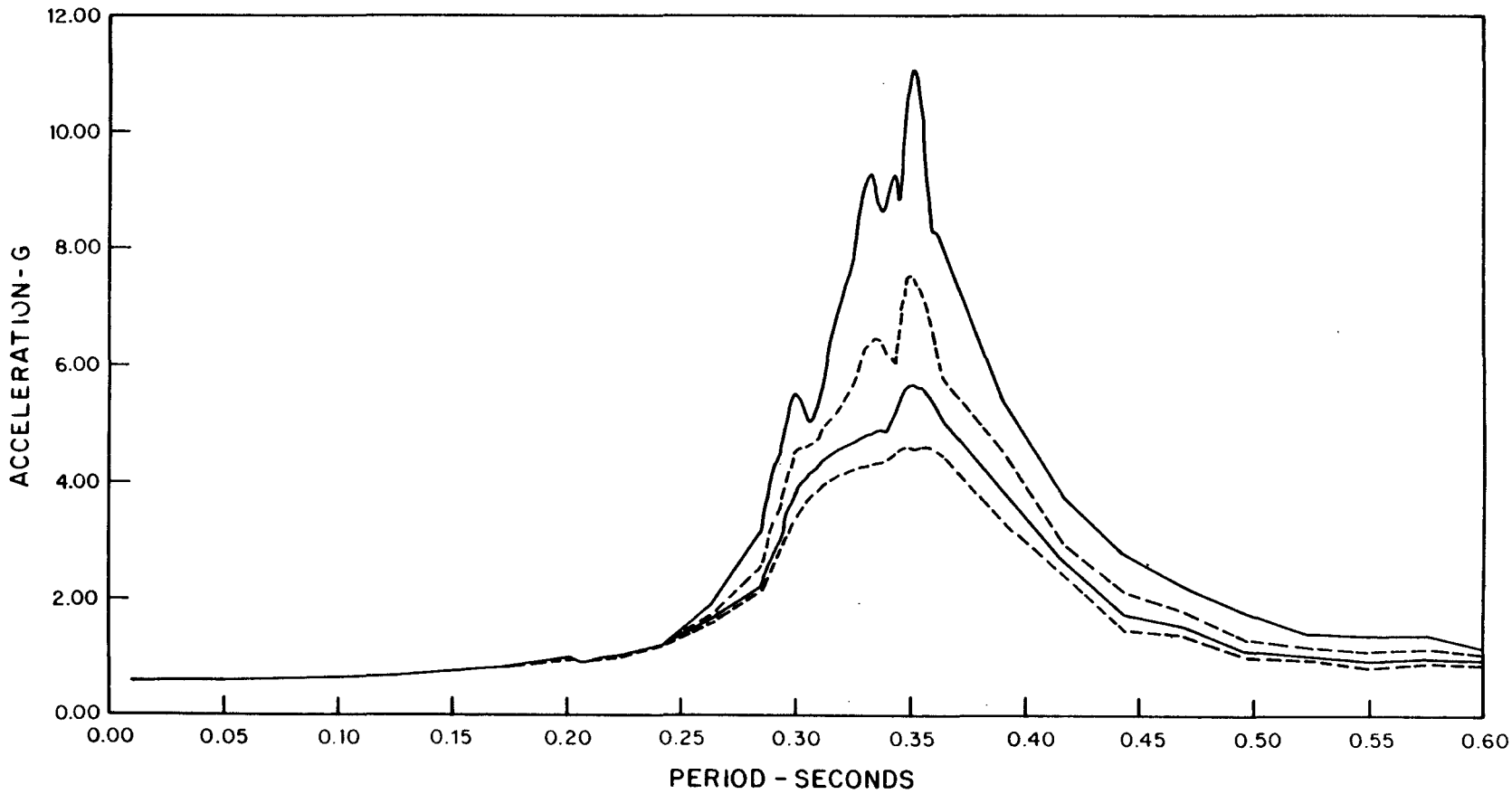

LEGEND

——— 0.010 OSCILLATOR DAMPING

– – – – – 0.020 OSCILLATOR DAMPING

——— 0.030 OSCILLATOR DAMPING

– – – – – 0.040 OSCILLATOR DAMPING

NOTE
FOR EQUIPMENT WITH A NATURAL PERIOD WITHIN +25 OR -20 PERCENT OF RESONANCE PERIOD, USE PEAK VALUES.

FIGURE 3.7B-44
AMPLIFIED RESPONSE SPECTRA BY TIME HISTORY, FUEL BUILDING CRANE RAIL STRUCTURE, E-W SSE AT EL. 798.00'
BEAVER VALLEY POWER STATION-UNIT 2
FINAL SAFETY ANALYSIS REPORT

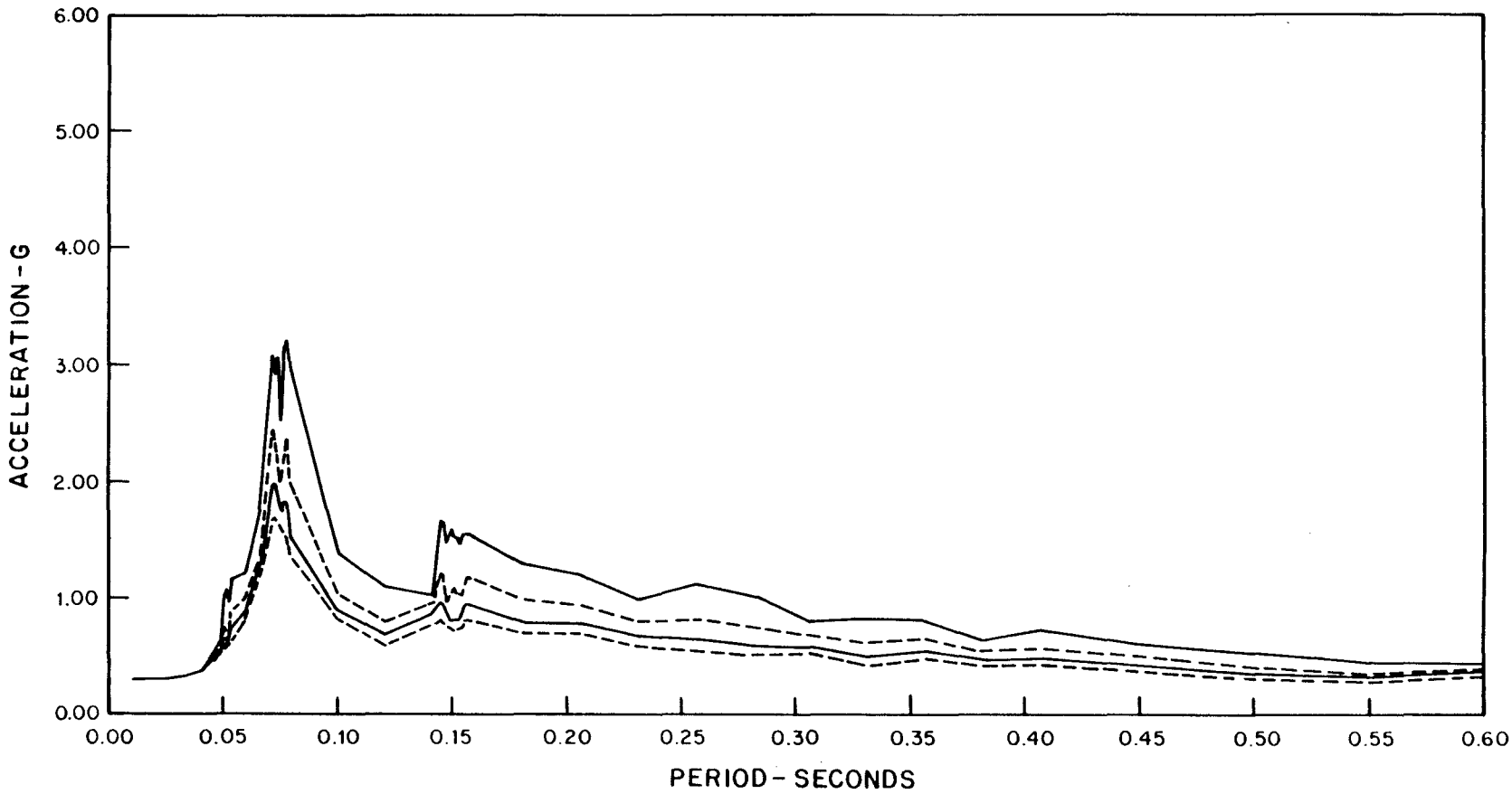

LEGEND

——— 0.010 OSCILLATOR DAMPING

– – – – – 0.020 OSCILLATOR DAMPING

——— 0.030 OSCILLATOR DAMPING

– – – – – 0.040 OSCILLATOR DAMPING

NOTE
FOR EQUIPMENT WITH A NATURAL PERIOD WITHIN +25 OR -20 PERCENT OF RESONANCE PERIOD, USE PEAK VALUES.

FIGURE 3.7B-45

AMPLIFIED RESPONSE SPECTRA BY TIME HISTORY, FUEL BUILDING CRANE RAIL STRUCTURE, VERTICAL SSE AT EL. 798.00'

BEAVER VALLEY POWER STATION-UNIT 2
FINAL SAFETY ANALYSIS REPORT

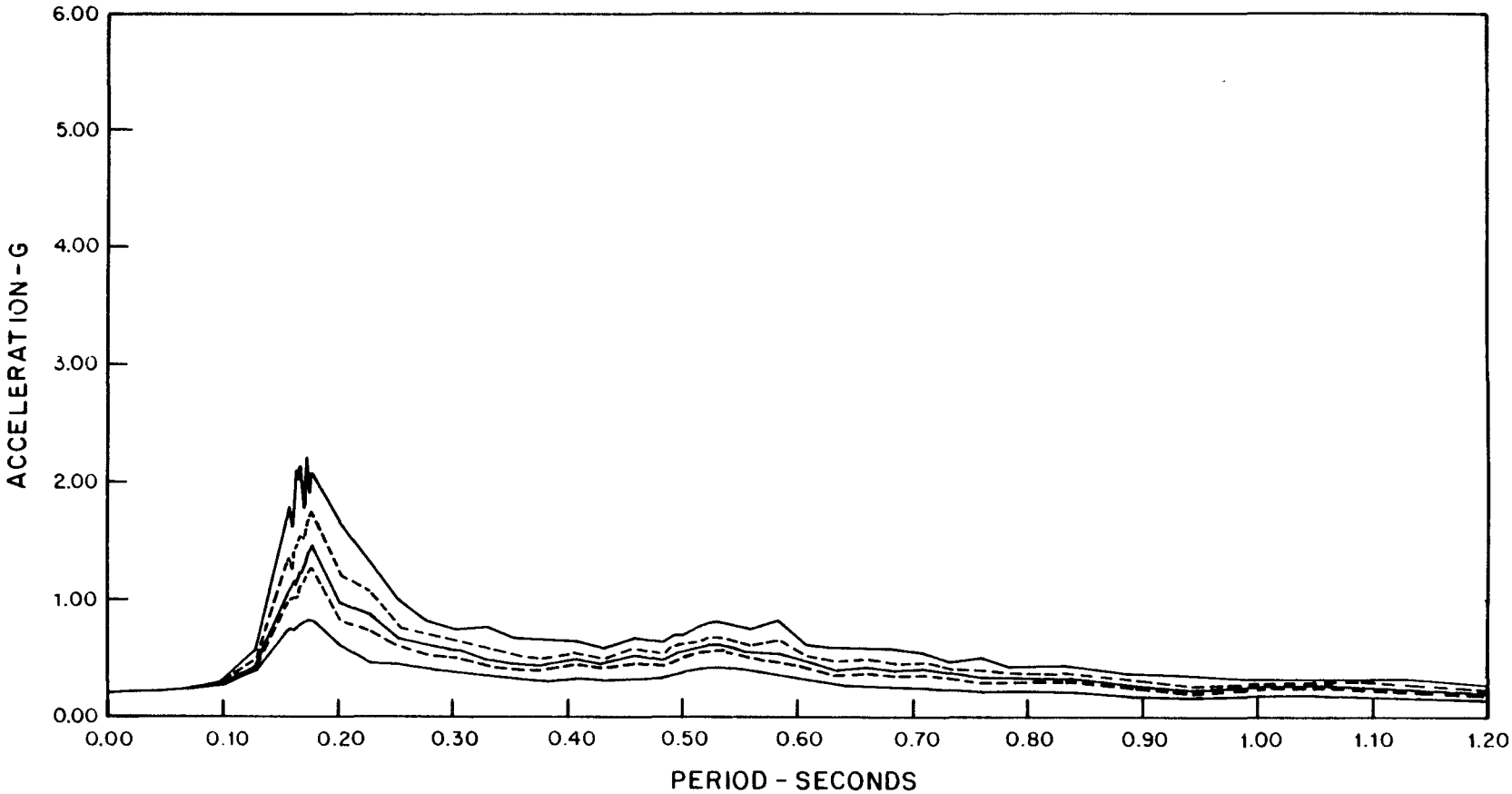

LEGEND

- ——— 0.010 OSCILLATOR DAMPING
- - - - - 0.020 OSCILLATOR DAMPING
- ——— 0.030 OSCILLATOR DAMPING
- - - - - 0.040 OSCILLATOR DAMPING
- ——— 0.080 OSCILLATOR DAMPING

NOTE
FOR EQUIPMENT WITH A NATURAL PERIOD WITHIN ± 25 PERCENT OF RESONANCE, USE PEAK VALUES.

FIGURE 3.7B-46
AMPLIFIED RESPONSE SPECTRA BY TIME HISTORY, CABLE VAULT BUILDING, N-S EXCITATION SSE AT EL. 718.5'
BEAVER VALLEY POWER STATION-UNIT 2
FINAL SAFETY ANALYSIS REPORT

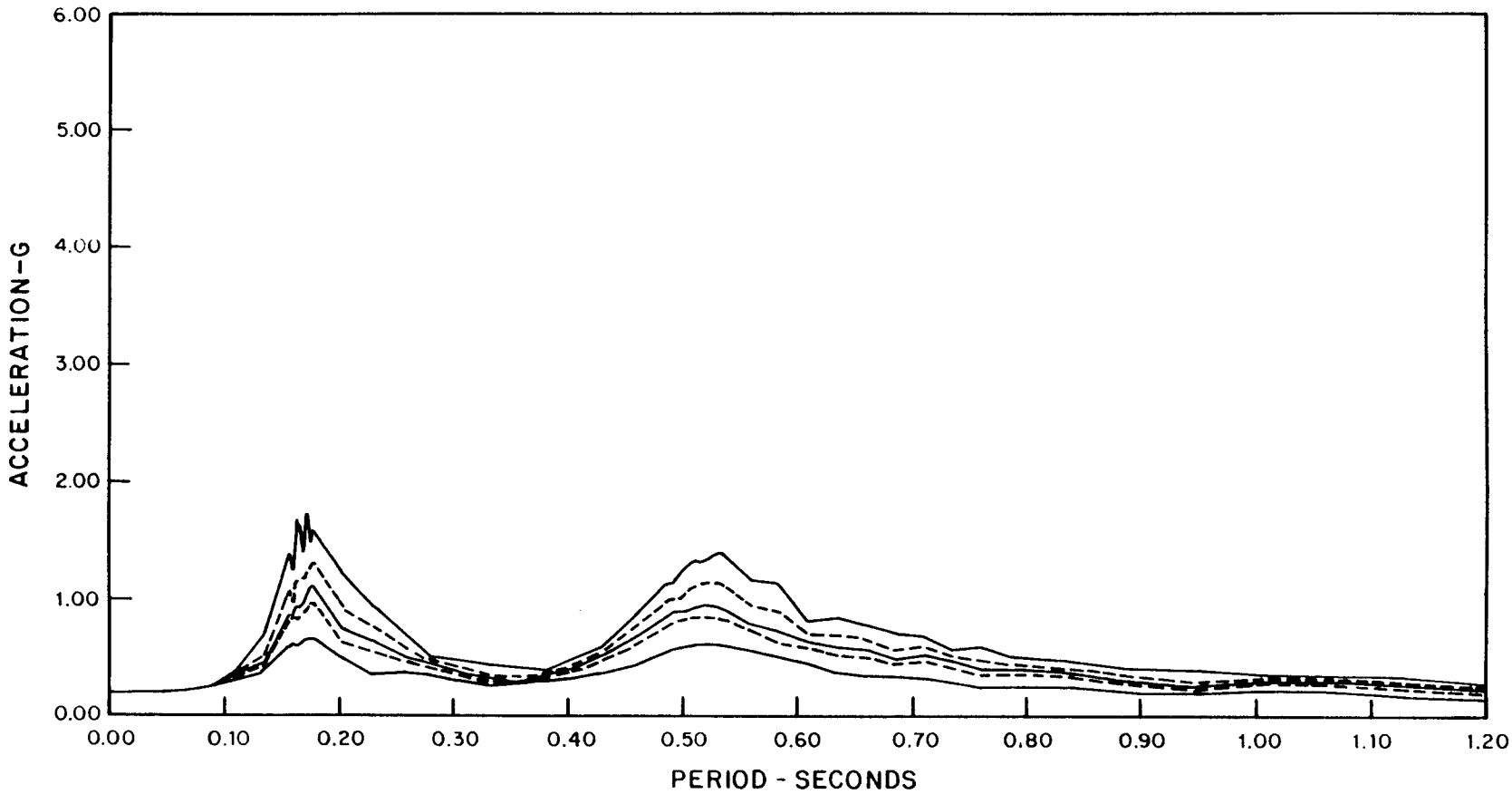

LEGEND

- 0.010 OSCILLATOR DAMPING
- 0.020 OSCILLATOR DAMPING
- 0.030 OSCILLATOR DAMPING
- 0.040 OSCILLATOR DAMPING
- 0.080 OSCILLATOR DAMPING

NOTE
FOR EQUIPMENT WITH A NATURAL PERIOD WITHIN ±25 PERCENT OF RESONANCE, USE PEAK VALUES.

FIGURE 3.7B-47
AMPLIFIED RESPONSE SPECTRA BY TIME HISTORY, CABLE VAULT BUILDING, N-S EXCITATION SSE AT EL. 735.5'
BEAVER VALLEY POWER STATION-UNIT 2
FINAL SAFETY ANALYSIS REPORT

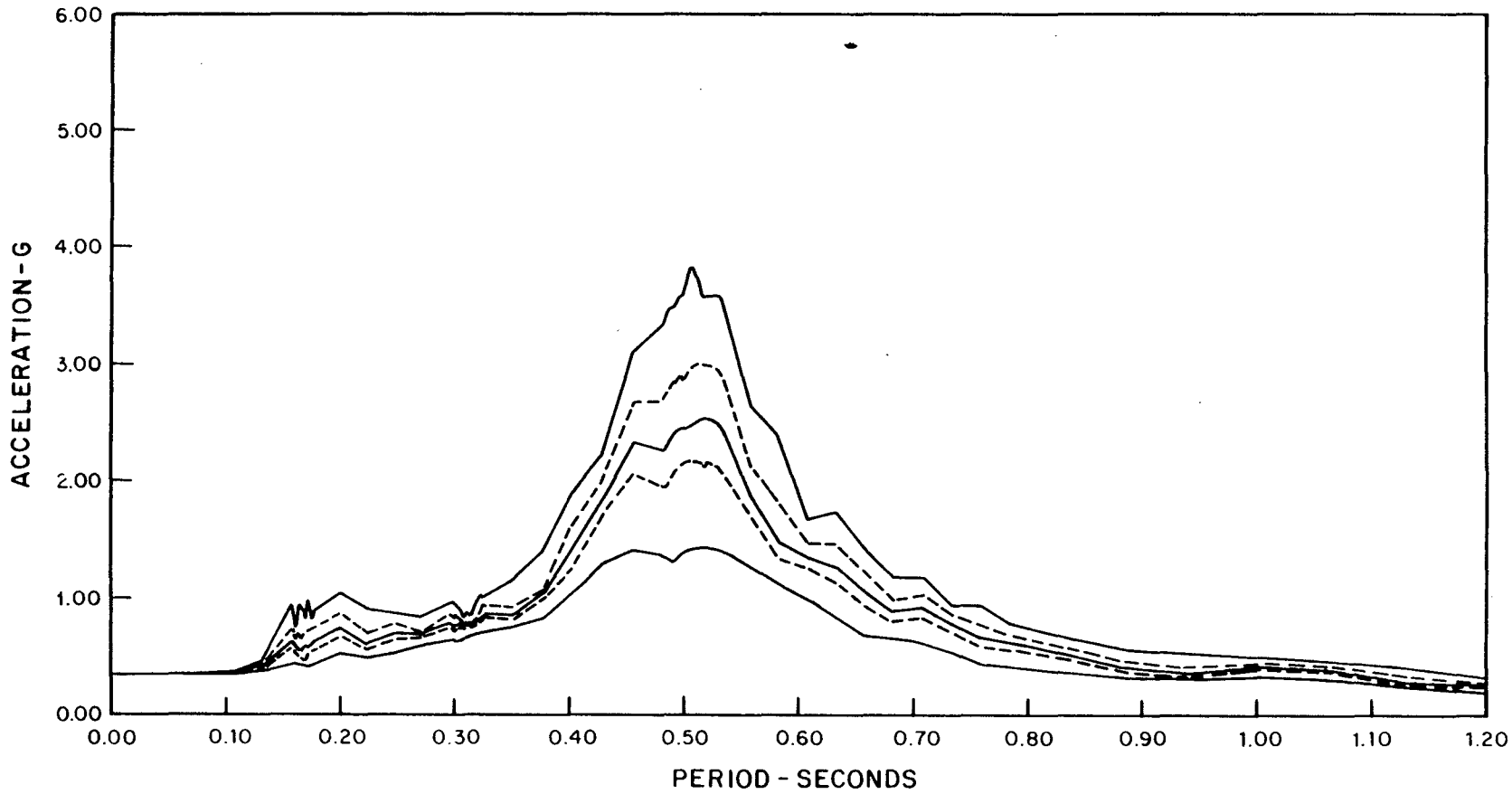

LEGEND

- 0.010 OSCILLATOR DAMPING
- 0.020 OSCILLATOR DAMPING
- 0.030 OSCILLATOR DAMPING
- 0.040 OSCILLATOR DAMPING
- 0.080 OSCILLATOR DAMPING

NOTE
FOR EQUIPMENT WITH A NATURAL PERIOD WITHIN ±25 PERCENT OF RESONANCE, USE PEAK VALUES.

FIGURE 3.7B-48
AMPLIFIED RESPONSE SPECTRA BY TIME HISTORY, CABLE VAULT BUILDING, N-S EXCITATION SSE AT EL. 805.04'
BEAVER VALLEY POWER STATION-UNIT 2
FINAL SAFETY ANALYSIS REPORT

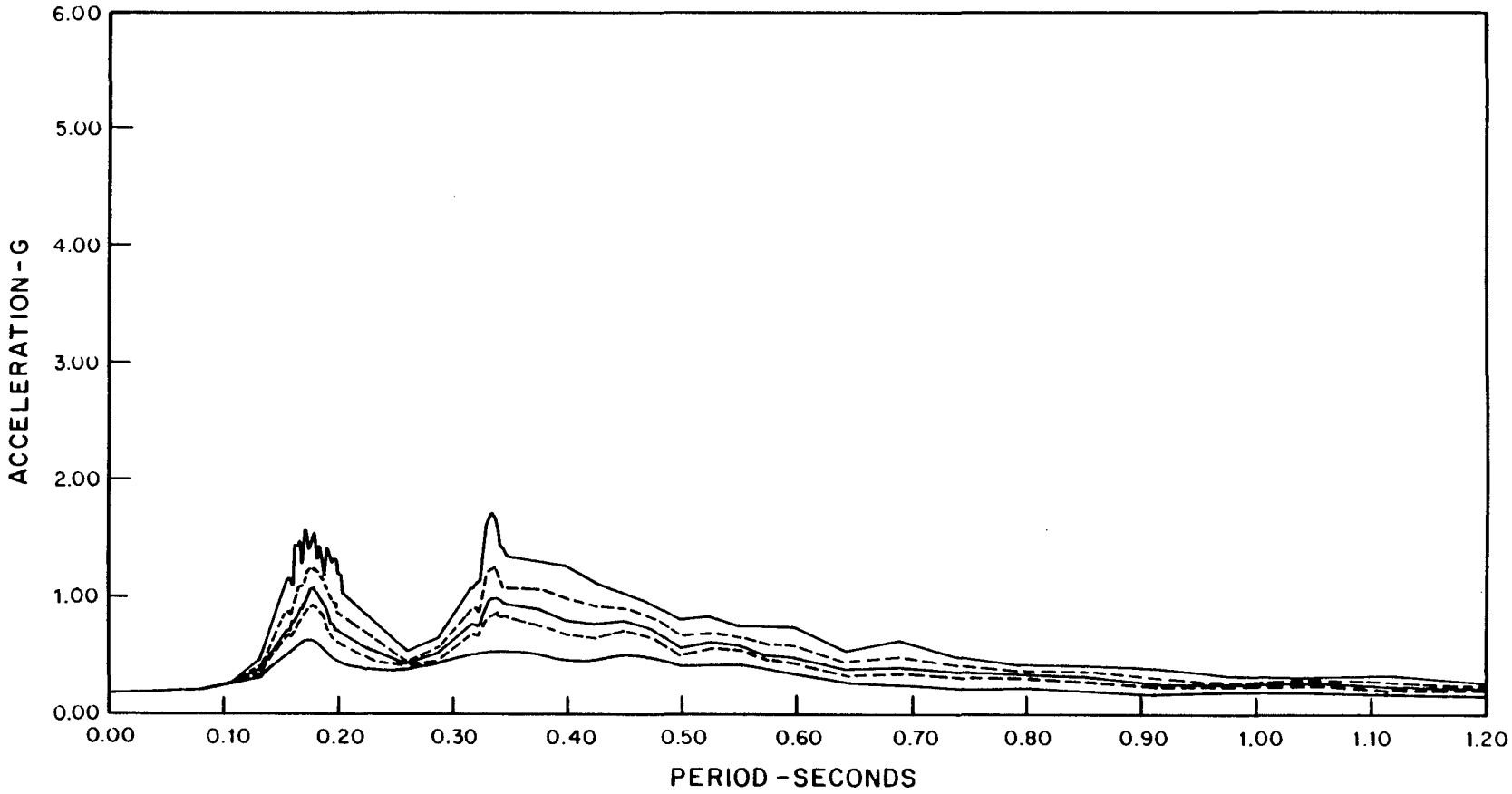

LEGEND

- ——— 0.010 OSCILLATOR DAMPING
- - - - - 0.020 OSCILLATOR DAMPING
- ——— 0.030 OSCILLATOR DAMPING
- - - - - 0.040 OSCILLATOR DAMPING
- ——— 0.080 OSCILLATOR DAMPING

NOTE
FOR EQUIPMENT WITH A NATURAL PERIOD WITHIN ±25 PERCENT OF RESONANCE, USE PEAK VALUES.

FIGURE 3.7B-49
AMPLIFIED RESPONSE SPECTRA BY TIME HISTORY, CABLE VAULT BUILDING, E-W EXCITATION SSE AT EL. 718.5'
BEAVER VALLEY POWER STATION-UNIT 2
FINAL SAFETY ANALYSIS REPORT

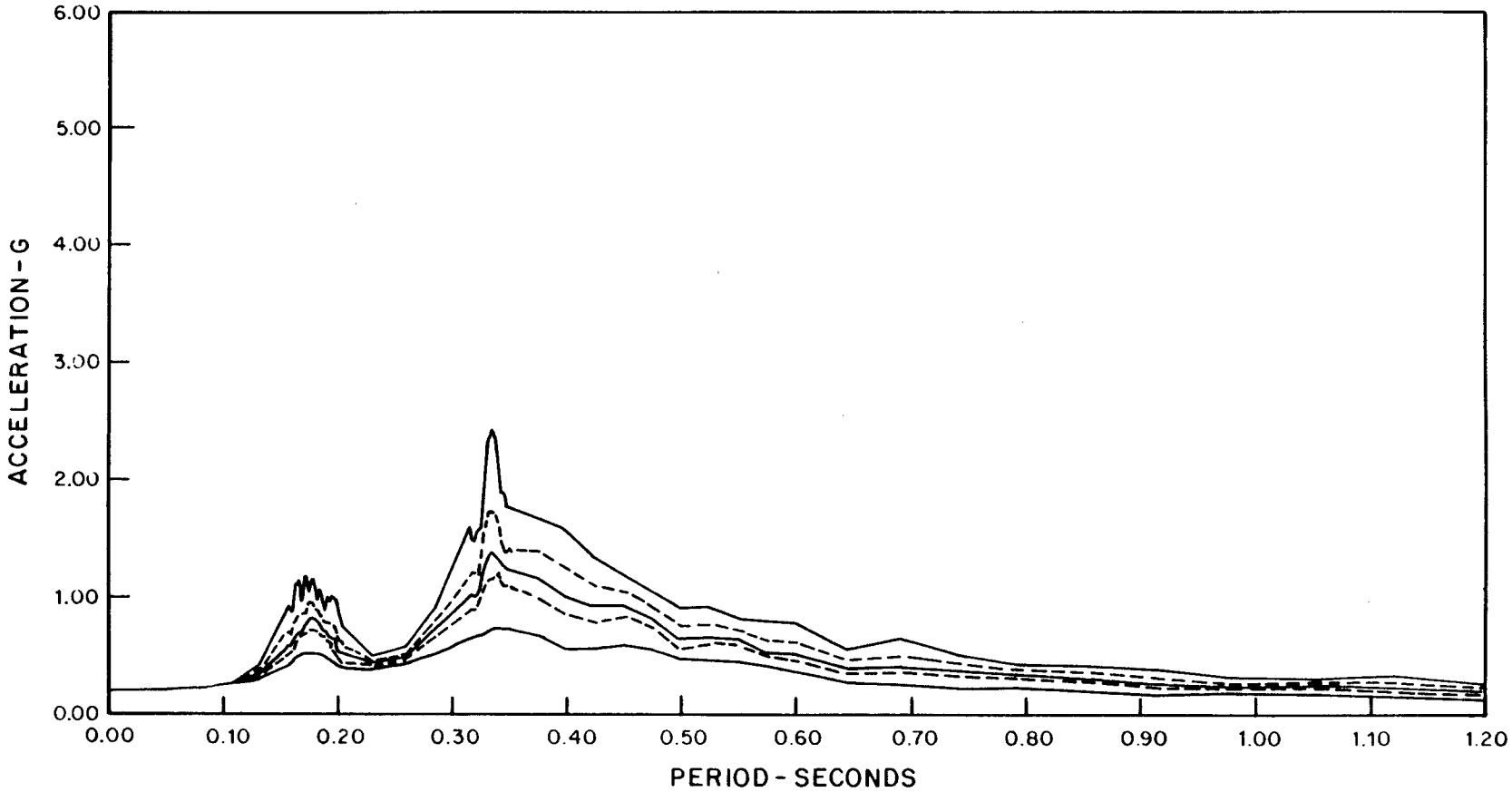

LEGEND

- 0.010 OSCILLATOR DAMPING
- 0.020 OSCILLATOR DAMPING
- 0.030 OSCILLATOR DAMPING
- 0.040 OSCILLATOR DAMPING
- 0.080 OSCILLATOR DAMPING

NOTE
FOR EQUIPMENT WITH A NATURAL PERIOD WITHIN ±25 PERCENT OF RESONANCE, USE PEAK VALUES.

FIGURE 3.7B-50
AMPLIFIED RESPONSE SPECTRA BY TIME HISTORY, CABLE VAULT BUILDING, E-W EXCITATION SSE AT EL. 735.50'
BEAVER VALLEY POWER STATION-UNIT 2
FINAL SAFETY ANALYSIS REPORT

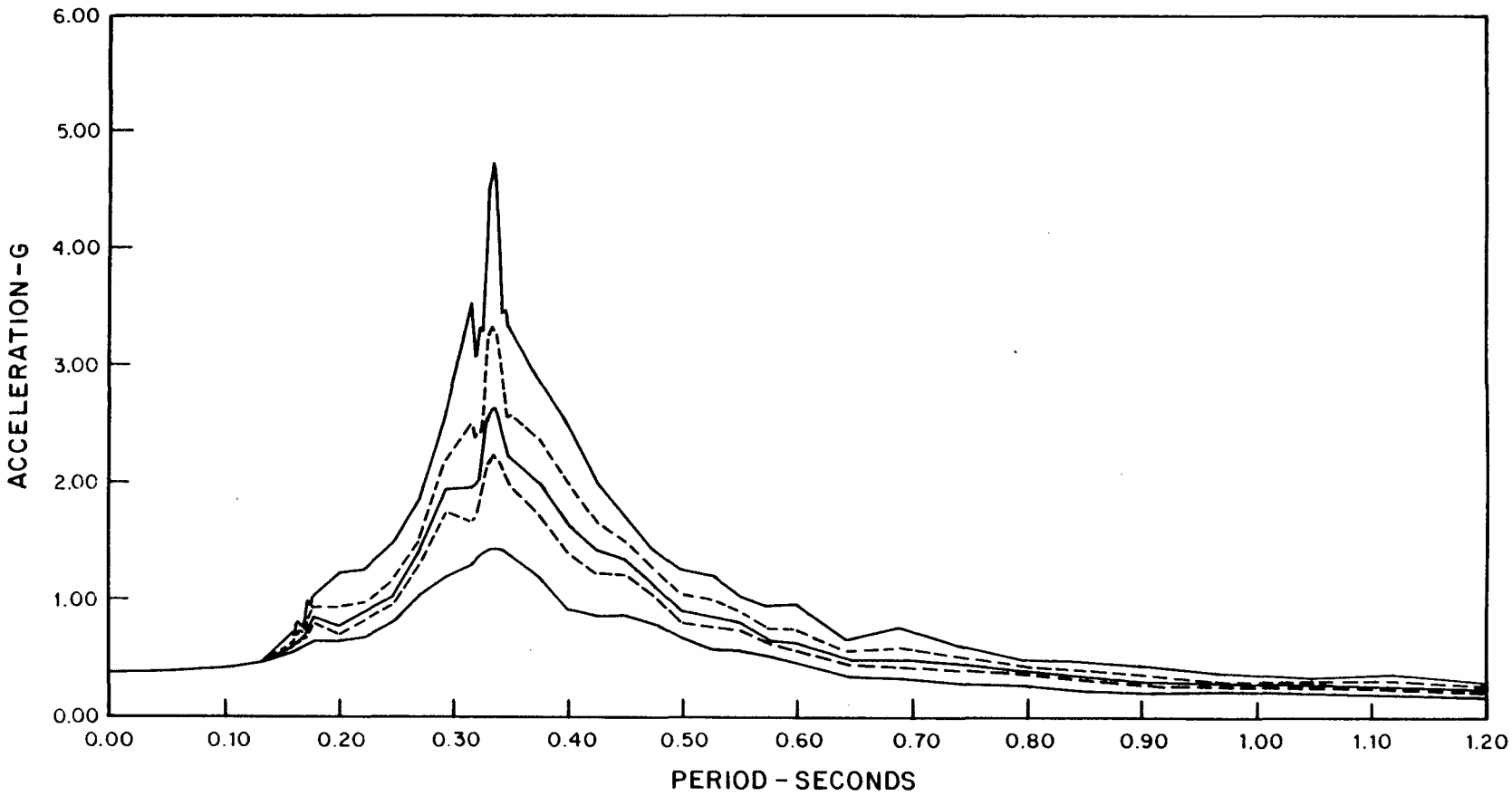

LEGEND

- 0.010 OSCILLATOR DAMPING
- 0.020 OSCILLATOR DAMPING
- 0.030 OSCILLATOR DAMPING
- 0.040 OSCILLATOR DAMPING
- 0.080 OSCILLATOR DAMPING

NOTE
FOR EQUIPMENT WITH A NATURAL PERIOD WITHIN ±25 PERCENT OF RESONANCE, USE PEAK VALUES.

FIGURE 3.7B-51
AMPLIFIED RESPONSE SPECTRA BY TIME HISTORY, CABLE VAULT BUILDING, E-W EXCITATION SSE AT EL. 805.04'
BEAVER VALLEY POWER STATION-UNIT 2
FINAL SAFETY ANALYSIS REPORT

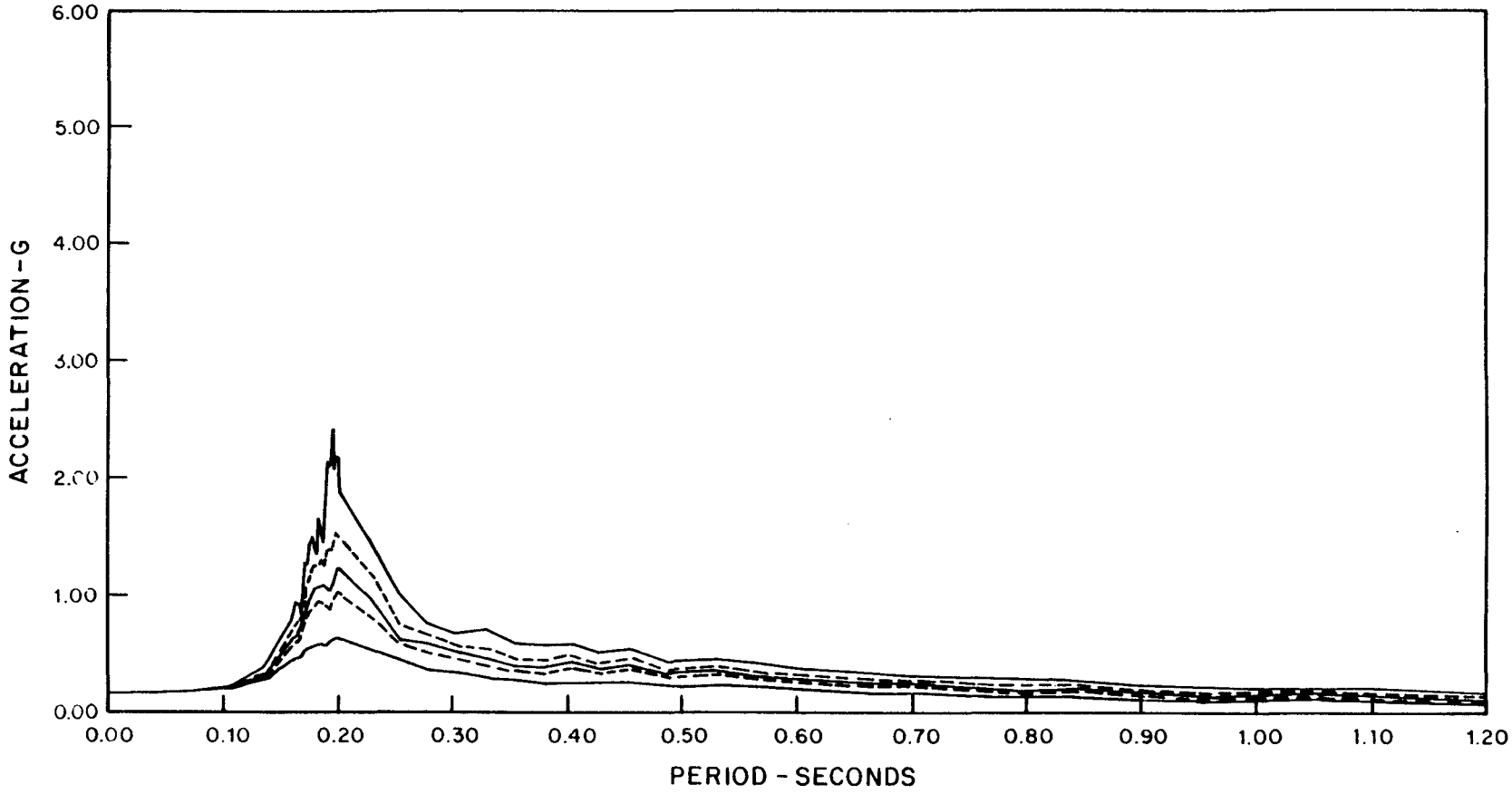

LEGEND

- 0.010 OSCILLATOR DAMPING
- 0.020 OSCILLATOR DAMPING
- 0.030 OSCILLATOR DAMPING
- 0.040 OSCILLATOR DAMPING
- 0.080 OSCILLATOR DAMPING

NOTE
FOR EQUIPMENT WITH A NATURAL PERIOD WITHIN ±25 PERCENT OF RESONANCE, USE PEAK VALUES.

FIGURE 3.7B-52
AMPLIFIED RESPONSE SPECTRA BY TIME HISTORY, CABLE VAULT BUILDING, VERTICAL EXCITATION SSE AT EL. 718.50'
BEAVER VALLEY POWER STATION-UNIT 2
FINAL SAFETY ANALYSIS REPORT

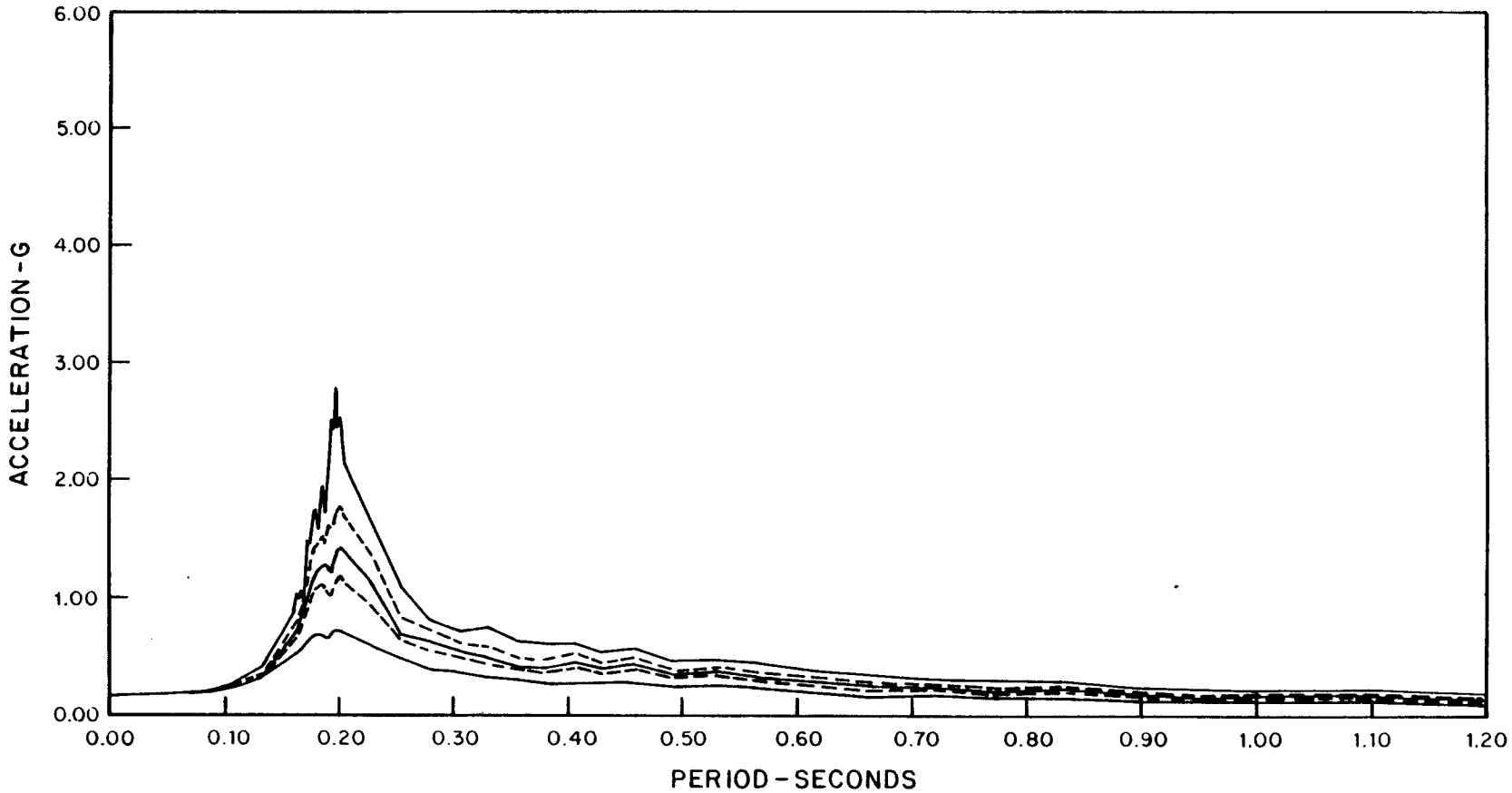

LEGEND

- ——— 0.010 OSCILLATOR DAMPING
- – – – – 0.020 OSCILLATOR DAMPING
- ——— 0.030 OSCILLATOR DAMPING
- – – – – 0.040 OSCILLATOR DAMPING
- ——— 0.080 OSCILLATOR DAMPING

NOTE
FOR EQUIPMENT WITH A NATURAL PERIOD WITHIN ±25 PERCENT OF RESONANCE, USE PEAK VALUES.

FIGURE 3.7B-53
AMPLIFIED RESPONSE SPECTRA BY TIME HISTORY, CABLE VAULT BUILDING, VERTICAL EXCITATION SSE AT EL. 805.04'
BEAVER VALLEY POWER STATION-UNIT 2
FINAL SAFETY ANALYSIS REPORT

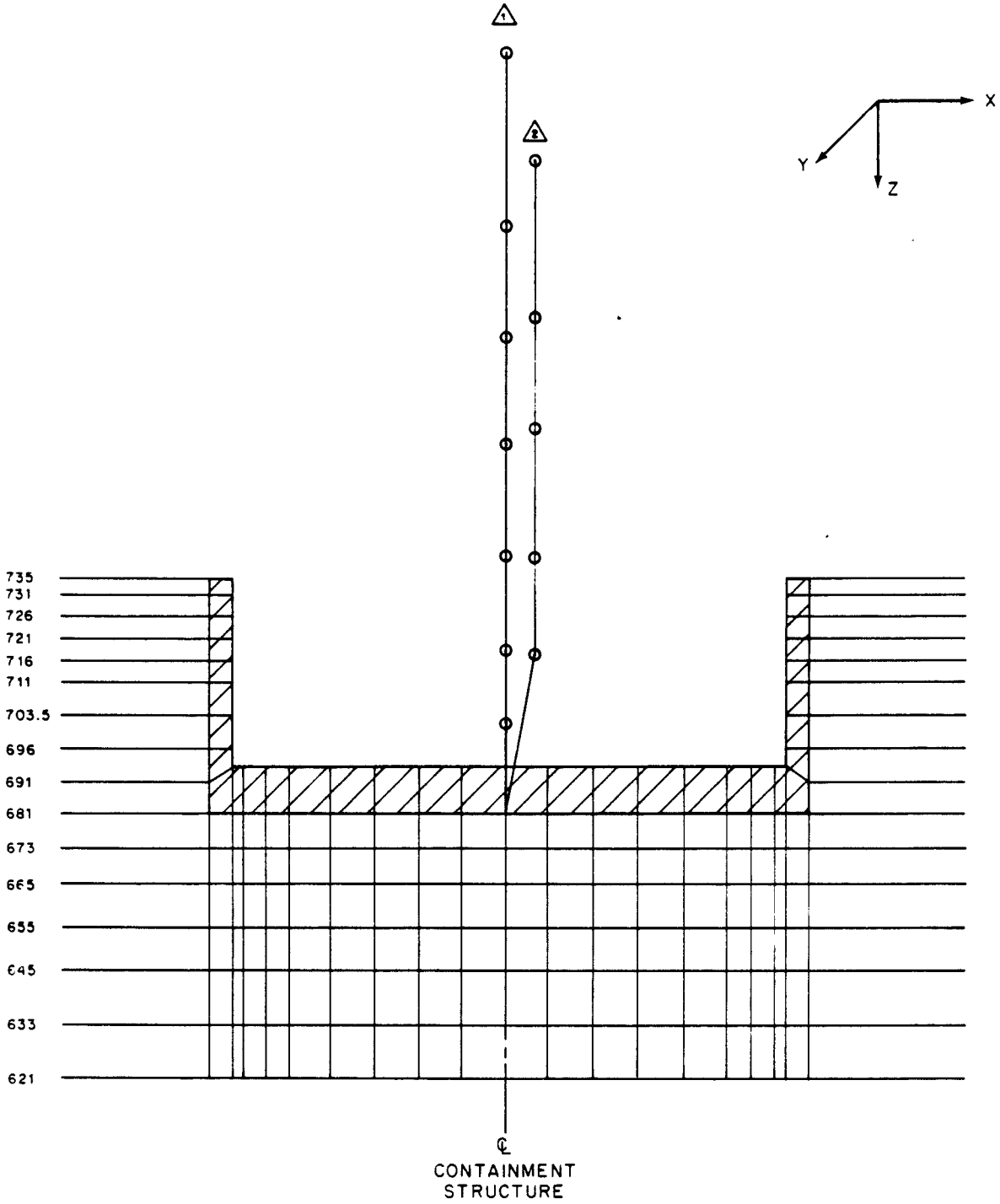

LEGEND

CONTAINMENT STRUCTURE

FIGURE 3.7B-54
CONTAINMENT-FINITE ELEMENT MODE
BEAVER VALLEY POWER STATION-UNIT 2
FINAL SAFETY ANALYSIS REPORT

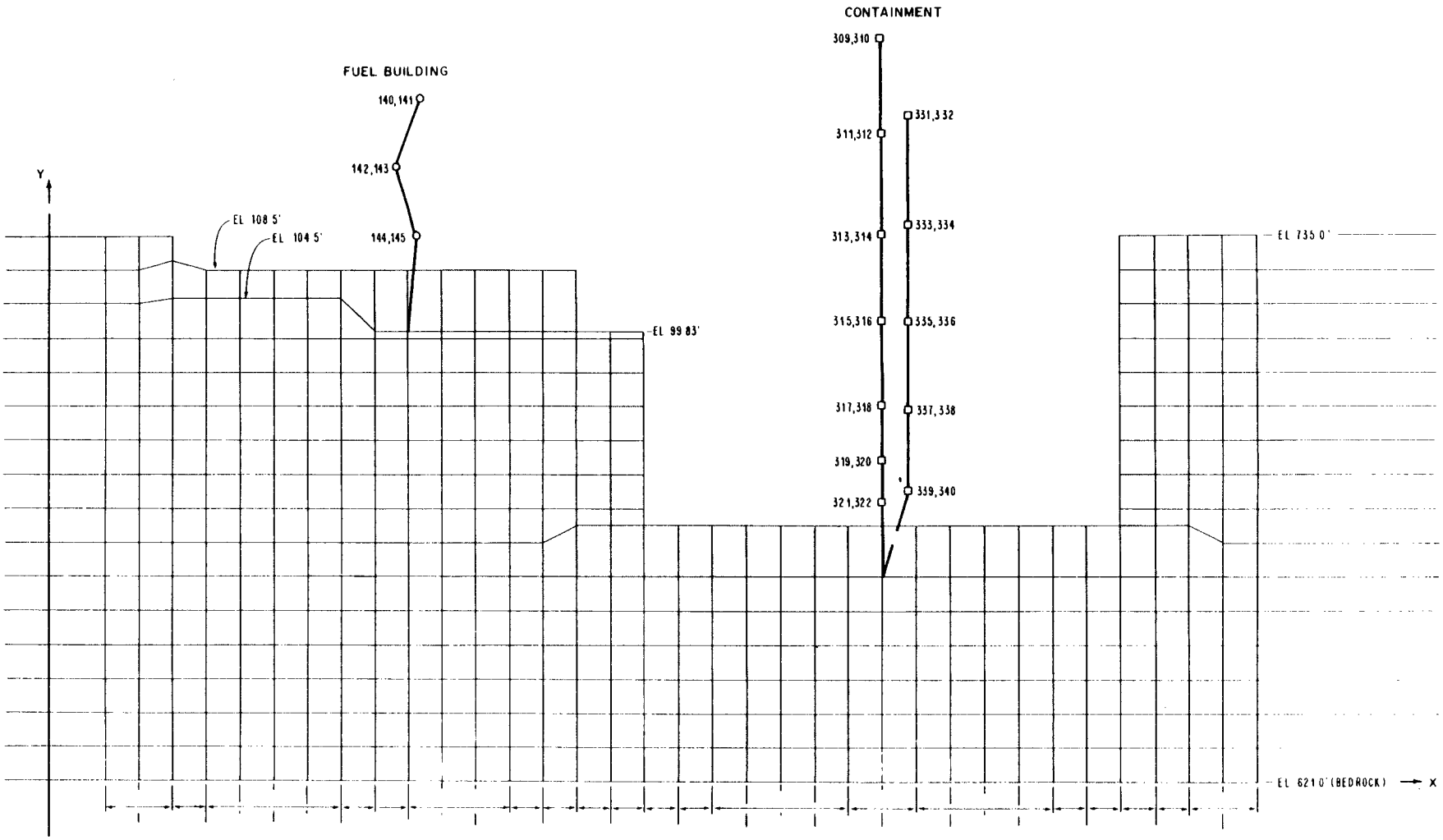

FIGURE 3.7B-55

CONTAINMENT-FUEL BUILDING STRUCTURE, INTERACTION MODEL

BEAVER VALLEY POWER STATION-UNIT 2
FINAL SAFETY ANALYSIS REPORT

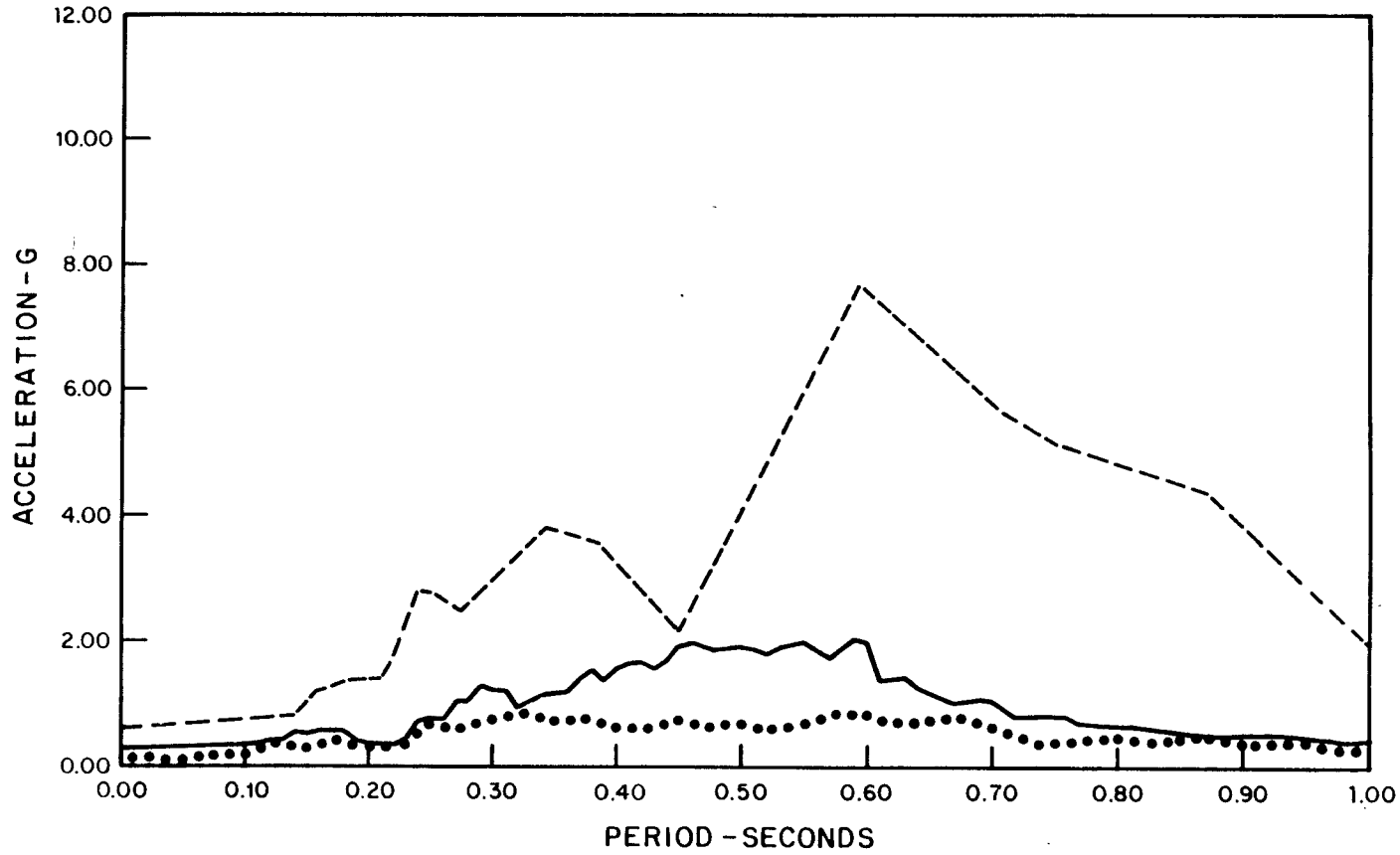

NOTE
BASED ON THE ENVELOPE OF CRACKED AND UNCRACKED PROPERTIES OF CONCRETE.

LEGEND

- ——— 0.010 OSCILLATOR DAMPING PLAXLY (FINITE ELEMENT)
- – – – – 0.010 OSCILLATOR DAMPING STRUDL/TIME HISTORY (LUMPED MASS-SPRING)
- •••••••• 0.010 OSCILLATOR DAMPING FLUSH (FINITE ELEMENT)

FIGURE 3.7B-56
A.R.S. COMPARISON-FINITE ELEMENT VS. LUMPED MASS-SPRING CONTAINMENT EXTERNAL STRUCTURE EL. 854.0', HORIZONTAL, SSE
BEAVER VALLEY POWER STATION-UNIT 2
FINAL SAFETY ANALYSIS REPORT

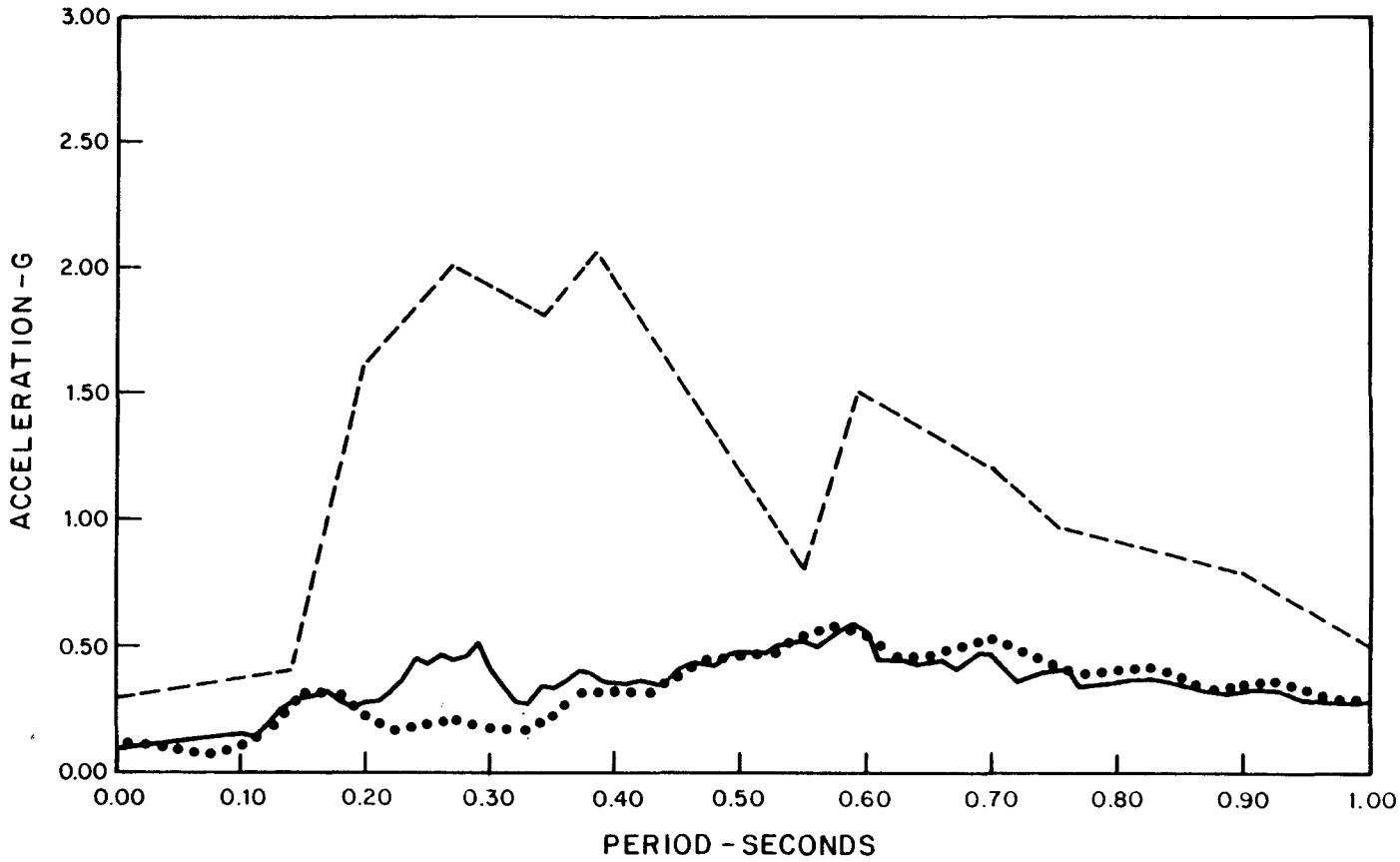

NOTE
BASED ON THE ENVELOPE OF CRACKED AND UNCRACKED PROPERTIES OF CONCRETE.

LEGEND

——— 0.010 OSCILLATOR DAMPING PLAXLY (FINITE ELEMENT)

– – – – 0.010 OSCILLATOR DAMPING STRUDL/TIME HISTORY (LUMPED MASS-SPRING)

•••••••• 0.010 OSCILLATOR DAMPING FLUSH (FINITE ELEMENT)

FIGURE 3.7B-57
A.R.S. COMPARISON-FINITE ELEMENT VS. LUMPED MASS-SPRING CONTAINMENT MAT EL. 681.0' TO 691.0', HORIZONTAL, SSE
BEAVER VALLEY POWER STATION-UNIT 2
FINAL SAFETY ANALYSIS REPORT

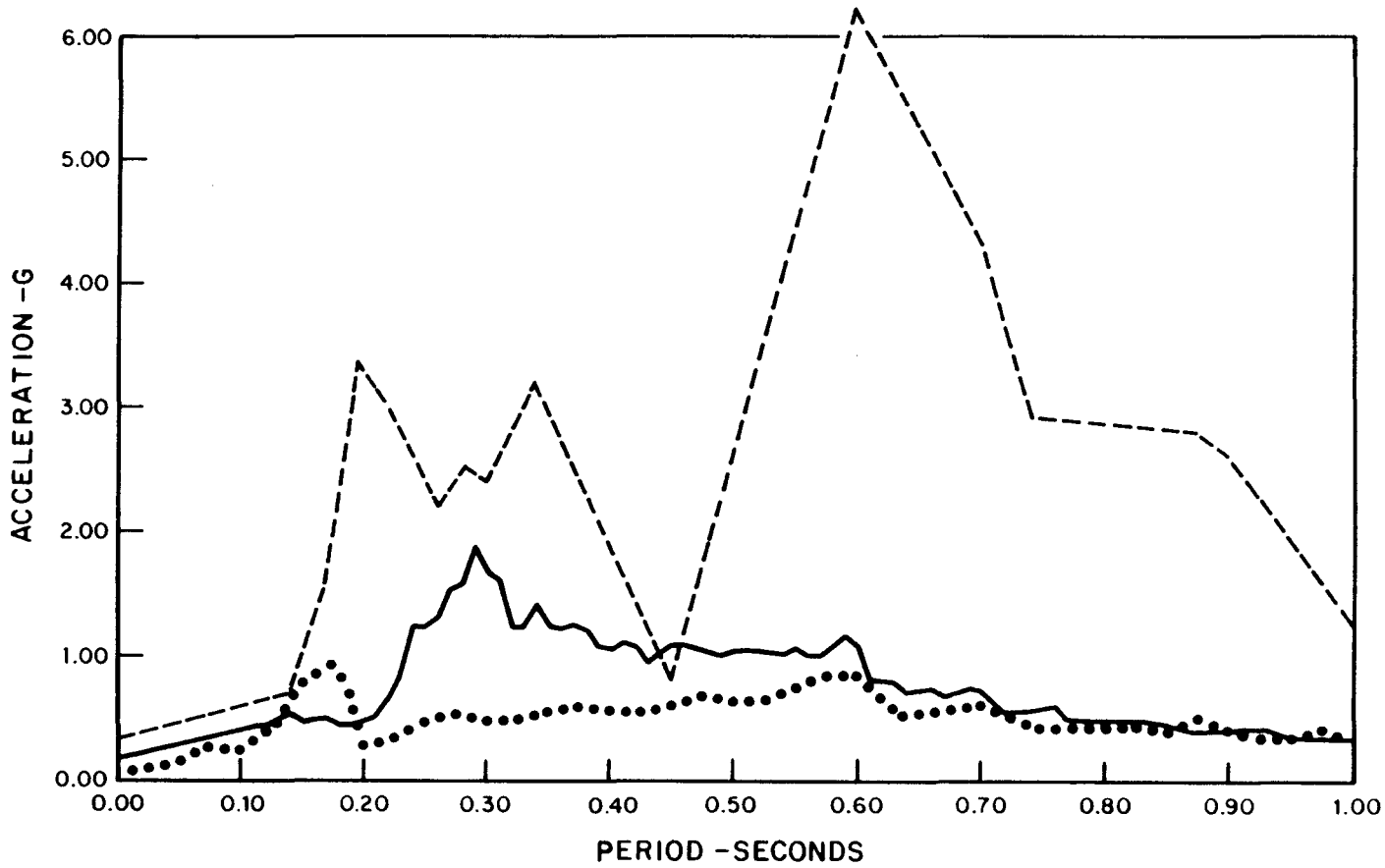

NOTE
BASED ON THE ENVELOPE OF CRACKED AND UNCRACKED PROPERTIES OF CONCRETE.

LEGEND

- ——— 0.010 OSCILLATOR DAMPING PLAXLY (FINITE ELEMENT)
- – – – – 0.010 OSCILLATOR DAMPING STRUDL/TIME HISTORY (LUMPED MASS-SPRING)
- •••••••• 0.010 OSCILLATOR DAMPING FLUSH (FINITE ELEMENT)

FIGURE 3.7B-58

A.R.S. COMPARISON-FINITE ELEMENT VS. LUMPED MASS-SPRING CONTAINMENT INTERNAL STRUCTURE EL. 818.0', HORIZONTAL, SSE

BEAVER VALLEY POWER STATION-UNIT 2
FINAL SAFETY ANALYSIS REPORT

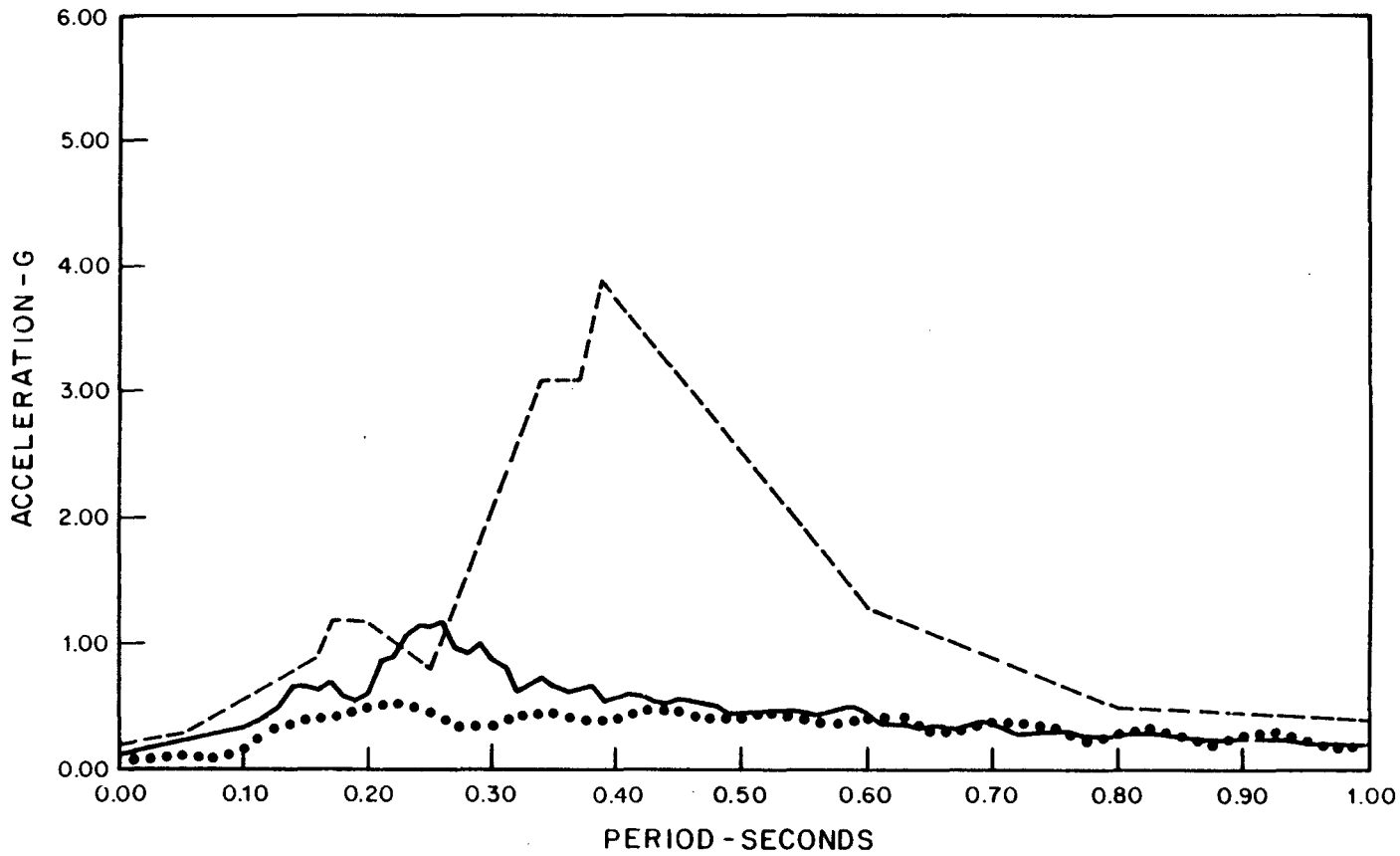

NOTE
BASED ON THE ENVELOPE OF CRACKED AND UNCRACKED PROPERTIES OF CONCRETE.

LEGEND

——— 0.010 OSCILLATOR DAMPING PLAXLY (FINITE ELEMENT)

– – – – 0.010 OSCILLATOR DAMPING STRUDL/TIME HISTORY (LUMPED MASS-SPRING)

•••••••• 0.010 OSCILLATOR DAMPING FLUSH (FINITE ELEMENT)

FIGURE 3.7B-59

A.R.S. COMPARISON-FINITE ELEMENT VS. LUMPED MASS-SPRING CONTAINMENT EXTERNAL STRUCTURE EL. 854.0', VERTICAL, SSE

BEAVER VALLEY POWER STATION-UNIT 2
FINAL SAFETY ANALYSIS REPORT

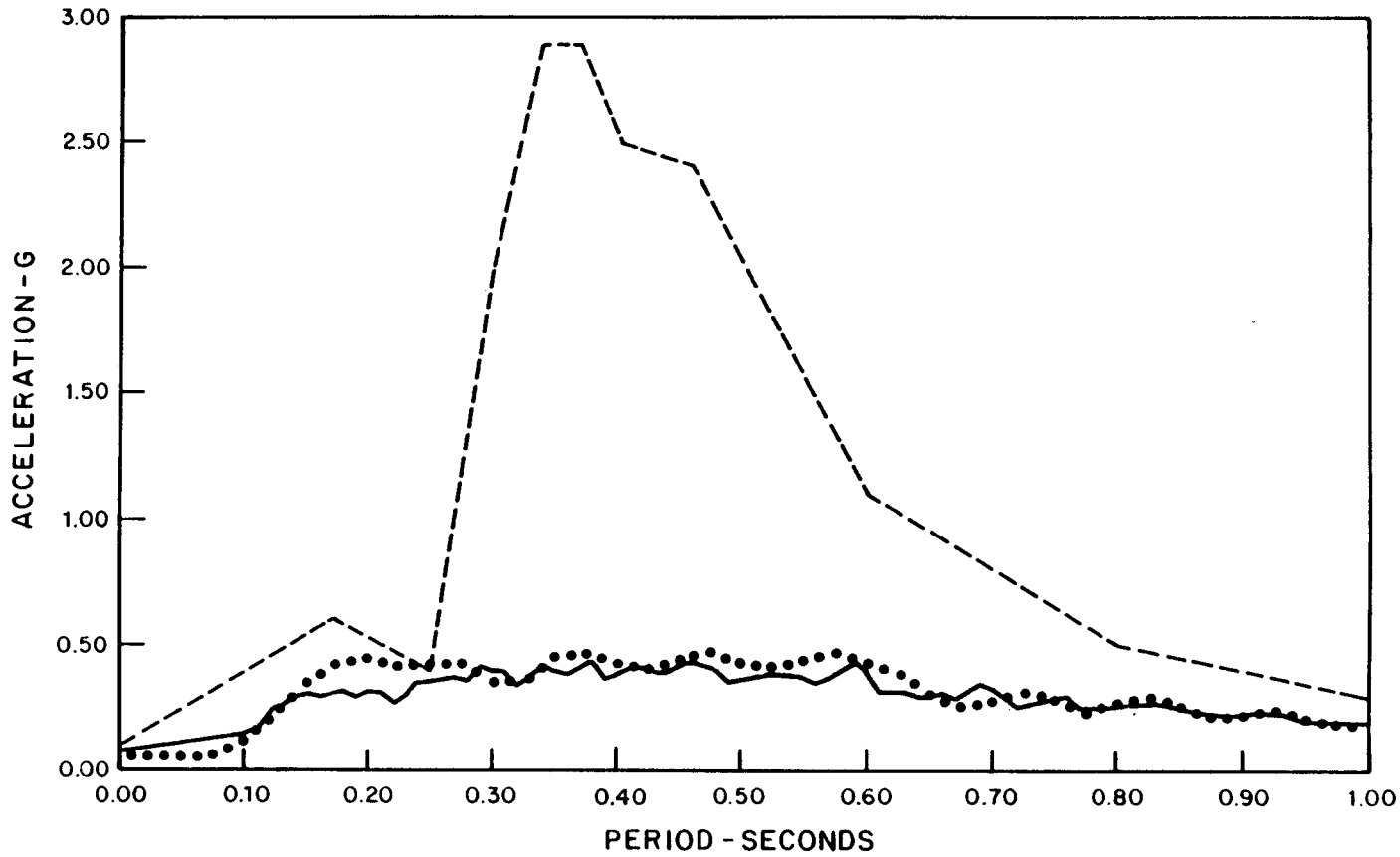

NOTE
BASED ON THE ENVELOPE OF CRACKED AND UNCRACKED PROPERTIES OF CONCRETE.

LEGEND

——— 0.010 OSCILLATOR DAMPING PLAXLY (FINITE ELEMENT)

– – – – – 0.010 OSCILLATOR DAMPING STRUDL/TIME HISTORY (LUMPED MASS-SPRING)

•••••••• 0.010 OSCILLATOR DAMPING FLUSH (FINITE ELEMENT)

FIGURE 3.7B-60
A.R.S. COMPARISION-FINITE ELEMENT VS. LUMPED MASS-SPRING CONTAINMENT MAT EL. 681.0' TO 691.0', VERTICAL, SSE
BEAVER VALLEY POWER STATION-UNIT 2
FINAL SAFETY ANALYSIS REPORT

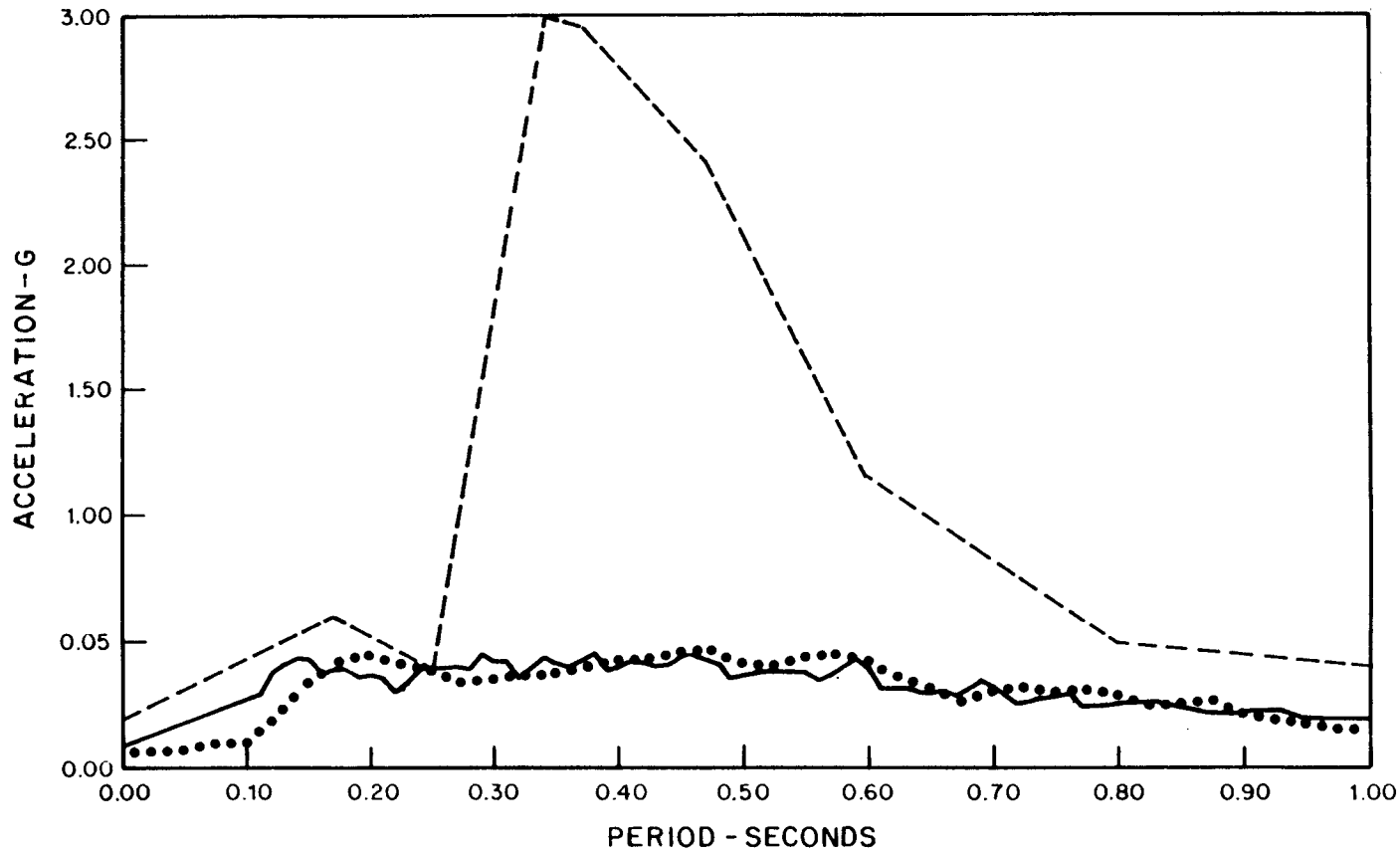

NOTE
BASED ON THE ENVELOPE OF CRACKED AND UNCRACKED PROPERTIES OF CONCRETE.

LEGEND

——— 0.010 OSCILLATOR DAMPING PLAXLY (FINITE ELEMENT)

– – – – 0.010 OSCILLATOR DAMPING STRUDL/TIME HISTORY (LUMPED MASS-SPRING)

•••••••• 0.010 OSCILLATOR DAMPING FLUSH (FINITE ELEMENT)

FIGURE 3.7B-61

A.R.S. COMPARISON-FINITE ELEMENT VS. LUMPED MASS-SPRING CONTAINMENT INTERNAL STRUCTURE EL. 818.0', VERTICAL, SSE

BEAVER VALLEY POWER STATION-UNIT 2
FINAL SAFETY ANALYSIS REPORT

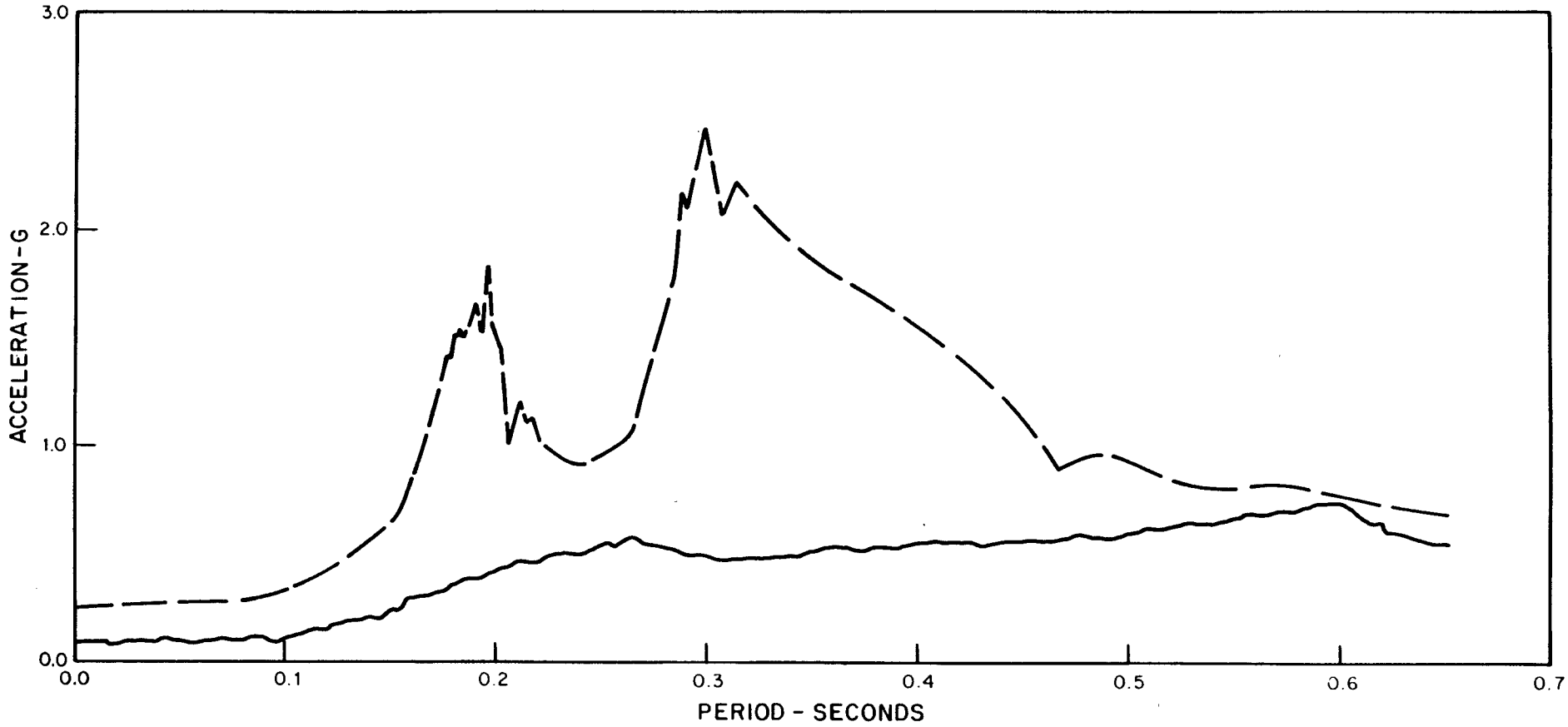

LEGEND

0.010 OSCILLATOR DAMPING FLUSH (FINITE ELEMENT)

0.010 OSCILLATOR DAMPING STRUDL / TIME HISTORY (LUMPED MASS-SPRING)

FIGURE 3.7B-62

A.R.S. COMPARISON-FINITE ELEMENT VS. LUMPED MASS-SPRING FUEL BUILDING, EL. 729.50' EAST-WEST, SSE

BEAVER VALLEY POWER STATION - UNIT 2
FINAL SAFETY ANALYSIS REPORT

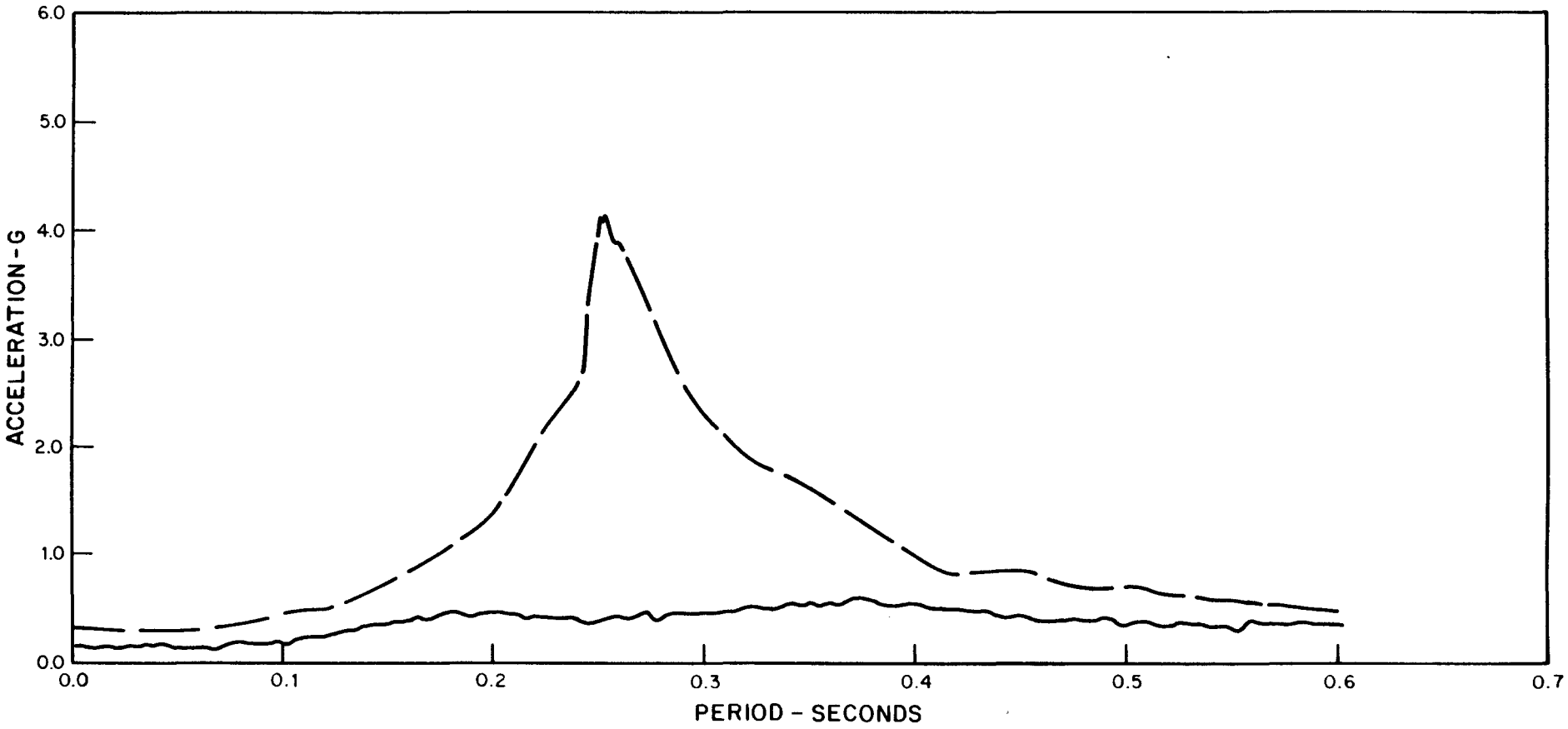

LEGEND

——— 0.010 OSCILLATOR DAMPING FLUSH (FINITE ELEMENT)

— — 0.010 OSCILLATOR DAMPING STRUDL / TIME HISTORY (LUMPED MASS-SPRING)

FIGURE 3.7B-63

A.R.S. COMPARISON-FINITE ELEMENT VS. LUMPED MASS-SPRING FUEL BUILDING, EL. 729.50' VERTICAL, SSE

BEAVER VALLEY POWER STATION-UNIT 2
FINAL SAFETY ANALYSIS REPORT

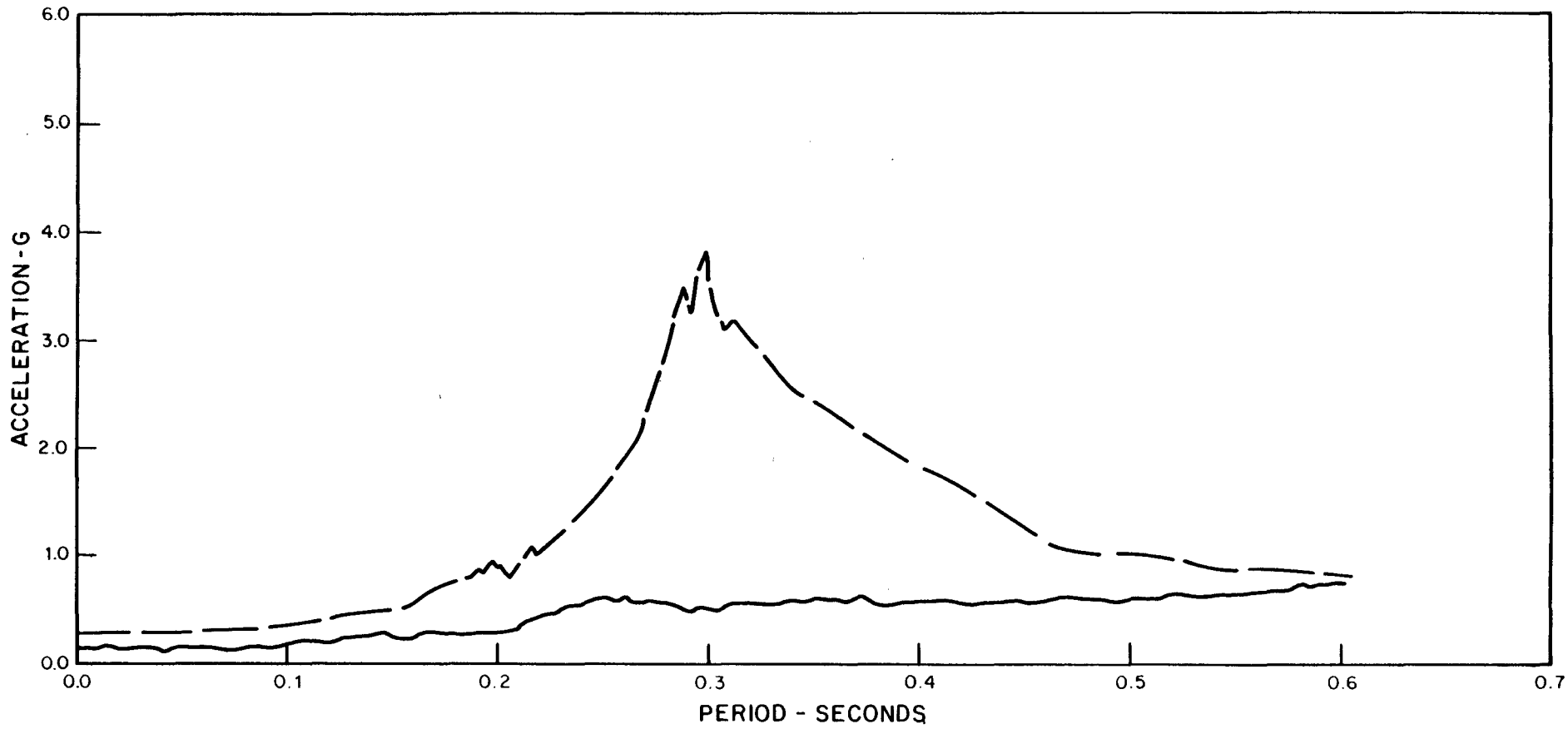

LEGEND

——— 0.010 OSCILLATOR DAMPING FLUSH (FINITE ELEMENT)

— — — 0.010 OSCILLATOR DAMPING STRUDL/TIME HISTORY (LUMPED MASS-SPRING)

FIGURE 3.7B-64

A.R.S. COMPARISON-FINITE ELEMENT VS. LUMPED MASS-SPRING FUEL BUILDING, EL. 767.33' EAST-WEST, SSE

BEAVER VALLEY POWER STATION - UNIT 2
FINAL SAFETY ANALYSIS REPORT

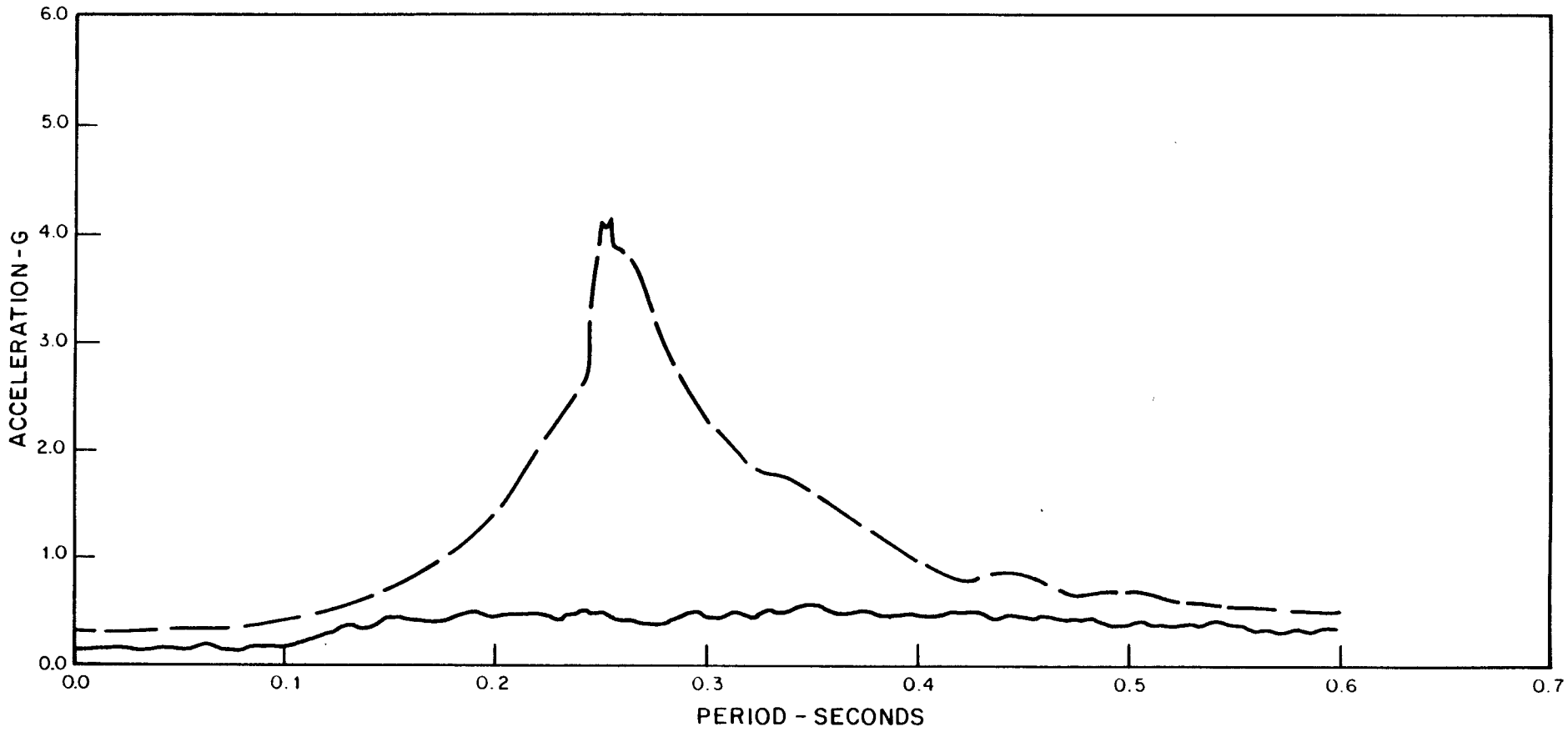

LEGEND

——— 0.010 OSCILLATOR DAMPING FLUSH (FINITE ELEMENT)

— — 0.010 OSCILLATOR DAMPING STRUDL / TIME HISTORY (LUMPED MASS-SPRING)

FIGURE 3.7B-65

A.R.S. COMPARISON-FINITE ELEMENT VS. LUMPED MASS-SPRING FUEL BUILDING, EL. 767.33' VERTICAL, SSE

BEAVER VALLEY POWER STATION-UNIT 2
FINAL SAFETY ANALYSIS REPORT

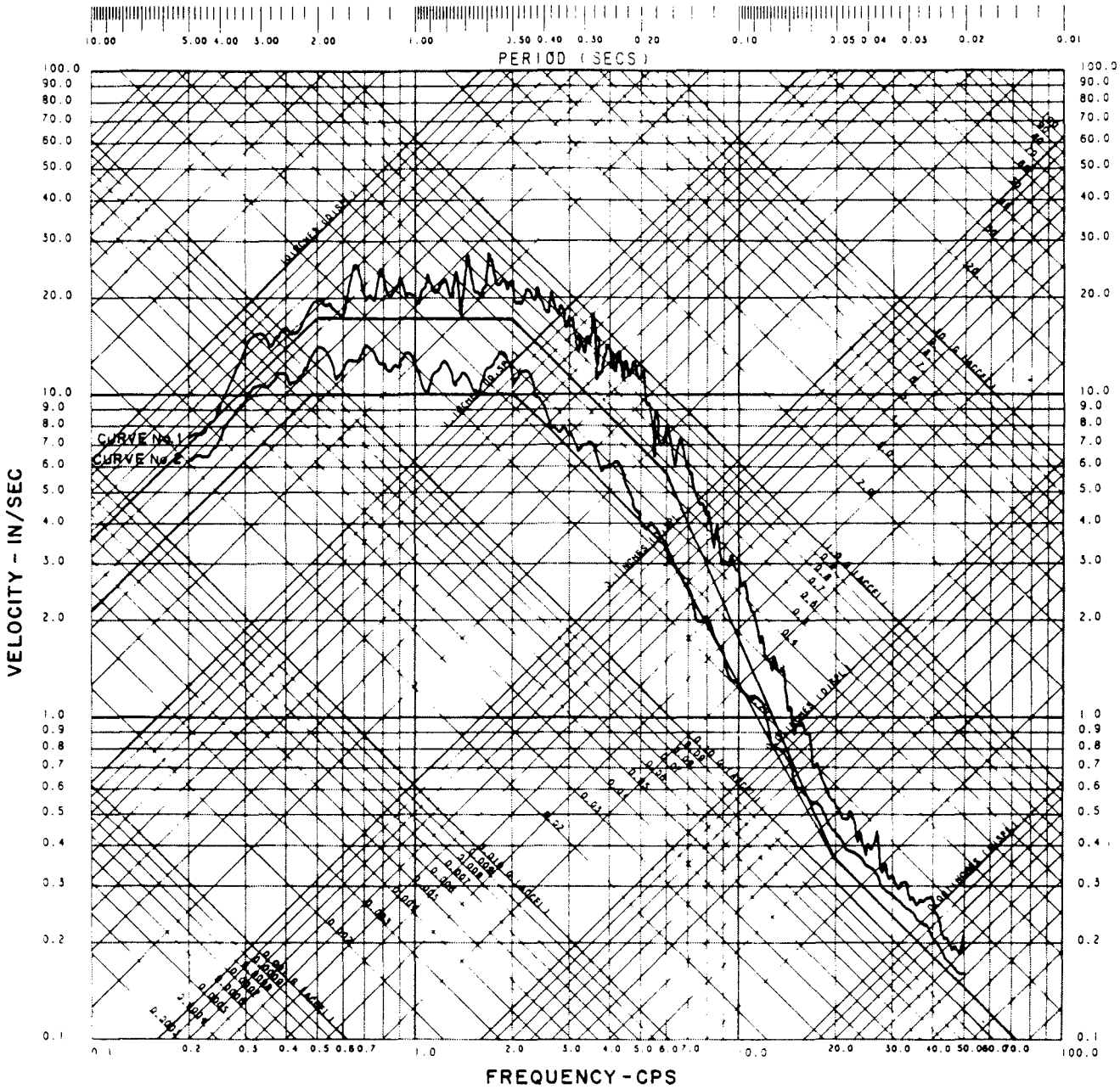

LEGEND

——— GROUND RESPONSE SPECTRA

SPECTRA RESULTING FROM TIME HISTORY

NOTES

CURVE No. 1 DAMPING 0.5 PERCENT
CURVE No. 2 DAMPING 5.0 PERCENT

DBE GRS BASED ON 0.125G MAX. GA

FIGURE 3.7B-66

GROUND RESPONSE SPECTRA VS. RESPONSE SPECTRA RESULTING FROM SITE ARTIFICIAL TIME HISTORY

BEAVER VALLEY POWER STATION-UNIT 2
FINAL SAFETY ANALYSIS REPORT

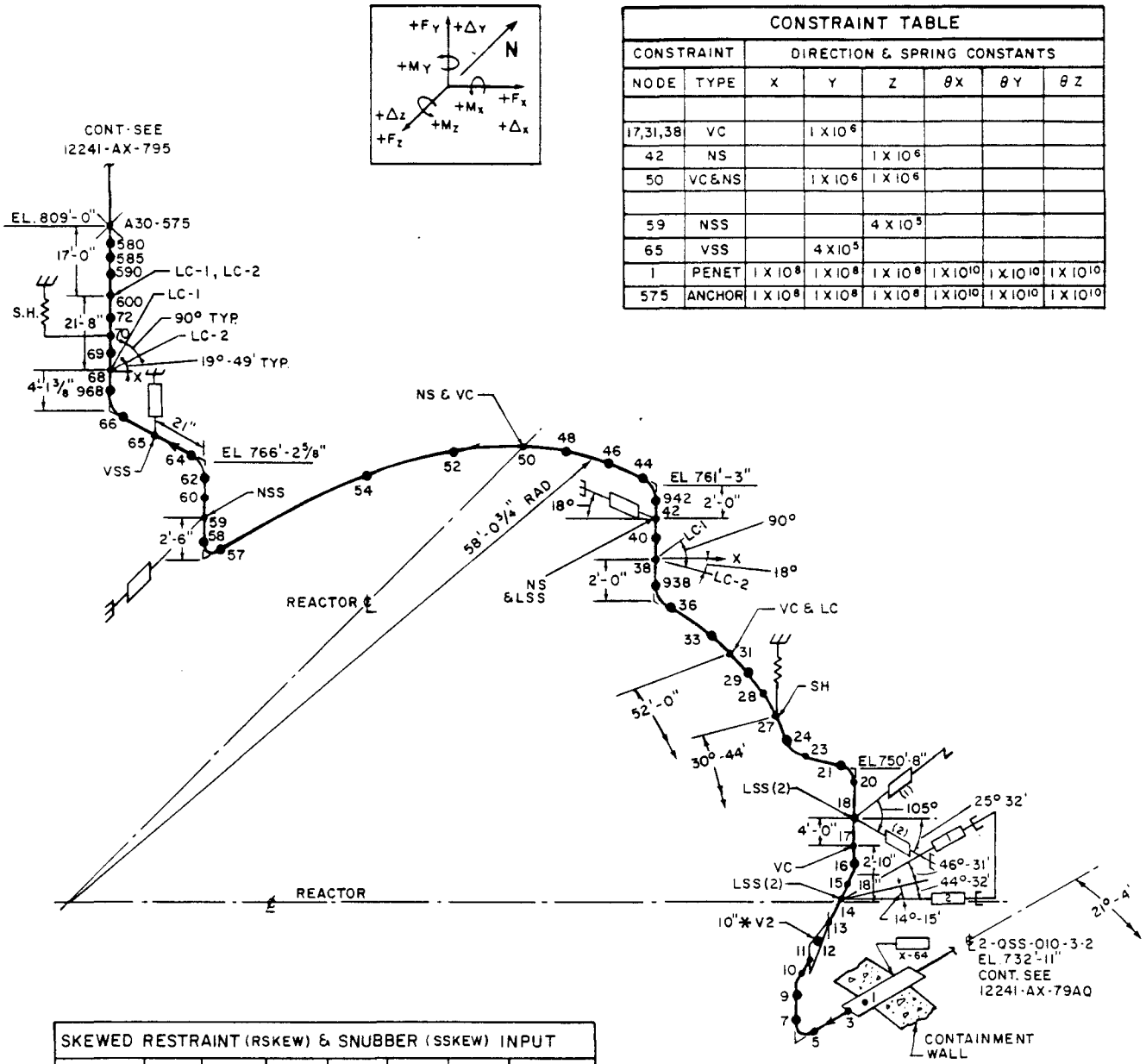

CONSTRAINT TABLE							
CONSTRAINT		DIRECTION & SPRING CONSTANTS					
NODE	TYPE	X	Y	Z	θX	θY	θZ
17,31,38	VC		1×10^6				
42	NS			1×10^6			
50	VC&NS		1×10^6	1×10^6			
59	NSS			4×10^5			
65	VSS		4×10^5				
1	PENET	1×10^8	1×10^8	1×10^8	1×10^{10}	1×10^{10}	1×10^{10}
575	ANCHOR	1×10^8	1×10^8	1×10^8	1×10^{10}	1×10^{10}	1×10^{10}

SKEWED RESTRAINT (RSKEW) & SNUBBER (SSKEW) INPUT							
RESTRAINT	NODE	S TYPE 1.0 TRANS 2.0 ROT	PD 1.0 OFFSETS 2.0 DIR COS	Px αX	PY αY	PZ αZ	K (IN-LBS) OR Kφ (IN-LBS/RAD)
SKS-1	14	1.0	2.0	.6669	.7257	-.1693	4×10^5
LSS-1	18	1.0	2.0	.1828		-.9832	4×10^5
LSS-2	18	1.0	2.0	.9024		.431	4×10^5
LC	31	1.0	2.0	.6157		-.788	1×10^6
LSS	42	1.0	2.0	.951		.309	4×10^5
SKS-2	14	1.0	2.0	.6909	-.7014	-.1754	4×10^5
LC-1	68,600	1.0	2.0	-.339		-.9408	1×10^6
LC-2	68,600	1.0	2.0	.9408		-.339	1×10^6
LC-1	38	1.0	2.0	.309		-.951	1×10^6
LC-2	38	1.0	2.0	.951		.309	1×10^6

FIGURE 3.7B-67
TYPICAL MATHEMATICAL MODEL OF A PIPING SYSTEM
BEAVER VALLEY POWER STATION - UNIT 2
FINAL SAFETY ANALYSIS REPORT

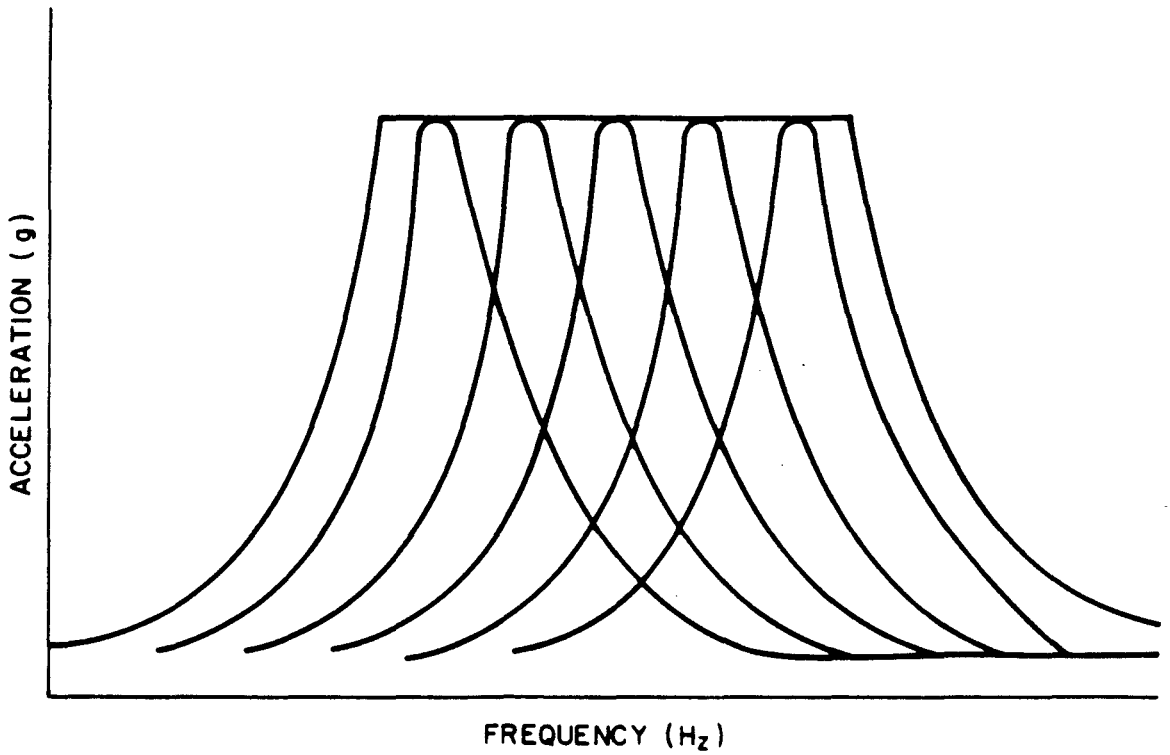

FIGURE 3.7B-68
REPRESENTATION OF FAMILY
OF PEAK RESPONSE CURVES
WITHIN BROADENED RESONANT PEAK
BEAVER VALLEY POWER STATION-UNIT 2
FINAL SAFETY ANALYSIS REPORT

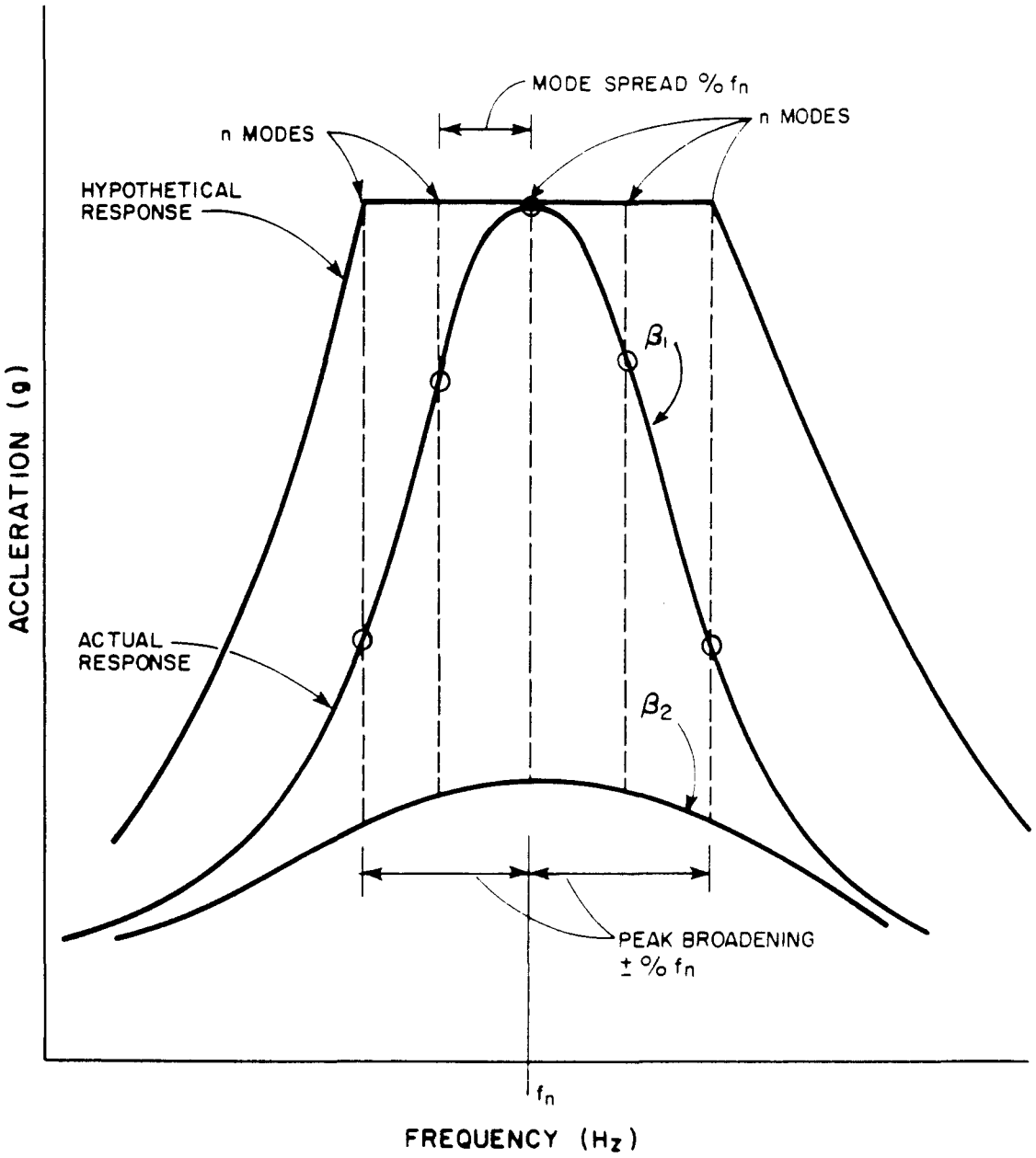

FIGURE 3.7B-69
HYPOTHETICAL VS ACTUAL RESPONSE OF MULTIPLE MODES WITHIN BROADENED RESPONSE PEAK
BEAVER VALLEY POWER STATION-UNIT 2
FINAL SAFETY ANALYSIS REPORT

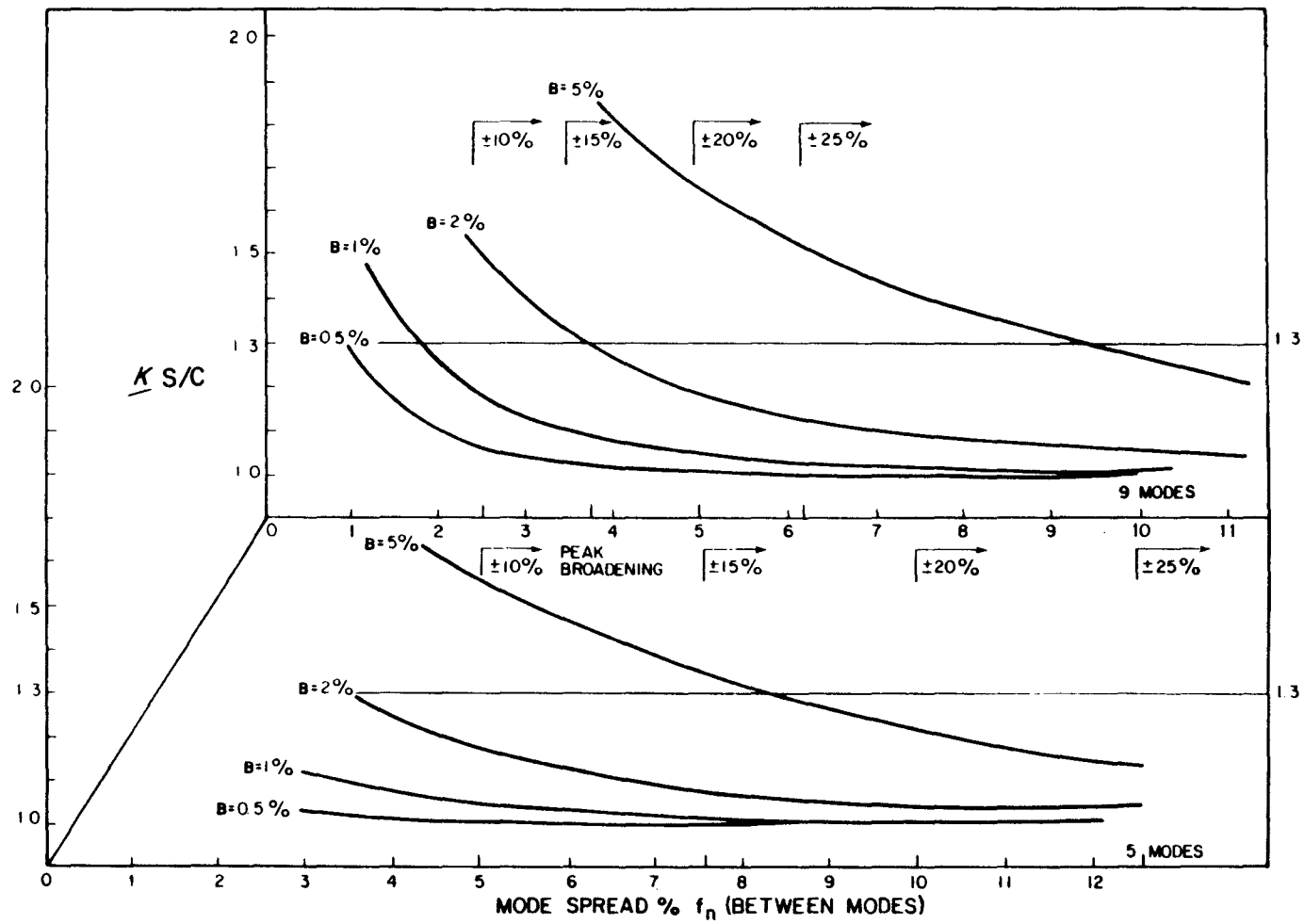

FIGURE 3.7B-70
JUSTIFICATION OF
STATIC LOAD FACTOR
BEAVER VALLEY POWER STATION-UNIT 2
FINAL SAFETY ANALYSIS REPORT

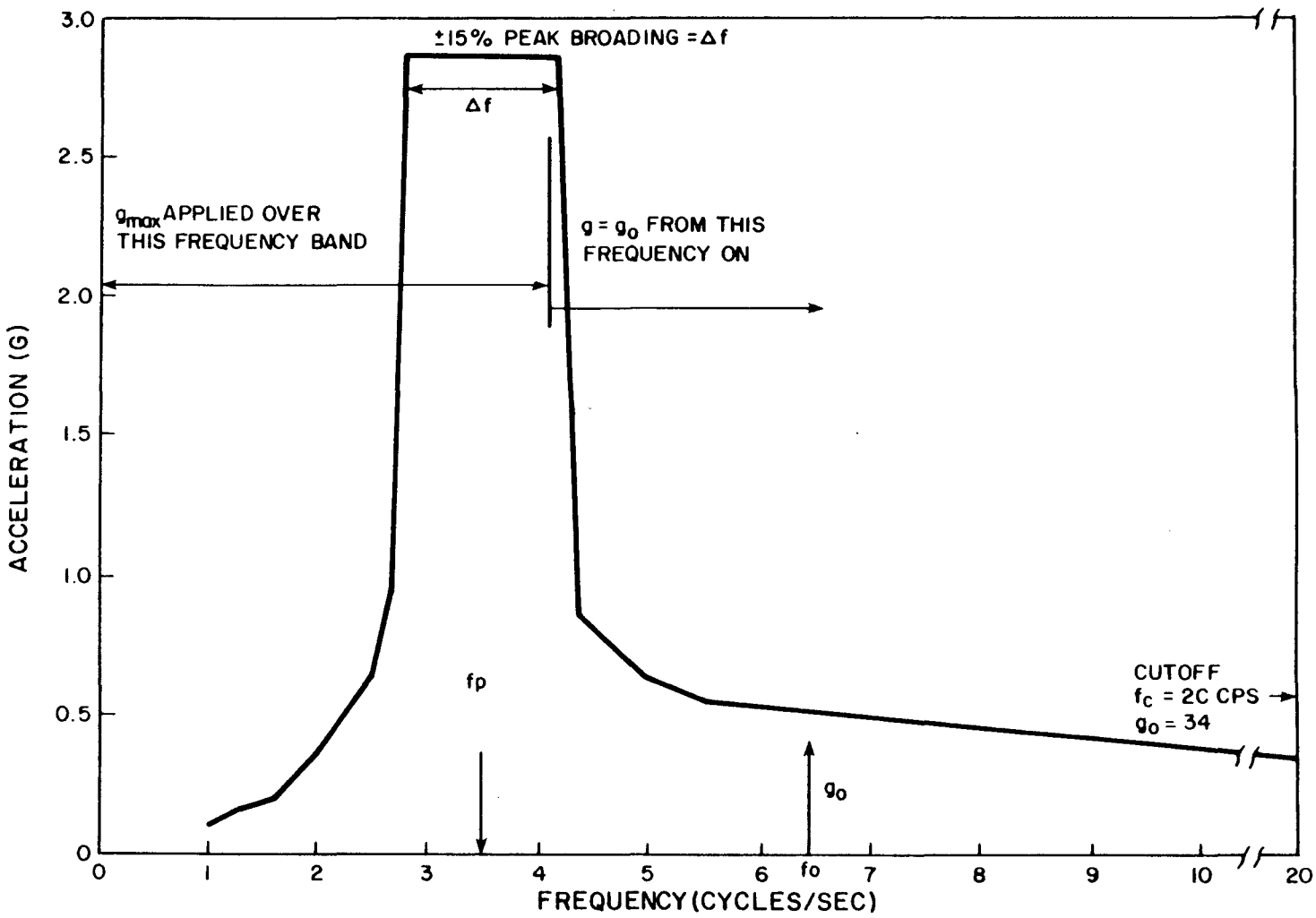

FIGURE 3.7B-71
TYPICAL AMPLIFIED RESPONSE SPECTRA
BEAVER VALLEY POWER STATION-UNIT 2
FINAL SAFETY ANALYSIS REPORT

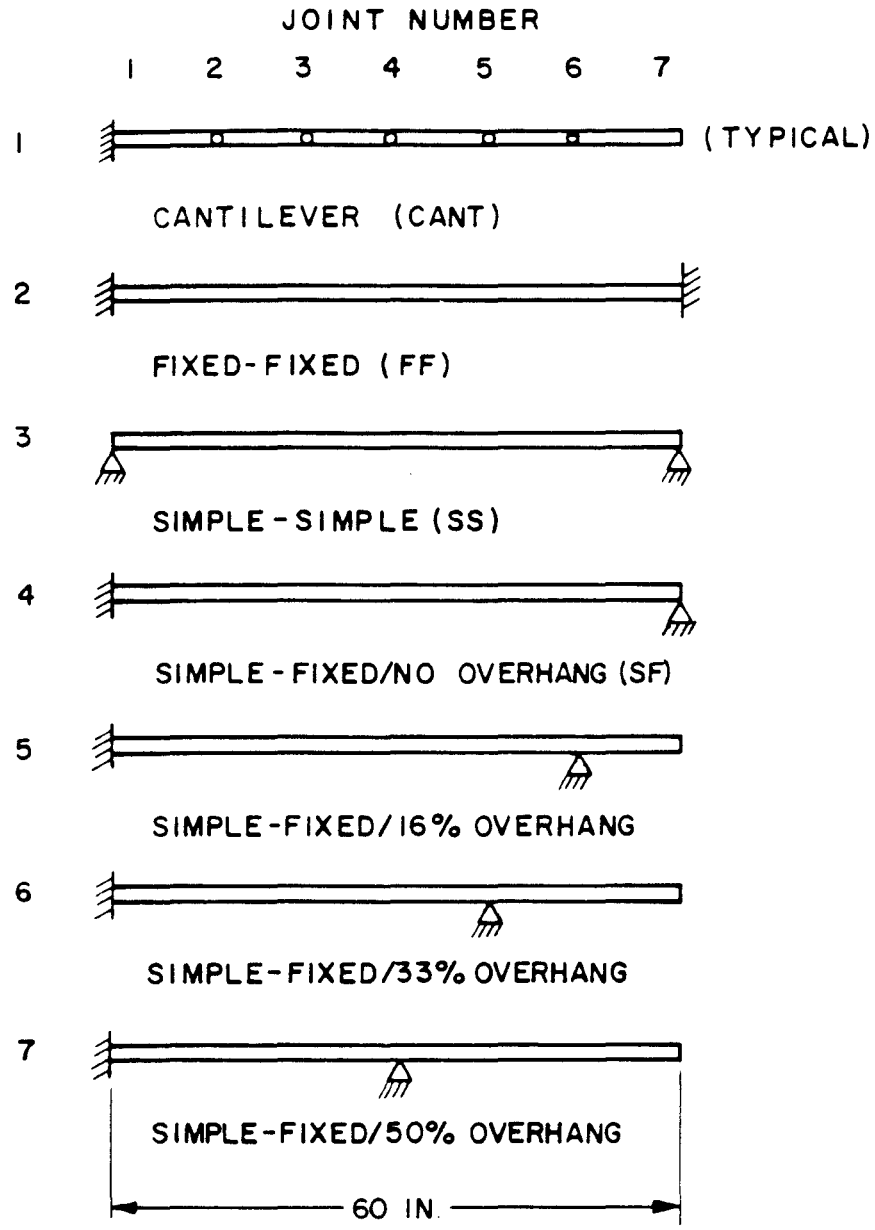

FIGURE 3.7B-72
MODEL BEAMS
BEAVER VALLEY POWER STATION-UNIT 2
FINAL SAFETY ANALYSIS REPORT

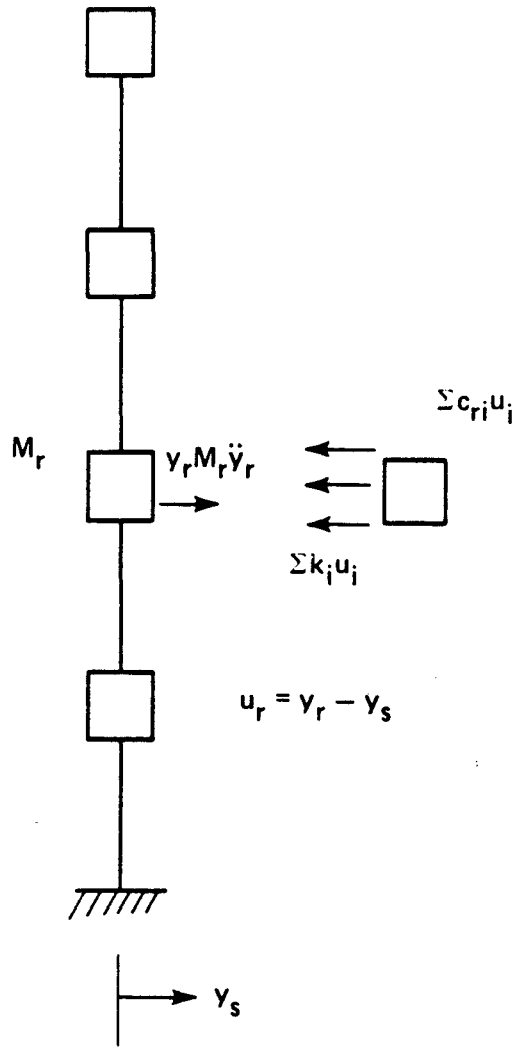

FIGURE 3.7N-1
MULTI-DEGREE OF FREEDOM SYSTEM
BEAVER VALLEY POWER STATION-UNIT 2
FINAL SAFETY ANALYSIS REPORT

3.8 DESIGN OF SEISMIC CATEGORY I STRUCTURES

3.8.1 Concrete Containment

3.8.1.1 Description of the Containment

3.8.1.1.1 General Description

The design, analysis, and construction of the containment structure is similar to, and takes full advantage of Stone & Webster Engineering Corporation's (SWEC'S) experience in, the designs for the following plants:

1. Connecticut Yankee Atomic Power Company's Nuclear Power Plant - Unit No. 1 (Docket No. 50-213).

2. Virginia Electric and Power Company's Surry Power Station - Units 1 and 2 (Docket No. 50-280 and 50-281).

3. Maine Yankee Atomic Power Company's Maine Yankee Atomic Power Station - (Docket No. 50-309).

4. Beaver Valley Power Station - Unit 1 (BVPS-1) (Docket No. 50-334).

5. Virginia Electric and Power Company's North Anna Power Station - Units 1 and 2 (Docket No. 50-338 and 50-339).

The containment structure is a heavily reinforced concrete, steel-lined vessel with a flat base mat, cylindrical walls, and a hemispherical dome. The arrangement of the containment structure is shown on Figures 3.8-1, 3.8-2, 3.8-3, 3.8-4, 3.8-5, 3.8-6 and 3.8-7. The containment is not structurally integral with any of the structures surrounding it (Figure 3.8-8). A "shake space" is provided between the containment and the adjacent structures to accommodate relative structural movement.

The base mat is a soil-bearing concrete slab 10 feet thick, without projections below its lower surface. A 4-inch thick (minimum) layer of porous concrete sub-base underlies the mat and consists of coarse aggregate bound with a water-cement paste. This concrete was made by omitting the fine aggregate from a standard concrete mix. The mix was designed to have a 28-day compressive strength of 1,000 psi minimum. The results of previous laboratory tests have indicated that this concrete provides adequate drainage for the emergency seepage removal system described in the following paragraph.

The exterior surface of the concrete shell and foundation mat, shown on Figure 3.8-9, has a continuous waterproofing membrane to protect the containment structure against water seepage during flood stages resulting from the probable maximum flood described in Section 2.4.3. As a supplementary safety factor, water relief systems are provided

in the floor of the two instrument pits at el 690 feet-11 inches. The pits are located in the mat outside of the containment wall. A sump extends into the mat from the bottom of the pit to a point above the bottom reinforcement. From the bottom of the sump, a vertical 6-inch pipe projects through the reinforcement into the underlying porous concrete. In the event of a flood and unexpected leakage through the membrane, the vertical pipe would allow the water to rise in the sump where it would sound an alarm in the control room after reaching a predetermined height. The water would then be removed by a sump pump to prevent buildup of pressure under and behind the steel liner. The instrument pits are enclosed by the waterproofing membrane protecting the containment structure.

The inside diameter (ID) of the containment cylinder is 126 feet, and the cylinder wall is 4 feet-6 inches thick.

The distance from the top of the mat to the inside of the dome crown is approximately 185 feet. The dome has a thickness of 2 feet-6 inches and an inside radius of 63 feet.

The inside faces of the containment wall, dome, and mat are lined with steel liner plates which act as a leaktight membrane. The liner plate for the walls is 3/8-inch thick and for the dome is 1/2-inch thick. A 1/4-inch plate is used over the base mat.

The containment is provided with a personnel air lock whose ID is 7.0 feet, and an equipment hatch whose ID is 14 feet-6 inches, and contains a 5 feet-0 inch ID x 12 feet-6 inch long emergency air lock. Other penetrations consist of hot and cold process pipes, the fuel transfer tube, and electrical penetrations.

3.8.1.1.2 Reinforcing Steel Arrangement

The foundation mat of the containment structure is strengthened with top and bottom layers of reinforcing, as shown on Figure 3.8-10. Bottom mat reinforcing is placed in a rectangular grid pattern with layers at 90 degrees to each other. Reinforcing for the top of the mat consists of concentric circular bars combined with radial bars. The reinforcing pattern for the top of the mat is arranged to permit a uniform spacing of the vertical wall rebars which extend into the mat. Splices in adjacent parallel rebars in the mat are staggered 4 feet wherever possible.

Hoop tension in the cylinder is resisted by horizontal bars located near the outer and inner surfaces of the wall. All horizontal circumferential bars, including those in the dome, have their splices staggered 3 feet in both circumferential and meridional directions wherever possible.

Longitudinal or meridional tension in the cylinder wall is resisted by rows of vertical bars placed near the interior and exterior faces of the wall. Vertical bars are placed in groups of not more than

20 bars of equal length. These groups are arranged so that no adjacent group in the same or opposite face of the wall have splices closer than 6 feet apart vertically wherever possible. At the temporary construction opening, both the vertical and horizontal reinforcement splices are staggered a minimum of 12 inches.

When the containment is pressurized, radial shear in lower elevations of the containment walls exceeds the capacity of unreinforced concrete. To resist the large radial shear near the base of the wall, flat steel bars, inclined at approximately 45 degrees with the horizontal, are welded to the vertical reinforcing as shown on Figure 3.8-10. A report on tests of concrete specimens containing these shear assemblies was presented to the U.S. Atomic Energy Commission during February 1970 (SWEC 1969). The results proved the adequacy of the design. The welded flat bars are terminated at a level above the mat where the radial shear load is reduced. Above this level, the radial shear is resisted by Z-type reinforcing steel, where required. In the lower portion of the containment wall, deformed studs welded to the liner resist splitting of the concrete in the plane of the vertical rebar as shown on Figure 3.8-10.

Tangential shear (Vu) resulting from the earthquake loading is resisted by the concrete and diagonal reinforcing bars. A maximum allowable tangential shear stress (Vc) is assigned to the concrete (Section 3.8.1.4.1). Stresses in excess of Vc are resisted by inclined reinforcing bars anchored in the mat. The spacing between these diagonal bars is increased as the design tangential shear decreases at higher wall elevations. No diagonal rebars are required above the spring line.

The dome reinforcing consists of horizontal layers of circumferential hoop bars and layers of meridional rebar extending from the vertical reinforcing of the cylindrical wall. Layers are located near both the inner and outer faces of the concrete. The radial pattern of the meridional reinforcing steel terminating in the containment dome results in a high degree of redundancy of reinforcing steel in the dome. Bars are terminated beyond a point where there is more than twice the amount of steel required for design purposes. The rate of convergence of these bars and the low stress requirements, dictated by the arrangement, produce a relatively low bond stress. In a limited number of cases where bars are terminated close to the apex of the dome, anchorage stresses are more critical. These bars are hooked or mechanically secured to provide the required anchorage. Near the crown, the meridional rebars are welded to a concentric ring cast in the concrete as shown on Figure 3.8-11.

A typical detail of the reinforcing steel at the junction of the containment mat and cylinder is shown on Figure 3.8-10, and Figure 3.8-12 shows a typical detail of the junction of the cylinder and the dome.

Section 3.8.1.4 describes the reinforcing steel arrangement at the equipment hatch and the personnel air lock openings as shown on Figures 3.8-13 and 3.8-14.

Minimum concrete cover for all principal reinforcing steel of the containment structure equals or exceeds the requirements of ACI 318-71.

Anchorage for terminated bars is developed either by bond or by means of a mechanical anchorage. In the case of anchorage by bond in a biaxial tension zone, the development length of the bars is increased 25 percent above that required by ACI 318-71 for reinforcement terminating in a tension zone.

The steel liner is not considered as making any contribution to the structural integrity of the containment shell. However, the resultant composite action due to the anchorage of the steel liner to the concrete shell does contribute, and adds to the conservatism of the containment design.

3.8.1.1.3 Containment Liner, Penetrations, and Access Openings

The containment liner consists of a vertical cylindrical portion capped by a hemispherical dome and closed at the bottom by a mat liner portion. The liner pressure boundary includes embedments, insert plates, and penetrations.

The liner plate acts as a leaktight membrane under conditions that can be encountered throughout the operating life of the plant. The liner plate is anchored to the concrete containment at sufficiently close intervals so that the overall deformation of the liner is essentially the same as that of the concrete containment.

All welded seams in the mat, cylindrical liner wall, hemispherical dome, and liner penetrations are covered with continuously welded test channels in a manner similar to those installed at BVPS-1 (Docket No. 50-334). These channels are zoned into test areas by dams welded to the ends of the sections of the channels. The channels are used to check tightness of welds during liner erection. Test ports are provided for each zone of the leak chase channels. After testing during erection, plugs are installed in the test fittings. Plugs remain in place during subsequent leak-rate testing. Test channel plugs are 1/8-inch NPT pipe plugs with socket hex heads. The plugs incorporate tapered pipe threads which are self-locking. Unlike set screws with untapered machine threads, these plugs require no significant torque to assure that they remain in place. Hence, there are no procedure requirements for torquing or tightening channel test plugs.

For channels mounted inside the containment structure (that is, those on the floor mat, penetration and cylinder wall), plugs are accessible throughout the life of the plant. For channels mounted on

the exterior of the dome, plugs are covered by concrete after testing. As added assurance that plugs will not be accidentally disturbed during concrete placement, dome plugs are seal welded in place after testing. Should access to dome test channel zones be required during the operating life of the plant, holes could be drilled through the dome liner. These holes would then be tapped and provided with a type NPT plug after testing.

Surfaces of carbon steel components of the liner, penetrations, and access openings which are exposed to the atmosphere inside or outside of the containment are painted. The coating is comprised of a prime coat of inorganic zinc primer applied in the fabricator's shop and touched up in the field after erection. Finish paint is an epoxy coating system.

Unpainted surfaces covered by concrete are located such that they are exposed to a limited oxygen supply which will only support insignificant corrosion. No need exists for a corrosion allowance.

The liner plate consists of the following:

1. Cylindrical Portion and Dome

   The cylindrical portion of the liner is a vertical circular cylinder attached to the foundation mat at its base. The top of the cylindrical portion is closed by a hemispherical dome. The liner dimensions are given in Section 3.8.1.1.1.

   The 3/8-inch-thick liner served as the internal form for the cylindrical portion of the concrete containment during construction. All liner seams are double-butt welded, except for the lower 30 feet of the cylindrical shell liner or where joint access was limited to one side; these liner plates were welded using a backing plate, as shown on Figure 3.8-15.

   The l/2-inch-thick hemispherical steel dome liner plate served as an internal form for the containment reinforced concrete dome during construction. All seams in the liner dome were double-butt welded as shown on Figure 3.8-15.

   The wall-to-dome liner junction is a double-butt welded joint, as shown on Figure 3.8-15.

   The bottom-to-wall liner plate junction knuckle joint is made of 3/8-inch-thick plates. The end of the knuckle plate in contact with the mat is attached to steel bridging plates, as shown on Figure 3.8-16,

   The knuckle joint (Figure 3.8-16), including the 7/8-inch-thick skirt, was designed as a unit for the same conditions as the rest of the liner. The skirt and the

surrounding concrete isolate the knuckle-shaped section of the liner from a large part of the loads due to temperature and pressure.

2. Mat Liner Plate

The l/4-inch thick bottom liner plates were assembled in place and were continuously welded at their periphery to steel bridging plates which were cast in the reinforced concrete base mat.

Except at the in-core instrumentation area and the sump areas, the bottom liner plate is overlayed with an approximately 2-foot-thick reinforced concrete slab that is anchored to the bottom concrete mat (Figure 3.8-17). This 2-foot-thick slab provides anchorage and support for equipment located in the base of the containment structure. It will insulate the mat liner from temperature effects and prevents damage to the liner from internal missiles.

The 3/4-inch-thick liners in the instrumentation and sump areas are anchored to the containment foundation using 5/8-inch diameter by 20-inch long deformed anchors or 5/8-inch diameter by 6 9/16-inch long headed concrete anchor studs.

3. Embedments

In areas where the transfer of loads through the floor liner plate is required, bridging bars with a rectangular cross section are used. As shown on Figures 3.8-18 and 3.8-19, internal structures are anchored firmly to the concrete base mat by lengths of 4 1/2 by 6-inch-steel bridging bars, which are placed horizontally and extend through the bottom plate liner. The main reinforcing bars are welded to the bottom faces and joined by cadwelds to the top faces of the bridging bars, thus providing continuity of reinforcing through the bottom liner.

The bridging bars form an integral part of the steel liner and conform to the material and workmanship specifications of the steel liner. All welded joints are covered by test channels and are tested, as are all other liner plate joints.

4. Insert and Overlay Plates

The loads derived from support of piping, platforms, or other miscellaneous equipment are transferred to the containment concrete wall through insert plates and their anchors. Sufficient anchorage is provided such that the liner plate adjacent to insert plates is isolated from loads

applied to brackets or attachments, and leaktight integrity is maintained.

Overlay plates are welded directly to the liner plate for the attachment of supports for small (under 3 inches in diameter) piping, conduit, and cable trays.

5. Anchors

The steel containment liner is anchored to the concrete wall and dome with concrete anchors. The shell anchorage attachments in the lowest 16 feet of the liner wall cylinder are deformed anchor bars 5/8-inch in diameter and 3 feet-10 inches long. The remainder of the cylinder and the dome are anchored by 5/8-inch diameter headed anchor studs, 6 9/16 inches long. Tests conducted for one stud manufacturer indicate that, with the manufacturer's recommended depth of embedment of the stud in concrete, the ultimate strength of the stud material can be developed in direct tension. These tests also show that shear failure occurs in the stud adjacent to the weld connecting the stud to the plate (TRW 1975).

3.8.1.1.3.1 Penetrations

Penetrations are used to carry piping, mechanical systems, and electrical services through the containment wall. Isolation systems for piping which penetrates the containment are described in Section 6.2.

Containment penetrations are anchored to and transfer loads to the reinforced concrete containment wall. These penetrations can be classified as follows:

1. Piping System Penetrations

All containment piping penetrations consist of basic containment inserts, each of which consists of a pipe sleeve, approximately 6 feet long with heavy reinforcing plates near both ends, plus additional items as required for the individual services. All containment piping penetration inserts are anchored in the reinforced concrete containment wall so that loads can be transferred from the piping to the reinforced concrete.

For cold penetrations, the piping is welded to a reinforcing plate which is anchored to the containment concrete wall so the loads can be transferred from the piping to the concrete wall, as shown on Figure 3.8-20.

Each penetration insert carrying hot piping (fluid continually over 200°F) is equipped with a water-cooled

cooling unit located on the inside of the penetration encompassing that length of the sleeve which is covered by concrete. Cooling water is supplied by the component cooling water system described in Section 9.2.2.1.

Each hot penetration is designed with a space between the sleeve and the piping for pipe insulation and for the installation of the cooling unit.

The cooling water system, as described in Section 9.2.2, has inlet and outlet lines located on the atmospheric end of the cooler which circulates water through the unit. The cooling water circulation pipes do not require any secondary penetration of the containment structure.

The cooling water system limits the radial heat flow, resulting from convection and radiation from the hot pipe penetration, thereby maintaining the temperature of the concrete in contact with the sleeve within allowable limits. The system also controls the longitudinal heat flow, resulting from conduction from the same heat source, thereby maintaining the temperature of the liner and the temperature gradient along the sleeve within allowable limits.

For hot penetrations, transition from the process pipe to the sleeve is by an integral forging, as shown on Figure 3.8-20.

For multiple penetrations per single sleeve, a forged head links the sleeve with the piping, as shown on Figure 3.8-20. The sleeve is welded to a reinforcing plate which is anchored to the containment concrete wall so the loads can be transferred from the piping to the wall through the forged head and sleeve.

2. Mechanical System Penetrations - Fuel Transfer Tube Enclosure

A fuel transfer tube penetration is provided for the transferring of fuel between the refueling canal in the containment structure and the spent fuel pool in the fuel building. The penetration consists of a stainless steel pipe installed inside an enclosure. As shown on Figure 3.8-24, the inner pipe acts as the fuel transfer tube and connects the refueling canal with the fuel pool. The enclosure is welded to the containment liner and provision is made, by use of a leak chase ring, for leak testing of all welds essential to the integrity of the penetration. Bellows expansion joints are provided on the enclosure to compensate for any differential movement between the two buildings. The enclosure consists of the three sets of bellows, plus the connecting sleeves.

There are two main requirements for the fuel transfer tube enclosure:

a. The bellows must accommodate the maximum deflections, including rotation and offset, between the spent fuel pool and the containment refueling canal.

b. The end of the enclosure inside the containment must withstand pressures and temperatures of the test and loss-of-coolant accident (LOCA) conditions.

The bellows expansion joints were selected to accommodate deflections caused by thermal expansion, seismic motions, and radial movement of the containment wall due to peak internal pressure and temperature.

3. Electrical Service Penetrations

Electrical conductors penetrating the containment structure range in size from No. 16 AWG thermocouple leads to 750 MCM copper cables for 4kV power circuits. The sleeves are welded into the containment liner reinforcement plate with a test channel around the seal weld, as shown on Figure 3.8-21 for periodic leak testing.

The basic electrical penetration is installed in a 12- or 18-inch steel pipe. The header plate of the penetration or the unitized penetration assembly has been welded to this pipe, and a test channel surrounds the weld. A permanent system of pressure monitoring for each electrical penetration has been installed. This permits either continuous or periodic tests for leaktightness.

3.8.1.1.3.2 Access Openings

The containment has the following access openings:

1. Equipment Hatch

The equipment hatch is a single closure penetration approximately 8 feet-4 inches in length with an ID of 14 feet-6 inches. The equipment hatch cover is mounted inside the containment structure and is provided with a hoist with two point suspension and a sliding rail for storage. A positive locking device is furnished to prevent circular swing. The cover is double-gasketed with a leakage test tap between the O rings.

The emergency air lock is a subassembly of the equipment hatch consisting of a double-closure removable penetration 12 feet-6 inches long and 5 feet in diameter attached to the removable equipment hatch cover by a bolted

flanged connection with double O rings. A leakage test tap is located between the "O" rings. A 30-inch-diameter opening is located at each end of the lock for personnel access. The doors swing toward the center of the containment vessel and a viewport approximately 4 inches in diameter is provided at each end of the lock. The doors are mechanically interlocked so that one door cannot be operated unless the other is sealed. However, provisions exist for deliberately violating the interlock by use of special tools or keys. An electromechanical interlock is provided to prevent operation of a door when a pressure differential greater than 0.5 psi exists across the bulkhead.

The operating mechanism includes pressure switches to indicate the sealed or unsealed status of the doors. These switches will energize indicating lights mounted on each airlock operating station and will provide a remote signal to the control room.

Each door is equipped with a valve for equalizing the pressure across the door. At no time will the equalizing valves on both doors be open at the same time and in no case shall an equalizing valve be open on one door while the other door is operating. The equalizing valves are capable of equalizing pressure differential in the emergency air lock within 2.5 minutes (maximum).

The air lock will be operated manually. This includes the operation of the mechanism and the swinging of the doors. In addition to normal operation, it is possible to operate each door from a remote location by manual means only. The inside door is operable from outside the containment structure, and the outside door is operable from inside the containment structure.

Both doors of the air lock are designed to withstand the containment test pressure of 52 psig. Also, each door is designed to withstand 8 psia pressure within the containment structure with full atmosphere on the other side.

The interior door is provided with an additional securing device to withstand the maximum test pressure inside the air lock when the containment structure is at 8 psia.

All shafts penetrating the door or bulkhead have double packing and a test connection to permit periodic leak testing between the seals.

Three pressure gages are provided: two penetrate the bulkhead at the reactor end of the air lock and measure containment vessel pressure and interior air lock pressure,

and one penetrates the bulkhead at the opposite end of the air lock and measures interior air lock pressure.

Test connections are provided for periodic leak testing between the double seals on each door.

The emergency air lock has a capped emergency air connection, which will permit testing of the lock at any time without interfering with the normal operation of the plant. Two electrical penetration connections with six spare terminals for telephone and other circuits are provided.

The emergency air lock will be unbolted from the equipment hatch and secured on a cart for removal before the equipment hatch is used.

The air lock's barrel, outside of the equipment hatch, is enclosed full-length in insulation to conserve heat input at the containment end. The heat retained is sufficient to prevent loss of metal ductility during frigid weather.

2. Personnel Air Lock

The personnel air lock is a double-closure penetration, 7 feet wide (ID) and 15 feet long. Each closure is flanged and double-gasketed with a leakage test tap between the O rings. The enclosed space between the O rings is pressurized to containment design pressure to test for leakage through the access door when it is locked in place. The entire personnel air lock can be independently pressurized to containment design pressure for testing.

Each door (closure) consists of three major components: a nonrotating head, a rotating locking ring, and a fixed shell extension flange. Both doors are hinged, hydraulically latched, and manually swung after the latch is released. The doors are interlocked so that if one door is open the other cannot be unlatched. Provisions have been made to allow for opening or closing of the doors remotely from either inside or outside the containment. Also included is one 6-inch diameter viewport in each door.

Each door is furnished with a pressure-equalizing, manually-operated valve installed on each side of both doors, which allows equalizing at an adjustable rate by the person entering or leaving the air lock. These valves are capable of equalizing the pressure in the personnel air lock within 5 minutes. As a safety device, a normally-open differential pressure switch, which prevents the opening of the door latches before 0.5 psi is obtained, is installed for each of the equalizing valves.

Each door of the personnel air lock is provided with an 18-inch diameter, double-gasketed, emergency manhole and cover. Each manhole is similar to a navy scuttle hatch, which is operated by handwheels on each side of the door. The design of the emergency manholes includes means of fast equalizing of the differential pressure across the manhole and appropriate interlocks to prevent the cover from blowing open.

Also provided are two electrical penetration connections, a 3-inch capped emergency air connection, a walkway, and two folding waiting benches inside the air lock. Each electrical penetration has at least six spare terminals for telephone and other circuits.

3.8.1.2 Applicable Codes, Standards, and Specifications

Structural design, materials, materials quality control, fabrication, construction testing, and in-service inspection, where applicable, conform to the following codes, standards, and specifications unless otherwise stated.

3.8.1.2.1 General

3.8.1.2.1.1 American Concrete Institute

ACI codes, standards, and specifications are presented in Table 3.8-1.

An exception is taken to the pressure tests called for in ACI 318-71, Section 6.3.2.4. The following shall be substituted: pipes which contain liquid, gas, or vapor, and which are embedded in concrete will be pressure-tested to the applicable ASME, ANSI, or Fire Protection and Plumbing Code requirements.

3.8.1.2.1.2 American Society of Mechanical Engineers

The American Society of Mechanical Engineers (ASME) Boiler and Pressure Vessel (B&PV) Code, Section III, Nuclear Vessels, 1971 Edition with addenda through Winter 1972, is used as a guide in the selection of materials, fabrication (including welding), nondestructive examination, and inspection of the steel containment liner and mat embedments.

ASME materials specifications for materials used in construction are presented in Table 3.8-2.

Applicability of the design provisions of ASME III is discussed in Section 3.8.1.2.3.

3.8.1.2.1.3 American Institute of Steel Construction

Structural design, materials and fabrication conform to AISC's Specification for the Design, Fabrication, and Erection of Structural

Steel for Buildings (February 12, 1969), with or without including Supplement No. 1 (November 1, 1970) and Supplement No. 2 (December 8, 1971), with the following exception:

An exception is taken to the provision that plate on continuous bar washer at least 5/16 inch thick are required to cover long slots in the outer plies of joints with ASTM A325 bolts, as called for in the Specification for Structural Joints Using ASTM A325 or A490 Bolts, dated April 18, 1972. For these applications, standard circular washers have been demonstrated to be adequate.

3.8.1.2.1.4 American Welding Society

The welding of structural and reinforcing steel meets the requirements of AWS D1.1-1972, 1973, 1975, or 1980, "Structural Welding Code," and AWS D12.1-61, "Recommended Practice for Welding Reinforcing Steel, Metal Inserts, and Connections in Reinforced Concrete Construction."

3.8.1.2.1.5 Occupational Safety and Health Standards

Applicable Safety and Health Standards are in conformance with U.S. Department of Labor, Occupational Safety and Health Administration, October 18, 1972, and the proposed Walking-Working Surfaces, September 6, 1973.

3.8.1.2.1.6 American National Standards Institute

Applicable ANSI codes, standards, and specifications are given in Table 3.8-3.

Exceptions to ANSI N45.2.5-1974 are discussed in Section 1.8, Table 1.8-1, under Regulatory Guide 1.94, Rev. 1.

3.8.1.2.1.7 American Society for Testing and Materials

Applicable ASTM materials specifications are presented in Table 3.8-4. Subsequent revisions to the standards and specifications listed are considered acceptable.

3.8.1.2.1.8 Handbook for Concrete and Cement, Corps of Engineers, U.S. Army

Specifications for cement and water stops are provided in CRD C 119, "Method of Test for Flat and Elongated Particles in Coarse Aggregate

CRD," C513, "Specification for Rubber Water Stop," and CRD C 572, "Specification for Polyvinyl Chloride Water Stop."

3.8.1.2.1.9 U.S. Nuclear Regulatory Commission Regulatory Guides

U.S. Regulatory Commission (USNRC) Regulatory Guides, listed in Table 3.8-5, are applicable to the extent described in Section 1.8.

3.8.1.2.2 Structural Specifications

All Category I structural specifications are written to comply with the applicable codes, standards, specifications, and procedures given in this Final Safety Analysis Report.

Table 3.8-6 is a summary of the principal plant structural specifications that are prepared for Seismic Category I materials.

3.8.1.2.3 Steel Liner, Penetrations, and Access Openings

Steel liner, penetrations, and access openings are in conformance with the codes presented in Table 3.8-7 to the extent discussed in this section, and further clarified in the ASME Code Baseline Document.

The specification for the steel liner, penetrations, and access openings is written to stipulate the extent of applicability of the codes, standards, specifications, and procedures defined herein. Table 3.8-8 is a summary of the materials called for in this specification.

The personnel air lock and the emergency air lock are designed, fabricated, and stamped to ASME III, Class MC.

The equipment hatch is designed and fabricated to ASME III. The equipment hatch is not code stamped as it cannot be pressure tested as a pressure vessel (that is, 45 psig internal pressure), but is tested during the final structural acceptance test of the concrete primary reactor containment.

The fuel transfer tube bellows assemblies are designed, fabricated, and code stamped ASME III, Class MC, as addressed by Code Case 1330-3 (special ruling), Special Equipment Requirement Section III, and Code Case 1177.

To provide additional assurance of the bellows design, duplicate bellows assemblies were tested in accordance with ASME III, Winter 1974 Addendum, paragraph NE-3365.2(e)(2), which was later modified as follows:

"The 15 percent maximum convolution pitch in accordance with paragraph NE-3365.2(c) for unreinforced bellows may be exceeded provided the bellows remain within the elastic range."

These requirements provide assurance that the bellows assemblies will function as designed for the life of the containment liner.

The process piping penetrations are designed, fabricated, and code stamped ASME III, Class 2 NPT. This also complies with the process piping system of which these are a part.

The penetrations are analyzed to Class 2 with further analysis to the more stringent Class MC requirements since MC is invoked as a guide.

The electrical penetrations through the liner are only sleeves which have electrical canisters welded on the outer end. Thus, the sleeves form a part of the containment boundary extension to provide installation of the electrical canisters. The electrical canisters are designed and fabricated to IEEE Standard 317-1976, which invokes ASME III Class MC. ASME III Section NE-3700 states "The rules for design of electrical and mechanical penetration assemblies shall be the same as for vessels (see NE-3300) except that the design and the materials performing electrical conducting and insulating functions of electrical penetration assemblies need not meet the requirements of this code." Thus, the electrical penetrations are designed and fabricated using ASME III Class MC as a guide, which is compatible with the remainder of the containment liner.

Thus, those parts of the liner to which Class MC directly applies are designed, fabricated, and stamped Class MC. Those to which all provisions of the code cannot be applied, for the reasons described, are not stamped. The resulting product complies to the intent of ASME III, (that is, to provide a high quality leaktight containment boundary).

3.8.1.3 Loads and Load Combinations

3.8.1.3.1 Containment Structure Shell and Mat

The containment structure is designed to have ultimate load capacity, as modified by the safety provisions of ACI 318-71, of not less than that required to satisfy the following structural loading criteria:

$$U = 1.0D + 1.5P + 1.0\ (T + TL) \qquad (3.8\text{-}1)$$

$$U = 1.0D + 1.25P + 1.0\ (T + TL) + 1.25E \qquad (3.8\text{-}2)$$

$$U = 1.0D + 1.0P + 1.0\ (T + TL) + 1.0E' \qquad (3.8\text{-}3)$$

$$U = 1.0D + 1.0T + 1.0WT \qquad (3.8\text{-}4)$$

where:

U = Required strength to resist design loads,

D = Dead load of structure and equipment, including efect of earth, hydrostatic forces, ice, and snow loads, when their effect increases the resultant stresses.

P = Pressure load resulting from the design basis accident (DBA)(45 psig).

T = Load due to maximum temperature gradient through the concrete shell and mat for normal operating conditions.

TL = Load exerted by the liner, when it is exposed to the temperature associated with the pressure resulting from a DBA (280°F) (Section 6.2.1), or other significant pipe break event.

E = Loading from the 1/2 SSE (Section 3.7).

E′ = Loading from the SSE (Section 3.7).

WT = Loading due to tornado (Section 3.3).

The four equations represent a conservative combination of loads selected among events, which may occur during the life of the plant. Because the design basis accident (DBA) for the containment structure is a LOCA, no direct interaction with a ruptured pipe appears in Equations 3.8-1 through 3.8-3.

Flooding after a LOCA is negligible.

Design controlled by the listed loading combinations will remain substantially elastic under the service conditions (pre-cracking of the containment shell concrete under structural acceptance test loads is presumed). Structural performance during the structural acceptance test is predicted by analysis using the following load combination:

$$D + L + P_t + T_t \qquad (3.8\text{-}5)$$

where:

$P_t + T_t$ represent pressure and temperature effects expected during the test. Monitoring of the structure during the test is described in Section 3.8.1.7.

The earthquake loadings include consideration of simultaneous excitation from the horizontal and vertical earthquake motions as described in Section 3.7B.3.6.

3.8.1.3.2 Steel Liner

Load combinations which control the design of the concrete structure are not the most severe for the liner components.

The liner plate, anchors, insert plates, overlay plates, and embedments have been designed for the load combinations presented in Table 3.8-9. Because of its specialized function, pressures and temperatures resulting from a LOCA are considered design loads under the provisions of Subsections NE-3100 and NE-3200 of the ASME III Code. The analysis of the post-DBA condition is not necessary since the lowest post-DBA pressure is between atmospheric and normal operating pressure.

During the severe operational condition, the minimum design pressure of the containment can occur. This pressure is the minimum operating air pressure minus the pressure drop due to the maximum containment cool-down situation, which results from accidental operation of the quench spray subsystem (Section 6.2.2). Assuming that the containment air is at 108°F and is suddenly cooled to the quench spray water temperature of 45°F, the vacuum would be increased by about 1.4 psi. This condition results in the minimum possible containment pressure of 8.0 psia, and the minimum temperature of 45°F.

The barometric pressure change due to the maximum hypothetical tornado is 3.0 psia. This atmospheric disturbance causes a decrease in the atmospheric pressure, which decreases the differential between the atmospheric pressure, and the containment ambient pressure. Since this situation decreases the potential for stresses in the containment liner, it is not analyzed.

3.8.1.3.3 Penetrations and Access Openings

Portions of penetrations and access openings which are not backed by concrete are analyzed to the loads and load combinations discussed in Section 3.8.2. Piping penetrations meet the more stringent requirements for their intended piping function (ASME Subsection NC) or the containment function. The containment function is discussed in Section 3.8.2.

3.8.1.4 Design and Analysis Procedures

3.8.1.4.1 Containment Structure

The containment structure consists of a hemispherical dome, a cylindrical shell, and a circular mat supported by an elastic subgrade. The design, analysis, and construction of the containment structure are similar to other plants designed and SWEC, as listed in Section 3.8.1.1.1. The containment structure is analyzed and designed for the load combinations given in Section 3.8.1.3.1.

The analysis of the mat for axisymmetric loading is accomplished using the program MAT 6 which is described in Appendix Section 3A.1.8. This program treats the mat as a symmetrically loaded circular plate on an elastic foundation. The general method is described by Zhemochkin and Sinitzin (1962). The program is set up so that the foundation stiffness can be formulated either through Boussinesq's approach or through a Winkler-type assumption. Zhemochkin's method is modified to account for a finite depth of elastic foundation, that is, the distance between mat and underlying rock. In addition, the cylindrical containment wall, crane wall, and primary shield wall are considered as elastic constraints, which are determined by applying compatibility conditions at the shell mat interface.

For the purpose of calculating the elastic constraint of the containment, the base of the cylinder is assumed to be completely cracked vertically and cracked horizontally to the neutral axis of the transformed section. At this location, the cylinder has a hoop stiffness of the circumferential rebars and the meridional bending stiffness of the transformed section.

A short distance above the mat, the meridional bending moment becomes so small that the entire meridional cross section is in a state of tension. Above this plane, the cylinder is assumed to be completely cracked horizontally and vertically.

Thus, the elastic constraint is determined from a cylinder which is divided into a short shell having the properties of a cross section completely cracked vertically and partially cracked horizontally, and a long shell having the properties of a cross section completely cracked horizontally and vertically.

Seismic analysis of the containment structure described in Section 3.7B.2 provides the dynamic loads imposed on the mat. Since these loads are asymmetric, the mat is analyzed using the finite difference computer program SHELL 1 which is described in Appendix Section 3A.1.2.

The discontinuity forces at the mat-shell junction, calculated as a part of the mat analysis, are used as boundary conditions for the analysis of the cylindrical shell which is performed using the program SHELL 1. The seismic analysis of the containment structure provides the accelerations to which the containment structure would be subjected. These accelerations are applied as static loading to the shell. The tangential shear caused by the seismic loading is resisted by the concrete or by the concrete and a system of diagonal rebars. The maximum allowable tangential shear stress carried by the concrete (Vc) is assumed not greater than 40 psi. This value of Vc was selected on the basis of SWEC nonproprietary reports No. SWND-5, dated November 1969 and submitted to the USAEC on December 3, 1969, and SWND-5S, dated March 1970 and submitted to the USAEC on April 10, 1970. Stresses in excess of Vc are resisted by inclined reinforcing

bars. The specified design compressive strength of the concrete carrying the tangential shear is not less than 3,000 psi with coarse aggregate not smaller than size No. 467, as given in ASTM C33-71. In areas of severe reinforcement congestion, coarse aggregate not smaller than size No. 7 is used.

The diagonal reinforcement required to supplement the tangential shear ability of the concrete consists of No. 14 rebars anchored in the mat and spaced horizontally 2 feet on centers, both ways, at the base of the wall at el 690 feet-11 inches. The spacing between these diagonal bars is increased as the design tangential shear decreases at higher wall elevations. No diagonal rebars are required above the spring line.

The requirements for diagonal reinforcement necessary for carrying the (Vu-Vc) shear force are determined by an analysis based on a paper by Prof. M. J. Holley, Jr. (1969) of MIT. The bar net vertical, horizontal, and diagonal reinforcing is treated as a continuum. This allows the establishment of a strain relationship between horizontal, vertical, and diagonal reinforcement. The total force in the diagonals is taken as the sum of forces determined under a symmetric loading due to internal pressure and vertical earthquake load (Vu=0) and involving only horizontal and vertical strains, plus forces determined under an asymmetric stress distribution due to seismic shear (Vu-Vc) and involving only shear strains.

Two temperature conditions are considered in the analysis of the containment:

1. Temperature under normal operating condition.

2. Temperature associated with the DBA. This is the transient temperature which, when combined with the coincident internal pressure, will produce the most adverse effects on the reactor containment structure.

Under normal operating conditions, the temperature gradient to produce the worst stress resultant is used.

The effect of the liner temperature increase associated with the DBA condition on the concrete containment shell is determined by the following procedure. For this condition, it is assumed that the temperature of the liner increases and the concrete remains at its ambient temperature. Liner expansion is limited by the concrete shell and a pressure develops between the concrete shell and the liner. The equivalent pressure exerted by the liner on the concrete shell is given by the expression:

$$Pe = LH \times hL/RL \qquad (3.8\text{-}6)$$

where:

Pe = equivalent pressure,

hL = thickness of liner,

RL = radius of liner, and

LH = circumferential liner stress.

At the junction of the mat and shell, it is assumed that the mat prevents radial movement of the shell; therefore, at this location, the circumferential stress in the liner used to determine equivalent pressure is:

LH = alpha X Es X delta T (3.8-7)

where:

Es = Young's modules of the steel liner,

alpha = coefficient of thermal expansion of the liner, and

delta T = change in temperature due to DBA.

A short distance above the mat, where the effect of the mat to shell discontinuity is negligible, the liner and concrete shell expand due to the DBA pressure and temperature of the liner. Free radial displacement of the liner due to temperature would be larger than the displacement of the reinforced concrete shell due to the DBA pressure. Thus, the liner will be constrained under pressure by the concrete shell. The resulting pressure exerted by the liner is determined from the expression for equivalent pressure given before. The liner stress is determined by the following procedure:

Expressions for stresses in the shell and liner are written in terms of the meridional and circumferential liner strains. These are inserted into the force equilibrium equations resulting in an explicit solution for liner strains from which liner stresses are determined.

The effects of creep and shrinkage of concrete are not important considerations in the analysis and design of a pre-stressed concrete containment. Shrinkage results in meridional and radial displacements which are the opposite of the displacements caused by the principal loads, temperature and internal pressure. Consequently, the effects of creep and shrinkage can be safely ignored.

Cracking is an important consideration in the analysis and design of a reinforced concrete containment. For this reason, stiffness of the concrete is adjusted for the extent of cracking present under various design conditions. When the concrete is completely cracked, calculation of the stiffness of the structure uses only the properties of the reinforcing steel. The steel liner is assumed to make no contribution to the structural integrity of the containment shell. However, the resultant composite action due to the anchorage of the steel liner to the concrete shell does contribute, and adds to the conservatism of the containment design.

The penetrations through the containment wall are grouped into the following three categories for the purposes of analysis and design:

1. 12-inch diameter (nominal) or less

   No special or additional reinforcing is provided. The principal wall reinforcement is located to avoid interference with the penetration.

2. All piping penetrations larger than 12-inch diameter (nominal)

   Reinforcing bars terminated at penetrations are replaced by at least twice the number of bars, one-half of these being placed on each side of the opening. Diagonal reinforcing bars are also provided around openings to take shear and diagonal tension. The anchorage length of the additional bars that frame the openings is determined by using a conservative value for bond stress. This method is consistent with established practice and pressure-tested at the plants listed in Section 3.8.1.1.1.

3. Personnel access and equipment access hatches

   Penetrations for the equipment and personnel access hatches are analyzed using the 3-dimensional finite element capability of the computer program STRUDL II which is discussed in Appendix Section 3A.1.1.

   The thickened ring beam and cylinder wall for both hatches are assumed to be cracked, and to have the extensional stiffness of the reinforcing bars only. The analysis shows that sizeable tangential (in plane) shears exist in the wall near the ring beam. These shears are resisted by reinforcing bars which are placed parallel to the typical earthquake shear bars.

   The ring beam is designed to resist the axial tension and shears resulting from the loading criteria listed in Section 3.8.1.3. The axial tension is assumed to be resisted by the reinforcing bars only. The shears,

including torsional shear, are resisted entirely by stirrups placed radially around the penetrations.

In effect, any concrete resistance to tension and shear is neglected. The principal circumferential and meridional reinforcing bars, as designed, are extended to the inner face of the ring beam, hooked 90 degrees and cadwelded to each other, thereby providing shear resistance additional to that provided in the design.

The normal pattern of membrane forces and moments (meridional and circumferential) in the containment wall is disrupted in the region of the hatch openings. The redistribution of these forces and moments is provided by the finite element computer program and extra reinforcement is added to areas of marked deviation from the normal pattern.

3.8.1.4.2 Steel Liner

The containment liner plate is analyzed and designed for the load combinations specified in Section 3.8.1.3.2.

The thermal analysis of the wall-to-mat transition area of the liner, including the knuckle region and support skirt, is done using the computer program TAC2D which is described in Appendix Section 3A.1.5. The results of this analysis along with the forces obtained from the analysis of the cylindrical portion of the liner are used as input to the computer program SHELL 1 to analyze this region. SHELL 1 is described in Appendix Section 3A.1.2.

The cylindrical and dome portions of the liner plate are analyzed using the computer program SHELL 1. This analysis provides the forces in the liner plate which are used for the design of the plate and as boundary conditions for the analysis of the wall-to-mat transition area of the liner as well as the analyses of all the penetrations.

The liner is considered firmly anchored to the containment concrete under all loading conditions, and liner loads are determined from the analysis of the containment structure assuming displacement compatibility between the liner and the inside face of the concrete containment wall or dome. Section loads developed from the SHELL 1 analysis, adjusted by hand analysis to include seismic responses, are proportioned according to the relative stiffness of the liner and concrete, taking into account the extent of concrete cracking. Membrane tension, compression, and shear distributions in the liner are thus provided.

The analysis of the liner adjacent to the penetrations is performed as a part of the analysis of the penetrations. The analysis is accomplished with the computer program ASAAS which is described in

Appendix Section 3A.1.4. The model includes the penetration and reinforcement collar as well as the liner up to a distance of approximately three times the radius of the penetration from the center of the penetration.

The loads derived from the support of piping, conduit, or miscellaneous equipment are transferred to the containment concrete wall through insert plates and their anchors. Sufficient anchorage is provided to ensure that the liner plate adjacent to the insert plates is isolated from the loads applied to brackets or attachments, and the leaktight integrity of the liner plate is maintained. Manual calculations are used to determine the resultant anchor loads.

The anchors for the liner plate are evaluated by manual calculations. Since the forces in the liner are usually compressive (test condition is an exception), the anchor studs are spaced throughout the liner wall and dome to prevent buckling. Pitch dimensions are determined by the procedure set forth by Timoshenko and Gere (1961) for a cylindrical shell under combined axial and uniform lateral pressure. Compressive forces which tend to buckle the liner are obtained from the liner plate analysis. These forces are transformed into the axial load and lateral pressure required by the referenced text.

Shear loads for the anchors are determined by assigning an area of influence to each anchor. Boundary loads on each area are calculated from the membrane force distributions. Equilibrium of each area requires that shear loads be transferred to the anchor. The anchor is designed for these loads.

3.8.1.5 Structural Acceptance Criteria

3.8.1.5.1 Containment Structure

The containment structure is designed for the loads and load combinations presented in Section 3.8.1.3.1. Allowable stresses, unless otherwise defined, are in accordance with ACI 318-71. Details of the design conform to ACI 318-71 and the additional requirements discussed in Section 3.8.1.4.

The tangential shear stress, Vu, resulting from earthquake loading is resisted by the concrete and by diagonal reinforcing bars. As discussed in Section 3.8.1.4.1, the maximum allowable tangential shear stress, Vc, carried by the concrete is assumed to be not greater than 40 psi.

3.8.1.5.2 Steel Liner

The load combinations and the corresponding allowable stresses used in the analysis and design of the steel liner plates and anchors are presented in Table 3.8-9.

Piping penetrations meet the requirements for the process piping systems of which they are a part. In addition, those portions which are not concrete backed and which form a part of the containment boundary meet the requirements discussed in Section 3.8.2.5. Other steel components not backed by concrete also meet the requirements discussed in Section 3.8.2.5.

3.8.1.6 Materials, Quality Control, and Special Construction Techniques

For applicable codes, standards, and specifications, refer to Section 3.8.1.2. The quality control program for the fabrication and construction of the containment complies with the requirements of Appendix B of 10 CFR 50 and the applicable Regulatory Guides listed in Section 3.8.1.2. Exceptions to these guides are indicated in this Section (3.8.1) or in Section 1.8.

The description of the Quality Control Program is given in Section 17.1.

3.8.1.6.1 Concrete

The concrete and its constituents meet the requirements of Regulatory Guide 1.55 with the exceptions given in Section 1.8.

3.8.1.6.1.1 Materials

Cement conforms to the requirements of Portland Cement of ASTM C 150, Type II. Fine and coarse aggregates conform to the requirements of ASTM C33.

Air-Entraining Admixtures conform to the requirements of "Standard Specification for Air-Entraining Admixtures for Concrete," ASTM C260, when tested in accordance with "Standard Method of Testing Air-Entraining Admixtures for Concrete," ASTM C233.

The concrete mixes used in the containment structure yield a unit weight of at least 135 lbs/ft^3, air- and oven-dried, in accordance with ASTM C567.

The compressive strength of the concrete in the mat, shell, and dome is at least 3,000 psi at 28 days with a maximum slump of 4 inches except as indicated in Section 1.8.

3.8.1.6.1.2 Quality Control

Concrete protection for reinforcement, preparation, and cleaning of construction joints, concrete mixing, delivering, placing, and curing, meets the requirements of Regulatory Guide 1.55 with the exceptions given in Section 1.8.

Curing and protection of freshly deposited concrete conform to ACI 301, Chapter 12, except that curing compounds are not used on surfaces to which additional concrete is to be bonded, and where wood and/or metal forms are used, and remain in place for curing, the forms are kept wet as required to prevent their opening at the joints and drying out of the concrete.

Concrete batching conforms to ASTM C94, ACI 301, and ACI 304.

The concrete is sampled and tested during construction in accordance with ACI 301 and ACI 318 to ensure compliance with the specifications.

Concrete strength tests of the job concrete are performed in accordance with ACI 301, Chapter 16, supplemented by the following: not less than two sets of compression test specimens are made for each strength of concrete placed during the first 2 days of placing concrete. Thereafter, one set of test specimens is made for each 8-hour shift, or for every 150 yd^3 for Seismic Category I structures and for every 250 yd^3 for other structures, whichever is less, of each mix design of concrete placed in any 1 day. In addition, one set of specimens is made whenever, for any reason, the material, method of concreting, or proportioning is changed.

The test specimens for compressive strength are 6-inch diameter and 12-inch long cylinders. Each set consists of three specimens; one is tested at 7 days and two at 28 days age.

The strength level of the concrete is considered satisfactory if the averages of all sets of three consecutive strength test results equal or exceed the specified compressive strength f'c and no individual strength test result falls below the specified compressive strength f'c by more than 500 psi.

If any strength test results fail to meet the criteria of ACI 318 as specified in the previous paragraph, specimens of hardened concrete are obtained and tested in accordance with "Method of Obtaining and Testing Drilled Cores and Sawed Beams of Concrete" (ASTM C42). The concrete specimens are evaluated in accordance with ACI 318, Chapter 4. If necessary, strength evaluation of the concrete member and load tests are made in accordance with ACI 318, Chapter 20.

Statistical quality control of the concrete is maintained by a computer program based on the article "Application of Computers in the Evaluation of Quality Control of Concrete" in ACI Publication SP-16, "Computer Application in Concrete Design and Technology." This program analyzes compression test results in accordance with methods established by ACI 214.

3.8.1.6.1.3 Construction Techniques

In general, concrete in the wall and dome of the containment structures is placed in approximately 6-foot-high lifts around the circumference. Each lift is constructed in approximately 18-inch layers placed at such a rate that concrete surfaces do not reach their initial set before additional concrete is placed.

Forms are used on the exterior of the concrete dome to a line about 50 degrees above the horizontal. The permanent steel liner serves as the inner form for concrete. For the area where exterior forms are used, the concrete joints lie in horizontal planes. Above the 50 degree line, the dome concrete is placed in three placements without the use of exterior forms.

3.8.1.6.2 Reinforcing Steel

3.8.1.6.2.1 Materials

Reinforcing bars size No. 11 and smaller conform to the requirements of ASTM A615 Grade 40 or 60. Reinforcing bar sizes No. 14 and 18 are grade 50 per ASTM A615 as modified by the special mechanical and chemistry requirements presented in Table 3.8-10.

Cadweld T-Series reinforcing steel splices are full tension splices manufacturered by Erico Products, Inc., Cleveland, Ohio, and are used to splice No. 14 and 18 reinforcing bars. In restricted areas, reinforcing bars are butt-welded in a manner conforming to the requirements of AWS D12.1-61. Cadweld splices are made in accordance with the instructions issued by the manufacturer.

3.8.1.6.2.2 Quality Control

Reinforcing Bars

For the No. 14 and 18 bars used in the containment structure, ingots and billets are traced with identifying heat numbers. Bundles of bars are tagged with a heat number as they come off the rolling mill. A mark is rolled into bars to identify them as possessing the chemical and mechanical qualities specified.

Inspectors from SWEC witness, on a random basis, the pouring of the heats and the physical and chemical tests performed by the manufacturer of the reinforcing bars.

Bars not meeting specification are rejected.

Mill test reports showing actual chemical and mechanical properties are furnished to the owner for each heat of steel used in making all reinforcing steel furnished.

Cadweld Splices

Splicing complies with the requirements of Regulatory Guide 1.10, Revision 1, dated January 2, 1973 with the exceptions given in Section 1.8.

3.8.1.6.2.3 Construction Techniques

General

Fabrication and placing of reinforcing steel conform to the requirements of Paragraph 5.4 of ACI 301 and Section 7.14 of ACI 318-71.

Tack welding of reinforcing steel is not permitted.

3.8.1.6.3 Structural Steel

3.8.1.6.3.1 Material

Steel specifications invoked for structural framing, brackets, and attachments are discussed in Section 3.8.1.2.2.

3.8.1.6.3.2 Quality Control

In general, main members, columns, baseplates, bracing, trusses, girts, and bolts larger than 1 inch in diameter are traceable to a specific heat number. For the above items in the auxiliary building roof framing, various field fabricated minor framing, and all clip angles, seats, stiffeners, gusset plates, and weld filler metal, traceability to a specific heat number is confirmed in the suppliers' shops or upon receipt at the jobsite. For bolts 1 inch in diameter and smaller, lot identification is similarly confirmed. The storage and issuance of these materials for construction is controlled in a manner which assures that only QA Category I materials are installed in QA Category I applications.

3.8.1.6.3.3 Construction Techniques

Structural steel material, erection, and fabrication tolerances are in accordance with the AISC "Specification for the Design Fabrication, and Erection of Structural Steel for Buildings."

Welding of structural steel is in accordance with AWS D 1.1-72.

3.8.1.6.4 Steel Liner

The materials for the reactor containment liner and mat embedments, including penetrations, are listed in Table 3.8-8 and meet the applicable requirements of the ASME B&PV Code, Sections II, III, and VIII.

3.8.1.7 Testing and Inservice Surveillance Requirements

3.8.1.7.1 Concrete Containment Structural Acceptance Test

In order to demonstrate that the concrete containment structure responds satisfactorily to required internal pressure loads, a structural acceptance test is performed after the liner is completed, the last concrete is poured and cured, and all penetrations, sleeves, and hatches are installed. The test equals or exceeds the requirements of Regulatory Guide 1.18.

The containment is subjected to an internal pressure equal to at least 1.15 times the containment design pressure. The pressure test commences at atmospheric pressure and is raised to the maximum test pressure in four or more approximately equal pressure increments. The containment is depressurized in the same number of decrements. At each pressurization and depressurization level, the pressure is held constant for at least 1 hour before the deflection and strain measurements are recorded.

Radial deflection is measured along six meridians around the circumference at 13 feet-6 inches above the top of the mat at mid-height between the mat and the springline, and at the springline of the dome. Vertical deflections are measured at the springline and the apex of the dome. Radial deflections for the largest opening with a ring edge beam are also measured.

Mapping of cracks is performed on exterior surfaces of the containment at locations selected prior to start of the pressure application. Mapping is performed at four locations: One near the base-wall intersection, one at the mid-height of the wall, one at the springline of the dome and one around one quadrant of the equipment hatch.

Environmental conditions are measured and monitored to permit the evaluation of their contribution to the response of the containment. The testing sequence is repeated if the test pressure drops for unexpected reasons to or below the next lower pressure level, or if significant modification or repairs are made to the containment following the test.

The anticipated deflections are computed by taking into account the interaction of liner, reinforcements, and concrete including the effects of concrete cracking. A final test report will be prepared following the test. The report will contain the information outlined in Regulatory Guide 1.18.

3.8.1.7.2 Steel Liner and Penetrations

3.8.1.7.2.1 Initial Structural Acceptance Test

The liner plate and penetrations are tested in conjunction with the concrete containment as discussed in Section 3.8.1.7.1.

3.8.1.7.2.2 Leakage Rate Test

A containment integrated leak rate test is performed initially and periodically to verify that the leakage rate of the containment is within allowable limits. The general test description is covered in Chapter 16 and Section 6.2.6.

The leak rate is performed in accordance with 10 CFR 50, Appendix J.

3.8.1.7.2.3 Piping System Penetrations

The unsleeved and sleeved piping system penetrations are tested in conjunction with the containment structural acceptance test. The spare process piping penetrations are capped off for the containment structural integrity test. The piping penetrations weld seams are capable of being locally leak tested periodically to verify continued integrity.

3.8.1.7.2.4 Mechanical System Penetrations

The fuel transfer tube enclosure is sealed off with a blind flange. The blind flange is pressure tested during the containment structural integrity test and has double gaskets capable of being locally tested.

3.8.1.7.2.5 Access Openings

The personnel air lock and emergency air lock are self-contained pressure vessels and are pressure tested independently. The equipment hatch opening is tested in conjunction with the containment structural acceptance test and is locally tested periodically thereafter.

3.8.2 Steel Containment

This section, as outlined in Regulatory Guide 1.70, Revision 3, "Standard Format and Content of Safety Analysis Reports for Nuclear Power Plants," regarding a steel containment, is not applicable to the BVPS-2 containment structure because a steel-lined reinforced concrete containment is being used, as described in Section 3.8.1. Certain steel components in the containment system, described in Section 3.8.1, are classified in accordance with the ASME B&PV Code, Section III, as Class MC components except as discussed later in this section; these are the personnel air lock, the equipment hatch, the emergency air lock, the fuel transfer tube enclosure, and the piping and electrical penetrations subject to pressure-induced stresses.

The ASME III Class MC requirements were not intended to apply to concrete backed pressure vessels. However, ASME III Division 2 was not available for use in the design, material selection, fabrication, and erection of the containment vessel. Hence, ASME III Division 1

and ASME VIII were used as guides. The extent to which ASME III Subsection NE applies to various containment components is discussed in Section 3.8.1.2.3.

This section addresses itself to the requirements of the USNRC Standard Review Plan (SRP), NUREG-75/087, Section 3.8.2, dated November 24, 1975.

3.8.2.1 Description of the Containment

For the description of the containment and its steel components, refer to Section 3.8.1.1.

3.8.2.2 Applicable Codes, Standards, and Specifications

The basic code for the Class MC steel components is the ASME B&PV Code, Section III, Division 1, 1971 Edition (including all addenda through Winter 1972). This code provides the requirements of the components, for materials, design, fabrication, examination, and testing. For other applicable codes, standards, and specifications, refer to Section 3.8.1.2.

3.8.2.3 Loads and Load Combinations

The loads presented and defined in NUREG-75/087, SRP Section 3.8.2 are considered where applicable in the design of the ASME B&PV Code, Section III, Class MC steel components. Discussion of the various load combinations and allowable stresses is presented in Section 3.8.2.5.

3.8.2.4 Design and Analysis Procedures

The design and analysis of the Class MC components are in accordance with the requirements of Subsection NE of the ASME B&PV Code, Section III, including the applicable portions of Appendix A.

3.8.2.5 Structural Acceptance Criteria

The design is such that the stress and strain limits, as defined in NE-3000 of the ASME B&PV Code, Section III, are satisfied for pressure loads in combination with mechanical loads and thermal loads. The load combinations and allowable stresses are in accordance with the requirements of NUREG-75/087, SRP Section 3.8.2.

3.8.2.6 Materials, Quality Control, and Special Construction Techniques

The materials meet the requirements in the ASME B&PV Code, Section III, Division 1, Subsection NE, for Class MC components, including the impact test requirements described by the Liner Specification. The materials are listed in Table 3.8-2.

The quality assurance program for fabrication and erection is in accordance with the requirements of Subsection NE of the ASME B&PV Code, Section III, Division 1

3.8.2.7 Testing and In-Service Inspection Requirements

Testing and ISI requirements of Class MC components are in accordance with 10 CFR 50, Appendix J. The personnel hatch, and the emergency air lock are tested and stamped Class MC in accordance with the requirements of the ASME B&PV Code, Section III, Subsection NE.

The equipment hatch is designed and fabricated to Class MC requirements, but is not code stamped. The electrical penetrations are designed and fabricated to Class MC requirements, but an ASME Code data report, (ANI) third party inspection and ASME Code stamping are not required. The Class MC components are tested during the containment structural acceptance test as described in Section 3.8.1.7.

The fuel transfer tube expansion bellows are tested in accordance with Code Case 1330-3 (special ruling) Special Equipment Requirements Section III.

3.8.3 Concrete and Structural Steel Internal Structures of Steel or Concrete Containments

3.8.3.1 Description of Internal Structures

The containment internal structures, shown on Figures 3.8-1, 3.8-2, 3.8-3, 3.8-4, 3.8-5, 3.8-6 and 3.8-7, consist of heavily reinforced concrete walls and slabs which are designed to support the principal nuclear steam supply equipment. The interior concrete also provides radiation shielding for equipment and operating personnel, supplies protection from missiles resulting from component failure, provides restraint for various piping systems, and acts as a jet impingement barrier during postulated pipe breaks.

The reinforced concrete primary shield wall forms the reactor cavity at the center of the containment structure. It surrounds and provides lateral restraint for the reactor vessel and its structural steel support.

Located concentrically to the primary shield wall is the reinforced concrete crane wall, which is supported by reinforced concrete columns extending from the foundation mat.

Extending approximately radially between the primary shield wall and the crane wall are reinforced concrete walls, which separate the internals into cubicles. Reinforced concrete slabs at the floor of three cubicles provide structural platforms for steam generator and reactor coolant pump (RCP) supports. In addition, the pressurizer is located in and supported by its own cubicle.

Structural supports for the reactor vessel steam generators, RCPS, and pressurizer are described in Section 5.4.14.

The refueling cavity, located above the reactor vessel, and the fuel transfer canal are stainless steel-lined reinforced concrete structures.

The overhead polar crane is located above the operating floor of the containment and spans approximately 106 feet. The crane is supported at the top of the reinforced concrete crane wall in such a way that it is restrained both horizontally and vertically against seismic dislodgement.

The auxiliary crane is located on the operating floor of the containment, between steam generator SG21A and the equipment hatch. The crane is supported vertically by the operating floor, and restrained laterally by bracing attached to the crane wall.

3.8.3.2 Applicable Codes, Standards, and Specifications

Codes, standards, specifications, and USNRC Regulatory Guides, as applicable to the internal structures of the containment, are provided in Sections 3.8.1.2, 3.8.1.6, and 5.4.14.

3.8.3.3 Loads and Loading Combinations

Loads considered in the design of the containment internals include those encountered during normal plant operation, severe environmental and extreme environmental events, and those sustained during abnormal plant conditions including the LOCA and other high-energy pipe rupture events.

Interior concrete structures and structural steel within the containment are designed to withstand the pressure buildup resulting from the most severe accident for each cubicle, including the LOCA discussed in Sections 6.2.2 and 15.6.5. The blowdown of a postulated rupture of the primary coolant pipe is assumed to be either in one of the three steam generator cubicles or within the primary shield wall. Since the volume of each of these cubicles is less than the entire containment structure, differential pressures exist between the interior and exterior of the cubicle until full pressurization of the containment is attained. All structural components, walls, floors, and beams enclosing these cubicles are designed to withstand these differential pressures.

Section 3.6B describes the protection provided against the dynamic effects associated with a postulated rupture of piping.

Missile generation and design of barriers to resist missile hazards are described in Section 3.5.

The reinforced concrete portions of the containment internal structure are designed for the loads and loading combinations which follow. These loading combinations compare with those presented in SRP 3.8.3. The accident loads considered in loading combinations 3.8-7 through 3.8-9, listed as follows, control the design of the internal concrete structures. These equations are equal to or more

conservative than their counterparts in ACI 349 or SRP 3.8.3. Loading combinations and strength limits for concrete structures are:

$$U = 0.75\ (1.4D + 1.7CL) \qquad (3.8\text{-}1)$$

$$U = 1.4D + 1.7L \qquad (3.8\text{-}2)$$

$$U = 1.4D + 1.7L + 1.9E \qquad (3.8\text{-}3)$$

$$U = 0.9D + 1.4E \qquad (3.8\text{-}4)$$

$$U = 1.0D + 1.0L + 1.0E' \qquad (3.8\text{-}5)$$

$$U = 0.9D + 1.0E' \qquad (3.8\text{-}6)$$

$$U = 1.0D + 1.0L + l.0Ta + l.0Ra + 1.5Pa \qquad (3.8\text{-}7)$$

$$U = 1.0D + 1.0L + l.\ 0Ta + l.0Ra + 1.25Pa + l.0(Yr + Yj + Ym) + 1.25E \qquad (3.8\text{-}8)$$

$$U = 1.0D + 1.0L + l.0Ta + l.0Ra + l.0Pa + l.0(Yr + Yj + Ym) + 1.0E' \qquad (3.8\text{-}9)$$

$$U = 0.75\ (1.4D + 1.7L + 1.9E + 1.7To + 1.7Ro) \qquad (3.8\text{-}10)$$

where:

U = Required section strength based on strength design methods as described in ACI 318-71.

D = Dead loads or their related internal moments and forces, including any permanent equipment loads.

L = Live loads or their related internal moments and forces, including any movable equipment loads and other loads which vary with intensity and occurrence.

CL = Construction live load.

E′ = Loads generated by the safe shutdown earthquake (SSE).

E = Loads generated by the one-half SSE.

Ta = Thermal loads under accident conditions generated by a postulated break.

Ra = Pipe and equipment reactions under accident conditions generated by a postulated break.

Pa = Differential pressure load generated by a postulated break including an appropriate dynamic load factor applied to the peak of the pressure-time curve.

Yr = Load on the structure generated by the reaction on the broken high energy pipe during the postulated break including an appropriate dynamic load factor applied to the peak of the reaction-time curve.

Yj = Jet impingement load on a structure during the postulated break, including an appropriate dynamic load factor applied to the peak of the jet-time curve.

Ym = Missile impact load on a structure during the postulated break, including an appropriate dynamic load factor applied to the peak of the missile impact-time curve.

Note: Except for the fuel building, To has a negligible effect on the concrete design.

The structural steel portions of the containment internal structure are designed for the loads, loading combinations, and strength limits described as follows:

$$S = D + L \quad (3.8\text{-}11)$$

$$S = D + L + E \quad (3.8\text{-}12)$$

$$1.6S = D + L + E' \quad (3.8\text{-}13)$$

$$1.6S = D + E' \quad (3.8\text{-}14)$$

$$1.6S = D + L + Ta + Ra \quad (3.8\text{-}15)$$

l $$1.6S = D + L + Ta + Ra + Pa + 1.0\ (Yj + Yr + Ym) + E \quad (3.8\text{-}16)$$

$$1.7S = D + L + Ta + Ra + Pa + 1.0\ (Yj + Yr + Ym) + E' \quad (3.8\text{-}17)$$

$$1.5S = D + L + E + To + Ro \quad (3.8\text{-}18)$$

where:

To = Thermal effects and loads during normal operation or shutdown conditions based on the most critical transient or steady state condition.

Ro = Pipe reactions during normal operation or shutdown conditions based on the most critical transient or steady state condition.

S = The required section strength based on the elastic working stress methods and allowable stresses defined in Part 1 of the AISC (1979) Specification as referenced in Section 3.8.1.2. The 33-1/3 percent increase in allowable stresses due to seismic loadings allowed by AISC is not used in determining the valvue of S.

Note: For load combinations 3.8-16 and 3.8-17, the plastic section modulus of steel shapes may be used computing the required section strength, S, except for those sections which do not meet the AISC criteria for compact sections.

In general, for both concrete and steel load combinations:

1. Peak values of Pa, Ta, Ra, Yj, Yr, and Ym are used unless a time-history analysis is performed to justify otherwise.

2. Local stresses may be exceeded under the concentrated loads Yr, Yj, and Ym, provided that there will be no loss of function of any safety-related system.

3. For structural steel loading combinations equations 3.8-11 through 3.8-17, the elastic modulus in bending is used.

3.8.3.4 Design and Analysis Procedures

The cylinders, beams, columns, walls, and slabs which comprise the containment internal structure provide multiple load paths to transfer applied loads to the containment mat. Distribution of loads through the members was accomplished by stiffness formulations using space frame, finite difference, and finite element techniques based on elastic behavior of the redundant structures. In limited local areas of walls and slabs where it was determined that overall structural integrity would not be impaired, and that deflections would not be excessive, the yield line theory was used to analyze the effects of accident (pipe whip, missile, or jet impingement) loads.

Using principles of engineering mechanics, appropriate for the geometry of the structure, overlapping models were selected such that boundary conditions assigned to one model were confirmed by deflections and loads generated by adjacent models.

Loads were applied directly to the models as static surface forces, body forces, or concentrated loads. Pressure time histories developed using the procedures described in Section 6.2 were converted to equivalent static loads considering peaks of the forcing functions and dynamic load factors appropriate to the stiffness of the structures and the duration and shape of the impulsive loads. Seismic forces and reactions developed using the techniques described in Section 3.7B.2 were applied as body forces, boundary loads, and concentrated reactions from equipment and piping using appropriate DLFs.

Accident loads were similarly applied, primarily as concentrated loads, at restraints and pipe whip target locations. Jet impingements were treated similarly to pressures.

Internal loads are transferred to the containment foundation mat through the primary shield wall and columns below the crane wall and steam generator cubicle slabs. The primary shield wall and the columns share the distribution of loads approximately equally. The relative stiffnesses of the 10 foot containment foundation mat and the support elements were considered in determining the load distribution. Where appropriate, cracked concrete sections were used to refine the loads distribution.

Computer programs STRUDL and SHELL 1, described in Appendix 3A, are the primary analytical codes used.

The design of the internals concrete conforms to the requirements of ACI 318-71 in a conservative manner. Reinforcing steel ratios are determined in accordance with the procedures outlined in ACI 318 and the principal reinforcement patterns are located in the direction of tensile forces.

tensile forces. Splice and anchorage requirements comply with ACI 318 and, where biaxial tension fields exist, the development lengths required by Section 12.5 of ACI 318 are increased by a minimum of 25 percent.

Structural steel is designed in accordance with the AISC (1969) Specification.

Structural design and analysis of specific internals components comply with the general procedures described. The reactor support system, steam generator supports, RCP supports, and pressurizer supports have been designed and analyzed as discussed in Section 5.4.14.

The primary shield wall provides the major structural support for the refueling cavity and also shares the loads from most other internals components. Loads from these structures are transferred to the primary shield walls through integrally cast, heavily reinforced slabs and walls. Direct loads on the primary shield wall include internal and external asymmetric pressures, equipment reactions, seismic loads, and pipe reactions and jet impingements resulting from primary coolant loop and other high energy line breaks. These loads were developed and applied as discussed in the general procedure, including appropriate consideration of dynamic loading effects. Where loads transfer became particularly complex, local computer analyses were used.

Loads developed in the meridional reinforcement of the primary shield wall are transferred directly through the base liner by means of bridging bars. The reinforcement is developed within the base mat. Compression and shear loads at the base are transferred in bearing.

During normal operation, a thermal gradient exists within the primary shield wall due to thermal input from the reactor and heat of gamma and neutron radiation. The design of the primary shield wall includes the effect of the gradient. Thermal input from a LOCA is not a significant design factor. Due to the relatively short duration of LOCA high temperatures, only a small thickness of the primary shield wall near each surface is heated.

Secondary shield walls (that is, radial and crane walls, refueling cavity walls, the operating floor, and intermediate floors) were designed as described in the general procedures. In general, all components were designed to remain elastic under the applied loads. When these components serve as missile barriers, local loads may exceed elastic limits. Analysis of missile barriers is discussed in Section 3.5.

The upper crane wall extends above the operating floor to support the polar crane. It is designed by the methods of ACI 318 to accommodate all dynamic loads from the polar crane, and to provide support for numerous high energy pipe restraints.

3.8.3.5 Structural Acceptance Criteria

Design and analysis of interior concrete structures comply with ACI 318, using the strength design methods, except where limit analysis is used. The basic criterion for concrete strength design is expressed as:

Required Strength ≤ Calculated Strength

The required strength is expressed in terms of design loads (that is, loads or load combinations multiplied by appropriate load factors). Calculated strength is computed using ACI 318-71 including the appropriate capacity reduction factors. Acceptance criteria for limit analysis are discussed in Section 3.8.3.

Design for horizontal shear forces in the plane of internal structure walls complies with the requirements of Section 11.16 of ACI 318 which incorporates the combined effects of shear and tensile stresses into the nominal permissible shear stress, Vc, allowed to be carried by the concrete.

Design of interior steel structures is based either on elastic working stress design methods using normal working stress levels given in Part 1 of the AISC (1969) Specification or on the plastic design methods of Part 2 of the AISC (1969) Specification.

The loading criteria specified in Section 3.8.3.3 also specify the allowable limits which constitute the structural acceptance criteria.

3.8.3.6 Materials, Quality Control, and Special Construction Techniques

Material and quality controls used for the reactor containment internal structures are described in Sections 3.8.1.2 and 3.8.1,6, except that a higher strength concrete mix was used. The 90-day minimum specified compressive strength of concrete is 5,000 psi.

Materials and quality control comply with the requirements of ACI 318-71 for concrete and with the AISC (1969) specification for structural steel. Quality control complies with the requirements of ANSI N45.2.5-1974 and Regulatory Guides 1.55 and 1.94, except as discussed in Section 1.8 and 3.8.1.2.1.6.

Welding of reinforcing bars complies with the requirements of AWS D12.1-61. Welding of structural steel complies with the requirements of AWS D1.1.

Materials and quality control for the steel supports of the reactor coolant system are as discussed in Sections 3.9B.3.4 and 5.4.14.

The Quality Assurance Program is described in Section 17.1.

3.8.3.7 Testing and Inservice Inspection Requirements

No full-scale structural testing or inservice inspection of the reactor containment interior structure is planned. The materials used in the construction of the internals are tested as described in Sections 3.8.1.2 and 3.8.1.6.

3.8.4 Other Seismic Category I Structures

3.8.4.1 Description of the Structures

This section describes other Seismic Category I structures which perform a safety-related function. The primary intake structure, which was designed, constructed, and licensed with Beaver Valley Power Station - Unit 1 (BVPS-1) and which serves both BVPS-1 and Beaver Valley Power Station - Unit 2 (BVPS-2), is not included herein.

Seismic Category I structures other than the containment structure and other safety-related structures not classified as Seismic Category I because of other design provisions are included herein.

The plot plan and the general arrangement of these structures and equipment within these structures are shown on the figures referenced in Table 3.8-12. A seismic shake space is provided between buildings as required to allow independent movement of structures under earthquake loading.

The design of Seismic Category I structures to resist tornado loads is discussed in Sections 3.5 and 3.7B.

3.8.4.1.1 Auxiliary Building

The auxiliary building is a Seismic Category I structure, consisting of a basement and three upper stories is approximately 120 feet wide by 145 feet long by 63 feet high. It is located adjacent to, and south of, the fuel and decontamination building, and adjacent to and west of the service building and main steam valve and cable vault area.

The auxiliary building is supported on a reinforced concrete foundation mat. The roof and walls of the top story are predominantly steel framed with metal siding and metal roof deck, with the exception of the ventilation core area, component cooling surge tank cubicle, and the air conditioning room which are reinforced concrete. The remainder of the structure is reinforced concrete.

Concrete walls and floors are designed to provide tornado protection for safety-related equipment and piping and to provide biological shielding where required. The top story steel structure is not designed to provide tornado protection.

3.8.4.1.2 Safeguards Area

The safeguards area is a Seismic Category I structure approximately 60 by 106 feet at the base and approximately 59 feet high. It is located adjacent to, and east of, the containment structure.

The safeguards area is supported on a reinforced concrete foundation mat and the remainder of the structure is reinforced concrete.

The concrete structure of the safeguards area provides tornado protection for the engineered safety features pumps, valves, and piping penetrations.

3.8.4.1.3 Main Steam Valve and Cable Vault Area

The main steam valve and cable vault area is a Seismic Category I multi-level structure, approximately 94 feet wide (at its widest part) by 138 feet long by 77 feet high, located adjacent to, and south of, the containment structure.

The main steam valve and cable vault area is supported on a reinforced concrete foundation mat. The remainder of the structure is reinforced concrete, with the exception of one portion of roof that is steel framed with metal roof deck.

The concrete structure provides tornado protection for safety-related systems, including the main steam isolation valves.

The steel frame roof portion is non-Seismic Category I and is not designed for seismic or tornado loadings.

3.8.4.1.4 Fuel and Decontamination Building

The fuel and decontamination building is a Seismic Category I L-shaped structure with the main portion approximately 44 by 110 by 71 feet high. It is located adjacent to, and west of, the containment building and north of, and adjacent to, the auxiliary building.

The fuel and decontamination building is supported on a continuous reinforced concrete foundation mat. The roof and walls are of reinforced concrete. The fuel and decontamination building contains the new and spent fuel and associated fuel handling facilities. The spent fuel pool has a cask loading area, storage rack area, and transfer canals, all of which are lined with stainless steel plate. The cask loading area is separated from the storage rack area by a stainless-steel-lined reinforced concrete wall. An opening, 25 feet

high by 2 feet wide, in this wall permits fuel transfer from the storage racks to the shipping cask. The shipping cask cannot be moved over the storage racks because the crane which lifts it is located such that it cannot travel over the storage racks.

Reinforced concrete is provided for biological shielding where required. Safety-related equipment and the spent fuel are protected against tornadoes and tornado-generated missiles.

3.8.4.1.5 Control Building

The control building is a Seismic Category I three-story structure built adjacent to, and as an extension of, the BVPS-1 control room. It is approximately 69 by 89 by 45 feet high. The control building is located west of the fuel building and auxiliary building and is connected to the auxiliary building by the electrical cable tunnel.

The control building is supported on a reinforced concrete foundation mat. The roof and walls are of reinforced concrete. The top story of the control building contains the control room, computer room, and the heating, ventilation and air conditioning equipment room. The lower two stories house switchgear, cable spreading areas, and other associated equipment.

The concrete structure is designed to provide tornado protection.

3.8.4.1.6 Diesel Generator Building

The diesel generator building is a Seismic Category I structure located east of the service building and adjacent to, and north of, the east end of the turbine building. It is a two story structure approximately 78 by 88 by 57 feet high.

The diesel generator building is supported on a reinforced concrete foundation mat. The roof and walls are of reinforced concrete.

The concrete structure is designed to provide tornado protection.

3.8.4.1.7 Service Building

The service building is a Seismic Category I structure located adjacent to, and north of, the turbine building and west of the diesel generator building. It is a four-story structure approximately 54 by 186 by 70 feet high.

The service building is supported on a reinforced concrete foundation mat. The roof and walls of the top story are steel framed with metal siding and roof deck. The remainder of the structure is reinforced concrete.

The reinforced concrete walls and floors are designed to protect against tornado and tornado-generated missiles. The top story steel

framed structure is non-Category I and is not designed for seismic or tornado loadings.

3.8.4.1.8 Electrical Cable Tunnel

The cable tunnel is a Seismic Category I subsurface structure extending approximately 82 feet from the auxiliary building to the control building.

The foundation mat, walls, and roof of the cable tunnel are reinforced concrete.

The concrete structure of the cable tunnel provides tornado protection for safety-related electrical systems.

3.8.4.1.9 Service Water Valve Pit

There are two Seismic Category I service water valve pits. One is approximately 14 by 20 by 15 feet high and is located adjacent to, and north of, the safeguards area. The other is approximately 24 feet by 36 feet by 18 feet high and is located northwest of the fuel and decontamination building. They are subsurface structures.

The service water valve pits are supported on reinforced concrete foundation mats. The walls and roofs are of reinforced concrete.

The concrete structures of the service water valve pits provide tornado protection for their contents.

3.8.4.1.10 Primary Demineralized Water Tank Enclosure

The primary demineralized water tank enclosure is a Seismic Category I structure located east of the safeguards area and south of the refueling water storage tank. It is approximately 38 by 40 by 46 feet high.

The primary demineralized water tank enclosure is supported on a reinforced concrete foundation mat which also supports the tank. The roof and walls of the enclosure are of reinforced concrete.

The reinforced concrete structure is designed to provide tornado protection.

3.8.4.1.11 Emergency Outfall Structure

The emergency outfall structure is a Seismic Category I dual-chambered overflow weir structure. It is approximately 21 by 35 by 24 feet high, located about 1,900 feet west of the center of the containment building.

The emergency outfall structure is constructed of reinforced concrete. It protects the ends of the emergency service water lines

from missile impact and maintains proper hydraulic head within the service water system.

The structure is designed to remain functional when subjected to the postulated tornado and tornado-generated missile loadings.

3.8.4.1.12 Equipment Hatch Platform

The equipment hatch platform is a Seismic Caregory I structure located adjacent to, and northeast of, the containment. It is approximately 29 by 31 by 49 feet high.

The equipment hatch platform is supported on a reinforced concrete foundation mat. The walls and slabs are of reinforced concrete.

The concrete structure is designed to provide tornado-generated missile protection for the containment equipment hatch.

3.8.4.1.13 Refueling Water Storage Tank and Chemical Addition Tank Enclosure

The refueling water storage tank (RWST) and chemical addition tank (CAT) are located east of the safeguards area. The RWST and CAT pad and surrounding shield wall are Seismic Category I. The wall is approximately 56 by 67 by 16 feet high.

The RWST and CAT are supported on a reinforced concrete foundation mat. The walls of the surrounding structure are of reinforced concrete.

The concrete structure is designed to provide biological shielding.

3.8.4.1.14 Pipe Trenches

There are two Seismic Category I pipe trenches. One is approximately 42 feet long by 10 feet wide by 13 feet deep. It connects the service building and the safeguards area. The other is approximately 7 feet wide by 6 feet deep with one portion enlarging to approximately 14 feet wide by 8 feet deep. It has a total length of approximately 164 feet, connecting the piping area of the electrical cable with the fuel and decontamination building.

The pipe trenches are reinforced concrete subsurface structures, with the top of the trench covers approximately level with the ground grade.

3.8.4.1.15 Pipe Trenches for BVPS-1 and BVPS-2 Crosstie Piping

The fuel building for BVPS-1 is connected to the waste handling and auxiliary buildings of BVPS-2 by a pipe trench. This pipe trench, approximately 6 feet wide by 4 feet deep, runs due east from the

BVPS-1 fuel building to the west wall of the BVPS-2 condensate polishing building.

The BVPS-1 turbine building is connected to the BVPS-2 pipe trench, just north of the electrical cable tunnel, by a pipe trench. This pipe trench, 8 feet to 9 feet wide by approximately 6 feet deep, runs north from the BVPS-2 pipe trench and then west to the BVPS-1 turbine building.

The crosstie pipe trenches are reinforced concrete subsurface structures with the top of the trench covers approximately level with the ground grade.

The crosstie pipe trenches are non-Seismic Category I. With the exceptions described in Section 3.7B.2, the seismic design requirements are in accordance with Regulatory Guide 1.143.

3.8.4.1.16 Waste Handling Building

The waste handling building is located adjacent to, and west of, the turbine building. It is a four-story, plus basement, structure approximately 40 by 112 by 77 feet high.

The waste handling building is supported on a reinforced concrete foundation mat. The roof and walls of the top two stories are steel

framed with metal siding and roof deck. The remainder of the structure is reinforced concrete.

The waste handling building is designed to provide biological shielding where required. The waste handling building is non-Seismic Category I. With the exceptions described in Section 3.7B.2, the seismic design requirements are in accordance with Regulatory Guide 1.143.

3.8.4.1.17 Condensate Polishing Building

The condensate polishing building is L-shaped with the main portion being approximately 44 by 141 feet and a maximum of 93 feet high. It is located adjacent to, and west of, the waste handling building. The condensate polishing building consists of a basement and three upper stories.

The condensate polishing building is supported on a reinforced concrete foundation mat. The roof, walls, and floor slabs of the building are reinforced concrete.

The condensate polishing building is non-Seismic Category I. With the exceptions described in Section 3.7B.2, the seismic design requirements are in accordance with Regulatory Guide 1.143.

3.8.4.1.18 Gaseous Waste Storage Tank Enclosure

The gaseous waste storage tank (GWST) enclosure is located north at the fuel building. It is an in-ground one story structure 37 by 52 by 15 feet high, with an at-grade entrance of 11 by 18.25 by 10 feet high.

The GWST enclosure is supported on a reinforced concrete foundation mat. The walls, roof, and interior structures are also reinforced concrete.

The GWST enclosure is designed to provide biological shielding where required. The GWST enclosure is non-Seismic Caregory I. With the exceptions described in Section 3.7B.1 and 3.7B.2, the seismic design requirements are in accordance with Regulatory Guide 1.143.

3.8.4.1.19 Turbine Building

The turbine building is located adjacent to, and south of, the auxiliary and service buildings and adjacent to, and east of, the waste handling building. It is approximately 135 by 275 by 115 feet high.

The turbine building and major equipment, including the turbine generator, are supported on reinforced concrete spread footings and foundation mats. The ground floor is a reinforced concrete slab.

The mezzanine floor consists of partial area platforms of steel grating or reinforced concrete supported by steel framing. The operating floor is a reinforced concrete slab supported by steel framing. The turbine building is steel framed. The building is enclosed with insulated metal siding and roof deck. The turbine support, located near the center of the building, is a reinforced concrete structure.

The turbine building steel frame is designed to remain in place with the siding blown off during a tornado. The turbine building is a non-Seismic Category I structure. Seismic design of the structure is discussed in Section 3.8.4.4.

3.8.4.1.20 Other Structures

Other plant structures, including the natural draft cooling tower, alternate intake structure, discharge flume, cooling tower pumphouse, transmission towers and temporary construction and office buildings are sufficiently remote from the Seismic Category I and other safety-related structures to preclude damage that would impair the ability of the safety-related structures to remain functional.

3.8.4.2 Applicable Codes, Standards, and Specifications

Unless indicated otherwise, the material properties and design and construction methods used for other Category I structures are based upon the appropriate sections of the applicable codes, standards, specifications, and USNRC regulations and Regulatory Guides listed in Sections 3.8.1.2 and 3.8.1.6.

3.8.4.3 Loads and Load Combinations

Loads considered in the design of other Category I structures include those encountered during normal plant operation, severe and extreme environmental events, and those sustained during abnormal plant conditions including high-energy pipe rupture events.

Other Seismic Category I structures are designed to the applicable loading criteria given in Section 3.8.3.3, for concrete and steel internal structures of concrete containment. Loads and the applicable load combinations for which each structure is designed depend on the conditions to which that particular structure could be subjected.

In addition to the loads and load combinations referenced, other Seismic Category I structures are designed for the wind and tornado loads described in Section 2.3.1.2 as applicable. The reinforced concrete portions of other Seismic Category I structures and foundations are designed for the following load combinations and allowable limits in addition to those given in Section 3.8.3.3:

$$U = (0.75)\ (1.4D + 1.7L + 1.7W) \qquad (3.8\text{-}1)$$

$$U = 0.9D + 1.3W \quad (3.8\text{-}2)$$

$$U = 1.0D + 1.0L = 1.0W \quad (3.8\text{-}3)$$

$$U = 0.9D + 1.0W_t \quad (3.8\text{-}4)$$

$$U = 1.0D + 1.0F \quad (3.8\text{-}5)$$

where:

U = Required section strength based on strength design methods, as described in ACI 318-71,

D = Dead loads or their related internal moments and forces, including any permanent equipment loads, include hydrostatic pressure in accordance with Section 9.3.5 of ACI 318-71,

L = Live loads or their related internal moments and forces, including any movable equipment loads and other loads which vary with intensity and occurrence, includes earth pressure in accordance with Section 9.3.4 of ACI 318-71,

W = Loads generated by the design wind,

W_t = Loads generated by the design tornado, including loads due to the tornado wind pressure, the tornado-created differential pressure, and to tornado-generated missiles,

F = Maximum flood or precipitation load.

In addition to the loading criteria given in Section 3.8.3.3, other Seismic Category I steel structures are designed for the following load combinations and allowable limits:

1. $$1.33S = D + W + L \quad (3.8\text{-}6)$$

2. $$1.6S = D + W_t \quad (3.8\text{-}7)$$

where:

S = The required section strength based on the elastic working stress methods and allowable stresses defined in Part 1 of the AISC (1969) Specification referenced in Section 3.8.1.2.

3.8.4.4 Design and Analysis Procedures

Design and analysis procedures conform to the requirements of ACI 318-71 and the AISC Specification for the design, fabrication,

and erection of steel structures, except as stated in Section 3.8.4.5. If biaxial tension fields exist, splice and anchorage requirements comply with ACI 318.

Earthquake forces on the structures are determined by dynamic analysis and then applied statically in the design of the structures. The analytical techniques used to determine the forces are given in Section 3.7B.2.

For the turbine building, dynamic analyses as described in Section 3.7B.2 are performed for independent plane frames at four column lines, two oriented north-south, and two oriented east-west. The masses of appropriate tributary areas are taken into consideration for each frame analyses. Because the earthquake forces calculated are substantially less than the forces calculated for tornado loading on the respective frames, no further seismic analysis is required.

Concrete structures are supported by their foundations. The reactions obtained from the analyses of these structures are applied as loads to the foundations.

Steel structures are considered to be supported by the concrete structures or foundations to which they are anchored. The reactions obtained from the analysis of a steel structure are applied as loads to the supporting concrete.

Material quality control procedures (Section 3.8.4.6) assure that the material supplied has the required strength.

3.8.4.5 Structural Acceptance Criteria

Steel structures are designed for the loads, loading combinations and strength limits given in Sections 3.8.3.3 and 3.8.4.3.

Concrete structures are designed by the strength design method and conform to the requirements of ACI 318-71. Load factors are as given in Section 3.8.4.3. The basic criterion for strength design is expressed as:

Required Strength ≤ Calculated Strength

Concrete members and sections of concrete members are proportioned to meet this criterion. The required strength is expressed in terms of design loads or their related internal moments and forces. Design loads are defined as loads that have been multiplied by their appropriate load factors. Calculated strength is that computed by the provisions of ACI 318, including the appropriate capacity reduction factors. Capacity reduction factors are given in Section 9.2 of ACI 318.

The loading criteria given in Section 3.8.4.3 also specify the allowable limits which constitute the structural acceptance criteria.

3.8.4.6 Materials, Quality Control, and Special Construction Techniques

Materials and quality controls used for Seismic Category I structures other than the containment are described in Sections 3.8.1.2, 3.8.1.6, and 3.8.3.6. The 28-day minimum compressive strength of the concrete is predominantly 3,000 psi in these structures, with 4,000 and 5,000 psi being used in a limited number of areas. No special construction techniques are used for the structures described in Section 3.8.4.1.

3.8.4.7 Testing and In-service Inspection Requirements

No full-scale structural testing or in-service inspection is anticipated for the structures described Section 3.8.4.1. Materials used in the construction are tested, as described in Section 3.8.4.6.

3.8.4.8 Masonry Walls

BVPS-2 has no safety-related masonry walls. In addition, BVPS-2 has no nonsafety-related masonry walls located in those portions of structures classified as Seismic Category I, except in the auxiliary building at el 710 ft-6 in. and 773 ft-6 in. The block walls at el 710 ft-6 in. are only two feet high and an analysis was performed to verify their structural integrity for a seismic event. Analysis verified that failure of the block walls at el 773 ft-6 in. will not adversely affect the steel framing at this elevation, and will not impact any safety-related equipment. Seismic and QA classification of structures is provided in Table 3.2-2.

3.8.5 Foundations

3.8.5.1 Description of the Foundations

Foundations for Seismic Category I structures consist of reinforced concrete mats designed for service on soil. Section 2.5 defines the geological and seismic design parameters. There are no unique foundations or concrete support features used in the design.

Sufficient space is provided between various Seismic Category I foundations to prevent contact during an SSE.

3.8.5.1.1 Containment Structure Foundation

The containment structure is supported on a flat, circular, reinforced concrete mat (Section 3.8.1.1) 10 feet thick and 142 feet in diameter. It is reinforced with both top and bottom layers of reinforcing steel as described in Section 3.8.1.1.

The containment structure is founded approximately 50 feet below plant grade. Lateral loads and forces are transmitted to the soil in bearing over the vertical area of the engaged portion of the structure. Lateral stability is not dependent on the transfer of horizontal shear through the waterproofing membrane.

3.8.5.1.2 Foundation For Other Seismic Category I Structures

The foundations for other Seismic Category I structures are concrete mats that vary in thickness depending on the requirements for shear and bending moment. Reinforcing is provided in two directions at both top and bottom faces. The principal reinforcement in the foundations consists of No. 11 bars. Lateral loads and forces are transmitted to the founding soil by friction.

Sections of the foundations of other Seismic Category I structures, as well as the relationship between the various foundations, are shown on the figures listed in Table 3.8-12.

3.8.5.2 Applicable Codes, Standards, and Specifications

The design codes, standards, and specifications for foundations and concrete supports are given in Sections 3.8.1.2 (for containment foundation) and 3.8.4.2 (for other Seismic Category I foundations).

3.8.5.3 Loads and Load Combinations

The loads and load combinations used in the design of the foundations are the same as those used in the design of the superstructures, as discussed in Sections 3.8.1.3 (for containment foundation) and 3.8.4.3 (for other Seismic Category I foundations).

3.8.5.4 Design and Analysis Procedures

The containment structure foundation is analyzed as a part of the analysis of the entire containment structure (Section 3.8.1.4).

Other Seismic Category I structure foundations are analyzed as a part of the entire structure analyses (Section 3.8.4.4). In the analysis of these foundations, the founding soil is assumed to behave in a uniformly elastic manner.

The predicted static and dynamic settlement of Seismic Category I structures is discussed in Section 2.5.4. The effect of the predicted settlement on these structures is insignificant.

3.8.5.5 Structural Acceptance Criteria

Seismic Category I foundations are designed as integral parts of the structures they support. Structural acceptance criteria are given in Sections 3.8.1.5 (for the containment structure) and 3.8.4.5 (for the other Seismic Category I structures).

Differential settlement of Seismic Category I structures is discussed in Section 2.5.4.

Factors of safety against sliding and overturning are presented in Table 3.8-13.

3.8.5.6 Materials, Quality Control, Special Construction Techniques

Sections 3.8.1.2 and 3.8.1.6 describe materials, quality control, and specifications for the containment structure foundation.

Materials, quality control, and specifications for foundations of other Category I structures are described in Sections 3.8.3.6, 3.8.4.6, and 3.8.5.2.

There are no special construction techniques required by the design.

The Quality Assurance Program is described in Section 17.1.

3.8.5.7 Testing and Inservice Inspection Requirements

The entire containment structure, including its foundation, undergoes structural acceptance testing (Section 3.8.1.7). Except for this test, no other testing or inservice inspection of foundation systems is planned.

3.8.6 References for Section 3.8

ACI Publication SP-16, Computer Application in Concrete Design and Technology, Article: Application of Computers in the Evaluation of Quality Control of Concrete.

American Institute of Steel Construction 1969. Specification for the Design, Fabrication, and Erection of Structural Steel for Buildings. (Supplement 1, November 1, 1970; Supplement 2, December 8, 1971.)

Holley, M.J., Jr. 1969. Provision of Required Seismic Resistance. MIT, Cambridge, Mass.

Stone & Webster Engineering Corporation (SWEC) 1969. Report on Shear Assembly Tests for Reactor Containment Wall. Beaver Valley Power Station - Unit 1, Report BVM-47, Duquesne Light Company.

SWEC 1969. Nonproprietary Report No. SWND-5, November 1969.

SWEC 1970. Nonproprietary Report No. SWND-5S, March 1970.

Timoshenko, S.P. and Gere, J.M. 1961. Theory of Elastic Stability. McGraw-Hill, New York, NY.

TRW, Inc. 1975. Embedment Properties Headed Studs, TRW Nelson Division, Lorain, OH.

U.S. Nuclear Regulatory Commission 1975. Concrete and Steel Internal Structures of Steel or Concrete Containments. In: Standard Review Plan, Section 3.8.3, NUREG-75/087. Office of Nuclear Reactor Regulation, Washington, D.C.

Zhemochkin, B.N. and Sinitzin, A.P. 1962. Practical Methods for Analysis of Beams and Plates on Elastic Foundations. In Russian, Gosstroiizdat, Moscow.

TABLE 3.8-1

AMERICAN CONCRETE INSTITUTE
CODES, STANDARDS, AND SPECIFICATIONS*

Code Number	Title
ACI 211.1-70	Recommended Practice for Selecting Proportions for Normal Weight Concrete
ACI 214-65	Recommended Practice for Evaluation of Compression Test Results of Field Concrete
ACI 301-72	Specification for Structural Concrete for Buildings
ACI 304-73	Recommended Practice for Measuring, Mixing, Transporting, and Placing Concrete
ACI 305-77	Recommended Practice for Hot Weather Concreting
ACI 306-72	Recommended Practice for Cold Weather Concreting
ACI 309-72	Recommended Practice for Consolidation of Concrete
ACI 318-71	Building Code Requirements for Reinforced Concrete
ACI 347-68	Recommended Practice for Concrete Formwork

NOTE:

*Codes, standards, and specifications are applicable as discussed in Section 3.8.

TABLE 3.8-2

AMERICAN SOCIETY OF MECHANICAL ENGINEERS
MATERIAL SPECIFICATIONS[1,2]

ASME Specification Number	Title
SA-105	Specifications for Forged or Rolled Steel Pipe Flanges, Forged Fittings, and Valves and Parts for High-Temperature Service
SA-182	Specification for Forged or Rolled Alloy Steel Pipe Flanges, Forged Fittings, and Valves and Parts for High-Temperature Service
SA-193	Specification for Alloy Steel Bolting Materials for High-Temperature Service
SA-194	Specification for Carbon and Alloy Steel Nuts for Bolts for High-Pressure and High-Temperature Service
SA-213	Specification for Seamless Ferritic and Austenitic Alloy Steel Boiler, Superheater, and Heat Exchanger Tubes
SA-234	Specification for Piping Fittings of Wrought Carbon Steel and Alloy Steel for Moderate and Elevated Temperatures
SA-240	Specification for Stainless and Heat-Resisting Chromium and Chromium-Nickel Steel Plate, Sheet, and Strip for Fusion-Welded Unfired Pressure Vessels
SA-312	Specification for Seamless and Welded Austenitic Stainless Steel Pipe
SA-333	Specification for Seamless and Welded Steel Pipe for Low-Temperature Service
SA-350	Specification for Forged or Rolled Carbon and Alloy Steel Flanges, Forged Fittings, and Valves and Parts for Low-Temperature Service
SA-358	Specification for Electric-Fusion-Welded Austenitic Chromium-Nickel Alloy Steel Pipe for High-Temperature Service
SA-403	Specification for Wrought Austenitic Stainless Steel Piping Fittings

TABLE 3.8-2 (Cont)

ASME Specification Number	Title
SA-508	Specification for Quenched and Tempered Vacuum Treated Carbon and Alloy Steel Forgings for Pressure Vessels
SA-516	Specifications for Carbon Steel Plates for Pressure Vessels for Moderate and Lower Temperature Service
SA-537	Specification for Carbon-Manganese-Silicon Steel Plates, Heat Treated, for Pressure Vessels

NOTES:

1. Boiler and Pressure Vessel Code, Section III, Material Specifications, Part A-Ferrous.
2. Codes and specifications are applicable as discussed in Section 3.8.

TABLE 3.8-3

AMERICAN NATIONAL STANDARDS INSTITUTE
CODES, STANDARDS, AND SPECIFICATIONS*

Code Number	Title
ANSI N512-1974	Protective Coatings (Paints) for the Nuclear Industry
ANSI N45.2.2-1972	Packaging, Shipping, Receiving, Storage, and Handling of Items for Nuclear Power Plants
ANSI N45.2.5-1974	Supplementary Quality Assurance Requirements for Installation, Inspection, and Testing of Structural Concrete and Structural Steel During the Construction of Nuclear Power Plants
ANSI N45.4-1972	Leakage Rate Testing of Containment Structures for Nuclear Reactors
ANSI/ANS 56.8-1987	Containment System Leakage Testing Requirements (This document used only as a guideline.)
ANSI N101.4-1972	Quality Assurance for Protective Coatings Applied to Nuclear Facilities

NOTE:

*Codes, standards, and specifications are applicable as discussed in Section 3.8.

TABLE 3.8-4

AMERICAN SOCIETY FOR TESTING AND MATERIALS SPECIFICATIONS*

Specification Number	Title
ASTM A 29-67	Specification for General Requirements for Steel Bar, Carbon and Alloy, Hot Rolled and Cold Finished
ASTM A 36-72	Specification for Structural Steel
ASTM A 105-71	Specifications for Forged or Rolled Steel Pipe Flanges, Forged Fittings, and Valves and Parts for High-Temperature Service
ASTM A 106-71	Specification for Seamless Carbon Steel Pipe for High-Temperature Service
ASTM A 123-71	Specification for Zinc Hot-Galvanized Coatings on Products Fabricated from Rolled, Pressed, and Forged Steel Shapes, Plates, Bars, and Strip
ASTM A 131-71	Specification for Structural Steel for Ships
ASTM A 153-73	Specification for Zinc-Coating (Hot-Dip) on Iron and Steel Hardware
ASTM A 182-72	Specification for Forged or Rolled Alloy-Steel Pipe Flanges, Forged Fittings, and Valves and Parts for High-Temperature Service
ASTM A 184-72	Specification for Fabricated Deformed Steel Bar Mats for Concrete Reinforcement
ASTM A 193-71	Specification for Alloy-Steel and Stainless Steel Bolting Materials for High-Temperature Services
ASTM A 194-71	Specification for Carbon and Alloy Steel Nuts for Bolts for High-Pressure and High-Temperature Service
ASTM A 240-72	Specification for Heat-Resisting Chromium and Chromium-Nickel Stainless Steel Plate, Sheet, and Strip for Fusion-Welded Unfired Pressure Vessels
ASTM A 242-70A	Specification for High-Strength Low-Alloy Structural Steel

TABLE 3.8-4 (Cont)

Code Number	Title
ASTM A 262-70	Standard Recommended Practices for Detecting Susceptibility to Intergranular Attack in Stainless Steels
ASTM A 276-72	Standard Specification for Stainless and Heat-Resisting Steel Bars and Shapes
ASTM A 307-68	Specification for Carbon Steel Externally and Internally Threaded Fasteners
ASTM A 325-71A	Specification for High Strength Bolts for Structural Steel Joints Including Suitable Nuts and Plain Hardened Washers
ASTM A 384-62	Recommended Practice for Safeguarding Against Warpage and Distortion During Hot-Dip Galvanizing of Steel Assemblies
ASTM A 385-62	Recommended Practice for Providing High Quality Zinc Coatings (Hot-Dip)
ASTM A 441-70	Specification or High-Strength Low-Alloy Structural Manganese-Vanadium Steel
ASTM A 490-71	Specification for Quenched and Tempered Alloy Steel Bolts for Structural Steel Joints
ASTM A 500-74	Standard Specification for Cold-Formed Welded and Seamless Carbon Steel Structural Tubing in Rounds and Shapes
ASTM A 501-74	Standard Specification for Hot-Formed Welded and Seamless Carbon Steel Structural Tubing
ASTM A 515-74	Specification for Pressure Vessel Plates, Carbon Steel, for Intermediate- and High-Temperature Service
ASTM A 516-72	Specification for Pressure Vessel Plates, Carbon Steel, for Moderate and Higher-Temperature Service
ASTM A 543-74	Specification for Pressure Vessel Plates, Alloy Steel, Quenched and Tempered Nickel-Chromium-Molybdenum
ASTM A 572-72	Specification for High-Strength Low-Alloy Columbium-Vanadium Steels of Structural Quality

TABLE 3.8-4 (Cont)

Code Number	Title
ASTM A 588-71	Specification for High-Strength Low-Alloy Structural Steel with 50,000 psi Minimum Yield to Four Inches Thick
ASTM A 615-68	Specification for Deformed and Plain Billet-Steel Bars for Concrete Reinforcement
ASTM A 706-74	Specification for Low-Alloy Steel Deformed Bars for Concrete Reinforcement
ASTM C 42-68	Obtaining and Testing Drilled Cores and Sawed Beams of Concrete
ASTM C 33-71	Specification for Concrete Aggregates
ASTM C 87-69	Test for Effect of Organic Impurities in Fine Aggregates on Strength of Mortar
ASTM C 88-73	Test for Soundness of Aggregates by Use of Sodium Sulfate or Magnesium Sulfate
ASTM C 94-74	Specification for Ready-Mixed Concrete
ASTM C 109-73	Test for Compressive Strength of Hydraulic Cement Mortars (Using 2 in Cube Specimens)
ASTM C 114-69	Chemical Analysis of Hydraulic Cement
ASTM C 115-73	Test for Fineness of Portland Cement by the Turbidimeter
ASTM C 117-69	Test for Materials Finer than No. 200 Sieve in Mineral Aggregates by Washing
ASTM C 123-69	Test for Lightweight Pieces in Aggregate
ASTM C 127-73	Test for Specific Gravity and Absorption of Coarse Aggregate
ASTM C 128-68	Test for Specific Gravity and Abosrption of Fine Aggregate
ASTM C 131-69	Test for Resistance to Abrasion of Small Size Coarse Aggregate by Use of the Los Angeles Machine
ASTM C 136-71	Test for Sieve or Screen Analysis of Fine and Coarse Aggregates

TABLE 3.8-4 (Cont)

Code Number	Title
ASTM C 138-74	Test for Unit Weight, Yield, and Air Content (Gravimetric) of Concrete
ASTM C 142-71	Test for Clay Lumps and Friable Particles in Aggregates
ASTM C 143-71	Test for Slump of Portland Cement Concrete
ASTM C 150-74	Specification for Portland Cement
ASTM C 151-74	Test for Autoclave Expansion of Portland Cement
ASTM C 172-71	Sampling Fresh Concrete
ASTM C 186-73	Test for Heat of Hydration of Hydraulic Cement
ASTM C 191-71	Test for Time of Setting of Hydraulic Cement by Vicat Needle
ASTM C 192-69	Making and Curing Concrete Test Specimens in the Laboratory
ASTM C 204-74	Test for Fineness of Portland Cement by Air Permeability Apparatus
ASTM C 227-71	Test for Potential Alkali Reactivity of Cement-Aggregate Combinations (Mortar Bar Method)
ASTM C 231-74	Test for Air Content of Freshly Mixed Concrete by the Pressure Method
ASTM C 233-73	Specification for Testing Air-entraining Admixtures in Concrete
ASTM C 235-68	Test for Scratch Hardness of Coarse Aggregate Particles
ASTM C 260-73	Specification for Air - Entraining Admixtures for Concrete
ASTM C 266-70	Test for Time of Setting of Hydraulic Cement by Gillmore Needles
ASTM C 289-71	Test for Potential Reactivity of Aggregates (Chemical Method)

TABLE 3.8-4 (Cont)

Code Number	Title
ASTM C 295-65	Recommended Practice for Petrographic Examination of Aggregates for Concrete
ASTM C 311-68	Standard Methods of Sampling and Testing Fly Ash for Use as an Admixture in Portland Cement Concrete
ASTM C 451-72	Test for False Set of Portland Cement (Paste Method)
ASTM C 494-71	Specification for Chemical Admixtures for Concrete
ASTM C 535-69	Test for Resistance to Abrasion of Large Size Coarse Aggregate by Use of the Los Angeles Machine
ASTM C 566-67	Test for Total Moisture Content of Aggregate by Drying
ASTM C 567-71	Test for Unit Weight of Structural Lightweight Concrete
ASTM C 586-69	Test for Potential Alkali Reactivity of Carbonate Rocks for Concrete Aggregates (Rock Cylinder Method)
ASTM C 618-72	Specification for Fly Ash and Raw Calcined National Pozzo Laws for Use in Portland Cement Concrete
ASTM C 637-73	Specification for Aggregate for Radiation-Shielding Concrete
ASTM C 642-69	Test for Specific Gravity, Absorption, and Voids and Hardened Concrete
ASTM C 666-71	Test for Resistance of Concrete to Rapid Freezing and Thawing
ASTM D 75-71	Sampling Aggregates
ASTM D 512-67	Tests for Chloride Ion in Water and Waste Water
ASTM D 994-71	Specification for Preformed Expansion Joint Filler for Concrete (Bituminous Type)
ASTM D 1752-67	Specification for Preformed Sponge Rubber and Cork Expansion Joint Fillers for Concrete Paving and Structural Construction
ASTM D 2842-69	Method of Tests for Water Absorption of Rigid Cellular Plastics

TABLE 3.8-4 (Cont)

Code Number	Title
ASTM E 165-71	Recommended Practice for Liquid Penetrant Inspection Method
ASTM E 208-69	Method for Conducting Drop-Weight Test to Determine Nil-Ductility Transition Temperature of Ferritic Steels
ASTM F 436-76b	Specification for Hardened Steel Washers for Use with High-Strength Bolts

NOTE:

*Codes, standards, and specifications are applicable as discussed in Section 3.8.

TABLE 3.8-5

USNRC REGULATORY GUIDES*

Regulatory Guide Number	Title
1.10	Mechanical (Cadweld) Splices in Reinforcing Bars for Category I Concrete Structures
1.15	Testing of Reinforcing Bars for Category I Concrete Structures
1.17	Protection of Nuclear Power Plant Against Industrial Sabotage
1.18	Structural Acceptance Test for Concrete Primary Reactor Containments
1.19	Nondestructive Examination of Primary Containment Liner Welds
1.29	Seismic Design Classification
1.31	Control of Ferrite Content in Stainless Steel Weld Metal
1.44	Control of the Use of Sensitized Stainless Steel
1.46	Protection Against Pipe Whip Inside Containment
1.54	Quality Assurance Requirements for Protective Coatings Applied to Water-Cooled Nuclear Power Plants
1.55	Concrete Placement in Category I Structures
1.60	Design Response Spectra for Seismic Design of Nuclear Power Plants
1.61	Damping Values for Seismic Design of Nuclear Power Plants
1.63	Electric Penetration Assemblies in Containment Structures for Light-Water-Cooled Nuclear Power Plants
1.69	Concrete Radiation Shields for Nuclear Power Plants
1.76	Design Basis Tornado for Nuclear Power Plants

TABLE 3.8-5 (Cont)

Regulatory Guide Number	Title
1.84	Design and Fabrication Code Case Acceptability - ASME Section III, Division 1
1.85	Materials Code Case Acceptability - ASME Section III, Division 1
1.92	Combining Modal Responses and Spatial Components in Seismic Response Analysis
1.94	Quality Assurance Requirements for Installation, Inspection, and Testing of Structural Concrete and Structural Steel During the Construction Phase of Nuclear Power Plants
1.117	Tornado Design Classification
1.122	Development of Floor Design Response Spectra for Seismic Design of Floor-Supported Equipment or Components

NOTE:

*USNRC Regulatory Guides are discussed in Section 1.8.

TABLE 3.8-6

PRINCIPLE PLANT STRUCTURAL SPECIFICATIONS
FOR SEISMIC CATEGORY I MATERIALS*

Seismic Category I Materials	Specifications
Furnish Reinforcing Steel	
Reinforcing Bars	ASTM A 615, Grade 40, 50 Special Chemistry, and 60, and ASTM A 706
Bar and Rod Mats	ASTM A 184
Detailing and Fabrication	ACI 315 and ACI 318
Furnish Radial Shear Bar Assemblies	
Inclined Flat Shear Bars	ASTM A 242 Type 2, ASTM A 441, ASTM A 572, or ASTM A 588 having a minimum yield strength of 50 ksi
Reinforcing Bars	ASTM A 615, Grade 50, and ASTM A 29
Filler Metal for Welding	AWS D1.1 Table 4.1-1, low hydrogen
Fabrication	AWS D1.1 and AWS D12.1
Mixing and Delivering Concrete Materials	
Portland Cement	ASTM C 150, Type II
Fly Ash	ASTM C 618, Class F (except that the loss of ignition shall not be more than 6 percent and available alkalies as Na O shall not exceed 1.5 percent)
Air Entraining Agent	ACI 301, ASTM C 233, ASTM C 260
Water Reducing Agent	ASTM C 494
Aggregates	ASTM C 33, ASTM C 227, ASTM C 289
Proportioning Concrete	ACI 301, ACI 304, ACI 211.1
Batching and Mixing Concrete	ASTM C 94, ACI 301, ACI 304
Delivery	ACI 301, ACI 304
Hot Weather Requirements	ACI 305
Cold Weather Requirements	ACI 306

TABLE 3.8-6 (Cont)

Seismic Category I Materials	Specifications
Concrete Testing Services	
Gather Aggregate Samples	ASTM D 75
Test Water and Ice	ASTM C 109, ASTM C 151, ASTM C 191
Test Fine Aggregates	ASTM C 136, ASTM C 29, ASTM C 40, ASTM C 142, ASTM C 117, ASTM C 123, ASTM C 227, ASTM C 289, ASTM C 128, ASTM C 88, ASTM C 295, ASTM C 33, ASTM C 87
Test Coarse Aggregates	ASTM C 136, ASTM C 29, ASTM C 131, ASTM C 535, ASTM C 88, ASTM C 227, ASTM C 289, ASTM C 127, ASTM C 142, ASTM C 117, ASTM C 123, ASTM C 295, ASTM C 33, ASTM C 235, CRD C 119
Test Cement	ASTM C 150
Test Calcium Aluminate Cement	ASTM C 114, ASTM C 115, ASTM C 109, ASTM C 191, ASTM C 204
Design Concrete Mixes	ACI 211.1
Test Concrete	
Compressive Strength	ACI 301, ASTM C 31, ASTM C 39
Air Dry Weight	ASTM C 567
Slump	ASTM C 143
Air Content	ASTM C 231
Unit Weight	ASTM C 138
Fly Ash	ASTM C 311, ASTM C 618
Hardened Concrete	ASTM C 42
Test Grout	ASTM C 109
Evaluation of Concrete Strength	ACI 301, ACI 214
Placing Concrete and Reinforcing Steel	
Cadweld Splices	See Section 3.8.1.6
Welded Splices	See Section 3.8.1.6
Formworks	ACI 301, ACI 347
Placing Reinforcement	ACI 301, ACI 318
Concrete Protection for Reinforcing	ACI 318
Concrete Construction, Expansion, and Contraction Joints	ACI 301

TABLE 3.8-6 (Cont)

Seismic Category I Materials	Specifications
Water Stops	CRD C 513 (except that ozone resistance requirements do not apply), CRD C 572
Anchor Bolts and Miscellaneous Steel	ASTM A 307, ASTM A 36, ASTM A 193, ASTM A 194, 1 and AISC Specifications
Inserts, Sleeves, and Pipes	ACI 301, ACI 318, AISC Specifications
Concrete Placing	ACI 301, ACI 304, ACI 305, ACI 306, ACI 318
Cold Weather Requirements	ACI 306
Hot Weather Requirements	ACI 305
Vibration of Concrete	ACI 309
Finishing of Concrete Lift Surfaces	ACI 301
Depositing Underwater	ACI 301
Watertight Concrete	ACI 301
Repair of Surface Defects	ACI 301
Finishing of Formed and Flat Surfaces	ACI 301
Curing Materials	ASTM C 171, ASTM C 309 - Type I
Structural Steel	
Structural Steel	ASTM A 36
Filler Metal	AWS D1.1 Table 4.1-1, Low Hydrogen
Bolts, Nuts, and Washers	ASTM A 325 - Type I, ASTM A 490, ASTM A 307
Welding	AWS D1.1
Miscellaneous Steel	
Steel	ASTM A 36, ASTM A 515
Bolts, Nuts, Washers	ASTM A 307 - Grade B, ASTM A 325
Glavanizing	ASTM A 123, ASTM A 153, ASTM A 384, ASTM A 385
Welded Studs	AWS D1.1
Pipe Handrails	ASTM A 106- Grade B Schedule 40, ASTM A 501 Schedule 40
Ladders	ASTM A 36

TABLE 3.8-6 (Cont)

Seismic Category I Materials	Specifications
Category I Concrete Embedments	
Steel	ASTM A 36, ASTM A 242, ASTM A 516, Grade 70, ASTM A 543 Class 1
Bolts, Nuts, and Washers	ASTM A 36, ASTM A 307, ASTM A 325, ASTM A 490, ASTM A 193 Grade B7 ASTM A 588, ASTM A 194 Grade 7, ASTM F 436
Welded Studs	AWS D1.1
Stainless Steel	ASTM A 240 Type 304, ASTM A 276, Type 304

NOTE:

*Specifications are applicable as discussed in Section 3.8.

TABLE 3.8-7

STEEL LINER, PENETRATIONS,
AND ACCESS OPENING CODES
STANDARDS, AND SPECIFICATIONS*

Code	Description
ASME Boiler and Pressure Vessel Code	Section III, Division I; Section II, VIII, V, and IX
IEEE Standard 317-1976	Electrical Penetration Assemblies in Containment Structures for Nuclear Fueled Power Generating Stations. Institute of Electrical and Electronics Engineers.
10 CFR 50 Appendix J	"Reactor Containment Leakage Testing for Water Cooled Power Reactors." Details of Type A tests (performed on liner plate) and Type B tests (performed on electrical penetration and access openings) are presented in Section 6.2.6.

NOTE:

*Codes, standards, and specifications are discussed in Section 3.8.

TABLE 3.8-8

SUMMARY OF MATERIALS[1] CALLED FOR
IN SPECIFICATIONS FOR
STEEL LINER, PENETRATIONS, AND ACCESS OPENINGS[2]

Item	Specifications[1]
Liner plates (1/4-inch to 1 1/4-inch inclusive)	SA537, Grade B, quenched and tempered, NDTT not higher than -10°F
Backing plates, shear lugs, bridging plates	SA516, Grade 60, fine grained, normalized, NDTT not higher than -10°F
Piping penetration sleeves without coolers	SA333, Grade 6, or SA516, Grade 60, fine grained, normalized, NDTT not higher than -10°F
Penetrations 73, 74, 75 sleeves	SA537, Grade B quenched and tempered, NDTT not higher than -10°F
Piping penetration sleeves with coolers	SA312, Type 304, seamless or welded or SA240, Type 304 or SA358, Type 304
Piping penetration coolers	SA312, Type 304, welded or SA358, Type 304
Piping penetration cooler end rings	SA240, Type 304
Carbon steel pipe and electrical penetration sleeves	SA333, Grade 6, fine grained, normalized, NDTT not higher than -10°F
Stainless steel pipe	SA312, Type 304 or SA312, Type 316
Pipe penetration end caps 4-inch diameter and under	SA105, Grade II, normalized
Pipe penetration end caps over 4-inch diameter	SA234, Grade WPB, normalized
Gas testing channels and angles	ASTM-A131, Grade C
Equipment hatch, emergency air lock, and personnel air lock, plate over 2 1/2 inches thick	SA516, Grade 60 or Grade 70, fine grained normalized, NDTT not higher than -10°F

TABLE 3.8-8 (Cont)

Item	Specifications[1]
Equipment hatch, emergency air lock, and personnel air lock plate, 2 1/2 inches thick and under	SA537, Grade B, quenched and tempered, NDTT not higher than -10°F or SA516, Grade 60 or Grade 70, fine grained normalized, NDTT not higher than -10°F
Carbon steel forgings and embedments	SA350, Grade LF1 or LF2, NDTT not higher than -10°F; acceptable alternate material electro-slag remelt processed steel (SA516 GR 60 or SA-537 GR B) provided that ultrasonic examination is added to the basic test requirements of the respective ASME II material specifications
Cooler tubing	SA213, Type 304
Stainless steel reducers and pipe caps for bottom embedments	SA403, Type 304
Stainless steel couplings, plugs and fittings for leak chase	A182, Type 304
Carbon steel couplings, plugs and fittings for leak chase	A105 Grade I or II
Equipment hatch bolts	SA193, GR B7
Equipment hatch nuts	SA-194-2H, SA-194-7
Equipment hatch, emergency air lock attachment, and personnel air lock gasket	Type "W" Neoprene, 40 ±5 Shore A Deg or Parker silicone rubber compound S-595-5 or S-595-65±5 with radiation certification or EPDM compound No. E401 40 ±5 durometer
Integral Forgings (Pen No. 39, 40, 41, 52, 73, 74, 75, 76, 77, 78)	SA508, Gr 1, Code Case 1332-6, NDTT requirements, Charpy V-Notch of -10°F and DWT per ASTM E208 of +10°F. Test temp for DWT to be +20°F
Integral forgings (Pen. No. 28, 51)	SA282, Type 304

NOTES

(1) Materials listed in this table may have been replaced with materials of equivalent design characteristics. The term equivalent is described in UFSAR Section 1.12, "Equivalent Materials".
(2) Specifications are applicable as discussed in Section 3.8.

TABLE 3.8-9

LOAD COMBINATIONS FOR LINER PLATE AND ANCHORS

Category	Load Combinations	Stress Allowables (Per ASME III Nomenclature)
Emergency	D + Pd + Td + SSE	Pm + Pb + Q<3 Sm
Test	D + 1.15 Pd	Pm <0.9 Sy Pm + Pb <1.35 Sy
Anticipated (Cyclic)	150 c of Po 600 c of T 150 c of 1/2 SSE	Use method of paragraph NB-3222.4 (d) or (e)
Severe Operational	D + Pmin + 1/2 SSE D + Pmin + 1/2 SSE D + Pmin + Tmin + 1/2 SSE	Pm < Sm Pm + Pb < 1.5 Sm Pm + Pb + Q <3 Sm
	Load Combinations for Liner Plate Anchors	
Emergency	D + Pd + Td	$(P/P')^2 + (S/S')^2 < 1$
Severe Operational	D + Pmin + Tmin	$(P/P')^2 + (S/S')^2 < 1$

where:

D = Dead load effect of reinforced concrete structure acting on the liner plus dead load of the liner.

Pd = Maximum design pressure (pressure resulting from design basis accident plus safety margin).

Td = Load due to thermal expansion resulting when the liner is exposed to the design temperature.

SSE = Stresses in the liner derived from applying the effect of the safe shutdown earthquake.

1/2 SSE = Stresses in the liner derived from applying the effect of the 1/2 safe shutdown earthquake (which is equivalent to one OBE). The anticipated number of cycles, one hundred fifty (150) cycles of 1/2 SSE are an assumed number of earthquake cycles based on a 60 year span.

Po = Differential pressure between operating and atmospheric pressure. The anticipated number of cycles, one hundred fifty (150) cycles are assumed on the basis of 2.5 refueling cycles per year on a 60-year span. The design limit for operating cycles is 1000 cycles.

TABLE 3.8-9 (Cont)

T	=	Load due to thermal expansion resulting when the liner is exposed to the differential temperature between operating and seasonal refueling temperatures. Six hundred cycles are assumed on the basis of 10 such variations per year on a 60 year span. The design limit for operating temperature variations is 4000 cycles.
Pmin	=	Minimum pressure resulting during operation of the containment.
Tmin	=	Load due to thermal expansion resulting when the liner is exposed to the minimum pressure.
Sy	=	Yield strength of the material.
Sm	=	Basic allowable stress from ASME III.
P,S	=	Applied loads on anchors - tension and shear.
P',S'	=	Allowable anchor loads - tension and shear.

TABLE 3.8-10

ASTM A615 REINFORCING STEEL
GRADE 50, STONE & WEBSTER
SPECIAL CHEMISTRY
CHEMICAL AND MECHANICAL PROPERTIES

Properties	Values
Carbon (percent by weight)	0.35 maximum
Manganese (percent by weight)	1.25 maximum
Silicon (percent by weight)	0.15 - 0.25
Phosphorus (percent by weight)	0.05 maximum
Sulfur (percent by weight)	0.05 maximum
Tensile strength (psi)	70,000 minimum
Yield strength (psi)	50,000 minimum
Elongation in 8 inches (percent)	13 minimum

NOTE:

*The permissible variation in chemical properties for check analysis is provided in ASTM A29, Table 1.

TABLE 3.8-11

CONTAINMENT INTERNAL STRUCTURE
CONCRETE STRUCTURES LOAD COMBINATIONS COMPARISON

SRP Section 3.8.3* Factors

Load Combination	D	L	To	Ro	E	E′	Pa	Ta	Ra	Yr	Yj	Ym	
1	1.4	1.7											
2	1.4	1.7			1.9								
1b	1.05	1.275	1.275	1.275									
2b	1.05	1.275	1.275	1.275	1.425								
3	1.0	1.0	1.0	1.0		1.0							
4	1.0	1.0					1.5	1.0	1.0				
5	1.0	1.0			1.25		1.25	1.0	1.0	1.0	1.0	1.0	
6	1.0	1.0				1.0		1.0	1.0	1.0	1.0	1.0	1.0

BVPS-2 Load

	D	L	To	Ro	E	E′	Pa	Ta	Ra	Yr	Yj	Ym	Cl
1	1.05												1.275
2	1.4	1.7			1.9								
3	0.9				1.4								
4	1.0	1.0				1.0							
5	0.9					1.0							
6	1.0	1.0					1.5	1.0	1.0				
7	1.0	1.0			1.25		1.25	1.0	1.0	1.0	1.0	1.0	
8	1.0	1.0				1.0	1.0	1.0	1.0	1.0	1.0	1.0	

NOTE:

*U.S. Nuclear Regulatory Commission 1975.

TABLE 3.8-12

SEISMIC CATEGORY I STRUCTURES AND EQUIPMENT
FOR OTHER THAN THE CONTAINMENT STRUCTURE

Figure Description	Figure Number
Plot Plan	3.8-8
Plant Arrangement at Plan El 735’-6”	3.8-25
Plant Arrangement at Plan El 752’-6”	3.8-26
Plant Arrangement at Plan El 760’-6”	3.8-27
Plant Arrangement at Plan El 774’-6”	3.8-28
Plant Arrangement Part Plan	3.8-29
Auxiliary Building Arrangement* Plant El 710’-6” and 718’-6”	3.8-30
Auxiliary Building Arrangement* Plan El 735’-6”	3.8-31
Auxiliary Building Arrangement* Plan El 755’-6”	3.8-32
Auxiliary Building Arrangement* Plan El 773’-6”	3.8-33
Auxiliary Building Arrangement* Sections 1-1 and 2-2	3.8-34
Auxiliary Building Arrangement* Sections 3-3 and 4-4	3.8-35
Auxiliary Building Arrangement* Section 5-5, Plan El 710’-6”	3.8-36
Safeguards Area Plan El 769’-0” and 758’-0”	3.8-1
Safeguards Area Plan El 741’-0”	3.8-2
Safeguards Area Plan El 718’-6”	3.8-3
Safeguards Area Section 1-1	3.8-4

TABLE 3.8-12 (Cont)

Figure Description	Figure Number
Main Steam Valve and Cable Vault Area** Plan El 773’-6"	3.8-1
Main Steam Valve and Cable Vault Area** Plan El 735’-6"	3.8-2
Main Steam Valve and Cable Vault Area** Plan El 718’-6"	3.8-3
Main Steam Valve and Cable Vault Area** Sections 2-2 and 5-5	3.8-6
Main Steam and Cable Vault Area** Plan El 755’-6", 798’-0", 808’-6"	3.8-37
Fuel and Decontamination Building Arrangement - Sheet 1	9.1-1
Fuel and Decontamination Building Arrangement - Sheet 2	9.1-2
Control Building Plan El 735’-6"	3.8-40
Control Building Plan El 707’-6"	3.8-41
Control Building Section 103 and 106	3.8-42
Diesel Generator Building Arrangement	3.8-43
Service Building*** Plan El 745’-6" and 730’-6"	3.8-44
Service Building*** Plan El 760’-6" and 780’-6"	3.8-45
Service Building*** Sections 1-1 and 2-2	3.8-46
Electrical Cable Tunnel	3.8-47
Service Water Valve Pit	3.8-48

TABLE 3.8-12 (Cont)

Figure Description	Figure Number
Primary Demineralized Water Tank Enclosure	3.8-1 3.8-2
Pipe Trench for BVPS-1 and BVPS-2 Crosstie Piping - Sheet 1 (non-Seismic Category I)	3.8-48
Pipe Trench for BVPS-1 and BVPS-2 Crosstie Piping - Sheet 2 (non-Seismic Category I)	3.8-49
Emergency Out Fall Structure	3.8-50
Equipment Hatch Platform	3.8-1
Waste Handling Building Arrangement (non-Seismic Category I)	3.8-51
Condensate Polishing Building (non-Seismic Category I) Plan El 722'-6" and 735'-6"	3.8-52
Condensate Polishing Building (non-Seismic Category I) Plan El 752'-6" and 774'-6"	3.8-53
Condensate Polishing Building (non-Seismic Category I) Sections 1-1, 2-2, 3-3, 4-4, 5-5	3.8-54
Condensate Polishing Building (non-Seismic Category I) Plan El 762'-6" and 794'-6", Section 6-6	3.8-55
Refueling Water Storage Tank and Chemical Addition Tank	3.8-1 3.8-2
Gaseous Waste Storage Tanks (non-Seismic Category I)	3.8-56

NOTES:

*The auxiliary building steel structure above el 773'-6" is Seismic Category I but does not provide tornado protection.
**The steel frame roof portion of the main steam valve and cable vault area is non-Seismic Category I.
***The service building above el 780'-6" is non-Seismic Category I.

TABLE 3.8-13

CRITERIA FOR STABILITY FACTORS AGAINST SLIDING AND OVERTURNING

Loading Combination	Stability Overturning	Stability Sliding	Flotation
D + H + E	1.5	1.5	
D + H + W	1.5	1.5	
D + H + E′	1.1	1.1	
D + H + W_t	1.1	1.1	
D + F			1.1

NOTES:

D = Dead loads or their related internal movements and forces, including permanent equipment loads and hydrostatic loads.

H = Lateral earth pressure.

E = Loads generated by the operating basis earthquake.

W = Loads generated by the design wind.

E′ = Loads generated by the safe shutdown earthquake.

W_t = Loads generated by the design tornado.

F = Buoyant force of probable maximum flood.

Removed in Accordance with RIS 2015-17

FIGURE 3.8-1

REACTOR CONTAINMENT MACHINE LOCATION, PLAN E. 767'-10"

BEAVER VALLEY POWER STATION - UNIT 2
UPDATED FINAL SAFETY ANALYSIS REPORT

s10R001D.dgn 10/15/2014 2:41:15 PM

Removed in Accordance with RIS 2015-17

FIGURE 3.8-2
REACTOR CONTAINMENT MACHINE
LOCATIONS, PLAN EL. 738'-10"
BEAVER VALLEY POWER STATION - UNIT 2
UPDATED FINAL SAFETY ANALYSIS REPORT

Removed in Accordance with RIS 2015-17

FIGURE 3.8-3
REACTOR CONTAINMENT MACHINE
LOCATIONS, PLAN EL. 718'-6"
BEAVER VALLEY POWER STATION - UNIT 2
FINAL SAFETY ANALYSIS REPORT

Removed in Accordance with RIS 2015-17

FIGURE 3.8-4

REACTOR CONTAINMENT MACHINE LOCATION PLAN EL. 692'-11"

BEAVER VALLEY POWER STATION-UNIT 2
UPDATED FINAL SAFETY ANALYSIS REPORT

Removed in Accordance with RIS 2015-17

FIGURE 3.8-5

REACTOR CONTAINMENT MACHINE LOCATIONS, SECTIONS 1-1, 6-6 & 10-10

BEAVER VALLEY POWER STATION - UNIT 2
UPDATED FINAL SAFETY ANALYSIS REPORT

Removed in Accordance with RIS 2015-17

FIGURE 3.8-6

REACTOR CONTAINMENT MACHINE LOCATIONS, SECTIONS 2-2, 5-5 & 9-9

BEAVER VALLEY POWER STATION - UNIT 2
UPDATED FINAL SAFETY ANALYSIS REPORT

Removed in Accordance with RIS 2015-17

FIGURE 3.8-7

REACTOR CONTAINMENT MACHINE LOCATIONS, SECTIONS 3-3 & 4-4

BEAVER VALLEY POWER STATION - UNIT 2
UPDATED FINAL SAFETY ANALYSIS REPORT

10R0070.dgn 10/16/2014 1:06:34 PM

Removed in Accordance with RIS 2015-17

FIGURE 3.8-8
PLOT PLAN
BEAVER VALLEY POWER STATION-UNIT 2
FINAL SAFETY ANALYSIS REPORT

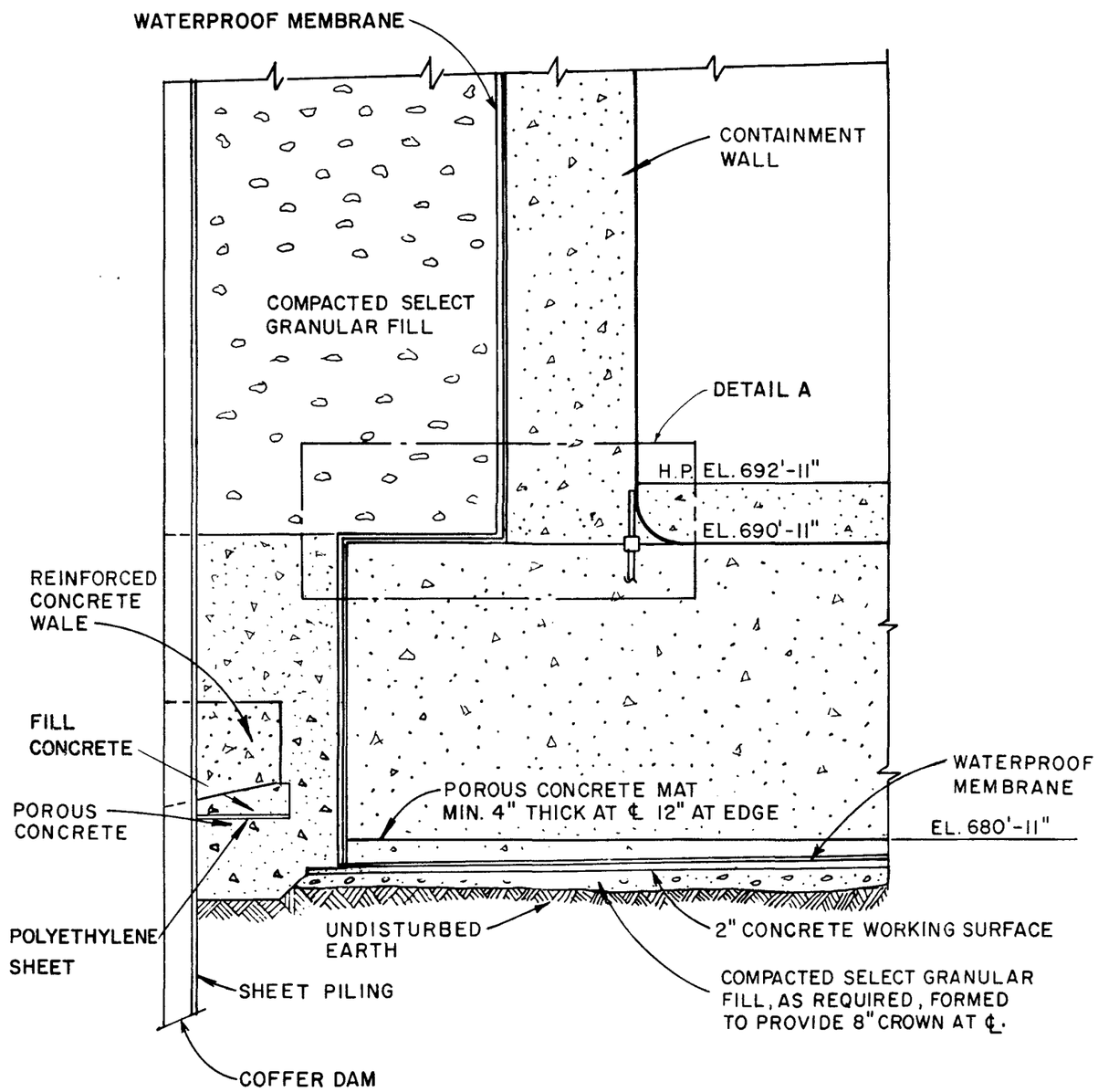

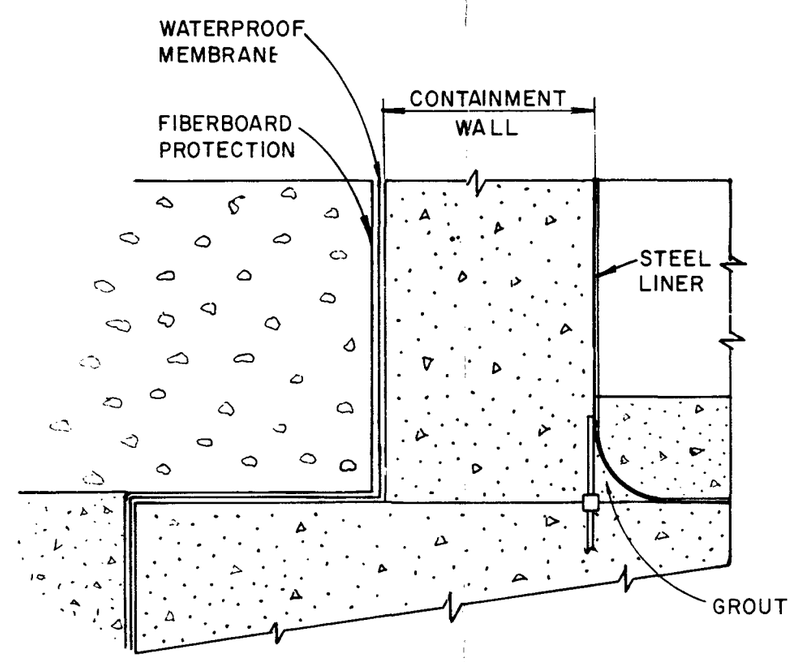

DETAIL A

NOTES:

1. NORMAL GROUND WATER EL. 665'±
2. ORDINARY HIGH WATER EL. 675'±
3. STANDARD PROJECT FLOOD EL. 705'
4. PROBABLE MAXIMUM FLOOD EL. 730'

FIGURE 3.8-9
REACTOR CONTAINMENT WATERPROOFING
BEAVER VALLEY POWER STATION-UNIT 2
FINAL SAFETY ANALYSIS REPORT

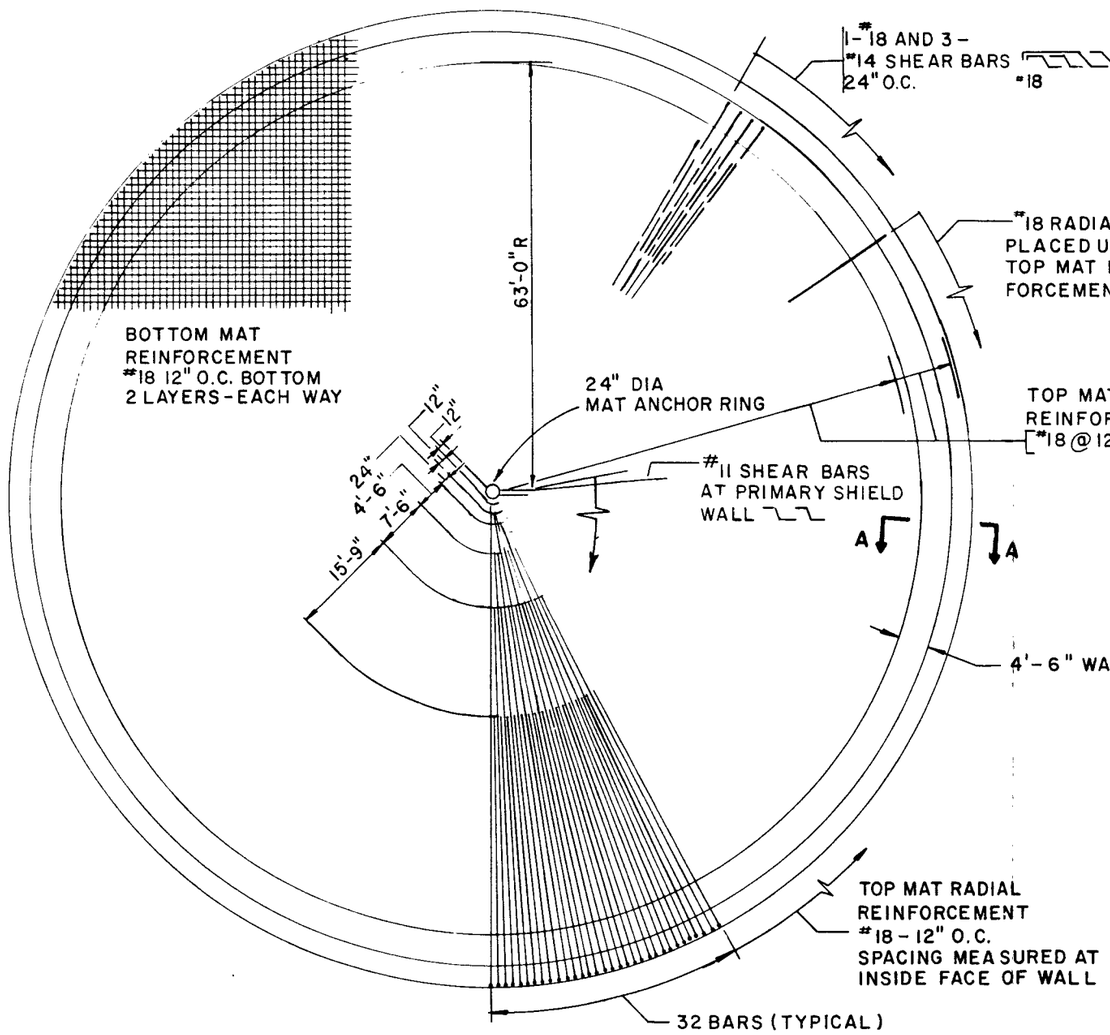

PLAN

FOUNDATION MAT

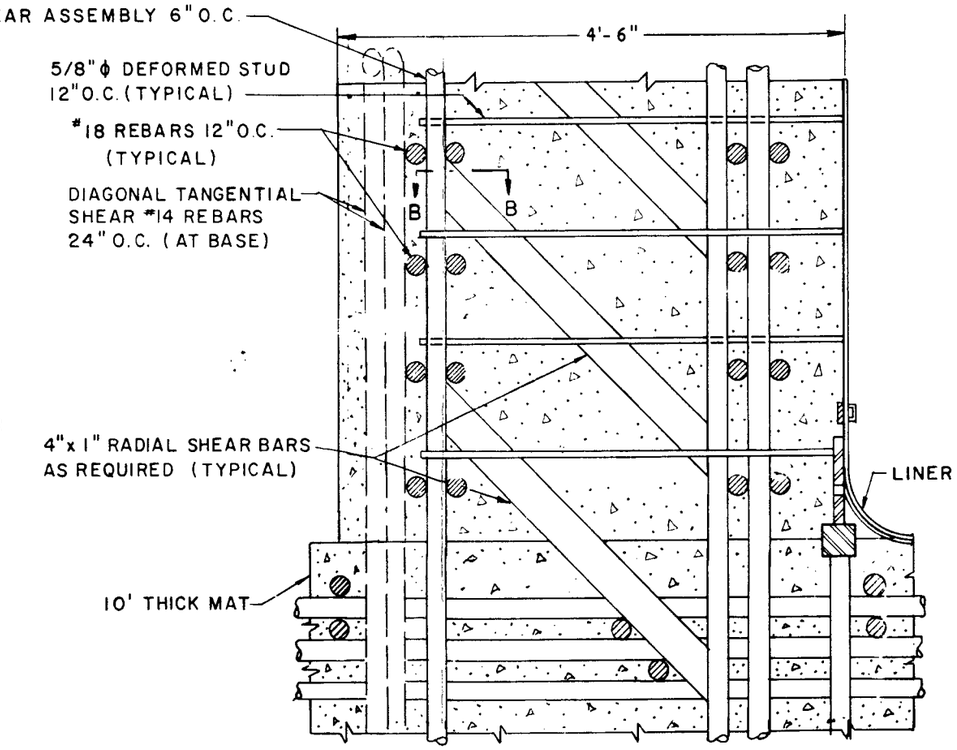

SECTION A-A

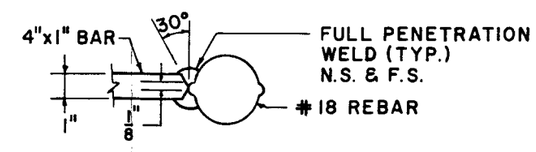

SECTION B-B

FIGURE 3.8-10
FOUNDATION MAT & WALL BASE
BEAVER VALLEY POWER STATION-UNIT 2
FINAL SAFETY ANALYSIS REPORT

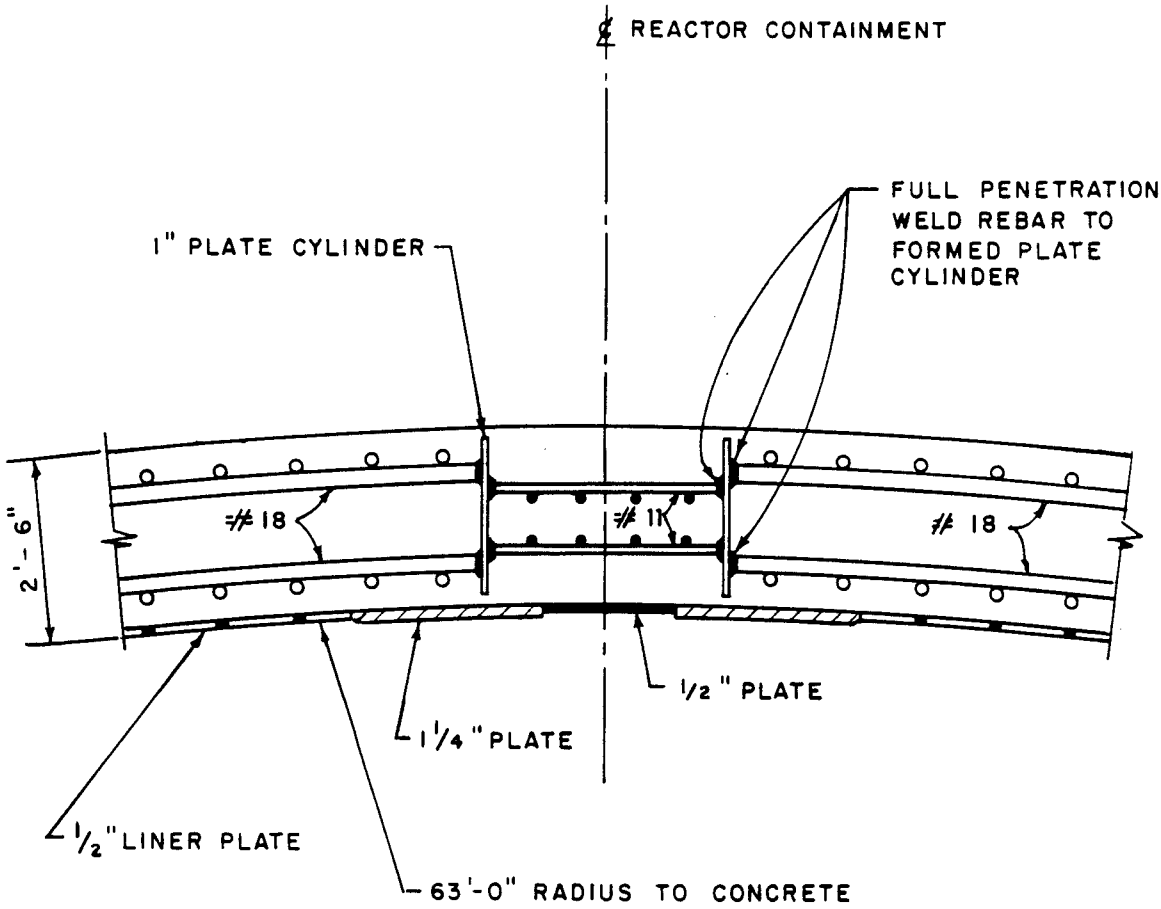

FIGURE 3.8-11
CONCENTRIC RING AT APEX OF DOME
BEAVER VALLEY POWER STATION-UNIT 2
FINAL SAFETY ANALYSIS REPORT

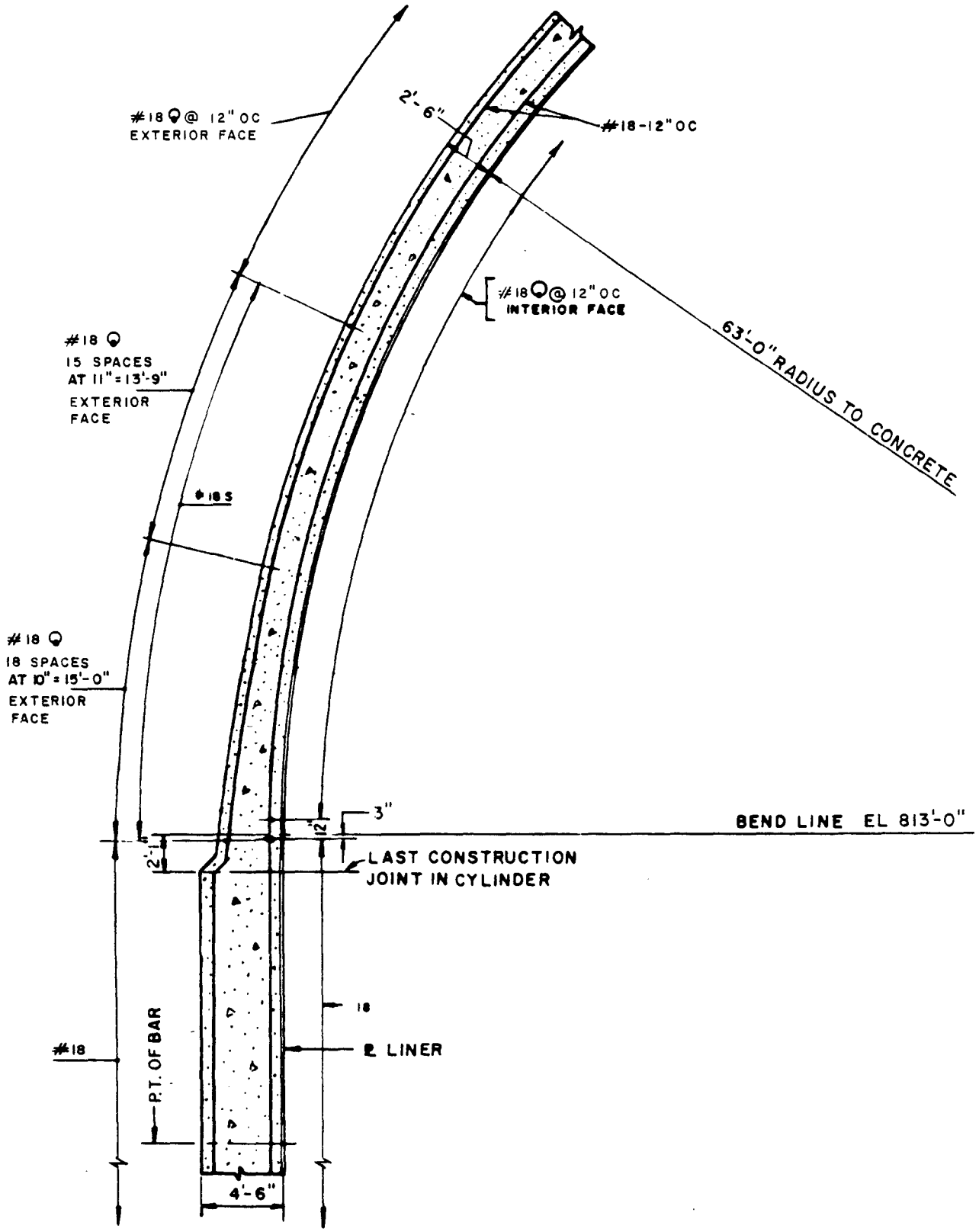

FIGURE 3.8-12
TYPICAL DETAIL OF DOME—
CYLINDER JUNCTION
BEAVER VALLEY POWER STATION-UNIT 2
FINAL SAFETY ANALYSIS REPORT

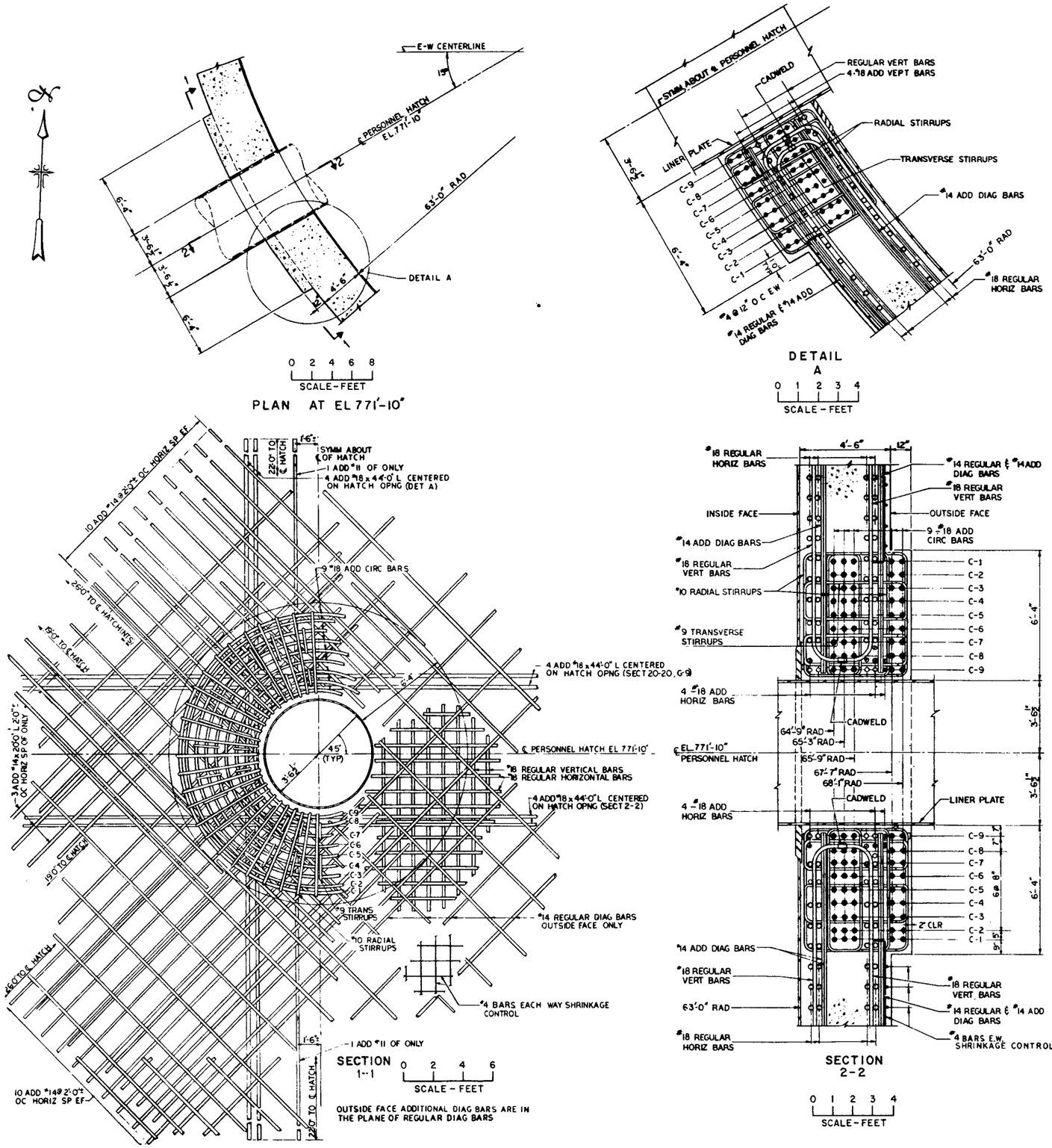

LEGEND:

- ● CIRCULAR REBARS WITH RADIUS FROM ℄ OF HATCH AND ℄ OF REACTOR CONTAINMENT
- ○ REGULAR REBARS
- ◐ ADDITIONAL HORIZONTAL OR VERTICAL REBARS

FIGURE 3.8-13
PERSONNEL HATCH
REINFORCING DETAILS
BEAVER VALLEY POWER STATION-UNIT 2
FINAL SAFETY ANALYSIS REPORT

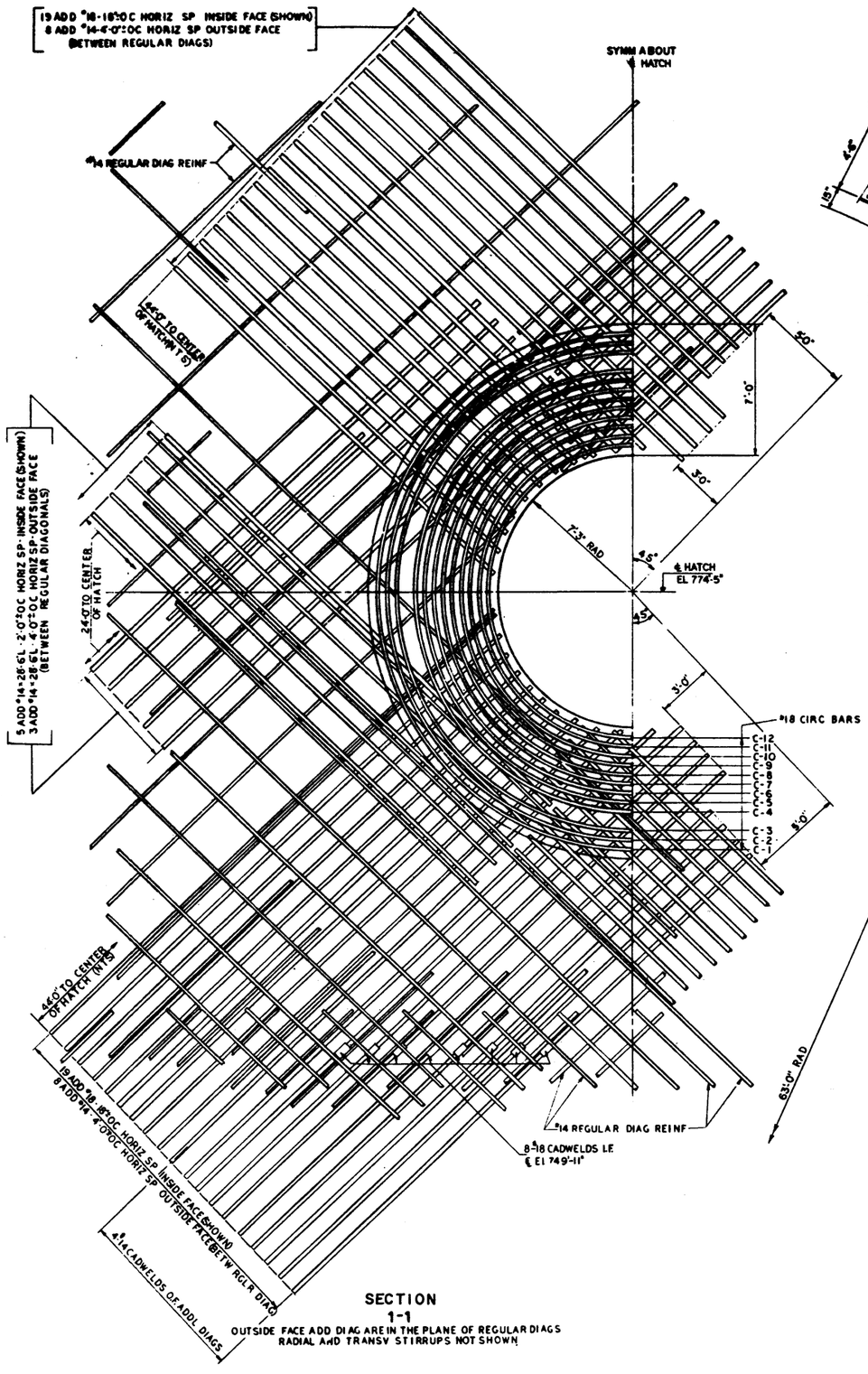

SECTION 1-1

OUTSIDE FACE ADD DIAG ARE IN THE PLANE OF REGULAR DIAGS
RADIAL AND TRANSV STIRRUPS NOT SHOWN

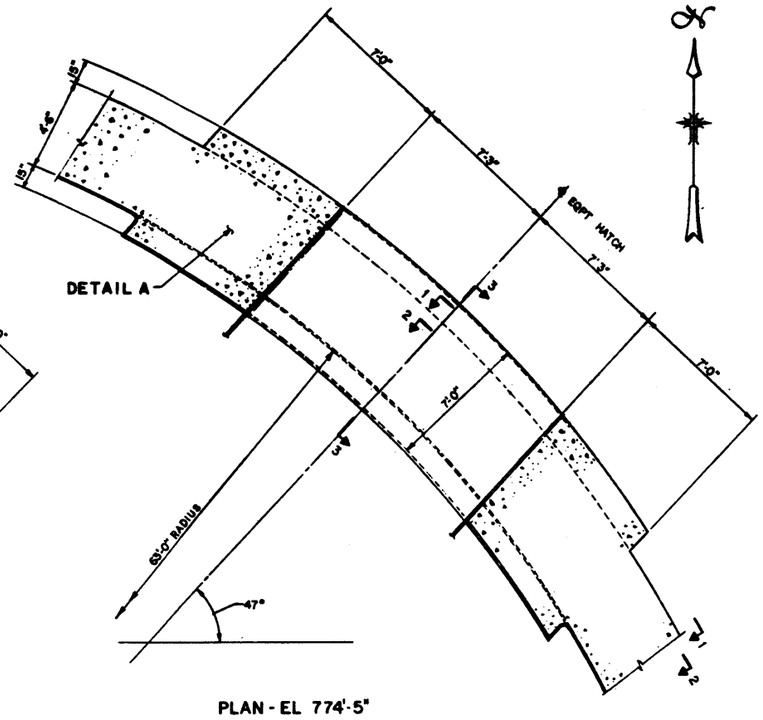

PLAN - EL 774'-5"

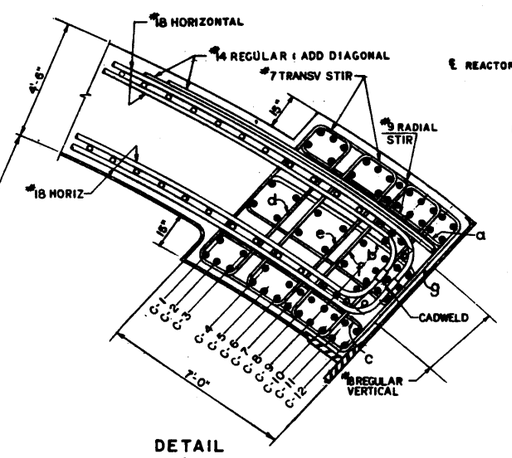

DETAIL A

0 1 2 3 4
SCALE-FEET

LEGEND:

- ● CIRCULAR REBARS WITH RADIUS FROM ℄ OF HATCH AND ℄ OF REACTOR CONTAINMENT
- ○ REGULAR REBARS
- ⊘ ADDITIONAL HORIZONTAL REBARS
- ⊕ ADDITIONAL VERTICAL REBARS

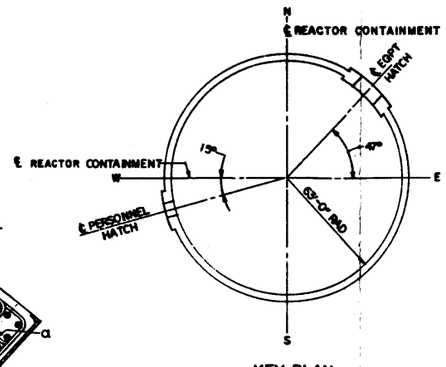

KEY PLAN

0 30 60
SCALE—FEET

FIGURE 3.8-14 (SHEET 1)
EQUIPMENT HATCH REINFORCING DETAILS
BEAVER VALLEY POWER STATION-UNIT 2
FINAL SAFETY ANALYSIS REPORT

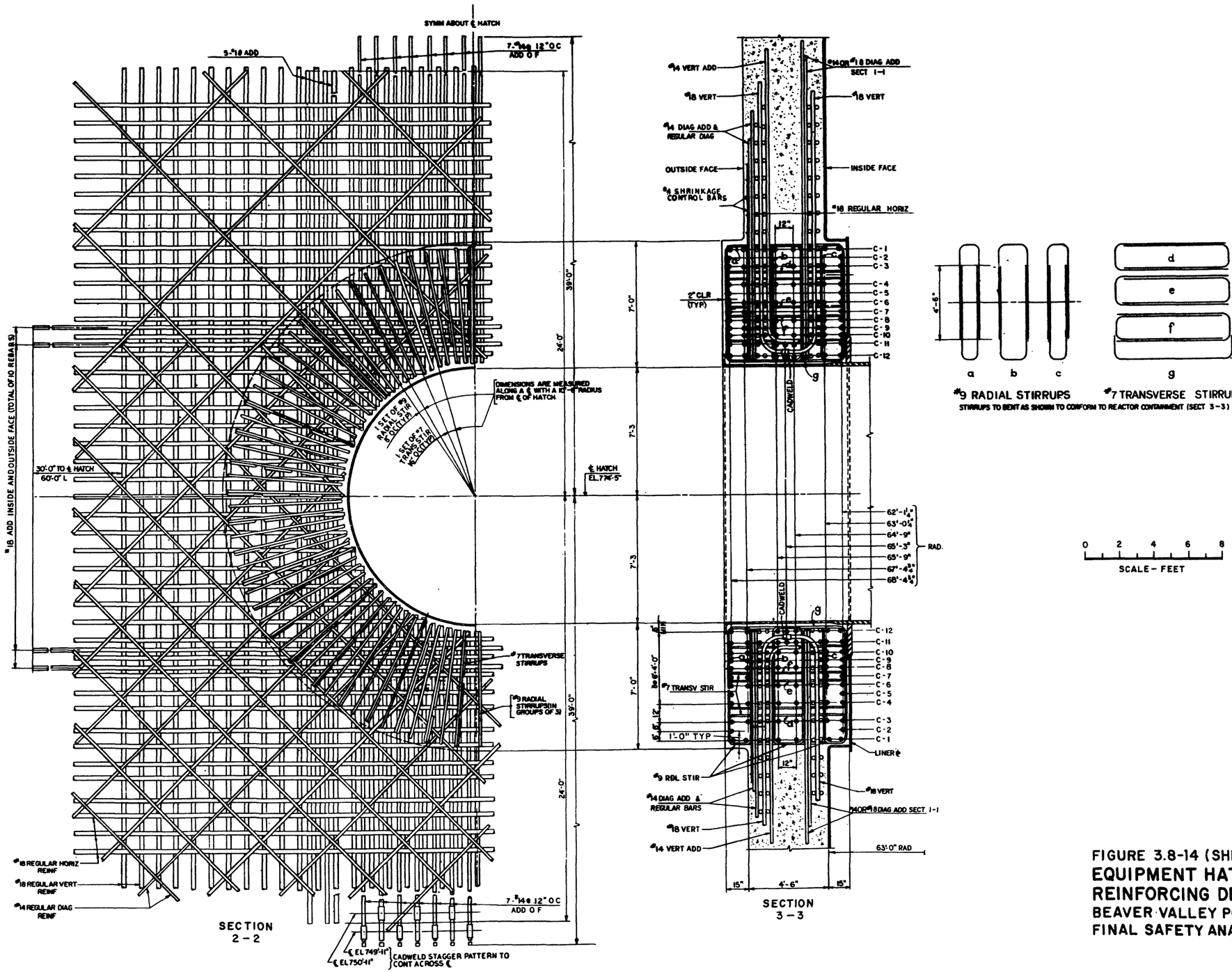

FIGURE 3.8-14 (SHEET 2)
EQUIPMENT HATCH REINFORCING DETAILS
BEAVER VALLEY POWER STATION-UNIT 2
FINAL SAFETY ANALYSIS REPORT

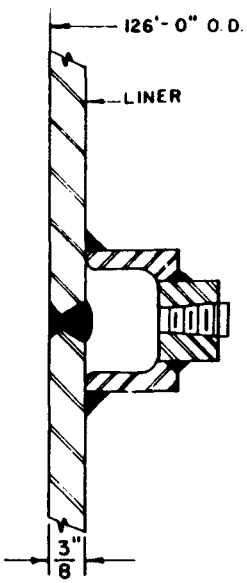

TYPICAL WALL JOINT
WITHOUT BACKING PLATE

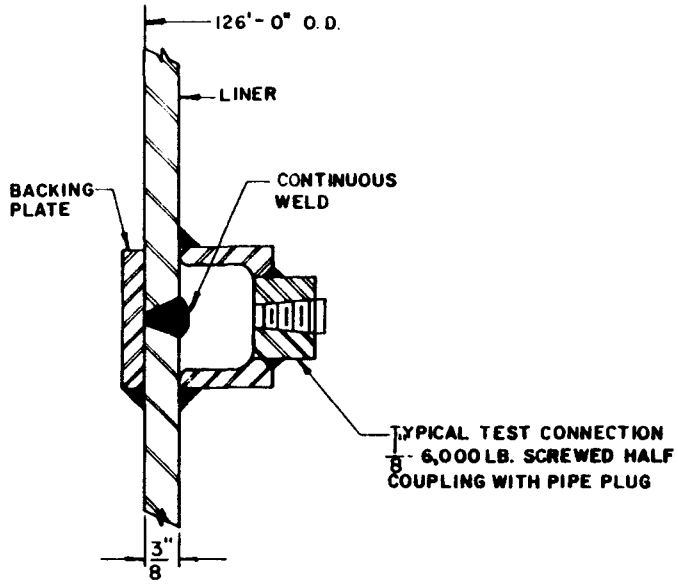

TYPICAL WALL JOINT
WITH BACKING PLATE

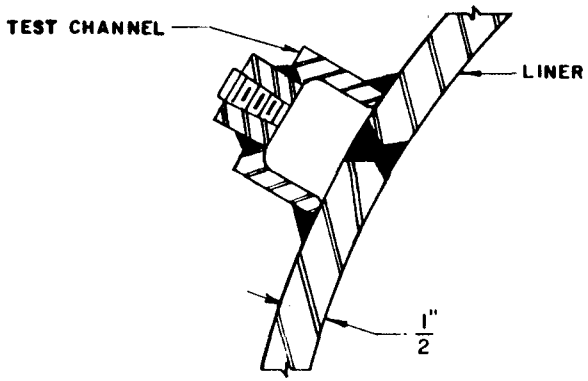

TYPICAL DOME JOINT

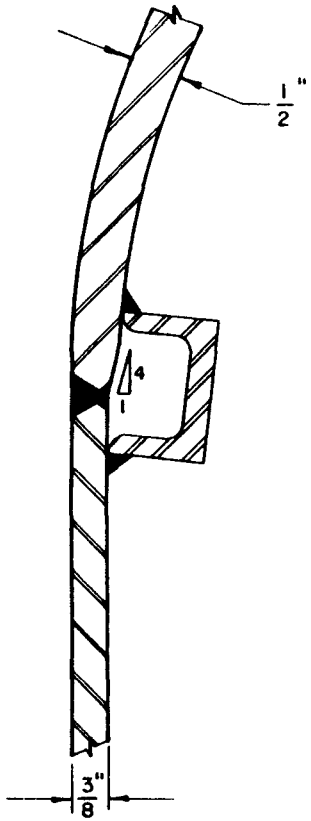

WALL TO DOME JOINT

FIGURE 3.8-15
TYPICAL LINER DETAILS
BEAVER VALLEY POWER STATION-UNIT 2
FINAL SAFETY ANALYSIS REPORT

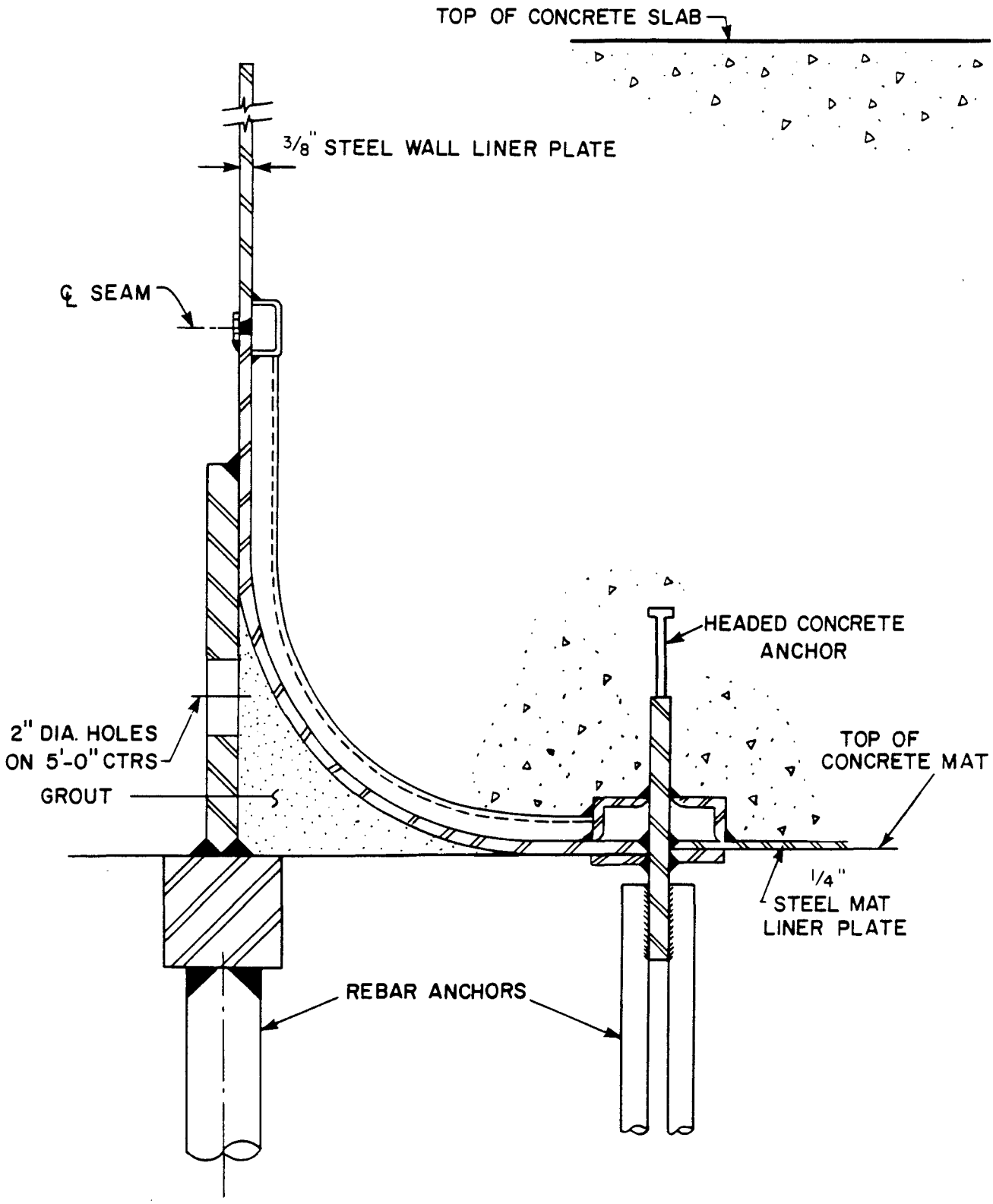

FIGURE 3.8-16
WALL AND MAT JOINT
BEAVER VALLEY POWER STATION - UNIT 2
FINAL SAFETY ANALYSIS REPORT

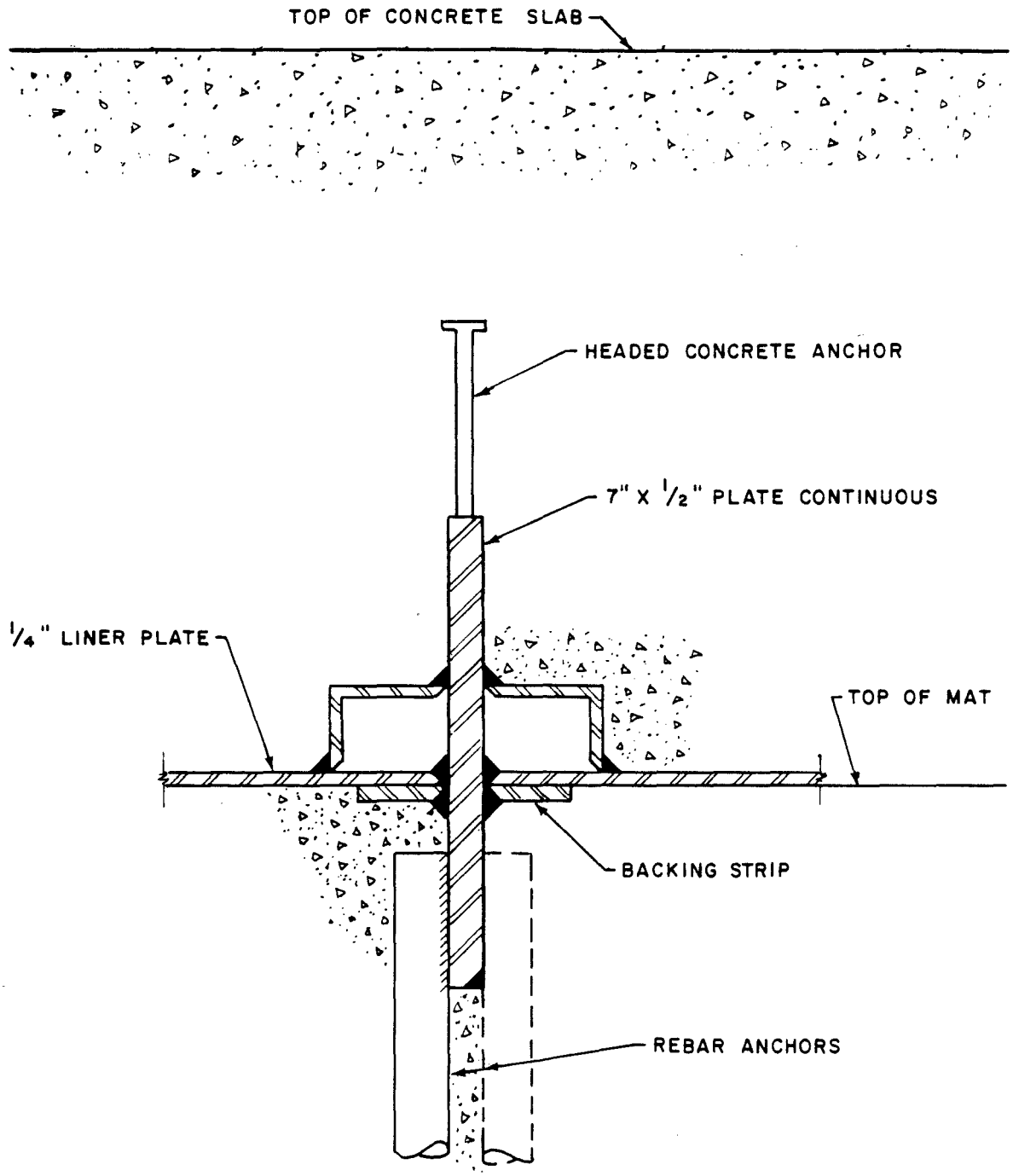

TYPICAL SECTION BRIDGING BAR USED TO ANCHOR CONCRETE SLAB TO CONTAINMENT MAT THROUGH MAT LINER

FIGURE 3.8-17

SECTION – TYPICAL
BOTTOM LINER BRIDGING PLATE

BEAVER VALLEY POWER STATION-UNIT 2
FINAL SAFETY ANALYSIS REPORT

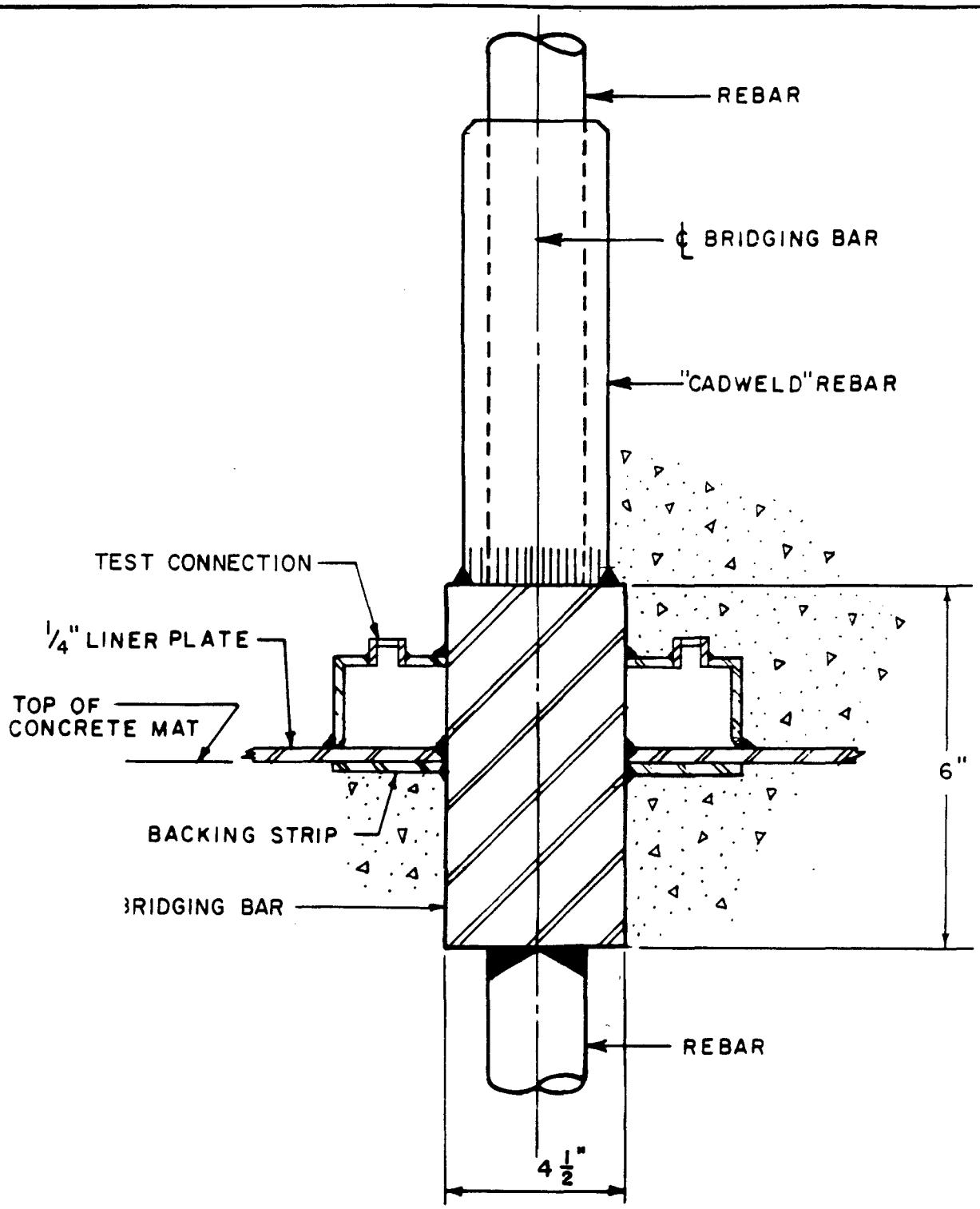

TYPICAL SECTION THROUGH BRIDGING BAR USED TO PROVIDE MAIN REINFORCING STEEL CONTINUITY THROUGH MAT LINER

FIGURE 3.8-18
SECTION - TYPICAL BRIDGING BAR
BEAVER VALLEY POWER STATION - UNIT 2
FINAL SAFETY ANALYSIS REPORT

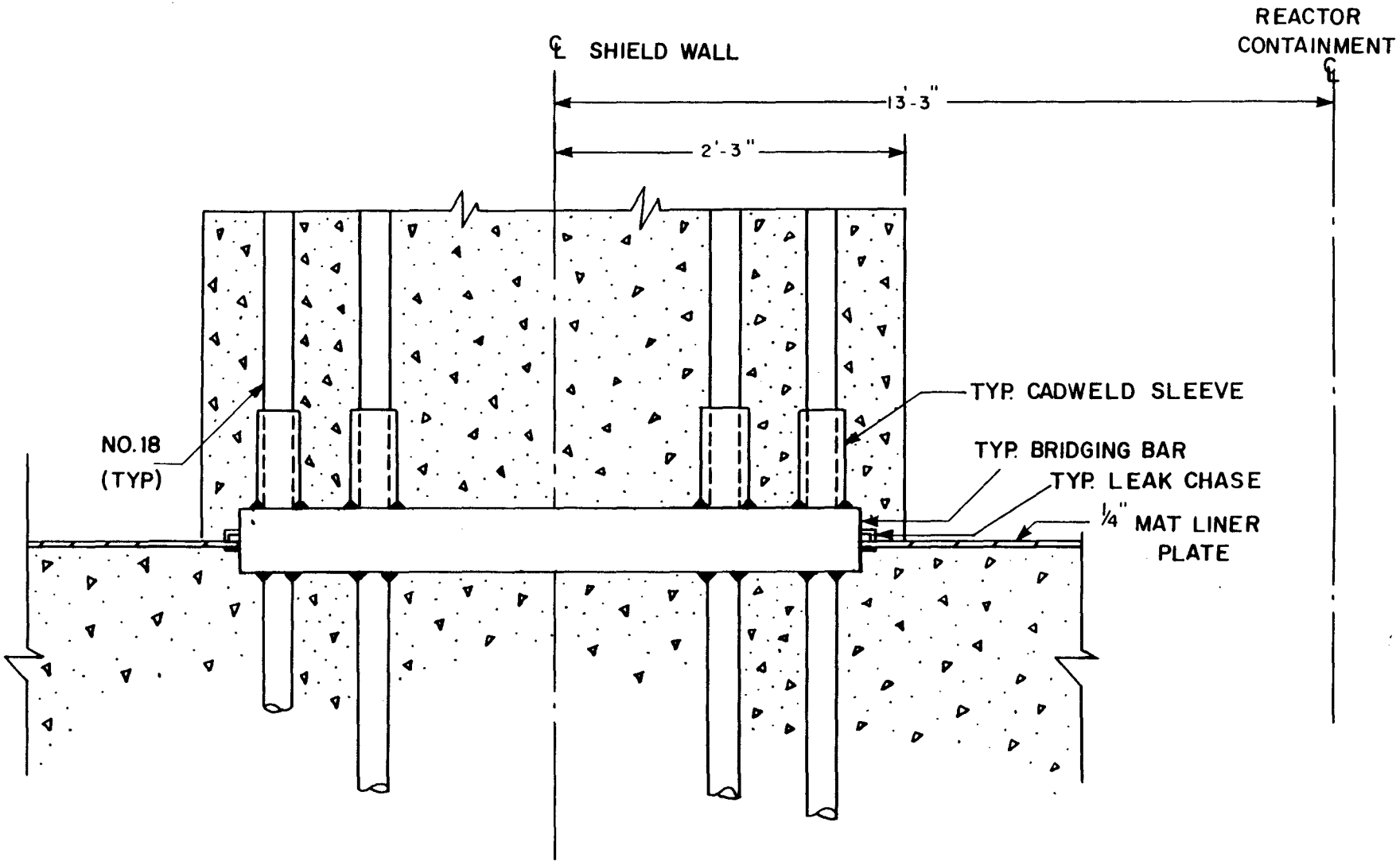

FIGURE 3.8-19
SECTION - SHIELD WALL BASE
BEAVER VALLEY POWER STATION - UNIT 2
FINAL SAFETY ANALYSIS REPORT

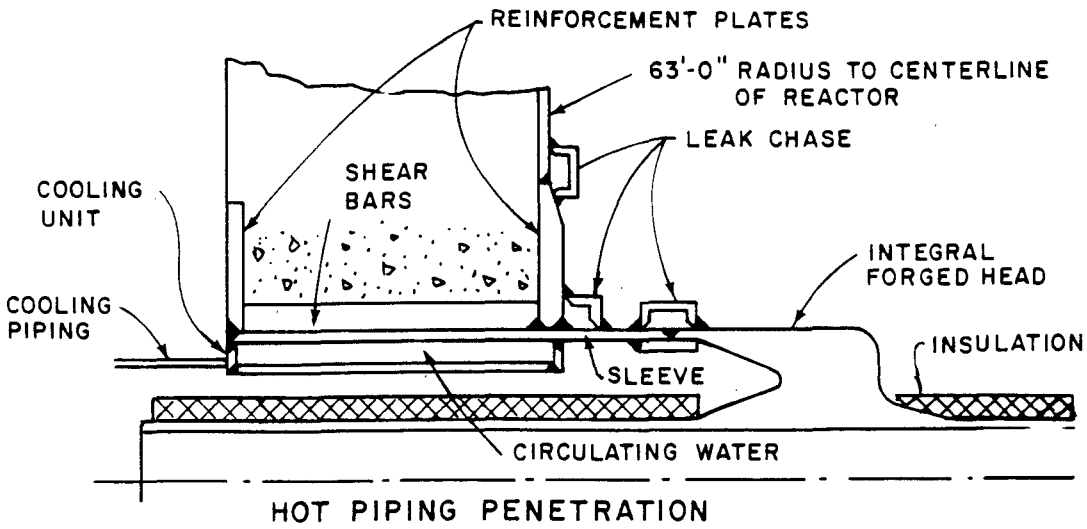

HOT PIPING PENETRATION

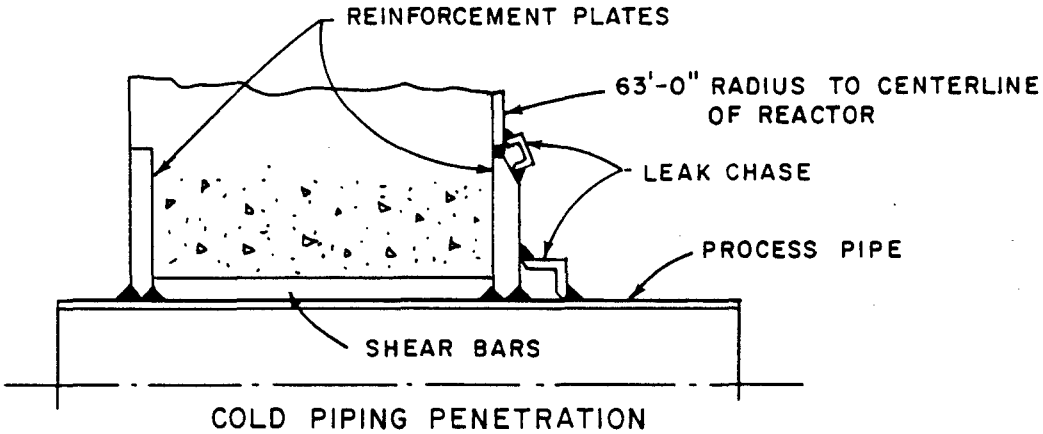

COLD PIPING PENETRATION

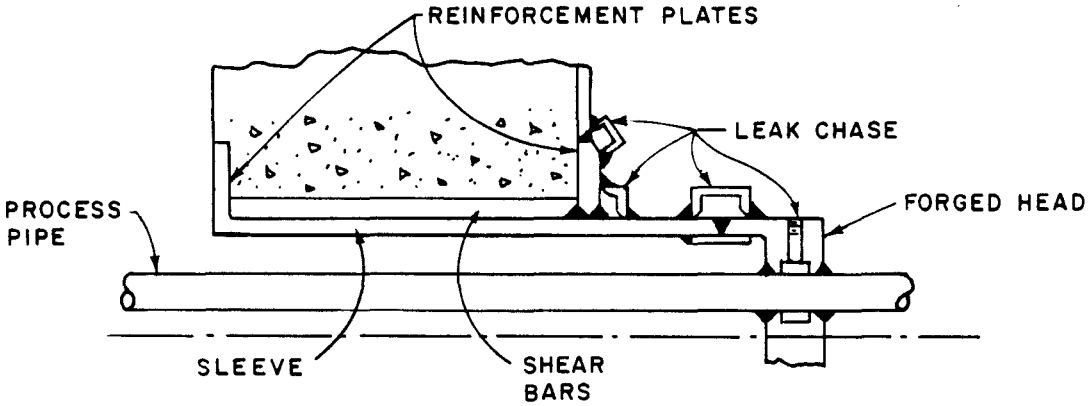

MULTIPLE PENETRATION

FIGURE 3.8-20
TYPICAL PIPING PENETRATIONS
BEAVER VALLEY POWER STATION-UNIT 2
FINAL SAFETY ANALYSIS REPORT

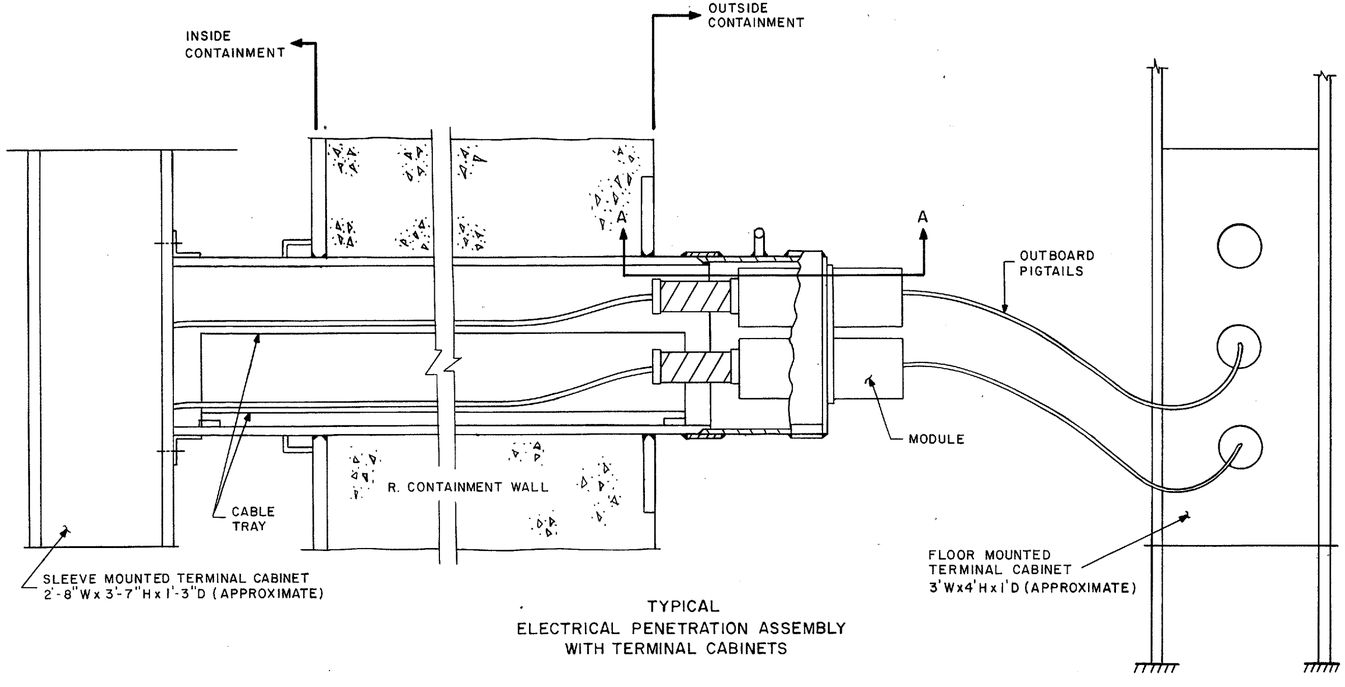

TYPICAL
ELECTRICAL PENETRATION ASSEMBLY
WITH TERMINAL CABINETS

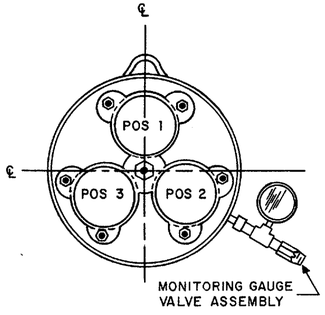

OUTBOARD END VIEW

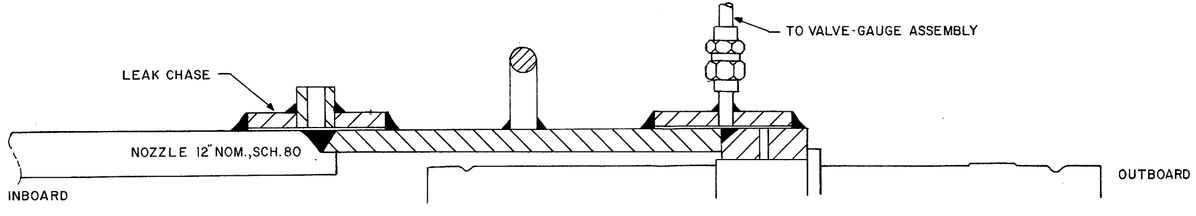

SECTION A-A
(FOR 600-V PENETRATIONS, SHOWN ABOVE)

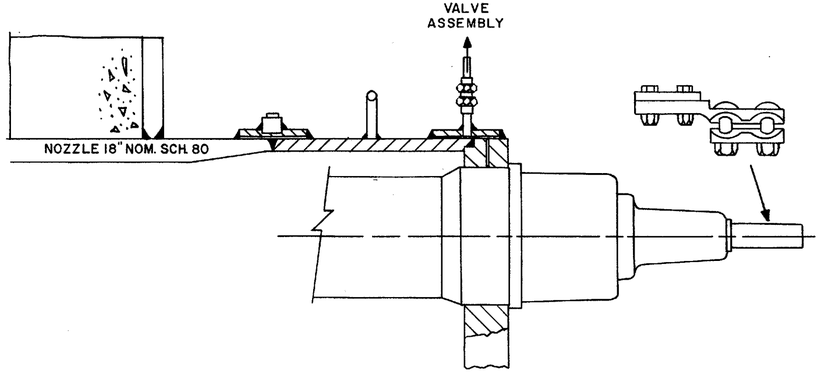

SECTION A-A
(FOR 5-KV PENETRATIONS, NOT SHOWN HERE)

FIGURE 3.8-21
TYPICAL ELECTRICAL PENETRATION
BEAVER VALLEY POWER STATION-UNIT 2
FINAL SAFETY ANALYSIS REPORT

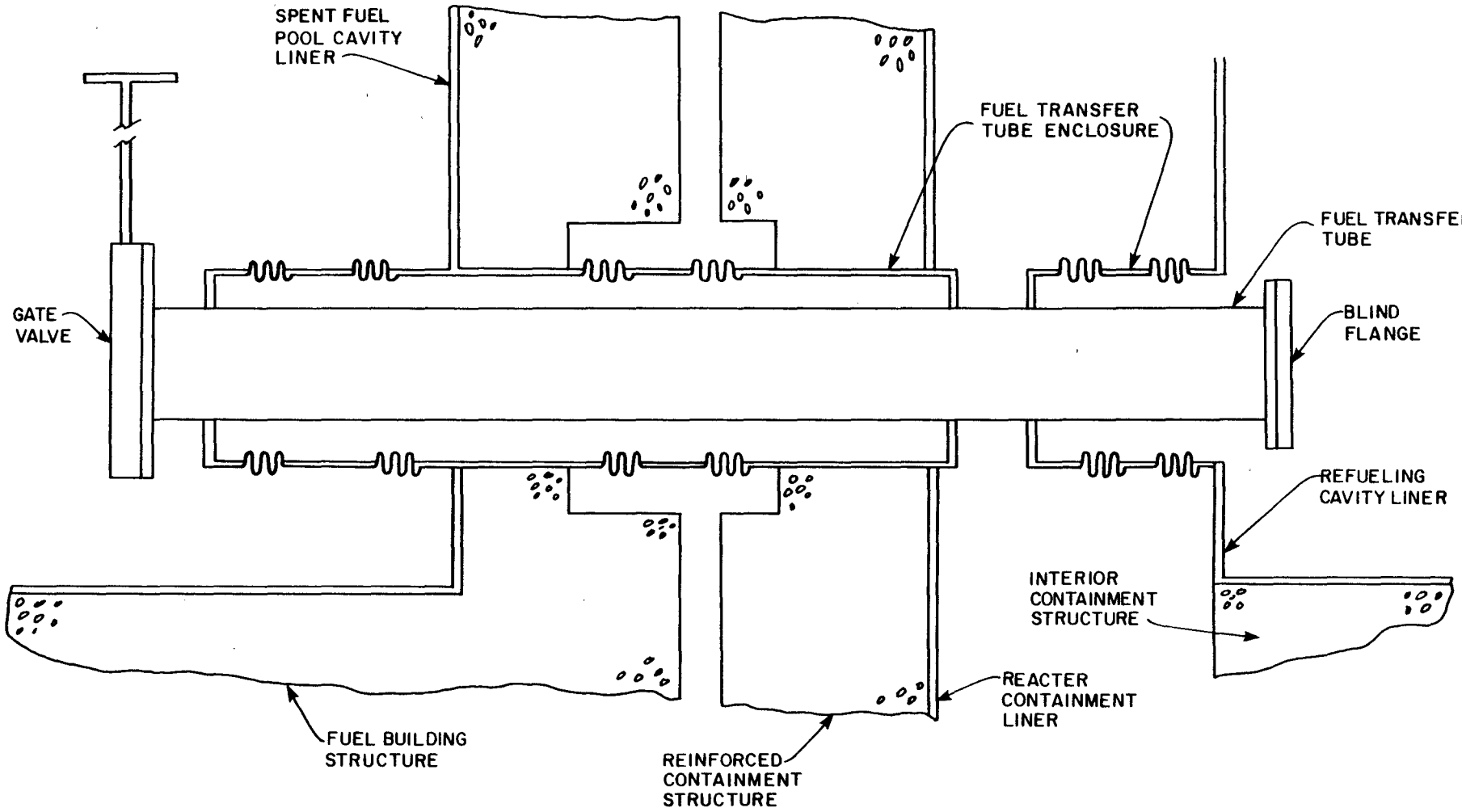

FIGURE 3.8-24
FUEL TRANSFER TUBE ENCLOSURE
BEAVER VALLEY POWER STATION-UNIT 2
FINAL SAFETY ANALYSIS REPORT

Removed in Accordance with RIS 2015-17

FIGURE 3.8 - 25

PLANT ARRANGEMENT AT
PLAN EL. 735'-6"

BEAVER VALLEY POWER STATION - UNIT 2
UPDATED FINAL SAFETY ANALYSIS REPORT

Removed in Accordance with RIS 2015-17

FIGURE 3.8-26
PLANT ARRANGEMENT AT PLAN EL. 752'-6"
BEAVER VALLEY POWER STATION-UNIT 2
FINAL SAFETY ANALYSIS REPORT

Removed in Accordance with RIS 2015-17

FIGURE 3.8-27
PLANT ARRANGEMENT AT PLAN EL. 760'-6"
BEAVER VALLEY POWER STATION—UNIT 2
FINAL SAFETY ANALYSIS REPORT

Removed in Accordance with RIS 2015-17

FIGURE 3.8-28
PLANT ARRANGEMENT AT PLAN EL. 774'-6"
BEAVER VALLEY POWER STATION-UNIT 2
FINAL SAFETY ANALYSIS REPORT

Removed in Accordance with RIS 2015-17

FIGURE 3.8-29
PLANT ARRANGEMENT PART PLAN
BEAVER VALLEY POWER STATION-UNIT 2
FINAL SAFETY ANALYSIS REPORT

Removed in Accordance with RIS 2015-17

FIGURE 3.8-30
AUXILIARY BUILDING ARRANGEMENT
PLAN EL. 710'-6" AND 718'-6"
BEAVER VALLEY POWER STATION-UNIT 2
FINAL SAFETY ANALYSIS REPORT

Removed in Accordance with RIS 2015-17

FIGURE 3.8-31
AUXILIARY BUILDING ARRANGEMENT
PLAN EL. 735'-6"
BEAVER VALLEY POWER STATION-UNIT 2
FINAL SAFETY ANALYSIS REPORT

Removed in Accordance with RIS 2015-17

FIGURE 3.8-32
AUXILIARY BUILDING ARRANGEMENT
PLAN EL. 755'-6"
BEAVER VALLEY POWER STATION-UNIT 2
FINAL SAFETY ANALYSIS REPORT

Removed in Accordance with RIS 2015-17

FIGURE 3.8-33
AUXILIARY BUILDING ARANGEMENT
PLAN EL. 773'-6"
BEAVER VALLEY POWER STATION - UNIT 2
FINAL SAFETY ANALYSIS REPORT

Removed in Accordance with RIS 2015-17

FIGURE 3.8-34
AUXILIARY BUILDING ARRANGEMENTS[1]
SECTIONS 1-1 AND 2-2
BEAVER VALLEY POWER STATION - UNIT 2
FINAL SAFETY ANALYSIS REPORT

Removed in Accordance with RIS 2015-17

FIGURE 3.8-35
AUXILIARY BUILDING
ARRANGEMENT SECTIONS
3-3 AND 4-4
BEAVER VALLEY POWER STATION-UNIT 2
FINAL SAFETY ANALYSIS REPORT

Removed in Accordance with RIS 2015-17

FIGURE 3.8-36
AUXILIARY BUILDING ARRANGEMENT
SECTION 5-5, PLAN EL.710'-6"
BEAVER VALLEY POWER STATION-UNIT 2
FINAL SAFETY ANALYSIS REPORT

Removed in Accordance with RIS 2015-17

FIGURE 3.8-37
MAIN STEAM & CABLE VAULT AREA
PLAN EL. 755'-6", 798'-0", 808'-6"
BEAVER VALLEY POWER STATION-UNIT 2
FINAL SAFETY ANALYSIS REPORT

Removed in Accordance with RIS 2015-17

FIGURE 3.8-40

CONTROL BUILDING
PLAN EL. 735'-6"

BEAVER VALLEY POWER STATION - UNIT 2
UPDATED FINAL SAFETY ANALYSIS REPORT

Removed in Accordance with RIS 2015-17

FIGURE 3.8-41
CONTROL BUILDING
PLAN EL. 707'-6"
BEAVER VALLEY POWER STATION-UNIT 2
FINAL SAFETY ANALYSIS REPORT

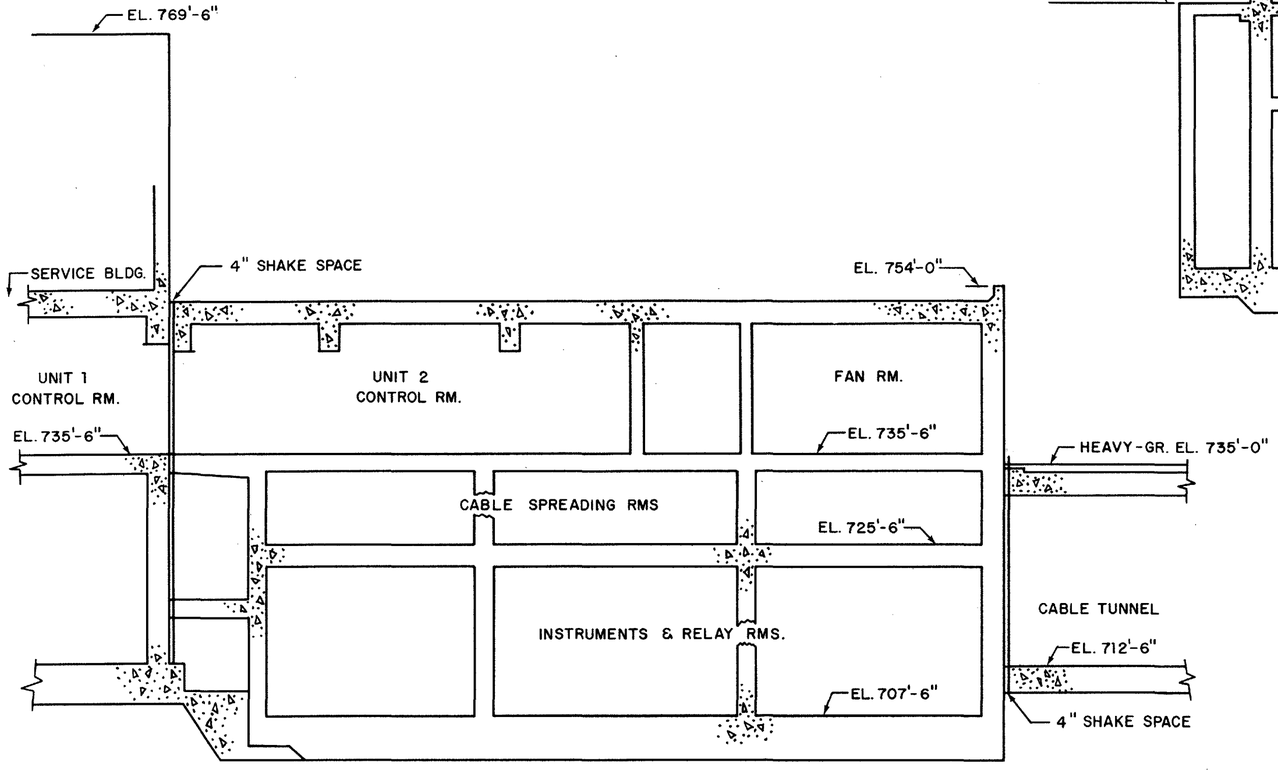

2-2

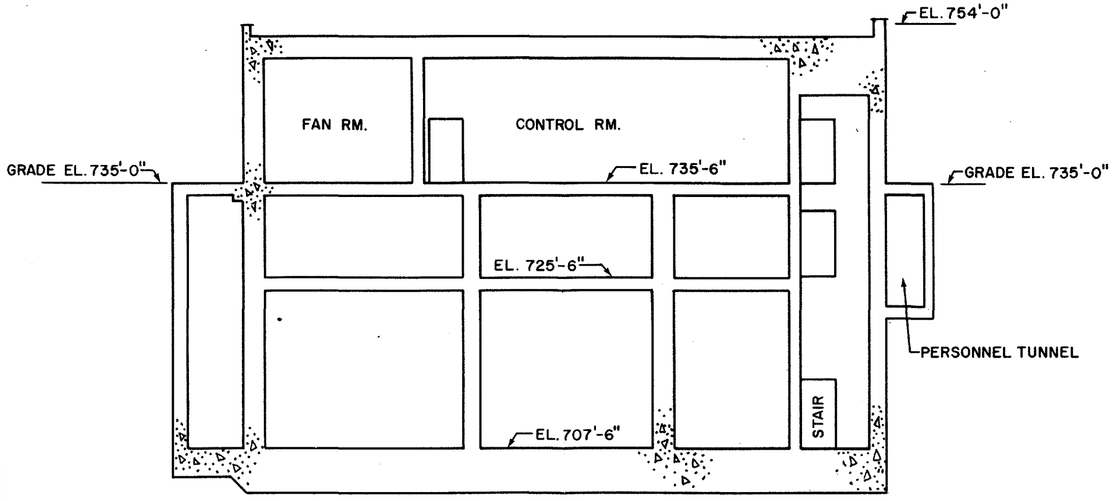

1-1

FIGURE 3.8-42
CONTROL BUILDING
SECTIONS
BEAVER VALLEY POWER STATION - UNIT 2
FINAL SAFETY ANALYSIS REPORT

Removed in Accordance with RIS 2015-17

FIGURE 3.8-43
DIESEL GENERATOR
BUILDING-ARRANGEMENT
BEAVER VALLEY POWER STATION-UNIT 2
FINAL SAFETY ANALYSIS REPORT

Removed in Accordance with RIS 2015-17

FIGURE 3.8-44
SERVICE BUILDING
PLAN EL 745'-6" AND 730'-6"
BEAVER VALLEY POWER STATION-UNIT 2
FINAL SAFETY ANALYSIS REPORT

Removed in Accordance with RIS 2015-17

FIGURE 3.8-45
SERVICE BUILDING
PLAN EL. 760'-6" AND 780'-6"
BEAVER VALLEY POWER STATION - UNIT 2
FINAL SAFETY ANALYSIS REPORT

Removed in Accordance with RIS 2015-17

FIGURE 3.8-46
SERVICE BUILDING
SECTIONS 1-1 AND 2-2
BEAVER VALLEY POWER STATION-UNIT 2
FINAL SAFETY ANALYSIS REPORT

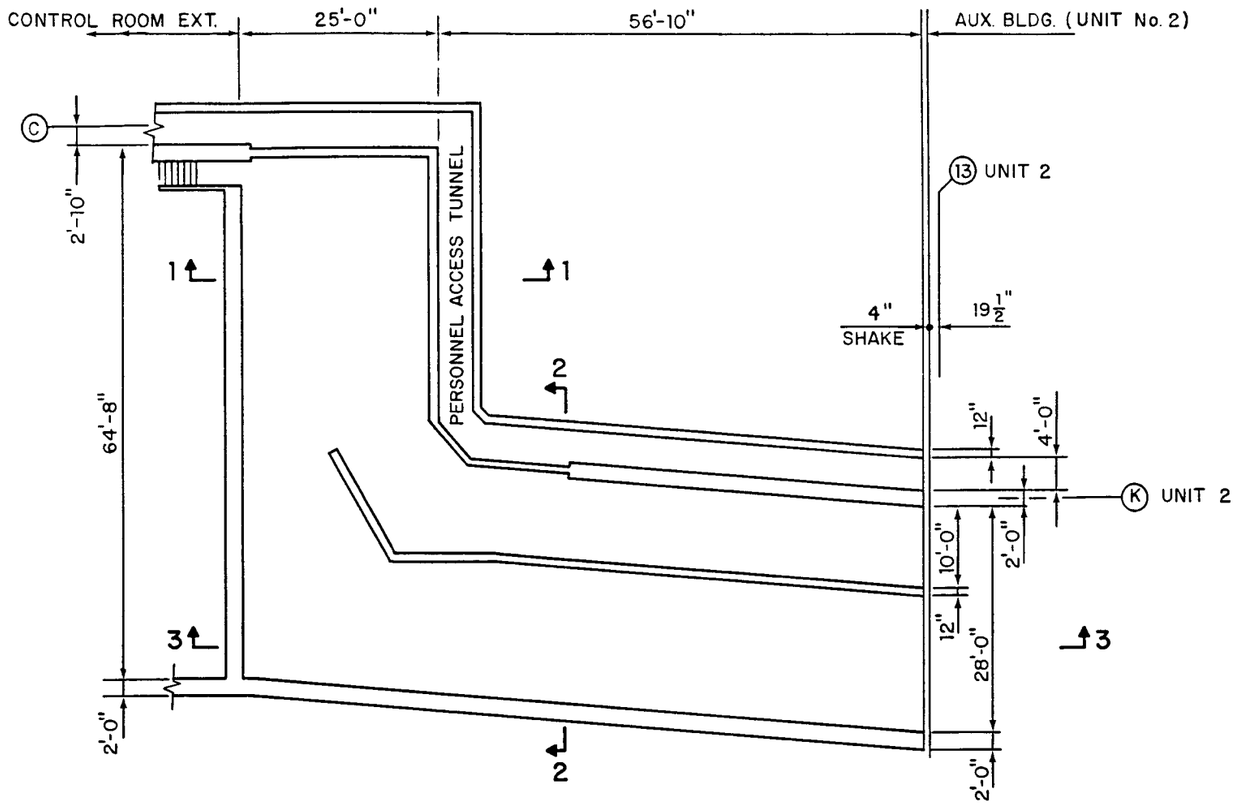

PLAN ABOVE EL. 722'-6"

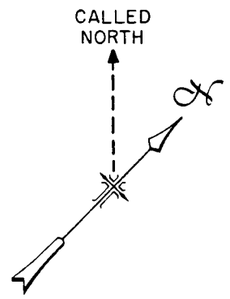

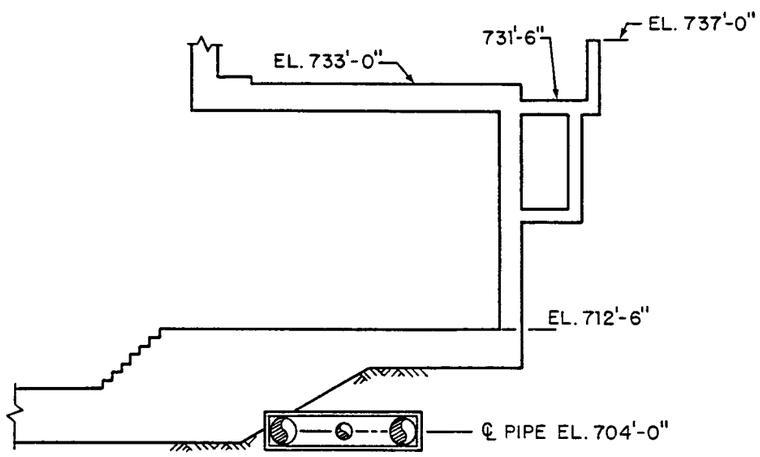

SECT 1-1

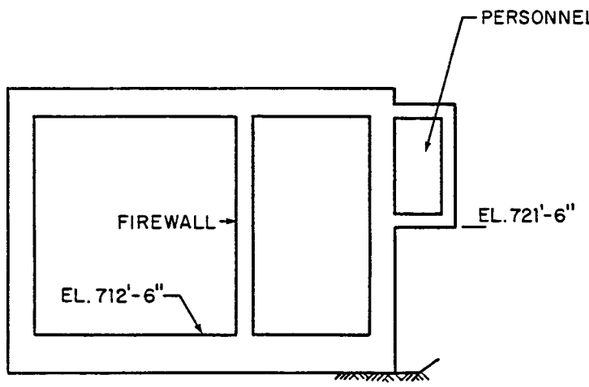

2-2

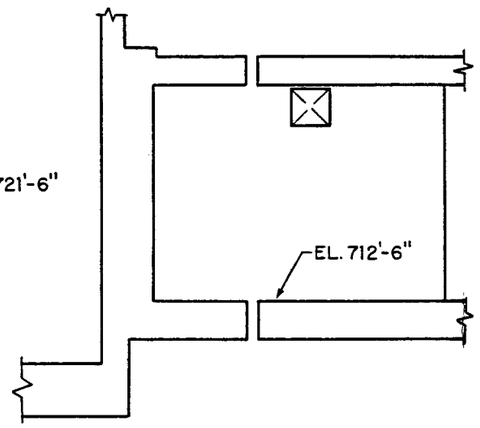

3-3

FIGURE 3.8-47
ELECTRICAL CABLE TUNNEL
BEAVER VALLEY POWER STATION-UNIT 2
FINAL SAFETY ANALYSIS REPORT

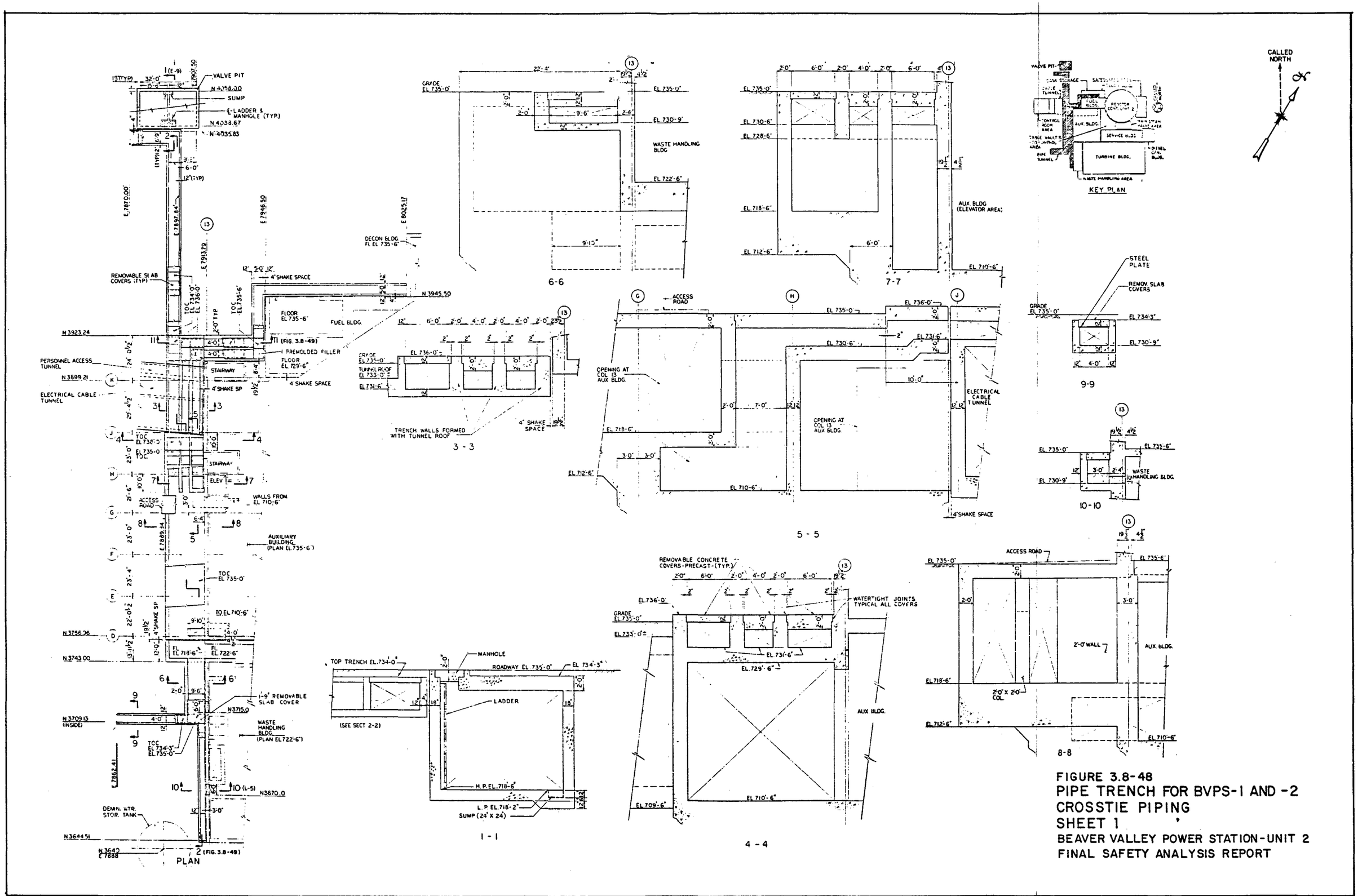

FIGURE 3.8-48
PIPE TRENCH FOR BVPS-1 AND -2
CROSSTIE PIPING
SHEET 1

BEAVER VALLEY POWER STATION-UNIT 2
FINAL SAFETY ANALYSIS REPORT

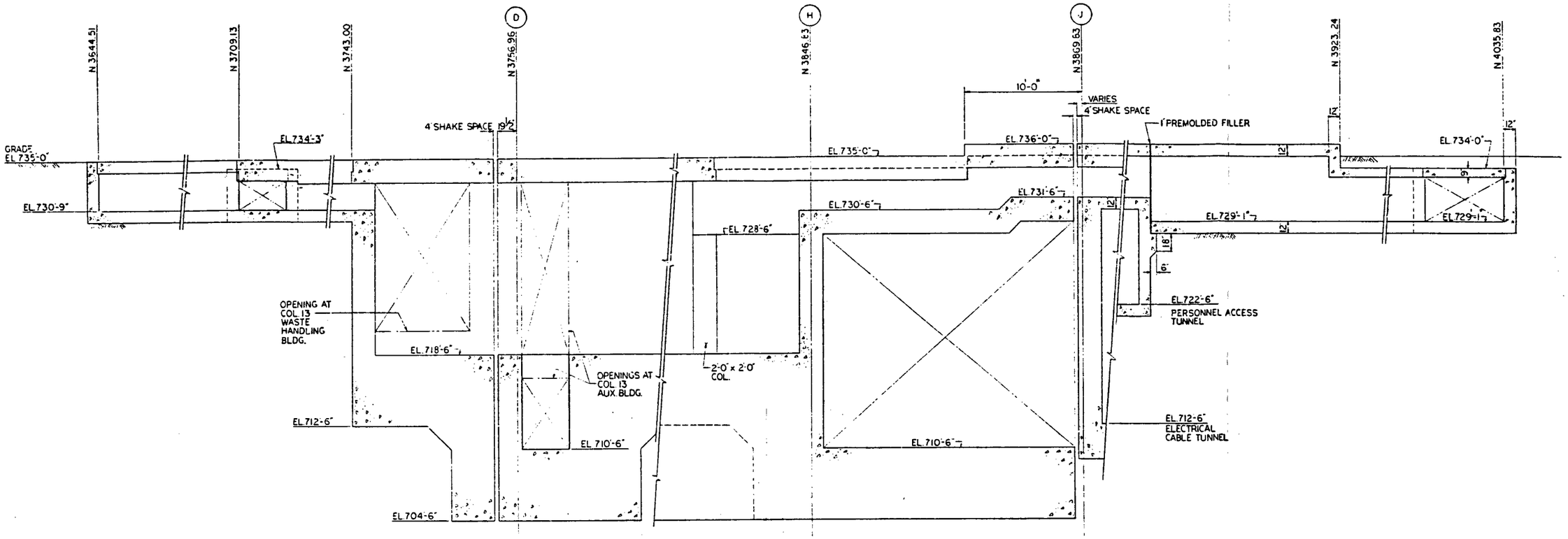

2-2

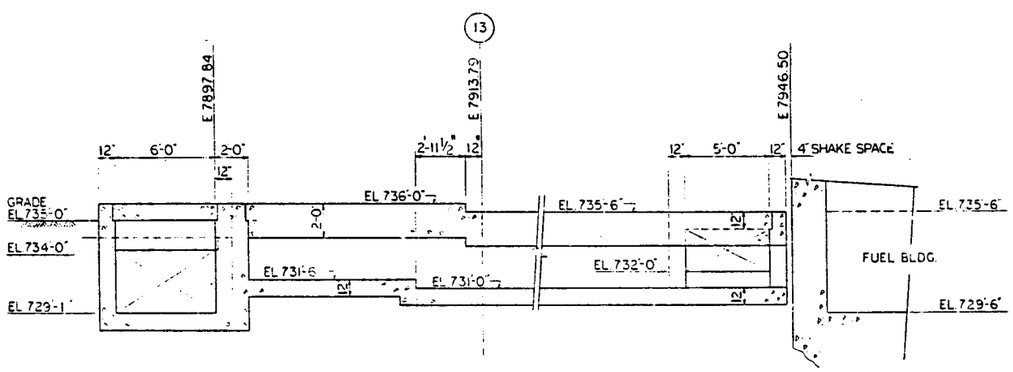

11-11

FIGURE 3.8-49
PIPE TRENCH FOR BVPS-1 AND-2
CROSSTIE PIPING
SHEET 2
BEAVER VALLEY POWER STATION-UNIT 2
FINAL SAFETY ANALYSIS REPORT

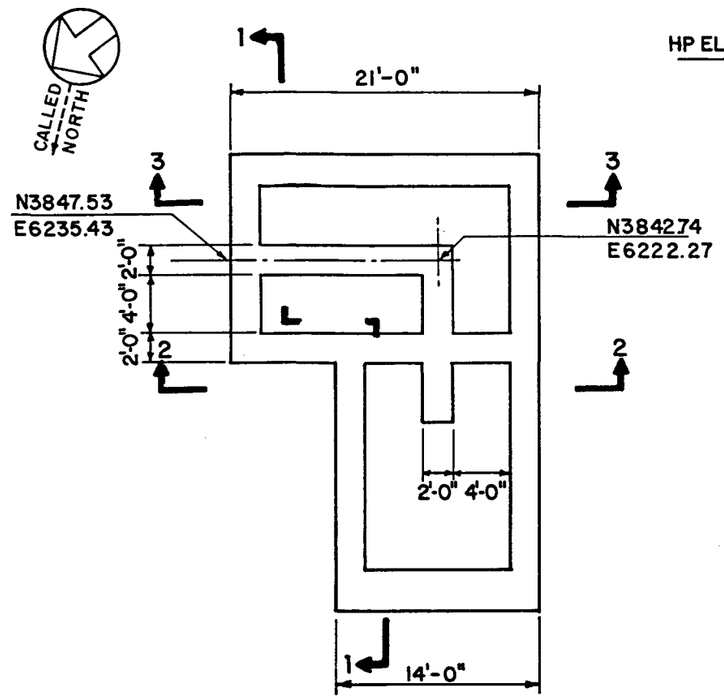

EMERGENCY SERVICE WTR.
OVERFLOW STRUCTURE
PLAN AT EL. 716'-0"

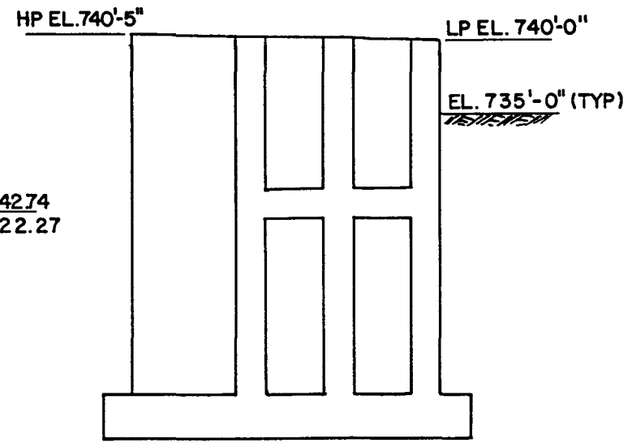

2-2

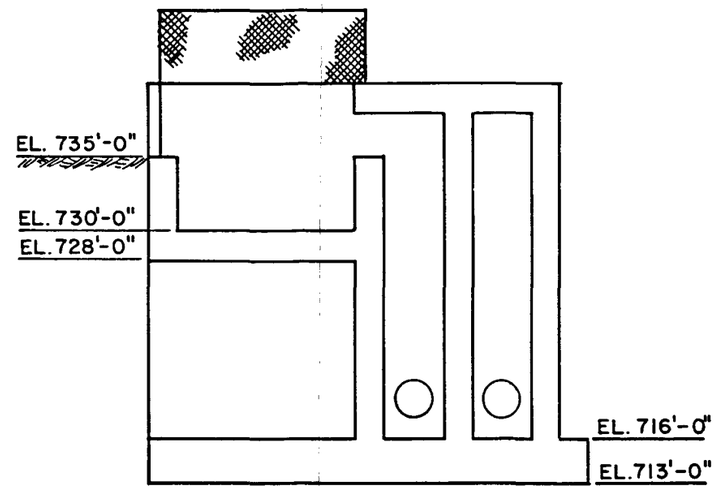

1-1

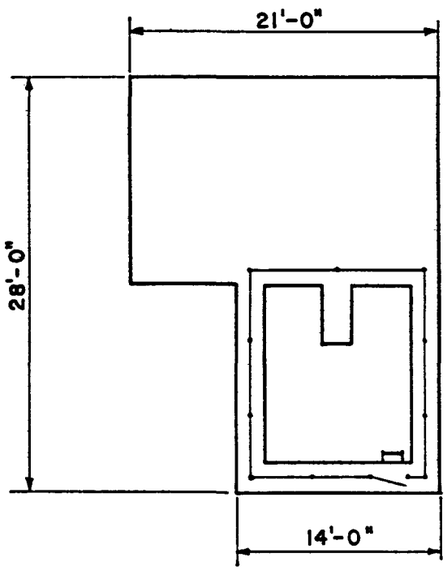

EMERGENCY SERVICE WTR.
OVERFLOW STRUCTURE
ROOF PLAN

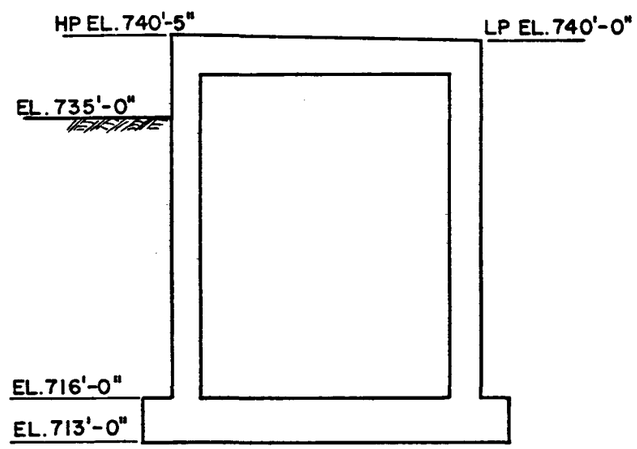

3-3

FIGURE 3.8-50
EMERGENCY SERVICE WATER
OVERFLOW STRUCTURE
BEAVER VALLEY POWER STATION-UNIT 2
FINAL SAFETY ANALYSIS REPORT

Removed in Accordance with RIS 2015-17

FIGURE 3.8-51
WASTE HANDLING BUILDING ARRANGEMENT
BEAVER VALLEY POWER STATION-UNIT 2
FINAL SAFETY ANALYSIS REPORT

Removed in Accordance with RIS 2015-17

FIGURE 3.8-52
CONDENSATE POLISHING BUILDING
PLAN EL. 722'-6" AND 735'-6
BEAVER VALLEY POWER STATION-UNIT 2
FINAL SAFETY ANALYSIS REPORT

Removed in Accordance with RIS 2015-17

FIGURE 3.8-53
CONDENSATE POLISHING BUILDING
PLAN EL. 752'- 6" AND 774'-6"
BEAVER VALLEY POWER STATION- UNIT 2
UPDATED FINAL SAFETY ANALYSIS REPORT

Removed in Accordance with RIS 2015-17

FIGURE 3.8-54
CONDENSATE POLISHING BUILDING
SECTIONS 1-1, 2-2, 3-3, 4-4, 5-5
BEAVER VALLEY POWER STATION - UNIT 2
UPDATED FINAL SAFETY ANALYSIS REPORT

Removed in Accordance with RIS 2015-17

FIGURE 3.8-55
CONDENSATE POLISHING BUILDING
(NON-CATEGORY I)
PLAN EL. 762'-6" AND 794'-6",
SECTION 6-6
BEAVER VALLEY POWER STATION - UNIT 2
FINAL SAFETY ANALYSIS REPORT

Removed in Accordance with RIS 2015-17

FIGURE 3.8-56
GASEOUS WASTE STORAGE TANK
BEAVER VALLEY POWER STATION - UNIT 2
FINAL SAFETY ANALYSIS REPORT

3.9 MECHANICAL SYSTEMS AND COMPONENTS

Sections whose identification numbers include the letter B contain material within balance-of-plant (BOP) scope, while sections whose identification numbers include the letter N contain material within the nuclear steam supply system (NSSS) scope.

3.9B.1 Special Topics for Mechanical Components

3.9B.1.1 Design Transients

The design of the reactor coolant system (RCS), RCS component supports, and reactor internals considers the following five operating conditions, defined in Section III of the ASME Boiler and Pressure Vessel Code.

1. Normal Conditions

   Any condition in the course of start-up, operation in the design power range, hot standby, and system shutdown (other than upset, emergency, faulted, or testing conditions).

2. Upset Conditions (Incidents of Moderate Frequency)

   Any deviations from normal conditions anticipated to occur often enough that design should include a capability to withstand the conditions without operational impairment.

   The upset conditions include:

   a. Transients which result from any single operator error or control malfunction,

   b. Transients caused by a fault in a system component requiring its isolation from the system,

   c. Transients due to loss of load or power,

   d. Abnormal incidents not resulting in a forced outage,

   e. Forced outages for which the corrective action does not include any repair of mechanical damage.

   The estimated duration of an upset condition is included in the design specifications for each component. The durations are based on the worst case for each component of the upset conditions listed in Section 3.9N.1. In this manner, each component is designed for the most severe upset transient experienced.

3. Emergency Conditions (Infrequent Incidents)

   Those deviations from normal conditions which require shutdown for correction of the conditions or repair of damage in the system. The conditions have a low probability of occurrence, but are included to assure that no gross loss of structural integrity results as a concomitant effect of any damage developed in the system. The total number of postulated occurrences for such events shall not cause more than 25 stress cycles having an S value greater than that for 10^6 cycles from the applicable fatigue design curves of the ASME Code, Section III. Beaver Valley Power Station - Unit 2 (BVPS-2) does not have any transients classified as emergency.

4. Faulted Conditions (Limiting Faults)

   Those combinations of conditions associated with extremely-low-probability, postulated events whose consequences involve the integrity and operability of the nuclear energy system. Such considerations require compliance with safety criteria specified by jurisdictional authorities.

5. Test Conditions

   Testing conditions are those tests in addition to the 10 hydrostatic or pneumatic tests permitted by NB-6222 and NB-6322 (ASME Section III), including leak tests or subsequent hydrostatic tests.

To provide the necessary high degree of integrity for the equipment in the NSSS, the transient conditions selected for equipment fatigue evaluation are based upon a conservative estimate of the magnitude and frequency of the temperature and pressure transients resulting from various operating conditions in the plant. The transients selected are representative of operating conditions which are considered to occur during plant operation. They are of sufficient severity and/or frequency to be significant to component cyclic behavior. The transients selected may be regarded as conservative representations of transients which, when used as a basis for component fatigue evaluation, provide confidence that the component has been adequately designed for the 40-year service life of the plant. For operation beyond the original 40-year service life, the 40-year design cycles were evaluated against 60-year projected operational cycles and were determined to be bounding for the period of extended operation, except in certain specific cases described in the UFSAR License Renewal Supplement (Chapter 19, section 19.2.3.1.1, 19.2.3.1.2, and 19.2.3.1.3). The Metal Fatigue of Reactor Coolant Pressure Boundary Program (section 19.1.27) will ensure that components do not exceed their fatigue design bases.

The transients used in the design and fatigue analysis of all ASME III Class 1 components and their supports in the BOP scope are defined in the Piping Design Specification.

3.9B.1.2 Computer Programs Used In Analysis

Lists of computer programs that are used in the design of Seismic Category I components and piping systems within the BOP scope are provided in Appendices 3A.2 and 3A.3, respectively. Also included in these sections are brief descriptions of each program, the extent of its application, and program verifications which demonstrate the applicability and validity of each program.

3.9B.1.3 Experimental Stress Analysis

No experimental stress analysis has been employed in lieu of analytical methods for the design of BOP equipment, components, and piping systems.

3.9B.1.4 Considerations for the Evaluation of the Faulted Condition

The elastic analysis techniques described in Section 3.7B.3.1.1 are utilized in the qualification of Seismic Category I ASME Code and non-code equipment within BOP scope. Stress limits utilized for the faulted plant condition are as outlined in Section 3.9B.2.2. The design conditions and stress limits defined are applicable for an elastic system (and equipment) analysis. Inelastic analyses have not been employed. Should inelastic analysis be required, detailed design bases, demonstrating maintenance of function and/or structural integrity, will be established prior to implementation.

The loading conditions considered in the analysis and the procedure used for the modeling and analytical methods for the reactor coolant loop and supports are provided in Section 5.4.14.

The procedure used for modeling of piping systems, and analytical methods employed for the pipe stress analysis, are provided in Section 3.7B.3.

3.9B.2 Dynamic Testing and Analysis

3.9B.2.1 Piping Vibration, Thermal Expansion, and Dynamic Effects Testing

A preoperational vibration, thermal expansion (in discrete temperature step increments), and dynamic effects testing program will be conducted during start-up testing on: 1) ASME Code Class 1, 2, and 3 piping systems within BOP scope; 2) other high energy piping systems inside Seismic Category I structures; 3) high energy portions of systems whose failure could reduce the functioning of any Seismic Category I plant feature to an unacceptable safety level; and 4) Seismic Category I portions of moderate energy piping systems located outside containment. The purpose of the tests is to confirm that these piping systems, restraints, components, and supports have been designed adequately to withstand the flow induced dynamic loadings under operational transient and steady-state conditions anticipated

during service, and to confirm that normal thermal motion is not restrained.

The preoperational tests will be performed to verify, as nearly as possible, the performance of the systems under actual operating conditions. Where required, simulated signals or inputs are used to demonstrate the full operating range of the systems that are used during normal operation, and verify and calibrate as close as possible to actual operating conditions. Systems that are not used during normal plant operation but must be in a state of readiness to perform safety functions, are checked under various modes and test conditions prior to initial BVPS-2 start-up. Whenever practical, these tests are performed under the conditions expected when the systems would be required to function. When these conditions cannot be attained or appropriately simulated at the time of the test, the system is tested to the extent practical under the given conditions, with additional testing completed at a time when appropriate conditions are attained.

A list of the systems and the types of tests being conducted is contained in Table 3.9B-1. The different flow modes of operation and transients to which each system will be subjected during the tests are contained in Chapter 14. The test titles, test prerequisites, test objectives, and summary of testing are also described in Chapter 14.

3.9B.2.1.1 Piping Vibration and Dynamic Effects Testing

For each system defined in items Table 3.9B-1, all flow modes of operation that the systems are subjected to during the tests will be visually observed, where accessible. In addition, selected systems that were stress analyzed for fluid flow instabilities will have instrumented measurements at selected locations for the specific flow modes analyzed.

The measured results will be compared to the analytically predicted values and determined acceptable if they are equal to or less than the predicted values. If the measured values exceed predicted values, acceptability will depend on the remaining margins in the analytically predicted stress levels and the magnitude of the measured loads or displacements. Since both of these parameters are variables dependent on specific locations in the systems, acceptance criteria will be established in the form of a load or displacement limit for each individual location. These load/displacement limits will be documented in the appropriate system test procedures after completion of the stress analysis and prior to preoperational testing for vibration and/or dynamic effects. If the measured loads/displacements exceed the acceptable limits, the analysis will be reviewed to explain the anomaly, an evaluation of the effects on the piping system will be performed, and the total results and evaluation documented to ensure that piping and pipe support criteria still satisfy the applicable code requirements.

Instrumented measurements will also be conducted (as needed) for other systems and conditions. For ASME Code Class 1, 2, and 3 piping systems, design and supervision of the tests, definition of acceptance criteria, evaluations of tests results, and the making of any changes in the piping system necessary to ensure that the piping is adequately designed and supported, are performed as required by Section III of the ASME code.

The selected locations in the piping systems at which visual inspections and measurements (as needed) will be performed and isometrics depicting the locations of these points will be contained in the appropriate test procedures. If vibrations are observed which from visual examination appear to be excessive in the opinion of experienced engineers who will supervise, conduct, and witness the various tests, then either: 1) an instrumented test program will be conducted and the system reanalyzed (or compared to existing analysis) to demonstrate that the observed levels do not cause ASME code stress and fatigue limits to be exceeded; 2) the cause of the vibration will be eliminated; or 3) a corrective support system will be designed and installed and the effect of the modification will be incorporated in the pipe stress analysis. Special attention will be paid to piping sections between supports; connections to instruments, vents, and drains; other free end connections; and motor or diaphragm operators for valves. Instrumented measurement of vibration is generally limited to those systems subject to potential fluid transient loads. The selection of monitoring points will be based upon calculated results and accessibility.

3.9B.2.1.2 Thermal Expansion Testing

Locations for monitoring thermal expansion are chosen based on 1) expected large movements, 2) areas with tight clearances, and 3) certain snubber locations to verify unrestricted motion. Piping snubbers that are monitored during the test program are listed in Table 3.9B-3.

The purpose of the thermal expansion monitoring program is to verify that the piping systems are free from interferences and unexpected restraints on thermal expansion, and that the pipe supports are functioning as intended. During hot functional testing, the piping systems will be raised to their operating temperatures in discrete temperature step increments. Displacement instrumentation and visual observations will be utilized to monitor the thermal expansions at selected temperatures and predetermined locations which will be contained in the appropriate test process. The types of instruments to be used for thermal expansion measurements, requirements that instruments be calibrated, installation details, etc, will also be contained in the specific test procedures for each system.

If the measured thermal motion is not as predicted, system heatup will be terminated and the system will be examined to verify that thermal expansion is not being restricted by any type of interference, and the pipe support system will be examined to verify

that all support components are functioning properly or to locate points of binding of restraints. If improper function of supports are found, adjustments or other corrective actions will be made to eliminate the unacceptable condition. If binding of restraints is found, the restraints will be adjusted to eliminate the unacceptable condition or reanalyzed to verify that the existing condition is acceptable.

If the piping and support system are found to be functioning properly, but thermal expansion movements vary from the predicted values by more than the acceptable tolerance, then the analysis will be reviewed to explain the anomaly, an evaluation of the effects on stress and loads will be performed, and the total results and evaluation documented to ensure that piping and pipe support criteria still satisfy the applicable code requirements. The acceptance tolerance for monitoring thermal expansions will vary for individual locations and/or systems and will be primarily dependent upon the calculated stress levels. The tolerance will be established as a percentage allowable deviation from the expected movements for each individual location. These tolerances will be established and documented after completion of the stress analysis and prior to commencement of hot functional testing. The specific acceptance tolerances will be contained in the appropriate system test procedures.

3.9B.2.2 Seismic Qualification Testing of Safety-Related Mechanical Equipment

The methods and procedures used in the design and qualification of Seismic Category I mechanical equipment within BOP scope are outlined in Sections 3.7B.3.1.1, 3.9B.3, and 3.10B. Loading combinations include operating, as well as earthquake loading, for consideration by testing and/or analytical methods.

Safety-related mechanical equipment (Seismic Category I), not covered by the ASME Boiler and Pressure Vessel Code, are seismically qualified in accordance with the procedures of Section 3.7B.3.1.1. Non ASME Code equipment typically includes diesel generators, fans, coolers, and emergency ventilation equipment. Cranes are seismically qualified in accordance with criteria that preclude the possibility of the crane being dislodged by a seismic disturbance.

Complete results of qualification for safety-related electrical and mechanical equipment were made available at the NRC's Seismic Qualification Review Team (SQRT) and Pump and Valve Operability Review Team (PVORT) Audits performed at the site in accordance with NUREG/CR 3137 “Seismic and Dynamic Qualification of Safety-Related Electrical and Mechanical Equipment."

Except as noted, if codes are used in the design of a component, the guidelines generally require the addition of operating loads to the operating basis earthquake (OBE) load, with no increase in code

allowable stress. If no codes are used, the stress level under the combined loading is limited to 75 percent of the minimum yield strength of the material in accordance with the ASTM specification. The general criteria for analysis of the safe shutdown earthquake (SSE), pipe rupture (if applicable), and operating loads, require that deformation of components be allowed only with no loss of safety function. Stresses under combined loadings are generally limited to the smaller of 100 percent of the minimum yield strength, or 70 percent of the minimum ultimate tensile strength, of the material

(at temperature) in accordance with the ASTM, or equivalent, specification for the material.

3.9B.2.3 Dynamic Response Analysis of Reactor Internals Under Operational Flow Transients and Steady State Conditions

Refer to Section 3.9N.2.3.

3.9B.2.4 Preoperational Flow-Induced Vibration Testing of Reactor Internals

Refer to Section 3.9N.2.4.

3.9B.2.5 Dynamic System Analysis of the Reactor Internals Under Faulted Condition

Refer to Section 3.9N.2.5.

3.9B.2.6 Correlations of Reactor Internals Vibration Tests With the Analytical Results

Refer to Section 3.9N.2.6.

3.9B.3 ASME Code Class 1, 2, and 3 Components, Component Supports, and Core Support Structures

3.9B.3.1 Loading Combinations, System Operating Transients, and Stress Limits

All ASME III Class 1 piping is designed and analyzed for the following loading conditions to the requirements of the ASME Code Section III, Subsection NB and/or applicable code cases as indicated in the ASME Code Baseline Document. All other Class 1 components are in the NSSS scope and are identified under Section 3.9N.

1. Design Condition
2. Normal Condition
3. Upset Condition
4. Emergency Condition
5. Faulted Condition
6. Test Condition

For ASME III Class 1 piping, the loading combinations and the allowable stress limits are defined in Table 3.9B-5. A comparison of this table with Regulatory Guide 1.48 is given in Table 3.9B-6. The system operating transients used in the design and fatigue analysis of all ASME III Class 1 piping within the BOP scope are defined in the Piping Design Specification. The transients used in the design and fatigue analysis of the RCS piping are also listed in Table 3.9N-1 and described in Section 3.9N. In accordance with ASME Section III, faulted system thermal transients are not included in the fatigue evaluation. BVPS-2 does not consider any emergency thermal transients in fatigue evaluation. The analysis techniques described in Section 3.7B.3.1.2 are utilized in implementing these criteria.

3.9B.3.1.2 ASME III Class 2 and 3 Components

ASME III Class 2 and 3 piping is designed and analyzed to the requirements of the ASME Code Section III, Subsections NC and ND, respectively, and/or applicable code cases as indicated in the ASME Code Baseline Document. Loading combinations and allowable stress limits are defined in Tables 3.9B-8 and 3.9B-9. Analytical requirements for buried piping are addressed in Section 3.7B.3.12.

Table 3.9B-7 provides loading conditions and stress limits for ASME Code Class 2 and 3 components (excluding piping) of Seismic Category I fluid systems,

which are constructed in accordance with ASME III Subsections NC and ND. These conditions generally relate to ASME III, Code Class 1 requirements, and include combinations as follows:

1. Design Condition I

   Includes the specified design loads (temperature, pressure, etc) plus OBE loads.

2. Design Condition II

   Includes the specified design loads (as previously mentioned), SSE loads, and pipe rupture loads (if applicable).

The design loading combinations are analogous to either the Code Class 1 normal or upset conditions for Design Condition I, or to the faulted (or emergency, if applicable) condition for Design Condition II. The stress limits for these design conditions are presented in Table 3.9B-7. Since design temperature and pressure exceed those associated with upset, emergency, and faulted conditions, satisfaction of primary stress limits is ensured.

These requirements which, when implemented, were a supplement to the requirements of ASME III, Subsections NC and ND, are intended to be consistent with the present code format and philosophy.

The stress limits and design conditions presented in Table 3.9B-7 are intended to ensure that no gross deformation of the component occurs. A comparison of Table 3.9B-7 with Regulatory Guide 1.48 is given in Table 3.9B-10. These limits are applicable for an elastic system (and component) analysis. It is not currently anticipated that inelastic deformation will be allowed on any ASME III Code Class 2 and 3 components. If, and when, inelastic analysis is contemplated, detailed design bases, demonstrating maintenance of either function and/or structural integrity, will be proposed prior to implementation. The analysis techniques of Section 3.7B.3.1.1 are utilized in implementing these criteria. The results of qualification analysis and/or tests for ASME III Class 2 and 3 components were made available at the NRC's Seismic Qualification Review Team (SQRT) and Pump and Valve Operability Review Team (PVORT) Audits performed at the site in accordance with NUREG/CR 3137, "Seismic and Dynamic Qualification of Safety-Related Electrical and Mechanical Equipment."

3.9B.3.2 Pump and Valve Operability Assurance

The ASME Boiler and Pressure Vessel Code, Section III, is used to ensure Pressure Boundary Integrity of Nuclear Power Plant Components. It should be noted that the documents ANSI/ASME QP-1, QP-2, QP-4 (formerly N551.1, N551.2, N551.4 respectively), N41.6, and B16.41 referenced by the NRC are used for guidance, and are in draft form pending endorsement by the NRC. The BVPS-2 SQRT/PVORT Qualification Programs address to the maximum practical extent the intent of these guidelines during the preparation of component design specifications and test procedures related to the qualification of ASME Code Class 2 and 3 active pump assemblies and power-operated active valve assemblies. These active pump and valve assemblies are qualified to the specific requirements delineated in this section. A list of all BOP active pumps and valves is presented in Tables 3.9B-18 and 3.9B-19.

Pumps and valves installed in Seismic Category I piping systems are designed in accordance with the requirements of ASME III, NB, NC, and ND. Inactive pumps and valves are designed for the loading combinations of Sections 3.9B.3.1 and 3.9B.3.2, and for the stress limits indicated in Table 3.9B-7.

The equipment types to be covered by the pump and valve operability assurance program are active pumps and valves and will be listed in the PVORT master list of safety-related equipment. This listing will identify the methods, codes, and standards used and the design criteria considered for qualification.

Active components are those that must perform mechanical motions during the course of accomplishing their safety functions.

Inactive components are those for which mechanical movement does not occur in order for the component to accomplish its intended safety function.

Qualification of components is based on an integrated program approach by conformance to design specifications, acceptance testing, and analyses in accordance with appropriate regulatory guide, codes, and standards. Implementation is verified by supporting documents that are audited for compliance and qualification acceptance towards assurance of active pumps and valves operability.

Sections 3.9B.3.2.1 and 3.9B.3.2.2 describe various testing methods performed in accordance with Standard Review Plan Section 3.10 for active pumps and valves. Preoperational testing of pumps such as hydrostatic and various performance tests are performed in the manufacturer’s shop as well as in the installed condition. This testing is in addition to qualification by analysis to faulted (SSE) loads including other operating and dynamic loads associated with the faulted condition.

Safety-related active valves are likewise subjected to a series of stringent tests prior to service to ensure functionability of these valves. These preoperational tests and analyses assure the functional reliability of the pump and valve assemblies for their intended safety system service and performance.

Operability of active pumps and valves is assured by satisfying the requirements of various programs. Safety-related valves are qualified by prototype testing and analysis, and safety-related active pumps by analysis with suitable stress limits and nozzle loads. The content of these programs is detailed as follows.

3.9B.3.2.1 Pump Operability Assurance Program

Active pumps are qualified for operability by being subjected to rigid tests both prior to and after installation in BVPS-2. These tests include:

1. Hydrostatic tests of ASME Section III requirements.

2. Performance tests, while the pump is operated with flow, to determine total developed head, minimum and maximum head, net positive suction head requirements, and other pump/motor parameters.

3. Operability qualification of pump motors for the environmental conditions over the installed life (aging, radiation, accident environmental simulation, etc) according to IEEE Standard 323-1971 or IEEE Standard 382-1972.

Also monitored during these operation tests are bearing temperatures and vibration levels, which are shown to be below appropriate limits specified to the manufacturer for design of each active pump.

After the pump is installed in BVPS-2, it undergoes performance testing and the required periodic in-service inspection and operation as applicable. These tests demonstrate reliability of the pump for the design life of BVPS-2.

In addition to these tests, the safety-related active pumps are qualified for operability during an SSE condition by ensuring that:

1. The pump is not damaged during the seismic event.

2. The pump continues operating when subjected to the SSE loads.

The pump manufacturer is required to show that the pump operates normally when subjected to the maximum applicable amplified seismic (floor) accelerations, attached piping nozzle loads, and dynamic system loads associated with the faulted operating condition. Analysis and/or testing procedures are utilized in accordance with

those outlined in Section 3.7B.3.1.1. Natural frequency calculations are performed in order to determine maximum seismic accelerations based on applicable amplified (floor) response spectra.

In order to avoid damage during the faulted condition, the stresses caused by the combination of normal operating loads, SSE, and dynamic system loads are limited as indicated in Table 3.9B-7. The average membrane stress (σ_m) for the faulted conditions loads is maintained at 1.2 S, or approximately 0.75 σ_y (σ_y = yield stress) and the maximum stress in local fibers (σ_m + bending stress σ_b) is limited to 1.8 S. In addition, the pump stresses caused by the maximum seismic nozzle loads are limited to the stresses outlined in Table 3.9B-7. The maximum seismic nozzle loads are also considered in an analysis of the pump supports to assure that an unacceptable level of misalignment cannot occur. A static shaft deflection analysis of the rotor is performed with horizontal and vertical accelerations based on floor response levels. The deflections determined from the static shaft analysis are compared to the allowable rotor clearances. The nature of seismic disturbances dictates that the maximum contact (if it occurs) is of short duration.

Performance of these analyses with the conservative loads stated and, with the restrictive stress limits of Table 3.9B-7 as allowables, assures that critical parts of the pump are not damaged during the short duration of the faulted condition, and that the reliability of the pump for post-faulted condition operation is not impaired by the seismic event.

In addition to the post-faulted condition operation, it is necessary to assure that the pump functions throughout the SSE. The pump/motor combination is designed to rotate at a constant speed under all conditions unless the rotor becomes completely seized (no rotation). Typically, the rotor can be seized 5 full seconds before a circuit breaker trips the pump, to prevent damage to the motor. However, the high rotary inertia in the operating pump rotor and the nature of the random, short-duration loading characteristics of the seismic event prevent the rotor from becoming seized. In actuality, the seismic loadings cause only a slight increase, if any, in the torque (motor current) necessary to drive the pump at the constant design speed. Therefore, the pump does not shut down during the SSE, and operates at the design speed despite the SSE loads.

To complete the seismic qualification procedures, the pump motor is independently qualified for operation during the maximum seismic event. Any auxiliary equipment which is vital to the operation of the pump, or pump motor, and which is not qualified for operation during the pump analysis or motor qualifications, is also separately qualified for operation at the accelerations occurring at its mounting. The pump motor and vital auxiliary equipment are qualified by meeting the requirements of IEEE Standard 344-1971. If the testing option is chosen, sinusoidal or sine-beat testing is justified by satisfying one or more of the following requirements to demonstrate that the multi-frequency response is negligible or the input is of sufficient magnitude to conservatively account for this effect:

1. The equipment response is basically due to one mode.

2. The sinusoidal or sine-beat response spectra envelop the floor response spectra in the region of significant response.

3. The floor response spectra consist of one dominant mode and have a peak at this frequency.

The degree of coupling in the equipment, in general, determines if a single or multi-axis test is required. Multi-axis testing is required if there is considerable cross coupling. If coupling is very light, then single axis testing is justified. If the degree of coupling can be determined, then single axis testing can be used with the input sufficiently increased to include the effect of coupling on the response of the equipment.

From previous arguments, the safety-related pump/motor assemblies are not damaged and continue operating under SSE loading, and, therefore, perform their intended functions. These proposed requirements take into account the complex characteristics of the pump and are sufficient to demonstrate and assure the seismic operability of the active pumps.

The functional ability of active pumps after a faulted condition is assured since only normal operating loads and steady-state nozzle loads exist. Since it is demonstrated that the pumps are not damaged during the faulted condition, the post-faulted condition operating loads are identical to the normal BVPS-2 operating loads. This is assured by requiring that the imposed nozzle loads (steady-state loads) for normal conditions, and post-faulted conditions, are limited by the magnitudes of the normal condition nozzle loads. The post-faulted condition ability of the pumps to function under these applied loads is proven during the normal operating BVPS-2 conditions for active pumps.

3.9B.3.2.2 Valve Operability Assurance Program

Safety-related active valves must perform their mechanical motion either coincidentally with a postulated event or after a postulated event has occurred. Assurance that these valves will operate when required must be supplied. Qualification tests accompanied by analyses are conducted for all active valves.

Valves without significant extended structure are proven seismically adequate by analysis of piping seismic adequacy. For valves with operators having significant extended structures, and if these structures are essential to maintaining pressure integrity, analysis is performed based upon static forces resulting from equivalent earthquake accelerations acting at the centers of gravity of the extended masses. For active valves, this requirement for analysis is

extended to the mechanical (nonpressure boundary) components of valve top-works to ensure operability.

The safety-related valves are subjected to a series of stringent tests prior to service and during BVPS-2 life. Prior to installation, the following tests are performed:

1. Shell hydrostatic test to ASME III requirements.

2. Backseat (if applicable) and main seat leakage tests.

3. Disc hydrostatic test.

4. Functional tests to verify that the valve will open and close within the specified time limits when subjected to the design differential pressure.

5. Operability qualification of motor operators for the environmental conditions over the installed life (aging, radiation, accident environmental simulation, etc) according to IEEE Standard 323-1971 or IEEE Standard 382-1972.

Cold hydro qualification tests, hot functional qualification tests, periodic in-service inspections (ISI), and periodic in-service operation are performed in situ to verify and assure the functional ability of the valve. These tests guarantee reliability of the valve for the design life of BVPS-2. The valves are designed using either stress analyses or the pressure containing minimum wall thickness requirements. On all active valves, an analysis of the extended structure is also performed for static equivalent seismic SSE loads supplied at the center of gravity of the extended structure. The maximum stress limits allowed in these analyses show structural integrity. The limits that are used for Class 2 and 3 active valves are shown in Table 3.9B-7.

In addition to these tests and analyses, representative valves of each design type are tested for verification of operability during a simulated seismic event by demonstrating operational capabilities within the specified limits. The testing procedures are described as follows.

The valve is mounted in a manner which conservatively represents a typical valve installation. The valve includes the operator and all appurtenances normally attached to the valve in service.

The operability of the valve during an SSE is demonstrated by satisfying the following criteria:

1. Except as stated by the following, active valves are designed to have a first natural frequency greater than 33 Hz. This may be shown by suitable test or analysis.

2. The actuator and yoke of the valve system are statically loaded an amount greater than that determined by an analysis, as representing SSE accelerations applied at the center of gravity of the operator alone in the direction of the weakest axis of the yoke. The design pressure of the valve is simultaneously applied to the valve during the static deflection tests.

3. The valve is then operated while in the deflected position (from the normal operating mode to the faulted mode). The valve must perform its safety-related function within the specified operating time limits.

4. Motor operators and other electrical appurtenances necessary for operation are qualified as operable during an SSE by appropriate IEEE Seismic Qualification Standards, such as IEEE 382-1972 and IEEE 344-1971, prior to their installation on the valve.

The accelerations used for static valve qualification are 3.0 g horizontal and 3.0 g vertical. The piping designer maintains the motor operator accelerations to these levels with an adequate margin of safety.

If the frequency of the valve, by test or analysis, is less than 33 Hz, the valve system is analyzed to determine the equivalent acceleration applied during the static test. The analysis provides the amplification of the input acceleration considering the natural frequency of the valve and the frequency content of the applicable plant floor response spectra. The adjusted acceleration is then used in the static analysis and valve operability is assured by the methods outlined in steps 2 through 4 stated previously, using the modified acceleration input.

This testing program applies only to valves with overhanging structures (the motor operator). The testing is conducted on a representative number of valves. Valves from each of the primary safety-related design types (for example, motor-operated gate valve) are tested. Valve sizes which cover the range of sizes in service are qualified by the tests and the results are used to qualify all valves within the intermediate range of sizes. Stress and deformation analysis are used to support the interpolation.

Valves which are safety-related, but can be classified as not having an overhanging structure, such as check valves and safety-relief valves, are considered separately.

Check valves are characteristically simple in design and their operation is not affected by seismic accelerations or the maximum applied nozzle loads. The check valve design is compact and there

are no extended structures or masses whose motion could cause distortions which could restrict operation of the valve. The nozzle loads due to maximum seismic excitation do not affect the functional ability of the valve, since the valve disc is designed to be isolated from the casing wall. The clearance supplied by the design around the disc prevents the disc from becoming bound or restricted due to any casing distortions caused by nozzle loads. Therefore, the design of these valves is such that once the structural integrity of the valve is assured using standard design or analysis methods, the ability of the valve to operate is ensured by the design features. In addition to these design considerations, the valve also undergoes the following tests and analysis:

1. Stress analysis including the SSE loads,

2. In-shop hydrostatic test,

3. In-shop seat leakage test, and

4. Periodic in situ valve exercising and inspection to ensure the functional ability of the valve.

Safety and relief valves are subjected to tests and analyses similar to check valves, that is, stress and deformation analyses for SSE loads, in-shop hydrostatic and seat leakage tests, and periodic in situ valve inspection. In addition, a static load equivalent to the SSE is applied to the top of the bonnet, and the pressure is increased until the valve mechanism is activated. Successful actuation within design requirements ensures its overpressurization safety capabilities during a seismic event.

Using the methods described, all the safety-related valves in the system are qualified for operability during a seismic event. These methods conservatively simulate the seismic event and ensure that the active valves perform their safety-related function when necessary.

Alternative valve operability testing, such as dynamic vibration testing, is allowed if it is shown to adequately ensure the faulted condition functional ability of the valve system. The results of qualification analysis and/or tests for active pumps and valves were made available at the NRC's Seismic Qualification Review Team (SQRT) and Pump and Valve Operability Review Team (PVORT) Audits performed at the site in accordance with NUREG/CR3137 “Seismic and Dynamic Qualification of Safety-Related Electrical and Mechanical Equipment.”

3.9B.3.3 Design and Installation of Pressure Relief Devices

Pressure relieving devices, consisting of safety and relief valves, are provided in ASME III Code Class 1, 2 and 3 piping systems to prevent overpressurization. The design of these valves takes into consideration the reaction force when the valve opens.

The design criteria for all pressure relieving devices are in accordance with the rules of ASME Boiler and Pressure Vessel Code Section III. In addition, relief and safety valve discharge events are considered as occasional loads and classified as upset, emergency, or faulted, depending upon the expected frequency of occurrence, with the exception that safety valve discharge events in the RCS are classified as either emergency or faulted only. These loads are combined with other service loadings and maintained within the appropriate stress limits as indicated in Section 3.9.3.1.

3.9B.3.3.1 Open Relief System

An open relief system is one where the fluid is discharged directly to atmosphere or to a vent pipe that is structurally uncoupled from the safety valve, and the discharge point is located within 4 discharge pipe diameters from the centerline of the valve inlet and within 6 discharge pipe diameters from the centerline of the valve discharge. Systems not meeting these dimensional criteria and/or where the effluent is carried to a discharge pipe connected directly to the safety valve are considered as closed discharge systems.

The total steady state load for an open system discharge is expressed as the sum of pressure and momentum forces as follows:

$$F = P_e A + (W/g_c)\ V_e$$

where:

F	=	reaction force (lbf)
P_e	=	static gage pressure at exit point (psig)
A	=	exit flow area (in^2)
W	=	mass flow rate (relieving capacity stamped on the valve X 1.11, adjusted for units to be compatible if necessary)(lbm/sec)
V_e	=	exit fluid velocity (ft/sec)
g_c	=	gravitational constant (32.2 lbm-ft/lbf-sec^2)

The response of the piping system due to this applied load is determined either by time-history dynamic analysis or by a static analysis. Both types of analysis are performed using the NUPIPE-SW program, described in Appendix 3A.

If time-history analysis is employed, the forcing function applied at the point of discharge is approximated by a linear forcing function with the force ranging from zero to the calculated reaction force over the period of time ranging from zero to the effective valve opening time “t”; after the time “t”, the reaction force remains steady until the conclusion of acceptable time-history integration.

If a static analysis method is employed, a dynamic load factor (DLF) is applied to the reaction force to ensure the consideration of the dynamic effects of the suddenly applied load. A conservative DLF of

conservative DLF of 2.0 is assumed in most instances. However, a smaller value of DLF may be determined by relating the reaction force rise time to the valve assembly natural period and utilizing the appropriate figure from Biggs (1964).

In this type of analysis, the calculated maximum discharge force multiplied by the appropriate DLF is applied to the discharge point in a direction opposite to the flow.

Where more than one valve is mounted on a common header, multiple valve discharge cases are considered. Simultaneous discharge of various possible valve combinations are considered consistent with system design and operating procedures to establish the design basis.

3.9B.3.3.2 Closed Relief System

A closed relief system may be either a system which discharges into a closed vessel or an open discharge system with longer discharge pipes than allowed for an open system. Of particular concern in closed relief systems are the large forces that may occur on piping that contains water seals (slug flow), two-phase flow, or if there is a water column in the discharge piping.

To establish the forcing functions necessary to perform a structural analysis of the piping, thermal/hydrodynamic models of the piping system are constructed. These models consist of one-dimensional representation of the piping system divided into reservoirs, pumps, valves, lengths of piped segments, branch connections, and other special piping components. Effects such as flow restrictions and frictional resistance are considered. The time dependent pressure, temperature, density, velocity, and momentum are computed. Unbalanced segment forces are then obtained as function of time.

The forcing functions are then applied to the structural model and system responses are determined by performing a time-history dynamic analysis using the NUPIPE-SW program or other commercial NUPIPE program.

Stone & Webster Engineering Corporation programs used to determine fluid forcing functions are STEHAM, WATHAM, and WATSLUG. Appendix 3A provides a description of each code.

As an alternative to using computer programs to generate fluid transient forcing functions, conservative hand calculations are performed to develop bounding pipe segment forces. These forces then may be analyzed statically using an appropriate DLF, or dynamically to obtain piping structural responses.

3.9B.3.4 Component Supports

3.9B.3.4.1 Equipment Component Supports

In general, equipment component supports are not considered to be within the jurisdiction of ASME III since Subsection NF was not in effect at the time most equipment component support systems were purchased. However, ASME criteria was used extensively as guidance in terms of both design and fabrication. Equipment component supports for the RCS, which were considered to be on the level of ASME III, Class 1, are described in Section 5.4.14. All remaining supports, which were considered to be within a classification of ASME III, Class 2 and 3, are described in Section 3.9B.2. A small number of ASME III Class 2 and 3 components have been supplied for which the support structures are according to ASME III, NF Requirements, due to the procurement date of the component(s).

3.9B.3.4.1.1 Loads, Load Combinations, and Stress Limits

Loads, load combinations, and stress limits for equipment component supports are identified in Table 3.9B-16.

3.9B.3.4.2 Piping Component Supports

3.9B.3.4.2.1 Loading Combinations, System Operating Transients, and Stress Limits

Loading combinations, system operating transients, and stress limits for piping component supports fall into two categories:

a. That part of the support which transmits loads from the pressure retaining boundary to the building structure (welded attachment) is considered locally as an extension of the piping and falls under the jurisdiction of ASME III outlined in Sections 3.9B.3.1.1 and 3.9B.3.1.2.

b. That part of the support other than the pressure boundary interface is evaluated as a piping component support structure as outlined in Section 3.9B.3.4.2.2.

3.9B.3.4.2.2 Piping Component Support Structures

a. Piping component support structures are defined as that part of the support structure other than the pressure boundary interface. This includes supplemental material such as plate, structural steel, structural bolts, etc. It also includes pre-fabricated vendor components such as struts, snubbers, spring hangers, concrete anchor bolts, etc.

b. The load combinations used for the analysis of piping component support structures are combined in a conservative manner consistent with the requirements of ANSI B31.7-1969,

Division 1-720 and 1-721, and ANSI B31.1.0-1967, Paragraphs 120 and 121. [USA Standard Code for Pressure Piping, Nuclear Power Piping ANSI B31.7-1969 and USA Standard Code for Pressure Piping, Power Piping ANSI B31.1.0-1967.] The load combinations and allowable stresses are shown in Tables 3.9B-14 and 3.9B-15.

c. Piping component support structure design loads are arrived at by the summation of the resultant forces and moments for sustained loads, occasional loads (including building settlement and hydrotest loads), dynamic loads, and thermal expansion loads. The summation of these loads produce a maximum positive design load and a maximum negative design load. (Earthquake and other cyclic loads are combined by SRSS).

d. Stress levels on supplemental material generated by the design loads are compared to the allowable stresses consistent with those in the AISC Specification for the Design, Fabrication, and Erection of Structural Steel for Buildings - 1969, the ANSI (B31.1) Code, and Tables 3.9B-14 and 3.9B-15.

e. Prefabricated vendor components are qualified by comparing the support design loads to the rated loads of the component(s) as specified by the vendor(s).

3.9B.3.4.2.3 Standard Prefabricated Piping (Hanger) Supports

The design of all hanger supports conforms to the requirements of the Manufacturers Standardization Society Standard Practices SP58 and SP69, and the requirements of ASME III (use of code cases are in accordance with Regulatory Guides 1.84 and 1.85 unless otherwise stated herein).

3.9B.3.4.2.4 Snubbers

1. Mechanical Properties

Mechanical and hydraulic snubbers are utilized to limit piping movements resulting from dynamic loadings while permitting normal thermal expansion. Snubbers are not provided for use as vibration arrestors.

2. Structural Analysis and System Evaluation

a. The entire piping system is mathematically modeled for complete structural analysis. In the mathematical model for dynamic loading, the snubbers are modeled as struts with spring stiffness dependent on snubber size. The analysis determines the forces and moments acting on each component and the forces acting on the snubbers due to

all the dynamic loading conditions defined in the piping design specification. The design load on snubbers includes those loads caused by seismic forces (OBE, SSE, seismic anchor movements), and reaction forces caused by relief valve discharge, turbine stop valve closure, etc.

b. The flexibility of support components is considered in the support designs. The assigned stiffness values are adequate for determining pipe stress and pipe support loads by computerized pipe analysis (see Appendix 3A for descriptions of computer programs used).

c. Snubber end fitting clearance and lost motion are minimized in the design and fabrication of the piping component supports.

3. Design Specifications

All snubbers are designed, manufactured, tested, inspected, and handled in strict accordance with the applicable design specifications. Each design specification addresses the following:

a. Functional requirements

b. Operating environment

c. Applicable codes and standards

d. Materials and fluid standards

e. Environmental, structural, and performance design verification tests

f. Production unit functional verification tests and certification

g. Packaging, shipping, handling, and storage requirements

h. Attachment and installation provisions

i. Quality assurance and assembly quality control procedures

4. Installation and Operability Verification

a. All snubbers are installed as detailed on the pipe support drawings and are designed and set to accommodate normal thermal expansion of the pipe. The manufacturer’s installation procedure is packaged with each snubber as it is sent to the job site.

b. The installed cold position of a snubber takes into account the predicted thermal displacements of the pipe obtained from the stress analysis.

c. After inspection of the pipe and installation of the supports, the snubber is adjusted to the cold position indicated on the support drawing.

d. Snubbers are designed to be accessible for removal and installation as required for functional testing and periodic plant maintenance.

5. Use of Additional Snubbers

The effects of snubber installation during or after plant construction, which may not have been included in the

original design analysis, are incorporated in the pipe stress analysis which takes into consideration any effects the additional snubbers would have on the piping system. The stress analysis is then reviewed, and an evaluation of the effects on stress and loads is performed and documented to ensure that the piping and piping supports satisfy applicable code requirements.

6. Inspection and Testing

   a. Prior to plant start-up, snubbers are inspected to verify operability and proper installation and cold position setting. During preoperational and initial start-up testing, thermal and vibratory movement, clearance adequacy, and hot position setting are measured and/or visually observed as specified in Section 3.9B.2. The acceptance criteria and procedure for measuring these movements are included in the appropriate system test procedures. Corrective action is taken to resolve problems observed during system testing.

   b. The plant maintenance program will establish a procedure for the periodic inspection and functional testing of snubbers to verify operability.

   c. After erection, inspections are made to assure adequate clearance and support during the hot and cold position.

7. Classification and Identification of Safety-Related Snubbers

   a. All mechanical and hydraulic snubbers utilized on safety-related piping components are designed and procured to the requirements of the applicable pipe support design specification. Snubber manufacturers fabricate snubber units in accordance with the ASME B&PV Code, Section III, Subsection NF. Fabrication to NF requirements only provides added conservatism and exceeds BVPS-2 design commitments; however, the snubber units are not considered as NF components. It shall not be construed to mean that any NF requirements are being invoked for the design, analysis, testing, maintenance, inspection, surveillance, etc. for any portion of the snubber assemblies. The entire snubber assembly (that is, pipe attachment, snubber unit, and supporting structure) is considered a non-NF component.

3.9B.3.4.3 Duct Supports

The analytical methods for the design of Seismic Category 1 duct supports are the same as those methods described for equipment and components in Section 3.7B.3.1.1. The loading combinations and allowable stress limits are the same as for pipe supports shown in Table 3.9B-14. However, loadings due to relative building displacements and thermal expansion of the duct are not considered because of the existence of flexible joints in the ducts at building shake spaces and between the supports.

3.9B.4 Refer to Section 3.9N.

3.9B.5 Refer to Section 3.9N.

3.9B.6 Inservice Testing of Pumps and Valves

The inservice test program includes baseline preservice and periodic inservice testing to ensure that all applicable pumps and valves remain in a state of operational readiness throughout the life of the plant. The inservice test program is based on the American Society of Mechanical Engineers (ASME) Code for Operation and Maintenance of Nuclear Power Plants (OM Code). A listing of all pumps and valves requiring inservice testing can be found in the BVPS-2 Inservice Testing (IST) Program for Pumps and Valves.

3.9B.6.1 Inservice Testing of Pumps

The inservice test program applies to certain centrifugal and positive displacement pumps that are provided with an emergency power source, and are required for shutting down a reactor to the cold shutdown condition, maintaining the cold shutdown condition, or mitigating the consequences of an accident at BVPS-2. The required pump parameters and test frequencies are discussed in the BVPS-2 Inservice Testing (IST) Program for Pumps and Valves.

3.9B.6.2 Inservice Testing of Valves

The inservice test program applies to certain valves that are required to perform a specific function in shutting down a reactor to the cold shutdown condition, maintaining the cold shutdown condition, or mitigating the consequences of an accident at BVPS-2. The valve test requirements and test frequencies are discussed in the BVPS-2 Inservice Testing (IST) Program for Pumps and Valves.

3.9N MECHANICAL SYSTEMS AND COMPONENTS

3.9N.1 Special Topics for Mechanical Components

3.9N.1.1 Design Transients

The following five operating conditions defined in ASME Section III are considered in the design of the RCS components and reactor internals:

1. Normal conditions

   Any condition in the course of start-up, operation in the design power range, hot standby, and system shutdown, other than upset, emergency, faulted, or testing conditions.

2. Upset conditions (incidents of moderate frequency)

   Any deviations from normal conditions anticipated to occur often enough that design should include a capability to withstand the conditions without operational impairment. The upset conditions include those transients which result from any single operator error or control malfunction, transients caused by a fault in a system component requiring its isolation from the system, and transients due to loss of load or power. Upset conditions include any abnormal incidents not resulting in a forced outage, and also forced outages for which the corrective action does not include any repair of mechanical damage. The estimated duration of an upset condition is included in the design specifications.

3. Emergency conditions (infrequent incidents)

   Those deviations from normal conditions which require shutdown for correction of the conditions or repair of damage in the system. These conditions have a low probability of occurrence but are included to provide assurance that no gross loss of structural integrity will result as a concomitant effect of any damage developed in the system. The total number of postulated occurrences for such events shall not cause more than 25 stress cycles having an S value greater than that for 10^6 cycles from the applicable fatigue design curves of the ASME Code, Section III. Beaver Valley Power Station - Unit 2 does not have any transients classified as "emergency", except as described in Section 3.9N.5.2.

4. Faulted conditions (limiting faults)

   Those combinations of conditions associated with extremely low probability postulated events, whose consequences are such that the integrity and operability of the nuclear energy system may be impaired to the extent that consideration of public health and safety is involved. Such considerations require compliance with safety criteria as may be specified by jurisdictional authorities.

5. Test conditions

   Test conditions are those tests in addition to the hydrostatic or pneumatic tests permitted by the ASME Code, Section III, including leak tests or subsequent hydrostatic tests.

To provide the necessary high degree of integrity for the equipment in the RCS, the transient conditions selected for equipment fatigue elevation are based upon a conservative estimate of the magnitude and frequency of the temperature and pressure transients resulting from various operating conditions in the plant. To a large extent, the specific transient operating conditions to be considered for equipment fatigue analyses are based upon engineering judgment and experience. The transients selected are representative of operating conditions which prudently should be considered to occur during plant operation and are sufficiently severe or frequent to be of possible significance to component cyclic behavior. The transients selected may be regarded as a conservative representation of transients which, when used as a basis for component fatigue evaluation, provide confidence that the component is appropriate for its application over the design life of BVPS-2.

The following design conditions are given in the equipment specifications for RCS components. The design transients and the number of cycles of each that is used for fatigue evaluations are

shown in Table 3.9N-1. In accordance with the ASME Section III, faulted conditions are not included in fatigue evaluations.

Normal Conditions

The following primary system transients are considered normal conditions:

1. Heatup and cooldown at 100°F/hr (maximum)

   The design heatup and cooldown transients are conservatively represented by continuous operations performed at a uniform temperature rate of 100°F/hr maximum. (These operations can take place at lower rates approaching the minimum of 0°F/hr.

   For these cases, the heatup occurs from ambient (assumed to be 120°F) to the no-load temperature and pressure condition and the cooldown represents the reverse situation. In actual practice, the rate of temperature change of 100°F/hr will not be attained because of other limitations such as:

   a. Slower initial heatup rates when using pump energy only.

   b. Interruptions in the heatup and cooldown cycles due to such factors as drawing a pressurizer steam bubble, rod withdrawal, sampling, water chemistry, and gas adjustments.

2. Unit loading and unloading at five percent of full power per minute

   The unit loading and unloading cases are conservatively represented by a continuous and uniform ramp power change of five percent per minute and between 0 percent load and full load. This load swing is the maximum possible consistent with operation of the reactor control system. The reactor temperature will vary with load as prescribed by the reactor control system.

3. Step load increase and decrease of ten percent of full power

   The ± 10 percent step change in load demand is a transient which is assumed to be a change in turbine control valve opening due to disturbances in the electrical network into which the plant output is tied. The reactor control system

is designed to restore plant equilibrium without reactor trip following a ± 10 percent step change in turbine load demand initiated from nuclear plant equilibrium conditions in the range between 15 percent and 100 percent full load. In effect, during load change conditions, the reactor control system or the operator attempts to match turbine and reactor outputs in such a manner that peak reactor coolant temperature is minimized and reactor coolant temperature is restored to its programmed set point at a sufficiently slow rate to prevent excessive pressurizer pressure decrease.

Following a step decrease in turbine load, the secondary side steam pressure and temperature initially increase since the decrease in nuclear power lags behind the step decrease in turbine load. During the same increment of time, the RCS average temperature and pressurizer pressure also initially increase. Because of the power mismatch between the turbine and reactor and the increase in reactor coolant temperature, the control system automatically inserts the control rods to reduce core power. With the load decrease, the reactor coolant temperature will ultimately be reduced from its peak value to a value below its initial equilibrium value at the inception of the transient. The reactor coolant average temperature set point change is made as a function of turbine generator load as determined by first stage turbine pressure measurement. The pressurizer pressure will also decrease from its peak pressure value and follow the reactor coolant's decreasing temperature trend. At some point during the decreasing pressure transient, the saturated water in the pressurizer begins to flash, which reduces the rate of pressure decrease. Subsequently, the pressurizer heaters come on to restore the plant pressure to its normal value.

Following a step increase in turbine load, the reverse situation occurs; that is, the secondary side steam pressure and temperature initially decrease, and the reactor coolant average temperature and pressure also initially decrease. The operator may withdraw the control rods to increase core power. The decreasing pressure transient is reversed by actuation of the pressurizer heaters and eventually the system pressure is restored to its normal value. Alternatively an operator may decrease turbine load as described by administrative controls. The reactor coolant average temperature will be raised to a value above its initial equilibrium value at the beginning of the transients.

4. Large step load decrease with steam dump

This transient applies to a step decrease in turbine load from full power, of such magnitude that the resultant rapid increase in reactor coolant average temperature and

secondary side steam pressure and temperature will automatically initiate a secondary side steam dump that will prevent both reactor trip and lifting of steam generator safety valves. Thus, when a unit is designed to accept a step decrease of 95 percent from full power (complete loss of outside load but retaining the plant auxiliary load of 5 percent), the steam dump system provides the heat sink to accept 85 percent of the turbine load. The remaining 10 percent of the total step change is assumed by the reactor control system (control rods). If a steam dump system was not provided to cope with this transient, there would be such a strong mismatch between turbine steam demand and reactor thermal output that a reactor trip and lifting of steam generator safety valves would occur.

5. Steady-state fluctuations

The reactor coolant average temperature, for purpose of design, is assumed to increase and decrease a maximum of 6°F in one minute. The temperature changes are assumed to be around the programmed value of T_{avg} (T_{avg} $\pm$ 3°F). The corresponding reactor coolant average pressure is assumed to vary accordingly (2,250 $\pm$ 25 psia).

6. Refueling

At the beginning of the refueling operation, the RCS is assumed to have been cooled down to 140°F. The vessel head is removed, and the refueling canal is filled. This is done by transferring water from the refueling water storage tank, which is outdoors and conservatively assumed to be at 32°F, (piping maintained at 45°F), into the loops by means of the low head safety injection pumps. The refueling water flows directly into the reactor vessel via the cold legs.

Upset Conditions

The following primary system transients are considered upset conditions:

1. Loss of load (without immediate reactor trip)

This transient applies to a step decrease in turbine load from full power (turbine trip) without immediately initiating a reactor trip, and represents the most severe pressure transient on the RCS under upset conditions. The reactor eventually trips as a consequence of a high pressurizer level trip initiated by the reactor protection system. Since redundant means of tripping the reactor are provided as part of the reactor protection system (RPS), transients of this nature are not expected but are included to ensure a conservative design.

2. Loss of power

This transient applies to a blackout situation involving the loss of all outside electrical power to the station, followed by reactor and turbine trips. Under these circumstances, the reactor coolant pumps (RCPs) are de-energized, and following coastdown of the RCPs, natural circulation in the system develops into an equilibrium condition. This condition permits removal of core residual heat through the steam generators, which at this time are receiving feedwater from the auxiliary feedwater system. Steam is removed for reactor cooldown through steam generator safety valves provided for this purpose.

3. Loss of flow

This transient applies to a partial loss of flow from full power, in which an RCP is tripped out of service as the result of a loss of power to that pump. The consequences of such an accident are a reactor and turbine trip, on low reactor coolant flow, followed by automatic opening of the steam dump system, and flow reversal in the affected loop. The flow reversal causes reactor coolant at cold leg temperature to pass through the steam generator and be cooled still further. This cooler water then flows through the hot leg piping and enters the reactor vessel outlet nozzles. The net result of the flow reversal is a sizeable reduction in the hot leg coolant temperature of the affected loop.

4. Reactor trip from full power

A reactor trip from full power may occur from a variety of causes resulting in temperature and pressure transients in the RCS and in the secondary side of the steam generator. This is the result of continued heat transfer from the reactor coolant in the steam generator. The transient continues until the reactor coolant and steam generator secondary side temperatures are in equilibrium at zero power conditions. A continued supply of feedwater and controlled dumping of steam will remove the core residual heat and prevent the steam generator safety valves from lifting. The reactor coolant temperature and pressure undergo a rapid decrease from full power values as the RPS causes the control rods to move into the core.

5. Inadvertent safety injection actuation

A spurious safety injection signal results in an immediate reactor trip followed by actuation of the high head safety injection (HHSI)/charging pumps. These pumps deliver borated water from the refueling water storage tank to the RCS cold legs. The initial portion of this transient is similar to the reactor trip from full power with no cooldown. Controlled steam dump and auxiliary feedwater flow after trip removes core residual heat. Reactor coolant temperature and pressure decrease as the control rods move into the core.

Later in the transient, the injected water causes the RCS pressure to increase and the primary and secondary temperatures to decrease gradually. The transient continues until the operator stops the HHSI/charging pumps. It is assumed that the plant is then returned to no load conditions, with pressure and temperature changes controlled within normal limits.

6. Operating basis earthquake

The mechanical stresses resulting from the OBE are considered on a component basis. Fatigue analysis, where required by the codes, is performed by the supplier as part of the stress analysis report. The earthquake loads are a part of the mechanical loading conditions specified in the equipment specifications. The origin of their determination is separate and distinct from those transients resulting from fluid pressure and temperature. They are, however, considered in the design analysis.

7. Reactor Coolant System Cold Overpressurization

RCS cold overpressurization occurs during startup and shutdown conditions at low temperature, with or without existence of a steam bubble in the pressurizer and is especially severe when the reactor coolant system is in a water-solid configuration. The event is inadvertent, and usually generated by any one of a variety of malfunctions or operator errors. All events which have occurred to date may be categorized as belonging to either events resulting in the addition of mass (mass input transient), or events resulting in the addition of heat (heat input transient). All these possible transients are represented by composite "umbrella" design transients, referred to here as RCS cold overpressurization.

8. Inadvertent Auxiliary Spray

The inadvertent pressurizer auxiliary spray transient will occur if the auxiliary spray valve is opened inadvertently during normal operation of the unit. This will introduce cold water into the pressurizer with a very sharp pressure decrease as a result.

The temperature of the auxiliary spray water is dependent upon the performance of the regenerative heat exchanger. The most conservative case is when the letdown stream is shut off and the charging fluid enters the pressurizer unheated. Therefore, for design purposes, the temperature of the spray water is assumed to be 100°F. The spray flow is assumed to be 200 gpm. It is further assumed that the auxiliary spray will, if actuated, continue for five minutes until it is shut off.

The pressure decreases rapidly to the low pressure reactor trip setpoint. At this pressure, the pressurizer low pressure reactor trip is assumed to be actuated; this accentuates the pressure decrease until the pressure is

finally limited to the hot leg saturation pressure. In five minutes, the spray is stopped, and all the pressurizer heaters return the pressure to 2250 psia.

Emergency Conditions

No transient is classified as an emergency condition.

Faulted Conditions

The following primary system transients are considered faulted conditions:

1. Reactor coolant pipe break (large LOCA)

   Following rupture of a reactor coolant pipe resulting in a large loss-of-coolant, the primary system pressure decreases, causing the primary system temperature to decrease. Because of the rapid blowdown of coolant from the system and the comparatively large heat capacity of the metal sections of the components, it is likely that the metal will still be at or near the operating temperature by the end of blowdown. It is conservatively assumed that the emergency core cooling system (ECCS) is actuated to introduce water at a minimum temperature of 45°F into the RCS. The safety injection signal will also result in reactor and turbine trips.

   This postulated break was eliminated by the application of "leak-before-break" technology for excluding from the design basis the dynamic effects of postulated pipe ruptures in primary coolant piping as allowed by GDC-4 (dated December 17, 1986).

   In addition, postulated breaks for the pressurizer surge line as well as portions of the RCS, RHRS, and SIS have been eliminated by application of "leak-before-break" technology.

   Protection criteria against dynamic effects associated with pipe breaks is covered in Section 3.6.

2. Large main steam line break (MSLB)

   This transient is based on the complete severance of the largest steam line. The following conservative assumptions were made:

   a. The reactor is initially in a hot, zero-power condition.

   b. The MSLB results in immediate reactor trip and ECCS actuation.

   c. A large shutdown margin, coupled with no feedback or decay heat, prevents heat generation during the transient.

   d. The ECCS operates at design capacity and repressurizes the RCS within a relatively short time.

The preceding conditions will result in the most severe temperature and pressure variations which the primary system will encounter during a steam break accident.

3. Steam generator tube rupture

This accident postulates the DER of a steam generator tube resulting in a decrease in pressurizer level and RCS pressure. Reactor trip will occur due to low pressurizer pressure or overtemperature ΔT and a safety injection signal is also initiated. Safety injection actuation automatically isolates the main feedwater lines by closing the main feedwater isolation valves and trips the main feed pumps. When this accident occurs, some of the reactor coolant blows into the affected steam generator causing the shell side level to rise. Shortly after the break, the primary system pressure is reduced to below the secondary safety valve setting. Subsequent recovery procedures call for isolation of the steam line leading from the affected steam generator. This accident will result in a transient which is no more severe than that associated with a reactor trip from full power accompanied by RCS cooldown and depressurization. Therefore, it requires no special treatment insofar as fatigue evaluation is concerned.

4. Safe shutdown earthquake (SSE)

The mechanical stresses due to the vibratory motion of the SSE are considered on a component basis.

Test Conditions

The following primary system transients under test conditions are discussed:

1. Turbine roll test

This transient is imposed upon the plant during the hot functional test period for turbine cycle checkout. Reactor coolant pump power will be used to heat the reactor coolant to operating temperature (no-load conditions) and the steam generated will be used to perform a turbine roll test.

2. Primary side hydrostatic test

The pressure tests include both shop and field hydrostatic tests which occur as a result of component or system testing. This hydrotest is performed at a water temperature, which is compatible with reactor vessel material ductility requirements, and a test pressure of 3,107 psig (1.25 times design pressure). In this test, the RCS is pressurized to 3,107 psig coincident with steam generator secondary side pressure of 0 psig.

3. Secondary side hydrostatic test

   The secondary side of the steam generator is pressurized to 1.25 design pressure with a minimum water temperature of 120°F coincident with the primary side of 0 psig.

4. Primary side leakage test

   Subsequent to each time the primary system has been opened, a leakage test will be performed. During this test, the primary system pressure is, for design purposes, raised to 2,500 psia, with the system temperature above the minimum temperature imposed by reactor vessel material ductility requirements, while the system is checked for leaks. In actual practice, the primary system is pressurized to less than 2,500 psia, as measured at the pressurizer, to prevent the pressurizer safety valves from lifting during the test.

   During this leakage test, the secondary side of the steam generator must be pressurized so that the pressure differential across the tubesheet does not exceed 1,600 psi.

Supplemental Transients

1. Pressurizer Insurge

   Surge line flow from the Hot Leg to the Pressurizer can cause rapid cooling of the Pressurizer nozzle and lower shell. This transient is most severe during plant startup and shutdown operation since there is a larger temperature difference (ΔT) from the Pressurizer liquid space to the hot leg temperature. Detailed analysis using various increments of ΔT has shown acceptable results. Confirmation of the analytical assumptions is required as a Fatigue Management activity.

2. Selected CVCS Transients

   Interruption of letdown flow stops the preheating of charging flow via the regenerative heat exchanger. This in turn can cause cooling of the charging nozzle. Interruption of charging flow, or excess letdown flow can affect the relative temperatures of the regenerative or letdown heat exchangers. These components are designed for specific temperature ranges and numbers of occurrences. Monitoring of certain CVCS transients is required as a Fatigue Management activity.

3. Auxiliary Feedwater Injections

   These transients can occur when the plant is at hot standby or no-load conditions. It is assumed that the low steam generation rate is made up by intermittent (slug) feeding of auxiliary feedwater into the steam generator.

   Feedwater additions required during plant heatup and cooldown operations are also assumed to be covered by the Auxiliary Feedwater Injections transient.

4. RHR Actuation

   The full design transient for the RHR system is a change from 70°F to 350°F as RCS flow is initiated through the RHR piping, pumps and heat exchangers. This occurs with each plant shutdown. At lower RCS temperatures, the RHR pumps are occasionally stopped and restarted to aid in RCS cleanup activities.

3.9N.1.2 Computer Programs Used in Analysis

The following computer programs have been used in dynamic and static analyses to determine mechanical loads, stresses, and deformations of Seismic Category I components and equipment:

1. ANSYS

   ANSYS is a general purpose finite element analysis program with structural and heat transfer capabilities. ANSYS is used as-needed for engineering analysis. ANSYS is a recognized program in the public domain.

2. MULTIFLEX

   The Multiflex program is an engineering tool for calculation of hydraulic loads on the reactor internals structure and the pressure vessel during rapid thermal hydraulic transients caused by an imposed driving force on the system. The hydraulic loads are computed in this code by taking into account the hydraulic-structural interactions. It is constructed by incorporating structural models into the thermal-hydraulic code, BLODWN-2A. This code is described by Takeuchi (et al 1976 and 1982.)

3. FORCE

   The FORCE-2 computer code determines the vertical hydraulic loads on the reactor vessel internals during blowdown, by utilizing a detailed geometric description of the vessel components and transient pressures and mass velocities computed by the MULTIFLEX code. The FORCE-2 code is applicable for all pressure and mass velocity transients of a postulated LOCA. This code is described by Takeuchi (et al 1976), Appendix B.

4. WECAN

   Finite element structural analysis program used to perform analyses of structural systems under the excitation of general forcing functions.

3.9N.1.3 Experimental Stress Analysis

No experimental stress analysis methods are used for Seismic Category I system or components. However, Westinghouse makes extensive use of measured results from prototype plants and various scale model tests, as described in Section 3.9N.2.

3.9N.1.4 Considerations for the Evaluation of the Faulted Condition

3.9N.1.4.1 Loading Conditions

The structural evaluations performed on the RCS components consider the loadings specified as shown in Table 3.9N-2. These loads result from thermal expansion, pressure, weight, OBE, SSE, design basis LOCA, and plant operational thermal and pressure transients.

3.9N.1.4.2 Analysis of Primary Components

Equipment which serves as part of the pressure boundary in the reactor coolant loop includes the steam generators, the RCPs, the pressurizer, and the reactor vessel. This equipment is American Nuclear Society (ANS) Safety Class 1 and the pressure boundary meets the requirements of the ASME Boiler and Pressure Vessel Code, Section III, Subsection NB.

The results of the reactor coolant loop analysis are used to determine the loads acting on the equipment nozzles and the support/component interface locations. These loads are supplied for all loading conditions on an "umbrella" load basis. That is, on the basis of previous plant analyses, a set of loads is determined which should be larger than those seen in any single plant analysis. The umbrella loads represent a conservative means of allowing detailed component analysis prior to the completion of the system analysis. Upon completion of the system analysis, conformance is demonstrated between the actual plant loads and the loads used in the analyses of the components. Any deviation where the actual load is larger than the umbrella load is handled by an individualized analysis.

Seismic analyses are performed individually for the RCP, the pressurizer, and the steam generator. Detailed and complex dynamic models are used for the dynamic analyses. The response spectra corresponding to the building elevation at the highest component/building attachment elevation is used for the component analysis. The reactor pressure vessel is qualified by static stress analysis based on loads that have been derived from dynamic analysis.

The pressure boundary portions of Class 1 valves in the RCS are designed and analyzed according to the requirements of NB-3500 of ASME III. These valves are identified in Section 3.9N.3.2.

Valves in sample lines connected to the RCS are not considered to be ANS Safety Class 1 nor ASME Class 1. This is because the nozzles where the line connects to the primary system piping contains a 3/8-inch orifice. This orifice restricts the flow such that a loss through a severance of one of these lines can be made up by normal charging flow.

3.9N.1.4.3 Reactor Vessel Loss-of-Coolant Accident Analysis

The LOCA analysis which is performed for the reactor vessel includes asymmetric pressure distributions on the internals and on the vessel exterior walls.

A detailed 3-D dynamic model of the reactor vessel and internals is prepared, which includes the stiffnesses of the reactor vessel supports and the attached piping. Hydraulic forces are developed in the internals for breaks in the 4-inch (Schedule 160) branch line attached to the cold leg piping and the 3-inch (Schedule 160) branch line attached to the hot leg piping; these forces are characterized by time-dependent forcing functions on the vessel and core barrel. In the derivation of these forcing functions, the fluid-structure (or hydroelastic) interaction in the downcomer region between the barrel and the vessel is taken into account. As a result of the pipe break, loop mechanical loads are also applied to the vessel.

The loads from these sources, the internals hydraulic forces, and the loop mechanical forces, are applied simultaneously in a nonlinear elastic dynamic time history analysis on the model of the vessel, supports, and internals using the WECAN computer code. The results of this analysis are the dynamic loads on the reactor vessel supports and vessel time history displacements. The support loads and vessel displacements are then used in the evaluation of the reactor pressure vessel supports and reactor coolant loops.

3.9N.1.4.4 Stress Criteria for ASME Class 1 Components

All ASME Class 1 components are designed and analyzed for the design, normal, upset, and emergency conditions to the rules and requirements of the ASME Code Section III (Table 3.9N-3). The design analysis, or test methods and associated stress or load allowable limits that will be used in evaluation of faulted conditions, are those defined in Appendix F of the ASME Code. The supplementary options that follow (in elastic components/elastic system analysis) are methods used in addition to the guidelines provided in Appendix F of the code.

Elastic system analysis and component inelastic analysis is an acceptable method of evaluation for faulted conditions if primary stress limits for components are taken as greater of 0.70 S_u or S_y + 1/3 (S_u - S_y) for membrane stress, and greater of 0.70 S_{ut} or S_y + 1/3 (S_{ut} - S_y) for membrane-plus-bending stress, where material properties are taken at appropriate temperature.

Inelastic component analysis was used for the RCP support feet. The pump casing with the pump support feet is shown on Figure 3.9N-1.

The pump foot was analyzed for a set of umbrella loads which are greater than the loads expected in any plant. The umbrella loads are calculated for the faulted condition and each of the maximas of the six load components, F_x, F_y,...,M_z, are assumed to occur simultaneously. For example, the maximum F_x is chosen by surveying many past plants. This is applied simultaneously with the maximum F_y, F_z,...,M_z, all determined similarly. The actual plant loads are calculated and compared to the umbrella loads. Conformance indicates adequacy of the

component for the specific plant application. The actual loads are, in themselves, also conservative since the maximum for each of the six load components is determined and assumed to act concurrently with the others. For the LOCA condition, the dynamic time history analyses show that the maximum values of the six load components do not act concurrently. The seismic event, although evaluated by response spectra analysis, is also dynamic and it is unlikely that the load component maximums at the foot will coincide.

The casing foot was analyzed by means of a three-dimensional stress analysis using the ANSYS computer code, (DeSalvo and Swanson 1972). Since the foot is similar to a beam type structure, the average stress across the section is very low. The primary bending stresses are, therefore, the controlling features. The resulting faulted condition stress intensity was compared with the membrane-plus-bending criteria of 0.7 S_{ut}. The true ultimate stress, S_{ut}, is determined from the engineering ultimate stress (the engineering stress at the point of maximum load) by assuming constancy of volume. Using this assumption, the true ultimate stress is given by:

$$S_{ut} = S_u (1 + \varepsilon)$$

where ε is the engineering strain corresponding to the point of maximum load.

The actual plant loads calculated in the dynamic RCS analysis are less than the umbrella loads used in the analysis of the pump foot. Therefore, the analysis demonstrates that the pump foot is adequately designed to withstand the most severe faulted condition loads.

3.9N.2 Dynamic Testing and Analysis

3.9N.2.1 Preoperational Vibration and Dynamic Effects Testing on Piping

Evaluation of preoperational piping vibrational and dynamics effects will be conducted for the reactor coolant loop/supports system during start up functional testing of BVPS-2. The purpose of this evaluation will be to demonstrate that the primary coolant system is within acceptable limits. Particular attention will be provided at these locations where the vibration is expected to be the most severe for the particular transient being studied.

It should be noted, the layout, size, etc, of the reactor coolant loop and surge line piping used in BVPS 2 is very similar to that employed in Westinghouse plants now in operation. The operating experience that has been obtained from these plants indicates that the reactor coolant loop and surge line piping are adequately designed and supported to minimize vibration. In addition, vibration levels of the RCP, which is the only mechanical component that could cause vibration of the reactor coolant loop and surge line piping, are measured and held to the limits given in Section 5.4.1. Thus, excessive vibration of the reactor coolant loop and surge line piping will not be present.

3.9N.2.2 Seismic Qualification Testing of Safety-Related Mechanical Equipment

Westinghouse utilizes analysis, testing, or a combination of test and analysis to seismically qualify equipment. Testing is the preferred method; however, analysis is utilized when one of the following conditions is satisfied:

1. The equipment is too large or the external loads, connecting elements, or appurtenances cannot be simulated with a shaker table test.

2. The only requirement that must be satisfied relative to the safety of the plant is the maintenance of structural integrity (mechanical equipment only).

3. The component represents a simple linear system or nonlinearities can be conservatively accounted for in the analysis.

The operability of Seismic Category I mechanical equipment must be demonstrated if the equipment is determined to be active; that is, mechanical operation is relied on to perform a safety function. The operability of active Class 2 and Class 3 pumps, active Class 1, Class 2, or Class 3 valves, and their respective drives, operators, and vital auxiliary equipment is shown by satisfying the criteria given in Section 3.9N.3.2. There is no other active mechanical equipment.

Other Seismic Category I equipment within the Nuclear Steam Supply System (NSSS) scope is shown to have structural integrity during all plant conditions in one of the following manners: 1) by analysis satisfying the stress criteria applicable to the particular piece of equipment, or 2) by test showing that the equipment retains its structural integrity under the simulated test environment.

A list of Seismic Category I equipment is provided in Table 3.2-1.

3.9N.2.3 Dynamic Response Analysis of Reactor Internals Under Operational Flow Transients and Steady-State Conditions

The vibration characteristics and behavior due to flow induced excitation are very complex and not readily ascertained by analytical means alone. Reactor components are excited by the flowing coolant which causes oscillatory pressures on the surfaces. The integration of these pressures over the applied area should provide the forcing functions to be used in the dynamic analysis of the structures. In view of the complexity of the geometries and the random character of the pressure oscillations, a closed form solution of the vibratory problem by integration of the differential equation of motion is not always practical and realistic. The determination of the forcing functions as a direct correlation of pressure oscillations cannot be

practically performed independently of the dynamic characteristics of the structure. The main objective is to establish the characteristics of the forcing functions that essentially determine the response of the structures. By studying the dynamic properties of the structure from previous analytical and experimental work, the characteristics of the forcing function can be deduced. These studies indicate that the most important forcing functions are flow turbulence and pump-related excitation. The relevance of such excitations depends on many factors such as type and location of component and flow conditions. The effects of these forcing functions have been studied from test runs on models, prototype plants, and in component tests (Westinghouse 1973, 1975; Bloyd and Singleton 1975; Bloyd et al 1976).

The H.B. Robinson No. 2 plant has been established as the prototype design for three-loop plant internals. H.B. Robinson was instrumented and tested during hot functional testing. Beaver Valley Power Station - Unit 2 is similar to H.B. Robinson, and the only significant differences are the modifications resulting from the use of 17 by 17 fuel and the replacement of the annular thermal shield with neutron shielding panels.

The original test and analysis of the three-loop configuration are presented in Bloyd and Singleton (1975). These results are augmented by Westinghouse (1973; 1975) and Bloyd (et al 1976) to address the effects of successive hardware modifications, which are discussed in the following paragraphs.

The only structural changes in the internals resulting from the design change from the 15 by 15 to the 17 by 17 fuel assembly are the guide tube and control rod drive line. The new 17 by 17 guide tubes are stronger and more rigid; hence, they are less susceptible to flow-induced vibration. The fuel assembly itself is relatively unchanged in mass and spring rate, and thus no significant deviation is expected from the 15 by 15 fuel assembly vibration characteristics.

The vibration levels due to core barrel excitation for Trojan and BVPS-2, both having neutron shielding pads, are expected to be similar. The Trojan plant was instrumented and tested during hot functional testing. Results from Trojan (Bloyd 1976), as well as scale model test results (Westinghouse 1973), show that core barrel vibration of plants with neutron shielding pads is less than that of plants with thermal shields. The Trojan results verify the adequacy of the neutron pad core barrel and 17 by 17 guide tube designs and provide plant data applicable to BVPS-2.

3.9N.2.4 Preoperational Flow-Induced Vibration Testing of Reactor Internals

Because the BVPS-2 reactor internals design configuration is well characterized, as was discussed in Section 3.9N.2.3, it is not

considered necessary to conduct instrumented tests on the BVPS-2 plant hardware. The requirements of Regulatory Guide 1.20, "Comprehensive Vibration Assessment Program," will be met by conducting the confirmatory preoperational examination for integrity in accordance with paragraph C.2.3, "Inspection Program." This examination will include the points on Figure 3.9N-2 summarized as follows:

1. All major load bearing elements of the reactor internals relied upon to retain the core structure in place.

2. The lateral, vertical, and torsional restraints provided within the vessel.

3. Those locking and bolting devices whose failures could adversely affect the structural integrity of the internals.

4. Those other locations on the reactor internals components that are similar to those which were examined on the prototype H.B. Robinson No. 2 design.

The inside of the vessel is inspected before and after the hot functional test, with all the internals removed, to verify that no loose parts or foreign materials are in evidence.

A particularly close inspection will be made on the following items or areas, using a 5x or 10x magnifying glass where applicable. The locations of these areas are shown on Figure 3.9N-2.

1. Lower Internals

   a. Upper barrel to flange girth weld.

   b. Upper barrel to lower barrel girth weld.

   c. Upper core plate aligning pin. Examine bearing surfaces for shadow marks, burnishing, buffing, or scoring. Inspect welds for integrity.

   d. Irradiation specimen guide screw locking devices and dowel pins. Check for lockweld integrity.

   e. Baffle assembly locking devices. Check for lockweld integrity.

   f. Lower barrel to core support girth weld.

   g. Neutron shield pad screw locking devices and dowel pin lockwelds. Examine the interface surfaces for evidence of tightness. Check for lockweld integrity.

   h. Radial support key welds.

i. Insert screw locking devices. Examine soundness of lockwelds.

j. Core support columns and instrumentation guides. Check all the joints for tightness and soundness of the locking devices.

k. Secondary core support assembling welds.

l. Lower radial support keys and inserts, examine bearing surfaces for shadow marks, burnishing, buffing, or scoring. Check the integrity of the lockwelds. These members supply the radial and torsional constraint of the internals at the bottom relative to the reactor vessel while permitting axial growth between the two. Subsequent to the hot functional testing, the bearing surfaces of the key and keyway will show burnishing, buffing, or shadowing marks that would indicate pressure loading and relative motion between these parts. Minor scoring of engaging surfaces is also possible and acceptable.

m. Gaps at baffle joints. Check the gaps at baffle to baffle joints.

2. Upper Internals

a. Thermocouple conduits, clamps, and couplings.

b. Guide tube, support column, and thermocouple column assembly locking devices.

c. Support column and thermocouple conduit assembly clamp welds.

d. Upper core plate alignment inserts. Examine bearing surfaces for shadow marks, burnishing, buffing, or scoring. Check the locking devices for integrity of lockwelds.

e. Thermocouple conduit gusset and clamp welds.

f. Thermocouple end plugs. Check for tightness.

g. Guide tube enclosure and card welds.

Acceptance standards are the same as required in the shop by the original design drawings and specifications.

During the hot functional test, the internals will be subjected to a total operating time at greater than normal full flow conditions (three pumps operating) of at least 240 hours. This provides a

cyclic loading of approximately 10^7 cycles on the main structural elements of the internals. In addition, there will be some operating time with only one or two pumps operating.

When there are no signs of abnormal wear, no harmful vibrations detected, or no apparent structural changes taking place, as determined by pre- and post-hot functional inspections, the three-loop core support structures are considered to be structurally sound and adequate for operations.

3.9N.2.5 Dynamic System Analysis of the Reactor Internals Under Faulted Conditions

The response of reactor internals components due to an excitation produced by complete severance of a branch line pipe is analyzed. Assuming a pipe break occurs in a very short period of time of 1 millisecond, the rapid drop of pressure at the break produces a disturbance which propagates along the primary loop and excites the internal structures.

The LOCA breaks that were considered consist of the 4-inch line break (4-inch schedule 160) in the cold leg and the 3-inch line break (3-inch schedule 160) in the hot leg. The LOCA hydraulic forcing functions (horizontal and vertical forces) that were used in the analyses were generated using MULTIFLEX 3.0 computer code described by Takeuchi (et. al 1982).

Mathematical Model of the Reactor Pressure Vessel (RPV) System

The mathematical model of the RPV system is a three-dimensional nonlinear finite element model which represents dynamic characteristics of the reactor vessel/internals/fuel in the six geometric degrees of freedom. The RPV system model was developed using the WECAN computer code (Westinghouse Electric Computer Analysis). The WECAN finite element model consists of three concentric structural sub-models connected by nonlinear impact elements and stiffness matrices. The first sub-model represents the reactor vessel shell and associated components. The reactor vessel is restrained by reactor vessel supports and by the attached primary coolant piping. The reactor vessel support system is represented by stiffness matrices.

The second sub-model represents the reactor core barrel assembly, lower support plate, tie plates, and secondary core support components. This sub-model is physically located inside the first, and is connected to it by a stiffness matrix at the internals support ledge. Core barrel to vessel shell impact is represented by nonlinear elements at the core barrel flange, core barrel nozzle, and lower radial support locations.

The third and innermost sub-model represents the upper support plate, guide tubes, support columns, upper and lower core plates, and the fuel. This sub-model includes the specific properties of the Westinghouse 17x17 Robust Fuel Assembly with Intermediate Flow Mixing devices (IFMs). The third sub-model is connected to the first and second by stiffness matrices and nonlinear elements.

The WECAN computer code, which is used to determine the response of the reactor vessel and its internals, is a general purpose finite element code. In the finite element approach, the structure is divided into a finite number of members or elements. The inertia and stiffness matrices, as well as the force array, are first calculated for each element in the local coordinates. Employing appropriate transformation, the element global matrices and arrays are then computed. Finally, the global element matrices and arrays are assembled into the global structural matrices and arrays, and used for dynamic solution of the differential equation of motion for the structure:

$$[M]\{\ddot{U}\} + [D]\{\dot{U}\} + [K]\{U\} = \{F\} \qquad \text{(Equation 1)}$$

where $[M]$ = Global inertia matrix

$[D]$ = Global damping matrix

$[K]$ = Global stiffness matrix

$\{\ddot{U}\}$ = Acceleration array

$\{\dot{U}\}$ = Velocity array

$\{U\}$ = Displacement array

$\{F\}$ = Force array, including impact, thrust forces, hydraulic forces, constraints and weight.

WECAN solves equation (1) using the nonlinear modal superposition theory. An initial computer run is made to calculate the eigenvalues (frequencies) and eigenvectors (mode shapes) for the mathematical model. This information is stored, and is used in a subsequent computer run which solves equation (1). The first time step performs a static solution of equation (1) to determine the initial displacements of the structure due to deadweight and normal operating hydraulic forces. After the initial time step, WECAN calculates the dynamic solution of equation (1). Time history nodal displacements and impact forces are stored for post-processing.

The following typical discrete elements from the WECAN finite element library are used to represent the reactor vessel and internals components:

- Three-dimensional elastic pipe
- Three-dimensional mass with rotary inertia
- Three-dimensional beam
- Three-dimensional linear spring
- Concentric impact element
- Linear impact element
- 6 x 6 stiffness matrix
- 18 Card stiffness matrix
- 18 Card mass matrix
- Three-dimensional friction element

Analytical Methods

The RPV system finite element model as described above was used to perform the LOCA analysis. Following a postulated LOCA pipe rupture, forces are imposed on the reactor vessel and its internals. These forces result from the release of the pressurized primary system coolant. The release of pressurized coolant results in traveling depressurization waves in the primary system. These depressurization waves are characterized by a wavefront with low pressure on one side and high pressure on the other. The wavefront translates and reflects throughout the primary system until the system is completely depressurized. The rapid depressurization results in transient hydraulic loads on the mechanical equipment of the system.

The LOCA loads applied to the reactor pressure vessel system consist of (a) reactor internal hydraulic loads (vertical and horizontal), and (b) reactor coolant loop mechanical loads. All the loads are calculated individually and combined in a time-history manner.

RPV Internal Hydraulic Loads

Depressurization waves propagate from the postulated break location into the reactor vessel through either a hot leg or a cold leg nozzle.

After a postulated break in the cold leg, the depressurization path for waves entering the reactor vessel is through the nozzle into the region between the core barrel and reactor vessel. This region is called the down-comer annulus. The initial waves propagate up, around, and down the down-comer annulus, then up through the region circumferentially enclosed by the core barrel; that is, the fuel region.

The region of the down-comer annulus close to the break depressurizes rapidly but, because of restricted flow areas and finite wave speed (approximately 3,000 feet per second), the opposite side of the core barrel remains at a high pressure. This results in a net horizontal force on the core barrel and reactor pressure vessel. As the depressurization wave propagates around the down-comer annulus and up through the core, the barrel differential pressure reduces, and similarly, the resulting hydraulic forces drop.

In the case of a postulated break in the hot leg, the waves follow a dissimilar depressurization path, passing through the outlet nozzle and directly into the upper internals region, depressurizing the core and entering the down-comer annulus from the bottom exit of the core barrel. Thus, after a break in the hot leg, the down-comer annulus would be depressurized with very little difference in pressure across the outside diameter of the core barrel.

A hot leg break produces less horizontal force because the depressurization wave travels directly to the inside of the core barrel (so that the down-comer annulus is not directly involved) and internal differential pressures are not as large as for a cold leg break. Since the differential pressure is less for a hot leg break, the horizontal force applied to the core barrel is less for a hot leg break than for a cold leg break. For breaks in both the hot leg and cold leg, the depressurization waves would continue to propagate by reflection and translation through the reactor vessel and loops.

The MULTIFLEX computer code described by Takeuchi (et al 1976 & 1982) calculates the hydraulic transients within the entire primary coolant system. It considers subcooled, transition, and two-phase (saturated) blowdown regimes. The MULTIFLEX program employs the method of characteristics to solve the conservation laws, and assumes one-dimensionality of flow and homogeneity of the liquid-vapor mixture.

The MULTIFLEX code considers a coupled fluid-structure interaction by accounting for the deflection of constraining boundaries, which are represented by separate spring-mass oscillator systems. A beam model of the core support barrel has been developed from the structural properties of the core barrel; in this model, the cylindrical barrel is vertically divided into various segments and the pressure as well as the wall motions are projected onto the plane parallel to the broken inlet nozzle. The spatial pressure variation at each time step is transformed into 10 horizontal forces, which act on the 10 mass points of the beam model. Each flexible wall is bounded on either side by a hydraulic flow path. The motion of the flexible walls is determined by solving the global equations of motion for the masses representing the forced vibration of an undamped beam.

Reactor Coolant Loop Mechanical Loads

The reactor coolant loop mechanical loads are applied to the RPV nozzles by the primary coolant loop piping. The loop mechanical loads result from the release of normal operating forces present in the pipe prior to the separation as well as transient hydraulic forces in the reactor coolant system. The magnitudes of the loop release forces are determined by performing a reactor coolant loop analysis for normal operating loads (pressure, thermal, and deadweight). The loads existing in the pipe at the postulated break location are calculated and are "released" at the initiation of the LOCA transient by application of the loads to the broken piping ends. These forces are applied with a ramp time of 1 millisecond because of the assumed instantaneous break opening time. For breaks in the branch lines the force applied at the reactor vessel would be insignificant. The restraints on the main coolant piping would eliminate any force to the reactor vessel caused by a break in the branch line.

Results of the Analysis

The severity of a postulated break in a reactor vessel is related to three factors: the distance from the reactor vessel to the break location, the break opening area, and the break opening time. The nature of the decompression following a LOCA, as controlled by the internals structural configuration previously discussed, results in larger reactor internal hydraulic forces for pipe breaks in the cold leg than in the hot leg (for breaks of similar area and distance from the RPV). Pipe breaks farther away from the reactor vessel are less severe because the pressure wave attenuates as it propagates toward the reactor vessel. The LOCA hydraulic and mechanical loads described in the previous sections were applied to the WECAN model of the reactor pressure vessel system.

The results of LOCA analysis include time history displacements and nonlinear impact forces for all major components. The time history displacements of upper core plate, lower core plate and core barrel at the upper core plate elevation are provided as input for the reactor core evaluations. The impact forces calculated at the vessel-internals interfaces are used to evaluate the structural integrity of the reactor vessel and its internals. Using appropriate post-processors, component linear forces are also calculated.

Seismic Evaluation

The non-linear dynamic seismic analysis of the reactor pressure vessel system uses the reactor pressure vessel system described above and the synthesized time history accelerations. The only difference between the seismic and LOCA model is that, in the seismic model, fluid-solid interactions are represented by hydrodynamic mass matrices in the downcomer region (between the core barrel and reactor vessel). On the other hand, in LOCA analysis, the fluid-solid interactions are accounted for through the hydraulic forcing functions generated by the MULTIFLEX Code.

Seismic Results

The results of system seismic analysis include time history displacements and impact forces for all major components. The time history displacements of upper core plate, lower core plate and core barrel at the upper core plate elevation are provided as input for the reactor core evaluations. The impact forces calculated at the vessel-internals interfaces are used to evaluate the structural integrity of the reactor vessel and its internals.

Components Subjected to Transverse Excitation

Various reactor internals components are subjected to transverse excitation during blowdown. Specifically, the barrel, guide tubes, and upper support columns are analyzed to determine their response to this excitation.

Core Barrel - For the hydraulic analysis of the pressure transients during hot leg blowdown, the maximum pressure drop across the barrel is a uniform radial compressive impulse.

The barrel is then analyzed for dynamic buckling using the following conservative assumptions:

1. The effect of the fluid environment is neglected.

2. The shell is treated as simply supported.

During cold leg blowdown, the upper barrel is subjected to a non-axisymmetric expansion radial impulse, which changes as the rare faction wave propagates both around the barrel and down the outer flow annulus between vessel and barrel.

Thus, the core barrel is subjected to non-axisymmetric pressure differentials across the barrel wall. These pressure differentials vary in circumferential as well as in axial direction of the core barrel.

The total response of the core barrel during cold leg break of blowdown consists of its response in shell modes of vibrations, as well as its response in the beam mode of vibration. The analysis of the core barrel response to cold leg blowdown is performed as follows:

1. The core barrel is analyzed as a shell with two variable sections to model the support flange and core barrel. The core barrel response due to shell modes such as m=1, n=0, 2, 3, 4, ... is determined.

2. The barrel with the core and thermal shielding pads is analyzed as a beam; that is, beam mode m=1 and n=1, fixed at the top and elastically supported at the lower radial support, and the dynamic response is obtained.

The total core barrel response is determined from the algebraic sum of the two responses described in steps 1 and 2.

Guide Tubes - The guide tubes in closest proximity to the outlet nozzle of the ruptured loop are the most severely loaded during a blowdown. The transverse guide tube forces decrease with increasing distance from the ruptured nozzle location.

All of the guide tubes are designed to maintain the function of the control rods for a break size of 144 in^2 and smaller. No credit for the function of the control rods is assumed for break size areas above 144 in^2. However, the design of the guide tube will permit control rod operation in all but four control rod positions, which is sufficient to maintain the core in a subcritical configuration, for break sizes up to a double-ended hot leg break. This double-ended hot leg break imposes the limiting lateral guide tube loading.

Upper Support Columns - Upper support columns located close to the broken nozzle during hot leg break will be subjected to transverse loads due to crossflow. The loads applied to the columns are computed with a method similar to the one used for the guide tubes; that is, by taking into consideration the increase in flow across the column during the accident. The columns are studied as beams with variable sections and the resulting stresses are obtained using the reduced section modulus and appropriate stress risers for the various sections.

The stresses due to the SSE (vertical and horizontal components) are combined with the blowdown stresses in order to obtain principal stresses and deflection.

All reactor internals components were found to be within acceptable stress and deflection limits for both hot leg and cold leg LOCAS, each occurring simultaneously with the SSE.

Both static and dynamic stress intensities are within acceptable limits. In addition, the cumulative fatigue usage factor is also within the allowable usage factor of unity.

The stresses due to the SSE (vertical and horizontal components) were combined in an unfavorable manner with the blowdown stresses in order to obtain the largest stress and deflection.

These results indicate that the maximum deflections and stress in the critical structures are below the established allowable limits. For the transverse excitation, it is shown that the upper barrel does not buckle during a hot leg break and that it has an allowable stress distribution during a cold leg break.

Even though control rod insertion is not required for BVPS-2 shutdown, this analysis shows that the deflection of most of the guide tubes is within the limits established experimentally to assure control rod insertion. For the guide tubes deflected above, the no loss of function limit, it must be assumed that the rods will not drop. However, the core will still shut down due to the negative reactivity insertion in the form of core voiding. Shutdown will be aided by the great majority of rods that do drop. Seismic deflections of the guide tubes are generally negligible by comparison with the no loss of function limit.

3.9N.2.6 Correlation of Reactor Internals Vibration Tests with the Analytical Results

As stated in Section 3.9N.2.3, it is not considered necessary to conduct instrumented tests of the BVPS-2 reactor vessel internals. Adequacy of these internals will be verified by use of the Sequoyah and Trojan results (Bloyd et al 1976). Westinghouse (1973) and Bloyd and Singleton (1975) describe predicted vibration behavior based on studies performed prior to BVPS-2 tests. These studies, which utilize analytical models, scale model tests results, component tests, and results of previous BVPS-2 tests, are used to characterize the forcing functions and establish component structural characteristics so that the flow-induced vibratory behavior and response levels for BVPS-2 are estimated. These estimates are then compared to values deduced from BVPS-2 test data obtained from the Sequoyah and Trojan (Bloyd et al 1976) internals vibration measurement programs.

3.9N.3 ASME Code Class 1, 2, and 3 Components, Component Supports, and Core Support Structures

The ASME Code Class components are constructed in accordance with the requirements of ASME Boiler and Pressure Vessel Code, Section III.

A detailed discussion of ASME Code Class 1 components is provided in Section 3.9N.1.

Design loading conditions for core support structures are given in Table 3.9N-13 and Table 3.9N-14. Loading conditions are discussed in Section 3.9.5.2.

In general for reactor internals components and for core support structures, the criteria for acceptability in regard to mechanical integrity analyses are that adequate core cooling and core shutdown must be assured. This implies that the deformation of the reactor internals must be sufficiently small so that the geometry remains substantially intact. Consequently, the limitations established on the internals are concerned principally with the maximum allowable deflections and stability of the parts, in addition to a stress criterion to assure integrity of the components.

For the LOCA plus the SSE condition, deflections of critical internal structures are limited. In a hypothesized downward vertical displacement of the internals, energy absorbing devices limit the displacement after contacting the vessel bottom head, ensuring that the geometry of the core remains intact.

The following mechanical functional performance criteria apply:

1. Following the design basis accident (DBA), the functional criterion to be met for the reactor internals is that BVPS-2 shall be shut down end cooled in an orderly fashion so that fuel cladding temperature is kept within specified limits. This criterion implies that the deformation of critical components must be kept sufficiently small to allow core cooling.

2. For large breaks, the reduction in water density greatly reduces the reactivity of the core, thereby shutting down the core whether the rods are tripped or not. The subsequent refilling of the core by the ECCS uses borated water to maintain the core in a subcritical state. Therefore, the main requirement is to assure effectiveness of the ECCS. Insertion of the control rods, although not needed, gives further assurance of ability to shut BVPS-2 down and keep it in a safe shutdown condition.

3. The inward upper barrel deflections are controlled to ensure that there is no contacting of the nearest rod cluster control guide tube. The outward upper barrel deflections are controlled in order to maintain an adequate annulus for the coolant between the vessel inner diameter and core barrel outer diameter.

4. The rod cluster control guide tube deflections are limited to ensure operability of the control rods.

5. To ensure column loading of rod cluster control guide tubes, the upper core plate deflection is limited.

Methods of analysis and testing for core support structures are discussed in Sections 3.9N.1.3, 3.9N.1.4.1, 3.9N.2.3, 3.9N.2.5, and 3.9N.2.6. Stress limits and deformation criteria are given in Sections 4.2.2.4 and 4.2.2.5.

3.9N.3.1 Loading Combinations, Design Transients, and Stress Limits

Design pressure, temperature, and other loading conditions that provide the bases for design of fluid systems Code Class 2 and 3 components are presented in the sections which describe the systems.

3.9N.3.1.1 Design Loading Combinations

The design loading combinations for ASME Code Class 2 and 3 components and supports are given in Table 3.9N-4. The design loading combinations are categorized with respect to normal, upset, emergency, and faulted conditions. Design of component supports is discussed in Section 3.9N.3.4.

3.9N.3.1.2 Design Stress Limits

The design stress limits established for the components are sufficiently low to assure that violation of the pressure retaining boundary will not occur. These limits, for each of the loading conditions, are component oriented and are presented in Tables 3.9N-5, 3.9N-6, 3.9N-7 and 3.9N-8.

3.9N.3.2 Pump and Valve Operability Assurance

3.9N.3.2.1 Pump and Valve Qualification for Operability Program

Mechanical equipment classified as safety-related must be capable of performing its function under postulated plant conditions. Equipment with faulted condition function requirements include active pumps and valves in fluid systems important to safety. (Active components are those whose operability is relied upon to perform a safety function (as well as reactor shutdown function) during the transients or events considered in the respective operating condition categories. Seismic analysis is presented in Section 3.7N and discusses all safety-related mechanical equipment. A list of all NSSS active pumps and valves is presented in Tables 3.9N-9 and 3.9N-10.

All active pumps are qualified for operability by being subjected to rigid tests both prior to and after installation in the plant. The in-shop tests include: 1) hydrostatic tests of pressure-retaining parts to 150 percent of the design pressure; 2) seal leakage tests at the same pressure used in the hydrostatic tests; and 3) performance tests, while the pump is operated with flow, to determine total developed head, minimum and maximum head, net positive suction head requirements, and other pump/motor parameters. Also monitored during these operating tests are bearing temperatures and vibration levels. Bearing temperature limits are determined, by the manufacturer, based

on the bearing material, clearances, oil type, and rotational speed. After the pump is installed in the plant, it undergoes performance testing and the required periodic in-service inspection and operation. "These tests will demonstrate the continuing operability of the pump compared to the initial in-plant operating capability, as required to conform with ASME OM Code requirements."

In addition to these tests, the safety-related active pumps are qualified for operability during SSE condition by assuring that: 1) the pump will not be damaged during the seismic event; and 2) the pump will continue operating despite the SSE loads.

The pump manufacturer is required to show that the pump will operate normally when subjected to the maximum seismic accelerations and maximum faulted plant condition nozzle loads. It is required that test or analysis be used to show that the lowest natural frequency of the pump is greater than 33 Hz. The pump, when having a natural frequency above 33 Hz, is considered essentially rigid. This frequency is considered sufficiently high to avoid problems with amplification between the component and structure for all seismic areas. A static shaft deflection analysis of the rotor is performed with the conservative SSE accelerations of 3 g in the horizontal directions and 2 g vertical acting simultaneously. The deflections determined from the static shaft analysis are compared to the allowable rotor clearances. The nature of seismic disturbances dictates that the maximum contact (if it occurs) will be of short duration. In order to avoid damage during the faulted plant condition, the stresses caused by the combination of normal operating loads, SSE, and dynamic system loads are limited to the material elastic limit, as indicated in Table 3.9N-7. In addition, the pump casing stresses caused by the maximum faulted nozzle loads will be limited to the stresses outlined in Table 3.9N-7. The changes in operating rotor clearances caused by casing distortions due to these nozzle loads will be considered in an analysis of the pump supports. Furthermore, the calculated misalignment will be shown to be less than that misalignment which could cause pump misoperation. The stresses in the supports will be below those in Table 3.9N-7; therefore, the support distortion will be elastic and of short duration (equal to the duration of the seismic event).

Performing these analyses with the conservative loads stated and with the restrictive stress limits of Table 3.9N-7 as allowable, assures that critical parts of the pump will not be damaged during the faulted condition, and the reliability of the pump for post-faulted condition operation will not be impaired by the seismic event.

To complete the seismic qualification procedures, the pump motor is independently qualified for operation during the maximum seismic event. Any auxiliary equipment which is identified to be vital to the operation of the pump or pump motor, and which is not qualified for operation during the pump analysis or motor qualifications, is also separately qualified for operation at the accelerations it would

see at its mounting. The pump motor is qualified by meeting the requirements of IEEE Standard 344-1971, as described in Section 3.10N.

This program gives the required assurance that the safety-related pump/motor assemblies will not be damaged, will continue operating under SSE loadings, and will perform their intended functions. These requirements take into account the complex characteristics of the pump and are sufficient to demonstrate and assure the seismic operability of the active pumps.

Since the pump is not damaged during the faulted condition, the functional ability of active pumps after the faulted condition is assured, since only normal operating loads and steady-state nozzle loads exist. The post-faulted condition operating loads will be identical to the normal plant operating loads. This is assured by requiring that the imposed nozzle loads (steady-state loads) for normal conditions and post-faulted conditions are limited by the magnitudes of the normal condition nozzle loads. The post-faulted condition ability of the pumps to function under these applied loads is proven during the normal operating plant conditions for active pumps.

Safety-related valves are subjected to a series of stringent tests prior to service and during the plant life. Prior to installation, the following tests are performed: shell hydrostatic test to ASME Section III requirements, backseat and main seat leakage tests, disc hydrostatic test, and operational tests to verify that the valve will open and close. Qualification of motor operators for environmental conditions is discussed in Sections 3.11 and Table 1.8-1 and Regulatory Guide 1.73. Cold hydro tests, hot functional qualification test, periodic in-service inspections, and periodic in-service operation are performed in situ to verify and assure the functional ability of the valve. These tests guarantee reliability of the valve for the design life of the plant. On active valves, an analysis of the extended structure is performed for static equivalent seismic SSE loads applied at the center of gravity of the extended structure. The maximum stress limits for active Class 2 and 3 valves are shown in Table 3.9N-3.

In addition to these tests and analyses, representative valves of each design type are tested for verification of operability during a simulated seismic event by demonstrating operational capabilities within the specified limits. The testing procedures are described as follows:

The valve is mounted in a manner which conservatively represents typical valve installations. The valve includes the operator pilot solenoid valves and limit switches normally attached to the valve in-service.

The faulted condition nozzle loads are considered in the test in either of two ways: 1) loads equivalent to the faulted condition nozzle loads are simultaneously applied to the valve through its mounting during the test described subsequently or 2) by analysis, the nozzle loads are shown not to affect the operability of the valve.

The operability of the valve during SSE is demonstrated by satisfying the following criteria:

1. All the active valves are designed to have a first natural frequency which is greater than 33 Hz.

2. The actuator and yoke of the valve system are statically deflected an amount equal to the deflection caused by the faulted condition accelerations applied at the center of gravity of the operator alone in the direction of the weakest axis of the yoke. The design pressure of the valve will be simultaneously applied to the valve during the static deflection tests.

3. The valve is cycled while in the deflected position. The time required to open or close the valve in the deflected position will be compared to similar data taken in the undeflected condition to evaluate the significance of any change.

4. Motor operators, external limit switches, and pilot solenoid valves necessary for operation are qualified by IEEE Standard 344-1971, as described in Section 3.10N.

The accelerations which are used for the static valve qualification shall be equivalent, as justified by analysis, to 3 g in the horizontal direction, and 2 g in the vertical. The piping designer must maintain the accelerations to these levels.

This testing program applies to valves with extended structures. The testing is conducted on a representative number of valves. Valves from each of the primary safety-related design types are tested. Valve sizes which cover the range of sizes in-service are qualified by the tests and the results are used to qualify all valves within the intermediate range of sizes.

Valves which are safety-related but can be classified as not having an extended structure, such as check valves and safety valves, are considered separately.

Check valves are characteristically simple in design and their operation will not be affected by seismic accelerations, or the maximum applied nozzle loads. The check valve design is compact and there are no extended structures of masses whose motion could cause distortions which could restrict operation of the valve. The nozzle

loads due to maximum seismic excitation will not affect the functional ability of the valve, since the valve disc is designed to be isolated from the body wall. The clearance supplied by the design around the disc will prevent the disc from becoming bound or restricted due to any body distortions caused by nozzle loads. Therefore, the design of these valves is such that once the structural integrity of the valve is assured using standard methods, the ability of the valve to operate is assured by the design features. The valve will also undergo: 1) in-shop hydrostatic tests; 2) in-shop seat leakage test; and 3) periodic in situ valve exercising and inspection to assure the functional ability of the valve.

The pressurizer safety valves are qualified by the following procedures (these valves are also subjected to tests and analysis similar to check valves): stress and deformation analyses for SSE loads, in-shop hydrostatic and seat leakage tests, and periodic in situ valve inspection. In addition to these tests, a static load equivalent to the SSE is applied at the top of the bonnet, and the pressure is increased until the valve mechanism actuates. Successful actuation within the design requirements of the valve assures its overpressurization safety capabilities during a seismic event.

Using the methods described, all the safety-related valves in the systems are qualified for operability during a seismic event. These methods conservatively simulate the seismic event and ensure that the active valves will perform their safety-related function when necessary.

This testing program for valves is conservative. Alternate valve operability testing, such as dynamic vibration testing, will be allowed if it is shown to adequately assure the faulted condition functional ability of the valve system.

3.9N.3.2.2 Pump Motor and Valve Electric Motor Operator Qualification

Active pump motors (and vital pump appurtenances) and active valve electric motor operators (and limit switches and pilot solenoid valves), are seismically qualified by meeting the requirements of IEEE Standard 344-1971, as described in Section 3.10N.

3.9N.3.3 Design and Installation Details in Mounting of Pressure Relief Devices

This is discussed in 3.9B.3.3.

3.9N.3.4 Component Supports

Westinghouse has supplied supports only for those Class 2 and 3 components also supplied by Westinghouse to which the supports are attached. The loads and loading combinations of the supports are the same as those of the supported component. These loads and combinations are given in Table 3.9N-4.

The Class 2 and 3 auxiliary equipment supplied by Westinghouse are grouped into two general categories. One group consists of tanks and heat exchangers. The other group is auxiliary pumps. Design criteria for the supports for these components are discussed below.

3.9N.3.4.1 Tanks and Heat Exchangers

The supports for auxiliary tanks and heat exchangers are of two types: linear and, for the most part, plate and shell type supports. The supports meet either the requirements of Subsection NF of the ASME Code or the requirements of the AISC Code, depending on the procurement date of the component. Components procured prior to the inclusion of Subsection NF into the ASME Code were designed to the AISC Code requirements. A listing of the tanks and heat exchangers and the codes to which the respective supports were designed is identified in the ASME Code Baseline Document.

3.9N.3.4.2 Auxiliary Pumps

The supports for Class 2 and 3 auxiliary pumps are plate and shell and, for the most part, linear-type supports. The supports for all Class 2 and 3 pumps supplied by Westinghouse are designed by the pump manufacturer to pressure boundary stress limits, (ASME III, Subsection NC/ND, as applicable), with the exception of the boric acid transfer pumps, the supports for which are designed to the limits of the AISC Code. A listing of the Class 2 and 3 auxiliary pumps and the ASME III Code edition/addenda to which they were purchased is identified in the ASME Code Baseline Document.

3.9N.4 Control Rod Drive Systems

3.9N.4.1 Descriptive Information of Control Rod Drive System

Control Rod Drive Mechanism

Control rod drive mechanisms (CRDMS) are located on the dome of the reactor vessel. They are coupled to rod control clusters which have absorber material over the entire length of the control rods. The CRDM is shown on Figure 3.9N-3 and schematically on Figure 3.9N-4.

The primary function of the CRDM is to insert or withdraw rod cluster control assemblies (RCCAs) within the core to control average core temperature and to shut down the reactor.

The CRDM is a magnetically-operated jack, which is an arrangement of three electromagnets energized in a controlled sequence to insert or withdraw RCCAs in the reactor core in discrete steps. Rapid insertion of the RCCAs occurs when electrical power is interrupted.

The CRDM consists of four separate subassemblies. They are the pressure vessel, coil stack assembly, latch assembly, and the drive rod assembly.

1. The pressure vessel includes a latch housing and rod travel housing which are connected by a threaded, seal welded, maintenance joint which facilitates access to the latch assembly. The threaded closure at the top of the rod travel housing contains a vent plug and utilizes a canopy seal weld for pressure integrity.

   The latch housing is the lower portion of the vessel and contains the latch assembly. The rod travel housing is the upper portion of the vessel and provides space for the drive rod during its upward movement as the control rods are withdrawn from the core.

2. The coil stack assembly includes the coil housings, an electrical conduit and connector, and three operating coils: 1) the stationary gripper coil, 2) the moveable gripper coil, and 3) the lift coil.

   The coil stack assembly is a separate unit which is installed on the drive mechanism by sliding it over the outside of the latch housing. It rests on the base of the latch housing without mechanical attachment.

   Energizing the operating coils causes movement of the pole pieces and latches in the latch assembly.

3. The latch assembly includes the guide tube, stationary pole pieces, moveable pole pieces, and two sets of latches: 1) the moveable gripper latches, and 2) the stationary gripper latches.

   The latches engage grooves in the drive rod assembly. The moveable gripper latches are moved up or down in 5/8-inch steps by the lift pole to raise or lower the drive rod. The stationary gripper latches hold the drive rod assembly while the moveable gripper latches are repositioned for the next 5/8-inch step.

4. The drive rod assembly includes a flexible coupling, a drive rod, a disconnect button, a disconnect rod, and a locking button.

   The drive rod has a 5/8-inch groove pitch which receives the latches during holding or moving of the drive rod. The flexible coupling is attached to the drive rod and provides the means for coupling to the RCCA.

   The disconnect button, disconnect rod, and locking button provide positive locking of the coupling to the RCCA and permit remote uncoupling of the drive rod from the rod cluster control.

The CRDM is a trip design. Tripping can occur during any part of the power cycle sequencing if electrical power to the coils is interrupted.

The CRDM is threaded and seal welded on a housing on top of the reactor vessel. The drive rod which is positioned in the mechanism is coupled to the RCCA directly below.

The mechanism is capable of raising or lowering a 360-pound load, (which includes the drive rod weight) at a rate of 45 in/min. Withdrawal of the RCCA is accomplished by magnetic forces while insertion is by gravity.

The mechanism internals are designed to operate in 650°F reactor coolant. The pressure vessel is designed to contain reactor coolant at 650°F and 2,500 psia. The three operating coils are designed to operate with a 40-year life at 392°F with forced air cooling required to maintain a temperature at or below 392°F.

The CRDM shown schematically on Figure 3.9N-4 withdraws and inserts an RCCA as shaped electrical pulses are received by the operating coils. An ON or OFF sequence, repeated by silicon controlled rectifiers in the power programmer, causes either withdrawal or insertion of the control rod. Position of the control rod is measured by 42 discrete coils mounted on the position indicator assembly surrounding the rod travel housing. Each coil magnetically senses the entry and presence of the top of the ferromagnetic drive rod assembly as it moves through the coil center line.

During plant operation the stationary gripper coil of the drive mechanism holds the RCCA in a static position until a stepping sequence is initiated at which time the moveable gripper coil and lift coil is energized sequentially.

Rod Cluster Control Assembly Withdrawal

The RCCA is withdrawn by repetition of the following sequence of events (Figure 3.9N-4):

1. Moveable gripper coil (B) - ON

   The latch locking plunger raises and swings the moveable gripper latches into the drive rod assembly groove. A l/16-inch axial clearance exists between the latch teeth and the drive rod.

2. Stationary gripper coil (A) - OFF

   The force of gravity, acting upon the drive rod assembly and attached control rod, causes the stationary gripper latches and plunger to move downward 1/16 inch until the load of the drive rod assembly and attached control rod is transferred to the moveable gripper latches. The plunger continues to move downward and swings the stationary gripper latches out of the drive rod assembly groove.

3. Lift coil (C) - ON

   The 5/8-inch gap between the moveable gripper pole and the lift pole closes and the drive rod assembly raises one step length (5/8 inch).

4. Stationary gripper coil (A) - ON

   The plunger raises and closes the gap below the stationary gripper pole. The three links, pinned to the plunger, swing, and the stationary gripper, latches into a drive rod assembly groove. The latches contact the drive rod assembly and lift it (and the attached control rod) 1/16 inch. The l/16-inch vertical drive rod assembly movement transfers the drive rod assembly load from the moveable gripper latches to the stationary gripper latches.

5. Moveable gripper coil (B) - OFF

   The latch locking plunger separates from the moveable gripper pole under the force of a spring and gravity. Three links, pinned to the plunger, swing the three moveable gripper latches out of the drive rod assembly groove.

6. Lift coil (C) - OFF

   The gap between the moveable gripper pole and lift pole opens. The moveable gripper latches drop 5/8 inch to a position adjacent to a drive rod assembly groove.

7. Repeat step 1

   The sequence described in Items 1 through 6 is termed as one step or one cycle. The RCCA moves 5/8 inch for each step or cycle. The sequence is repeated at a rate of up to

72 steps/min and the drive rod assembly (which has a 5/8-inch groove pitch) is raised 72 grooves/min. The RCCA is thus withdrawn at a rate up to 45 in/min.

Rod Cluster Control Assembly Insertion

The sequence for RCCA insertion is similar to that for control rod withdrawal, except the timing of lift coil (C) ON and OFF is changed to permit lowering the control assembly.

1. Lift coil (C) - ON

   The 5/8-inch gap between the moveable gripper and lift pole closes. The moveable gripper latches are raised to a position adjacent to a drive rod assembly groove.

2. Moveable gripper coil (B) - ON

   The latch locking plunger raises and swings the moveable gripper latches into a drive rod assembly groove. A 1/16-inch axial clearance exists between the latch teeth and the drive rod assembly.

3. Stationary gripper coil (A) - OFF

   The force gravity, acting upon the drive rod assembly and attached RCCA, causes the stationary gripper latches and plunger to move downward 1/16 inch until the load of the drive rod assembly and attached RCCA is transferred to the moveable gripper latches. The plunger continues to move downward and swings the stationary gripper latches out of the drive rod assembly groove.

4. Lift coil (C) - OFF

   The force of gravity and spring force separates the moveable gripper pole from the lift pole and the drive rod assembly and attached rod cluster control drop down 5/8 inch.

5. Stationary gripper (A) - ON

   The plunger raises and closes the gap below the stationary gripper pole. The three links, pinned to the plunger, swing the three stationary gripper latches into a drive rod assembly groove. The latches contact the drive rod assembly and lift it (and the attached control rod) 1/16 inch. The 1/16-inch vertical drive rod assembly movement transfers the drive rod assembly load from the moveable gripper latches to the stationary gripper latches.

6. Moveable gripper coil (B) - OFF

The latch locking plunger separates from the moveable gripper pole under the force of a spring and gravity. Three links, pinned to the plunger, swing the three moveable gripper latches out of the drive rod assembly groove.

7. Repeat step 1

The sequence is repeated, as for RCCA withdrawal, up to 72 times/min which gives an insertion rate of 45 in/min.

Holding and Tripping of the Control Rods

During most of the plant operating time, the CRDMs hold the RCCAs withdrawn from the core in a static position. In the holding mode, only one coil, the stationary gripper coil (A), is energized on each mechanism. The drive rod assembly and attached RCCAs hang suspended from the three latches.

If power to the stationary gripper coil is cut off, the combined weight of the drive rod assembly and the RCCA and the stationary gripper return spring is sufficient to move latches out of the drive rod assembly groove. The control rod falls by gravity into the core. The trip occurs as the magnetic field, holding the stationary gripper plunger half against the stationary gripper pole, collapses and the stationary gripper plunger half is forced down by the stationary gripper return spring and weight acting upon the latches. After the RCCA is released by the mechanism, it falls freely until the control rods enter the dashpot section of the thimble tubes in the fuel assembly.

3.9N.4.2 Applicable Control Rod Drive System Design Specifications

For those components in the control rod drive system (CRDS), comprising portions of the reactor coolant pressure boundary, conformance with the General Design Criteria 15, 30, 31, and 32, and Section 50.55a of 10 CFR 50 is discussed in Sections 3.1 and 5.2. Conformance with the regulatory guides pertaining to materials suitability is described in Sections 4.5 and 5.2.3.

Design Bases

The design of the reactor control components takes into consideration temperature effects, thermal clearances, and stresses on structural members resulting from normal and accident conditions.

Design Stresses

The CRDS is designed to withstand stresses originating from various operating conditions as summarized in Table 5.2-1.

Allowable Stresses

For normal operating conditions, Section III of the ASME Boiler and Pressure Code is used. All pressure boundary components are analyzed as Class I components under Article NB-3000.

Dynamic Analysis

The cyclic stresses due to dynamic loads and deflections are combined with the stresses imposed by loads from component weights, hydraulic forces, and thermal gradients for the determination of the total stresses of the CRDS.

Control Rod Drive Mechanisms

The CRDMs pressure housings are Class 1 components designed to meet the stress requirements for normal operating conditions of Section III of the ASME Boiler and Pressure Vessel Code. Both static and alternating stress intensities are considered. The stresses originating from the required design transients are included in the analysis.

A dynamic seismic analysis is required on the CRDMs when a seismic disturbance has been postulated to confirm the ability of the pressure housing to meet ASME Code, Section III, allowable stresses, and to confirm its ability to trip when subjected to the seismic disturbance.

Control Rod Drive Mechanism Operational Requirements

The basic operational requirements for the CRDMs are:

1. 5/8-inch step,
2. 144-inch travel (nominal value),
3. 360-lb maximum dynamic load,
4. Step in or out at 45 in/min (72 steps/min),
5. Electrical power interruption shall initiate release of drive rod assembly,
6. Trip delay time of less than 150 milliseconds - Free fall of drive rod assembly shall begin less than 150 milliseconds after power interruption no matter what holding or stepping action is being executed with any load and coolant temperature of 100°F to 550°F, and
7. Forty-year design life with normal refurbishment,

3.9N.4.3 Design Loads, Stress Limits, and Allowable Deformations

3.9N.4.3.1 Pressure Vessel

The pressure retaining components are analyzed for loads corresponding to normal, upset, and faulted conditions. The analysis performed depends on the mode of operation under consideration.

The scope of the analysis requires many different techniques and methods, both static and dynamic.

Some of the loads that are considered on each component where applicable are as follows:

1. Control rod trip (equivalent static load),
2. Differential pressure,
3. Spring preloads,
4. Coolant flow forces (static),
5. Temperature gradients,
6. Differences in thermal expansion,
    a. Due to temperature differences
    b. Due to expansion of different materials,
7. Interference between components,
8. Vibration (mechanically or hydraulically induced),
9. All operational transients listed in Table 3.9N-1,
10. Pump overspeed,
11. Seismic loads (operation basis earthquake and design basis earthquake), and
12. Blowdown forces (due to cold and hot leg break).

The main objective of the analysis is to satisfy allowable stress limits, given in NB-3200 and NA Appendix F, to assure an adequate design margin, and to establish deformation limits which are concerned primarily with the functioning of the components. The stress limits are established not only to assure that peak stresses will not reach unacceptable values, but also limit the amplitude of the oscillatory stress component in consideration of fatigue characteristics of the materials. Standard methods of strength of materials are used to establish the stresses and deflections of these

components. The dynamic behavior of the reactivity control components has been studied using experimental test data and experience from operating reactors.

3.9N.4.3.2 Drive Rod Assembly

All postulated failures of the drive rod assemblies either by fracture or uncoupling lead to a reduction in reactivity. If the drive rod assembly fractures at any elevation below the gripper latches, that portion remaining coupled falls with, and is guided by the RCCA. This always results in reactivity decrease for control rods. Such an occurrence on a part length rod could result in reactivity increase but is not considered an excessive reactivity increase.

3.9N.4.3.3 Latch Assembly and Coil Stack Assembly

With respect to the CRDM as a whole, critical clearances are present in the following areas:

1. Latch assembly (diametral clearances),
2. Latch arm-drive rod clearances,
3. Coil stack assembly-thermal clearances, and
4. Coil fit in coil housing.

The following description defines clearances that are designed to provide reliable operation in the CRDM in these four critical areas. These clearances have been proven by life tests and actual field performance at operating plants.

Latch Assembly - Thermal Clearances

The magnetic jack has several locations where parts made of Type 410 stainless steel fit over parts made from Type 304 stainless steel. Differential thermal expansion is therefore important. Minimum clearance of these parts at 68°F is 0.011 inch. At the maximum design temperature of 650°F, minimum clearance is 0.0045 inch and at the maximum expected operating temperature of 550°F is 0.0057 inch.

Latch Arm - Drive Rod Clearances

The CRDM incorporates a load transfer action. The moveable or stationary gripper latch is not under load during engagement due to load transfer action.

Figure 3.9N-5 shows latch clearance variation with the drive rod as a result of minimum and maximum temperatures. Figure 3.9N-6 shows clearance variations over the design temperature range.

Coil Stack Assembly - Thermal Clearances

The assembly clearance of the coil stack assembly over the latch housing was selected so that the assembly could be removed under all anticipated conditions of thermal expansion.

At 70°F the inside diameter of the coil stack is 7.308/7.298 inches. The outside diameter of the latch housing is 7.260/7.270 inches.

Thermal expansion of the mechanism due to operating temperature of the CRDM results in the minimum inside diameter of the coil stack being 7.310 inches at 222°F and the maximum latch housing diameter being 7.302 inches at 532°F.

Under the extreme tolerance conditions listed previously, it is necessary to allow time for a 70°F coil housing to heat during a replacement operation.

Four coil stack assemblies were removed from four hot CRDMs mounted on 11.035-inch centers on a 550°F test loop, allowed to cool, and then placed without incident as a test to prove the preceding.

Coil Fit in Coil Housing

Control rod drive mechanism and coil housing clearances are selected so that coil heat up results in a close to tight fit. This is done to facilitate thermal transfer and coil cooling in a hot CRDM.

3.9N.4.4 Control Rod Drive System Performance Assurance Program

Evaluation of Material's Adequacy

The ability of the pressure housing components to perform throughout the design lifetime as defined in the equipment specification is confirmed by the stress analysis report required by the ASME Boiler and Pressure Vessel Code, Section III.

Internal components subjected to wear will withstand a minimum of 3,000,000 steps without refurbishment, as confirmed by life tests (Westinghouse 1977). Latch assembly inspection is recommended after approximately 2.5 by 10^6 steps have been accumulated on a CRDM.

To confirm the mechanical adequacy of the fuel assembly, the CRDM and the RCCA, functional test programs have been conducted on a full scale 12-foot control rod. The 12-foot prototype assembly was tested under simulated conditions of reactor temperature, pressure, and flow for approximately 1,000 hours. The prototype mechanism accumulated about 3,000,000 steps and 600 trips. At the end of the test the CRDM was still operating satisfactorily. A correlation was developed to predict the amplitude of the flow-excited vibration of individual fuel rods and fuel assemblies. Inspection of the drive line components did not reveal significant fretting.

These tests include verification that the trip time of the CRDM meets the design requirement of 2.2 seconds from start of RCCA motion to dashpot entry. Trip times are to be confirmed for each CRDM prior to initial reactor operation, and at periodic intervals after initial reactor operation, as required by the proposed Technical Specification.

There are no significant differences between the prototype CRDMs and the production units. Design materials, tolerances, and fabrication techniques are the same.

These tests have been reported by Bohm and LaFaille (1971).

If an RCCA cannot be moved by its mechanism, adjustments in the boron concentration ensure that adequate shutdown margin would be achieved following a trip. Thus, inability to move one RCCA can be tolerated. More than one inoperable RCCA could be tolerated but would impose additional demands on the plant operator.

In order to demonstrate proper operation of the CRDM and to ensure acceptable core power distributions during operation, RCCA partial-movement checks are performed on the RCCAs (Technical Specifications, Chapter 16). In addition, periodic drop tests of the full length RCCAs are performed at each refueling shutdown, to demonstrate continued ability to meet trip time requirements and to ensure core subcriticality after reactor trip. During these tests the acceptable drop time of each assembly is not greater than 2.2 seconds at full flow and operating temperature, from the beginning of motion to dashpot entry.

Actual operating experience indicates excellent performance of the CRDM both with respect to tripping action and stepping.

All units are production tested prior to shipment to confirm ability of the mechanism to meet design specification-operational requirements.

Each CRDM undergoes a production test according to the following summarization:

Test	Acceptance Criteria
Cold (ambient) hydrostatic	ASME Section III
Confirm step length and load transfer (stationary gripper to moveable gripper or moveable gripper to stationary gripper)	Step Length 5/8 ± 0.015 inch axial movement Load Transfer 0.047 inch nominal axial

	movement
Cold (ambient) performance test at design load - 5 full travel excursions	Operating Speed 45 cm/min Trip Delay Free fall of drive rod to begin within 150 milliseconds

3.9N.5 Reactor Vessel Internals

3.9N.5.1 Design Arrangements

The reactor vessel internals are described as follows:

The components of the reactor internals are divided into three parts: 1) the lower core support structure (including the entire core barrel and neutron shield pad assembly); 2) the upper support structure; and 3) the incore instrumentation support structure. The reactor internals support the core, maintain fuel alignment, limit fuel assembly movement, maintain alignment between fuel assemblies and CRDMs, direct coolant flow past the fuel elements, direct coolant flow to the pressure vessel head, provide gamma and neutron shielding, and guides for the incore instrumentation. The coolant flows from the vessel inlet nozzles down the annulus between the core barrel and the vessel wall and then into a plenum at the bottom of the vessel. It then reverses and flows up through the core support and through the lower core plate. The lower core plate is sized to provide the desired inlet flow distribution to the core. After passing through the core, the coolant enters the region of the upper support structure and then flows radially to the core barrel outlet nozzles and directly through the vessel outlet nozzles. A small portion of the coolant flows between the baffle plates and the core barrel to provide additional cooling of the barrel. Similarly, a small amount of the entering flow is directed into the vessel head plenum and exits through the vessel outlet nozzles.

Lower Core Support Structure

The major component and support member of the reactor internals is the lower core support structure, shown on Figure 3.9N-7. This support structure assembly consists of the core barrel, the core baffle, the lower core plate and support columns, the neutron shield pads, and the core support which is welded to the core barrel. All the major material for this structure is Type 304 stainless steel or equivalent. The lower core support structure is supported at its upper flange from the ledge in the reactor vessel head flange, and its lower end is restrained in its transverse movement by a radial support system attached to the vessel wall. Within the core barrel are an axial baffle and a lower core plate, both of which are attached to the core

barrel wall and form the enclosure periphery of the assembled core. The lower core support structure and principally the core barrel serve to provide passageways and control for the coolant flow. The lower core plate is positioned at the bottom level of the core below the baffle plates and provides support and orientation for the fuel assemblies.

The lower core plate is a member through which the necessary flow distribution holes for each fuel assembly are machined. Fuel assembly locating pins (two for each assembly) are also inserted into this plate. Columns are placed between this plate and the core support of the core barrel in order to provide stiffness and to transmit the core load to the core support. Adequate coolant distribution is obtained through the use of the lower core plate and core support.

The neutron shield pad assembly consists of four pads that are bolted and pinned to the outside of the core barrel. These pads are constructed of Type 304 stainless steel or equivalent and are approximately 48 inches wide by 148 inches long by 2.8 inches thick. The pads are located azimuthally to provide the required degree of vessel protection. Specimen guides, in which material surveillance samples can be inserted and irradiated during reactor operation, are attached to the pads. The samples are held in the guide by a preloaded spring device at the top and bottom to prevent sample movement. Additional details of the neutron shield pads and irradiation specimen holders are given by DeSalvo and Swanson (1972).

Vertical downward loads from weight, fuel assembly preload, control rod dynamic loading, hydraulic loads, and earthquake acceleration are carried by the lower core plate partially into the lower core plate support flange on the core barrel shell and partially through the lower support columns to the core support, and thence through the core barrel shell to the core barrel flange supported by the vessel head flange. Transverse loads from earthquake acceleration, coolant cross flow, and vibration are carried by the core barrel shell and distributed between the lower radial support to the vessel wall, and to the vessel flange. Transverse loads of the fuel assemblies are transmitted to the core barrel shell by direct connection of the lower core plate to the barrel wall and by upper core plate alignment pins which are welded into the core barrel.

The main radial support system of the lower end of the core barrel is accomplished by "key" and “keyway” joints to the reactor vessel wall. At equally spaced points around the circumference, an Inconel clevis block is welded to the vessel inner diameter. Inconel inserts are bolted to these clevis blocks to provide “keyway” geometry. Opposite each of these is a "key" which is attached to the internals. At assembly, as the internals are lowered into the vessel, the keys engage the keyways in the axial direction. With this design, the internals are provided with a support at the furthest extremity, and may be viewed as a beam supported at the top and bottom.

Radial and axial expansions of the core barrel are accommodated, but transverse movement of the core barrel is restricted by this design. With this system, cyclic stresses in the core support structures are within the ASME Section III limits. In the event of an abnormal downward vertical displacement of the internals following a hypothetical failure, energy absorbing devices limit the displacement after contacting the vessel bottom head. The load is then transferred through the energy absorbing devices of the internals to the vessel.

The bottom of the energy absorbers is contoured similar to the reactor vessel bottom head inside geometry. Assuming a downward vertical displacement, the potential energy of the system is absorbed mostly by the strain energy of the energy absorbing devices.

Upper Core Support Assembly

The upper core support assembly, shown on Figures 3.9N-8 and 3.9N-9, consists of the top support plate assembly and the upper core plate between which are contained support columns and guide tube assemblies. The support columns establish the spacing between the top support plate assembly and the upper core plate and are fastened at top and bottom to these plates.

The support columns transmit the mechanical function of providing a passageway for the thermocouple. The guide tube assemblies sheath and guide the control rod drive shafts and control rods. They are fastened to the top support plate and are restrained by pins in the upper core plate for proper orientation and support. Additional guidance for the control rod drive shafts is provided by the upper guide tube which is attached to the upper support plate and guide tube.

The upper core support assembly is positioned in its proper orientation with respect to the lower support structure by flat-sided pins pressed into the core barrel, which in turn engage in slots in the upper core plate. At an elevation in the core barrel where the upper core plate is positioned, the flat-sided pins are located at angular positions of 90° from each other. Four slots are milled into the core plate at the same positions. As the upper support structure is lowered into the main internals, the slots in the plate engage the flat-sided pins in the axial direction. Lateral displacement of the plate and of the upper support assembly is restricted by this design. Fuel assembly locating pins protrude from the bottom of the upper core plate and engage the fuel assemblies as the upper assembly is lowered into place. Proper alignment of the lower core support structure, the upper core support assembly, the fuel assemblies, and control rods are thereby assured by this system of locating pins and guidance arrangement. The upper core support assembly is restrained from any axial movement by a large circumferential spring which rests between the upper barrel flange and the upper core support assembly, and is compressed by the reactor vessel head flange.

Vertical loads from weight, earthquake acceleration, hydraulic loads, and fuel assembly preload are transmitted through the upper core plate via the support columns to the top support plate assembly and then the reactor vessel head. Transverse loads from coolant cross flow, earthquake acceleration, and possible vibrations are distributed by the support columns to the top support plate and upper core plate. The top support plate is particularly stiff to minimize deflection.

Incore Instrumentation Support Structures

The incore instrumentation support structures consist of an upper system to convey and support thermocouples penetrating the vessel through the head, and a lower system to convey and support flux thimbles penetrating the vessel through the bottom. (Figure 7.7-8 shows the basic flux-mapping system.)

The upper system utilizes the reactor vessel head penetrations. Instrumentation port columns are slip-connected to inline columns that are in turn fastened to the upper support plate. These port columns protrude through the head penetrations. The thermocouples are carried through these port columns and the upper support plate at positions above their readout locations. The thermocouple conduits are supported from the columns of the upper core support system. The thermocouple conduits are sealed stainless steel tubes.

In addition to the upper incore instrumentation, there are reactor vessel bottom port columns which carry the retractable, cold worked stainless steel flux thimbles that are pushed upward into the reactor core. Conduits extend from the bottom of the reactor vessel down through the concrete shield area and up to a thimble seal line. The minimum bend radii are about 144 inches and the trailing ends of the thimbles (at seal line) are extracted approximately 15 feet during refueling of the reactor in order to avoid interference within the core. The thimbles are closed at the leading ends and serve as the pressure barrier between the reactor pressurized water and the containment atmosphere.

Mechanical seals between the retractable thimbles and conduits are provided at the seal line. During normal operation, the retractable thimbles are stationary and move only during refueling or for maintenance, at which time a space of approximately 15 feet above the seal line is cleared for the retraction operation.

The incore instrumentation support structure is designed for adequate support of instrumentation during reactor operation, and is rugged enough to resist damage or distortion under the conditions imposed by handling during the refueling sequence.

These are the only conditions which affect the incore instrumentation support structure. Reactor vessel surveillance specimen capsules are covered in Section 5.3.1.6. All the necessary details with regard

to irradiation surveillance, including a cross section of the reactor showing the capsule identity and location, are included in the FSAR.

3.9N.5.2 Design Loading Conditions

Normal and Upset

The normal and upset loading conditions that provide the basis for the design of the reactor internals are:

1. Fuel and reactor internals weight,
2. Fuel and core component spring forces including spring preloading forces,
3. Differential pressure and coolant flow forces,
4. Temperature gradients,
5. Vibratory loads including OBE seismic,
6. The normal and upset operational thermal transients listed in Table 3.9N-1,
7. Control rod trip (equivalent static load),
8. Loads due to loop(s) out-of-service, and
9. Loss of load pump overspeed.

Emergency

The emergency loading conditions that provide the basis for the design of the reactor internals are:

1. Small LOCA,
2. Small steam break, and
3. Complete loss of flow.

Faulted

The faulted conditions that provide the basis for the design of the reactor internals are:

1. Large LOCA, and
2. Safe shutdown earthquake.

The main objective of the design analysis is to satisfy allowable stress limits, to assure an adequate margin, and to establish

deformation limits which are concerned primarily with the functioning of the components. The stress limits are established not only to assure that peak stresses will not reach unacceptable values, but also limit the amplitude of the oscillatory stress component in consideration of fatigue characteristics of the materials. Both low and high cycle fatigue stresses are considered when the allowable amplitude of oscillation is established. Dynamic analysis on the reactor internals is provided in Section 3.9N.2.

As part of the evaluation of design loading conditions, extensive testing and inspection are performed from the initial selection of raw materials up to and including component installation and plant operation. Among these tests and inspections are those performed during component fabrication, plant construction, start-up and checkout, and during plant operation.

3.9N.5.3 Design Loading Categories

The combination of design loadings fit into the normal, upset, or faulted conditions as defined in the ASME Code, Section III.

Loads and deflections imposed on components due to shock and vibration are determined analytically and experimentally in both scaled models and operating reactors. The cyclic stresses due to these dynamic loads and deflections are combined with the stresses imposed by loads from component weight, hydraulic forces, and thermal gradients for the determination of the total stresses of the internals.

The reactor internals are designed to withstand stresses originating from various operating conditions as summarized in Table 3.9N-1.

The scope of the stress analysis problem is very large, requiring many different techniques and methods, both static and dynamic. The analysis performed depends on the mode of operation under consideration.

Allowable Deflections

For normal operating conditions, downward vertical deflection of the lower core support plate is negligible. For the LOCA plus the SSE conditions, the deflection criteria of critical internal structures are the limiting values given in Table 3.9N-11. The corresponding no loss of function limits are included in Table 3.9N-11 for comparison purposes with the allowed criteria.

The criteria for the core drop accident are based upon analyses which have to determine the total downward displacement of the internal structures following a hypothesized core drop resulting from the loss of the normal core barrel supports. The initial clearance between the secondary core support structures and the reactor vessel lower head in the hot condition is approximately

1/2 inch. An additional displacement of approximately 3/4 inch would occur due to strain of the energy absorbing devices of the secondary core support; thus, the total drop distance is about 1 1/4 inches which is insufficient to permit the tips of the RCCA to come out of the guide thimble in the fuel assemblies.

Specifically, the secondary core support is a device which will never be used except during a hypothetical accident of the core support (core barrel, barrel flange, etc). There are four supports in each reactor. This device limits the fall of the core and absorbs much of the energy of the fall which otherwise would be imparted to the vessel. The energy of the fall is calculated assuming a complete and instantaneous failure of the primary core support and is absorbed during the plastic deformation of the controlled volume of stainless steel, loaded in tension.

Design loading categories are further discussed in Section 3.9N.1.

3.9N.5.4 Design Bases

The design bases for the mechanical design of the reactor vessel internals components are as follows:

1. The reactor internals in conjunction with the fuel assemblies direct reactor coolant through the core to achieve acceptable flow distribution and to restrict bypass flow so that the heat transfer performance requirements are met for all modes of operation. In addition, required cooling for the pressure vessel head shall be provided so that the temperature differences between the vessel flange and head do not result in leakage from the flange during reactor operation.

2. In addition to neutron shielding provided by the reactor coolant, the reactor internals are designed to limit the exposure of the pressure vessel in order to maintain the required ductility of the material for all modes of operation.

3. Provisions shall be made for installing incore instrumentation useful for the plant operation, and providing the vessel material test specimens required for a pressure vessel irradiation surveillance program.

4. The core internals are designed to withstand mechanical loads arising from an OBE, SSE, end pipe ruptures and meet the requirements of Item 5.

5. The reactor shall have mechanical provisions which are sufficient to adequately support the core and internals and

to assure that the core is intact with acceptable heat transfer geometry following transients arising from abnormal operating conditions.

6. Following the DBA, BVPS-2 shall be capable of being shut down and cooled in an orderly fashion so that fuel cladding temperatures are kept within specified limits. This implies that the deformation of certain critical reactor internals must be kept sufficiently small to allow core cooling.

The functional limitations for the core structures during the design basis accident are shown in Table 3.9N-11. To ensure no column loading of rod cluster control guide tubes, the upper core plate deflection shall not exceed the value shown in Table 3.9N-11.

Details of the dynamic analyses, input forcing functions, and response loadings are presented in Section 3.9B.2.

The following identifies the basis for the design stress and deflection criteria:

Allowable Stresses

For normal operating conditions Section III of the ASME Boiler and Pressure Vessel Code is used as a basis for evaluating acceptability of calculating stresses. Both static and alternating stress intensities are considered. It should be noted that the allowable stresses in Section III of the ASME Code are based on unirradiated material properties. The strength of Type 304 stainless steel used for internals is not changed when exposed to an irradiation level of less than 1×10^{21} neutron per sq cm and increases when exposed to high levels; thus, it is considered that use of the allowable stresses in Section III is appropriate and conservative for irradiated internal structures.

The allowable stress limits during the DBA used for the core support structures are defined in the 1974 edition of the ASME Code for Core Support Structure, Subsection NG, and the Criteria for Faulted Conditions. Stress limits for reactor vessel internal structures are presented in Table 3.9N-12. The design and construction of the BVPS-2 core support structures conforms to the requirements of Subsection NG, except that the core support structures are not Code stamped and a plant specific stress report has not been written. This is because procurement of the BVPS-2 core support structures predated the inclusion of Subsection NG into the ASME Code.

3.9N.6 References for Section 3.9

American Institute of Steel Construction 1969. Specification for the Design, Fabrication and Erection of Structural Steel for Buildings.

Biggs, J. M. 1964. Introduction to Structural Dynamics. McGraw-Hill Book Company, New York, N.Y.

Bloyd, C.N. and Singleton, N.R. 1975. UHI Plant Internals Vibration Measurement Program and Pre- and Post- Hot Functional Examinations, WCAP-8516-P (Proprietary) and WCAP-8517.

Bloyd, C.N.; Ciarametario, W.; and Singleton, N.R. 1976. Verification of Neutron Pad and 17 x 17 Guide Tube Designs by Preoperational Tests on the Trojan 1 Power Plant, WCAP-8708.

Bohm, G.J. and LaFaille, J.P. 1971. Reactor Internals Response Under a Blowdown Accident. First International Conference on Structural Mechanics in Reactor Technology, Berlin.

DeSalvo, G.J. and Swanson, J.A. 1972. ANSYS User's Manual, Engineering Analysis Systems Report.

Takeuchi, K. et al 1976. Multiflex-A Fortran-IV Computer Program for Analyzing Thermal-Hydraulic-Structure System Dynamics, WCAP-8708 (Proprietary) and WCAP-8709.

Takeuchi, K. et al 1982. Multiflex 3.0-A Fortran IV Computer Program for Analyzing Thermal-Hydraulic-Structural System Dynamics (III) Advanced Beam Model, WCAP-9735 Rev. 1 (Proprietary) and WCAP-9736.

U.S. Nuclear Regulatory Commission (USNRC) 1986. Seismic and Dynamic Qualification of Safety-Related Electrical and Mechanical Equipment. NUREG/CR 3137.

Westinghouse 1973. Westinghouse PWR Internals Vibration Summary 3-Loop Internals Assurance, WCAP-7765-AR.

Westinghouse 1975. Prediction of the Flow-Induced Vibration of Reactor Internals by Scale Model Tests, WCAP-8303-P-A (Proprietary) and WCAP-8317-A.

Westinghouse 1977. Documentation of Selected Westinghouse Structural Analysis Computer Codes, WCAP-8252, Revision 1.

Tables for Section 3.9

TABLE 3.9B-1

SYSTEMS AND TYPES OF TEST CONDUCTED

System Designation	System Name	Preoperational Tests* Vibration	Thermal Expansion	Dynamic Effects
ASS	Auxiliary Steam	NR	V	NR
BDG	Steam Generator Blowdown	NR	V&I	V
BRS	Boron Recovery	NR	V	NR
CCP	Component Cooling	V	NR	NR
CHS	Chemical and Volume Control	V	V&I	V
CDS	Chilled Water	V	NR	NR
CND	Condensate Demineralizer	V	NR	NR
CNM	Condensate	V	V	NR
EDG EDA EDS EDF	Diesel Generator Auxiliary Systems	V	V	NR
ESS	Extraction Steam	V	V	V
FNC	Fuel Pool Cooling	V	NR	NR
FWE	Auxiliary Feedwater	V	NR	NR
FWS	Feedwater	V	V&I	V&I
GSS	Turbine Gland Steam Seal	NR	V	NR
HDH	Feedwater Heater High Pressure Drains	V	V	NR
HDL	Feedwater Heater Low Pressure Drains	V	V	NR
MSS	Main Steam	V	V&I	V&I
QSS	Quench Spray	V	NR	V
RCS	Reactor Coolant	V	V&I	V

TABLE 3.9B-1 (Cont)

System Designation	System Name	Preoperational Tests* Vibration	Thermal Expansion	Dynamic Effects
RCS(PSRV)	Pressurizer Safety and Relief Valve Piping	NR	V&I	V&I
RHS	Residual Heat Removal	V	V&I	NR
RSS	Recirculation Spray	V	NR	V
SDS	Steam Drains	NR	V	NR
SIS	Safety Injection	V	NR	NR
SWS	Service Water	V	NR	V

*Type of test is as follows: V = Visual
I = Instrumented
NR = Not Required

TABLE 3.9B-3

PIPING SNUBBERS MONITORED DURING PREOPERATIONAL TESTING

SNUBBER MARK NUMBER	PIPE LINE NUMBER	SNUBBER MARK NUMBER	PIPE LINE NUMBER	SNUBBER MARK NUMBER	PIPE LINE NUMBER
2BDG-PSSP007	2BDG-025-011-2	2CHS-PSSP-011	2CHS-002-098-1	2DGS-PSSP044B	2DGS-004-239-4
2BDG-PSSP055X	2BDG-025-010-2	2CHS-PSSP012	2CHS-002-098-1	2DGS-PSSP045A	2DGS-004-239-4
2BDG-PSSP325Y	2BDG-003-222-4	2CHS-PSSP014X	2CHS-002-098-1	2DGS-PSSP045B	2DGS-004-239-4
2BDG-PSSP326Y	2BDG-003-223-4	2CHS-PSSP015A	2CHS-002-098-1	2DGS-PSSP879	2DGS-002-001-1
2BDG-PSSP852	2BDG-002-070-2	2CHS-PSSP015X	2CHS-003-126-1	2EDG-PSSP027A	2EDG-022-001-3
2BDG-PSSP866	2BDG-002-066-2	2CHS-PSSP016	2CHS-002-096-1	2EDG-PSSP027B	2EDG-022-001-3
2BDG-PSSP867	2BDG-022-066-2	2CHS-PSSP016X	2CHS-002-142-1	2EDG-PSSP029A	2EDG-038-014-3
2BDG-PSSP868	2BDG-002-066-2	2CHS-PSSP017	2CHS-002-096-1	2EDG-PSSP029B	2EDG-038-014-3
2BDG-PSSP874	2BDG-002-066-2	2CHS-PSSP017X	2CHS-002-140-1	2EDG-PSSP030Y	2EDG-038-014-3
2BDG-PSSP876	2BDG-002-066-2	2CHS-PSSP024	2CHS-002-096-1	2EDG-PSSP031A	2EDG-022-002-3
2BDG-PSSP878	2BDG-002-066-2	2CHS-PSSP024X	2CHS-002-097-1	2EDG-PSSP031B	2EDG-022-002-3
2BDG-PSSP884	2BDG-002-066-2	2CHS-PSSP025	2CHS-002-096-1	2EDG-PSSP032A	2EDG-022-012-3
2BDG-PSSP887	2BDG-002-020-2	2CHS-PSSP025X	2CHS-002-097-1	2EDG-PSSP032B	2EDG-O22-012-3
2BDG-PSSP895	2BDG-002-068-2	2CHS-PSSP660X	2CHS-002-141-1	2EDG-PSSP033A	2EDG-022-013-3
2BDG-PSSP907	2BDG-002-068-2	2CHS-PSSP661X	2CHS-002-097-1	2EDG-PSSP033B	2EDG-022-013-3
2BDG-PSSP927	2BDG-003-261-2	2CHS-PSSP662X	2CHS-002-097-1	2EDG-PSSP033Y	2EDG-038-003-3
2BDG-PSSP945	2BDG-002-070-2	2CHS-PSSP663X	2CHS-002-097-1	2EDG-PSSP035A	2EDG-038-003-3
2BDG-PSSP947	2BDG-002-066-2	2CHS-PSSP664X	2CHS-003-120-2	2EDG-PSSP035B	2EDG-038-003-3
2BDG-PSSP951	2BDG-002-070-2	2CHS-PSSP667X	2CHS-002-098-1	2EDG-PSSP037A	2EDG-038-014-3
2BDG-PSSP953	2BDG-002-070-2	2CHS-PSSP668X	2CHS-002-098-1	2EDG-PSSP037B	2EDG-038-014-3
2BRS-PSSP091Y	2BRS-002-005-3	2CHS-PSSP669X	2CHS-002-096-1	2EDG-PSSP042B	2EDG-038-014-3
2CHS-PSSP001	2CHS-002-096-1	2CHS-PSSP673X	2CHS-002-001-1	2EDG-PSSP042B	2EDG-038-014-3
2CHS-PSSP002	2CHS-002-096-1	2CHS-PSSP684	2CHS-002-094-2	2FWS-PSSP001	2FWS-016-012-2
2CHS-PSSP003	2CHS-002-096-1	2CHS-PSSP685C	2CHS-002-002-2	2FWS-PSSP002A	2FWS-016-012-2
2CHS-PSSP005	2CHS-002-097-1	2CHS-PSSP783	2CHS-750-129-1	2FWS-PSSP002B	2FWS-016-012-2
2CHS-PSSP006	2CHS-003-126-1	2DGS-PSSP023	2DGS-002-001-1	2FWS-PSSP003A	2FWS-016-012-2
2CHS-PSSP007	2CHS-003-345-2	2DGS-PSSP037	2DGS-002-001-1	2FWS-PSSP003B	2FWS-016-012-2
2CHS-PSSP008	2CHS-003-345-2	2DGS-PSSP043A	2DGS-004-239-4	2FWS-PSSP005	2FWS-016-017-2
2CHS-PSSP009	2CHS-003-345-2	2DGS-PSSP043B	2DGS-004-239-4	2FWS-PSSP006	2FWS-016-022-2
2CHS-PSSP010	2CHS-002-098-1	2DGS-PSSP044A	2DGS-004-239-4	2FWS-PSSP007	2FWS-016-022-2

TABLE 3.9B-3 (CONTINUED)

SNUBBER MARK NUMBER	PIPE LINE NUMBER	SNUBBER MARK NUMBER	PIPE LINE NUMBER	SNUBBER MARK NUMBER	PIPE LINE NUMBER
2FWS-PSSP008	2FWS-016-022-2	2MSS-PSSP131B	2MSS-032-002-4	2RCS-PSSP009A	2RCS-006-156-4
2FWS-PSSP012	2FWS-016-022-2	2MSS-PSSP132A	2MSS-032-002-4	2RCS-PSSP009B	2RCS-006-156-4
2FWS-PSSP016	2FWS-016-022-2	2MSS-PSSP132B	2MSS-032-002-4	2RCS-PSSP010A	2RCS-006-106-4
2FWS-PSSP036	2FWS-016-016-4	2MSS-PSSP144	2MSS-032-003-4	2RCS-PSSP010B	2RCS-006-106-4
2FWS-PSSP039	2FWS-016-016-4	2MSS-PSSP149	2MSS-032-003-4	2RCS-PSSP011	2RCS-002-033-1
2FWS-PSSP060	2FWS-016-032-4	2MSS-PSSP151A	2MSS-032-003-4	2RCS-PSSP011X	2RCS-006-106-4
2MSS-PSSP001	2MSS-032-035-2	2MSS-PSSP151B	2MSS-032-003-4	2RCS-PSSP012	2RCS-002-053-1
2MSS-PSSP002A	2MSS-032-035-2	2MSS-PSSP164	2MSS-038-004-4	2RCS-PSSP012A	2RCS-006-106-4
2MSS-PSSP002B	2MSS-032-035-2	2MSS-PSSP165	2MSS-038-004-4	2RCS-PSSP012B	2RCS-006-106-4
2MSS-PSSP003A	2MSS-032-035-2	2MSS-PSSP168	2MSS-038-004-4	2RCS-PSSP013A	2RCS-002-056-1
2MSS-PSSP003B	2MSS-032-035-2	2MSS-PSSP363A	2MSS-028-067-4	2RCS-PSSP013B	2RCS-002-056-1
2MSS-PSSP005	2MSS-032-035-2	2MSS-PSSP363B	2MSS-028-007-4	2RCS-PSSP015X	2RCS-006-105-4
2MSS-PSSP006	2MSS-032-035-2	2MSS-PSSP364A	2MSS-028-007-4	2RCS-PSSP016	2RCS-002-013-1
2MSS-PSSP007	2MSS-032-039-2	2MSS-PSSP364B	2MSS-028-007-4	2RCS-PSSP016X	2RCS-006-105-4
2MSS-PSSP008A	2MSS-032-039-2	2MSS-PSSP456	2MSS-046-003-3	2RCS-PSSP017A	2RCS-002-016-1
2MSS-PSSP008B	2MSS-032-039-2	2MSS-PSSP476	2MSS-010-200-3	2RCS-PSSP017B	2RCS-002-016-1
2MSS-PSSP009	2MSS-032-043-2	2RCS-PSSP001A	2RCS-014-084-1	2RCS-PSSP017X	2RCS-006-105-4
2MSS-PSSP011A	2MSS-032-043-2	2RCS-PSSP001X	2RCS-004-081-1	2RCS-PSSP018X	2RCS-006-104-4
2MSS-PSSP011B	2MSS-032-043-2	2RCS-PSSP002	2RCS-014-084-1	2RCS-PSSP019	2RCS-003-015-1
2MSS-PSSP012	2MSS-032-043-2	2RCS-PSSP002A	2RCS-004-080-1	2RCS-PSSP-019X	2RCS-006-104-4
2MSS-PSSP103	2MSS-032-001-4	2RCS-PSSP003	2RCS-008-061-1	2RCS-PSSP020X	2RCS-006-104-4
2MSS-PSSP107	2MSS-032-001-4	2RCS-PSSP003X	2RCS-006-215-1	2RCS-PSSP021X	2RCS-006-104-4
2MSS-PSSP110	2MSS-032-001-4	2RCS-PSSP004	2RCS-008-021-1	2RCS-PSSP022	2RCS-002-025-1
2MSS-PSSP111A	2MSS-032-001-4	2RCS-PSSP004X	2RCS-006-215-1	2RCS-PSSP022X	2RCS-003-110-1
2MSS-PSSP111B	2MSS-032-001-4	2RCS-PSSP005	2RCS-008-021-1	2RCS-PSSP022Y	2RCS-003-110-1
2MSS-PSSP112A	2MSS-032-001-4	2RCS-PSSP006	2RCS-008-041-1	2RCS-PSSP023X	2RCS-003-110-1
2MSS-PSSP112B	2MSS-032-001-4	2RCS-PSSP006A	2RCS-006-107-1	2RCS-PSSP026	2RCS-002-045-1
2MSS-PSSP124	2MSS-032-002-4	2RCS-PSSP007	2RCS-008-041-1	2RCS-PSSP026A	2RCS-006-111-4
2MSS-PSSP130	2MSS-032-002-4	2RCS-PSSP007X	2RCS-006-107-1	2RCS-PSSP026B	2RCS-006-111-4
2MSS-PSSP131A	2MSS-032-002-4	2RCS-PSSP008X	2RCS-150-082-1	2RCS-PSSP027	2RCS-002-045-1

TABLE 3.9B-3 (CONTINUED)

SNUBBER MARK NUMBER	PIPE LINE NUMBER	SNUBBER MARK NUMBER	PIPE LINE NUMBER	SNUBBER MARK NUMBER	PIPE LINE NUMBER
2RCS-PSSP028	2RCS-002-025-1	2RCS-PSSP664X	2RCS-002-031-1	2RHS-PSSP008A	2RHS-010-016-2
2RCS-PSSP029	2RCS-002-025-1	2RCS-PSSP667X	2RCS-002-039-1	2RHS-PSSP008B	2RHS-010-016-2
2RCS-PSSP-029X	2RCS-006-111-4	2RCS-PSSP668X	2RCS-002-039-1	2RHS-PSSP009	2RHS-010-016-2
2RCS-PSSP030	2RCS-002-045-1	2RCS-PSSP669X	2RCS-002-051-1	2RHS-PSSP010A	2RHS-010-006-2
2RCS-PSSP030X	2RCS-003-108-1	2RCS-PSSP673X	2RCS-002-059-1	2RHS-PSSP010B	2RHS-012-006-2
2RCS-PSSP031	2RCS-002-045-1	2RCS-PSSP674X	2RCS-002-059-1	2RHS-PSSP011A	2RHS-012-018-2
2RCS-PSSP031X	2RCS-003-108-1	2RCS-PSSP882	2RCS-012-112-4	2RHS-PSSP011B	2RHS-012-018-2
2RCS-PSSP034	2RCS-002-065-1	2RCS-PSSP883A	2RCS-012-112-4	2RHS-PSSP012X	2RHS-006-015-4
2RCS-PSSP035	2RCS-002-065-1	2RCS-PSSP883B	2RCS-012-112-4	2RHS-PSSP013X	2RHS-006-027-4
2RCS-PSSP035X	2RCS-012-112-4	2RCS-PSSP884A	2RCS-012-112-4	2RHS-PSSP014A	2RHS-010-005-2
2RCS-PSSP036	2RCS-002-067-1	2RCS-PSSP884B	2RCS-012-112-4	2RHS-PSSP014B	2RHS-010-005-2
2RCS-PSSP037A	2RCS-150-082-1	2RCS-PSSP885	2RCS-012-112-4	2RHS-PSSP-015A	2RHS-010-004-2
2RCS-PSSP037B	2RCS-150-082-1	2RCS-PSSP887A	2RCS-006-106-4	2RHS-PSSP015B	2RHS-010-004-2
2RCS-PSSP038	2RCS-150-082-1	2RCS-PSSP887B	2RCS-006-106-4	2RHS-PSSP501X	2RHS-010-010-2
2RCS-PSSP038X	2RCS-002-065-1	2RCS-PSSP890	2RCS-006-111-4	2RHS-PSSP515X	2RHS-012-006-2
2RCS-PSSP039A	2RCS-004-173-1	2RCS-PSSP891A	2RCS-006-111-4	2RHS-PSSP518X	2RHS-012-056-1
2RCS-PSSP039B	2RCS-004-173-1	2RCS-PSSP891B	2RCS-006-111-4	2RHS-PSSP520X	2RHS-012-001-1
2RCS-PSSP118A	2RCS-150-082-1	2RCS-PSSP893	2RCS-006-011-4	2RHS-PSSP521X	2RHS-012-001-1
2RCS-PSSP118B	2RCS-150-082-1	2RCS-PSSP894	2RCS-006-242-4	2RHS-PSSP522X	2RHS-012-001-1
2RCS-PSSP653	2RCS-002-045-1	2RCS-PSSP896	2RCS-006-242-4	2RHS-PSSP524X	2RHS-012-018-2
2RCS-PSSP655X	2RCS-003-055-1	2RCS-PSSP897	2RCS-006-156-4	2RHS-PSSP525X	2RHS-012-018-2
2RCS-PSSP656X	2RCS-003-055-1	2RCS-PSSP898	2RCS-003-109-1	2RHS-PSSP526X	2RHS-012-018-2
2RCS-PSSP657X	2RCS-003-015-1	2RCS-PSSP906	2RCS-006-113-4	2RHS-PSSP527X	2RHS-012-018-2
2RCS-PSSP658A	2RCS-002-036-1	2RCS-PSSP910	2RCS-760-260-2	2RHS-PSSP531A	2RHS-010-010-2
2RCS-PSSP658B	2RCS-002-036-1	2RHS-PSSP001	2RHS-010-005-2	2RHS-PSSP531B	2RHS-010-010-2
2RCS-PSSP659	2RCS-003-035-1	2RHS-PSSP002	2RHS-010-005-2	2RHS-PSSP818	2RHS-006-015-4
2RCS-PSSP660X	2RCS-003-035-1	2RHS-PSSP003	2RHS-010-010-2	2RHS-PSSP821	2RHS-006-015-4
2RCS-PSSP661A	2RCS-002-019-1	2RHS-PSSP003X	2RHS-010-016-2	2SIS-PRR815	2SIS-012-288-1
2RCS-PSSP661B	2RCS-002-019-1	2RHS-PSSP005	2RHS-006-015-4	2SIS-PRR817	2SIS-012-071-1
2RCS-PSSP663X	2RCS-002-011-1	2RHS-PSSP007	2RHS-010-004-2	2SIS-PRR824	2SIS-012-069-1

TABLE 3.9B-3 (CONTINUED)

SNUBBER MARK NUMBER	PIPE LINE NUMBER	SNUBBER MARK NUMBER	PIPE LINE NUMBER
2SIS-PRR826	2SIS-012-069-1	2SVS-PSSP016B	2SVS-010-173-2
2SIS-PSSP002	2SIS-012-067-1	2SVS-PSSP020A	2SVS-004-040-2
2SIS-PSSP003	2SIS-012-067-1	2SVS-PSSP020B	2SVS-004-040-2
2SIS-PSSP004	2SIS-012-071-1	2SVS-PSSP024A	2SVS-010-175-2
2SIS-PSSP005	2SIS-012-071-1	2SVS-PSSP024B	2SVS-010-175-2
2SIS-PSSP006	2SIS-012-071-1	2SVS-PSSP028A	2SVS-004-044-2
2SIS-PSSP007	2SIS-012-069-1	2SVS-PSSP028B	2SVS-004-044-2
2SIS-PSSP018X	2SIS-012-069-1	2SVS-PSSP084Y	2SVS-004-042-2
2SIS-PSSP201A	2SIS-006-269-1	2SVS-PSSP652A	2SVS-010-178-1
2SIS-PSSP201B	2SIS-006-269-1	2SVS-PSSP652B	2SVS-010-178-2
2SIS-PSSP202X	2SIS-006-269-1	2SVS-PSSP656A	2SVS-008-012-2
2SIS-PSSP203X	2SIS-006-269-1	2SVS-PSSP656B	2SVS-008-012-2
2SIS-PSSP204	2SIS-006-268-1	2SVS-PSSP658A	2SVS-008-012-2
2SIS-PSSP205	2SIS-006-266-1	2SVS-PSSP658B	2SVS-008-012-2
2SIS-PSSP206	2SIS-006-266-1	2SVS-PSSP659	2SVS-008-012-2
2SIS-PSSP207	2SIS-006-268-1	2SVS-PSSP663A	2SVS-006-015-2
2SIS-PSSP208X	2SIS-006-270-1	2SVS-PSSP665	2SVS-008-012-2
2SIS-PSSP209A	2SIS-006-271-1		
2SIS-PSSP209B	2SIS-006-271-1		
2SIS-PSSP210	2SIS-006-271-1		
2SIS-PSSP211	2SIS-006-267-1		
2SIS-PSSP212	2SIS-006-267-1		
2SIS-PSSP213	2SIS-006-270-1		
2SIS-PSSP609	2SIS-012-289-1		
2SIS-PSSP609	2SIS-012-289-1		
2SIS-PSSP609	2SIS-012-289-1		
2SIS-PSSP610	2SIS-012-067-1		
2SVS-PSSP007A	2SVS-010-171-2		
2SVS-PSSP007B	2SVS-010-171-2		
2SVS-PSSP012A	2SVS-004-036-2		
2SVS-PSSP012B	2SVS-004-036-2		
2SVS-PSSP016A	2SVS-020-173-2		

TABLE 3.9B-5

LOAD COMBINATIONS FOR ASME III CLASS 1 PIPING [3,5]

Plant Design or Operating Condition	NB 3600 Equations	Load (Moment Combination) [1,4]	Design or Service Stress Limits [2]
Design	9	$P_d + D + E + H$	1.5 Sm [5]
Normal/Upset	10	$P_{max} + T + R + H + E + A + L + R''$	3.0 Sm
	11	$P_{max} + T + R + H + E + A + L + R''$	---
	12	$T + R + R''$	3.0 Sm
	13	$P_{max} + D + E + H + L$	3.0 Sm
	14	$P_{max} + T + R + H + E + A + L + R''$	$\Sigma \mu \leq 1.0$
Emergency	9	$P_E + D + H$	2.25 Sm
Faulted	9	$P_F + D + H + E' + Y'$	3.0 Sm
Test	--	P_h	0.9 S_y
	--	$P_h + D$	1.35 S_y

NOTES:

1. For definitions of each load, refer to Table 3.9B-11.
2. Sm is the design stress intensity, S_y is the tabulated yield strength, and μ is the usage factor as defined in the ASME III code or applicable code cases.
3. Code Class 1 piping 1 inch NPS and less is analyzed in accordance with Tables 3.9B-8 and 3.9B-9.
4. The methods used for various load combinations are described in Table 3.9B-17.
5. For piping analyzed in accordance with ASME Section III 1989 Edition, design or service stress limits is 1.8 Sm for Service Level "B" (upset condition)

TABLE 3.9B-6

COMPARISON OF ASME III [2] CLASS 1 PIPING REQUIREMENTS
REGULATORY GUIDE 1.48 VS TABLE 3.9B-5

Component(1)	Normal or Upset(3) + OBE	Emergency	Normal + Faulted + SSE	Regulatory Position	Comparison With Regulatory Position
Pipe	NB-3654	NB-3655	NB-3656	C.1	Agree

NOTES: (from Regulatory Guide 1.48, Pages 1.48-7 and -8)

1. Applies to all components that are relied upon to cope with the effects of specified BVPS-2 conditions.

2. Section III of the American Society of Mechanical Engineers Boiler and Pressure Vessel Code including 1972 Winter Addenda thereto.

3. Identification of the specific transients or events to be considered under each plant condition will be addressed in a future regulatory guide.

TABLE 3.9B-7

STRESS LIMITS FOR ASME SECTION III CLASS 2 AND 3 COMPONENTS (ELASTIC ANALYSIS)

Component and Design Condition	ASME III Code Class		Primary Stress Limits (1) Membrane (Pm)	Membrane Plus Bending (P + P)
Pressure Vessels				
I	2(NC3300)	or	1.1 S	1.65 S
II	3(ND3300)		2.0 S	2.40 S
I(2)	2(NC3200)		1.1 S	1.65 S
II(3)			2.0 S	2.40 S
Pumps(4,5), Inactive				
I	2(NC3400)	or	1.1 S	1.65 S
II	3(ND3400)		2.0 S	2.40 S
Pumps(4,5), Active				
I	2(NC3400)	or	1.0 S	1.50 S
II	3(ND3400)		1.2 S	1.80 S
Valves(5,6)				
I	2(NC3500)	or	1.1 S	1.65 S
II	3(ND3500)		2.0 S	2.40 S
Tanks(5), (Steel)				
I	2(NC38-3900)	or	1.1 S	1.65 S
II	3(ND38-3900)		2.0 S	2.40 S

NOTES:

1. S - Allowable stress values at design temperature from ASME Section III, Appendix I, as allowed by class.

   S - Design stress intensity values at design temperature from ASME Section III, Appendix I, as allowed by class.

2. Fatigue analysis may be required with operating conditions, reference paragraph NC-3219 and Appendix XIV of ASME Section III, Subsection NC.

TABLE 3.9B-7 (Cont)

NOTES: (Cont)

3. When a complete analysis is performed in accordance with NC 3211.1(c), the faulted stress limits of Appendix F shall apply.

4. In accordance with NC-3400 and ND-3400, any design method which has been demonstrated to be satisfactory for the specified design conditions may be used.

5. Stress limits of ASME Section III, Subsection NF, are used for the design of supports as applicable.

6. The standard or alternative design rules of NC-3500 and ND-3500 may be used in conjunction with the stress limits specified.

   Valve nozzle (piping load) stress analysis is not required when both the following conditions are satisfied by calculation:

   a. Section modulus and area at the plane normal to the flow passage through the region at the valve body crotch is at least 110 percent of that for the piping connected (or joined) to the valve body inlet and outlet nozzles; and,

   b. Code allowable stress, S, for valve body material, is equal to or greater than the code allowable stress, S, of connected piping material. If the valve body material allowable stress is less than that of the connected piping, the valve section modulus and area, as calculated in (a) previously, shall be multiplied by the ratio of the allowable stress for the pipe divided by the allowable stress of the valve.

   If unable to comply with these requirements, the design by analysis procedure of NB-3545.2 is an acceptable alternative method.

   Casting quality factor of 1.0 shall be used.

   Design requirements listed in this table are not applicable to valve discs, stems, cast rings, or other parts of valves which are contained within the confines of the body and bonnet.

TABLE 3.9B-8

LOAD COMBINATIONS FOR ASME III CLASS 2 AND 3 PIPING
EXCEPT QUENCH SPRAY, RECIRCULATION SPRAY, AND SAFETY INJECTION SYSTEMS[2,4,7]

Plant Design or Operating Condition	NC 3600 Equations	Load (Moment Combination)[1]	Design or Service Stress Limits[5]
Design	8	$P_d + D$	S_h
Normal/Upset	9	$P_{max} + D + E + H$	$1.2\ S_h$[7]
	9	$P_{max} + D + W$	$1.2\ S_h$
	10[3]	$T + R + A + R''$	S_A
	10	S	$3\ S_c$
	11[3]	$P_d + D + T + R + A + R''$	$S_h + S_A$
Emergency	9	$P_E + D + H$	$1.8\ S_h$[7]
Faulted	9	$P_F + D + E' + H + Y'$	$2.4\ S_h$[7]
Test	8	$P_{h\ +\ D}$	$1.2\ S_h$[6]
	--	P_h	$0.9\ S_y$

NOTES:

1. For definitions of each load, refer to Table 3.9B-11.
2. Table 3.9B-9 illustrates loading combinations for QSS, RSS and SIS.
3. Loads due to OBE anchor movements (A) are shown in Equation 10 and 11 above, but may alternately be considered in Equation 9 only.
4. The methods used for various load combinations are described in Table 3.9B-17.
5. S_h, S_c, S_A, and S_y are allowable stress limits as defined in the ASME III Code or applicable code cases.
6. An allowable of 1.35 S_y may be used provided the appropriate ASME III Class 1 stress indices are used.
7. For piping analyzed in accordance with ASME Section III 1989 Edition, design or service stress limits for NC 3600 equations 9 normal/upset condition is 1.8 S_h, emergency condition is 2.25 S_h and faulted condition is 3.0 S_h.

TABLE 3.9B-9

LOAD COMBINATIONS FOR ASME III CLASS 2 AND 3 PIPING ON QUENCH SPRAY, RECIRCULATION SPRAY AND SAFETY INJECTION SYSTEMS (1,4)

Plant Design or Operating Condition	NC 3600 Equations	Load (Moment Combination) (2)	Design or Service Stress Limits (6)
Design	8	$P_d + D$	S_h
Normal/Upset	9 (5)	$P_{max} + D + E + H$	$1.2\ S_h$
	10 (3)	$T + R + A + R''$	S_A
	10	S	$3\ S_c$
	11 (3)	$P_d + D + T + R + A + R''$	$S_h + S_A$
Emergency	9	$P_e + D + H$	$1.8\ S_h$
Faulted	9	$P_f + D + E' + H + Y'$	$1.8\ S_h$
	10 (3)	$T + R' + A' + X$	S_A
	11 (3)	$P_f + D + T + R' + A' + X$	$S_h + S_A$
Test	8	$P_{h\ +\ D}$	$1.2\ S_h$ (7)
	--	P_h	$0.9\ S_y$

NOTES:

1. Class 1 portions of the safety injection system are analyzed in accordance with Table 3.9B-5.
2. For definitions of each load, refer to Table 3.9B-11.
3. Loads due to seismic anchor movements (A,A') are shown in Equations 10 and 11, but may alternately be considered in Equation 9 only.
4. The methods used for various load combinations are described in Table 3.9B-17.
5. Earthquake loads need not be considered concurrently with flow transient loads resulting from RSS system testing during plant shutdown and refueling. Since there are only 5 OBES postulated over the life of the plant and the RSS startup flow transient loads last less than 10 minutes per year, the probability of these events occurring simultaneously is extremely low.
6. S_h, S_c, S_A, and S_y are allowable stress limits as defined in the ASME III code or applicable code cases.
7. An allowable of 1.35 S_y may be used provided the appropriate ASME III Class 1 stress indices are used.

TABLE 3.9B-10

COMPARISON OF CLASS 2 AND 3 REQUIREMENTS - REGULATORY GUIDE 1.48
VS. TABLES 3.9B-7, 3.9B-8, AND 3.9B-9

Components	Regulatory Guide 1.48 Loading Combinations	Regulatory Guide 1.48 Design Limits			Reg. Position	Tables 3.9B-7, 3.9B-8, and 3.9B-9 Loading Combinations	Tables 3.9B-7, 3.9B-8, and 3.9B-9 Design Limits			Comparison
Pressure Vessels [9]		P_m	P_m (or P_L) + P_b				P_m	P_m (or P_L) + P_b		Acceptable alternate,
Classes 2 and 3	Normal	1.1 S	1.65 S		C.6.a	Design + OBE	1.1 S	1.65S		Code Case 1607,
ASME Section	Upset + OBE	1.1 S	1.65 S		C.6.a					Regulatory Guide 1.84
III NC/ND-3300	Emergency	1.1 S	1.65 S		C.6.a	Design + SSE	2.0 S	2.40S		
	Faulted + SSE	1.5 S	2.25 S		C.6.b					
Pressure Vessels		P_m	P_m (or P_L) + P_b	Q			P_m	P_m (or P_L) + P_b	Q	Reflects proposed Code
Class 2	Normal			NB-3223	C.7.a	Normal)		As applicable		revision
ASME Section	Upset + OBE			NB-3223	C.7.a	Upset)		See Add-100 (b)		
III NC-3200	Emergency		NB 3224		C.7.b	Emergency)				
	Faulted + SSE		NB 3225		C.7.b	Faulted)				
Part AD						Design + OBE	1.1 Sm	1.65 Sm		
						Design + SSE	2.0 Sm	2.40 Sm		
Piping [10]	Normal)					Normal)				Acceptable alternate,
Classes 2 and 3	Upset + OBE)	NC-3611.1(b)(4)(b)(1)		$1.2S_h$	C.8.a	Upset + OBE)	NC-3611.1(b)(4) (b)(1)		$1.2S_h$	Code Case 1606, Regulatory Guide 1.84
	Emergency)					Emergency)	NC-3611.1(b)(4) (b)(2)		$1.8S_h$	
	Faulted + SSE	NC-3611.1(b)(4)(b)(2)		$1.8S_h$	C.8.b	Faulted + SSE			$2.4S_h$	
Pumps		P_m	P_m (or P_L) + P_b				P_m	P_m (or P_L) + P_b		Acceptable alternate,
Classes 2 and 3	Normal	1.1 S	1.65 S			Design + OBE	1.1 S	1.65 S		Code Case 1636,
Inactive	Upset + OBE	1.1 S	1.65 S		C.9.a					Regulatory Guide 1.84
	Emergency	1.1 S	1.65 S			Design + SSE	2.0 S	2.40 S		
	Faulted + SSE	1.2 S	1.8 S		C.9.b					
Active[11]		P_m	P_m (or P_L) + P_b				P_m	P_m (or P_L) + P_b		Acceptable alternate program
	Normal)									
	Upset + OBE)	S	1.5S		C.10.a	Design + OBE	1.0 S	1.5 S		
	Emergency)									
	Faulted + SSE					Design + SSE	1.2 S	1.8 S		

TABLE 3.9B-10 (Cont)

Components	Regulatory Guide 1.48 Loading Combinations	Regulatory Guide 1.48 Design Limits	Reg. Position	Tables 3.9B-7, 3.9B-8, and 3.9B-9 Loading Combinations	Tables 3.9B-7, 3.9B-8, and 3.9B-9 Design Limits		Comparison
					P_m	P_m (or P_L) + P_b	
Valves Classes 2 and 3 Inactive	Normal) Upset + OBE)	1.1 Pr	C.11.a	Design + OBE	1.1 S	1.65 S	Acceptable alternate, Code Case 1635, Regulatory Guide 1.84
	Emergency) Faulted + SSE	1.2 Pr	C.11.b	Design + SSE	2.0 S including	2.4 S ≤ Pr	
Active	All Conditions	1.0 Pr	C.12.a		Same as for Inactive		Acceptable alternate

NOTES ( ) Indicates note number from Regulatory Guide 1.48 as reprinted below.

(9) Division 1 of Section VIII of ASME Boiler and Pressure Vessel Code does not provide rules for design analysis. If detailed analysis is performed, Division 1 vessels should meet, as a minimum, equations a and b below, which are applicable to Regulatory Positions 6.a and 6.b, respectively.

a. $m\sigma < 1.1\ s > \frac{\sigma m + \sigma b}{1.5}$

b. $m\sigma < 1.5\ S > \frac{\sigma m + \sigma b}{1.5}$

where:

m = primary membrane stress
b = primary bending stress
S = allowable stress value as specified in Appendix I Section III of ASME Boiler and Pressure Vessel Code

(10) For loadings designated in Regulatory Position 8.a(2). Only equation 9 of NC-3651 need be met.

(11) In addition to compliance with the design limits specified, assurance of operability under all design loading combinations should be provided by any appropriate combination of the following suggested measures:

a. In situ testing (for example, preoperational testing after the component is installed in the plant).
b. Full-scale prototype testing.
c. Reduced-scale prototype testing.
d. Detailed stress and deformation analyses (includes experimental stress and deformation analyses).

In the performance of tests or analyses to demonstrate operability, the structural interaction of the entire assembly (for example, valve-operator and pump-motor assembly) should be considered. If superposition of test results for other than the combined loading condition is proposed, the applicability of such a procedure should be demonstrated. The design limits for nonactive pumps and valves may be used for the applicable loading combinations if appropriate analyses and/or testing confirms that operability is not impaired when designed to these limits.

TABLE 3.9B-11

DEFINITIONS OF LOADINGS APPLICABLE TO PIPING SYSTEMS

D - Sustained mechanical loads, including deadweight of piping, components, contents, and insulation (includes snow loads when applicable.

P_d - Design pressure

P_{max} - Maximum internal pressure occuring in the normal and upset plant operating conditions. For Class 1 piping only, P_{max} shall designate the "Range of Operating Pressures" for normal, upset, and test conditions.

P_E - The greater of P_{max} or internal pressure occuring during the emergency plant operating conditions ($P_E \leq 1.5\ P_d$)

P_F - The greater of P_{max} or internal pressure occuring during the faulted plant operating condition ($P_F \leq 2.0\ P_d$)

P_h - Hydrostatic pressure during hydrotest including an additional 75 psi to account for potential static head pressures plus an assumed 6 percent maximum overpressure. (Where P_h is evaluated with other sustained loads, the longitudinal pressure stress shall be used. Where P_h is evaluated alone, the circumferential pressure stress shall be used.)

T - Loads due to thermal expansion of the system in response to average fluid temperature.

R - Loads induced in the piping due to the thermal growth of equipment and/or structures to which the piping is connected as a result of the BVPS-2 normal and upset plant conditions.

R′ - Loads induced in the piping due to thermal growth of equipment and/or structures to which the piping is connected as a result of BVPS-2 faulted plant conditions.

R" - Loads induced in the piping due to pressure response of the containment during a plant test condition, including any thermal expansion effects occurring during the test condition.

E - Inertia effects of the OBE.

E′ - Inertia effects of the SSE.

TABLE 3.9B-11 (Continued)

A - Loads induced in the piping due to response of the connected equipment and/or civil structures to the OBE (commonly referred to as OBE anchor movements), including ground motion and building rocking motion between independent structures (orbital motion).

A′ - Loads induced in the piping due to response of the connected equipment and/or civil structures to the SSE (commonly referred to as SSE anchor movements), including ground motion and building rocking motion between independent structures (orbital motion).

S - Loads induced due to building settlement effects.

H - Loads resulting from occasional loads other than seismic. Examples of these loads would be: water hammer, steam hammer, opening and closing of safety relief valves, etc.

L - Local stress effects in piping and/or piping components due to sudden changes in fluid temperature. These loads are commonly referred to as thermal transient effects.

X - Loads induced in the piping due to pressure/temperature response (growth) of the containment during a BVPS-2 faulted plant condition.

Y′ - Effects of pipe striking pipe (pipe whip) or effects of blowdown of an adjacent system (jet impingement loads), as defined for the BVPS 2 faulted plant condition.

W - Wind loads.

TABLE 3.9B-14

LOAD COMBINATIONS FOR PIPE SUPPORTS EXCEPT QSS, RSS, AND SIS[3,4,5]

Plant Operating Condition	Load Combinations[1,6]	Allowable Tensile Stress[2,7]
Normal/Upset	D + T + R + R″ + S[8]	0.6 S_y
	D + E + H + T + R + A + W + S[9]	0.8 S_y
Emergency	D + H	0.8 S_y
Faulted	D + E′ + H + Y′	0.8 S_y

NOTES:

1. For definition of terms, see Table 3.9B-11.

2. Buckling criterion for pipe supports is in accordance with the AISC Specification.

3. Generally, an enveloped design load is used, thus producing a conservative load combination. The above load combination and limits may be used when specific loading methods are needed.

4. Refer to Table 39B-15 for allowable tensile stress values for QSS, RSS, and SIS systems.

5. QSS, RSS, and SIS systems correspond to:

   QSS - Quench spray system
   RSS - Recirculation spray system
   SIS - Safety injection system

6. For instrumentation tubing that is normally dead-ended (i.e., no flow) the thermal loads are determined using a temperature gradient based on the maximum temperature of the source line.

7. The above allowables are the basic tensile stress allowables and include a 1/3 increase for dynamic type loads. All other requirements of the AISC Specification related to member stresses are satisfied.

8. During containment pressure test, only system thermal conditions that occur during the test are considered.

9. Wind loads (W) are not considered acting concurrently with OBE inertia effects (E) and OBE anchor movements (A).

TABLE 3.9B-15

LOAD COMBINATIONS FOR PIPE SUPPORTS FOR QSS, RSS, AND SIS[3,4]

Plant Operating Condition	Load Combinations [1,5]	Allowable Tensile Stress [2,6]
Normal/Upset	D + T + R + R″ + S[7]	0.6 S_y
	D + E + H + T + R + A + W + S [8,9]	0.8 S_y
Emergency	D + H	0.8 S_y
Faulted	D + E′ + H + Y′ + T + R′ + A′ + X	0.95 S_y[10]

NOTES:

1. For definition of terms, see Table 3.9B-11.

2. Buckling criterion for pipe supports is in accordance with the AISC Specification.

3. Generally, an enveloped design load is used, thus producing a conservative load combination. The above load combination and limits may be used when specific loading methods are needed.

4. QSS, RSS, and SIS Systems correspond to:

   QSS - Quench Spray System
   RSS - Recirculation Spray System
   SIS - Safety Injection System

5. For instrumentation tubing that is normally dead-ended (i.e., no flow) the thermal loads are determined using a temperature gradient based on the maximum temperature of the source line.

6. The above allowables are the basic tensile stress allowables and include a 1/3 increase for dynamic type loads. All other requirements of the AISC Specification related to member stresses are satisfied.

7. During containment pressure test, only system thermal conditions that occur during the test are considered.

8. Wind loads (W) are not considered acting concurrently with OBE inertia effects (E) and OBE anchor movements (A).

9. For the RSS system, earthquake loads need not be considered concurrently with the flow transients loads resulting from RSS systems testing during plant shutdown and refueling.

TABLE 3.9B-15 (Cont)

10. The higher allowable shown for the faulted condition ($.95S_y$) is used because of the inclusion of secondary type loads.

TABLE 3.9B-16

LOADS, LOAD COMBINATIONS, AND STRESS LIMITS FOR
S&W DESIGNED ASME III, CLASS 2 AND 3 EQUIPMENT SUPPORTS

Plant Design or Operating Condition	Loads and Loading Combinations	Stress Limits	Reference Source
Normal	Deadweight of Component and Supports Temperature Pressure Mechanical (Piping) Loads***	Structural Members Tension and Bending (F_t) = $0.6S_y$ Shear (F_y) = $0.4S_y$ Bolts (Either above or:) Tension (F_t) = S /2 Shear (F_v) = $0.62S_u/3$ Welds	ASME III Subsection NF Subart: NF-3100 NF-3230 Article XVII-2000 Table NF-3292.1-1 (Above used as a guide)
Upset	Normal and OBE	Same as normal	Same as normal
Emergency	Not applicable*	--	--
Faulted	Normal and SSE****	Structural Members Lesser of: 1.2 (S_y/F_t) or .7 (S_u/F_t)** Bolts 0.7 $S_u/F_t < S_y$	ASME III Subsection NF Subart: NF-3230 Appendix F Subart: F-1370 (Above used as a guide)

NOTES:

* As stated in Section 3.9B.1-1.

** Limits used only when faulted stresses exceed normal/upset allowables (conservative). Not to exceed S_y.
S_y is specified minimum material yield strengh at temperature.
S_u is specified minimum material ultimate strength at temperature.
For bolting materials 0.7 S_u is less than S_y.

*** Includes thermal expansion and another point motion loads.

**** Pipe rupture loads (pipe whip or jet impingement) which might affect component supports are evaluated or avoided by barriers or restraints.

TABLE 3.9B-17
METHODS OF LOAD COMBINATIONS

1. The "Range of Moments" concept is used for the following loads: thermal expansion loads (T), thermal anchor displacement loads (R, R'), loads due to containment temperature and/or pressure response (R", X), and loads due to thermal transient effects (L).

2. Seismic anchor displacement loads (A, A') and sustained mechanical loads such as deadweight (D) are combined with other occasional loads by absolute summation.

3. Occasional loads (H) are combined with seismic loads (E, E') by the SRSS method. Where multiple occasional loads (H) exist concurrently, they are combined with each other by the SRSS method, except as described in Item 6 below.

4. Pipe whip and jet impingement loads (Y') are combined with other dynamic loads by the SRSS method.

5. (Deleted)

6. Steady state blowdown loads (H) resulting from system operation or tests (e.g., steady-state safety valve discharge) are combined with other occasional loads (H) by absolute summation, by SRSS, or may be considered separately, depending on the time phasing between these events.

7. Wind loads (W) are combined with other applicable loads by absolute summation.

TABLE 3.9B-18
ACTIVE PUMPS (BOP)[1]

Mark No.	Type	Class	Function	Normal Mode	Post-LOCA Mode
2CCP*P21A	Centrifugal	3	Component Cooling Water	On	Off/On
2CCP*P21B	Centrifugal	3	Component Cooling Water	On	Off/On
2CCP*P21C	Centrifugal	3	Component Cooling Water	On	Off/On
2EGF*P21A	Vertical	3	Emergency Diesel Generator Fuel Oil	Off	On/Off
2EGF*P21B	Vertical	3	Emergency Diesel Generator Fuel Oil	Off	On/Off
2EGF*P21C	Vertical	3	Emergency Diesel Generator Fuel Oil	Off	On/Off
2EGF*P21D	Vertical	3	Emergency Diesel Generator Fuel Oil	Off	On/Off
2FNC*P21A	Centrifugal	3	Circulate Fuel Pool Borated Water	On	Off/On
2FNC*P21B	Centrifugal	3	Circulate Fuel Pool Borated Water	On	Off/On
2FWE*P22	Centrifugal	3	Aux. Feedwater to Steam Gen.	Off	On
2FWE*P23A	Centrifugal	3	Aux. Feedwater to Steam Gen.	Off	On
2FWE*P23B	Centrifugal	3	Aux. Feedwater to Steam Gen.	Off	On
2QSS*P21A	Centrifugal	2	Quench Spray to Containment	Off	On
2QSS*P21B	Centrifugal	2	Quench Spray to Containment	Off	On

TABLE 3.9B-18 (Cont)

Mark No.	Type	Class	Function	Normal Mode	Post-LOCA Mode
2RSS*P21A	Deep Draft Vert.	2	Containment Water Recirculation	Off	On
2RSS*P21B	Deep Draft Vert.	2	Containment Water Recirculation	Off	On
2RSS*P21C	Deep Draft Vert.	2	Containment Water Recirculation	Off	On
2RSS*P21D	Deep Draft Vert.	2	Containment Water Recirculation	Off	On
2SWS*P21A	Deep Draft Vert.	3	Service Water to Components	On	On
2SWS*P21B	Deep Draft Vert.	3	Service Water to Components	On	On
2SWS*P21C	Deep Draft Vert.	3	Service Water to Components	On	On
2SWS*P25A	Centrifugal	3	Control Room Refrigerator Condenser Recirculation	On	On/Off
2SWS*P25B	Centrifugal	3	Control Room Refrigerator Condenser Recirculation	On	On/Off

NOTE: 1) This pump listing is for design applicability of "Active" components. For test requirements of those pumps contained in the BVPS-2 IST Program, see the BVPS-2 Inservice Testing Program for Pumps and Valves (ASME OM Code).

TABLE 3.9B-19

ACTIVE VALVES (BOP)[2]

Mark No.	Type	Class	Actuated By	Function	Normal Position[1]
2ASS*AOV130A	Globe	3	Air	HELB Isolation	O
2ASS*AOV130B	Globe	3	Air	HELB Isolation	O
2BDG*AOV100A1	Globe	2	Air	Steam Gen. Blowdown Isolation	O
2BDG*AOV100B1	Globe	2	Air	Steam Gen. Blowdown Isolation	O
2BDG*AOV100C1	Globe	2	Air	Steam Gen. Blowdown Isolation	O
2BDG*AOV101A1	Globe	2	Air	Steam Gen. Blowdown Isolation	O
2BDG*AOV101A2	Globe	2	Air	Steam Gen. Blowdown Isolation	O
2BDG*AOV101B1	Globe	2	Air	Steam Gen. Blowdown Isolation	O
2BDG*AOV101B2	Globe	2	Air	Steam Gen. Blowdown Isolation	O
2BDG*AOV101C1	Globe	2	Air	Steam Gen. Blowdown Isolation	O
2BDG*AOV101C2	Globe	2	Air	Steam Gen. Blowdown Isolation	O
2BDG*AOV102A1	Globe	2	Air	Sample Line Isolation	O
2BDG*AOV102A2	Globe	2	Air	Sample Line Isolation	O
2BDG*AOV102B1	Globe	2	Air	Sample Line Isolation	O
2BDG*AOV102B2	Globe	2	Air	Sample Line Isolation	O
2BDG*AOV102C1	Globe	2	Air	Sample Line Isolation	O
2BDG*AOV102C2	Globe	2	Air	Sample Line Isolation	O
2CCP*AOV107A	Globe	3	Air	Thermal Barrier Rupture Isolation	O
2CCP*AOV107B	Globe	3	Air	Thermal Barrier Rupture Isolation	O
2CCP*AOV107C	Globe	3	Air	Thermal Barrier Rupture Isolation	O
2CCP*AOV171	Globe	3	Air	SC-3/NNS Isolation	O
2CCP*AOV172	Globe	3	Air	SC-3/NNS Isolation	O
2CCP*AOV173	Globe	3	Air	SC-3/NNS Isolation	O
2CCP*AOV174	Globe	3	Air	SC-3/NNS Isolation	O
2CCP*DCV100-1	Globe	3	E/H	CCP Pump Min. Flow	M
2CCP*DCV100-2	Globe	3	E/H	CCP Pump Min. Flow	M
2CCP*DCV101A	Butterfly	3	Air	CCP Heat Exchanger Supply	M
2CCP*DCV101B	Butterfly	3	Air	CCP Heat Exchanger Supply	M
2CCP*DCV101C	Butterfly	3	Air	CCP Heat Exchanger Supply	M
2CCP*MOV112A	Butterfly	3	Motor	RHS Supply	C
2CCP*MOV112B	Butterfly	3	Motor	RHS Supply	C

TABLE 3.9B-19 (Cont)

Mark No.	Type	Class	Actuated By	Function	Normal Position[1]
2CCP*MOV118	Ball	3	Motor	SC-3/NNS Break	O
2CCP*MOV119	Ball	3	Motor	SC-3/NNS Break	O
2CCP*MOV120	Ball	3	Motor	SC-3/NNS Break	O
2CCP*MOV150-1	Butterfly	2	Motor	Containment Isolation	O
2CCP*MOV150-2	Butterfly	2	Motor	Containment Isolation	O
2CCP*MOV151-1	Butterfly	2	Motor	Containment Isolation	O
2CCP*MOV151-2	Butterfly	2	Motor	Containment Isolation	O
2CCP*MOV156-1	Butterfly	2	Motor	Containment Isolation	O
2CCP*MOV156-2	Butterfly	2	Motor	Containment Isolation	O
2CCP*MOV157-1	Butterfly	2	Motor	Containment Isolation	O
2CCP*MOV157-2	Butterfly	2	Motor	Containment Isolation	O
2CCP*MOV175-1	Butterfly	3	Motor	SC-3/NNS Isolation	O
2CCP*MOV175-2	Butterfly	3	Motor	SC-3/NNS Isolation	O
2CCP*MOV176-1	Butterfly	3	Motor	SC-3/NNS Isolation	O
2CCP*MOV176-2	Butterfly	3	Motor	SC-3/NNS Isolation	O
2CCP*MOV177-1	Butterfly	3	Motor	SC-3/NNS Isolation	O
2CCP*MOV177-2	Butterfly	3	Motor	SC-3/NNS Isolation	O
2CCP*MOV178-1	Butterfly	3	Motor	SC-3/NNS Isolation	O
2CCP*MOV178-2	Butterfly	3	Motor	SC-3/NNS Isolation	O
2CCP*RV102	Relief	2	Self	Containment Isolation	-
2CCP*RV103	Relief	2	Self	Containment Isolation	-
2CCP*RV104	Relief	2	Self	Containment Isolation	-
2CCP*RV105	Relief	2	Self	Containment Isolation	-
2CCP*324	Butterfly	3	Manual	Train Separation	O
2CCP*325	Butterfly	3	Manual	Train Separation	O
2CCP*5	Check	3	Self	Pump Discharge Check Valve	-
2CCP*6	Check	3	Self	Pump Discharge Check Valve	-
2CCP*4	Check	3	Self	Pump Discharge Check Valve	-
2CCP*27B	Butterfly	3	Manual	Train Separation	O
2CCP*27A	Butterfly	3	Manual	Train Separation	O
2CCP*354	Butterfly	3	Manual	Train Separation	O
2CCP*355	Butterfly	3	Manual	Train Separation	O

TABLE 3.9B-19 (Cont)

Mark No.	Type	Class	Actuated By	Function	Normal Position[1]
2CCP*321	Gate	3	Manual	Train Separation	O
2CCP*322	Gate	3	Manual	Train Separation	O
2CCP*289	Check	3	Self	Thermal Barrier Rupture Isolation	-
2CCP*291	Check	3	Self	Thermal Barrier Rupture Isolation	-
2CCP*290	Check	3	Self	Thermal Barrier Rupture Isolation	-
2CCP*352	Check	3	Self	SC-3/NNS Break Check Valve	-
2CCP*323	Gate	3	Manual	Train Separation	O
2CCP*326	Gate	3	Manual	Train Separation	O
2CHS*RV160	Relief	2	Self	Penetration Overpressure	-
2CHS*RV203	Relief	2	Self	Regenerative Heat Exchanger Relief	-
2CHS*RV260A	Relief	2	Self	Penetration Overpressure	-
2CHS*RV260B	Relief	2	Self	Penetration Overpressure	-
2CHS*RV260C	Relief	2	Self	Penetration Overpressure	-
2CHS*RV8144	Relief	2	Self	Regenerative Heat Exchanger Relief	-
2CHS*SOV206	Globe	2	Solenoid	A.H. Emerg. Boration	C
2CHS*474	Check	2	Weight	Containment Isolation	-
2CHS*476	Check	2	Weight	Containment Isolation	-
2CHS*475	Check	2	Weight	Containment Isolation	-
2CHS*473	Check	2	Weight	Containment Isolation	-
2CHS*472	Check	2	Weight	Containment Isolation	-
2CHS*31	Check	2	Weight	Containment Isolation	-
2CHS*FCV113B	Globe	2	Air	Normal Boration	O
2CHS*136	Check	2	Self	Alt. Emerg. Boration	-
2CVS*SOV102	Globe	2	Solenoid	Cont. Rad. Monitor Discharge	O
2CVS*SOV151A	Globe	2	Solenoid	Cont. Vacuum Suction	O
2CVS*SOV151B	Globe	2	Solenoid	Cont. Vacuum Suction	O
2CVS*SOV152A	Globe	2	Solenoid	Cont. Vacuum Suction	O
2CVS*SOV152B	Globe	2	Solenoid	Cont. Vacuum Suction	O
2CVS*SOV153A	Globe	2	Solenoid	Cont. Vacuum Suction	O
2CVS*SOV153B	Globe	2	Solenoid	Cont. Vacuum Suction	O
2CVS*93	Check	2	Self	Cont. Atm. Rad. Monitor Discharge	-

TABLE 3.9B-19 (Cont)

Mark No.	Type	Class	Actuated By	Function	Normal Position[1]
2DAS*AOV100A	Globe	2	Air	Cont. Sump Pump Discharge	C
2DAS*AOV100B	Globe	2	Air	Cont. Sump Pump Discharge	O
2DGS*AOV108A	Globe	2	Air	Prim. Drains Transfer Pump Discharge	C
2DGS*AOV108B	Globe	2	Air	Prim. Drains Transfer Pump Discharge	O
2DAS*RV110	Relief	2	Self	Containment Isol. Thermal Relief	-
2DGS*RV115	Relief	2	Self	Containment Isol. Thermal Relief	-
2EGA*100	Check	3	Self	D.G. Air Tank Inlet	-
2EGA*101	Check	3	Self	D.G. Air Tank Inlet	-
2EGA*118	Check	3	Excess Flow	SC-3/NNS Isolation Flow	-
2EGA*119	Check	3	Excess Flow	SC-3/NNS Isolation Flow	-
2EGA*130	Check	3	Self	D.G. Air Tank Inlet	-
2EGA*131	Check	3	Self	D.G. Air Tank Inlet	-
2EGA*155	Check	3	Excess Flow	SC-3/NNS Isolation Flow	-
2EGA*156	Check	3	Excess Flow	SC-3/NNS Isolation Flow	-
2EGF*7	Check	3	Self	DG Fuel Oil Transfer Pump Discharge	-
2EGF*9	Check	3	Self	DG Fuel Oil Transfer Pump Discharge	-
2EGF*8	Check	3	Self	DG Fuel Oil Transfer Pump Discharge	-
2EGF*10	Check	3	Self	DG Fuel Oil Transfer Pump Discharge	-
2FNC*109	Check	3	Self	Fuel Pool Coolant Pump Discharge	-
2FNC*108	Check	3	Self	Fuel Pool Coolant Pump Discharge	-
2FPW*AOV205	Globe	2	Air	Fire Protect/Contain. Isolation	C
2FPW*AOV206	Globe	2	Air	Fire Protect/Contain. Isolation	C
2FPW*382	Check	2	Weight	Fire Protect/Contain. Isolation	-
2FPW*388	Check	2	Weight	Fire Protect/Contain. Isolation	-
2FPW*761	Check	2	Weight	Fire Protect/Contain. Isolation	-
2FPW*753	Check	2	Weight	Fire Protect/Contain. Isolation	-
2FWE*FCV122	ARC	3	Flow	Aux. Feedwater Flow Control	-
2FWE*FCV123A	ARC	3	Flow	Aux. Feedwater Flow Control	-
2FWE*FCV123B	ARC	3	Flow	Aux. Feedwater Flow Control	-
2FWE*HCV100A	Globe	2	E/H	Aux. Feedwater Flow Control	O

TABLE 3.9B-19 (Cont)

Mark No.	Type	Class	Actuated By	Function	Normal Position[1]
2FWE*HCV100B	Globe	2	E/H	Aux. Feedwater Flow Control	O
2FWE*HCV100C	Globe	2	E/H	Aux. Feedwater Flow Control	O
2FWE*HCV100D	Globe	2	E/H	Aux. Feedwater Flow Control	O
2FWE*HCV100E	Globe	2	E/H	Aux. Feedwater Flow Control	O
2FWE*HCV100F	Globe	2	E/H	Aux. Feedwater Flow Control	O
2FWE*RV101	Relief	3	Self	Aux. Feedwater Relief	-
2FWE*SOV100A	Globe	3	Solenoid	Prim.PH.Demin.Wtr.Stor.Tank Isol.	O
2FWE*SOV100B	Globe	3	Solenoid	Prim.PH.Demin.Wtr.Stor.Tank Isol.	O
2FWE*92	Butterfly	3	Manual	P.P.D.W.S.T. Switchover to S.W.	C
2FWE*95	Butterfly	3	Manual	P.P.D.W.S.T. Switchover to S.W.	O
2FWE*90	Butterfly	3	Manual	P.P.D.W.S.T. Switchover to S.W.	C
2FWE*93	Butterfly	3	Manual	P.P.D.W.S.T. Switchover to S.W.	O
2FWE*94	Butterfly	3	Manual	P.P.D.W.S.T. Switchover to S.W.	O
2FWE*91	Butterfly	3	Manual	P.P.D.W.S.T. Switchover to S.W.	C
2FWE*42A	Check	2	Self	Aux. Feedwater	-
2FWE*42B	Check	2	Self	Aux. Feedwater	-
2FWE*43A	Check	2	Self	Aux. Feedwater	-
2FWE*43B	Check	2	Self	Aux. Feedwater	-
2FWE*44A	Check	2	Self	Aux. Feedwater	-
2FWE*44B	Check	2	Self	Aux. Feedwater	-
2FWE*99	Check	2	Self	Aux. Feedwater	-
2FWE*100	Check	2	Self	Aux. Feedwater	-
2FWE*101	Check	2	Self	Aux. Feedwater	-
2FWS*FCV478	Globe	2	Air	Feedwater Control/Isolation	M
2FWS*FCV479	Globe	2	Air	Feedwater Control/Isolation	C
2FWS*FCV488	Globe	2	Air	Feedwater Control/Isolation	M
2FWS*FCV489	Globe	2	Air	Feedwater Control/Isolation	C
2FWS*FCV498	Globe	2	Air	Feedwater Control/Isolation	M
2FWS*FCV499	Globe	2	Air	Feedwater Control/Isolation	C
2FWS*HYV157A	Gate	2	E/H	Feedwater Isolation	O
2FWS*HYV157B	Gate	2	E/H	Feedwater Isolation	O
2FWS*HYV157C	Gate	2	E/H	Feedwater Isolation	O

TABLE 3.9B-19 (Cont)

Mark No.	Type	Class	Actuated By	Function	Normal Position[1]
2FWS*28	Check	2	Self	Feedwater Isolation	-
2FWS*29	Check	2	Self	Feedwater Isolation	-
2FWS*30	Check	2	Self	Feedwater Isolation	-
2GNS*SOV853A	Globe	2	Solenoid	Accumulator Vent	C
2GNS*SOV853B	Globe	2	Solenoid	Accumulator Vent	C
2GNS*SOV853C	Globe	2	Solenoid	Accumulator Vent	C
2GNS*SOV853D	Globe	2	Solenoid	Accumulator Vent	C
2GNS*SOV853E	Globe	2	Solenoid	Accumulator Vent	C
2GNS*SOV853F	Globe	2	Solenoid	Accumulator Vent	C
2GNS*SOV854A	Globe	2	Solenoid	Accumulator Vent	C
2GNS*SOV854B	Globe	2	Solenoid	Accumulator Vent	C
2HCS*MOV112A	Ball	2	Motor	RBNR Inlet Isolation	C
2HCS*MOV112B	Ball	2	Motor	RBNR Inlet Isolation	C
2HCS*MOV116	Ball	2	Motor	Containment Isolation	C
2HCS*MOV117	Ball	2	Motor	Containment Isolation	C
2HCS*MOV120A	Plug	2	Motor	RBNR Outlet Isolation	C
2HCS*MOV120B	Plug	2	Motor	RBNR Outlet Isolation	C
2HCS*SOV114A	Globe	2	Solenoid	Containment Isolation	C
2HCS*SOV114B	Globe	2	Solenoid	Containment Isolation	C
2HCS*SOV115A	Globe	2	Solenoid	Containment Isolation	C
2HCS*SOV115B	Globe	2	Solenoid	Containment Isolation	C
2HCS*SOV133A	Globe	2	Solenoid	Containment Isolation	C
2HCS*SOV133B	Globe	2	Solenoid	Containment Isolation	C
2HCS*SOV134A	Globe	2	Solenoid	Containment Isolation	C
2HCS*SOV134B	Globe	2	Solenoid	Containment Isolation	C
2HCS*SOV135A	Globe	2	Solenoid	Containment Isolation	C
2HCS*SOV135B	Globe	2	Solenoid	Containment Isolation	C
2HCS*SOV136A	Globe	2	Solenoid	Containment Isolation	C
2HCS*SOV136B	Globe	2	Solenoid	Containment Isolation	C
2HCS*111	Ball	2	Manual	Containment Isolation Backup	C
2HCS*110	Ball	2	Manual	Containment Isolation Backup	C
2HVC*MOD201A	Butterfly	3	Motor	Isolation-Outdoor Air Norm. Supply	O

TABLE 3.9B-19 (Cont)

Mark No.	Type	Class	Actuated By	Function	Normal Position[1]
2HVC*MOD201B	Butterfly	3	Motor	Isolation-Outdoor Air Norm. Supply	O
2HVC*MOD201C	Butterfly	3	Motor	Isolation-Exhaust to Outdoor	C
2HVC*MOD201D	Butterfly	3	Motor	Isolation-Exhaust to Outdoor	C
2HVC*MOD204A	Butterfly	3	Motor	Isolation-Outdoor Emerg. Supply	C
2HVC*MOD204B	Butterfly	3	Motor	Isolation-Outdoor Emerg. Supply	C
2HVC*SOV201A	Globe	3	Solenoid	Modulate Refrig. Supply to DX Coils 2HVC*ACU201A,B	M
2HVC*SOV201B	Globe	3	Solenoid	Modulate Refrig. Supply to DX Coils 2HVC*ACU201A,B	M
2HVR*MOD23A[3]	Butterfly	2	Motor	Isolation-Containment Purge Supply	C
2HVR*MOD23B[3]	Butterfly	2	Motor	Isolation Containment Purge Supply	C
2HVR*MOD25A[3]	Butterfly	2	Motor	Isolation-Containment Purge Exhaust	C
2HVR*MOD25B[3]	Butterfly	2	Motor	Isolation-Containment Purge Exhaust	C
2IAC*MOV130	Plug	2	Motor	Containment Isolation	O
2IAC*MOV133	Plug	2	Motor	Containment Isolation	O
2IAC*MOV134	Plug	2	Motor	Containment Isolation	O
2IAC*22	Check	2	Weight	Containment Isolation	-
2LMS*SOV950	Globe	2	Solenoid	Cont. Atm. Pressure to Indicator	O
2LMS*SOV951	Globe	2	Solenoid	Cont. Atm. Pressure to Indicator	O
2LMS*SOV952	Globe	2	Solenoid	Cont. Atm. Pressure to Indicator	O
2LMS*SOV953	Globe	2	Solenoid	Cont. Atm. Pressure to Indicator	O
2MSS*AOV102A	Globe	2	Air	Main Steam Warmup	C
2MSS*AOV102B	Globe	2	Air	Main Steam Warmup	C
2MSS*AOV102C	Globe	2	Air	Main Steam Warmup	C
2MSS*AOV101A	Globe	2	Air	Main Steam Isolation	O
2MSS*AOV101B	Globe	2	Air	Main Steam Isolation	O
2MSS*AOV101C	Globe	2	Air	Main Steam Isolation	O
2MSS*SOV105A	Globe	2	Solenoid	Steam to Terry Turbine	C
2MSS*SOV105B	Globe	2	Solenoid	Steam to Terry Turbine	C
2MSS*SOV105C	Globe	2	Solenoid	Steam to Terry Turbine	C
2MSS*SOV105D	Globe	2	Solenoid	Steam to Terry Turbine	C
2MSS*SOV105E	Globe	2	Solenoid	Steam to Terry Turbine	C

TABLE 3.9B-19 (Cont)

Mark No.	Type	Class	Actuated By	Function	Normal Position[1]
2MSS*SOV105F	Globe	2	Solenoid	Steam to Terry Turbine	C
2MSS*SOV120	Globe	2	Solenoid	Main Steam Radiation Monitor Isolation	C
2MSS*SV101A	Relief	2	Self	Main Steam Safety	-
2MSS*SV101B	Relief	2	Self	Main Steam Safety	-
2MSS*SV101C	Relief	2	Self	Main Steam Safety	-
2MSS*SV102A	Relief	2	Self	Main Steam Safety	-
2MSS*SV102B	Relief	2	Self	Main Steam Safety	-
2MSS*SV102C	Relief	2	Self	Main Steam Safety	-
2MSS*SV103A	Relief	2	Self	Main Steam Safety	-
2MSS*SV103B	Relief	2	Self	Main Steam Safety	-
2MSS*SV103C	Relief	2	Self	Main Steam Safety	-
2MSS*SV104A	Relief	2	Self	Main Steam Safety	-
2MSS*SV104B	Relief	2	Self	Main Steam Safety	-
2MSS*SV104C	Relief	2	Self	Main Steam Safety	-
2MSS*SV105A	Relief	2	Self	Main Steam Safety	-
2MSS*SV105B	Relief	2	Self	Main Steam Safety	-
2MSS*SV105C	Relief	2	Self	Main Steam Safety	-
2MSS*19	Check	3	Self	Steam Supply to Terry Turbine	-
2MSS*20	Check	3	Self	Steam Supply to Terry Turbine	-
2MSS*18	Check	3	Self	Steam Supply to Terry Turbine	-
2MSS*196	Check	3	Self	Steam Supply to Terry Turbine	-
2MSS*199	Check	3	Self	Steam Supply to Terry Turbine	-
2MSS*352	Check	3	Self	Steam Supply to Terry Turbine	-
2PAS*SOV103	Globe	2	Solenoid	SC-2/NNS Isolation	C
2PAS*SOV105A1	Globe	2	Solenoid	Containment Isolation	C
2PAS*SOV105A2	Globe	2	Solenoid	Containment Isolation	C
2PAS*SOV106	Globe	3	Solenoid	Gas Return Isolation	C
2PAS*SOV107	Globe	2	Solenoid	2RSS*P21A Sample Isolation	C

TABLE 3.9B-19 (Cont)

Mark No.	Type	Class	Actuated By	Function	Normal Position[1]
2PAS*SOV108	Globe	2	Solenoid	2RSS*P21B Sample Isolation	C
2PAS*SOV113	Globe	3	Solenoid	SWS/PAS Isolation	C
2PAS*SOV114	Globe	3	Solenoid	SWS/PAS Isolation	C
2QSS*AOV120A	Globe	2	Air	Refuel Wtr Clg Pump Suct.Isolation	O
2QSS*AOV120B	Globe	2	Air	Refuel Wtr Clg Pump Suct.Isolation	O
2QSS*MOV100A	Gate	2	Motor	QSS Pump Suction	O
2QSS*MOV100B	Gate	2	Motor	QSS Pump Suction	O
2QSS*MOV101A	Gate	2	Motor	QSS Pump Discharge	O
2QSS*MOV101B	Gate	2	Motor	QSS Pump Discharge	O
2QSS*RV101A	Relief	2	Self	Relief for 2QSS*MOV101A	-
2QSS*RV101B	Relief	2	Self	Relief for 2QSS*MOV101B	-
2QSS*SOV101B	Globe	2	Solenoid	QSS Chem. Inj. Header Isolation	O
2QSS*SOV102B	Globe	2	Solenoid	QSS Chem. Inj. Header Isolation	O
2QSS*4	Check	2	Weight	Containment Isolation	-
2QSS*3	Check	2	Weight	Containment Isolation	-
2QSS*304	Check	2	Self	Chem. Inj. Pump Discharge	-
2RCS*RV100	Relief	2	Self	PRT Relief	-
2RCS*68	Check	2	Weight	PRT N_2 Supply	-
2RCS*72	Check	2	Weight	PRT Water Supply	-
2RHS*FCV605A	Butterfly	2	Air	RHR Heat Exchanger Bypass	M
2RHS*FCV605B	Butterfly	2	Air	RHR Heat Exchanger Bypass	M
2RHS*HCV758A	Butterfly	2	Air	RHR Heat Exchanger Isolation	M

TABLE 3.9B-19 (Cont)

Mark No.	Type	Class	Actuated By	Function	Normal Position[1]
2RHS*HCV758B	Butterfly	2	Air	RHB Heat Exchanger Isolation	M
2RHS*RV721A	Relief	2	Self	RHS Pump Suction Relief	-
2RHS*RV721B	Relief	2	Self	RHS Pump Suction Relief	-
2RHS*RV100	Relief	2	Self	Cont. Penet. X-24 Thermal Relief	-
2RSS*MOV154C	Gate	2	Motor	RSS Pump Mini Flow Recirc.	C
2RSS*MOV154D	Gate	2	Motor	RSS Pump Mini Flow Recirc.	C
2RSS*MOV155A	Butterfly	2	Motor	RSS Pump Suction	O
2RSS*MOV155B	Butterfly	2	Motor	RSS Pump Suction	O
2RSS*MOV155C	Butterfly	2	Motor	RSS Pump Suction	O
2RSS*MOV155D	Butterfly	2	Motor	RSS Pump Suction	O
2RSS*MOV156A	Gate	2	Motor	RSS Pump Discharge	O
2RSS*MOV156B	Gate	2	Motor	RSS Pump Discharge	O
2RSS*MOV156C	Gate	2	Motor	RSS Pump Discharge	O
2RSS*MOV156D	Gate	2	Motor	RSS Pump Discharge	O
2RSS*RV156A	Relief	2	Self	Thermal Relief for 2RSS*MOV156A	-
2RSS*RV156B	Relief	2	Self	Thermal Relief for 2RSS*MOV156B	-
2RSS*RV156C	Relief	2	Self	Thermal Relief for 2RSS*MOV156C	-
2RSS*RV156D	Relief	2	Self	Thermal Relief for 2RSS*MOV156D	-
2RSS*29	Check	2	Weight	Containment Isolation	-
2RSS*31	Check	2	Weight	Containment Isolation	-
2RSS*32	Check	2	Weight	Containment Isolation	-
2RSS*30	Check	2	Weight	Containment Isolation	-
2SDS*AOV111A1	Globe	2	Air	Containment Isolation (Steam Drains)	O
2SDS*AOV111A2	Globe	2	Air	Containment Isolation (Steam Drains)	O
2SDS*AOV111B1	Globe	2	Air	Containment Isolation (Steam Drains)	O
2SDS*AOV111B2	Globe	2	Air	Containment Isolation (Steam Drains)	O
2SDS*AOV111C1	Globe	2	Air	Containment Isolation (Steam Drains)	O
2SDS*AOV111C2	Globe	2	Air	Containment Isolation (Steam Drains)	O
2SDS*AOV129A	Globe	2	Air	Containment Isolation (RHR Drain)	O
2SDS*AOV129B	Globe	2	Air	Containment Isolation (RHR Drain)	O
2SIS*RV130	Relief	2	Self	Containment Isolation	-
2SIS*RV175	Relief	2	Self	Safety Accumulator Test Relief	-

TABLE 3.9B-19 (Cont)

Mark No.	Type	Class	Actuated By	Function	Normal Position[1]
2SIS*130	Check	2	Weight	Containment Isolation	-
2SIS*132	Check	2	Weight	Containment Isolation	-
2SIS*133	Check	2	Weight	Containment Isolation	-
2SIS*83	Check	2	Weight	Containment Isolation	-
2SIS*84	Check	2	Weight	Containment Isolation	-
2SIS*94	Check	2	Weight	Containment Isolation	-
2SIS*95	Check	2	Weight	Containment Isolation	-
2SIS*42	Check	2	Weight	SIS Fill Containment Isolation	-
2SIS*895	Check	2	Self	SIS Pump Discharge	-
2SIS*894	Check	2	Self	SIS Pump Discharge	-
2SSR*AOV100A1	Globe	2	Air	Containment Isolation	C
2SSR*AOV100A2	Globe	2	Air	Containment Isolation	C
2SSR*AOV102A1	Globe	2	Air	Containment Isolation	C
2SSR*AOV102A2	Globe	2	Air	Containment Isolation	C
2SSR*AOV109A1	Globe	2	Air	Containment Isolation	O
2SSR*AOV109A2	Globe	2	Air	Containment Isolation	O
2SSR*AOV112A1	Globe	2	Air	Containment Isolation	C
2SSR*AOV112A2	Globe	2	Air	Containment Isolation	C
2SSR*AOV117A	Globe	2	Air	Steam Generator Isolation	O
2SSR*AOV117B	Globe	2	Air	Steam Generator Isolation	O
2SSR*AOV117C	Globe	2	Air	Steam Generator Isolation	O
2SSR*AOV116A	Globe	2	Air	Charging Pump Discharge Sample	C
2SSR*AOV116B	Globe	2	Air	Charging Pump Discharge Sample	C
2SSR*AOV116C	Globe	2	Air	Charging Pump Discharge Sample	C
2SSR*AOV118A	Globe	2	Air	Letdown Flow Sample Valve	C
2SSR*AOV118B	Globe	2	Air	Volume Control Tank Gas Space Sample	C
2SSR*AOV118C	Globe	2	Air	Volume Control Tank Liquid Sample	C
2SSR*AOV118D	Globe	2	Air	Reactor Coolant Filter Influent Sample	C

TABLE 3.9B-19 (Cont)

Mark No.	Type	Class	Actuated By	Function	Normal Position[1]
2SSR*RV117	Relief	2	Self	Containment Penetration Relief	-
2SSR*RV118	Relief	2	Self	Containment Penetration Relief	-
2SSR*RV119	Relief	2	Self	Containment Penetration Relief	-
2SSR*RV120	Relief	2	Self	Containment Penetration Relief	-
2SSR*RV121	Relief	2	Self	Containment Penetration Relief	-
2SSR*RV122	Relief	2	Self	Containment Penetration Relief	-
2SSR*SOV128A1	Globe	2	Solenoid	Containment Isolation	C
2SSR*SOV128A2	Globe	2	Solenoid	Containment Isolation	C
2SSR*SOV129A1	Globe	2	Solenoid	Containment Isolation	C
2SSR*SOV129A2	Globe	2	Solenoid	Containment Isolation	C
2SSR*SOV129B	Globe	2	Solenoid	Sample Pump Isolation	C
2SSR*SOV130A1	Globe	2	Solenoid	Containment Isolation	O
2SSR*SOV130A2	Globe	2	Solenoid	Containment Isolation	O
2SVS*HCV104	Globe	2	E/H	Residual Heat Removal	C
2SVS*PCV101A	Globe	2	E/H	Atmosphere Dump	C
2SVS*PCV101B	Globe	2	E/H	Atmosphere Dump	C
2SVS*PCV101C	Globe	2	E/H	Atmosphere Dump	C
2SVS*80	Check	2	Self	Residual Heat Release Check Valves	-
2SVS*81	Check	2	Self	Residual Heat Release Check Valves	-
2SVS*82	Check	2	Self	Residual Heat Release Check Valves	-
2SWE*MOV116A	Butterfly	3	Motor	Barge Accident SC-3/NNS Isolation	C
2SWE*MOV116B	Butterfly	3	Motor	Barge Accident SC-3/NNS Isolation	C
2SWS*AOV114	Butterfly	3	Air	SC-3/NNS Isolation	O
2SWS*AOV118A	Globe	3	Air	Unit 1 Seal Wtr. Isolation	O
2SWS*AOV118B	Globe	3	Air	Unit 1 Seal Wtr. Isolation	O
2SWS*MOV102A	Butterfly	3	Motor	SWS Pump Discharge Isolation	O
2SWS*MOV102B	Butterfly	3	Motor	SWS Pump Discharge Isolation	O
2SWS*MOV102C1	Butterfly	3	Motor	SWS Pump Discharge Isolation	C

TABLE 3.9B-19 (Cont)

Mark No.	Type	Class	Actuated By	Function	Normal Position[1]
2SWS*MOV102C2	Butterfly	3	Motor	SWS Pump Discharge Isolation	C
2SWS*MOV103A	Butterfly	3	Motor	RSS Supply	C
2SWS*MOV103B	Butterfly	3	Motor	RSS Supply	C
2SWS*MOV104A	Gate	3	Motor	RSS Supply	O
2SWS*MOV104B	Gate	3	Motor	RSS Supply	O
2SWS*MOV104C	Gate	3	Motor	RSS Supply	O
2SWS*MOV104D	Gate	3	Motor	RSS Supply	O
2SWS*MOV105A	Butterfly	3	Motor	RSS Supply	O
2SWS*MOV105B	Butterfly	3	Motor	RSS Supply	O
2SWS*MOV105C	Butterfly	3	Motor	RSS Supply	O
2SWS*MOV105D	Butterfly	3	Motor	RSS Supply	O
2SWS*MOV106A	Butterfly	3	Motor	CCP/CCS-Contmt Cooling Coil Supply	O
2SWS*MOV106B	Butterfly	3	Motor	CCP/CCS-Contmt Cooling Coil Supply	O
2SWS*MOV107A	Butterfly	3	Motor	CCS SC-3/NNS Isolation	O
2SWS*MOV107B	Butterfly	3	Motor	CCS SC-3/NNS Isolation	O
2SWS*MOV107C	Butterfly	3	Motor	CCS SC-3/NNS Isolation	O
2SWS*MOV107D	Butterfly	3	Motor	CCS SC-3/NNS Isolation	O
2SWS*MOV113A	Gate	3	Motor	Diesel Supply	C
2SWS*MOV113B	Gate	3	Motor	Diesel Supply	C
2SWS*MOV113C	Gate	3	Motor	Diesel Supply	C
2SWS*MOV113D	Gate	3	Motor	Diesel Supply	C
2SWS*MOV148A	Butterfly	3	Motor	Rod Control AC Supply	C
2SWS*MOV148B	Butterfly	3	Motor	Rod Control AC Supply	C
2SWS*MOV152-1	Butterfly	2	Motor	Containment Isolation	O
2SWS*MOV152-2	Butterfly	2	Motor	Containment Isolation	O
2SWS*MOV155-1	Butterfly	2	Motor	Containment Isolation	O
2SWS*MOV155-2	Butterfly	2	Motor	Containment Isolation	O
2SWS*MOV162	Butterfly	3	Motor	SC-3/NNS Isolation	O

TABLE 3.9B-19 (Cont)

Mark No.	Type	Class	Actuated By	Function	Normal Position[1]
2SWS*MOV163	Butterfly	3	Motor	SC-3/NNS Isolation	C
2SWS*MOV164	Butterfly	3	Motor	SC-3/NNS Isolation	C
2SWS*MOV165	Butterfly	3	Motor	SC-3/NNS Isolation	O
2SWS*RV152	Relief	2	Self	Containment Isolation	-
2SWS*RV153	Relief	2	Self	Containment Isolation	-
2SWS*RV154	Relief	2	Self	Containment Isolation	-
2SWS*RV155	Relief	2	Self	Containment Isolation	-
2SWS*SOV130A	Globe	3	Solenoid	Unit 2 Seal Wtr Supply	O
2SWS*SOV130B	Globe	3	Solenoid	Unit 2 Seal Wtr Supply	O
2SWS*59	Check	3	Self	SWS Pump Discharge Check	-
2SWS*58	Check	3	Self	SWS Pump Discharge Check	-
2SWS*57	Check	3	Self	SWS Pump Discharge Check	-
2SWS*162	Gate	3	Manual	"C" Charging Pump Supply Isolation	C
2SWS*165	Gate	3	Manual	"C" Charging Pump Supply Isolation	C
2SWS*111	Check	3	Self	Diesel Check Valve	-
2SWS*110	Check	3	Self	Diesel Check Valve	-
2SWS*113	Check	3	Self	Diesel Check Valve	-
2SWS*112	Check	3	Self	Diesel Check Valve	-
2SWS*488	Check	3	Self	SWS Pump Vacuum Breaker	-
2SWS*487	Check	3	Self	SWS Pump Vacuum Breaker	-
2SWS*486	Check	3	Self	SWS Pump Vacuum Breaker	-
2SWS*40	Butterfly	3	Manual	SC-3/NNS Isolation	O
2SWS*41	Butterfly	3	Manual	SC-3/NNS Isolation	O
2SWS*104	Butterfly	3	Manual	RSS Heat Exchangers	C
2SWS*107	Check	3	Self	Header Check (Barge Acc Loop Cycle)	-

TABLE 3.9B-19 (Cont)

Mark No.	Type	Class	Actuated By	Function	Normal Position[1]
2SWS*106	Check	3	Self	Header Check(Barge Acc Loop Cycle)	-
2SWS*122	Gate	3	Manual	Fuel Pool Backup	C
2SWS*124	Gate	3	Manual	Fuel Pool Backup	C
2SWS*353	Check	3	Self	SC-3/NNS Isolation	-
2SWS*1084	Check	3	Self	Control Room Cooling	-
2SWS*1085	Check	3	Self	Control Room Cooling	-
2VRS*AOV109A1	Globe	2	Air	Hydrogenated Gas Vent	O
2VRS*AOV109A2	Globe	2	Air	Hydrogenated Gas Vent	O

TABLE 3.9B-19 (Cont)

NOTES:

1) Normal Positions

   O - Open
   C - Closed
   M - Modulating

2) This valve listing is for design applicability of "Active" components. For test requirements of those valves contained in the BVPS-2 IST Program, see the BVPS-2 Inservice Testing Program for Pumps and Valves (ASME OM Code).

3) 2HVR*MOD23A,B; 25A,B. These dampers are locked closed during normal operation and in the "active" mode only during cold shutdown and refueling.

TABLE 3.9N-1

SUMMARY OF REACTOR COOLANT SYSTEM DESIGN TRANSIENTS

Normal Conditions	Occurrences
Heatup and cooldown at 100°F/hr (pressurizer cooldown 200°F/hr)	200 (each)[2]
Unit loading and unloading at 5% of full power/min	5,700 (each)
Step load increase and decrease of 10% of full power	2,000 (each)
Large step load decrease with steam dump	200
Steady-state fluctuations	infinite
Refueling	80
Upset Conditions	
Loss of load (without immediate reactor trip)	80
Loss of power	40
Loss of flow	80
Reactor trip from full power	400
Operating basis earthquake	
Westinghouse components (20 earthquakes of 20 cycles each)	400
Piping components (5 earthquakes of 10 cycles each)	50
Inadvertent safety injection actuation	60
RCS cold overpressurization	10[2]
Inadvertent auxiliary spray	10[2]
Faulted Conditions*	**Occurrences**
Reactor coolant pipe break (large loss of coolant accident)	1
Large steam line break	1
Steam generator tube rupture	1 (included in upset condition "reactor trip from full power," above)
Safe shutdown earthquake	1

TABLE 3.9N-1 (Cont)

Test Conditions	Occurrences
Turbine roll test	10
Primary side hydrostatic test	5
Secondary side hydrostatic test	5
Primary side leakage test	50
Supplemental Transients	**Occurrences**
Pressurizer Insurge	Varies(2)(3)
Selected CVCS Transients	
Isolation of Letdown Flow (Mode 4)	400
Isolation of Charging Flow (Mode 1, 2, 3)	500(2)
Isolation of Charging Flow (Mode 4)	2000(2)
Auxiliary Feedwater Injections	18,300
RHR Actuation	200

NOTE:

* In accordance with the ASME Boiler and Pressure Vessel Code, Section III, faulted conditions are not included in fatigue evaluation.

(2) Critical transient where the predicted count may approach the design count during the period of extended operation. Occurrences of this transient must be counted in accordance with ITS 5.5.3.

(3) The design occurrences depend on specific attributes and severity of the actual transient. This is monitored as part of the Fatigue Management Program.

TABLE 3.9N-2

LOADING COMBINATIONS FOR ASME CLASS 1 COMPONENTS

Condition Classification	Loading Combination
Normal	Normal condition transients, temperature, pressure deadweight
Upset	Upset condition transients, temperature, pressure deadweight operating basis earthquake
Faulted	Faulted condition transients, temperature, pressure, deadweight, safe shutdown earthquake or (safe shutdown earthquake and pipe rupture loads)

TABLE 3.9N-3

ALLOWABLE STRESSES FOR ASME SECTION III CLASS 1 COMPONENTS*

Operating Condition Classification	Vessels/Tanks	Pumps	Valves
Normal	ASME Section III	ASME Section III	ASME Section III
Upset	ASME Section III	ASME Section III	ASME Section III
Faulted	Section 3.9N.1.4.4	Section 3.9N.1.4.4	**

NOTES:

* A test of the components may be performed in lieu of analysis.
** Class 1 Valve Faulted Condition Criteria

Active

a) Calculate P_m from paragraph NB3545.1 with Internal Pressure $P_s = 1.25P_s$

$P_m \leq 1.5\ S_m$

b) Calculate S_n from paragraph NB3545.2 with

$Cp = 1.5$ $P_s = 1.25P_s$

$Q_t2 = 0$ $P_{ed} = 1.3x$ value of P_{ed}

from equations of 3545.2(b)(1)

$S_n \leq 3S_m$

Inactive

a) Calculate P_m from paragraph NB3545.1 with Internal Pressure $P_s = 1.50P_s$

$P_m \leq 2.4\ S_m$ or $0.7\ S_u$

b) Calculate S_n from paragraph NB3545.2 with

$Cp = 1.5$ $P_s = 1.50P_s$

$Q_t2 = 0$ $P_{ed} = 1.3x$ value of P_{ed}

from equations of NB3545.2(b)(1)

$S_n \leq 3S_m$

P_e, P_m, P_b, Q_t, C_p, S_n and S_m as defined by Section III, ASME Code

TABLE 3.9N-4

DESIGN LOADING COMBINATIONS FOR ASME CODE CLASS 2 AND 3 COMPONENTS AND SUPPORTS

Condition Classification	Loading Combination
Design	Design pressure, temperature, deadweight
Normal	Normal condition pressure deadweight, temperature, nozzle loads*
Upset	Upset condition pressure, deadweight, temperature, OBE, nozzle loads*
Faulted	Faulted condition pressure, temperature, deadweight, SSE, nozzle loads*

NOTE:

* Nozzle loads are those loads associated with the particular plant operating conditions for the component under consideration.

TABLE 3.9N-5

STRESS CRITERIA FOR SAFETY RELATED
ASME CLASS 2 AND CLASS 3 TANKS

Condition	Stress Limits
Design and normal	The vessel shall conform to the requirements of ASME Section VIII, Division 1
Upset	$\sigma_m \leq 1.1\ S$
	$(\sigma_m \text{ or } \sigma_L) + \sigma_b \leq 1.65\ S$
Faulted	$\sigma_m \leq 2.0\ S$
	$(\sigma_m \text{ or } \sigma_L) + \sigma_b \leq 2.4\ S$

TABLE 3.9N-6

STRESS CRITERIA FOR ASME CODE CLASS 2 AND CLASS 3 INACTIVE PUMPS

Condition	Stress Limits
Design and normal	ASME Section III, Subsection NC-3400 (or ND-3400)
Upset	$\sigma_m \leq 1.1\ S$
	$(\sigma_m \text{ or } \sigma_L) + \sigma_b \leq 1.65\ S$
Faulted	$\sigma_m \leq 2.0\ S$
	$(\sigma_m \text{ or } \sigma_L) + \sigma_m \leq 2.4\ S$

TABLE 3.9N-7

DESIGN CRITERIA FOR ACTIVE PUMPS

Condition	Stress Limits
Design and normal	ASME Section III, Subsection NC-3400 and ND-3400
Upset	$\sigma_m \leq 1.0\ S$
	$\sigma_m + \sigma_b \leq 1.5\ S$
Faulted	$\sigma_m \leq 1.2\ S$
	$\sigma_m + \sigma_b \leq 1.8\ S$

TABLE 3.9N-8

STRESS CRITERIA FOR SAFETY-RELATED ASME CODE CLASS 2 AND CLASS 3 VALVES

Condition	Stress Limits (1-5)	P_{max} (6)
Design and Normal	Valve bodies shall conform to the requirements of ASME Section III, NC-3,500 (or ND-3,500)	
Upset	$\sigma_m \leq 1.1\ S$ $(\sigma_m \text{ or } \sigma_L) + \sigma_b \leq 1.65\ S$	1.1
Faulted	$\sigma_m \leq 2.0\ S$ $(\sigma_m \text{ or } \sigma_L) + \sigma_b \leq 2.4\ S$	1.5

NOTES:

1. Valve nozzle (piping load) stress analysis is not required when both the following conditions are satisfied by calculation: 1) the section modulus and area of a plane, normal to the flow, through the region defined as the valve body crotch is at least 10 percent greater than the piping connected (or joined) to the valve body inlet and outlet nozzles; and 2) code allowable stress, S, for valve body material is equal to or greater than the code allowable stress, S, of the connecting piping material. If the valve body material allowable stress is less than that of the connected piping, the valve section modulus and area as calculated in the preceding Item 1 previously mentioned shall be multiplied by the ratio ($\sigma S_{pipe}/S_{valve}$). If unable to comply with the requirement, the design by analysis procedure of NB-3545.2 is an acceptable alternate method.

2. Casting quality factor of 1.0 shall be used.

3. These stress limits are applicable to the pressure retaining boundary, and include the effects of loads transmitted by the extended structures, when applicable.

4. Design requirements listed in this table are not applicable to valve discs, stems, seat rings, or other parts of valves which are contained within the confines of the body and bonnet, or otherwise not part of the pressure boundary.

5. These rules do not apply to Class 2 and 3 safety relief valves. Safety relief valves will be designed in accordance with ASME Section III requirements.

TABLE 3.9N-8 (Cont)

6. The maximum pressure resulting from upset, or faulted conditions, shall not exceed the tabulated factors listed under P_{max} times the design pressure or the rated pressure at the applicable operating condition temperature. If the pressure rating limits are met at the operating conditions, the stress limits in Table 3.9N-4 are considered to be satisfied.

TABLE 3.9N-9

ACTIVE PUMPS[1]

Pump	Item No.	System	ANS Safety Class	Normal Mode	Post-LOCA Mode	Function
Centrifugal charging pumps #1, #2 or #3	APCH	CVCS	2	ON/OFF	ON	High head safety injection, also boration for safe shutdown
Boric acid transfer pumps #1 or #2	APBA	CVCS	3	ON/OFF	OFF	Boration for safe shutdown
Low head safety injection pumps #1 or #2	APLH	SIS	2	OFF*	ON	Low head safety injection

NOTE:

* Low head pumps operate during refueling to fill the reactor cavity from the RWST.

1) This pump listing is for Design Applicability of "Active" Components. For test requirements of those pumps contained in the BVPS-2 IST Program, see the BVPS-2 Inservice Testing Program for Pumps and Valves (ASME OM Code).

TABLE 3.9N-10

ACTIVE VALVES (W SCOPE)

Mark No.	Vendor Mark No.	System	Actuated By	Type/ Safety Class	Normal Position	Function
2RCS*MOV535,536,537	8000A/B/C	RCS	Motor	Gate/1	O	Block valve
2RCS*RV551A,B,C	8010A/B/C	RCS	Self	Safety/1	-	RCS pressure protection
2RCS*AOV519	8028	RCS	Air	Diaphragm/2	C	Containment isolation
2RCS*AOV101	8033	RCS	Air	Diaphragm/2	C	Containment isolation
2RCS*SOV200A,B	8035A/B	RCS	Solenoid	Globe/1	C	Head vent isolation
2RCS*SOV201A,B	8038A/B	RCS	Solenoid	Globe/1	C	Head vent isolation
2RCS*HCV250A,B	HCV-443A/B	RCS	Solenoid	Globe/2	C	Head vent discharge
2RCS*PCV455C,D	PCV-455C/D	RCS	Solenoid	Globe/1	C	PORV - pzr relief valve
2RCS*PCV456	PCV-456	RCS	Solenoid	Globe/1	C	PORV - pzr relief valve

TABLE 3.9N-10 (Cont)

Mark No.	Vendor Mark No.	System	Actuated By	Type/ Safety Class	Normal Position	Function
2CHS*MOV381	8100	CVCS	Motor	Gate/2	O	Containment isolation-seal return
2CHS*MOV350	8104	CVCS	Motor	Globe/2	C	BATP discharge isolation
2CHS*MOV289	8107	CVCS	Motor	Gate/2	O	Charging/Containment isolation
2CHS*MOV378	8112	CVCS	Motor	Gate/2	O	Containment isolation-seal return
2CHS*MOV308A-C	8113A/B/C	CVCS	Motor	Globe/2	O	Containment isolation-seal injection
2CHS*MOV8130A/B	8130A/B	CVCS	Motor	Gate/2	O	CCP suction isolation
2CHS*MOV8131A/B	8131A/B	CVCS	Motor	Gate/2	O	CCP suction isolation
2CHS*MOV8132A/B	8132A/B	CVCS	Motor	Gate/2	O	CCP discharge isolation
2CHS*MOV8133A/B	8133A/B	CVCS	Motor	Gate/2	O	CCP discharge isolation
2CHS*MOV310	8146	CVCS	Motor	Gate/2	O	Charging isolation
2CHS*AOV200A/C	8149A/C	CVCS	Air	Globe/2	C	Letdown/containment isolation
2CHS*AOV200B	8149B	CVCS	Air	Globe/2	O	Letdown/containment isolation
2CHS*AOV204	8152	CVCS	Air	Globe/2	O	Containment isolation
2CHS*MOV201	8153	CVCS	Motor	Globe/1	C	RCPB
2CHS*75,76	8314A/B	CVCS	Self	Check/3	-	BATP discharge

TABLE 3.9N-10 (Cont)

Mark No.	Vendor Mark No.	System	Actuated By	Type/ Safety Class	Normal Position	Function
2CHS*474,475,476	8367A/B/C	CVCS	Weight	Check/1	-	RCPB (seal injection)
2CHS*188,189,190	8368A/B/C	CVCS	Self	Check/1	-	RCPB (seal injection)
2CHS*784,785	8377A/B	CVCS	Self	Check/1	-	RCPB (press. spray)
2CHS*870,871	8378A/B	CVCS	Self	Check/1	-	RCPB (norm. charging)
2CHS*31	8381 (Spare)	CVCS	Weight	Check/2	-	Containment isolation
2CHS*18	8440	CVCS	Self	Check/2	-	VCT to CCP suction
2CHS*136	8442	CVCS	Self	Check/2	-	BATP to CCP suction
2CHS*152,153,154	8480A/B/C	CVCS	Self	Check/2	-	CCP miniflow
2CHS*22,23,24	8481A/B/C	CVCS	Self	Check/2	-	CCP discharge
2CHS*LCV115B/D	LCV-115B/D	CVCS	Motor	Gate/2	C	RWST to CCP suction
2CHS*LCV115C/E	LCV-115C/E	CVCS	Motor	Gate/2	O	VCT to CCP suction
2CHS*LCV460A/B	LCV-460A/B	CVCS	Air	Globe/1	O	Letdown stop valve

TABLE 3.9N-10 (Cont)

Mark No.	Vendor Mark No.	System	Actuated By	Type/ Safety Class	Normal Position	Function
2CHS*FCV113A	--	CVCS	Air	Globe/3	C	Train A boration
2RHS*MOV701A,B	8701A/B	RHRS	Motor	Gate/1	C	RHR suction isolation
2RHS*MOV702A,B	8702A/B	RHRS	Motor	Gate/1	C	RHR suction isolation
2RHS*MOV720A,B	8703A/B	RHRS	Motor	Gate/1	C	RHR discharge isolation
2RHS*3,4	8704A/B	RHRS	Self	Check/2	-	RHR pump discharge

TABLE 3.9N-10 (Cont)

Mark No.	Vendor Mark No.	System	Actuated By	Type/ Safety Class	Normal Position	Function
2SIS*MOV840	8800	SIS	Motor	Globe/2	C	Containment isolation
2SIS*MOV867C/D	8801A/B	SIS	Motor	Gate/2	C	ECCS injection flowpath
2SIS*MOV867A/B	8803A/B	SIS	Motor	Gate/2	C	ECCS injection flowpath
2SIS*MOV865A/B/C	+8808A/B/C	SIS	Motor	Gate/2	O	Accumulator discharge isolation
2SIS*MOV8809A/B	8809A/B	SIS	Motor	Gate/2	O	LHSI pump suction isolation
2SIS*MOV8811A/B	8811A/B	SIS	Motor	Gate/2	C	Recirculation pump discharge
2SIS*MOV863A/B	8812A/B	SIS	Motor	Gate/2	C	LHSI header to HHSI pump suction
2SIS*MOV869A	8814	SIS	Motor	Gate/2	C	Cont. iso. H.L. injection
2SIS*MOV869B	8816	SIS	Motor	Gate/2	C	Cont. iso. H.L. injection
2SIS*MOV842	8871	SIS	Motor	Globe/2	C	Containment isolation
2GNS*AOV101-1/-2	8880A/B	SIS	Air	Globe/2	C	Containment isolation
2SIS*MOV836	8885	SIS	Motor	Gate/2	C	ECCS flowpath to cold legs
2SIS*MOV8887A/B	8887A/B	SIS	Motor	Gate/2	O	LHSI C.L. to H.L. crossconnect
2SIS*MOV8888A/B	8888A/B	SIS	Motor	Gate/2	O	LHSI C.L. injection path
2SIS*MOV8889	8889	SIS	Motor	Gate/2	C	H.L. injection path

+ Procured as active; during normal operation, valves are open with power removed.

TABLE 3.9N-10 (Cont)

Mark No.	Vendor Mark No.	System	Actuated By	Type/ Safety Class	Normal Position	Function
2SIS*MOV8890A/B	8890A/B	SIS	Motor	Gate/2	C	LHSI miniflow
2SIS*MOV841	8892	SIS	Motor	Gate/2	O	ECCS injection flowpath
2SIS*27	8926	SIS	Self	Check/2	-	RWST to CCP pumps suction
2SIS*141,145,151	8948A/B/C	SIS	Self	Check/1	-	RCPB, accumulator injection
2SIS*142,147,148	8956A/B/C	SIS	Self	Check/1	-	RCPB, accumulator injection
2SIS*AOV889	8961	SIS	Air	Globe/2	C	Containment isolation
2SIS*107,108,109	8973A/B/C	SIS	Self	Check/1	-	RCPB
2SIS*6,7	8976A/B	SIS	Self	Check/2	-	LHSI pump discharge
2SIS*128,129	8988A/B	SIS	Self	Check/1	-	RCPB
2SIS*122,123,124	8990A/B/C	SIS	Self	Check/1	-	RCPB
2SIS*125,126,127	8992A/B/C	SIS	Self	Check/1	-	RCPB
2SIS*545,546,547	8993A/B/C	SIS	Self	Check/1	-	RCPB
2SIS*134,135,136	8995A/B/C	SIS	Self	Check/1	-	RCPB
2SIS*137,138,139	8997A/B/C	SIS	Self	Check/1	-	RCPB
2SIS*548,550,552	8998A/B/C	SIS	Self	Check/1	-	RCPB
2SIS*HCV868A/B	HCV-937A/B	SIS	Solenoid	Globe/2	C	Emergency boration, safe shutdown

NOTE: This valve listing is for design applicability of "active" components.

For test requirements of those valves contained in the BVPS-2 IST Program, see the BVPS-2 Inservice Testing Program for Pumps and Valves (ASME OM Code).

TABLE 3.9N-11

MAXIMUM DEFLECTIONS ALLOWED FOR REACTOR INTERNAL SUPPORT STRUCTURES

Component	Allowable Deflections (in)	No-Loss-of Functions Deflections (in)
Upper barrel		
Radial inward	4.1	8.2
Radial outward	1.0	1.5
Upper package	0.10	0.15
Rod cluster guide tubes	1.00	1.75

TABLE 3.9N-12

STRESS LIMITS FOR REACTOR VESSEL INTERNAL STRUCTURES

Operating Condition	Stress Categories and Limit of Stress Intensities
Normal and Upset	Figure NG 3221.1
Faulted	Appendix F, Section 3 Rules for Evaluating Faulted Conditions and NG 3,200 as applicable.

TABLE 3.9N-13

LOADING COMBINATIONS FOR CORE SUPPORT STRUCTURES

Condition Classification	Loading Combination
Normal	Normal condition transients, temperature, pressure deadweight
Upset	Upset condition transients, temperature, pressure deadweight, operating basis earthquake
Faulted	Faulted condition transients, temperature, pressure deadweight safe shutdown earthquake or (safe shutdown earthquake and pipe rupture loads)

TABLE 3.9N-14

ALLOWABLE STRESSES FOR CORE SUPPORT STRUCTURES

Operating Condition Classification	Stress Limits ASME Section III
Normal and Upset	$P_m \leq S_m$; $P_m + P_a \leq 1.5\ S_m$; $P_m + P_b + Q \leq 3\ S_m$
Faulted	$P_m \leq 2.4\ S_m$; $P_m + P_b \leq 3.6\ S_m$

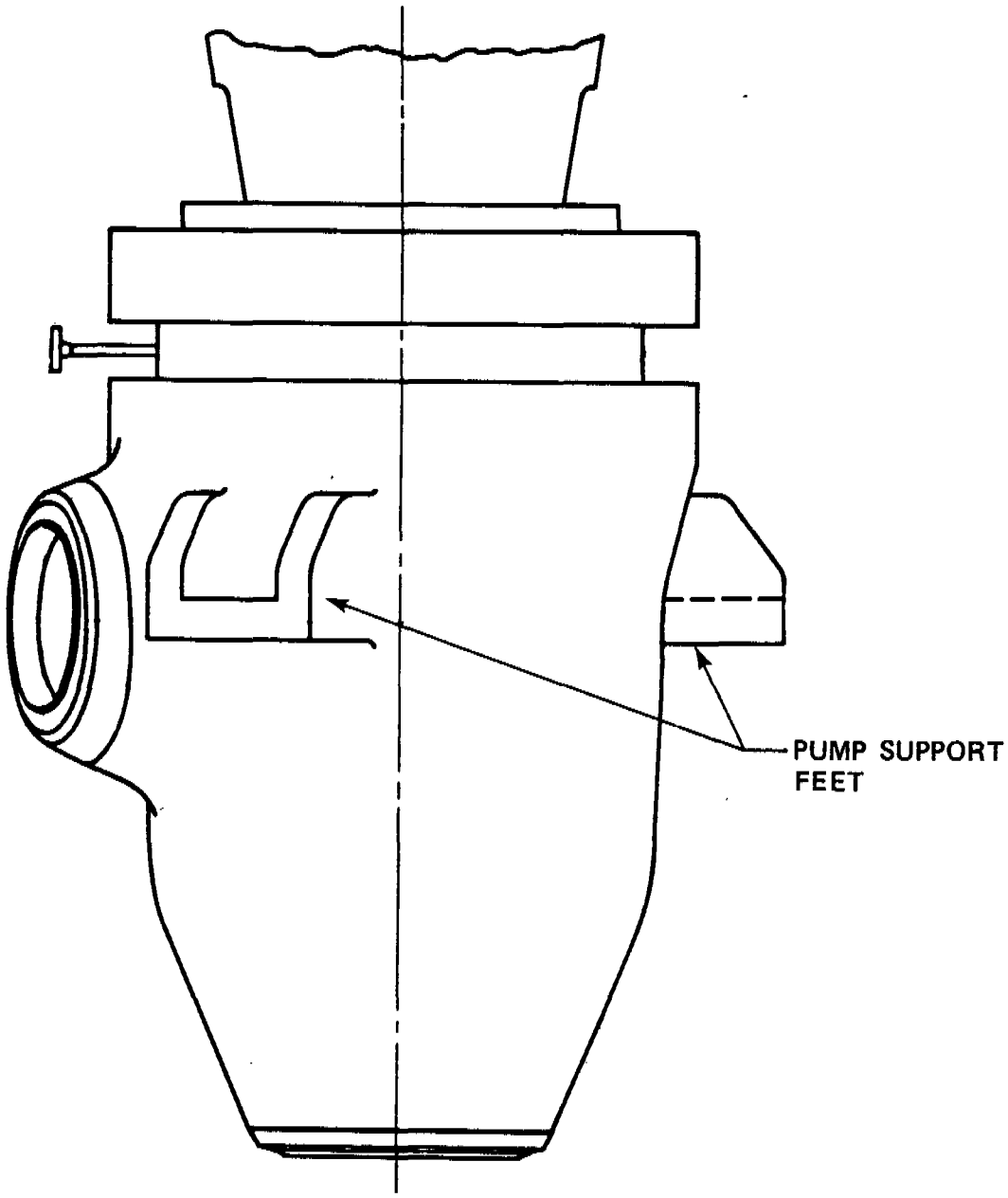

FIGURE 3.9N-1
REATOR COOLANT PUMP
CASING WITH SUPPORT FEET
BEAVER VALLEY POWER STATION-UNIT 2
FINAL SAFETY ANALYSIS REPORT

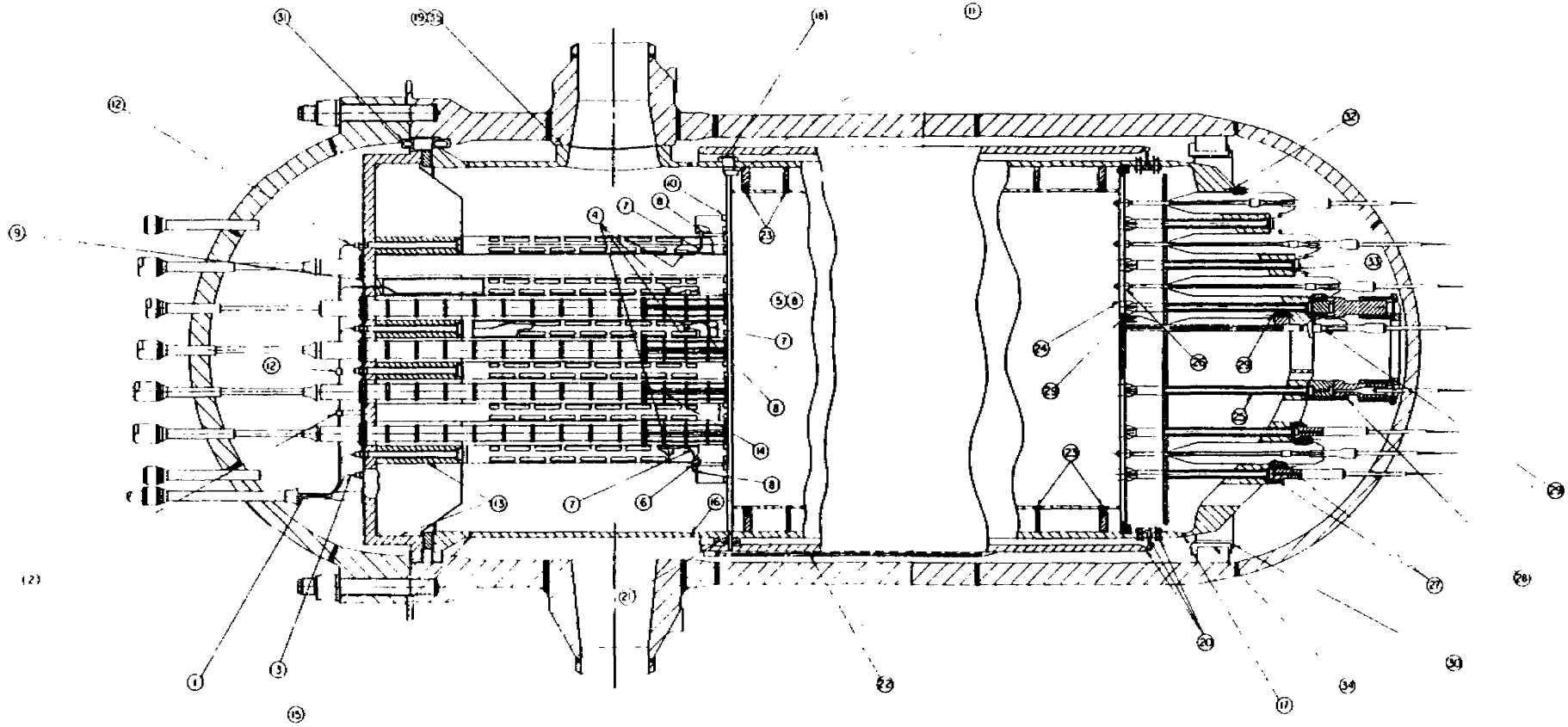

FIGURE 3.9N-2 (SHEET 1)
VIBRATION CHECK-OUT FUNCTIONAL TEST INSPECTION POINTS
BEAVER VALLEY POWER STATION-UNIT 2
FINAL SAFETY ANALYSIS REPORT

		FEATURES TO BE EXAMINED
UPPER INTERNALS	1	THERMOCOUPLE CONDUIT CLAMPS INSIDE THE THERMOCOUPLE COLUMN
	2	CLAMP ARRANGEMENTS AT THE MOUNTING BRACKET LOCATIONS
	3	PLUG TO CONDUIT WELD AT THE FIVE SUPPORT COLUMNS ADJACENT TO THE THERMOCOUPLE COLUMNS
	4	ACCESSIBLE ANGLE CONDUIT CLAMPS INSIDE THE UPPER SUPPORT COLUMNS
	5	ACCESSIBLE WELD JOINTS AT THE THERMOCOUPLE STOP FOR THE SELF INSTRUMENTED COLUMNS
	6	WELD JOINTS ON ACCESSIBLE SUPPORT COLUMN AND MIXING DEVICE GUSSETS (THERMOCOUPLE SUPPORT HARDWARE)
	7	RIGIDITY OF EXPOSED PORTION OF THERMOCOUPLE CONDUIT RUNS. AT ACCESSIBLE LOCATIONS. (INSIDE SUPPORT COLUMNS – LOWER END)
	8	RIGIDNESS OF THE ACCESSIBLE PROTRUDING THERMOCOUPLE TIPS
	9	THERMOCOUPLE COLUMN AND GUIDE TUBE SCREW LOCKING DEVICES
	10	ACCESSIBLE SUPPORT COLUMN MIXING DEVICE. ORIFICE PLATE. AND CORE PLATE INSERT SCREW LOCKING DEVICES
	11	UPPER CORE PLATE INSERTS
	12	CONDUIT CONNECTOR FITTINGS AND CROSS RUN CLAMP ARRANGEMENTS
	13	DEEP BEAM WELDS AT THE SKIRT AND AT THE OUTER HOLLOW ROUNDS
	14	ACCESSIBLE GUIDE TUBE WELDS
LOWER INTERNALS	15	UPPER BARREL TO FLANGE GIRTH WELD
	16	UPPER BARREL TO LOWER BARREL GIRTH WELD
	17	LOWER BARREL TO CORE SUPPORT GIRTH WELD
	18	UPPER CORE PLATE ALIGNING PIN WELDS AND BEARING SURFACES
	19	OUTLET NOZZLE INTERFACE SURFACE CONDITION
	20	THERMAL SHIELD FLEXURE ARM. ATTACHMENTS TO BARREL, AND WELD TO THE THERMAL SHIELD. DYE PENETRANT INSPECT ALL SIX
	21	THERMAL SHIELD INTERFACE AT THE HANG OFF PADS
	22	IRRADIATION SPECIMEN BASKET WELDS
	23	BAFFLE ASSEMBLY SCREW LOCKING ARRANGEMENTS AT THE TWO TOP AND THE TWO BOTTOM FORMER ELEVATIONS
	24	CORE SUPPORT COLUMN TO LOWER CORE PLATE SCREW LOCKING DEVICES. (24 RANDOMLY CHOSEN)
	25	CORE SUPPORT COLUMN ADJUSTING SLEEVES
	26	ACCESSIBLE (2) INSTRUMENTATION GUIDE COLUMN LOCKING COLLARS NEAREST THE MANWAY
	27	LOCKING DEVICES OF THE BOTTOM INSTRUMENTATION GUIDE COLUMNS
	28	LOCKING DEVICES OF THE SECONDARY CORE SUPPORT
	29	ACCESSIBLE LOCKING DEVICES OF THE OFF-SET INSTRUMENTATION COLUMN (UPPER AND LOWER ENDS)
	30	RADIAL SUPPORT KEY LOCKING ARRANGEMENTS AND BEARING SURFACES
	31	HEAD AND VESSEL ALIGNING PIN SCREW LOCKING DEVICES AND BEARING SURFACES
	32	CONTACT AT INTERFACE OF THE ACCESSIBLE INSTRUMENTATION GUIDE COLUMNS
	33	CONTACT AT INTERFACE OF THE ACCESSIBLE CORE SUPPORT COLUMN NUTS
VESSEL	34	VESSEL CLEVIS LOCKING ARRANGEMENTS AND BEARING SURFACES
	35	VESSEL NOZZLE INTERFACE SURFACE CONDITION

FIGURE 3.9N-2 (SHEET 2)
VIBRATION CHECK-OUT FUNCTIONAL TEST INSPECTION POINTS
BEAVER VALLEY POWER STATION-UNIT 2
FINAL SAFETY ANALYSIS REPORT

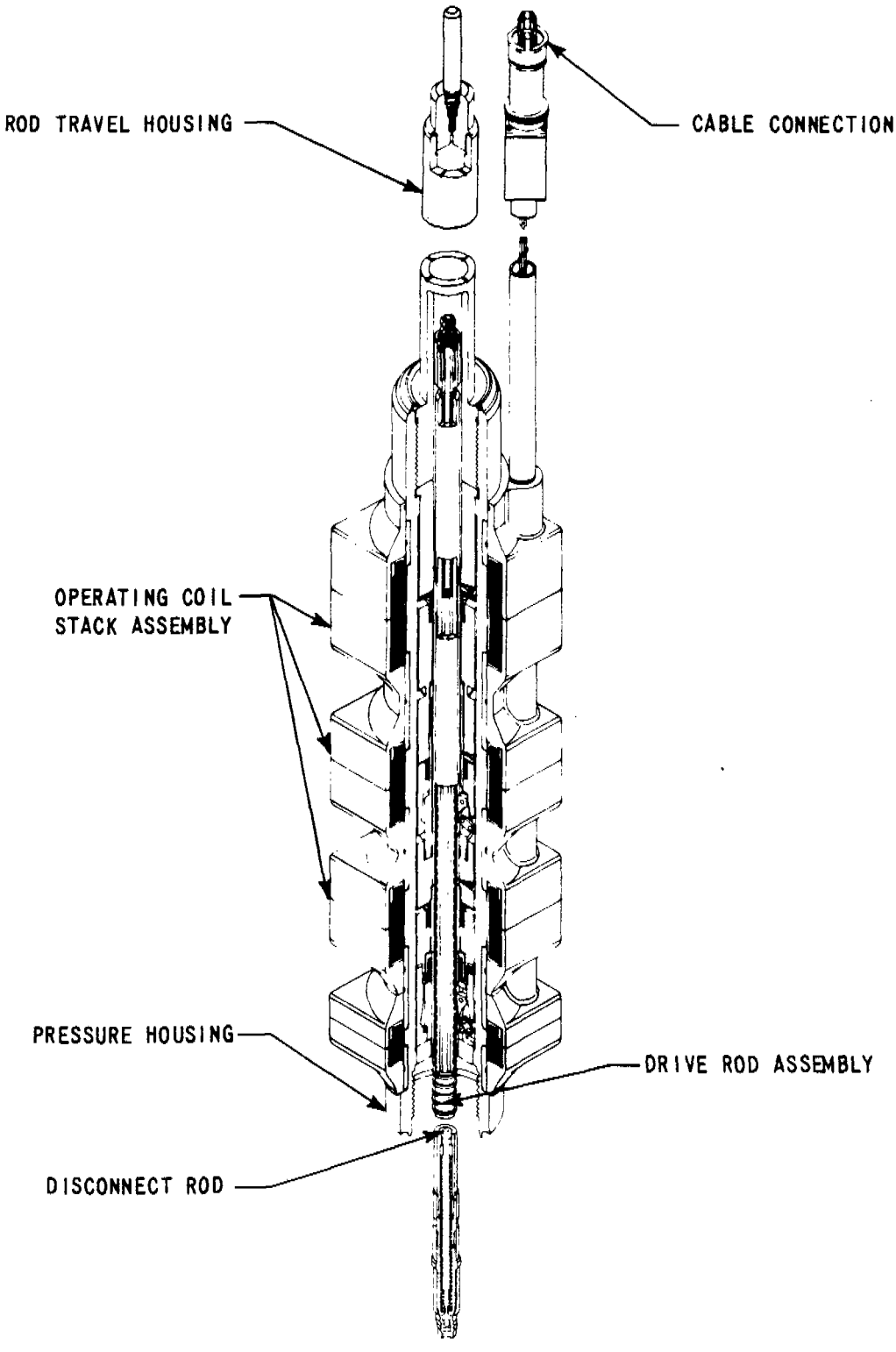

FIGURE 3.9 N - 3
CONTROL ROD DRIVE MECHANISM
BEAVER VALLEY POWER STATION-UNIT 2
FINAL SAFETY ANALYSIS REPORT

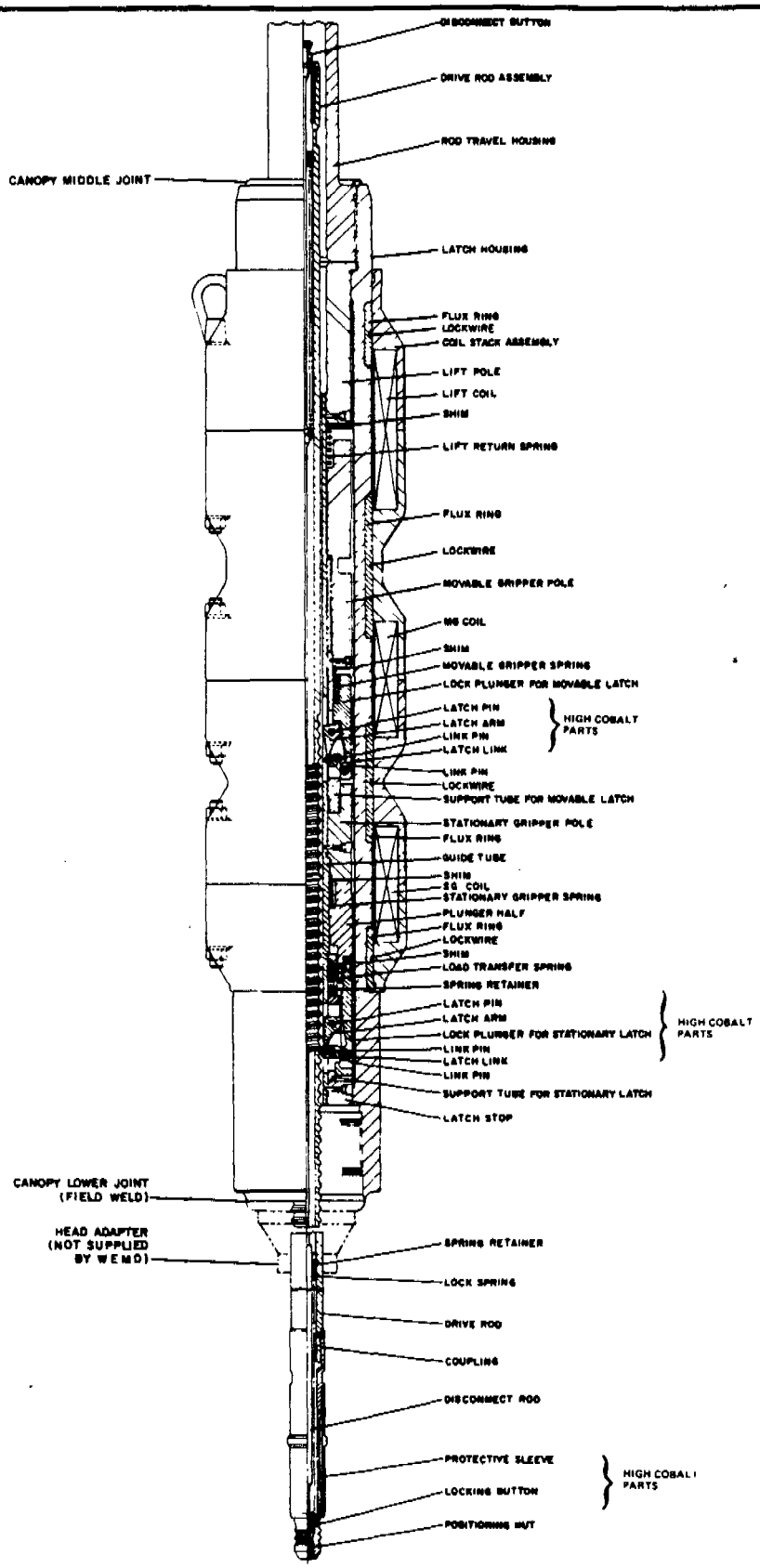

FIGURE 3.9 N - 4
CONTROL ROD DRIVE
MECHANISM SCHEMATIC
BEAVER VALLEY POWER STATION-UNIT 2
FINAL SAFETY ANALYSIS REPORT

BEFORE LOAD TRANSFER

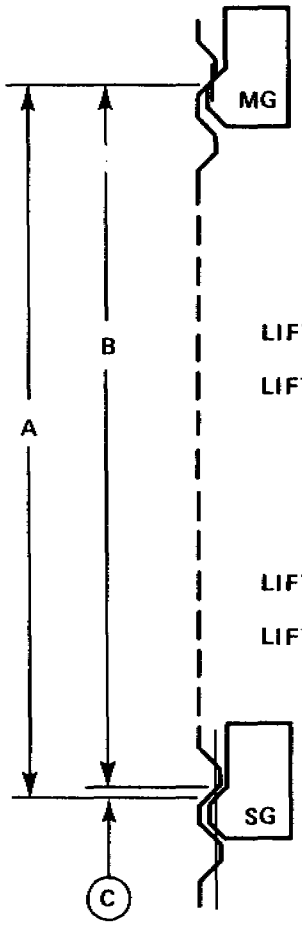

	AT 70°		
	A	B	C
LIFT COIL OFF	13.133	13.125	0.008
LIFT COIL ON	13.758	13.750	0.008

	AT 650°		
	A	B	C
LIFT COIL OFF	13.203	13.174	0.029
LIFT COIL ON	13.848	13.802	0.046

AFTER LOAD TRANSFER

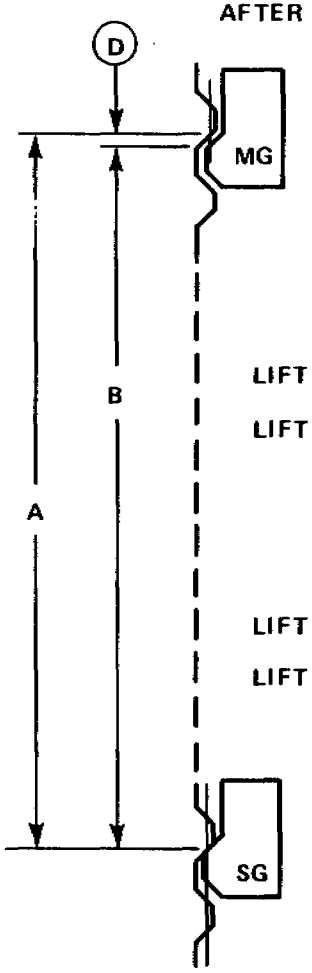

	AT 70°		
	A	B	D
LIFT COIL OFF	13.125	13.070	0.055
LIFT COIL ON	13.750	13.695	0.055

	AT 650°		
	A	B	D
LIFT COIL OFF	13.174	13.123	0.051
LIFT COIL ON	13.802	13.768	0.034

FIGURE 3.9N-5
NOMINAL LATCH CLEARANCE MINIMUM AND MAXIMUM TEMPERATURE
BEAVER VALLEY POWER STATION-UNIT 2
FINAL SAFETY ANALYSIS REPORT

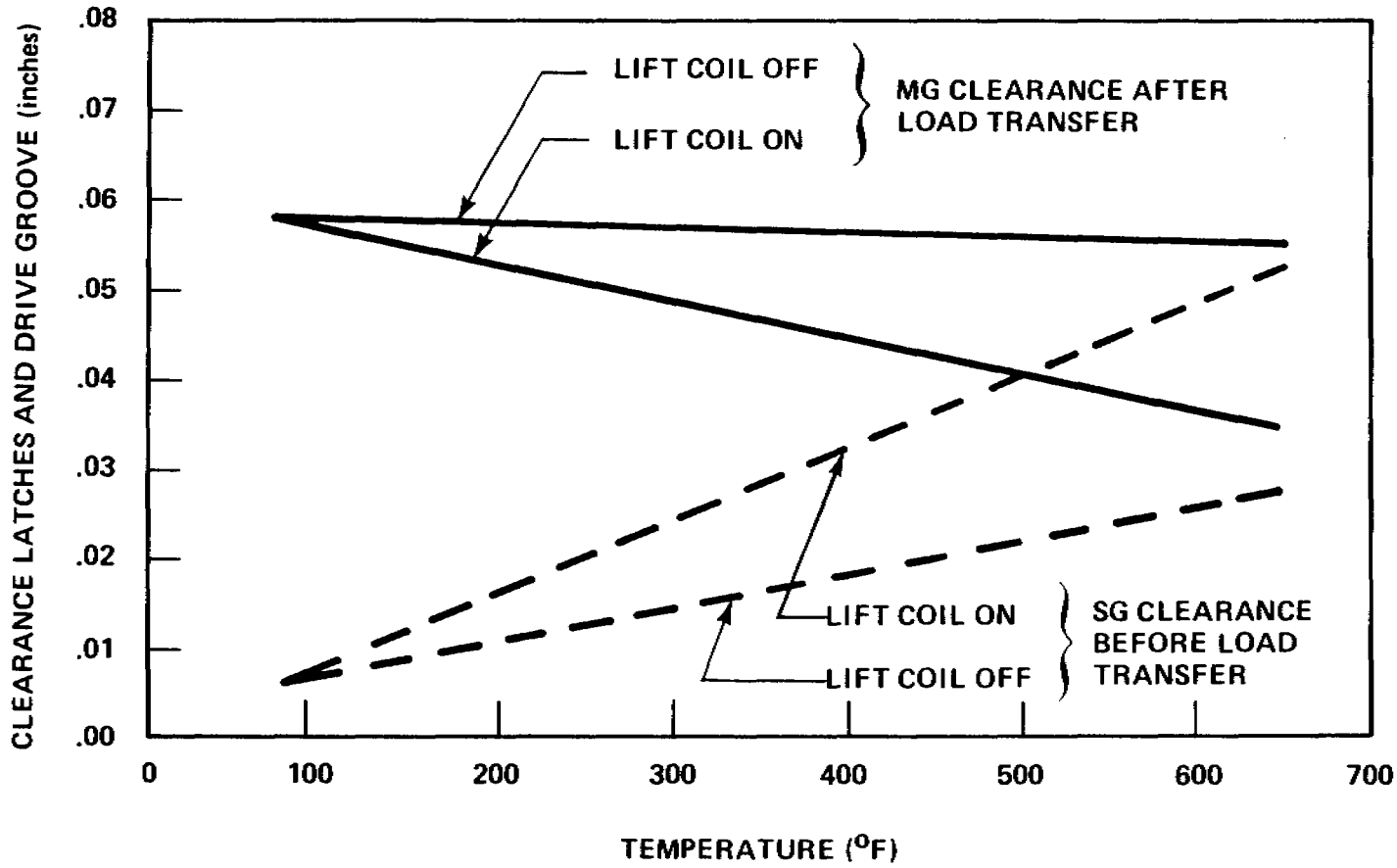

FIGURE 3.9N-6
CONTROL ROD DRIVE MECHANISM
LATCH CLEARANCE THERMAL EFFECT
BEAVER VALLEY POWER STATION-UNIT 2
FINAL SAFETY ANALYSIS REPORT

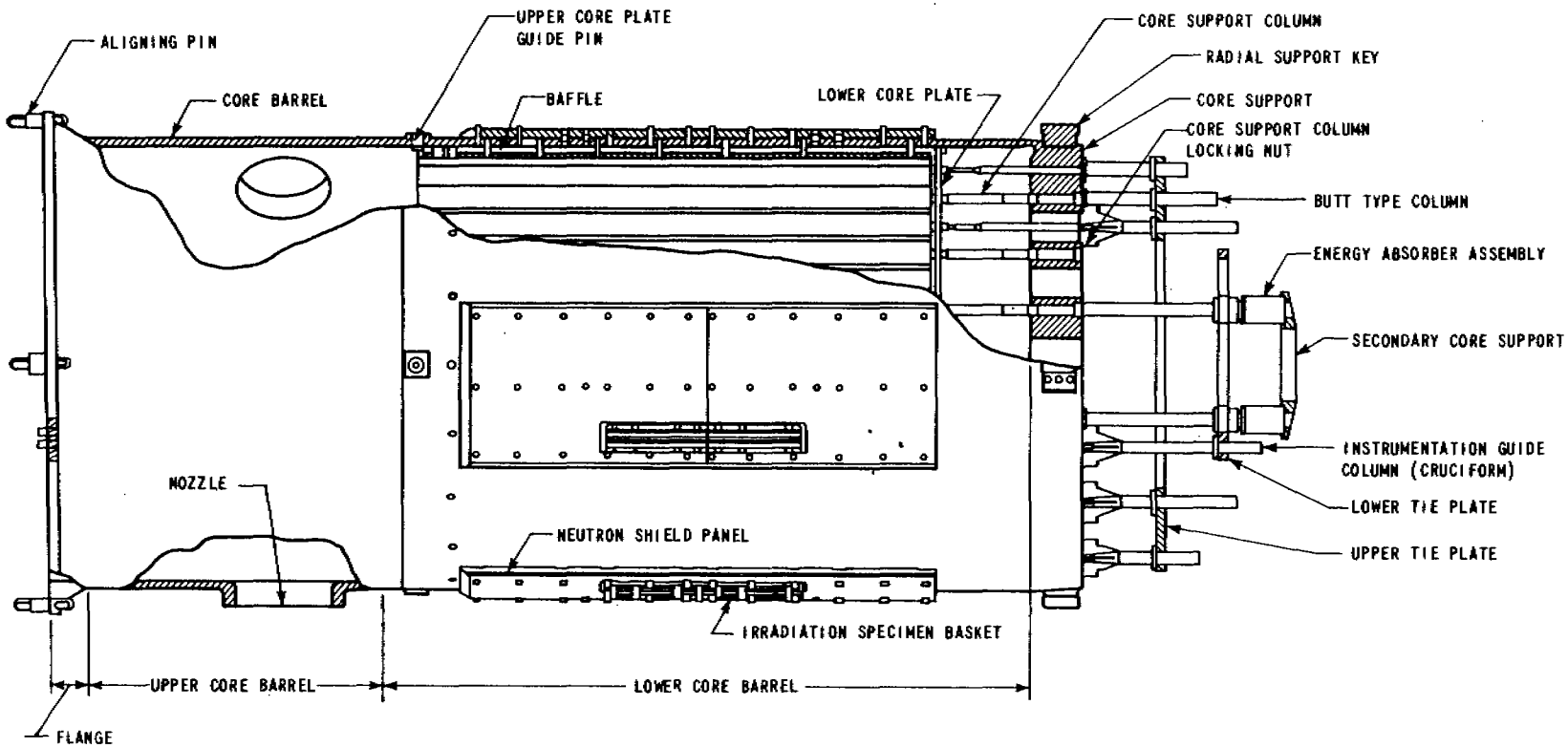

FIGURE 3.9N-7
LOWER CORE SUPPORT ASSEMBLY
(CORE BARREL ASSEMBLY)
BEAVER VALLEY POWER STATION-UNIT 2
FINAL SAFETY ANALYSIS REPORT

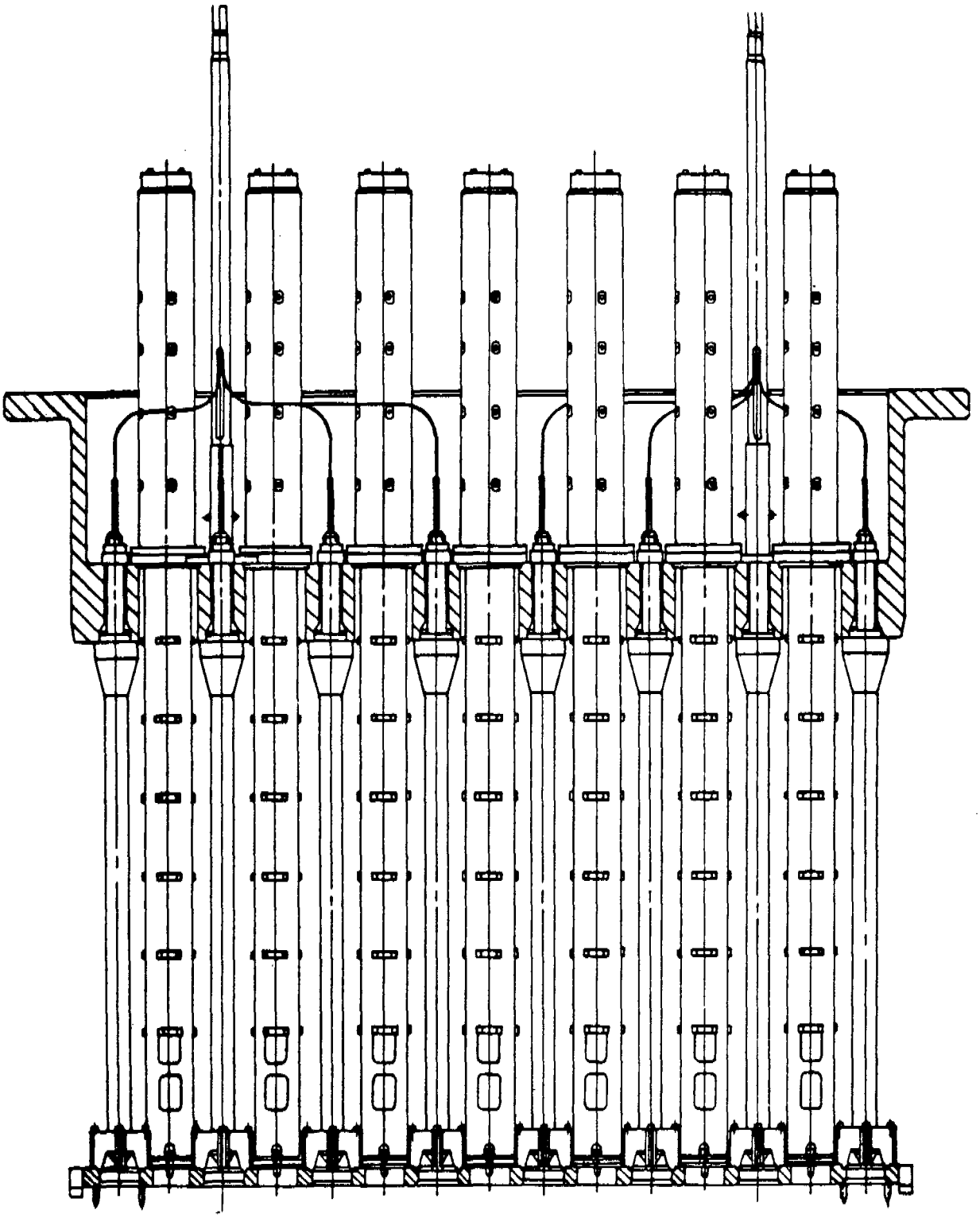

FIGURE 3.9N-8
UPPER CORE SUPPORT STRUCTURE
BEAVER VALLEY POWER STATION-UNIT 2
FINAL SAFETY ANALYSIS REPORT

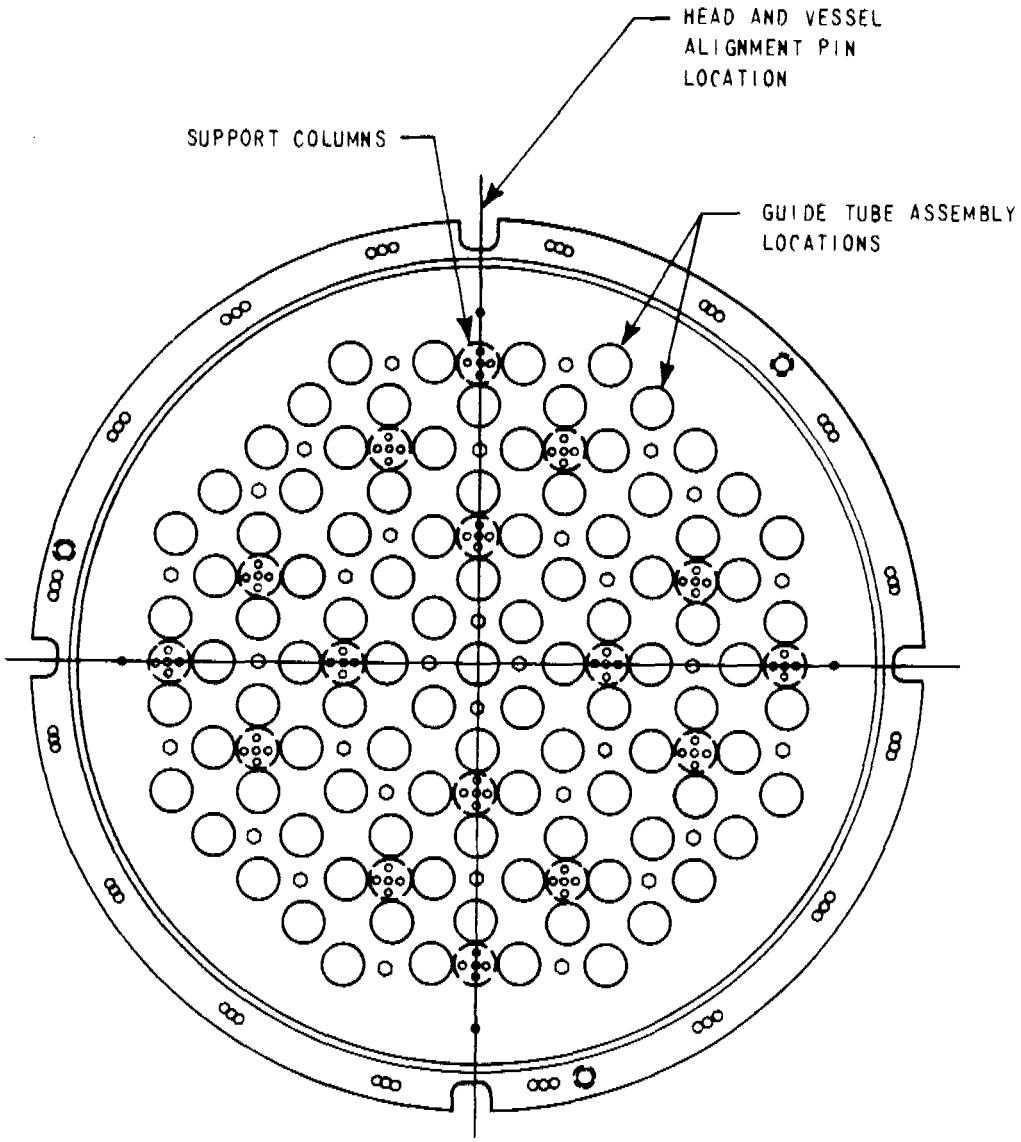

FIGURE 3.9N-9
PLAN VIEW OF UPPER CORE
SUPPORT STRUCTURE
BEAVER VALLEY POWER STATION-UNIT 2
FINAL SAFETY ANALYSIS REPORT

3.10 SEISMIC QUALIFICATION OF SEISMIC CATEGORY I INSTRUMENTATION AND ELECTRICAL EQUIPMENT

Sections whose identification numbers include the letter B contain material within balance-of-plant (BOP) scope, while sections whose identification numbers include the letter N contain material within the nuclear steam supply system (NSSS) scope.

3.10B.1 Seismic Qualification Criteria

Seismic Category I instrumentation and electrical equipment are designed to maintain the capability to:

1. Initiate a protective action during the safe shutdown earthquake (SSE),

2. Withstand seismic disturbances during post-accident operation without loss of safety function.

There is no requirement that a SSE and Design Basis Accident (DBA) be considered simultaneously for accident analytical purposes. The above criteria apply to safety related SSC design considerations only.

Instrumentation and electrical equipment are seismically qualified in accordance with general instructions for earthquake requirements (Section 3.7B.3.1). These requirements conform with, or exceed, those outlined in IEEE Standard 344-1971, and are in agreement with the acceptance criteria in SRP 3.10, Rev. 1, 11-75 (NUREG-75-087). Although not required (due to Beaver Valley's docket date being before October 27, 1972), IEEE 344-1975 was employed for seismic qualification of Seismic Category I electrical equipment when feasible. Instrumentation and electrical equipment may be tested as individual components, as part of a simulated structural section, or as part of a completely assembled module or unit.

3.10B.2 Methods and Procedures for Qualifying Electrical Equipment and Instrumentation

The response of racks, panels, cabinets, and consoles is considered in assessing the seismic capability of instrumentation and electrical equipment. As a minimum, mounted equipment is qualified to acceleration levels consistent with those transmitted by supporting structures. A design objective is to minimize amplification of floor acceleration by supporting members to mounted equipment.

Determination of amplification and seismic adequacy of instrumentation and electrical equipment are implemented by the analysis and testing methods outlined in Section 3.7B.3.1.

3.10B.3 Methods and Procedures of Analysis or Testing of Supports of Electrical Equipment and Instrumentation

Supports for Seismic Category I electrical equipment, instrumentation, and control systems are seismically qualified by the analysis and testing procedures outlined in Section 3.7B.3.1. Supports are designed to withstand the combined effects of normal operating loads

acting simultaneously with horizontal and vertical components of earthquake loading and must retain their functional capability and structural integrity as applicable. When qualified by analysis, stress levels permitted under applicable codes. If there are no applicable codes, the stress level under the combined loading for an operating basis earthquake (OBE) does not exceed 75 percent of the minimum yield strength of the material in accordance with the ASTM specification.

A design objective is to provide supports for electrical equipment, instrumentation, and control systems that are seismically rigid (that is, with fundamental natural frequencies above the cutoff frequency of the relevant amplified response spectra curves). This ensures that amplification of floor accelerations through supporting members to mounted equipment is minimized.

The dynamic analysis method is typically used to establish support spacing for cable trays and conduit. Additionally, restraints are used as necessary to limit the horizontal lateral loads to allowable design values established on the basis of raceway loading and unsupported span lengths. Design provisions for significant differential motions between buildings are made by breaks in raceways if these relative displacements would result in unacceptable equipment or support loadings.

3.10B.4 Operating License Review

The results of testing and analyses that ensure proper implementation of the criteria in Section 3.10B.1 and demonstrate adequate seismic qualification of Seismic Category I instrumentation and electrical equipment were made available at the Seismic Qualification Review Team (SQRT) and Pump and Valve Operability Review Team (PVORT) site audit.

3.10N SEISMIC QUALIFICATION OF SEISMIC CATEGORY I INSTRUMENTATION AND ELECTRICAL EQUIPMENT

This section presents information to demonstrate that instrumentation and electrical equipment classified as Seismic Category I is capable of performing designated safety-related functions in the event of an earthquake. The information presented includes identification of the Category I instrumentation and electrical equipment that are within the scope of the Westinghouse NSSS, the qualification criteria employed, and for each item of equipment; the designated safety-related functional requirements, definition of the applicable seismic environment and documentation of the qualification process employed to demonstrate the required seismic capability.

There is no requirement that a Safe Shutdown Earthquake (SSE) and Design Basis Accident (DBA) be considered simultaneously for accident analytical purposes. The above provisions apply to safety related SSC design considerations only.

3.10N.1 Seismic Qualification Criteria

3.10N.1.1 Qualification Standards

The U.S. Nuclear Regulatory Commission's (USNRC) recommendations concerning the methods to be employed for seismic qualification of electrical equipment endorse IEEE Standard 344-1971. Westinghouse Electric Corporation (Westinghouse) meets or exceeds the requirements

appropriate combination of these methods. Westinghouse meets this commitment either under the Westinghouse Supplemental Qualification Program (Westinghouse 1975) or as defined in the final version of WCAP 8587 (Butterworth and Miller 1979). Regulatory Guide 1.100 Seismic Qualification of Electrical Equipment for Nuclear Power Plants does not directly apply to Beaver Valley Power Station-Unit-2 (BVPS-2) due to its docket date being before July, 1974.

Morrone (1971) presents the Westinghouse testing procedure used to qualify equipment by type testing. Seismic qualification testing of equipment to IEEE Standard 344-1971 is documented according to Potochnik (1971), Reid (1972), and Vogeding (1971a, 1971b, 1971c, 1974). Fisher and Jarecki (1974) present the theory, practice, and justification for the use of single axis sine beats test inputs used in seismic qualification. In addition, it is noted that Westinghouse has conducted a seismic qualification Demonstration Test Program to confirm equipment operability during a seismic event (Westinghouse 1975).

For the seismic qualification of Westinghouse electrical equipment outside of the containment, the previously noted demonstration test program, in conjunction with the justification for the use of single-axis sine-beat tests (Figenbaum and Vogeding 1974) and the original tests documented by Vogeding (1971a, 1971b, 1971c, 1974), Potochnik (1971), Reid (1972); and Figenbaum and Vogeding (1974) meets or exceeds the requirements of IEEE Standard 344-1971.

Thus, since the Demonstration Test Program was successfully completed, the equipment's operability has been demonstrated to meet or exceed the requirements of IEEE Standard 344-1971.

The acceptability criteria for the SSE notes that there may be permanent deformation of the equipment, provided that the capability to perform its function is maintained.

The BOP instrumentation and electrical equipment which are designed to withstand the SSE horizontal and vertical accelerations at each floor level are discussed in Section 3.10B.

3.10N.1.2 Performance Requirements for Seismic Qualification

For NSSS instrumentation and electrical equipment classified as Seismic Category I and covered under the supplemental qualification program, qualification requirements can be found in Westinghouse (1975). WCAP 8587 (Westinghouse 1978) contains an Equipment Qualification Data Package (EQDP) for that NSSS instrumentation and electrical Seismic Category I equipment which has been upgraded to the criteria defined in WCAP-8587 (Butterworth and Miller 1979). Each EQDP in WCAP 8587 (Westinghouse 1978) contains a section entitled Performance Specifications. This specification establishes the safety-related functional requirements of the equipment to be

demonstrated during and after a seismic event. The required response spectrum (RRS) employed by Westinghouse for generic seismic qualification is also identified in the specification, as applicable. Complete results of qualification of safety-related electrical and mechanical equipment were made available at the NRC's Seismic Qualification Review Team (SQRT) and Pump and Valve Operability Review Team (PVORT) site audits.

3.10N.1.3 Acceptance Criteria

Seismic qualification must demonstrate that Category I instrumentation and electrical equipment is capable of performing designated safety-related functions during and after an earthquake of magnitude up to and including the OBE and SSE without the initiation of undesired spurious actuation which might result in consequences adverse to safety. The qualification will also demonstrate the structural integrity of mechanical supports and structures at the OBE level. Some permanent mechanical deformation of supports and structures is acceptable at the SSE level providing that the ability to perform the designated safety-related functions is not impaired.

3.10N.2 Methods and Procedures for Qualifying Electrical Equipment and Instrumentation

In order to meet or exceed the requirements of IEEE Standard 344-1971, seismic qualification of safety-related electrical equipment is demonstrated by either type testing, analysis, or a combination of these methods. The choice of qualification method employed by Westinghouse for a particular item of equipment is based upon many factors; including practicability, complexity of equipment, economics, availability of previous seismic qualification earlier standards, etc. The qualification method employed for a particular item of equipment is identified in the applicable qualification document or EQDP.

3.10N.2.1 Seismic Qualification by Type Test

From 1969 to mid-1974, Westinghouse seismic test procedures employed single axis sine beat inputs in accordance with IEEE Standard 344-1971 to seismically qualify equipment. The input form selected by Westinghouse was chosen following an investigation of building responses to seismic events as reported by Morrone (1971). In addition, Westinghouse has conducted seismic retesting of certain items of equipment as part of the Supplemental Qualification Program (Westinghouse 1975). This retesting was performed at the request of the USNRC staff on agreed selected items of equipment employing multi-frequency, multi-axis test inputs (Jarecki 1975) to demonstrate the conservatism of the original sine-beat test method with respect to the modified methods of testing for complex equipment recommended by IEEE Standard 344-1975, which is not required for BVPS-2, but where possible, was employed.

Where possible, testing utilizes multi-frequency, multi-axis, inputs, developed by the general procedures outlined by Jarecki (1975). The test results contained in the individual EQDPs Westinghouse (1978) demonstrate that the measured test response spectrum envelopes the applicable RRS defined for generic testing as specified in Section 1 of the EQDP (Westinghouse 1978). Qualification for plant specific use is established by verification that the generic RRS specified by Westinghouse envelops the applicable plant specific response spectrum. Alternative test methods, such as single frequency, single axis inputs, are used in selected cases.

3.10N.2.2 Seismic Qualification by Analysis

Employing motors as an example, the structural integrity of safety-related motors is demonstrated by a static seismic analysis meeting or exceeding the requirements of IEEE Standard 344-1971.

The analytical models employed and the results of the analysis are described in the applicable qualification document.

3.10N.3 Method and Procedures for Qualifying Supports of Electrical Equipment and Instrumentation

Where supports for the electrical equipment and instrumentation are within the Westinghouse NSSS scope of supply, the seismic qualification tests and/or analysis are conducted including the supplied supports. Where applicable, the appropriate qualification documents identify the equipment mounting employed for qualification purposes and establish interface requirements for the equipment to ensure that the subsequent in-plant installation does not prejudice the qualification established by Westinghouse.

3.10N.4 Operating License Review

The results of tests and analyses that ensure that the criteria established in Section 3.10N.1 have been satisfied, employing the qualification methods described in Sections 3.10N.2 and 3.10N.3, are included in the individual qualification documents or EQDPs.

3.10N.5 References for Section 3.10N

Butterworth, G. and Miller, R. B. 1979. Methodology for Qualifying Westinghouse WRD Supplied NSSS Safety-Related Electrical Equipment. WCAP-8587.

Figenbaum, E. K. and Vogeding, E. L. 1974. Seismic Testing of Electrical and Control Equipment (Type DB Reactor Trip Switchgear) WCAP-7817; Supplement 6, August 1974.

Fischer, E. G. and Jarecki, S. J. 1974. Qualification of Westinghouse Seismic Testing Procedure for Electrical Equipment Tested Prior to May 1974. WCAP-8373.

Jarecki, S. J. 1975. General Method of Developing Multi-Frequency Biaxial Test Inputs for Bistables. WCAP-8634 Proprietary.

Morrone, A. 1971. Seismic Vibration Testing with Sine Beats. WCAP-7558.

Potochnik, L. M. 1971. Seismic Testing of Electric and Control Equipment (Low Seismic Plants). WCAP-7817, Supplement 2.

Reid, J. B. 1972. Seismic Testing of Electrical and Control Equipment (WCID NUCANA 7300 Series) (Low Seismic Plants) WCAP-7817, Supplement 4.

Vogeding, E. L. 1971. Seismic Testing of Electrical and Control Equipment 1970. WCAP-7397-L (Proprietary) January 1970 and WCAP-7817 (Non-Proprietary).

Vogeding, E. L. 1971. Seismic Testing of Electrical and Control Equipment (WCID Process Control Equipment). WCAP-7397-L, Supplement 1 (Propriety) January 1971 and WCAP-7871, Supplement 1 (Non-Proprietary). December 1971.

Vogeding, E. L. 1971. Seismic Testing of Electric and Control Equipment (Westinghouse Solid State Protection System) (Low Seismic Plants). WCAP-7817, Supplement 3.

Vogeding, E. L. 1974. Seismic Testing of Electrical and Control Equipment (Instrument Bus Distribution Panel) (Low Seismic Plants). WCAP-7817, Supplement 5.

Westinghouse 1975. Personal Communication Between C. Eicheldinger (Westinghouse) to D. B. Vassallo (USNRC), letter NS-CE-692, dated July 10, 1975.

Westinghouse 1978. EQDP - Equipment Qualification Data Packages. Supplement 1 to WCAP 8587.

3.11 ENVIRONMENTAL QUALIFICATION OF MECHANICAL AND ELECTRICAL EQUIPMENT

Information on the environmental qualification of Class lE equipment and safety-related mechanical equipment has been provided separately (refer to Table 1.7-3).

The Environmental Qualification Report, as referenced in Table 1.7-3, discusses the initial implementation of environmental qualification of electrical equipment. This document is now considered a historical report only, and is no longer being updated to reflect current EQ program requirements.

The current, ongoing program of environmental qualification for electrical equipment is in accordance with the provisions of 10CFR50.49 and is implemented at BVPS-2 through several administrative procedures.

Tables for Section 3.11

TABLE 3.11-1

ENVIRONMENTAL QUALIFICATION PARAMETERS FOR SAFETY-RELATED EQUIPMENT

Table 3.11-1 has been deleted and information on the environmental qualification of Class 1E equipment and safety-related mechanical equipment has been provided separately (refer to Table 1.7-3).

TABLE 3.11-2

PLANT ENVIRONMENTAL CONDITIONS

Table 3.11-2 has been deleted and information on the environmental qualification of Class 1E equipment and safety-related mechanical equipment has been provided separately (refer to Table 1.7-3).

APPENDIX 3A

COMPUTER PROGRAM FOR DYNAMIC AND STATIC ANALYSIS OF SEISMIC CATEGORY I STRUCTURES, EQUIPMENT, AND COMPONENTS

TABLE OF CONTENTS

APPENDIX 3A

COMPUTER PROGRAMS FOR DYNAMIC AND STATIC ANALYSIS
OF SEISMIC CATEGORY I STRUCTURES, EQUIPMENT
AND COMPONENTS, AND PIPING SYSTEMS

Section	Title	Page
3A.1	STRUCTURES	3A.1-1
3A.1.1	STRUDL II	3A.1-1
3A.1.2	SHELL 1	3A.1-2
3A.1.3	STRUDL-SW	3A.1-3
3A.1.4	ASAAS	3A.1-3
3A.1.5	TAC2D	3A.1-6
3A.1.6	TIME HISTORY PROGRAM	3A.1-9
3A.1.7	PLAXLY	3A.1-9
3A.1.8	MAT6	3A.1-10
3A.1.9	ANSYS	3A.1-10
3A.1.10	MEMBRANE	3A.1-10
3A.1.11	SBMMI	3A.1-11
3A.1.12	BASEPLATE ANALYSIS PROCESSOR (BAP)	3A.1-11
3A.1.13	GTSTRUDL	3A.1-12
3A.1.14	REFERENCES FOR APPENDIX 3A.1	3A.1-12
3A.2	EQUIPMENT AND COMPONENTS	3A.2-1
3A.2.1	DINASAW	3A.2-1
3A.2.2	LIMITA2	3A.2-3
3A.2.3	LIMITA3	3A.2-6
3A.2.4	STARDYNE	3A.2-8
3A.2.5	NOZZLE	3A.2-9
3A.2.6	LION	3A.2-10
3A.2.7	SLOSH	3A.2-11
3A.2.8	MISSILE	3A.2-11
3A.2.9	PSPECTRA	3A.2-15
3A.2.10	LIMITA2S	3A.2-15
3A.2.11	STRUDL-SW	3A.2-18
3A.2.12	STRUDL II	3A.2-18
3A.2.13	TAC2D	3A.2-18
3A.2.14	TAP-A	3A.2-18
3A.2.15	ANSYS	3A.2-18
3A.2.16	GTSTRUDL	3A.2-22
3A.2.17	LIDOP	3A.2-22
3A.2.18	ASYMPR	3A.2-22a
3A.2.19	DLF	3A.2-22b
3A.2.20	References for Appendix 3A.2	3A.2-22d
3A.3	PIPING SYSTEMS	3A.3-1
3A.3.1	NUPIPE-SW	3A.3-1
3A.3.2	HTLOAD	3A.3-3
3A.3.3	PITRUST	3A.3-4

TABLE OF CONTENTS (Cont)

Section	Title	Page
3A.3.4	PILUG	3A.3-4
3A.3.5	PITRIFE	3A.3-5
3A.3.6	STEHAM	3A.3-6
3A.3.7	WATHAM	3A.3-7
3A.3.8	WATSLUG	3A.3-8
3A.3.9	ELBOW	3A.3-8
3A.3.10	BENDCORD	3A.3-10
3A.3.11	CDC-BASEPLATE II	3A.3-11
3A.3.12	PSPECTRA	3A.3-12
3A.3.13	ANSYS	3A.3-13
3A.3.14	STRUDL II	3A.3-13
3A.3.15	STRUDL-SW	3A.3-13
3A.3.16	NUPIPE II	3A.3-13
3A.3.17	BIP	3A.3-13
3A.3.18	APE	3A.3-14
3A.3.19	CHPLOT	3A.3-14
3A.3.20	BAP	3A.3-15
3A.3.21	TRUNPIPE	3A.3-15
3A.3.22	LUGAPIPE	3A.3-15
3A.3.23	CCN318	3A.3-16
3A.3.24	CCN392	3A.3-16
3A.3.25	REFERENCES FOR APPENDIX 3A.3	3A.3-16

LIST OF TABLES

Table Number	Title
3A.1.2-1	Thin-Wall Cylinder, Pertinent Parameters
3A.1.2-2	Exact and Computer Stresses for Thin-Wall Cylinder
3A.1.4-1	Infinitely Long Solid Cylinder, Pertinent Parameters
3A.1.5-1	Input Thermal Parameter Functions for TAC2D Sample Problem
3A.1.6-1	Peak Acceleration and Displacement
3A.1.6-2	Horizontal Amplified Response Spectra (Two-Percent Oscillator Damping)
3A.1.8-1	Force Quantities
3A.1.8-2	Displace Quantities, A Comparison of Results
3A.1.10-1	Pertinent Parameters of Cylindrical Shell Sample Program
3A.1.10-2	Summary of Results
3A.1.11-1	Test Problem Data
3A.1.11-2	A Comparison of Hand Calculation and Computer Program Results
3A.2.3-1	Comparison of Experimental Data and Analytical Data Using LIMITA3
3A.2.7-1	Sample Problems - Input Parameters
3A.2.7-2	Comparison of Results of SLOSH vs AEC Analysis
3A.2.8-1	MISSILE Program Verification
3A.3.1-1	Comparison of Support Reaction Due to Thermal, Anchor Movement, and External Force Loading
3A.3.1-2	Comparison of Deflections and Rotations Due to Thermal, Anchor Movement, and External Force Loading
3A.3.1-3	Comparison of Stress Due to Thermal, Anchor Movement, and External Force Loading
3A.3.1-4	Comparison of Internal Forces Due to Deadweight Analysis

LIST OF TABLES (Cont)

Table Number	Title
3A.3.1-5	Comparison of Deflections and Rotation Due to Deadweight Analysis
3A.3.1-6	Comparison of Stresses Due to Deadweight Analysis
3A.3.1-7	Comparison of Natural Frequencies (Hz), NUPIPE-SW vs. ADLPIPE
3A.3.1-8	Comparison of Natural Frequencies (Hz), NUPIPE-SW vs. BENCHMARK
3A.3.1-9	Comparison of Class 1 Pipe Stress Analysis
3A.3.1-10	Individual Pair Usage Factor for Point No. 30
3A.3.2-1	Pipe Material Properties
3A.3.2-2	Fluid Material/Thermal Properties
3A.3.2-3	Comparison of HTLOAD with Hand Calculation
3A.3.2-4	Comparison of HTLOAD with Charts of Brock and McNeill
3A.3.2-5	Comparison of HTLOAD with TRHEAT
3A.3.3-1	Comparison of PITRUST with Franklin Institute Program CYLNOZ and Hand Calculation
3A.3.4-1	Comparison of PILUG Computer Program Output with Hand Calculations
3A.3.5-1	Comparison of PITRIFE Computer Program Output with STRUDL-II Output
3A.3.5-2	Comparison of PITRIFE Computer Program Output with Hand Calculations
3A.3.6-1	Nodal Force Comparison
3A.3.7-1	Input Data for WATHAM
3A.3.7-2	Comparison of Nodal Force Calculation
3A.3.8-1	Input data for NUPIPE-SW

LIST OF TABLES (Cont)

Table Number	Title
3A.3.8-2	Input Data for WATSLUG
3A.3.9-1	ELBOW Program - Elbow Properties Used for Verification Problems
3A.3.9-2	ELBOW Program - Case 1 Results
3A.3.9-3	ELBOW Program - Case 2 Results
3A.3.9-4	ELBOW Program - Case 3 Results
3A.3.10-1	BENDCORD Program - Verification Problem
3A.3.11-1	Intentionally Deleted
3A.3.11-2	Intentionally Deleted
3A.3.11-3	Intentionally Deleted
3A.3.12-1	PSPECTRA Program Verification Problem - Maximum Value Enveloping
3A.3.12-2	PSPECTRA Program Verification Problem - Absolute Sum Enveloping
3A.3.12-3	PSPECTRA Program Verification Problem - SRSS Enveloping
3A.3.12-4	PSPECTRA Program Verification Problem - Peak Spreading
3A.3.18-1	APE Program Verification Problem - Comparison of Drilled-In Anchor Loads

LIST OF FIGURES

Figure Number	Title
3A.1.2-1	One Hundred-Element Idealization of Thin-Wall Cylinder
3A.1.4-1	Element Plot
3A.1.4-2	Harmonic Axisymmetric Plan Strain
3A.1.5-1	TAC2D Sample Problem Thermal Model
3A.1.5-2	Transient Temperatures in a Right Circular Cylinder - Comparison of TAC2D Results with Series Solution
3A.1.6-1	Structural Model - Time History Program
3A.1.7-1	Finite Element Grid for PLAXLY-FLUSH Comparison
3A.1.7-2	Horizontal Amplified Response Spectra at Top Mass in Beam Structure
3A.1.8-1	MAT 6 Sample Problem
3A.2.1-1	Circular Ring Subjected to Radial Blast Wave
3A.2.1-2	Deformation Profiles
3A.2.1-3	Strain Response Element 8 (Angle = 90°)
3A.2.1-4	Fragment - Ring Impact Model
3A.2.1-5	Shape of Ring at 700 uSec
3A.2.2-1	Cantilever Pipe Used in MIT Experiment
3A.2.2-2	MIT Experiment Stress-Strain Curves
3A.2.2-3	DINASAW and LIMITA2 Lumped Mass Models
3A.2.2-4	Time History Plots of the X-Displacement at the Free End
3A.2.2-5	Time History Plots of the Y-Displacement at the Free End
3A.2.2-6	Time History Plots of the Moment Reaction at the Clamped End

LIST OF FIGURES (Cont)

Figure Number	Title
3A.2.2-7	Permanent Pipe Deformations for the MIT Experiment
3A.2.3-1	LIMITA3 Elastic Space Frame
3A.2.3-2	LIMITA3 Displacement Time History at Joint 6
3A.2.3-3	LIMITA3 Time History of Moment Z in Member 5, Joint 6
3A.2.3-4	Structure and Model Used for LIMITA3 Analysis
3A.2.5-1	Summary of Manual Calculations for Local Stresses in Cylindrical Shells
3A.2.5-2	Summary of Computer Calculations for Local Stresses in Cylindrical Shells
3A.2.5-3	Summary of Manual Calculations for Local Stresses in Spherical Shells
3A.2.5-4	Summary of Computer Calculations for Local Stresses in Spherical Shells
3A.2.5-5	Sample Input Data-NOZZLE
3A.2.5-6	Comparison of Meridonial and Hoop Stresses
3A.2.8-1	Nomenclature for Missile Program
3A.2.8-2	Top View of Idealized Target
3A.2.8-3	Side View of Idealized Target
3A.2.8-4	Target for Low Trajectory Missile
3A.2.10-1	Force Displacement Curve
3A.3.1-1	Mathematical Model for Flexibility Analysis Verification
3A.3.1-2	NUPIPE Program Force Time-History Verification
3A.3.1-3	Mathematical Model for Class 1 Stress Verification
3A.3.3-1	Comparison of PITRUST with Hodge's Results
3A.3.6-1	Sudden Discharge of a Gas from a Pipeline Through a Nozzle (Case A)

LIST OF FIGURES (Cont)

Figure Number	Title
3A.3.6-2	Sudden Discharge of a Gas from a Pipeline Through a Nozzle (Case B)
3A.3.6-3	Comparison of Pressure Response at the Closed End
3A.3.6-4	Comparison of Pressure Response at the Open End
3A.3.6-5	Comparison of Pressure Responses by STEHAM and Experiment
3A.3.7-1	Hydraulic Network for Verification Problem
3A.3.7-2	Hydraulic Network for WATHAM Verification
3A.3.7-3	Head vs. Time-Plot for Junction J
3A.3.7-4	Head vs. Time-Plot at Valve
3A.3.8-1	WATSLUG Model of EPRI Sample Problem
3A.3.8-2	NUPIPE-SW Model of EPRI Sample Problem
3A.3.8-3	Comparison of Segment 2 Forcing Function
3A.3.8-4	Comparison of Segment 3 Forcing Function
3A.3.8-5	Comparison of Segment 2 Support Reaction
3A.3.8-6	Comparison of Segment 3 Support Reaction
3A.3.10-1	Design Input to a Problem
3A.3.11-1	Intentionally Deleted

APPENDIX 3A

COMPUTER PROGRAMS FOR DYNAMIC AND STATIC ANALYSIS OF SEISMIC CATEGORY I STRUCTURES, EQUIPMENT, AND COMPONENTS AND PIPING SYSTEMS

3A.1 STRUCTURES

The following computer programs are used in dynamic and static analysis of Seismic Category structures:

1. STRUDL II - Structural Analysis Program,
2. SHELL 1 - Shell Analysis,
3. STRUDL-SW - Structural Analysis Program,
4. ASAAS - Asymmetric Stress Analysis of Axisymmetric Solids,
5. TAC2D - Heat Transfer Program,
6. Time History Program - Dynamic Analysis,
7. PLAXLY - Finite Element Soil-Structure Analysis for Plain Strain Problems,
8. MAT - Axisymmetric Mat Analysis,
9. ANSYS - Engineering Analysis System,
10. MEMBRANE - Membrane Stresses Analysis,
11. SBMMI - Single Barrier Mass Missile Impact,
12. Baseplate Analysis Processor (BAP),
13. GTSTRUDL.

3A.1.1 STRUDL II

3A.1.1.1 General Description

The finite element method (Cheung and Ziankiewicz 1967) provides for the solution of a wide range of solid mechanics problems. Its implementation within the context of the STRUDL analysis facilities expands these for the treatment of plane stress, plane strain, plate bending, shallow shell, and three-dimensional stress analysis problems.

STRUDL II (Massachusetts Institute of Technology (MIT) 1968; 1971) has been designed as a modified subsystem of the Integrated Civil Engineering System (ICES), which was designed and formulated at the MIT Department of Civil Engineering.

STRUDL II also provides a dynamic analysis capability for linear elastic structures undergoing small displacements. Either free or forced vibrational response may be obtained and, in the latter case, the forcing functions may be in the form of time histories or response spectra.

Seismic Category I structures are analyzed for seismic effects using the dynamic analysis capability of STRUDL II. The analysis yields frequencies of vibrations, mode shapes, displacements, velocities, accelerations, and forces.

STRUDL II has been documented by benchmarking procedures against the GTSTRUDL computer code STRUDL-SW. GTSTRUDL is a recognized public domain program.

3A.1.2 SHELL 1

3A.1.2.1 General Description

This program is based upon the general numerical procedure proposed by B. Budiansky and P.P. Radkowski (1963) and Greenbaum (1963) to analyze a shell of revolution subjected to arbitrary loadings.

This is a finite difference stress analysis computer code. It can be used to determine the forces, moments, shears, displacements, rotations, and stress in a thin shell of revolution subject to arbitrary loads expanded in a Fourier series of up to 150 terms. Single layer shells with up to 30 simply connected branches may be analyzed. Poisson's ratio may change at discontinuity points, and Young’s modulus and the thermal coefficient of expansion may be different at each point. The allowed types of loading include elastic restraints, pressures in three orthogonal directions, temperature changes which may have a gradient through the shell thickness, and simplified input for weight of the shell or earthquake forces.

The equilibrium equations for a thin shell are based on Sanders linear theory (Sanders 1959). Sanders' equations are expanded and modified slightly to handle a broader range of problems. All pertinent load, stress, and deformation variables are expanded into a Fourier series. The individual Fourier components of stress and deflection are found separately by solution of the finite difference forms of the appropriate differential equations. The algorithm used to solve these equations is a minor modification of the Gaussian elimination method.

3A.1.2.2 Sample Problem - Thin-Wall Cylinder

A long thin-walled circular cylinder is subjected to a constant internal pressure distribution. A solution of this problem may be obtained (Roark 1965).

The pertinent parameters of the cylinder are presented in Table 3A.1.2-1.

The following solution can be verified (Roark 1965).

$$\delta_R = \frac{PR^2}{Et} \qquad (3A.1.2\text{-}1)$$

$$\sigma_\theta = \frac{PR}{t} \qquad (3A.1.2\text{-}2)$$

where:

σ_θ = hoop stress

δ_R = radial displacement

P = pressure

R = radius

t = thickness

E = Young's modulus

The cylinder is idealized by 100 elements, as shown on Figure 3A.1.2-1. Computer results are presented in Table 3A.1.2-2 along with the results obtained from Equations 3A.1.2-1 and 3A.1.2-2. As can be seen, the computer results compare favorably; therefore, this problem demonstrates the accuracy of SHELL 1.

3A.1.3 STRUDL-SW

3A.1.3.1 General Description

The STRUDL-SW computer code uses the stiffness analysis method to analyze a wide range of structural problems. It handles two- and three-dimensional trusses and frames, having linear elastic members and statically applied loading.

STRUDL-SW has been documented by bench marking procedures against the GTSTRUDL computer code. GTSTRUDL is a recognized program in the public domain.

3A.1.4 ASAAS

3A.1.4.1 General Description

ASAAS is a finite element computer code (Crose 1971). It can be used to determine stresses and displacements in arbitrary axisymmetric solids, including problems involving asymmetric mechanical and thermal loads and asymmetric temperature-dependent mechanical properties. All dependent variables, including the mechanical properties, are input by Fourier series expansions of the

circumferential coordinate. The mechanical loads can be surface pressures, surface shears, and nodal point forces.

The explicit stiffness relations for the axisymmetric solid ring elements of the triangular cross section are based on the classical theorem of potential energy and the assumption that, within any element, the displacement variation in the R-Z plane is linear. All dependent variables, including the material properties, are expanded into the Fourier series. The harmonics are coupled and all the equilibrium equations are solved simultaneously. The algorithm used to solve the equations is a block modified square root Cholesky method with iterative refinement (Crose 1971).

3A.1.4.2 Sample Problem - Harmonic Axisymmetric Plane Strain

An infinitely long, solid, circular cylinder is subjected to $P_o\cos\theta$ and $P_o\cos\alpha\theta$ pressure distributions plus a $P_o\sin\theta$ shear distribution. A closed-form solution of this problem may be obtained (Love 1944).

The pertinent parameters of the cylinder are presented in Table 3A.1.4-1.

The following solution can be verified (Love 1944):

$$\sigma_r = P_o\left(\frac{r}{a}\cos\theta + \cos 2\theta\right) \qquad (3A.1.4\text{-}1)$$

$$\sigma_\theta = P_o\left[\frac{3r}{a}\cos\theta + \frac{2r^2 - a^2}{a^2}\cos 2\theta\right] \qquad (3A.1.4\text{-}2)$$

$$\sigma_{r\theta} = P_o\left[\frac{r}{a}\sin\theta - \frac{r^2 - a^2}{a^2}\sin 2\theta\right] \qquad (3A.1.4\text{-}3)$$

$$U_r = U_{r_1} + U_{r_2} \qquad (3A.1.4\text{-}4)$$

$$U_{r_1} = \frac{P_o(1-4\nu)(1+\nu)r^2}{2Ea}\cos\theta$$

$$U_{r_2} = P_o\left(\frac{1+\nu}{E}\right)\left(r - \frac{2\nu r^3}{3a^2}\right)\cos 2\theta$$

$$U_\theta = U_{\theta_1} + U_{\theta_2} \qquad (3A.1.4\text{-}5)$$

$$U_{\theta_1} = \frac{P_o(5-4\nu)(1+\nu)r^2 \sin\theta}{2Ea}$$

$$U_{\theta_2} = P_o\left(\frac{1+\nu}{E}\right)\left[\left(1-\frac{2\nu}{3}\right)\frac{r^3}{a^2} - r\right]\sin 2\theta$$

where:

σ_r = radial stress

σ_θ = circumferential stress

$\sigma_{r\theta}$ = shear stress

U_r = radial deformation

U_θ = circumferential deformation

ν = Poisson's ratio

a = outer radius of solid cylinder

E = Young's Modulus

r = radius

The cylinder is idealized by 16 elements, as shown on Figure 3A.1.4-1. Computer results are depicted on Figure 3A.1.4-2, along with the exact results obtained from Equations 3A.1.4-4 and 3A.1.4-5. As can be seen, the computer results are very close to the exact results. Therefore, this problem verifies the accuracy of ASAAS for mechanical loading problems where material properties are not variable.

3A.1.5 TAC2D

3A.1.5.1 General Description

This is a finite difference computer code (Peterson 1969) which can be used to determine steady-state and transient temperatures in two- dimensional problems. The configuration of the body to be analyzed is described in the rectangular, cylindrical, or circular (polar) coordinate system by orthogonal lines of constant coordinate called grid lines. These grid lines specify an array of nodal elements. Nodal points are defined as lying midway between the bounding grid lines of these elements. A finite difference equation is formulated for each nodal point in terms of its capacitance, heat generation, and heat flow paths to neighboring nodal points. The equations for all the nodal points are assembled and solved using an implicit alternating gradient algorithm.

3A.1.5.2 Sample Problem

A sample problem is presented to compare the results from TAC2D with an analytical solution. The objective is to show that the TAC2D program yields the correct solution.

The problem is to determine the transient temperature distribution in a right circular cylinder which is initially at temperature T_1. At time, t = 0, the temperature at the surface is instantaneously changed to T_2 and maintained at that value.

Mathematically, the problem is defined by the following equations:

$$\frac{1}{r}\left(\frac{d}{dr}\left(\frac{rdT}{dr}\right)\right)+\frac{d^2T}{dZ^2}=\frac{1}{\alpha}\left(\frac{dT}{dt}\right) \qquad (3A.1.5\text{-}0)$$

$$0 \le r \le R \qquad (3A.1.5\text{-}1)$$

$$T(r,z) = T_1 \text{ at } t \le 0 \qquad (3A.1.5\text{-}2)$$

$$T(R,z) = T_2 \text{ at } t \ge 0 \qquad (3A.1.5\text{-}3)$$

$$T\left(r,\pm\frac{L}{2}\right) = T_2 \ at \ t \ge 0 \qquad (3A.1.5\text{-}4)$$

where:

t = the time,

r = the radius,

z = the axial coordinate,

R = the outside radius of the cylinder,

L = the length of the cylinder, and

α = the diffusivity.

Further,

$$\alpha = \frac{k}{\rho c} \qquad (3A.1.5\text{-}5)$$

where :

k = the thermal conductivity,

ρ = the density,

c = the specific heat capacity,

For the specific problem analyzed, the following numerical values were used:

R = 12.0 inches
L = 48.0 inches
k = 20.0 Btu/hr-ft-°F
ρ = 40.0 Btu/cu ft-°F
T_1 = 0.0 °F
T_2 = 1,000.0°F

3A.1.5.2.1 Analytical Solution

It may be shown in Carlslaw and Jaeger (1959) that the solution is:

$$\frac{T - T_1}{T_2 - T_1} = 1 - f(z,t)\, g(r,t) \qquad (3A.1.5\text{-}6)$$

$$f(z,t) = \frac{4}{\pi} \sum_{n=0}^{\infty} \frac{(-1)^n}{(2n+1)} e^{-\alpha t\left[\frac{\pi}{2L}(2n+1)\right]^2} \cos\left[\frac{\pi z}{2L}(2n+1)\right] \qquad (3A.1.5\text{-}7)$$

$$g(r,t) = \frac{2}{R} \sum_{m=1}^{\infty} \frac{J_o(r\psi m)}{\psi_m J_1(R\psi_m)} e^{-\alpha\psi_m^2 t} \qquad (3A.1.5\text{-}8)$$

where the Ψm are the roots of

$$J_o\ (R\Psi) = 0 \qquad (3A.1.5\text{-}9)$$

The roots Ψm of Equation 3A.1.5-9 and the Bessel functions (J_o) and (J_1) are tabulated by Jahnke and Emde (1945) and need not be computed.

From the definition of the problem there is symmetry about the geometric center of the cylinder and the origin of the coordinate system taken at that point, as is reflected in the boundary conditions, Equations 3A.1.5-3 and 3A.1.5-4.

3A.1.5.2.2 Numerical Solution With TAC2D

A cross section of the problem model for TAC2D is shown on Figure 3A.1.5-1. The model extends only to the axial midplane of the cylinder where an adiabatic boundary may be specified by virtue of the symmetry condition described previously. The solid material is represented by one material block. The boundary conditions on the four external boundaries are described by Coolants 1 through 4 (specifically, Coolant Blocks 1 through 4). The material and coolant thermal parameters, as specified by the input functions, are given in Table 3A.1.5-1. All coolants have the standard specific heat of 1.0 Btu per pound-°F (Btu/lb-°F). Coolants 1 and 2, which represent the adiabatic external boundaries, have the standard heat transfer coefficient of 10^{-6} Btu/hr-sq ft-°F and the standard flow rate of 10^{6} pounds per hour.

3A.1.5.2.3 Comparison of TAC2D Solution with the Analytical Solution

A comparison of the output from the code with the series solution is shown on Figure 3A.1.5-2. The temperature-versus-time function is plotted at three representative points within the cylinder. It can be seen that the results from TAC2D are almost identical to the

series solution results. The maximum difference between the two sets of results is about 2°F out of a mean magnitude of 100°F.

3A.1.6 Time History Program

3A.1.6.1 General Description

The Time History Program computes time history response and amplified response spectra (ARS) at any mass location of a lumped mass system due to a synthetic earthquake input. The responses are computed by integration of the modal equations of the system by exact methods (Nigam and Jennings 1968). The program's main application is the generation of ARS used in the design of Seismic Category I equipment and piping.

3A.1.6.2 Sample Problem

The Time History Program's solution to a test problem is essentially identical to the solution obtained using STARDYNE. STARDYNE is a recognized program in the public domain. The sample problem used consists of a structure subjected to an earthquake time history record. The structure is idealized by five lumped masses interconnected by five elastic beam elements, as shown on Figure 3A.1.6-1.

Peak acceleration and displacement, as well as the horizontal ARS at the top mass point, are compared in Tables 3A.1.6-1 and 3A.1.6-2, respectively.

3A.1.7 PLAXLY

3A.1.7.1 General Description

The PLAXLY program provides a numerical solution for the dynamic analysis of plane systems under general dynamic loadings. This program works with a two-dimensional plane-strain finite element idealization of the soil structure interaction problem.

The original version of PLAXLY was developed at the University of California in Berkeley (Waas 1972). It was later modified and extended at Stone & Webster Engineering Corporation (SWEC) to incorporate transient seismic excitations, nonlinear soil behavior, and lumped mass representations of the structures.

3A.1.7.2 Sample Problem

The PLAXLY program's solution to a test problem is essentially identical to the solution obtained by using the FLUSH program. FLUSH is a recognized program in the public domain.

The sample problem used consists of a structure represented by five lumped masses interconnected by four elastic beam elements. This

structural model is connected to a finite element representation of the soil, as shown on Figure 3A.1.7-1. The horizontal amplified response spectra (ARS) at the top mass point are compared on Figure 3A.1.7-2.

3A.1.8 MAT6

3A.1.8.1 General Description

This program is based upon the general numerical procedures proposed by Zhemoshkin (1962) to analyze a circular plate on an elastic foundation. It is used to determine moments, shears, vertical deflections, radial displacements, tangential and radial in-plane forces, plus rotations of the circular plate subjected to axisymmetric loadings.

The soil subgrade may be modeled as either a Winkler (1867) or a Boussinesqu (1885) type elastic foundation.

3A.1.8.1 Sample Problem

As a sample problem, the case of a circular plate with two axisymmetric loadings will be considered. Figure 3A.1.8-1 presents the pertinent parameters of the problem and a cross-sectional sketch of the plate.

The results from a hand calculation using the methods of Ulickii (1972) are compared to those from MAT6 in Tables 3A.1.8-1 and 3A.1.8-2.

3A.1.9 ANSYS

3A.1.9.1 General Description

ANSYS is a general purpose finite element analysis program with structural and heat transfer capabilities. ANSYS is used as-needed for engineering analysis. ANSYS is a recognized program in the public domain.

3A.1.10 MEMBRANE

3A.1.10.1 General Description

This program computes membrane stresses and strains in containment structures due to dead loads, internal pressure, and temperature

gradients across the wall. It analyzes cylinders, cones, and spherical domes which consist of a fully cracked reinforced concrete section with a steel liner.

Stresses are computed by shell membrane theory (Billington 1965). The program automatically considers the effect of the uplift force acting on the roof of a cone or cylinder.

3A.1.10.2 Sample Problem

As an example, a cylindrical shell was analyzed by the program and by a hand calculation. Table 3A.1.10-1 presents the pertinent parameters of the cylinder. The comparison of results is given in Table 3A.1.10-2.

As can be seen, the computer program's results compare very favorably. This problem verifies the accuracy of MEMBRANE.

3A.1.11 SBMMI

3A.1.11.1 General Description

This program computes the elasto-plastic structural response of a barrier due to the following types of loads: (a) static loads; (b) suddenly applied constant dynamic loads which remain permanently on the structure; (c) suddenly applied constant dynamic loads representing missile impact with a finite force and specific momentum; and (d) suddenly applied dynamic load of zero time duration and specific momentum representing missile impact. The barrier is modelled as a single barrier mass and a non-linear spring, with the above loads applied. The equation of motion is integrated in time assuming constant acceleration in each time step (Biggs 1964).

3A.1.11.2 Sample Problem

As an example, the program SBMMI was run for each load case separately. The computer's results were compared to those obtained from a hand calculation. The hand calculation was based on the elasto-plastic response charts found in Biggs (1964). Table 3A.1.11-1 presents the pertinent model and load parameters. The hand and computer program results are compared in Table 3A.1.11-2. It can be seen that the results compare very favorably. This problem verifies the accuracy of the SBMMI computer program.

3A.1.12 Baseplate Analysis Processor (BAP)

3A.1.12.1 General Description

The computer program BAP is a preprocessor/postprocessor which works in conjunction with the program ANSYS. The purpose of BAP is to generate the ANSYS input necessary for the static, non-linear

analysis of baseplates subjected to out-of-plane loads, to distribute in-plane loads to the anchor bolts assuming an infinitely rigid baseplate, and to postprocess the ANSYS results into a report style format.

BAP has been documented by bench marking procedures against the Baseplate Investigation Processors computer code, which is a recognized program in the public domain.

3A.1.13 GTSTRUDL

3A.1.13.1 General Description

The computer program GTSTRUDL provides for the solution of a wide range of solid mechanics problems. It is capable of analyzing for various static and dynamic loadings

GTSTRUDL is a recognized program in the public domain.

3A.1.14 References for Appendix 3A.1

Biggs, J.M. 1964. Introduction to Structural Dynamics. McGraw-Hill Book Company, Inc., New York, N.Y.

Billington, D.P. 1965. Thin Shell Concrete Structures. First Edition, McGraw-Hill Book Company, Inc., New York, N.Y.

Boussinesqu, J. 1885. Application des Potentials a etude de l'equilibre et du Mouvement des Solides Elastiques. Paris, France.

Budiansky, B. and Radkowski, P.P. 1963. Numerical Analysis of Unsymmetrical Bending of Shells of Revolution. AIAA Journal, 1, 1833.

Carlslaw, H.S. and Jaeger, J.C. 1959. Conduction of Heat in Solids. Oxford at the Clarendon Press, p 227.

Cheung, Y.K. and Zienkiewicz, O.C. 1967. The Finite Element Method. McGraw-Hill Book Company, Inc., New York, N.Y.

Crose, J.G. 1971. ASAAS Asymmetric Stress Analysis of Axisymmetric Solids with Orthotropic Temperature Dependent Material Properties that Can Vary Circumferentially. Air Force Report No. SAMSO-TR-71-197, Aerospace Report No. TR-0172 (S2816-15)-1.

Greenbaum, G.A. 1963. Comments on Numerical Analysis of Symmetrical Bending of Shells of Revolution. AIAA Journal 2, 1833.

Janhke, E. and Emde, F. 1945. Table of Functions. Fourth Edition, Dover Publications, New York, N.Y.

Love, A.E.H. 1944. A Treatise on the Mathematical Theory of Elasticity. Dover Publications, New York, N.Y.

Massachusetts Institute of Technology (MIT) 1968. ICES STRUDL II, The Structural Design Language Engineering Users Manual. Vol 1, Frame Analysis. Department of Civil Engineering.

MIT 1971. ICES STRUDL II, The Structural Design Language Engineering Users Manual. Vol 2, Chapters III and IV, Additional Design and Analysis Facilities. Department of Civil Engineering.

Nigam, N.C. and Jennings, P.C. 1968. Digital Calculation of Response Spectrum from Strong-Motion Earthquake Records. National Science Foundation.

Peterson, J.F. 1969. TAC2D - A General Purpose Two-Dimensional Heat Transfer Computer Code. USAEC Research and Development Report, Gulf General Atomic Inc., GA-9262.

Roark, R.J. 1965. Formulas for Stress and Strain. Fourth Edition, NcGraw-Hill Book Company, Inc., New York, N.Y. p 298.

Sanders, J.L., Jr. 1959. An Improved First Approximation Theory for Thin Shells. NASA Technical Report R-24.

Ulickii, I.I. 1972. Reinforced Concrete Structures (in Russian). Kiev, Russia.

Waas, G. 1972. Linear Two-Dimensional Analysis of Soil Dynamics Problems in Semi-Infinite Layered Media. Ph.D.Thesis, University of California, Berkeley.

Winkler, E. 1867. Die Lehre Vender Elasticat und Festigkeit. Praha, Czechoslovakia.

Zhemochkin, B. N. and Sinitsin, A. P. 1962. Practical Method in Analysis of Beams and Plates on Elastic Foundations (in Russian). Gosstroiizdat, Russia.

Tables for Section 3A.1

TABLE 3A.1.2-1

THIN-WALL CYLINDER,
PERTINENT PARAMETERS

Dimensions and Properties	Loading and Boundary Conditions
R = 25 inches	At z = 0 inch; Fr = M = δ_z = 0
ℓ = 200 inches	
t = 0.5 inch	At z = ℓ = 200 inches; Fr = M = Fz = 0
E = 28 x 10^6 psi	
Poisson's ratio = 0.3	P = 75 psi
M = Moment on free edge	
Fr = Radial force	
F_z = Force in Z-direction	
δ_z = Displacement in Z-direction	

TABLE 3A.1.2-2

EXACT AND COMPUTER STRESSES FOR THIN-WALL CYLINDER

Variable	Exact	Shell 1
δ_R (inch)	3.348×10^{-3}	3.348×10^{-3}
σ_θ (psi)	3,750	3,750

TABLE 3A.1.4-1

INFINITELY LONG SOLID CYLINDER, PERTINENT PARAMETERS

Dimensions and Properties	Loading and Boundary Conditions
$a = b$	$P_r = P_o (\cos\theta + \cos 2\theta)$
$\ell = b$	$\tau_{r\theta} = P_0 \sin\theta$
$E = 10 \times 10^6$ psi	$Uz = 0$
$\nu = 0.25$	At $r = 0$, $U_r = 0$
$b = 1$ inch	$P_o = 10{,}000$ psi

TABLE 3A.1.5-1

INPUT THERMAL PARAMETER FUNCTIONS FOR TAC2D SAMPLE PROBLEM

Material Thermal Parameters	Coolant Thermal Parameters
SPEC1 (X) = 40.0 Btu/lb-°R	H3A (X) = 1.0×10^8 Btu/hr-ft^2-°R
RCON1 (X) = 20.0 Btu/hr-ft-°R	FL03A (X) = 1.0×10^8 lb/hr
ACON1 (X) = 20.0 Btu/hr-ft-°R	TIN3A (X) = 1,460°R
	H4A (X) = 1.0×10^8 Btu/hr-ft^2-°R
	FLO4A (x) = 1.0×10^8 lb/hr
	TIN4A (x) = 1,460°R

Explanation of terms:

SPEC1(X)	=	specific heat capacity of material 1
RCON1(X)	=	thermal conductivity in the X (or radial) direction of material 1
ACON1(X)	=	thermal conductivity in the Y (or theta, or axial direction) of material 1
H3A(x)	=	heat transfer coefficient for coolant 3
FL03A(x)	=	mass flow rate of coolant 3
TIN3A(x)	=	inlet temperature of coolant 3
HYA(X)	=	heat transfer coefficient for coolant 4
FLO4A(X)	=	mass flow rate of coolant 4
TIN4A(X)	=	inlet temperature of coolant 4

TABLE 3A.1.6-1

PEAK ACCELERATION AND DISPLACEMENT

	Time History Program	Stardyne Program
Peak Acceleration	0.922 g	0.922 g
Peak Displacement	0.352 in.	0.352 in.

TABLE 3A.1.6-2

HORIZONTAL AMPLIFIED RESPONSE SPECTRA
(TWO-PERCENT OSCILLATOR DAMPING)

Period (Seconds)	Time History Program (g)	Stardyne Program (g)
0.02	0.929	0.928
0.04	0.999	0.999
0.06	1.040	1.039
0.08	1.301	1.301
0.10	1.253	1.252
0.12	1.694	1.697
0.14	2.419	2.419
0.16	3.158	3.153
0.18	5.962	5.961
0.20	11.104	11.101
0.22	6.777	6.802
0.24	4.964	5.025
0.26	3.441	3.451
0.28	2.576	2.576
0.30	2.417	2.428
0.34	1.613	1.603
0.38	1.720	1.731
0.42	1.493	1.491
0.46	1.487	1.507
0.50	1.201	1.201
0.70	0.653	0.660

TABLE 3A.1.8-1

FORCE QUANTITIES

Station (ai)	Radius (r, ft)	Radial Moment Mr (ft-K/ft)		Tangential Moment Mt (ft-K/ft)		Shear Force Qr (U/ft)	
		Hand	MAT6	Hand	MAT6	Hand	MAT6
0.0	0.0	-864.47	-864.81	-864.47	-864.81	0.0	0.0
1.0	5.0	-864.47	-864.81	-864.47	-864.81	0.0	0.0
2.0	10.0	-864.47	-864.81	-864.47	-864.81	0.0	0.0
3.0	15.0	-864.47	-864.81	-864.47	-864.81	0.0	0.0
4.0	20.0	-864.47	-864.81	-864.47	-864.81	0.0	0.0
5.0	25.0	-864.47	-864.81	-864.47	-864.81	0.0	0.0
6.0	30.0	-864.47	-864.81	-864.47	-864.81	0.0	0.0
7.0	35.0	-864.47	-864.81	-864.47	-864.81	0.0	0.0
8.0	40.0	-864.47	-864.81	-864.47	-864.81	0.0	0.0
9.0	45.0	-864.47	-864.81	-864.47	-864.81	0.0	0.0
10.0	50.0	-864.47	-864.81	-864.47	-864.81	0.0	0.0
10.5	52.5					-30.32	-30.32
11.0	55.0	-718.41	-718.79	-833.50	-833.82	-28.94	
11.5	57.5					-27.68	-27.68
12.0	60.0	-593.84	-594.23	-796.47	-796.77	-26.63	
12.5	62.5					-25.46	-25.46
13.0	65.0	-485.44	-485.85	-756.20	-756.40	-24.49	
13.5	67.5					-23.58	-23.58
14.0	70.0	-389.60	-390.01	-714.40	-714.68	-22.74	
14.5	72.5					-21.96	-21.95
15.0	75.0	-303.72	-304.14	-672.13	-672.40	-21.22	
15.5	77.5					-20.54	-20.54
16.0	80.0	-225.94	-226.37	-630.04	-630.31	-19.89	
16.5	82.5					-19.29	-19.29
17.0	85.0	-154.85	-155.29	-588.53	-588.79	-18.72	
17.5	87.5					-18.19	-18.19
18.0	90.0	-89.37	-89.82	-547.85	-548.10	-17.63	
18.5	92.5					-17.21	-17.21
19.0	95.0	-28.68	-29.12	-508.13	-508.37	-16.75	
19.5	97.5	0.0	-0.35	-488.65	-488.84	-16.32	-16.32

TABLE 3A.1.8-2

DISPLACE QUANTITIES,
A COMPARISON OF RESULTS

Station (ai)	Radius (r, ft)	Relative Vertical Displ. U (ft)		Mat rotation 0 (rad)	
		Hand	MAT6	Hand	MAT6
0.0	0.0	0.0	0.0	0.0	0.0
1.0	5.0	-0.00	-0.00031	-0.0001	-0.0001
2.0	10.0	-0.00100	-0.00106	-0.0002	-0.0002
3.0	15.0	-0.00225	-0.00231	-0.0003	-0.0003
4.0	20.0	-0.00400	-0.00406	-0.0004	-0.0004
5.0	25.0	-0.00625	-0.00632	-0.0005	-0.0005
6.0	30.0	-0.00900	-0.00907	-0.0006	-0.0006
7.0	35.0	-0.01225	-0.01232	-0.0007	-0.0007
8.0	40.0	-0.01600	-0.01607	-0.0008	-0.0008
9.0	45.0	-0.02025	-0.02032	-0.0009	-0.0009
10.0	50.0	-0.02500	-0.02507	-0.0010	-0.0010
11.0	55.0	-0.03024	-0.03030	-0.0010911	-0.001045
12.0	60.0	-0.03588	-0.03593	-0.0011631	-0.0011628
13.0	65.0	-0.04185	-0.04188	-0.00122	-0.00122
14.0	70.0	-0.04806	-0.04809	-0.00126	-0.00126
15.0	75.0	-0.05446	-0.05448	-0.001300	-0.001300
16.0	80.0	-0.06100	-0.06101	-0.001317	-0.001317
17.0	85.0	-0.06719	-0.06720	-0.001329	-0.001329
18.0	90.0	-0.07428	-0.07427	-0.001333	-0.001333
19.0	95.0	-0.08094	-0.08092	-0.001329	-0.001329
19.5	97.5	-0.08426	-0.08424	-0.001324	-0.001324

TABLE 3A.1.10-1

PERTINENT PARAMETERS OF CYLINDRICAL SHELL SAMPLE PROGRAM

Input Data	Parameter
Radius of outer layer of rebars	r_o = 66.5 ft
Radius of inner layer of rebars	r_i = 63.67 ft
Radius of liner	r_1 = 63 ft
Radius of reference surface	r = 65.25 ft
Height of cylinder	h = 122 ft
Meridional steel area/unit length, outer layer	A_o = 4 in^2
Meridional steel area/unit length, inner layer	A_i = 4 in^2
Liner area/unit length	A_1 = 4.5 in^2
Circumferential steel area, unit length, outer layer	A_o' = 8 in^2
Circumferential steel area, unit length, inner layer	A_i' = 8 in^2
Internal pressure	p = 9.72 ksi
Wall weight per unit surface	q = 0.68 ksi
Total load at top	w = 9,726.5 k
Temperature increment, outer rebars	ΔT_o = -12°F
Temperature increment, inner rebars	ΔT_i = 27°F
Temperature increment, liner	ΔT_1 = 230°F

TABLE 3A.1.10-2

SUMMARY OF RESULTS

Input Data	Hand Calculation	Computer Run	% Difference
Liner strain:			
Meridional	0.001308	0.001308	0.0
Circumferential	0.001412	0.001412	0.0
Membrane stresses: (ksi)			
Meridional rebars:			
Outer layer	41.58	41.59	0.02
Inner layer	33.975	33.99	0.02
Liner	-6.9857	-6.97	0.2
Hoop rebars:			
Outer layer	42.47	42.47	0.0
Inner layer	36.65	35.65	0.0
Liner	-4.586	-4.586	0.0
Membrane Forces: (k/ft)			
Meridional	271.76	271.90	0.05
Circumferential	612.32	612.36	0.0

TABLE 3A.1.11-1

TEST PROBLEM DATA

	Load Type	Load
1.	Static load	-15.k k*
2.	Suddenly applied constant load (remains on structure permanently)	62.9 k*
3.	Missile impact - finite force	264 k*
	specific momentum	1.4 k*/sec
4.	Suddenly applied dynamic load w/zero time duration (applied impulse)	1.2 k*/sec

NOTES:

*Equivalent barrier weight = 16.66 k.
Barrier resistance function - From zero displacement to a displacement of 0.003 foot, the barrier resistance increases linearly from 0 to 87.2 k. For displacements greater than 0.0003 foot, the resistance remains at a constant value of 87.2 k.

TABLE 3A.1.11-2

A COMPARISON OF HAND CALCULATION AND COMPUTER PROGRAM RESULTS

Load Number		Results from Hand Calculation		Results from Computer Run	
1	Barrier deflection	0.000533	ft	0.0005	ft
2	Barrier deflection	0.0054	ft	0.0054	ft
	Time of maximum deflection	0.01802	sec	0.018378	sec
3	Barrier deflection	0.0183	ft	0.0187	ft
	Time of maximum deflection	0.0180	sec	0.018391	sec
4	Barrier deflection	0.0171	ft	0.0172	ft
	Time of maximum deflection	0.01481	sec	0.014419	sec

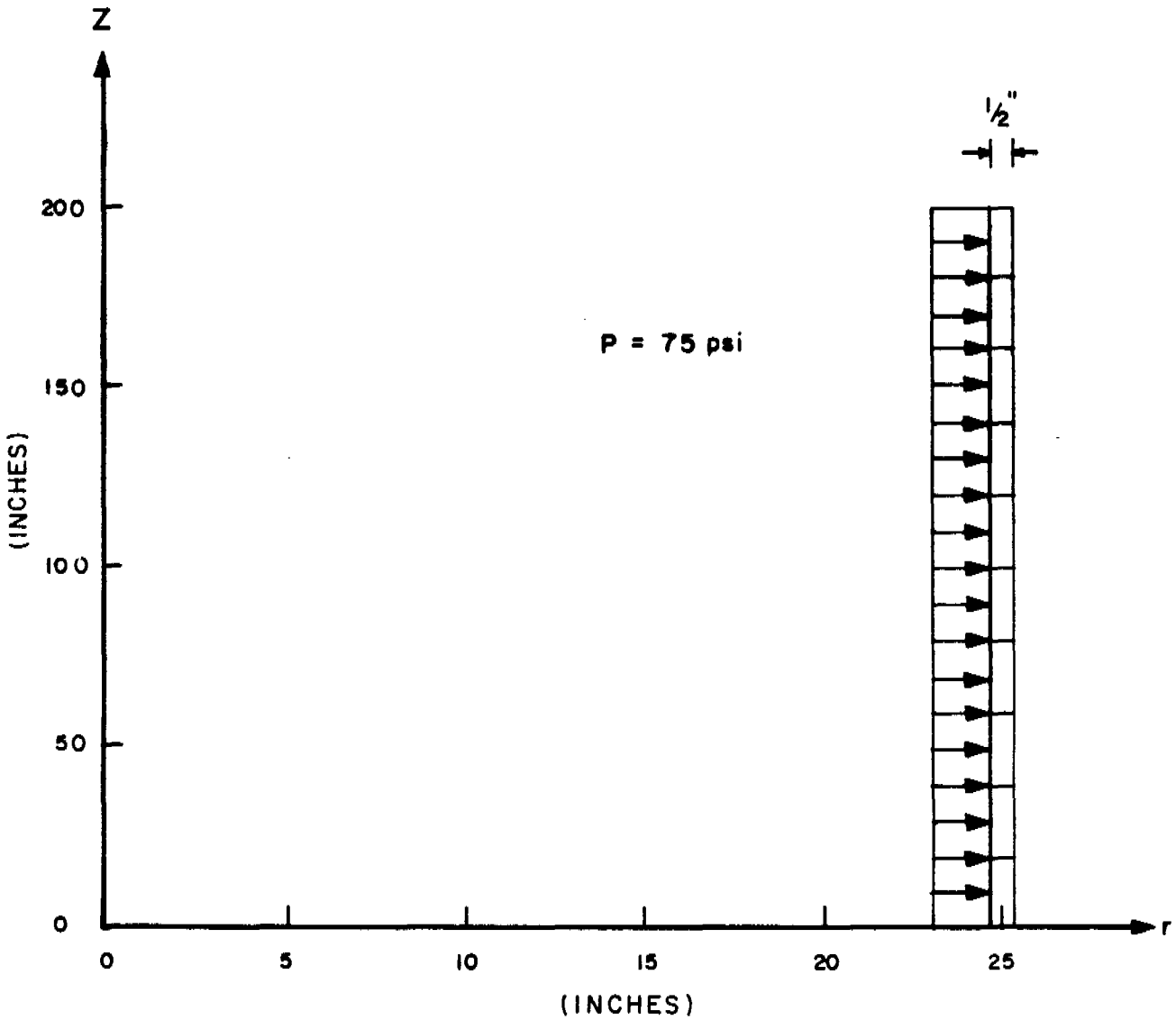

FIGURE 3A.1.2-1

ONE HUNDRED-ELEMENT IDEALIZATION OF THIN-WALL CYLINDER

BEAVER VALLEY POWER STATION - UNIT 2
FINAL SAFETY ANALYSIS REPORT

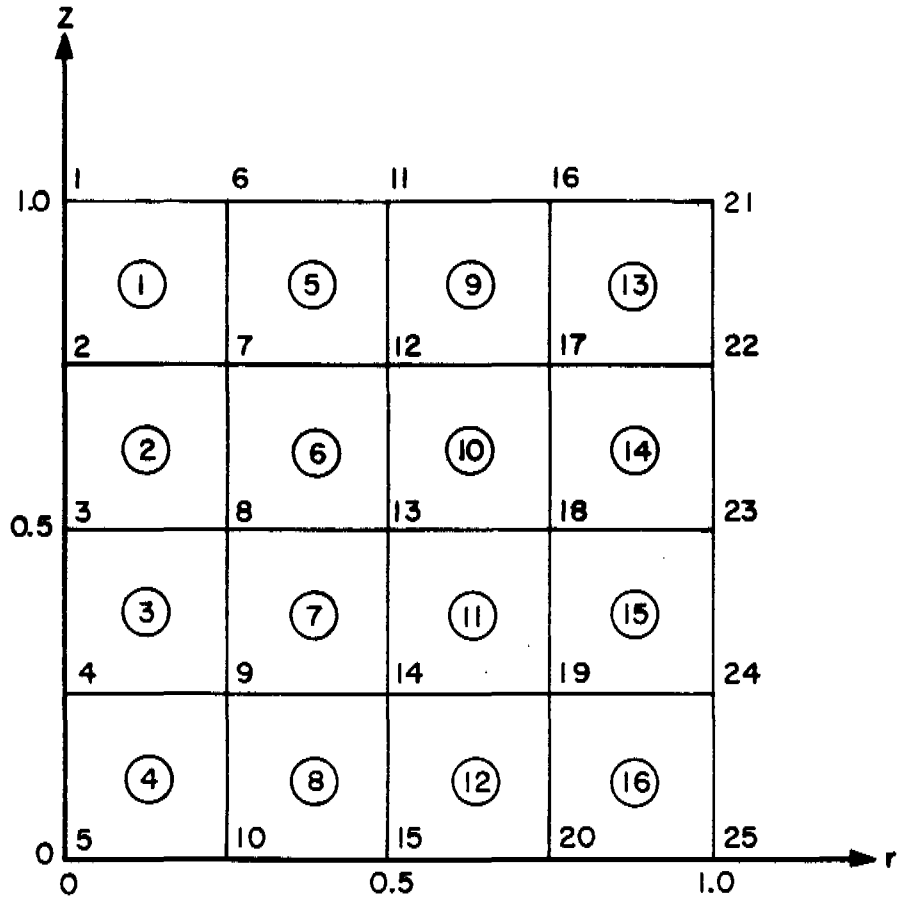

FIGURE 3A.1.4-1

ELEMENT PLOT

BEAVER VALLEY POWER STATION-UNIT 2

FINAL SAFETY ANALYSIS REPORT

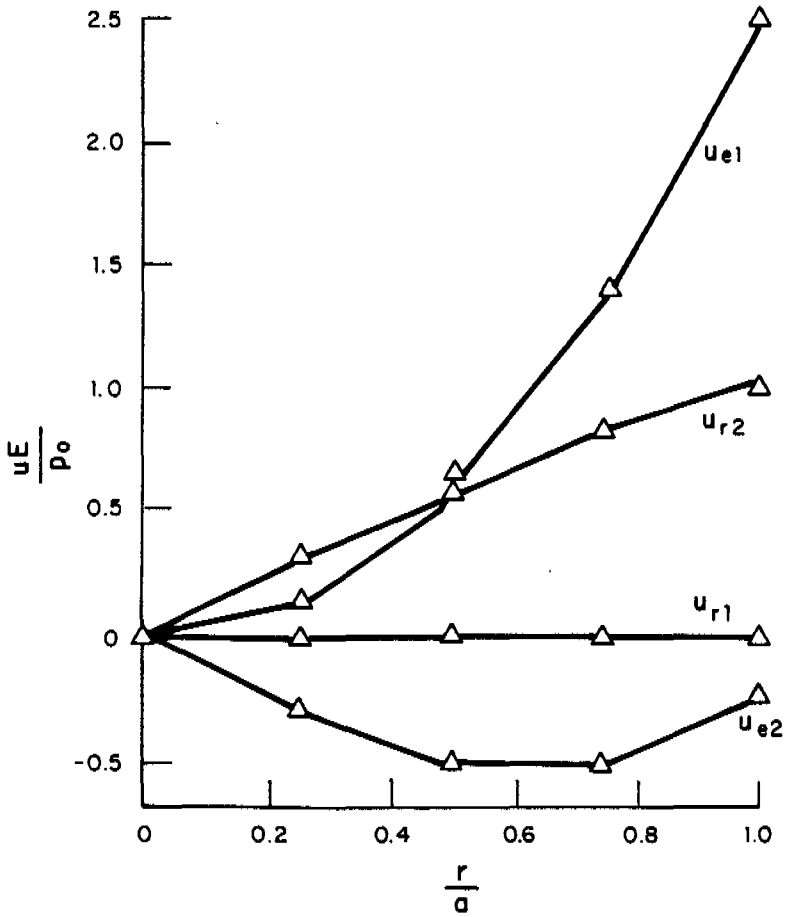

△ 16 ELEMENTS SOLUTION

—— LOVE

FIGURE 3A.1.4-2

HARMONIC AXISYMMETRIC PLAN STRAIN

BEAVER VALLEY POWER STATION-UNIT 2
FINAL SAFETY ANALYSIS REPORT

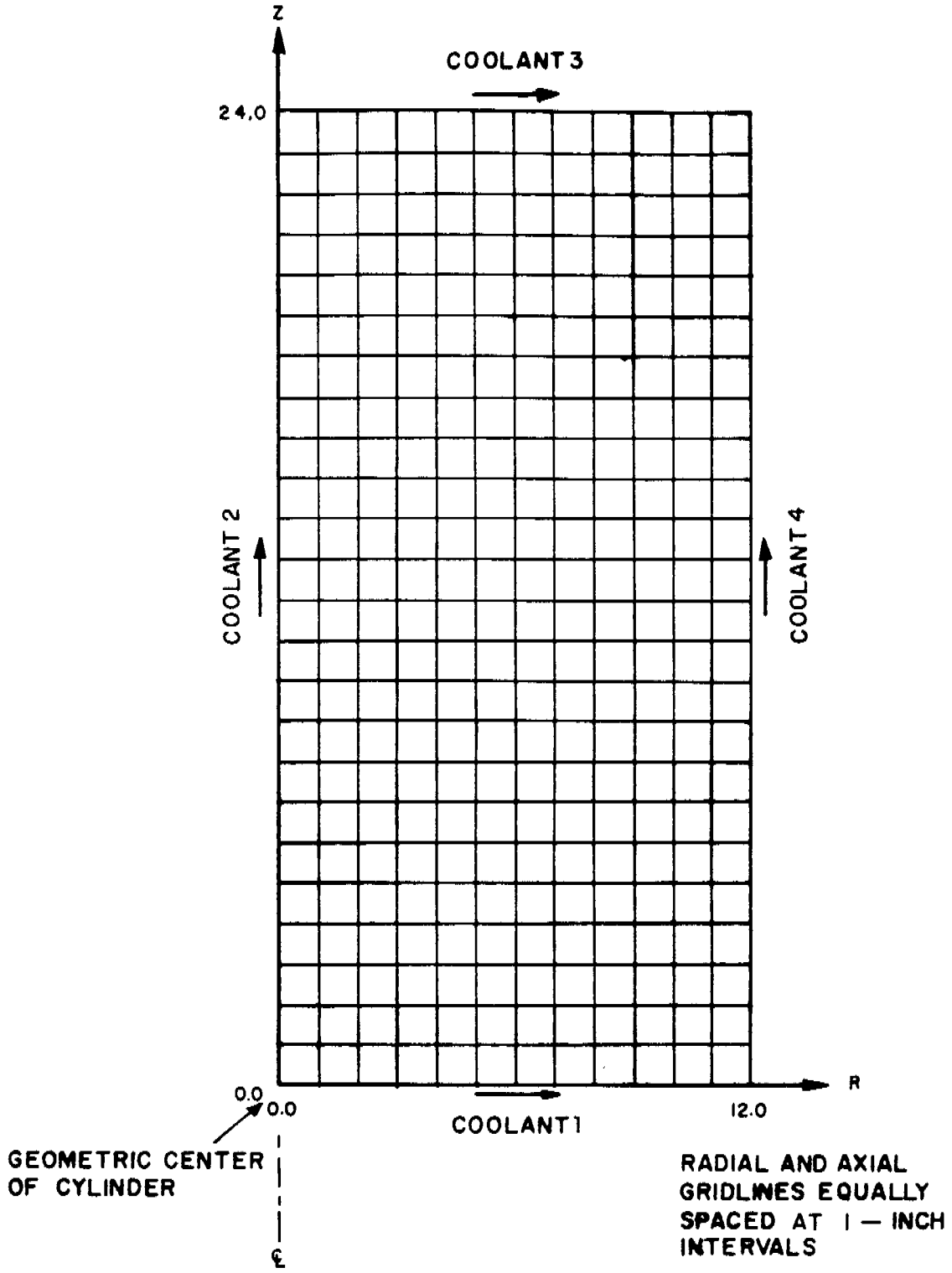

FIGURE 3A.1.5-1

TAC2D SAMPLE PROBLEM
THERMAL MODEL

BEAVER VALLEY POWER STATION- UNIT 2
FINAL SAFETY ANALYSIS REPORT

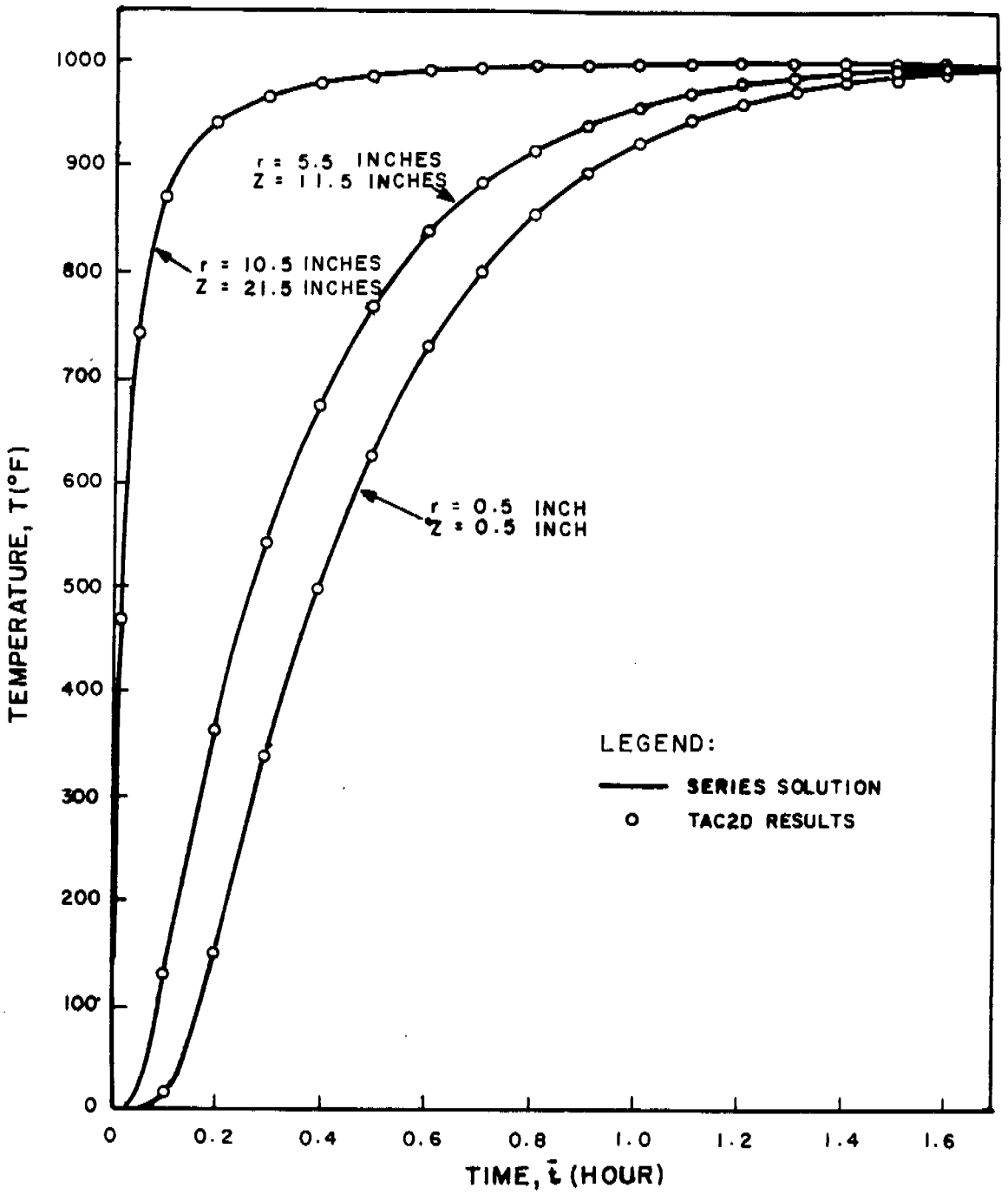

FIGURE 3A.1.5-2

TRANSIENT TEMPERATURES IN A RIGHT CIRCULAR CYLINDER-COMPARISON OF TAC 2D RESULTS WITH SERIES SOLUTION

BEAVER VALLEY POWER STATION-UNIT 2
FINAL SAFETY ANALYSIS REPORT

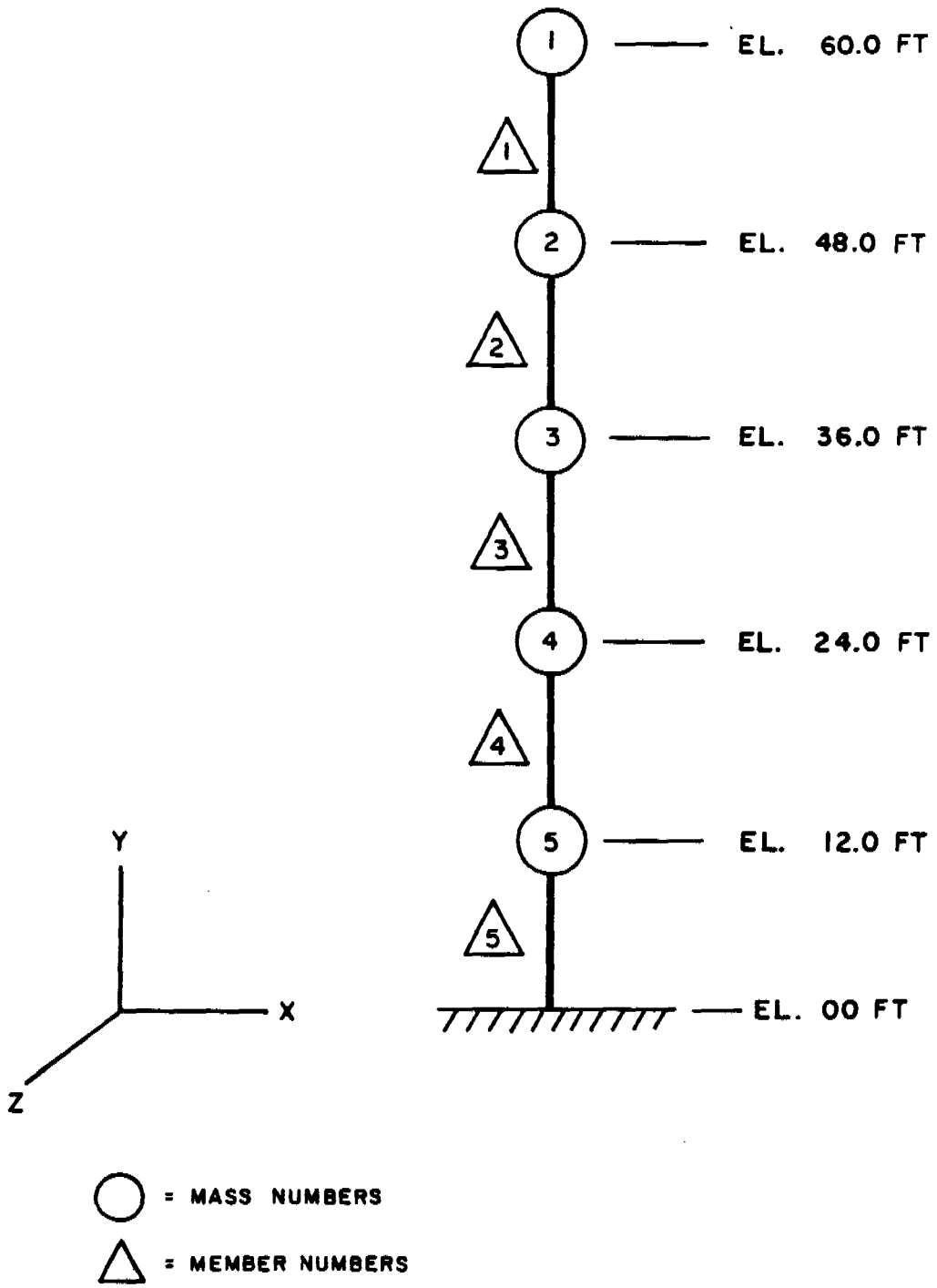

FIGURE 3A.1.6-1
STRUCTURAL MODEL
TIME HISTORY PROGRAM
BEAVER VALLEY POWER STATION-UNIT 2
FINAL SAFETY ANALYSIS REPORT

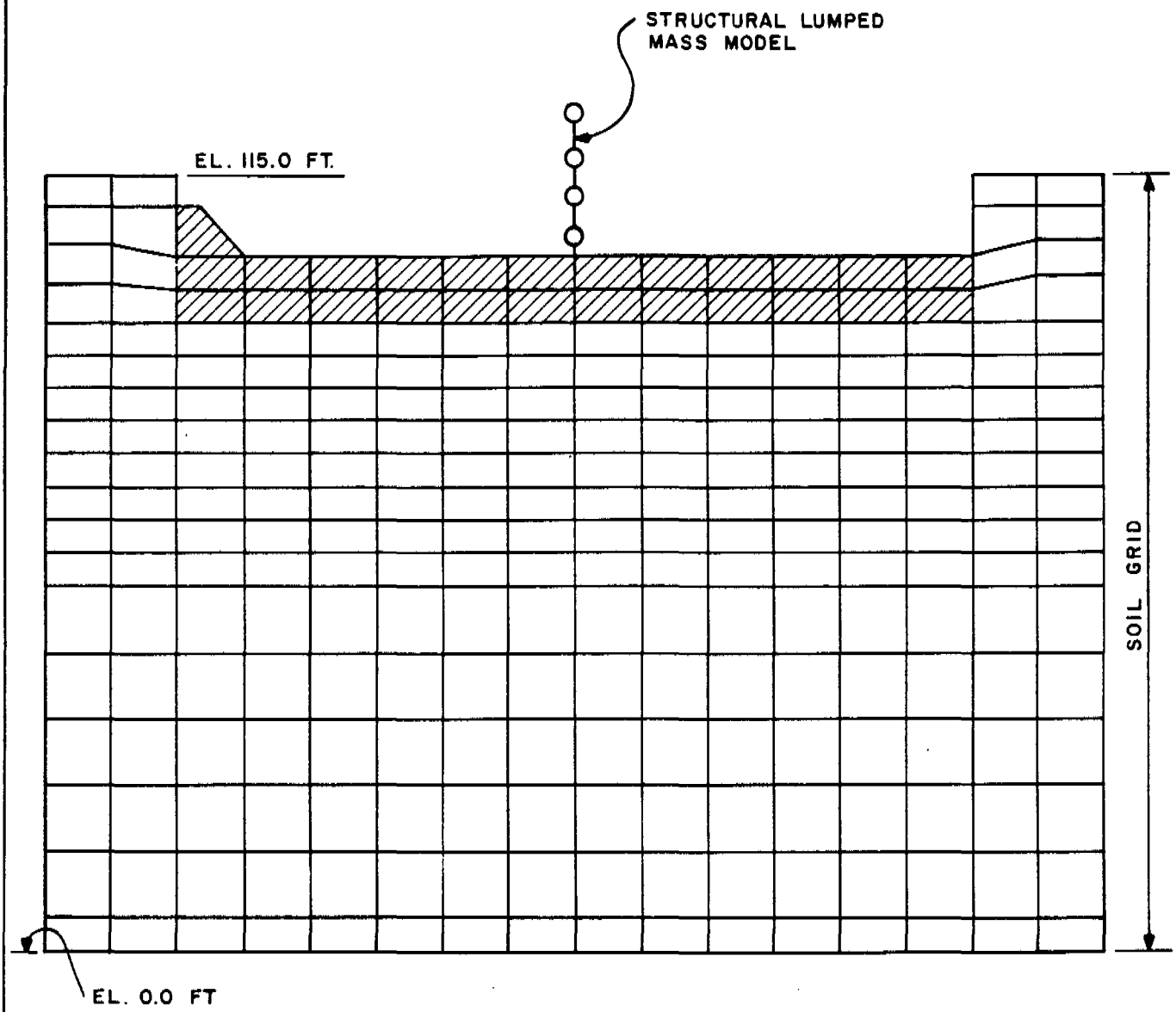

NOT TO SCALE

LEGEND

MAT

FIGURE 3A.1.7-1
FINITE ELEMENT GRID FOR
PLAXLY - FLUSH COMPARISON
BEAVER VALLEY POWER STATION-UNIT 2
FINAL SAFETY ANALYSIS REPORT

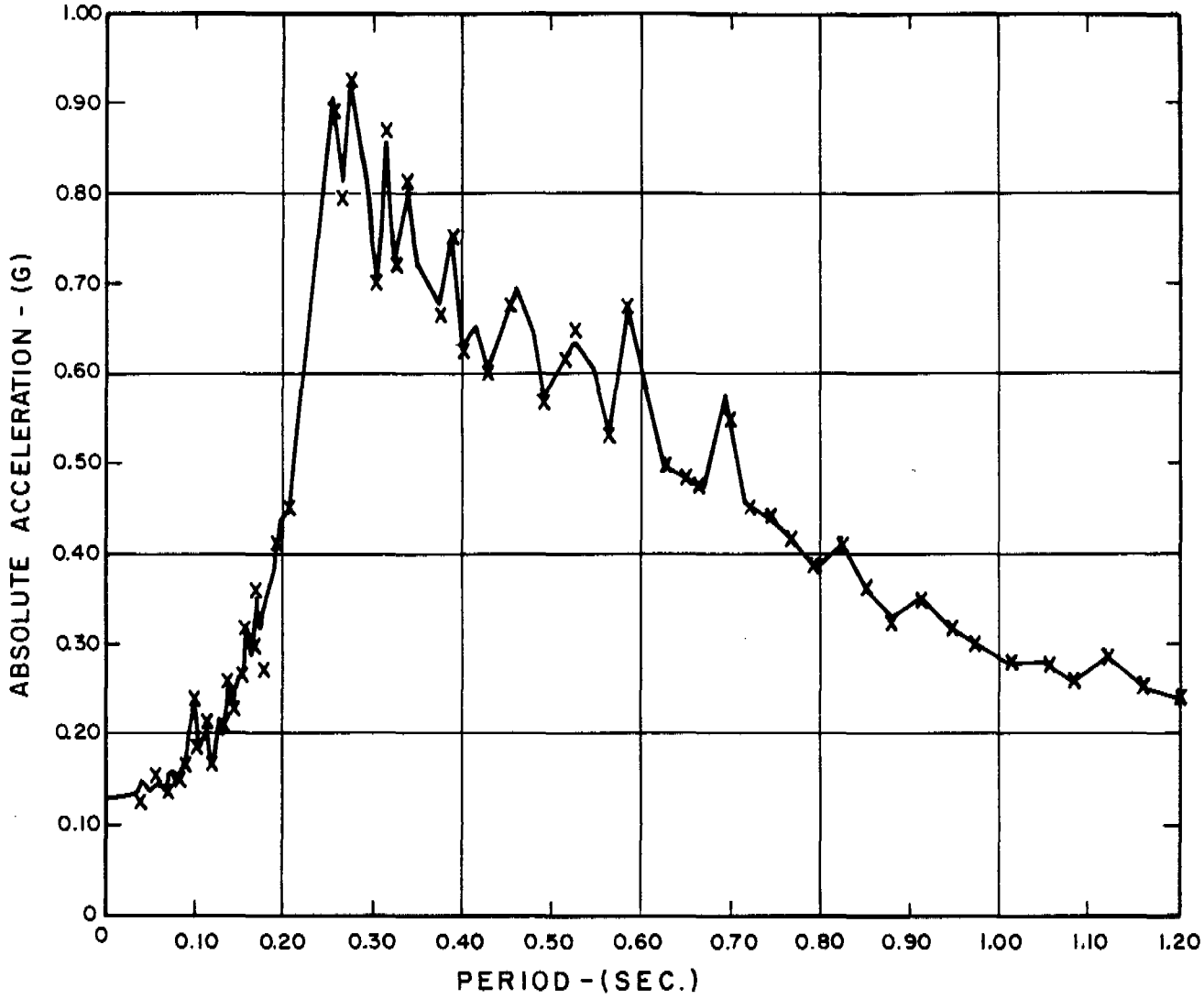

LEGEND

——— PLAXLY RESULTS

X X X X FLUSH RESULTS

FIGURE 3A.1.7-2

HORIZONTAL AMPLIFIED RESPONSE SPECTRA AT TOP MASS IN BEAM STRUCTURE

BEAVER VALLEY POWER STATION-UNIT 2
FINAL SAFETY ANALYSIS REPORT

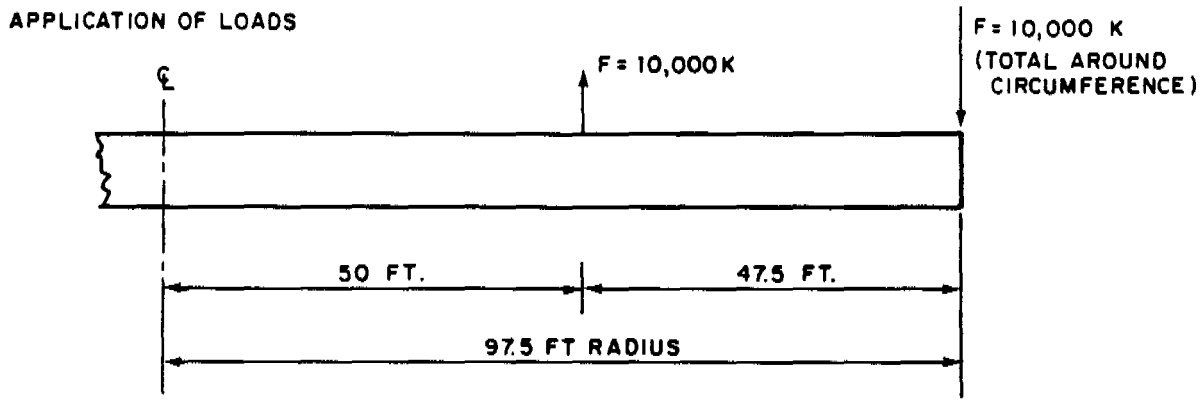

NOTES

1. MAT THICKNESS = 10.0 FT
2. MAT RADIUS = R = 97.5 FT
3. YOUNG'S MODULUS OF MAT = E_m = 432,000.0 KSF
4. POISSON'S RATIO OF MAT = υ = 0.167
5. SOIL SHEAR MODULUS = G_0 = 2,678.6 KSF
6. POISSON'S RATIO OF SOIL = μ_0 = 0.40
7. YOUNG'S MODULUS OF SOIL = E_0 = 7,500.0 KSF
8. SOIL LAYER THICKNESS = 10^6 FT

FIGURE 3A.1.8-1
MAT 6 SAMPLE PROBLEM
BEAVER VALLEY POWER STATION-UNIT 2
FINAL SAFETY ANALYSIS REPORT

3A.2 EQUIPMENT AND COMPONENTS

The following computer programs are used for the analysis of Seismic Category I equipment and components as well as for pipe rupture design and analysis:

1. DINASAW - Dynamic Inelastic Nonlinear Analysis,
2. LIMITA2 - 2-D Nonlinear Transient Dynamic Analysis,
3. LIMITA3 - 3-D Nonlinear Transient Dynamic Analysis,
4. STARDYNE - Linear and Nonlinear Elastic Structure Analysis,
5. NOZZLE - Vessel Penetration Analysis,
6. LION - 3-D Heat Transfer Analysis,
7. SLOSH - Simplified Tank Sloshing Analysis,
8. MISSILE - Turbine Missile Probability Program,
9. PSPECTRA - Combining Amplified Response Spectra,
10. LIMITA2S - Nonlinear Static Analysis of Plane Frames,
11. STRUDL-SW - Structural Analysis Package,
12. STRUDL II - Structural Analysis Program,
13. TAC2D - Heat Transfer Program,
14. TAP-A - 3-D Heat Transfer Program,
15. ANSYS - Nonlinear Transient Thermal/Structural Analysis Program,
16. GTSTRUDL - Structural Analysis Program,
17. LIDOP - Pipe Crush Characteristics,
18. ASYMPR - Asymmetric Pressure Force Time History, and
19. DLF - Dynamic Load Factor

PSPECTRA, STRUDL-SW, STRUDL II, ANSYS, GTSTRUDL and TAC2D program descriptions and verifications are presented in Sections 3A.3.12, 3A.1.3, 3A.1.1, 3A.1.9, 3A.1.13 and 3A.1.5; respectively, and are not duplicated here.

3A.2.1 DINASAW

3A.2.1.1 General Description

DINASAW is a modification and extension of a lumped-mass elastic-plastic dynamic analysis code (Wu and Witmer 1972) used to predict the large-deflection behavior of beams and rings. DINASAW extends this analysis to cover pipes (tubular cross-sections) which may impact walls or restraints.

The analysis, as derived (Wu and Witmer 1972; Collins and Witmer 1973), employs the spatial finite-element method in which the tangential and normal displacement fields are represented by cubic interpolations. By applying the principle of virtual work in conjunction with D'Alembert's principle, the equations of motion may be derived in the form:

$$[M] \{\ddot{q}\} = \{F\} - \{P\} - [H] \{q\} \qquad (3A.2.1\text{-}1)$$

where:

$\{q\}$ and $\{\ddot{q}\}$ = the generalized displacements and generalized accelerations, respectively, for the complete assembled discretized structure defined with respect to a global coordinate system,

$[M]$ = the lumped mass matrix for the complete assembled discretized structure,

$\{F\}$ = the assembled vector of externally-applied loading,

$\{P\}$ = an assembled internal force matrix (replaces conventional stiffness matrix),

$[H] \{q\}$ = generalized loads arising from both large deflection and plastic behavior.

3A.2.1.2 Program Verification

Three examples are discussed here. The first (Wu and Witmer 1972) involves a ring subjected to a radial blast wave over a portion of its circumference (Figure 3A.2.1-1). The resulting deformation severely distorts the ring, flattening it considerably. Still, the computer code follows very closely not only the displacement field, but also the strain time history (Figure 3A.2.1-2 and 3A.2.1-3).

The second case (Collins and Witmer 1973) involves the impact of a rotor segment onto a ring or shroud. Again the program, in conjunction with the Collision Imparted Velocity Method (CIVM), follows experimental results very closely (Figures 3A.2.1-4 and 3A.2.1-5).

The third case was analyzed by DINASAW and LIMITA2 (Section 3A.2.2). It consisted of a cantilever pipe (Figure 3A.2.2-1) subjected to an impulsive load at its free end. The impulse is imparted by the detonation of a sheet of high explosive, separated from the pipe by a buffer material. A nearly uniform initial velocity is produced in the loaded region and is determined by high-speed photography. The results of the DINASAW analyses were compared with experimental data and the output from LIMITA2.

The stress-strain curves used in the DINASAW and LIMITA2 calculations are shown on Figure 3A.2.2-2 with the experimentally derived curve. Figure 3A.2.2-3 shows the lumped mass model used for both computer solutions. The impulsive load, idealized as initial nodal velocities, is also shown on Figure 3A.2.2-3. Time history plots of the X and Y displacements of the free end of the pipe for the LIMITA2 and DINASAW runs are shown on Figures 3A.2.2-4 and 3A.2.2-5, respectively. The moment reaction at the clamped end of the pipe is shown on Figure 3A.2.2-6. A comparison of the permanent pipe deformations predicted by experiment, DINASAW and LIMITA2, is illustrated on Figure 3A.2.2-7. Agreement is good in all cases as shown on Figures 3A.2.2-4, 3A.2.2-5, 3A.2.2-6 and 3A.2.2-7.

3A.2.2 LIMITA2

3A.2.2.1 General Description

LIMITA2 (ST-223) is a two-dimensional, nonlinear, transient dynamic computer code developed and fully documented by Stone & Webster Engineering Corporation (SWEC) for in-house use. A plane frame is simulated as a lumped parameter system, represented mathematically by an assembly of discrete lumped masses connected by beam members. Under any loading, the equilibrium at the rth mass point is ensured by the equation of motion:

$$m_r \ddot{q}_r + \sum^{i} K_{ri} q_i = f_{\bar{r}} \qquad (3A.2.2\text{-}1)$$

where:

$\sum$ = a series with one term for each of the i displacements,

K_{ri} = the member stiffness, which is defined as the force necessary to hold the structural member from moving in the rth degree of freedom when the ith degree of freedom is given a unit displacement when all other degrees of freedom are restrained from moving, (Martin 1966; Przemieniecki 1968),

$f_{\bar{r}}$ = the external load factor,

m_r = the rth discrete mass point of the structure,

$q_i, \ddot{q}_r$ = the generalized displacement and accelerations, respectively, for the complete assembled discretized structure defined with respect to a global system.

To take account of nonlinear effects, such as plasticity and large deflections, Equation 3A.2.2-1 is solved by an incremental method (Clough and Wilson 1962). At any particular time, t, the displacement increment is obtained from:

$$m_r \ddot{q}_r^t + \sum^i K_{ri}^t \, \Delta q_i^t = f_{ri}^t - \sum_{s=o}^{t-\Delta t} \left(\sum^i K_{ri}^s \, \Delta q_i^s \right) \qquad \text{(3A.2.2-2)}$$

where:

K_{ri}^t = the member stiffness

f_{ri}^t = the forcing function

which are calculated based on the current deformed structure (Martin 1966) and assumed constant through the time step, Δt. The displacement and member forces are thus given by:

$$q_r^t = \sum_{s=o}^{t} \Delta q_r^s$$

$$Q_r^t = \sum_{s=o}^{t} \left(\sum^i K_i^s \, \Delta q_i^s \right) \qquad \text{(3A.2.2-3)}$$

where:

q_r = member r displacement vector

Q_r = member r force vector

The second order differential system equations (Equation 3A.2.2-2) are solved by a linear acceleration method (Hildebrand 1956).

Since no external loading is applied to a member between nodes, the maximum value of the internal force acting on a member occurs at its end sections. The transition from the elastic to the fully plastic state is disregarded and the end sections are assumed to remain linearly elastic up to the full plastic yield surface.

The yield surface is defined by a scalar function of the internal member forces, Q, of the form (Hodge 1959; Neal 1961; and Stokey, Peterson, and Wruder, 1966):

$$\Phi(Q^t) = 1 \qquad (3A.2.2\text{-}4)$$

Here the function Φ is obtained by integrating the stress across the section with the stress fully developed over the section and satisfying the von Mises (or Tresca) yield criterion:

$$\sigma^2 + \gamma^2 \tau^2 = \sigma_y^2 \qquad (3A.2.2\text{-}5)$$

where:

σ = normal stress,

τ = shear stress,

σ_y = yield stress in simple tension,

γ^2 = 3 (von Mises) or 4 (Tresca).

Thus, the function Φ depends on the shape of the cross section and the force components being considered.

For a frame structure, the yielding normally occurs due to either a predominant bending moment or to a predominant tension or compression. Thus, two plastic models are provided:

1. Bending predominant members

   Since a section is either elastic or fully plastic, there are four possible states:

   a. Both ends A and B are elastic,

   b. End A is yielding and B is elastic,

   c. End A is elastic and B is yielding, or

   d. Both ends A and B are yielding.

   A plastic hinge is introduced at any end section which is yielding. The force-displacement relation of the plastic hinge follows an ideal bilinear strain-hardening curve (Clough, Benuska, and Wilson 1965; Giberson 1967). In

situations where the force unloads, the elastic stiffness of the hinged member is restored (isotropic strain-hardening model).

2. Tension or compression predominant members

There are only two possible states:

a. The entire member is elastic, or

b. The entire member is plastic.

When the member yields, Young's Modulus is replaced by a plastic tangent modulus and the force-displacement curve follows a bilinear curve. If the member unloads, the elastic modulus is restored.

3A.2.2.2 Program Verification

SWEC sponsored an experimental investigation performed by the Massachusetts Institute of Technology (MIT) (Pirotin and East 1977). The problem consisted of the cantilevered pipe (Figure 3A.2.2-1) subjected to an impulsive load at its free end. The impulse is imparted by the detonation of a sheet of high explosive, separated from the pipe by a buffer material. A nearly uniform initial velocity is produced in the loaded region and is determined by high speed photography. This problem was analyzed by LIMITA2. The results were compared with experimental data and output from another computer program, DINASAW.

The stress-strain curves used in the LIMITA2 and DINASAW calculations are shown on Figure 3A.2.2-2 with the experimentally derived curve. Figure 3A.2.2-3 shows the lumped-mass models used for both computer solutions. The impulsive load, idealized as initial nodal velocities, is also shown on Figure 3A.2.2-3. Time history plots of the x and y displacements of the free end of the pipe for the LIMITA2 and DINASAW runs are shown on Figures 3A.2.2-4 and 3A.2.2-5, respectively. The moment reaction at the clamped end of the pipe is shown on Figure 3A.2.2-6. A comparison of the permanent pipe deformations predicted by the experiment, DINASAW, and LIMITA2 is illustrated on Figure 3A.2.2-7. Agreement is good in all cases, as seen on Figures 3A.2.2-4, 3A.2.2-5, 3A.2.2-6 and 3A.2.2-7. Additional problems were also evaluated to ensure that all program options were exercised, and thus demonstrate the function and adequacy of this program.

3A.2.3 LIMITA3

3A.2.3.1 General Description

LIMITA3 (ST-225) is a computer code developed and fully documented by SWEC for in-house use. Its formulation is identical to that of LIMITA2 (Section 3A.2.2), with the exception that the equations are

applicable to a general three-dimensional problem. For a space frame, yielding normally occurs due to either a predominant bending moment or a predominant torsion (combined with axial load). Therefore, two plastic models are provided.

1. Bending Yield Model

   Since a beam section is either elastic or fully plastic, there are four possible states:

   a. Both ends A and B are elastic,

   b. End A is plastic, end B is elastic,

   c. End A is elastic, end B is plastic, or

   d. Both ends A and B are plastic.

   A plastic hinge is introduced at any end section which is yielding. The force-displacement relation of the plastic hinge follows an ideal bilinear strain-hardening curve (Clough, Benuska, and Wilson 1965; Giberson 1967). In situations where the force unloads, the elastic stiffness of the hinged member is restored (isotropic strain-hardening model).

2. Torsional-Axial Yield Model

   There are only two possible states:

   a. The entire member is elastic, or

   b. The entire member is plastic.

   When the member yields, the Young's Modulus is replaced by a plastic tangent modulus and the force-displacement relation follows a bilinear curve. If the member unloads, the elastic modulus is restored.

3A.2.3.2 Program Verification

3A.2.3.2.1 Elastic Example

Consider the dynamic response of a space frame (Figure 3A.2.3-1) subjected to a step load of 30 kips at joint 6. This problem was analyzed by LIMITA3 and STRUDL II elastically. The results of displacements and moment Z at joint 6 were plotted against each other on Figures 3A.2.3-2 and 3A.2.3-3, respectively. As shown, there is excellent agreement.

3A.2.3.2.2 Plastic Example

This example is provided to illustrate the ability of the program to determine the inelastic transient response of a three-dimensional structure. The structure considered consists of cantilevered steel tubes (Figure 3A.2.3-4) subjected to force transients, causing bending and torsion in the structure. The results obtained from an analysis using the LIMITA3 code are compared with data obtained experimentally (Larson 1973).

The experiment was a drop test in which the cantilevered tubes were loaded by weights at each tube end. The results tabulated were the peak deflections and their corresponding times and the permanent deflections. These results are compared to those obtained using the LIMITA3 code in Table 3A.2.3-1.

Additional problems, elastic and inelastic, were analyzed to ensure that all program options were exercised, and thus demonstrate the function and adequacy of this program.

3A.2.4 STARDYNE

3A.2.4.1 General Description

The STARDYNE (ST-330) Structural Analysis System, written by System Development Corporation (SDC) of Santa Monica, California, is a fully warranted and documented computer program available at Control Data Corporation. The latest version of this program became available in 1984.

The SDC STARDYNE Analysis System consists of a series of compatible digital computer programs, which includes the DYNRE1, DYNRE4, and DYNRE6 codes, designed to analyze linear and nonlinear elastic structural models. The system encompasses the full range of static and dynamic analyses.

The basic equation used by STARDYNE is:

$$[m]\{\ddot{\delta}\} + [c]\{\dot{\delta}\} + [k]\{\delta\} = \{F(t)\} \qquad (3A.2.4\text{-}1)$$

where:

$[m]$ = mass matrix

$[c]$ = damping matrix

$[k]$ = stiffness matrix

$\{\delta\}$ = displacement vector

$\{\dot{\delta}\}$ = velocity vector

$\{\ddot{\delta}\}$ = acceleration vector

$\{F(t)\}$ = time dependent forcing function

The static capability includes the computation of structural deformations and member loads and stresses caused by an arbitrary set of thermal, nodal-applied loads, and prescribed displacements (Cybernet Services 1974, Section I-C).

Utilizing the normal mode technique (Cybernet Services 1974, Sections III-A and IV-A) linear dynamic response analyses can be performed for a wide range of loading conditions, including transient (Cybernet Services 1974, Section IV-B), steady-state harmonic (Cybernet Services 1974, Section IV-C), random (Cybernet Services 1974, Section IV-D), and shock spectra excitation types (Cybernet Services 1974, Sections III-E and III-F). Dynamic response results can be presented as structural deformations and internal member loads.

The nonlinear dynamic analysis program is integrated in the rest of the STARDYNE system. The equations of motion for the linear portion of the structural model are generated and modified to account for the nonlinear springs. The resulting nonlinear equations of motion are directly integrated using either the Newmark or Wilson implicit integration operators (Newmark 1959; Bathe and Wilson 1973). The user may enter sets of structural loadings which vary with time, and specify time points at which the program is to output the structural response.

3A.2.5 NOZZLE

3A.2.5.1 General Description

The vessel penetration analysis computer code, NOZZLE (ST-147), is a code written and fully documented by SWEC for in-house use. This code performs various analyses on tanks and pressure vessels. All of the analyses are concerned with local stresses at penetrations. Typical problems which can be handled include the following:

1. Applied load stresses at vessel-nozzle junction for:

    a. Rigid attachment to cylinder,

    b. Rigid attachment to sphere, or

    c. Hollow attachment to sphere,

2. Pressure discontinuity analysis for thin shell interaction,

3. Allowable load functions on nozzles for each case.

Local stresses due to nozzle loads are found by the method prescribed by P. P. Bijlaard (Wichman, Hopper, and Mershon 1965). The method prescribed by Johns and Orange (1961) is used for pressure discontinuity stresses.

3A.2.5.2 Program Verification

A sample problem of a thin-walled cylindrical vessel is subjected to applied loads from a rigid cylindrical attachment. This problem may be solved using Wichman, Hopper, and Mershon's (1965) method. The pertinent parameters of the problem are presented in Figure 3A.2.5-1.

A summary of the manual calculations is shown on Figure 3A.2.5-1. The computer calculations are summarized on Figure 3A.2.5-2. As can be seen, the computer results are very close to the exact results.

The second sample problem is of a thin-walled spherical vessel subjected to applied loads at a hollow nozzle. The pertinent parameters and a summary of the manual calculations are shown on Figure 3A.2.5-3. The computer calculations are summarized on Figure 3A.2.5-4. The comparison shows excellent agreement for this type of analysis.

The third sample problem is of a thin-walled cylindrical vessel. The purpose of this problem was to analyze the discontinuity stresses at the nozzle to shell junction. The pertinent parameters are provided on Figure 3A.2.5-5. The comparison of manual calculations to computer calculations are summarized on Figure 3A.2.5-6.

3A.2.6 LION

3A.2.6.1 General Description

LION (ME-112) is a digital computer program which is used to solve three-dimensional transient and steady-state temperature distribution problems. The program may also consider subcooled nucleate boiling and coolant heat transfer effects. The surface conditions may be forced convection, free convection, or radiation, and heat may be externally or internally generated. Input to the program consists of structural geometry, physical properties, boundary conditions, internal heat generation rates, coolant flow properties, and flow rates. The program solves the transient heat conduction equations for a three-dimensional field using a first forward difference method.

Since the original program by Bray (1954) was developed, subsequent versions have evolved to solve larger and more complex problems (Bray 1954; Bray and McCraken 1959; Briggs 1963; Lechliter, Liedel, and Schmid 1964; Schmid, Lechliter, and Fisher 1969).

LION is a recognized program developed by the General Electric Company, Knolls Atomic Power Laboratory, Schenectady, N.Y., and

obtained by SWEC from the Argonne Code Center. Verification of the program is contained in the user's manual. This includes problems which were provided by the Argonne Code Center, hand-calculated results produced by Knolls Atomic Power Laboratory, and the computer output of the test runs.

3A.2.7 SLOSH

3A.2.7.1 General Description

SLOSH (ME-111) is a computer code written and fully documented by SWEC for in-house use. The purpose of this program is to compute the seismically-induced liquid pressures and the maximum vertical displacement of the liquid surface in a container under horizontal acceleration. The mathematical procedures and formulas used in developing the program were taken from AEC Report TID-7024 (U.S. Atomic Energy Commission (USAEC) 1963). The program uses data for intensity of ground motion taken from average-acceleration-spectrum curves, as used in the analysis in TID-7024.

The program is used for circular or rectangular, shallow or slender, ground-supported tanks and circular or rectangular, shallow (not slender) tower-supported tanks.

3A.2.7.2 Program Verification

There are three examples provided in TID-7024 (USAEC 1963). These problems cover 1) tanks supported on the ground, 2) slender tanks supported on the ground, and 3) elevated tanks. The pertinent parameters of the problems are presented in Table 3A.2.7-1. The comparison of computer calculations to those given in TID-7024 are provided in Table 3A.2.7-2. This comparison shows excellent agreement between the SLOSH results and those provided in TID-7024.

3A.2.8 MISSILE

3A.2.8.1 General Description

MISSILE (MA-057) is a computer code written and fully documented by SWEC for in-house use. The MISSILE program calculates the impact probability (P_2) of postulated turbine missiles on specified targets. The solid angle method is used to calculate P_2. The following is the methodology:

The turbine spins about the Z-axis of the reference system as shown on Figure 3A.2.8-1. Based on data provided by Westinghouse Electric Corporation, a postulated missile is thrown from the turbine with initial velocity V , as shown. The variable angles required to describe the resulting motion are displayed as shown on Figure 3A.2.8-1. Deflection angles δ^1 and δ^2 provided by Westinghouse limit 0 to the range:

$$\frac{\pi}{2} - \delta_1 \le \theta \le \frac{\pi}{2} + \delta_2 \qquad (3A.2.8\text{-}1)$$

The probability that a single disc fragment strikes a critical area
A is defined as:f

$$P_2(A_0) = \int_{\Omega_o} f(\Omega)\, d\Omega \qquad (3A.2.8\text{-}2)$$

where:

Ω_0 = the solid angle which must be subtended by the initial velocity vector for a missile to strike A,

d_Ω = the differential solid angle, and

$f(\Omega)$ = the probability density function.

From Figure 3A.2.8-1:

$$d\Omega = \cos\Phi\, d\Phi\, d\psi \qquad (3A.2.8\text{-}3)$$

Given V_o, the elevation angle Φ necessary to hit any point on A_o (described by r, y, and Ψ on Figure 3A.2.8-1 is determined from classical trajectory theory as:

$$\Phi = \tan^{-1}\left[\frac{1 \pm \left[1 - \left(rg/v_0^2\right)^2 - 2\left(yg/v_0^2\right)\right]^{1/2}}{\left(rg/v_0^2\right)}\right] \qquad (3A.2.8\text{-}4)$$

In Equation 3A.2.8-4, air resistance is neglected and the ± refers to high and low trajectory missiles respectively.

The probability density function f (Ω) is determined by assuming:

$f(\Omega)$ = constant = f_o for $0 \le \beta \le 2\pi$ and (3A.2.8-5)

$$\pi/2 - \delta_1 \le \Phi \le \pi/2 + \delta_2$$

$f(\Omega)$ = O, for all other θ

From probability theory it is required that:

$$\int_{\Omega} f(\Omega) \quad d\Omega = 1 \qquad (3A.2.8\text{-}6)$$

Therefore,

$$f_o = \frac{1}{2\Pi\ (\sin\delta_1 + \sin\delta_2)} \qquad (3A.2.8\text{-}7)$$

The probability that n disc fragments strike a critical area, A is then:

$$P_2(A_o) = \frac{n}{2\Pi\ (\sin\delta_1\ +\ \sin\delta_2)} \int_{\Omega_o} d\Omega \qquad (3A.2.8\text{-}8)$$

MISSILE has been developed to calculate the strike probability using Equation 3A.2.8-7. Following Bush (1973), the analysis considers high trajectory hits on the tops of all critical targets and low trajectory hits on the sides of all critical targets. Figures 3A.2.8-2 and 3A.2.8-3 represent the top and side views of an idealized target. The strike probability of the target is found by numerically integrating Equation 3A.2.8-7, which gives:

$$P_2 = \frac{n}{2\pi\ (\sin\delta_1 + \sin\delta_2)} \sum_{i=1}^{n_\Psi} (\cos\phi_i)(\Delta\phi_i)\Delta\psi \qquad (3A.2.8\text{-}9)$$

for

$$(\Pi/2 - \delta_1) \le \theta_1 \le (\Pi/2\ +\ \delta_2)$$

and

$$P_2 = 0$$

for

$$O \le \theta_i < (\Pi/2 - \delta_1),\ (\Pi/2 + \delta_2) < \theta_1 \le \Pi$$

where:

$\theta_i = \cos^{-1} (\cos \phi_i \cos \psi_i)$

and

n_ψ = number of ground angle increments taken through the target.

From Figures 3A.2.8-2 and 3A.2.8-3,

$$\Delta\psi = \frac{\psi \max - \psi \min}{n_\psi}$$

$$\psi_i = \psi_{min} + (i - 1/2)\ \Delta\psi \qquad (3A.2.8\text{-}10)$$

$$\Delta\phi_1 = \left|\phi_2^i - \phi_1^i\right|$$

$$\phi_i = 1/2\left(\phi_1^i + \phi_2^i\right)$$

Equation 3A.2.8-4 is used to determine ϕ_1^i, ϕ_2^i. The low and high trajectory probabilities are calculated separately and added to obtain the final probability.

3A.2.8.2 High Trajectory Verification

Westinghouse has derived a formula to predict the probability of impact for high trajectory missiles (Westinghouse 1974). Some adjustments to the formula are necessary to enable direct comparison of hand calculated results with the program results. The formula has been derived on the basis that the initial velocity is random and uniformly distributed between V_1 and V_2. The program uses a deterministic initial velocity. The formula may be specialized to this condition by setting V_1 equal to V_2 after applying L'Hopital's Rule. Also, the formula has been derived assuming a missile fragment occurs in the quadrant of the target, whereas the program assumes a missile fragment can occur in any of the four quadrants. These differing assumptions can be reconciled by using four fragments for program input.

After making the above adjustments, the high trajectory formula becomes:

$$P = G^2/(2\pi\Delta V^4) \qquad (3A.2.8\text{-}11)$$

where:

P = Impact probability per square foot of target,

G = Acceleration of gravity (ft/sec^2),

Δ = Deflection angle range (radians),

V = Initial velocity (fps).

Comparison of the probability calculated by the formula and the results of the computer program are given in Table 3A.2.8-1.

3A.2.8.3 Low Trajectory Verification

The probability of impact for low trajectory missiles (LTM) calculated by this program was verified by comparison with Bush (1973). The LTM was identified as four fragments of the outer disk resulting from a turbine failure. The two different initial ejection velocities were 300 and 600 fps. The geometry is shown on Figure 3A.2.8-4.

Since only the half of Bush's (1973) 4,800 square foot target lies in the reported interval ($0 \leq \delta < 25°$), only a 2,400 square foot portion was modeled in MISSILE. A comparison of the probability listed in Bush (1973) and the results of the computer program is provided in Table 3A.2.8-1.

Additional problems were analyzed to ensure that all program options were exercised and demonstrate the function and adequacy of this program.

3A.2.9 PSPECTRA

3A.2.9.1 General Description

A description of the program and sample problem used for verification are provided in Section 3A.3.12.

3A.2.10 LIMITA2S

3A.2.10.1 General Description

LIM1TA2S (ST-224) is a computer code written and fully documented by SWEC which predicts the nonlinear, static behavior of two-dimensional structures. A plane frame is represented mathematically as a discrete system of beam members. Under loading, the equilibrium at each joint is ensured by the system equilibrium equations (Martin 1960):

$$[K]\ \{q\} = \{F\} \qquad (3A.2.10\text{-}1)$$

where:

[K] = System stiffness matrix

{q} = Global displacement vector

{F} = External force vector

An element of the stiffness matrix, K_{ij}, situated in row i and column j, is the force in the i th degree of freedom required to produce a unit displacement in the j th degree of freedom when all other degrees of freedom are restrained from moving (Martin 1966; Przemieniecki 1968).

To account for nonlinear effects, such as plasticity and large deflections, Equation 3A.2.10-1 is solved by an incremental method. At any particular load step i, Equation 3A.2.10-1 may be written:

$$[K]_i \ \{\Delta q\} = \{\Delta F\}_i \qquad \text{(3A.2.10-2)}$$

where:

$$[\Delta q]_i = [q]_i = [q]_{i-1} \ [\Delta F]_i = [F]_i - [F]_{i-1}$$

$$[\Delta q]_O = [q]_O, \qquad [\Delta F]_O = [F]_O$$

The stiffness matrix [K] , calculated based on the deformed structure at load step i in Martin's work (1966), is assumed constant through the load step. Displacements and member forces are given at load step i by:

$$\{q\} = \sum_{\alpha=o}^{i} \{\Delta q\}_\alpha$$

$$\{Q\} = \sum_{\alpha=o}^{i} [k]_\alpha \ \{\Delta \overline{q}\}_\alpha \qquad \text{(3A.2.10-3)}$$

where :

{Q} = Member force vector

[k] = Member stiffness matrix

{q} = Member displacement vector

The equilibrium equations, Equation 3A.2.10-2, are solved by a standard elimination technique.

Since no external loading is applied to a member between joints, the maximum value of the internal force acting on a member occurs at its ends. The transition from the elastic to the fully plastic state is disregarded, and the end sections are assumed to remain linearly elastic until a fully plastic state is reached. The yield surface is defined by a scalar function, , of the internal member force, {Q}, having the form (Hodge 1959; Neal 1961; Stokey, Peterson, and Wruder, 1966):

$$\phi\ (\{Q\}_i) = 1$$

(3A.2.10-4)

ϕ is obtained by integrating stress across the member section with the stress fully developed over the section and satisfying the von Mises (or Tresca) yield criterion:

$$\sigma^2 + \alpha^2 \tau^2 = \sigma_y^2$$

(3A.2.10-5)

where:

σ = Normal stress

τ = Shear stress

σ_y = Yield stress in simple tension

α^2 = 3 (von Mises) or 4 (Tresca)

Thus the function depends on the shape of the cross section and the force components being considered. For a plane frame, the yielding normally occurs due to either a predominant bending moment or a predominant axial force. Therefore, two plastic models are used.

Bending Yield Model:

Since a section is either elastic or fully plastic, there are four possible states:

1. Both ends A and B are elastic,
2. End A is plastic, end B is elastic,
3. End A is elastic, end B is plastic, or
4. Both ends A and B are plastic.

A plastic hinge is introduced at any end section which is yielding. The force-displacement relation of the plastic hinge follows an ideal

bilinear curve (Clough, Benuska, and Wilson 1965; Giberson 1967). In situations where force reversal occurs, the elastic stiffness of the hinged member is restored, providing elastic unloading (isotropic strain-hardening model).

Axial Yield Model:

There are only two possible states:

1. The entire member is elastic.

2. The entire member is plastic.

When the member yields, the member elastic Young's modulus is replaced by a plastic tangent modulus and the force-displacement relation follows a bilinear curve. If the member unloads, the elastic modulus is restored.

3A.2.10.2 Program Verification

A center-loaded beam, built in at one end, and supported at the other end, is analyzed for comparison to data obtained analytically. The analytical solution was obtained using limit analysis as explained in Hodge's work (1959). The displacement at the point of loading calculated using LIMITA2S and calculated analytically is shown on Figure 3A.2.10-1.

Additional problems were analyzed to ensure that all program options were exercised and thus demonstrate the function and adequacy of the program.

3A.2.11 STRUDL-SW

3A.2.11.1 General Description

A description of the program is provided in Section 3A.1.3.

3A.2.12 STRUDL II

3A.2.12.1 General Description

A description of the program is provided in Section 3A.1.1.

3A.2.13 TAC2D

3A.2.13.1 General Description

A description of the program and sample problem used for verification are provided in Section 3A.1.5.

3A.2.14 TAP-A

3A.2.14.1 General Description

TAP-A is a general thermal analysis program developed to solve problems involving transient and steady-state heat transfer in multi- dimensional systems. The systems may have arbitrary geometric configuration, boundary conditions, initial conditions, and physical properties. The program has the capability to consider the following modes of heat transfer and boundary conditions:

1. Internal conduction and radiation,

2. Free and forced convection,

3. Radiation at external surfaces,

4. Specified time dependent surface temperatures, heat fluxes and boundary conditions, and

5. Space and time dependent thermal conductivity and heat capacity.

The TAP-A program solves the general heat conduction equation:

$$\nabla \bullet K\nabla t + q = \rho\, C_p \frac{\partial t}{\partial \theta} \qquad \text{(3A.2.14-1)}$$

by either of two unconditionally stable finite difference methods. The first method is the implicit method:

$$Q_i + \sum_j Y_{ij}(t_i^* - t_j^*) = \frac{C_i(t_i^* - t_i)}{\Delta\theta} \qquad \text{(3A.2.14-2)}$$

and the second technique is the exponential explicit method:

$$t_i^* = Z_i t_i + \frac{(1-Z_i)}{\sum_j Y_{ij}} \{\sum_j Y_{ij}\, t_j^* + \sum_j Y_{ij}\, t_j + Q_i\} \qquad \text{(3A.2.14-3)}$$

where:

t_i = temperature of node i at time θ

t_i^* = temperature of node i at time $\theta + \Delta\theta$

θ = time

K = thermal conductivity

C_p = heat capacity

q = heat generation rate per unit volume

Y_{ij} = admittance between node i and node j

Q_i = $q_i\ V_i\ P\theta$

V_i = volume of node i = $L_i\ W_i\ D_i$

Pe = dimensionless time function used when the heat generation rate is a function of time.

C_i = $C_{p_i}\,\rho_i V_i$

ρ_i = density of material of node i

L_i, W_i, D_i = dimension of node i

$$Z_i = \exp\left\{\frac{-\Delta\theta}{C_i}\sum Y_{ij}\right\}$$

When the implicit method is used to determine the temperature of a number of nodes n, a system of n linear equations (3A.2.14-1) must be solved. The Gauss-Seidel procedure is used to solve this system of n linear equations.

3A.2.14.2 Program Verification

TAP-A is a recognized program disseminated under the sponsorship of the National Aeronautics and Space Administration (NASA) and produced by Westinghouse Astronuclear Laboratory. The program or document was obtained by SWEC through Computer Software Management and Information Center (COSMIC), Athens, Georgia.

TAP-A was verified by a multi-dimensional sample problem provided in the user's manual (Pierce and Stumpf 1969) which utilizes all of the program options. As a check or bench mark, several additional sample problems were run and compared to hand-calculated results.

3A.2.14.2.1 Sample Problem

The following sample problem is a typical problem selected to verify steady-state temperature distribution in a composite wall:

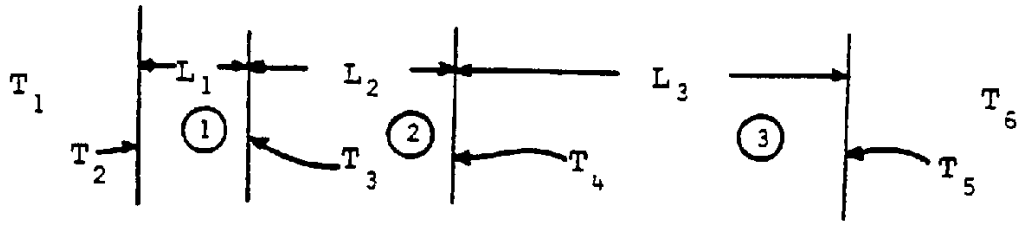

where :

T_1 = 300°F (temp of left environment)

h_1 = 25 Btu/hr-ft^2-°F (film coefficient)

T_6 = 0°F (temp of right environment)

h_6 = 2 Btu/hr-ft^2-°F

K_1 = 1 Btu/hr-ft-°F (thermal conductivity of material No. 1)

K_2 = 5

K_3 = 0.1

L_1 = 0.5 ft (length of material No. 1)

L_2 = 1 ft

L_3 = 2 ft

Hand Solution:

$$Q = \frac{T_1 - T_6}{\sum R_{th}}$$ (R_{th} = thermal resistance)

$$R_{th} = \frac{1}{h_1} + \frac{L_1}{K_1} + \frac{L_2}{K_2} + \frac{L_3}{K_3} + \frac{1}{h_6}$$

= 21.24

therefore, Q = 14.124 Btu/hr

The general solution for T_n is:

$T_n + 1 = T - Q/Rth$

The results are as follows:

	Hand Calculation	TAP-A
T_1	299.4°F	299.4
T_2	292.3	293.0
T_3	289.5	289.7
T_4	7.0	7.1

Verification is concluded from the above results.

3A.2.15 ANSYS

3A.2.15.1 General Description

A description of the program is provided in Section 3A.1.9.1.

3A.2.16 GTSTRUDL

3A.2.16.1 General Description

A description of the program is provided in Section 3A.1.13.1.

3A.2.17 LIDOP (ME-184)

3A.2.17.1 General Description

LIDOP (ME-184) will generate crush rigidities and deformation energies for pressurized or unpressurized piping in the following geometries:

1. Ring crush against flat rigid surface
2. Indent of straight pipe against rigid cylinder
3. 1.5D pipe elbow (extrados) against flat rigid surface
4. Pipe bend (extrados) against flat rigid surface
5. Indent of straight pipe against rectangular block

Both dynamic and material properties are considered in generation of the crush characteristics.

Unpressurized force-displacement and energy-displacement character-istics of pipe and elbows are generated from empirical equations which are based on experimental data. Pressurization effects, based on fluid displacement during deformation, are superimposed on the unpressurized characteristics. The overall dimensions of the contact area, where applicable, are generated by empirically corrected geometric relationships. Dynamic effects of elbows are empirically determined from an experimental comparison of static and dynamic impact of spheres. Dynamic effects of all other geometries and elbows in certain cases are based on the results of finite element computer simulations of rings impacting flat, rigid surfaces. The effects of material properties are determined from empirical relationships based on computer predictions.

3A.2.17.2 Program Verification

Several sample problems were performed by the use of the code ME-184 to ensure that all options were exercised and thus demonstrate the function and adequacy of the program. Analytical results from ME-184 were verified by comparison to hand calculations.

3A.2.18 ASYMPR (ME-171)

3A.2.18.1 General Description

This computer program is written to calculate the time history of the resulting forces and moments at assigned nodes in the dynamic model of the RPV support system. These forces are produced due to the external asymmetric pressure in the reactor cavity, resulting from a LOCA near a hot leg or cold leg nozzle. The pressure forces may be acting at the reactor pressure vessel, the primary shield wall, or the neutron shield tank.

The program performs the following calculation:

$$P(t) = \sum Pj(t) = \sum A_i \, x \, P_i(t)$$

$$M(t) = \sum Pj(t) \; x \; R_j$$

where :

$P_i(t)$ = A pressure time history for pressure area No. i

A_i = An area vector corresponding to the pressure time history p (t)

Pj(t) = Force vector due to pressure acting on No. j area

P(t) = Resultant force vector due to pressures acting on all areas

Rj = Displacement vector from a force application point on an area to the point of rotation

M(t) = Resultant moment vector due to all pressures

To calculate the force and moment time history at a node in a given structural model, the surface area on which the pressure acts is divided into several regions, such that only a constant pressure acts on one region at any time.

The projection of a surface area, multiplied by the pressure acting perpendicular to it, gives the pressure force. This force is broken into three global components by defining the direction cosines of the pressure force vector.

The centroid coordinates of the projected area are then calculated, and when these are subtracted from the coordinates of the node, the displacement components are obtained, which are used in calculating the three moments at the node.

The forces and moments for all projected areas, due to corresponding pressure forces, are thus calculated and summed for each time point to get the force/moment time history for the node.

3A.2.18.2 Program Verification (ME-171)

Sample problems were performed using ME-171 to ensure that all options were exercised and thus demonstrate the functional adequacy of the program. Analytical results from ME-171 were verified by comparison to hand calculations.

3A.2.19 Dynamic Load Factors (DLF ME-185)

3A.2.19.1 General Description

The ME-185 program determines the dynamic load factor (DLF) for a single degree-of-freedom harmonic oscillator subject to an arbitrary force history. At time zero, the oscillator is assumed to be in equilibrium and at rest. Its response to the force history, defined by a series of force-time pairs, is then computed. If the force is not specified at time zero, it is automatically set at zero and ramps up linearly to the first specified force-time coordinate. If the force is specified at time zero, it is assumed to be suddenly applied.

Using the initial conditions at time zero, ME-185 solves the equation of motion and searches for maxima during the interval up to the next specified force-time pair. It then determines the boundary conditions (position and velocity) at the end of the interval and uses these as initial conditions for the solution during the next time increment. The process is repeated until the last force-time pair is reached. Assuming this last force is applied as a continuing

load, the steady state response is computed and maxima determined. The greatest maxima is then divided by the greatest applied load to determine the maximum load factor. Since the solution method searches for the greatest absolute amplitude of the system response and applied force, the applied force may be positive or negative and may arbitrarily change signs during the specified force history.

The dynamic load factor depends on the natural frequency of the single degree of freedom oscillator. In order to provide the DLF at the frequency of the structural system being analyzed, as well as to show how the DLF changes to an error in the calculated frequency or in the duration of the applied force, DLFs are computed for a range of frequencies. The above calculation method is repeated for each of several discrete frequencies in the range. The frequency range extends approximately one order of magnitude to either side of the frequency corresponding to the period (duration) of the applied force history.

For a force which varies linearly between two specified force-time pairs, the equation of motion is:

$$M\ddot{x} + kx = F_o + a_o t$$

where:

M = mass of the oscillator

k = stiffness of the oscillator

F_o = applied force at the start of the interval

a_o = rate of change in the applied force (F/t)

The solution of this equation is:

$$X = C_1 \sin(wt) + C_2 \cos(wt) + C_3 + C_4 t$$

where:

$w = \sqrt{K/M,}$ the natural frequency

$C_1 = (V_o - a_o/k)/w$

$C_2 = X_o - F_o/k$

$C_3 = F_o/k$

$C_4 = a_o/k$

x_o = initial position

V_o = initial velocity

The above relations are simplified and the magnitude of the spring force is made identical to displacement of K=1. This relation is used in ME-185.

When transferring from one time interval to the next, the position and velocity must be determined before the new coefficients, $C_1 \ldots C_4$ can be calculated. The position at the end of the previous time interval can be computed from the above equation for X and the velocity may be determined from:

$$V = C_1 W \cos(wt) - C_2 W \sin(wt) + C_4$$

In any interval, the maxima or minima may be computed by substituting the times of zero velocity in the equation for X. These times may be computed from the relation:

$$O = C_1 w \cos(wt) - C_2 w \sin(wt) + C_4$$

If $C_2 = O$ then,

$$wt = \cos^{-1} (-C_4/(C_1 w))$$

If $C_4 = O$ then,

$$wt = \tan^{-1} (C_1/C_2)$$

If $C_1 = O$ then,

$$Wt = \sin^{-1} (C_4/C_2 w))$$

otherwise:

$$wt = \cos^{-1} \left[\frac{-C_1 C_4 w \pm C_2 w \sqrt{(C_1^2 + C_2^2) w^2 - C_4^2}}{(C_1^2 + C_2^2) w^2} \right]$$

3A.2.19.2 Program Verification

Several problems were performed by the use of DLF (ME-185) to ensure that all options were used and thus demonstrate the function and adequacy of the program. Analytical results from ME-185 were verified by comparison to hand calculations.

3A.2.20 References for Appendix Section 3A.2

Bathe, K.J. and Wilson, E.L. 1973. Stability and Accuracy Analysis of Direct Integration Methods. Earthquake Engineering and Structural Dynamics, Vol 1, p 283-291.

Bray, A.P. 1954. TIGER-Temperatures from Internal Generation Rates. General Electric Co., KAPL, Schenectady, NY.

Bray, A.P. and MacCracken, S.J. 1959. TIGER-II-Temperatures from Internal Generation Rates. General Electric Co., KAPL-2004, Schenectady, NY.

Briggs, D.L. 1963. TIGER-Temperatures from Internal Generation Rates. General Electric Co., KAPL-M-EC-29, Schenectady, NY.

Bush, S.H. 1973. Probability of Damage to Nuclear Components Due to Turbine Failure. Nuclear Safety, Vol 14, No. 3, p 197.

Clough, R.W.; Benuska, K.L.; and Wilson, E.L. 1965. Inelastic Earthquake Response of Tall Buildings. Proceedings of the Third World Conference on Earthquake Engineering, Vol II, Auckland and Wellington, New Zealand, p 68-69.

Clough, R.W. and Wilson, E.L. 1962. Dynamic Response by Step-by-Step Matrix Analysis. Symposium on Use of Computers in Civil Engineering, Lisbon, Portugal, p 45.1-45.14.

Collins, T. and Witmer, E. 1973. Application of the Collision Imparted Velocity Method for Analyzing the Responses of Containment and Reflector Structures to Engine Rotor Fragment Impact.

Aereolastic and Structures Research Laboratory, Department of Aeronautics and Astronautics, Massachusetts Institute of Technology (MIT).

Cybernet Services 1974. MRI/Stardyne Theoretical Manual. Control Data Corporation, Publication No. 86616300.

Giberson, M.F. 1967. The Response of Non-Linear Multi-Story Structures Subjected to Earthquake Excitation. Earthquake Engineering Research Lab, California Institute of Technology, Pasadena, California.

Hildebrand, F.B. 1956. Introduction to Numerical Analysis. McGraw-Hill Book Company, Inc., New York, NY.

Hodge, P.G. 1959. Plastic Analysis of Structures. McGraw-Hill Book Company, Inc., New York, NY.

Johns, R.H. and Orange, T.W. 1961. Theoretical Elastic Stress Distributions Arising from Discontinuities and Edge Loads in Several Shell-Type Structures. NASA Technical Report R-103.

Larson, L.D. 1973. Inelastic Response of Pressurized Tubes Under Dynamic Bending and Torsional Loads. Ph.D. Thesis, Mechanical Engineering Department, Carnegie-Mellon University, University Microfilm Order No. 73-22872.

Lechliter, G.L.; Liedel, A.L.; and Schmid, J.R. 1964. Mathematics Programs Available on Philco 2000 Computer, Part II, Curve Plotting. KAPL-M-6416 (EC-40).

Martin, H.C. 1966. Introduction to Matrix Methods of Structural Analysis. McGraw-Hill Book Company, Inc., New York, NY.

Martin, H.C. 1960. On the Derivation of Stiffness Matrices for the Analysis of Large Deflection and Stability Problems. Proc. Conf. Matrix Methods Structure Mech., Wright-Paterson Air Force Base, Ohio, AFTDL TR 66-80.

Neal, B.G. 1961. The Effect of Shear and Normal Forces on the Fully Plastic Moment of a Beam of Rectangular Cross Section. Journal of Applied Mechanics, p 269-274.

Newmark, N.M. 1959. A Method of Computation for Structural Dynamics. Journal of Engineering Mechanics Division, ASCE, Vol 85, No. EM3, Proc Paper 2094.

Pierce, B.L. and Stumpf, H.J. TAP-A: Program for Computing Transient or Steady-State Temperature Distributions User's Manual. Westinghouse Astronuclear Laboratory Document No. WANL-TME-1872, December 1969.

Pirotin, S.D. and East, G.H. 1977. Large Deflector, Elastic-Plastic Response of Piping: Experiment, Analysis, and Application. Transactions of the Fourth SMIRT Conference, Paper F3/1, San Francisco, California.

Przemieniecki, J.S. 1968. Theory of Matrix Structural Analysis. McGraw-Hill Book Company, Inc., New York, NY.

Schmid, J.R.; Lechliter, G.L.; and Fisher, W.W. 1969. LION-Temperature Distribution for Arbitrary Shapes and Complicated Boundary Condition. KAPL-M-6532 (EC-57), Revision IV.

Stokey, W.F.; Peterson, D.B.; and Wruder, R.A. 1966. Limit Load for Tubes Under Internal Pressure, Bending Moment, Axial Force and Torsion. Nuclear Engineering and Design, 4, North-Holland Publishing Company, Amsterdam, Holland, p 193-261.

U.S. Atomic Energy Commission (USAEC) 1963. Nuclear Reactors and Earthquakes, Chapter 6, Dynamic Pressure on Fluid Containers. TID-7024, Division of Reactor Development, Washington, D.C.

Westinghouse Electric Corporation 1974. Analysis of the Probability of the Generation and Strike of Missiles from a Nuclear Turbine. Steam Turbine Division, p 48.

Wichman, K.R.; Hopper, A.G; and Mershon, J.L. 1965. Local Stresses in Spherical and Cylindrical Shells Due To External Loading. Welding Research Council Bulletin, WRC-107.

Wu, R. and Witmer, E. 1972. Finite-Element Analysis of Large Transient Elastic-Plastic Deformations of Simple Structures, with Application to the Engine Rotor Fragment Containment-Deflection Problem. Aeroelastic and Structures Research Laboratory, Department of Aeronautics and Astronautics, Massachusetts Institute of Technology (MIT).

Tables for Section 3A.2

TABLE 3A.2.3-1

COMPARISON OF EXPERIMENTAL DATA AND ANALYTICAL DATA USING LIMITA3

	Experimental Values	LIMITA3 Computer Results	Difference (%)
Peak deflection-in node 6	.297	.310	4.2
Peak deflection-in node 9	(Not determined)	.870	-
Time at peak deflection-sec node 6	.004	.0042	4.8
Permanent deflection-in node 6	.144	.140	2.8
Permanent deflection-in node 9	.302	.310	2.6

TABLE 3A.2.7-1

SAMPLE PROBLEMS-INPUT PARAMETERS

	Example 1 - Tank on Ground	Example 2 - Slender Tank	Example 3 - Tank on Tower
Tank			
Type	Cylinderical	Cylinderical	Cylinder
Diameter	26 ft	26 ft	26 ft
Height of water	15 ft	30 ft	15 ft
Type of support	Ground	Ground	Steel tower
Critical damping	15%	15%	5%
Output desired	Impulsive and convective forces and movements and displacement surface.	Seismic forces and movements on the tank and displacement of water surface.	Maximum deflection, seismic shear on the tower, and displacement of water surface.

TABLE 3A.2.7-2

COMPARISON OF RESULTS OF SLOSH VS AEC ANALYSIS*

Example 1	Page 188*	SLOSH
W_o, Eq. impulsive force (kips)	298.5	299.7
P_o, Impulse force (kips)	105.4	105.8
M (EBP), Impulsive moment (kip-ft)	594	595
M (IBP), Impulsive moment (kip-ft)	1,120	1,118
W_1, Convective force (kips)	133	133
M_1 (EBP), Convective moment (kip-ft)	212	214
M_1 (IBP), Convective moment (kip-ft)	252	253
M_{max}, Maximum moment (kip-ft)	1,372	1,371
P_{max}, Maximum shear (kips)	127.9	128.5

Example 2	Page 192*	SLOSH
W_o, Eq. impulsive force (kips)	458	458
P_o, Impulsive force (kips)	277	278
M (EBP), Impulsive moment (kip-ft)	3,460	3,470
M (IBP), Impulsive moment (kip-ft)	4,070	4,074
W_1, Convective force (kips)	139	137
M_1(EBP), Convective moment (kip-ft)	552	547
M_1(IBP), Convective moment (kip-ft)	560	552
M_{max}, Maximum moment (kip-ft)	4,630	4,626
P_{max}, Maximum shear (kips)	301	301

Example 3	Page 197*	SLOSH
W_o, Eq. impulsive force (kips)	298.5	299.7
W_1, Convective force (kips)	133	133
Mode 1		
Frequency (cps)	0.333	0.331
FB1, seismic force (kips)	23.46	23.80
FA1, seismic force (kips)	1.26	1.28
Mode 2		
Frequency (cps)	1.486	1.482
FB2, seismic force (kips)	-3.90	-3.91
FA2, seismic force (kips)	174.39	174.54
P_{max}, Maximum shear (kips)	195.21	195.72

NOTE:

*U.S. Atomic Energy Commission 1963.

TABLE 3A.2.8-1

MISSILE PROGRAM VERIFICATION

Comparison of High Trajectory Probabilities

Velocity (fps)	Deflection Angle (°)	Formula*	Program
300	5	0.254×10^{-3}	0.259×10^{-3}
300	25	0.508×10^{-4}	0.534×10^{-4}
600	5	0.162×10^{-4}	0.160×10^{-4}
600	25	0.318×10^{-5}	0.330×10^{-5}

Comparison of Low Trajectory Probabilities

Velocity (fps)	Deflection Angle (°)	Bush**	Program
300	0° <25°	0.113	0.111
600	0° <25°	0.11	0.112

NOTES:

*Westinghouse Electric Corporation 1974.
**Bush, S.H. 1973.

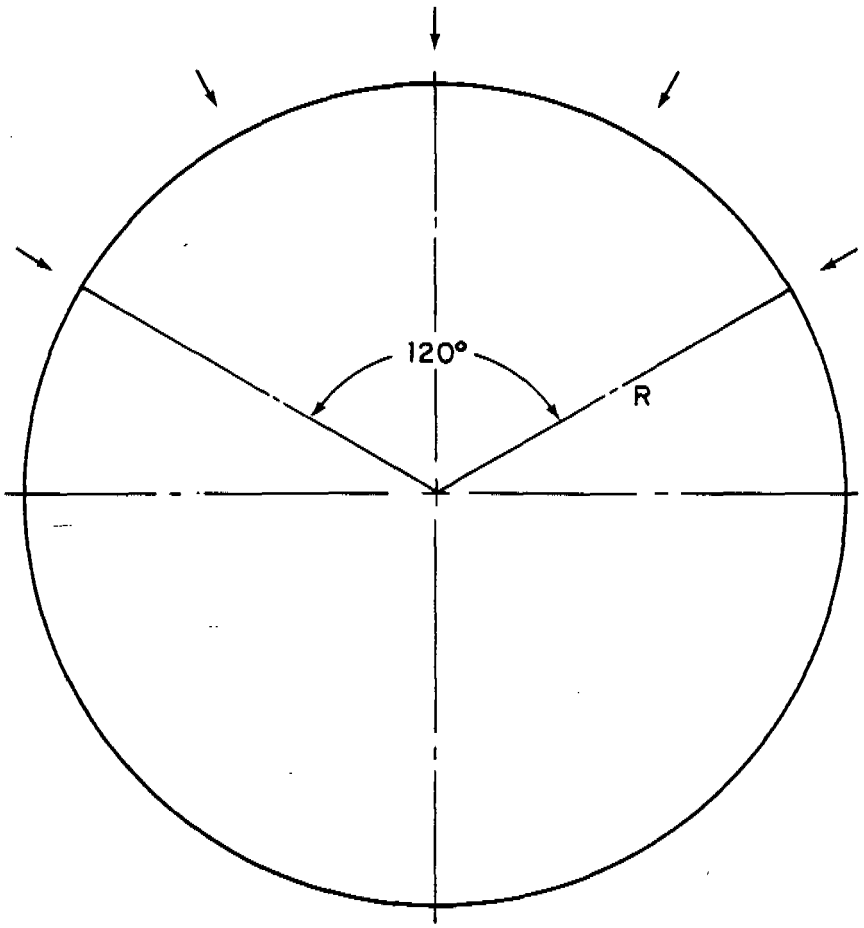

FIGURE 3A.2.1-1
CIRCULAR RING SUBJECTED TO RADIAL BLAST WAVE
BEAVER VALLEY POWER STATION - UNIT 2
FINAL SAFETY ANALYSIS REPORT

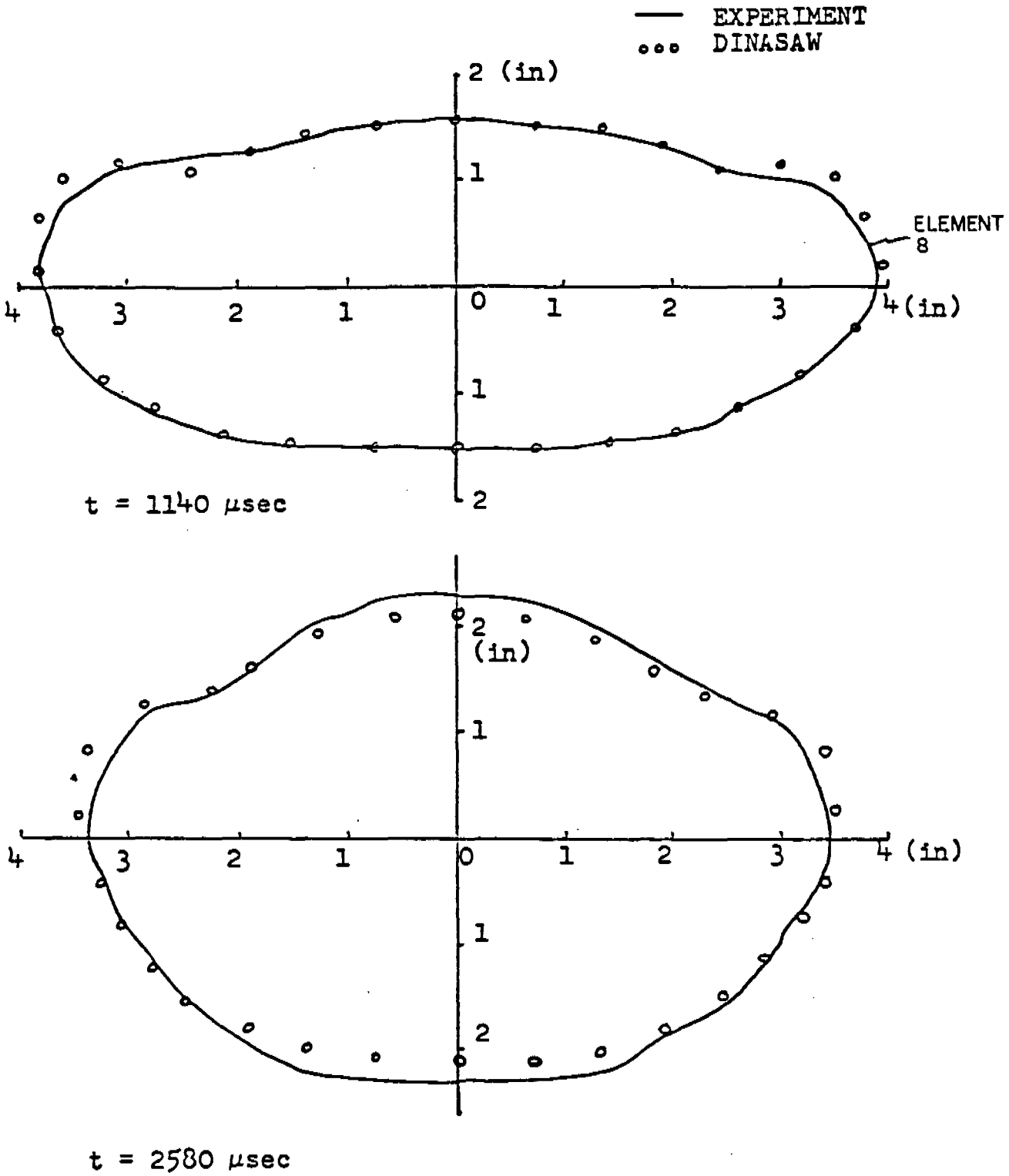

FIGURE 3A.2.1-2
DEFORMATION PROFILES
BEAVER VALLEY POWER STATION-UNIT 2
FINAL SAFETY ANALYSIS REPORT

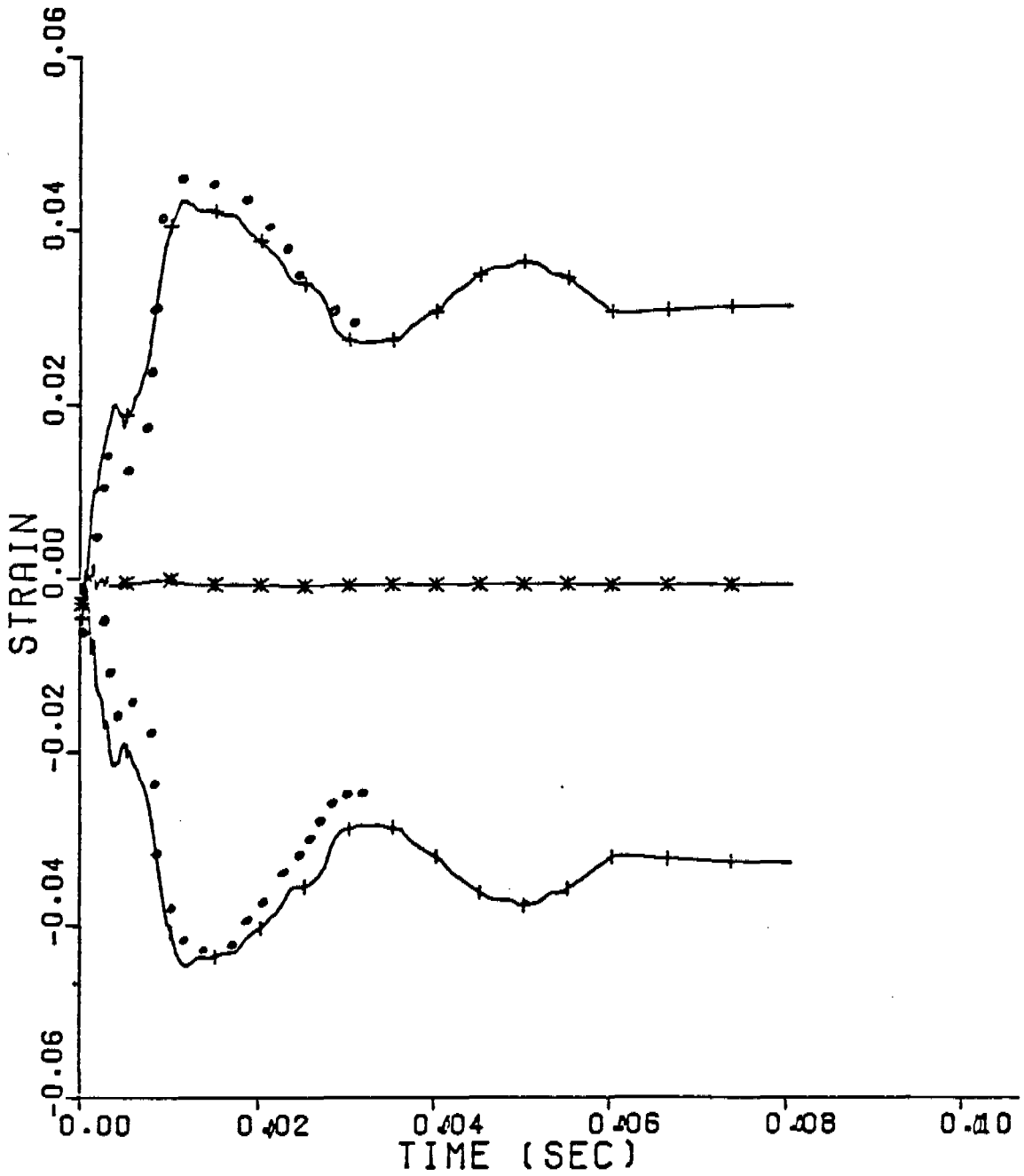

DINASAW PREDICTIONS
+ UPPER SURFACE
* MID SURFACE
| LOWER SURFACE

EXPERIMENT oooooooooo

FIGURE 3A.2.1-3
STRAIN RESPONSE ELEMENT 8
(ANGLE = 90°)
BEAVER VALLEY POWER STATION-UNIT 2
FINAL SAFETY ANALYSIS REPORT

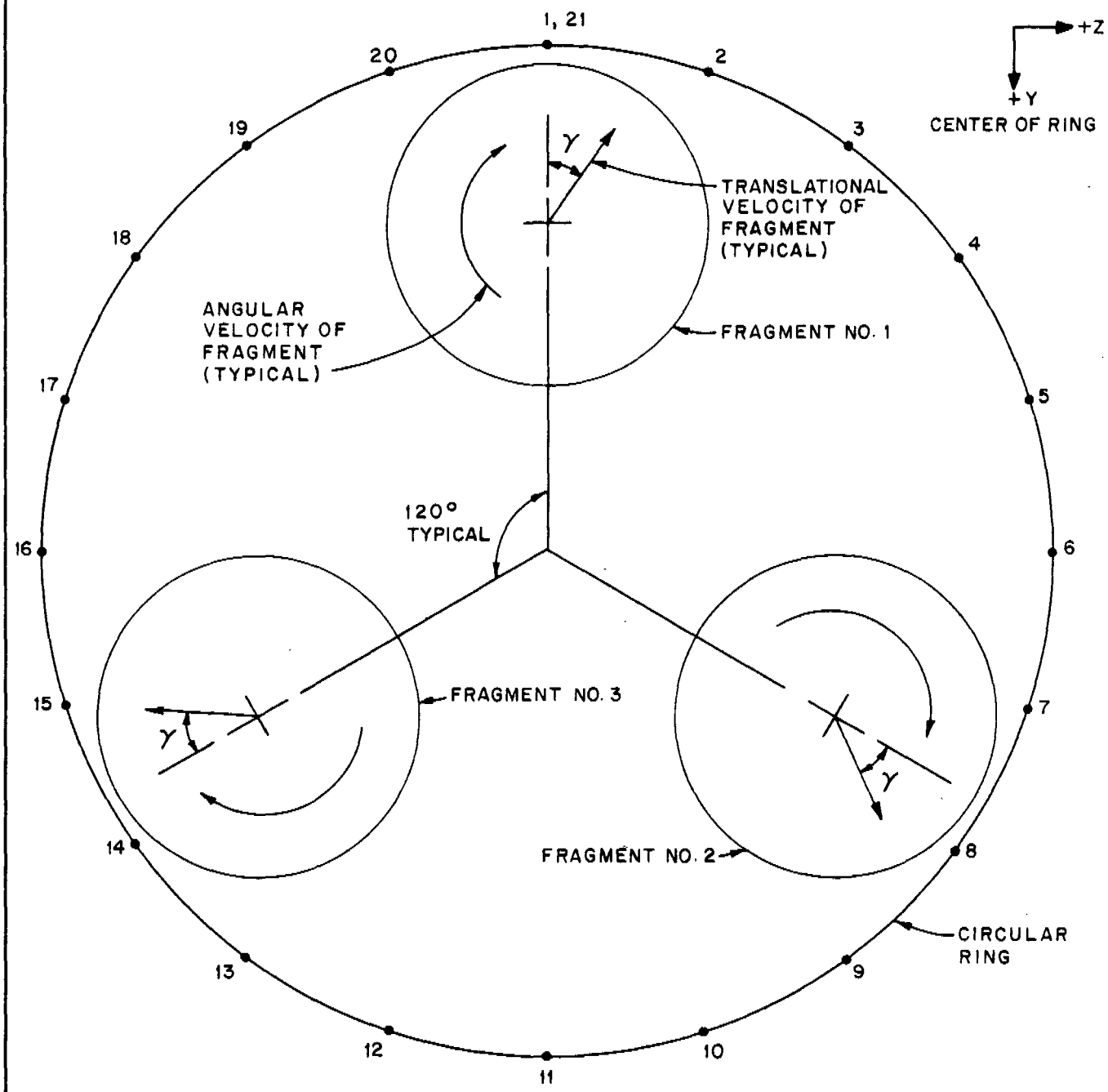

FIGURE 3A.2.1-4

FRAGMENT-RING IMPACT MODEL

BEAVER VALLEY POWER STATION-UNIT 2
FINAL SAFETY ANALYSIS REPORT

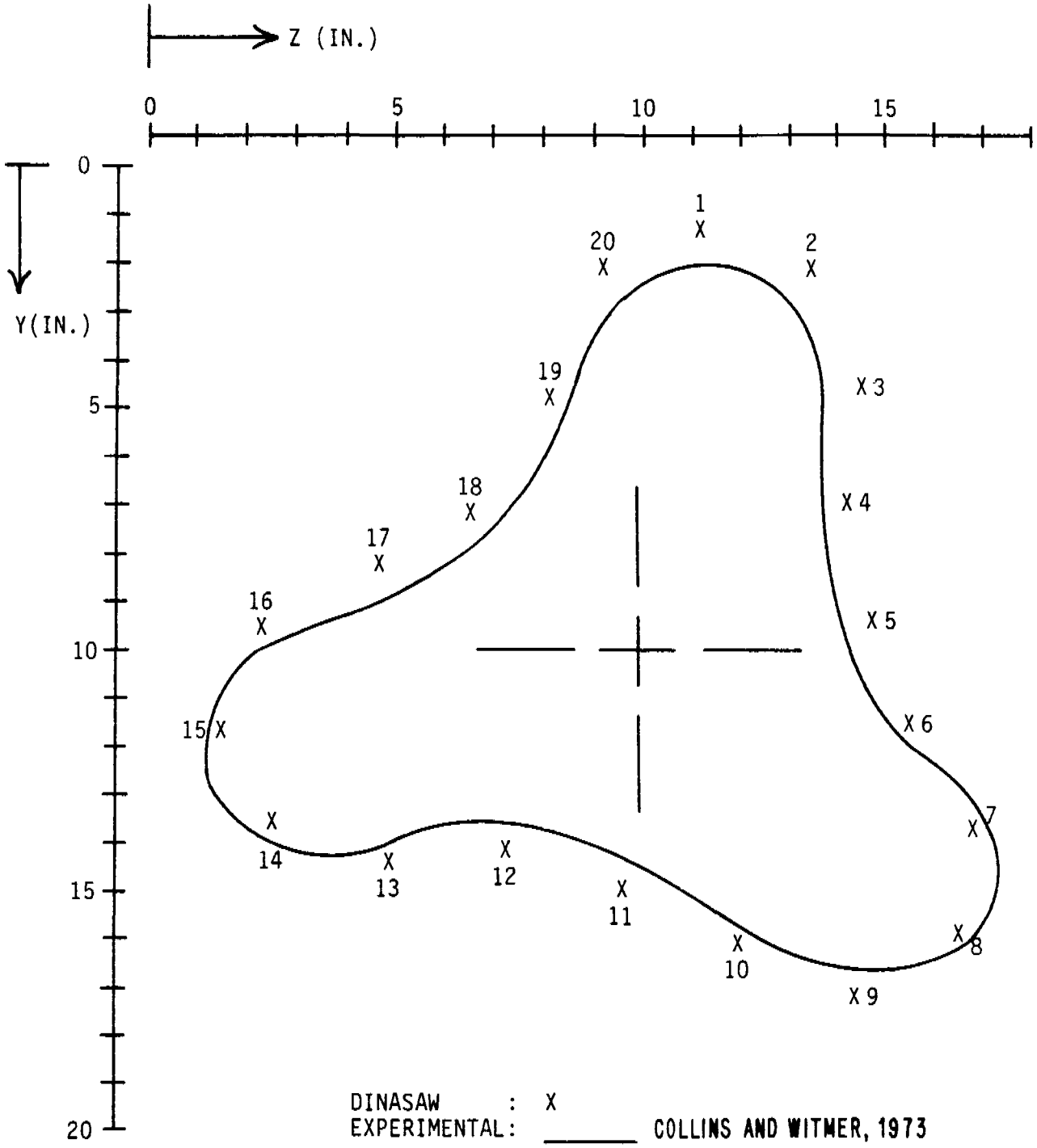

FIGURE 3A.2.1-5
SHAPE OF RING AT 700 μSEC
BEAVER VALLEY POWER STATION-UNIT 2
FINAL SAFETY ANALYSIS REPORT

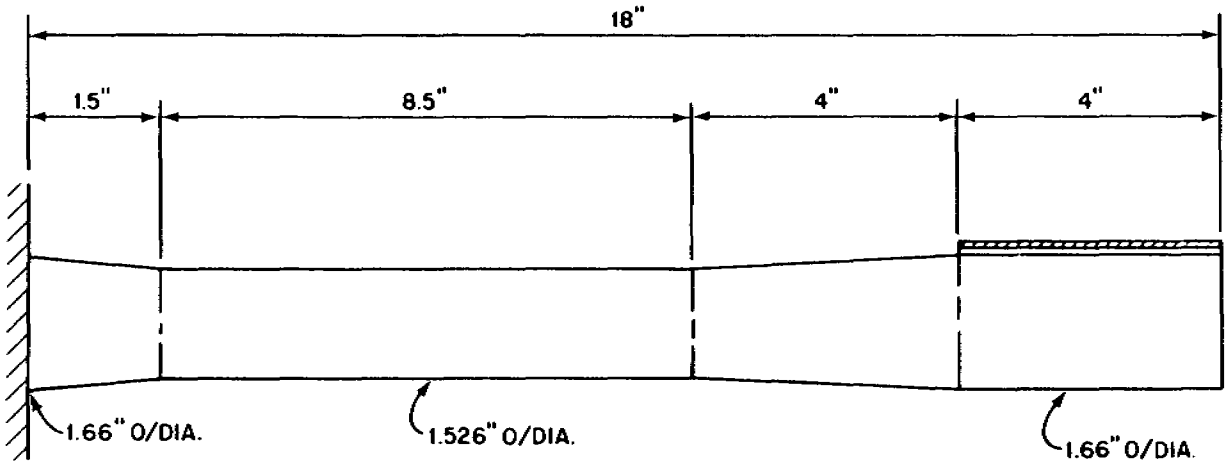

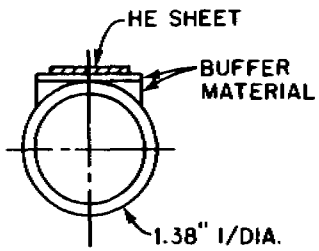

PIPE MATERIAL: A106 STEEL.

NOTE:
NOT DRAWN TO SCALE.

FIGURE 3A.2.2-1

CANTILEVER PIPE USED IN MIT EXPERIMENT

BEAVER VALLEY POWER STATION – UNIT 2
FINAL SAFETY ANALYSIS REPORT

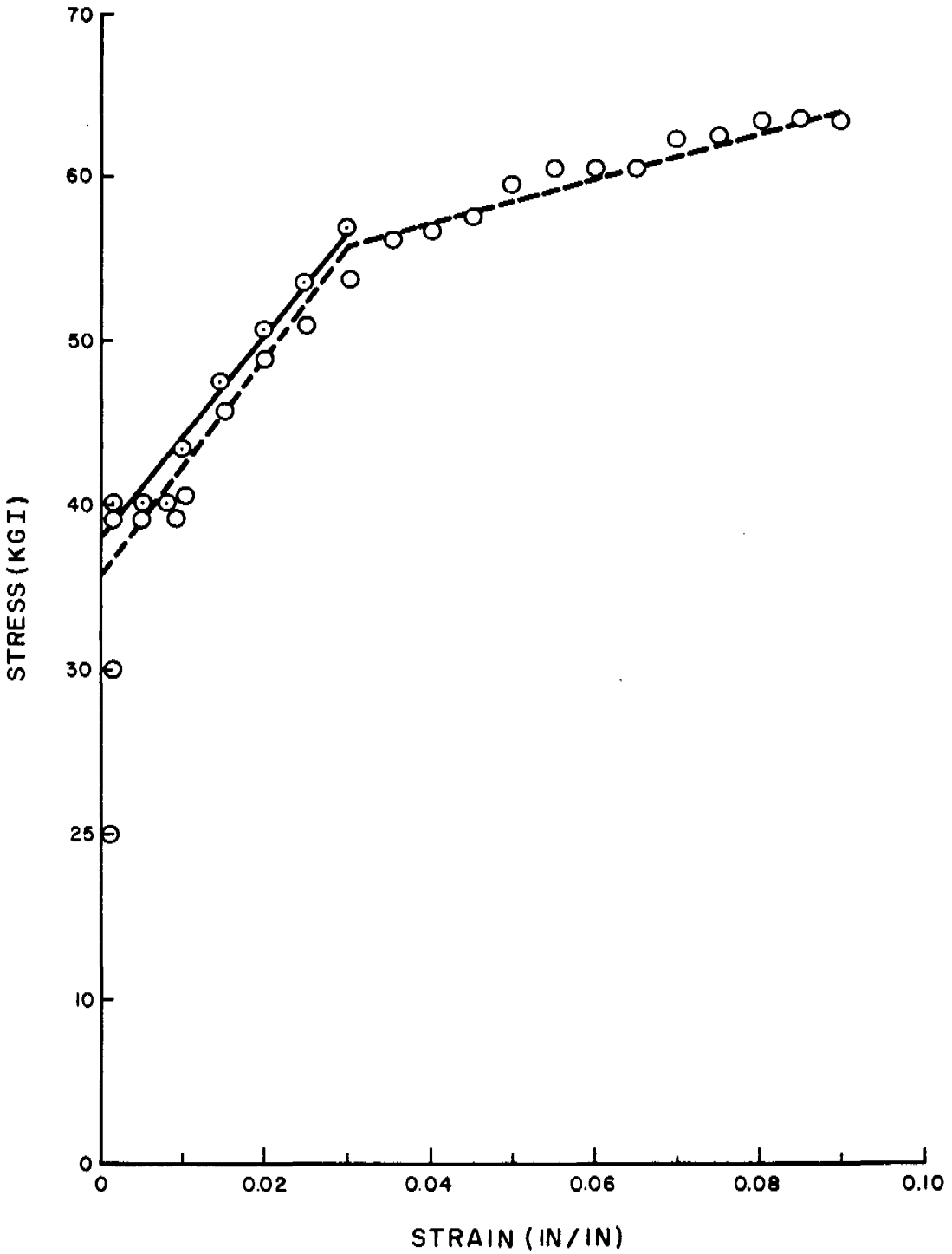

LEGEND

⊙ + ○ EXPERIMENT

- - - - - DINASAW

——— LIMITA2

FIGURE 3A.2.2-2

MIT EXPERIMENT STRESS-STRAIN CURVES

BEAVER VALLEY POWER STATION-UNIT 2

FINAL SAFETY ANLYSIS REPORT

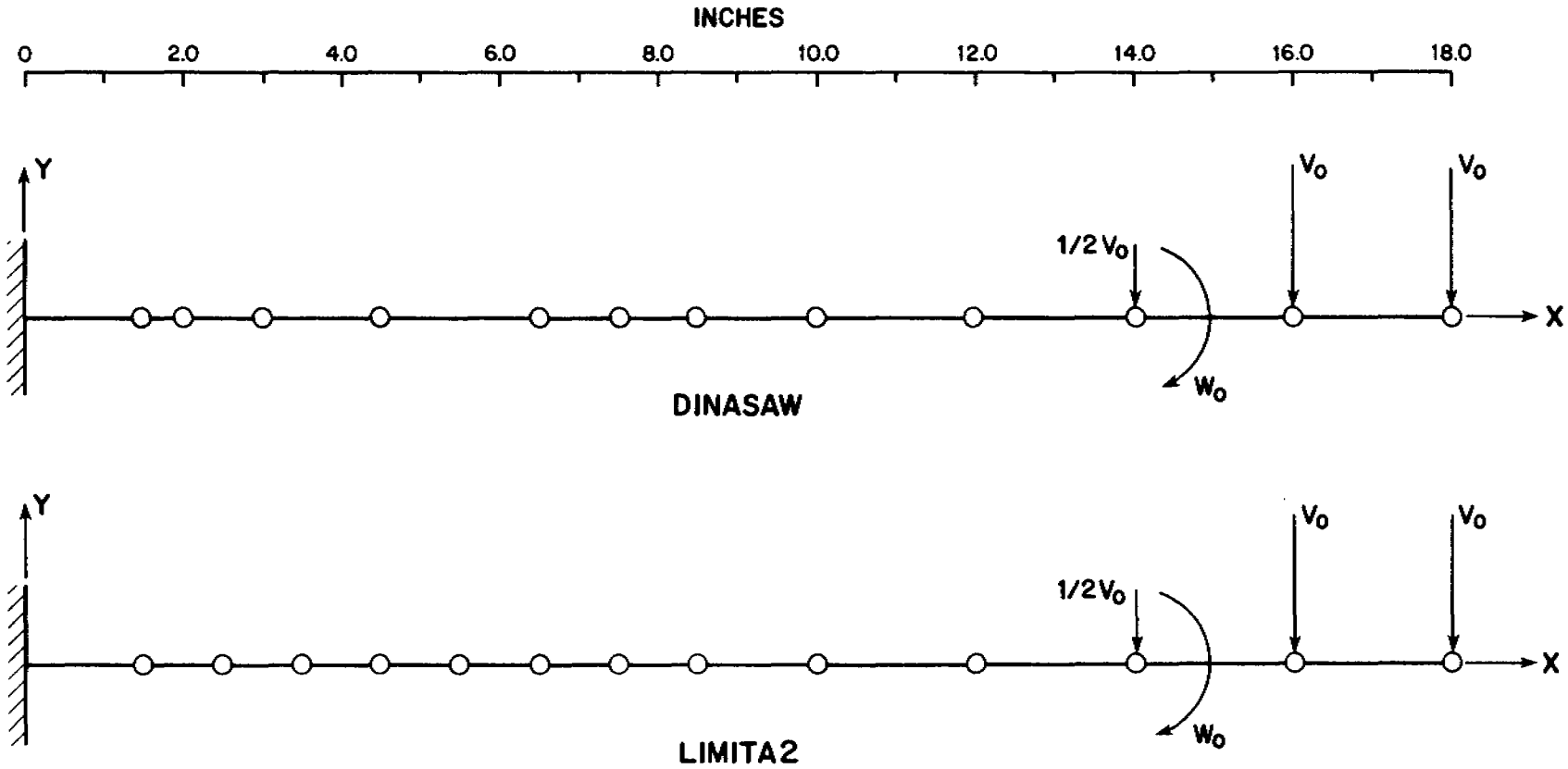

NOTES:
V_0 = 1,400 IN/SEC
W_0 = 600 RAD/SEC

FIGURE 3A.2.2-3
DINASAW AND LIMITA2 LUMPED MASS MODELS
BEAVER VALLEY POWER STATION – UNIT 2
FINAL SAFETY ANALYSIS REPORT

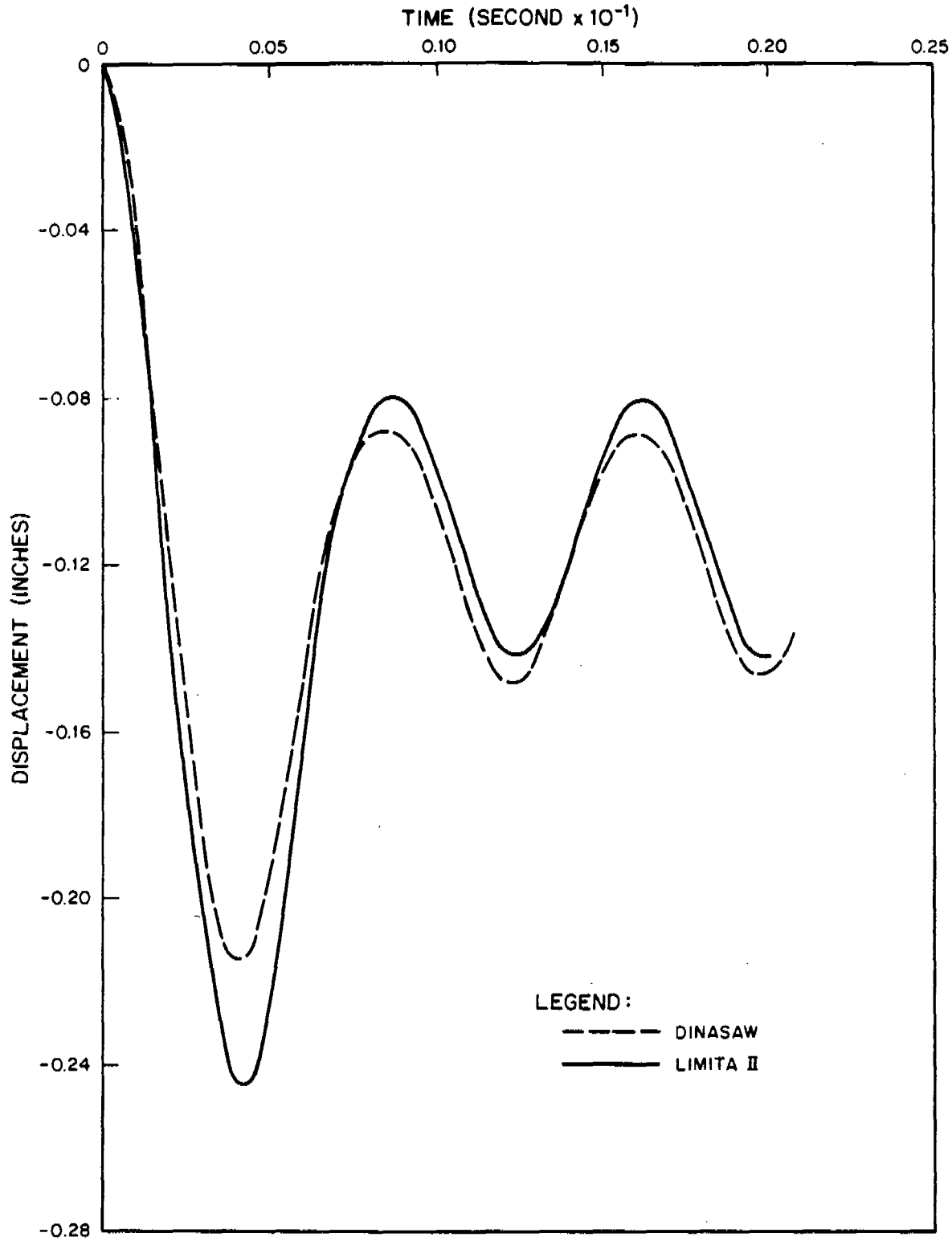

FIGURE 3A.2.2-4

TIME HISTORY PLOTS OF THE X-DISPLACEMENT AT THE FREE END

BEAVER VALLEY POWER STATION – UNIT 2
FINAL SAFETY ANALYSIS REPORT

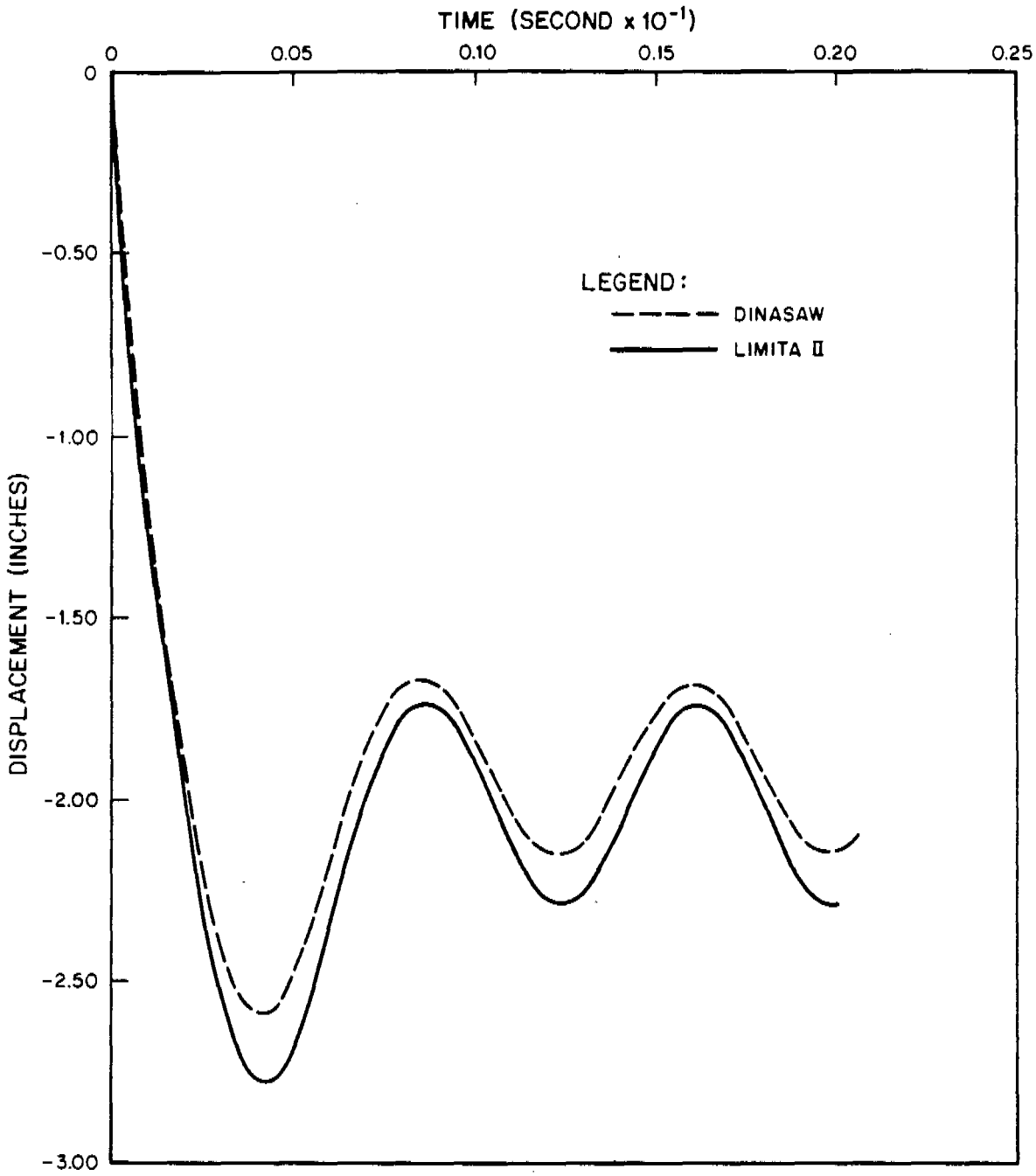

FIGURE 3A.2.2-5

TIME HISTORY PLOTS OF THE Y-DISPLACEMENT AT THE FREE END

BEAVER VALLEY POWER STATION—UNIT 2
FINAL SAFETY ANALYSIS REPORT

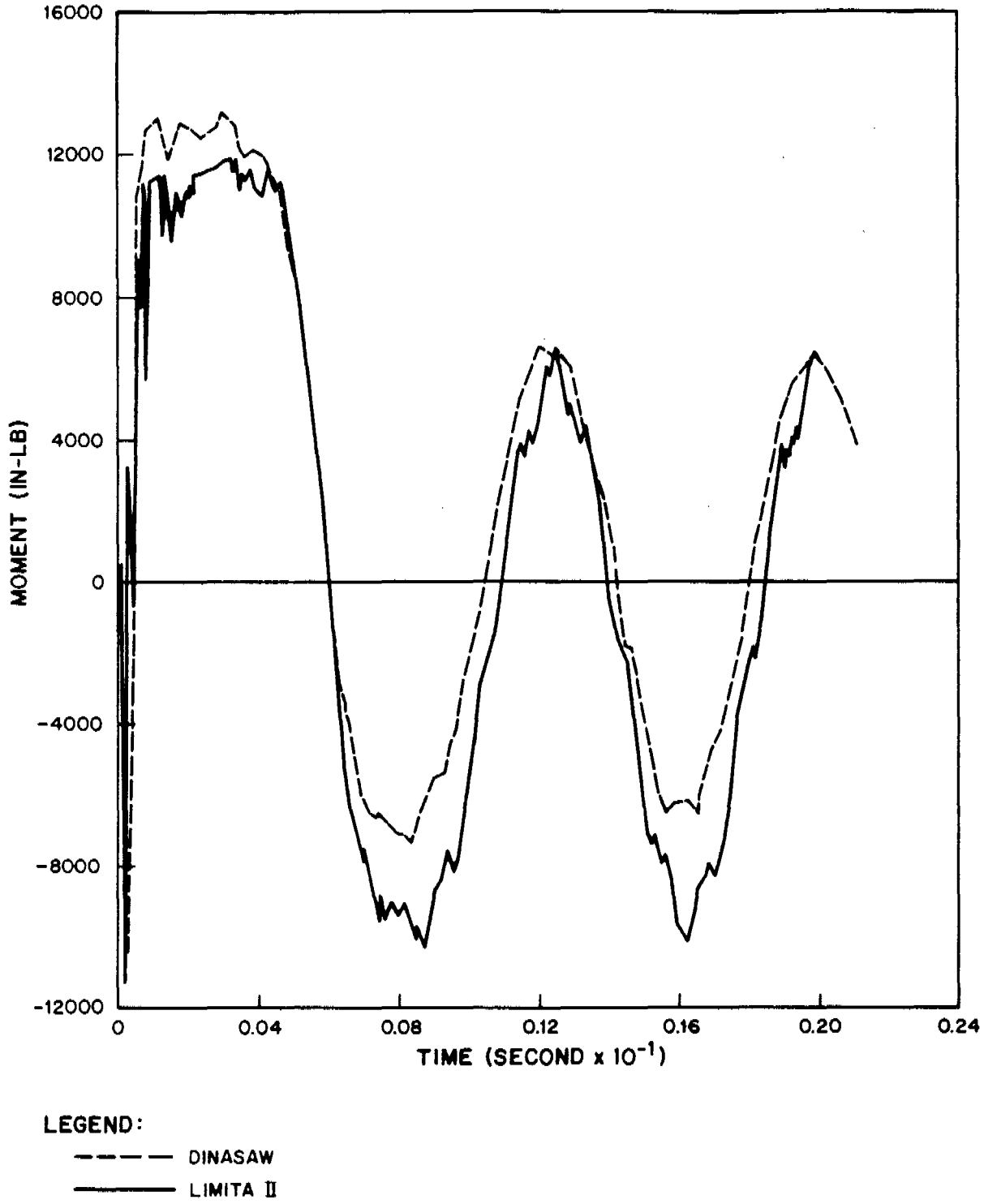

FIGURE 3A.2.2-6

TIME HISTORY PLOTS OF THE MOMENT REACTION AT THE CLAMPED END

BEAVER VALLEY POWER STATION – UNIT 2
FINAL SAFETY ANALYSIS REPORT

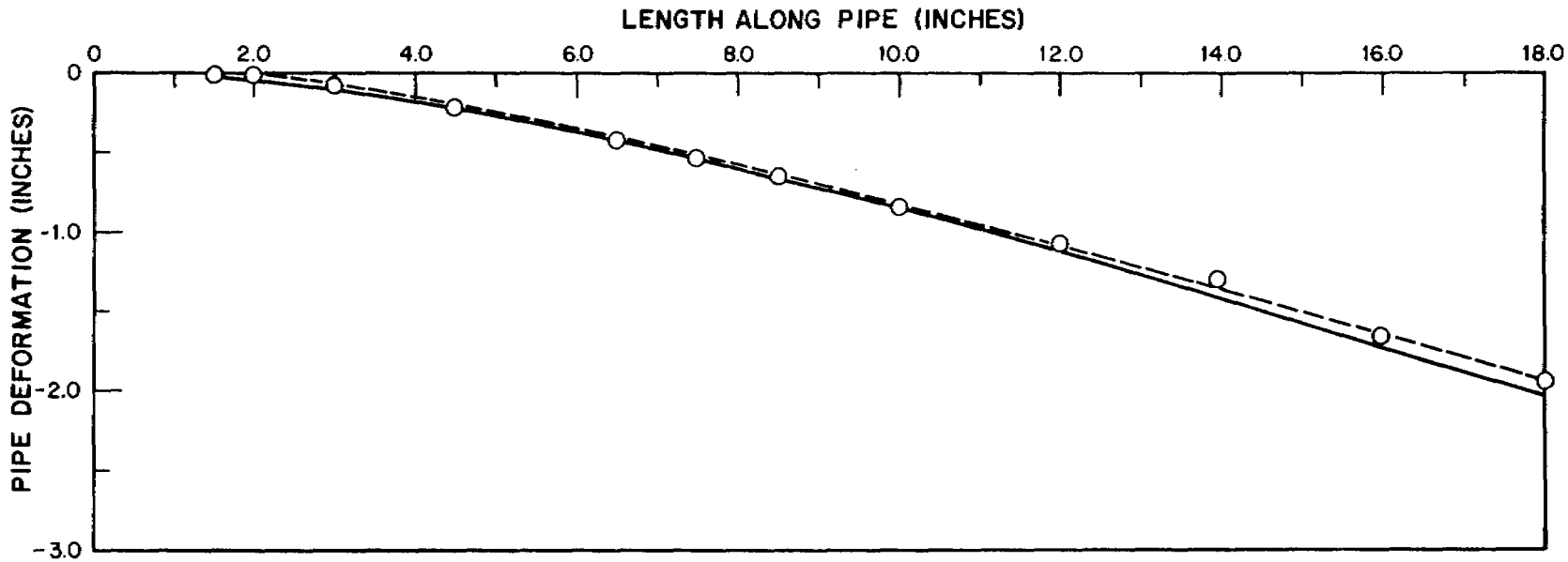

LEGEND:

- ○ EXPERIMENT
- — — — DINASAW
- ——— LIMITA II

FIGURE 3A.2.2-7

PERMANENT PIPE DEFORMATIONS FOR THE MIT EXPERIMENT

BEAVER VALLEY POWER STATION – UNIT 2
FINAL SAFETY ANALYSIS REPORT

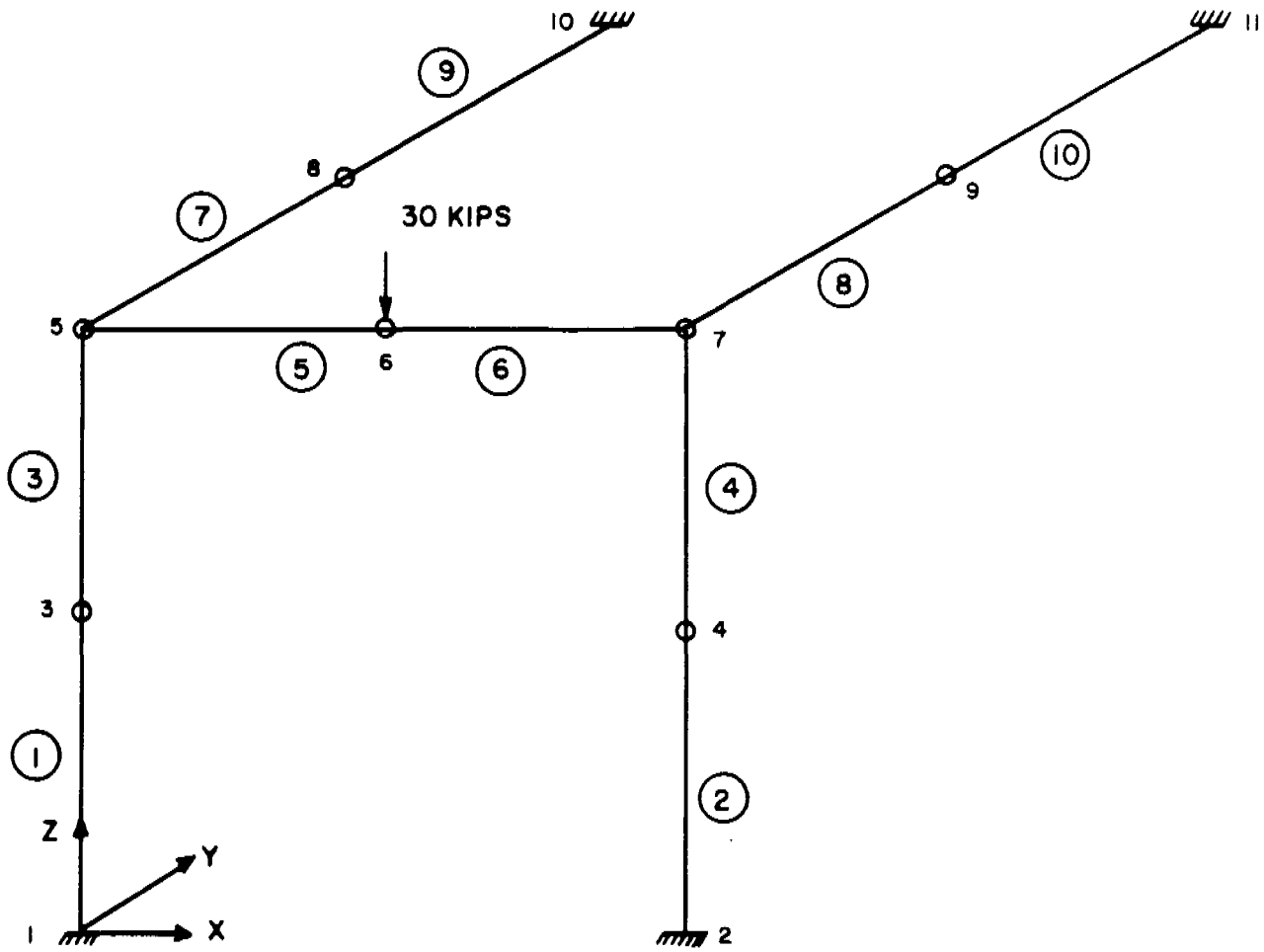

NOTE:

ALL MEMBERS W14 X 500

0 30 60

SCALE-INCHES

FIGURE 3A.2.3-1

LIMITA3 ELASTIC SPACE FRAME

BEAVER VALLEY POWER STATION-UNIT 2

FINAL SAFETY ANALYSIS REPORT

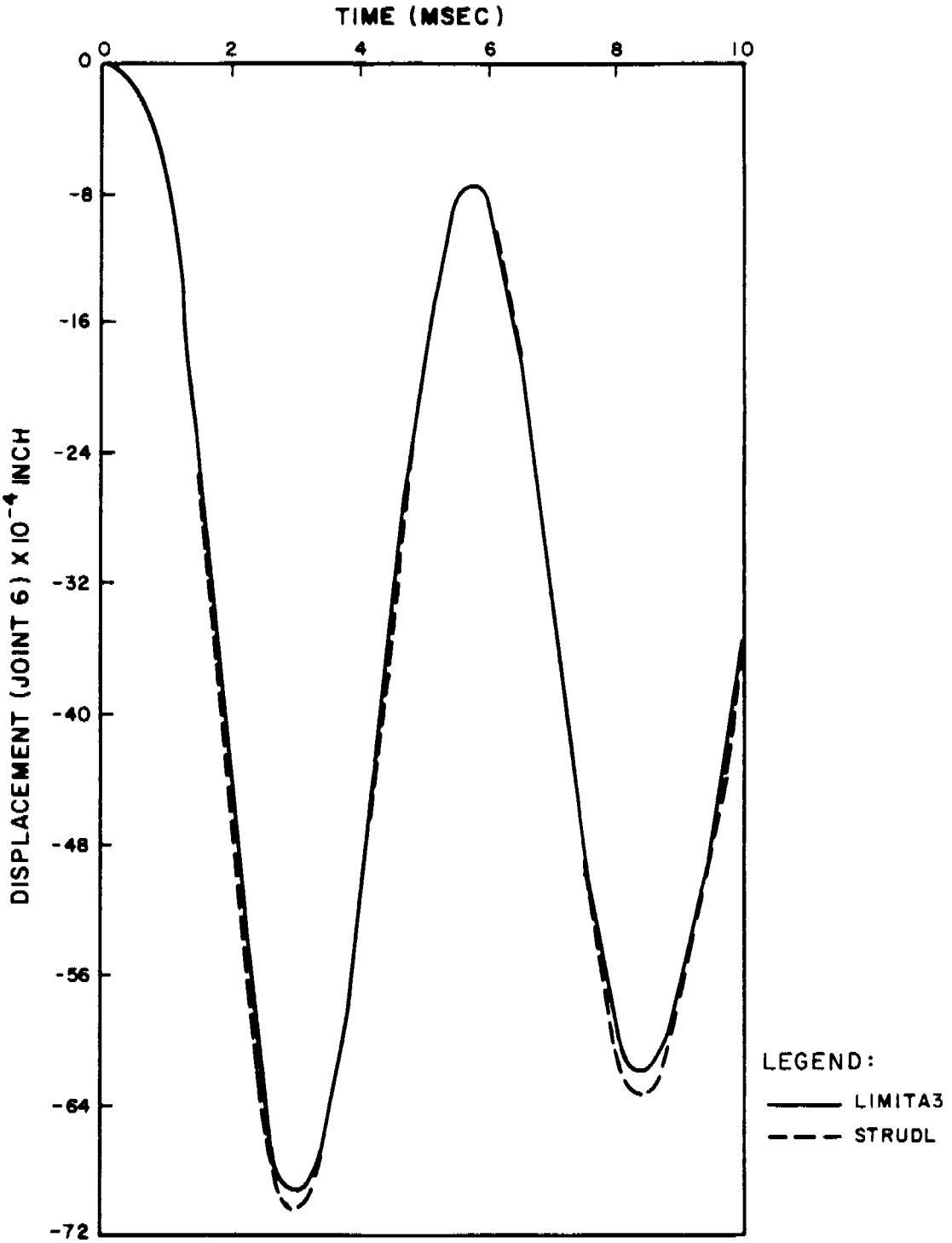

FIGURE 3A.2.3-2

LIMITA3 DISPLACEMENT TIME HISTORY AT JOINT 6

BEAVER VALLEY POWER STATION - UNIT 2
FINAL SAFETY ANALYSIS REPORT

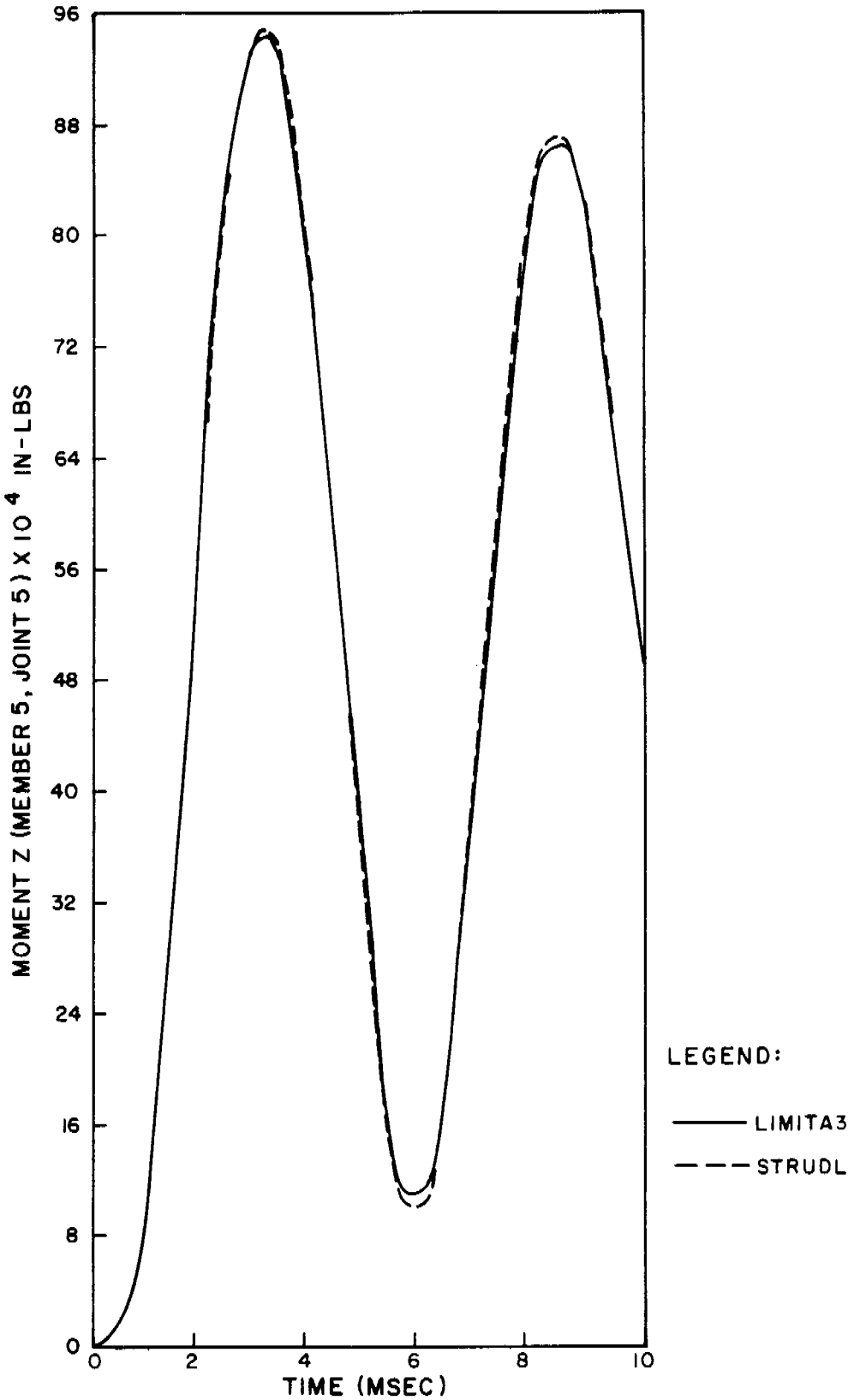

FIGURE 3A.2.3-3

LIMITA3 TIME HISTORY OF MOMENT Z IN NUMBER 5, JOINT 6

BEAVER VALLEY POWER STATION-UNIT 2
FINAL SAFETY ANALYSIS REPORT

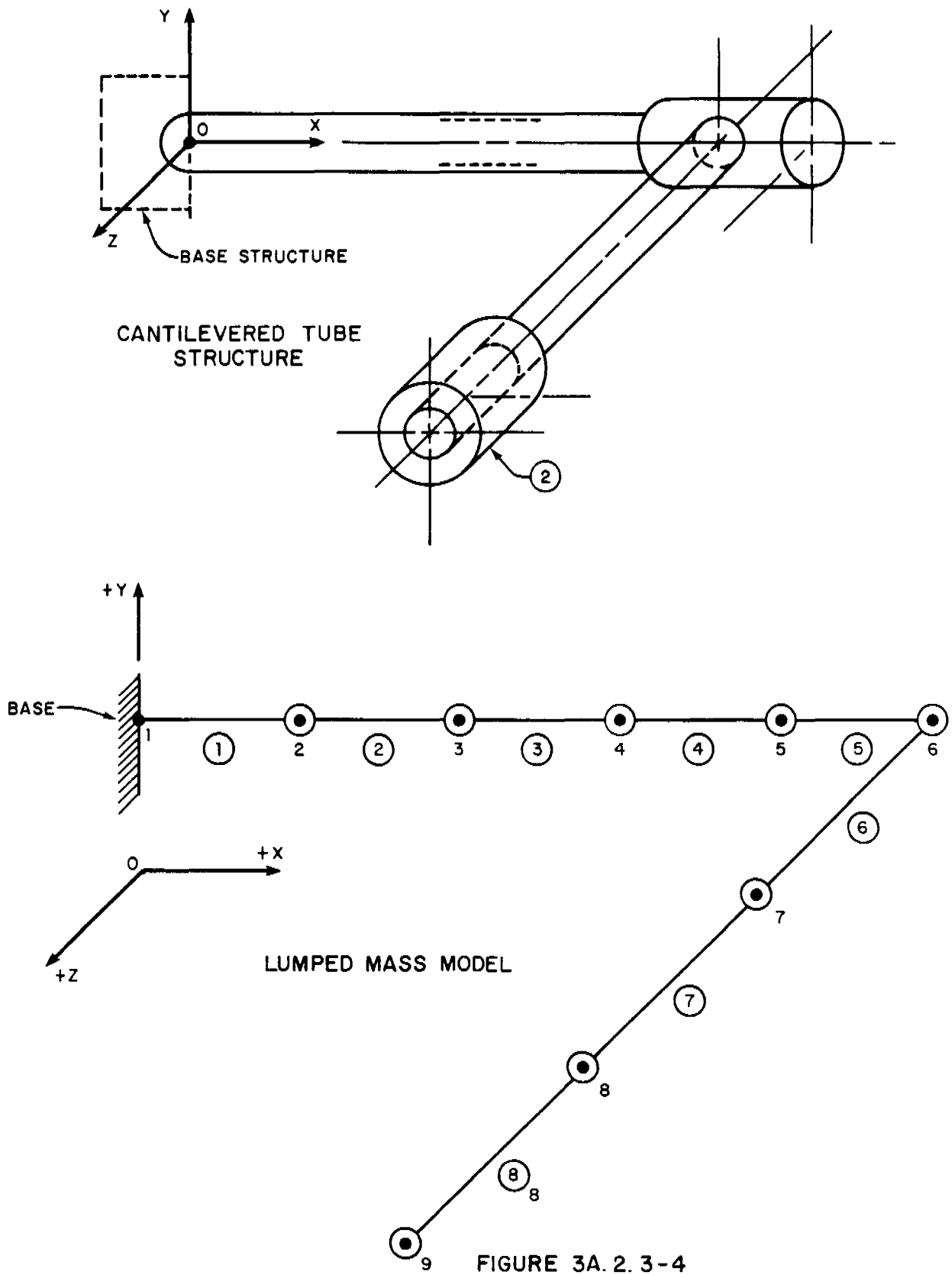

NOT TO SCALE

FIGURE 3A.2.3-4
STRUCTURE AND MODEL USED FOR LIMITA3 ANALYSES
BEAVER VALLEY POWER STATION-UNIT 2
FINAL SAFETY ANALYSIS REPORT

1. APPLIED LOADS

Radial Load	P	- 1000 lb.
Circ. Moment	M_C	- 1000 in. lb.
Long. Moments	M_L	- 1000 in. lb.
Torsion Moment	M_T	- 1000 in. lb.
Shear Load	V_C	- 1000 lb.
Shear Load	V_L	- 1000 lb.

2. GEOMETRY

Vessel Thickness	T	- 0.375 in
Attachment Radius	r_o	- 8.0 in.
Vessel Radius	R_m	- 19.1875 in.

3. GEOMETRIC PARAMETERS

$$\gamma = \frac{R_m}{T} \quad 51.167$$

$$\beta = (0.875)\frac{r_o}{R_m} \quad 0.3648$$

STRESS CONCENTRATION DUE TO:
a) Membrane Load Kn - 1.0
b) Bending Load Kb - 1.0

NOTE: Enter all force values in accordance with sign convention.

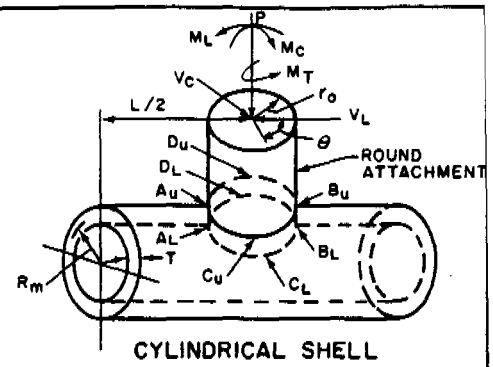

CYLINDRICAL SHELL

FROM FIG.(#)	READ CURVES FOR	COMPUTE ABSOLUTE VALUES OF STRESS AND ENTER RESULTS	STRESSES - if load is opposite that shown, reverse signs shown							
			A_u	A_L	B_u	B_L	C_u	C_L	D_u	D_L
3C	$\frac{N\phi}{P/R_m} = 1.78$	$Kn\left(\frac{N\phi}{P/R_m}\right)\cdot\frac{P}{R_m T} = 247$	-247	-247	-247	-247	-247	-247	-247	-247
1C	$\frac{M\phi}{P} = 0.023$	$Kb\left(\frac{M\phi}{P}\right)\cdot\frac{6P}{T^2} = 981$	-981	+981	-981	+981	-981	+981	-981	+981
3A	$\frac{N\phi}{M_C/R_m^2\beta} = 1.41$	$Kn\left(\frac{N\phi}{M_C/R_m^2\beta}\right)\cdot\frac{M_C}{R_m^2\beta T} = 28$					-28	-28	+28	+28
1A	$\frac{M\phi}{M_C/R_m\beta} = 0.059$	$Kb\left(\frac{M\phi}{M_C/R_m\beta}\right)\cdot\frac{6M_C}{R_m\beta T^2} = 360$					-360	+360	+360	-360
3B	$\frac{N\phi}{M_L/R_m^2\beta} = 2.63$	$Kn\left(\frac{N\phi}{M_L/R_m^2\beta}\right)\cdot\frac{M_L}{R_m^2\beta T} = 52$	-52	-52	+52	+52				
1B or 1B-1	$\frac{M\phi}{M_L/R_m\beta} = 0.0067$	$Kb\left(\frac{M\phi}{M_L/R_m\beta}\right)\cdot\frac{6M_L}{R_m\beta T^2} = 41$	-41	+41	+41	-41				
Add algebraically for summation of ϕ stresses $\sigma\phi$			-1321	+723	-1135	+745	-1616	+1066	-840	+402
4C	$\frac{N_x}{P/R_m} = 4.4$	$Kn\left(\frac{N_x}{P/R_m}\right)\cdot\frac{P}{R_m T} = 612$	-612	-612	-612	-612	-612	-612	-612	-612
2C	$\frac{M_x}{P} = 0.0088$	$Kb\left(\frac{M_x}{P}\right)\cdot\frac{6P}{T^2} = 375$	-375	+375	-375	+375	-375	+375	-375	+375
4A	$\frac{N_x}{M_C/R_m^2\beta} = 5.0$	$Kn\left(\frac{N_x}{M_C/R_m^2\beta}\right)\cdot\frac{M_C}{R_m^2\beta T} = 99$					-99	-99	+99	+99
2A	$\frac{M_x}{M_C/R_m\beta} = 0.0235$	$Kb\left(\frac{M_x}{M_C/R_m\beta}\right)\cdot\frac{6M_C}{R_m\beta T^2} = 143$					-143	+143	+143	-143
4B	$\frac{N_x}{M_L/R_m^2\beta} = 1.52$	$Kn\left(\frac{N_x}{M_L/R_m^2\beta}\right)\cdot\frac{M_L}{R_m^2\beta T} = 30$	-30	-30	+30	+30				
2B or 2B-1	$\frac{M_x}{M_L/R_m\beta} = 0.01$	$Kb\left(\frac{M_x}{M_L/R_m\beta}\right)\cdot\frac{6M_L}{R_m\beta T^2} = 61$	-61	+61	+61	-61				
Add algebraically for summation of X stresses σ_x			-1078	-206	-896	-268	-1229	-193	-745	-281
Shear stress due to torsion M_T		$\tau\phi_x = \tau_x\phi = \frac{M_T}{2\pi r_o^2 T} = 7$	+7	+7	+7	+7	+7	+7	+7	+7
Shear stress due to load V_C		$\tau_x\phi = \frac{V_C}{\pi r_o T} = 106$	+106	+106	-106	-106				
Shear stress due to load V_L		$\tau_x\phi = \frac{V_L}{\pi r_o T} = 106$					-106	-106	+106	+106
Add algebraically for summation of shear stresses τ			+113	+113	-99	-99	-99	-99	+113	+113

NOTE: WICHMAN et al; 1965

FIGURE 3A.2.5-1
SUMMARY OF MANUAL CALCULATIONS FOR LOCAL STRESSES IN CYLINDRICAL SHELLS
BEAVER VALLEY POWER STATION-UNIT 2
FINAL SAFETY ANALYSIS REPORT

1. APPLIED LOADS

Radial Load	P	- 1000 lb.
Circ. Moment	M_C	- 1000 in. lb.
Long. Moments	M_L	- 1000 in. lb.
Torsion Moment	M_T	- 1000 in. lb.
Shear Load	V_C	- 1000 lb.
Shear Load	V_L	- 1000 lb.

GEOMETRY

Vessel Thickness	T	- 0.375 in
Attachment Radius	r_o	- 8.0 in.
Vessel Radius	R_m	- 19.1875 in.

3. GEOMETRIC PARAMETERS

$$\gamma = \frac{R_m}{T} \quad 51.167$$

$$\beta = (0.875)\frac{r_o}{R_m} \quad 0.3648$$

STRESS CONCENTRATION DUE TO:
a) Membrane Load Kn -1.0
b) Bending Load Kb -1.0

NOTE: Enter all force values in accordance with sign convention.

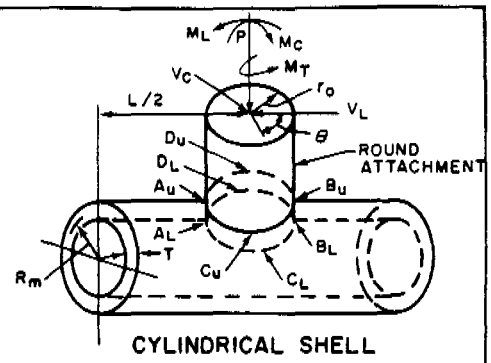

CYLINDRICAL SHELL

FROM FIG. (*)	READ CURVES FOR	COMPUTE ABSOLUTE VALUES OF STRESS AND ENTER RESULTS	STRESSES - if load is opposite that shown, reverse signs shown							
			A_u	A_L	B_u	B_L	C_u	C_L	D_u	D_L
3C	$\frac{N\phi}{P/R_m} = 1.77$	$Kn\left(\frac{N\phi}{P/R_m}\right)\cdot\frac{P}{R_mT} = 246$	-246	-246	-246	-246	-246	-246	-246	-246
1C	$\frac{M\phi}{P} = 0.022$	$Kb\left(\frac{M\phi}{P}\right)\cdot\frac{6P}{T^2} = 937$	-937	+937	-937	+937	-937	+937	-937	+937
3A	$\frac{N\phi}{M_C/R_m^2\beta} = 1.41$	$Kn\left(\frac{N\phi}{M_C/R_m^2\beta}\right)\cdot\frac{M_C}{R_m^2\beta T} = 28$					-28	-28	+28	+28
1A	$\frac{M\phi}{M_C/R_m\beta} = 0.059$	$Kb\left(\frac{M\phi}{M_C/R_m\beta}\right)\cdot\frac{6M_C}{R_m\beta T^2} = 357$					-357	+357	+357	-357
3B	$\frac{N\phi}{M_L/R_m^2\beta} = 2.62$	$Kn\left(\frac{N\phi}{M_L/R_m^2\beta}\right)\cdot\frac{M_L}{R_m^2\beta T} = 52$	-52	-52	+52	+52				
1B or 1B-1	$\frac{M\phi}{M_L/R_m\beta} = 0.0066$	$Kb\left(\frac{M\phi}{M_L/R_m\beta}\right)\cdot\frac{6M_L}{R_m\beta T^2} = 40$	-40	+40	+40	-40				
Add algebraically for summation of ϕ stresses $\sigma\phi$			-1275	+1679	-1091	+703	-1568	+1020	-798	+362
4C	$\frac{N_X}{P/R_m} = 4.4$	$Kn\left(\frac{N_X}{P/R_m}\right)\cdot\frac{P}{R_mT} = 614$	-614	-614	-614	-614	-614	-614	-614	-614
2C	$\frac{M_X}{P} = 0.0087$	$Kb\left(\frac{M_X}{P}\right)\cdot\frac{6P}{T^2} = 373$	-373	+373	-373	+373	-373	+373	-373	+373
4A	$\frac{N_X}{M_C/R_m^2\beta} = 5.0$	$Kn\left(\frac{N_X}{M_C/R_m^2\beta}\right)\cdot\frac{M_C}{R_m^2\beta T} = 99$					-99	-99	+99	+99
2A	$\frac{M_X}{M_C/R_m\beta} = 0.0233$	$Kb\left(\frac{M_X}{M_C/R_m\beta}\right)\cdot\frac{6M_C}{R_m\beta T^2} = 142$					-142	+142	+142	-142
4B	$\frac{N_X}{M_L/R_m^2\beta} = 1.53$	$Kn\left(\frac{N_X}{M_L/R_m^2\beta}\right)\cdot\frac{M_L}{R_m^2\beta T} = 30$	-30	-30	+30	+30				
2B or 2B-1	$\frac{M_X}{M_L/R_m\beta} = 0.01$	$Kb\left(\frac{M_X}{M_L/R_m\beta}\right)\cdot\frac{6M_L}{R_m\beta T^2} = 62$	-62	+62	+62	-62				
Add algebraically for summation of X stresses σ_X			-1079	-209	-895	-280	-1228	-198	-746	-284
Shear stress due to torsion M_T		$\tau\phi_X = \tau_X\phi = \frac{M_T}{2\pi r_o^2 T} = 7$	+7	+7	+7	+7	+7	+7	+7	+7
Shear stress due to load V_C		$\tau_X\phi = \frac{V_C}{\pi r_o T} = 106$	+106	+106	-106	-106				
Shear stress due to load V_L		$\tau_X\phi = \frac{V_L}{\pi r_o T} = 106$					-106	-106	+106	+106
Add algebraically for summation of shear stresses τ			+113	+113	-99	-99	-99	-99	+113	+113

NOTE: WICHMAN et al; 1965

FIGURE 3A.2.5-2
SUMMARY OF COMPUTER CALCULATIONS FOR LOCAL STRESSES IN CYLINDRICAL SHELLS
BEAVER VALLEY POWER STATION-UNIT 2
FINAL SAFETY ANALYSIS REPORT

1. Applied Loads*

Radial Load,	P =	1.0
Shear Load,	V_1 =	1.0
Shear Load,	V_2 =	1.0
Overturning Moment,	M_1 =	1.0
Overturning Moment,	M_2 =	1.0
Torsional Moment,	M_T =	1.0

2. Geometry

Vessel Thickness,	T =	.25
Vessel Mean Radius,	R_m =	10.25
Nozzle Thickness,	t =	.25
Nozzle Mean Radius,	r_m =	1.25
Nozzle Outside Radius,	r_o =	1.375

3. Geometric Parameters

$\tau = \frac{r_m}{t} = 5.0$

$\rho = \frac{T}{t} = 1.0$

$u = \frac{r_m}{\sqrt{R_m T}} = 0.5$

4. Stress Concentration Factors

due to:

membrane load, K_n = 1.0

bending load, K_b = 1.0

NOTE: Enter all force values in accordance with sign convention

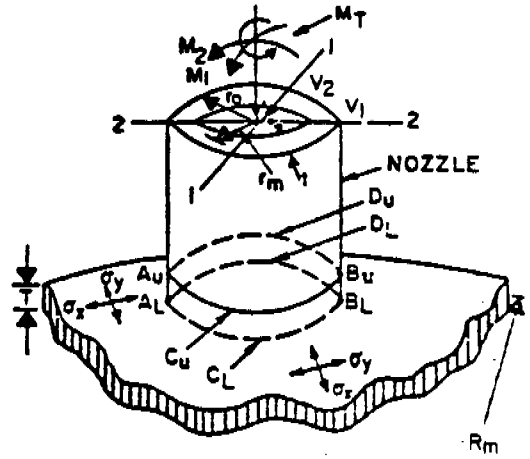

HOLLOW ATTACHMENT

From Fig.	Read curves for	Compute absolute values of stress and enter result –	STRESSES – if load is opposite that shown, reverse signs shown							
			A_U	A_L	B_U	B_L	C_U	C_L	D_U	D_L
SP-1 to 10	$\frac{N_x T}{P}$ = .087	$K_n \left(\frac{N_x T}{P}\right) \cdot \frac{P}{T^2}$ =	-1.392	-1.392	-1.392	-1.392	-1.392	-1.392	-1.392	-1.392
↓	$\frac{M_x}{P}$ = .087	$K_b \left(\frac{M_x}{P}\right) \cdot \frac{6P}{T^2}$ =	-8.352	+8.352	-8.352	-8.352	-8.352	+8.352	-8.352	+8.352
SM-1 to 10	$\frac{N_x T\sqrt{R_m T}}{M_1}$ = .135	$K_n \left(\frac{N_x T\sqrt{R_m T}}{M_1}\right) \cdot \frac{M_1}{T^2\sqrt{R_m T}}$ =					-.785	-.785	+.785	+.785
	$\frac{M_x\sqrt{R_m T}}{M_1}$ = .220	$K_b \left(\frac{M_x\sqrt{R_m T}}{M_1}\right) \cdot \frac{6M_1}{T^2\sqrt{R_m T}}$ =					-7.680	-7.680	+7.680	-7.680
	$\frac{N_x T\sqrt{R_m T}}{M_2}$ = .135	$K_n \left(\frac{N_x T\sqrt{R_m T}}{M_2}\right) \cdot \frac{M_2}{T^2\sqrt{R_m T}}$ =	-.785	-.785	+.785	+.785				
↓	$\frac{M_x\sqrt{R_m T}}{M_2}$ = .220	$K_b \left(\frac{M_x\sqrt{R_m T}}{M_2}\right) \cdot \frac{6M_2}{T^2\sqrt{R_m T}}$ =	-7.680	-7.680	+7.680	-7.680				
Add algebraically for summation of σ_x =										
SP-1 to 10	$\frac{N_y T}{P}$ = .139	$K_n \left(\frac{N_y T}{P}\right) \cdot \frac{P}{T^2}$ =	-2.224	-2.224	-2.224	-2.224	-2.224	-2.224	-2.224	-2.224
↓	$\frac{M_y}{P}$ = .037	$K_b \left(\frac{M_y}{P}\right) \cdot \frac{6P}{T^2}$ =	-3.552	+3.552	-3.552	+3.552	-3.552	+3.552	-3.552	+3.552
SM-1 to 10	$\frac{N_y T\sqrt{R_m T}}{M_1}$ = .146	$K_n \left(\frac{N_y T\sqrt{R_m T}}{M_1}\right) \cdot \frac{M_1}{T^2\sqrt{R_m T}}$ =					-.849	-.849	+.849	+.849
	$\frac{M_y\sqrt{R_m T}}{M_1}$ = .092	$K_b \left(\frac{M_y\sqrt{R_m T}}{M_1}\right) \cdot \frac{6M_1}{T^2\sqrt{R_m T}}$ =					-3.212	-3.212	-3.212	-3.212
	$\frac{N_y T\sqrt{R_m T}}{M_2}$ = .146	$K_n \left(\frac{N_y T\sqrt{R_m T}}{M_2}\right) \cdot \frac{M_2}{T^2\sqrt{R_m T}}$ =	-.849	-.849	+.849	+.849				
↓	$\frac{M_y\sqrt{R_m T}}{M_2}$ = .092	$K_b \left(\frac{M_y\sqrt{R_m T}}{M_2}\right) \cdot \frac{6M_2}{T^2\sqrt{R_m T}}$ =	-3.212	+3.212	+3.212	3.212				
Add algebraically for summation of σ_y =										
Shear stress due to load, V_1		$\tau_1 = \frac{V}{\pi r_o T} = \frac{1.0}{\pi(1.375)(.25)}$					.926	.926	+.926	[illegible]
Shear stress due to load, V_2		$\tau_2 = \frac{V}{\pi r_o T} = \frac{1.0}{\pi(1.375)}$	-.926	-.926	+.926	-.926				
Shear stress due to torsion, M_T		$\tau_1 = \tau_2 = \frac{M}{2\pi r_o^2 T}$ =	+.337	+.337	+.337	+.337	+.337	+[illegible]	+[illegible]	+.337

FIGURE 3A.2.5-3

SUMMARY OF MANUAL CALCULATIONS FOR LOCAL STRESSES IN SPHERICAL SHELLS

BEAVER VALLEY POWER STATION-UNIT 2

FINAL SAFETY ANALYSIS REPORT

PROBLEM NO. 1 - STRESSES IN SHELL AT NOZZLE ASSUMING SHELL THICKNESS IS EQUAL TO INSERT THICKNESS

DIMENSIONLESS CURVE FACTORS BASED UPON 3A ABOVE

NY/P	HY/P	NY/H1	HY/H1	NY/H2	HY/H2	NX/P	HX/P	NX/H1	HX/H1	NX/H2	HX/H2
0.140894	0.033549	0.145850	0.096415	0.145850	0.096415	0.086875	0.086470	0.127766	0.214108	0.127766	0.214108

STRESS / LOCATION		AU	AL	BU	BL	CU	CL	DU	DL
N-X	P	-1.390	-1.390	-1.390	-1.390	-1.390	-1.390	-1.390	-1.390
H-X	P	-8.301	8.301	-8.301	8.301	-8.301	8.301	-8.301	8.301
N-X	HC	XXXXXXXXXX	XXXXXXXXXX	XXXXXXXXXX	XXXXXXXXXX	-0.743	-0.743	0.743	0.743
H-X	HC	XXXXXXXXXX	XXXXXXXXXX	XXXXXXXXXX	XXXXXXXXXX	-7.474	7.474	7.474	-7.474
N-X	HL	-0.743	-0.743	0.743	0.743	XXXXXXXXXX	XXXXXXXXXX	XXXXXXXXXX	XXXXXXXXXX
H-X	HL	-7.474	7.474	7.474	-7.474	XXXXXXXXXX	XXXXXXXXXX	XXXXXXXXXX	XXXXXXXXXX
N-PHI	P	-2.254	-2.254	-2.254	-2.254	-2.254	-2.254	-2.254	-2.254
H-PHI	P	-3.221	3.221	-3.221	3.221	-3.221	3.221	-3.221	3.221
N-PHI	HC	XXXXXXXXXX	XXXXXXXXXX	XXXXXXXXXX	XXXXXXXXXX	-0.849	-0.849	0.849	0.849
H-PHI	HC	XXXXXXXXXX	XXXXXXXXXX	XXXXXXXXXX	XXXXXXXXXX	-3.366	3.366	3.366	-3.366
N-PHI	HL	-0.849	-0.849	0.849	0.849	XXXXXXXXXX	XXXXXXXXXX	XXXXXXXXXX	XXXXXXXXXX
H-PHI	HL	-3.366	3.366	3.366	-3.366	XXXXXXXXXX	XXXXXXXXXX	XXXXXXXXXX	XXXXXXXXXX
SHEAR STRESS	VC	0.926	0.926	-0.926	-0.926	XXXXXXXXXX	XXXXXXXXXX	XXXXXXXXXX	XXXXXXXXXX
SHEAR STRESS	VL	XXXXXXXXXX	XXXXXXXXXX	XXXXXXXXXX	XXXXXXXXXX	-0.926	-0.926	0.926	0.926
SHEAR STRESS	HT	0.337	0.337	0.337	0.337	0.337	0.337	0.337	0.337

FIGURE 3A.2.5-4
SUMMARY OF COMPUTER CALCULATIONS FOR LOCAL STRESSES IN SPHERICAL SHELLS
BEAVER VALLEY POWER STATION - UNIT 2
FINAL SAFETY ANALYSIS REPORT

VESSEL THICKNESS (hs) = 0.375 IN.

NOZZLE THICKNESS (hc) = 0.365 IN.

VESSEL INNER RADIUS (Ri) = 23.625 IN.

VESSEL MEAN RADIUS (Rm) = 23.8125 IN.

NOZZLE INNER RADIUS (ri) = 5.010 IN.

NOZZLE MEAN RADIUS (a) = 5.1925 IN.

INTERNAL PRESSURE (P) = 50 PSI

FIGURE 3A.2.5-5

SAMPLE INPUT DATA-NOZZLE

BEAVER VALLEY POWER STATION-UNIT 2
FINAL SAFETY ANALYSIS REPORT

MERIDIONAL STRESSES (S_1)			
LOCATION	Σ OF STRESSES	HAND CALC.	TEST PROBLEM 2*
AU	$\sigma_{\phi o} + \sigma_{AV}$	4842.688	4844.043
AL	$\sigma_{\phi I} + \sigma_{AV}$	-3694.314	-3695.641
BU	$\sigma_{\phi o} + \sigma_{AV}$	4842.688	4844.043
BL	$\sigma_{\phi I} + \sigma_{AV}$	-3694.314	-3695.641
CU	$\sigma_{\phi o} + \sigma_{HV}$	6417.688	6419.043
CL	$\sigma_{\phi I} + \sigma_{HV}$	-2119.314	-2120.641
DU	$\sigma_{\phi o} + \sigma_{HV}$	6417.688	6419.043
DL	$\sigma_{\phi I} + \sigma_{HV}$	-2119.314	-2120.641

HOOP STRESSES (S_2)			
LOCATION	Σ OF STRESSES	HAND CALC.	TEST PROBLEM 2*
AU	$\sigma_{\theta o} + \sigma_{HV}$	6660.645	6660.332
AL	$\sigma_{\theta I} + \sigma_{HV}$	4099.545	4098.430
BU	$\sigma_{\theta o} + \sigma_{HV}$	6660.645	6660.332
BL	$\sigma_{\theta I} + \sigma_{HV}$	4099.545	4098.430
CU	$\sigma_{\theta o} + \sigma_{AV}$	5085.645	5085.332
CL	$\sigma_{\theta I} + \sigma_{AV}$	2524.545	2523.430
DU	$\sigma_{\theta o} + \sigma_{AV}$	5085.645	5085.332
DL	$\sigma_{\theta I} + \sigma_{AV}$	2524.545	2523.430

* TEST PROBLEM 2 COMPUTER RESULTS (RUN 001)

FIGURE 3A2.5-6
COMPARISONS OF MERIDIONAL AND HOOP STRESSES
BEAVER VALLEY POWER STATION-UNIT 2
FINAL SAFETY ANALYSIS REPORT

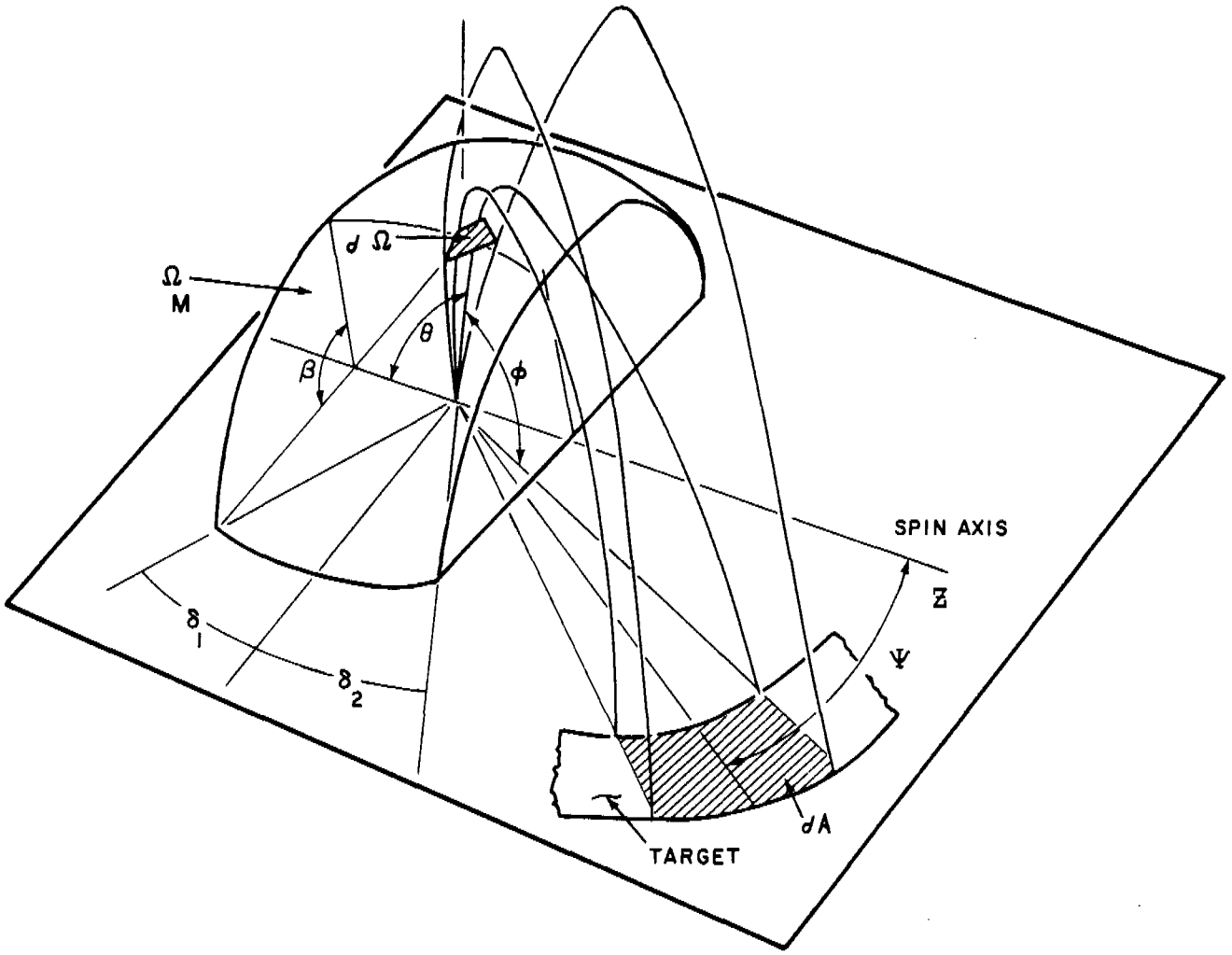

FIGURE 3A. 2.8-1

NOMENCLATURE FOR MISSILE PROGRAM

BEAVER VALLEY POWER STATION-UNIT 2

FINAL SAFETY ANALYSIS REPORT

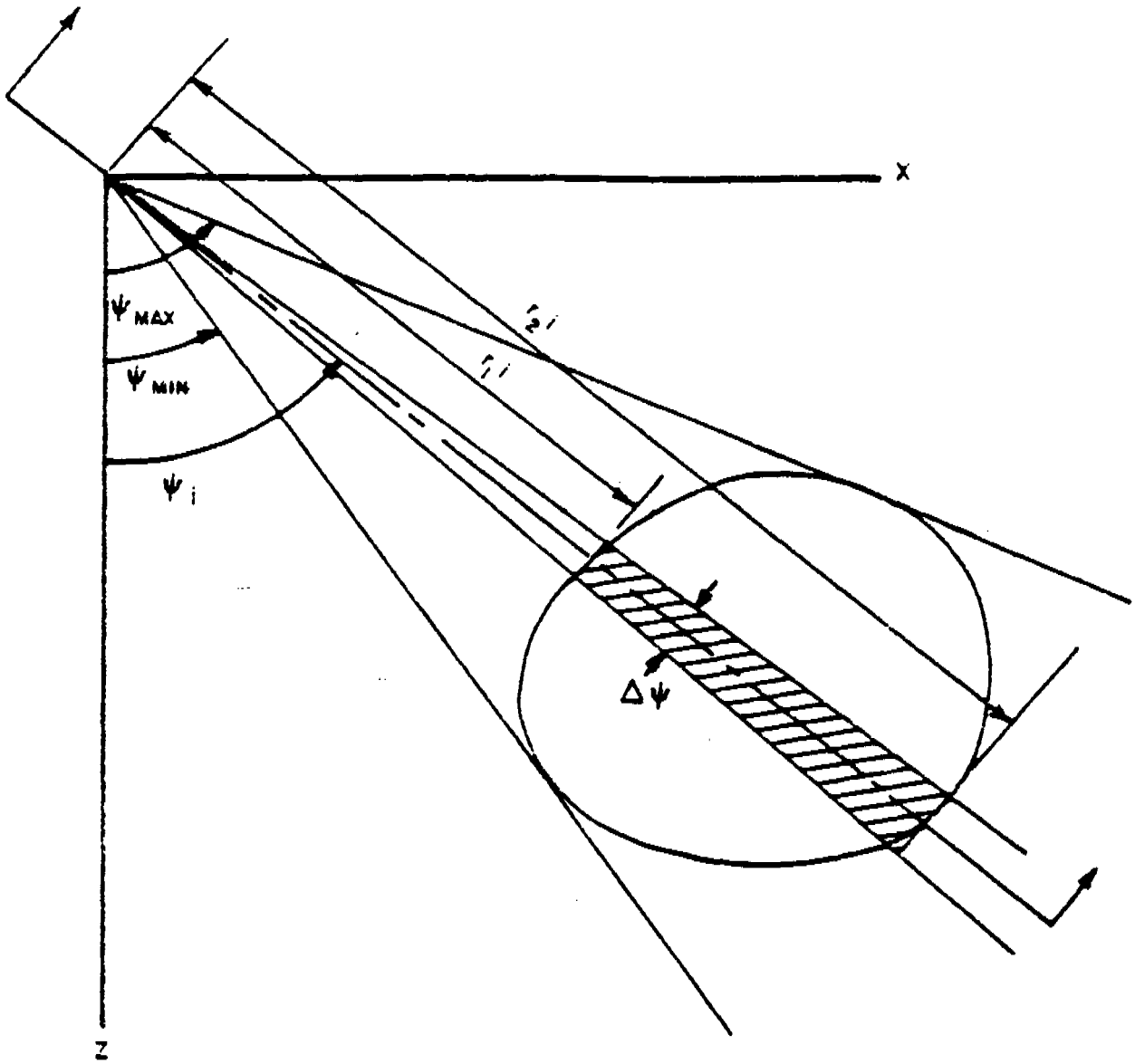

FIGURE 3A.2.8-2
TOP VIEW OF IDEALIZED TARGET
BEAVER VALLEY POWER STATION-UNIT 2
FINAL SAFETY ANALYSIS REPORT

E

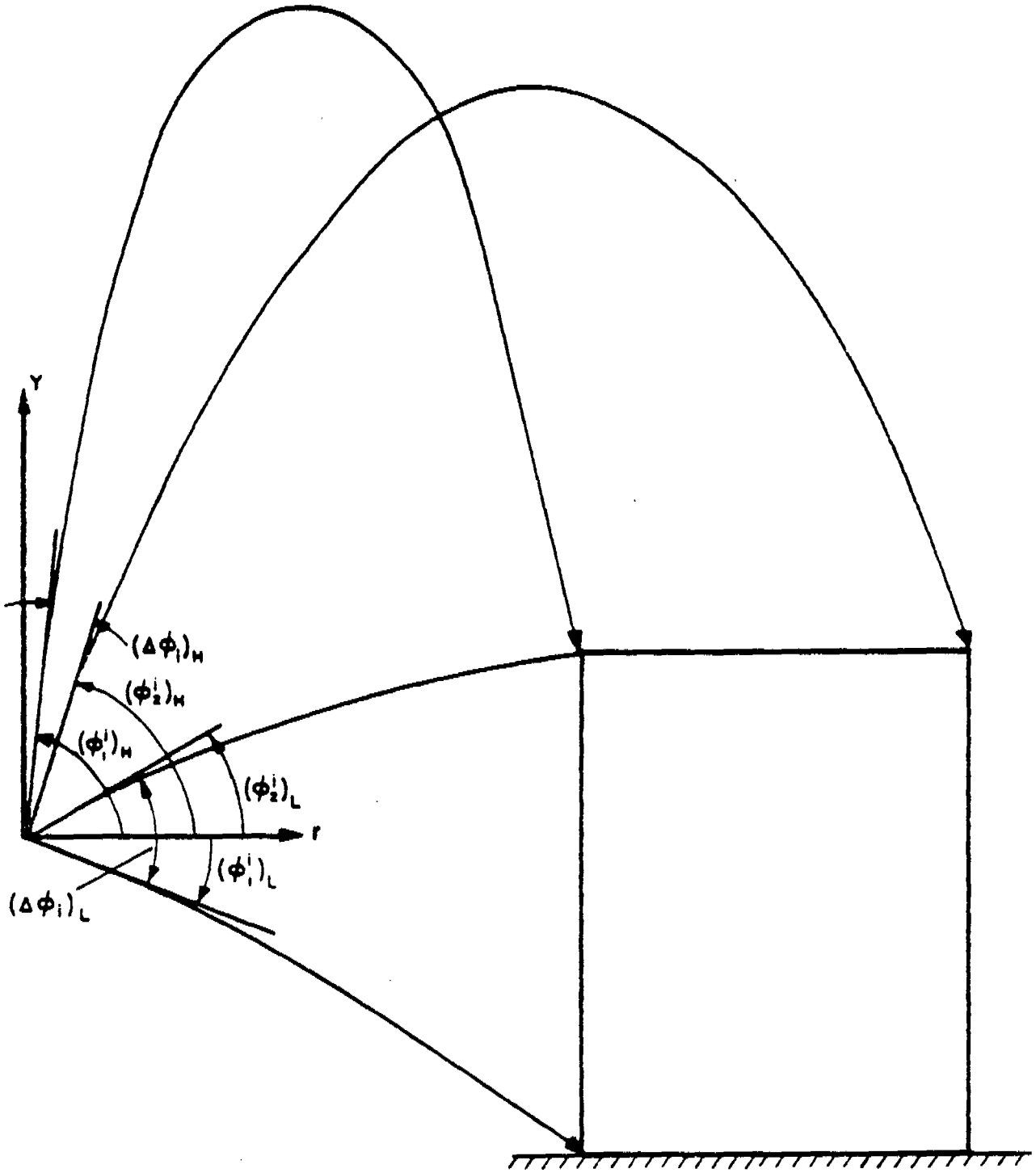

FIGURE 3A.2.8-3
SIDE VIEW OF IDEALIZED TARGET
BEAVER VALLEY POWER STATION–UNIT 2
FINAL SAFETY ANALYSIS REPORT

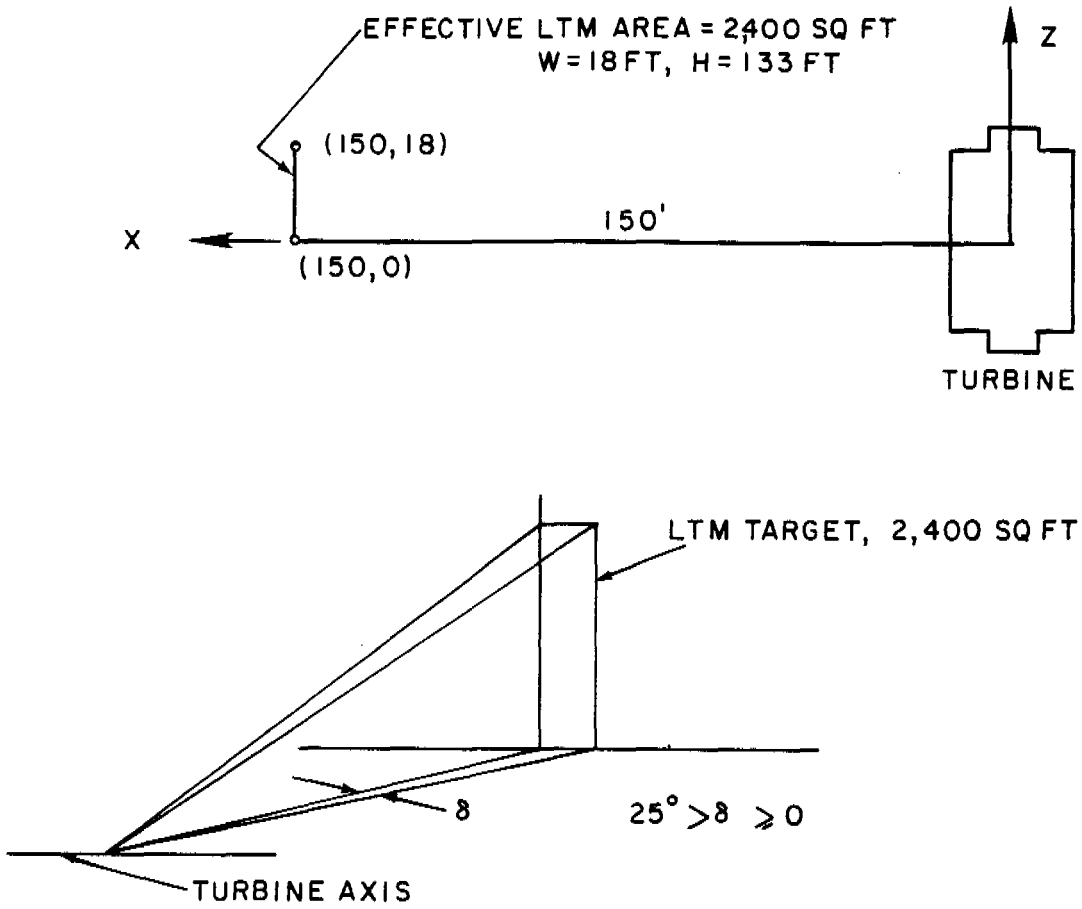

NOTE: BUSH 1973

FIGURE 3A.2.8-4

TARGET FOR LOW TRAJECTORY MISSILE

BEAVER VALLEY POWER STATION – UNIT 2
FINAL SAFETY ANALYSIS REPORT

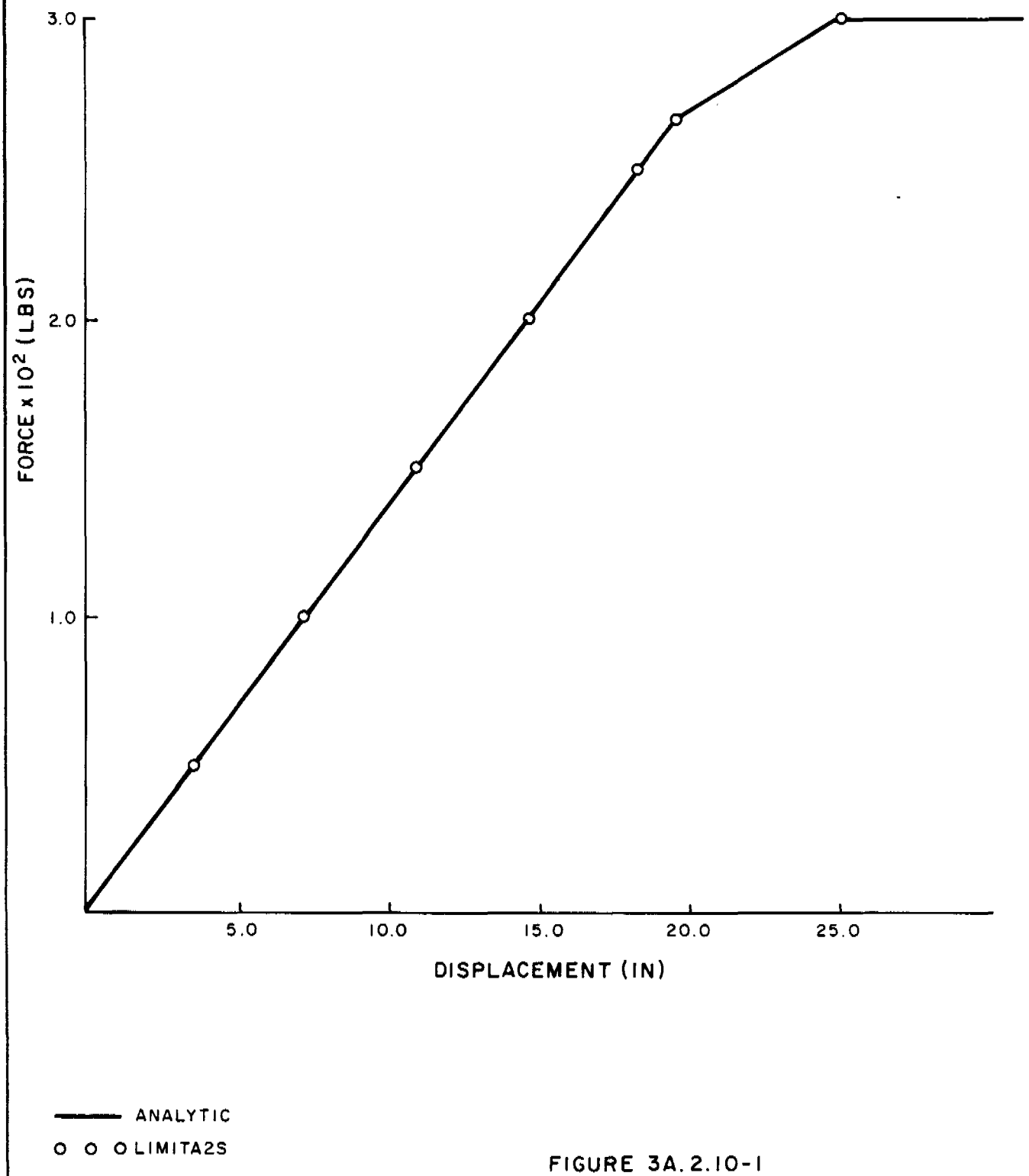

FIGURE 3A.2.10-1
FORCE DISPLACEMENT CURVE
BEAVER VALLEY POWER STATION-UNIT 2
FINAL SAFETY ANALYSIS REPORT

3A.3 PIPING SYSTEMS

The following computer programs are used for the analysis of Seismic Category I piping systems:

1. NUPIPE-SW - Linear Elastic Analysis of 3-D Piping System Subjected to Thermal, Static, and Dynamic Loads,
2. HTLOAD - Thermal Transient Analysis,
3. PITRUST - Local Stress Analysis at Junction of Two Cylindrical Vessels,
4. PILUG - Local Stress Analysis at Junction of Lug with Pipe for a Cylindrical Vessel,
5. PITRIFE - Finite Element Analysis of Integral Weld Attachment,
6. STEHAM - Steamhammer Transient Analysis,
7. WATHAM - Waterhammer Transient Analysis,
8. WATSLUG - Water Slug Transient Analysis,
9. ELBOW - Detailed Stresses in Elbows,
10. BENDCORD - Bend Coordinate Program,
11. CDC - BASEPLATE II,
12. PSPECTRA - Data Generator for NUPIPE,
13. ANSYS - Engineering Analysis System,
14. STRUDL II - Structural Analysis Program,
15. STRUDL-SW - Structural Analysis Program,
16. NUPIPE II - Linear Elastic Analysis of 3-D Piping System Subjected to Thermal, Static, and Dynamic Loads,
17. BIP - Baseplate Information Processor,
18. APE - Anchor Plate Evaluation,
19. CHPLOT - Data Plotting Program,
20. BAP - Baseplate Analysis Processor,
21. TRUNPIPE - Analysis of Local Pipe Stresses at Trunnion Attachments,

22. LUGAPIPE - Analysis of Local Pipe Stresses at Lug Attachments,

23. CCN318 - ASME III Code Case N-318 Analysis of Rectangular Attachments to Pipe, and

24. CCN392 - ASME III Code Case N-392 Analysis of Circular Attachments to Pipe.

3A.3.1 NUPIPE-SW

3A.3.1.1 General Description

The NUPIPE-SW (SWEC 1982) piping program performs a linear elastic analysis of three-dimensional piping systems subjected to thermal, static, and dynamic loads. It utilizes the finite element method of analysis.

NUPIPE-SW handles all loading conditions required for complete nuclear piping analyses. A given piping configuration may be analyzed successively for a number of static and dynamic load conditions in a single computer run. Separate load cases, such as thermal expansion and anchor displacements, may be combined to form additional analysis cases. The piping deadload analysis considers both distributed weight properties of the piping and any added concentrated weights.

A lumped mass model of the system is used for all dynamic analysis, and both translational and rotational degrees of freedom may be considered. Location of lumped masses and degrees of freedom at each mass point are preselected by the analyst. The program automatically computes values of translational lumped masses.

Program input consists basically of program control, piping configuration description, and load specification information. Output includes certain computed system information and a listing of calculated forces, moments, deflections, and stresses for each individual load case. Output from seismic analyses includes system normal mode information. NUPIPE-SW output data also contains pipe stress and pipe support summaries and piping isometric plots. Output data of NUPIPE-SW can be saved on a separate tape for further analysis, if required.

The NUPIPE-SW program is designed to perform analysis in accordance with ASME Section III, Nuclear Power Plant Components (Code). Features ensuring code conformance include use of accepted analysis methods, incorporation of specified stress indices and flexibility factors, proper combination of moment resultants, and provision to generate (automatically) results of combined loading cases. A program option is available to specify among:

1. Class 1 analysis per Article NB-3600 of the Code,

2. Class 2 analysis per Article NC-3600 of the Code,

3. Analysis per ANSI B31.1.0 power piping code, and

4. Combined Class 1 and Class 2 analysis per Articles NB-3600 and NC-3600 of the Code.

3A.3.1.2 Program Verification

NUPIPE-SW program has been verified with ADLPIPE (ADL 1972) for thermal, weight, and response spectrum seismic analysis. The results from both programs are presented in Tables 3A.3.1-1, 3A.3.1-2, 3A.3.1-3, 3A.3.1-4, 3A.3.1-5, 3A.3.1-6 and 3A.3.1-7. The model used for this comparison is shown on Figure 3A.3.1-1.

The comparison is also made with the ASME (1972) Benchmark solution for force time-history dynamic response. The model used for this comparison is shown on Figure 3A.3.1-2. The results for comparisons are plotted an Figure 3A.3.1-2. The natural frequencies are given in Table 3A.3.1-8.

The Class 1 pipe stresses computed by NUPIPE-SW agree with those calculated by hand. The model used is shown on Figure 3A.3.1-3. The results are listed in Tables 3A.3.1-9 and 3A.3.1-10.

3A.3.2 HTLOAD

3A.3.2.1 General Description

HTLOAD is a computer program which performs a finite difference method analysis of piping system response to thermal transients of its contained fluid. The output gives overall thermal growth, linear and nonlinear temperature distribution through the pipe wall, gross discontinuity information (T_A-T_B), and Equation 10 and Equation 11 stress analysis results for Article NB-3600 of ASME Section III.

HTLOAD can analyze piping, with or without a thermal sleeve, that is subject to changes in fluid temperature, velocity, and/or state. The properties of subcooled or saturated water and superheated or saturated steam are taken from the ASME steam tables (Meyer, McClintock, Silvestri, and Spencer 1967). The pressure range is from 0.45 to 6,210 psia.

This computer program also performs thermal analysis for pipes ranging from non-insulated to perfectly insulated. It has stored properties for insulation such as unibestos, asbestos, reflective aluminum, reflective stainless steel, and calcium silicate. Provision is made for hand input properties of other insulation types.

Also stored in the program are the piping material properties of carbon steel, austenitic stainless steel, low-chrome steel, high-chrome steel, and nickel-chrome iron for the temperature range of 32° to l,600°F.

Program input includes piping material insulation information, time lapse for initial to final fluid temperature, calculation time limit, fluid velocities, initial and final temperature and pressure, pipe and thermal sleeve dimensions.

HTLOAD requires that each thermal transient be input as a step change, a ramp change, or as a 50-point (maximum) arbitrary function.

Output results are used in the calculation of piping stress in accordance with Article NB-3600 of ASME Section III. HTLOAD also calculates stress for the local thermal transient terms for equations 10 and 11 of NB-3650. This information must be combined with other loading terms applicable to equations 10 and 11 and must be ranged with other transients in order to perform a complete code check.

3A.3.2.2 Program Verification

The sample problem selected for solution by HTLOAD consists of a 2-inch, Schedule 160, stainless steel pipe, with one end connected to a l/2-inch thick socket-welded fitting. Saturated water flowing within the piping system changes temperature from 400° to 500°F in a period of 10 seconds. Velocity of fluid is 7,560 feet per hour. Input properties are listed in Tables 3A.3.2-1 and 3A.3.2-2.

Reynolds number and heat transfer coefficients are compared with hand calculations by Krieth (1964) and are given in Table 3A.3.2-3.

Comparison between HTLOAD and Brock and McNeill's charts (1971) for ΔT_1 and ΔT_2 are given in Table 3A.3.2-4. Table 3A.3.2-5 represents the comparison between TRHEAT in Nuclear Services Corporation (1972) and HTLOAD for ΔT_1, ΔT_2, and T_A-T_B.

3A.3.3 PITRUST

3A.3.3.1 General Description

PITRUST is a computer program which calculates the local stress intensity at the junction of two cylindrical vessels; typically, where a trunnion is welded to a run pipe or where a branch pipe exists from a run pipe or vessel. Code-specified loading conditions are applied, and, if overstressing occurs, there is a program option that will redesign the pad thickness to attain acceptability. Input consists of run pipe cross-section dimensions, pipe internal operating pressure, trunnion outside diameter, trunnion-run pipe orientation, code classification, and load type. PITRUST computes stresses in accordance with the method outlined by Wichman (et al 1965).

If the design criteria for the stresses are exceeded, the program will incrementally increase the pad thickness and recalculate the stresses until the pipe passes or until the pad reaches a maximum of 1.5 times the pipe wall thickness.

PITRUST is capable of complying with the following code requirements: ASME Section III, Class 2 and 3, and ANSI B31.1 Power Piping Code.

Program output tabulates the applied loadings and local stress at the junction of the trunnion and the run pipe.

3A.3.3.2 Program Verification

Program PITRUST has been verified by comparing its solution of a test problem to the solution of the same problem by an independently written piping local stress program, CYLNOZ, in the public domain. The CYLNOZ piping local stress program was written by Franklin Institute, Philadelphia, Pennsylvania, and is presently used by engineering companies. The test problem is a 72.375-inch (outside diameter) by 0.375-inch thick run pipe, reacting under an external loading condition of 1,000 pounds of force (normal and shear) and 1,000 inch-pounds bending and torsional moments transmitted by a 16-inch (outside diameter) nozzle. A comparison of results is listed in Table 3A.3.3-1. Program PITRUST has also been verified by comparing its solution of a test problem to the experimental results obtained by Corum and Greenstreet (1971). A comparison of these results is shown on Figure 3A.3.3-1.

3A.3.4 PILUG

3A.3.4.1 General Description

PILUG is a computer program which calculates local stress intensity at the junction of a lug with a pipe or other cylindrical vessel; specifically, where a rectangular lug is welded to a run pipe. Input consists of run pipe cross-section dimensions, pipe internal operating pressure, lug dimensions, lug-run pipe orientation, code classification, and load type. PILUG computes stresses in accordance with the method outlined by Wichman, Hopper, and Mershon (1965).

If the design criteria for the stresses are exceeded, the program incrementally increases the pad thickness and recalculates the stresses until the lug passes or until the pad reaches 1.5 times the pipe wall thickness.

PILUG is capable of complying with the following code requirements: ASME Section III, Class 2 and Class 3; and ANSI B31.1 Power Piping Code.

Program output tabulates the applied loadings and applied stresses at the junction of the lug and the run pipe.

3A.3.4.2 Program Verification

PILUG has been verified by comparing its solution to a test problem to results obtained by hand calculations using the formulations specified by Wichman, Hopper, and Mershon (1965). A comparison of results is presented in Table 3A.3.4-1.

3A.3.5 PITRIFE

3A.3.5.1 General Description

PITRIFE (SWEC 1982) is a computer program for calculating the local discontinuity stresses in a pipe at the intersection with a circular trunnion due to loads applied to the trunnion. It is a post-processor program that utilizes the results of a finite element model of two intersecting cylinders. Based upon the stresses calculated with the finite element model, non-dimensional stress coefficients are computed for a size-on-size pipe-trunnion configuration for three different values of average pipe radius to wall thickness (R/t = 5,10,20). Additionally, non-dimensional stress coefficients are computed for a trunnion radius equal to 0.707 times the pipe radius (0.707 size-on-size) for the three values of R/t. To facilitate the determination of non-dimensional stress coefficients for other values of R/t, a rotated parabola curve that fits the three R/t data points is generated for both the size-on-size and the 0.707 size-on-size data. The PITRIFE program reconstructs these curves and uses them to interpolate and extrapolate for stress coefficients for different values of R/t. The finite element models are analyzed using the STRUDL-II computer program (ICES) SWEC 1977.

3A.3.5.2 Program Verification

The PITRIFE computer program has been verified by demonstrating that the maximum stress intensities as given by PITRIFE equal the values given by the finite element analysis for specific size-on-size and 0.707 size-on-size models. A comparison of these results is tabulated in Table 3A.3.5-1. The program was verified for other ratios of trunnion to pipe radius by demonstrating that the stress coefficients and maximum stress intensities derived by hand calculation equal the coefficients used in the program to calculate maximum stress intensity. A comparison of these results is given in Table 3A.3.5-2.

3A.3.6 STEHAM

3A.3.6.1 General Description

STEHAM is a computer program which is used to determine the steamhammer transients of piping systems. This program uses the method of characteristics with finite difference approximations both in space and in time (Jonsson, Matthews, and Spaulding 1973; Luk 1975; and Moody 1973). It calculates the one-dimensional transient flow responses and the flow-induced forcing functions in a piping system caused by rapid operational changes of piping components, such as the actuation of a stop valve or a safety/relief valve. Flow characteristics of piping components are mathematically formulated as boundary conditions in the program. These components include the flow control valve, the stop valve, the safety/relief valve, the steam manifold, and the steam reservoir. Frictional effects are taken into consideration in this program.

This program accepts the following as input:

1. The flow network representation of the piping system,
2. The initial flow conditions along the piping system, and
3. Time-dependent flow characteristics of piping components.

Output consists of time-histories of flow pressures, flow densities, flow velocities, inertia, and momentum functions.

3A.3.6.2 Program Verification

STEHAM is verified by comparing its solutions of a test program (Figures 3A.3.6-1 and 3A.3.6-2) to the results of the same problem obtained by an independent analytical approach, as well as an experimental measurement (Progelhof and Owczanek 1963a; 1963b). A comparison of results for time-history pressure responses is plotted on Figures 3A.3.6-3, 3A.3.6-4, and 3A.3.6-5. The forcing functions

developed for nodal points of the piping system, calculated from the relation

$$F = \left(P + \frac{YV^2}{g}\right)A$$

have also been checked by hand calculations (Table 3A.3.6-1).

3A.3.7 WATHAM

3A.3.7.1 General Description

WATHAM is a computer program which is used to determine the flow-induced forcing functions acting on piping systems due to waterhammer. These forcing functions may then be used as input to a structural dynamic analysis, such as a NUPIPE program run.

WATHAM is applicable to a waterhammer problem or, more generally, any unsteady, incompressible fluid flow. These events may be caused by normal or abnormal operational changes of piping components, such as the start-up and trip of pumps, or the rapid opening and closing of valves.

The analysis is based upon the method of characteristics with finite-difference approximations both in time and space for the solution of one-dimensional liquid flows. Influences of piping components, including flow valves, pipe connections, reservoirs, and pumps, have been considered in the analysis.

WATHAM input requires the geometry of the piping system, pipe properties, water properties, operational characteristics of pump and valve, flow frictional coefficients, and the initial water flow conditions. The output provides the time history functions of piezometric heads, velocities, and nodal forces for all nodes and the inertial unbalanced force for each segment. It also gives the maximum values of all the previously mentioned functions and their time of occurrence in the process of flow-transient.

3A.3.7.2 Program Verification

For the verification of WATHAM, a problem from Streeter and Wylie (1967) is employed. Figure 3A.3.7-1 depicts the flow network with nine pipes, its geometrical properties, and steady state flow conditions. The flow-transient mode analyzed is the sudden closure of a valve at the downstream end. Figure 3A.3.7-2 shows the hydraulic network for WATHAM. Table 3A.3.7-1 illustrates the input data needed for a WATHAM run. Figures 3A.3.7-3 and 3A.3.7-4 show the comparison of head-time curves obtained from Streeter and Wylie (1967), Fabic (1967), and WATHAM. Table 3A.3.7-2 presents the comparison of nodal forces derived by hand calculation and WATHAM computation.

In general, WATHAM 3 results are in good agreement with Streeter and Wylie's (1967) results. The small discrepancy is attributed to the modeling of the reservoir boundary condition. In WATHAM, the energy

equation between the reservoir is utilized rather than assuming the head of the pipe entrance is the same as that of the reservoir.

3A.3.8 WATSLUG

3A.3.8.1 General Description

The purpose of WATSLUG (Hsieh and van Duyne 1982) is to determine forcing functions on piping systems during water slug discharge events for subsequent input to piping dynamic analysis.

The analysis is based upon rigid body motion of the generally subcooled water slug and ideal gas representations of the steam or air using rigid column theory to facilitate tracking the several water-steam or water-air interfaces. The driving force is the steam pressure between the valve and the slug, less friction and other losses, and back pressure. Density changes due to possible local flashing of the water slug are considered. Having recourse to the control volume theory, the subsequent segment-forced calculation is carried out.

The input consists of complete piping system geometry, pipe dimensions (Table 3A.3.8-1), valve flow characteristics, valve opening time, detail upstream steam conditions, and initial downstream steam or air conditions, (Table 3A.3.8-2), while the output contains forcing functions for each piping segment based upon flow velocities, pressures, and densities during the water slug discharge event. Forces are written on tape for direct input to NUPIPE-SW.

3A.3.8.2 Program Verification

The WATSLUG model of the test problem is diagrammed in Figure 3A.3.8-1, while the NUPIPE-SW model is diagrammed in Figure 3A.3.8-2. WATSLUG is verified by comparing the solution of this test problem to the results for the same problem obtained by an independent analytical approach (RELAP5/MOD 1) (House 1982), as shown in Figures 3A.3.8-3 and 3A.3.8-4, and by comparison of predicted versus measured support reactions. NUPIPE-SW (ME-110)-generated support reactions due to WATSLUG forcing functions were compared with experimental measurements from a test run of this problem, EPRI Test 908 (RELAP5/MOD 1) shown in Figures 3A.3.8-5 and 3A.3.8-6.

The WATSLUG-generated forcing functions and the resultant NUPIPE-SW support reactions compare favorably with the RELAP5/MOD 1 predicted forcing functions and the EPRI-measured support reactions, respectively.

3A.3.9 ELBOW

3A.3.9.1 General Description

ELBOW calculates the circumferential and longitudinal stresses on the inside and outside surfaces of an elbow subjected to internal

pressure, in-plane bending, out-of-plane bending, torsion, and linear temperature gradient through the wall. Stress indices and flexibility factors for the elbows are also calculated. Results can be used directly for design and analysis of elbows in accordance with Article NB-3600 of ASME Section III.

The solution method utilizes Table NB-3685.1-1 relative to internal pressure and Table NB-3685.l-2, with modifications as indicated by Dodge and Moore (1972) relative to moment loadings and flexibility factors.

The complete analysis of Rodabaugh and George (1957), based on minimum potential energy method, was written in terms of infinite series. A modified version of the analytical method by Rodabaugh and George (1957), which considered both in-plane and out-of-plane bending as well as the influence of internal pressure, was selected by ORNL as the most appropriate basis in determining the stresses and flexibility for elbows. The analysis is a generation of the work done by Von Karman. The modifications to the analysis method of Rodabaugh and George (1957) include a generalization of the "correction for transverse compression" recommended by Gross. The ORNL computer program ORNL-ELBOW was written by Dodge and Moore (1973) to implement this analysis procedure.

The SWEC computer program ELBOW uses the same theoretical considerations to obtain the flexibility factor and detailed stresses in the elbows.

When this program is used, it is considered as a detailed analysis. For elbows free from local discontinuities, ELBOW solutions are the detailed solutions to Equation 10, Table NB-3653, including the consideration of C_1 and C_2, but without $|\alpha_a T_a - \alpha_b T_b|$ term. The solutions are also the detailed solutions to Equation 11 if $|\Delta T2|$ term is negligible.

The program does not take into account the effects of discontinuities on the elbows. The influence length of a concentrated force or moment in a shell structure is about $2.5\sqrt{rt}$, where r is the radius of curvature of the shell surface, or for a pipe r is the mean radius and t is the thickness of the pipe. For the portion of elbow at a distance of $2.5\sqrt{rt}$ away from local discontinuities, detailed stresses can be obtained by using this program.

In general, for an elbow welded to tangent pipe of the same thickness, the effects of straight tangent pipe on the elbow can be neglected (Table NB-3683.2). However, if two elbows are welded together or joined by a piece of straight pipe that is less than one pipe diameter in length, some intensification effects may have to be considered.

This program is an efficient and easy to use program for determining stresses, stress indices, and flexibility factors for elbows. Comparison with experimental results indicates that the results accurately represent the maximum stresses which occur at the center

of the bend. Since end effects are not included in the analytical solution on which this program is based, the calculated stresses and flexibility of the elbow may be larger than the actual values.

Required input data includes elbow dimensions, material properties, applied moments and forces, internal pressure, and linear temperature gradients.

Output includes stress indices, flexibility factor for the elbow, and circumferential and longitudinal stresses on the inside and outside surfaces at specified locations.

3A.3.9.2 Program Verification

Sample problems were selected for solution by ELBOW, and these results were compared with those obtained from hand calculations. The following cases were selected for purposes of verification:

Case 1 - Elbow is subjected to internal pressures. Results are given in Table 3A.3.9-2.

Case 2 - Elbow is subjected to a linear temperature gradient through the pipe wall. Results are given in Table 3A.3.9-3.

Case 3 - Elbow is subjected to combined loadings at one end. Results are given in Table 3A.3.9-4.

Elbow properties utilized for the analyses are given in Table 3A.3.9-1.

3A.3.10 BENDCORD

3A.3.10.1 General Description

BENDCORD is a FORTRAN IV program which supplies, in printed and card form, data for coding segments of a circle for use in the NUPIPE-SW piping program (Section 3A.3.1).

BENDCORD has the capacity of operating on an arc which lies in any one of three planes defined by the cartesian coordinate system.

The piping system may be divided into equal or unequal segments so as to aid the user in placing supports. For seismic piping systems, the user is provided the option of locating mass points at alternating nodes or, if desired, at every node.

Various elbow types may be provided as input to reflect the requirements of Class 1 analysis.

The method utilized by BENDCORD divides an arc into tangent lines, the lengths of which are then calculated by subtracting the coordinates of the tangent point from the tangent intersection point of the tangent lines.

For output, BENDCORD provides a table of the tangent intersection coordinates of the arc.

3A.3.10.2 Program Verification

The BENDCORD program is verified by calculating distances (or offsets) between nodal points by hand and comparing these values to those calculated by BENDCORD.

The problem consists of a 180 degree piping arc in the X-Z plane beginning with node 10 at phi = 45 degrees, and ending at node 36. There are 26 included angles in the arc, all equal. Mass points are at every other node. Refer to Figure 3A.3.10-1 for a graphic representation of the problem.

Partial results are shown in Table 3A.3.10-1. It can be seen that there are no significant differences between the results from BENDCORD and the hand calculations.

3A.3.11 CDC - BASEPLATE II

3A.3.11.1 General Description

BASEPLATE II is a combination of a pre- and post-processor to the STARDYNE program for the purpose of analyzing flexible baseplates on a geometrically nonlinear foundation. The program employs an automatic mesh generation technique with the user in control of mesh size and element configuration.

Input includes plate geometry, nonstandard and standard (library) attachments, anchor locations, anchor and concrete stiffnesses, material properties, anchor allowables, and up to fifty loading conditions.

Output consists of a printer plot of the baseplate showing attachment and anchor locations, plate deformations and principal stresses, anchor bolt tension and resultant shear load for each anchor together with calculated tension/shear interaction and factor of safety.

3A.3.11.2 Program Verification

BASEPLATE II is verified and qualified through control data corporation quality assurance programs, which are periodically evaluated by Stone & Webster Engineering Corporation and which have been found to be satisfactory.

3A.3.12 PSPECTRA

3A.3.12.1 General Description

The PSPECTRA program peak spreads and envelops amplified response spectra (ARS) curves of earthquakes or other dynamic events. The program reads ARS curves from magnetic tape, card, or disk files. The created curves are stored on a disk file and are optionally

printed, plotted, or punched on a card file. The disk and card file format is compatible with the NUPIPE-SW program (Section 3A.3.1). One important application of PSPECTRA is the creation of disk or card data sets of operating basis earthquake (OBE) and safe shutdown earthquake (SSE) curves for input to NUPIPE-SW.

There are two methods of peak spreading - either the sides of the spread peaks can be vertical or they can be parallel to the sides of the original peaks. There are three methods of enveloping - maximum value, absolute sum, and square root of the sum of the squares (SRSS). Another program option allows enveloping E-W and N-S direction curves to form one horizontal curve for each curve set on a disk file. ARS curves can also be input from as many as four disk files in one run for the purpose of enveloping or plotting curves with up to four different damping values, and superimposing curves with different damping values on the same plot.

Input data includes ARS data tapes, optional disk file input, and card input.

Output data includes tables of edited ARS data as retrieved from tape; tables of enveloped curves; and plots of original, peak spread, and enveloped curves.

3A.3.12.2 Program Verification

PSPECTRA is verified by manually enveloping and peak spreading input ARS curves and comparing these results with those calculated by PSPECTRA. The following presents the results of four sample verification problems.

1. Problem I - This problem verifies the maximum value enveloping option. The data points were selected from each of three sets of ARS curves, and the maximum value of the acceleration was manually determined for each set. These values were then compared with those from PSPECTRA. Results are shown in Table 3A.3.12-1.

2. Problem II - This problem verifies the absolute sum value enveloping option. The same procedure as Problem I was utilized. Results are shown in Table 3A.3.12-2.

3. Problem III - This problem verifies the SRSS enveloping option. Same procedure as Problem I was utilized. Results are shown in Table 3A.3.12-3.

4. Problem IV - This problem verifies the peak spreading option. Two different peaks were selected from the input ARS and were spread manually. The values of these spreads were then compared with the values from PSPECTRA. Results are shown in Table 3A.3.12-4.

3A.3.13 ANSYS

3A.3.13.1 General Description

A description of the program is provided in Section 3A.1.9.

3A.3.14 STRUDL II

3A.3.14.1 General Description

A description of the program is provided in Section 3A.1.1.

3A.3.15 STRUDL-SW

3A.3.15.1 General Description

A description of the program is provided in Section 3A.1.3.

3A.3.16 NUPIPE II

3A.3.16.1 General Description

The NUPIPE II piping program performs a linear elastic analysis of three-dimensional piping systems subjected to thermal, static, and dynamic loads. It utilizes the finite element method of analysis.

NUPIPE II is a recognized program in the public domain.

3A.3.17 BIP

3A.3.17.1 General Description

BIP (baseplate information processor) is a set of two programs, BIP1 and BIP2, which are pre- and post-processors to ANSYS. These programs reduce the time required for baseplate analysis. Baseplates are analyzed for in-plane and out-of-plane loads that are transferred through the attachments. The baseplate may be treated as infinitely rigid for in-plane loads, resulting in a statically determinate solution for anchor bolt shear loads. Out-of-plane loads are analyzed by ANSYS to account for plate flexibility as well as gaps between the baseplate and concrete and interference fit with anchors.

Input to BIP includes plate and attachment geometry, anchor locations, anchor and concrete stiffness values, anchor and concrete gaps, material properties, anchor allowables with reduction factors, and up to ten loading conditions.

Output consists of an input echo, a printer plot of the baseplate showing attachment and anchor locations, resultant shear at each anchor together with reduced tension allowables based on tension-shear interaction, plate deformations and stresses, and reactions (including bolt pullout loads).

3A.3.17.2 Program Verification

BIP program is a publicly available program and is verified and qualified through Boeing Computer Services Quality Assurance Programs. These are periodically evaluated by Stone & Webster Engineering Corporation and have been found to be satisfactory.

3A.3.18 APE

3A.3.18.1 General Description

Computer program APE (anchor plate evaluation) calculates the shear and tension loads for each anchor of a group of drilled-in anchors of a baseplate subjected to in-plane and out-of-plane loads. A reduced tension allowable, based on the calculated shear load and tension-shear interaction, is also calculated.

Program input includes plate and attachment geometry, anchor bolt locations and allowables, and applied loads.

Output consists of anchor bolt pattern center of gravity and polar moment of inertia, resultant shear and allowable tension load for each anchor, load factors for out-of-plane loading, and anchor tension loads, including load factors, for each anchor.

3.A.3.18.2 Program Verification

Verification of program APE (version 01, level 00) was performed by comparing results of APE analyses with similar results obtained from Boeing Computer Service Program BIP (refer to Section 3A.3.17). Comparisons of results from APE (version 01, level 00) and Boeing Computer Service Program BIP are shown in Table 3A.3.18-1. APE results are shown to be conservative or comparable with respect to BIP. All results are based on loadings at the critical anchor.

3A.3.19 CHPLOT

3A.3.19.1 General Description

CHPLOT is a program which will plot any number of data values (variables) versus time. Although the plot input data file can be in the form of card data, the more appropriate application of this program is to be used in conjunction with a program that creates a plot data file (on disk or tape) having the format required for input to this program.

Plots are available in two sizes; one with axes of 5 inches ordinate by 8 inches (abscissa) that fits the standard 8-1/2 inches by 11 inches page, and the other is 8 inches by 12 inches for fitting an 11 inches by 15 inches page. Plots are normally one data value versus time per graph, although up to 14 data values (plots) can be plotted on one graph.

Each graph's abscissa will be labeled as TIME (SEC) and the ordinate labels for each graph can be input. Ordinate axes can be selectively suppressed. Scaling is performed automatically to fit the size selected. Graphs can be grouped into a maximum of nine groups, within which each group of graphs will be scaled to the same scale factor.

An optional label is available for labeling all graphs at the bottom of each graph.

3A.3.19.2 Program Verification

CHPLOT is qualified by analyzing sample problems which utilize all three methods for invoking CHPLOT and verifying results by inspection. These methods include invoking CHPLOT in the STEHAM or WATHAM computer programs, plotting functions from a NUPIPE computer program tape, or plotting manually input functions.

3A.3.20 BAP

3A.3.20.1 General Description

A description of the program is provided in Section 3A.1.12.

3A.3.21 TRUNPIPE

3A.3.21.1 General Description

TRUNPIPE (SWEC 1986) is a computer program run on the HP-41CX desk computer, which analyzes integral circular attachments on ASME III Class 2 and 3 piping in accordance with ASME III Code Case N-392.

3A.3.21.2 Program Verification

Verification of the program was performed by comparison to results of manual calculations.

3A.3.22 LUGAPIPE

3A.3.22.1 General Description

LUGAPIPE (SWEC 1986) is a computer program run on the HP-41CX desk computer, which analyzes integral rectangular attachments on ASME III Class 2 and 3 piping in accordance with ASME III Code Case N-318.

3A.3.22.2 Program Verification

Verification of the program was performed by comparison to results of manual calculations.

3A.3.23 CCN318

3A.3.23.1 General Description

CCN318 is a computer program that performs analysis of local stresses at rectangular cross section welded attachments on ASME III Class 2 and 3 and ANSI B31.1 piping using Code Case N-318. Various types of welds and loading conditions may be evaluated.

Program output consists of an echo print of the input data followed by local stress indices, calculated pressure stresses, and a tabulation of calculated stresses based on the code case equations and the corresponding allowable stresses.

3A.3.23.2 Program Verification

Verification of the program was performed by comparison to results of manual calculations.

3A.3.24 CCN392

3A.3.24.1 General Description

CCN392 is a computer program that performs analysis of local stresses at hollow circular cross section welded attachments on ASME III Class 2 and 3 and ANSI B31.1 piping using Code Case N-392. Various types of welds and loading conditions may be evaluated.

Program output consists of an echo print of the input data followed by local stress indices, calculated pressure stresses, and a tabulation of calculated stresses based on the code case equations and the corresponding allowable stresses.

3A.3.24.2 Program Verification

Verification of the program was performed by comparison to results of manual calculations.

3A.3.25 References for Appendix 3A.3

American Society of Mechanical Engineers (ASME) 1972. Pressure Vessel and Piping, Computer Programs Verification, Problem No. 5.

Arthur D. Little Corporation (ADL) 1972. ADLPIPE: Static, Dynamic, Thermal Pipe Stress Analysis.

Corum, J.M. and Greenstreet, W.L. 1971. Experimental Elastic Stress Analysis of Cylinder to Cylinder Shell Models and Comparison with Theoretical Predictions. First International Conference on Structural Mechanics in Reactor Technology, Berlin, Preprints, Vol. 3, Part G.

Dodge, W.G. and Moore, S.E. 1972. Stress Indices and Flexibility Factors for Moment Loadings on Elbows and Curved Pipe. WRC Bulletin 179, Welding Research Council.

Dodge, W.G. and Moore S.E. 1973. ELBOW: A Fortran Program for the Calculation of Stresses, Stress Indices, and Flexibility Factors for Elbows and Curved Pipe. ORNL-TM-4098, Oak Ridge National Laboratory.

Fabic, S. 1967. Computer Program WHAM for Calculation of Pressure, Velocity, and Force Transients in Liquid Filled Piping Networks. Report No. 67-49-R, Kaiser Engineers.

House, R.K. 1982. RELAP5/MOD 1. Calculation of Safety and Relief Valve Discharge Pipe Hydrodynamic Loads, Interim Report. Intermountain Technologies, Inc., Idaho Falls, Idaho.

Hsieh, J.S. and Van Duyne, D.A. 1982. Verification of WATSLUG (ME-212) Computer Program. Calculation No. 576-470.1-NP(B)-038-FD. SWEC Computer Library.

Jonsson, V.K.; Matthews, L.; and Spalding, D.B. 1973. Numerical Solution Procedure for Calculating the Unsteady One-Dimensional Flow of Compressible Fluid. ASME Paper No. 73-FE-30.

Krieth, F. 1964. Principles of Heat Transfer. International Textbook Company.

Luk, C.H. 1975. Effects of the Steam Chest on Steamhammer Analysis for Nuclear Piping Systems. ASME Paper No. 75-PVP-61.

McNeill, D. R. and Brock, J.E. 1971. Charts for Transient Temperature in Pipes. Heating/Piping/Air Conditioning.

Meyer, C.A.; McClintock, R.B.; Silvestri, G. J.; and Spencer, R.C., Jr. 1967. ASME Steam Tables.

Nuclear Services Corporation (NSC) 1972. TRHEAT: Computer Code for Transient Heat Analysis of Nuclear Piping.

Moody, F.J. 1973. Time-Dependent Pipe Forces Caused by Blowdown and Flow Stoppage. ASME Paper No. 73-FE-23.

Progelhof, R.C. and Owczarek, J.A. 1963a. The Rapid Discharge of a Gas from a Cylindrical Vessel Through a Nozzle. AIAA Journal, Vol. 1, No. 9, p 2182-2184.

Progelhof, R.C. and Owczarek, J.A. 1963b. The Rapid Discharge of a Gas from Cylindrical Vessel Through an Orifice. ASME Paper No. 63-WA-10.

Rodabaugh, E.C. and George, H.H. 1957. Effect of Internal Pressure on Flexibility and Stress-Intensification Factors of Curved Pipe or Welding Elbows. Transactions of the ASME.

Streeter, V.L. and Wylie, E.G. 1967. Hydraulic Transients. McGraw-Hill Book Company, New York, NY.

Stone & Webster Engineeering Corporation (SWEC) 1977. Part Verification of STRUDL-II (ICES) Computer Program. SWEC Computer Library.

SWEC 1984. PITRIFE (ME-211). Computer Code for Pipe Trunnion Interpolated Stresses. SWEC Computer Library.

SWEC 1986. NUPIPE-SW (ME-110). Computer Code for Stress Analysis of Nuclear Piping. SWEC Computer Library.

SWEC 1986. Code Case N-318 Analysis Computer Program Qualification. Calculation No. 12241-NP(B)-550-ZC.

SWEC 1986. Code Case N-392 Analysis Computer Program Qualification. Calculation No. 12241-NP(B)-538-ZC.

SWEC 1986. CCN318 (ME-272). User's Manual. SWEC Computer Library.

SWEC 1986. CCN392 (ME-262). User's Manual. SWEC Computer Library.

Timoshenko, S.P. and Goodier, J.N. 1970. Theory of Elasticity. Third Edition, McGraw-Hill, New York, NY.

Wichman, K.R.; Hopper, A.G.; Mershon, J.L. 1965. Local Stresses in Spherical and Cylindrical Shells due to External Loading. Welding Research Council Bulletin, WRC-107.

Tables for Section 3A.3

TABLE 3A.3.1-1

COMPARISON OF SUPPORT REACTION DUE TO THERMAL, ANCHOR MOVEMENT, AND EXTERNAL FORCE LOADING

		Forces (lb)			Moments (in-lb)		
Node	Program	FX	FY	FZ	MX	MY	MZ
170	NUPIPE-SW	-9,154	7,541	4,492	-5,952	-823,420	1,241,512
	ADLPIPE	-9,178	7,540	4,492	-5,529	-823,420	1,241,512
218	NUPIPE-SW		16,650				
	ADLPIPE		16,622				
330	NUPIPE-SW	34,532	-33,620	-31,750	-486,338	-1,516,811	573,673
	ADLPIPE	34,511	-33,608	-31,736	-486,386	-1,519,359	573,438
390	NUPIPE-SW		8,631				
	ADLPIPE		8,678				
430	NUPIPE-SW	1,702	798	12,553	-28,147	164,346	248,852
	ADLPIPE	1,746	768	12,541	-26,917	166,180	250,956

TABLE 3A.3.1-2

COMPARISON OF DEFLECTIONS AND ROTATIONS DUE TO THERMAL, ANCHOR MOVEMENT, AND EXTERNAL FORCE LOADING

		Deflection (inch)			Rotation (rad)		
Node	Program	DX	DY	DZ	RX	RY	RZ
197	NUPIPE-SW	0.348	-0.141	0.230	-0.0026	0.0025	-0.0084
	ADLPIPE	0.348	-0.141	0.229	-0.0026	0.0025	-0.0084
212	NUPIPE-SW	1.120	0.052	-0.023	-0.0092	-0.0051	-0.0115
	ADLPIPE	1.120	0.052	-0.023	-0.0092	-0.0051	-0.0115
230	NUPIPE-SW	1.276	-0.028	-0.548	-0.0066	-0.0044	0.0024
	ADLPIPE	1.276	-0.027	-0.548	-0.0066	-0.0044	0.0024
260	NUPIPE-SW	0.512	-0.001	-0.520	-0.0034	-0.0005	0.0035
	ADLPIPE	0.512	-0.000	-0.520	-0.0035	-0.0005	0.0035
390	NUPIPE-SW	0.066	-0.000	0.249	-0.0010	0.0026	-0.0020
	ADLPIPE	0.067	-0.000	0.248	-0.0010	0.0026	-0.0020
420	NUPIPE-SW	-0.029	-0.079	0.011	-0.0002	-0.0002	-0.0007
	ADLPIPE	-0.029	-0.079	0.011	-0.0002	-0.0002	-0.0007

TABLE 3A.3.1-3

COMPARISON OF STRESS DUE TO THERMAL, ANCHOR MOVEMENT AND EXTERNAL FORCE LOADING

Node	NUPIPE-SW (psi)	ADLPIPE (psi)
180	18,989	19,013
199	17,703	17,731
214	23,958	23,955
236	14,427	14,416
265	6,254	6,251
305	12,539	12,532
344	11,845	11,838
370	6,295	6,296
395	3,476	3,473
430	3,282	3,308

TABLE 3A.3.1-4

COMPARISON OF INTERNAL FORCES DUE TO DEADWEIGHT ANALYSIS

		Forces (lb)			Moments (in-lb)		
Node	Program	FX	FY	FZ	MX	MY	MZ
197	NUPIPE-SW	295	2,337	14	-35,864	5,218	51,979
	ADLPIPE	290	2,341	15	-35,108	5,231	52,081
212	NUPIPE-SW	295	3,306	14	59,390	-5,394	14,010
	ADLPIPE	299	3,310	15	59,735	-5,500	14,542
360	NUPIPE-SW	330	2,781	-29	30,930	-22,748	-84,971
	ADLPIPE	326	2,783	-32	31,920	-23,105	-82,784
390	NUPIPE-SW	330	4,933	-29	-255,351	701	126,476
	ADLPIPE	336	4,707	-32	-256,444	916	126,716
420	NUPIPE-SW	330	-492	-29	8,972	27,075	82,202
	ADLPIPE	336	-497	-32	-9,181	27,724	80,676

TABLE 3A.3.1-5

COMPARISON OF DEFLECTIONS AND ROTATION
DUE TO DEADWEIGHT ANALYSIS

		Deflections (inch)			Rotations (rad)		
Node	Program	DX	DY	DZ	RX	RY	RZ
197	NUPIPE-SW	0.007	-0.014	-0.004	0.0001	0.0001	0.0002
	ADLPIPE	0.007	-0.014	-0.004	0.0001	0.0001	0.0002
212	NUPIPE-SW	-0.005	-0.013	0.013	0.0006	0.0001	0.0004
	ADLPIPE	-0.005	-0.013	0.013	0.0006	0.0001	0.0004
360	NUPIPE-SW	-0.008	-0.068	0.024	0.0004	-0.0000	-0.0004
	ADLPIPE	-0.009	-0.069	0.024	0.0004	0.0000	-0.0004
390	NUPIPE-SW	-0.015	-0.000	-0.003	0.0002	-0.0002	-0.0005
	ADLPIPE	-0.015	-0.000	-0.003	0.0002	-0.0002	-0.0005
420	NUPIPE-SW	-0.001	0.002	-0.001	-0.0000	-0.0001	-0.0002
	ADLPIPE	-0.001	0.002	-0.001	-0.0000	-0.0001	-0.0002

TABLE 3A.3.1-6

COMPARISON OF STRESS DUE TO DEADWEIGHT ANALYSIS

Node	NUPIPE-SW (psi)	ADLPIPE (psi)
180	685	694
199	448	458
214	667	679
236	2,472	2,449
265	530	524
305	515	522
344	635	631
370	679	677
395	575	580
430	1,101	1,091

TABLE 3A.3.1-7

COMPARISON OF NATURAL FREQUENCIES (Hz)
NUPIPE-SW VERSUS ADLPIPE

Mode	1st	2nd	3rd	4th	5th
NUPIPE-SW	7.109	9.328	12.297	14.681	18.043
ADLPIPE	7.118	9.329	12.492	14.427	17.714

TABLE 3A.3.1-8

COMPARISON OF NATURAL FREQUENCIES (Hz)
NUPIPE-SW VERSUS BENCHMARK

Mode	1st	2nd
NUPIPE-SW	2.407	13.537
BENCHMARK	2.3288	13.0808

TABLE 3A.3.1-9

COMPARISON OF CLASS 1 PIPE STRESS ANALYSIS

Point No. 20	Hand Calculation	NUPIPE
Minimum wall thickness (in)	0.032	0.032
Primary stress (Eq. 9) (psi)	3,713	3,712
Primary and secondary stress (Eq. 10)(psi)	16,041	16,038
Alternating stress (Eq. 11 and 14) (psi)	13,468	13,465
Usage factor	0.0654	0.0631

Point No. 30		
Minimum wall thickness (in)	0.047	0.047
Primary stress (Eq. 9) (psi)	8,748	8,741
Primary and secondary stress (Eq. 10)(psi)	117,655	117,546
Expansion stress (Eq. 12) (psi)	99,884	99,781
Eq. 13 (psi)	18,252	18,246
Alternate stress (Eq. 14) (psi)	218,258	217,811
Usage factor	Not in Range	

TABLE 3A.3.1-10

INDIVIDUAL PAIR USAGE FACTOR FOR POINT NO. 30

Pair	Hand Calculation	NUPIPE
1, 5	0.183	0.1803
1, 8	1.660	1.7361
1, 9	0.0001	0.0001
1, 10	Not in Range	
5, 8	Not in Range	
5, 9	0.221	0.2646
5, 10	0.747	0.8051
8, 9	0.857	0.8832
8, 10	5.5518	5.8608
9, 10	0.0001	0.0001

TABLE 3A.3.2-1

PIPE MATERIAL PROPERTIES

Property	Temperature (°F)	Value
Thermal conductivity	450	10.01 Btu/°F-hr-ft
Thermal diffusivity	450	0.164 sq ft/hr
Young's Modulus	70	28.3×10^{6} psi
Coefficient of thermal expansion	70	9.11×10^{-6} in/in/°F

TABLE 3A.3.2-2

FLUID MATERIAL/THERMAL PROPERTIES

Property	Temperature (°F)	Value
Density	450	51.300 lb/cu ft
Viscosity	450	0.2920 lb/hr/ft
Specific heat	450	1.135 Btu/lb-°F
Conductivity	450	0.3650 Btu/°F-hr-ft
Volume expansion coefficient	450	0.0009/°F

TABLE 3A.3.2-3

COMPARISON OF HTLOAD WITH HAND CALCULATION

Property	HTLOAD	Hand Calculation
Reynolds number	186,700	186,700
Heat transfer coefficient Btu/°F-hr-sq ft	946.8	946.8

TABLE 3A.3.2-4

COMPARISON OF HTLOAD WITH CHARTS OF BROCK AND MCNEILL

Parameter	Charts	HTLOAD
Maximum ΔT_1 (°F)	43.31	45.14
Maximum ΔT_2 (°F)	8.50	8.36

TABLE 3A.3.2-5

COMPARISON OF HTLOAD WITH TRHEAT

Parameter	TRHEAT	HTLOAD
Maximum ΔT_1 (°F)	44.70	45.14
Maximum ΔT_2 (°F)	8.69	8.36
Maximum T_A - T_B (°F)	19.03	19.08

TABLE 3A.3.3-1

COMPARISON OF PITRUST WITH
FRANKLIN INSTITUTE PROGRAM CYLNOZ AND HAND CALCULATION

Source of Stress	Franklin Institute Corrected Values	Output from PITRUST	Hand Calculation
Circumferential			
p (Normal)(lb)	395.00	399.00	399.99
p (Bending)(lb)	1,875.00	1,883.00	1,877.30
M_C (Normal)(in-lb)	35.85	35.57	36.06
M_C (Bending)(in-lb)	364.70	366.60	354.30
M_L (Normal)(in-lb)	79.05	79.66	79.54
M_L (Bending)(in-lb)	90.52	80.57	79.42
Axial			
p (Normal)(lb)	813.00	812.00	814.80
p (Bending)(lb)	812.30	827.00	810.60
M_C (Normal)(in-lb)	91.79	105.00	95.45
M_C (Bending)(in-lb)	158.80	160.00	158.80
M_L (Normal)(in-lb)	37.06	37.00	37.12
M_L (Bending)(in-lb)	117.90	105.00	103.85
Shear stress by M_C (psi)	6.63	6.63	6.63
Shear stress by V_C (psi)	106.10	106.10	106.10
Shear stress by V_C (psi)	106.10	106.10	106.10

TABLE 3A.3.4-1

COMPARISON OF PILUG COMPUTER PROGRAM OUTPUT WITH HAND CALCULATIONS[1]

Figure[2]	P	Stress From Hand Calculation	Computer Output	Remarks
		Stress in Circumferential Direction		
3C	0.5485	387	330	Membrane stress due to P[3]
1C	0.326	2,165	2,160	Bending stress due to P[3]
3A	0.294	671	629	Membrane stress due to M_C[4]
1A	0.388	18,976	19,904	Bending stress due to M_C[4]
3B	0.467	3,014	2,961	Membrane stress due to M_L[5]
1B	0.416	6,143	5,969	Bending stress due to M_L[5]
		Stress in Axial Direction		
4C	0.4447	683	690	Membrane stress due to P
2C	0.4632	773	792	Bending stress due to P
4A	0.294	1,897	1,864	Membrane stress due to M_C[4]
2A	0.550	6,357	5,942	Bending stress due to M_C[4]
4B	0.467	2,365	2,328	Membrane stress due to M_L[5]
2B	0.582	4,989.7	4,842	Bending stress due to M_L[5]
		Shear Stress		
		1,304.8	1,304.8	Shear stress due to M_T[6]
		-366.99	-366.99	Shear stress due to V_C[7]
		127.15	127.16	Shear stress due to V_L[8]

TABLE 3A.3.4-1 (Cont)

NOTES:

1. Test problem dimensions:
   a. Run pipe outside diameter = 17 inches
   b. Run pipe thickness = 0.812 inch
   c. Axial length of lug = 12 inches
   d. Width of lug along circumference = 3 inches
2. Wichman et al 1965, WRC Bulletin No. 107
3. Test problem loading P = 3,399 lb
4. Test problem loading M_C = 81,834 lb
5. Test problem loading M_L = 103,320 in/lb
6. Test problem loading M_T = 76,284 in/lb
7. Test problem loading V_C = 1,788 lb
8. Test problem loading V_L = 2,478 lb

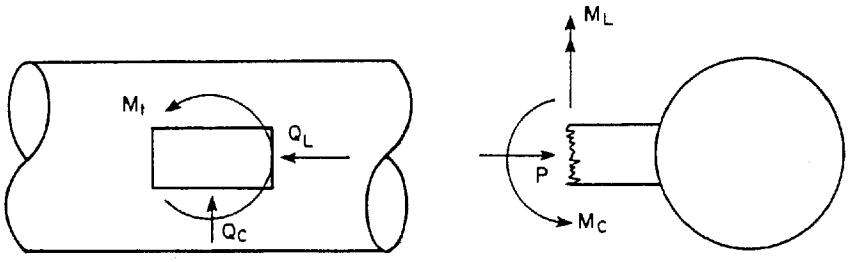

TABLE 3A.3.5-1

COMPARISON OF PITRIFE COMPUTER PROGRAM OUTPUT WITH STRUDL-II OUTPUT

Test Problem:

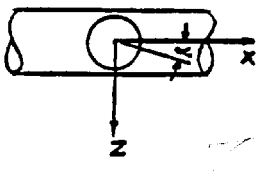

	Size-On-Size	0.707 Size-On-Size
Avg Pipe Radius (in)	3.00	3.00
Avg Trunnion Radius (in)	3.00	2.12
Pipe Wall Thickness (in)	0.30	0.30
Trunnion Wall Thickness (in)	0.30	0.21

SIZE-ON-SIZE
MAXIMUM STRESS INTENSITY-PSI (α = 30°)

Load	PITRIFE Output	STRUDL-II Output
FX = 10,000 lbs	5,763	5,768
FY = 10,000 lbs	7,844	7,846
FZ = 10,000 lbs	6,507	6,506
MX = 10,000 in-lb	1,329	1,329
MY = 10,000 in-lb	1,688	1,687
MZ = 10,000 in-lb	4,066	4,068

0.707 SIZE-ON-SIZE
MAXIMUM STRESS INTENSITY - PSI (α = 30°)

Load	PITRIFE Output	STRUDL-II Output
FX = 10,000 lbs	13,471	13,458
FY = 10,000 lbs	9,616	9,611
FZ = 10,000 lbs	20,105	20,030
MX = 10,000 in-lb	4,371	4,368
MY = 10,000 in-lb	2,467	2,467
MZ = 10,000 in-lb	6,178	6,176

TABLE 3A.3.5-2

COMPARISON OF PITRIFE COMPUTER PROGRAM OUTPUT WITH HAND CALCULATIONS

Test Problem:

Avg Pipe Radius	= 1.5 in
Avg Trunnion Radius	= 1.35 in
Pipe Wall Thickness	= 0.30 in
Trunnion Wall Thickness	= 0.27 in

LOADS FOR EACH LOAD TYPE COMBINED (DL, OBEI, THER, OCCU, ETC)

FX = FY = FZ = 10,000 lbs
MX = MY = MZ = 10,000 in-lbs
MNS Stress = 200 psi
Internal Pressure = 100 psi

STRESS COEFFICIENTS - 0.9 SIZE-ON-SIZE - FX LOADING (α = 30°)

Stress Type	Coefficient By Hand Calculation	Coefficient From PITRIFE
Longitudinal - Inside Fiber	-1.2652	-1.2652
Circumferential - Inside Fiber	-0.2764	-0.2764
Shear - Inside Fiber	0.2041	0.2041
Longitudinal - Outside Fiber	0.7454	0.7454
Circumferential - Outside Fiber	1.3509	1.3509
Shear - Outside Fiber	0.2041	0.2041

MAXIMUM STRESS INTENSITY - 0.9 SIZE-ON-SIZE (α = 30°C)

Load Condition	Maximum Stress Intensity - psi Hand Calculation	PITRIFE
P + DL + MNS_1	28,181	28,182
P + DL + SRSS (OBEI, OCCU) + MNS_2	73,220	73,220
P + DL + OBEA + THER + MNS_3	88,216	88,216
P + DL + OCCE + MNS_4	59,853	59,853
P + DL + SRSS (SSEI, OCCF) + MNS_5	73,220	73,220

TABLE 3A.3.6-1

NODAL FORCE COMPARISON*

Node No.	Pressure (psia)	Velocity (fps)	Density (lb/cu ft)	Force (STEHAM) (lb)	Force (Hand Calculation) (lb)
1	42.523	0.0	0.23954	196.57	196.67
5	42.785	5.7843	0.24076	198.43	198.53
10	44.231	31.219	0.24647	209.00	209.11
15	47.003	78.172	0.25737	230.62	230.73
20	50.214	129.89	0.26979	257.84	257.97
25	52.095	159.43	0.27697	274.93	275.06
30	52.209	161.97	0.27742	276.09	276.23
35	52.168	162.21	0.27731	275.83	275.97

NOTE:

*This comparison is based on the following:

Diameter $D = 0.25$ feet

Area $A = \pi D^2/4$
$= 0.0490874$ square foot

Nodal Force $F = (p + \gamma V^2/g)\ A - p_{atm}\ A$

where p = pressure (lb/sq ft)

γ = density (lb/cu ft)

V = velocity (fps)

g = gravitational constant (32.2 ft/sec^2)

P_{atm} = 14.7 x 144 lb/sq ft

at time $t = 0.00650$ second

TABLE 3A.3.7-1

INPUT DATA FOR WATHAM*

Pipe No.	Total Length (ft)	Inside Diameter (ft)	Friction Factor	No. of Nodes	Nodal Span (ft)	Thickness (in)	Velocity (fps)
1	2,000	3.0	0.030	7	333.33	0.30824	4.24413
2	3,000	2.5	0.028	9	375.00	0.44	2.92132
3	2,000	2.0	0.024	6	400.00	0.50026	4.98473
4	1,800	1.5	0.020	7	300.00	0.11108	3.59336
5	1,500	1.5	0.022**	5	375.00	0.264	4.52142
6	1,600	1.5	0.025	6	320.00	0.13796	2.29183
7	2,200	2.5	0.040	8	314.29	0.21534	3.65878
8	1,500	2.0	0.030	6	300.00	0.14811	3.83245
9	2,000	3.0	0.024	7	333.33	0.30824	4.24413

NOTES:

*The initial heads of all nodes are calculated by using the Darcy-Weisbach equation.
**Friction factor in Pipe 5 should be 0.022 instead of 0.02.

TABLE 3A.3.7-2

COMPARISON OF NODAL FORCE COMPARISON*

Pipe No.	Node No.	Force (WATHAM) (kips)	Force (Hand Calculation) (kips)
1	1	276.34	276.48
1	2	300.46	300.62
1	3	317.78	317.94
1	4	329.59	329.76
1	5	341.39	341.56
1	6	355.31	355.49
1	7	369.52	369.71

NOTE:

*Nodal Force Calculation is based on the following equation:

$$F = A\,(H + \gamma \frac{V^2}{g})$$

where:

F = nodal force (lb)

γ = density (lb/cu ft)

H = nodal head (ft)

g = 32.2 ft/sec^2

V = nodal velocity (fps)

A = pipe area (sq ft)

At time = 2.34 seconds

TABLE 3A.3.8-1

INPUT DATA FOR NUPIPE-SW*

Cutoff Mode	Cutoff Frequency	Time Step	Integration Time	Damping Ratio
53	433 Hz	0.0009 sec.	0.5 sec	10%

Pipe Section	Total Length (ft)	Outside Diameter (in)	Thickness (in)	Weight (lb/ft)
1	4.73	8.625	0.906	74.71
2	12.31	6.625	0.864	53.16
3	12.43	6.625	0.28	18.97
4	69.0	12.75	0.688	88.60
5	1.1	12.75	1.5	-
6	1.0	8.625	0.322	28.55
7	0.83	6.625	0.432	28.57

$F_{hot} = E_{cold}$ = Young's Modulus of pipe = 28.3×10^6 psi

NOTE:

*See Figure 3A.3.8-2 for sketch of NUPIPE-SW model

TABLE 3A.3.8-2

INPUT DATA FOR WATSLUG*

Pipe No.	Total Length (ft)	Inside Diameter (ft)	Friction Factor
1	16.125	0.408	0.015
2	12.563	0.5054	0.015
3	63.562	0.948	0.013

Valve Characteristics

Orifice Area (ft^2)	Opening Time (sec)	Discharge Coefficient	Flow Rate (lbm/sec)
0.0253	0.015	0.805	120.83

Upstream Steam Conditions

Pressure (psia)	Temperature	Density $\frac{lbm}{ft^3}$	Pressure Rise Rate $\frac{psi}{sec}$
2690	679°F (1139°R)	8.862	-40.**

Downstream Gas Conditions

Pressure (psia)	Temperature	Density $\frac{lbm}{ft^3}$
15	80°F (540°R)	0.09975

Waterslug Weight = 69.8 lbs

NOTES:

*See Figure 3A.3.8-1 for sketch of WATSLUG model.
**Pressure is decreasing after valve opens.

TABLE 3A.3.9-1

ELBOW PROGRAM - ELBOW PROPERTIES USED FOR VERIFICATION PROBLEMS

Outside diameter	30.0 inches
Minimum wall thickness	0.5239 inches
Bend radius	44.214 inches
Pipe radius	14.738 inches
Young's modulus	28.3×10^{6} psi
Poisson's ratio	0.3
Coefficient of thermal expansion	9.11×10^{-6} in/in °F

TABLE 3A.3.9-2

ELBOW PROGRAM - CASE 1 RESULTS

Internal Pressure equals 413.58 psi

	Circumferential Stresses - psi		Longitudinal Stresses - psi		Stress Intensities - psi	
	Inside	Outside	Inside	Outside	Inside	Outside
ELBOW Program	11,676	11,676	5,714	5,714	12,090	11,676
Hand Calculation*	11,676	11,676	5,714	5,714	12,090	11,676

NOTE:

*Hand calculation based on Article NB-3685.1 of ASME Section III, 1974.

TABLE 3A.3.9-3

ELBOW PROGRAM - CASE 2 RESULTS

Linear Temperature Gradient Through Wall Equals 100°F

	Circumferential Stresses - psi		Longitudinal Stresses - psi		Stress Intensities - psi	
	Inside	Outside	Inside	Outside	Inside	Outside
ELBOW Program	18,415	-18,415	18,415	-18,415	18,415	18,415
Hand Calculation	*18,415	-18,415	18,415	-18,415	18,415	18,415

NOTE:

*Hand calculation of Timoshenko and Goodier 1970.

TABLE 3A.3.9-4

ELBOW PROGRAM - CASE 3 RESULTS

Combined Loadings as Follows:

1. Internal pressure equals 413.58 psi
2. Linear temperature gradient equals 100°F
3. Axial force equal to 60,000 lbs
4. Torsional moment equal to 3,500,000 in-lbs

	Circumferential Stresses - psi		Longitudinal Stresses - psi		Stress Intensities - psi	
	Inside	Outside	Inside	Outside	Inside	Outside
ELBOW Program	30,091	-6,739	24,129	-12,701	32,165	14,362
Hand Calculation	30,091	-6,739	24,129	-12,701	32,071	14,362

TABLE 3A.3.10-1

BENDCORD PROGRAM - VERIFICATION PROBLEM

	Offsets Between Nodal Points (ft)	
	Manual	BENDCORD
X_1	4.27721	4.27715
Z_1	4.27721	4.27713
X_2	3.73046	3.73042
Z_2	4.76158	4.76151
X_3	3.73043	3.73041
Z_3	4.76152	4.76151
X_4	3.12932	3.12929
Z_4	5.17652	5.17642
X_5	3.12932	3.12929
Z_5	5.17652	5.17642
X_6	2.48254	2.48254
Z_6	5.51598	5.51588
X_7	2.48254	2.48254
Z_7	5.51598	5.51587
X_8	1.79956	1.77956
Z_8	5.77500	5.77489
X_9	1.79956	1.79959
Z_9	5.77500	5.77490

TABLE 3A.3.12-1

PSPECTRA PROGRAM VERIFICATION PROBLEM

MAXIMUM VALUE ENVELOPING

			ARS Curves			PSPECTRA	
Pt.	Dir.	Quake	El (ft)	Period (sec)	Accel. (ft/sec^2)	Period (sec)	Accel. (ft/sec^2)
1	N-S	OBE	718.5	0.168	0.550	0.168	0.896
			737.5	0.168	0.455		
			758.0	0.168	0.896		
2	E-W	SSE	718.5	0.282	0.670	0.282	1.360
			737.5	0.282	1.010		
			758.0	0.282	1.360		
3	N-S	SSE	718.5	0.075	0.150	0.075	0.230
			737.5	0.075	0.170		
			758.0	0.075	0.230		

TABLE 3A.3.12-2

PSPECTRA PROGRAM VERIFICATION PROBLEM

ABSOLUTE SUM ENVELOPING

		ARS Curves			PSPECTRA	
Dir.	Quake	El (ft)	Period (sec)	Accel. (ft/sec^2)	Period (sec)	Accel. (ft/sec^2)
N-S	OBE	718.5	0.282	0.670	0.282	
		737.5	0.282	1.010		
		758.0	0.282	1.360		
		Abs. Sum		3.040		3.040

TABLE 3A.3.12-3

PSPECTRA PROGRAM VERIFICATION PROBLEM

SRSS ENVELOPING

		ARS Curves			PSPECTRA	
Dir.	Quake	El	Period	Accel.	Period	Accel.
N-S	OBE	718.5	0.282	0.670	0.282	
		737.5	0.282	1.010		
		758.0	0.282	1.360		
			SSRS	1.822		1.822

TABLE 3A.3.12-4

PSPECTRA PROGRAM VERIFICATION PROBLEM

PEAK SPREADING*,**

	Hand Calculation		PSPECTRA	
	TLD (sec)	THI (sec)	TLD (sec)	THI (sec)
Peak No. 1	0.0768	0.120	0.076	0.120
Peak No. 2	0.278	0.435	0.278	0.435

NOTES:

*This table is based on the following values taken from the input ARS for two peaks as follows:

1. For Peak No. 1 - T(period) = 0.096 sec,
2. For Peak No. 2 - T(period) = 0.348 sec,
3. Percent spread on high side = 25, and
4. Percent spread on low side = 20.

**TLD represents lower bound period for spread peak.
THI represents upper bound period for spread peak.

TABLE 3A.3.18-1

APE PROGRAM VERIFICATION PROBLEM
COMPARISON OF DRILLED-IN ANCHOR LOADS

Attachment	Attachment Location	Loading	BIP (ST 361) Anchor Shear	BIP (ST 361) Anchor Tension	APE (ST 378, V01L00) Anchor Shear	APE (ST 378, V01L00) Anchor Tension
TS 4X4	Corner of Surface Mounted Plate	F_z = 3,000 lb	0	2,269.36	0	2,296.87
TS 4X4	Corner of Surface Mounted Plate	M_x = 12,000 in. lb	0	1,256.61	0	2,625.00
TS 4X4	Corner of Surface Mounted Plate	M_x = 8,000 in. lb M_y = 8,000 in. lb	0	1,204.13	0	3,500.0
L 4X4	Corner of Surface Mounted Plate	F_z = 3,000 lb	0	2,116.39	0	2,268.52
L 4X4	Corner of Surface Mounted Plate	M_x = 12,000 in. lb	0	1,418.15	0	2,333.33
L 4X4	Corner of Surface Mounted Plate	M_x = 8,000 in. lb M_y = 8,000 in. lb	0	1,506.74	0	3,111.11
TS 4x4	Center of Embedded Plate	F_z = 20,000 lb	0	12,742.6	0	12,752.1
TS 4x4	Center of Embedded Plate	M_x = 50,000 in. lb	0	4,285.7	0	5,934.86
TS 4x4	Center of Embedded Plate	M_x = 25,000 in. lb M_y = 25,000 in. lb	0	3,756.76	0	5,934.86
TS 4x4	Corner of Embedded Plate	F_z = 20,000 lb	0	17,591.00	0	17,607.22
TS 4x4	Corner of Embedded Plate	M_x = 50,000 in. lb	0	9,735.84	0	10,937.50
TS 4x4	Corner of Embedded Plate	M_x = 25,000 in. lb M_y = 25,000 in. lb	0	5,575.9	0	10,937.5
L 4x4	Center of Embedded Plate	F_z = 20,000 lb	0	14,585.3	0	15,940.12
L 4x4	Center of Embedded Plate	M_x = 50,000 in. lb	0	4,959.99	0	5,934.86
L 4x4	Center of Embedded Plate	M_x = 25,000 in. lb M_y = 25,000 in. lb	0	4,344.17	0	5,934.86

TABLE 3A.3.18-1 (Cont)

Attachment	Attachment Location	Loading	BIP (ST 361) Anchor Shear	BIP (ST 361) Anchor Tension	APE (ST 378, V01L00) Anchor Shear	APE (ST 378, V01L00) Anchor Tension
L 4x4	Corner of Embedded Plate	F_z = 20,000 lb	0	18,596.5	0	22,009.02
L 4x4	Corner of Embedded Plate	M_x = 50,000 in. lb	0	10,559.60	0	10,937.50
L 4x4	Corner of Embedded Plate	M_x = 25,000 in. lb M_y = 25,000 in. lb	0	8,648.15	0	10,937.50
C 4x5.4	Corner of Embedded Plate	F_x = F_y = 2,800 lb F_z = 1970 lb M_x = 30,430 in. lb M_y = 27,390 in. lb M_z = 0	1,763.35	11,067	1,763.35	32,351.37
TS 4x4	Along Edge of Surface Mounted Plate	F_z = 3,000 lb	0	1,237.02	0	1,458.33
TS 4x4	Along Edge of Surface Mounted Plate	M_x = 12,000 in. lb	0	786.89	0	1,250.0
TS 4x4	Along Edge of Surface Mounted Plate	M_x = 8,000 in. lb M_y = 8.000 in. lb	0	856.54	0	1,833.33

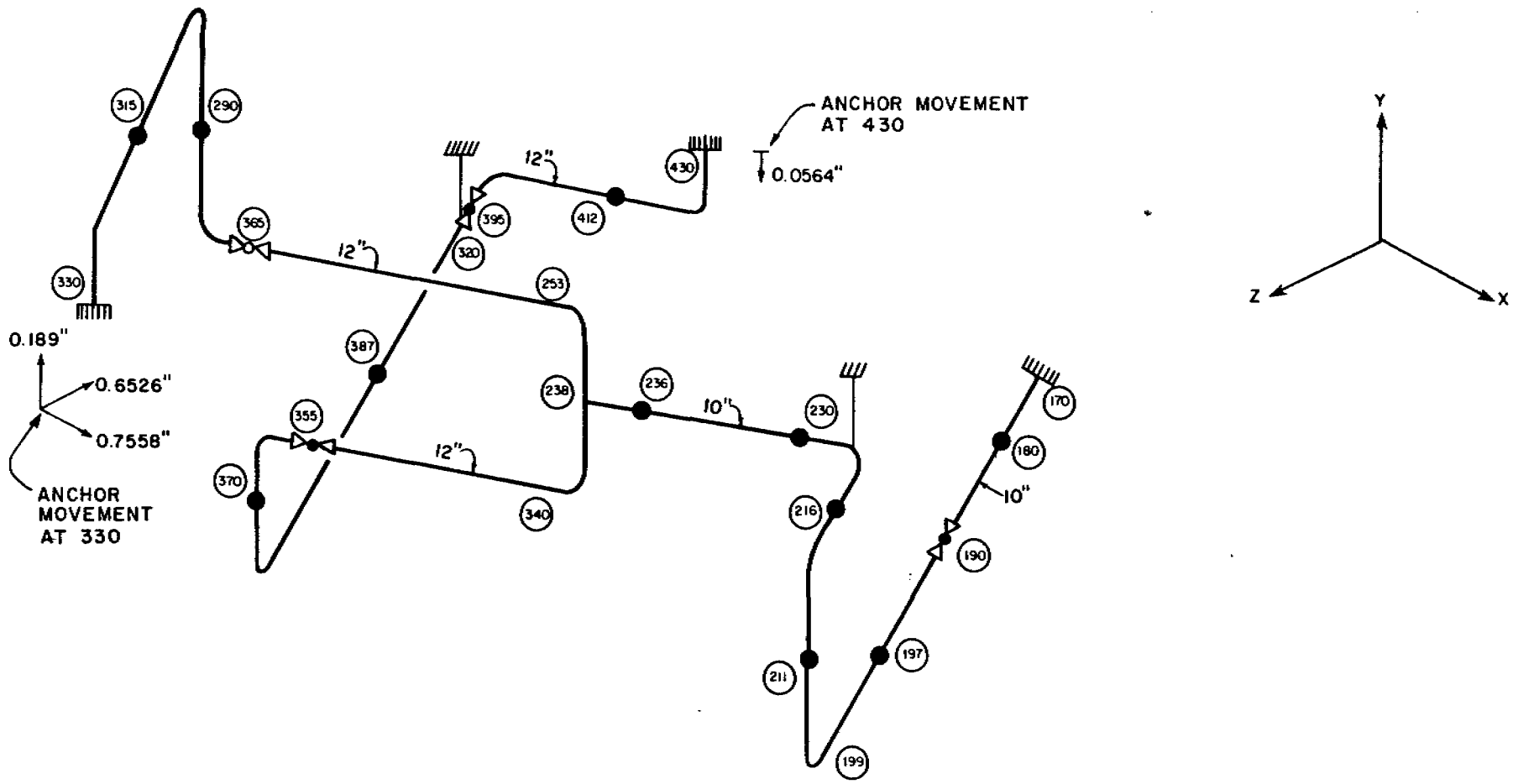

FIGURE 3A.3.1-1
MATHEMATICAL MODEL FOR FLEXIBILITY ANALYSIS VERIFICATION
BEAVER VALLEY POWER STATION - UNIT 2
FINAL SAFETY ANALYSIS REPORT

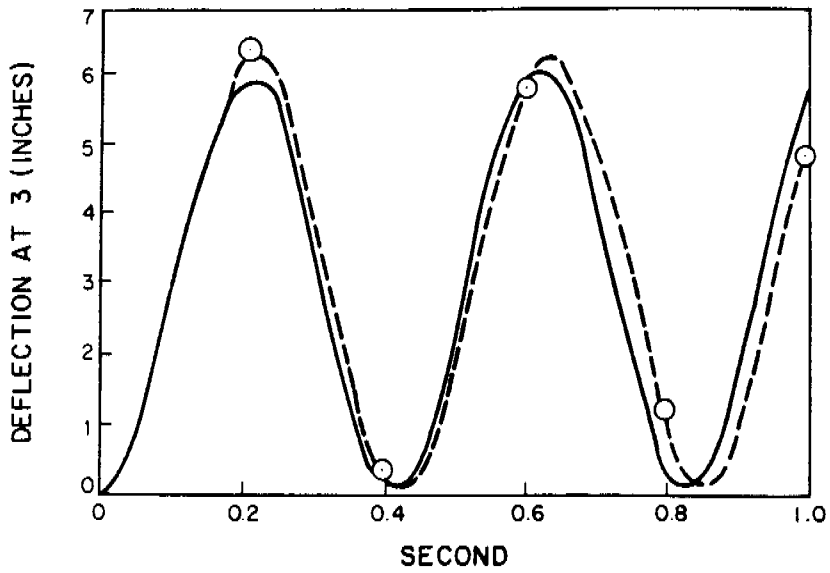

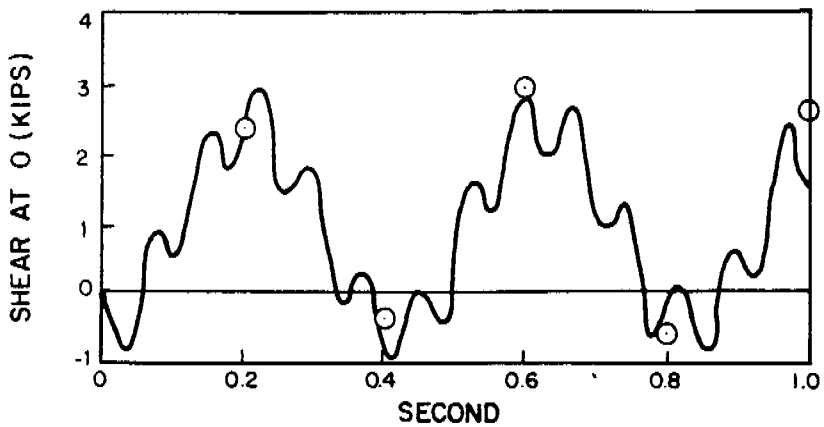

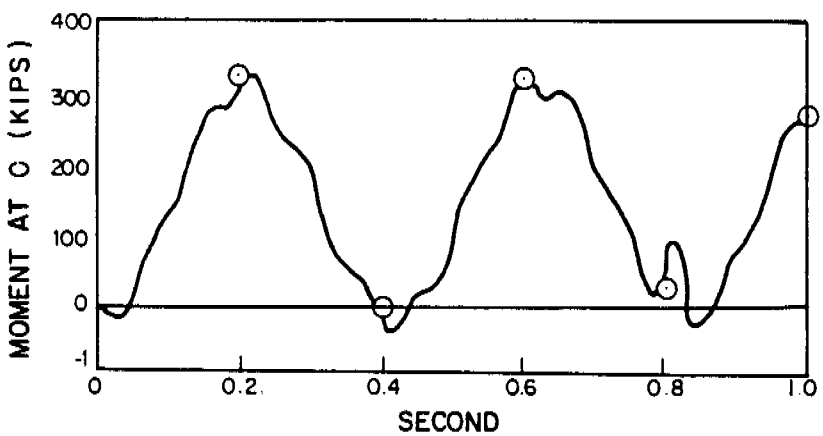

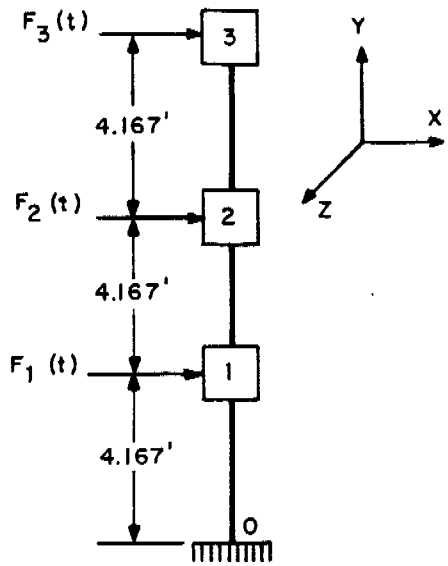

THREE MASS LUMPED CANTILEVER BEAM

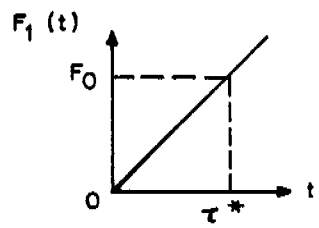

$F_2(t) = 0$ FOR t 7, 0

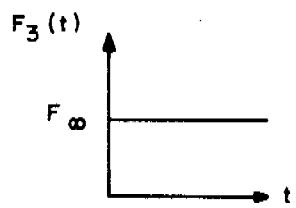

IMPOSED EXTERNAL FORCES

ASME BENCHMARK PROB NO.5 MODEL

FIGURE 3A.3.1-2
NUPIPE PROGRAM FORCE TIME-HISTORY VERIFICATION
BEAVER VALLEY POWER STATION - UNIT 2
FINAL SAFETY ANALYSIS REPORT

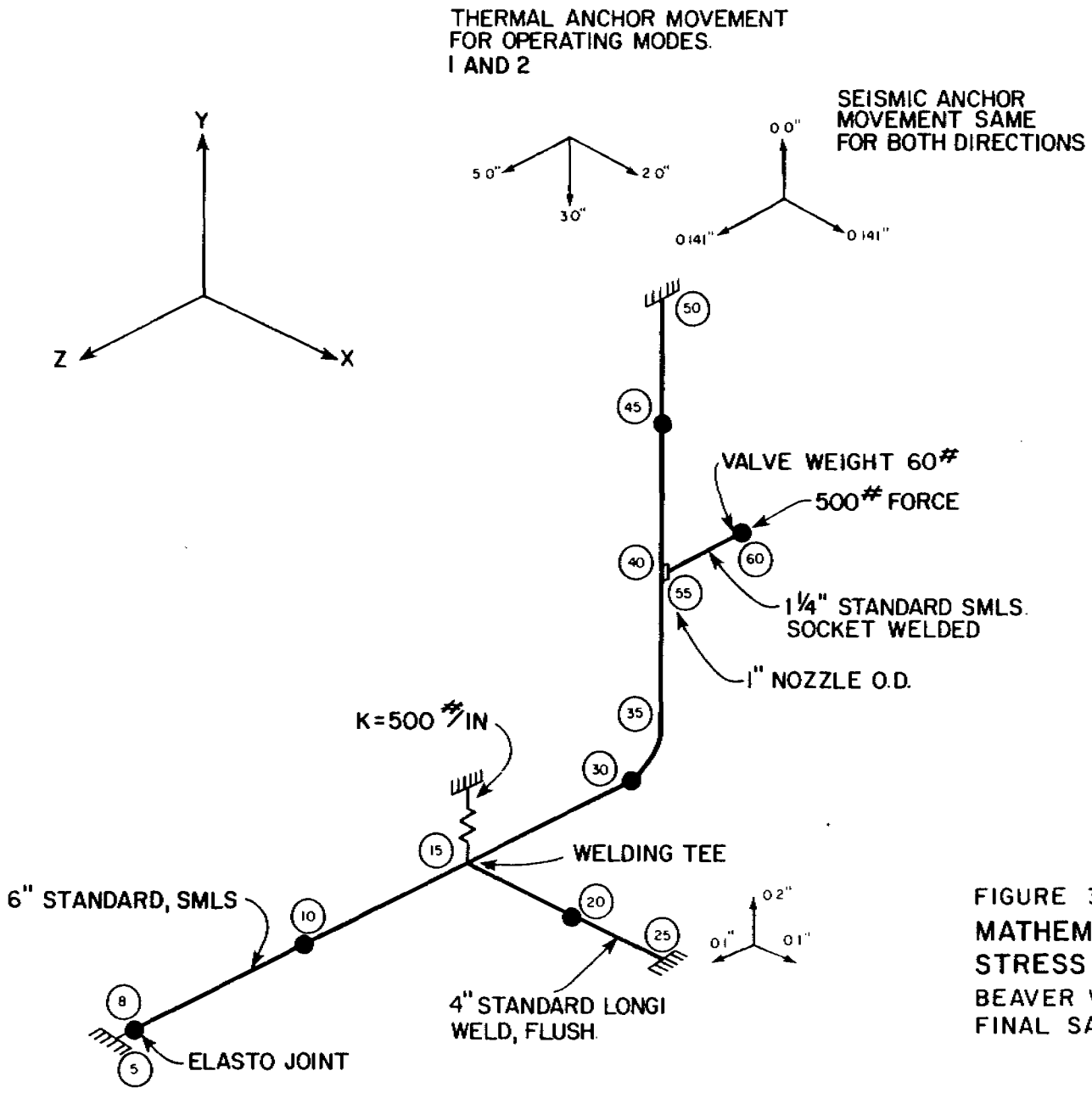

OPERATING CONDITIONS			
OPER MODE	PIPE	PRESSURE (PSI)	TEMPERATURE °F
1	6"	200	400
	4"	"	"
	1¼"	"	"
$E/\alpha_1 Ta - \alpha b Tb / AT\ 15 = 440$ PSI			
2	6"	200	700
	4"	0	70
	1¼"	200	700
$\alpha \Delta T_1 = 0.0002$ $\alpha \Delta T_2 = 0.0004$ IN/FT			
3	6"	700	70
	4"	700	70
	1¼"	700	70

FIGURE 3A.3.1-3

MATHEMATICAL MODEL FOR CLASS 1 STRESS VERIFICATION

BEAVER VALLEY POWER STATION - UNIT 2
FINAL SAFETY ANALYSIS REPORT

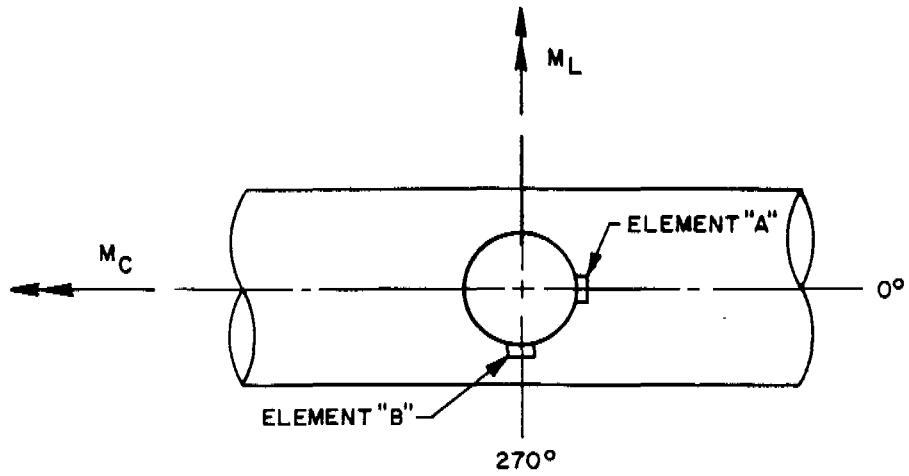

LOCATION AND CAUSE	PITRUST RESULTS	EXP. RESULTS (1)
ELEMENT "A" LONGT. MOMENT CIRCUMF. STRESS AXIAL STRESS	 20,438.9 psi 26,292.6 psi	 20,000 psi 25,000 psi (HODGE-FIG.16)
ELEMENT "B" CIRCUMF. MOMENT CIRCUMF. STRESS AXIAL STRESS	 22,016.2 psi 13,105.8 psi	 24,000 psi 13,000 psi (HODGE-FIG.15)

SOURCE:

1. HODGE, P.G. PLASTIC ANALYSIS OF STRUCTURES. McGRAW-HILL BOOK COMPANY, INC., NEW YORK, N.Y., 1959.

FIGURE 3A.3.3-1
COMPARISON OF
PITRUST WITH HODGE'S RESULTS
BEAVER VALLEY POWER STATION-UNIT 2
FINAL SAFETY ANALYSIS REPORT

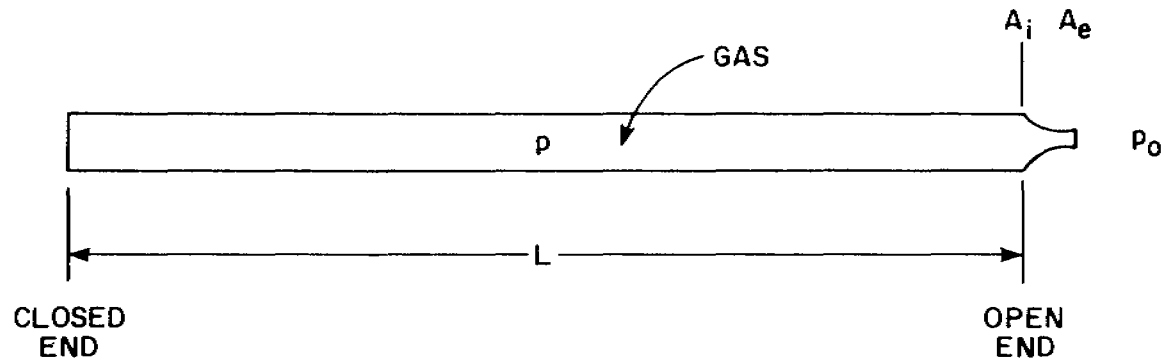

CASE (A) FOR COMPARISON WITH ANALYTICAL RESULTS.

INITIAL CONDITIONS:

$p_1/p_o = 4.72$, $a_o/a_1 = 0.80$

DIMENSIONS:

$A_e/A_i = 0.6$, L = PIPE LENGTH

SPECIFIC HEAT RATIO:

$\gamma = C_p/C_v = 1.4$

p = PRESSURE, a = SOUND VELOCITY, A = FLOW AREA

FIGURE 3A.3.6-1

SUDDEN DISCHARGE OF A GAS FROM A PIPELINE THROUGH A NOZZLE

BEAVER VALLEY POWER STATION-UNIT 2
FINAL SAFETY ANALYSIS REPORT

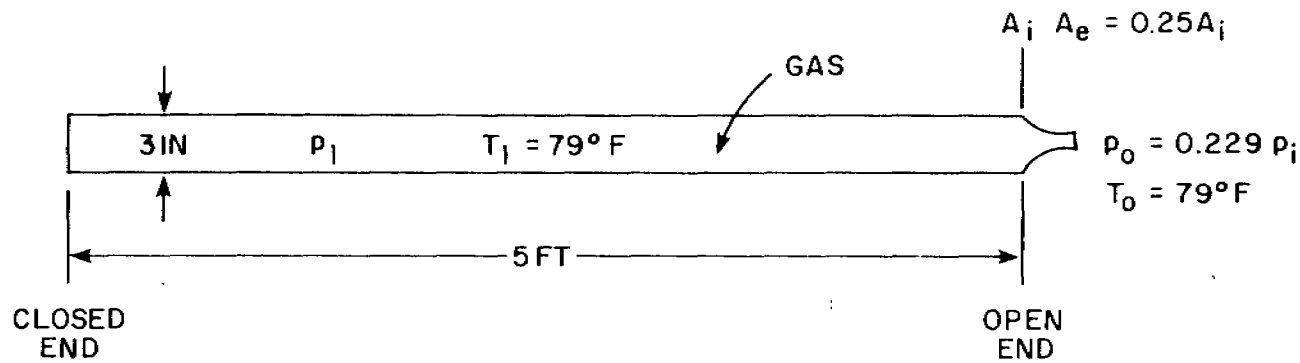

CASE (B) FOR COMPARISON WITH EXPERIMENTAL DATA AND HAND CALCULATION.

PRESSURE = $p_o = 14.7$ psia, $p_1 = 14.7/0.229 = 64.2$ psia

AREA = $A_i = \frac{\pi}{4}(0.25)^2 = 0.0491\ ft^2$, $A_e = 0.25A_i = 0.0123\ ft^2$

GAS CONSTANT = $R = 53.35\ ft\text{-}lb_f/lb°R$

TEMPERATURE = $T_o = 79°F = 539°R$, $T_1 = T_o$

DENSITY = $\rho_o = \frac{p_o}{RT_o} = 0.0736\ lb/ft^3$, $\rho_1 = \frac{p_1}{RT_1} = 0.3215\ lb/ft^3$

FIGURE 3A.3.6-2
SUDDEN DISCHARGE OF A GAS FROM A PIPELINE THROUGH A NOZZLE

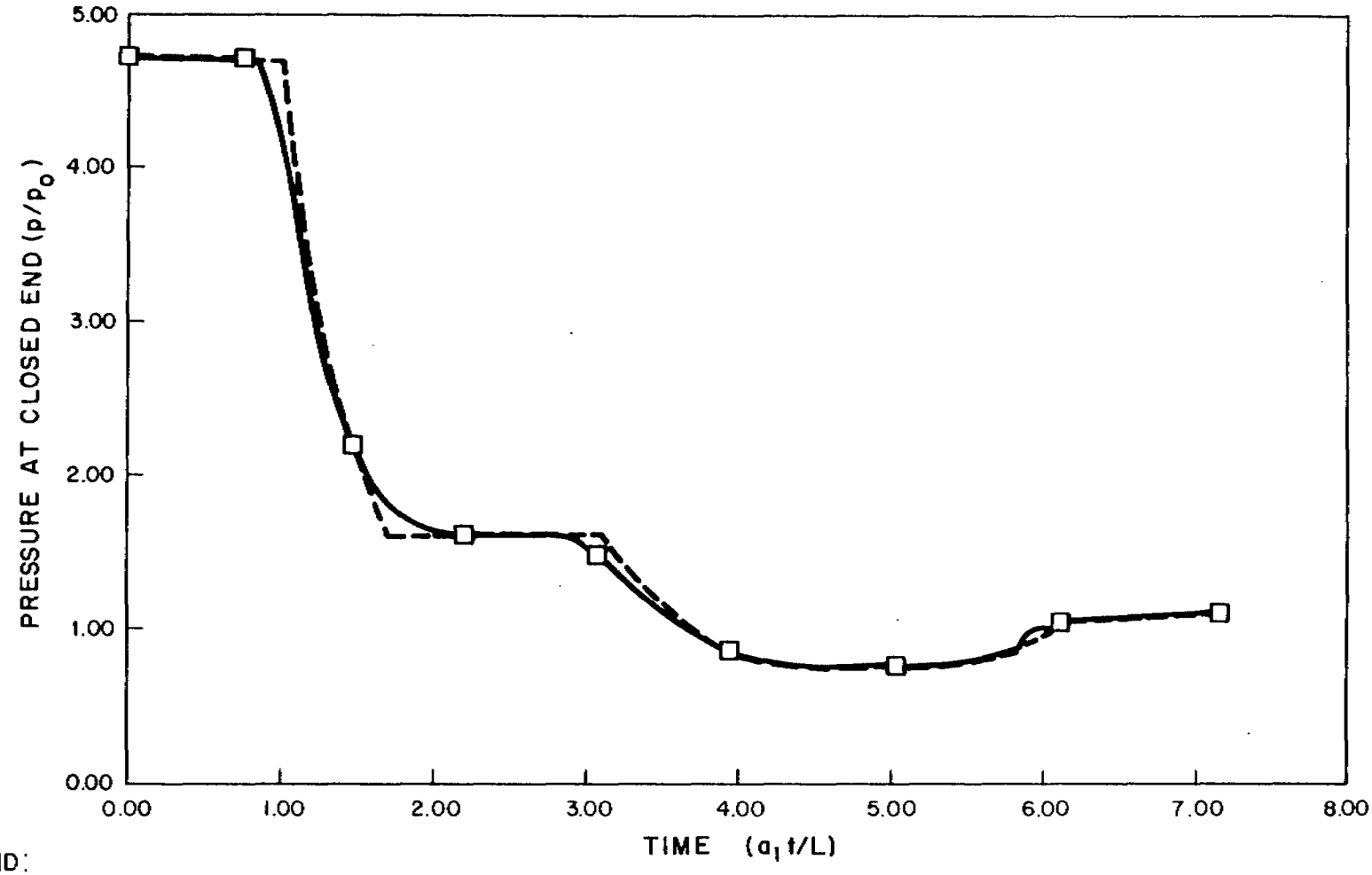

LEGEND:

(CASE A)

——— STEHAM

– – – – GIBERSON (1) AND WILSON (2) - ANALYTICAL SOLUTION

SOURCES:

1. GIBERSON, M.F. THE RESPONSE OF NON-LINEAR MULTI-STORY STRUCTURES SUBJECTED TO EARTHQUAKE EXCITATION. EARTHQUAKE ENGINEERING RESEARCH LAB, CALIFORNIA INSTITUTE OF TECHNOLOGY, PASADENA, JUNE 1967.
2. WILSON, E.L. A COMPUTER PROGRAM FOR THE DYNAMIC STRESS ANALYSIS OF UNDERGROUND STRUCTURES. REPORT TO WATERWAYS EXPERIMENTAL STATION, U.S. ARMY CORPS OF ENGINEERS, REPORT NO. 68-1, STRUCTURAL ENGINEERING LABORATORY, UNIVERSITY OF CALIFORNIA, BERKELEY, JANUARY 1968.

FIGURE 3A.3.6-3

COMPARISON OF PRESSURE RESPONSE AT THE CLOSED END

BEAVER VALLEY POWER STATION-UNIT 2
FINAL SAFETY ANALYSIS REPORT

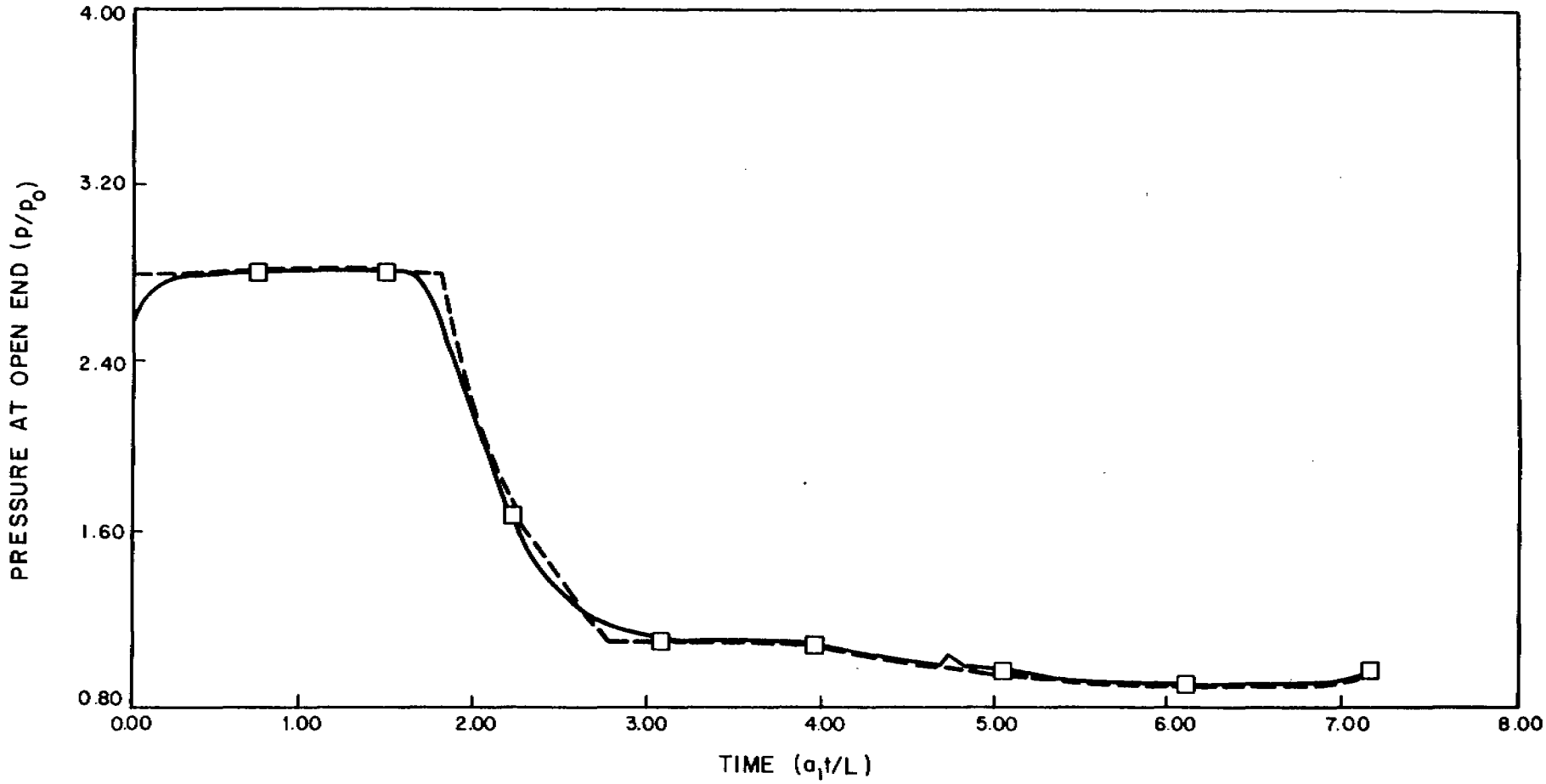

LEGEND:

(CASE A)

——— STEHAM

– – – – GIBERSON (1) AND WILSON (2) - ANALYTICAL SOLUTION

SOURCES:

1. GIBERSON, M.F. THE RESPONSE OF NON-LINEAR MULTI-STORY STRUCTURES SUBJECTED TO EARTHQUAKE EXCITATION. EARTHQUAKE ENGINEERING RESEARCH LAB, CALIFORNIA INSTITUTE OF TECHNOLOGY, PASADENA, JUNE 1967.
2. WILSON, E.L. A COMPUTER PROGRAM FOR THE DYNAMIC STRESS ANALYSIS OF UNDERGROUND STRUCTURES. REPORT TO WATERWAYS EXPERIMENTAL STATION, U.S. ARMY CORPS OF ENGINEERS, REPORT NO. 68-1, STRUCTURAL ENGINEERING LABORATORY, UNIVERSITY OF CALIFORNIA, BERKELEY, JANUARY 1968.

FIGURE 3A.3.6-4

COMPARIS ON OF PRESSURE RESPONSE AT THE OPEN END

BEAVER VALLEY POWER STATION-UNIT 2
FINAL SAFETY ANALYSIS REPORT

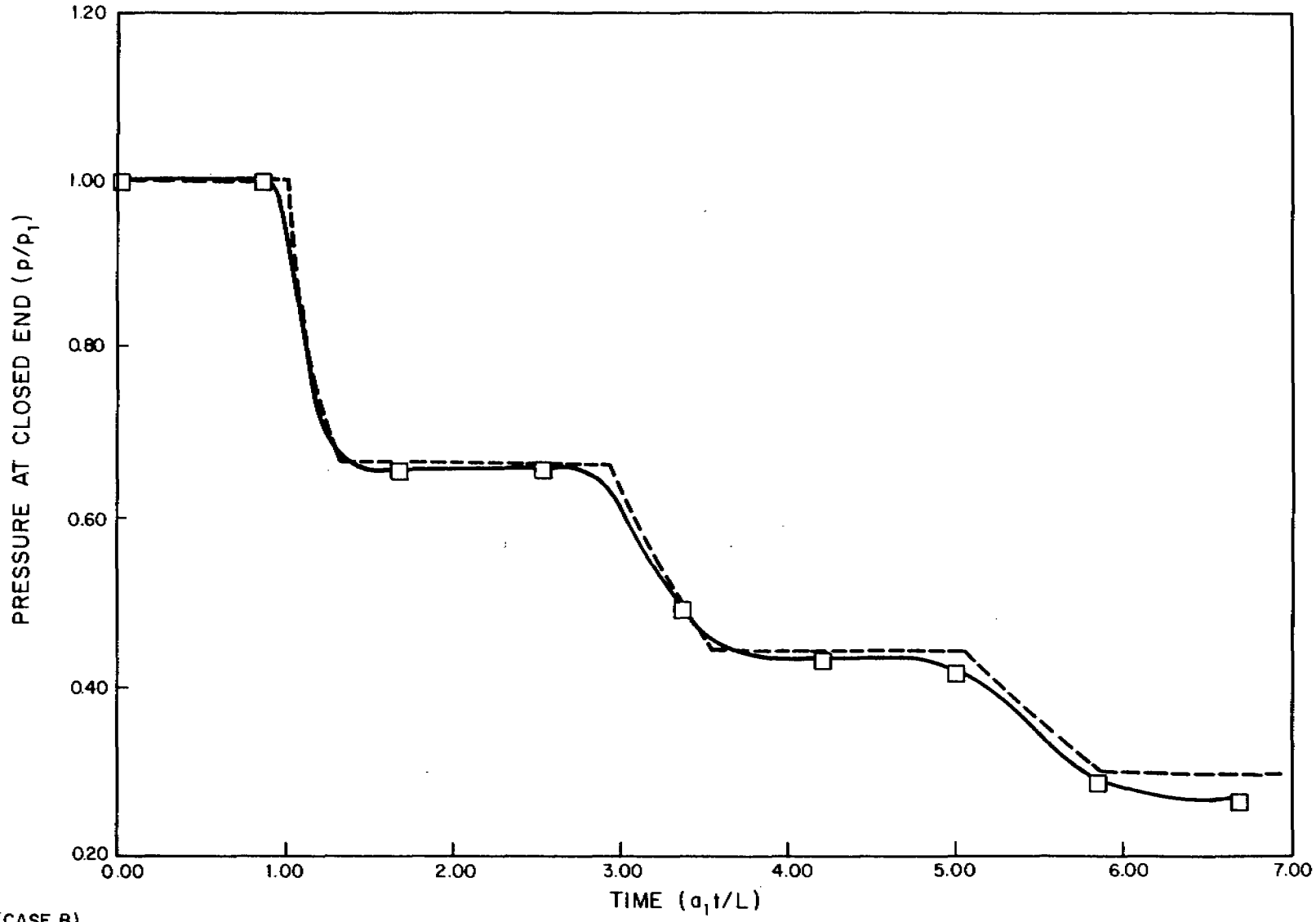

LEGEND:

(CASE B)

——— STEHAM

– – – – GIBERSON (1) AND WILSON (2) - ANALYTICAL SOLUTION

SOURCES:

1. GIBERSON, M.F. THE RESPONSE OF NON-LINEAR MULTI-STORY STRUCTURES SUBJECTED TO EARTHQUAKE EXCITATION. EARTHQUAKE ENGINEERING RESEARCH LAB, CALIFORNIA INSTITUTE OF TECHNOLOGY, PASADENA, JUNE 1967.
2. WILSON, E.L. A COMPUTER PROGRAM FOR THE DYNAMIC STRESS ANALYSIS OF UNDERGROUND STRUCTURES. REPORT TO WATERWAYS EXPERIMENTAL STATION, U.S. ARMY CORPS OF ENGINEERS, REPORT NO. 68-1, STRUCTURAL ENGINEERING LABORATORY, UNIVERSITY OF CALIFORNIA, BERKELEY, JANUARY 1968.

FIGURE 3A.3.6-5

COMPARISON OF PRESSURE RESPONSES BY STEHAM AND EXPERIMENT

BEAVER VALLEY POWER STATION - UNIT 2

FINAL SAFETY ANALYSIS REPORT

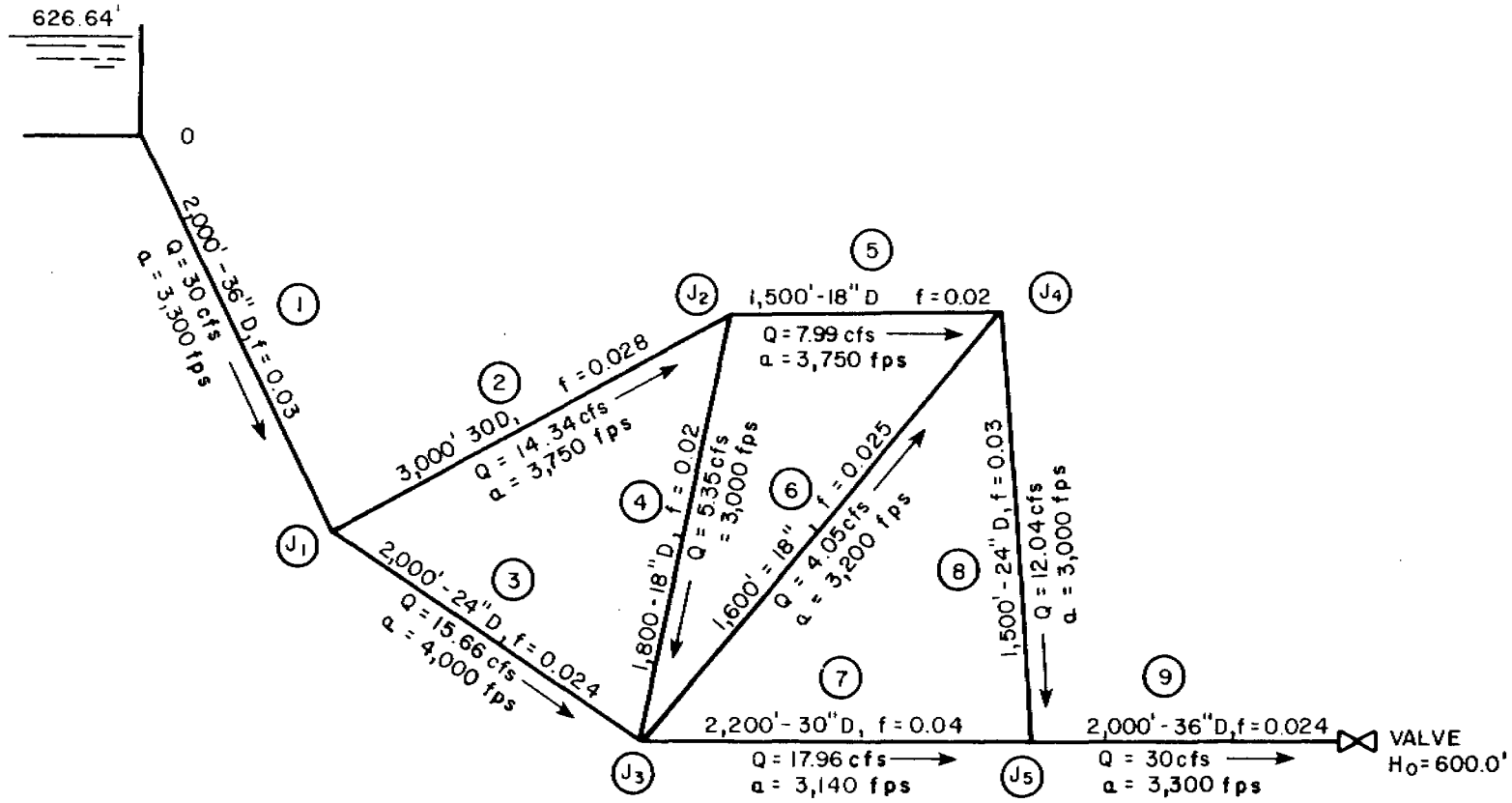

LEGEND:

(5) PIPE NUMBER

(J1) PIPE JUNCTION

D = INSIDE DIAMETER

f = FRICTION FACTOR

Q = FLOW RATE

a = SONIC SPEED (WATER)

FIGURE 3A.3.7-1

HYDRAULIC NETWORK FOR VERIFICATION PROBLEM

BEAVER VALLEY POWER STATION - UNIT 2
FINAL SAFETY ANALYSIS REPORT

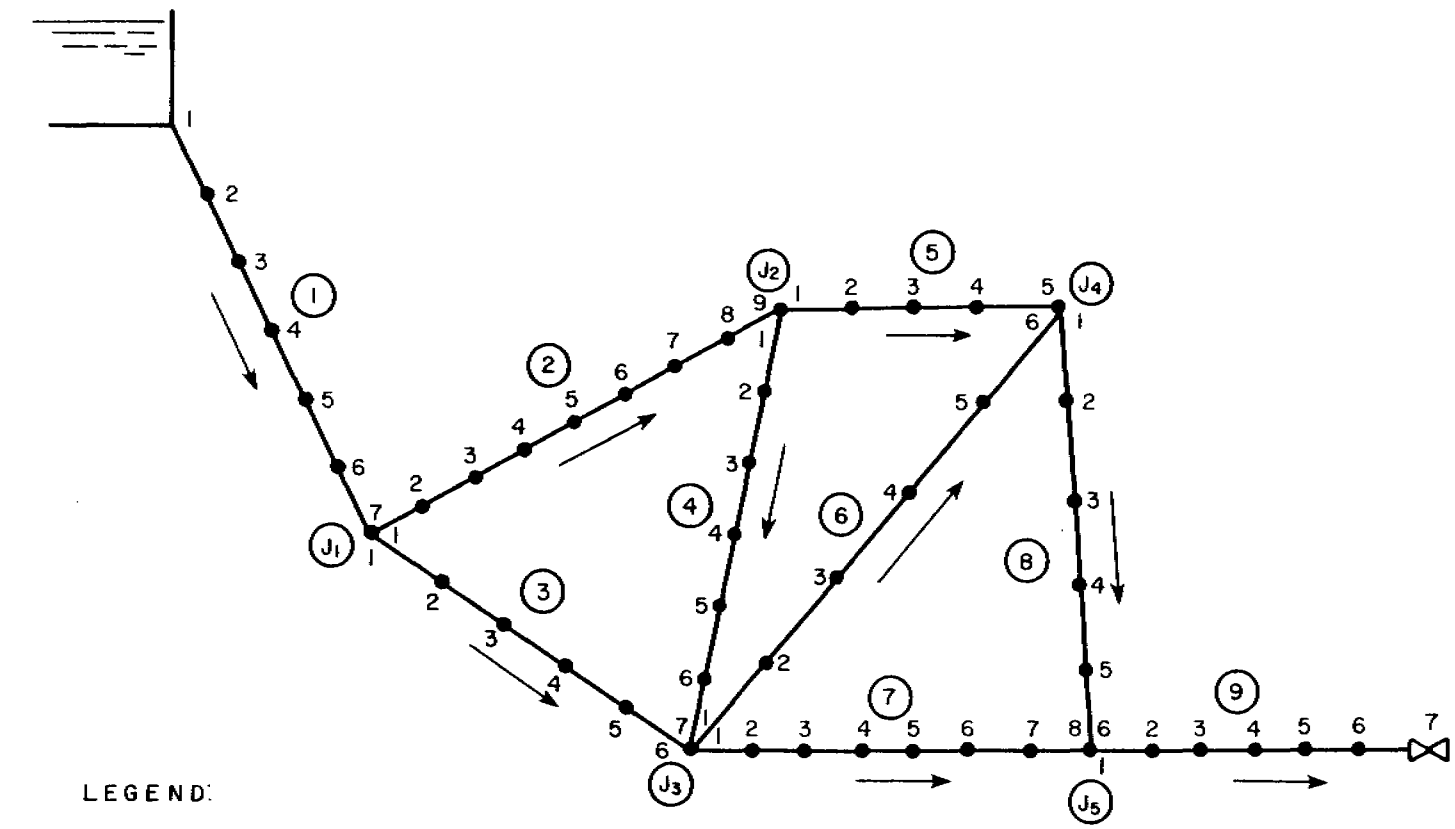

LEGEND:

(5) PIPE NUMBER

(J1) PIPE JUNCTION

5 NODE NUMBER

VALVE

FIGURE 3A.3.7-2

HYDRAULIC NETWORK FOR WATHAM VERIFICATION

BEAVER VALLEY POWER STATION - UNIT 2
FINAL SAFETY ANALYSIS REPORT

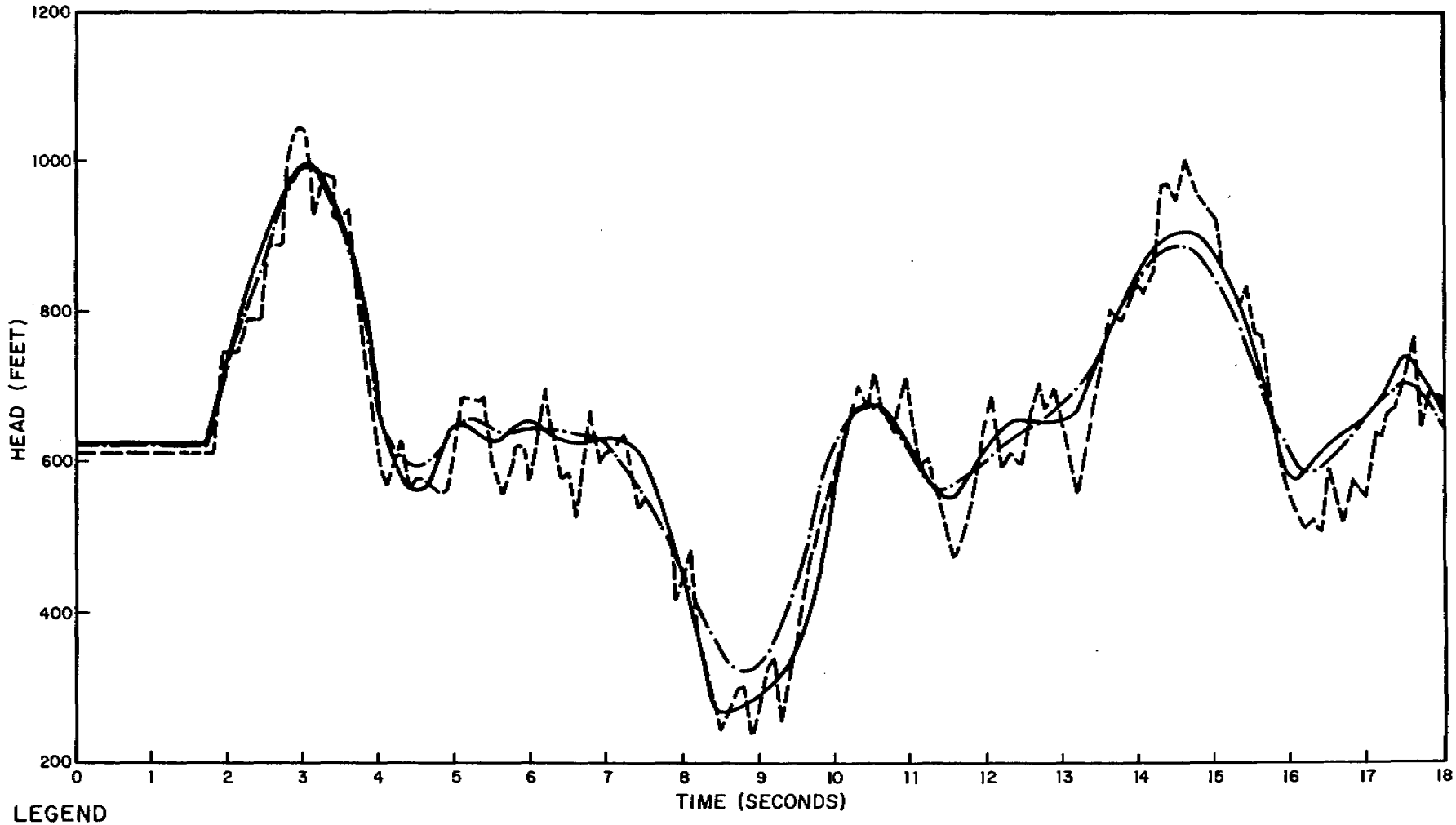

LEGEND

—·— WATHAM

——— STREETER AND WYLIE (1)

– – – – FABIC (2) - WHAM

SOURCES:

1. STREETER, V.L. AND WYLIE, E.G. HYDRAULIC TRANSIENTS. McGRAW-HILL BOOK COMPANY, INC., NEW YORK, N.Y., 1967.
2. FABIC, S. COMPUTER PROGRAM WHAM FOR CALCULATION OF PRESSURE, VELOCITY, AND FORCE TRANSIENTS IN LIQUID-FILLED PIPING NETWORKS. REPORT NO. 67-49-R, KAISER ENGINEERS, NOVEMBER 1967.

FIGURE 3A.3.7-3

HEAD VERSUS TIME-PLOT FOR JUNCTION J

BEAVER VALLEY POWER STATION-UNIT 2
FINAL SAFETY ANALYSIS REPORT

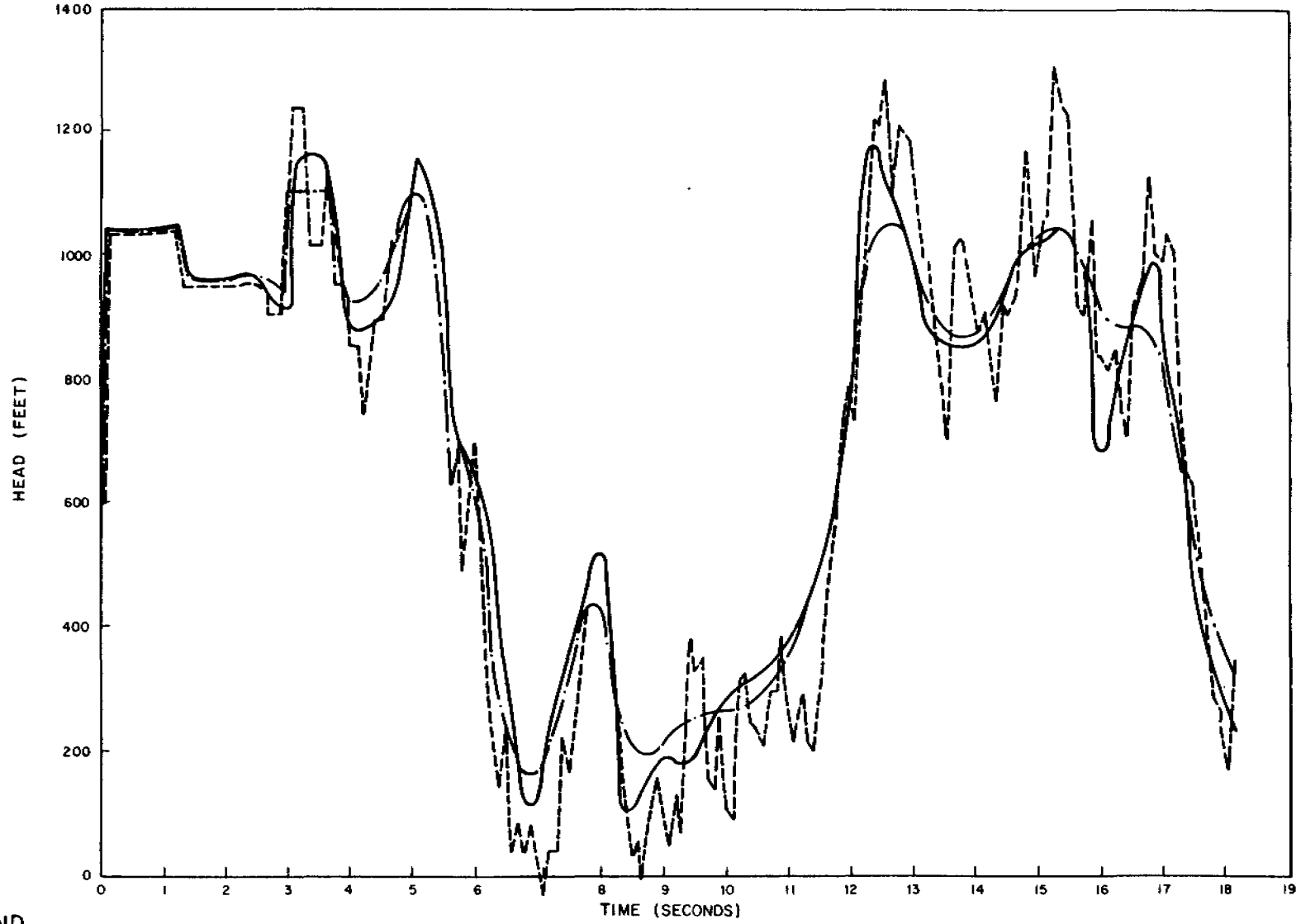

LEGEND

—·— WATHAM

——— STREETER AND WYLIE (1)

– – – – FABIC (2) - WHAM

SOURCES:

1. STREETER, V.L. AND WYLIE, E.G. HYDRAULIC TRANSIENTS. McGRAW-HILL BOOK COMPANY, INC., NEW YORK, N.Y., 1967.
2. FABIC, S. COMPUTER PROGRAM WHAM FOR CALCULATION OF PRESSURE, VELOCITY, AND FORCE TRANSIENTS IN LIQUID-FILLED PIPING NETWORKS. REPORT NO. 67-49-R, KAISER ENGINEERS, NOVEMBER 1967.

FIGURE 3A.3.7-4

HEAD VERSUS TIME-PLOT AT VALVE

BEAVER VALLEY POWER STATION-UNIT 2
FINAL SAFETY ANALYSIS REPORT

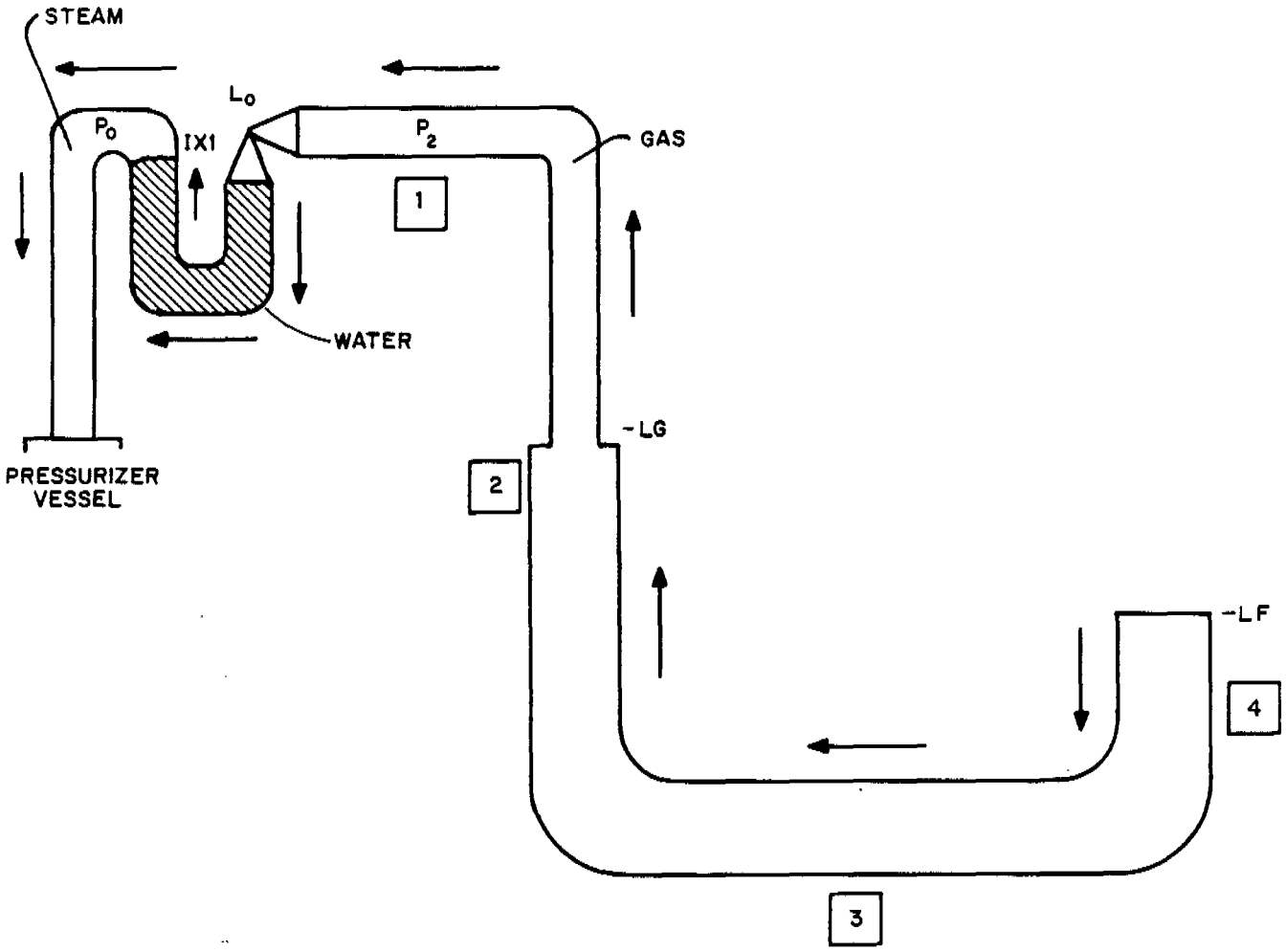

DISTANCES FROM PRESSURIZER VESSEL:

L_o = SAFETY/RELIEF VALVE

LG = DOWNSTREAM AREA CHANGE

LF = PIPE EXIT

IX1 = TRAILING EDGE OF SLUG 1

← FORCING FUNCTION DIRECTION, +

□ EPRI TEST 908 SEGMENT NO.

WATSLUG MODEL PIPE NUMBER

1 - PRESSURIZER TO L_o

2 - L_o TO LG

3 - LG TO LF

FIGURE 3A.3.8-1

WATSLUG MODEL OF EPRI SAMPLE PROBLEM

BEAVER VALLEY POWER STATION-UNIT 2
FINAL SAFETY ANALYSIS REPORT

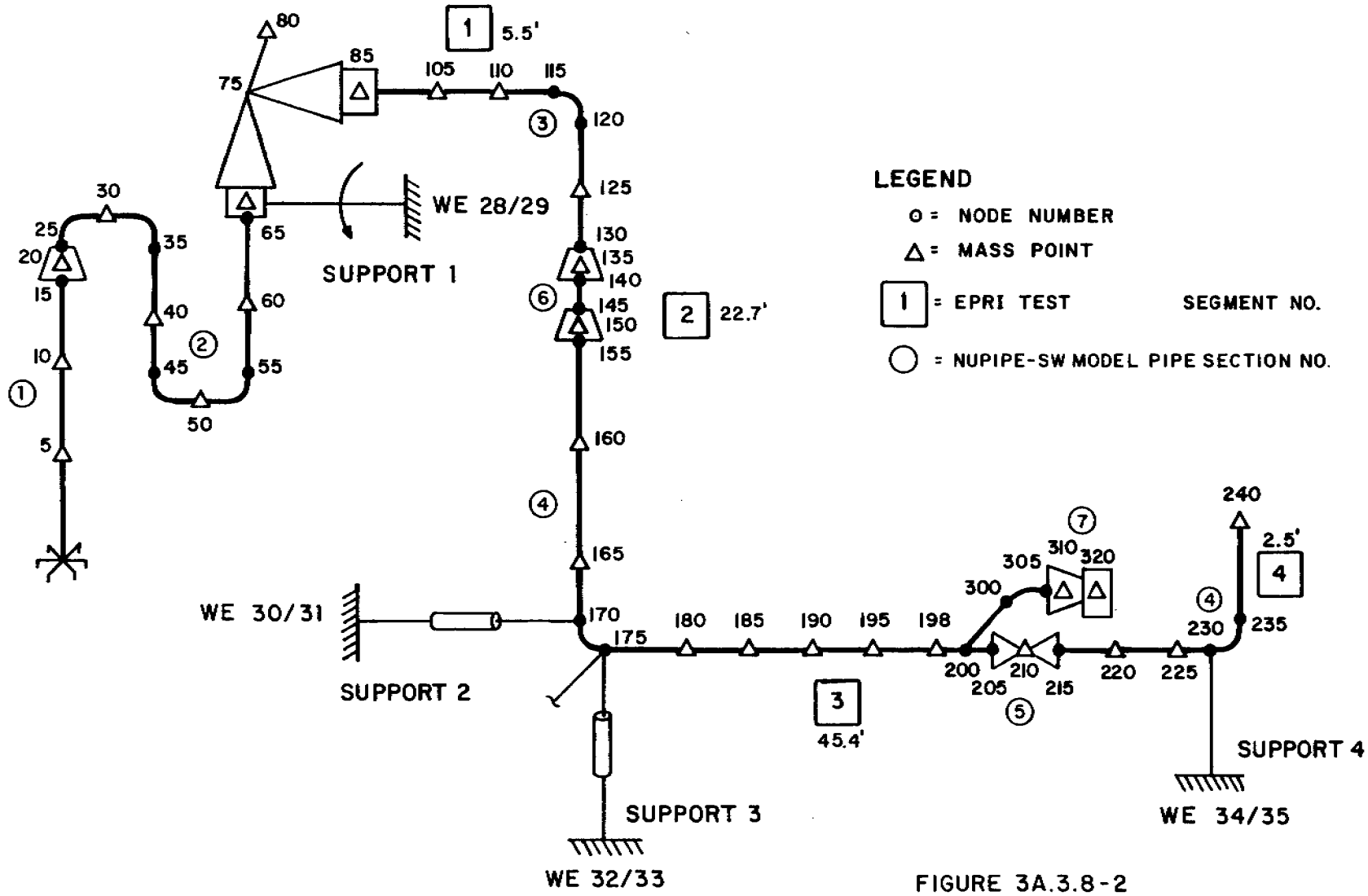

FIGURE 3A.3.8-2
NUPIPE-SW MODEL OF EPRI SAMPLE PROBLEM
BEAVER VALLEY POWER STATION-UNIT 2
FINAL SAFETY ANALYSIS REPORT

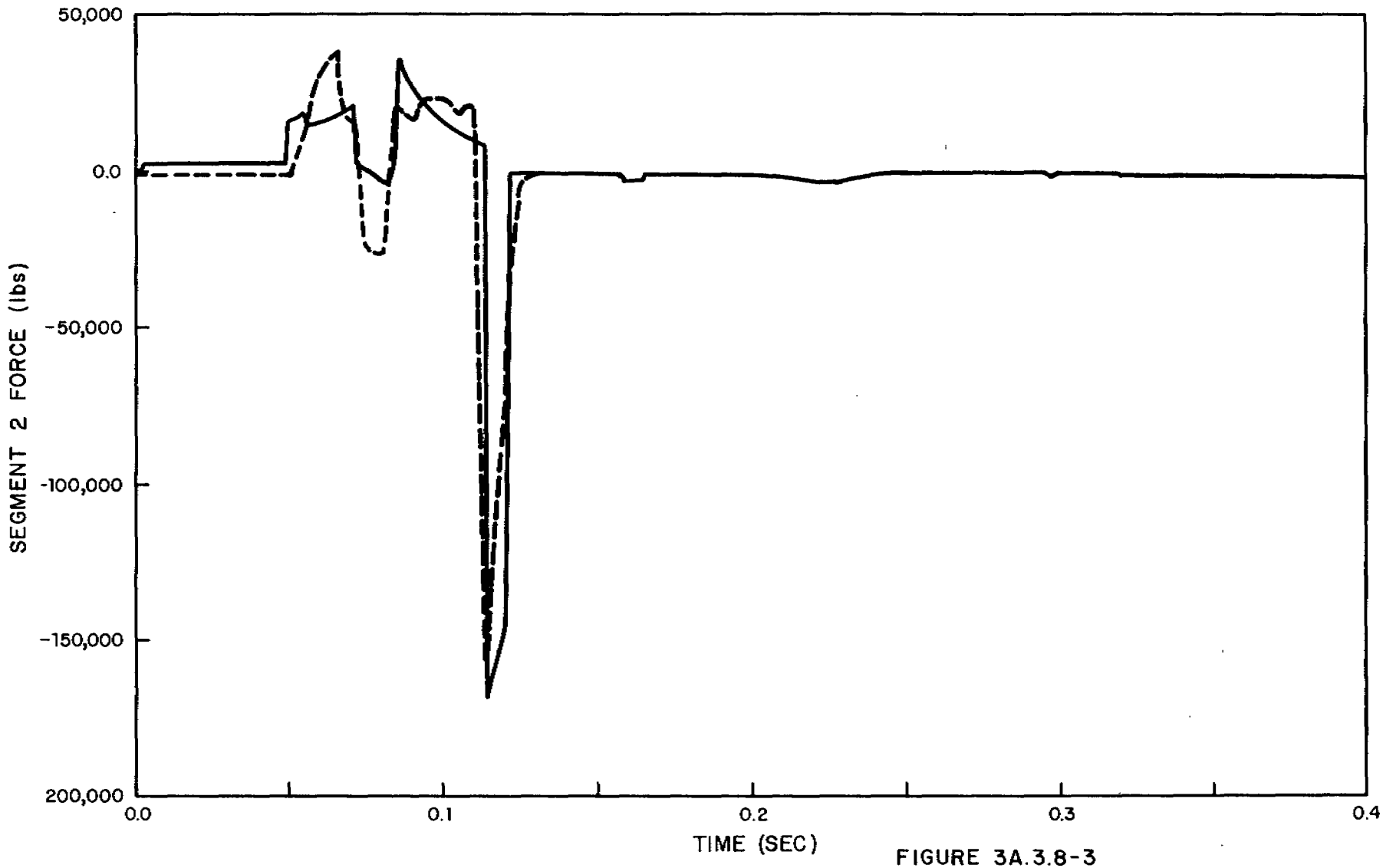

LEGEND

WATSLUG

RELAP 5/MOD 1

FIGURE 3A.3.8-3
COMPARISON OF SEGMENT 2
FORCING FUNCTION
BEAVER VALLEY POWER STATION-UNIT 2
FINAL SAFETY ANALYSIS REPORT

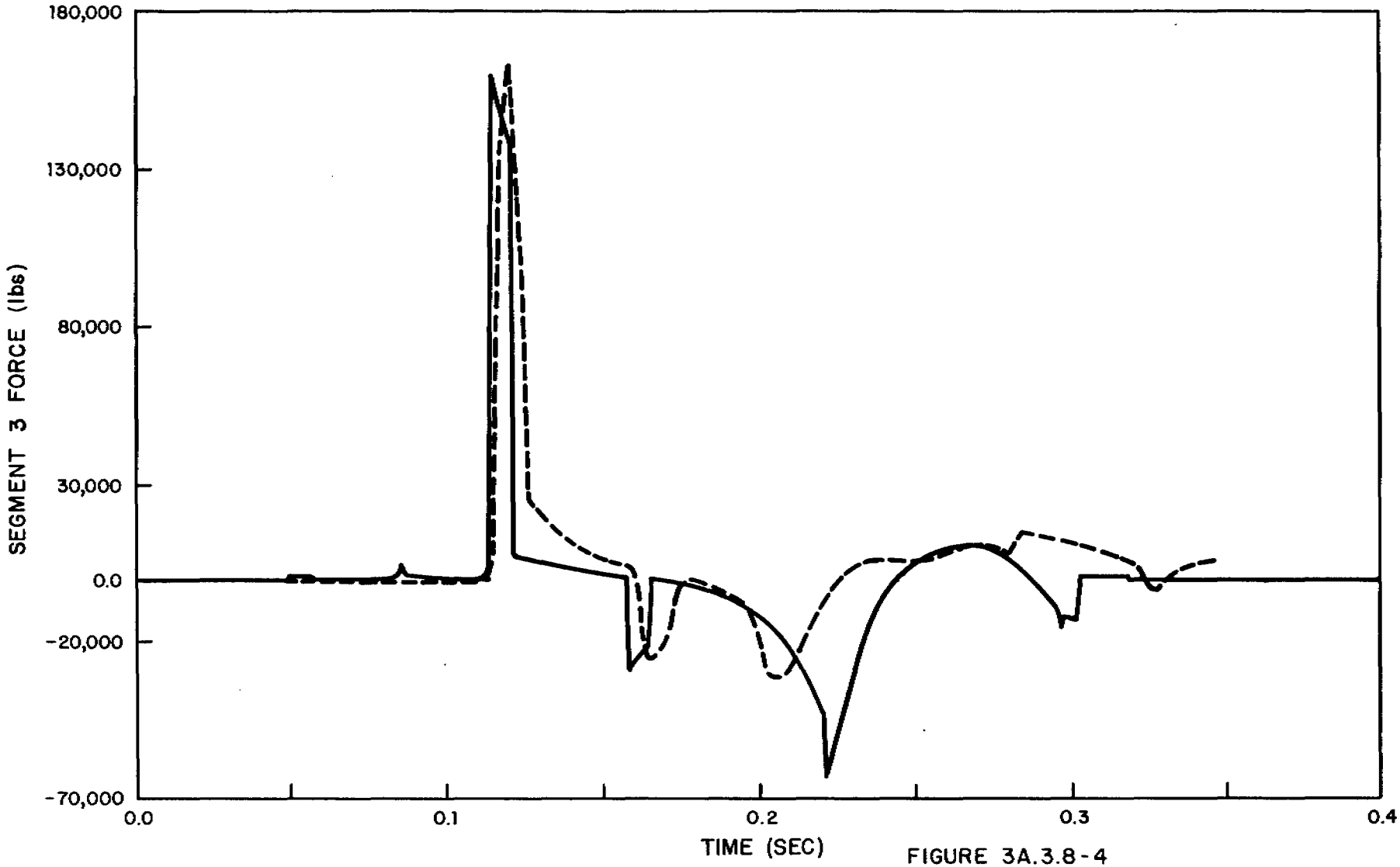

LEGEND

WATSLUG

RELAP 5/MOD 1

FIGURE 3A.3.8-4

COMPARISON OF SEGMENT 3 FORCING FUNCTION

BEAVER VALLEY POWER STATION-UNIT 2
FINAL SAFETY ANALYSIS REPORT

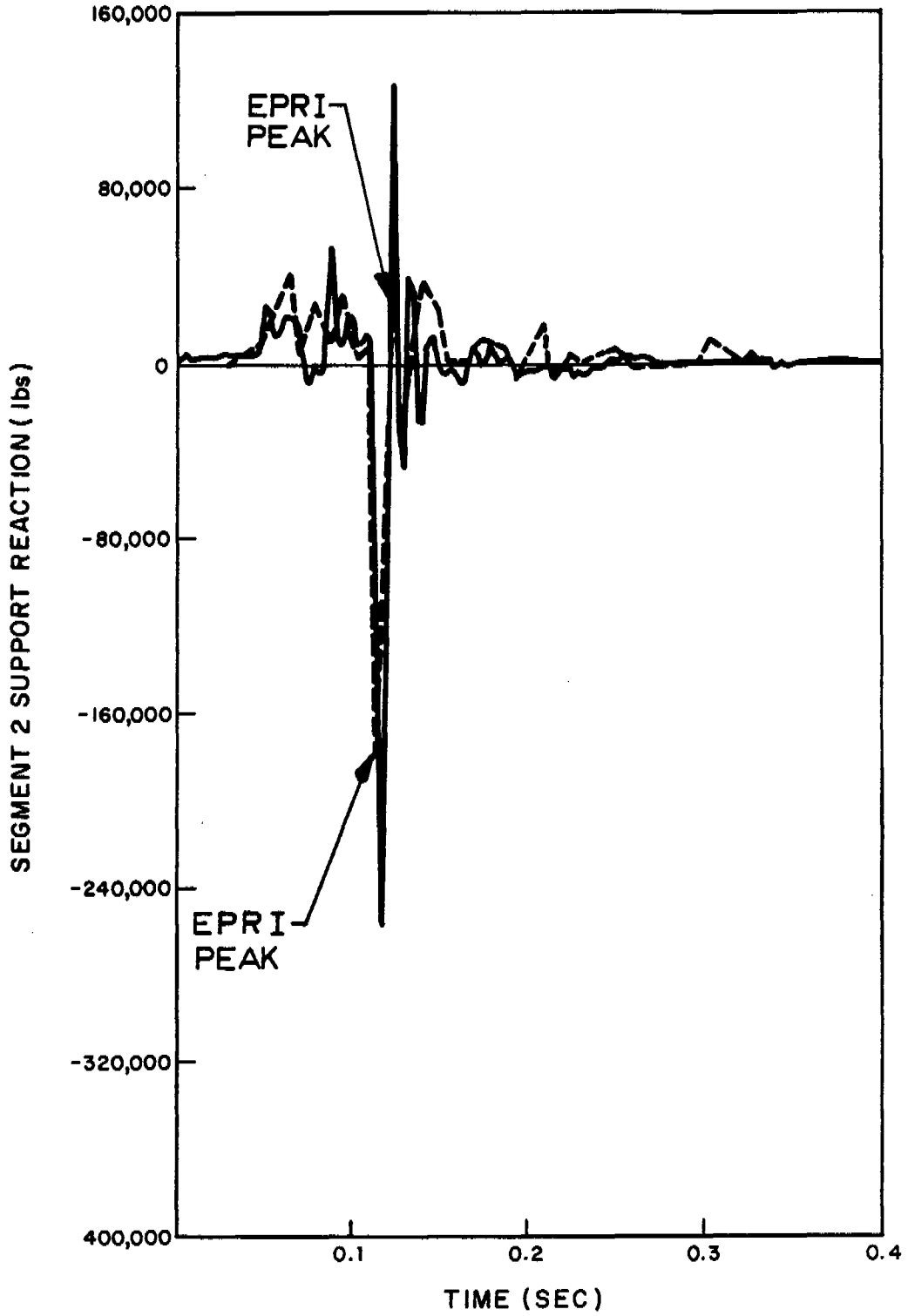

LEGEND

NUPIPE-SW

EPRI TEST RESULTS

FIGURE 3A.3.8-5

COMPARISON OF SEGMENT 2 SUPPORT REACTION

BEAVER VALLEY POWER STATION-UNIT 2

FINAL SAFETY ANALYSIS REPORT

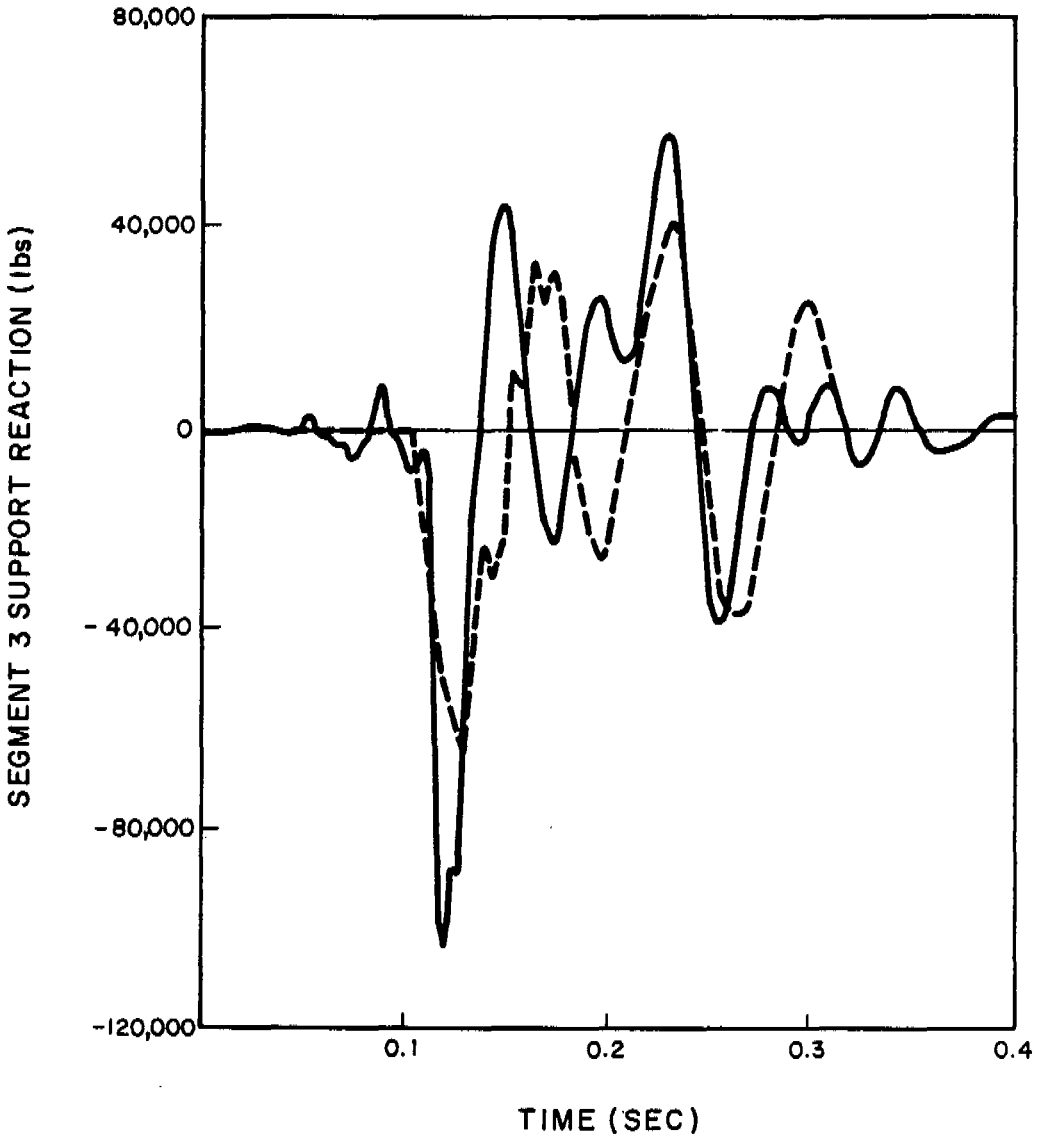

LEGEND

NUPIPE-SW

EPRI TEST RESULTS

FIGURE 3A.3.8-6
COMPARISON OF SEGMENT 3 SUPPORT REACTION
BEAVER VALLEY POWER STATION-UNIT 2
FINAL SAFETY ANALYSIS REPORT

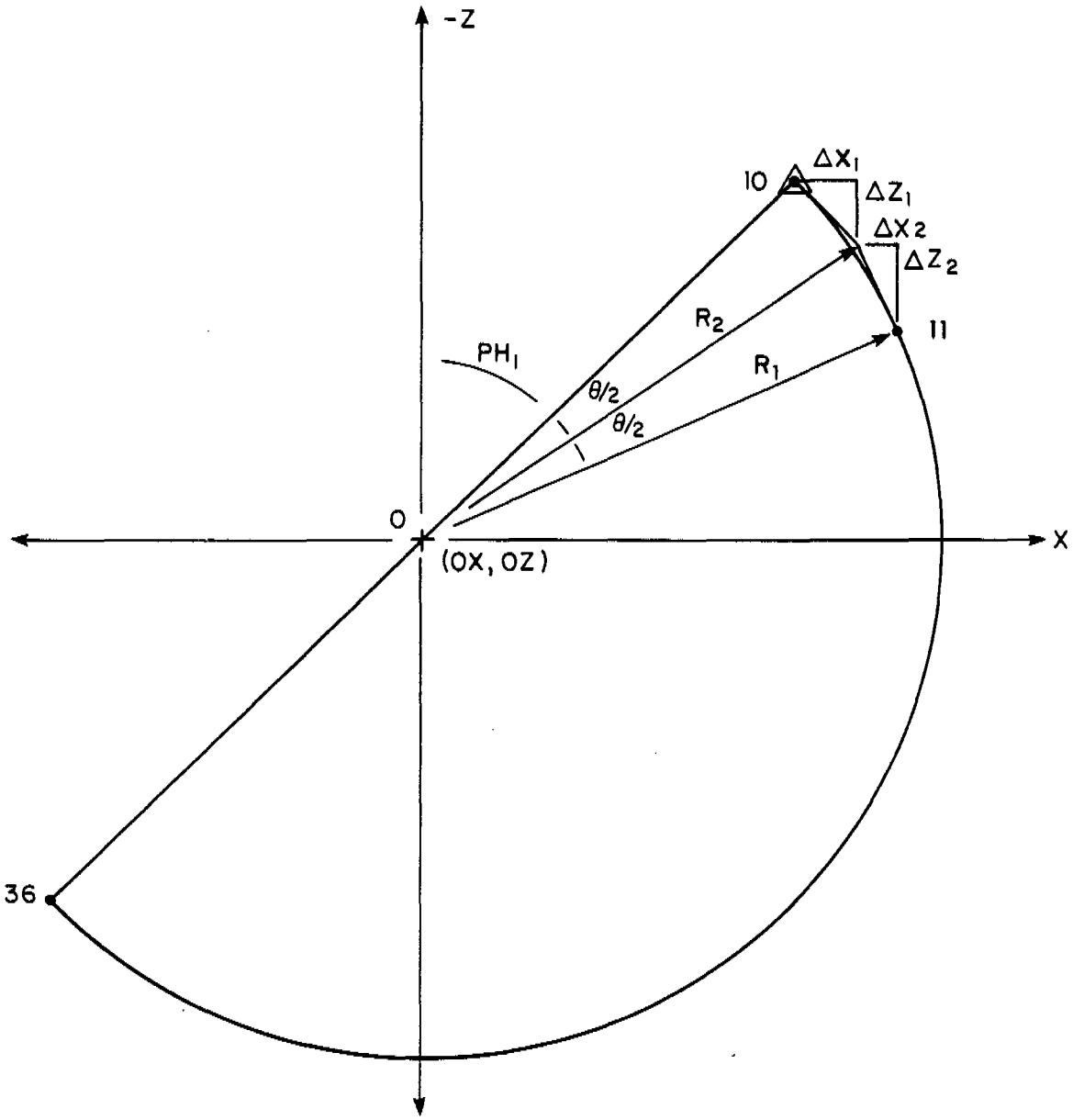

NOTES:

△ = DENOTES MASS POINTS

R_1 = 100 FT.

PH_1 = START ANGLE = 45°

OX = X COORDINATE OF ORIGIN OF ARC = 0.0 FT.

OZ = Z COORDINATE OF ORIGIN OF ARC = 0.0 FT.

OD = 14.0 IN.

θ = INCLUDE ANGLE BETWEEN NODES = 6.923°

NAGLE = NO. OF INCLUDED ANGLES IN ARC = 26

FIGURE 3A.3.10-1

DESIGN INPUT TO A PROBLEM

BEAVER VALLEY POWER STATION - UNIT 2
FINAL SAFETY ANALYSIS REPORT

APPENDIX 3B

A STUDY OF THE PROBABILITY OF AN AIRCRAFT COLLISION WITH THE BEAVER VALLEY POWER STATION - UNIT 2

BEAVER VALLEY POWER STATION

LIST OF TABLES

Table Number	Title
3B-1	Probability Estimates of Aircraft Colliding With Critical BVPS-2 Structures
3B-2	Beaver County Airport Fixed Base Operator's Facilities and Services
3B-3	Beaver County Airport Annual and Hourly Airfield Capacities
3B-4	Beaver County Airport, Trends in Aircraft Activity
3B-5	Greater Pittsburgh International Airport, Types of Aircraft and Carrier Utilization
3B-6	Greater Pittsburgh International Airport, Distribution of Traffic by Runway
3B-7	General Aviation Aircraft Based at Herron Airport
3B-8	Air Carrier Operational Increase Forecast for V and J Airways in the Vicinity of Shippingport
3B-9	Distribution of Skidding Distances in General Aviation Accidents 1964 Through 1975
3B-10	Skidding Distances in Air Carrier Accidents 1964 through 1975
3B-11	Representative Impact Angles in Air Carrier Accidents
3B-12	Target Area Information
3B-13	General Aviation Operations 1964 through 1975
3B-14	Air Carrier Activities 1964 through 1975
3B-15	Military Aircraft (A-7, C-123, KC-135) Accident Rates 1968 through 1976
3B-16	Airport-Related Military Aircraft Crash Rates 1968 through 1976
3B-17	Air Carrier Accidents versus Airport Proximity 1964 through 1975
3B-18	General Aviation Accidents versus Airport Proximity 1964 through 1975

LIST OF TABLES (Cont)

Table Number	Title
3B-19	U.S. Registered Civil Aircraft Accidents in the Vicinity of the Beaver Valley Power Station from 1964 through 1977

APPENDIX 3B
LIST OF FIGURES

Figure Number	Title
3B.4-1	Airports in the Vicinity of the Beaver Valley Power Station
3B.4-2	Jet Air Routes in the Beaver Valley Area
3B.4-3	Beaver County Airport IFR Route Structure Pittsburgh Area
3B.4-4	Beaver Valley Airport Published Instrument Approach Procedure Chart
3B.4-5	Routes and Operating Patterns, Traffic to the East, Greater Pittsburgh Area
3B.4-6	Routes and Operating Patterns, Traffic to the West, Greater Pittsburgh Area
3B.5-1	Beaver Valley Power Station Unit No. 2 Safety Related Structures
3B.5-2	Frequency Curve of Skid Distance for General Aviation Accidents
3B.5-3	Distribution of Impact Angle for General Aviation Accidents
3B.7-1	Frequency Curve of Radial Location for Air Carrier Accidents
3B.7-2	Frequency Curve of Radial Location for General Aviation Accidents
3B.7-3	Frequency Curve of Angular Location For General Aviation Accidents
3B.7-4	Frequency Curve of Radial Location for General Aviation Accidents Beyond 5 Miles
3B.7-5	Location of 174 USAF Major and Minor Aircraft Accidents in the Vicinity of Airfields 5 Mile Zone 1960 - 1964
3B.7-6	Location of 314 USAF Major Aircraft Accidents in the Vicinity of Airfields 10 Mile Zone 1968 - 1972
3B.7-7	Frequency Curve of Radial Location for Military Aircraft Accidents
3B.7-8	Frequency Curve of Angular Location for Military Aircraft Accidents

LIST OF FIGURES (Cont)

Figure Number	Title
3B.7-9	Frequency Curve of Crash Location for In Flight Air Carriers

APPENDIX 3B

A STUDY OF THE PROBABILITY OF AN AIRCRAFT COLLISION WITH THE BEAVER VALLEY POWER STATION - UNIT 2

3B.1 INTRODUCTION

This section primarily describes the site characteristics for the Beaver Valley Power Station as they existed when the facility was licensed. As such, current site characteristics may not agree with these descriptions. This information was gathered to support or develop the original plant design bases and was accurate at the time the plant was originally licensed. It is considered historical and is not intended or expected to be updated for the life of the plant. Additionally, the operating term of the plant has been extended from 40 to 60 years by issuance of a renewed operating license. References to a 40-year plant life in this section are historical and have not been revised. Descriptions of requirements specific to the period of extended operation are contained in Chapter 19 of the UFSAR.

This appendix provides an assessment of the probability of an aircraft striking the safety-related structures of the Beaver Valley Power Station - Unit 2 (BVPS-2) in Shippingport, Pennsylvania.

To define this probability, it is necessary to identify all flight operations in the vicinity of BVPS-2 which, by their nature, involve a certain crash risk. This selection considers aircraft and airport proximity to BVPS-2, frequency of operations, and the crash history of a particular aircraft type. Airplane operations are divided into three categories: general aviation, air carrier, and military. They are further distinguished as to whether the phase of operation is airport-related (for example, some aspect of landing or takeoff) or in-flight (cruising). The previous operational breakdown leads to four separate cases for analysis.

Assuming an airplane crash to be a random phenomenon, mathematical models are constructed to compute the likelihood of an airplane impacting the plant structures. These models are based on the following:

1. The effective target area that the critical plant structures present to a specific aircraft type.

2. The number of aircraft movements (landings, takeoffs, or overflights) per year.

3. An aircraft-specific crash rate.

4. A spatial probability distribution function which measures the frequency of occurrence of a crash location with respect to a given reference mark (for example, an airport runway or an air corridor).

Information on airport facilities, operations, and area aircraft activity was obtained from airport managers, control tower chiefs, commanders of United States military units, regional Federal Aviation Administration (FAA) officials, FAA publications, and other documents (for example, airport master plan).

Data on general aviation and air carrier accidents were derived principally from aircraft accident tapes purchased from the National Transportation Safety Board (NTSB) in Washington, D.C., covering the period 1964 through 1975. The NTSB supplemental data were obtained from the Washington offices of the NTSB during an examination of the accident files for additional information not available on the tapes.

The Analysis Group at Norton Air Force Base, California, supplied data on United States Air Force (USAF) accidents (Directorate of Aerospace Safety undated).

Beaver Valley Power Station - Unit 2 is scheduled to go on line in 1986. With a 40-year operational period, it will be decommissioned in the year 2026. Probabilities are estimated for the current time period and for 2024 with the latter being a gross estimate since uncertain economic factors play a decisive role in any such calculation. Projections beyond 10 years are speculative. The analysis has not been extended from 2024 to 2026 because no significant changes are expected.

3B.2 GENERAL METHODOLOGY

The probability calculation is based on the following approximate general relationship:

$$P=NARD$$

where:

P = The probability of an aircraft collision with the target (per year).

N = The number of operations per year (landings or takeoffs, overflights).

A = The effective target area of BVPS-2.

R = A crash rate which is specific to aircraft type and operation.

D = A density distribution function which characterizes the location of crashes with respect to the airport or the air corridor.

Each term is defined and evaluated for the type of aircraft (general aviation, air carrier, and military) and the type of operation (airport-related or overflight). Using U.S. aircraft statistics, the following steps are performed:

1. Computing N: The number of current operations, and of those projected over the life span of BVPS-2, is estimated for those airports under consideration. The number of overflights during this same time period is computed for each air corridor.

2. Computing A: The effective target area presented by BVPS-2 is composed of three parts:

a. The plan area,

b. The shadow area, based on the projection onto the horizontal or the vertical face of the structures, and

c. The skidding area.

Representative aircraft impact angles used to determine shadow areas and skidding distances are computed for four cases:

a. Airport-related air carrier accidents,

b. In-flight air carrier accidents,

c. Airport-related general aviation accidents, and

d. Airport-related military aircraft accidents.

The shadow area is computed graphically for each impact angle. The skidding area is simply the product of the skidding distance and the length of the side of BVPS-2 exposed to the aircraft. Adding these contributions to the plan area, which is constant in all cases, yields the total target area.

3. Computing R: Crash data for each type of aircraft are analyzed to yield crash rates. General aviation accidents are treated as a whole. In-flight air carrier accidents are differentiated from air carrier accidents in general. Separate accident rates are generated for each type of military aircraft. The value, R, for airport-related accidents is expressed in units of crashes per operation. For in-flight accidents, the value is expressed in units of crashes per mile flown.

4. Computing D: By analyzing the distribution of accident locations relative to the end of the runway in terms of polar coordinates (r,θ) for each aircraft type, a distribution function can be calculated for airport-related accidents. Separate analyses are conducted for those accidents occurring within 5 miles of the airport and those beyond 5 miles of the airport. Military and air carrier operations in the area originate at Greater Pittsburgh Airport only. Because this airport is located more than 10 miles from BVPS-2, only one analysis is required for these operations.

A similar analysis is applied to air carrier in-flight accidents.

A distribution function is calculated based on perpendicular distance from the crash location to the centerline of the air route.

For the airport-related accidents, the value, D, is expressed in units of $(mi)^{-2}$. For in-flight accidents, this value is expressed in units of $(mi)^{-1}$.

3B.3 RESULTS

Table 3B-1 presents probability estimates of aircraft colliding with the critical structures of BVPS-2 for the present and future levels of aircraft activities in the area.

3B.4 NEARBY AIRPORTS AND AIR ROUTES

Five airports in the vicinity of the BVPS-2 could require individual accident analyses according to criteria set forth in Regulatory Guide 1.70. Greater Pittsburgh International Airport, Beaver County Airport, Fino Airport (all in Pennslyvania), Herron Airport (West Virginia), and Columbiana Airport (Ohio). Fino Airport qualifies solely on its proximity to BVPS-2. Greater Pittsburgh, Beaver County and Herron airports are considered due to present or projected levels of activity. Columbiana Airport, located more than 10 miles from the site, does not presently qualify for consideration nor will it in the future (the airport manager states that there has been a drain of area business to the Beaver County Airport in recent years and he does not foresee a reversal in the trend (Porter 1977).

Figure 3B.4-1 shows the location of the pertinent airports in relation to the BVPS-2. The facilities and operations at each airport are described in Sections 3B.4.1 through 3.B.4.4.

There are low level (V) and high level (J) flight routes in the vicinity of BVPS-2 but none that directly overlies the Shippingport area. The low level (federal) routes are 8 nautical miles in width; V12 lies east to west, and V37 is generally north to south. The high level (jet) routes are J53, J64, J145, J152, and J518; jet routes do not have a specified width. These routes are depicted schematically on Figure 3B.4-2. Details about distance from BVPS-2, frequency of overflights, etc, are presented in Section 3.B.4.5.

There are no low or high level military training routes or bombing ranges in the Pittsburgh area.

3B.4.1 Beaver County Airport

The master plan for Beaver County Airport (Baker 1974) contains current and projected data on airport facilities and operations. This airport is located 10 miles north of the Beaver Valley Power Station (BVPS). It has one paved runway (10-28) 4,500 feet long and 100 feet wide. It is a medium intensity runway, generally in good condition, with taxiway lights, runway markings, and a full-length paved parallel taxiway. It has a nonprecision instrument approach called very-high-frequency omni range (VOR) utilizing the Ellwood City VORTAC. All types of general aviation activity (for example, personal, business, commercial, instructional, and general purpose)

are represented at the airport. Recently, it has been designated as a reliever airport for Greater Pittsburgh International Airport (that is, it relieves congestion at a major airport, which has a high density of scheduled certificated airline traffic, by diverting general aviation traffic from the major airport to the reliever airport). The Beaver Valley Expressway (Route 60) will contribute considerably to this function when completed. Table 3B-2 gives the flight services offered at Beaver County Airport. Operations can be summarized as follows: (Pennsylvania Department of Transportation 1974).

Operation	Percentage of Aviation Traffic
Pleasure	10
Training	50
Business	10
Charter (Passengers)	25
Charter (Cargo)	5

Table 3B-3 presents estimates of the capacity of the single runway. There are no plans to expand this particular runway. With respect to flight patterns, Beaver County Airport experiences its peak demand levels in visual flight rules (VFR) conditions. A single VOR instrument approach procedure provides limited capability to operate within the instrument flight rules (IFR) system. Any VFR aircraft desiring to penetrate the Pittsburgh Terminal Control Area (TCA) must obtain an Air Traffic Control (ATC) clearance prior to operating within this area. In the vicinity of the Beaver County Airport, this designated airspace begins at 4,000 feet mean sea level (msl) (2,748 feet above ground level (agl) at Beaver County Airport) and terminates at 8,000 feet msl. Aircraft at the airport utilize a standard traffic pattern at an altitude of 800 feet agl for light single-engine aircraft and at 1,000 feet agl for multi-engine aircraft. In contrast, the IFR airspace is structured by navigational aids and airways. Figure 3B.4-3 illustrates the low-altitude IFR environment in the vicinity of the Beaver County Airport and Figure 3B.4-4 shows the approach procedures to Beaver County. These airways and navigational aids allow aircraft to transit the area and define instrument approach procedures for the various local airports capable of handling IFR aircraft.

Aircraft activity at Beaver County Airport is expected to increase in future years (Table 3B-4). Extrapolating this trend to the year 2024 yields 131,920 movements in that year. The increase corresponds to an annual average increase of 6 percent over the base (starting) figure.

For the immediate future, a previously used sod runway (2-20) is proposed to be reopened to accommodate small aircraft at those times when winds do not favor operations on the main runway. This secondary, or crosswind, runway is 3,000 feet long and 75 feet wide.

In addition, the installation of a localizer-type nonprecision instrument approach to Runway 10 is recommended.

3B.4.2 Greater Pittsburgh International Airport

Information on the Greater Pittsburgh Airport was supplied primarily by the Chief of Operations at the Greater Pittsburgh Tower (Bernhard 1977). The runway at Greater Pittsburgh Airport closest to BVPS-2 is 28R-10L approximately 11.2 miles away. It is 10,500 feet in length. The other three runways, 28L-10R, 32-14, and 23, have respective lengths of 9,500, 8,100, and 3,936 feet. The airport has an FAA tower and a surveillance radar approach to all runways. Air carrier, military, and general aviation aircraft utilize the facilities. The military operations include an interceptor squadron, an aerial refueling squadron, and a troop carrier group. The 911th Tactical Airlift Group of the USAF Reserve, the 147th Air Refueling Wing, and the l12th Tactical Fighter Group of the Pennslyvania Air National Guard are stationed at Greater Pittsburgh. A breakdown of the aircraft is presented in Table 3B-5 with air taxi operations separated out from general aviation.

No specific record is maintained of aircraft types utilizing a particular runway. However, when landings are to the west, most air carrier and military traffic use runway 28L, with air taxi and general aviation using runway 32 or 23, while departures are on runway 28R. When landings are to the east, air carrier and military traffic use runway 10L, with air taxi and general aviation using runway 10R and departures are on runway 14. Table 3B-6 gives the distribution of traffic by runways, as provided by the facility chief. Figures 3B.4-5 and 3B.4-6 depict the routes and holding patterns in the Greater Pittsburgh airspace. All traffic, whether air carrier, air taxi, general aviation, or military, uses the same arrival/departure route structure. Where the departure and arrival tracks intersect, altitude separation is maintained. The departure is tunneled at 5,000 feet and the arrival maintains 6,000 feet until intersection is accomplished. In the immediate area of the BVPS-2, most traffic is at 5,000 feet msl or higher.

The purposes for which general aviation operations are conducted are summarized as follows:

Operation	Percentage of Aviation Traffic
Business	63
Commercial charter (Passengers)	20
Mail service	10
Commercial charter (Cargo)	5
Pleasure	2

In 1976, there were 116,480 general aviation operations, including air taxi movements. Because Beaver County Airport has been assigned the function of a reliever airport for Greater Pittsburgh

International, the rate of growth of general aviation traffic at this airport will probably be less than the national average. However, in projecting activity over the life of BVPS-2, an annual increase of 6 percent of the base year's figure is invoked. This approach, which is consistent with national statistics, (FAA 1976a), leads to a figure in year 2024 of 452,000 operations. National predictions extend only to 1988 and several factors could intervene to alter the predictions.

In 1976, there were 182,610 air carrier operations. The FAA (1976a) predictions point to a 3.4 percent annual average increase over the base year's figure. In other words, applying the given fractional increase to 182,610 and then multiplying by the number of years (48) yields the total increase between 1976 and 2024. The final result is about 481,000 operations in 2024. A new runway, to be labeled runway 28L, is being constructed 1,500 feet south of the present 28L. The present 28L will be retained and designated 28 center. The new runway will be 200 feet in width and approximately 12,500 feet in length. Completion may not be for 3 or 4 years. This runway will be suitable for any type of aircraft.

Data on military aircraft movements were provided by the individual Air Force units stationed at Greater Pittsburgh International (Prave 1977; Bright 1977, and Bitonti 1977). The l12th Tactical Fighter Group flies the A7 aircraft in 2,600 to 2,800 sorties per year (a maximum of 5,600 operations per year). The 911th Tactical Airlift Group flies C-123 aircraft in 1,200 sorties per year (2,400 operations per year). The 147th Air Refueling Group flies the KC 135 aircraft in 12 to 15 sorties per week (a maximum of 1,560 operations per year). Over the past 10 years, the level of military operations has declined at Greater Pittsburgh Airport. According to the commanders of the various units, operations are expected to remain stable in the near future and local long range forecasts are not available. A national forecast for military air activity (FAA 1976b) up to 1988 indicates zero growth.

Beaver Valley Power Station - Unit 2 does not fall within the TCA of the Greater Pittsburgh Tower. Military aircraft entering or exiting from the TCA are controlled by the Pittsburgh Tower in the same manner as general aviation or air carrier planes. They do not lock into any training routes until they are well away from this area. The area training routes, SR815,816,817,818 (Bitonti 1977), which are low level, low speed VFR routes, begin at distances not less than 18 miles from BVPS-2. The C-123 aircraft generally fly these routes 1,000 feet above ground level (Bitonti 1977).

The KC-135 aircraft fly their air refueling tracks always above 12,000 feet (Bright 1977) with most of their activity concentrated in the Columbus, Ohio, area. The A-7 aircraft, once outside the control of the Greater Pittsburgh Tower, fly high speed direct routes to Warren Grove, New Jersey (60 percent of the time), and Atterbury, Indiana (25 percent of the time). The remaining 15 percent of the flights is divided among Watertown (New York), Grailing (Michigan),

Columbus (Ohio), and Harrisburg (Pennsylvania). The closest lateral approach of the aircraft to BVPS is 5 miles (Prave 1977). No accident analysis for the in-flight (training route) phase of USAF activity was deemed necessary.

3B.4.3 Herron Airport

Information on Herron Airport was obtained from the Airport Directory (1977) and from the airport manager (McVay 1977). This public airport, which is located 8.2 miles southwest of the BVPS-2 site, has three runways: 4-22, which is 2,018 feet long by 25 feet wide with an asphalt surface; 1-19, which is 1,400 feet long by 30 feet wide; and 14-32, which is 800 feet long by 30 feet wide. The latter two have grass compositions. No quantitative estimate is available as to the relative frequency of use of the runways, although the asphalt runway does experience the heaviest traffic. There are runway lights but no instrument approach systems. Fifty-three aircraft are based at Herron. A breakdown of the aircraft is given in Table 3B-7. The majority are light single-engine planes weighing less than 5,000 pounds. The Cessna 310 and Beechcraft Baron have respective gross weights of 5,300 and 5,400 pounds.

In lieu of any records, it has been estimated (Scheff 1977) that local plus itinerant operations average 500 per year per based airplane, resulting in approximately 26,500 operations per year at Herron.

The airport manager does not anticipate any substantial change in the level of activities in the near future and cannot make any projections beyond that time. There are no plans to expand the facilities.

The national trend is toward a steady rise in general aviation movements in the years to come (FAA 1976a), barring any major economic setbacks.

For purposes of analysis, Herron Airport is conservatively assumed to remain competitive with Beaver County Airport and to grow at approximately the same rate.

This corresponds to an annual average increase of 6 percent of the base (initial) year's figure (26,500), resulting in 102,800 operations in 2024.

3B.4.4 Fino Airport

Information on Fino Airport was provided by the airport owner/manager (Gowley 1977). It is a private landing strip located approximately 1.5 miles southwest of the BVPS-2. Its single runway (12-30), composed of grass, is 1,750 feet long and 100 feet wide. It can accommodate any single engine general aviation aircraft. There is one airplane based at the airport, a Cessna Cardinal RG (2,800 pounds maximum weight), which is flown solely by the owner. There is no

instrumentation at the airport and all operations are VFR. There is some runway lighting.

The owner estimates that when conditions are favorable, he may take off as many as 3 to 4 times per day and that, on an annual basis, he averages two movements (one take-off and one landing) per day or approximately 700 operations per year. No transient aircraft use the airport, principally because Fino has no facilities.

Power lines adjacent to runway 30 do not present a hazard, according to the owner, because of the steep climb slope associated with take-offs. Runway 12 is not used for landing. Flight patterns connected with landing or take-off are somewhat dependent on wind direction but can generally be classified as standard left-oriented. The owner states that he deliberately steers clear of the BVPS-2, his closest approach being 3/4 to 1 mile away laterally, 2,500 feet vertically.

In the foreseeable future, the owner has no plans to expand either activities or facilities. The operation at Fino may eventually be phased out because it is a small, private airport.

In the probability calculation, the angle between the runway centerline and the line joining the airport and the power station is incorporated. A conservative choice was runway 12 which led to an angle of 75 degrees rather than the 105 degrees for runway 30.

3B.4.5 Low and High Altitude Routes

The federal (V) airways and high altitude jet (J) air corridors in the vicinity of Shippingport are identified in Section 3B.4. The V airways (V12 and V37) experience a maximum of 100 total overflights per day, distributed about equally between them. Only about 2 percent of the flights are air carriers, the rest being general aviation (air taxi, cargo charter, business, etc) (Aber 1977). The Cleveland Air Route Traffic Control Center (Norris 1977) provided statistics on the J airways, specifically the Peak Day Traffic Count for 1976. It is assumed that the national forecast for air carrier operational increases can be directly applied to all air corridor operations. The data are summarized in Table 3B-8.

3B.5 CRITICAL STRUCTURES

The following structures of BVPS-2 comprise the critical targets for any incoming aircraft:

1. Control room extension,
2. Electric cable tunnel,
3. Auxiliary building,
4. Fuel and decontamination buildings,

5. Main steam and cable vault buildings,

6. Service building,

7. Reactor containment,

8. Safeguards area, and

9. Diesel generator building.

The intake structure is not considered a critical target because BVPS-2 has an alternate cooling system to provide sufficient cooling and heat dissipation in the event of the loss of the intake structure (Section 3.8.4).

The plant configuration is shown on Figure 3B.5-1. The total plan area of these structures is computed to be 76,770 square feet (0.0028 square mile).

The critical structures are exposed the most to aircraft approaching from the southeast, when viewed in terms of potential shadow and skidding areas. Some noncritical buildings provide substantial shielding to the south (for example, the turbine, waste handling, and condensate polishing buildings). There is one cooling tower to the northeast and one to the south-southeast. To the north, in addition to part of the cooling tower, shielding is afforded by an office building. The maximum skidding distance to the critical structures is from the southeast, even though Route 168 to the east, because of its elevation, would limit the maximum possible sliding distance of any aircraft. A comparable skidding area is seen for aircraft coming in from the northwest, but the accompanying shadow area would be smaller for this case.

3B.5.1 Skidding Distance

A representative skidding distance is defined or computed for each of the following aircraft operations:

1. General aviation,

2. Air carrier, airport-related,

3. Air carrier, in-flight,

4. Military, fighter aircraft, and

5. Military, transport, or tanker aircraft

The aircraft accident tapes of the NTSB list skidding distance information for 3,508 fatal general aviation accidents during the period 1964 through 1975. Table 3B-9 presents the distribution of skidding distances. A plot of the cumulative fraction of accidents with stopping distances greater than or equal to a specific value,

S_D, is shown on Figure 3B.5-2. An exponential curve is fit to the data points in piecewise fashion. This function, $F(S_D)$, is

$$F(S_D) = e^{-(S_D/72)}, S_D \leq 75'$$

$$0.56e^{-(S_D/180)}, 75' < S_D \leq 375'$$

$$0.25e^{-(S_D/239)}, 375' < S_D \leq 925'$$

$$0.45e^{-(S_D/624)}, 925' < S_D \leq 3{,}000'$$

Integrating $F(S_D)$ between 0 and 3,000 yields a representative skidding distance of 126 feet.

The NTSB data tapes and the accident files in Washington (Miller 1978) together yielded skidding distances for 54 fatal air carrier accidents between 1964 and 1975. Of these, 12 were in-flight accidents and 42 airport-related. The skidding distances and their averages for each case are presented in Table 3B-10.

Information on typical skidding distances for military aircraft is divided into fighter and tanker/transport categories (Strategic Air Command undated).

	Skidding Distance	
Type of Aircraft	Landing	Takeoff
Fighter	1,017	1,437
Tanker/Transport	1,143	712

Averaging the figures for landings and takeoffs, the representative skidding distances for fighter and tanker/transport aircraft are 1,227 and 928 feet, respectively.

3B.5.2 Impact Angle

The NTSB data tapes contained impact angles for 1,121 fatal general aviation accidents. The distribution of angles is given as follows:

Range of Angles (degrees)	Number of Occurrences
0-10	103
11-20	51
21-30	134
31-40	46
41-50	209
51-60	185
61-70	51
71-80	96
81-90	246

A plot of this distribution is shown on Figure 3B.5-3. One vertical scale is the number of occurrences in a given 10-degree interval, the other is a probability density function (fractional number of occurrences divided by the interval width). A weighted impact angle is computed by applying a weighting factor to the probability density distribution. This factor is the inverse of the tangent of the impact angle, 1/tan ϕ, which measures the projection of the vertical aspect of a structure onto the horizontal surface. The integral of the product of the weighting factor and the probability density function yields the ratio of the length of the horizontal projection to the height of the structure. The integration is performed piecewise with the numerical result of 1.91. The corresponding impact angle is

$$\phi = \tan^{-1}\left(\frac{1}{1.91}\right) = 28^{\circ}$$

A representative impact angle for air carriers is computed based on 40 accident cases (National Transportation Safety Board 1977 and Miller 1978), 12 in-flight accidents, and 28 airport-related. The average values of the impact angles listed in Table 3B-11 are 58 degrees and 35 degrees, respectively, for the two types of accidents. Data on impact angles for military aircraft are not as available. In the absence of any definitive information, it is conservatively assumed that airport-related military aircraft accidents have the same characteristic impact angle as general aviation accidents.

3B.5.3 Shadow and Skidding Areas

The shadow areas associated with the impact angles (Table 3B-11) were calculated graphically. The direction of approach of the aircraft was chosen to be southeast, the direction of maximum potential skidding distance. The length of the side exposed to the aircraft was 205 feet. Added to this figure, there was a contribution due to the length of the aircraft wing span (one-half the wing span added to each end of the BVPS-2's exposure).

Conservative estimates are made for the wing span for each aircraft category. A value of 50 feet was chosen for general aviation (the majority of general aviation aircraft have wing spans less than this) and a value of 150 feet for air carriers (the wing spans of the B-747 and B-727 are 195 feet and 108 feet, respectively). Of the three military aircraft (the A-7, KC-135, and C-123), the KC-135 has the largest wing span (142 feet). This number is adopted for the KC-135 and C-123 and one-half this value for the A-7.

The input data and the results of the target area calculations are presented in Table 3B-12.

3B.6 ACCIDENT RATES

National general aviation accident statistics for the period 1964 through 1975 indicate a total of 2,750 fatal accidents with airport data (airport-related). Of these, 84 accidents occurred beyond 5 miles of an airport (National Transportation Safety Board 1977). The total number of operations for this time period is estimated from several sources (FAA 1976a; FAA 1976b; and Mercer 1978). Table 3B-13 summarizes the data. The accident rates corresponding to these two cases are:

2.15×10^{-6} crashes per operation, all accidents with airport data

6.56×10^{-8} crashes per operation, accidents beyond 5 miles with airport data

For air carriers, two accident rates were computed:

1. Airport-related accidents beyond 5 miles of an airport,

2. Accidents in-flight.

Table 3B-14 indicates that there were, between 1964 and 1975, 50 fatal accidents with airport data, of which 14 were beyond 5 miles. Fifty-six in-flight accidents were identified for this time period. Air carrier activities (number of operations and total miles flown) are presented in Table 3B-15 (FAA 1976b).

The following crash rates were calculated:

1.22×10^{-7} crashes per operation, accidents beyond 5 miles with airport data

2.30×10^{-9} crashes per mile flown, for in-flight accidents.

For USAF aircraft, the crash rates were supplied in terms of accidents per 100,000 hours flown for the types of aircraft stationed at Greater Pittsburgh International Airport (Table 3B-16) (Crewse 1977). To convert these figures to accidents per operation, an average flight time of 4 hours was chosen (the higher this number, the higher the number of crashes per operation). Choosing those accidents that were airport-related, Table 3B-17 on crash rates was compiled.

3B.7 SPATIAL DISTRIBUTION FUNCTION

Table 3B-17 (National Transportation Safety Board 1977) presents the distribution of fatal air carrier accidents as a function of airport proximity for 1964 through 1975. Of the 14 accidents beyond 5 miles with airport data, specific information on nine of these was obtained (Miller 1978). The data for computing a probability density function, f(r), where r is the distance from the runway to the crash location, are

r(mi) = 9.7, 25.0, 9.7, 8.0, 8.2,
11.3, 9.0, 18.5, 8.9.

The cumulative frequency of events with radius, r, greater than or equal to specified values is plotted on Figure 3B.7-1. Fitting an exponential function to this curve yields

$$e^{-(r-5)/6.74}$$

f(r) is the derivative of one minus this function or

$$f(r) = 0.148^{-(r-5)/6.74}$$

The density function, f(r), is assumed uniform, where (θ) is the angle from the airport runway centerline to the crash location.

The joint probability density function is the product f(r) f(fθ). Integrating this expression over a differential area and then dividing by this same area (θ in radians) generates a probability density (per square mile) which is designated D (r,θ), the distribution function

$$D(r,\theta) = \frac{0.024e^{-(r-5)/6.74}}{r} \qquad (3B\text{-}2)$$

The function D(r,θ) was derived for general aviation accidents with airport data both within and beyond 5 miles of the airport. Table 3B-19 (National Transportation Safety Board 1977) gives the distribution of fatal general aviation accidents as a function of airport proximity (1964 through 1975).

These data are plotted on Figure 3B.7-2. An exponential fit to these points yields the function

$$e^{-r/1.57}$$

so that the probability density function is:

$$f(r) = 0.637e^{-r/1.57} \qquad (3B\text{-}3)$$

In determining f(θ), 69 accidents were reviewed (Miller 1978 and Scribner and Chang 1974). The following data were analyzed:

Angle from Runway Centerline, θ	Cumulative Fraction of Accidents with Angular Deviation ≥ θ
0°	69/69 = 1.00
10°	50/69 = 0.72
20°	37/69 = 0.54
30°	30/69 = 0.43
40°	29/69 = 0.42
50°	25/69 = 0.36
60°	22/69 = 0.32
70°	22/69 = 0.32
80°	19/69 = 0.28
90°	17/69 = 0.25

The values are plotted on Figure 3B.7-3. The best fit exponential is $0.02e^{-\theta/49.6}$ so that the function f(θ) is

$$0.020^{-\theta/49.6}$$

Because θ has a maximum value of 180°, a constant factor is multiplied to f(θ) so that its integration between 0° and 180° equals 0.5. The function D(r,θ) for accidents within 5 miles of the airport becomes

$$D(r,\theta) = \frac{0.37e^{-r/1.57}}{r} e^{-\theta/49.6} \qquad (3B\text{-}4)$$

For accidents beyond 5 miles, a uniform distribution in θ is assumed. f(r) was derived based on 51 accidents (Miller 1978 and Scribner and Chang 1974) with radii distributed as follows:

r	Cumulative Fraction ≥ r
5	51/51 = 1.00
6	47/51 = 0.92
7	38/51 = 0.75

8	28/51 = 0.55
9	22/51 = 0.43
10	20/51 = 0.39
11	16/51 = 0.31
12	14/51 = 0.27
13	11/51 = 0.22
14	7/51 = 0.14
15	6/51 = 0.12
20	3/51 = 0.06
21	2/51 = 0.04

These data are plotted on Figure 3B.7-4.

The best fit exponential has the form

$$e^{-(r-5)/4.56}$$

and the function D(r,θ) is given by

$$\frac{0.034e^{-(r-5)/4.56}}{r}$$

The data base for (r,θ) values for USAF accidents were obtained from two sources (Strategic Air Command undated and Directorate of Aerospace Safety undated). The distribution of accidents within 5 and 10 mile zones of the airport are shown on Figures 3B.7-5 and 3B.7-6. The cumulative distribution functions for r and θ are plotted on Figures 3B.7-7 and 3B.7-8 and are described, respectively, by the exponentials

$$e^{-r/1.91} \text{ and } e^{-\theta/29.6}$$

The distribution function D(r,θ) becomes

$$D(r,\theta) = \frac{0.51e^{-r/1.91}}{r} e^{-\theta/29.6} \qquad (3B\text{-}5)$$

This formulation is employed (conservatively) even though the Greater Pittsburgh Airport is more than 10 miles from BVPS-2.

For the V and J airways, data on inflight crash locations with respect to the centerline of the flight path were secured from two sources (Miller 1978 Lowe and Robbins 1976) for the period 1964 through 1974. The data are displayed below with Figure 3B.7-9 being a plot of this data.

Perpendicular Distance from Flight Path, R miles	Number of Accidents
0	6
0<R≤1/2	3
1/2≤R1	3
1<R≤2	2
2<R≤3	4
3<R≤4	1
4<R≤5	1
5<R≤6	0
6<R≤7	0
7<R≤8	1
8<R≤9	0
Total	21

An exponential fit yields the cumulative distribution function f(R) (USNRC 1975 and Miller 1978). The resulting probability density function was halved since only one side of an airway is considered;

$$f(R) = 0.23e^{-R/2.17} \qquad (3B\text{-}6)$$

This is the distribution function, D(R), (density function per mile) for the in-flight probability analysis.

3B.8 DISCUSSION

The results of the probability analysis for the present and for the year 2024 have been presented in Section 3B.3. The analysis is regarded as conservative in several respects.

1. The skidding distance of an aircraft, as reported by accident investigators, is often the total length over which the wreckage is spread. A large fraction of the aircraft's energy would probably be dissipated over an appreciably shorter distance.

2. The direction of approach of an aircraft to BVPS-2 was chosen to maximize the target area (no weighting of the various possible directions was performed).

3. For the direction of aircraft approach chosen, the maximum possible skidding distance was less than 1,000 feet (as imposed by local topography). For the A-7 aircraft, a greater value was used. In addition, the southeast corner of BVPS-2 is shielded by a cooling tower from this approach so that the extra contribution to the skidding area due to half a wing span is conservative. Furthermore, the representative wing spans are considered somewhat high.

4. In general, the statistics were chosen to reflect conservatism. (For example, an average crash rate for air

carrier accidents over several years was chosen even though the trend in recent years has been toward a decreasing rate).

5. The pilot can exert some control over an aircraft in distress and, to the extent possible, would attempt to avoid hitting a solid structure such as a power plant.

The previous qualitative arguments offer substantial justification for reduction of the probabilities cited herein below 10^{-7} per year.

3B.9 ACCIDENTS AT NEARBY AIRPORTS FROM 1964 TO 1977

Information on aircraft accidents in the vicinity of the four airports described in Section 3B.4 for the period 1964 to 1977 was obtained from the NTSB aircraft accident data tapes (information for 1978 was not available from this source at the time of the analysis). During this period, 58 airport-related accidents were associated with these airports. Table 3B-19 presents the pertinent information including aircraft data and accident summaries. Typically, the aircraft involved was general aviation, less than 12,500 pounds in weight, sustained "substantial" damage in an accident involving no injuries, and occurred on or near the airport during the landing phase. Greater Pittsburgh, Beaver County, and Herron were the airports of record in 26, 20, and 12 cited accidents, respectively, between 1964 and 1977.

3B.10 REFERENCES FOR APPENDIX 3B

Aber, W. (Greater Pittsburgh Control Tower) 1977. Personal communication (letter dated September 22, 1977). Airport Directory 1977.

Bernhard, P. W. (Chief, Greater Pittsburgh Tower) 1977. Personal communication (letter dated August 25, 1977) to Stone & Webster Engineering Corporation (SWEC).

Bitonti, D. F. Major (Operations and Training Officer, 911th Tactical Airlift Group, Greater Pittsburgh Airport) 1977. Personal communication (letter dated August 31, 1977) to SWEC.

Bright, Colonel (Commander of the 147th Air Refueling Wing, Greater Pittsburgh Airport) 1977. Personal communication (dated August 20, 1977).

Crewse, R.G. (Reports and Analysis Division, Directorate of Aerospace Safety, Norton Air Force Base, California) 1977. Personal communication (letter dated December 30, 1977) to SWEC.

Directorate of Aerospace Safety Undated. Summary of USAF Aircraft Accidents in Vicinity of Airfields, 5-Mile Zone, 1960-1964. USAF Norton Air Force Base, California, Study NR21-65.

Federal Aviation Administration (FAA) 1976a. Aviation Forecasts, Fiscal Years 1977-1988. Department of Transportation, Washington, D.C.

Federal Aviation Administration 1976b. FAA Air Traffic Activity, Calendar Year 1976. U.S. Department of Transportation, Office of Management Systems, Information and Statistics Division.

Gowley, J. (Owner, Fino Airport, Hookstown, Pennsylvania) 1977. Personal communication (letter dated July 26, 1977).

Hanten, James J. 1977. (Facility Chief, Greater Pittsburgh International Airport). Table of Distribution of Traffic by Runway.

Lowe, W. and Robbins, T. 1976. Applicant's Testimony on the Criteria for Protection Against Aircraft Accidents, Potomac Electric Power Co., Douglas Point Nuclear Generating Station - Units 1 and 2. USNRC Docket Nos. 50-448, 50-449.

McVay, R. (Manager of Herron Airport, East Cumberland, Virginia) 1977. Personal communication (letter dated July 25, 1977).

Mercer, G. (Aviation Policy, FAA. Washington, D.C.) 1978. Personal communication (dated March 27, 1978).

Michael Baker Jr., Inc. 1974. Beaver County Airport Master Plan. Prepared for the Beaver County Board of Commissioners.

Miller, C.D. 1978. Notes taken at the offices of the National Transportation Safety Board, Washington, D.C., from air carrier and general aviation accident files.

National Transportation Safety Board 1977. Aircraft Accident and Reporting System. SWEC computer program EN-96.

Norris, F. A. (Acting Chief, Cleveland Air Route Traffic Control Center, Oberlin, Ohio) 1977. Personal communication (letter dated September 28, 1977) to SWEC.

Pemsylvania Department of Transportation 1974. Pennsylvania State- wide Airport System Plan. Phase 1, Data Collection and Inventories. Appendix B - Airport/Airspace Inventory.

Porter, J. (Manager, Columbiana Airport, East Liverpool, Ohio) 1977. Personal communication (letter dated August 26, 1977).

Prave, Colonel (Commander, l12th Tactical Fighter Group, Greater Pittsburgh Airport) 1977. Personal communication (letter dated September 20, 1977).

Scheff, J. (Director of Regional FAA Office in West Virginia) 1977. Personal communication (letter dated September 6, 1977).

Scribner, K. and Chang, Y.C. 1974. Data collected at the National Transportation Safety Board offices, Washington, D.C.

Strategic Air Command Headquarters Undated. Summary of U.S. Air Force Aircraft Accidents in Vicinity of Airfields, 1968-1972. In Conjunction with Directorate of Aerospace Safety Undated.

Tables for Section 3B

TABLE 3B-1

PROBABILITY ESTIMATES OF AIRCRAFT COLLIDING
WITH CRITICAL BVPS-2 STRUCTURES

Category	Year	Flight Operations	Probability (collisions/year)
General Aviation			
Greater Pittsburgh International Airport	1976-1977	116,480	1.72×10^{-8}
	2024	452,000	6.60×10^{-8}
Beaver County Airport	1976-1977	34,000	1.32×10^{-8}
	2024	131,920	5.12×10^{-8}
Herron Airport	1976-1977	26,500	1.89×10^{-8}
	2024	102,800	7.33×10^{-8}
Fino Airport	1976-1977	700	1.64x10-7
	2024	700	1.64×10^{-7}
Military (Greater Pittsburgh)			
A-7	1976-1977	5,600	2.05×10^{-8}
	2024	5,600	2.05×10^{-8}
KC-135	1976-1977	1,560	4.19×10^{-9}
	2024	1,560	4.19×10^{-9}
C-123	1976-1977	2,400	5.82×10^{-8}
	2024	2,400	5.82×10^{-8}
Air Carrier			
Greater Pittsburgh International Airport	1976-1977	182,610	1.80×10^{-7}
	2024	478,800	4.72×10^{-7}
Air Routes			
V12	1976-1977	18,250	1.24×10^{-12}
	2024	48,180	3.27×10^{-12}
V37	1976-1977	18,250	3.77×10^{-10}
	2024	48,180	9.95×10^{-10}

TABLE 3B-1 (Cont)

Category	Year	Flight Operations	Probability (collisions/year)
J518	1976-1977	25,185	3.96×10^{-8}
	2024	66,430	1.04×10^{-7}
J152	1976-1977	36,500	4.13×10^{-11}
	2024	95,995	1.09×10^{-10}
J145	1976-1977	8,760	2.38×10^{-10}
	2024	22,995	6.24×10^{-10}
J53	1976-1977	11,680	4.81×10^{-10}
	2024	30,660	1.26×10^{-9}
J64	1976-1977	16,790	1.58×10^{-10}
	2024	44,165	4.16×10^{-10}

TABLE 3B-2

BEAVER COUNTY AIRPORT
FIXED BASE OPERATOR'S FACILITIES AND SERVICES

Item	Beaver Aviation Service	Skyline Motors Aviation	Moore Aviation Service	Schreck's Flying Service
Year Established	1967	1970	1966	Not Available
Services Offered	1. Training 2. Aircraft rental 3. Charter -Passenger -Cargo 4. Aircraft sales 5. Maintenance	1. Training 2. Aircraft rental 3. Charter -Passenger -Cargo 4. Aircraft sales	1. Training 2. Aircraft rental 3. Aircraft sales	1. Training 2. Aircraft rental
Number of Aircraft Utilized	13	10	3	2

TABLE 3B-3

BEAVER COUNTY AIRPORT
ANNUAL AND HOURLY AIRFIELD CAPACITIES*

Runway	Capacity	Number of Movements
10-28	VFR Hourly	92
10-28	IFR Hourly**	36
10-28	Annual	151,130
10-28	Weighted Hourly	87

NOTES:

*Michael Baker, Jr., Inc. 1974
**Based upon VOR approach with radar monitoring.

TABLE 3B-4

BEAVER COUNTY AIRPORT,
TRENDS IN AIRCRAFT ACTIVITY

Activity	1974	1979	1984	1994
Based Aircraft	86	101	122	181
Single-Engine	71	83	101	149
Multi-Engine	15	18	21	32
Aircraft Operations	24,861	34,000	43,200	69,800
Local	9,444	13,600	17,300	27,900
Itinerant	15,417	20,400	25,900	41,900
Instrument Approaches	804	1,072	1,500	2,400

TABLE 3B-5

GREATER PITTSBURGH INTERNATIONAL AIRPORT,
TYPES OF AIRCRAFT AND CARRIER UTILIZATION

Category	Make	Model	Number	Gross Weight (lb)
Military (Based at Airport)	Boeing	KC-135	8	362,100
	Fairchild-Republic	C-123	16	60,000
	Ling-Temco-Vought	A-7	20	42,500
General Aviation (Based at Airport)	Agusta Helicopters	A-109	2	5,402
	Grumman	G-1159	4	62,500
	Hawker-Siddeley	DH-25	2	22,500
	Lockheed	L-329	1	40,921
	Rockwell	AC-68	2	10,300
	Rockwell	NA-265	3	23,000
Air Carrier				
USAir (Home Base)	Nords	--		
		BAC-111		
	Douglas	DC-9		
	Boeing	B-727		
American Airlines (Transient)	Boeing	B-707		
	Boeing	B-727		
	Boeing	B-747		
Eastern Airlines (Transient)	Boeing	B-727		
	Douglas	DC-9		
	Lockheed	L-1011		
Nordair (Transient)	Boeing	B-737		
Northwest Airlines (Transient)	Boeing	B-707		
	Boeing	B-727		
Trans-World Air-lines (Transient)	Boeing	B-707		
	Boeing	B-727		
	Douglas	DC-9		
	Lockheed	L-1011		
United Airlines (Transient)	Boeing	B-727		
	Boeing	B-737		
	Boeing	B-747		
	Douglas	DC-8		
	Douglas	DC-10		

TABLE 3B-5 (Cont)

Category	Make	Model	Number	Gross Weight (lb)
Air Taxi	Beech	BE-18	1	9,900
	Douglas	DC-3	3	26,900
Other				
4 Commuter Airlines (Transient)	Beechcraft	BE-99		

TABLE 3B-6

GREATER PITTSBURGH INTERNATIONAL AIRPORT,
DISTRIBUTION OF TRAFFIC BY RUNWAY *, **, ***

Runway	Percent of Annual Arrivals (IFR & VFR) for Each Runway	Percent of Annual Instrument Approaches for Each Runway
05	Closed to Landings and Takeoffs	
10L	20	40
10R	5	1
14	1	
23	1	
28L	55	58
32	14	****
28R	4	1

NOTES:

*From table provided by James J. Hanten, Facility Chief, Greater Pittsburgh International Airport, March 7, 1977.

**Automatic Terminal Information Service (ATIS) is provided.

***Both arrival service and departure service are provided.

****ILS System was commissioned January 20, 1977. The percentage of instrument use is conjecture at this time, but it is expected to be 18 to 10 percent after 1 year.

TABLE 3B-7

GENERAL AVIATION AIRCRAFT BASED AT HERRON AIRPORT

Make and Model	Number	Make and Model	Number
Beech		Luscomb	1
Beechaft Baron	1	Navion	
Bonanza	5	Rangemaster	3
Cessna		Piper	
Skymaster	1	Apache	2
140	3	Cherokee	2
150	5	Comanche 400	3
170	4	Twin Comanche	2
172	4	Tripacer	4
175	2	J-3	1
182	3	J-4	1
190	4		
310	1		
1210	1		

TABLE 3B-8

AIR CARRIER OPERATIONAL INCREASE FORECAST FOR
V AND J AIRWAYS IN THE VICINITY OF SHIPPINGPORT

Airway	Perpendicular Distance From Power Station (mi)	Peak Day Count (1976)	Projection for Operations/yr
V12	24.3	50 (18,250/yr)	48,180
V37	11.9	50 (18,250/yr)	48,180
J53	10.4	32 (11,680/yr)	30,660
J64	13.6	46 (16,790/yr)	44,165
J145	11.3	24 (8,760/yr)	22,995
J152	18.2	100 (36,500/yr)	95,995
J518	2.5	69 (25,185/yr)	66,430

TABLE 3B-9

DISTRIBUTION OF SKIDDING DISTANCES
IN GENERAL AVIATION ACCIDENTS
1964 THROUGH 1975

Range of Distance (ft) S_D	Number of Occurrences	Range of Distance (ft) S_D	Number of Occurrences
0-50	2,129	1,201-1,300	4
51-100	391	1,301-1,400	2
101-150	262	1,401-1,500	4
151-200	175	1,501-1,600	1
201-250	136	1,601-1,700	0
251-300	109	1,701-1,800	0
301-350	58	1,801-1,900	1
351-400	40	1,901-2,000	2
401-450	40	2,001-2,100	2
451-500	33	2,101-2,200	1
501-550	10	2,201-2,300	1
551-600	32	2,301-2,400	0
601-650	9	2,401-2,500	1
651-700	14	2,501-2,600	0
701-750	8	2,601-2,700	0
751-800	8	2,701-2,800	1
801-850	2	2,801-2,900	0
851-900	10	2,901-3,000	10
901-950	6	-	1
951-1000	5	-	0
1,001-1,100	3	-	
1,101-1,200	7	5,801-5,900	1
		Total	3,508

TABLE 3B-10

SKIDDING DISTANCES IN AIR CARRIER ACCIDENTS
1964 THROUGH 1975

Skidding Distance (ft)				
In-Flight Accidents	Airport-Related Accidents			
0	610	360	3,800	995
1,050	375	1,050	800	775
300	600	440	270	1,525
55	1,200	1,840	350	248
800	340	1,020	107	400
0	0	1,400	250	267
1,000	750	580	1,600	
950	1,200	200	3,200	
150	1,015	0	262	
175	700	700	1,200	
180	1,080	279	790	
1,100	3,600	250	850	
Average value = 480	Average value = 888			

TABLE 3B-11

REPRESENTATIVE IMPACT ANGLES
IN AIR CARRIER ACCIDENTS

Impact Angles

In-Flight Accidents (Degrees)	Airport-Related Accidents (Degrees)		
90	22	39	45
90	60	90	13
35	70	90	
8	90	5	
60	4	70	
60	9	90	
90	90	70	
11	14	5	
30	5	6	
40	8	1	
90	6	4	
90	45	6	
	12	5	

TABLE 3B-12

TARGET AREA INFORMATION

Aircraft Type or Operation	Plan Area (ft^2)	Shadow Area (ft^2)	Frontal Exposure of Plant (ft)	Skidding Distance (ft)	Skidding Area (ft^2)	Total Target Area (ft^2)	Total Target Area (mi^2)
General aviation	76,770	38,000	255	126	32,130	146,900	0.0053
Air carrier, airport-related	76,770	29,650	355	888	315,240	421,660	0.0151
Air carrier, in-flight	76,770	14,685	355	480	170,400	261,855	0.0094
Military - KC-135, C-123	76,770	38,000	347	928	322,016	436,786	0.0157
Military - A-7	76,770	38,000	276	1,227	338,655	453,425	0.0163

TABLE 3B-13

GENERAL AVIATION OPERATIONS
1964 through 1975

Calendar Year	Operations at Towered Airports	Total Operations at Towered and Nontowered Airports
1964	23,020,000	63,945,000*
1965	26,573,000	73,814,000*
1966	33,445,000	92,903,000*
1967	37,223,000	103,397,000*
1968	41,567,000	115,464,000*
1969	41,957,000	116,547,000*
1970	41,384,000	114,956,000*
1971	40,401,000	112,225,000*
1972	38,172,000	115,400,000**
1973	41,363,000	114,897,000*
1974	43,124,000	125,700,000**
1975	45,297,000	130,700,000**
Total	453,526,000	Total 1,279,948,000

NOTES:

* In the period 1972 through 1977, nontowered general aviation operations constituted conservatively 64 percent of all operations (FAA 1976a; Mercer 1978).

** Federal Aviation Administration 1976a.

TABLE 3B-14

AIR CARRIER ACCIDENTS VERSUS AIRPORT PROXIMITY
1964 THROUGH 1975

	Fatal Accidents		
Proximity Class	Total	With Airport Data	Without Airport Data
In traffic pattern	9	0	9
Within 1/4 mile	1	0	1
Within 1/2 mile	2	1	3
Within 3/4 mile	2	0	2
Within 1 mile	4	0	4
Within 2 miles	8	0	8
Within 3 miles	3	0	3
Within 4 miles	4	0	4
Within 5 miles	3	3	0
Total within 5 miles	37	36	1
Total beyond 5 miles	57	14	43
Total	94	50	44

TABLE 3B-15

AIR CARRIER ACTIVITIES
1964 through 1975

Year	Number of Operations	Aircraft Miles Flown (x 1,000)
1964	7,600,000*	1,278,000*
1965	8,100,000*	1,363,000*
1966	8,702,900	1,464,200
1967	9,845,200	1,813,000
1968	10,649,400	2,124,000
1969	10,707,700	2,359,700
1970	10,138,200	2,383,400
1971	9,946,300	2,343,600
1972	10,238,600	2,336,900
1973	10,204,600	2,401,900
1974	9,389,300	2,213,500
1975	9,350,400	2,202,600
Total	114,672,000	Total 24,282,000

NOTE:

*Estimated

TABLE 3B-16

MILITARY AIRCRAFT (A-7, C-123, KC-135) ACCIDENT RATES
1968 THROUGH 1976

Type of Aircraft	Year	Phase of Operation	Number	Rate*
A-7	1970	Landing, lost control	1	
	1971	Takeoff, climb, initial	1	2.7
	1971	Landing, approach	1	2.7
	1972	In flight, normal	1	1.6
	1972	In flight, climb, prolonged	1	1.6
	1973	In flight, normal	5	5.7
	1975	In flight, normal	3	3.4
	1975	Landing, approach	3	3.4
	1976	In flight, normal	3	3.0
C-123	1968	Takeoff, climb, initial	1	.8
	1969	Takeoff, climb, initial	1	.8
	1970	In flight, normal	1	.9
	1970	Landing, approach	2	1.8
	1971	Landing, approach	1	1.4
	1972	Landing, approach	1	3.2
KC-135	1968	Takeoff, climb, initial	1	.2
	1968	In flight, normal	1	.2
	1969	In flight, normal	2	.5
	1971	In flight, normal	1	.3
	1971	Landing, approach	1	.3
	1974	Takeoff, climb, initial	1	.3
	1974	In flight, normal	1	.3
	1975	Takeoff, climb, initial	1	.4

NOTE:

*Per 100,000 flying hours.

TABLE 3B-17

AIRPORT-RELATED MILITARY AIRCRAFT CRASH RATES
1968 THROUGH 1976

Year	A-7 Crash Rate	Accidents/Operation KC-135 Crash Rate	C-1234 Crash Rate
1968	0	$1.6x10^{-5}$	$0.4x10^{-5}$
1969	0	$1.6x10^{-5}$	0
1970	$5.4x10^{-5}$	$3.6x10^{-5}$	0
1971	$10.8x10^{-5}$	$2.8x10^{-5}$	$0.6x10^{-5}$
1972	0	$6.4x10^{-5}$	0
1973	0	0	0
1974	0	0	$0.6x10^{-5}$
1975	$6.8x10^{-5}$	0	$0.6x10^{-5}$
1976	0	0	0
	Average = $2.6x10^{-5}$	Average = $1.8x10^{-5}$	Average = $0.2x10^{-5}$

TABLE 3B-18

GENERAL AVIATION ACCIDENTS VERSUS AIRPORT PROXIMITY
1964 THROUGH 1975

	Fatal Accidents		
Proximity Class	Total	With Airport Data	Without Airport Data
In traffic pattern*	685	673	12
Within 1/4 mile	302	296	6
Within 1/2 mile	242	237	5
Within 3/4 mile	90	89	1
Within 1 mile	242	242	0
Within 2 miles	438	427	11
Within 3 miles	328	324	4
Within 4 miles	267	263	4
Within 5 miles	117	115	2
Total within 5 miles	2,711	2,666	45
Total beyond 5 miles	3,640	84	3,556
Total	6,351	2,750	3,601

NOTE:

* For purposes of analysis, those accidents in the traffic pattern are distributed among other categories (as their precise location is unknown). This is accomplished as follows (accidents with airport data): There are 8 other categories:

673/8 = (84 x 8) + 1
within 1/4 mi = 85 + 296 = 381
within 1/2 mi = 84 + 237 = 321
within 3/4 mi = 84 + 89 = 173
within 1 mi = 84 + 242 = 326
within 2 mi = 84 + 427 = 511
within 3 mi = 84 + 324 = 408
within 4 mi = 84 + 263 = 347
within 5 mi = 84 + 115 = 199

TABLE 3B-19

U.S. REGISTERED CIVIL AIRCRAFT ACCIDENTS
IN THE VICINITY OF THE BEAVER VALLEY POWER STATION
FROM 1964 THROUGH 1977

Date	Location	Make	Model	Weight Category (lb)	Airport	Airport Proximity	Aircraft Damage	Injury Index	Operational Phase
10/30/64	Pittsburgh, Pa.	Curtis	C-46F	>12,500	Greater Pittsburgh	On airport	Substantial	None	Forced Landing
8/12/64	Beaver Falls, Pa.	Brantly	B2	<12,500	Beaver County	On airport	Substantial	Minor	Forced Landing
5/03/64	Beaver Falls, Pa.	Mooney	M20C	<12,500	Beaver County	Within 1/4 mile	Substantial	None	Forced Landing
9/06/64	Pittsburgh, Pa.	Piper	PA24	<12,500	Greater Pittsburgh	On airport	Substantial	None	Landing
10/23/64	New Cumberland, WVa.	Champion	7FC	<12,500	Herron	On airport	Substantial	None	Landing
11/09/65	Coraopolis, Pa.	Douglas	DC3	>12,500	Greater Pittsburgh	Within 2 Miles	Destroyed	Serious	Forced Landing
6/15/65	Beaver Falls, Pa.	Cessna	120	<12,500	Beaver County	On airport	Substantial	None	Taxiing after landing - nose over
8/07/65	Beaver Falls, Pa.	Beechcraft	C-18S	<12,500	Beaver County	On airport	Substantial	None	Taxiing after landing- collided with ditches
2/10/66	Greater Pittsburgh Airport	Fairchild	F-27J	>12,500	Greater Pittsburgh	On airport	Substantial	None	Forced Landing
3/19/66	Coraopolis, Pa.	Cessna	172G	<12,500	Greater Pittsburgh	On airport	Substantial	None	Taxiing to takeoff - nose over
7/03/66	Pittsburgh, Pa.	Mooney	20E	<12,500	Greater Pittsburgh	On airport	Substantial	None	Landing - wheels up
7/11/66	New Cumberland, WVa.	Aeronca	7FC	<12,500	Herron	On airport	Substantial	None	Landing - gear collapsed

TABLE 3B-19 (Cont)

Date	Location	Make	Model	Weight Category (lb)	Airport	Airport Proximity	Aircraft Damage	Injury Index	Operational Phase
7/23/66	New Cumberland, WVa.	Cessna	337	<12,500	Herron	On airport	Substantial	None	Landing - collided with fence
12/30/66	Coraopolis, Pa.	Piper	PA24	<12,500	Greater Pittsburgh	On airport	Substantial	None	Landing - gear collapsed
5/15/67	McKees Rocks, Pa.	Mooney	M20C	<12,500	Greater Pittsburgh	Within 4 miles	Substantial	None	Forced Landing
11/21/67	New Cumberland, WVa.	Cessna	172F	<12,500	Herron	On airport	Substantial	None	Overshoot on landing - collided with dirt bank
12/23/67	Beaver Falls, Pa.	Piper	PA25	<12,500	Beaver County	Within 3 miles	Substantial	None	Landing, final approach - collided with trees
3/09/68	Pittsburgh, Pa.	Mitsubishi	MU-2B	<12,500	Greater Pittsburgh	On airport	Substantial	None	Landing - wheels up
7/13/68	Beaver Falls, Pa.	Piper	J3	<12,500	Beaver County	On airport	Destroyed	Serious	In flight acrobatics - stall
9/01/68	Beaver Falls, Pa.	Cessna	180	<12,500	Beaver County	On airport	Substantial	None	Landing - gear collapsed
12/28/68	Coraopolis, Pa.	Cessna	150	<12,500	Greater Pittsburgh	On airport	Substantial	None	Taxiing from landing - nose over
4/13/69	Coraopolis, Pa.	Beech	T34	<12,500	Greater Pittsburgh	On airport	Substantial	None	Landing - wheels up
3/06/69	Coraopolis, Pa.	Beech	D18S	<12,500	Greater Pittsburgh	On airport	Substantial	None	Landing - gear collapsed
8/20/69	Coraopolis, Pa.	Cessna	310N	<12,500	Greater Pittsburgh	In traffic pattern	Substantial	Serious	Landing, final approach - collided with wires
9/10/70	Coraopolis, Pa.	Piper	PA-28R	<12,500	Greater Pittsburgh	On airport	Substantial	None	Taxiing from landing - collided with dirt bank

TABLE 3B-19 (Cont)

Date	Location	Make	Model	Weight Category (lb)	Airport	Airport Proximity	Aircraft Damage	Injury Index	Operational Phase
10/24/70	New Cumberland, WVa.	Lake	LA4	<12,500	Herron	Within 3 miles	Destroyed	Fatal	In flight - collision with ground
11/12/70	Clinton, Pa.	Beech	G18S	<12,500	Greater Pittsburgh	Within 3 miles	Destroyed	Serious	Landing, final approach - collided with ground
7/08/70	Coraopolis, Pa.	Handly-Page	137	<12,500	Greater Pittsburgh	On airport	Substantial	None	Crashed on landing
8/20/71	Pittsburgh, Pa.	Convair	580	>12,500	Greater Pittsburgh	On airport	Substantial	None	Landing - gear collapsed
6/12/71	Beaver Falls, Pa.	Cessna	150J	<12,500	Beaver County	On airport	Substantial	Minor	Taxiing from landing - went over step bank, became inverted
5/01/71	Beaver Falls, Pa.	Cessna	172	<12,500	Beaver County	In traffic pattern	Substantial	None	Propeller blade failed after takeoff - emergency landing
6/04/71	Coraopolis, Pa.	Ham-Flugzen	HFB320	>12,500	Greater Pittsburgh	On airport	Substantial	None	Fire - Takeoff aborted
4/21/71	Coraopolis, Pa.	Piper	PA23	<12,500	Greater Pittsburgh	On airport	Substantial	None	Gear retracted on takeoff
4/28/72	New Cumberland, WVa.	Piper	PA28	<12,500	Herron	On airport	Substantial	None	Landing - collided with trees
4/29/72	New Cumberland, WVa.	Aeronca	7AC	<12,500	Herron	On airport	Substantial	None	Landing - collided with wind tee
6/12/73	Pittsburgh, Pa.	Convair	580	>12,500	Greater Pittsburgh	On airport	Substantial	Minor	Gear collapsed on takeoff
4/10/73	Coraopolis, Pa.	Piper	PA32	<12,500	Greater Pittsburgh	Within 1/2 mile	Destroyed	Fatal	Landing, final approach - collided with trees
3/21/73	Beaver Falls, Pa.	Cessna	150J	<12,500	Beaver County	On airport	Substantial	None	Landing - wing hit runway

TABLE 3B-19 (Cont)

Date	Location	Make	Model	Weight Category (lb)	Airport	Airport Proximity	Aircraft Damage	Injury Index	Operational Phase
6/13/73	Beaver Falls, Pa.	Beech	D95A	<12,500	Beaver County	On airport	Substantial	None	Landing - gear up
7/30/73	Beaver Falls, Pa.	Piper	Pa.16	<12,500	Beaver County	On airport	Substantial	None	Takeoff - gear collapsed
12/07/73	Coraopolis, Pa.	Beech	E18S	<12,500	Greater Pittsburgh	Within 1/2 mile	Destroyed	Fatal	Takeoff - stall
7/29/74	Beaver Falls, Pa.	Cessna	182	<12,500	Beaver County	Within 1 mile	Substantial	Minor	Landing - collided with trees
8/26/74	New Cumberland, WVa.	Cessna	172	<12,500	Herron	On airport	Substantial	None	Landing, overshoot - collided with fence
7/24/74	Pittsburgh, Pa.	Piper	PA28R	<12,500	Greater Pittsburgh	On airport	Substantial	None	Taxiing from landing - gear collapsed
4/23/75	Beaver Falls, Pa.	Cessna	172K	<12,500	Beaver County	On airport	Substantial	None	Taxiing from landing - nose down
4/01/75	Beaver Falls, Pa.	Hiller	UH-12B	<12,500	Beaver County	Within 2 miles	Substantial	None	Engine failure in flight - hard landing
9/18/75	New Cumberland, WVa.	Cessna	150G	<12,500	Herron	On airport	Substantial	Minor	Landing - stall
9/02/75	New Cumberland, WVa.	Cessna	172H	<12,500	Herron	On airport	Substantial	None	Landing, overshoot - collided with ditches
9/03/75	Beaver Falls, Pa.	Hiller	UH-12B	<12,500	Beaver County	On airport	Substantial	None	Takeoff aborted - collision with ground
11/30/75	Pittsburgh, Pa.	Piper	PA-28R	<12,500	Greater Pittsburgh	On airport	Substantial	None	Landing - gear collapsed
1/22/76	Beaver Falls, Pa.	Piper	PA28	<12,500	Beaver County	On airport	Substantial	None	Landing - collided with snowbank
9/19/76	Beaver Falls, Pa.	Cessna	150L	<12,500	Beaver County	On airport	Substantial	None	Landing - gear collapsed

TABLE 3B-19 (Cont)

Date	Location	Make	Model	Weight Category (lb)	Airport	Airport Proximity	Aircraft Damage	Injury Index	Operational Phase
9/16/76	Beaver Falls, Pa.	Beech	G18S	<12,500	Beaver County	On airport	Substantial	None	Landing, overshoot - collided with ditches
5/26/76	Sewickley, Pa.	Bellanca	17-30A	<12,500	Greater Pittsburgh	Within 4 miles	Destroyed	Fatal	In flight - stall
7/13/76	New Cumberland, WVa.	Grumman American	AA-1B	<12,500	Herron	On airport	Substantial	None	Landing - gear collapsed
5/7/77	Beaver Falls, Pa.	Alon	A-2	<12,500	Beaver County	On airport	Substantial	None	Landing - gear collapsed
8/17/77	Pittsburgh, Pa.	Beech	G18S	<12,500	Greater Pittsburgh	On airport	Substantial	Serious	Takeoff, initial climb - stall, forced landing
5/7/77	New Cumberland, WVa.	Cessna	172	<12,500	Herron	Within 1/4 mile	Substantial	None	Landing - collided with trees

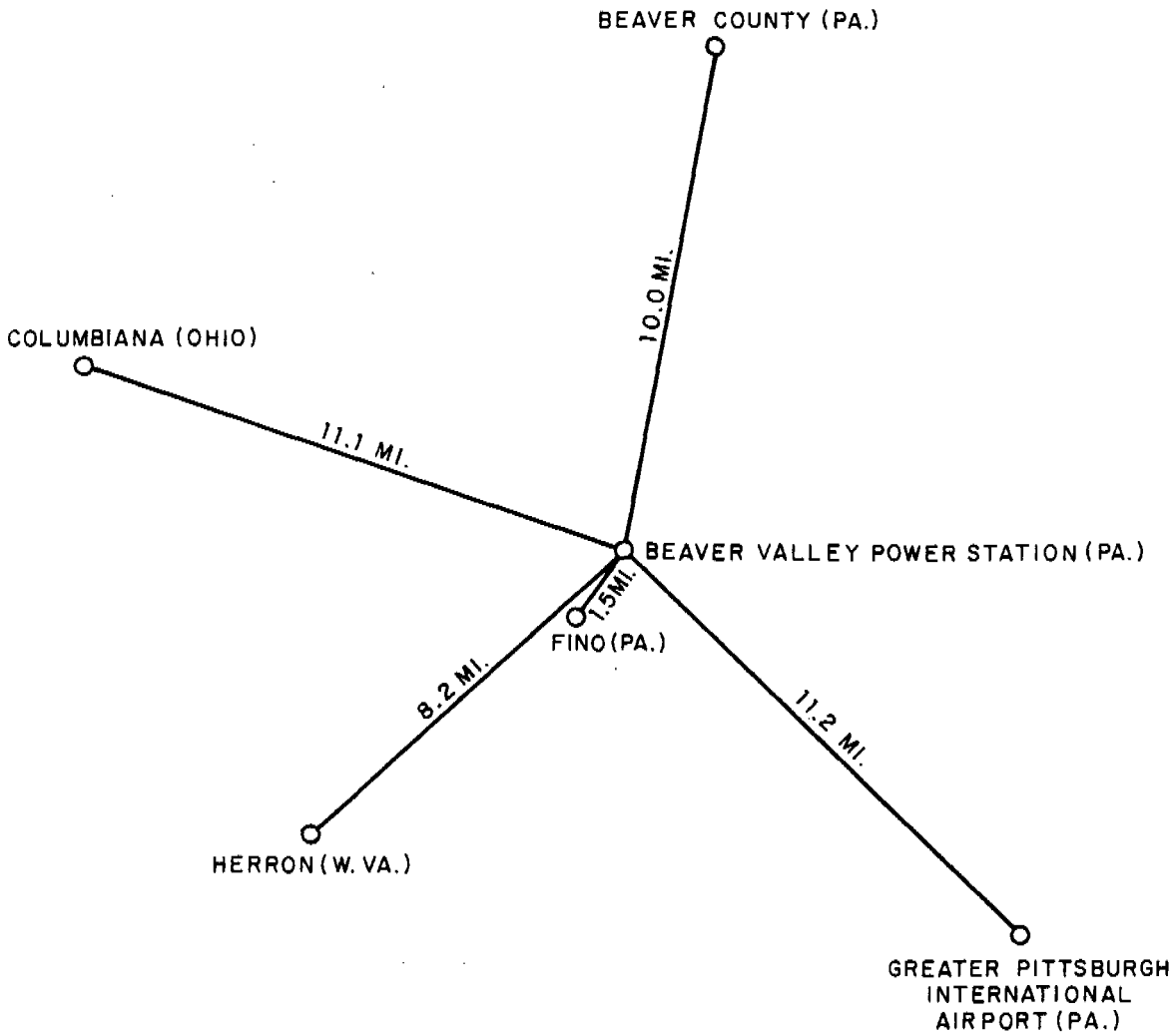

FIGURE 3B.4-1

AIRPORTS IN THE VICINITY OF THE BEAVER VALLEY POWER STATION

BEAVER VALLEY POWER STATION – UNIT 2
FINAL SAFETY ANALYSIS REPORT

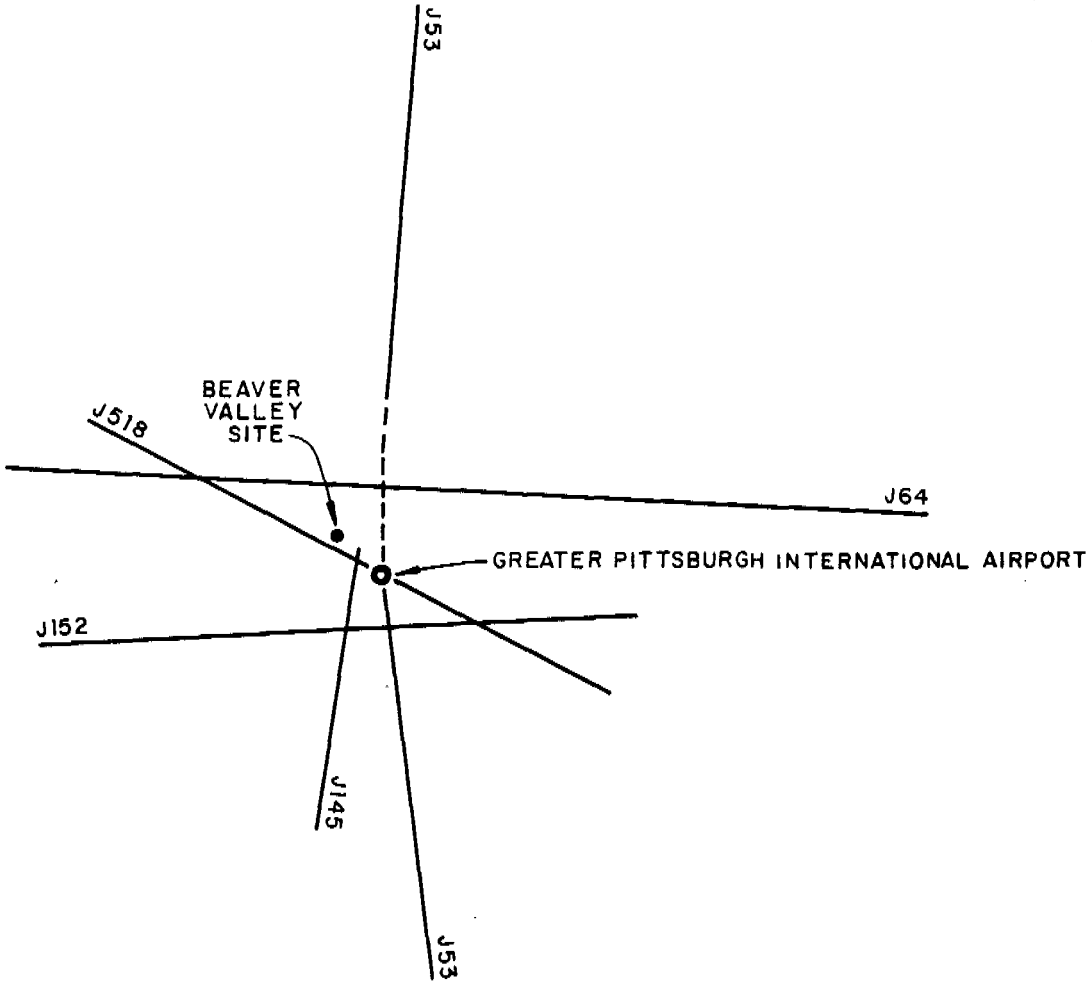

FIGURE 3B.4-2

JET AIR ROUTES IN THE BEAVER VALLEY AREA

BEAVER VALLEY POWER STATION – UNIT 2
FINAL SAFETY ANALYSIS REPORT

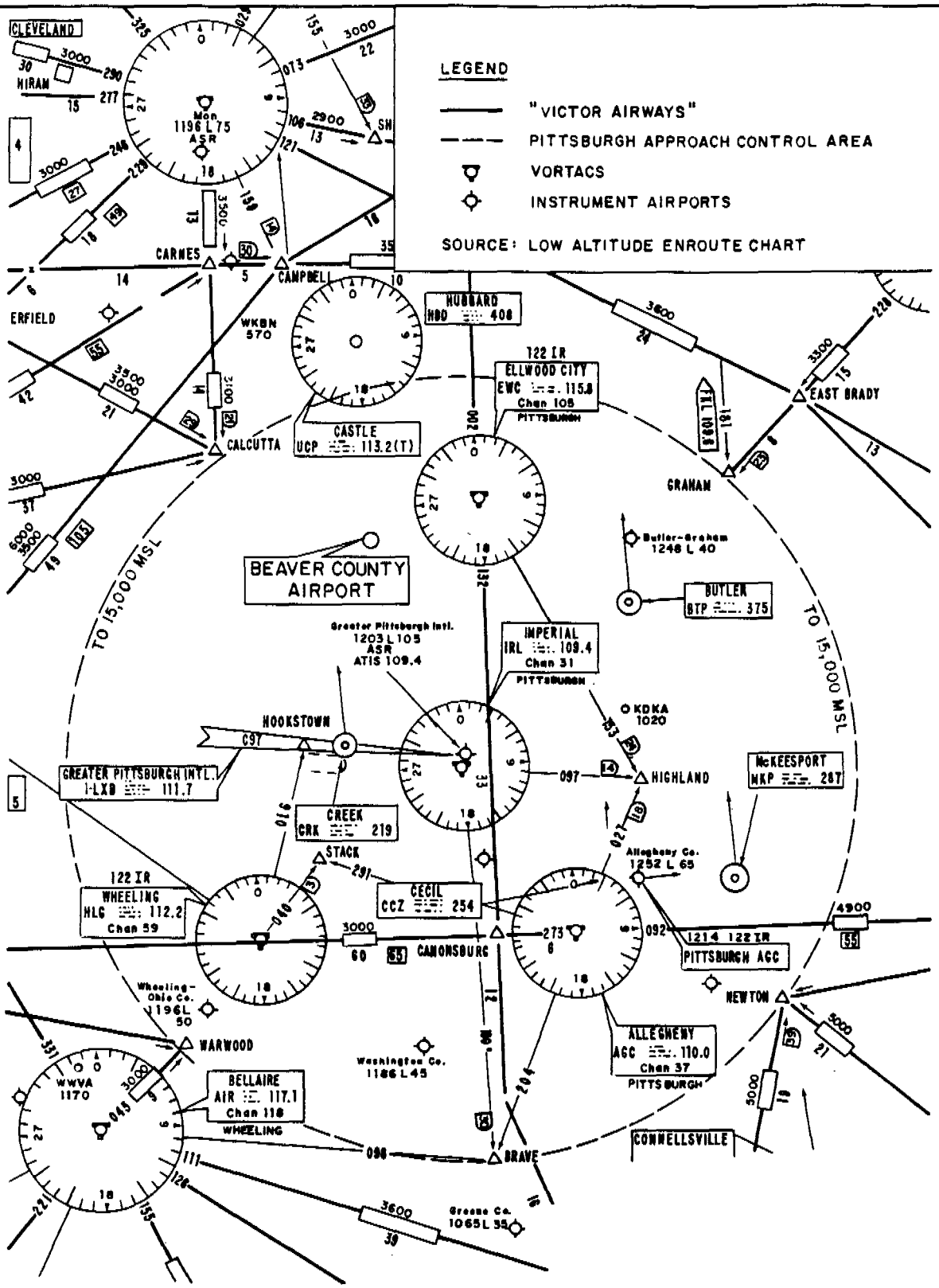

FIGURE 3B.4-3

BEAVER COUNTY AIRPORT
IFR ROUTE STRUCTURE
PITTSBURGH AREA

BEAVER VALLEY POWER STATION-UNIT 2
FINAL SAFETY ANALYSIS REPORT

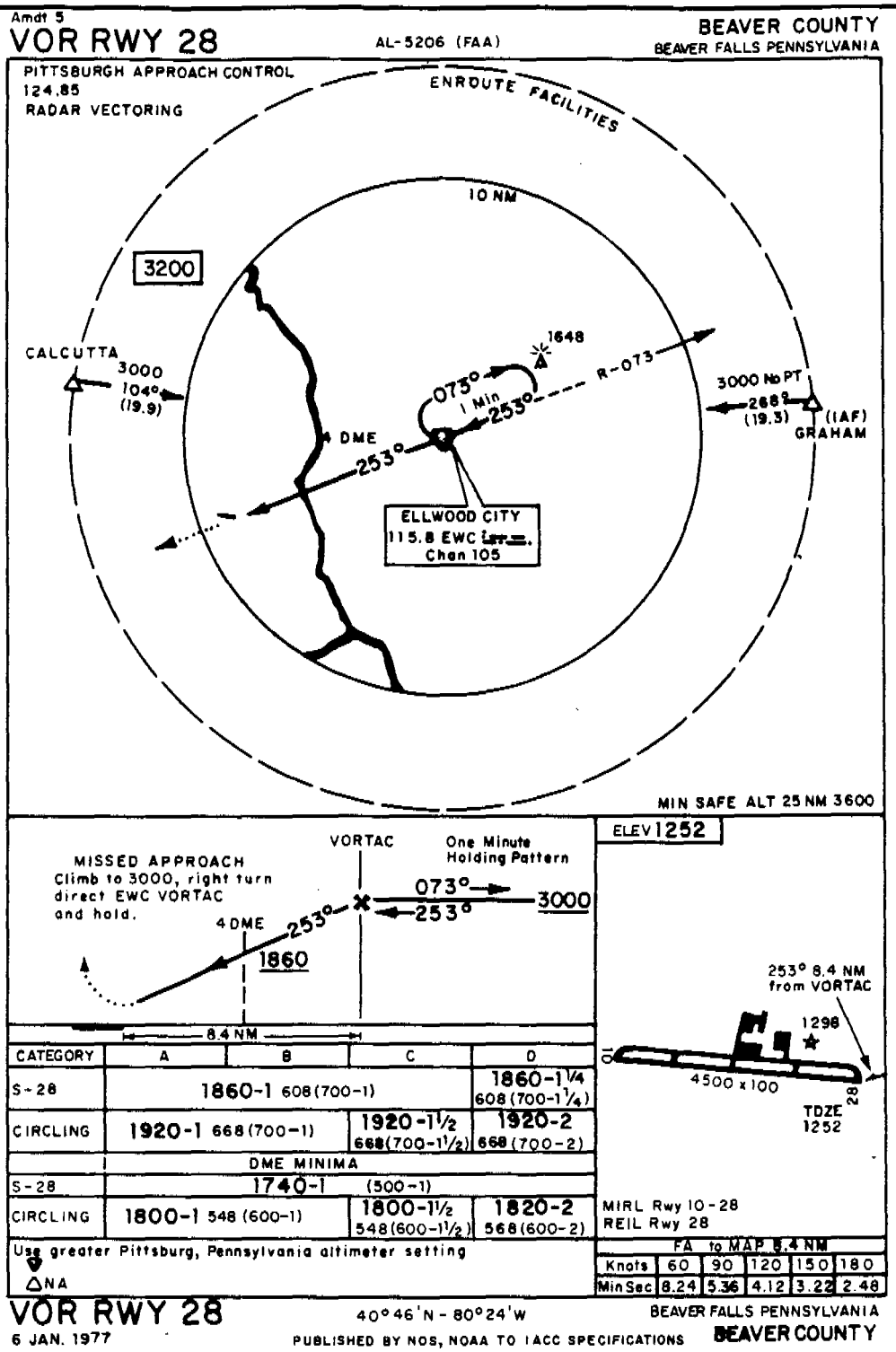

FIGURE 3B.4-4
BEAVER COUNTY AIRPORT
PUBLISHED INSTRUMENT APPROACH
PROCEDURE CHART

BEAVER VALLEY POWER STATION-UNIT 2
FINAL SAFETY ANALYSIS REPORT

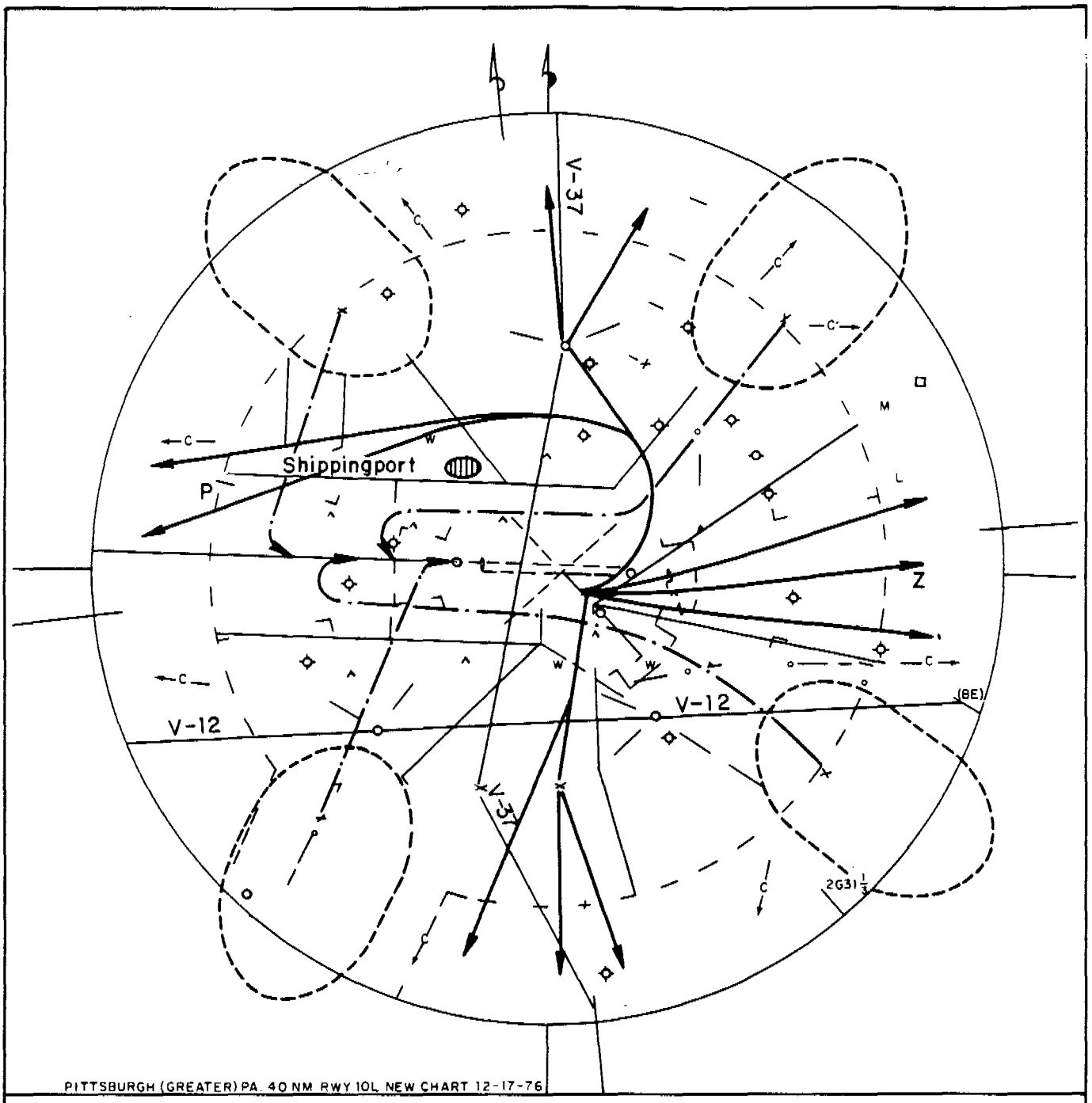

HOLDING PATTERNS
DEPARTURE ROUTES
INBOUND ROUTES

FIGURE 3B.4-5
ROUTES AND OPERATING PATTERNS, TRAFFIC TO THE EAST, GREATER PITTSBURGH AREA

BEAVER VALLEY POWER STATION-UNIT 2
FINAL SAFETY ANALYSIS REPORT

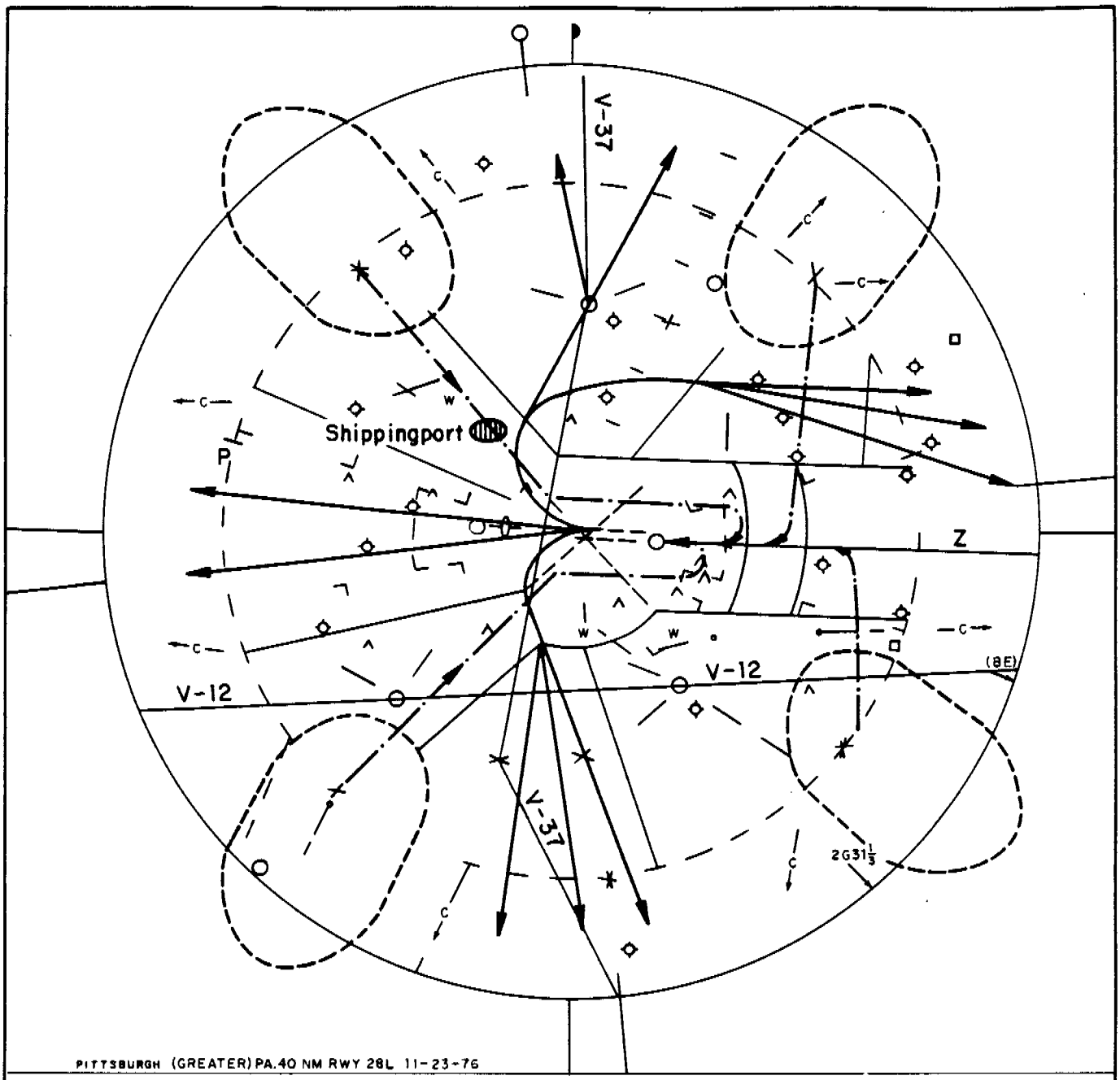

HOLDING PATTERNS
DEPARTURE ROUTES
INBOUND ROUTES

FIGURE 3B.4-6
ROUTES AND OPERATING PATTERNS, TRAFFIC TO THE WEST, GREATER PITTSBURGH AREA

BEAVER VALLEY POWER STATION-UNIT 2
FINAL SAFETY ANALYSIS REPORT

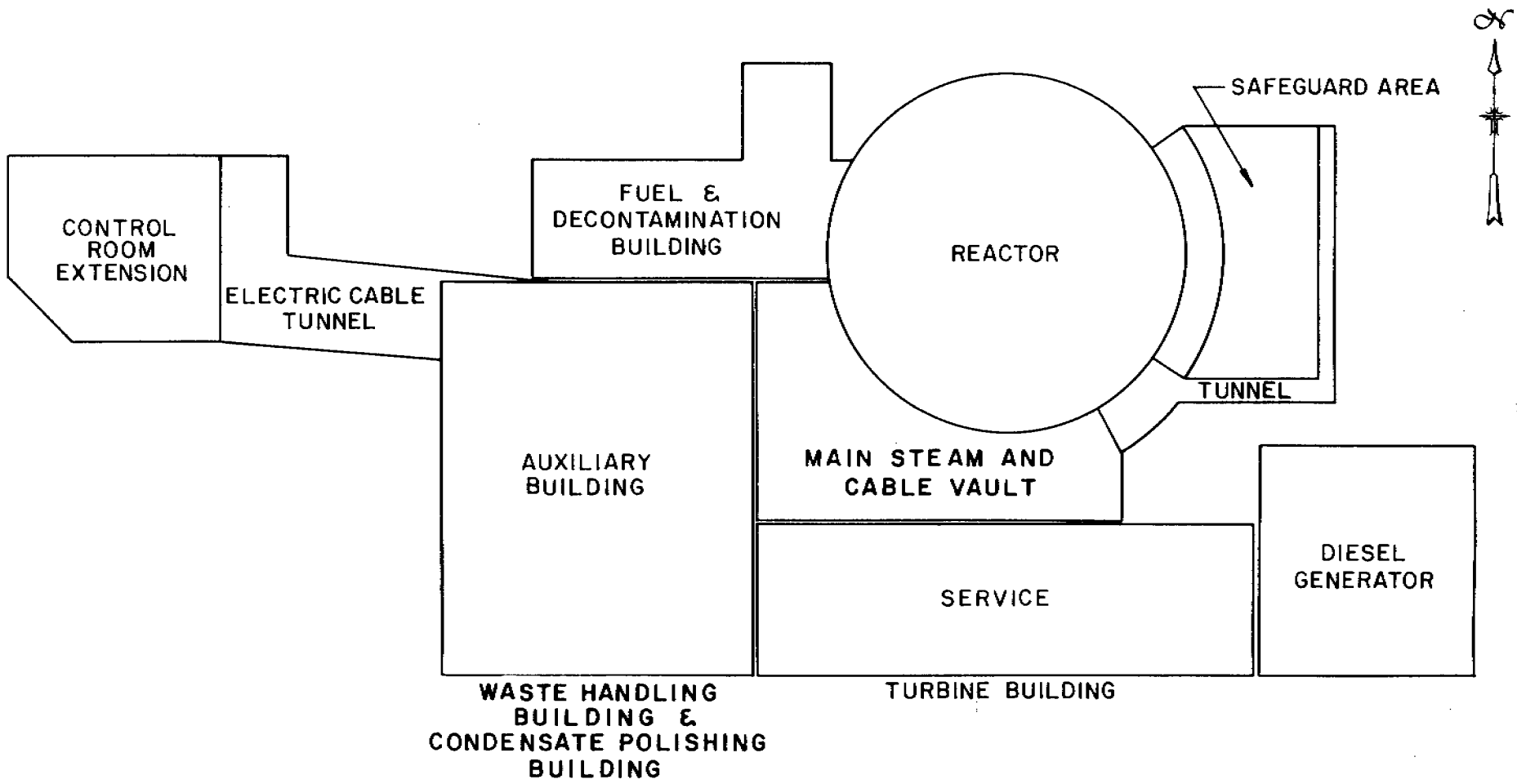

FIGURE 3B.5-1
BEAVER VALLEY POWER STATION
UNIT No. 2
SAFETY-RELATED STRUCTURES

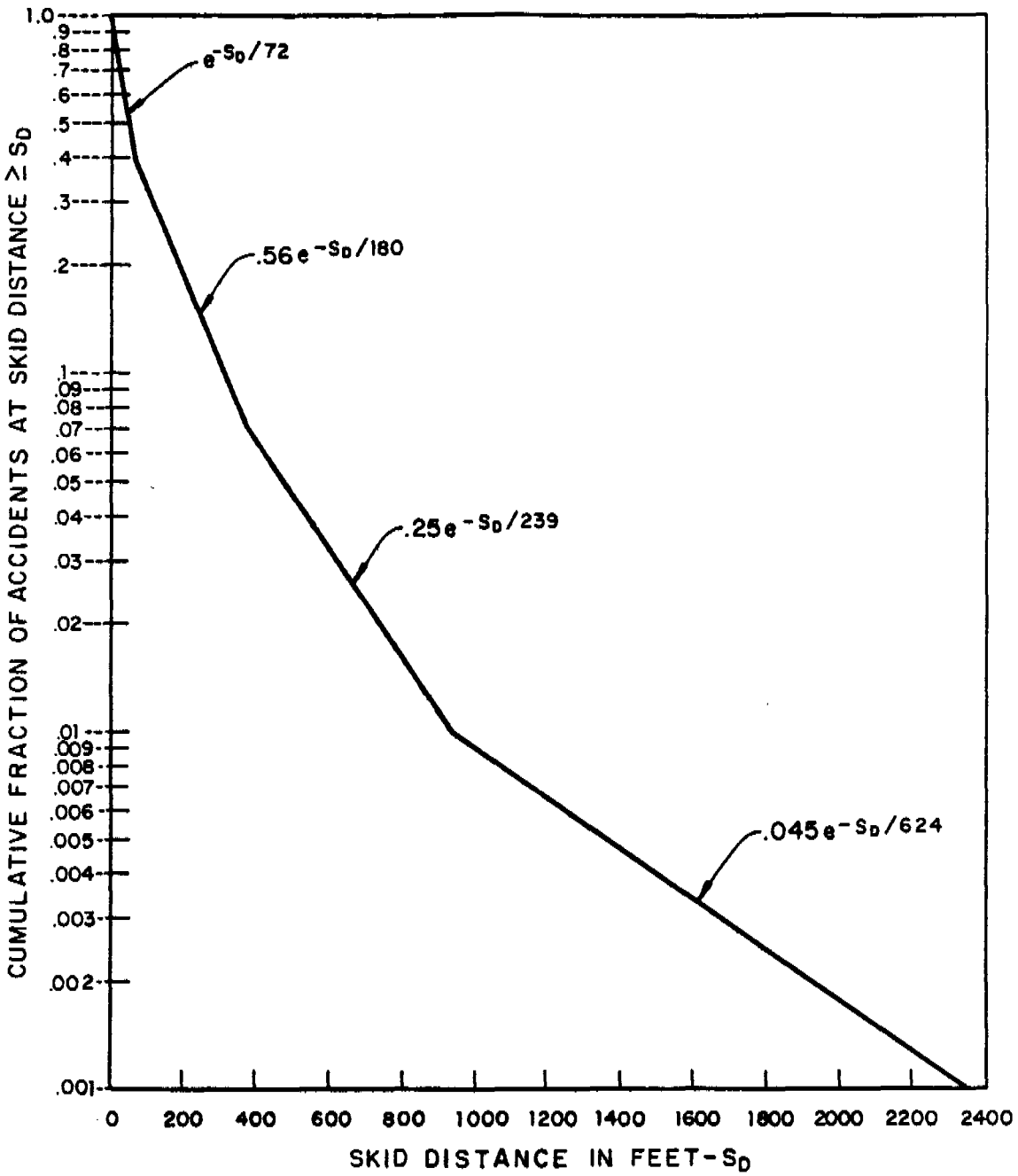

FIGURE 3B.5-2

FREQUENCY CURVE OF SKID DISTANCE FOR GENERAL AVIATION ACCIDENTS

BEAVER VALLEY POWER STATION-UNIT 2
FINAL SAFETY ANALYSIS REPORT

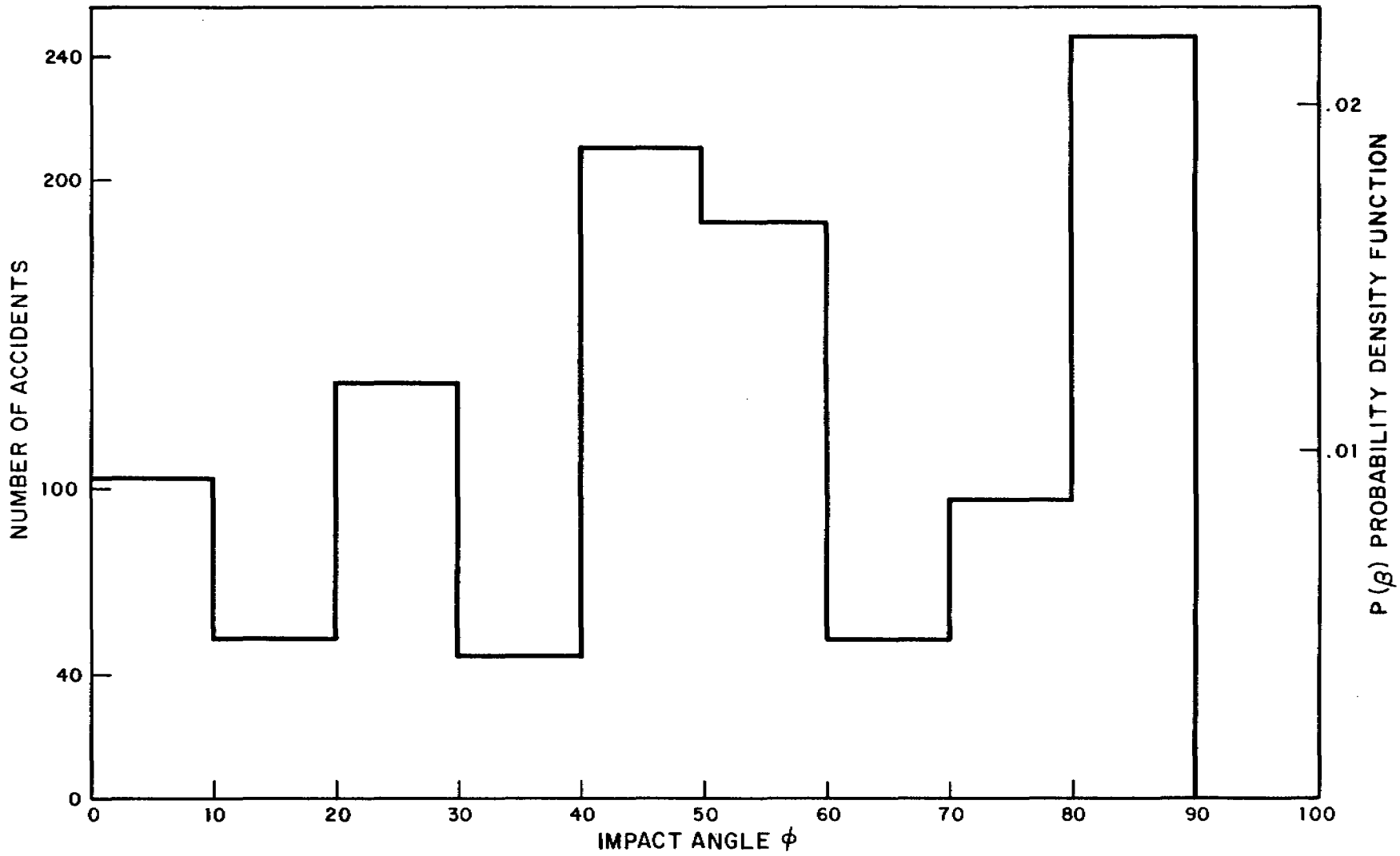

FIGURE 3B.5-3
DISTRIBUTION OF IMPACT ANGLE FOR GENERAL AVIATION ACCIDENTS

BEAVER VALLEY POWER STATION–UNIT 2
FINAL SAFETY ANALYSIS REPORT

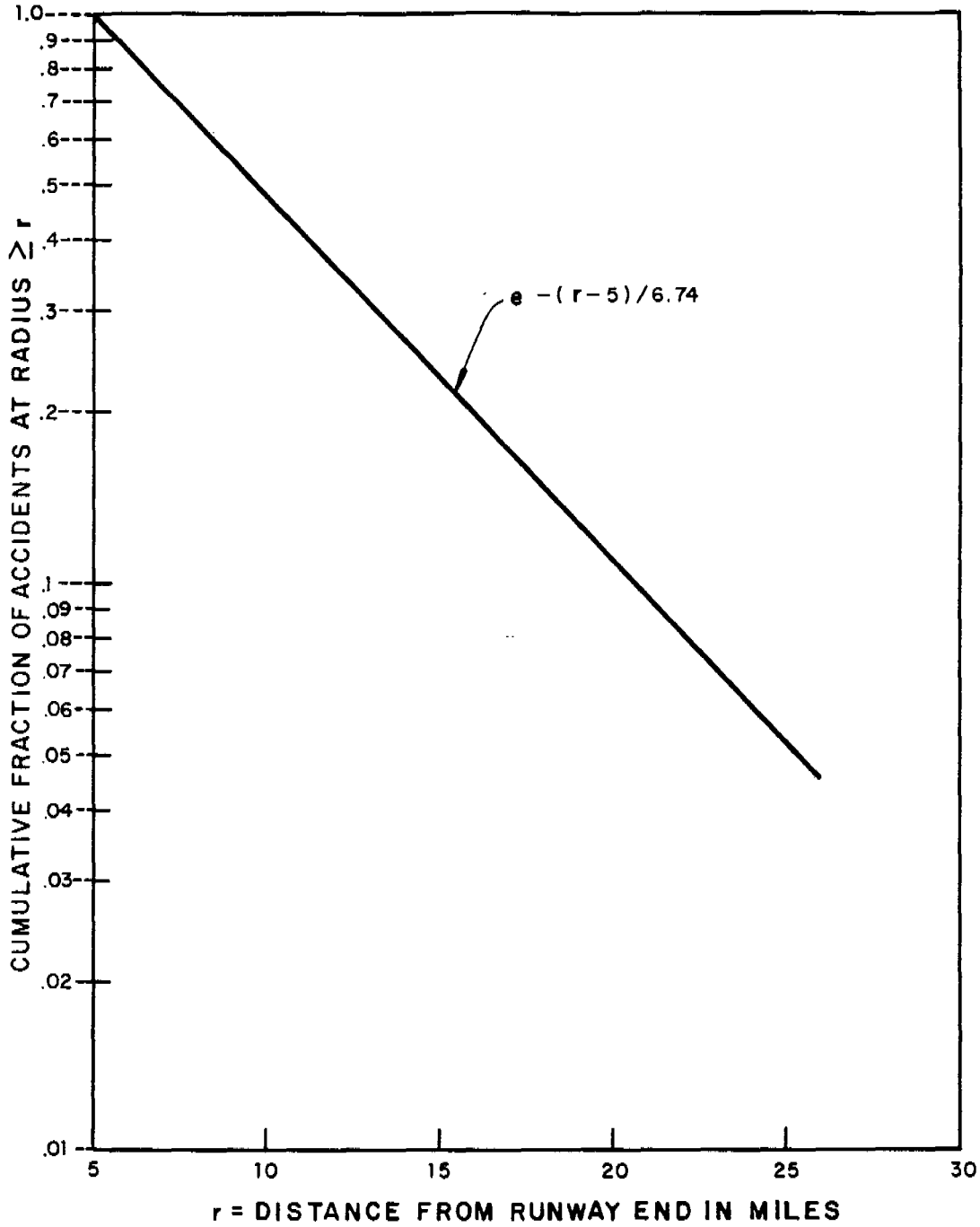

FIGURE 3B.7-1

FREQUENCY CURVE OF RADIAL LOCATION FOR AIR CARRIER ACCIDENTS

BEAVER VALLEY POWER STATION – UNIT 2
FINAL SAFETY ANALYSIS REPORT

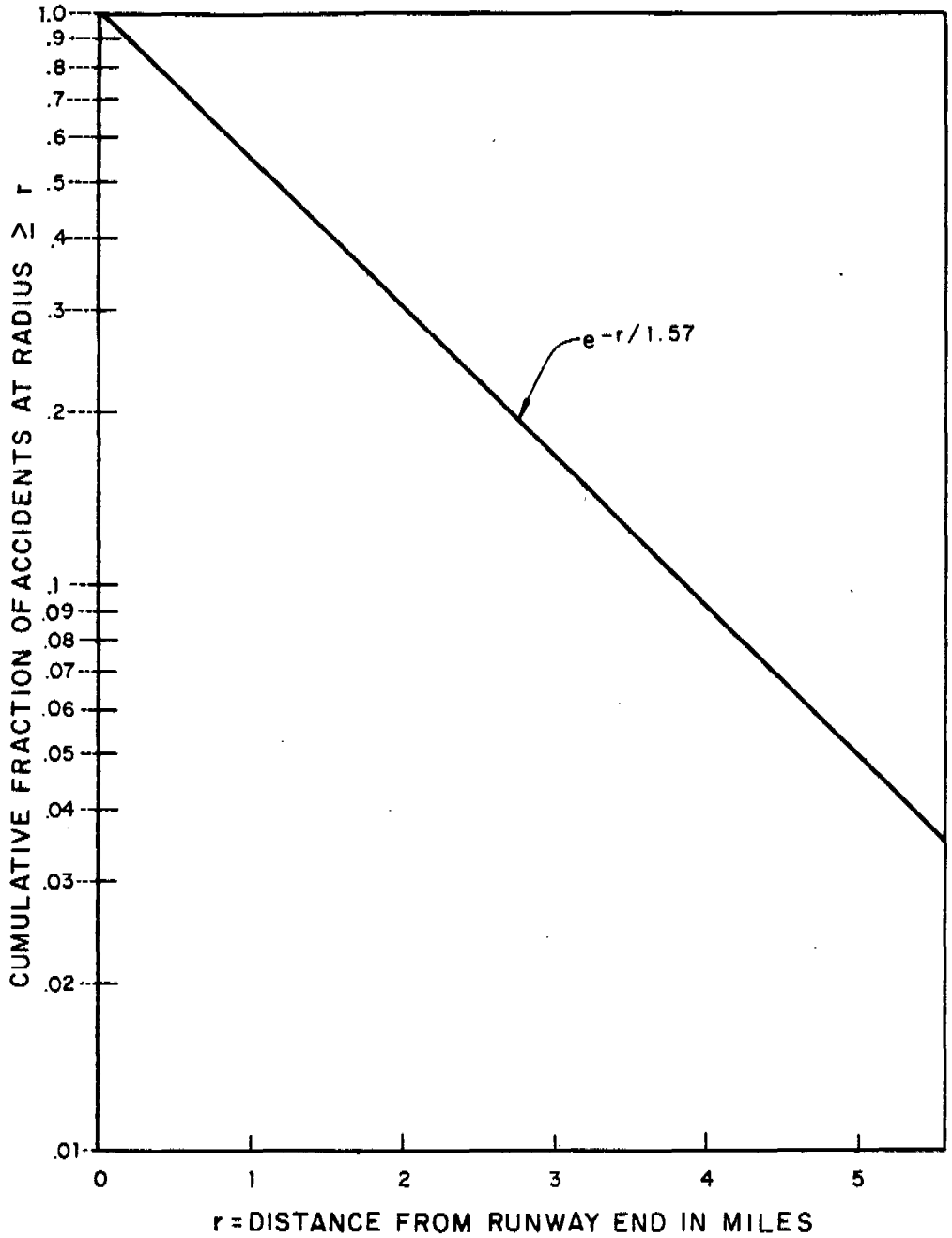

FIGURE 3B.7-2

FREQUENCY CURVE OF RADIAL LOCATION FOR GENERAL AVIATION ACCIDENTS

BEAVER VALLEY POWER STATION - UNIT 2
FINAL SAFETY ANALYSIS REPORT

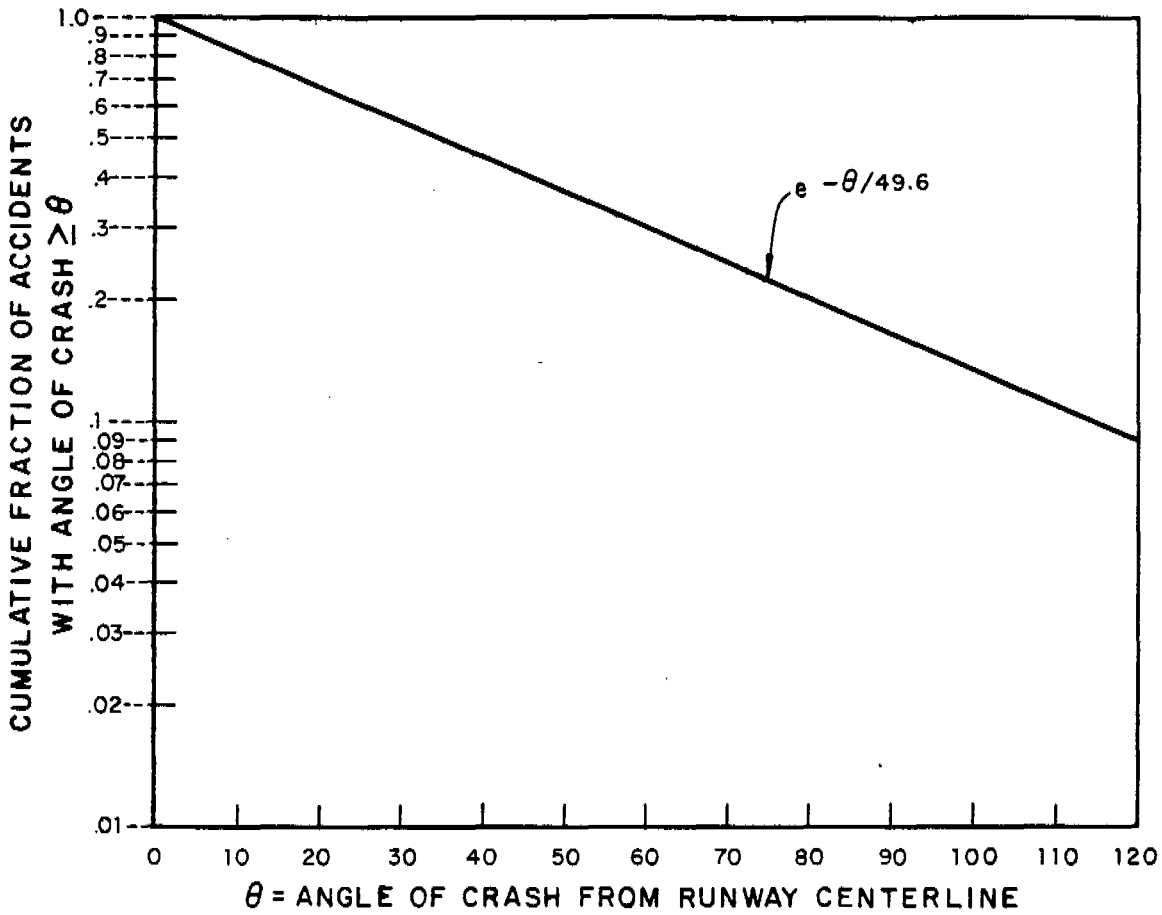

FIGURE 3B.7-3

FREQUENCY CURVE OF ANGULAR LOCATION FOR GENERAL AVIATION ACCIDENTS

BEAVER VALLEY POWER STATION-UNIT 2
FINAL SAFETY ANALYSIS REPORT

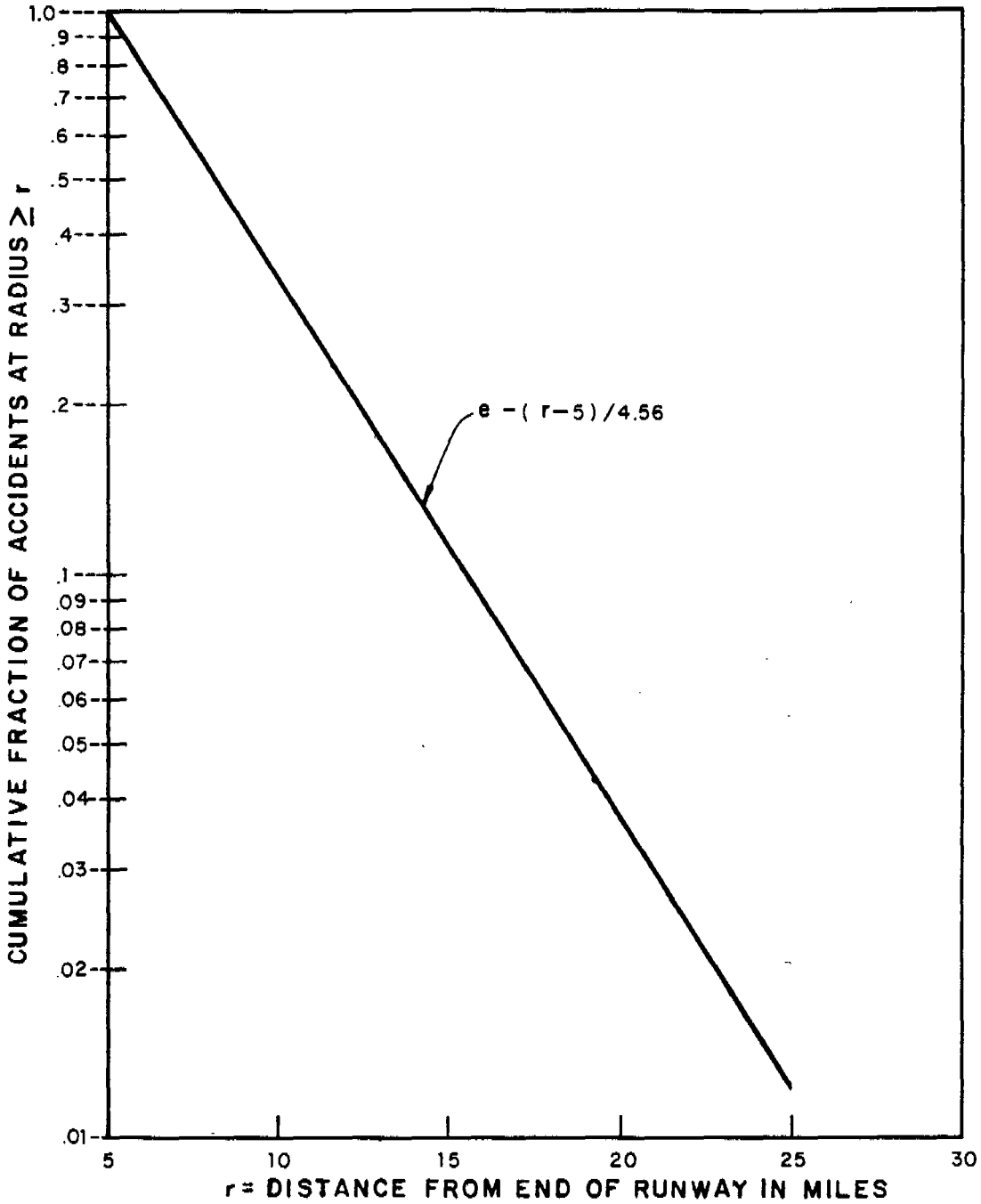

FIGURE 3B.7-4

FREQUENCY CURVE OF RADIAL LOCATION FOR GENERAL AVIATION ACCIDENTS BEYOND 5 MILES

BEAVER VALLEY POWER STATION – UNIT 2
FINAL SAFETY ANALYSIS REPORT

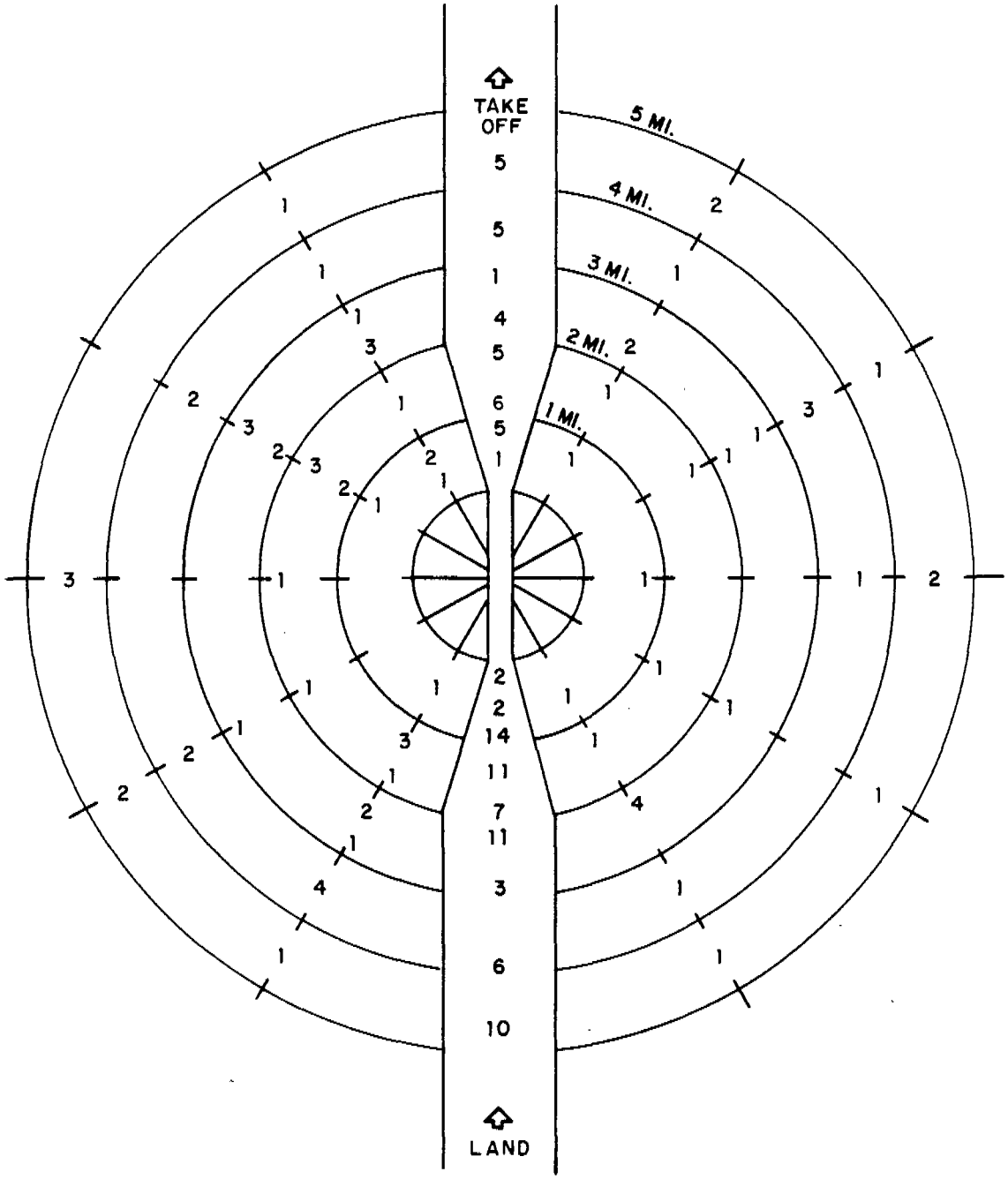

FIGURE 3B.7-5
LOCATION OF 174 USAF MAJOR AND MINOR AIRCRAFT ACCIDENTS IN THE VICINITY OF AIRFIELDS
5 MILE ZONE 1960-1964
BEAVER VALLEY POWER STATION-UNIT 2
FINAL SAFETY ANALYSIS REPORT

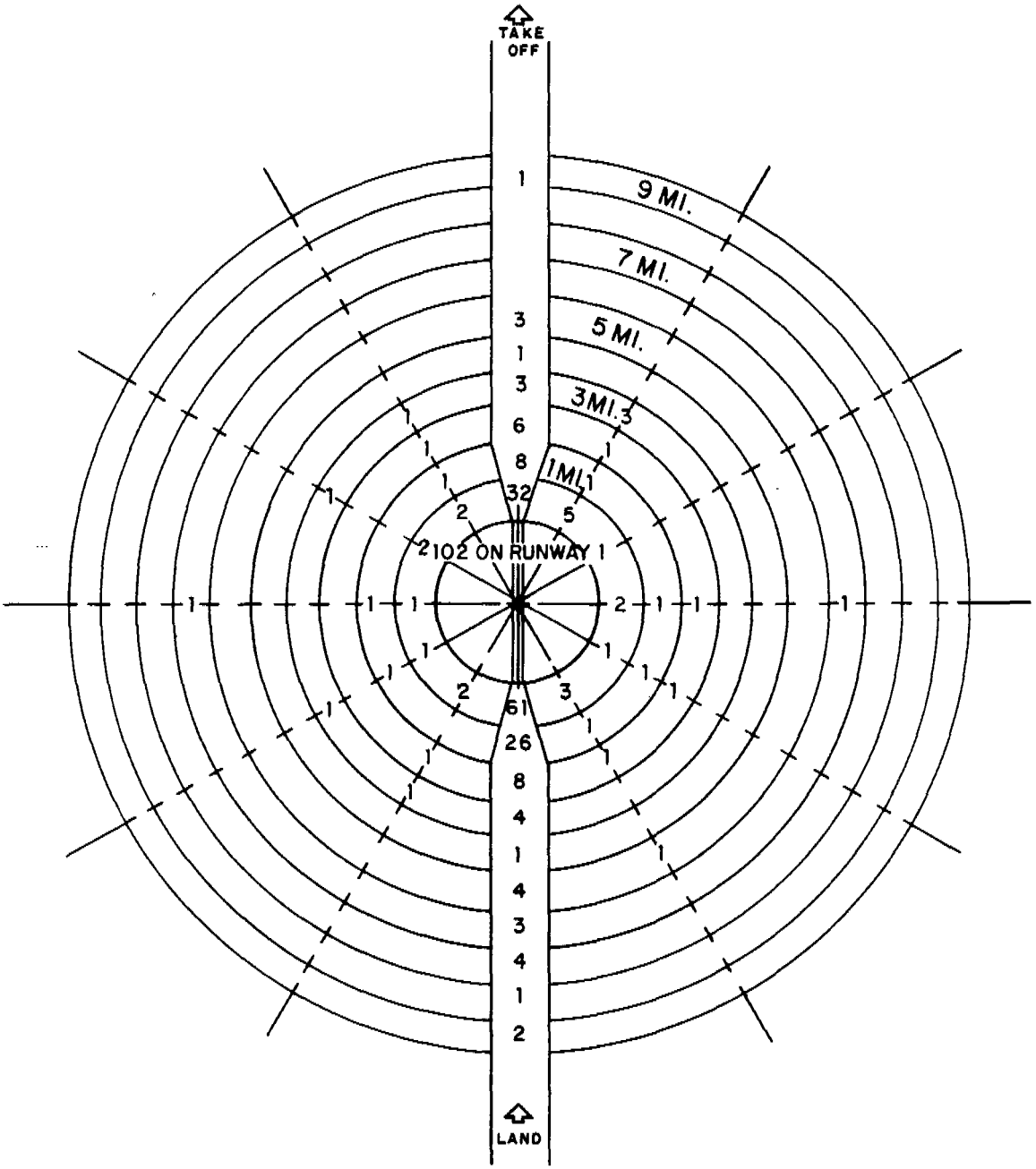

FIGURE 3B.7-6

LOCATION OF 314 USAF MAJOR AIRCRAFT ACCIDENTS IN THE VICINITY OF AIRFIELDS 10 MILE ZONE 1968-1972

BEAVER VALLEY POWER STATION-UNIT 2
FINAL SAFETY ANALYSIS REPORT

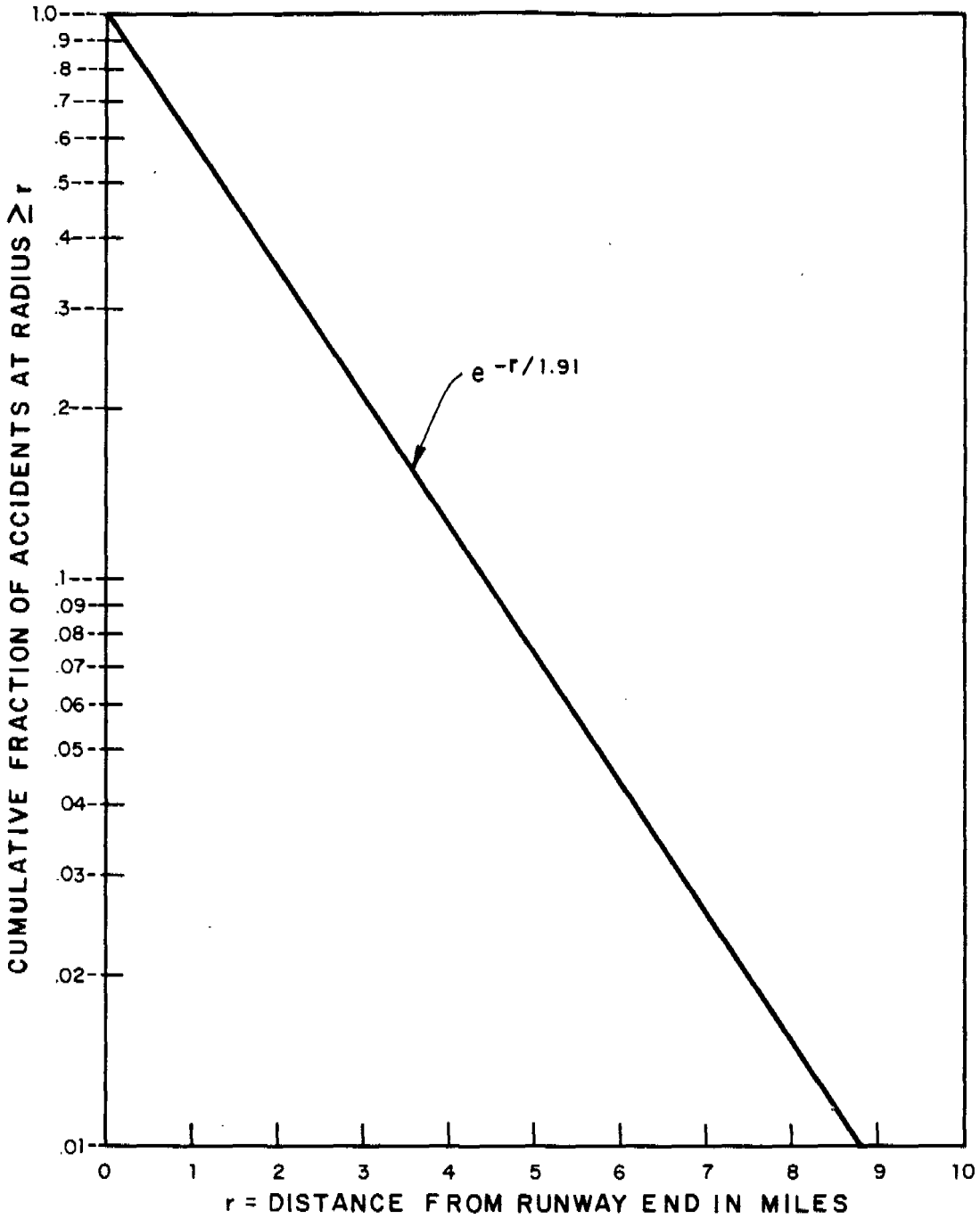

FIGURE 3B.7-7

FREQUENCY CURVE OF RADIAL LOCATION FOR MILITARY AIRCRAFT ACCIDENTS

BEAVER VALLEY POWER STATION - UNIT 2
FINAL SAFETY ANALYSIS REPORT

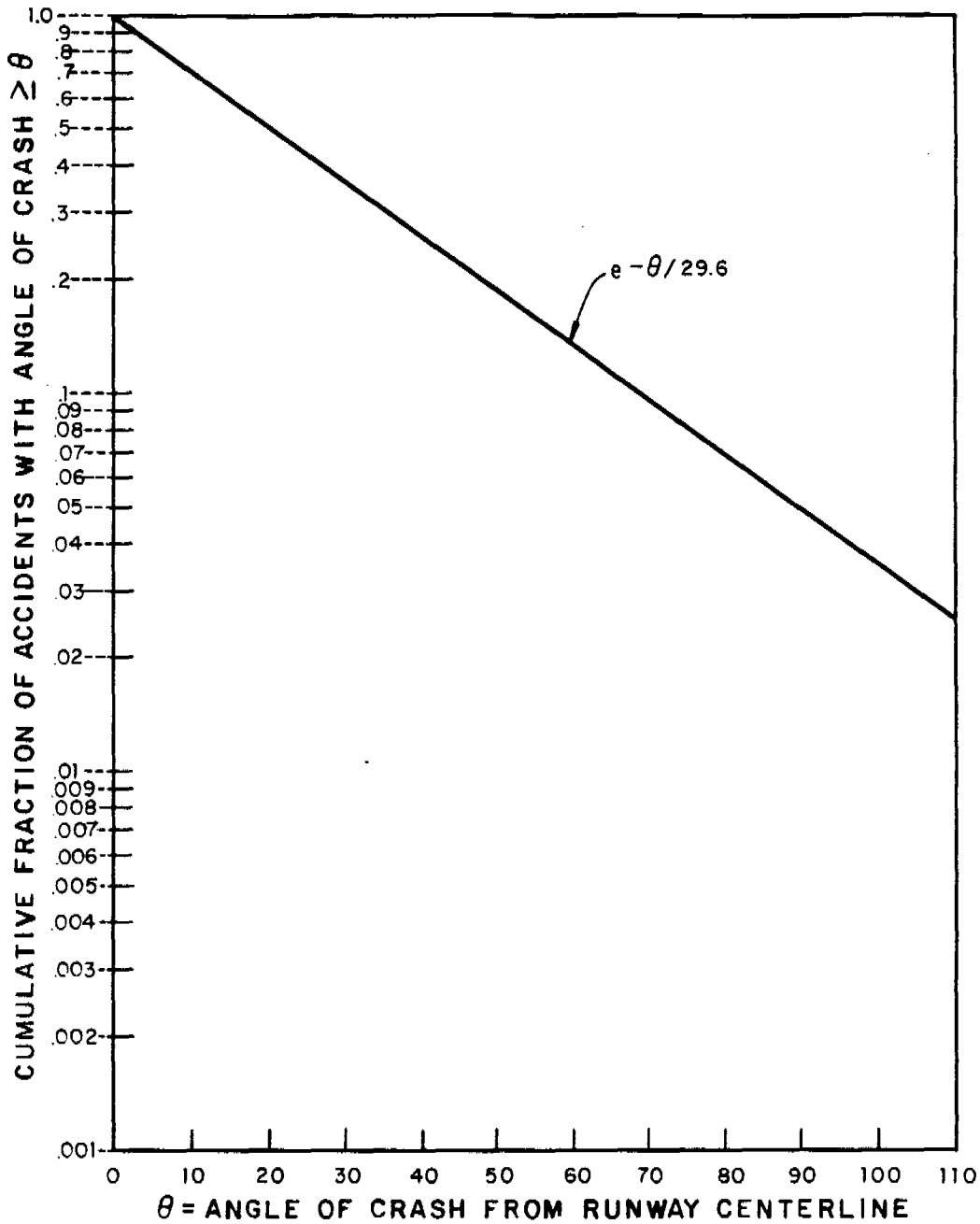

FIGURE 3B.7-8
FREQUENCY CURVE OF ANGULAR LOCATION FOR MILITARY AIRCRAFT ACCIDENTS

BEAVER VALLEY POWER STATION-UNIT 2
FINAL SAFETY ANALYSIS REPORT

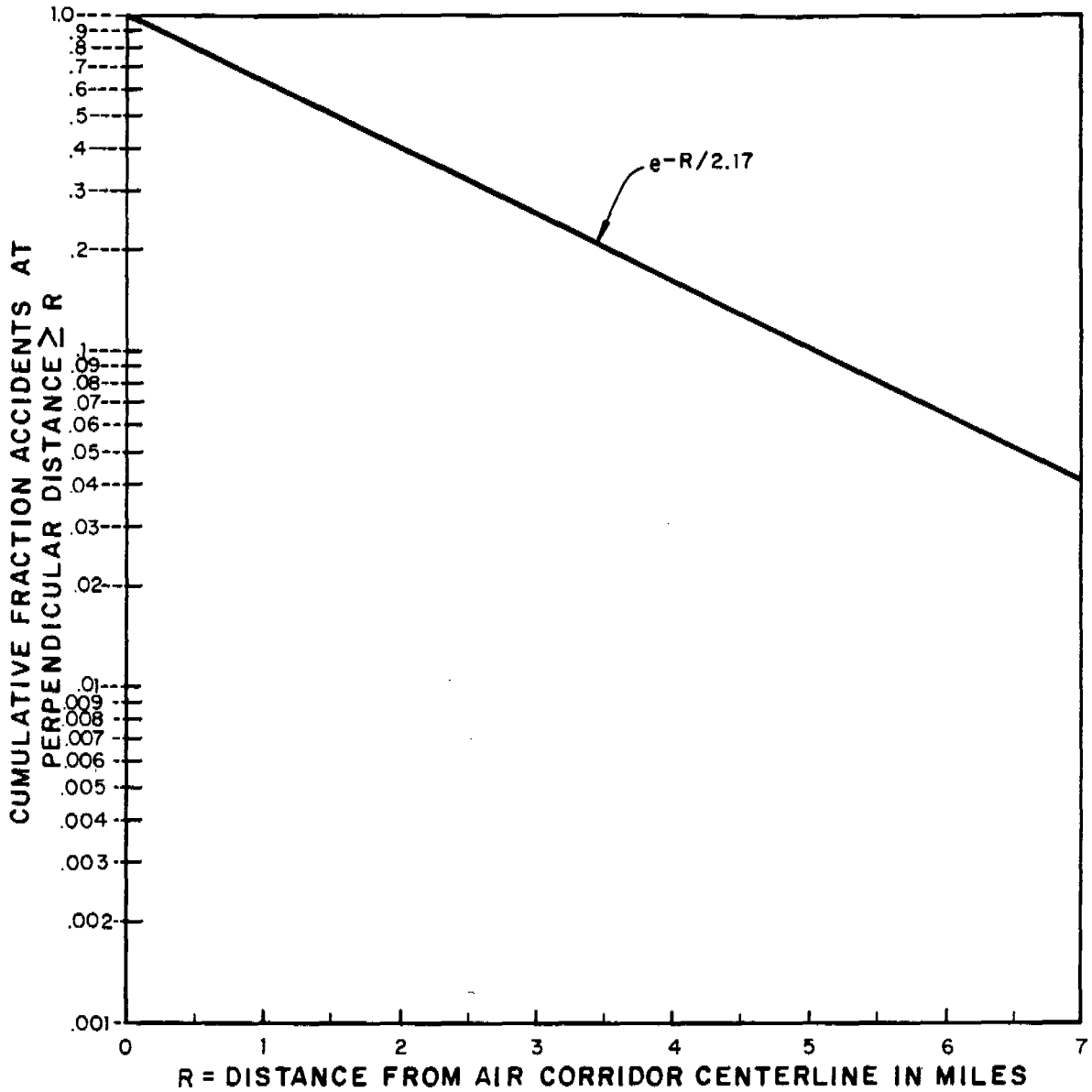

FIGURE 3B.7-9

FREQUENCY CURVE OF CRASH LOCATION FOR IN-FLIGHT AIR CARRIERS

BEAVER VALLEY POWER STATION–UNIT 2
FINAL SAFETY ANALYSIS REPORT