Orano TN
7160 Riverwood Drive
Suite 200
Columbia, MD 21046
USA
Tel: 410-910-6900
Fax: 434-260-8480

October 30, 2020
E-57412

U. S. Nuclear Regulatory Commission
Attn: Document Control Desk
One White Flint North
11555 Rockville Pike
Rockville, MD 20852

Subject: Additional Information for Application for Revision 5 of Certificate of Compliance No. 9358 for the Model No. TN-LC, Docket No. 71-9358 (EPID No. L-2020-LLA-0086)

Reference:
(1) TN Americas letter dated April 23, 2020, Subject: Application for Revision of Certificate of Compliance No. 9358 for the Model No. TN-LC, Docket No. 71-9358
(2) NRC Certificate of Compliance for the Model No. TN-LC, USA/9358/B(U)F-96, Revision 4
(3) Packaging Safety Analysis Report for the Model TN-LC Package, Revision 6
(4) NRC letter dated September 22, 2020, Subject: Request for Additional Information for Review of the Model No. TN-LC Package

In accordance with 10 CFR 71.38, TN Americas LLC (TN Americas) submitted an application to revise Certificate of Compliance (CoC) No. 9358 for the TN-LC packaging [1]. The current CoC 9358, Revision 4 [2], references the TN Americas consolidated application dated November 2012 [3], as supplemented. The NRC reviewed the application [1] and issued a request for additional information to continue the technical review [4].

Responses to the requests for additional information are provided as Enclosure 1. Enclosure 2 provides a summary of SAR changes not related to RAIs, and summary of all drawing changes is provided in Enclosure 3. Enclosure 4 provides the Safety Analysis Report (SAR) changed pages associated with Revision 9c. The Revision 9c changes are identified in the header with “Revision 9c, 04/20”. Changes are indicated by italicized text and a revision bar in the right-hand margin. Enclosure 5 provides the public version of the Enclosure 4 change pages.

Certain portions of this submittal include proprietary information, which may not be used for any purpose other than to support the NRC staff’s review of the application. In accordance with 10 CFR 2.390, TN Americas is providing an affidavit (Enclosure 6), specifically requesting that this proprietary information be withheld from public disclosure.

A consolidated version of the SAR to include Revision 9 change pages will be provided upon completion of the review and prior to NRC issuing the revised CoC.

Should the NRC staff require additional information to support review of this application, please contact Peter Vescovi at 336-420-8325, or by email at peter.vescovi@orano.group.

Sincerely,

Don Shaw
Licensing Manager
TN Americas LLC

Electronic Information Exchange (EIE) Document Components:

001 NRC TN-LC RAI Response Transmittal Letter
002 Enclosure 1 RAI and Responses
003 Enclosure 2 Additional Changes Not Associated with the RAIs
004 Enclosure 3 Summary of Drawing Changes
005 Enclosure 4 SAR Changed Pages (Proprietary)
006 Enclosure 5 SAR Changed Pages (Public)
007 Enclosure 6 Affidavit

cc: Pierre Saverot, Senior Project Manager, U.S. Nuclear Regulatory Commission
Peter Vescovi, Licensing Engineer, TN Americas LLC
Damien Sicard, Project Manager, TN Americas LLC

RAI 1-1:

Confirm that the thicknesses of the top lead gamma shield and the bottom lead gamma shield in the proposed drawing revisions for the Option 3 pin can basket in Drawing No. 65200-71-102 are unchanged.

It is not clear from the previous and current drawing revisions if and how the dimensions related to the thicknesses of the lead gamma shield components of the Option 3 pin can basket have changed. This is unclear since some dimensions are not given and others show only as reference dimensions in both the currently approved drawing revision and the proposed drawing revision for the pin can. Also, as discussed in the application, a variety of changes were made to the drawings including this one; however, as stated in the revision description on this drawing, no revision marks are provided.

This information is needed to confirm compliance with 10 CFR 71.33(a), 71.47, and 71.51(a).

Response to RAI 1-1:

<u>Bottom lead gamma shield thickness - pin can option 3:</u>

Screenshot from the previous drawing:

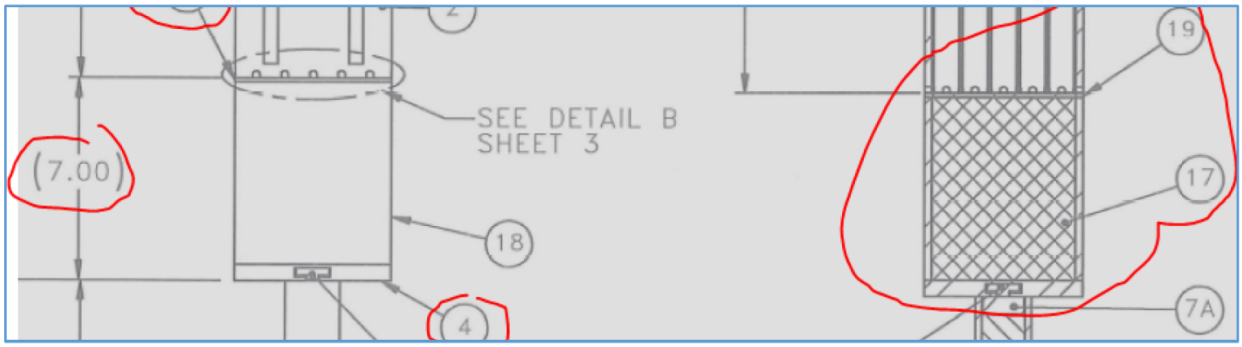

For information, the thicknesses of items 4 and 19 are 0.56” and 0.13” respectively. Hence, the thickness of lead is 7.00 - 0.13 - 0.56 = 6.31”. This is the same as what is given on new Drawing 65200-71-102, sheet 4, detail 2: the thickness of the bottom lead gamma shield component of the Option 3 pin can basket has not changed.

For information, the as-fabricated bottom lead thickness was measured between 6.31” and 6.32”.

<u>Top lead gamma shield thickness - pin can option 3:</u>

Screenshots from the previous drawing:

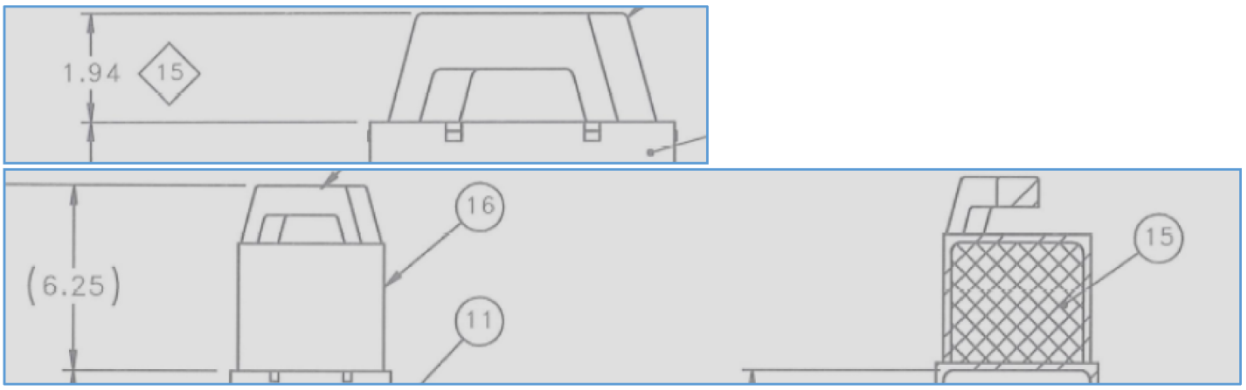

The thickness of item 16 at the top is 0.25”. Hence, the thickness of lead was 6.25 - 1.94 - 0.25 = 4.06”.

For information, the as-fabricated top lead thickness came out to be 4.05”. Therefore, the lead thickness that is given on new Drawing 65200-71-102, sheet 5, section BA-BA was adjusted to this slightly smaller as-fabricated lead thickness (4.05”): the thickness of the bottom lead gamma shield component of the Option 3 pin can basket has therefore slightly decreased by 0.01”.

Neither the top nor the bottom lead thickness was modeled in the pin can shielding calculation: only the longer cavity pin can without shielding at the ends was conservatively modeled, see SAR page 5.6.4-10 (screenshot below given for reference with relevant section highlighted):

The pin can may have a cavity length of either 179.5 in. or 168.5 in. The shorter cavity length pin can is heavily shielded with lead on each end and will be used to transport all but EPR rods, which are too long to fit in the lead-shielded pin can. To be conservative, only the longer-cavity pin can without lead shielding is modeled. The pin can without lead at the ends results in larger dose rates through the ends of the package than the pin can with lead because the ends are less shielded. Therefore, dose rates through the ends of the package are calculated for the pin can configuration only for EPR rods in the long cavity pin can. Radial dose rates through the package are computed for EPR rods (standard and MOX), PWR rods, BWR rods, and MOX rods.

For models containing EPR rods, actual EPR rod dimensions from Table 5.6.4-29 are used. EPR rods are longer than a standard PWR rod and consist of a lower plenum, active fuel, and upper plenum. EPR rods may be either enriched uranium or MOX. An enriched uranium EPR rod is bounded by the PWR rod source terms, while a MOX EPR rod is bounded by the MOX rod source terms. The bottom and top nozzle regions are part of the fuel assembly hardware and will not be present when transporting a rod. Therefore, the top nozzle is not modeled in the EPR models because it will not be present and would not fit in the pin can. Because the EPR has a]

TN-LC-0100 5.6.4-10

For axial dose rates, only EPR rods were analyzed (with no lead shielding at the ends), with the assumption that this analysis was envelope of non-EPR rods because of the thickness of the lead shielding present on both ends when transporting non-EPR rods. However, since this assumption relies on the thicknesses of the lead on both ends of the pin can, the axial length of the pin can Option 3 bottom lead shielding of 6.31 inches has been changed from a reference dimension to a hard dimension on SAR Drawing 65200-71-102, sheet 4, detail 2. The thickness of item 4 was also added to Drawing 65200-71-102 (see RAI 1-4), both on sheet 2, section A-A (as a hard dimension) and on sheet 4, detail 2 (as a reference dimension since this dimension is a reminder of the dimension shown on sheet 2 section A-A).

Based on the changes mentioned above, the 7.00 inches combined thickness for items 4, 17 and 19 was also changed from a hard dimension to a reference dimension on Drawing 65200-71-102, sheet 4, because this dimension is now a combination of all the dimensions mentioned above plus the thickness of item 19, which is explicitly given. Therefore, it is appropriate for this dimension to be a reference dimension.

This change justifies and validates the assumption that the EPR axial dose rates are bounding even if the non-EPR source terms are stronger than the EPR source terms by specifying the lead thicknesses on both ends with ‘hard’ dimensions instead of reference dimensions.

This change also clarifies the axial positioning of the non-EPR contents within the package and its shielding and ensures that all non-EPR rods will always be positioned within the neutron and gamma radial shields, which is important for the radial dose rates evaluation: since the lead thicknesses at the top and bottom of the pin can ensure that the non-EPR rods are always positioned so that they are shielded radially by both neutron and lead shielding, it is acceptable to model the non-EPR rods as being centered in the cavity length for the radial dose rates evaluation.

Impact:

SAR Drawing 65200-71-102 has been revised as described in the response.

RAI 1-2:

Clarify whether or not the optional slot design for the TN-LC-1FA Basket will also result in removal of some portion of the neutron absorber plate and modify Drawing No. 65200-71-90 as needed.

The optional basket design allows a slot in the top of the basket walls. The drawing shows that the slot extends up to 2.0 inches in length. Thus, it appears that the slot extends into the axial zone covered by the neutron absorber plates. Based on this and the changes to the insert plate for when the slot option is used (see Note 10 of the drawing), it would seem that the slot design will also affect the neutron absorber plates, that the portion of the absorber plate material covering the slot location might also need to be removed.

This information is needed to confirm compliance with 10 CFR 71.33(a), 71.55, and 71.59.

Response to RAI 1-2:

TN confirms that the optional slot will not result in the removal of some portion of the neutron absorber plates in any way. No change to SAR Drawing 65200-71-90 is needed.

Impact:

No change as a result of this RAI.

RAI 1-3

Justify the appropriateness of Note 10 in Drawing No. 65200-71-01, Rev 9A and Note 13 in Drawing No. 65200-71-102 or remove the notes.

Note 10 of Drawing No. 65200-71-01 appears to indicate that packagings with components that are fabricated outside of dimensions and tolerances specified in the drawings may be acceptable for use upon approval of the certificate holder. Note 13 of Drawing No. 65200-71-102 appears to have a similar meaning. These notes focus on the structural aspect of those kinds of dimension and tolerances. However, it is not clear that the application considers how the potential changes that these notes would allow have been considered for their impacts to other package functions (e.g., shielding). Multiple changes to Drawing No. 65200-71-102 have been made in this revision request to which it appears that Note 13 may apply. Furthermore, while the shielding analyses were done with the steel packaging components at nominal dimensions (see Section 5.4.4 of the application), tolerances do have an impact on package radiation levels. The impact of these tolerances and the further changes in component thicknesses that these drawing notes may allow could be important particularly for the analysis of the proposed Unit 01 packaging for which there are questions (see the shielding questions below) about the analysis demonstrating compliance with the regulatory limits for package radiation levels.

This information is needed to confirm compliance with 10 CFR 71.33(a), 71.47 and 71.85(c).

Response to RAI 1-3:

Note 10 in SAR Drawing 65200-71-01 and Note 13 in SAR Drawing 65200-71-102 have been removed from the drawings. A review of the cask and pin can Fabrication Data Package (FDP) was performed and determined that the as-built cask and pin can do not violate the drawings requirements as far as these notes are concerned, and therefore it is acceptable to remove them without putting in jeopardy the as-built components compliance with the drawings requirements.

Impact:

SAR Drawings 65200-71-01 and 65200-71-102 have been revised as described in the response.

RAI 1-4:

Justify the appropriateness of having the following dimensions either not be provided in the drawings or appear only as reference dimensions; otherwise provide these dimensions as non-reference dimensions.

a. The bottom lid plate thickness, tube lengths, and the thickness of the bottom lead of the Option 3 pin can in Drawing No. 65200-71-102.

b. The lead thickness (or length) in the bottom plug and the axial length of the radial lead shielding (and whether it covers the full package cavity length) in Drawing No. 65200-71-01.

It is the staff's understanding that designation of dimensions as reference dimensions (by use of parentheses with the dimensions) means that either the dimension may be determined from others on the drawing or the dimension is considered unimportant and so is not inspected. However, the staff is unable to determine the dimensions of the identified components from other non-reference dimensions given on the drawings. As described in ISG-20, the NRC certificate of compliance defines the package design that is authorized for transport. The design or engineering drawings submitted with the package application are incorporated into the certificate by reference and are a condition of the certificate. The licensee using the package must maintain a copy of and follow the terms and conditions of the certificate, including those incorporated by reference (see 10 CFR 71.17(c)), and the terms and conditions of the certificate specify the components, contents, and operations of the package that assure the package meets the performance requirements in the regulations. Other information in the package application, of which the safety analysis is part, is not typically considered a condition of the package approval and simply provides the information that demonstrates the design meets the performance standards in the regulations.

Thus, the approval conditions, of which the design or engineering drawings in the application are part, need to include sufficient information to ensure the package as fabricated and operated in accordance with the package approval will meet the performance requirements in the regulations. With some dimensions missing or provided as reference dimensions only, it is not clear that the drawings meet this standard of sufficient information. The items identified in this RAI are important for purposes of shielding, both in the presence of the material and in the positioning of the contents within the package shielding. The shielding evaluations in the application rely on the presence and dimensions of these components to show that the regulatory limits for package external radiation levels are met. Thus, the identified dimensions should be provided in the drawings but not as reference dimensions only. Any justification that they are not necessary or that appearing as only reference dimensions is acceptable should include an evaluation of the impacts on compliance with the shielding requirements of the variations that would be allowed in these components with these dimensions either missing or specified as reference only.

This information is needed to confirm compliance with 10 CFR 71.33(a), 71.35, and 71.47.

Response to RAI 1-4:

a. The thickness of the bottom lid plate (item 4) is 0.56” and has been added to SAR Drawing 65200-71-102 (also see the response to RAI 1-1: this dimension has been added in two places, first on sheet 2 section A-A as a hard dimension, and also on sheet 4 detail 2 as a reminder and, therefore, a reference dimension). The lengths of the tubes (item 1) are 177.74±0.25 inches (options 1 and 2) and 166.00±0.25 inches (option 3) and have been specified as such on Drawing 65200-71-102 (sheet 3). The thickness of the bottom lead of the Option 3 pin can was also made a hard dimension in Drawing 65200-71-102, see the response to RAI 1-1.

b. The length of the lead shielding (item 8D) in the bottom plug has been added to SAR Drawing 65200-71-01, sheet 11 section Y-Y and is equal to 6.00 +0.05/-0.01 inches. As for the radial lead shielding, its position relative to the bottom and top ends of the package (7.50 inches in both cases), which was given as reference dimensions on Drawing 65200-71-01 sheet 4 section A-A, has been changed to hard dimensions (same section). The thickness of item 5A has also been changed to a regular dimension (as opposed to a reference dimension as previously shown) in drawing 65200-71-01 sheet 8, section H-H. Therefore, since the lid thickness (7.50 inches) and the overall cask bottom thickness (2.50+3.50+1.50=7.50 inches) are both equal to the starting positions of the radial lead shielding from the top and bottom ends of the package, it is now clear from Drawing 65200-71-01 that the radial lead shielding covers the full package cavity length.

Impact:

SAR Drawings 65200-71-01 and 65200-71-02 have been revised as described in the response.

RAI 1-5:

Clarify the meaning of Note 32 on Drawing No. 65200-71-01 and modify it as necessary to ensure consistency with Note 5 on the same drawing and with Section 8.1.6.1 of the application.

Note 32 on Drawing No. 65200-71-01 includes discussion of inspection for voids within the poured lead gamma shielding, referring to an option for an approved equivalent technique. It is not clear how this description is consistent with Note 5 of the same drawing and Section 8.1.6.1, "Gamma Shield Test." Both of those locations state lead shield inspection shall be done by gamma scan and do not allow for alternate techniques to be used in lieu of the gamma scan. Note 32 should be consistent with Note 5 and Section 8.1.6.1 of the application. For compliance with the certificate, acceptance tests of the lead gamma shield must follow Section 8.1.6.1, which is incorporated by reference into the certificate.

This information is needed to confirm compliance with 10 CFR 71.47, 71.51(a), and 71.85(a).

Response to RAI 1-5:

SAR Drawing 65200-71-01 has been updated to remove the last sentence of note 32: this sentence was not necessary since note 5 already specifies a gamma scan of the radial shielding, and this gamma scan inspection is more specifically defined in Section 8.1.6.1 of the SAR.

Impact:

SAR Drawing 65200-71-01 and Section 8.1.6.1 have been revised as described in the response.

RAI 1-6:

Modify Note 46 on Drawing No. 65200-71-01 to remove the TRIGA basket.

The application has only provided analyses to support the loading of a 1FA basket containing either a PWR (UO2) fuel assembly or a pin can that contains PWR (UO2) fuel rods in the Unit 01 TN-LC packaging. No analysis has been provided to support the loading of any other contents or baskets with this packaging. As described in the response to the staff's request for supplemental information (response dated July 9, 2020), no other baskets or contents are to be loaded in the Unit 01 TN-LC packaging. Therefore, the drawing should be consistent with the application.

This information is needed to confirm compliance with 10 CFR 71.35(a), 71.47, and 71.51(a).

Response to RAI 1-6:

SAR Drawing 65200-71-01 has been updated to remove the mention to the TRIGA basket and its top spacer reduction in note 46.

Impact:

SAR Drawing 65200-71-01 has been revised as described in the response.

RAI 1-7:

Confirm that the axial extent and positioning of the radial lead shield and neutron shield relative to the package cavity are unchanged for the Unit 01 packaging versus the packaging design described in the drawings.

It is not clear whether the change in packaging cavity length is or is not the result of changes that also affect the axial extent and positioning of the radial lead gamma shield and neutron shield. Changes to these aspects of the shielding components could affect the shielding performance of the package that is described and analyzed in the application for the Unit 01 packaging.

This information is needed to confirm compliance with 10 CFR 71.35(a), 71.47, and 71.51(a).

Response to RAI 1-7:

Radial Lead Shield:

As explained in the response to RAI 1-4, the radial lead shield length is meant to coincide with the length of the cask cavity.

It was verified using as-fabricated dimensions that for Unit 01, despite this unit's cavity length being out of tolerances and slightly shorter than expected, the radial lead shielding starts less than 0.04 inches below the lid surface at the top of the cask, and extends at least 0.03 inch past the bottom of the cavity at the bottom of the cask (shown in the sketch below, with exaggerated scale for clarity). This analysis is described further in the details below, and its results are in line with the design intent stated above.

At the top of the cask:

Per the cask as-built records, the radial lead shielding starts between 7.47 and 7.48 inches from the top surface of the top cask flange. The cask lid bottom surface (which delineates the top of the cask cavity) is located between 7.44 and 7.46 inches from the top surface of the top cask flange. Therefore, the radial lead shielding starts, at worst, 7.48-7.44=0.04 inches below the cask lid bottom surface (meaning no more than 0.04 inches of the cavity extend past, and is uncovered by, the radial lead shielding at the top of the cavity).

At the bottom of the cask:

Per the cask as-built records, the radial lead shielding starts between 7.48 and 7.50 inches from the bottom surface of the bottom cask flange. The top of the bottom lead cap plate surface (which delineates the bottom of the cask cavity) is located between 7.53 and 7.55 inches from the top surface of the top cask flange. Therefore, the radial lead shielding starts, at worst, 7.53-7.50=0.03 inches below the cask bottom lead cap plate top surface (meaning at least 0.03 inches of the radial lead shielding extend past the bottom of the cavity).

The sketch below presents a graphical depiction of the analysis above, using an exaggerated scale for clarity. This analysis shows that the axial extent and positioning of the radial lead shield relative to the package cavity are unchanged for the Unit 01 packaging versus the packaging design described in the drawings.

This analysis also shows that, considering the various fabrication tolerances on the individual parts that make the cask assembly, despite its shorter length, the cask Unit 01 cavity's top and bottom surfaces are located where they are expected to be for the packaging design, and there are no differences between Unit 01 and the packaging design shown on the drawings regarding the location of the cavity within the cask.

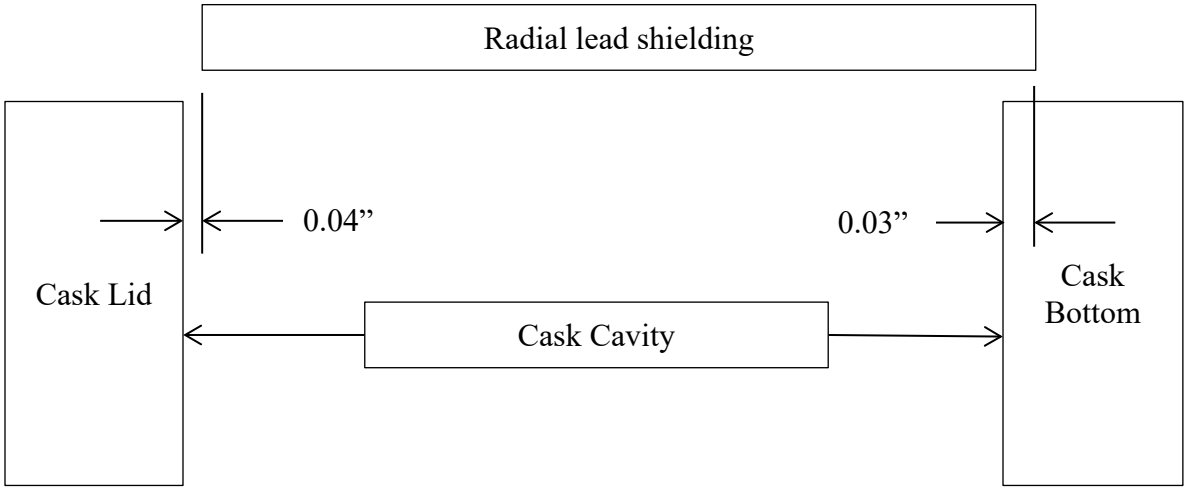

Radial Neutron Shield:

Because, as shown in the analysis above, there are no differences between Unit 01 and the packaging design shown on the drawings regarding the location of the cavity within the cask, and because the neutron shield for Unit 01 starts between 11.97 and 12.05 inches from either ends of the cask, which is also in line with the nominal dimension of 12 inches shown on the drawings, the axial extent and positioning of the radial neutron shield relative to the package cavity are unchanged for the Unit 01 packaging versus the packaging design described in the drawings.

Impact:

No change as a result of this RAI.

RAI 1-8:

Provide the dimensional description for the new configuration for items 24 and 25 and evaluate the impact of this configuration on the package shielding performance to demonstrate that the package meets regulatory radiation level limits.

The applicant has revised the cask assembly design in Drawing No. 65200-71-01 to modify a valve for the neutron shield. The new configuration is shown in Detail 2A of sheet 11 of this drawing. However, no dimensions are provided. The new configuration appears to replace some amount of neutron shielding material, but it is not clear how much. Nor is it clear how the current shielding evaluation is adequate to address the potential impacts of this change and loss of neutron shield material in this location.

This information is needed to confirm compliance with 10 CFR 71.33(a) and 71.47.

Response to RAI 1-8:

The outer dimensions of item 25 (Ø1.63 x 2" long) have been added to SAR Drawing 65200-71-01, sheet 11, detail 2A. These are the only important dimensions as far as items 24 and 25 are concerned as these dimensions define the loss of neutron shielding at that location. The overall affected volume is very small (~4 in^3) and localized compared to the overall volume of the neutron shield. Furthermore, what is lost in neutron shielding at that location is mostly replaced with gamma shielding as items 24 and 25 are made of steel and fit together tightly. Therefore, the impact of this change on dose rates around the cask is insignificant.

Impact:

SAR Drawing 65200-71-01 has been revised as described in the response.

RAI 1-9:

Provide tolerances on the thickness for the 1FA basket frames (top and lateral) or provide evaluations that show the package's performance with respect to criticality and shielding safety is not affected by the tolerances of these components.

The applicant has proposed to remove the identifier 'Stk' from the dimensions for the thickness of the top and lateral frames of the 1FA basket in Drawing No. 65200-71-90. The applicant states that the tolerance that such an identifier imposes is too restrictive. However, the staff believes that the application should provide tolerances on the thickness of these components because they are important to safety and are credited in the shielding and criticality analyses as noted in shielding RAI-5 and criticality RAI-2. For the criticality case, these components are steel, which can be an important neutron absorber in optimally moderated systems and so reduce system reactivity. Thus, the minimum thickness of these components can result in increased reactivity. The criticality analysis assumes a tolerance for these components. In addition, the staff notes that the margin to the upper subcritical limit is very small. If the actual tolerances can be larger now than what is assumed in the criticality analysis, the analysis should be revised to address the larger tolerances and ensure subcriticality is maintained with these components at the larger tolerances.

Further, for shielding design, steel is a good gamma shield. So, tolerances that reduce the steel thickness can increase gamma radiation levels. Taken together with the tolerances of the other steel packaging components, this can result in a 10% increase in gamma radiation levels with the top and lateral frame thicknesses at the minimum tolerance evaluated in the criticality analysis. Larger tolerances would further increase that effect and may impact the ability to meet the regulatory radiation level limit at 2 meters from the vehicle surface.

The staff recognizes the components are specified as being SA-240 type 304 stainless steel. Per the specifications in that standard, which for dimensions point to the requirements in ASTM A480/A480M, the maximum under tolerance for such material appears to be -0.01 inches, the same as what the identifier 'Stk' implies. Thus, it is also not clear if the tolerance has changed.

This information is needed to confirm compliance with 10 CFR 71.33(a), 71.35(a), 71.47, 71.55, and 71.59.

Response to RAI 1-9:

Tolerances of ±0.05 inch have been added to the thickness of the basket plates (items 1 and 2) on Drawing 65200-71-90. From a structural point of view, a negative tolerance of -0.10 inch would have been acceptable and therefore bounds ±0.05 inch. Shielding and criticality sensitivity analyses were also performed to show that such a tolerance has no adverse effect on the cask design. Finally, this tolerance is not expected to make any difference on the temperatures of the cask components.

Impact:

SAR Drawing 65200-71-90, Section 6.10.4.3.4 and Table 6.10.4-11 have been revised as described in the response.

Section 5.6.4.4.5.4.6 has been added as described in the response.

RAI 2-1:

Provide material property data on the fluorocarbon-based O-ring's performance under irradiation. Justify that the fluorocarbon-based O-ring is stable at total cumulative dose rates, prior to replacement.

The application does not describe the performance of the O-ring (page 1-5a) materials under irradiation. A fluorocarbon O-ring has a radiation tolerance limit of 10^4 – 10^5 rads, i.e., lower than most other types of O-rings with a tolerance of 10^6 – 10^7 rads..

This information is needed to confirm compliance with 10 CFR 71.71(b).

Response to RAI 2-1:

One of the most important properties of an elastomer O-ring seal is resistance to compression set, and it is that property that is most severely affected when the seal is exposed to gamma radiation.

The Parker O-Ring handbook reports, based on testing, that for an exposure of up to 10^6 rads, the effects on all compounds were minor. This corresponds to a radiation level achieved after years of operations in the majority of the applications.

An evaluation of the gamma exposure for the fluorocarbon (FKM, FPM) material based O-ring is performed in new SAR Section 5.6.4.4.5.4.5 of Appendix 5.6.4. The evaluation is performed on the fluorocarbon based O-ring at the top and bottom of the TN-LC Unit 01 cask, very conservatively considering a full year exposure (much greater than a typical transport duration) to the bounding gamma source (10 GWd/MTU, 4.9 wt% U-235 and 2.4 years cooling time) identified in Table 1.4.5-8a (PWR 1FA FQT table). The evaluation shows that the maximum exposure over an entire year, 1.81 10^4 rad, is well below 10^6 rad; therefore, there is no concern that the seals would develop leaks due to radiation exposure.

Impact:

SAR Section 5.6.4.4.5.4.5 has been added as described in the response.

RAI 5-1:

Confirm that all pin can loads in the Unit 01 packaging must meet the specifications based on a full pin can or provide an analysis and appropriate specifications for a pin can with fewer PWR UO_2 rods (i.e., the 9-rod pin can load).

The currently approved package has two separate specifications tables for a pin can containing 25 pins and a pin can containing 9 rods. The shielding analysis also includes calculations of radiation levels for the 9-rod pin can load cases since the specifications for the 9-rod pin can load contents differ from those for the 25-pin load contents and it is not apparent that the radiation levels for the larger pin load will bound the radiation levels for the smaller pin load. For the Unit 01 packaging, the thinner lead shielding has resulted in a revised analysis and specifications for the 25-pin load cases. It would appear that, if the 9-rod pin can load is also to be allowed in this Unit 01 packaging, a revised shielding analysis and revised specifications for that case are also needed.

This information is needed to confirm compliance with 10 CFR 71.35(a), 71.47, and 71.51(a).

Response to RAI 5-1:

The 9-rod pin can is not requested for TN-LC Unit 01, i.e., FQT shown in SAR Table 1.4.5-11 are not applicable to PWR rods loaded in TN LC Unit 01. Up to 21 PWR rods is allowed for loading in TN LC Unit 01 per FQT shown in Table 1.4.5-10a.

Impact:

SAR Table 1.4.5-1 has been revised as described in the response.

RAI 5-2:

Provide the following modifications:

c. Modify Table 1.4.5-1 to refer to the new Tables 1.4.5-8a and 1.4.5-10a, and any additional tables that result from response to the RAIs included in this letter, and

d. Fix the description of the enrichments in Tables 1.4.5-1 (Note 1 of the Table) and 1.4.5-10a to be consistent with the description in the notes after Table 1.4.5-14 and with the description of the enrichments in the other tables for rod contents.

New tables have been added for PWR UO_2 assemblies and PWR UO_2 rods for the contents in the Unit 01 packaging. The table for PWR fuel specifications, Table 1.4.5-1, should include appropriate references to these tables (i.e., Tables 1.4.5-8a and 1.4.5-10a). Also, the enrichments for the rods in Table 1.4.5-10a should be consistently described in Table 1.4.5-1 and Table 1.4.5-10a to understand what enrichment is being provided (rod average). The notes after Table 1.4.5-14 provide the definition of the term enrichment for the fuel rod contents. The definition of the enrichments should be consistent across the tables in the application as supported by the analyses.

This information is needed to confirm compliance with 10 CFR 71.33(b), 71.35(a), 71.47, and 71.51(a).

Response to RAI 5-2:

SAR Table 1.4.5-1 and note (1) of Table 1.4.5-1 and also Sections 1.4.5.2.1 and 1.4.5.2.3 have been updated to incorporate appropriate reference to Tables 1.4.5-8a and 1.4.5-10a. The label for enrichments in Tables 1.4.5-8a and 1.4.5-10a has been changed to “Enrichment, wt. %.^{235}U”.

Impact:

SAR Tables 1.4.5-1, 1.4.5-8a, and 1.4.5-10a have been revised as described in the response.

SAR Sections 1.4.5.2.1 and 1.4.5.2.3 have been revised as described in the response.

RAI 5-3:

Provide the basis for the cooling times in the revised Table 1.4.5-10a.

In the applicant's response to the staff's request for supplemental information (response dated July 9, 2020) the applicant revised the cooling times in Table 1.4.5-10a to conservatively bound the cooling times for the same contents (25 PWR UO_2 fuel pins) in Table 1.4.5-10. The first table is for the Unit 01 packaging with thinner radial lead shielding, and the second table is for the packaging with the standard minimum radial lead shielding. While the values in Table 1.4.5-10a do bound the values in Table 1.4.5-10, it is not clear how the new cooling times for Table 1.4.5-10a were selected. No basis for the values was provided and a comparison of Tables 1.4.5-10 and 1.4.5-10a does not reveal an obvious understanding of the selection of the new cooling times in Table 1.4.5-10a. Furthermore, given the concerns in shielding RAI-5.5, the staff has some concerns about the Unit 01 packaging loaded with these contents being able to meet the regulatory limits for radiation levels.

This information is needed to confirm compliance with 10 CFR 71.33(b), 71.35(a), 71.47, and 71.51(a).

Response to RAI 5-3:

FQT for 25 PWR fuel rods, SAR Table 5.6.4-62, is generated based on 7.69 mrem/hr used as the design criteria to meet the regulatory limit at 2 m.

As mentioned in response to RSI Observation O-1, all dose rates for the burnup/enrichment/cooling time shown in Table 5.6.4-62 are close to 7.69 mrem/hr, new SAR Table 5.6.4-62a has been added to illustrate that. While being the basis for SAR Table 1.4.5-10a, Table 5.6.4-62 does not include any rounding to cooling time. Following RSI Observation O-1, it was decided to round up arbitrarily and conservatively some cooling time in Table 1.4.5-10a to bound those in Table 1.4.5-10 to prevent further confusion. This is acceptable since all burnup/enrichment/cooling time shown in Table 5.6.4-62 meet the regulatory limit at 2 m with significant margin as shown in new Table 5.6.4-62a.

Impact:

SAR Table 5.6.4-62a has been added as described in the response.

RAI 5-4:

Revise the calculation of the radiation levels for the bottom end of the package to use the minimum lead thickness in the base of the cask and modify the allowable package contents as needed to ensure the regulatory limits are met.

In the shielding analysis in chapter 5 of the application, the bottom end surface of the package is also the back surface of the vehicle used to transport the package. In Table 5.6.4-1, the radiation level is reported for the vehicle surface at the bottom end to be 178 mrem/hr. Per Section 5.4.4, the nominal lead thickness is used for radiation level calculations at the axial ends (i.e., the top and bottom) of the package. It appears that a sensitivity study was done that showed little change in radiation levels, but little detail is provided. The staff performed some simple calculations which indicate that use of the minimum lead thickness at the bottom of the package will result in radiation levels that exceed the regulatory limits for the vehicle surface, which is at the bottom end surface of the package. Thus, it is not clear that the current shielding analysis is adequate to show the regulatory limits will not be exceeded at this location. Adding the effect of tolerances in the steel components as allowed by the drawings would cause radiation levels to further exceed the limits.

Any changes to the shielding analysis for the radiation levels at this location should be adequately justified. This includes descriptions of any components that may be newly credited in the analysis (e.g., minimum thicknesses and materials specifications of spacers) and descriptions that ensure these components, with the needed specifications, will be used in the package for shipping the affected contents (e.g., package operation descriptions that include placement of spacers of specified materials and minimum thickness in the cask cavity prior to loading of the spent fuel contents (those contents for which the analysis needs to rely on these components to meet radiation level limits)). Alternatively, the acceptance test criterion (in Section 8.1.6.1) for the lead shield in the cask base could be based on a test block that uses the nominal lead thickness specified in the drawings.

This information is needed to confirm compliance with 10 CFR 71.35(a), 71.47 and 71.87.

Response to RAI 5-4:

Drawing 65200-71-01 has been revised to update the minimum lead thicknesses at the bottom and top (lid) of the cask, to 3.49 inches minimum (increased from 3.38 inches) and 3.99 inches minimum (increased from 3.88 inches) respectively. These minimum thicknesses are very close to the nominal (3.50 inches and 4.00 inches, respectively, so a negative tolerance of only -0.01 inch) so a sensitivity analysis is not necessary. The thickness of the lead in the bottom plug has also been specified on the drawing, with the same tight -0.01 inch negative tolerance.

This change is acceptable because these lead parts are cast and machined as opposed to poured in place, which means that 1) their final thickness can be controlled very tightly, and 2) their thickness can also be inspected accurately before placement into the cask (as opposed to poured lead, for which the installed thickness is difficult to control due to the pouring process of molten lead and difficult to inspect after placement since it's between two shells and is inaccessible).

For example, the as-built thicknesses used in TN-LC Unit #1 were 4.02 inches in the lid, between 3.52 and 3.54 inches at the bottom, and 6.03 inches in the bottom plug; therefore, all above their respective nominal thicknesses. They were also inspected using a gamma scan to ensure they did not contain any voids (see below).

As a result, there is no need to update the calculation of the radiation levels for the bottom end of the package, and the sensitivity study that analyzed the 3.38 inches lead thickness was removed from the SAR. The acceptance test criterion for the precast lead parts in Section 8.1.6.1 was also revised (also see answer to RAI 8-2): the raw block of lead meant to be used to machine these precast parts from must have a uniform thickness and an area known to be free of voids and defects. This block is then gamma-scanned, and the portions of the block showing a higher count than the area known to be free of voids and defects is excluded from fabrication, while the areas with a lower count are marked as acceptable to use for fabrication. The precast lead parts are then machined from the areas marked acceptable to use for fabrication and their final thickness is verified to be within the required tolerances for each part.

This ensures that the lead used to make these precast parts is free of voids and defects and has the required thickness.

Furthermore, it was identified that the NCT gamma activation sources for bottom nozzle, plenum and top nozzle for the PWR fuel assembly content were calculated using 2.6 wt% U-235 enrichment in lieu of 3.2 wt% U-235 enrichment in the ORIGEN ARP models leading to slightly over estimation of these gamma activation sources shown in SAR Table 5.6.4-63. This latter has been updated to report the gamma activation sources from 3.2 wt% U-235 enrichment (burnup and cooling being 61 GWd/MTU and 13.3 year) along with results shown in SAR Section 5.6.4.4.5.4.1 and Table 5.6.4-66. As expected, while this has little effect on the reported package surface and vehicle side (contact and 2 m) dose rates, the vehicle surface dose rate and 2 m dose rates from the ends of the vehicle are lower by approximately 5%.

Impact:

SAR Drawing 65200-71-01 has been revised as described in the response.

SAR Section 5.6.4.4.5.4.1 has been revised as described in the response.

SAR Tables 5.6.4-63 and 5.6.4-66 have been revised as described in the response.

RAI 5-5:

Provide additional information to demonstrate and justify that the radiation levels for the Unit 01 packaging with the proposed pin can contents will not exceed the regulatory limits, and ensure that the same concerns (identified below) for the Unit 01 packaging and contents do not also affect the current package design with its contents, revising that analysis as needed.

The Unit 01 packaging has a radial lead shell with a minimum thickness that is 0.28 inches less than the design specification. For gamma sources with spectra like those of the package's spent fuel contents, the staff estimated that this amount of reduction in the lead will result in an approximately 43 percent increase in package radiation levels. The applicant used a source term for the proposed PWR UO_2 25-rod contents that was derived from a burnup of 10 GWd/MTU, 0.8 percent enrichment, and 0.19 years of cooling time for normal conditions of transport (see Table 5.6.4-64 of the application). The applicant states that its analysis resulted in package radiation levels that are below the regulatory limits (see Table 5.6.4-66 of the application). However, the staff noticed that the total source strength of this gamma source term is about 7 times larger than the total source strength of the design basis PWR UO_2 25-rod contents for the package design (see Table 5.6.4-22). In some high importance energy groups, the differences are even greater. As the applicant's own analysis shows, the normal conditions radiation levels are dominated by the gamma source term for these particular contents.

The above factors indicate that the regulatory limits (e.g., the limit for 2 meters from the vehicle surface, on the side of the package/vehicle) will be exceeded by a significant amount. Calculation using the applicant's source term for the Unit 01 packaging under normal conditions of transport for these contents and the applicant's 2-meter response functions (see Table 5.6.4-60 of the application) confirms that the 2-meter side gamma radiation levels would be about 5.5 times larger than the regulatory limit for that location in 10 CFR 71.47. The staff also noticed that the gamma source term for these proposed Unit 01 packaging contents is larger than the gamma source term for the proposed Unit 01 packaging's proposed PWR UO_2 fuel assembly contents (see Table 5.6.4-63 of the application). While burnup, enrichment and cooling time parameters for the pin can contents would result in a larger gamma source versus the burnup, enrichment, and cooling time parameters for the assembly contents, it would seem that the difference in the numbers of fuel rods (25 versus 208) for these two content types would reduce the difference in their gamma source terms, potentially changing which one is the larger of the two.

If the 25-rod contents source term is correct, this raises questions about the revised cooling times for the Unit 01 packaging's proposed 25-rod contents. It is not clear that the revised cooling times are sufficiently long to ensure the package radiation levels for the Unit 01 packaging will meet the regulatory limits. Also, given that the package radiation levels for the PWR UO_2 25-rods contents are dominated by the gamma source term and the significant difference between the Unit 01 packaging source term and the design basis source term for these contents, it would appear that the selected design basis source term is not bounding for these contents in the package with the standard minimum radial lead shielding and that the package radiation levels for this case would exceed the regulatory limits as well. Thus, the applicant should ensure that the specifications for the proposed Unit 01 packaging 25-rods contents and analysis for those contents are sufficient to ensure and demonstrate that the package radiation levels for this packaging and these contents will not exceed the regulatory limits. The applicant should also ensure that the analyses and contents specifications for the same rods contents in the package design (the allowed contents in the standard design) do not exceed the regulatory limits for radiation levels (the concerns in the Unit 01 packaging and contents specifications and analysis do not also occur in the specifications and analysis for the currently approved package and contents).

In evaluating the package radiation levels versus the regulatory limits for the sources in response to this RAI, appropriate consideration should be given to the tolerances of the steel components. The staff's evaluation indicates that with all the steel components at their minimum thicknesses, the radiation levels for the pin can contents could increase by about 10 percent (using the same tolerances on 1FA basket frames as used in the criticality analysis). If the sources are kept such that they are to be less than the target 7.65 mrem/hr for limiting radiation levels at 2 meters stated in the response to the staff's request for supplemental information, then inclusion of these tolerances would not be necessary. Such a target, or self-imposed limit would provide enough margin to account for the impact of the steel components' tolerances.

In reviewing the shielding analysis and comparing between the design basis and the Unit 01 packaging analyses, the staff also identified various anomalous points in the application. One is that the totals of the source terms (Table 5.6.4-64) for each axial zone of the Unit 01 packaging source term do not appear to be correct; they appear to be inconsistent with the spectrum strength for their respective axial zone. The second is that the response functions for the design basis gamma radiation level calculations (Table 5.6.4-16) for the higher two gamma energy groups appear to be incorrect for at least the 25 PWR fuel rods and likely for all the content types in that table; the total radiation level obtained from multiplying the design basis source term in Table 5.6.4-22 with the response functions in Table 5.6.4-16 and adding to that the neutron radiation level results in a total radiation level at the 2-meter location that is significantly different from the total radiation level reported for these contents in Table 5.6.4-32. Thus, the application should be revised to ensure accurate information is provided to demonstrate and enable confirmation that the regulatory limits are met.

This information is needed to confirm compliance with 10 CFR 71.47.

Response to RAI 5-5:

SAR Table 5.6.4-64 in Appendix 5.6.4, while labeled as gamma sources for 25-PWR rods, actually reported gamma sources corresponding to 208 rods, a full B&W 15x15 fuel assembly, from ORIGEN-ARP runs. Table 5.6.4-64 is revised to report the gamma sources for 25-PWR rods by scaling down the sources by a factor of 25/208. Note that correction has also been made on sources as gamma sources for various regions were swapped. The results for 25-PWR rods documented in Section 5.6.4.4.5.4.3 in NCT and Section 5.6.4.4.5.4.4 in HAC shows the regulatory limits are met with significant margin to account for the effect of tolerances on material component such as steel.

In addition, SAR Table 5.6.4-16 in Appendix 5.6.4 incorrectly reported response functions for upper energy groups 2.50 MeV and 3.00 MeV as identical to response functions for upper energy groups 1.33 MeV. Table 5.6.4-16 is revised to report the correct response functions for each energy group.

Impact:

SAR Tables 5.6.4-16 and 5.6.4-64 have been revised as described in the response.

RAI 5-6:

Provide additional justification that the response functions used in the shielding analysis in the application are sufficient to calculate the radiation levels at 2 meters from the vehicle surface and for the other regulatory limit locations specified in 10 CFR 71.47 for exclusive use.

The applicant used response functions developed from shielding calculations with MCNP to calculate radiation levels for showing compliance with the regulatory limits. The applicant has selected to use response functions for only four energy bins from the gamma spectrum of the spent fuel source terms, stating that the selected four energies capture 95% of the radiation level. These four energy bins include only the 1.33, 1.66, 2.5 and 3.0 MeV energy bins. Based on comparisons of source strengths in these energy bins with the source strength in other energy bins for the source terms used in the Unit 01 packaging (being requested in this revision) shielding analysis, it would appear that it is not always true that the four selected energy bins capture 95% of the contribution to gamma radiation levels of the proposed contents for the Unit 01 packaging and possibly for at least some of the currently allowed package contents. In Table 5.6.4-64, the gamma source strength in one neglected energy bin (2.0 MeV) is the same as the source strength of one of the energy bins that is used to calculate package radiation levels (3.0 MeV) for normal conditions. For the gamma source used in the hypothetical accident conditions analysis, the source strength in the same 2.0 MeV energy bin is about ten times larger than the source strength in the 3.0 MeV energy bin. In Table 5.6.4-63, the gamma source in the 2.0 MeV energy bin is about 100 times larger for normal conditions and about 200 times larger for accident conditions than the 3.0 MeV gamma source.

Simple staff calculations of gamma radiation levels also indicate that other energy bins (e.g., 0.8 and 1.0 MeV bins) may contribute more than one or two of the applicant's selected energy bins. The staff notes that the sources in these energies in Tables 5.6.4-63 and 5.6.4-64 are significantly higher than the sources in one or more of the applicant's selected energy bins. The staff's calculations also indicate that the applicant's selected energy bins alone may only capture as low as 80% of the contribution to gamma radiation levels. With other uncertainties (e.g., not accounting for steel packaging component tolerances, modeling of the neutron shielding, radial/azimuthal variation in radiation levels) in the method it is not clear that the margins to the limits in the applicant's analysis are sufficient to compensate for such significant underestimating of radiation levels that use of only the four selected energy bins can introduce for the Unit 01 packaging and potentially for the contents in the standard package design. As is noted in the standard review plan (NUREG-1617, Section 5.5.2.1), gammas in the energies of approximately 0.8 MeV to 2.5 MeV contribute significantly to radiation levels for typical packages. The shielding analysis should be revised, as needed, to include the appropriate portions of the gamma energy spectrum in the calculation of package radiation levels.

This information is needed to confirm compliance with 10 CFR 71.47 and 71.51(a).

Response to RAI 5-6:

The basis of the MCNP response function is provided in SAR Appendix 5.6.4 Section 5.6.4.2.2. Particularly, section “Gamma Response Functions” provides the justification of developing gamma response function for only four energy groups as these groups capture 95% of the dose rate due to the gamma source. The upper bounds of these four energy groups are 1.33 MeV, 1.66 MeV, 2.50 MeV and 3.00 MeV. Note that 95% refers to the primary gamma dose rate contribution from these four groups to the primary gamma dose rate while considering 18 energy groups.

This can be verified as follow for example for the 1 PWR fuel assembly content using response functions in SAR Table 5.6.4-16, and gamma radiological source in Table 5.6.4-20 to estimate the primary gamma dose rate from the four energy groups and compare it to the primary gamma dose rate provides in Table 5.6.4-36 when computing with 18 energy groups. Note that Table 5.6.4-16 has been updated to correct the response functions for 2.50 MeV and 3.00 MeV energy groups, see response to RAI 5-5.

Primary gamma “predicted” from four energy groups = 5.79804E-15 x 1.769E+14 + 3.93774E-14 x 4.062E+13 + 3.03671E-13 x 2.739E+10 + 5.98923E-13 x 2.360E+09

= 2.63 mrem/hr

Primary gamma computed with 18 energy groups is 2.82 mrem/hr as shown in Table 5.6.4-36.

The primary gamma dose rate “predicted” from the four energy groups is 93% of the Primary gamma dose rate computed with 18 energy groups. Similar results can be obtained for 1 BWR fuel assembly and 25 EPR rods using the updated Table 5.6.4-16 and gamma sources from Table 5.6.4-21 and Table 5.6.4-22. The ratio of the primary gamma dose rates "predicted" from the four energy groups are respectively 92% and 95% of the primary gamma dose rates computed with 18 energy groups shown in Table 5.6.4-41 and Table 5.6.4-45.

Response function is employed as a tool to rank burnup/enrichment/cooling time combinations resulting in dose rate lower than the regulatory limit at 2 m from side vehicle in order to develop FQT and also identify the design basis bounding BECT used in the comprehensive shielding analysis, which is performed based on 18-energy groups for primary gamma. The dose rate criterion for developing FQT is approximately 8 mrem/hr which provides additional margin to regulatory limit at 2 m of 10 mrem/hr.

Impact:

No change as a result of this RAI.

RAI 6-1:

Confirm the minimum cladding outer diameter for the CE 16x16 PWR fuel contents.

A previous revision of the application (Table 1.4.5-2) and the current revision of the certificate of compliance show a minimum cladding outer diameter of 0.382 inches whereas the application for a new certificate revision shows this dimension to be 0.374 inches (Table 1.4.5-2). If the applicant is seeking to change this dimension, then an analysis should be provided demonstrating this assembly content will remain subcritical with the new minimum cladding outer diameter.

This information is needed to confirm compliance with 10 CFR 71.55(b), (d), and (e) and 71.59.

Response to RAI 6-1:

SAR Table 6.10.4-8 of Appendix 6.10.4 reports the results for the most reactive PWR fuel analysis. System 80 fuel type is identified as the most reactive fuel for the CE 16x16 fuel class. The clad OD associated with the CE 16x16 System 80 fuel analysis is 0.382 inch. SAR Table 6.10.4-21 of Appendix 6.10.4 shows that the maximum k_{eff} for the CE 16x16 fuel class with 5 PRAs is 0.9249, HAC single package. This latter case is re-evaluated with a clad OD of 0.374 inch. While higher, 0.9322 compared to 0.9249, the k_{eff} when considering 0.374 inch clad OD is still below the USL of 0.9420 ensuring the sub criticality of the system.

Table 6.10.4-21 of Appendix 6.10.4 has been updated with the additional analysis considering the 0.374-inch clad OD.

Impact:

SAR Section 6.10.4.4.1 has been revised as described in the response.

SAR Table 6.10.4-21 has been revised as described in the response.

RAI 6-2:

Provide an evaluation of the packaging changes with respect to criticality to show the package will remain subcritical with the changes proposed in the application, modifying the design drawings as needed.

The applicant has proposed a variety of changes to the packaging, including the TN-LC-1FA basket, the BWR hold down ring and sleeve, and the pin can. These changes include removal of tolerances, reductions in materials thicknesses in some portions of the components, and changes in cavity lengths (such as the longer cavity length of the shorter cavity pin can without a compensating length increase of the pin tubes). It is not clear from the application that the effects on the package's criticality safety function have been considered. Items such as tolerances on steel components help to ensure that the package design, and the packaging fabricated in accordance with that design (as defined in the package drawings), will maintain criticality safety. Since steel components in an optimum moderation condition can be significant absorbers of neutrons, tolerances on these components can be important and should be specified in the package design drawings or shown by evaluation to otherwise be not important to the package's criticality safety function. Some of the tolerances proposed for removal are on such components. Given that the maximum reactivity case has very little margin to the upper subcritical limit (a margin of 0.0002), it is not clear that changes that can result in reduced thicknesses of packaging components, reduced distances between fissile contents of adjacent packages provided by various packaging components, and any changes in axial dimensions that may also affect the relative positioning of fissile material in the package with packaging components that influence reactivity do not result in the maximum reactivity case exceeding the upper subcritical limit. The effect of any changes in response to the other RAIs should also be addressed, as appropriate. Drawings should be revised as needed to specify tolerances on appropriate components (e.g., top and lateral frames of the 1FA basket).

This information is needed to confirm compliance with 10 CFR 71.55(b), (d), and (e) and 71.59.

Response to RAI 6-2:

SAR Section 6.10.4.3.4 Item 4 stated that "manufacturing tolerances on the cask body have a negligible effect on the reactivity". To supplement the demonstration of maximum reactivity, the most reactive configuration analysis for PWR fuel assembly in Section 6.10.4.3.4 has been revised to add a lead shell thickness analysis including 3.5-inch. nominal thickness, 3.38-inch minimal thickness and 3.10-inch thickness for TN-LC Unit 01. SAR Table 6.10.4-11 results show that it is appropriate to consider the nominal lead thickness.

Section 6.10.4.3.4 Item 4 for PWR fuel assembly did include a tolerance analysis for the basket steel frame varying from 0.95 minimum to 1.05 in maximum and 1-inch. nominal value. The analysis is supplemented with a basket steel frame thickness at 0.9 inch. Updated Table 6.10.4-11 reports the additional analysis. The results show that it is appropriate to consider the nominal basket steel frame thickness.

Regarding the maximum k_{eff} of 0.9418 (margin of 0.0002 to USL of 0.9420) obtained by Case ID P_N008 for the CE 15x15 fuel class, it is worth noting that 0.9418 resulted from an additional bias SCALE6.0 PC/SCALE 6.0 LINUX of 0.0019 added to the actual Case ID P_N008 performed with SCALE 6.0 LINUX, see SAR Table 6.10.4-33. This was discussed in SAR Section 6.10.4.4.1. The maximum k_{eff} was obtained for the CE 15x15 fuel class with 1 PRA and 3.70 wt%, the k_{eff} for all other fuel classes were significantly below the USL as shown in Table 6.10.4-33 primarily due to higher number of PRAs. In order to increase the margin to the USL, the maximum enrichment for the CE 15x15 fuel class is further reduced to 3.60 wt%, see updated Table 6.10.4-33, the maximum k_{eff} for the PWR content is then 0.9347, when adding 0.0019 bias, which is 8 sigma margin below the USL.

SAR Appendices 1.4.5 and 6.10.4 have been revised to reflect the reduction in the maximum enrichment for the CE15x15 fuel class. Drawings 65200-71-01, 65200-71-90 and 65200-71-102 have also been revised to provide more dimensions and tolerances.

Impact:

SAR Sections 1.4.5.2.1, 6.10.4.1.2, 6.10.4.2, 6.10.4.4.1, and 6.10.4.9.2 have been revised as described in the response.

SAR Tables 1.4.5-1, 6.10.4-1, 6.10.4-11, 6.10.4-22, 6.10.4-24, 6.10.4-26, and 6.10.4-33 have been revised as described in the response.

SAR Drawings 65200-71-01, 65200-71-90 and 65200-71-102 have been revised as described in the response.

RAI 7-1:

Confirm that the package operations descriptions in Chapter 7 clearly and adequately ensure that the Unit 01 packaging will only be used for the contents for which that packaging has been analyzed, modifying the package operations descriptions as needed.

While the package operations descriptions in Chapter 7 of the application clearly describe actions regarding different basket types, it is not clear that the operations descriptions adequately address when a different packaging with a same basket type has different limitations on the contents for that same basket. In this particular revision request, the Unit 01 packaging has been evaluated for only certain types of contents for the TN-LC-1FA basket. Baskets with other contents types have not been evaluated for shipment in the Unit 01 packaging. Further, the proposed 1FA basket contents have different cooling time requirements for the same burnup and enrichment specifications than are allowed for these same contents in the other TN-LC packagings that are fabricated in accordance with the certified package design. The package operations descriptions should include the necessary directions to ensure the Unit 01 packaging will only be loaded with the contents for which it was evaluated in this application.

This information is needed to confirm compliance with 10 CFR 71.87 and to ensure the package operations will be consistent with the evaluations to ensure the package meets the requirements in 10 CFR Part 71 Subparts E and F.

Response to RAI 7-1:

Section 7.1 TN-LC Package Loading is revised to note that TN-LC Unit 01 shall only be loaded with the TN-LC-1FA basket with one PWR fuel assembly or one pin can with up to 21 PWR/EPR fuel rods. In addition, Fuel Qualification Tables 1.4.5-8a and 1.4.5-10a for TN-LC Unit 01, corrected to show appropriate cooling times (see the response to RAI 5-3), have been referenced and added to Table 7-1.

Impact:

SAR Section 7.1 and Table 7-1 have been revised as described in the response.

RAI 8-1:

Provide justification that demonstrates that the leakage test methods described in Section 8.2.2, "Leakage Tests," of the application are consistently sensitive enough to meet the acceptance criterion for the 1FA shipments, or alternatively describe another type of leakage test method that is capable of meeting the acceptance criterion for the 1FA shipments.

Section 8.2.2 of the application describes that for the 1FA shipments the acceptance criterion for the periodic and maintenance leakage tests is less than or equal to $8.0 \cdot 10^{-6}$ ref·cm^3/s, with a test sensitivity of $4.0 \cdot 10^{-6}$ ref·cm3/s. Also, Section 8.2.2 of the application describes that for the 1FA shipments, the typical methods for leakage tests used are A.5.1, gas pressure drop, and A.5.2, gas pressure rise, from ANSI N14.5-2014, "American National Standard for Radioactive Materials – Leakage Tests on Packages for Shipment." However, Table A-2, "Leakage Tests Sensitivities," of ANSI N14.5-2014 describes that the nominal test sensitivity for the gas pressure drop and gas pressure rise tests is 10^{-1} ref·cm^3/s to 10^{-5} ref·cm^3/s. The test sensitivity for the 1FA shipments is outside of the nominal range and therefore the use of those leakage test methods might not meet the containment requirements.

This information is needed to confirm compliance with 10 CFR 71.51(a)(1) and (2).

Response to RAI 8-1:

In SAR Section 8.2.2, Helium leakage test methods will be described as sensitive enough methods for the 1FA shipments to verify that the acceptance criterion for the periodic and maintenance leakage tests is less than or equal to 8.0 10-6 ref cm^3/s, with a test sensitivity of 4.0 10^{-6} ref cm^3/s. The typical methods used will be A.5.3, gas filled envelope (gas detector), and A.5.4, evacuated envelope (gas detector). For the pre-shipment test of the 1FA shipments, the following typical methods will be also added as eligible methods: A.5.8, tracer gas (sniffer technique), and A.5.9, tracer gas (spray method). Therefore, the table summarizing the leakage tests for 1FA shipments in Section 8.2.2 has been revised as follows:

Leakage Tests for 1FA Shipments

Test	*Frequency*	*Acceptance Criteria*	*Typical Method (ANSI N14.5 TABLE A.1 [4])*
Periodic	*Within 12 months prior to shipment*	*Sum of leak rates ≤ 8.0×10^{-6} ref cm^3/s with a test sensitivity of 4.0×10^{-6} ref cm^3/s*	*(He)* *A.5.3* *A.5.4*
Pre-shipment	*Before each shipment, after the contents are loaded and the package is closed*	*No detected leakage, sensitivity of 10^{-3} ref cm^3/s or better, unless seal is replaced.*	*A.5.1* *A.5.2* *A.5.8* *A.5.9*
Maintenance	*After maintenance, repair, or replacement of containment components, including inner seals*	*Sum of leak rates ≤ 8.0×10^{-6} ref cm^3/s with a test sensitivity of 4.0×10^{-6} ref cm^3/s*	*(He)* *A.5.3* *A.5.4*

As a result of this RAI, note 45 of Drawing 65200-71-01 has been modified to allow for the use of grooved ports plugs O-rings with a larger cross-section such as Parker sizes 2-208 and 2-209: this change will make the leak tests of these ports plugs easier because it will take longer for helium to permeate larger seals such as these, whereas a smaller size such as 2-017 would take a shorter time before helium would permeate the seal, making testing difficult.

However, size 2-017 is retained in the note as it would be acceptable to use for the test ports groove plugs for example, which are NITS and are not tested themselves. Size 2-015 also remains mentioned because it was the original seal size and may still be used with some of the plugs.

Note 45 has also been corrected to explicitly specify item 3P (test ports plugs) and this note was also explicitly applied to item 3P in the drawings BOM as well.

Impact:

SAR Section 8.2.2 and Drawing 65200-71-01 have been revised as described in the response.

RAI 8-2:

Revise the last paragraph of Section 8.1.6.1 of the application to clarify the acceptance criterion for the gamma shield test of precast lead components and remove the word ‘either’.

The proposed new paragraph in Section 8.1.6.1 describes the acceptance testing for precast lead gamma shield components. The word ‘either’ indicates that there is another optional testing method. There is no such option; therefore, the word should be removed. Also, the criterion is described as being the same as for the poured lead gamma shielding. While the method for defining the acceptance criterion is the same (i.e., using measurements of a test block that replicate the steel and lead layers of the packaging at their minimum thicknesses), the resulting dose rate criterion value will not necessarily be the same. The current text may be misunderstood to mean the dose rate criterion value is the same. Thus, the text should be clarified.

This information is needed to confirm compliance with 10 CFR 71.85(a).

Response to RAI 8-2:

Acceptance of the parts fabricated from a precast block is based on gamma-scan or radiography of the precast block and dimensional measurement of the parts machined from the precast block. The acceptance criteria in SAR Section 8.1.6.1 for parts fabricated from precast lead has been revised to describe the tests performed during fabrication. Individual parts were formed from precast lead that was checked for voids, pinholes, and cracks using a gamma scan and x-ray radiography. The parts were machined to a thickness no less than the specified minimum thickness. The minimum thickness shown is the previously shown nominal thickness minus 0.01 inch.

Impact:

SAR Section 8.1.6.1 has been revised as described in the response.

RAI 8-3:

Justify the action described in the third paragraph of Section 8.1.6.1 of the application in the event the gamma shield test results exceed the acceptance criterion, modifying the action description as necessary.

The acceptance criterion is used to confirm that the packaging's gamma shielding components were fabricated as designed (the minimum thickness is present and there are no voids). If the criterion for a shielding component is exceeded, that would indicate that the as-fabricated shielding component does not meet the design and should be reworked to conform with the design specifications. It is not clear that the current language describing the actions to take in the event the acceptance criterion is exceeded are adequate to ensure the as-fabricated packaging shielding will meet the design specifications. The current language seems to allow for using a packaging with shielding components that exceed the acceptance criterion and so do not conform to the package design in the package drawings. This would be inconsistent with the purpose of the acceptance tests. The applicant has proposed changes to this section to add descriptions of acceptance test to address all packaging lead shielding components. The descriptions of actions to take when the acceptance criterion is exceeded applies to the new descriptions in gamma shield test section and should be such to ensure the as-fabricated packaging shielding will meet the design specifications and perform as evaluated in the application.

This information is needed to confirm compliance with 10 CFR 71.85(a).

Response to RAI 8-3:

The description of source/detector geometry and actions required if gamma scan show a non-conforming thickness should not be specified in the acceptance criteria. Source/detector geometry is provided in detailed gamma-scan procedures. The disposition for a non-conforming condition discovered during the gamma-scan is determined using TN QA program implementing procedures to determine if the condition will result in rework, repair, or use as-is. The third paragraph on Section 8.1.6.1 is not needed to specify the acceptance criteria and has been deleted.

Impact:

SAR Section 8.1.6.1 and Drawing 65200-71-01 have been revised as described in the response.

Additional Changes Not Associated with the RAIs

2-A

Revised the thermal expansion evaluation in SAR Section 2.13.10. See Enclosure 3, Item 3 for a description and justification of this change.

5-A

Description:

Revise description of pin can.

Justification:

This change is to match the pin can description corrections made in other parts of the SAR

Impact:

Revised the pin can description in Section 5.6.4.1.1

6-A

Description:

Revise description of pin can.

Justification:

This change is to match the pin can description corrections made in other parts of the SAR.

Impact:

Revised the pin can description in Appendix 6.10.4.

7-A

Description:

SAR Section 7.2 Preparation of Empty Package for Transport refers to 49 CFR 173.427 in the DOT Hazardous Material Regulation for shipping Low Specific Activity (LSA) material. Prior to a change that added rules for shipping LSA, HMR 173.427 was the rule for shipping empty radioactive material packaging. In the current 49 CFR 173.427 is for shipping LSA and 173.428 is the rule for empty packaging. The reference to a specific HMR rule for shipping empty packaging is replaced with a general instruction to use the appropriated HMR rules.

Justification:

Residual internal contamination may prevent shipping the empty packaging as allowed by 49 CFR 173.428. The package may be shipped as Type A, Type B, or Surface Contaminated

Object (SCO) depending on the level of residual contamination. Not specifying the type of package allows operational flexibility in preparing the empty package for transport.

Impact:

Chapter 7 Operating Instructions pages 7-10 and 7-14 revised.

8-A

Description:

TN-LC current CoC/SAR requires to perform leakage test in accordance with ANSI N14.5, edition 2014. Such edition requires that test personnel shall be certified according to SNT-TC-1A, edition 2006. This requirement is not practical as:

- There are later editions of SNT-TC-1A than 2006 so that available test personnel may be certified according to later editions.

- TN-LC shall be used in overseas countries so that available test personnel may be certified according to ISO 9712 instead of SNT-TC-1A.

  The changes in pages 7-11, 7-14, 8-2, 8-14 and 8-17 propose that test personnel can be certified to versions of SNT-TC-1A later than 2006, or alternatively test personnel can be certified to ISO 9712

Justification:

- Main safety requirement remains to rely on test personnel qualified and certified for the leakage test of TN-LC

- Certification of test personnel according to a later edition of SNT-TC-1A than 2006 is accepted by the industry.

- A certification of test personnel according to ISO 9712 is similar to SNT-TC-1A as the differences are very limited and cannot lead to question the qualification of test personnel for leakage test:
  - SNT-TC-1A is a recommended practice for employer certification; ISO 9712 is a standard for certification by a centralized agency (for instance COFREND in France)
  - SNT-TC-1A min test passing grade is 80%, ISO 9712 is 70%
  - SNT-TC-1A min test questions 20, ISO 9712 30
  - SNT-TC-1A visual test Jaeger 2, ISO 9712 Jaeger 1
  - Minimum training hours ISO 9712 greater than required by SNT-TC-1A

Impact:

Chapter 7 Operating Instructions pages 7-11 and 7-14 revised.

Chapter 8 Acceptance Tests and Maintenance Instructions pages 8-2, 8-14, and 8-17 revised.

CoC 71-9358, Revision 9c Summary of Drawing Changes

Item	Drawing No.	Description/Justification
1	65200-71-01 Sh 2	Description: Remove the last sentence of note 32. Justification: This is to address RAI 1-5. This sentence was not necessary since note 5 already specifies a gamma scan of the radial shielding, and this gamma scan inspection is more specifically defined in Section 8.1.6.1 of the SAR.
2	65200-71-01 Sh 2	Description: Remove the mention of the TRIGA basket and its top spacer from note 46. Justification: This is to answer RAI 1-6. The current application is for PWR fuel, no analysis has been made to transport TRIGA fuel in Unit 01 of the TN-LC and there currently are no plans to transport that fuel.
3	65200-71-01 Sh 2 65200-71-102 Sh 2 & 4 Ch. 1 p. 1-5 App. 2.13.10 p. 2.13.10-2 and Tables 2.13.10-1, 2.13.10-2, 2.13.10-3, 2.13.10-7, 2.13.10-8, 2.13.10-9, and 2.13.10-13	Description: 65200-71-01 sheet 2: In note 46, change “AS-FABRICATED CAVITY LENGTH OF 182.12 INCHES” with “A MINIMUM AS-FABRICATED CAVITY LENGTH OF 182.10 INCHES”. 65200-71-102 sheets 2 and 4: add “181.91 MAX” to overall pin can length of 181.87. Update page 1-5 to also mention a minimum as-fabricated cavity length of 182.10” for unit #1. Update the thermal expansion evaluation in 2.13.10 with these updated lengths. Justification: This change is not RAI-related. To account for the accuracy of measurements, the fact that the actual cavity length will see slight variations at various angular locations around the cavity circumference, and to be consistent with how the ‘normal’ cavity length is shown on the drawing (i.e. as a minimum length), the reduced cavity length of the Unit 01 TN-LC cask is adjusted from “182.12” to “182.10 minimum”. As a result, in order for the maximum hot pin can length not to exceed the cavity length during cold NCT, the pin can overall length is limited to 181.91” maximum (versus 181.92” maximum previously) and the thermal expansion evaluation is updated to reflect this change.
4	65200-71-01 Sh 2 & 4	Description: Remove note 10 in its entirety. Justification: This is to answer RAI 1-3. The NRC has requested the removal of these notes. A review of the cask and pin can FDP was performed and determined that the as-built cask and pin can do not violate the drawings requirements as far as these notes are concerned and therefore it is acceptable to remove them without putting in jeopardy the as-built components compliance with the drawings requirements.
5	65200-71-01 Sh 4	Description: Remove the parentheses from the 7.50 dimensions locating each end of the radial lead shielding length from the ends of the cask. Justification: This is to answer RAI 1-4. These dimensions are needed (as ‘hard’ dimensions instead of reference dimensions) to locate the start and end locations of the radial gamma lead shielding from both ends of the cask and ensure they will line up with the start and end locations of the cask cavity (accounting of course for tolerances).

Item	Drawing No.	Description/Justification
6	65200-71-01 Sh 7	Description: Change the minimum thickness of the layer of lead inside the lid to 3.99. Justification: This is to answer RAI 5-4. The dimensions of the pre-cast lead components installed on the cask can be tightly controlled unlike the poured radial lead shielding. A review of the fabrication data package showed that the as-built thickness of lead at the top and bottom of the cask is actually slightly over nominal. Therefore, it is acceptable to specify a tight (-.01) negative tolerance to avoid a conservative shielding analysis (for example assuming a -.12 negative tolerance that could greatly affect dose rates) without putting in jeopardy the as-built components compliance with the drawings requirements.
7	65200-71-01 Sh 8	Description: Change the minimum thickness of layer of lead inside the bottom flange to 3.49. Justification: See Item 6 for the justification.
8	65200-71-01 Sh 8	Description: Remove the parentheses from the thickness of item 5A. Justification: This is to answer RAI 1-4. This dimension is needed (as 'hard' dimension instead of reference dimension) to locate the cavity in the cask and ensure it will line up with the start and end locations of the cask radial lead shielding (accounting of course for tolerances). Also see #5.
9	65200-71-01 Sh 11	Description: Add missing length of item 8D: 6.00 +.05/-.01. Justification: This is to answer RAI 1-4. This dimension is needed (as 'hard' dimension instead of reference dimension) to define the amount of lead shielding in the bottom plug.
10	65200-71-01 Sh 11	Description: Add missing outer dimensions of item 25: Ø1.63 X 2.00 LG. Justification: This is to answer RAI 1-8. The external dimensions of item 25 are needed to show that the amount of neutron shielding material displaced by items 24 and 25 is insignificant and would not affect the shielding performance of the cask.
11	65200-71-90 Sh 1	Description: Change quantity/material specification/quality category/code criterion of item 10 (dowel pins) to "A/R"/"Stainless Steel"/"NITS"/"NON-CODE" respectively. This is to support ongoing basket modifications. Justification: This change is not RAI-related. These dowel pins (item 10) are not credited in the structural calculation and can therefore be downgraded to a NITS item. They also do not need to be NG: "A/R" is adequate for their quantity and "stainless steel" is sufficient as a material specification since the mechanical properties of item 10 are not used anywhere in the safety analysis (see Appendix 2.13.8 Section 2.13.8.5.5 page 2.13.8-15: "*No credit is taken for the dowel pins*").
12	65200-71-90 Sh 2	Description: Add ±0.05" tolerance to thicknesses of items 1 and 2 (basket plates). Justification: This is to answer RAI 1-9. Tolerances of +.05/-.10 were previously assigned on the design drawing but are now changed (and specified as such on the SAR drawing) to ±0.05 so as to not penalize the shielding analysis.

Item	Drawing No.	Description/Justification
13	65200-71-102 Sh 1	Description: Remove note 13 in its entirety. Justification: See #4.
14	65200-71-102 Sh 2	Description: Make thickness of item 3 a reference dimension (and add callout for item 3 to this section). Justification: This change is not RAI-related. Since item 3 is a NITS item, its thickness (shown on Drawing 65200-71-102, sheet 2, section B-B) can be a reference dimension without having any impact on the safety of the package. Additionally, this change will allow this item to be replaced (if needed) with a 1/8" thick strip in the future for repairs or new fabrication, which will decrease costs as such a thickness is readily available.
15	65200-71-102 Sh 2 & 4	Description: Add thickness of item 4 (equal to 0.56). Add thickness of item 4 as a reference dimension (reminder) to detail 2 on sheet 4 as well. Justification: This is to answer RAI 1-4. This dimension is needed in conjunction with #18 (as 'hard' dimension instead of reference dimension) to locate the pin can cavity in the cask.
16	65200-71-102 Sh 3	Description: Change length of item 1 to hard dimensions with tolerances: 177.74±.25 for options 1 & 2, and 166.00±.25 for option 3. Justification: This is to answer RAI 1-4. This dimension is needed (as 'hard' dimension instead of reference dimension).
17	65200-71-102 Sh 3	Description: Section K-K, area C5: make 1.38 dimension a reference dimension. Justification: This change is not RAI-related. This dimension (location of a water escape hole in the pin can lid) is not needed as a hard dimension because it has no nuclear safety function.
18	65200-71-102 Sh 4	Description: Change bottom pin can dimension of 7.00" to a reference dimension and reference dimension of (6.31) (height of item 17, lead shielding) to a hard dimension. Justification: This is to answer RAIs 1-1 & 1-4. This dimension is needed in conjunction with #15 (as 'hard' dimension instead of reference dimension) to locate the pin can cavity in the cask.
19	65200-71-102 Sh 5	Description: Add callouts for item 24. Justification: This change is not RAI-related and is strictly editorial as it simply consists of adding an item number callout to improve drawing legibility and clarity and it has no impact on the safety analysis.

Item	Drawing No.	Description/Justification
20	65200-71-102 Sh 5	Description: Change overall height of option 3 pin can lid from 8.25±0.25 to 8.10±0.25. Justification: This change is not RAI-related, it is a correction: it can be seen from section M-M of the drawing (sheet 4) that since the cavity length is 169.55 inches and the tubes length is 166.00 inches, the internal length of the lid (from its bottom surface to the bottom of item 24) is 169.55-166.00=3.55 inches. This means the total height of the lid should be 3.55+0.25+4.05+0.25=8.10 inches (see section BA-BA on sheet 5), not 8.25 inches. This change has no effect on the analysis of the package and of its contents as it only affects the length of the pin can body, whereas the important dimension is the overall length of the pin can (181.87 nominal) including the height of the closure bolts and lifting boss (items 20 & 26), which is the length that is analyzed in section 2.13.10.
21	65200-71-01 Sh 1 & 2	Description: On sheet 1, apply note 45 to item 3P and mention this item is a 'test' port plug; on sheet 2, in note 45, remove mentions of O-ring sizes "2-016, 2-018 or 2-019" (but keep 2-017) and replace them with sizes "2-208 or 2-209". Explicitly mention item 3P in this note in addition to items 3J and 3N, adjust the subsequent wording accordingly and allow the O-rings used in the test port plugs replacements to be NITS like the test ports plugs. Justification: This is to answer RAI 8-1.It was identified while preparing the answer to RAI 8-1 regarding test sensitivity that a bigger seal cross-section would allow more time to perform the leak test at the ports before helium permeation of the seal material would become a problem: the seal size currently specified in note 45 (2-017) is very small and only allows a very short time before the seal is polluted with helium, which makes the test very impractical; increasing the size of the seal (2-208 or 2-209) will mitigate this issue. However, size 2-017 remains mentioned in the note because it remains an acceptable option for the test port plugs. Size 2-015 also remains mentioned because it was the original seal size and may be used with some of the plugs. The containment analysis that is provided in section 4.6.1 considers the smaller seal cross-section diameter of seal size 2-017 (which is the same as 2-015), which is bounding for seal sizes 2-20*, therefore the current analysis remains applicable and does not need to be updated. This change also explicitly includes a mention of item 3P (test port plugs) in note 45, which is now explicitly applied to this item in the BOM, as originally intended: although note 45 was correctly applied to item 3P on sheets 6 & 8, this item was not explicitly mentioned previously in the note, and note 45 was not applied to the item in the BOM like it was to the other items, so this is corrected, and the change also clarifies that this item 3P is a test port plug. It also allows the seals used with the replacement grooved test port plug for item 3P, which is a NITS items, to be also NITS instead of category A. This is acceptable because these test plugs and their seals are not part of the containment boundary and have no safety function, so the seal quality category should match that of the test port plug it is used with.

Enclosure 4 to E-57412

SAR Changed Pages
(Proprietary)

Withheld Pursuant to 10 CFR 2.390

Enclosure 5 to E-57412

SAR Changed Pages
(Public)

Revision History

Rev. 0	May 2012	Initial Application for CoC 9358
Rev. 1	August 2011	Response to NRC Request for Supplemental Information (RSI-1)
Rev. 2	May 2012	Response to NRC Request for Additional Information (RAI-1)
Rev. 3	August 2012	Response to NRC Request for Additional Information (RAI-2)
Rev. 4	September 2012	Response to NRC Request for Supplemental Information (RSI-2) with respect to the RAI-2 request
Rev. 5	October 2012	Incorporate drawing revisions with respect to RAI-2
Rev. 6	November 2012	Response to NRC Request (RSI-2 and RSI-3)
Rev. 7	October 2013	Initial Application for Revision 1 to CoC 9358
Rev. 8	March 2014	Response to NRC Request for Additional Information (RAI-1)
Rev. 9	*April 2020*	*Revised specifications and technical evaluations to reflect as-built non-conformances for TN-LC Unit 01, and revised containment evaluation to establish an allowable leak rate for 1FA contents*

payload cavity has a diameter of 18 inches and a minimum length of 182.5 inches. *The TN-LC Unit 01 as-fabricated cask has a reduced minimum cavity length of 182.10 inches. This is allowed for Unit 01 for use only with the 1FA basket.* The end flanges are made from ASME SA-182, Type FXM19 stainless steel forgings. The bottom end of the cask has a drain to allow removal of water from the payload cavity and bottom plug for cask operations. A test port with a sealing washer is provided for testing the cask bottom access port cover seal.

The inner and outer shells are made from ASME SA-240, Type XM19 plate. Except for the closure bolts, trunnions and impact limiter attachments, the package is of primarily welded construction, using austenitic stainless steel. The inner and outer shells each may have two or more full penetration longitudinal seam welds and may have circumferential butt welds. The inner shell is 1 inch thick and is welded to each end structure using a full penetration weld. The outer shell is 1.5 inches thick and is connected to each end structure using a full penetration weld.

The cask is lifted using two removable martensitic stainless steel trunnions (SA-182 Type FXM19) which are bolted to the cask body using eight 1-8 UNC bolts. The threaded holes in the upper end cask structure have thread inserts for improved durability.

On the outside of the outer shell, in the region not covered by the impact limiters, is a neutron shield composed of an outer sheet (neutron shield shell) of 0.25 inch thick Type 304 stainless steel, separated from the outer shell by twenty aluminum shield boxes which are filled with neutron absorbing material. The outside diameter of the cask including neutron shield and neutron shield shell is 38.5 inches.

A set of eight 1-8 UNC bolts is used to attach each of two impact limiters. *At the top end of the cask, t*wo of the bolt holes are contained in the trunnion attachment blocks and the other six are within attachment blocks which are welded to the cask shell and extend through the neutron shield. *At the bottom end of the cask, all eight attachment blocks are welded to the cask shell and extend through the neutron shield.* The attachment is completed with *the above-mentioned* bolts which pass through the impact limiter and thread into the attachment blocks described above.

All lead shielding is made from ASTM B29 copper lead. The annular lead shield is cast-in-place through the upper end structure and is nominally 3.5 inches thick. *The TN-LC Unit 01 as-fabricated cask body has a reduction in its shielding capability due to localized areas where the lead thickness may be as low as 3.10 inches. See Appendices 1.4.1 and 5.6.4 and Chapter 5 for further details.* The shield at the bottom is made from lead sheet material that is packed firmly into place or poured and is also nominally 3.5 inches thick. The bottom lead cavity is closed using a 1.5 inch stainless steel plate.

The closure lid is machined from an ASME SA-182 F304 forging. It is attached to the cask using twenty 1-8 UNC ASME SA-540 Grade B23 Class 1 hex head bolts and stainless steel washers. The mating holes in the cask body are fitted with heavy duty thread inserts for improved durability. The mating surface of the lid features a step relief located at the bolt circle. This relief prevents any contact between the lid and the body outside of the bolt circle, thus

Proprietary and Security Related Information
Drawing 65200-71-01 Revision 9B
Withheld Pursuant to 10 CFR 2.390

Proprietary and Security Related Information
Drawing 65200-71-90 Revision 6A
Withheld Pursuant to 10 CFR 2.390

Proprietary and Security Related Information
Drawing 65200-71-102 Revision 7A
Withheld Pursuant to 10 CFR 2.390

The maximum allowable heat load for the TN-LC cask with TN-LC-1FA basket is 3.0 kW.

1.4.5.2 TN-LC-1FA Basket Contents

The TN-LC-1FA basket has three different types of intact payload: PWR fuel assemblies, BWR fuel assemblies, and fuel rods from PWR, BWR, MOX, and EPR fuel assemblies. Intact payloads are fuel assemblies or fuel rods with no known or suspected cladding defects greater than hairline cracks or pinhole leaks.

RAI 5-2

1.4.5.2.1 PWR Fuel Assemblies

The TN-LC-1FA basket is designed to transport one intact PWR fuel assembly, as specified in Table 1.4.5-1. The PWR fuel qualification table (FQT) is provided in Table 1.4.5-8 *and Table 1.4.5-8a*. The fuel to be transported is limited to a maximum assembly average initial enrichment of 5.0 wt. % ^{235}U except for CE 15x15 class assemblies (maximal assembly initial enrichment of *3.6* wt. % ^{235}U). The maximum assembly average burnup is limited to 62 GWd/MTU. The maximum allowable heat load for the TN-LC-1FA basket loaded with a PWR fuel assembly is 3.0 kW.

RAI 6-2

In addition to the poison plates provided in the basket, Poison Rod Assemblies (PRAs) are required while transporting PWR fuel assemblies in order to ensure that the maximum reactivity is subcritical and below the Upper Subcritical Limit (USL). The PRAs consist of a cluster of absorber rods containing B_4C pellets inserted into the guide tubes of the fuel assembly. A typical PRA is illustrated in Figure 1.4.5-5. The minimum required B_4C content of the absorber rods in the PRA is 40 percent Theoretical Density (TD) (75 percent credit is taken in the criticality analysis, or 30 percent TD). A summary of the number of absorber rods required in the PRA for each PWR fuel class is shown in Table 1.4.5-4. PRA loading configurations are also illustrated in Figure 1.4.5-1 through Figure 1.4.5-4.

1.4.5.2.2 BWR Fuel Assemblies

The TN-LC-1FA basket is designed to transport one intact BWR fuel assembly as specified in Table 1.4.5-6. Basket cell sleeves are used to reduce the area within the 1FA basket for BWR fuel. The BWR FQT is provided in Table 1.4.5-9. The fuel to be transported is limited to a maximum assembly average initial enrichment of 5.0 wt. % ^{235}U. The maximum allowable assembly average burnup is limited to 62 GWd/MTU. The maximum allowable heat load for the TN-LC-1FA basket loaded with a BWR fuel assembly is 2.0 kW.

1.4.5.2.3 Fuel Rods in the Pin Can

The TN-LC-1FA basket is designed to transport up to *21* intact light water reactor fuel rods in *the* pin can. This includes irradiated PWR, BWR, MOX, and EPR fuel rods. The maximum peak burnup for fuel rods is 90 GWd/MTU. Two designs are available, with cavity lengths of *180.24* in. *or 169.55* in. The pin can with the shorter cavity length is heavily shielded with lead at the ends, while the pin can with the longer cavity length does not feature axial lead shielding. The longer cavity pin can is used only for EPR pins, which are much longer than a standard fuel rod (an EPR rod is approximately 179.24 in. long). All other rods are transported in the shorter cavity pin can *with heavy axial shielding*.

PWR and BWR intact fuel rods may be from any of the fuel assemblies listed in Table 1.4.5-1 or Table 1.4.5-6, respectively. The pin can may transport up to *21* fuel rods, although the cooling times are reduced if 9 or fewer rods are transported. When transporting 9 or fewer rods, the rods shall be placed in the center 3x3 region of the pin can. PWR rod FQTs are shown in Table 1.4.5-10*, Table 1.4.5-10a for the 21 configuration,* and Table 1.4.5-11 for the 9 rod configuration. BWR rod FQTs are shown in Table 1.4.5-12 and Table 1.4.5-13 for the *21* and 9 rod configurations, respectively.

MOX rods have the same geometry as PWR or BWR rods, as defined in Table 1.4.5-1 and Table 1.4.5-5, although with a different fuel composition. The composition of MOX fuel is specified in Table 1.4.5-5.

The MOX rod FQT is provided in Table 1.4.5-14 for both *21* and 9 rods. The MOX rod FQT is applicable to both BWR and PWR MOX rods.

EPR rods may be either standard (UO_2) or MOX. UO_2 EPR rods have a uranium loading of 0.0020 MTU/rod, which is bounded by the B&W 15x15 Mark B10 rod listed in Table 1.4.5-1. Therefore, EPR rods are governed by the PWR rod FQTs (Table 1.4.5-10 and Table 1.4.5-11), while MOX EPR rods are governed by the MOX rod FQTs (Table 1.4.5-14).

Solid stainless steel spacers are inserted into the tubes prior to fuel rod loading to leave approximately 2 in. of each fuel rod protruding above the top of the base 5x5 array of tubes in the pin can assembly to allow handling.

The maximum allowable heat load for TN-LC cask with TN-LC-1FA basket loaded with fuel rods in the pin can is *2.5* kW (120 watts per rod) for the *21* rod option and *1.8* kW (220 watts per rod) for the 9 rod option.

All Indicated Changes are in response to RAI 5-2

Table 1.4.5-1
PWR Fuel Specification for the Fuel to be Transported in the TN-LC-1FA Basket

PHYSICAL PARAMETERS: Fuel Class [(1)(2)]	Intact unconsolidated B&W 17x17, WE 17x17, CE 16x16, B&W 15x15, WE 15x15, CE 15x15, WE 14x14, *WE 16x16,* and CE 14x14 class PWR assemblies (without control components) that are enveloped by the fuel assembly design characteristics listed in Table 1.4.5-2. Reload fuel manufactured by the same or other vendors but enveloped by the design characteristics listed in Table 1.4.5-2 is also acceptable.
Maximum Assembly + PRA Weight	1850 lbs
Fissile Material	UO_2
Maximum Initial Uranium Content[(4)]	490 kg/assembly
Maximum Unirradiated Assembly Length	178.3 inches
THERMAL/RADIOLOGICAL PARAMETERS: Fuel Assembly Average Burnup, Enrichment and Minimum Cooling Time	Per Table 1.4.5-8 *and Table 1.4.5-8a* RAI 5-2
Maximum Planar Average Initial Enrichment	5.0[(3)] wt.% U-235
Maximum Decay Heat[(5)]	3.0 kW per Assembly
Minimum B-10 content in poison plates loading	• 16.7 mg/cm^2 (Natural or Enriched Boron Aluminum Alloy / Metal Matrix Composite (MMC)) • 20.0 mg/cm^2 (Boral®)
Minimum number of absorber rods per PRA as a function of assembly class	Per Table 1.4.5-4

Notes:

1. Up to *21* PWR fuel rods from any of the PWR fuel assemblies listed in Table 1.4.5-2 may also be transported in the TN-LC-1FA basket in a pin can. The fuel rods are loaded in a pin can with a cavity length of *169.55* inches (Option 3) which is placed within the TN-LC-1FA basket. The maximum peak burnup for the fuel rods is 90 GWd/MTU. The required cooling time as a function of a PWR fuel rod burnup and enrichment are provided in Table 1.4.5-10 *and Table 1.4.5-10a* for *21* rods and Table 1.4.5-11 for 9 rods *(Not applicable to TN-LC Unit 01)*, respectively. RAI 5-2 RAI 5-2 RAI 5-2
2. Up to *21* EPR fuel rods from any of the fuel class listed in Table 1.4.5-2 and meeting EPR rod parameters specified in Table 1.4.5-3 may also be loaded in the TN-LC-1FA basket. The fuel rods are loaded in a pin can with a cavity length of *180.24* inches (Option 1 and Option 2) which is placed within the TN-LC-1FA basket. The maximum peak burnup for the fuel rods is 90 GWd/MTU. The required cooling time as a function of an EPR fuel rod burnup and enrichment are provided in Table 1.4.5-10 for *21* rods and Table 1.4.5-11 for 9 rods, respectively.
3. For CE 15x15, the maximum planar average initial enrichment is *3.60* wt. % ^{235}U. RAI 6-2
4. The maximum initial uranium content is based on the shielding analysis. The listed value is higher than the actual.
5. The maximum decay heat per rod is 220 watts when loading up to 9 rods. The maximum decay heat per rod is 120 watts when loading 10 or more (up to *21*) rods.

Table 1.4.5-8a
Fuel Qualification Table for a PWR Fuel Assembly - 3.10" Lead Thickness

(Minimum required years of cooling time after reactor core discharge)

Burn-up, GWd/ MTU	Enrichment, wt. % U-235																																				
	0.7	0.8	0.9	1.2	1.5	2.0	2.1	2.2	2.3	2.4	2.5	2.6	2.7	2.8	2.9	3.0	3.1	3.2	3.3	3.4	3.5	3.6	3.7	3.8	3.9	4.0	4.1	4.2	4.3	4.4	4.5	4.6	4.7	4.8	4.9	5.0
10	3.0	3.0	2.9	2.9	2.8	2.8	2.8	2.8	2.7	2.7	2.7	2.7	2.6	2.6	2.6	2.6	2.6	2.6	2.6	2.5	2.5	2.5	2.5	2.5	2.5	2.5	2.5	2.5	2.5	2.5	2.5	2.4	2.4	2.4	2.4	2.4
20	4.7	4.6	4.5	4.4	4.3	4.2	4.2	4.1	4.0	4.0	3.9	3.9	3.8	3.8	3.8	3.7	3.7	3.6	3.6	3.6	3.6	3.5	3.5	3.5	3.5	3.4	3.4	3.4	3.4	3.4	3.4	3.3	3.3	3.3	3.3	3.3
30			6.7	6.5	6.3	6.2	6.0	5.9	5.7	5.6	5.5	5.3	5.2	5.1	5.1	5.0	4.9	4.8	4.7	4.7	4.6	4.6	4.5	4.5	4.4	4.4	4.3	4.3	4.2	4.2	4.2	4.1	4.1	4.1	4.1	4.0
39						7.1	6.9	6.7	6.6	6.4	6.3	6.2	6.0	5.9	5.8	5.7	5.6	5.5	5.4	5.4	5.3	5.2	5.2	5.1	5.0	5.0	4.9	4.9	4.8	4.8	4.8	4.7	4.7	4.6	4.6	4.6
40												6.4	6.2	6.1	6.0	5.9	5.8	5.7	5.6	5.5	5.4	5.4	5.3	5.2	5.2	5.1	5.1	5.0	5.0	4.9	4.9	4.8	4.8	4.7	4.7	4.7
50												9.6	9.4	9.2	8.9	8.7	8.5	8.3	8.1	7.9	7.8	7.6	7.5	7.3	7.2	7.1	6.9	6.8	6.7	6.6	6.5	6.4	6.3	6.2	6.2	6.1
55												12.0	11.7	11.4	11.1	10.8	10.5	10.3	10.0	9.8	9.6	9.4	9.1	8.9	8.8	8.6	8.4	8.2	8.1	7.9	7.8	7.7	7.5	7.4	7.3	7.2
60												14.8	14.4	14.1	13.7	13.4	13.0	12.7	12.4	12.1	11.8	11.5	11.3	11.0	10.7	10.5	10.3	10.1	9.8	9.6	9.4	9.3	9.1	8.9	8.8	8.6
61												15.4	15.0	14.7	14.3	13.9	13.6	13.3	12.9	12.6	12.3	12.0	11.7	11.5	11.2	10.9	10.7	10.5	10.2	10.0	9.8	9.6	9.4	9.3	9.1	8.9
62												16.1	15.7	15.3	14.9	14.5	14.2	13.8	13.5	13.1	12.8	12.5	12.2	11.9	11.7	11.4	11.1	10.9	10.7	10.4	10.2	10.0	9.8	9.6	9.4	9.3
Enr. wt.%	0.7	0.8	0.9	1.2	1.5	2.0	2.1	2.2	2.3	2.4	2.5	2.6	2.7	2.8	2.9	3.0	3.1	3.2	3.3	3.4	3.5	3.6	3.7	3.8	3.9	4.0	4.1	4.2	4.3	4.4	4.5	4.6	4.7	4.8	4.9	5.0

Note:

1. *Explanatory notes and limitations regarding the use of this table follow Table 1.4.5-14.*

All Indicated Changes are in response to RAI 5-2

Table 1.4.5-10a
Fuel Qualification Table for 21 PWR Fuel Rods (UO_2) - 3.10" Lead Thickness

(Minimum required years of cooling time after reactor core discharge)

Burn-up, GWd/ MTU	Enrichment, wt. % U-235																																				
	0.7	0.8	0.9	1.2	1.5	2.0	2.1	2.2	2.3	2.4	2.5	2.6	2.7	2.8	2.9	3.0	3.1	3.2	3.3	3.4	3.5	3.6	3.7	3.8	3.9	4.0	4.1	4.2	4.3	4.4	4.5	4.6	4.7	4.8	4.9	5.0
10	0.35	0.35	0.30	0.30	0.30	0.30	0.30	0.30	0.30	0.30	0.30	0.30	0.30	0.30	0.30	0.30	0.30	0.30	0.30	0.30	0.30	0.30	0.30	0.30	0.30	0.30	0.30	0.30	0.30	0.30	0.30	0.30	0.30	0.30	0.30	0.30
20	0.35	0.35	0.30	0.30	0.30	0.30	0.30	0.30	0.30	0.30	0.30	0.30	0.30	0.30	0.30	0.30	0.30	0.30	0.30	0.30	0.30	0.30	0.30	0.30	0.30	0.30	0.30	0.30	0.30	0.30	0.30	0.30	0.30	0.30	0.30	0.30
30			0.30	0.30	0.30	0.30	0.30	0.30	0.30	0.30	0.30	0.30	0.30	0.30	0.30	0.30	0.30	0.30	0.30	0.30	0.30	0.30	0.30	0.30	0.30	0.30	0.30	0.30	0.30	0.30	0.30	0.30	0.30	0.30	0.30	0.30
39						0.30	0.30	0.30	0.30	0.30	0.30	0.30	0.30	0.30	0.30	0.30	0.30	0.30	0.30	0.30	0.30	0.30	0.30	0.30	0.30	0.30	0.30	0.30	0.30	0.30	0.30	0.30	0.30	0.30	0.30	0.30
40												0.30	0.30	0.30	0.30	0.30	0.30	0.30	0.30	0.30	0.30	0.30	0.30	0.30	0.30	0.30	0.30	0.30	0.30	0.30	0.30	0.30	0.30	0.30	0.30	0.30
45												0.30	0.30	0.30	0.30	0.30	0.30	0.30	0.30	0.30	0.30	0.30	0.30	0.30	0.30	0.30	0.30	0.30	0.30	0.30	0.30	0.30	0.30	0.30	0.30	0.30
50												0.35	0.35	0.35	0.35	0.30	0.30	0.30	0.30	0.30	0.30	0.30	0.30	0.30	0.30	0.30	0.30	0.30	0.30	0.30	0.30	0.30	0.30	0.30	0.30	0.30
55												0.37	0.37	0.37	0.36	0.36	0.35	0.35	0.35	0.35	0.35	0.35	0.35	0.35	0.35	0.35	0.35	0.35	0.35	0.35	0.35	0.35	0.35	0.35	0.35	0.35
60												0.50	0.49	0.48	0.47	0.47	0.46	0.45	0.45	0.44	0.44	0.43	0.43	0.42	0.42	0.41	0.41	0.41	0.40	0.40	0.40	0.39	0.39	0.39	0.38	0.38
61												0.53	0.52	0.51	0.5	0.5	0.49	0.48	0.47	0.47	0.46	0.46	0.45	0.44	0.44	0.44	0.43	0.43	0.42	0.42	0.42	0.41	0.41	0.41	0.40	0.40
62												0.56	0.55	0.54	0.53	0.53	0.52	0.51	0.5	0.49	0.49	0.48	0.48	0.47	0.46	0.46	0.45	0.45	0.44	0.44	0.44	0.43	0.43	0.43	0.42	0.42
65																							0.56	0.55	0.55	0.54	0.53	0.53	0.52	0.51	0.51	0.50	0.50	0.49	0.49	0.49
70																							0.71	0.70	0.69	0.68	0.67	0.67	0.66	0.65	0.65	0.64	0.63	0.62	0.62	0.61
75																							0.87	0.86	0.85	0.84	0.83	0.82	0.8	0.79	0.79	0.78	0.77	0.76	0.75	0.75
80																							1.04	1.03	1.01	1.00	0.99	0.97	0.96	0.95	0.94	0.93	0.92	0.91	0.90	0.89
85																							1.24	1.22	1.20	1.18	1.16	1.15	1.13	1.12	1.10	1.09	1.08	1.06	1.05	1.04
90																							1.47	1.44	1.41	1.39	1.37	1.34	1.32	1.3	1.29	1.27	1.25	1.23	1.22	1.20
Enr. wt.%	0.7	0.8	0.9	1.2	1.5	2.0	2.1	2.2	2.3	2.4	2.5	2.6	2.7	2.8	2.9	3.0	3.1	3.2	3.3	3.4	3.5	3.6	3.7	3.8	3.9	4.0	4.1	4.2	4.3	4.4	4.5	4.6	4.7	4.8	4.9	5.0

Note:

1. *Explanatory notes and limitations regarding the use of this table follow Table 1.4.5-14.*

All Indicated Changes are in response to RAI 5-2

2.13.10.2 Methodology

The thermal analysis of the payload for NCT is described in Chapter 3. This analysis is performed to determine the transport cask component's temperatures for the condition with maximum solar heating, maximum decay heat from the basket contents, and 100 °F ambient temperature. The results of the thermal analysis are used to evaluate the effects of axial and radial thermal expansion in the transport cask components.

Maximum temperatures of the TN-LC components and payload are obtained using ANSYS [1] from 100°F ambient NCT thermal analysis results from Chapter 3. The maximum temperatures of the basket components are conservatively used as average basket component temperatures during hot NCT evaluations. For cold NCT evaluations, the average basket component temperature is conservatively assumed to be 250 °F, which bounds the maximum basket temperature from Chapter 3. It is conservatively assumed that the TN-LC cask inner shell does not thermally expand*, except for the hot NCT 1FA pin case,* and a reference temperature of 70 °F is used.

To verify that adequate clearance exists between the fuel and basket components and the cask cavity for free thermal expansion, the thermal expansions between various components were calculated and maximum fuel lengths were determined.

A 182.10" minimum cavity length is conservatively considered for TN-LC Unit #1 and 1FA contents.

Table 2.13.10-1
Dimensions and Average Temperatures Used
in Calculating Fuel Assembly Axial Thermal Expansion in the TN-LC Transport Cask

Operation Condition	TN-LC Basket in Transport Cask	$L_{IC,FCav,Cold}$, inches	$T_{avg,FA}$, °F	Cladding Materials
Hot NCT (100°F Ambient)	NRUX	115.70	196	Aluminum (1)
	MTR-S	27.42	245	
	MTR-M	33.25	245	
	MTR-L	42.00	245	
	TRIGA (Option 1)	31.00	250	
	TRIGA (Option 2)	48.05	250	
	1FA (BWR)	*182.10*(2)	396	Zircaloy-4
	1FA (PWR)	*182.10*(2)	401	
	1FA (Pin Can Options 1 *and 2*)	*180.24*	456	
	1FA (Pin Can Option 3)	*169.55*	456	
Cold NCT (-40°F Ambient)	1FA (Pin Can Options 1 *and 2*)	*180.24*	335	
	1FA (Pin Can Option 3)	*169.55*	335	

Notes:
1. **[ ]**
2. *Conservatively considering TN-LC Unit #1 minimum as-built cavity length.*

Table 2.13.10-2
Dimensions and Average Temperatures Used
in Calculating Basket Assembly Axial Thermal Expansion in the TN-LC Transport Cask

Operation Condition	TN-LC Basket in Transport Cask	$L_{Basket,Cold}$, in.	$L_{IC,TC,Cold}$, in.	$T_{avg,Basket}$, °F	$T_{avg,TC,Shell}$, °F
Hot NCT	NRUX	181.5	181.75	199	n/a
	MTR	182.0	182.5	256	
	TRIGA	179.5	182.5	255	
	1FA (BWR)	181.5	*182.10*(3)	298	
	1FA (PWR)	181.5	*182.10*(3)	278	
	1FA *pin can*	*181.91*	*182.10*(3)	283 (1)	210.5 (2)
Cold NCT	1FA *pin can*	*181.91*	*182.10*(3)	185 (1)	n/a

Notes:
1. Based on the average value among pin can, cask top and bottom maximum temperatures from Chapter 3.
2. Average temperature based on TN-LC transport cask temperature plot in Chapter 3. Thermal expansion for the transport cask is considered for this basket considering the higher heat load and the lower initial clearance.
3. *Conservatively considering TN-LC Unit #1 minimum as-built cavity length.*

Table 2.13.10-3
Dimensions and Average Temperatures Used
in Calculating Basket Rail Axial Thermal Expansion in the TN-LC Transport Cask

Operation Condition	**TN-LC Basket in Transport Cask**	$L_{Rail,Cold,}$ In.	$L_{IC,Rail,Cold,}$ In.	$T_{avg,Rail,}$ °F
Hot NCT	MTR	176.5	177	220
	TRIGA	47.3 [1]	48.3	231
	1FA (BWR)	180.5	*182.10*[3]	261
	1FA (PWR)	180.5	*182.10*[3]	268
	1FA (Pin Can)	180.5	*182.10*[3]	268
Cold NCT	1FA (Pin Can)	180.5	*182.10*[3]	250 [2]

Notes:
1. At least 1 in. space among basket rail segments for thermal growth based on Chapter 1 drawings.
2. Based on the bounding maximum basket temperature for cold NCT.
3. *Conservatively considering TN-LC Unit #1 minimum as-built cavity length.*

Table 2.13.10-4
Dimensions and Average Temperatures Used
in Calculating Basket Assembly Radial Thermal Expansion in the TN-LC Transport Cask

Operation Condition	**TN-LC Basket in Transport Cask**	$ID_{TC,Cold}$ **In.**	$OD_{Basket,Cold}$ **In.**	$W_{SS,Basket,Cold}$ **In.**	$W_{Rail,Cold}$ **In.**	$T_{avg,Basket}$ **°F**	$T_{avg,Rail}$ **°F**
Hot NCT	NRUX	18	17.55	n/a	n/a	191	n/a
	MTR	18	17.55	12.94	2.305	256	220
	TRIGA	18	17.55	12.12	2.715	255	231
	1FA (BWR)	18	17.55	11.375	3.0875	267	261
	1FA (PWR)	18	17.55	11.375	3.0875	278	268
	1FA (Pin Can)	18	17.55	11.375	3.0875	277	268
Cold NCT	1FA (Pin Can)	18	17.55	11.375	3.0875	250 [1]	250 [1]

Notes:
1. Based on the bounding maximum basket temperature for cold NCT.

Table 2.13.10-7
Maximum Allowable Irradiated FA Length in a Fuel Basket

Operating Condition	TN-LC Basket Type	$T_{avg,FA}$ °F	$L_{IC,FCan,Cold}$ In	$L_{FA,Cold,Max}$ in
Hot NCT (100ºF Ambient)	NRUX	196 (1)	115.70	115.51
	MTR-S	245 (1)	27.42	27.36
	MTR-M	245 (1)	33.25	33.17
	MTR-L	245 (1)	42.00	41.90
	TRIGA (Option 1)	250 (1)	31.00	30.93
	TRIGA (Option 2)	250 (1)	48.05	47.94
	1FA (BWR)	396 (2)	*182.10(3)*	*181.67*
	1FA (PWR)	401 (2)	*182.10(3)*	*181.66*
	1FA (Pin Can Option*s* 1 *and 2*)	*456* (2)	*180.24*	*179.73*
	1FA (Pin Can Option 3)	*456* (2)	*169.55*	*169.08*
Cold NCT (-40ºF Ambient)	1FA (Pin Can Option*s* 1 *and 2*)	335 (2)	*180.24*	179.*89*
	1FA (Pin Can Option 3)	335 (2)	*169.55*	*169.23*

Notes:
1. Fuel cladding material based on aluminum cladding.
2. Zircaloy assumed for 144" active fuel region and SA-240 type 304 for fuel assembly components excluding active fuel region.
3. *Conservatively considering TN-LC Unit #1 minimum as-built cavity length.*

Table 2.13.10-8
Minimum Axial Clearance for the Basket in Transport Cask

Operating Condition	TN-LC Basket Type	$\alpha_{SS,Basket}$ $°F^{-1}$	α_{TC} $°F^{-1}$	$L_{Basket,Hot}$ In.	$L_{IC,TC,Hot}$ in.	$\Delta_{Bask\_Axi\_Hot\_Gap}$ in.
Hot NCT	NRUX	8.90E-06	n/a	181.71	181.75	0.04
	MTR	9.11E-06	n/a	182.31	182.50	0.19
	TRIGA	9.11E-06	n/a	182.31	182.50	0.19
	1FA (BWR)	9.20E-06	n/a	181.88	*182.10*	0.*22*
	1FA (PWR)	9.16E-06	n/a	181.85	*182.10*	0.*25*
	1FA (Pin Can)	9.17E-06	8.52E-06	*182.27*	*182.32*	0.*05*
Cold NCT	1FA (Pin Can)	8.97E-06	n/a	*182.098*	*182.100*	0.*002*

Table 2.13.10-9
Minimum Axial Clearance for the Basket Rail in TN-LC Transport Cask

Operating Condition	TN-LC Basket Type	$\alpha_{Al,Rail}$ °F^{-1}	$L_{Rail,Hot}$ in.	$L_{IC,Rail,Hot}$ in.	$\Delta_{Rail\_Axi\_Hot\_Gap}$ in.
NCT	MTR	1.30E-05	176.85	177.00	0.15
	TRIGA	1.31E-05	*47*.40	*48*.30	0.90
	1FA (BWR)	1.31E-05	180.95	*182.10*	*1.15*
	1FA (PWR)	1.32E-05	180.97	*182.10*	*1.13*
	1FA (Pin Can)	1.32E-05	180.97	*182.10*	*1.13*
Cold NCT	1FA (Pin Can)	1.24E-05	180.93	*182.10*	*1.17*

Table 2.13.10-10
Minimum Radial Clearance for the Basket in the TN-LC Transport Cask

Operating Condition	TN-LC Basket Type	$\alpha_{SS,Basket}$ 1/°F	$\alpha_{Al,Rail}$ 1/°F	$OD_{Basket,Hot}$ in.	$ID_{TC,Hot}$ in.	$\Delta_{Bask\_Rad\_Hot\_Gap}$ in.
Hot NCT	NRUX	8.88E-06	1.28E-05	17.569	18.000	0.216
	MTR	9.11E-06	1.30E-05	17.581	18.000	0.210
	TRIGA	9.11E-06	1.31E-05	17.582	18.000	0.209
	1FA (BWR)	9.13E-06	1.31E-05	17.586	18.000	0.207
	1FA (PWR)	9.16E-06	1.32E-05	17.588	18.000	0.206
	1FA (Pin Can)	9.15E-06	1.32E-05	17.588	18.000	0.206
Cold NCT	1FA (Pin Can)	9.10E-06	1.31E-05	17.583	18.000	0.208

Table 2.13.10-11
Minimum Clearance for the Poison Plate Thermal Expansion in a Fuel Basket

	Hot NCT	Cold NCT
$W_{Wrap,Cold,}$ in.	11.875	11.875
$W_{Poison,Cold,}$ in.	11.845	11.845
$T_{avg,Wrap,}$ °F	n/a	n/a
$T_{avg,Poison,}$ °F	255	250
$\alpha_{SS,Wrap,}$ 1/°F	n/a	n/a
$\alpha_{Al,Poison,}$ 1/°F	1.31E-05	1.31E-05
$W_{Wrap,Hot,}$ in.	11.875	11.875
$W_{Poison,Hot,}$ in.	11.874	11.873
$\Delta_{Poison\_Hot\_Gap,}$ in.	0.001	0.002

Table 2.13.10-12
Minimum Axial Clearance for the Poison Plate Thermal Expansion in a Fuel Basket

Basket Type	**TRIGA (Option 1)**	**TRIGA (Option 2)**	**1FA**
$_{Insert\_End,Cold}$, in.	28.76	45.81	181
$L_{Poison,Cold}$, in.	28.31	45.36	180.5
$T_{avg,Poison}$, °F	255	255	275
α_{Poison}, 1/°F	1.31E-05	1.31E-05	1.32E-05
$L_{Insert\_End,Hot}$, in.	28.760	45.810	181.000
$L_{Poison,Hot}$, in.	28.379	45.470	180.988
$\Delta_{Poison\_Axi\_Hot\_Gap}$, in.	0.381	0.340	0.012

Table 2.13.10-13
Maximum Length of Fuel Assemblies, Rods and Fuel Elements for TN-LC Transport Cask

Operating Condition	**TN-LC Basket Type**	$L_{IC,FCan,Cold}$ in.	$L_{FA,Cold,Max}$ in.
Hot NCT (100°F Ambient)	NRUX	115.70	115.51
	MTR-S	27.42	27.36
	MTR-M	33.25	33.17
	MTR-L	42.00	41.90
	TRIGA (Option 1)	31.00	30.93
	TRIGA (Option 2)	48.05	47.94
	1FA (BWR)	*182.10*	*181.67*
	1FA (PWR)	*182.10*	*181.66*
	1FA (Pin Can Option*s* 1 *and 2*)	*180.24*	*179.73*
	1FA (Pin Can Option 3)	*169.55*	*169.08*
Cold NCT (-40°F Ambient)	1FA (Pin Can Option*s* 1 *and 2*)	*180.24*	*179.89*
	1FA (Pin Can Option 3)	*169.55*	*169.23*

Appendix 5.6.4
FA Basket Shielding Evaluation

NOTE: References in this Appendix are shown as [1], [2], etc. and refer to the reference list in Section 5.6.4.5.1.

This Appendix presents the shielding evaluation of the TN-LC transportation package containing the TN-LC-1FA basket. The MCNP computer program [1] is used to calculate the dose rates using a detailed three-dimensional model. The dose rates are evaluated per the requirements of 10CFR71.47 and 71.51 for exclusive use transportation in a closed transport vehicle.

5.6.4.1 Description of the Shielding Design

5.6.4.1.1 Design Features

The shielding design of the cask is described in Section 5.1.1. Shielding is also provided by the TN-LC-1FA basket. The shielding provided is different for different fuel types. **[**

]

The pin can is used to transport up to *21* BWR or PWR fuel rods. **[**

]

5.6.4.1.2 Summary Tables of Maximum Radiation Levels

Normal conditions of transport (NCT) dose rates are computed for exclusive use transport in a closed transport vehicle. The dose rate limits are as follows:

- Surface of the package: 1000 mrem/hr
- Surface of the transport vehicle: 200 mrem/hr
- 2 m from the surface of the transport vehicle: 10 mrem/hr

The transport vehicle is assumed to be 8 ft wide. Because the TN-LC is a long package, the ends of the transport vehicle are conservatively assumed to be at the ends of the impact limiters. The underside (floor) of the vehicle is conservatively assumed to correspond to the radius of the impact limiters. The dose rates on the vehicle roof are not computed as these dose rates are bounded by the dose rates on the underside of the vehicle. Dose rates are also computed 2 m from the sides and ends of the vehicle.

5.6.4.4.5.2 Fuel Qualification

The fuel qualification tables, matrix of burnup, enrichment and cooling time, are generated using the response functions at 2m determined in Section 5.6.4.4.5.1 as the dose rate 2 m from the side of the vehicle is typically the limiting dose rate.

The methodology employed is identical to that described in Section 5.6.4.2.1. The updated FQT are developed for the:

- 1 PWR fuel assembly

- 25 PWR rods in a pin can

For PWR fuel assembly, the maximum burnup is 62 GWD/MTU. For fuel rods, the maximum burnup is 90 GWD/MTU. The U-235 enrichment varies between 0.9 and 5.0 wt.%.

FQTs for each of the fuel types are provided in the following tables:

- *Table 5.6.4-61, FQT for a single PWR fuel assembly*
- *Table 5.6.4-62, FQT for 25 PWR fuel rods. Table 5.6.4-62a shows dose rates corresponding to burnup/enrichment/cooling time shown in Table 5.6.4-62.*

The cooling times determined in the FQTs ensure the decay heat limits are met and the dose rates 2 m from the side of the vehicle are below 8 mrem/hr for PWR fuel assembly and 7.69 mrem/hr for 25 PWR rods pin can. ORIGEN-ARP models, fuel hardware and irradiation parameters are identical to those described in Section 5.6.4.2.1.

5.6.4.4.5.3 Bounding Gamma and Neutron Source Terms

Once FQTs and design basis burnup, enrichment, and cooling time combinations have been established, design basis source terms are developed based on identical ORIGEN-ARP models as described in Section 5.6.4.2.3.

The bounding NCT and HAC gamma source terms for the various fuel types and quantities are summarized in Table 5.6.4-63 and Table 5.6.4-64 as follow:

- *Table 5.6.4-63: PWR fuel assembly, NCT assembly average burnup of 61 GWD/MTU, enrichment of 3.2 wt%, and cooling time of 13.3 years; HAC assembly average burnup of 62 GWD/MTU, enrichment of 2.6 percent, and cooling time of 16.1 years*
- *Table 5.6.4-64: 25 PWR fuel rods, NCT rod peak burnup of 10 GWD/MTU, enrichment of 0.8 wt%, and cooling time of 69.51 days or 0.19 year; HAC rod peak burnup of 90 GWD/MTU enrichment of 3.7 percent, and cooling time of 1.5 years*

The corresponding neutron sources for the two contents are summarized in Table 5.6.4-65.

All Indicated Changes are in response to RAI 5-3

5.6.4.4.5.4 Shielding Analysis

The shielding analysis is performed for the 1 PWR fuel assembly and 25 PWR rods in 1 pin can contents as described in Sections 5.6.4.4.1, 5.6.4.4.2, 5.6.4.4.3 and 5.6.4.4.4. The shielding model is identical to that described in Section 5.6.4.3 with the exception of the lead thickness set to 3.10 inches.

In summary, the following NCT analyses are performed:

- *PWR fuel assembly, shifted either up or down. Note that fuel reconfiguration in NCT is not performed as it was shown in Section 5.6.4.4.4.4 that NCT fuel reconfiguration did not result in higher dose rate than NCT dose rate.*
- *25 PWR rods axially centered in the long-cavity pin can*

HAC assumptions are identical to those described in Section 5.6.4.3.1 with the exception of the lead thickness set to 3.10 inches. HAC analysis is performed for the 1 PWR fuel assembly with and without fuel reconfiguration and for the 25 PWR rods pin can.

The summary of the NCT dose rates for the 1 PWR fuel assembly and 25 PWR rods pin can is provided in Table 5.6.4-66.

5.6.4.4.5.4.1 NCT, PWR Fuel Assembly

Dose rates are computed for fuel shifted up in all PWR fuel assembly results tables, with the exception of dose rates at the bottom end, which are for fuel shifted down. Radial dose rates are slightly higher when the fuel is shifted up.

Package surface: The maximum package surface dose rate occurs on the side of the cask at the shear key, with a dose rate of 477 mrem/hr. This is an NCT dose rate, although it is computed using the HAC source by scaling the NCT dose rate. This dose rate is less than the limit of 1000 mrem/hr.

Vehicle surface: The maximum dose rate on the vehicle underside occurs at the shear key with a dose rate of 116 mrem/hr. The maximum vehicle surface dose rate occurs on the impact limiter surface at the bottom center of the package. This dose rate is 70.2 mrem/hr, which bounds the vehicle surface dose rates on the underside, side, and top end. This dose rate is less than the limit of 200 mrem/hr.

2 m from vehicle surface: The maximum dose rate of 8.77 mrem/hr is computed using a mesh tally. This dose rate is less than the limit of 10 mrem/hr and bounds the dose rates 2 m from the ends of the vehicle.

5.6.4.4.5.4.2 HAC, PWR Fuel Assembly

PWR fuel assembly HAC cases are developed for the fuel assembly shifted up or down, as shifting the fuel places the nozzles closer to the lead slump regions that may form under HAC. The lead slump has little effect on the dose rate because the dose rate is dominated by neutrons and peaks near the axial center. The maximum side dose rate for the PWR fuel assembly is 305 mrem/hr.

All Indicated Changes are in response to RAI 5-4

HAC reconfiguration is performed with the PWR fuel assembly shifted down when the active fuel region is rubblized during an accident assuming the volume of active fuel region of the assembly reduced by 50% with a corresponding homogenized density increase, see Section 5.6.4.4.4.5. The maximum radial dose rate is 413 mrem/hr.

5.6.4.4.5.4.3 NCT, 25 PWR rods Pin Can

Package surface: The maximum package surface dose rate occurs on the side of the cask at the shear key with a dose rate of 100 mrem/hr. This is an NCT dose rate, although it is computed using the HAC source by scaling the NCT dose rate. This dose rate is less than the limit of 1000 mrem/hr.

Vehicle surface: The maximum dose rate on the vehicle underside occurs at the shear key with a dose rate of 45.6 mrem/hr. This is an NCT dose rate, although it is computed using the HAC source by scaling the NCT dose rate using the factors shown above. The NCT vehicle side surface dose rate is bounded by the dose rate on the underside of the vehicle. NCT vehicle end dose rates are bounded by the dose rates on the underside of the vehicle. The maximum vehicle surface dose rate is less than the limit of 200 mrem/hr.

2 m from vehicle surface: The maximum dose rate of 8.07 mrem/hr is computed using a mesh tally. This dose rate is less than the limit of 10 mrem/hr.

5.6.4.4.5.4.4 HAC, 25 PWR rods Pin Can

The maximum HAC dose rate using the 25 PWR rods is 147 mrem/hr.

5.6.4.4.5.4.5 O-rings Gamma Exposure

The gamma exposure for the fluorocarbon (FKM, FPM) material based O-rings in the TN-LC Unit 01 is evaluated considering a full year service and the bounding gamma source.

An examination of the enrichment/burnup/cooling time combinations shown in Table 5.6.4-61, FQT table for PWR 1FA content, in conjunction with response functions in Table 5.6.4-60, identifies 10 GWd/MTU, 4.9 wt% U235 and 2.4 years as the bounding combination for gamma sources (combination yielding the highest gamma dose rate).

Fluorocarbon (FKM, FPM) material based O-ring is a family of fluoroelastomer materials. The Parker O-ring handbook indicates that all elastomers suffer no change of their physical properties at radiation levels up to 10^6 rad which corresponds to a radiation level achieved after years of operations in the majority of the applications.

Fluorocarbon (FKM, FPM) O-rings are modeled at the top lid seal and the bottom plug of the TN-LC Unit 01 cask; the fluorocarbon O-ring material is assumed to be with molecular formula C3F7 and 1.87 g/cc density. F6 tallies are used in the MCNP models and the average energy deposition in MeV/g is converted in rad/year using tally multiplier card (FMn).

The gamma exposures at the top O-rings and the bottom O-rings for a full year of service are respectively 1.84×10^4 rad and 1.05×10^4 rad. The gamma exposures are significantly below the 10^6 rad threshold.

All Indicated Changes are in response to RAI 2-1

5.6.4.4.5.4.6 Sensitivity analysis on basket frame tolerances

The 1FA basket steel frame is 1 inch thick, Table 5.6.4-30, with a tolerance of 0.05 inch. This section documents a sensitivity analysis for the 1 PWR fuel assembly content and 25-pin can content when considering 0.9 inch thick steel frame which is below the minimum thickness.

The MCNP models for the 1 PWR fuel assembly and 25-pin can analyses are identical to those in Section 5.6.4.4.5.4.1 and Section 5.6.4.4.5.4.3 with the exception that the steel frame is modeled as 0.9 inch. The sources are identical to those shown in Section 5.6.4.4.5.3 for NCT, i.e., 61 GWD/MTU, 3.2 wt% U235 and 13.3 years cooling time for the 1 PWR fuel assembly content and 10 GWD/MTU, 0.8 wt% U235 and 69.51 days cooling time for the 25-pin can content.

The analysis shows that while the gamma component increases by approximately 11%, the total dose rate at 2 m from surface vehicle is 9.19 mrem/hr for the 1 PWR fuel assembly content and remains below the regulatory limit. For the 25pin can content, the gamma component increases by approximately 9%, the total dose rate at 2 m from surface vehicle is 8.74 mrem/hr, which is significantly below the regulatory limit.

All Indicated Changes are in response to RAI 1-9

Table 5.6.4-16
Gamma NCT Response Functions

Upper Energy (MeV)	1 PWR Fuel Assembly (mrem/hr)	1 BWR Fuel Assembly (mrem/hr)	25 PWR Fuel Rods (mrem/hr)	25 BWR Fuel Rods (mrem/hr)	9 PWR Fuel Rods (mrem/hr)	9 BWR Fuel Rods (mrem/hr)
1.33	5.79804E-15	2.17913E-15	2.13004E-15	1.72260E-15	2.46354E-15	2.08946E-15
1.66	3.93774E-14	1.76670E-14	1.72475E-14	1.40196E-14	1.95900E-14	1.67858E-14
2.50	*3.03671E-13*	*1.71670E-13*	*1.69884E-13*	*1.40343E-13*	*1.93450E-13*	*1.70131E-13*
3.00	*5.98923E-13*	*3.56723E-13*	*3.61668E-13*	*3.01290E-13*	*4.11446E-13*	*3.65447E-13*

Table 5.6.4-17
Neutron NCT Response Functions

Fuel Type	Neutron (mrem/hr)	Secondary Gamma (mrem/hr)
PWR Assembly	2.40405E-09	2.33788E-10
BWR Assembly	2.06492E-09	2.45805E-10
25 PWR rods	2.06372E-09	2.44077E-10
25 BWR rods	2.12327E-09	2.63361E-10
9 PWR rods	2.16932E-09	2.50505E-10
9 BWR rods	2.11987E-09	2.50904E-10

All Indicated Changes are in response to RAI 5-5

Table 5.6.4-62
Fuel Qualification Table for 25 PWR Fuel Rods - 3.10" Lead Thickness
Cooling Time (years)

Burn-up, GWd/ MTU	Enrichment, wt.%. ^{235}U																																				
	0.7	0.8	0.9	1.2	1.5	2.0	2.1	2.2	2.3	2.4	2.5	2.6	2.7	2.8	2.9	3.0	3.1	3.2	3.3	3.4	3.5	3.6	3.7	3.8	3.9	4.0	4.1	4.2	4.3	4.4	4.5	4.6	4.7	4.8	4.9	5.0
10	0.19	0.19	0.19	0.19	0.19	0.19	0.19	0.19	0.19	0.19	0.19	0.19	0.19	0.19	0.19	0.19	0.19	0.19	0.19	0.19	0.19	0.19	0.19	0.19	0.19	0.19	0.19	0.19	0.19	0.19	0.19	0.19	0.19	0.19	0.19	0.19
20	0.22	0.22	0.22	0.22	0.22	0.22	0.21	0.21	0.21	0.21	0.21	0.21	0.21	0.21	0.21	0.21	0.21	0.21	0.21	0.21	0.21	0.21	0.21	0.21	0.21	0.21	0.21	0.21	0.21	0.21	0.21	0.21	0.21	0.21	0.21	0.21
30			0.24	0.24	0.24	0.24	0.24	0.24	0.24	0.24	0.24	0.23	0.23	0.23	0.23	0.23	0.23	0.23	0.23	0.23	0.23	0.23	0.23	0.23	0.23	0.23	0.23	0.23	0.23	0.23	0.23	0.23	0.23	0.23	0.23	0.23
39						0.25	0.25	0.25	0.25	0.25	0.25	0.25	0.25	0.25	0.25	0.24	0.24	0.24	0.24	0.24	0.24	0.24	0.24	0.24	0.24	0.24	0.24	0.24	0.24	0.24	0.24	0.24	0.24	0.24	0.24	0.24
40												0.25	0.25	0.25	0.25	0.25	0.25	0.25	0.25	0.24	0.24	0.24	0.24	0.24	0.24	0.24	0.24	0.24	0.24	0.24	0.24	0.24	0.24	0.24	0.24	0.24
45												0.26	0.26	0.26	0.26	0.26	0.26	0.26	0.26	0.26	0.26	0.26	0.26	0.25	0.25	0.25	0.25	0.25	0.25	0.25	0.25	0.25	0.25	0.25	0.25	0.25
50												0.31	0.30	0.30	0.30	0.30	0.30	0.30	0.29	0.29	0.29	0.29	0.29	0.29	0.29	0.29	0.28	0.28	0.28	0.28	0.28	0.28	0.28	0.28	0.28	0.28
55												0.37	0.37	0.37	0.36	0.36	0.35	0.35	0.35	0.35	0.34	0.34	0.34	0.34	0.33	0.33	0.33	0.33	0.33	0.33	0.32	0.32	0.32	0.32	0.32	0.32
60												0.50	0.49	0.48	0.47	0.47	0.46	0.45	0.45	0.44	0.44	0.43	0.43	0.42	0.42	0.41	0.41	0.41	0.40	0.40	0.40	0.39	0.39	0.39	0.38	0.38
61												0.53	0.52	0.51	0.50	0.50	0.49	0.48	0.47	0.47	0.46	0.46	0.45	0.44	0.44	0.44	0.43	0.43	0.42	0.42	0.42	0.41	0.41	0.41	0.40	0.40
62												0.56	0.55	0.54	0.53	0.53	0.52	0.51	0.50	0.49	0.49	0.48	0.48	0.47	0.46	0.46	0.45	0.45	0.44	0.44	0.44	0.43	0.43	0.43	0.42	0.42
65																							0.56	0.55	0.55	0.54	0.53	0.53	0.52	0.51	0.51	0.50	0.50	0.49	0.49	0.49
70																							0.71	0.70	0.69	0.68	0.67	0.67	0.66	0.65	0.65	0.64	0.63	0.62	0.62	0.61
75																							0.87	0.86	0.85	0.84	0.83	0.82	0.80	0.79	0.79	0.78	0.77	0.76	0.75	0.75
80																							1.04	1.03	1.01	1.00	0.99	0.97	0.96	0.95	0.94	0.93	0.92	0.91	0.90	0.89
85																							1.24	1.22	1.20	1.18	1.16	1.15	1.13	1.12	1.10	1.09	1.08	1.06	1.05	1.04
90																							1.47	1.44	1.41	1.39	1.37	1.34	1.32	1.30	1.29	1.27	1.25	1.23	1.22	1.20
Enr. wt.%	0.7	0.8	0.9	1.2	1.5	2.0	2.1	2.2	2.3	2.4	2.5	2.6	2.7	2.8	2.9	3.0	3.1	3.2	3.3	3.4	3.5	3.6	3.7	3.8	3.9	4.0	4.1	4.2	4.3	4.4	4.5	4.6	4.7	4.8	4.9	5.0

Note: for values not explicitly listed in the table, round burnups up to the first value shown, round enrichments down, and select the cooling time listed. Average assembly burnup listed. Shaded empty area of the table indicates fuel not analyzed for loading

All Indicated Changes are in response to RAI 5-3

Table 5.6.4-62a
Dose Rate Table for 25 PWR Fuel Rods (mrem/hr) - 3.10" Lead Thickness

Burn-up, GWd/ MTU	Enrichment, wt.%. ^{235}U																																			
	0.7	0.8	0.9	1.2	1.5	2.0	2.1	2.2	2.3	2.4	2.5	2.6	2.7	2.8	2.9	3.0	3.1	3.2	3.3	3.4	3.5	3.6	3.7	3.8	3.9	4.0	4.1	4.2	4.3	4.4	4.5	4.6	4.7	4.8	4.9	5.0
10	7.65	7.69	7.65	7.68	7.68	7.65	7.68	7.68	7.68	7.68	7.67	7.67	7.67	7.67	7.67	7.67	7.65	7.67	7.66	7.65	7.65	7.65	7.65	7.65	7.65	7.65	7.65	7.65	7.65	7.65	7.65	7.65	7.65	7.65	7.65	7.65
20	7.65	7.67	7.65	7.65	7.65	7.65	7.65	7.65	7.65	7.65	7.65	7.65	7.65	7.65	7.65	7.65	7.65	7.65	7.65	7.65	7.65	7.67	7.67	7.67	7.67	7.65	7.67	7.67	7.67	7.66	7.67	7.67	7.66	7.67	7.66	7.66
30			7.65	7.65	7.65	7.65	7.65	7.65	7.66	7.67	7.65	7.65	7.65	7.65	7.66	7.65	7.65	7.65	7.65	7.65	7.65	7.65	7.65	7.65	7.65	7.65	7.65	7.65	7.65	7.65	7.65	7.65	7.65	7.65	7.65	7.65
39						7.65	7.65	7.65	7.66	7.65	7.65	7.65	7.66	7.65	7.66	7.65	7.65	7.65	7.66	7.65	7.65	7.65	7.65	7.65	7.65	7.66	7.66	7.65	7.65	7.65	7.65	7.65	7.66	7.65	7.65	7.65
40												7.65	7.65	7.65	7.65	7.65	7.65	7.65	7.65	7.65	7.65	7.66	7.65	7.66	7.65	7.65	7.65	7.66	7.66	7.65	7.65	7.66	7.65	7.65	7.65	7.65
45												7.66	7.66	7.65	7.65	7.66	7.65	7.65	7.66	7.66	7.66	7.65	7.66	7.65	7.66	7.65	7.66	7.66	7.66	7.66	7.65	7.65	7.65	7.66	7.65	7.66
50												7.66	7.66	7.66	7.66	7.66	7.66	7.66	7.66	7.66	7.66	7.65	7.66	7.66	7.66	7.66	7.66	7.66	7.65	7.66	7.65	7.66	7.66	7.66	7.66	7.66
55												7.65	7.66	7.65	7.65	7.66	7.66	7.66	7.65	7.65	7.66	7.65	7.66	7.66	7.66	7.66	7.66	7.66	7.66	7.66	7.66	7.66	7.66	7.66	7.66	7.65
60												7.65	7.65	7.65	7.65	7.65	7.65	7.65	7.65	7.65	7.65	7.65	7.65	7.65	7.65	7.65	7.65	7.65	7.65	7.65	7.65	7.65	7.65	7.65	7.65	7.65
61												7.65	7.65	7.65	7.65	7.65	7.64	7.65	7.65	7.65	7.65	7.65	7.65	7.65	7.65	7.65	7.65	7.65	7.65	7.65	7.65	7.65	7.65	7.65	7.65	7.65
62												7.65	7.65	7.65	7.65	7.64	7.65	7.64	7.64	7.65	7.64	7.65	7.65	7.65	7.65	7.65	7.65	7.65	7.65	7.65	7.65	7.65	7.65	7.65	7.65	7.65
65																							7.64	7.65	7.65	7.65	7.65	7.65	7.65	7.65	7.64	7.65	7.65	7.64	7.65	7.65
70																							7.65	7.65	7.64	7.64	7.65	7.65	7.65	7.65	7.64	7.65	7.65	7.65	7.64	7.65
75																							7.65	7.65	7.65	7.65	7.65	7.65	7.66	7.66	7.65	7.65	7.66	7.66	7.66	7.65
80																							7.65	7.65	7.65	7.65	7.65	7.65	7.65	7.65	7.65	7.65	7.65	7.65	7.65	7.65
85																							7.65	7.65	7.65	7.65	7.65	7.65	7.65	7.65	7.65	7.65	7.65	7.65	7.65	7.65
90																							7.65	7.65	7.65	7.65	7.65	7.65	7.65	7.65	7.65	7.65	7.65	7.65	7.65	7.65
Enr. wt.%	0.7	0.8	0.9	1.2	1.5	2.0	2.1	2.2	2.3	2.4	2.5	2.6	2.7	2.8	2.9	3.0	3.1	3.2	3.3	3.4	3.5	3.6	3.7	3.8	3.9	4.0	4.1	4.2	4.3	4.4	4.5	4.6	4.7	4.8	4.9	5.0

All Indicated Changes are in response to RAI 5-3

Table 5.6.4-63
PWR Fuel Assembly Design Basis Gamma Source Terms - 3.10" Lead Thickness

E_{max} (MeV)	Bottom Nozzle (γ/s)	In-core (γ/s)	Plenum (γ/s)	Top Nozzle (γ/s)	Total (γ/s)
NCT					
0.05	1.19E+11	1.11E+15	2.42E+11	7.05E+10	1.11E+15
0.10	1.95E+10	2.98E+14	4.29E+10	1.35E+10	2.98E+14
0.20	6.71E+09	2.16E+14	1.17E+10	3.26E+09	2.16E+14
0.30	3.78E+08	6.33E+13	6.12E+08	1.63E+08	6.33E+13
0.40	7.81E+08	4.00E+13	9.84E+08	2.12E+08	4.00E+13
0.60	1.07E+10	1.17E+14	7.02E+09	1.50E+07	1.17E+14
0.80	7.26E+09	2.21E+15	1.21E+10	1.41E+09	2.21E+15
1.00	2.03E+09	7.02E+13	8.72E+09	1.63E+09	7.02E+13
1.33	5.65E+12	1.35E+14	1.25E+13	3.92E+12	1.57E+14
1.66	1.60E+12	2.89E+13	3.52E+12	1.11E+12	3.51E+13
2.00	1.02E+02	1.10E+11	6.63E+01	1.51E-02	1.10E+11
2.50	3.82E+07	1.17E+10	8.42E+07	2.65E+07	1.18E+10
3.00	3.26E+04	1.01E+09	7.19E+04	2.27E+04	1.01E+09
4.00	1.55E-05	1.74E+08	7.92E-05	1.28E-05	1.74E+08
5.00	1.26E-33	4.07E+07	6.28E-34	0.00E+00	4.07E+07
6.50	3.62E-34	1.64E+07	1.81E-34	0.00E+00	1.64E+07
8.00	4.60E-35	3.21E+06	2.30E-35	0.00E+00	3.21E+06
10.00	6.14E-36	6.81E+05	3.07E-36	0.00E+00	6.81E+05
Total	7.41E+12	4.29E+15	1.63E+13	5.12E+12	4.32E+15
HAC					
0.05	8.79E+10	9.98E+14	1.86E+11	5.46E+10	9.98E+14
0.10	1.49E+10	2.66E+14	3.28E+10	1.03E+10	2.66E+14
0.20	4.65E+09	1.88E+14	8.61E+09	2.49E+09	1.88E+14
0.30	2.55E+08	5.52E+13	4.48E+08	1.25E+08	5.52E+13
0.40	4.84E+08	3.50E+13	6.80E+08	1.63E+08	3.50E+13
0.60	5.65E+09	6.38E+13	3.70E+09	1.20E+07	6.38E+13
0.80	4.73E+09	2.05E+15	1.10E+10	1.52E+09	2.05E+15
1.00	1.94E+09	4.27E+13	9.20E+09	1.61E+09	4.27E+13
1.33	4.33E+12	9.20E+13	9.53E+12	3.00E+12	1.09E+14
1.66	1.22E+12	1.77E+13	2.69E+12	8.48E+11	2.24E+13
2.00	1.13E+02	9.14E+10	7.35E+01	1.62E-02	9.14E+10
2.50	2.92E+07	5.85E+09	6.44E+07	2.03E+07	5.96E+09
3.00	2.50E+04	5.44E+08	5.50E+04	1.73E+04	5.44E+08
4.00	1.67E-05	1.52E+08	8.52E-05	1.37E-05	1.52E+08
5.00	3.50E-33	4.85E+07	1.75E-33	0.00E+00	4.85E+07
6.50	1.01E-33	1.95E+07	5.04E-34	0.00E+00	1.95E+07
8.00	1.28E-34	3.82E+06	6.41E-35	0.00E+00	3.82E+06
10.00	1.71E-35	8.10E+05	8.55E-36	0.00E+00	8.10E+05
Total	5.67E+12	3.81E+15	1.25E+13	3.92E+12	3.83E+15

All Indicated Changes are in response to RAI 5-4

Table 5.6.4-64
25 PWR Rods Design Basis Gamma Source Terms - 3.10" Lead Thickness

E_{max} (MeV)	Bottom Nozzle (γ/s)	In-core (γ/s)	Plenum (γ/s)	Top Nozzle (γ/s)	Total (γ/s)
NCT					
0.05	2.76E+11	1.98E+15	2.34E+11	2.76E+10	1.98E+15
0.10	2.45E+10	5.63E+14	2.86E+10	6.65E+09	5.63E+14
0.20	3.62E+10	8.77E+14	2.57E+10	6.08E+09	8.77E+14
0.30	6.20E+09	1.39E+14	5.34E+09	6.24E+08	1.39E+14
0.40	3.33E+11	1.29E+14	1.98E+11	1.73E+11	1.30E+14
0.60	1.13E+11	1.36E+15	2.18E+11	6.45E+10	1.36E+15
0.80	3.15E+12	4.66E+15	2.14E+12	1.78E+10	4.67E+15
1.00	5.99E+11	8.57E+13	6.62E+11	3.73E+11	8.73E+13
1.33	1.57E+12	5.26E+13	3.23E+12	1.08E+12	5.85E+13
1.66	4.10E+11	1.13E+14	9.07E+11	2.85E+11	1.15E+14
2.00	1.51E+09	3.32E+12	3.22E+09	9.93E+08	3.33E+12
2.50	1.68E+07	1.19E+13	2.63E+07	6.81E+06	1.19E+13
3.00	1.39E+04	3.33E+12	2.21E+04	5.83E+03	3.33E+12
4.00	2.04E-07	3.89E+10	1.05E-06	1.68E-07	3.89E+10
5.00	1.27E-43	9.51E+04	6.35E-44	0.00E+00	9.51E+04
6.50	3.65E-44	3.81E+04	1.84E-44	0.00E+00	3.81E+04
8.00	4.71E-45	7.46E+03	2.36E-45	0.00E+00	7.46E+03
10.00	6.74E-46	1.59E+03	3.37E-46	0.00E+00	1.59E+03
Total	6.51E+12	9.98E+15	7.67E+12	2.03E+12	1.00E+16
HAC					
0.05	2.94E+11	2.07E+15	3.17E+11	5.53E+10	2.07E+15
0.10	1.66E+10	6.77E+14	3.51E+10	1.09E+10	6.77E+14
0.20	1.15E+10	6.41E+14	1.33E+10	2.67E+09	6.41E+14
0.30	9.53E+08	1.74E+14	9.29E+08	1.39E+08	1.74E+14
0.40	6.80E+09	1.36E+14	4.82E+09	1.78E+08	1.36E+14
0.60	4.11E+10	1.32E+15	2.93E+10	1.14E+09	1.32E+15
0.80	7.40E+10	1.75E+15	4.95E+10	2.70E+08	1.75E+15
1.00	4.76E+11	4.72E+14	9.22E+10	2.72E+11	4.73E+14
1.33	4.54E+12	1.49E+14	1.00E+13	3.16E+12	1.67E+14
1.66	1.29E+12	6.01E+13	2.82E+12	8.92E+11	6.51E+13
2.00	3.34E+07	4.68E+12	6.09E+07	1.74E+07	4.68E+12
2.50	3.17E+07	1.20E+13	6.83E+07	2.14E+07	1.20E+13
3.00	2.70E+04	3.47E+11	5.83E+04	1.83E+04	3.47E+11
4.00	6.00E-06	3.20E+10	3.06E-05	4.94E-06	3.20E+10
5.00	1.89E-32	2.61E+07	9.44E-33	0.00E+00	2.61E+07
6.50	5.43E-33	1.05E+07	2.72E-33	0.00E+00	1.05E+07
8.00	6.91E-34	2.06E+06	3.46E-34	0.00E+00	2.06E+06
10.00	9.22E-35	4.36E+05	4.62E-35	0.00E+00	4.36E+05
Total	6.75E+12	7.48E+15	1.33E+13	4.39E+12	7.50E+15

All Indicated Changes are in response to RAI 5-5

Table 5.6.4-66
NCT Dose Rate Summary (mrem/hr) - 3.10" Lead Thickness

Fuel Type	***Package Surface***	***Vehicle Underside***	***Vehicle Side***	***Vehicle Bottom End***	***Vehicle Top End***	***2m from Vehicle Side***	***2 m from Vehicle Bottom End***	***2m from Vehicle Top End***
PWR Fuel Assembly	*477*	*116*	*35.4*	*70.2*	*47.2*	*8.77*	*3.84*	*2.87*
25 PWR rods	*100*	*45.6*	*25.0*	*Note 1*	*Note 1*	*8.07*	*Note 1*	*Note 1*
Limit	*1000*	*200*				*10*		

(1) Bounded by the maximum EPR rod dose rate at this location, see Table 5.6.4-32

All Indicated Changes are in response to RAI 5-4

models are developed for this payload. Therefore, the HAC array result is the same as the HAC single package result. For the BWR fuel assembly and 25 pin can payloads, the CSI is 0 and HAC infinite array calculations are performed. An HAC infinite array bounds an NCT infinite array. Also, for the 25 pin can payload, the rods are modeled as undamaged during HAC because the reactivity is very low. Therefore, the NCT and HAC results are the same for this payload.

The maximum results of the criticality calculations are summarized in Table 6.10.4-1. The maximum calculated k_s is *0.9347*, which occurs for HAC with a PWR fuel assembly. The maximum reactivity is below the USL of 0.9420.

6.10.4.1.3 Criticality Safety Index

For the PWR fuel assembly payload, no HAC array models are developed (2N = 1). Therefore, per 10 CFR 71.59, N=0.5, and the CSI is 50/N = 100 for this payload. In the NCT array cases for the PWR fuel assembly payload, 5N=2.5 and 3 packages are modeled.

For the BWR fuel assembly and 25 pin can payloads, an infinite HAC array of packages is modeled. NCT infinite array calculations are not explicitly performed and are bounded by the HAC infinite array. Therefore, for these payloads, N = ∞ and CSI = 50/N = 0.

All Indicated Changes are in response to RAI 6-2

6.10.4.2 Fissile Material Contents

The fissile materials are a single PWR or BWR fuel assembly. Additionally, PWR, BWR, EPR and MOX fuel pins are allowed in the 25 pin can.

The PWR fuel assemblies and their parameters are provided in Table 6.10.4-2. The KENO model fuel assemblies are constructed using these parameters. *Note that WE 16x16 fuel class is not specifically analyzed as this fuel class is similar to WE 17x17 fuel class. WE 16x16 fuel class is a 235 fuel rods design (16x16 – 21 guide/instrument tubes) with fuel characteristics (pellet OD, clad thickness and clad OD) similar to those of WE 17x17 LOPAR. WE 17x17 fuel class is expected to bound WE 16x16 fuel class.*

Similarly, the BWR fuel assembly parameters are provided in Table 6.10.4-3 and Table 6.10.4–30. As stated, no credit is taken for burn up of fuel in the calculations. A maximum enrichment of 5.0 wt. percent U-235 is used for all fuel assemblies listed in Table 6.10.4-2, Table 6.10.4-3, and Table 6.10.4–30, with the following exception. For the CE 15x15 class assemblies, the maximum enrichment is *3.60* wt. percent U-235.

Each fuel assembly listed for the PWR assemblies is modeled using nominal dimensions within the cask to obtain a limiting assembly with the highest k_s for subsequent analyses. For BWR fuel, the most reactive fuel assembly for each lattice group is obtained. In addition, since the BWR LaCrosse fuel assemblies have a much smaller active fuel length than the other 10x10 assemblies, both are evaluated individually. The two LaCrosse fuel assemblies are Allis Chalmers and Exxon/ANF.

The ABB fuel assemblies evaluated are provided in Table 6.10.4-30. The table shows three array types. However, the SVEA 96Opt fuel has two fuel pellet and fuel clad options; so using the maximum pitch of 0.502", two cases are evaluated individually: the fuel pellet OD of 0.346" and fuel clad OD of 0.406" and fuel pellet OD of 0.323" and fuel clad OD of 0.379". The fuel assemblies are modeled with and without fuel channels. The thickness of the fuel channel is set at 0.025", 0.08", and 0.12".

In order to qualify individual fuel rods for transport, the fuel rods from the most reactive PWR and BWR assembly calculations are inserted in the fuel rod tubes located in the 25 pin can. The MOX and EPR fuel rods are modeled according to the parameters provided in Table 6.10.4-4 and Table 6.10.4-5, respectively. Additionally, a generic UO_2 fuel model is considered in the 25 pin can with parameters shown in Table 6.10.4-5. The plutonium isotopic vector provides a bounding k_s and the analysis is performed with three different plutonium concentrations: 6.0, 8.0 and 10.2 wt. percent plutonium.

All Indicated Changes are in response to RAI 6-2

negligible effect: the fuel rod models used in Step 2 are centered in their lattices regardless of their position in the assembly (i.e., the outer fuel rods do not touch the compartment). In Step 3, the outer rods touch the sides of the compartment, which results in a slightly larger pitch. This will result in slight increase in reactivity. Nevertheless, out of the three positions, the central case is most reactive and that will be picked as the standard most reactive position for NCT and HAC. The results are presented in Table 6.10.4-10 with Figure 6.10.4-11 to illustrate the positioning.

In Step 4, the compartment and poison plate dimensions are changed to reflect tolerance effects. **[**

] *Additionally, the effect of the lead shell thickness variation is also analyzed*. The results, presented in Table 6.10.4-11 show that the nominal compartment thickness and a poison plate thickness of 0.20 in. results in the most reactive configuration (Case ID: P_D001). The B-10 loading is held constant during this analysis, i.e. the 15 mg B-10/cm^2 is modeled in each case. The result in Case ID P_D001 also represents the most reactive PWR fuel under NCT.

In Step 5, the compartment and poison plate configuration from Case P_D001 is used to obtaining the most reactive fuel for HAC. That is, the most reactive fuel obtained in Table 6.10.4-8 (P_A045) is modeled for further analysis in the three damaged fuel scenarios described in Section 6.10.4.3.1.

In the HAC analysis, the PWR fuels undergo the aforementioned three different damaged fuel analyses. In Table 6.10.4-12, it is shown that when the PWR fuel (WE 14x14 Std/LOPAR/ ZCA/ZCB) is at its maximum pitch, reactivity is maximized for the rod pitch study. In Table 6.10.4-13 and Table 6.10.4-14, the single- and double- ended shear scenario results are presented. The configuration of the cask is at the most reactive state determined thus far.

For single shear and double shear analyses, it is shown that the BW 15x15 B11 fuel assembly results in the most reactive configuration. However, the WE 14x14 Std/LOPAR/ ZCA/ZCB fuel assembly remains the most reactive for damaged fuel cases, as shown in Table 6.10.4-12.

The results presented thus far exceed the USL. In Step 6, PRAs are added to the fuel assembly to reduce the reactivity below the USL. The PRA analysis is presented in Section 6.10.4.4.

<u>BWR Fuel Assembly</u>:

The methodology is repeated for BWR fuel. Where the specific step is modified, it is explicitly stated below. For the BWR case, the most reactive component dimensions are used. In step 1, the most reactive BWR fuel for each array type is presented in Table 6.10.4-15. For the 10x10 type, the LaCrosse fuels have a smaller active fuel length and are also more reactive than all the other array types. Therefore, they are analyzed individually.

In the models, the BWR fuel assembly is modeled in the axial center of the cavity. Since the fuel assembly is modeled in an axially centered position along the compartment, some of the fuel assemblies were modeled as if they extend to the hold-down ring. As a result, in some cases the hold down ring is included. The effect of modeling the BWR fuel so that the fuel is not axially centered and the hold down ring is not included is evaluated. Case B_A005, for Group 1 assemblies is rerun without the hold down ring and resulted in a k_s of 0.7258 (Case B_A005-1).

31 for better clarity as Case ID A_S001. Although this difference is considered statistically insignificant the difference of 0.0019 is added to the final most reactive case.

The model also contains the 12 studs modeled on the poison plates as 2" by 1" volume stainless steel mentioned in section 6.10.4.1.1. On each poison plate, two rows of 6 studs are modeled. The number of studs is determined by the active fuel length. The number is held at 6 studs per row to a total of 12 per poison plate since it has been demonstrated that adding these studs to the model did not affect the reactivity of the system beyond the statistical uncertainty of 2σ as described by the evaluation performed in section 6.10.4.4.1. Furthermore, this is not incorporated in the BWR evaluation since there is a large margin of reactivity between the most reactive PWR model and BWR model.

The missing rods evaluation for the PWR fuel assemblies is performed for the fuel assembly classes listed in Table 6.10.4-19 and Table 6.10.4-21. The results are presented in Table 6.10.4-32. The missing rod model with the highest k_s for each fuel assembly is used to perform a 6" de-cladding evaluation. The cases are modeled with PRAs and the maximum allowable enrichment shown in Table 6.10.4-26. The results presented in Table 6.10.4-33 demonstrate that the system remains under USL for all the fuel assembly classes at the given maximum enrichment. *Note that the maximum enrichment for the CE15x15 fuel class is further reduced to 3.60 wt%.* The maximum k_s obtained for the CE15 (Case ID *P_N009*) with the Δk due to difference in operating system is *0.9347* which is bounded by the USL of 0.9420.

The PRA requirement for each assembly class is addressed as follows:

<u>WE 14x14 Class Assemblies</u>:

The WE 14x14 Std fuel assembly utilized for HAC does not have a central instrument tube. This applies for all WE 14x14 class assemblies. The number of PRAs is selected such that possible configurations for PRA locations are minimized. This will eliminate any error that will result due to selection of PRA locations. To this end, the configurations illustrated in Figure 6.10.4-13 are selected. The reactivity of these configurations as shown in Table 6.10.4-19 is below the USL. The minimum PRA diameter required is 0.88 cm and a resulting linear density of 0.460 g/cm B_4C per PRA, at a maximum U-235 enrichment of 5.00 weight percent. The WE 14x14 has a substantially less k_s than other assembly classes evaluated in HAC. This is due to the 8-PRA requirement and does not change the analysis that it is the most reactive fuel assembly in HAC. All rotationally symmetric configurations of the absorber rods are also acceptable.

<u>WE 15x15 Class Assemblies</u>:

For the WE 15x15 class assemblies, the most reactive WE 15x15 assembly evaluated is the WE 15x15 Std, as shown in Table 6.10.4-8 for HAC results. This class of assembly remains

All Indicated Changes are in response to RAI 6-2

subcritical and below the USL with the PRA configuration as shown in Figure 6.10.4-13. The number of PRAs required is 8, each at a minimum diameter of 0.88 cm. The maximum allowable U-235 enrichment is 5.00 weight percent. All rotationally symmetric configurations of the absorber rods are also acceptable.

WE 17x17 Class Assemblies:

The most reactive WE 17x17 assembly evaluated is the WE 17x17 OFA fuel assembly, as shown in Table 6.10.4-8. These class of assemblies will remain subcritical and below the USL with the PRA configuration as shown in Figure 6.10.4-15. The number of PRAs required is 8, each at a minimum diameter of 0.88 cm. The maximum allowable U-235 enrichment is 5.00 weight percent. All rotationally symmetric configurations of the absorber rods are also acceptable.

Results for WE 17x17 class assembly are applicable to WE 16x16 class assembly.

BW 15x15 Class Assemblies:

The most reactive BW 15x15 assembly is the BW 15x15, Mark B11 fuel assembly as shown in Table 6.10.4-8. The number of PRAs required is 8, each at a minimum diameter of 0.88 cm. The maximum allowable U-235 enrichment is 5.00 weight percent. The configuration of PRA location is as shown in Figure 6.10.4-15. All rotationally symmetric configurations of the absorber rods are also acceptable.

CE 14x14 Class Assemblies:

The most reactive CE 14x14 assembly is the Framatome CE 14x14 fuel assembly as shown in Table 6.10.4-8. The number of PRAs required is 5, each at a minimum diameter of 1.02 cm. This translates to a linear density of 0.618 g/cm. The maximum allowable U-235 enrichment is 5.00 weight percent. The configuration of PRA location is as shown in Figure 6.10.4-12.

CE 15x15 Class Assemblies:

For CE 15x15 Class assemblies that have just one location for PRA insertion, the maximum enrichment is reduced to *3.60* weight percent U-235. The analysis is performed with a PRA diameter of 0.76 cm or linear density of 0.343 g/cm B_4C per PRA.

All Indicated Changes are in response to RAI 6-2

CE 16x16 Class Assemblies:

The most reactive CE 16x16 assembly is the CE 16x16 System 80 fuel assembly as shown in Table 6.10.4-8. The number of PRAs required is 5, each at a minimum diameter of 1.02 cm. The maximum allowable U-235 enrichment is 5.00 weight percent. The configuration of PRA location is as shown in Figure 6.10.4-12.

BW 17x17 Class Assemblies:

In the case of B&W 17x17 Mark C, a PRA diameter of 0.76 cm or a linear density of 0.343 g/cm is required. The maximum allowable enrichment is 5.00 weight percent U-235. The PRA configuration is as illustrated in Figure 6.10.4-15.

For each class, the result is shown in Table 6.10.4-21 with HAC scenario. *Note that for CE 16x16 fuel class, results for 2 clad ODs respectively 0.382" and 0.374" are reported in Table 6.10.4-21.* As a resultant, the PRA requirement under all conditions of transport is as summarized in Table 6.10.4-26. This table contains the number of PRAs necessary for each assembly class, maximum enrichment allowed, the linear density of each PRA before the 75% credit is applied for analysis, or the actual minimum 40% TD required, and the minimum diameter of each PRA. Note that in Table 6.10.4-21; only PRA Configuration 1 is evaluated, since it has been shown that both Configurations 1 and 2 are acceptable in Table 6.10.4-19.

Under HAC, the PRA configuration is not expected to change. All rotationally symmetric configurations of the absorber rods are also acceptable.

The most reactive HAC case (based on the CE 15x15 class fuel assembly) from Table 6.10.4-21 is employed to determine the effect of the poison plate bolt holes as shown in Figure 6.10.4-2. **[**

] This is shown in Figure 6.10.4-16. The result of this evaluation is also shown in Table 6.10.4-21 **[**

] and demonstrates that the effect is statistically insignificant although this represents the highest calculated k_s for the TN-LC-1FA basket.

As the results in Table 6.10.4-17 demonstrate, BWR fuels will remain subcritical and under the USL for HAC. NCT single package results for the 25 pin can are provided in Table 6.10.4-18. For the transportation of 25 individual fuel rods, damaged fuel rods are not considered because the margins to the USL are very large compared to PWR and BWR fuel. This is due to the fact that the reactivity of the system is bounded by PWR fuel assembly transportation by more than 0.30 in Δk for NCT, and any postulated HAC is also bounded by PWR fuel rod pitch expansion analysis performed. These scenarios have been explored for PWR and BWR fuels to show that the 25 fuel rods are bounded.

6.10.4.4.2 Results

The results for single package transport are presented in Table 6.10.4-22. In this table, taking the most reactive fuel under NCT, the B&W 15x15 Mark B11 fuel assembly from Table 6.10.4-9 (Case ID P_B011), eight PRAs are added to the system. Additionally, the most reactive CE 16x16 and CE 15x15 fuel assemblies are selected and evaluated with five PRAs and one PRA, respectively, to demonstrate that they remain subcritical and under the USL. The remaining cases presented in this table are reproduced with their original Case IDs.

Proprietary Information on This Page
Withheld Pursuant to 10 CFR 2.390

All Indicated Changes are in response to RAI 6-2

Table 6.10.4-1
Summary of Criticality Evaluation

	PWR Fuel Assembly Payload	**BWR Fuel Assembly Payload**	**Pin Can Payload**
Normal Conditions of Transport (NCT)			
Case	k_s	k_s	k_s
Single Unit Maximum	*0.8834*	0.7806	0.5210
Array Maximum	*0.9016*	<0.8721	0.5452
Number of Packages in Array	3	∞	∞
Hypothetical Accident Conditions (HAC)			
Case	k_s	k_s	k_s
Single Unit Maximum	*0.9347*	0.8118	0.5210
Array Maximum	*0.9347*	0.8721	0.5452
Number of Packages in Array	1	∞	∞
USL	0.9420	0.9420	0.9420
CSI	100	0	0

All Indicated Changes are in response to RAI 6-2

Table 6.10.4-20
Evaluation of Effects due to PRA Clad Variation, Single Package

Case ID	Description	k_{eff}	1σ	k_s
	BW 15x15 Fuel Assembly – Single Package NCT, 5 PRAs			
	Case 1 - PRA Clad: solid zirc	0.9110	0.0008	0.9126
	Case 2 - PRA Clad: zirc-with gap	0.9111	0.0010	0.9131
	Case 3 - PRA Clad: ss304-with gap	0.9128	0.0009	0.9146
	CE 15x15 Palisade Fuel Assembly HAC, 1 PRA			
	Case 1 - PRA Clad: solid zirc	0.9295	0.0008	0.9311
	Case 2 - PRA Clad: zirc-with gap	0.9294	0.0008	0.9310
	Case 3 - PRA Clad: ss304-with gap	0.9270	0.0009	0.9288
	Exxon/ANP 15x15 CE Fuel Assembly HAC, 1 PRA			
	Case 1 - PRA Clad: solid zirc	0.9235	0.0008	0.9251
	Case 2 - PRA Clad: zirc-with gap	0.9231	0.0009	0.9249
	Case 3 - PRA Clad: ss304-with gap	0.9254	0.0010	0.9274
	WE 14x14 Fuel Assembly HAC, 6 PRAs			
	Case 1 - PRA Clad: solid zirc	0.9316	0.0009	0.9334
	Case 2 - PRA Clad: zirc-with gap	0.9353	0.0010	0.9373
	Case 3 - PRA Clad: ss304-with gap	0.9350	0.0008	0.9366]

Table 6.10.4-21
Design Basis PRA Configuration for Various PWR Assemblies, HAC Single Package

Case ID	Description	k_{eff}	1σ	k_s
	BW 15x15, 8 PRAs	0.8914	0.0010	0.8934
	CE 15x15, 1 PRA	0.9331	0.0010	0.9351
	CE 16x16, 5 PRAs	0.9231	0.0009	0.9249(1)
	Framatome, CE, 14x14, 5 PRAs	0.9243	0.0009	0.9261
	BW 17x17, 8 PRAs	0.9225	0.0008	0.9241
	Framatome, MK BW 17x17, 8 PRAs	0.9127	0.0009	0.9145
	WE 15x15, 8 PRAs	0.9119	0.0009	0.9137
	WE 17x17, 8 PRAs	0.9168	0.0009	0.9186
	CE 15x15, 1 PRA-Poison Plate Bolt Holes	0.9348	0.009	0.9366

(1) k_s = 0.9322 when considering clad OD of 0.374" (Case ID P_K010)

All Indicated Changes are in response to RAI 6-1

Table 6.10.4-22
NCT and HAC Results for Single Package Transport

Case ID	Description	k_{eff}	1σ	k_s
	Normal Conditions of Transport: PWR fuel			
	Single Package Maximum, 8 PRAs	0.8596	0.0008	0.8612
	Single Package Maximum, 1 PRA	*0.8817*	*0.0008*	*0.8834*
	Single Package Maximum, 5 PRAs	0.8724	0.0009	0.8742
	Normal Conditions of Transport: BWR fuel			
	Single Package Maximum	0.7788	0.0009	0.7806
	Hypothetical Accident Conditions: PWR fuel			
	Single Package Maximum	*0.9311*	*0.0009*	*0.9328*
	Hypothetical Accident Conditions: BWR fuel			
	Single Package Maximum	0.8099	0.0009	0.8118
	Normal Conditions of Transport: 25 Pin Can			
	Single Package Maximum	0.5194	0.0008	0.5210

Table 6.10.4-23
NCT Package Array Results at Varying External Moderator Density – PWR Fuels (no PRAs)

Case ID	Description	k_{eff}	1σ	k_s
	AIR	1.0172	0.0009	1.0190
	0.01% EMD	**1.0177**	**0.0009**	**1.0195**
	10% EMD	1.0116	0.0009	1.0133
	20% EMD	1.0092	0.0010	1.0112
	30% EMD	1.0092	0.0009	1.0110
	40% EMD	1.0079	0.0010	1.0098
	50% EMD	1.0073	0.0010	1.0093
	60% EMD	1.0077	0.0009	1.0095
	70% EMD	1.0063	0.0009	1.0080
	80% EMD	1.0061	0.0009	1.0079
	90% EMD	1.0044	0.0009	1.0063
	100% EMD	1.0049	0.0009	1.0067

All Indicated Changes are in response to RAI 6-2

Table 6.10.4-24
NCT Package Array Results with PRAs for the Most Reactive PWR Configuration

Case ID	Description	k_{eff}	1σ	k_s
P_NCT3A1	3 Array, CE 15x15, 1 PRA	*0.8999*	*0.0009*	*0.9016*
P_NCT3A2	3 Array, CE 16x16, 5 PRAs	0.8867	0.0010	0.8887
P_NCT3A3	3 Array, BW 15x15, 8 PRAs	0.8925	0.0009	0.8943

Table 6.10.4-25
HAC Array Results, BWR Fuel Assembly and 25 Pin Can

Case ID	Description	Water Density Between Casks (g/cm^3)	k_{eff}	1σ	k_s
BWR Fuel Assembly					
B_Infinite1	**Expanded pitch**	**0**	**0.8703**	**0.0009**	**0.8721**
B_Infinite2	Expanded pitch	0.1	0.8363	0.0009	0.8380
B_Infinite3	Expanded pitch	0.2	0.8296	0.0008	0.8313
B_Infinite4	Expanded pitch	0.3	0.8287	0.0009	0.8305
25 Pin Can					
Pin_Infinite1	**Centered in tubes**	**0**	**0.5436**	**0.0008**	**0.5452**
Pin_Infinite2	Centered in tubes	0.1	0.5310	0.0008	0.5325
Pin_Infinite3	Centered in tubes	0.2	0.5279	0.0008	0.5295
Pin_Infinite4	Centered in tubes	0.3	0.5269	0.0008	0.5285
Pin_Infinite5	Alternate rows close proximity	0	0.5159	0.0009	0.5177
Pin_Infinite6	Outer ring moved outward	0	0.5312	0.0007	0.5326

All Indicated Changes are in response to RAI 6-2

Table 6.10.4-26
Summary of PRA Requirements Under all Conditions of Transport for PWR Fuel Assembly Classes

Assembly Class	Number of PRAs	Diameter of PRAs (cm)	Minimum B_4C Content (g/cm)	Max U-235 Enrichment (wt %)
WE 17x17	8	0.88	0.613	5.00
WE 16x16	*8*	*0.88*	*0.613*	*5.00*
CE 16x16	5	1.02	0.824	5.00
BW 15x15	8	0.88	0.613	5.00
CE 15x15	1	0.76	0.475	*3.60*
WE 15x15	8	0.88	0.613	5.00
CE 14x14	5	*1.02*	*0.824*	5.00
WE 14x14	8	0.88	0.613	5.00
BW 17x17	8	0.76	0.475	5.00

All Indicated Changes are in response to RAI 6-2

Table 6.10.4-33
6" Bare Rod Evaluation

Case ID	**Description**	**k_{eff}**	**1σ**	**k_s**
P_N001	CE 16x16	0.9257	0.0009	0.9275
P_N002	BW 15x15	0.9000	0.0009	0.9018
P_N003	WE 15x15	0.9139	0.0009	0.9157
P_N004	WE 17x17	0.9162	0.0008	0.9178
P_N005	CE 14x14	0.9240	0.0009	0.9258
P_N006	BW 17x17	0.9271	0.0008	0.9287
P_N007	WE 14x14	0.9060	0.0009	0.9078
P_N008	*CE 15x15 (1)*	*0.9379*	*0.0010*	*0.9399*
P_N009	***CE 15x15 (2)***	***0.9311***	***0.0009***	***0.9328***

(1) With 3.70wt%
(2) With 3.60wt%

All Indicated Changes are in response to RAI 6-2

Chapter 7
Package Operations

NOTE: References in this Chapter are shown as [1], [2], etc., and refer to the reference list in Section 7.5. A glossary of terms used in this Chapter is provided in Section 7.6.

This Chapter contains TN-LC cask loading and unloading procedures that are intended to show the general approach to cask operational activities. The procedures in this chapter are intended to show the types of operations that will be performed and are not intended to be limiting. Site-specific conditions and requirements may require the use of different equipment and ordering of steps to accomplish the same objectives or to meet acceptance criteria to ensure the integrity of the package.

A separate operations manual (OM) will be prepared for the TN-LC cask to describe the operational steps in greater detail. The OM, along with the information in this chapter, will be used to prepare the site-specific procedures that will address the particular operational considerations related to the cask.

7.1 TN-LC Package Loading

The use of the TN-LC cask to transport fuel offsite involves (1) preparation of the empty cask for use; (2) verification that the fuel assemblies or fuel rods to be loaded in the TN-LC cask with the appropriate fuel-specific basket meet the criteria set forth in this document; (3) installation of a basket into the cask; and (4) loading fuel or placing loaded fuel buckets or pin cans in an empty TN-LC cask with the appropriate fuel-specific basket.

Offsite transport involves (1) preparation of the loaded cask for transport; (2) assembly verification leakage-rate testing of the package containment boundary; (3) placement of the cask onto a transportation vehicle; (4) installation of the impact limiters and (5) closure of the transportation container.

During shipment, the package contains any one of the TN-LC basket designs with its authorized contents as described in Chapter 1, Appendices 1.4.2 through 1.4.5. *TN-LC Unit 01 shall only be loaded with the TN-LC-1FA basket with one PWR fuel assembly (Table 1.4.5-8a) or one pin can with up to 21 PWR/EPR fuel rods (Table 1.4.5-10a).* Procedures are provided in this section for (1) transport of the cask directly from a site spent fuel pool and (2) transport of the cask directly from a site hot cell. Appendix 7.7 contains a sub-appendix for each basket design detailing its loading procedures.

7.1.1 TN-LC Cask Preparation for Loading

Procedures for preparing the cask for use after receipt at the loading site are provided in this section and are applicable for shipment of casks loaded with any one of the basket designs and its respective approved contents.

1. Upon arrival of the empty TN-LC Package at the receiving site, perform receipt inspection. Inspect for damage, verify tamper-indicating seal is intact and perform radiation survey.
2. Open the transport container, and remove the empty TN-LC package.

3. Remove the tamper-indicating seals.
4. Remove the impact limiters from the cask.
5. Prior to removing the lid, sample the cask cavity atmosphere. *If removing the lid at this stage, inspect the lid seals and sealing surfaces and verify that the O-ring seals have been replaced within the last 12 months.*
6. Remove the skid tie-down assembly.
7. Take contamination smears on the outside surfaces of the cask. If necessary, decontaminate the cask.
8. *The lid, bottom plug and all drain/vent/test ports incorporate O-ring seals.* O-ring seals *may be reused. Prior to installation, the seals and sealing surfaces shall be inspected. Verify that the seals have been replaced within the last 12 months.*
9. Remove the trunnion and pocket trunnion plugs.
10. Install the two lifting trunnions in place of the front trunnions plugs. Install the trunnion bolts and torque them to *the torque specified on drawing 65200-71-01, Appendix 1.4.1,* following the torquing sequence shown in Figure 7-1.
11. For the specific payload to be transported as part of the TN-LC package, verify that the basket type (TN-LC-NRUX, TN-LC-MTR, TN-LC-TRIGA, or TN-LC-1FA) and spacers, if required, are appropriate for the fuel to be transported.

NOTE: *TN-LC Unit 01 shall only be loaded with TN-LC-1FA basket.*

12. The candidate intact fuel assemblies/elements or fuel rods to be transported in a specific basket must be evaluated to verify that they meet the fuel qualification requirements of the applicable fuel specification as listed in Table 7-1.

NOTE: *TN-LC Unit 01 shall only be loaded with TN-LC-1FA basket with one PWR fuel assembly or one fuel rod pin can.*

13. Prior to being placed in service, the cask is to be cleaned or decontaminated, as necessary.
14. Remove the bottom plug assembly, inspect the *seals and* sealing surfaces, *verify that the O-ring seals have been replaced within the last 12 months,* lubricate and reinstall the bottom plug assembly, torquing the bolts to *the torque specified on drawing 65200-71-01, Appendix 1.4.1*.
15. *Remove the two test ports, the drain port and the vent port, inspect the seals and sealing surfaces, verify that the O-ring seals have been replaced within the last 12 months, reinstall each port (hand tight). The vent port on the lid may be left partially threaded to facilitate draining operations in step 14. The ports covers may be reinstalled over the two test ports at this time.*
16. Engage the cask trunnions with the cask lifting yoke.
17. Rotate the cask to a vertical orientation, lift the cask, and place the cask in the designated preparation area.

7.3 Preparation of Empty Package for Transport

1. *Determine the amount and form of residual internal activity within the interior of the empty packaging.*

2. *Inspect and securely close the empty packaging.*

3. *Prepare the empty packaging for shipment using the package requirements specified in the Hazardous Material Regulations (HMR) [2] which are appropriate for the amount and form of the residual activity and contamination.*

7.4 Other Operations

7.4.1 Assembly Verification Leakage Testing of the Containment Boundary

The procedure for leakage testing of the cask containment boundary prior to shipment is given in this section. Assembly verification leakage testing shall conform to the requirements of ANSI N14.5 [1]. A flow chart of the assembly verification leakage testing is provided in Figure 7-2. The order in which the leakage test of the various seals are performed may vary. If more than one leakage detector is available, then more than one seal may be tested at a time. Personnel performing the leakage testing shall be specifically trained in leakage testing in accordance with SNT-TC-1A [4]*, or alternatively ISO [7]*.

The acceptance criterion for pre-shipment leakage rate testing shall be either (a) a leakage rate of not more than the reference air leakage rate, or (b) no detected leakage when tested to a sensitivity of at least 10^{-3} ref-cm^3/s.

The following steps present one method of performing the pre-shipment verification leakage testing. Alternate methods and order of testing are acceptable as long as the above criteria is satisfied for the TN-LC containment boundary seals.

<u>Vent Port Plug Seal Leakage Test</u>

1. Remove the vent port plug cover *if previously installed*. Install the cask port tool in the vent port.

2. Open the vent port plug.

3. Attach a suitable vacuum pump to the cask port tool.

4. Reduce the cask cavity pressure to below 1.0 psia.

5. Fill the cask cavity with helium to atmospheric pressure.

6. Close the vent port plug, torquing it to *the torque specified on drawing 65200-71-01, Appendix 1.4.1*.

7. Remove the helium-saturated cask port tool and install a clean (helium free) cask port tool.

8. Connect a leak detector to the cask port tool.

9. Evacuate the vent port until the vacuum is sufficient to operate the leakage detection equipment.

10. Perform the *pre-shipment leak test in accordance with Section 8.2.2. If either O-ring was replaced, the maintenance leak test in Section 8.2.2 shall be performed.*

    NOTE: Upon removing the vent port plug and seal, it will be necessary to reduce the cask cavity pressure below 1.0 psia and refill with helium through the vent port.

11. Remove the leakage detection equipment.

7.5 References

1. ANSI N14.5-*2014*, "American National Standard for Radioactive Materials - Leakage Tests on Packages for Shipment," American National Standards Institute, Inc., New York, *2014*.

2. Title 49, Code of Federal Regulations, *Subtitle B, Chapter 1, Parts 171 through 180.*

3. Title 10, Code of Federal Regulations, Part 71 (10 CFR 71), "Packaging and Transportation of Radioactive Material."

4. SNT-TC-1A, "American Society for Nondestructive Testing, Personnel Qualification and Certification in Nondestructive Testing*, "2006 edition or later.*

5. Not used.

6. USNRC, NUREG-1536, "Standard Review Plan for Spent Fuel Dry Storage Systems at a General License Facility," Final Report, Revision 1.

7. *ISO 9712 Non-destructive testing — Qualification and certification of NDT personnel.*

Table 7-1
Applicable Fuel Specification for Various Fuel Types

Basket Design	Applicable Fuel Specification from Chapter 1
TN-LC-NRUX	Table 1.4.2-1 and 1.4.2-2
TN-LC-MTR	Table 1.4.3-1 thru Table 1.4.3-3
TN-LC-TRIGA	Table 1.4.4.1 thru 1.4.4-5
TN-LC-1FA	Table 1.4.5-1 thru 1.4.5-14
TN-LC-1FA in Unit 01	*Table 1.4.5-1, 1.4.5-1, 1.4.5-4, and either 1.4.5-8a (PWR fuel assembly) or 1.4.5-10a (up to 21 rods in pin can)*

Table 7-2
Appendices Containing Loading Procedures for Various TN-LC Baskets

Basket Type	Subbasket Type	Appendix	Bottom Spacer Required?
TN-LC-NRUX	–	7.7.1, Sections 7.7.1.1-2	Yes
	–	7.7.1, Sections 7.7.1.1-2	Yes
TN-LC-MTR	–	7.7.2, Sections 7.7.2.1-2	Yes
TN-LC-TRIGA	–	7.7.3, Sections 7.7.3.1-2	Yes
TN-LC-1FA	1-PWR	7.7.4, Sections 7.7.4.1-2	Yes
	1-BWR	7.7.4, Sections 7.7.4.1-2	Yes
	Pin Can	7.7.4, Sections 7.7.4.1-2	No

Table 7-3
Appendices Containing Unloading Procedures for Various TN-LC Baskets

Basket Type	Subbasket Type	Appendix
TN-LC-NRUX	–	7.7.1, Sections 7.7.1.3-4
	–	7.7.1, Sections 7.7.1.3-4
TN-LC-MTR	–	7.7.2, Sections 7.7.2.3-4
TN-LC-TRIGA	–	7.7.3, Sections 7.7.3.3-4
TN-LC-1FA	1-PWR	7.7.4, Sections 7.7.4.3-4
	1-BWR	7.7.4, Sections 7.7.4.3-4
	pin can	7.7.4, Sections 7.7.4.3-4

All Indicated Changes are in response to RAI 7-1

8.1.3 Structural and Pressure Tests

8.1.3.1 Load Tests

One set of trunnions is provided for the TN-LC transport package lifting. The trunnions have a single shoulder (single failure proof). The trunnions are fabricated and tested in accordance with ANSI N14.6 [3]. A load test of 3.0 times the design lift load (for single failure proof trunnions) is applied to the trunnions for a period of ten minutes to ensure that the trunnions can perform satisfactorily.

A force equal to 1.5 times the impact limiter weight will be applied to the hoist rings of each impact limiter for a period of ten minutes. At the conclusion of the test, the impact limiter hoist rings will be examined visually for defects and permanent deformation.

8.1.3.2 Pressure Tests

A pressure test is performed on the TN-LC cask at a pressure between 45.0 and 50.0 psig. This is well above 1.5 times the maximum normal operating pressure of 16.9 psig (Chapter 3, Table 3-8). The test pressure is held for a minimum of ten minutes. The test is performed in accordance with ASME B&PV Code, Section III, Subsection NB, Paragraph NB-6200 or NB-6300. All visible joints and surfaces are examined visually for possible leakage after application of the pressure.

In addition, a bubble leakage test is performed on the neutron shield enclosure. The purpose of this test is to identify any potential leakage paths in the enclosure welds.

8.1.4 Containment Boundary Leakage Tests

8.1.4.1 TN-LC Cask Leakage Tests

Leakage tests are performed on the TN-LC cask containment boundary prior to first use, typically at the fabricator's facility. The fabrication verification leakage test can be separated into the following five tests: 1) cask leakage integrity, 2) vent port plug seal integrity, 3) drain port plug seal integrity, 4) lid seal integrity, and 5) bottom plug seal integrity. These tests are usually performed using the helium mass spectrometer method. Alternative methods are acceptable provided that the required sensitivity is achieved. The leakage test is performed in accordance with ANSI N14.5 [4]. The personnel performing the leakage test are qualified in accordance with SNT-TC-1A [2] *or, alternatively, ISO 9712 [18]*.

8.1.4.1.1 Cask Leakage Integrity Test

Prior to lead pour and final machining of the inner shell, the containment boundary, including containment boundary base metal and welds, will be leakage tested in accordance with the requirements of ANSI N14.5 using temporary closures and seals, as necessary, for the bottom plug and lid. As the inner shell will not be accessible for leakage testing after lead is poured, leakage testing will be performed during the fabrication process as permitted by ANSI N14.5 Table 1. As one means of performing a portion of this test, the interior of the cask cavity may be flooded with a helium atmosphere while a vacuum is drawn on the lead cavity to

Each impact limiter container will be pressurized to a pressure between 2.0 and 3.0 psig. All the weld seams and penetrations will be tested for leakage using a soap bubble test. If bubbles are detected, the weld will be repaired and the test re-performed.

8.1.5.4 Functional Tests

The following functional tests will be performed prior to the first use of the TN-LC package. Generally these tests will be performed at the fabrication facility.

(a) Installation and removal of the lid, bottom plug, vent and drain port plugs, and other fittings will be observed. Each component will be checked for difficulties in installation and removal. After removal, each component will be visually examined for damage. Any defects will be corrected prior to the acceptance of the cask.

(b) Each TN-LC-1FA basket as well as each TN-LC-MTR, TN-LC-TRIGA and TN-LC-NRUX fuel assembly/element compartment will be checked by gauge to demonstrate that the fuel assemblies or elements, as applicable, will fit in the basket.

8.1.6 Shielding Tests

Chapter 5 presents the analyses performed to ensure that the TN-LC package shielding design is adequate.

8.1.6.1 Gamma Shield Test

The TN-LC cask poured lead gamma shielding shall be inspected via gamma scanning at the intersections of a grid no larger than 6 x 6 inches on the outside of the shell prior to installation of the neutron shield.

The acceptance criterion for the gamma scan is based on dose rate measurements of a test block constructed to replicate the layers of stainless steel, lead, and stainless steel in the TN-LC cask. The thickness of each stainless steel layer in the test block shall be no less than the minimum specified thickness of the corresponding cask shell, and the thickness of the lead layer in the test block shall be no less than *the minimum* thickness of lead specified for the cask. The dose rate measured using the test block shall be the maximum acceptable reading for the inspected cask.

RAI 8-3

The TN-LC cask precast lead gamma shielding, which is installed as parts machined from a precast lead block, shall be inspected using gamma scanning, or x-ray radiography to check for voids. After machining the lead parts, dimensional measurements shall be no less than the minimum thickness of lead specified for these parts.

RAI 8-2

8.2 Maintenance Program

8.2.1 Structural and Pressure Tests

Within 14 months prior to any lift of a TN-LC package, the trunnions shall be subject to either of the following:

- A test load equal to 300% of the maximum service load per ANSI N14.6 [3], paragraph 7.3.1(a) for single failure proof trunnions.
- Dimensional testing, visual inspection and nondestructive examination of accessible critical areas of the trunnions including the bearing surfaces in accordance with Paragraph 6.3.1(b) of ANSI N14.6 [3].

8.2.2 Leakage Tests

The following containment boundary components shall be subject to periodic maintenance, and preshipment leakage testing in accordance with ANSI N14.5 [4]:

- Lid and seals
- Bottom Plug and seals
- Vent Port Plug Seal
- Drain Port Plug Seal

The personnel performing the leakage test are qualified in accordance with SNT-TC-1A [2] or, alternatively, ISO 9712 [18].

Leakage Tests for NRUX, TRIGA, MTR and MOX fuel (assembly or pins) in 1FA basket

Test	Frequency	Acceptance Criteria	Typical Method (ANSI N14.5 TABLE A.1 [4])
Periodic	Within 12 months prior to shipment	Each component individually ≤ 1×10^{-7} ref cm^3/s	(He) A.5.3 A.5.4
Pre-shipment	Before each shipment, after the contents are loaded and the package is closed	No detected leakage, sensitivity of 10^{-3} ref cm^3/s or better, unless seal is replaced.	A.5.1 A.5.2 A.5.8 A.5.9
Maintenance	After maintenance, repair, or replacement of containment components, including inner seals	Each component individually ≤ 1×10^{-7} ref cm^3/s	(He) A.5.3 A.5.4

Leakage Tests for 1FA Shipments

Test	***Frequency***	***Acceptance Criteria***	***Typical Method (ANSI N14.5 TABLE A.1 [4])***
Periodic	*Within 12 months prior to shipment*	*Sum of leak rates ≤ $8.0x10^{-6}$ ref cm^3/s with a test sensitivity of $4.0x10^{-6}$ ref cm^3/s*	*(He)* *A.5.3* *A.5.4*
Pre-shipment	*Before each shipment, after the contents are loaded and the package is closed*	*No detected leakage, sensitivity of 10^{-3} ref cm^3/s or better, unless seal is replaced.*	*A.5.1* *A.5.2* *A.5.8* *A.5.9*
Maintenance	*After maintenance, repair, or replacement of containment components, including inner seals*	*Sum of leak rates ≤ $8.0x10^{-6}$ ref cm^3/s with a test sensitivity of $4.0x10^{-6}$ ref cm^3/s*	*(He)* *A.5.3* *A.5.4*

No leakage tests are required prior to shipment of an empty TN-LC packaging.

8.2.3 Component and Material Tests

The TN-LC cask shall be inspected in accordance with the requirements of 10 CFR Part 71.87, *Routine determinations*, part (b) prior to each shipment. Any defects or signs of degradation discovered by these inspections for any component (including accessible welds and fasteners) or feature would be repaired and brought into compliance with the licensing drawings prior to shipment of the loaded package.

All Indicated Changes are in response to RAI 8-1

8.3 References

1. ASME Boiler and Pressure Vessel Code, Section III and Appendices, 2004 Edition including 2006 addenda.
2. SNT-TC-1A, "American Society for Nondestructive Testing, Personnel Qualification and Certification in Nondestructive Testing*," 2006 edition or later.*
3. ANSI N14.6-1993, "American National Standard for Special Lifting Devices for Shipping Containers Weighing 10,000 Pounds or More for Nuclear Materials."
4. ANSI N14.5-*2014*, "American National Standard for Leakage Tests on Packages for Shipment of Radioactive Materials."
5. *ASME Boiler and Pressure Vessel Code, Section IX, 2004 Edition including 2006 addenda.*
6. "Aluminum Standards and Data, 2003," The Aluminum Association.
7. Natrella, "Experimental Statistics," Dover, 2005.
8. ASTM E1225, "Thermal Conductivity of Solids by Means of the Guarded-Comparative-Longitudinal Heat Flow Technique."
9. ASTM E1461, "Thermal Diffusivity of Solids by the Flash Method."
10. Sung, C., "Microstructural Observation of Thermally Aged and Irradiated Aluminum/Boron Carbide (B4C) Metal Matrix Composite by Transmission and Scanning Electron Microscope," 1998.
11. Boralyn testing submitted to the NRC under docket 71-1027, 1998.
12. ASTM B557, "Standard Test Methods of Tension Testing Wrought and Cast Aluminum and Magnesium-Alloy Products."
13. ASTM E290, "Standard Methods for Bend Testing of Materials for Ductility."
14. ASTM E94, "Recommended Practice for Radiographic Testing."
15. ASTM E142, "Controlling Quality of Radiographic Testing."
16. ASTM E545, "Standard Method for Determining Image Quality in Thermal Neutron Radiographic Testing."
17. AWS D1.6/D1.6M, "Structural Welding Code – Stainless Steel."
18. *ISO 9712 Non-destructive testing — Qualification and certification of NDT personnel.*

AFFIDAVIT PURSUANT
TO 10 CFR 2.390

TN Americas LLC)
State of Maryland) SS.
County of Howard)

I, Prakash Narayanan, depose and say that I am Chief Technical Officer of TN Americas LLC, duly authorized to execute this affidavit, and have reviewed or caused to have reviewed the information which is identified as proprietary and referenced in the paragraph immediately below. I am submitting this affidavit in conformance with the provisions of 10 CFR 2.390 of the Commission's regulations for withholding this information.

The information for which proprietary treatment is sought is contained in Enclosure 4 and is listed below:

- Portions of certain chapters and appendices of the Safety Analysis Report (SAR) for Certificate of Compliance No. 9358 TN-LC, Revision 9c, Docket 71-9358 (Proprietary Version)

This document has been appropriately designated as proprietary.

I have personal knowledge of the criteria and procedures utilized by TN Americas LLC in designating information as a trade secret, privileged, or as confidential commercial or financial information.

Pursuant to the provisions of paragraph (b) (4) of Section 2.390 of the Commission's regulations, the following is furnished for consideration by the Commission in determining whether the information sought to be withheld from public disclosure, included in the above referenced document, should be withheld.

1) The information sought to be withheld from public disclosure involves certain design details associated with the SAR analyses and SAR drawings for the TN-LC System, which are owned and have been held in confidence by TN Americas LLC.
2) The information is of a type customarily held in confidence by TN Americas LLC and not customarily disclosed to the public. TN Americas LLC has a rational basis for determining the types of information customarily held in confidence by it.
3) Public disclosure of the information is likely to cause substantial harm to the competitive position of TN Americas LLC because the information consists of descriptions of the design and analysis of a radioactive material transportation system, the application of which provide a competitive economic advantage. The availability of such information to competitors would enable them to modify their product to better compete with TN Americas LLC, take marketing or other actions to improve their product's position or impair the position of TN America LLC's product, and avoid developing similar data and analyses in support of their processes, methods or apparatus.

Further the deponent sayeth not.

A. Prakash

Prakash Narayanan
Chief Technical Officer, TN Americas LLC

Subscribed and sworn before me this 28th day of October, 2020.

Notary Public
My Commission Expires 10/16/2023

RONDA JONES
NOTARY PUBLIC
MONTGOMERY COUNTY
MARYLAND
MY COMMISSION EXPIRES OCT. 16, 2023