TABLE OF CONTENTS

CHAPTER 3.0

DESIGN OF STRUCTURES, COMPONENTS, EQUIPMENT,AND SYSTEMS

Section		Page
3.1	CONFORMANCE WITH NRC GENERAL DESIGN CRITERIA	3.1-1
3.1.1	DEFINITION OF SINGLE FAILURE	3.1-1
3.1.1.1	Active Component	3.1-2
3.1.1.2	Active Component Failure	3.1-2
3.1.1.3	Passive Component	3.1-2
3.1.1.4	Passive Component Failure	3.1-3
3.1.2	ADDITIONAL SINGLE FAILURE ASSUMPTIONS	3.1-3
3.1.3	OVERALL REQUIREMENTS	3.1-5
3.1.4	PROTECTION BY MULTIPLE FISSION PRODUCT BARRIERS	3.1-9
3.1.5	PROTECTION AND REACTIVITY CONTROL	3.1-18
3.1.6	FLUID SYSTEMS	3.1-25
3.1.7	REACTOR CONTAINMENT	3.1-39
3.1.8	FUEL AND REACTIVITY CONTROL	3.1-44
3.1.9	REFERENCES	3.1-48
3.2	CLASSIFICATION OF STRUCTURES, COMPONENTS, AND SYSTEM	3.2-1
3.2.1	SEISMIC CLASSIFICATION	3.2-2
3.2.2	SYSTEM QUALITY GROUP CLASSIFICATION	3.2-3
3.2.3	SAFETY CLASSES	3.2-3
3.2.4	QUALITY ASSURANCE PROGRAM	3.2-3
3.2.5	ENGINEERING CODES AND STANDARDS	3.2-4
3.2.6	LOCATION	3.2-4
3.2.7	REFERENCES	3.2-4
3.3	WIND AND TORNADO LOADINGS	3.3-1
3.3.1	WIND LOADINGS	3.3-1
3.3.1.1	Design Wind Velocity	3.3-1
3.3.1.2	Determination of Applied Forces	3.3-2

TABLE OF CONTENTS (Continued)

Section		Page
3.3.2	TORNADO LOADINGS	3.3-2
3.3.2.1	Applicable Design Parameters	3.3-2
3.3.2.2	Determination of Forces on Structures	3.3-3
3.3.2.3	Effect of Failure of Structure or Components Not Designed for Tornado Loads	3.3-3
3.3.3	REFERENCES	3.3-3
3.4	WATER LEVEL (FLOOD) DESIGN	3.4-1
3.4.1	FLOOD PROTECTION	3.4-1
3.4.1.1	Flood Protection Measures for Seismic Category I Structures	3.4-1
3.4.1.2	Ground Water Elevations	3.4-3
3.4.1.3	Permanent Dewatering Systems	3.4-3
3.4.2	ANALYSIS PROCEDURES	3.4-3
3.4.2.1	Design Basis Flood for the ESWS Pumphouse	3.4-4
3.4.2.2	Design Basis Ground Water	3.4-4
3.5	MISSILE PROTECTION	3.5-1
3.5.1	MISSILE SELECTION AND DESCRIPTIONS	3.5-1
3.5.1.1	Internally Generated Missiles (Outside Containment)	3.5-2
3.5.1.2	Internally Generated Missiles (Inside Containment)	3.5-3
3.5.1.3	Turbine Missiles	3.5-3
3.5.1.4	Missiles Generated by Natural Phenomena	3.5-8
3.5.1.5	Missiles Generated by Events Near the Site	3.5-8
3.5.1.6	Aircraft Hazards	3.5-8
3.5.2	SYSTEMS TO BE PROTECTED	3.5-11
3.5.2.1	Essential Service Water Systems Pumphouse	3.5-11
3.5.2.2	Essential Service Water Systems Pipe, Electrical Duct Banks and Manholes	3.5-12

TABLE OF CONTENTS (Continued)

Section		Page
3.5.2.3	Essential Service Water System Valve House	3.5-12
3.5.2.4	Essential Service Water System Discharge Structure	3.5-12
3.5.2.5	Diesel Generator Building	3.5-12
3.5.2.6	Diesel Exhaust Stack	3.5-13
3.5.3	BARRIER DESIGN PROCEDURES	3.5-16
3.5.3.1	Tornado Missile Barrier Design Procedures	3.5-16
3.5.3.2	Barrier Design Procedures for Internally Generated Missiles	3.5-16
3.5.4	REFERENCES	3.5-16
3.6	PROTECTION AGAINST THE DYNAMIC EFFECTS ASSOCIATED WITH THE POSTULATED RUPTURE OF PIPING	3.6-1
3.6.1	POSTULATED PIPING FAILURES IN FLUID SYSTEMS INSIDE AND OUTSIDE CONTAINMENT	3.6-1
3.6.1.1	Design Bases	3.6-1
3.6.1.2	Description	3.6-5
3.6.1.3	Safety Evaluation	3.6-6
3.6.2	DETERMINATION OF BREAK LOCATIONS AND DYNAMIC EFFECTS ASSOCIATED WITH THE POSTULATED RUPTURE OF PIPING	3.6-10
3.6.2.1	Criteria Used to Define High/Moderate Energy Break/Crack Locations and Configurations	3.6-10
3.6.2.2	Analytical Methods to Define Forcing Functions and Response Models	3.6-18
3.6.2.3	Dynamic Analysis Methods to Verify Integrity and Operability	3.6-25
3.6.2.4	Protective Assembly Design Criteria	3.6-36
3.6.2.5	Material to be Submitted for the Operating License Review	3.6-36
3.6.3	REFERENCES	3.6-38

TABLE OF CONTENTS (Continued)

Section		Page
3.7(B)	SEISMIC DESIGN	3.7(B)-1
3.7(B).1	SEISMIC INPUT	3.7(B)-1
3.7(B).1.1	Design Response Spectra	3.7(B)-1
3.7(B).1.2	Design Time History	3.7(B)-2
3.7(B).1.3	Critical Damping Values	3.7(B)-3
3.7(B).1.4	Supporting Media for Seismic Category I Structures	3.7(B)-3
3.7(B).2	SEISMIC SYSTEM ANALYSIS	3.7(B)-4
3.7(B).2.1	Seismic Analysis Methods	3.7(B)-4
3.7(B).2.2	Natural Frequencies and Response Loads	3.7(B)-4
3.7(B).2.3	Procedure Used for Modeling	3.7(B)-5
3.7(B).2.4	Soil/Structure Interaction	3.7(B)-5
3.7(B).2.5	Development of Floor Response Spectra	3.7(B)-6
3.7(B).2.6	Three Components of Earthquake Motion	3.7(B)-6
3.7(B).2.7	Combination of Modal Responses	3.7(B)-6
3.7(B).2.8	Interaction of Non-Seismic Category I Structure With Seismic Cateogry I Structures	3.7(B)-7
3.7(B).2.9	Effects of Parameter Variations on Floor Response Spectra	3.7(B)-7
3.7(B).2.10	Use of Constant Vertical Static Factors	3.7(B)-7
3.7(B).2.11	Method Used to Account for Torsional Effects	3.7(B)-8
3.7(B).2.12	Comparison of Responses	3.7(B)-8
3.7(B).2.13	Methods for Seismic Analysis of Dams	3.7(B)-8
3.7(B).2.14	Determination of Seismic Category I Structure Overturning Moments	3.7(B)-8
3.7(B).2.15	Analysis Procedure for Damping	3.7(B)-8
3.7(B).3	SEISMIC SUBSYSTEM ANALYSIS	3.7(B)-8
3.7(B).3.1	Seismic Analysis Methods	3.7(B)-8
3.7(B).3.2	Determination of Number of Earthquake Cycles	3.7(B)-8
3.7(B).3.3	Procedure Used for Modeling	3.7(B)-9

TABLE OF CONTENTS (Continued)

Section		Page
3.7(B).3.4	Basis for Selection of Frequencies	3.7(B)-9
3.7(B).3.5	Use of Equivalent Static Load Method of Analysis	3.7(B)-9
3.7(B).3.6	Three Components of Earthquake Motion	3.7(B)-9
3.7(B).3.7	Combination of Modal Responses	3.7(B)-9
3.7(B).3.8	Analytical Procedures for Piping	3.7(B)-10
3.7(B).3.9	Multiple Supported Equipment and Components With Distinct Inputs	3.7(B)-10
3.7(B).3.10	Use of Constant Vertical Static Factors	3.7(B)-11
3.7(B).3.11	Torsional Effects of Eccentric Masses	3.7(B)-11
3.7(B).3.12	Buried Seismic Category I Piping Systems & Tunnels	3.7(B)-11
3.7(B).3.13	Interaction of Other Piping With Seismic Category I Piping	3.7(B)-11
3.7(B).3.14	Seismic Analyses for Reactor Internals	3.7(B)-11
3.7(B).3.15	Analysis Procedure for Damping	3.7(B)-11
3.7(B).3.16	Seismic Analysis for Cable Trays	3.7(B)-11
3.7(B).4	SEISMIC INSTRUMENTATION	3.7(B)-16
3.7(B).4.1	Comparison with Regulatory Guide 1.12 Rev. 2 (March 1997)	3.7(B)-16
3.7(B).4.2	Location and Description of Instrumentation	3.7(B)-17
3.7(B).4.3	Control Room Operator Notification	3.7(B)-19
3.7(B).4.4	Comparison of Measured and Predicted Responses	3.7(B)-19
3.7(B).5	REFERENCES	3.7(B)-19
App. 3.7(B)A	IMPEDANCE FUNCTIONS FOR A RIGID CIRCULAR FOUNDATION ON A LAYERED VISCOELASTIC MEDIUM	3.7(B)A-1
A.1	FORMULATION OF THE PROBLEM	3.7(B)A-1
A.1.1	STATEMENT OF THE PROBLEM	3.7(B)A-1
A.1.2	TYPES OF ENERGY DISSIPATION	3.7(B)A-3
A.1.3	INTEGRAL REPRESENTATION	3.7(B)A-5
A.2	INTEGRAL EQUATIONS AND IMPEDANCE FUNCTIONS	3.7(B)A-7
A.3	NUMERICAL SOLUTION	3.7(B)A-11
A.4	REFERENCES	3.7(B)A-12

TABLE OF CONTENTS (Continued)

Section		Page
App. 3.7(B)B	SOIL DEPENDENT DISPLACEMENT FUNCTIONS FOR THE SOLUTION OF THE EQUATIONS OF MOTION	3.7(B)B-1
3.7(N)	SEISMIC DESIGN	3.7(N)-1
3.7(N).1	SEISMIC INPUT	3.7(N)-1
3.7(N).1.1	Design Response Spectra	3.7(N)-1
3.7(N).1.2	Design Time History	3.7(N)-1
3.7(N).1.3	Critical Damping Values	3.7(N)-2
3.7(N).1.4	Supporting Media for Seismic Category I Structures	3.7(N)-3
3.7(N).2	SEISMIC SYSTEM ANALYSIS	3.7(N)-3
3.7(N).2.1	Seismic Analysis Methods	3.7(N)-3
3.7(N).2.2	Natural Frequencies and Response Loads	3.7(N)-13
3.7(N).2.3	Procedures Used for Modeling	3.7(N)-13
3.7(N).2.4	Soil/Structure Interaction	3.7(N)-13
3.7(N).2.5	Development of Floor Response Spectra	3.7(N)-13
3.7(N).2.6	Three Components of Earthquake Motion	3.7(N)-13
3.7(N).2.7	Combination of Modal Response	3.7(N)-14
3.7(N).2.8	Interaction of Non-Category I Structures With Seismic Category I Structures	3.7(N)-16
3.7(N).2.9	Effects of Parameter Variations on Floor Response Spectra	3.7(N)-17
3.7(N).2.10	Use of Constant Vertical Static Factors	3.7(N)-17
3.7(N).2.11	Methods Used to Account for Torsional Effects	3.7(N)-17
3.7(N).2.12	Comparison of Responses	3.7(N)-17
3.7(N).2.13	Methods for Seismic Analysis of Dams	3.7(N)-17
3.7(N).2.14	Determination of Seismic Category I Structure Overturning Moments	3.7(N)-17
3.7(N).2.15	Analysis Procedure for Damping	3.7(N)-17
3.7(N).3	SEISMIC SUBSYSTEM ANALYSIS	3.7(N)-17
3.7(N).3.1	Seismic Analysis Methods	3.7(N)-17

TABLE OF CONTENTS (Continued)

Section		Page
3.7(N).3.2	Determination of Number of Earthquake Cycles	3.7(N)-18
3.7(N).3.3	Procedure Used for Modeling	3.7(N)-19
3.7(N).3.4	Basis for Selection of Frequencies	3.7(N)-19
3.7(N).3.5	Used of Equivalent Static Load Method of Analysis	3.7(N)-19
3.7(N).3.6	Three Components of Earthquake Motion	3.7(N)-20
3.7(N).3.7	Combination of Modal Responses	3.7(N)-20
3.7(N).3.8	Analytical Procedures for Piping	3.7(N)-20
3.7(N).3.9	Multiple Supported Equipment Components	3.7(N)-20
3.7(N).3.10	Use of Constant Vertical Static Factors	3.7(N)-21
3.7(N).3.11	Torsional Effects of Eccentric Masses	3.7(N)-21
3.7(N).3.12	Buried Seismic Category I Piping Systems and Tunnels	3.7(N)-21
3.7(N).3.13	Interaction of Other Piping With Seismic Category I Piping	3.7(N)-22
3.7(N).3.14	Seismic Analyses for Reactor Internals	3.7(N)-22
3.7(N).3.15	Analysis Procedure for Damping	3.7(N)-22
3.7(N).4	SEISMIC INSTRUMENTATION	3.7(N)-23
3.7(N).5	REFERENCES	3.7(N)-23
3.7(S)	SEISMIC DESIGN	3.7(S)-1
3.7(S).1.	SEISMIC INPUT	3.7(S)-1
3.7(S).1.1	Design Response Spectra	3.7(S)-1
3.7(S).1.2	Design Time History	3.7(S)-1
3.7(S).1.3	Supporting Media for Seismic Category I Structure	3.7(S)-2
3.7(S).2	SEISMIC SYSTEM ANALYSIS	3.7(S)-2
3.7(S).2.1	Seismic Analysis Method	3.7(S)-2
3.7(S).2.2	Natural Frequencies and Response Loads	3.7(S)-2
3.7(S).2.3	Soil/Structure Interaction	3.7(S)-3
3.7(S).2.4	Methods for Seismic Analysis of Dams	3.7(S)-3

TABLE OF CONTENTS (Continued)

Section		Page
3.8	DESIGN OF CATEGORY I STRUCTURES	3.8-1
3.8.1	CONCRETE CONTAINMENT	3.8-1
3.8.1.1	Description of the Reactor Building	3.8-1
3.8.1.2	Applicable Codes, Standards, and Specifications	3.8-4
3.8.1.3	Loads and Loading Combinations	3.8-6
3.8.1.4	Design and Analysis Procedures	3.8-7
3.8.1.5	Structural Acceptance Criteria	3.8-10
3.8.1.6	Materials, Quality Control, and Special Construction Techniques	3.8-11
3.8.1.7	Testing and Inservice Surveillance Requirements	3.8-26
3.8.2	CONTAINMENT SYSTEM STEEL ITEMS	3.8-27
3.8.2.1	Description of Steel Items	3.8-27
3.8.2.2	Applicable Codes, Standards, and Specifications	3.8-30
3.8.2.3	Loads and Loading Combinations	3.8-32
3.8.2.4	Design and Analysis Procedure	3.8-34
3.8.2.5	Structural Acceptance Criteria	3.8-36
3.8.2.6	Materials, Quality Control, and Special Construction Techniques	3.8-37
3.8.2.7	Testing and Inservice Surveillance Requirements	3.8-37
3.8.3	CONCRETE AND STEEL INTERNAL STRUCTURES OF STEEL OR CONCRETE CONTAINMENTS	3.8-37
3.8.3.1	Description of the Internal Structures	3.8-37
3.8.3.2	Applicable Codes, Standards, and Specifications	3.8-43
3.8.3.3	Loads and Loading Combinations	3.8-45
3.8.3.4	Design and Analysis Procedures	3.8-51
3.8.3.5	Structural Acceptance Criteria	3.8-54
3.8.3.6	Materials, Quality Control, and Special Construction Techniques	3.8-54
3.8.3.7	Testing and Inservice Surveillance Requirements	3.8-59

TABLE OF CONTENTS (Continued)

Section		Page
3.8.4	OTHER CATEGORY I STRUCTURES	3.8-59
3.8.4.1	Description of the Structures	3.8-59
3.8.4.2	Applicable Codes, Standards, and Specifications	3.8-65
3.8.4.3	Loads and Load Combinations	3.8-66
3.8.4.4	Design and Analysis Procedures	3.8-66
3.8.4.5	Structural Acceptance Criteria	3.8-71
3.8.4.6	Materials, Quality Control, and Special Construction Techniques	3.8-71
3.8.4.7	Testing and Inservice Surveillance Requirements	3.8-72
3.8.5	FOUNDATIONS	3.8-72
3.8.5.1	Description of the Foundations	3.8-72
3.8.5.2	Applicable Codes, Standards, and Specifications	3.8-76
3.8.5.3	Loads and Load Combinations	3.8-76
3.8.5.4	Design and Analysis Procedures	3.8-76
3.8.5.5	Structural Acceptance Criteria	3.8-77
3.8.5.6	Materials, Quality Control, and Special Construction Techniques	3.8-77
3.8.5.7	Testing and Inservice Surveillance Requirements	3.8-77
3.8.6	RADWASTE BUILDING AND TUNNEL	3.8-77
3.8.6.1	Description of the Structures	3.8-77
3.8.6.2	Applicable Codes, Standards and Specifications	3.8-78
3.8.6.3	Loads and Load Combinations	3.8-79
3.8.6.4	Design and Analysis Procedures	3.8-79
3.8.6.5	Structural Acceptance Criteria	3.8-81
3.8.6.6	Materials, Quality Control, and Special Construction Techniques	3.8-81
3.8.6.7	Testing and Inservice Surveillance Requirements	3.8-82
3.8.7	REFERENCES	3.8-82
App. 3.8A	COMPUTER PROGRAMS USED FOR STRUCTURAL AND SEISMIC ANALYSES	3.8A-1

TABLE OF CONTENTS (Continued)

Section		Page
3.8A.1	COMPUTER PROGRAMS USED FOR STRUCTURAL AND SEISMIC ANALYSES BY BECHTEL POWER CORPORATION	3.8A-3
3.8A.1.1	Bechtel CE 201 Bechtel Structural Analysis Program - Post Processor (BSAP-POST)	3.8A-3
3.8A.1.2	Bechtel CE 239 Hemispherical Dome Tendon Analysis (TENDON)	3.8A-4
3.8A.1.3	Bechtel CE 309, Structural Engineering Systems Solver (STRESS)	3.8A-5
3.8A.1.4	Bechtel CE 316, Finite Element Stress Analysis (FINEL)	3.8A-5
3.8A.1.5	Bechtel CE 400, Concrete Column Design (PCACOL)	3.8A-6
3.8A.1.6	Bechtel CE 639, Hemispherical Dome Tendon Analysis (STRESS)	3.8A-7
3.8A.1.7	Bechtel CE 779, Structural Analysis Program (SAP)	3.8A-8
3.8A.1.8	Bechtel CE 786, Ground Spectrum Raise	3.8A-9
3.8A.1.9	Bechtel CE 798, Engineering Analysis System (ANSYS)	3.8A-9
3.8A.1.10	Bechtel CE 800, Bechtel Structural Analysis Program (BSAP)	3.8A-10
3.8A.1.11	Bechtel CE 801, Finite Element Stress Analysis (FINEL)	3.8A-12
3.8A.1.12	Bechtel CE 802, Response Spectra Analysis (SPECTRA)	3.8A-13
3.8A.1.13	Bechtel CE 803, Axisymmetric Shell and Solid Computer Program (ASHSD)	3.8A-13
3.8A.1.14	Bechtel CE 901, The Structural Design Language (ICE STRUDL)	3.8A-14
3.8A.1.15	Bechtel CE 915, A Computer Program for Earthquake Response Analysis of Horizontally Layered Sites (SHAKE)	3.8A-15
3.8A.1.16	Bechtel CE 917, Modal Dynamic Analysis	3.8A-16
3.8A.1.17	Bechtel CE 918, Response Spectrum Analysis	3.8A-16
3.8A.1.18	Bechtel CE 920, Time-History Analysis of Structures	3.8A-17
3.8A.1.19	Bechtel CE 921, Response Spectrum Calculations	3.8A-17
3.8A.1.20	Bechtel CE 933, Fourier Analysis of Soils (FASS)	3.8A-18
3.8A.1.21	Bechtel CE 935, Earthquake Acceleration Time-Histories	3.8A-18

TABLE OF CONTENTS (Continued)

Section		Page
3.8A.1.22	Bechtel CE 970, Impedance Functions for a Rigid Circular Foundation on a Layered Viscoelastic Medium (LUCON)	3.8A-19
3.8A.1.23	Computer Programs for Seismic Soil-Structure Interaction Analysis	3.8A-20
3.8A.1.24	DISCOM, a FLUSH Postprocessor (Control Data Corp. Version)	3.8A-21
3.8A.1.25	The Structural Design Language (ICES-STRUDL by McDonnell-Douglas Automation Version)	3.8A-22
3.8A.1.26	Other Computer Programs Used in Structural Analysis	3.8A-22
3.8A.2	COMPUTER PROGRAMS USED FOR STRUCTURAL ANALYSES BY SUPPLIERS	3.8A-23
3.8A.2.1	INRYCO, Nuclear Force Computation (NUCFOR)	3.8A-23
3.8A.2.2	CBI Program 7-81, Shells of Revolution	3.8A-23
3.8A.2.3	CBI Program 1027, Stress Intensities at Loaded Attachments for Spheres of Cylinders with Round or Square Attachment	3.8A-24
3.8A.2.4	CBI Program 1691	3.8A-25
3.9(B)	MECHANICAL SYSTEMS AND COMPONENTS	3.9(B)-1
3.9(B).1	SPECIAL TOPICS FOR MECHANICAL COMPONENTS	3.9(B)-1
3.9(B).1.1	Design Transients	3.9(B)-1
3.9(B).1.2	Computer Programs Used in Analyses	3.9(B)-1
3.9(B).1.3	Experimental Stress Analysis	3.9(B)-4
3.9(B).1.4	Considerations for the Evaluation of the Faulted Condition	3.9(B)-4
3.9(B).2	DYNAMIC TESTING AND ANALYSIS	3.9(B)-5
3.9(B).2.1	Piping Vibration, Thermal Expansion Dynamic Effects	3.9(B)-5
3.9(B).2.2	Seismic Qualification Testing of Safety-Related Mechanical Equipment	3.9(B)-8
3.9(B).2.3	Dynamic Response Analysis of Reactor Internals Under Operational Flow Transients and Steady State Conditions	3.9(B)-9

TABLE OF CONTENTS (Continued)

Section		Page
3.9(B).2.4	Preoperational Flow Induced Vibration Testing of Reactor Internals	3.9(B)-9
3.9(B).2.5	Dynamic System Analysis of the Reactor Internals Under Faulted Condition	3.9(B)-9
3.9(B).2.6	Correlations of Reactor Internals Vibration Tests With Analytical Results	3.9(B)-9
3.9(B).3	ASME SECTION III CLASS 1, 2, and 3 COMPONENTS, COMPONENT SUPPORTS, AND CORE SUPPORT STRUCTURES	3.9(B)-10
3.9(B).3.1	Loading Combinations, Design Transients, and Stress Limits	3.9(B)-10
3.9(B).3.2	Pump and Valve Operability Assurance	3.9(B)-11
3.9(B).3.3	Design and Installation Details for Mounting of Pressure Relief Devices	3.9(B)-16
3.9(B).3.4	Component Supports	3.9(B)-17
3.9(B).4	CONTROL ROD DRIVE SYSTEMS	3.9(B)-20
3.9(B).5	REACTOR PRESSURE VESSEL INTERNALS	3.9(B)-20
3.9(B).6	INSERVICE TESTING OF PUMPS AND VALVES	3.9(B)-21
3.9(B).6.1	Inservice Testing of Pumps	3.9(B)-21
3.9(B).6.2	Inservice Test of Valves	3.9(B)-21
3.9(B).7	REFERENCES	3.9(B)-21
App. 3.9(B)A	ME-632 VERIFICATION REPORT	3.9(B)A-1
3.9(N)	MECHANICAL SYSTEMS AND COMPONENTS	3.9(N)-1
3.9(N).1	SPECIAL TOPICS FOR MECHANICAL COMPONENTS	3.9(N)-1
3.9(N).1.1	Design Transient	3.9(N)-1
3.9(N).1.2	Computer Programs Used in Analysis	3.9(N)-20
3.9(N).1.3	Experimental Stress Analysis	3.9(N)-21
3.9(N).1.4	Considerations for the Evaluation of the Faulted Condition	3.9(N)-21

TABLE OF CONTENTS (Continued)

Section		Page
3.9(N).2	DYNAMIC TESTING AND ANALYSIS	3.9(N)-35
3.9(N).2.1	Preoperational Vibration and Dynamic Effects Testing on Piping	3.9(N)-35
3.9(N).2.2	Seismic Qualification Testing of Safety-Related Mechanical Equipment	3.9(N)-36
3.9(N).2.3	Dynamic Response Analysis of Reactor Internals Under Operational Flow Transients and Steady State Conditions	3.9(N)-37
3.9(N).2.4	Preoperational Flow-Induced Vibration Testing of Reactor Internals	3.9(N)-39
3.9(N).2.5	Dynamic System Analysis of the Reactor Internals Under Faulted Conditions	3.9(N)-41
3.9(N).2.6	Correlations of Reactor Internals Vibration Tests With the Analytical Results	3.9(N)-47
3.9(N).3	ASME CODE CLASS 1, 2 AND 3 COMPONENTS, COMPONENT SUPPORTS AND CORE SUPPORT STRUCTURES	3.9(N)-47
3.9(N).3.1	Loading Combinations Design Transients, and Stress Limits (For ASME Code Class 2 and 3 Components)	3.9(N)-49
3.9(N).3.2	Pump and Valve Operability Assurance	3.9(N)-50
3.9(N).3.3	Design and Installation Details in Mounting of Pressure Relief Devices	3.9(N)-55
3.9(N).3.4	Component Supports (ASME Code Class 2 and 3)	3.9(N)-55
3.9(N).4	CONTROL ROD DRIVE SYSTEM (CRDS)	3.9(N)-56
3.9(N).4.1	Descriptive Information of CRDS	3.9(N)-56
3.9(N).4.2	Applicable CRDS Design Specifications	3.9(N)-61
3.9(N).4.3	Design Loads, Stress Limits, and Allowable Deformations	3.9(N)-63
3.9(N).4.4	CRDS Performance Assurance Program	3.9(N)-65

TABLE OF CONTENTS (Continued)

Section		Page
3.9(N).5	REACTOR PRESSURE VESSEL INTERNALS	3.9(N)-67
3.9(N).5.1	Design Arrangements	3.9(N)-67
3.9(N).5.2	Design Loading Conditions	3.9(N)-71
3.9(N).5.3	Design Loading Categories	3.9(N)-72
3.9(N).5.4	Design Bases	3.9(N)-73
3.9(N).6	INSERVICE TESTING OF PUMPS AND VALVES	3.9(N)-75
3.9(N).7	REFERENCES	3.9(N)-75
3.10(B)	SEISMIC QUALIFICATION OF CATEGORY I INSTRUMENTATION AND ELECTRICAL EQUIPMENT	3.10(B)-1
3.10(B).1	SEISMIC QUALIFICATION CRITERIA	3.10(B)-1
3.10(B).2	METHODS AND PROCEDURES FOR QUALIFYING ELECTRICAL EQUIPMENT AND INSTRUMENTATION	3.10(B)-2
3.10(B).2.1	Analysis	3.10(B)-2
3.10(B).2.2	Testing	3.10(B)-2
3.10(B).2.3	Combined Analysis and Testing	3.10(B)-2
3.10(B).2.4	Generic Qualification	3.10(B)-2
3.10(B).3	METHODS AND PROCEDURES OF ANALYSIS OR TESTING OF SUPPORTS OF ELECTRICAL EQUIPMENT	3.10(B)-3
3.10(B).4	METHODS AND PROCEDURES OF ANALYSIS OR TESTING OF INSTRUMENTATION PANELS, MOUNTING STRUCTURES FOR FIELD MOUNTED INSTRUMENTS, AND SUPPORTS FOR INSTRUMENT TUBING	3.10(B)-4
3.10(B).4.1	Instrumentation Panels	3.10(B)-4
3.10(B).4.2	Mounting Structures for Field Mounted Instruments	3.10(B)-4
3.10(B).4.3	Supports for Instrument Tubing	3.10(B)-4
3.10(B).5	OPERATING LICENSE REVIEW	3.10(B)-5
3.10(N)	SEISMIC QUALIFICATION OF SEISMIC CATEGORY I INSTRUMENTATION AND ELECTRICAL EQUIPMENT	3.10(N)-1
3.10(N).1	SEISMIC QUALIFICATION CRITERIA	3.10(N)-1

TABLE OF CONTENTS (Continued)

Section		Page
3.10(N).1.1	Qualification Standards	3.10(N)-1
3.10(N).1.2	Performance Requirements for Seismic Qualification	3.10(N)-2
3.10(N).1.3	Acceptance Criteria	3.10(N)-2
3.10(N).2	METHODS AND PROCEDURES FOR QUALIFYING ELECTRICAL EQUIPMENT AND INSTRUMENTATION	3.10(N)-3
3.10(N).2.1	Seismic Qualification by Type Test	3.10(N)-3
3.10(N).2.2	Seismic Qualification by Analysis	3.10(N)-4
3.10(N).3	METHODS AND PROCEDURES FOR QUALIFYING SUPPORTS OF ELECTRICAL EQUIPMENT AND INSTRUMENTATION	3.10(N)-5
3.10(N).4	OPERATING LICENSE REVIEW	3.10(N)-5
3.10(N).5	REFERENCES	3.10(N)-5
3.11(B)	ENVIRONMENTAL DESIGN OF MECHANICAL AND ELECTRICAL EQUIPMENT	3.11(B)-1
3.11(B).1	EQUIPMENT IDENTIFICATION AND EVIR-RONMENTAL CONDITIONS	3.11(B)-2
3.11(B).1.1	Equipment and Systems List	3.11(B)-2
3.11(B).1.2	Plant Environments	3.11(B)-4
3.11(B).1.3	Voltage and Frequency	3.11(B)-14
3.11(B).1.4	Environment Design Criteria	3.11(B)-15
3.11(B).2	QUALIFICATION TESTS AND ANALYSES	3.11(B)-16
3.11(B).2.1	Equipment Inside Containment	3.11(B)-17
3.11(B).2.2	Auxiliary and Fuel Building Equipment	3.11(B)-20
3.11(B).2.3	Control Building Equipment	3.11(B)-21
3.11(B).2.4	Essential Service Water Pump House	3.11(B)-22
3.11(B).2.5	Equipment Located Outside of Buildings	3.11(B)-22
3.11(B).3	QUALIFICATION TEST RESULTS	3.11(B)-23
3.11(B).4	LOSS OF VENTILATION	3.11(B)-23
3.11(B).5	NUREG-0588 PROGRAM REQUIREMENTS	3.11(B)-24
3.11(B).5.1	Display Instrumentation	3.11(B)-24
3.11(B).5.2	Equipment Operability	3.11(B)-24
3.11(B).5.3	Margins	3.11(B)-25
3.11(B).5.4	Aging	3.11(B)-25
3.11(B).5.5	Exemption from Qualification	3.11(B)-26
3.11(B).5.6	Maintenance and Surveillance Activities	3.11(B)-27

TABLE OF CONTENTS (Continued)

Section		Page
3.11(B).5.7	Equipment Located in Mild Environments	3.11(B)-29
3.11(B).5.8	Synergistic Effects	3.11(B)-29
3.11(B).6	MECHANICAL EQUIPMENT QUALIFICATION	3.11(B)-31
3.11(B).7	CONTROL SYSTEMS QUALIFICATION	3.11(B)-32
3.11(B).8	REFERENCES	3.11(B)-35
3.11(N)	ENVIRONMENTAL DESIGN OF MECHANICAL AND ELECTRICAL EQUIPMENT	3.11(N)-1
3.11(N).1	EQUIPMENT IDENTIFICATION AND ENVIRONMENTAL CONDITIONS	3.11(N)-1
3.11(N).2	QUALIFICATION TESTS AND ANALYSES	3.11(N)-1
3.11(N).3	QUALIFICATION TEST RESULTS	3.11(N)-2
3.11(N).4	LOSS OF VENTILATION	3.11(N)-2
3.11(N).5	ESTIMATED CHEMICAL AND RADIATION ENVIRONMENT	3.11(N)-2
3.11(N).6	REFERENCES	3.11(N)-2
3.12	COMPUTER PROGRAMS FOR STRUCTURAL ANALYSIS AND DESIGN	3.12-1
3.12.1	ISBILD	3.12-1
3.12.2	QUAD4	3.12-2
3.12.3	RSG	3.12-4
3.12.4	SEEPAGE	3.12-5
3.12.5	SLOPE	3.12-6
3.12.6	BISHOP	3.12-6
3.12.7	REFERENCES	3.12-8
App. 3A	CONFORMANCE TO NRC REGULATORY GUIDES	3A-1
App. 3B	HAZARD ANALYSIS	3B-1
3B.1	INTRODUCTION	3B-1
3B.2	ANALYSIS ASSUMPTIONS	3B-2
3B.2.1	EARTHQUAKE ANALYSIS ASSUMPTIONS	3B-3
3B.2.2	PIPE BREAK ANALYSIS ASSUMPTIONS	3B-3
3B.2.3	MISSILES ANALYSIS ASSUMPTIONS	3B-3
3B.2.4	FLOODING ANALYSIS ASSUMPTIONS	3B-4
3B.3	PROTECTION MECHANISMS	3B-4
3B.4	HAZARDS EVALUATIONS	3B-5
3B.4.1	AUXILIARY FEEDWATER PUMP ROOMS	3B-5
3B.4.2	MAIN STEAM/MAIN FEEDWATER ISOLATION VALVE COMPARTMENT	3B-6

TABLE OF CONTENTS (Continued)

Section		Page
3B.4.2.1	Break Size and Location	3B-6
3B.4.2.2	Method of Analysis	3B-7
3B.4.2.3	Mass and Energy Release	3B-7
3B.4.2.4	Compartment Volumes and Vent Areas	3B-10
3B.4.2.5	Initial Conditions	3B-10
3B.4.2.6	Results	3B-11
3B.4.2.7	Design Provisions	3B-13
3B.4.3	TURBINE BUILDING FLOODING EVALUATION	3B-13
3B.4.3.1	Introduction	3B-14
3B.4.3.2	CWS Rupture Analysis	3B-15
3B.4.3.3	CWS Rupture Evaluation	3B-15
3B.4.4	EVALUATION OF RCS LOOP BRANCH LINE BREAKS	3B-16
3B.5	REFERENCES	3B-16
App. 3C	SEISMIC EVALUATION OF WOLF CREEK GENERATING STATION STRUCTURES USING LIVERMORE SPECTRUM	3C-1
3C.1	EVALUATION OF STRUCTURES	3C-1
3C.1.1	INTRODUCTION	3C-1
3C.1.2	DISCUSSION	3C-1
3C.1.3	CONCLUSION	3C-8
3C.1.4	REFERENCES	3C-8
3C.2	EVALUATION OF PIPING SYSTEMS AND SUPPORTS	3C-8
3C.2.1	INTRODUCTION	3C-8
3C.2.2	STRESS EVALUATION OF PIPING SYSTEMS	3C-9
3C.2.3	STRESS EVALUATION RESULTS	3C-9
3C.2.4	CONCLUSIONS	3C-10
3C.3	EVALUATION OF EQUIPMENT	3C-10
3C.3.1	INTRODUCTION	3C-10
3C.3.2	EVALUATION OF SAFETY-RELATED EQUIPMENT	3C-10
3C.3.3	EQUIPMENT EVALUATION RESULTS	3C-11
3C.3.4	CONCLUSION	3C-14
App. 3D	WOLF CREEK RESPONSE TO BEYOND – DESIGN – BASIS EXTERNAL EVENT FUKUSHIMA RELATED REQUIRED ACTIONS	3D-1

TABLE OF CONTENTS (CONTINUED)

LIST OF TABLES

Table No.	Title
3.2-1	Classifications of Structures, Components, and Systems
3.2-2	Code Requirements for Components and Quality Groups
3.2-3	Design Comparison to Regulatory Positions of Regulatory Guide 1.29, Revision 3, Dated September 1978, Titled "Seismic Design Classification"
3.2-4	Design Comparison to Regulatory Guide 1.26, Revision 3, Dated February 1976, Titled "Quality Group Classifications and Standards for Water-, Steam-, and Radioactive-Waste Containing Components of Nuclear Power Plants"
3.2-5	Design Comparison to Regulatory Guide 1.143, for Comments Dated July 1978, Titled "Design Guidance for Radioactive Waste Management Systems, Structures, and Components Installed in Light-Water-Cooled Nuclear Power Plants"
3.3-1	Tornado Resistant Buildings and Enclosures – Standard Plant
3.4-1	PMF, Groundwater, Reference, and Actual Plant Elevations
3.4-2	Site Related, Category I Structures with Penetrations Below Ground Water Elevations
3.4-3	Wind-Generated Wave Data for the ESWS Pumphouse
3.5-1	Characteristics of Postulated Tornado Missiles
3.5-2	Structures Providing Tornado Missile Barrier Protection
3.5-3	Turbine Missile Probabilities High Energy, High and Low Trajectory
3.5-4	Range of Maximum and Minimum Turbine Missile Velocities
3.5-5	NUREG-0121 Applicability to Diesel Stack Design
3.6-1	Safety-Related Systems and High and Moderate Energy Systems

TABLE OF CONTENTS (Continued)

LIST OF TABLES

Table No.	Title
3.6-2	Design Comparison to Regulatory Positions of Regulatory Guide 1.46, Revision 0, Dated May 1973, Titled "Protection of Pipe Whip Inside Containment"
3.6-3	High-Energy Pipe Break Initial Stress Analysis Results
3.6-4	High-Energy Pipe Break Effects Analysis Results
3.6-5	Primary Plus Secondary Stress Intensity Ranges and Cumulative Usage Factors at Design Break Locations in the Reactor Coolant Loop
3.6-6	Summary of Flood Levels in All Safety-Related Rooms
3.7(B)-1	Damping Values for Category I Structures, Systems, and Components (Percent of Critical Damping)
3.7(B)-2	Depth of Soil Deposited Over Bedrock Major Category I Structures
3.7(B)-3	Foundation Depth Below Grade, Minimum Base Dimension and Method of Analysis for Category I Structures
3.7(B)-4	Summary First Mode Natural Frequencies (Hertz)
3.7(B)-5A	Spectrum Response Summary Tables through 8AB
3.7(B)-9	Design Comparison with R. G. 1.12, Revision 1, Dated April 1974, Titled "Instrumentation For Earthquakes"
3.7(N)-1	Damping Values Used for Seismic Systems Analysis for Westinghouse-Supplied Equipment
3.7(S)-1	Depth of Soil Deposited over Bedrock - Site Related Seismic Category I Structures
3.7(S)-2	Foundation Depth, Below Grade Minimum Base Dimension and Methods of Analysis for Site Related Seismic Category I Structures
3.7(S)-3A	Spectral Response Summary - ESWS Pumphouse, 0.12GSSE

TABLE OF CONTENTS (CONTINUED)

LIST OF TABLES

Table No.	Title
3.7(S)-3B	Spectral Response Summary - ESWS Pumphouse, 0.06G0BE
3.8-1	Control Tests for Concrete
3.8-2	Maximum Allowable Offset in Final Welded Joints of Reactor Building Liner Plate
3.8-3	Stress Limits for Steel Portions of Concrete Containments Designed in Accordance with Subsection NE of the ASME Code
3.8-4	General Design Live Loads
3.8-5	Load Combinations and Load Factors for Category I Concrete Structures
3.8-6	Load Combinations and Load Factors for Seismic Category I Concrete Structures
3.8-7	Load Combinations and Load Factors for Category I Steel Structures
3.8-8	Load Combinations and Load Factors for Seismic Category I Steel Structures
3.8-9	Additional Load Combinations for Sliding, Overturning and Flotation
3.9(B)-1	Computer Programs Used in Analysis
3.9(B)-2	Design Loading Combinations for ASME Code Class 2 and 3 Components
3.9(B)-3	Deleted
3.9(B)-4	Deleted
3.9(B)-5	Stress Criteria for ASME Code Class 2 and Class 3 Vessels
3.9(B)-6	Stress Criteria for ASME Code Class 1, 2, and 3 Valves (Active and Inactive)
3.9(B)-7	Design Criteria for ASME Code Class 2 and 3 Piping
3.9(B)-8	Stress Criteria for ASME Code Class 2 and Class 3 Inactive Pumps

TABLE OF CONTENTS (CONTINUED)

LIST OF TABLES

Table No.	Title
3.9(B)-9	Stress Criteria for ASME Code Class 2 and Class 3 Active Pumps
3.9(B)-10	Design Loading Combinations for Supports for ASME Code Class 1, 2, and 3 Components
3.9(B)-11	Allowable Stress Limits for Class 1 Component Supports
3.9(B)-12	Allowable Stress Limits for Class 2 and 3 Component Supports
3.9(B)-13	Response to Regulatory Guide 1.48 for Components Not Furnished With the NSSS
3.9(B)-14	Response to Regulatory Guide 1.124 for Components Not Furnished with the NSSS
3.9(B)-15	Active Pumps Not Furnished with the NSSS
3.9(B)-16	Active Valves
3.9(B)A-1	Summary of Maximum Deflections, Stresses, and Reactions Core Spray Piping System Monticello Nuclear Generating Plant, Unit 1
3.9(B)A-2	Summary of Maximum Deflections, Stresses, and Reactions SMUD Rancho Seco, Unit 1 Piping System
3.9(B)A-3	Comparison of Natural Periods SMUD Rancho Seco, Unit 1 Piping System
3.9(N)-1	Summary of Reactor Coolant System Design Transients
3.9(N)-2	Loading Combinations for ASME Class 1 Components and Supports (Excluding Pipe Supports)
3.9(N)-3	Allowable Stresses for ASME Code, Section III, Class 1 Components
3.9(N)-4	Design Loading Combinations for ASME Code Class 2 and 3 Components and Supports (Excluding Pipe Supports)
3.9(N)-5	Stress Criteria for Safety-Related ASME Class 2 and Class 3 Vessels
3.9(N)-6	Stress Criteria for Safety-Related Class 2 Vessels

TABLE OF CONTENTS (CONTINUED)

LIST OF TABLES

Table No.	Title
3.9(N)-7	Stress Criteria for ASME Code Class 2 and Class 3 Inactive Pumps and Pump Supports
3.9(N)-8	Design Criteria for Active Pumps and Pump Supports
3.9(N)-9	Stress Criteria for Safety-Related ASME Code Class 2 and Class 3 Valves
3.9(N)-10	Active Pumps
3.9(N)-11	Active Valves
3.9(N)-12	Maximum Deflections Allowed for Reactor Internal Support Structures
3.10(B)-1	Seismic Qualification of Safety-Related (Class 1E) Equipment
3.10(N)-1	Seismic Category I Instrumentation and Electrical Equipment in Westinghouse NSSS Scope of Supply
3.11(B)-1	Plant Environmental Normal Conditions
3.11(B)-2	Environmental Qualification Parameters for SNUPPS NUREG 0588 Review (LOCA, MSLB and HELB)
3.11(B)-3	Identification of Safety-Related Equipment and Components: Equipment Qualification
3.11(B)-4	Containment Worst Case Radiation Levels
3.11(B)-5	Containment Spray Requirements
3.11(B)-6	Deleted
3.11(B)-7	Specifications Reviewed under the NUREG-0588 Program
3.11(B)-8	Exemptions from NUREG-0588 Qualification
3.11(B)-9	Safety Related System Listings
3.11(B)-10	Equipment Added for NUREG-0737
3.11(B)-11	Typical Examples of Maintenance/Surveillance Requirements

TABLE OF CONTENTS (CONTINUED)

LIST OF TABLES

Table No.	Title
3.12-1	Comparison of Response Spectra Values from RSG and Brancy Et. AL.(1972)
3.12-2	Results of Problem Solved With Bishop and Ices-Slope (Bishop)
3B-1	Hazards Analysis of Auxiliary Building - Elevation 1974'-0"
3B-2	Main Steam/Main Feedwater Isolation Valve Compartment Design Parameters
3B-2A	Transient Summary for the Spectrum of Steamline Breaks at 102% Power
3B-3	Mass and Energy Release Data for Main Steam Line Break in Main Steam/Main Feedwater Isolation Valve Compartment
3B-4	Mass Release Data for Main Feedwater Line Break in Main Steam/Main Feedwater Isolation Valve Compartment
3B-5	Summary of Nodalization Model
3B-6	Missiles
3B-7	Evaluation of RCS Loop Branch Line Breaks
3C-1	Site Specific Safety-Related Equipment Evaluated for a 0.15g SSE Design Spectrum
3C-2	Factors of Safety UHS Dam
3C-3	Computed Factor of Safety for the Finite Element Model of UHS Dam - Vertical and Horizontal Acceleration, 0.15g
3C-4	Results of Slope Stability Analysis for ESWS Intake Channel Excavated Slopes
3C-5	Results of Slope Stability Analysis for UHS Excavated Slopes Using Wedge Analysis

CHAPTER 3 - LIST OF FIGURES

*Refer to Section 1.6 and Table 1.6-3. Controlled drawings were removed from the USAR at Revision 17 and are considered incorporated by reference.

Figure #	Sheet(s)	Title	Drawing #*
3.4-1	0	Typical Waterproofing Details	
3.5-1	0	Turbine Missile Trajectory	
3.5-2		Structural Protection for Diesel Exhaust Stacks from Tornado Missiles	
3.6-1	1	High Energy Pipe Break Isometric Main Steam System Inside Containment	
3.6-1	2	High Energy Pipe Break Isometric Main Steam System Inside Containment	
3.6-1	3	High Energy Pipe Break Isometric Main Feedwater Inside Containment	
3.6-1	4-7	Deleted	
3.6-1	8	High Energy Pipe Break Isometric Reactor Coolant System Pressurizer Relief	
3.6-1	9	High Energy Pipe Break Isometric Reactor Coolant System Pressurizer Relief	
3.6-1	10-11	Deleted	
3.6-1	12	High Energy Pipe Break Isometric Reactor Coolant System Seal Water Injection Inside Containment	
3.6-1	13	High Energy Pipe Break Isometric Reactor Coolant Pump A Seal Water Injection Inside Containment	
3.6-1	14	High Energy Pipe Break Isometric Reactor Coolant Pump C Seal Water Injection Inside Containment	
3.6-1	15	High Energy Pipe Break Isometric Reactor Coolant Pump B Seal Water Injection Inside Containment	
3.6-1	16	Deleted	
3.6-1	17	Deleted	
3.6-1	18	High Energy Pipe Break Isometric NCP to Regen HX CVCS - Outside Containment	
3.6-1	19	High Energy Pipe Break Isometric CCP A & B Discharge CVCS - Outside Containment	
3.6-1	20	High Energy Pipe Break Isometric CVCS – Letdown Outside Containment	
3.6-1	21	High Energy Pipe Break Isometric CVCS - Seal Water Injection Outside Containment	
3.6-1	22	High Energy Pipe Break Isometric CCP A - B Miniflow CVCS - Outside Containment	
3.6-1	23	High Energy Pipe Break Isometric Letdown to Reheat HX CVCS - Outside Containment	
3.6-1	24	High Energy Pipe Break Isometric Normal & Alternate Charging CVCS - Inside Containment	

CHAPTER 3 - LIST OF FIGURES

*Refer to Section 1.6 and Table 1.6-3. Controlled drawings were removed from the USAR at Revision 17 and are considered incorporated by reference.

Figure #	Sheet(s)	Title	Drawing #*
3.6-1	25	High Energy Pipe Break Isometric CVCS Letdown Inside Containment	
3.6-1	26	High Energy Pipe Break Isometric Charging & Excess Letdown CVCS - Inside Containment	
3.6-1	27	High Energy Pipe Break Isometric CVCS - Aux. Spray Inside Containment	
3.6-1	28	Deleted	
3.6-1	29	High Energy Pipe Break Isometric Stm Gen A & D Blowdown Inside Containment	
3.6-1	30	High Energy Pipe Break Isometric Stm Gen B & C Blowdown Inside Containment	
3.6-1	31	High Energy Pipe Break Isometric Stm Gen A, B, C, D Blowdown Inside Containment	
3.6-1	32	High Energy Pipe Break Isometric Stm Gen A Sample & Tube Sheet Drain Inside Containment	
3.6-1	33	High Energy Pipe Break Isometric Stm Gen B Sample & Tube Sht. Drain Inside Containment	
3.6-1	34	High Energy Pipe Break Isometric Stm Gen C Sample & Tube Sht. Drain Inside Containment	
3.6-1	35	High Energy Pipe Break Isometric Stm Gen D Sample & Tube Sht. Drain Inside Containment	
3.6-1	36	High Energy Pipe Break Isometric RHR Suction - Loops 1 & 4 Inside Containment	
3.6-1	37	High Energy Pipe Break Isometric Boron Injection Tank Inlet SIS - Outside Containment	
3.6-1	38	High Energy Pipe Break Isometric BIT and SI & RHR Recirc SIS - Inside Containment	
3.6-1	39	High Energy Pipe Break Isometric SI Discharge - Loops 1 & 4 SIS - Inside Containment	
3.6-1	40	High Energy Pipe Break Isometric Accumulator Injection - Loops 1 & 4 Inside Containment	
3.6-1	41	High Energy Pipe Break Isometric Accumulator Injection - Loops 2 & 3 Inside Containment	
3.6-1	42	Deleted	
3.6-1	43	High Energy Pipe Break Isometric Aux Stm Deaerator Feed Pump Disch Outside Containment	
3.6-1	44	High Energy Pipe Break Isometric Aux Stm Supply Header Outside Containment	
3.6-1	45	High Energy Pipe Break Isometric Aux Stm Condensate Return Outside Containment	

CHAPTER 3 - LIST OF FIGURES

*Refer to Section 1.6 and Table 1.6-3. Controlled drawings were removed from the USAR at Revision 17 and are considered incorporated by reference.

Figure #	Sheet(s)	Title	Drawing #*
3.6-1	46	High Energy Pipe Break Isometric Aux Stm Cond Stor & Recov Tank Overflow & Vent Outside Containment	
3.6-1	47	High Energy Pipe Break Isometric Aux Stm Cond Transfer Pump Disch Outside Containment	
3.6-1	48	High Energy Pipe Break Isometric Aux Stm Deaerator Feed Pump Recirc Outside Containment	
3.6-1	49	High Energy Pipe Break Isometric Main Stm Supply to Turb AFP Outside Containment	
3.6-1	50	High Energy Pipe Break Isometric Reactor Coolant - Loop Drains Inside Containment	
3.6-1	51	High Energy Pipe Break Isometric Accumulator Tank Drains Inside Containment	
3.6-2	0	Loss of Reactor Coolant Accident Boundary Limits	
3.6-3	0	Location of Postulated Breaks in Reactor Coolant Loop (Including Pressurizer Surge Line)	
3.6-4	0	Typical Piping Guide Installation	
3.6-5	0	Typical Isolation Restraint	
3.6-6	1	Energy Absorbing Honeycomb Material - Large Gap Restraint	
3.6-6	2	Typical Prefabricated Energy Absorbing Honeycomb Material Installation	
3.6-7	0	Typical Upset Rod Large Gap Restraint	
3.6-8	0	Typical Close Gap Restraint	
3.6-9	0	Lumped-Parameter Model Pipe Restraint System	
3.7(B)-1	0	SSE Horizontal Ground Spectra 0.2g	
3.7(B)-2	0	SSE Vertical Ground Spectra 0.2g	
3.7(B)-3	0	Synthesized Time History Horizontal (OBE and SSE)	
3.7(B)-4	0	Synthesized Time History Vertical (OBE and SSE)	
3.7(B)-5	0	Deleted	
3.7(B)-6	0	Deleted	
3.7(B)-7	0	Deleted	
3.7(B)-8	0	Deleted	
3.7(B)-9A	0	Typical Free-Field Base Elevation Spectra Callaway Site	
3.7(B)-9B	0	Typical Free-Field Base Elevation Spectra Sterling Site	
3.7(B)-9C	0	Typical Free-Field Base Elevation Spectra Tyrone Site	
3.7(B)-9D	0	Typical Free-Field Base Elevation Spectra Wolf Creek Site	
3.7(B)-10	0	Typical Free-Field Base Elevation Spectra Three Site Envelope	

CHAPTER 3 - LIST OF FIGURES

*Refer to Section 1.6 and Table 1.6-3. Controlled drawings were removed from the USAR at Revision 17 and are considered incorporated by reference.

Figure #	Sheet(s)	Title	Drawing #*
3.7(B)-11A	0	Deleted	
3.7(B)-11B	0	Deleted	
3.7(B)-12	0	Mathematical Model for Reactor Building and Internal Structures	
3.7(B)-13	0	The Finite-Element Model	
3.7(B)-14A	0	Spectra - Containment Building SSE, North-South Direction, Polar Crane Location, Callaway Site	
3.7(B)-14B	0	Spectra - Containment Building SSE, North-South Direction, Polar Crane Location, Sterling Site	
3.7(B)-14C	0	Deleted	
3.7(B)-14D	0	Spectra - Containment Building SSE, North-South Direction, Polar Crane Location, Wolf Creek Site	
3.7(B)-14E	0	Spectra - Containment Building SSE, East-West Direction, Polar Crane Location, Callaway Site	
3.7(B)-14F	0	Spectra - Containment Building SSE, East-West Direction, Polar Crane Location, Sterling Site	
3.7(B)-14G	0	Deleted	
3.7(B)-14H	0	Spectra - Containment Building SSE, East-West Direction, Polar Crane Location, Wolf Creek Site	
3.7(B)-14I	0	Spectra - Containment Building SSE, Vertical Direction, Polar Crane Location, Callaway Site	
3.7(B)-14J	0	Spectra - Containment Building SSE, Vertical Direction, Polar Crane Location, Sterling Site	
3.7(B)-14K	0	Deleted	
3.7(B)-14L	0	Spectra - Containment Building SSE, Vertical Direction, Polar Crane Location, Wolf Creek Site	
3.7(B)-14M	0	Spectra - Containment Building OBE, North-South Direction, Polar Crane Location, Callaway Site	
3.7(B)-14N	0	Spectra - Containment Building OBE, North-South Direction, Polar Crane Location, Sterling Site	
3.7(B)-14O	0	Deleted	
3.7(B)-14P	0	Spectra - Containment Building OBE, North-South Direction, Polar Crane Location, Wolf Creek Site	
3.7(B)-14Q	0	Spectra - Containment Building OBE, East-West Direction, Polar Crane Location, Callaway Site	
3.7(B)-14R	0	Spectra - Containment Building OBE, East-West Direction, Polar Crane Location, Sterling Site	
3.7(B)-14S	0	Deleted	
3.7(B)-14T	0	Spectra - Containment Building OBE, East-West Direction, Polar Crane Location, Wolf Creek Site	

CHAPTER 3 - LIST OF FIGURES

*Refer to Section 1.6 and Table 1.6-3. Controlled drawings were removed from the USAR at Revision 17 and are considered incorporated by reference.

Figure #	Sheet(s)	Title	Drawing #*
3.7(B)-14U	0	Spectra - Containment Building OBE, Vertical Direction, Polar Crane Location, Callaway Site	
3.7(B)-14V	0	Spectra - Containment Building OBE, Vertical Direction, Polar Crane Location, Sterling Site	
3.7(B)-14W	0	Deleted	
3.7(B)-14X	0	Spectra - Containment Building OBE, Vertical Direction, Polar Crane Location, Wolf Creek Site	
3.7(B)-15A	0	Spectra - Containment Building SSE, North-South Direction, Steam Generator Upper Support, Callaway Site	
3.7(B)-15B	0	Spectra - Containment Building SSE, North-South Direction, Steam Generator Upper Support, Sterling Site	
3.7(B)-15C	0	Deleted	
3.7(B)-15D	0	Spectra - Containment Building SSE, North-South Direction, Steam Generator Upper Support, Wolf Creek Site	
3.7(B)-15E	0	Spectra - Containment Building SSE, East-West Direction, Steam Generator Upper Support, Callaway Site	
3.7(B)-15F	0	Spectra - Containment Building SSE, East-West Direction, Steam Generator Upper Support, Sterling Site	
3.7(B)-15G	0	Deleted	
3.7(B)-15H	0	Spectra - Containment Building SSE, East-West Direction, Steam Generator Upper Support, Wolf Creek Site	
3.7(B)-15I	0	Spectra - Containment Building SSE, Vertical Direction, Steam Generator Upper Support, Callaway Site	
3.7(B)-15J	0	Spectra - Containment Building SSE, Vertical Direction, Steam Generator Upper Support, Sterling Site	
3.7(B)-15K	0	Deleted	
3.7(B)-15L	0	Spectra - Containment Building SSE, Vertical Direction, Steam Generator Upper Support, Wolf Creek Site	
3.7(B)-15M	0	Spectra - Containment Building OBE, North-South Direction, Steam Generator Upper Support, Callaway Site	

CHAPTER 3 - LIST OF FIGURES

*Refer to Section 1.6 and Table 1.6-3. Controlled drawings were removed from the USAR at Revision 17 and are considered incorporated by reference.

Figure #	Sheet(s)	Title	Drawing #*
3.7(B)-15N	0	Spectra - Containment Building OBE, North-South Direction, Steam Generator Upper Support, Sterling Site	
3.7(B)-15O	0	Deleted	
3.7(B)-15P	0	Spectra - Containment Building OBE, North-South Direction, Steam Generator Upper Support, Wolf Creek Site	
3.7(B)-15Q	0	Spectra - Containment Building OBE, East-West Direction, Steam Generator Upper Support, Callaway Site	
3.7(B)-15R	0	Spectra - Containment Building OBE, East-West Direction, Steam Generator Upper Support, Sterling Site	
3.7(B)-15S	0	Deleted	
3.7(B)-15T	0	Spectra - Containment Building OBE, East-West Direction, Steam Generator Upper Support, Wolf Creek Site	
3.7(B)-15U	0	Spectra - Containment Building OBE, Vertical Direction, Steam Generator Upper Support, Callaway Site	
3.7(B)-15V	0	Spectra - Containment Building OBE, Vertical Direction, Steam Generator Upper Support, Sterling Site	
3.7(B)-15W	0	Deleted	
3.7(B)-15X	0	Spectra - Containment Building OBE, Vertical Direction, Steam Generator Upper Support, Wolf Creek Site	
3.7(B)-16	0	Deleted	
3.7(B)-17	0	Lumped-Mass/Flush Model, Containment Building	
3.7(B)-18	0	Lumped-Mass/Flush Model, Fuel Building	
3.7(B)-19	0	Lumped-Mass/Flush Model, Auxiliary/Control Building	
3.7(B)-20	0	Lumped-Mass/Flush Model, Diesel Generator Building	
3.7(B)-21	0	Damping vs. Input Level for Braced Hanger Systems	
3.7(B)-22	0	Lower Bound Damping as a Function of Input ZPA	
3.7(B)A-1	0	Description of the Model	
3.7(N)-1	0	Multi-Degree-of-Freedom System	
3.7(S)-1	0	Safe Shutdown Earthquake Horizontal Ground Spectra (0.12g)	
3.7(S)-2	0	Safe Shutdown Earthquake Vertical Ground Spectra (0.12g)	

CHAPTER 3 - LIST OF FIGURES

*Refer to Section 1.6 and Table 1.6-3. Controlled drawings were removed from the USAR at Revision 17 and are considered incorporated by reference.

Figure #	Sheet(s)	Title	Drawing #*
3.7(S)-3	0	Horizontal Design Response Spectra For 0.12g Horizontal Ground Acceleration (10% damping)	
3.7(S)-4	0	Horizontal Design Response Spectra For 0.12g Horizontal Ground Acceleration (7% damping)	
3.7(S)-5	0	Horizontal Design Response Spectra For 0.12g Horizontal Ground Acceleration (5% damping)	
3.7(S)-6	0	Vertical Design Response Spectra For 0.12g Horizontal Ground Acceleration (10% damping)	
3.7(S)-7	0	Vertical Design Response Spectra For 0.12g Horizontal Ground Acceleration (7% damping)	
3.7(S)-8	0	Vertical Design Response Spectra For 0.12g Horizontal Ground Acceleration (5% damping)	
3.7(S)-9	0	Typical Free Field Base Elevation Spectra ESWS Pumphouse	
3.7(S)-10	0	Free Field Media Typical Subsurface Profile and Soil Properties SSE and OBE	
3.7(S)-11	0	Mathematical Model for ESWS Pumphouse For East- West Vertical Analysis	
3.7(S)-12A	0	Spectra-ESWS Pumphouse, SSE, North-South Direction, Top of Penthouse Roof	
3.7(S)-12B	0	Spectra-ESWS Pumphouse, SSE, East-West Direction, Top of Penthouse Roof	
3.7(S)-12C	0	Spectra-ESWS Pumphouse, SSE, Vertical Direction, Top of Penthouse Roof	
3.7(S)-12D	0	Spectra-ESWS Pumphouse, OBE, North-South Direction, Top of Penthouse Roof	
3.7(S)-12E	0	Spectra-ESWS Pumphouse, OBE, East-West Direction, Top of Penthouse Roof	
3.7(S)-12F	0	Spectra-ESWS Penthouse, OBE, Vertical Direction, Top of Penthouse Roof	
3.7(S)-13	0	Safe Shutdown Earthquake Horizontal Ground Spectra (0.15g)	
3.7(S)-14	0	Safe Shutdown Earthquake Vertical Ground Spectra (0.15g)	
3.8-1	0	Plan and Elevation of Reactor Building	
3.8-2	0	Reactor Building Ground Floor Plan - Elev. 2000'-0" and 2001'-4"	
3.8-3	0	Reactor Building Intermediate Floor Plan - Elev. 2026'-0"	
3.8-4	0	Reactor Building Operating Floor Plan - Elev. 2047'-6" and 2051'-0"	
3.8-5	0	Reactor Building Plan - Elev 2068'-0"	
3.8-6	0	Reactor Building East-West Cross Section	

CHAPTER 3 - LIST OF FIGURES

*Refer to Section 1.6 and Table 1.6-3. Controlled drawings were removed from the USAR at Revision 17 and are considered incorporated by reference.

Figure #	Sheet(s)	Title	Drawing #*
3.8-7	0	Reactor Building North-South Cross Section	
3.8-8	0	Reactor Building Base Mat Reinforcing - Bottom Layers	
3.8-9	0	Reactor Building Base Mat Reinforcing - Top Layers	
3.8-10	0	Reactor Building Base Mat Reinforcing - Cross Section	
3.8-11	0	Reactor Building Base Mat Reinforcing - Shear Tie	
3.8-12	0	Reactor Building Shell Reinforcing	
3.8-13	0	Reactor Building Dome Reinforcing - Plan	
3.8-14	0	Reactor Building Dome Reinforcing - Elevation	
3.8-15	0	Reactor Building Tendon Anchorage System	
3.8-16	0	Reactor Building Tendon and Buttress Arrangement	
3.8-17	0	Reactor Building Tendons - Sections	
3.8-18	0	Reactor Building Tendons - Additional Sections	
3.8-19	0	Reactor Building Liner Plate - Typical Wall Sections	
3.8-20	0	Reactor Building Liner Plate - Dome Stiffener Plan	
3.8-21	0	Reactor Building Liner Plate - Typical Dome Section	
3.8-22	0	Reactor Building Liner Plate - Dome Details	
3.8-23	0	Anchorage at Reactor Cavity - Plan View	
3.8-24	0	Anchorage at Reactor Cavity - Typical Section	
3.8-25	0	Typical Anchorage Through Base Mat for NSSS Equipment Supports	
3.8-26	0	Reactor Building Polar Crane Brackets	
3.8-27	0	Reactor Building Shell Typical Beam Support Brackets	
3.8-28	0	Reactor Building - Typical Pipe Support Brackets in Dome	
3.8-29	0	Reactor Building Liner Plate Leak Chase - Typical Data	
3.8-30	0	Reactor Building Buttress Details	
3.8-31	0	Reactor Building Equipment Hatch Opening	
3.8-32	0	Reactor Building Equipment Hatch Opening - Typical Section	
3.8-33	1	Reactor Building Personnel Hatch Opening - Inside Face	
3.8-33	2	Reactor Building Personnel Hatch Opening - Outside Face	
3.8-34	0	Reactor Building Main Steam and Main Feedwater Openings - Inside Face	
3.8-35	0	Reactor Building Main Steam and Main Feedwater Openings - Outside Face	

CHAPTER 3 - LIST OF FIGURES

*Refer to Section 1.6 and Table 1.6-3. Controlled drawings were removed from the USAR at Revision 17 and are considered incorporated by reference.

Figure #	Sheet(s)	Title	Drawing #*
3.8-36	0	Temperature Gradients Through Reactor Building Wall for DBA (Postulated Primary Coolant Loop Break)	
3.8-37	0	Finite Element Model for Axisymmetric Loads - Str.	
3.8-38	0	Finite Element Model for Axisymmetric Loads - Dome	
3.8-39	0	Finite Element Model for Axisymmetric Loads - Founda. Medium	
3.8-40	0	Finite Element Model for Nonaxisymmetric Loads	
3.8-41	0	Finite Element Model for Equipment Hatch - Elevation	
3.8-42	0	Finite Element Model for Equipment Hatch - Plan	
3.8-43	0	Finite Element Model for Personnel Hatch	
3.8-44	0	Reactor Building Equipment Hatch	
3.8-45	0	Reactor Building Personnel Hatch	
3.8-46	0	Reactor Building Auxiliary Access Hatch	
3.8-47	0	Reactor Building Typical Pipe Penetration	
3.8-48	0	Reactor Building Fuel Transfer Penetration	
3.8-49	0	Reactor Building Electrical Penetration	
3.8-50	0	Reactor Building Purge Line Penetrations	
3.8-51	0	Reactor Vessel Support System - Elevation	
3.8-52	0	Reactor Vessel Support System - Plan	
3.8-53	0	Steam Generator Support System - Upper Supports	
3.8-54	0	Steam Generator Support System - Lower Supports	
3.8-55	0	Steam Generator Support System - Elevation	
3.8-56	0	Reactor Coolant Pump Lateral Support Embeds	
3.8-57	0	Reactor Coolant Pump Support Details	
3.8-58	0	Reactor Cavity Plan - Elevation 1997'-6" to 2005'-7"	
3.8-59	0	Reactor Cavity Plan - Elevation 2011'-6" to 2021'-7"	
3.8-60	0	Reactor Cavity Elevations	
3.8-61	0	Reactor Cavity Neat Line	
3.8-61a	0	Reactor Cavity Neutron Shield	
3.8-62	0	Secondary Shield Walls - Elevation 2000'-0" to 2025'-0"	
3.8-63	0	Secondary Shield Walls - Elevation 2025'-0" to 2047'-0"	
3.8-64	0	Secondary Shield Walls - Sections	
3.8-65	0	Secondary Shield Walls - Additional Sections	
3.8-66	0	Pressurizer Supports	
3.8-67	0	Pressurizer Support Details	
3.8-68	0	Refueling Canal - Typical Plan	
3.8-69	0	Refueling Pool Typical Cross Section	
3.8-70	0	Reactor Building Operating Floor	

CHAPTER 3 - LIST OF FIGURES

*Refer to Section 1.6 and Table 1.6-3. Controlled drawings were removed from the USAR at Revision 17 and are considered incorporated by reference.

Figure #	Sheet(s)	Title	Drawing #*
3.8-71	0	Reactor Building Operating Floor Supports at Shell	
3.8-72	0	Reactor Building Intermediate Floor at Elevation 2026'-0"	
3.8-73	0	Reactor Building Intermediate Floor at Elevation 2068'-6"	
3.8-74	0	Simplified Head Assembly with Reactor Missile Shield	
3.8-75	0	Reactor Building Polar Crane Support System	
3.8-76	0	Deleted	
3.8-77	0	Refueling Pool Finite Element Model - Isometric	
3.8-78	0	Refueling Pool Finite Element Model - Plan Views	
3.8-79	0	Secondary Shield Wall East Side Finite Element Model - Plan Views	
3.8-80	0	Reactor Building Secondary Shield Wall Finite Element Model - Plan View	
3.8-81	0	Wall Finite Element Model - Sections A, B and C	
3.8-82	0	Reactor Building Secondary Shield Wall Finite Element Model - Section D	
3.8-83	0	Reactor Cavity Finite Element Model	
3.8-84	0	General Arrangement of Standard Plant Category I Structures	
3.8-85	0	Typical Isolation Joints Between Buildings	
3.8-86	0	Auxiliary Building Plan - Elev. 1974'-0"	
3.8-87	0	Auxiliary Building Plan - Elev. 1988'-0" and 1989'-6"	
3.8-88	0	Auxiliary Building Plan - Elev. 2000'-0"	
3.8-89	0	Auxiliary Building Plan - Elev. 2026'-0"	
3.8-90	0	Auxiliary Building Plan - Elev. 2047'-6"	
3.8-91	0	Auxiliary Building Plan - North-South Cross Section	
3.8-92	0	Auxiliary Building Plan - East-West Cross Section	
3.8-93	0	Auxiliary Building Plan - East-West Cross Section	
3.8-94	0	Fuel Building Plan - Elev. 2000'-0" (UN)	
3.8-95	0	Fuel Building Plan - Elev. 2026'-0" (UN)	
3.8-96	0	Fuel Building Plan - Elev. 2047'-6"	
3.8-97	0	Fuel Building - North-South Cross Section	
3.8-98	0	Fuel Building - East-West Cross Section	
3.8-99	0	Control Building Plan - Elev. 1974'-0" and 1984'-0"	
3.8-100	0	Control Building Plan - Elev. 2000'-0" and 2016'-0"	
3.8-101	0	Control Building Plan - Elev. 2032'-0"	
3.8-102	0	Control Building Plan - Elev. 2047'-6" and 2073'-6"	
3.8-103	1	Control Building – North – South Cross Section	
3.8-103	2	ESW Vertical Loop Chase – North – South Cross Section	
3.8-104	1	Control Building – Isometric Cross Section	
		ESW Vertical Loop Chase – Isometric Cross Section	
3.8-104	2	ESW Vertical Loop Chase – Isometric Cross Section	
3.8-105	0	Diesel-Generator Building Plan - Elev. 2000'-0"	

CHAPTER 3 - LIST OF FIGURES

*Refer to Section 1.6 and Table 1.6-3. Controlled drawings were removed from the USAR at Revision 17 and are considered incorporated by reference.

Figure #	Sheet(s)	Title	Drawing #*
3.8-106	0	Diesel-Generator Building Plan - Elev. 2024'-0" and 2032'-0"	
3.8-107	0	Diesel-Generator Building Plan - Elev. 2047'-2"	
3.8-108	0	Diesel-Generator Building - East-West Cross Section	
3.8-109	0	Diesel-Generator Building - North-South Cross Section	
3.8-110	0	Refueling Water Storage Tank and Valve House - Foundation Plan	
3.8-111	0	Refueling Water Storage Valve House Elevation	
3.8-112	0	Emergency Oil Storage Tanks and Access Vault Plan	
3.8-113	0	Emergency Oil Storage Tanks and Access Vault	
3.8-114	0	Buried Duct Banks to Emer. Fuel Oil Storage Tanks	
3.8-115	0	Buried Duct Banks to Refueling Storage Valve House	
3.8-116	0	Arrangement of Foundation - Plan	
3.8-117	0	Arrangement of Foundation - Details	
3.8-118	0	Arrangement of Foundation - Additional Details	
3.8-119	0	Auxiliary and Control Building Foundation Plan	
3.8-120	0	Auxiliary and Control Building Foundation Sections	
3.8-121	0	Fuel Building Foundation Plan	
3.8-122	0	Fuel Building Foundation Sections	
3.8-123	0	Diesel-Generator Building Foundation Plan	
3.8-124	0	Radwaste Building and Tunnel - Plan El. 1974'-0" and El. 1976'-0"	
3.8-125	0	Radwaste Building - Plan El. 2000'-0"	
3.8-126	0	Radwaste Building - Plan El. 2022'-0"	
3.8-127	0	Radwaste Building - Plan El. 2031'-6"	
3.8-128	0	Radwaste Building - Plan El. 2040'-6" and El. 2047'-0"	
3.8-129	0	Radwaste Building - Section	
3.8-130	0	Radwaste Building - Section	
3.8-131	0	Plan-ESWS Pumphouse	
3.8-132	0	E-W Section ESWS Pumphouse	
3.8-133	0	N-S Sections ESWS Pumphouse	
3.8-134	0	Plan-ESWS Pipes and Duct Banks	
3.8-135	0	Plan-ESWS Pipes and Duct Banks	
3.8-135a	0	Plan-ESWS Pipes and Duct Banks	
3.8-136	0	Section Through ESWS Pipes and Duct Banks	
3.8-137	1	Plan and Sections of Pipe Encasements	
3.8-137	2	Circ Water Line Protection Structure	
3.8-138	0	30" Diameter Pipe Penetration Details	
3.8-139	0	Duct Bank Entrance Details	
3.8-140	0	Electrical Manholes	

CHAPTER 3 - LIST OF FIGURES

*Refer to Section 1.6 and Table 1.6-3. Controlled drawings were removed from the USAR at Revision 17 and are considered incorporated by reference.

Figure #	Sheet(s)	Title	Drawing #*
3.8-141	0	Deleted	
3.8-142	0	Plan and Section Discharge Point	
3.8-143	1-5	Plan and Section ESW Access Vaults	
3.8-144	0	4" and 18" Diameter Pipe Penetration Details	
3.8-145	0	ESWS Pumphouse Tornado Missile Shield	
3.9(N)-1	1	Reactor Coolant Loop Support System Dynamic Structural Model	
3.9(N)-1	2	Reactor Coolant Piping Model for Loop 1 (Typical)	
3.9(N)-2	0	Through-Wall Thermal Gradients	
3.9(N)-3	0	Vibration Checkout Functional Test Inspection Points	
3.9(N)-4	0	Full-Length Control Rod Drive Mechanism	
3.9(N)-5	0	Full-Length Control Rod Drive Mechanism Schematic	
3.9(N)-6	0	Nominal Latch Clearance at Minimum and Maximum Temperature	
3.9(N)-7	0	Control Rod Drive Mechanism Latch Clearance Thermal Effect	
3.9(N)-8	0	Lower Core Support Assembly (Core Barrel Assembly)	
3.9(N)-9	0	Upper Core Support Structure	
3.9(N)-10	0	Plan View of Upper Core Support Structure	
3.11(B)-1	0	See EQSD-1, Attachment A "Cross Reference Table between Figures 3.11(B)-1 through 3.11(B)-49 of USAR Section 3.11(B)".	
3.11(B)-2	0	See EQSD-1, Attachment A "Cross Reference Table between Figures 3.11(B)-1 through 3.11(B)-49 of USAR Section 3.11(B)".	
3.11(B)-3	0	See EQSD-1, Attachment A "Cross Reference Table between Figures 3.11(B)-1 through 3.11(B)-49 of USAR Section 3.11(B)".	
3.11(B)-4	0	See EQSD-1, Attachment A "Cross Reference Table between Figures 3.11(B)-1 through 3.11(B)-49 of USAR Section 3.11(B)".	
3.11(B)-5	0	See EQSD-1, Attachment A "Cross Reference Table between Figures 3.11(B)-1 through 3.11(B)-49 of USAR Section 3.11(B)".	
3.11(B)-6	0	See EQSD-1, Attachment A "Cross Reference Table between Figures 3.11(B)-1 through 3.11(B)-49 of USAR Section 3.11(B)".	
3.11(B)-7	0	See EQSD-1, Attachment A "Cross Reference Table between Figures 3.11(B)-1 through 3.11(B)-49 of USAR Section 3.11(B)".	
3.11(B)-7A	0	See EQSD-1, Attachment A "Cross Reference Table between Figures 3.11(B)-1 through 3.11(B)-49 of USAR Section 3.11(B)".	
3.11(B)-8	0	See EQSD-1, Attachment A "Cross Reference Table between Figures 3.11(B)-1 through 3.11(B)-49 of USAR Section 3.11(B)".	
3.11(B)-9	0	See EQSD-1, Attachment A "Cross Reference Table between Figures 3.11(B)-1 through 3.11(B)-49 of USAR Section 3.11(B)".	
3.11(B)-9A	0	See EQSD-1, Attachment A "Cross Reference Table between Figures 3.11(B)-1 through 3.11(B)-49 of USAR Section 3.11(B)".	
3.11(B)-10	0	See EQSD-1, Attachment A "Cross Reference Table between Figures 3.11(B)-1 through 3.11(B)-49 of USAR Section 3.11(B)".	
3.11(B)-11	0	See EQSD-1, Attachment A "Cross Reference Table between Figures 3.11(B)-1 through 3.11(B)-49 of USAR Section 3.11(B)".	
3.11(B)-12	0	See EQSD-1, Attachment A "Cross Reference Table between Figures 3.11(B)-1 through 3.11(B)-49 of USAR Section 3.11(B)".	
3.11(B)-13	0	See EQSD-1, Attachment A "Cross Reference Table between Figures 3.11(B)-1 through 3.11(B)-49 of USAR Section 3.11(B)".	
3.11(B)-14	0	See EQSD-1, Attachment A "Cross Reference Table between Figures 3.11(B)-1 through 3.11(B)-49 of USAR Section 3.11(B)".	

CHAPTER 3 - LIST OF FIGURES

*Refer to Section 1.6 and Table 1.6-3. Controlled drawings were removed from the USAR at Revision 17 and are considered incorporated by reference.

Figure #	Sheet(s)	Title	Drawing #*
3.11(B)-15	0	See EQSD-1, Attachment A "Cross Reference Table between Figures 3.11(B)-1 through 3.11(B)-49 of USAR Section 3.11(B)".	
3.11(B)-16	0	See EQSD-1, Attachment A "Cross Reference Table between Figures 3.11(B)-1 through 3.11(B)-49 of USAR Section 3.11(B)".	
3.11(B)-17	0	See EQSD-1, Attachment A "Cross Reference Table between Figures 3.11(B)-1 through 3.11(B)-49 of USAR Section 3.11(B)".	
3.11(B)-18	0	See EQSD-1, Attachment A "Cross Reference Table between Figures 3.11(B)-1 through 3.11(B)-49 of USAR Section 3.11(B)".	
3.11(B)-19	0	See EQSD-1, Attachment A "Cross Reference Table between Figures 3.11(B)-1 through 3.11(B)-49 of USAR Section 3.11(B)".	
3.11(B)-20	0	See EQSD-1, Attachment A "Cross Reference Table between Figures 3.11(B)-1 through 3.11(B)-49 of USAR Section 3.11(B)".	
3.11(B)-21	0	See EQSD-1, Attachment A "Cross Reference Table between Figures 3.11(B)-1 through 3.11(B)-49 of USAR Section 3.11(B)".	
3.11(B)-22	0	See EQSD-1, Attachment A "Cross Reference Table between Figures 3.11(B)-1 through 3.11(B)-49 of USAR Section 3.11(B)".	
3.11(B)-23	0	See EQSD-1, Attachment A "Cross Reference Table between Figures 3.11(B)-1 through 3.11(B)-49 of USAR Section 3.11(B)".	
3.11(B)-24	0	See EQSD-1, Attachment A "Cross Reference Table between Figures 3.11(B)-1 through 3.11(B)-49 of USAR Section 3.11(B)".	
3.11(B)-25	0	See EQSD-1, Attachment A "Cross Reference Table between Figures 3.11(B)-1 through 3.11(B)-49 of USAR Section 3.11(B)".	
3.11(B)-26	0	See EQSD-1, Attachment A "Cross Reference Table between Figures 3.11(B)-1 through 3.11(B)-49 of USAR Section 3.11(B)".	
3.11(B)-27	0	See EQSD-1, Attachment A "Cross Reference Table between Figures 3.11(B)-1 through 3.11(B)-49 of USAR Section 3.11(B)".	
3.11(B)-28	0	See EQSD-1, Attachment A "Cross Reference Table between Figures 3.11(B)-1 through 3.11(B)-49 of USAR Section 3.11(B)".	
3.11(B)-29	0	See EQSD-1, Attachment A "Cross Reference Table between Figures 3.11(B)-1 through 3.11(B)-49 of USAR Section 3.11(B)".	
3.11(B)-30	0	See EQSD-1, Attachment A "Cross Reference Table between Figures 3.11(B)-1 through 3.11(B)-49 of USAR Section 3.11(B)".	
3.11(B)-31	0	See EQSD-1, Attachment A "Cross Reference Table between Figures 3.11(B)-1 through 3.11(B)-49 of USAR Section 3.11(B)".	
3.11(B)-32	0	See EQSD-1, Attachment A "Cross Reference Table between Figures 3.11(B)-1 through 3.11(B)-49 of USAR Section 3.11(B)".	
3.11(B)-33	0	See EQSD-1, Attachment A "Cross Reference Table between Figures 3.11(B)-1 through 3.11(B)-49 of USAR Section 3.11(B)".	
3.11(B)-34	0	See EQSD-1, Attachment A "Cross Reference Table between Figures 3.11(B)-1 through 3.11(B)-49 of USAR Section 3.11(B)".	
3.11(B)-35	0	See EQSD-1, Attachment A "Cross Reference Table between Figures 3.11(B)-1 through 3.11(B)-49 of USAR Section 3.11(B)".	
3.11(B)-36	0	See EQSD-1, Attachment A "Cross Reference Table between Figures 3.11(B)-1 through 3.11(B)-49 of USAR Section 3.11(B)".	
3.11(B)-37	0	See EQSD-1, Attachment A "Cross Reference Table between Figures 3.11(B)-1 through 3.11(B)-49 of USAR Section 3.11(B)".	

CHAPTER 3 - LIST OF FIGURES

*Refer to Section 1.6 and Table 1.6-3. Controlled drawings were removed from the USAR at Revision 17 and are considered incorporated by reference.

Figure #	Sheet(s)	Title	Drawing #*
3.11(B)-38	0	See EQSD-1, Attachment A "Cross Reference Table between Figures 3.11(B)-1 through 3.11(B)-49 of USAR Section 3.11(B)".	
3.11(B)-39	0	See EQSD-1, Attachment A "Cross Reference Table between Figures 3.11(B)-1 through 3.11(B)-49 of USAR Section 3.11(B)".	
3.11(B)-40	0	See EQSD-1, Attachment A "Cross Reference Table between Figures 3.11(B)-1 through 3.11(B)-49 of USAR Section 3.11(B)".	
3.11(B)-41	0	See EQSD-1, Attachment A "Cross Reference Table between Figures 3.11(B)-1 through 3.11(B)-49 of USAR Section 3.11(B)".	
3.11(B)-42	0	See EQSD-1, Attachment A "Cross Reference Table between Figures 3.11(B)-1 through 3.11(B)-49 of USAR Section 3.11(B)".	
3.11(B)-43	0	See EQSD-1, Attachment A "Cross Reference Table between Figures 3.11(B)-1 through 3.11(B)-49 of USAR Section 3.11(B)".	
3.11(B)-44	0	See EQSD-1, Attachment A "Cross Reference Table between Figures 3.11(B)-1 through 3.11(B)-49 of USAR Section 3.11(B)".	
3.11(B)-45	0	See EQSD-1, Attachment A "Cross Reference Table between Figures 3.11(B)-1 through 3.11(B)-49 of USAR Section 3.11(B)".	
3.11(B)-46	0	See EQSD-1, Attachment A "Cross Reference Table between Figures 3.11(B)-1 through 3.11(B)-49 of USAR Section 3.11(B)".	
3.11(B)-47	0	See EQSD-1, Attachment A "Cross Reference Table between Figures 3.11(B)-1 through 3.11(B)-49 of USAR Section 3.11(B)".	
3.11(B)-48	0	See EQSD-1, Attachment A "Cross Reference Table between Figures 3.11(B)-1 through 3.11(B)-49 of USAR Section 3.11(B)".	
3.11(B)-49	0	See EQSD-1, Attachment A "Cross Reference Table between Figures 3.11(B)-1 through 3.11(B)-49 of USAR Section 3.11(B)".	
3.12-1	0	Displacement in Otter Brook Dam Compared With Isbild Results	
3.12-2	0	Settlement Analysis by Isbild for Homogeneous Dam Due to Water Loading	
3.12-3	0	Comparison of Water Load Effects on Movement	
3.12-4	0	Soil Profile and Finite Element Representation Used for QUAD 4 Sample Problem	
3.12-5	0	Strain-Compatible Damping and Modulus Values Used in Analysis by QUAD 4	
3.12-6	0	Distribution of Maximum Shear Stresses and Accelerations	
3.12-7	0	Acceleration Spectra for Computed Surface Motion	
3.12-8	0	Comparison of Accelerated Time History Plot of the El Centro N-S Earthquake Record from RSG and as Published by California Institute of Technology	
3.12-9	0	Comparison of Response Spectra PWTS at Various Damping from RSG and as Published in Brady (1972)	
3.12-10	0	Fourier Transform Plot from RSG for a 5 Cycle/ Sec. Sine Wave Time History	
3.12-11	0	Comparison of Desired Response Spectrum and Response Spectrum of Compatible Acceleration Time History (Damping - 0.02) from RSG	

CHAPTER 3 - LIST OF FIGURES

*Refer to Section 1.6 and Table 1.6-3. Controlled drawings were removed from the USAR at Revision 17 and are considered incorporated by reference.

Figure #	Sheet(s)	Title	Drawing #*
3.12-12	0	Finite Element Mesh for Axisymetric Flow Problem for Seepage	
3.12-13	0	Critical Slope of Ultimate Heat Sink for Bishop Validation Problem	
3A-1	0	Comparison of Tensile Stress for Bolts	
3A-2	0	Factor of Safety Against Failure Under Service Level D as a Function of T-S Ratio	
3B-1	0	Auxiliary Building El. 1974 Hazards Analysis Room Locations	
3B-2	0	Plan and Elevation View of Main Steam/Main Feedwater Isolation Valve Compartment	
3B-3	0	Deleted	
3B-4	1	Nodalization Model for Main Steam/Main Feedwater Isolation Valve Compartment Pressure Analysis	
3B-4	2	Nodalization Model for Main Steam/Main Feedwater Isolation Valve Compartment Temperature Analysis	
3B-5	0	Main Steam/Main Feedwater Isolation Valve Compartment Pressure Transient	
3B-6a	0	Main Steam/Main Feedwater Isolation Valve Compartment Temperature Transient	
3B-6b	0	Main Steam/Main Feedwater Isolation Valve Compartment Temperature Transient	
3B-6c	0	Main Steam/Main Feedwater Isolation Valve Compartment Temperature Transient	
3B-6d	0	Main Steam/Main Feedwater Isolation Valve Compartment Temperature Transient	
3B-7	0	Turbine Building CWS Rupture	
3C-1	0	Comparison of Lawrance Livermore Spectrum with Wolf Creek Design Spectra	
3C-2	0	Plan View - ESWS Pumphouse	
3C-3	0	N-S Section - ESWS Pumphouse	
3C-4	0	E-W Section - ESWS Pumphouse	
3C-5	0	Comparison of Flush & Fixed Base Analysis Building Shear and Moments	
3C-6	0	Comparison of Flush & Fixed Base Analysis Pumphouse N-S Response Spectrum at El. 2000', 3% Damping	
3C-7	0	Comparison of Flush & Fixed Base Analysis Pumphouse E-W Response Spectrum at El. 2000', 3% Damping	

CHAPTER 3 - LIST OF FIGURES

*Refer to Section 1.6 and Table 1.6-3. Controlled drawings were removed from the USAR at Revision 17 and are considered incorporated by reference.

Figure #	Sheet(s)	Title	Drawing #*
3C-8	0	Comparison of Flush & Fixed Base Analysis Pumphouse Vertical Response Spectrum at El. 2000', 3% Damping	
3C-9	0	Comparison of Flush & Fixed Base Analysis Pumphouse N-S Response Spectrum at El. 2025', 3% Damping	
3C-10	0	Comparison of Flush & Fixed Base Analysis Pumphouse E-W Response Spectrum at El. 2025', 3% Damping	
3C-11	0	Comparison of Flush & Fixed Base Analysis Pumphouse Vertical Response Spectrum at El. 2025', 3% Damping	
3C-12	0	Pumphouse Shear & Moments for 0.15g SSE	
3C-13	0	Pumphouse Response Spectrum for 0.15g SSE N-S Direction at El. 2000', 3% Damping	
3C-14	0	Pumphouse Response Spectrum for 0.15g SSE E-W Direction at El. 2000', 3% Damping	
3C-15	0	Pumphouse Response Spectrum for 0.15g SSE Vertical Direction at El. 2000', 3% Damping	
3C-16	0	Pumphouse Response Spectrum for 0.15g SSE N-S Direction at El. 2025', 3% Damping	
3C-17	0	Pumphouse Response Spectrum for 0.15g SSE E-W Direction at El. 2025', 3% Damping	
3C-18	0	Pumphouse Response Spectrum for 0.15g SSE Vertical Direction at El. 2025', 3% Damping	
3C-19	0	Test Response Spectra Front to Back Horizontal Direction ESWS Control Panels EF-155 and EF-156	
3C-20	0	Comparison of Artificial Accelerogram and Design Response Spectra for Maximum Horizontal Ground Acceleration of 15% of Gravity and 5% Spectra Damping	
3C-21	0	Comparison of Artificial Accelerogram and Design Response Spectra for Maximum Vertical Ground Acceleration of 15% of Gravity and 5% Spectra Damping	

3.0 DESIGN OF STRUCTURES, COMPONENTS, EQUIPMENT, AND SYSTEMS

This chapter identifies, describes, and discusses the principal architectural and engineering design features of those structures, components, equipment, and systems which are necessary to assure:

a. The integrity of the reactor coolant pressure boundary

b. The capability to shut down the reactor and maintain it in a post-accident safe shutdown condition

c. The capability to prevent or mitigate the consequences of accidents which could result in potential offsite exposures comparable to the guideline values of 10 CFR 100.

3.1 CONFORMANCE WITH NRC GENERAL DESIGN CRITERIA

This section briefly discusses the extent to which the design criteria for safety-related plant structures, systems, and components comply with Title 10, Code of Federal Regulations, Part 50 (10 CFR 50), Appendix A, "General Design Criteria for Nuclear Power Plants" (GDC). As presented in this section, each criterion is first quoted and then discussed in enough detail to demonstrate compliance with each criterion. For some criteria, additional information may be required for a complete discussion. In such cases, detailed evaluations of compliance with the various general design criteria are incorporated in more appropriate USAR sections, but are located by reference.

3.1.1 DEFINITION OF SINGLE FAILURE

The single failure criterion is a constraint used in the design of safety systems to improve the reliability of the system to perform its safety function following a design-basis event or design occurrence.

A single failure means an occurrence which results in the loss of the capability of a component to perform its intended safety functions. Multiple failures resulting from a single occurrence are considered to be a single failure. Fluid and electrical systems are considered to be designed against an assumed single failure if neither (1) a single failure of any active component (assuming that passive components function properly) nor (2) a single failure of a passive component (assuming that active components function properly) results in a loss of the capability of the system to perform its safety functions.

Single failures are random occurrences imposed upon safety systems that are required to respond to a design basis event. They are postulated despite the fact that the systems were designed to remain functional under the adverse condition imposed by the accident. No mechanism for the cause of the single failure need be postulated. Single failures of passive components in electrical systems are assumed in designing against a single failure.

3.1.1.1 Active Component

An active component is a device characterized by an expected significant change of state or a discernible mechanical motion in response to an imposed design-basis load demand upon the system. Examples are switches, relays, powered valves, check and safety valves, pressure switches, turbines, transistors, motors, dampers, pumps, analog meters, etc. (See Sections 3.9(B).3.2 and 3.9(N).3.2 for discussions and lists of active pumps and valves).

The definition of an active component for the purpose of supporting the pump and valve operability program includes the Westinghouse nuclear steam supply system (NSSS) check valves. These check valves, although not powered components, meet the definition of having mechanical motion and are therefore included in Table 3.9(N)-11. At the same time, however, they are not considered to be active (powered) components in the Westinghouse design with respect to the Emergency Core Cooling System (ECCS) failure modes and effects analysis (FMEA) of active components or the single active failure analysis for ECCS components. Refere to Section 6.3.2.5.

3.1.1.2 Active Component Failure

An active failure is a failure of an active component to complete its intended function upon demand. Examples of active component failures include the failure of a powered valve to move to its correct position, failure of a pump, fan, or diesel generator to start, failure of a relay to respond, etc.

Certain selected valves that are provided with a power supply for proper system functioning must be prevented from unwanted movement in certain situations. Remote manual power lockout of these valves is provided to preclude unwanted valve motion due to an assumed single electrical failure. The valves are identified in their appropriate sections.

Where the proper active function of a component can be demonstrated despite any reasonable postulated condition, then that component may be considered exempt from active failure. Examples of such components may include code safety valves and check valves. Where such exemption is taken, the basis for the exemption shall be documented in the single failure analysis.

Although Westinghouse NSSS check valves are included in Table 3.9(N)-11, they are not considered to be active components in Tables 6.3-5 and 6.3-6. Refer to Section 3.9(N).3.2.1 and Section 6.3.2.5.

3.1.1.3 Passive Component

A passive component is a device characterized by an expected negligible change of state or negligible mechanical motion in response to an imposed design basis demand upon the system. Examples are cables, piping, valves in stationary position, resistors, capacitors, fluid filters, indicator lamps, cabinets, cases, etc.

3.1.1.4 Passive Component Failures

A passive component failure is the structural failure of a static component which limits the component's effectiveness in carrying out its design function. When applied to a fluid system, this means a breach of the pressure boundary is postulated, resulting in abnormal leakage. Such leakage is limited to that which results from a single sprung flange, a single pump seal failure, a single valve stem packing failure, or other single failure mechanisms considered credible by a systematic analysis of system components. The probability of a large break in a piping system (e.g., rupture of ECCS piping), subsequent to the original large LOCA pipe break, is considered to be sufficiently low that it need not be postulated.

Single failures of passive components in electrical systems are assumed in designing against a single failure.

3.1.2 ADDITIONAL SINGLE FAILURE ASSUMPTIONS

In designing for and analyzing for a DBA (i.e., loss-of-coolant accident, main steam line break, fuel handling accident, or steam generator tube rupture), the following assumptions are made, in addition to postulating the initiating event.

a. The events are assumed not to result from a tornado, hurricane, flood, fire, loss of offsite power, or earthquake.

b. Any one of the following occurs:

    1. During the short term of an accident, a single failure of any active mechanical component. The short term is defined as less than 24 hours following an accident, or

    2. During the short term of an accident, a single failure of any active or passive electrical component, or

    3. A single failure of passive components associated with long-term cooling capability, assuming that a single active failure has not occurred during the short term. Long-term cooling applies to a time duration greater than 24 hours.

c. No reactor coolant system transient is assumed, preceding the postulated reactor coolant system piping rupture.

d. No operator action is assumed to be taken by plant operators to correct problems during the first 10 minutes following the accident.

e. All offsite power is simultaneously lost and is restored within 7 days (except that for events postulated to occur during MODE 5, MODE 6, and/or during movement of irradiated fuel assemblies when the plant is in MODE 5 or MODE 6 or with the core fully offloaded, such as a fuel handling accident, a loss of all offsite power is not required to be assumed in addition to a single failure).

f. For a LOCA, for additional safety no credit is taken for the functioning of nonseismic Category I components.

In the design and analysis performed for provision of protection of safety-related equipment from hazards and events (tornadoes, floods, missiles, pipe breaks, fires, and seismic events) which could reasonably be expected, the following assumptions were made:

a. Should the event result in a turbine or reactor trip, loss of offsite power is assumed, and the plant will be placed in a hot standby condition.

b. If required by a limiting condition for operation (per Technical Specifications or if the recovery from the event will cause the plant to be shutdown for an extended period of time, the plant will be taken to a cold shutdown (CSD) condition.

c. Redundancy or diversity of systems and components is provided to enable continued operation at hot standby or to cool the reactor to a CSD condition. If required, it is assumed that temporary repairs can be made to circumvent damages resulting from the hazard. All available systems, including non-safety-related systems and those systems requiring operator action, may be employed to mitigate the consequences of the hazard.

   In determining the availability of the systems required to mitigate the consequences of a hazard and those required to place the reactor in a safe condition, the direct consequences of the hazard are considered. The feasibility of carrying out operator actions are based on ample time and adequate access to the controls, motor control center, switchgear, etc., associated with the component required to accomplish the proposed action.

d. When the postulated hazard occurs and results in damage to one of two or more redundant or diverse trains, single failures of components in other trains (and associated

supporting trains) are not assumed. The postulated hazard is precluded, by design, from affecting the opposite train or from resulting in a DBA. For the situation in which a hazard affects a safety-related component, the event and subsequent activities are governed by Technical Specification requirements in effect when that component is not functional.

e. When evaluating the effects of any earthquake, no other major hazard or event is assumed, and no seismic Category I equipment is assumed to fail as a result of the earthquake. Certain nonseismic Category I components are designed and constructed to ensure that their failure will not reduce the functioning of a safety-related component to an unacceptable safety level. This criterion meets the intent of Regulatory Guide 1.29, Position C.2. Evaluation of component failure includes drop impact forces and secondary effects, such as spray and flooding from piping failure.

3.1.3 OVERALL REQUIREMENTS

CRITERION 1 - QUALITY STANDARDS AND RECORDS

"Structures, systems, and components important to safety shall be designed, fabricated, erected, and tested to quality standards commensurate with the importance of the safety functions to be performed. Where generally recognized codes and standards are used, they shall be identified and evaluated to determine their applicability, adequacy, and sufficiency and shall be supplemented or modified as necessary to assure a quality product in keeping with the required safety function. A quality assurance program shall be established and implemented in order to provide adequate assurance that these structures, systems, and components will satisfactorily perform their safety functions. Appropriate records of the design, fabrication, erection, and testing of structures, systems, and components important to safety shall be maintained by or under the control of the nuclear power unit licensee throughout the life of the unit."

DISCUSSION

The quality assurance program of the utility, together with the quality assurance, quality engineering, and quality control programs of the major contractors and their vendors, ensure that safety-related structures, systems, and components are designed, fabricated, erected, and tested to quality standards commensurate with the safety functions to be performed. This is accomplished

through the use of recognized codes, standards, and design criteria. As necessary, additional supplemental standards, design criteria, and requirements were developed by SNUPPS and the major contractors' engineering organizations. Appropriate records associated with the engineering and design, fabrication, erection, and testing which document the compliance with recognized codes, standards, and design criteria are maintained throughout the life of the unit. Quality assurance is described in Chapter 17.0.

The principal design criteria, design bases, codes, and standards applied to the facility are described in Section 3.2. Additional detail may be found in the pertinent section of the USAR dealing with safety-related structures, systems, and components, e.g., the containment as described in Section 3.8.2.

CRITERION 2 - DESIGN BASES FOR PROTECTION AGAINST NATURAL PHENOMENA

"Structures, systems, and components important to safety shall be designed to withstand the effects of natural phenomena such as earthquakes, tornadoes, hurricanes, floods, tsunami, and seiches without the loss of the capability to perform their safety functions. The design bases for these structures, systems, and components shall reflect: (1) appropriate consideration of the most severe of the natural phenomena that have been historically reported for the site and surrounding area, with sufficient margin for the limited accuracy, quantity, and period of time in which the historical data have been accumulated, (2) appropriate combinations of the effects of normal and accident conditions with the effects of the natural phenomena, and (3) the importance of the safety functions to be performed."

DISCUSSION

The safety-related structures, systems, and components are designed either to withstand the effects of natural phenomena without loss of the capability to perform their safety functions, or to fail in a safe condition. Those structures, systems, and components vital to the shutdown capability of the reactor are designed to withstand the maximum probable natural phenomena at the site, determined from recorded data for the site vicinity, with appropriate margin to account for uncertainties in historical data. Appropriate combinations of structural loadings from normal, accident, and natural phenomena are considered in the plant design. The nature and magnitude of the natural phenomena considered in the design of this plant are discussed in Chapter 2.0. Chapter 3.0 discusses the design of the plant in relationship to

natural events. Seismic and quality group classifications, as well as other pertinent standards and information, are given in the sections discussing individual structures and components.

CRITERION 3 - FIRE PROTECTION

"Structures, systems, and components important to safety shall be designed and located to minimize, consistent with other safety requirements, the probability and effect of fires and explosions. Noncombustible and heat resistant materials shall be used wherever practical throughout the unit, particularly in locations such as the containment and control room. Fire detection and fighting systems of appropriate capacity and capability shall be provided and designed to minimize the adverse effects of fires on structures, systems, and components important to safety. Firefighting systems shall be designed to assure that their rupture or inadvertent operation does not significantly impair the safety capability of these structures, systems, and components."

DISCUSSION

The plant is designed to minimize the probability and effect of fires and explosions. Noncombustible and fire-resistant materials are used in the containment, control room, components of safety features systems, and throughout the unit whenever fire is a potential risk to safety-related systems. For example, electrical cables have a fire retardant jacketing, and fire barriers and fire stops are utilized as described in Section 9.5.1. Equipment and facilities for fire protection, including detection, alarm, and extinguishment, are provided to protect both plant equipment and personnel from fire, explosion, and the resultant release of toxic vapors.

Fire protection is provided by deluge systems (water spray), sprinklers, Halon 1301, and portable extinguishers.

Firefighting systems are designed to assure that their rupture or inadvertent operation will not prevent systems important to safety from performing their design functions.

The following codes, guides, and standards are used as guidelines in the design of the fire protection system and equipment, and, where required by law, the system and equipment conform to the applicable standards:

a. National Fire Protection Association (NFPA) "National Fire Codes"

b. American Nuclear Insurers (ANI) "Basic Fire Protection for Nuclear Power Plants," April, 1976

c. "International Guidelines for the Fire Protection of Nuclear Power Plants" - 1974

d. "Occupational Safety and Health Standards," Federal Register Part 1910, October, 1972

e. BTP-APCSB 9.5-1 "Guidelines for Fire Protection for Nuclear Power Plants," May 1, 1976.

CRITERION 4 - ENVIRONMENTAL AND MISSILE DESIGN BASES

"Structures, systems, and components important to safety shall be designed to accommodate the effects of and to be compatible with the environmental conditions associated with normal operation, maintenance, testing, and postulated accidents, including loss-of-coolant accidents. These structures, systems, and components shall be appropriately protected against dynamic effects, including the effects of missiles, pipe whipping, and discharging fluids, that may result from equipment failures and from events and conditions outside the nuclear power unit."

DISCUSSION

Safety-related structures, systems, and components are designed to accommodate the effects of and to be compatible with the environmental conditions associated with normal operation, maintenance, testing, and postulated accidents, including LOCAs. Criteria are presented in Chapter 3.0, and the environmental conditions are described in Sections 3.11(B) and 3.11(N).

These structures, systems, and components are appropriately protected against dynamic effects, including the effects of missiles, pipe whipping, and discharging fluids, that may result from equipment failures and from events and conditions outside the nuclear power unit. Details of the design, environmental testing, and construction of these systems, structures, and components are included in Chapters 3.0, 5.0, 6.0, 7.0, 9.0, and 10.0. Evaluation of the performance of the safety features is contained in Chapter 15.0.

CRITERION 5 - SHARING OF STRUCTURES, SYSTEMS, AND COMPONENTS

"Structures, systems, and components important to safety shall not be shared among nuclear power units unless it can be shown that

such sharing will not significantly impair their ability to perform their safety functions, including, in the event of an accident in one unit, an orderly shutdown and cooldown of the remaining units."

DISCUSSION

Wolf Creek Generating Station is a one unit site.

3.1.4 PROTECTION BY MULTIPLE FISSION PRODUCT BARRIERS

CRITERION 10 - REACTOR DESIGN

"The reactor core and associated coolant, control, and protection systems shall be designed with an appropriate margin to assure that specified acceptable fuel design limits are not exceeded during any condition of normal operation, including the effects of anticipated operational occurrences."

DISCUSSION

The reactor core and associated coolant, control, and protection systems are designed to the following criteria:

a. No fuel damage will occur during normal core operation and operational transients (Condition I) or any transient conditions arising from occurrences of moderate frequency (Condition II) beyond the small fraction of clad defects (1 percent) for which the plant shielding, cleanup, and radwaste systems are designed. Fuel damage, as used here, is defined as penetration of the fission product barrier (i.e., the fuel rod clad). Conditions I and II, as used here, are defined by ANSI N18.2-1973. The small number of clad defects that may occur are within the capability of the plant cleanup system and are consistent with the plant design bases.

b. The reactor can be returned to a post-accident safe shutdown state following a Condition III event with only a small fraction of the fuel rods damaged, although sufficient fuel damage might occur to preclude the immediate resumption of operation. Condition III, as used here, is defined by ANSI N18.2-1973.

c. The core will remain intact with acceptable heat transfer geometry following transients arising from occurrences of limiting faults (Condition IV). Condition IV, as used here, is defined by ANSI N18.2-1973.

The reactor trip system is designed to actuate a reactor trip whenever necessary to ensure that the fuel design limits are not exceeded. The core design, together with the process and decay heat removal systems, provide for this capability under all expected conditions of normal operation with appropriate margins for uncertainties and anticipated transient situations, including the effects of the loss of reactor coolant flow, trip of the turbine generator, loss of normal feedwater, and loss of both normal and preferred power sources.

Chapter 4.0 discusses the design bases and design evaluation of core components. Details of the control and protection systems' instrumentation design and logic are discussed in Chapter 7.0. This information supports the accident analyses of Chapter 15.0 which show that the acceptable fuel design limits are not exceeded for Condition I and II occurrences.

CRITERION 11 - REACTOR INHERENT PROTECTION

"The reactor core and associated coolant systems shall be designed so that in the power operating range the net effect of the prompt inherent nuclear feedback characteristics tends to compensate for a rapid increase in reactivity."

DISCUSSION

Whenever the reactor is critical, prompt compensatory reactivity feedback is assured by the negative fuel temperature effect (Doppler effect). At full power, compensatory reactivity feedback is assured by the nonpositive operational limit on the moderator temperature coefficient of reactivity. The negative Doppler coefficient of reactivity is assured by the inherent design, using low enrichment fuel. The nonpositive moderator temperature coefficient of reactivity is assured by administratively controlling the dissolved absorber concentration or by using burnable poison.

Reactivity coefficients and their effects are discussed in Chapter 4.0.

CRITERION 12 - SUPPRESSION OF REACTOR POWER OSCILLATIONS

"The reactor core and associated coolant, control, and protection systems shall be designed to assure that power oscillations which can result in conditions exceeding specified acceptable fuel design limits are not possible or can be reliably and readily detected and suppressed."

DISCUSSION

Power oscillations of the fundamental mode are inherently eliminated by negative Doppler and nonpositive moderator temperature coefficients of reactivity. Small positive moderator temperature coefficients are allowable at reactor powers <70%. The reactor coolant, control, and protection systems are designed to assure positive MTC's at partial power can be controlled within acceptable fuel design limits.

Oscillations, due to xenon spatial effects, in the radial, diametral, and azimuthal overtone modes are heavily damped due to the inherent design and due to the negative Doppler and nonpositive moderator temperature coefficients of reactivity.

Oscillations, due to xenon spatial effects, may occur in the axial first overtone mode. Assurance that fuel design limits are not exceeded by xenon axial oscillations is provided by reactor trip functions, using the measured axial power imbalance as an input.

If necessary to maintain axial imbalance within the limits of the Technical Specifications, i.e., imbalances which are alarmed to the operator and are within the imbalance trip setpoints, the operator can suppress xenon axial oscillations by control rod motions and/or temporary power reductions.

Oscillations, due to xenon spatial effects, in axial modes higher than the first overtone are heavily damped due to the inherent design and due to the negative Doppler coefficient of reactivity.

The stability of the core against xenon-induced power oscillations and the functional requirements of instrumentation for monitoring and measuring core power distribution are discussed in Chapter 4.0. Details of the instrumentation design and logic are discussed in Chapter 7.0.

CRITERION 13 - INSTRUMENTATION AND CONTROL

"Instrumentation shall be provided to monitor variables and systems over their anticipated ranges for normal operation, for anticipated operational occurrences, and for accident conditions as appropriate to assure adequate safety, including those variables and systems that can affect the fission process, the integrity of the reactor core, the reactor coolant pressure boundary, and the containment and its associated systems. Appropriate controls shall be provided to maintain these variables and systems within prescribed operating ranges."

DISCUSSION

Instrumentation and controls are provided to monitor and control neutron flux, control rod position, fluid temperatures, pressures, flows, and levels, as necessary, to assure that adequate plant

safety can be maintained. Instrumentation is provided in the reactor coolant system, steam and power conversion system, containment, engineered safety features systems, radiological waste systems, and other auxiliaries. Parameters that must be provided for operator use under normal operating and accident conditions are indicated in the control room in proximity to the controls for maintaining the indicated parameter in the proper range.

The quantity and types of process instrumentation provided ensure safe and orderly operation of all systems over the full design range of the plant. These systems are described in Chapters 6.0, 7.0, 8.0, 9.0, 10.0, 11.0, and 12.0.

CRITERION 14 - REACTOR COOLANT PRESSURE BOUNDARY

"The reactor coolant pressure boundary shall be designed, fabricated, erected, and tested so as to have an extremely low probability of abnormal leakage, of rapidly propagating failure, and of gross rupture."

DISCUSSION

The reactor coolant pressure boundary is designed to accommodate the system pressures and temperatures attained under all expected modes of plant operation, including all anticipated transients, with stresses within applicable limits. Consideration is given to loadings under normal operating conditions and to abnormal loadings, such as pipe rupture and seismic loadings, as discussed in Chapter 3.0. The piping is protected from overpressure by means of pressure-relieving devices, as required by ASME Section III.

Reactor coolant pressure boundary materials and fabrication techniques are such that there is a low probability of gross rupture or significant leakage.

Coolant chemistry is controlled to protect the materials of construction of the reactor coolant pressure boundary from corrosion.

The reactor coolant pressure boundary is accessible for inservice inspections to assess the structural and leaktight integrity. For the reactor vessel, a material surveillance program conforming to applicable codes is provided. Chapter 5.0 has additional details.

Instrumentation is provided to detect significant leakage from the reactor coolant pressure boundary with indication in the control room, as discussed in Chapter 5.0.

CRITERION 15 - REACTOR COOLANT SYSTEM DESIGN

"The reactor coolant system and associated auxiliary, control, and protection systems shall be designed with sufficient margin to assure that the design conditions of the reactor coolant pressure boundary are not exceeded during any condition of normal operation, including anticipated operational occurrences."

DISCUSSION

Steady-state and transient analyses are performed to ensure that reactor coolant system design conditions are not exceeded during normal operation. Protection and control setpoints are based on these analyses.

Additionally, reactor coolant pressure boundary components have a large margin of safety through application of proven materials and design codes, use of proven fabrication techniques, nondestructive shop testing, and integrated hydrostatic testing of assembled components.

The effect of radiation embrittlement is considered in reactor vessel design, and surveillance samples monitor adherence to expected conditions throughout the plant life.

Multiple safety and relief valves are provided for the reactor coolant system. These valves and their setpoints meet the ASME criteria for overpressure protection. The ASME criteria are satisfactory, based on a long history of industrial use. Chapter 5.0 discusses the reactor coolant system design.

CRITERION 16 - CONTAINMENT DESIGN

"Reactor containment and associated systems shall be provided to establish an essentially leak-tight barrier against the uncontrolled release of radioactivity to the environment and to assure that the containment design conditions important to safety are not exceeded for as long as postulated accident conditions require."

DISCUSSION

A steel-lined, prestressed, post-tensioned concrete reactor containment structure encloses the entire reactor coolant system. It is designed to sustain, without loss of required integrity, the effects of LOCAs up to and including the double-ended rupture of the largest pipe in the reactor coolant system or double-ended rupture of a steam or feedwater pipe. Engineered safety features comprising the emergency core cooling system, containment spray

system, and the containment air coolers serve to cool the reactor core and return the containment to near atmospheric pressure. The reactor containment structure and engineered safety features systems are designed to assure the required functional capability of containing any uncontrolled release of radioactivity. The concrete radiological shielding and the liner within the containment limit the uncontrolled release of radioactivity to the environment.

Refer to Chapters 3.0, 6.0, and 15.0.

CRITERION 17 - ELECTRIC POWER SYSTEMS

"An onsite electric power system and an offsite electric power system shall be provided to permit the functioning of structures, systems, and components important to safety. The safety function for each system (assuming the other system is not functioning) shall be to provide sufficient capacity and capability to assure that (1) specified acceptable fuel design limits and design conditions of the reactor coolant pressure boundary are not exceeded as a result of anticipated operational occurrences and (2) the core is cooled and containment integrity and other vital functions are maintained in the event of postulated accidents.

"The onsite electric power supplies, including the batteries, and the onsite electric distribution system shall have sufficient independence, redundancy, and testability to perform their safety functions assuming a single failure.

"Electric power from the transmission network to the onsite electric distribution system shall be supplied by two physically independent circuits (not necessarily on separate rights of way) designed and located so as to minimize to the extent practical the likelihood of their simultaneous failure under operating and postulated accident and environmental conditions. A switchyard common to both circuits is acceptable. Each of these circuits shall be designed to be available in sufficient time following a loss of all onsite alternating current power supplies and the other offsite electric power circuit, to assure that specified acceptable fuel design limits and design conditions of the reactor coolant pressure boundary are not exceeded. One of these circuits shall be designed to be available within a few seconds following a loss-of-coolant accident to assure that core cooling, containment integrity, and other vital safety functions are maintained.

"Provisions shall be included to minimize the probability of losing electric power from any of the remaining supplies as a result of, or coincident with, the loss of power generated by the

nuclear power unit, the loss of power from the transmission network, or the loss of power from the onsite electric power supplies."

DISCUSSION

An onsite electric power system and an offsite electric power system are provided to permit the functioning of safety-related structures, systems, and components. As discussed in Chapter 8.0, each Class 1E electric power system is designed with adequate independence, capacity, redundancy, and testability to ensure the functioning of engineered safety features (ESF). Independence is provided by physical separation and electrical isolation of components and cables to minimize the vulnerability of the redundant systems to any single credible event.

Two physically independent sources of power provide preferred power to the onsite power system. One preferred circuit is connected to a 13.8/4.16-kV ESF transformer which supplies power normally to its associated 4.16-kV Class 1E bus. The second preferred circuit is connected to one secondary winding of a 3-winding startup transformer which supplies power to a second 13.8/4.16-kV ESF transformer. The second ESF transformer supplies power normally to its associated 4.16-kV Class 1E bus. Each ESF transformer normally supplies power to its associated 4.16-kV Class 1E ac bus, but it can simultaneously supply power to the second 4.16-kV Class 1E bus, if required, by the closure of the circuit breaker. A failure of a single component will not prevent the safety-related systems from performing their function. Each of the preferred circuits is designed to be available in sufficient time, following a loss of all onsite power sources and the other offsite electric power circuit, to assure that specified acceptable fuel design limits and design conditions of the reactor coolant pressure boundary are not exceeded.

The onsite ac power is furnished by two diesel generators. Each diesel generator is connected to a Class 1E bus. The ESF loads are divided between the Class 1E busses in a balanced, redundant load grouping. Each diesel generator is capable of supplying sufficient power in sufficient time for the operation of the engineered safety features required for the unit during a postulated loss-of-coolant accident. During a postulated LOCA, both diesel generators start automatically. If preferred power is available to the Class 1E bus following a loss-of-coolant accident, the ESF loads will be started sequentially. However, in the event that preferred power is lost, the load sequencing system will connect the diesel generator to its associated Class 1E bus and sequentially start the ESF equipment. The associated diesel

generator is so arranged that a failure of a single component will not prevent the post-accident safe shutdown of the reactor. The onsite Class 1E dc power supply consists of four independent battery systems. Failure of a single component in this system will not impair control of the engineered safety features required to maintain the reactor in a safe condition.

CRITERION 18 - INSPECTION AND TESTING OF ELECTRIC POWER SYSTEMS

"Electric power systems important to safety shall be designed to permit appropriate periodic inspection and testing of important areas and features, such as wiring, insulation, connections, and switchboards, to assess the continuity of the systems and the condition of their components. The systems shall be designed with a capability to test periodically (1) the operability and functional performance of the components of the systems, such as onsite power sources, relays, switches, and buses, and (2) the operability of the systems as a whole and, under conditions as close to design as practical, the full operation sequence that brings the systems into operation, including operation of applicable portions of the protection system, and the transfer of power among the nuclear power unit, the offsite power system, and the onsite power system."

DISCUSSION

Class 1E electric power systems are designed as described below in order that the following aspects of the system can be periodically tested:

a. The operability and functional performance of the components of Class 1E electric power systems (diesel generators, engineered safety feature (ESF) busses, dc system)

b. The operability of these electric power systems as a whole and under conditions as close to design as practical, including the full operational sequence that actuates these systems

The switchyard circuit breakers will be inspected, maintained, and tested on a routine basis without affecting the rest of the system. Transmission lines and protective relaying on these lines will be periodically tested.

Any one of the ESF transformers and its circuit to the Class 1E busses can be taken out of service and tested periodically. Each transformer has the capacity to supply power to both group 1 and

group 2 Class 1E loads simultaneously. The 4160-V and 480-V circuit breakers and the associated equipment will be tested one at a time only while redundant equipment is operational.

The dc system is provided with detectors to indicate and alarm when there is a ground existing on any part of the system. During plant operation, normal maintenance may be performed.

Complete provisions for the testing of Class 1E electric power systems and the standby power supplies (diesel generators) are described in Chapter 8.0.

CRITERION 19 - CONTROL ROOM

"A control room shall be provided from which actions can be taken to operate the nuclear power unit safely under normal conditions and to maintain it in a safe condition under accident conditions, including loss-of-coolant accidents. Adequate radiation protection shall be provided to permit access and occupancy of the control room under accident conditions without personnel receiving radiation exposures in excess of 5 rem whole body, or its equivalent, to any part of the body, for the duration of the accident.

"Equipment at appropriate locations outside the control room shall be provided (1) with a design capability for prompt hot shutdown of the reactor, including necessary instrumentation and controls to maintain the unit in a safe condition during hot shutdown, and (2) with a potential capability for subsequent cold shutdown of the reactor through the use of suitable procedures."

DISCUSSION

A separate control room is provided from which actions can be taken to operate the nuclear power unit safely under normal conditions and to maintain in a safe manner under accident conditions, including LOCAs. Operator action outside of the control room to mitigate the consequences of an accident is permitted. The control room and its post-accident ventilation systems are designed to satisfy seismic Category I requirements, as discussed in Chapter 3.0. Adequate concrete shielding and radiation protection are provided against direct gamma radiation and inhalation doses postulated to result from a TID-14844 release of fission products inside the containment structure. The shielding and the control room standby air-conditioning system allow access to and occupancy of the control rooms under accident conditions without personnel receiving radiation exposures in excess of 5 rem whole body or its equivalent to any part of the body for the duration of the accident. Refer to Chapter 15.0. Fission product removal is provided

in the control room recirculation equipment to remove iodine and particulate matter, thereby minimizing the thyroid dose which could result from the accident. The control room habitability features are described in Chapter 6.0.

In the event that the operators are forced to abandon the control room, panel-mounted local instrumentation and controls are provided to achieve and maintain the plant in the hot shutdown condition (see Chapter 7.0). The capability for bringing the plant to a cold shutdown is also provided outside the control room through the use of local controls.

3.1.5 PROTECTION AND REACTIVITY CONTROL SYSTEMS

CRITERION 20 - PROTECTION SYSTEM FUNCTIONS

"The protection system shall be designed (1) to initiate automatically the operation of appropriate systems including the reactivity control systems, to assure that specified acceptable fuel design limits are not exceeded as a result of anticipated operational occurrences and (2) to sense accident conditions and to initiate the operation of systems and components important to safety."

DISCUSSION

A fully automatic protection system with appropriate redundant channels is provided to cope with transient events where insufficient time is available for manual corrective action. The design basis for all protection systems is in accordance with the intent of IEEE Standards 279-1971 and 379-1972. The reactor protection system automatically initiates a reactor trip when any variable monitored by the system or combination of monitored variables exceeds the normal operating range. Setpoints are designed to provide an envelope of safe operating conditions with adequate margin for uncertainties to ensure that the fuel design limits are not exceeded.

Reactor trip is initiated by removing power to the rod drive mechanisms of all the rod cluster control assemblies. This causes the rods to insert by gravity, thus rapidly reducing the reactor power. The response and adequacy of the protection system have been verified by analysis of anticipated transients.

The engineered safety features actuation system automatically initiates emergency core cooling and other safety functions by sensing accident conditions, using redundant analog channels measuring diverse variables. Manual actuation of safety features

may be performed where ample time is available for operator action. The engineered safety features actuation system automatically trips the reactor on a manual or automatic safety injection signal.

CRITERION 21 - PROTECTION SYSTEM RELIABILITY AND TESTABILITY

"The protection system shall be designed for high functional reliability and inservice testability commensurate with the safety functions to be performed. Redundancy and independence designed into the protection system shall be sufficient to assure that (1) no single failure results in the loss of the protection function and (2) removal from service of any component or channel does not result in the loss of the required minimum redundancy unless the acceptable reliability of operation of the protection system can be otherwise demonstrated. The protection system shall be designed to permit periodic testing of its functioning when the reactor is in operation, including a capability to test channels independently to determine failures and losses of redundancy that may have occurred."

DISCUSSION

The protection system is designed for high functional reliability and in-service testability. The design employs redundant logic trains and measurement and equipment diversity. The reliability of the system has been verified by analysis which is documented by Reference 1.

The protection system, including the engineered safety features test cabinet, is designed to meet Regulatory Guide 1.22 and conform to the requirements of IEEE Standards 279-1971 and 379-1972. Functions that cannot be tested with the reactor at power are tested during shutdown, as allowed by the regulatory guide and the above standards.

In cases where actuated equipment cannot be tested at power, the channels and logic associated with this equipment, up to the final actuation device, have the capability for testing at power. Such testing discloses failures or reduction in redundancy which may have occurred.

Removal from service of any single channel or component does not result in the loss of minimum required redundancy. For example, a two-of-three function is placed in the one-of-two mode when one channel is removed. (Note that distinction is made between channels and trains in this discussion. A train may be removed from service only during testing.)

Semiautomatic testers are built into each of the two logic trains of the protection system. These testers have the capability of testing the system logic very rapidly while the reactor is at power. A self-testing provision is designed into each tester.

For a detailed description of reliability and testability of the Westinghouse portion of the protection system, refer to Reference 2.

CRITERION 22 - PROTECTION SYSTEM INDEPENDENCE

"The protection system shall be designed to assure that the effects of natural phenomena, and of normal operating, maintenance, testing, and postulated accident conditions on redundant channels do not result in the loss of the protection function, or shall be demonstrated to be acceptable on some other defined basis. Design techniques, such as functional diversity or diversity in component design and principles of operation, shall be used to the extent practical to prevent loss of the protection function."

DISCUSSION

Design of the protection systems includes consideration of natural phenomena, normal maintenance, testing, and accident conditions so that the protection functions are always available.

Protection system components are designed, arranged, and qualified so that the environment accompanying any emergency situation in which the components are required to function does not result in the loss of the safety function.

Functional diversity has been designed into the system. The extent of this functional diversity has been evaluated for a wide variety of postulated accidents. Diverse protection functions will automatically terminate an accident before intolerable consequences can occur.

Sufficient redundancy and independence is designed into the protection systems to assure that no single failure or removal from service of any component or channel of a system would result in loss of the protection function. Functional diversity and consequential location diversity are designed into the system. Automatic reactor trips are based upon neutron flux measurements, reactor coolant loop temperature measurements, pressurizer pressure and level measurements, and reactor coolant pump power supply underfrequency and undervoltage measurements. Trips may also be initiated manually or by a safety injection signal. See Chapter 7.0 for details.

High quality components, conservative design and applicable quality control, inspection, calibration, and tests are utilized to guard against common-mode failure. Qualification testing is performed on the various safety systems to demonstrate functional operation at normal and postaccident conditions of temperature, humidity, pressure, and radiation for specified periods, if required. Typical protection system equipment is subjected to type tests under simulated seismic conditions, using conservatively large accelerations and applicable frequencies. The test results indicate no loss of the protection function. Refer to Sections 3.10(B), 3.10(N), 3.11(B) and 3.11(N) for further details.

CRITERION 23 - PROTECTION SYSTEM FAILURE MODES

"The protection system shall be designed to fail into a safe state or into a state demonstrated to be acceptable on some other defined basis if conditions such as disconnection of the system, loss of energy (e.g., electric power, instrument air), or postulated adverse environments (e.g., extreme heat or cold, fire, pressure, steam, water, and radiation), are experienced."

DISCUSSION

The protection system is designed with consideration of the most probable failure modes of the components under various perturbations of the environment and energy sources. Each reactor trip channel is designed on the de-energize-to-trip principle so loss of power, disconnection, open channel faults, and the majority of the internal channel short circuit faults cause the channel to go into its tripped mode.

Similarly, that portion of the engineered safety features actuation system provided for actuation of auxiliary feedwater system and containment ventilation isolation is designed to fail into a safe state, except for the final output relays. The relays are energized to actuate as are the pumps and motor-operated valves of the actuated equipment.

For a more detailed description of the protection system, refer to Chapter 7.0.

CRITERION 24 - SEPARATION OF PROTECTION AND CONTROL SYSTEMS

"The protection system shall be separated from control systems to the extent that failure of any single control system component or channel, or failure or removal from service of any single protection system component or channel which is common to the control and protection systems leaves intact a system satisfying all reliability, redundancy, and independence requirements of the

protection system. Interconnection of the protection and control systems shall be limited so as to assure that safety is not significantly impaired."

DISCUSSION

The protection system is separate and distinct from the control systems, as described in Chapter 7.0. Control systems are, in some cases, dependent on the protection system in that control signals are derived from protection system measurements, where applicable. These signals are transferred to the control system by isolation devices which are classified as protection components. The adequacy of the system isolation has been verified by testing under conditions of postulated credible faults. The failure of any single control system component or channel, or failure or removal from service of any single protection system component or channel which is common to the control and protection system, leaves intact a system which satisfies the requirements of the protection system. Distinction between channel and train is made in this discussion. The removal of a train from service is allowed only during testing of the train.

CRITERION 25 - PROTECTION SYSTEM REQUIREMENTS FOR REACTIVITY CONTROL MALFUNCTIONS

"The protection system shall be designed to assure that specified acceptable fuel design limits are not exceeded for any single malfunction of the reactivity control systems, such as accidental withdrawal (not ejection or dropout) of control rods."

DISCUSSION

The protection system is designed to limit reactivity transients so that the fuel design limits are not exceeded. Reactor shutdown by control rod insertion is completely independent of the normal control function since the trip breakers interrupt power to the rod mechanisms regardless of existing control signals. Thus, in the postulated accidental withdrawal of a control rod or control rod bank (assumed to be initiated by a control malfunction) neutron flux, temperature, pressure, level, and flow signals would be generated independently. Any of these signals (trip demands) would operate the breakers to trip the reactor.

Analyses of the effects of possible malfunctions are discussed in Chapter 15.0. These analyses show that for postulated boron dilution during refueling, startup, manual or automatic operation at power, hot standby, or cold shutdown, the operator has ample time to determine the cause of dilution, terminate the source of

dilution, and initiate reboration before the shutdown margin is lost. Either manual or automatic controls can be used to terminate dilution and initiate boration. The analyses show that acceptable fuel damage limits are not exceeded even in the event of a single malfunction of either system.

CRITERION 26 - REACTIVITY CONTROL SYSTEM REDUNDANCY AND CAPABILITY

"Two independent reactivity control systems of different design principles shall be provided. One of the systems shall use control rods, preferably including a positive means for inserting the rods, and shall be capable of reliably controlling reactivity changes to assure that under conditions of normal operation, including anticipated operational occurrences, and with appropriate margin for malfunctions such as stuck rods, specified acceptable fuel design limits are not exceeded. The second reactivity control system shall be capable of reliably controlling the rate of reactivity changes resulting from planned, normal power changes (including xenon burnout) to assure that the acceptable fuel design limits are not exceeded. One of the systems shall be capable of holding the reactor core subcritical under cold conditions."

DISCUSSION

Two reactivity control systems are provided. These are rod cluster control assemblies (RCCAs) and chemical shim (boric acid). The RCCAs are inserted into the core by the force of gravity.

During operation, the shutdown rod banks are fully withdrawn. The control rod system automatically maintains a programmed average reactor temperature compensating for reactivity effects associated with scheduled and transient load changes. The shutdown rod banks, along with the control banks, are designed to shut down the reactor with adequate margin under conditions of normal operation and anticipated operational occurrences, thereby ensuring that specified fuel design limits are not exceeded. The most restrictive period in the core life is assumed in all analyses, and the most reactive rod cluster is assumed to be in the fully withdrawn position.

The boron system will maintain the reactor in the cold shutdown state independent of the position of the control rods and can compensate for xenon burnout transients.

Details of the construction of the RCCAs are presented in Chapter 4.0, and the operation is discussed in Chapter 7.0. The means of controlling the boric acid concentration is described in Chapter 9.0. Performance analyses under accident conditions are included in Chapter 15.0.

CRITERION 27 - COMBINED REACTIVITY CONTROL SYSTEMS CAPABILITY

"The reactivity control systems shall be designed to have a combined capability, in conjunction with poison addition by the emergency core cooling system, of reliably controlling reactivity changes to assure that under postulated accident conditions and with appropriate margin for stuck rods the capability to cool the core is maintained."

DISCUSSION

The facility is provided with means of making and holding the core subcritical under any anticipated conditions and with appropriate margin for contingencies. These means are discussed in detail in Chapters 4.0 and 9.0. Combined use of the rod cluster control system and the chemical shim control system permits the necessary shutdown margin to be maintained during long-term xenon decay and plant cooldown. The single highest worth control cluster is assumed to be stuck full out upon trip for this determination.

CRITERION 28 - REACTIVITY LIMITS

"The reactivity control system shall be designed with appropriate limits on the potential amount and rate of reactivity increase to assure that the effects of postulated reactivity accidents can neither (1) result in damage to the reactor coolant pressure boundary greater than limited local yielding nor (2) sufficiently disturb the core, its support structures or other reactor pressure vessel internals to impair significantly the capability to cool the core. These postulated reactivity accidents shall include consideration of rod ejection (unless prevented by positive means), rod dropout, steam line rupture, changes in reactor coolant temperature and pressure, and cold water addition."

DISCUSSION

The maximum reactivity worth of the control rods and the maximum rates of reactivity insertion employing control rods and boron removal are limited to values that prevent any reactivity increase from rupturing the reactor coolant system boundary or disrupting the core or vessel internals to a degree that could impair the effectiveness of emergency core cooling.

The appropriate reactivity insertion rate for the withdrawal of RCCAs and the dilution of the boric acid in the reactor coolant systems are specified in the Technical Specifications for the facility. The COLR includes appropriate graphs that show the permissible withdrawal limits and overlap of the RCCA banks as

a function of power. These data on reactivity insertion rates, dilution, and withdrawal limits are also discussed in Chapter 4.0. The capability of the chemical and volume control system to avoid an inadvertent excessive rate of boron dilution is discussed in Chapter 9.0. The relationship of the reactivity insertion rates to plant safety is discussed in Chapter 15.0.

Core cooling capability following accidents, such as rod ejection, steam line break, etc., is assured by keeping the reactor coolant pressure boundary stresses within faulted condition limits, as specified by applicable ASME codes. Structural deformations are also checked and limited to values that do not jeopardize the operation of needed safety features.

CRITERION 29 - PROTECTION AGAINST ANTICIPATED OPERATIONAL OCCURRENCES

"The protection and reactivity control systems shall be designed to assure an extremely high probability of accomplishing their safety functions in the event of anticipated operational occurrences."

DISCUSSION

The protection and reactivity control systems have an extremely high probability of performing their required safety functions in any anticipated operational occurrences. Diversity and redundancy, coupled with a rigorous quality assurance program and analyses, support this probability as does operating experience in plants using the same basic design. Failure modes of system components are designed to be safe modes. Loss of power to the protection system results in a reactor trip. Details of system design are covered in Chapters 4.0 and 7.0.

3.1.6 FLUID SYSTEMS

CRITERION 30 - QUALITY OF REACTOR COOLANT PRESSURE BOUNDARY

"Components which are part of the reactor coolant pressure boundary shall be designed, fabricated, erected, and tested to the highest quality standards practical. Means shall be provided for detecting and, to the extent practical, identifying the location of the source of reactor coolant leakage."

DISCUSSION

All reactor coolant system components are designed, fabricated, inspected, and tested in conformance with the ASME Boiler and Pressure Vessel Code, Section III.

All components are classified according to ANSI-N18.2-1973 and are accorded all the quality measures appropriate to this classification except for the deviation described in section 3.2.3. The design bases and evaluations of the reactor coolant system are discussed in Chapter 5.0.

A number of methods are available for detecting reactor coolant leakage. The reactor vessel closure joint is provided with a temperature monitored leakoff between double gaskets. Leakage inside the reactor containment is drained to the reactor building sump where the level is monitored. Leakage is also detected by measuring the airborne activity and humidity of the containment. Monitoring the inventory of reactor coolant in the system at the pressurizer, volume control tank, and coolant drain collection tank provides an accurate indication of integrated leakage. Refer to Chapter 5.0 for complete description of the reactor coolant pressure boundary leakage detection system.

CRITERION 31 - FRACTURE PREVENTION OF REACTOR COOLANT PRESSURE BOUNDARY

"The reactor coolant pressure boundary shall be designed with sufficient margin to assure that when stressed under operating, maintenance, testing, and postulated accident conditions (1) the boundary behaves in a nonbrittle manner and (2) the probability of rapidly propagating fracture is minimized. The design shall reflect consideration of service temperatures and other conditions of the boundary material under operating, maintenance, testing, and postulated accident conditions and the uncertainties in determining (1) material properties, (2) the effects of irradiation on material properties, (3) residual, steady state, and transient stresses, and (4) size of flaws."

DISCUSSION

Close control is maintained over material selection and fabrication for the reactor coolant system to assure that the boundary behaves in a nonbrittle manner. The reactor coolant system materials which are exposed to the coolant are corrosion-resistant stainless steel or Inconel. The reference temperature (RT_{NDT}) of the reactor vessel structural steel is established by Charpy V-notch and drop weight tests in accordance with 10 CFR 50, Appendix G, "Fracture Toughness Requirements."

The reactor vessel specification imposes the following requirements which are not specified by the ASME code:

a. The performance of a 100-percent volumetric ultrasonic test of reactor vessel plate for shear wave and a post-hydrotest ultrasonic map of all welds in the pressure

vessel are required. Cladding bond ultrasonic inspection to more restrictive requirements than those specified in the code is also required to preclude interpretation problems during inservice inspection.

b. In the surveillance programs, the evaluation of the radiation damage is based on pre-irradiation testing of Charpy V-notch and tensile specimens and post-irradiation testing of Charpy V-notch, tensile, and 1/2 T compact tension specimens. These programs are directed toward evaluation of the effect of radiation on the fracture toughness of reactor vessel steels based on the reference transition temperature approach and the fracture mechanics approach, and are in accordance with ASTM E-185-79, "Standard Recommended Practice of Surveillance Tests for Nuclear Reactor Vessels," and the requirements of 10 CFR 50, Appendix H, "Reactor Vessel Material Surveillance Program Requirements."

c. Reactor vessel core region material chemistry (copper, phosphorous, and vanadium) is controlled to reduce sensitivity to embrittlement due to irradiation over the life of the plant.

The fabrication and quality control techniques used in the fabrication of the reactor coolant system are equivalent to those used for the reactor vessel. The inspections of reactor vessel, pressurizer, piping, pumps, and steam generators are governed by ASME code requirements. Refer to Chapter 5.0 for details.

Allowable pressure-temperature relationships for plant heatup and cooldown rates are calculated, using methods derived from the ASME Code, Section III, Appendix G, "Protection Against Non-ductile Failure." The approach specifies that allowed stress intensity factors for all vessel operating conditions shall not exceed the reference stress intensity factor (KIR) for the metal temperature at any time. Operating specifications include conservative margins for predicted changes in the material reference temperatures (RT_{NDT}) due to irradiation.

CRITERION 32 - <u>INSPECTION OF REACTOR COOLANT PRESSURE BOUNDARY</u>

"Components which are part of the reactor coolant pressure boundary shall be designed to permit (1) periodic inspection and testing of important areas and features to assess their structural and leaktight integrity, and (2) an appropriate material surveillance program for the reactor pressure vessel."

DISCUSSION

The design of the reactor coolant pressure boundary provides accessibility to the entire internal surfaces of the reactor vessel and most external zones of the vessel, including the nozzle to reactor coolant piping welds, the vessel shell beneath the nozzles, the top and bottom heads, and external surfaces of the reactor coolant piping, except for the area of pipe within the primary shielding concrete. The inspection capability complements the leakage detection systems in assessing the pressure boundary component's integrity. The reactor coolant pressure boundary will be periodically inspected under the provisions of the ASME Code, Section XI.

Monitoring of changes in the fracture toughness properties of the reactor vessel core region plates forging, weldments, and associated heat treated zones is performed in accordance with 10 CFR 50, Appendix H. Samples of reactor vessel plate materials are retained and cataloged in case future engineering development shows the need for further testing.

The material properties surveillance program includes not only the conventional tensile and impact tests, but also fracture mechanics specimens. The observed shifts in RT_{NDT} of the core region materials with irradiation will be used to confirm the allowable limits calculated for all operational transients.

The design of the reactor coolant pressure boundary piping provides for accessibility of all welds requiring inservice inspection under the provisions of the ASME Code, Section XI. Removable insulation is provided at all welds requiring inservice inspection. The inservice inspection program is discussed in detail in Chapter 5.2.4.

CRITERION 33 - REACTOR COOLANT MAKEUP

"A system to supply reactor coolant makeup for protection against small breaks in the reactor coolant pressure boundary shall be provided. The system safety function shall be to assure that specified acceptable fuel design limits are not exceeded as a result of reactor coolant loss due to leakage from the reactor coolant pressure boundary and rupture of small piping or other small components which are part of the boundary. The system shall be designed to assure that for onsite electric power system operation (assuming offsite power is not available) and for offsite electric power system operation (assuming onsite power is not available) the system safety function can be accomplished using the piping, pumps, and valves used to maintain coolant inventory during normal reactor operation."

DISCUSSION

The chemical and volume control system provides a means of reactor coolant makeup and adjustment of the boric acid concentration. Makeup is added automatically if the level in the volume control tank falls below a preset level. The high pressure centrifugal charging pumps provided are capable of supplying the required make-up and reactor coolant seal injection flow when power is available from either onsite or offsite electric power systems. These pumps also serve as high head safety injection pumps. Functional reliability is assured by provision of standby components assuring a safe response to probable modes of failure. Details of system design, including descriptions of the effects of small piping and component ruptures, are provided in Sections 6.3 and 9.3 and Chapter 15.0, with details of the electric power system included in Chapter 8.0.

CRITERION 34 - RESIDUAL HEAT REMOVAL

"A system to remove residual heat shall be provided. The system safety function shall be to transfer fission product decay heat and other residual heat from the reactor core at a rate such that specified acceptable fuel design limits and the design conditions of the reactor coolant pressure boundary are not exceeded.

"Suitable redundancy in components and features, and suitable interconnections, leak detection, and isolation capabilities shall be provided to assure that for onsite electric power system operation (assuming offsite power is not available) and for offsite electric power system operation (assuming onsite power is not available) the system safety function can be accomplished, assuming a single failure."

DISCUSSION

The residual heat removal system, in conjunction with the steam and power conversion system, is designed to transfer the fission product decay heat and other residual heat from the reactor core at a rate which keeps the fuel within acceptable limits. The residual heat removal system functions when temperature and pressure are below approximately 350°F and 425 psig, respectively.

The design of the RHRS includes two motor-operated isolation valves that are closed during normal operations. They are provided with both a “prevent-open” interlock and “RHRS-Iso-Valve-Open” alarm which are designed to prevent possible exposure of the RHRS to normal RCS operating pressure.

The isolation valves are opened for residual heat removal during a plant cooldown after the RCS temperature is reduced to approximately 350°F and RCS pressure is less than approximately 360 psig. During a plant startup, the inlet isolation valves are shut after drawing a bubble in the pressurizer and prior to increasing RCS pressure above approximately 425 psig (alarm setpoint).

Redundancy of the residual heat removal system is provided by two residual heat removal pumps (located in separate flood-proof compartments, with means available for draining and monitoring leakage), two heat exchangers, and associated piping, cabling, and

electric power sources. For a more detailed description of residual heat removal system redundancy, refer to Section 5.4.7. The residual heat removal system is able to operate on either the onsite or offsite electrical power system.

Heat removal at temperatures above approximately 350°F is provided by the four steam generators, four atmospheric relief valves, and the auxiliary feedwater system.

Details of the Residual Heat Removal system design are provided in Section 5.4.7. Refer to sections 7.3.6 and 10.4.9 for discussion of the auxiliary feedwater system.

CRITERION 35 - EMERGENCY CORE COOLING

"A system to provide abundant emergency core cooling shall be provided. The system safety function shall be to transfer heat from the reactor core following any loss of reactor coolant at a rate such that (1) fuel and clad damage that could interfere with continued effective core cooling is prevented and (2) clad metal-water reaction is limited to negligible amounts.

"Suitable redundancy in components and features, and suitable interconnections, leak detection, isolation, and containment capabilities shall be provided to assure that for onsite electric power system operation (assuming offsite power is not available) and for offsite electric power system operation (assuming onsite power is not available) the system safety function can be accomplished, assuming a single failure."

DISCUSSION

An emergency core cooling system has the capability to mitigate the effects of any LOCA within the design bases. Cooling water is provided in an emergency to transfer heat from the core at a rate sufficient to maintain the core in a coolable geometry and to assure that clad metal-water reaction is limited to less than 1 percent. Design provisions assure performance of the required safety functions even with a single failure.

Emergency core cooling is provided even if there should be a failure of any component in the system. A passive system of four accumulators which do not require any external signals or source of power to operate provide the short-term cooling requirements for large reactor coolant pipe breaks. Two independent and redundant high pressure flow and pumping systems, each capable of the required emergency cooling, are provided for small break protection and to keep the core submerged after the accumulators have

discharged following a large break. These systems are arranged so that the single failure of any active component does not interfere with meeting the short-term cooling requirements.

The primary function of the ECCS is to deliver borated cooling water to the reactor core in the event of a LOCA. This limits the fuel-clad temperature, ensures that the core will remain intact and in place, with its essential heat transfer geometry preserved, and prevents a return to criticality. This protection is afforded for:

a. All pipe break sizes up to and including the hypothetical circumferential rupture of the largest pipe of a reactor coolant loop

b. A loss-of-coolant associated with a rod ejection accident

The ECCS is described in Chapter 6.0. The LOCA including an evaluation of consequences, is discussed in Chapter 15.0.

CRITERION 36 - INSPECTION OF EMERGENCY CORE COOLING SYSTEM

"The emergency core cooling system shall be designed to permit appropriate periodic inspection of important components, such as spray rings in the reactor pressure vessel, water injection nozzles, and piping, to assure the integrity and capability of the system."

DISCUSSION

The ECCS is accessible for visual inspection and for non-destructive inservice inspection, as required by the ASME Code, Section XI.

Components outside the containment are accessible for leaktightness inspection during operation of the reactor.

Details of the inspection program for the emergency core cooling system are discussed in Section 6.3.

CRITERION 37 - TESTING OF EMERGENCY CORE COOLING SYSTEM

"The emergency core cooling system shall be designed to permit appropriate periodic pressure and functional testing to assure (1) the structural and leaktight integrity of its components, (2) the operability and performance of the active components of the system, and (3) the operability of the system as a whole and, under conditions as close to design as practical, the performance of the full operational sequence that brings the system into operation,

including operation of applicable portions of the protection system, the transfer between normal and emergency power sources, and the operation of the associated cooling water system."

DISCUSSION

The design of the ECCS permits periodic testing of both active and passive components of the ECCS.

Preoperational performance tests of the ECCS components are performed by the manufacturer. Initial system hydrostatic and functional flow tests demonstrate structural and leaktight integrity of components and proper functioning of the system. Thereafter, periodic tests demonstrate that components are functioning properly.

Each active component of the ECCS may be individually operated on the normal power source or transferred to standby power sources at any time during normal plant operation to demonstrate operability. The centrifugal charging/safety injection pumps are not normally operating but, as part of the charging system, they are available for operation as necessary during plant operation. The test of the safety injection pumps employs the minimum flow recirculation test line which connects back to the refueling water storage tank. Remote-operated valves are exercised and actuation circuits tested. The automatic actuation circuitry, valves, and pump breakers may be checked during integrated system tests performed during a planned cooldown of the reactor coolant system.

Design provisions include special instrumentation, testing, and sampling lines to perform certain tests during plant shutdown to help demonstrate proper automatic operation of the ECCS. Several subsystems/components of the ECCS can also be tested during normal plant operation. (Refer to Section 7.1.2.5 & Table 7.1-3 for a discussion of Regualtory Guide 1.22). A test signal is applied to initiate automatic action and verification is made that the safety injection pumps attain required discharge heads. The test demonstrates the operation of the valves, pump circuit breakers, and automatic circuitry. In addition, the periodic testing of the pumps and valves verify the delivery capability of the ECCS.

The design provided the capability to test initially, to the extent practical, the full operational sequence up to the design conditions, including transfer to alternate power sources for the ECCS to demonstrate the state of readiness and capability of the system. This functional test was performed with the water level below the reactor pressure vessel flange with the reactor coolant system initially cold and depressurized.

The ECCS valving is set to initially simulate the system alignment for plant power operation.

Details of the ECCS are found in Chapter 6.0. Performance under accident conditions is evaluated in Chapter 15.0. Surveillance requirements are identified in the Technical Specifications.

CRITERION 38 - CONTAINMENT HEAT REMOVAL

"A system to remove heat from the reactor containment shall be provided. The system safety function shall be to reduce rapidly, consistent with the functioning of other associated systems, the containment pressure and temperature following any loss-of-coolant accident and maintain them at acceptably low levels.

"Suitable redundancy in components and features, and suitable interconnections, leak detection, isolation, and containment capabilities shall be provided to assure that for onsite electric power system operation (assuming offsite power is not available) and for offsite electric power system operation (assuming onsite power is not available) the system safety function can be accomplished, assuming a single failure."

DISCUSSION

The containment spray and containment fan cooler systems, in conjunction with the residual heat removal system, are capable of removing sufficient energy and subsequent decay energy from the containment following the hypothesized LOCA to maintain the containment pressure below the containment design pressure. During the post-accident injection phase, water for the containment spray system and residual heat removal system is drawn from the refueling water storage tank. During the later recirculation phase, spray water and reflood water are pumped from the containment sump.

Each of these systems consists of two independent subsystems supplied from separate 1E power busses. No single failure, including loss of onsite or offsite electrical power, can cause loss of more than half of the installed 200-percent cooling capacity. The containment spray system and containment fan coolers are discussed in Chapter 6.0. Electrical facilities are described in Chapter 8.0. A containment pressure and temperature analysis following a LOCA is given in Chapter 6.0 with additional results found in Chapter 15.0.

CRITERION 39 - INSPECTION OF CONTAINMENT HEAT REMOVAL SYSTEM

"The containment heat removal system shall be designed to permit appropriate periodic inspection of important components, such as the torus, sumps, spray nozzles, and piping to assure the integrity and capability of the system."

DISCUSSION

The essential equipment of the containment spray system is outside the containment, except for risers, distribution header piping, spray nozzles, and the containment sump. The containment sump, spray piping, and nozzles can be inspected during shutdown. Portions of the containment spray suction piping and the RHR suction piping from the containment recirculation sumps are embedded in concrete and are not accessible for inspection. A portion of the piping from the refueling water storage tank is buried in the ground and not accessible for inspection. Associated equipment outside the containment can be visually inspected.

The containment air coolers and associated cooling water system piping inside the containment can be inspected during shutdowns.

These periodic inspections assure that the capability of these heat removal systems as specified in the Technical Specification is met.

For details on the containment air coolers and containment spray system, see Chapter 6.0.

CRITERION 40 - TESTING OF CONTAINMENT HEAT REMOVAL SYSTEM

"The containment heat removal system shall be designed to permit appropriate periodic pressure and functional testing to assure (1) the structural and leaktight integrity of its components, (2) the operability and performance of the active components of the system, and (3) the operability of the system as a whole, and under conditions as close to the design as practical the performance of the full operational sequence that brings the system into operation, including operation of applicable portions of the protection system, the transfer between normal and emergency power sources, and the operation of the associated cooling water system."

DISCUSSION

The containment spray system and the containment fan cooling system are designed to permit periodic testing to assure the

structural and leaktight integrity of their components and to assure the operability and performance of the active components of the systems. All active components of the containment spray system and delivery piping up to the last powered valve before the spray nozzle have the capability to be tested during reactor power operation. In addition, when the unit is shutdown, smoke or air can be blown through the test connections for visual verification of the flow path. All safety-related active components of the containment fan cooling system can be tested to verify operability during reactor power operation. In addition, since the containment fan cooling system is a normally operating system, the performance and operability of portions of the system are continuously verified during normal reactor power operation. The facility design allows, under conditions as close to the design as practicable, the performance of a full operational sequence that brings these systems into operation. More complete discussions of the testing of these systems are in Chapters 6.0, 8.0, and the Technical Specifications.

CRITERION 41 - CONTAINMENT ATMOSPHERE CLEANUP

"Systems to control fission products, hydrogen, oxygen, and other substances which may be released into the reactor containment shall be provided as necessary to reduce, consistent with the functioning of other associated systems, the concentration and quantity of fission products released to the environment following postulated accidents, and to control the concentration of hydrogen or oxygen and other substances in the containment atmosphere following postulated accidents to assure that containment integrity is maintained.

"Each system shall have suitable redundancy in components and features, and suitable interconnections, leak detection, isolation, and containment capabilities to assure that for onsite electric power system operation (assuming offsite power is not available) and for offsite electric power system operation (assuming onsite power is not available) its safety function can be accomplished, assuming a single failure."

DISCUSSION

The containment spray system serves to remove radioiodine and other airborne particulate fission products from the containment atmosphere following a LOCA. The system consists of two independent systems, each supplied from separate electrical power busses, as described in Chapter 8.0. Either subsystem alone can provide the fission product removal capacity for which credit is taken in Chapter 15.0, in compliance with Regulatory Guide 1.4. (See Section 3A for discussion of RG 1.4)

The generation of hydrogen in the containment under post-accident conditions has been evaluated, using the assumptions of Regulatory Guide 1.7 (see Chapter 6.0). A post-accident hydrogen recombiner system is provided with redundancy of vital components so that a single failure does not prevent timely operation of the system. This system is described in Section 6.2.5. A hydrogen purge system is provided as a backup. No single failure causes both subsystems to fail to operate.

CRITERION 42 - INSPECTION OF CONTAINMENT ATMOSPHERE CLEANUP SYSTEMS

"The containment atmosphere cleanup systems shall be designed to permit appropriate periodic inspection of important components, such as filter frames, ducts, and piping to assure the integrity and capability of the systems."

DISCUSSION

The containment atmosphere cleanup systems are designed and located so that they can be inspected periodically, as required. The essential equipment of the containment spray system is outside the containment, except for risers, distribution header piping, and spray nozzles in the containment. The hydrogen purge and monitoring components of the hydrogen control system are located outside the containment. The equipment outside the containment may be inspected during normal power operation. Components of the containment spray system and the hydrogen control system located inside the containment can be inspected during refueling shutdowns. See Chapter 6.0 for details on the containment spray system and details of the hydrogen control system.

CRITERION 43 - TESTING OF CONTAINMENT ATMOSPHERE CLEANUP SYSTEMS

"The containment atmosphere cleanup systems shall be designed to permit appropriate periodic pressure and functional testing to assure (1) the structural and leaktight integrity of its components, (2) the operability and performance of the active components of the systems such as fans, filters, dampers, pumps, and valves and (3) the operability of the systems as a whole and, under conditions as close to design as practical, the performance of the full operational sequence that brings the systems into operation, including operation of applicable portions of the protection system, the transfer between normal and emergency power sources, and the operation of associated systems."

DISCUSSION

The containment spray system which serves as the containment atmosphere cleanup system can be tested. The operation of the spray pumps can be tested by recirculation to the refueling water storage tank through a test line. The system valves can be operated through their full travel. The system is checked for leaktightness during testing. See Sections 6.2.2 and 6.5.2 for details and Chapter 8.0 for electrical power details. The spray headers and nozzles can be smoke or air tested, as described in the response to Criterion 40.

CRITERION 44 - COOLING WATER

"A system to transfer heat from structures, systems, and components important to safety, to an ultimate heat sink shall be provided. The system safety function shall be to transfer the combined heat load of these structures, systems, and components under normal operating and accident conditions.

"Suitable redundancy in components and features, and suitable interconnections, leak detection, and isolation capabilities shall be provided to assure that for onsite electric power system operation (assuming offsite power is not available) and for offsite electric power system operation (assuming onsite power is not available) the system safety function can be accomplished, assuming a single failure."

DISCUSSION

The component cooling and essential service water systems are provided to transfer heat from plant safety-related components to the ultimate heat sink. These systems are designed to transfer their respective heat loads under all anticipated normal and accident conditions. Suitable redundancy, leak detection, systems interconnection, and isolation capabilities are incorporated in the design of these systems to assure the required safety function, assuming a single failure with either onsite or offsite power.

Complete descriptions of the essential service water system and the component cooling water system are given in Chapter 9.0.

CRITERION 45 - INSPECTION OF COOLING WATER SYSTEM

"The cooling water system shall be designed to permit appropriate periodic inspection of important components, such as heat exchangers and piping, to assure the integrity and capability of the system."

DISCUSSION

The integrity and capability of the component cooling water system and portions of the essential service water system are monitored during normal operation by alternating operation of the systems between the redundant system components. Normally, inactive portions of the essential service water system are periodically tested.

The important components are located in accessible areas with the exception of any underground piping for the essential service water system. These components have suitable manholes, handholes, inspection ports, or other appropriate design and layout features to allow periodic inspection. The integrity of any underground piping will be demonstrated by pressure and functional tests. Piping to and from the containment air coolers is accessible for inspection during reactor shutdown and refueling periods. These systems are discussed in Chapter 9.0.

CRITERION 46 - TESTING OF COOLING WATER SYSTEM

"The cooling water system shall be designed to permit appropriate periodic pressure and functional testing to assure (1) the structural and leaktight integrity of its components, (2) the operability and the performance of the active components of the system, and (3) the operability of the system as a whole and, under conditions as close to design as practical, the performance of the full operational sequence that brings the system into operation for reactor shutdown and for loss-of-coolant accidents, including operation of applicable portions of the protection system and the transfer between normal and emergency power sources."

DISCUSSION

The component cooling system operates continuously during normal plant operation and shutdown, under flow and pressure conditions that approximate the accident conditions. The essential service water system distribution piping utilizes the service water system cooling flow, during normal plant operation, at flows and pressures approximating accident conditions. Provisions are incorporated in the design to allow for periodic starting of the essential service water pumps and verification of the required flowpath at pressure conditions approximating the accident conditions. These operations demonstrate the operability, performance, and structural and leaktight integrity of all cooling water system components.

The cooling water system is designed to include the capability for testing through the full operational sequence that brings the system into operation for reactor shutdown and for LOCAs, including operation of applicable portions of the protection system and the transfer between normal and emergency power sources.

For a detailed description of the cooling water system, refer to Section 9.2.

3.1.7 REACTOR CONTAINMENT

CRITERION 50 - CONTAINMENT DESIGN BASIS

"The reactor containment structure, including access openings, penetrations, and the containment heat removal system shall be designed so that the containment structure and its internal compartments can accommodate, without exceeding the design leakage rate and with sufficient margin, the calculated pressure and temperature conditions resulting from any loss-of-coolant accident. This margin shall reflect consideration of (1) the effects of potential energy sources which have not been included in the determination of the peak conditions, such as energy in steam generators and as required by Section 50.44 energy from metal-water and other chemical reactions that may result from degradation but not total failure of emergency core cooling functioning, (2) the limited experience and experimental data available for defining accident phenomena and containment responses, and (3) the conservatism of the calculational model and input parameters."

DISCUSSION

The design of the containment structure is based on the containment design basis accidents which include the rupture of a reactor coolant pipe in the reactor coolant system or the rupture of a main steam line. In either case, the pipe rupture is assumed to be coupled with partial loss of the redundant safety features systems minimum safety features. The maximum pressure and temperature reached for a containment design basis accident are presented in Chapter 6.0. Containment design pressure of 60 psig and the design saturation temperature of 320°F provide ample margin to the design basis limits.

See Chapters 3.0 and 6.0 for details.

CRITERION 51 - FRACTURE PREVENTION OF CONTAINMENT PRESSURE BOUNDARY

"The reactor containment boundary shall be designed with sufficient margin to assure that under operating, maintenance, testing, and postulated accident conditions (1) its ferritic materials

behave in a nonbrittle manner and (2) the probability of rapidly propagating fracture is minimized. The design shall reflect consideration of service temperatures and other conditions of the containment boundary material during operation, maintenance, testing, and postulated accident conditions, and the uncertainties in determining (1) material properties, (2) residual, steady-state, and transient stresses, and (3) size of flaws."

DISCUSSION

The containment liner plate is a fully silicon kilned, fine-grain practice, normalized plate 1/4-inch thick.

Principal load-carrying components of ferritic materials exposed to the external environment are selected so that their temperatures under normal operating and testing conditions are not less than 30°F above nil ductility transition temperature.

Refer to Section 3.8.1 for details.

CRITERION 52 - CAPABILITY FOR CONTAINMENT LEAKAGE RATE TESTING

"The reactor containment and other equipment which may be subjected to containment test conditions shall be designed so that periodic integrated leakage rate testing can be conducted at containment design pressure."

DISCUSSION

The containment system is designed and constructed and the necessary equipment is provided to permit periodic integrated leakage rate tests during plant lifetime, in accordance with the requirements of Appendix J of 10 CFR 50. Details concerning the conduct of periodic integrated leakage rate tests are included in Chapter 6.0.

CRITERION 53 - PROVISIONS FOR CONTAINMENT TESTING AND INSPECTION

"The reactor containment shall be designed to permit (1) appropriate periodic inspection of all important areas, such as penetrations, (2) an appropriate surveillance program, and (3) periodic testing at containment design pressure of the leaktightness of penetrations which have resilient seals and expansion bellows."

DISCUSSION

Provisions exist for conducting individual leakage rate tests on containment penetrations. Penetrations are visually inspected and pressure tested for leaktightness at periodic intervals. Other

inspections are performed as required by Appendix J of 10 CFR 50 as modified by the exemption described in KMLNRC 84-192. Refer to Chapter 6.0.

CRITERION 54 - PIPING SYSTEMS PENETRATING CONTAINMENT

"Piping systems penetrating the primary reactor containment shall be provided with leak detection, isolation, and containment capabilities having redundancy, reliability, and performance capabilities which reflect the importance to safety of isolating these piping systems. Such piping systems shall be designed with a capability to test periodically the operability of the isolation valves and associated apparatus and to determine if valve leakage is within acceptable limits."

DISCUSSION

Piping systems penetrating the primary reactor containment are provided with containment isolation valves. Penetrations which must be closed for containment isolation have redundant valving and associated apparatus. Automatic isolation valves with air or motor operators, which do not restrict normal plant operation, are periodically tested to assure operability. Secondary system piping inside the containment is considered an extension of the containment boundary, as described in Section 6.2.4. The isolation valve arrangements are discussed in Chapter 6.0.

Piping that penetrates the containment has been equipped with test connections and test vents or has other provisions to allow periodic leak rate testing to ensure that leakage is within the acceptable limit as defined by the Technical Specifications and Appendix J to 10 CFR 50, as described in Chapter 6.0.

The fuel transfer tube is not classified as a fluid system penetration. The blind flange and the portion of the transfer tube inside the containment are an extension of the containment boundary. The blind flange isolates the transfer tube at all times, except when the reactor is shutdown for refueling. This assembly is a penetration in the same sense as are equipment hatches and personnel locks.

CRITERION 55 - REACTOR COOLANT PRESSURE BOUNDARY PENETRATING CONTAINMENT

"Each line that is part of the reactor coolant pressure boundary and that penetrates primary reactor containment shall be provided with containment isolation valves as follows, unless it can be

demonstrated that the containment isolation provisions for a specific class of lines, such as instrument lines, are acceptable on some other defined basis:

(1) One locked closed isolation valve inside and one locked closed isolation valve outside containment; or

(2) One automatic isolation valve inside and one locked closed isolation valve outside containment; or

(3) One locked closed isolation valve inside and one automatic isolation valve outside containment. A simple check valve may not be used as the automatic isolation valve outside containment; or

(4) One automatic isolation valve inside and one automatic isolation valve outside containment. A simple check valve may not be used as the automatic isolation valve outside containment.

"Isolation valves outside containment shall be located as close to containment as practical and upon loss of actuating power, automatic isolation valves shall be designed to take the position that provides greater safety.

"Other appropriate requirements to minimize the probability or consequences of an accidental rupture of these lines or of lines connected to them shall be provided as necessary to assure adequate safety. Determination of the appropriateness of these requirements, such as higher quality in design, fabrication and testing, additional provisions for inservice inspection, protection against more severe natural phenomena, and additional isolation valves and containment, shall include consideration of the population density, use characteristics, and physical characteristics of the site environs."

DISCUSSION

Each line that is a part of the reactor coolant pressure boundary and penetrates the containment is provided with isolation valves meeting the intent of this criterion, except that the reactor shutdown lines (RHR system) which are part of the reactor coolant pressure boundary and which penetrate the containment are provided with two isolation valves in series, both inside the containment. This system is a closed system outside the containment and is constructed to ASME Section III, Class 2, specifications and is considered the second passive barrier to fission product release, as described in Chapter 6.0. The arrangement and type of valves

utilized are discussed in Chapter 6.0. Containment penetrations are seismic Category I and are protected against possible environmental effects, including missiles.

CRITERION 56 - PRIMARY CONTAINMENT ISOLATION

"Each line that connects directly to the containment atmosphere and penetrates primary reactor containment shall be provided with containment isolation valves as follows, unless it can be demonstrated that the containment isolation provisions for a specific class of lines, such as instrument lines, are acceptable on some other defined basis:

(1) One locked closed isolation valve inside and one locked closed isolation valve outside containment; or

(2) One automatic isolation valve inside and one locked closed isolation valve outside containment; or

(3) One locked closed isolation valve inside and one automatic isolation valve outside containment. A simple check valve may not be used as the automatic isolation valve outside containment; or

(4) One automatic isolation valve inside and one automatic isolation valve outside containment. A simple check valve may not be used as the automatic isolation valve outside containment.

"Isolation valves outside containment shall be located as close to the containment as practical and upon loss of actuating power, automatic isolation valves shall be designed to take the position that provides greater safety."

DISCUSSION

Lines which communicate directly with the containment atmosphere and which penetrate the reactor containment are normally provided with two isolation valves in series, one inside and one outside the containment, in accordance with one of the above acceptable arrangements. Several penetrations use alternative arrangements which satisfy containment isolation on some other defined bases.

Special cases are described in Chapter 6.0.

Valving arrangements are combinations of locked shut isolation valves and automatic isolation valves or remote-manual isolation

valves. No simple check valves are utilized as automatic isolation valves outside the containment. Where necessary, provision for leak detection is provided for lines outside the containment.

Instrument lines satisfy other acceptable criteria, as described in Chapter 6.0.

CRITERION 57 - CLOSED SYSTEM ISOLATION VALVES

"Each line that penetrates the primary reactor containment and is neither part of the reactor coolant pressure boundary nor connected directly to the containment atmosphere shall have at least one containment isolation valve which shall be either automatic, or locked closed, or capable of remote manual operation. This valve shall be outside containment and located as close to the containment as practical. A simple check valve may not be used as the automatic isolation valve."

DISCUSSION

All containment penetrations are considered to be covered by either GDC-55 or GDC-56. There are no penetrations to which GDC-57 is considered applicable. For a more detailed discussion of containment isolation, refer to Section 6.2.4.

3.1.8 FUEL AND RADIOACTIVITY CONTROL

CRITERION 60 - CONTROL OF RELEASES OF RADIOACTIVE MATERIALS TO THE ENVIRONMENT

"The nuclear power unit design shall include means to control suitably the release of radioactive materials in gaseous and liquid effluents and to handle radioactive solid wastes produced during normal reactor operation, including anticipated operational occurrences. Sufficient holdup capacity shall be provided for retention of gaseous and liquid effluents containing radioactive materials, particularly where unfavorable site environmental conditions can be expected to impose unusual operational limitations upon the release of such effluents to the environment."

DISCUSSION

Means are provided to control the release of radioactive materials in gaseous and liquid effluents and to handle radioactive solid wastes produced during normal reactor operation, including anticipated operational occurrences. The radioactive waste management systems are designed to minimize the potential for an inadvertent release of radioactivity from the facility and to assure that the

discharge of radioactive wastes is maintained as low as practicable below regulatory limits of 10 CFR 20 during normal operation. The radioactive waste processing system, the design criteria, and the amounts of estimated releases of radioactive effluents to the environment are described in Chapter 11.0.

CRITERION 61 - FUEL STORAGE AND HANDLING AND RADIOACTIVITY CONTROL

"The fuel storage and handling, radioactive waste, and other systems which may contain radioactivity shall be designed to assure adequate safety under normal and postulated accident conditions. These systems shall be designed (1) with a capability to permit appropriate periodic inspection and testing of components important to safety, (2) with suitable shielding for radiation protection, (3) with appropriate containment, confinement, and filtering systems, (4) with a residual heat removal capability having reliability and testability that reflects the importance to safety of decay heat and other residual heat removal, and (5) to prevent significant reduction in fuel storage coolant inventory under accident conditions."

DISCUSSION

The fuel storage pool and associated cooling system, fuel handling system, and radioactive waste processing system are designed to assure adequate safety under normal and postulated accident conditions.

The fuel storage pool cooling system provides cooling to remove residual heat from the fuel stored in the spent fuel pool. The system is designed with redundancy and testability to assure continued heat removal. The fuel storage pool cooling system is described in Section 9.1.3.

The fuel storage pool is designed so that no postulated accident could cause excessive loss-of-coolant inventory. Accidents are discussed in Chapter 15.0.

Structures, components, and systems are designed and located so that appropriate periodic inspection and testing may be performed.

Adequate shielding is provided as described in Chapter 12.0. Radiation monitoring is provided as discussed in Chapters 11.0 and 12.0.

Individual components that contain significant radioactivity are in confined areas adequately ventilated through appropriate filtering systems.

CRITERION 62 - PREVENTION OF CRITICALITY IN FUEL STORAGE AND HANDLING

"Criticality in the fuel storage and handling system shall be prevented by physical systems or processes, preferably by use of geometrically safe configurations."

DISCUSSION

The restraints and interlocks provided for the safe handling and storage of new and spent fuel are discussed and illustrated in Chapter 9.0.

Criticality in new and spent fuel storage facilities is prevented both by physical separation of fuel assemblies and, in the fuel storage pool, the presence of borated water and the Boral neutron absorber panels. The center-to-center distance between the adjacent fuel assemblies is sufficient to ensure a keff <0.95, even if unborated water is used to fill the fuel storage pool. New fuel is stored with enough center-to-center distance to ensure a keff <0.98 under conditions of optimum moderation.

Layout of the fuel handling area is such that the spent fuel cask cannot traverse the spent fuel storage pool.

CRITERION 63 - MONITORING FUEL AND WASTE STORAGE

"Appropriate systems shall be provided in fuel storage and radioactive waste systems and associated handling areas (1) to detect conditions that may result in loss of residual heat removal capability and excessive radiation levels and (2) to initiate appropriate safety actions."

DISCUSSION

Instrumentation is provided to detect and alarm, in the control room, excessive temperature or low water level in the spent fuel pool. Area radiation monitors are provided in the fuel storage area for personnel protection and general surveillance.

These area monitors alarm locally and in the control room. Normally, the fuel building ventilation system removes radioactivity from the atmosphere above the fuel storage pool and discharges it by way of the plant vent. The ventilation system is continuously monitored by gaseous, particulate, and radio-iodine radiation monitors.

If radiation levels reach a predetermined point, an alarm will sound in the control room and the ventilation discharge path will automatically be transferred through filter adsorber units which provides adequate filtration before discharge from the plant vent. See Chapters 7.0, 9.0, and 12.0 for details.

CRITERION 64 - MONITORING RADIOACTIVITY RELEASES

"Means shall be provided for monitoring the reactor containment atmosphere, spaces containing components for recirculation of loss-of-coolant accident fluids, effluent discharge paths, and the plant environs for radioactivity that may be released from normal operations, including anticipated operational occurrences, and from postulated accidents."

DISCUSSION

The containment atmosphere is continually monitored during normal and transient station operations, using the containment particulate, gaseous, and radio-iodine radiation monitors. Under accident conditions, samples of the containment atmosphere provide data on existing airborne radioactive concentrations within the containment. Area radiation monitors located in the auxiliary and radwaste buildings are provided to continually monitor radiation levels in the spaces which contain components for recirculation of LOCA fluids and components for processing radioactive wastes. Radioactivity levels contained in the facility effluent and discharge paths and in the plant environs are continually monitored during normal and accident conditions by the station radiation monitoring systems. In addition to the installed detectors, periodic plant environmental surveillance is established. Measurement capability and reporting of effluents will meet the recommendations of Regulatory Guides 4.1 and 1.21. Radiation monitoring systems are discussed in Sections 11.5, 12.3.4, and Chapter 18.

3.1.9 REFERENCES

1. Gangloff, W. C. and Loftus, W. D., "An Evaluation of Solid State Logic Reactor Protection in Anticipated Transients," WCAP-7706-L(Proprietary) and WCP-7706 (Non-Proprietary), July, 1971.

2. Katz, D.N., "Solid State Logic Protection System Description," WCAP-7488-L (Proprietary), January, 1971 and WCAP-7672 (Non-Proprietary), June, 1971.

3. Westinghouse Electric Corporation Reference Safety Analysis Report, RESAR-3, Chapter 3.1.1, Pages 3.1-3 and 3.1-2 dated June 1972.

3.2 CLASSIFICATION OF STRUCTURES, COMPONENTS, AND SYSTEMS

Certain structures, components, and systems of the nuclear plant are considered to serve a safety function because they:

a. Assure the integrity of the reactor coolant pressure boundary.

b. Assure the capability to shut down the reactor and maintain it in a safe condition.

c. Assure the capability to prevent or mitigate the consequences of accidents which could result in potential offsite exposures comparable to the guideline exposures of 10 CFR 100.

d. Contain or may contain radioactive material.

The purpose of this section is to classify structures, systems, and components according to the importance of the item in order to provide reasonable assurance that the facility can be operated without undue risk to the health and safety of the public. Table 3.2-1 delineates each of the items in the plant which fall under the above-mentioned categories and the respective associated classification that the NRC, ANS, and industrial codes committees have developed. Each of the classification categories in Table 3.2-1 is addressed in the following sections.

For identification of system and subsystem boundaries, Table 3.2-1 is supplemented (i.e., referenced to applicable figures) by piping and instrument diagrams which have been marked to clearly show the limits of the seismic Category I and various quality group classifications on a system. The legend for the piping and instrument diagrams is provided in Figure 1.1-1.

Classification of power supplies, instrumentation and controls, motors, piping and valves, ductwork and dampers, and associated supports, hangers, and restraints is not delineated in Table 3.2-1 because of the extensive listing required. Their classification, however, is consistent with the boundaries shown on the piping and instrumentation drawings. A listing of the piping and instrumentation drawings and their associated USAR figures is found in Table 1.7-2.

3.2.1 SEISMIC CLASSIFICATION

Seismic classification criteria are set forth in 10 CFR 100 and supplemented by Regulatory Guide 1.29. Clarifications and specific exceptions to Regulatory Guide 1.29 are discussed in Table 3.2-3.

All components classified as Safety Class 1, 2, or 3 (classifications are as defined by Reference 1), are seismic Category I.

Seismic Category I structures, components, and systems are designed to withstand the safe shutdown earthquake (SSE), as discussed in Sections 3.7(B) and 3.7(N), and other applicable load combinations, as discussed in Sections 3.8.1 through 3.8.5. Seismic Category I structures are sufficiently isolated or protected from the other structures to ensure that their integrity is maintained.

Radwaste systems and structures are designated as nonseismic Category I. In accordance with Regulatory Guide 1.143, a simplified seismic analysis is performed for portions of the gaseous radwaste system (which by design are intended to store and delay the release of gaseous radioactive waste), including isolation valves, equipment, interconnecting piping, and components located between the upstream and downstream valves used to isolate these components from the rest of the system. In addition, a simplified seismic analysis is performed for structures housing radioactive waste management systems in accordance with Regulatory Guide 1.143. In addition a simplified seismic analysis is performed for structures housing radioactive waste management systems in accordance with Regulatory Guide 1.143, except for the Mixed Waste Storage Facility located in the Owens Corning Building. Mixed waste is stored in barrels which are precluded from tipping over during a seismic event. Also, the total curie content of this building is limited below the limits of 10CFR20 and 100 (see sections 11.4.2.3.5 and 11.4.3).

Nonsafety-related structures, systems, and components that must be designed to retain structural integrity during and after an SSE, but do not have to function, are seismically analyzed to ensure that faulted stress limits are not exceeded. These items (for example: piping and piping supports for nonsafety-related piping located over safety-related items) whose continued function is not required are nonseismic Category I and are not controlled by a 10 CFR 50 Appendix B Quality Assurance Program (not Q-listed). The nonseismic Category I Systems Quality Assurance Program is described in Section 17.D of the SNUPPS Quality Assurance Programs Manual for Design and Construction.

3.2.2 SYSTEM QUALITY GROUP CLASSIFICATION

The quality group classification for each water- and steam-containing pressure component is shown in Table 3.2-1. The components are classified according to their safety significance as dictated by service and functional requirements and by the consequences of their failure. The quality group classifications and code requirements for the quality of plant process systems meet the intent of Regulatory Guides 1.26 and 1.143. Clarifications and specific exceptions to these guides are discussed in Tables 3.2-4 and 3.2-5, respectively. These tables compare the design to each regulatory position.

The design, fabrication, inspection, and testing requirements of each classification provide the required degree of conservatism in assuring component pressure integrity and operability.

Radioactive waste management systems are designed consistent with Regulatory Guide 1.143, as noted in Tables 3.2-1, 3.2-2 and 3.2-5. The radioactive waste management systems are considered to begin at the interface valve(s) in each line, from other systems provided for collecting wastes that may contain radioactive materials, and to include related instrumentation and control systems. The radioactive waste management systems terminate at the point of controlled discharge to the environment, at the point of recycle back to storage for reuse in the reactor, or at the point of storage of packaged solid wastes prior to shipment offsite to a licensed burial ground. The steam generator blowdown system begins at, but does not include, the outermost isolation valve on the blowdown line and terminates at the point of controlled discharge to the environment, at the point of interface with other liquid waste systems, or at the point of recycle back to the secondary system.

The code requirements applicable to each quality group classification are identified in Table 3.2-2. The quality group classifications and the interfaces between classifications in a system having components of different classifications are indicated on the piping and instrumentation diagram or flow diagram of that system.

3.2.3 SAFETY CLASSES

Table 3.2-1 lists the safety class assigned to applicable systems and components in accordance with ANSI N18.2 (Ref. 1). The criteria (of Ref. 1) is used in the plant design to provide an added degree of assurance that the plant is designed, constructed, and operated without undue risk to the health and safety of the public.

All components located within the reactor coolant pressure boundary (as defined by 10CFR50.2) are classified as required by 10CFR50.55a with the exception of the pressurizer upper level instrument lines, the pressurizer safety valve loop seal drain lines, ¾" and smaller branch lines connected to the pressurizer relief lines, and the associated components. These lines are Safety Class 2 although a rupture of one of these lines may result in a rapid depressurization of the reactor coolant system and ECCS actuation on low pressurizer pressure. See Section 5.2.1.1 for additional information.

3.2.4 QUALITY ASSURANCE PROGRAM

Quality assurance practices, in accordance with the program outlined in 10 CFR 50, Appendix B, have been applied to activities which influence the ability of items in Safety Classes 1, 2, and 3 to perform their intended safety function. The quality assurance

programs for design and construction is described in Chapter 17.0 of the SNUPPS PSAR. Those Q-listed items which fall under a quality assurance program are identified in Table 3.2-1.

In addition to the 10 CFR 50, Appendix B, quality assurance program for the safety-related items shown as Q-listed on Table 3.2-1, a quality program is implemented for those portions of the nonsafety-related structures, systems, or components whose continued function is not required but whose failure could degrade the performance of safety-related items required to maintain the plant in a post accident safe shutdown condition, for interface points between seismic Category I and nonseismic Category I piping, and for the applicable portions of the fire protection system.

3.2.5 ENGINEERING CODES AND STANDARDS

The engineering codes and standards are listed in Table 3.2-1. For those components covered by the system quality group classification and the safety classes, the codes and standards employed meet the given classification requirements.

The designs of areas and equipment involving the safety and health of personnel include consideration of the Occupational Safety and Health Administration (OSHA) Requirements, 29 CFR 1910.

3.2.6 LOCATION

Table 3.2-1 identifies the location of each item by building.

3.2.7 REFERENCES

1. "Nuclear Safety Criteria for the Design of Stationary Pressurized Water Reactor Plants," ANSI N18.2, November 1973.

INDEX TO TABLE 3.2-1

		Sheet
1.0	NSSS AND NUCLEAR AUXILIARY SYSTEMS	1
1.1	Reactor Coolant System	1
1.2	Chemical and Volume Control System	3
1.3	Residual Heat Removal System	4
1.4	Safety Injection System	5
1.5	Containment Spray System	5
1.6	Containment Cooling System	5
1.7	Containment Isolation	6
1.8	Containment Hydrogen Control System	6
2.0	WATER SYSTEMS	6
2.1	Service Water System	6
2.2	Essential Service Water System	6
2.3	Component Cooling Water System	6
2.4	Fuel Pool Cooling and Cleanup System	6
2.5	Ultimate Heat Sink	7
3.0	FUEL HANDLING AND STORAGE	7
4.0	RADWASTE MANAGEMENT SYSTEMS	8
4.1	Boron Recycle System	8
4.2	Liquid Radwaste System	8
4.3	Gaseous Radwaste System	10
4.4	Steam Generator Blowdown System	10
4.5	Solid Radwaste System	11
5.0	SECONDARY CYCLE SYSTEMS	12
5.1	Main Steam System	12
5.2	Main Feedwater System	12
5.3	Chemical Addition System	12
5.4	Auxiliary Feedwater System	12
5.5	Turbine-Gland Sealing System	13
5.6	Condenser Air Removal System	13
5.7	Condensate Demineralizer System	13
5.8	Secondary Liquid Waste System	13
5.9	Condensate Storage and Transfer System	14

INDEX TO TABLE 3.2-1 (Sheet 2)

		Sheet
6.0	SERVICE SYSTEMS	14
6.1	Auxiliary Steam	14
6.2	Standby Diesel Generator Engine	14
6.3	Emergency Fuel Oil System	15
6.4	Compressed Air	16
6.5	Service Gases	16
6.6	Fire Protection	16
6.7	Floor and Equipment Drainage System	16
6.8	Nuclear Sampling System	16
6.9	Process Sampling System	16
7.0	HEATING, VENTILATING, AND AIR CONDITIONING	17
7.1	Control Building	17
7.2	Fuel Building	18
7.3	Auxiliary Building	18
7.4	Diesel Generator Building Ventilation System	19
7.5	Auxiliary, Fuel, Radwaste, Turbine Buildings, Access Control Exhaust HVAC, and Containment Purge	19
7.6	Essential Service Water Pump House HVAC	19
7.7	Containment Purge System	20
7.8	Miscellaneous Building HVAC	20
8.0	CIVIL/ARCHITECTURAL	20
8.1	Structures and Buildings	20
8.2	Materials for Category I Structures	21
9.0	CONTROL AND INSTRUMENTATION	22
10.0	ELECTRICAL POWER SYSTEMS	22
10.1	Class IE Lower Medium Voltage System	22
10.2	Class IE Low Voltage System	23
10.3	Class IE 125 V DC System	23
10.4	Class IE Instrument AC Power	23
10.5	Reactor Building Cable Penetrations	23
10.6	Conduit Supports and Tray Supports	23
10.7	Raceway Installation	23
10.8	Load Shedding and Emergency Load Sequencing	23
10.9	Auxiliary Relay Racks	23
10.10	Transformers	23
10.11	Status Indicating Systems	23
10.12	Local Control Stations	23

TABLE 3.2-1

CLASSIFICATIONS OF STRUCTURES, COMPONENTS, AND SYSTEMS (14)

System/Component	Seismic Category I (1)	Quality Group Classification (2)	ANS Safety Class (3)	Quality Assurance (4)	Principal Construction Codes and Standards (5)	Location (6)	Remarks
1.0 NSSS AND NUCLEAR AUXILIARY SYSTEMS							
1.1 Reactor Coolant System (Figure 5.1-1)							
Reactor Vessel and Appurtenances							
Vessel	Y	A	1	Y-W1	III-1	C	
Head	Y	A	1	Y-W1	III-1	C	
Studs	Y	A	1	Y-W1	III-1	C	
Shoes and shims	Y	A	1	Y-W2	III-1	C	
Supports	Y	A	1	Y-B	III-1	C	
Lower internals structure	Y	NA	2	Y-W3	NA	C	
Upper internals structure	Y	NA	2	Y-W3	NA	C	
Irradiation specimen baskets	Y	NA	2	Y-W3	III/NG	C	
Irradiation capsules	N	NA	NNS	N	NA	C	
Irradiation specimens	N	NA	NNS	N	NA	C	
Fuel assemblies and appurtenances	Y	NA	NA	Y-W3	NA	C	
Control rods	Y	NA	NA	Y-W3	NA	C	
Primary source rods	Y	NA	NA	Y-W3	NA	C	
Burnable poison rod assemblies	Y	NA	NA	Y-W3	NA	C	
Thimble guide tubing	Y	NA	2	Y-W2	III-2	C	
Thimble guide couplings	Y	NA	2	Y-W2	III-2	C	
Thimble seal table and parts	Y	NA	1	Y-W3	NA	C	
Flux thimble assembly	Y	NA	2	Y-W1	NA	C	
Control rod drive mechanism (CRDM), housing only	Y	NA	1	Y-W3	III-1	C	Non-class 1E power supply
CRDM head adapter plugs	Y	NA	1	Y-W3	III-1	C	
CRDM dummy can assemblies	N	NA	NNS	N	NA	C	
CRDM air cool baffle assemblies (shroud)	N	NA	NNS	N	NA	C	The CRDM shroud is seismically qualified
CRDM seismic support platform, spacer plates and tie rods	Y	NA	1	Y-W1	III-1	C	
Thermal sleeves	Y	NA	2	Y-W3	NA	C	
Steam generator							
Tube side - RC	Y	A	1	Y-W3	III-1	C	
Shell side - main steam and feedwater	Y	B	2	Y-W3	III-2(7)		
Pressurizer	Y	A	1	Y-W3	III-1/NEMA	C	
Pressurizer heaters	N	NA	1/NNS(1)	N	NA	C	Power supply is diesel-backed non-Class 1E
Flux Mapping Frame	N	NA	NNS	N	NA	C	
RC Thermowell NR	Y	A	1	Y-A	III-1	C	
RC thermowell WR	Y	A	1	Y-W2	III-1	C	
Pressurizer relief tank	N	D	NNS	N	VIII	C	The PRT is a seismically qualified Section VIII component
RC pump standpipe and orifice	N	D	NNS	N	VIII	C	
RC pump:						C	
Casing and supports	Y	A	1	Y-W3	III-1		
Main flange	Y	A	1	Y-W3	III-1		
Thermal barrier	Y	A	1	Y-W3	NA		
Thermal barrier heat exchanger	Y	A	1	Y-W3	III-1		

TABLE 3.2-1 (Sheet 2)

CLASSIFICATIONS OF STRUCTURES, COMPONENTS, AND SYSTEMS (14)

System/Component	Seismic Category I (1)	Quality Group Classification (2)	ANS Safety Class (3)	Quality Assurance (4)	Principal Construction Codes and Standards (5)	Location (6)	Remarks
#1 Seal housing	Y	A	1	Y-W3	III-2		
#2 Seal housing	Y	B	2	Y-W3	NA		
#3 Seal housing	N	D	NNS	N	NA		
Bolting (Pressure-retaining)	Y	A	1	Y-W3	III-1		
RC Pump Motors							Power supply is non-class 1E
Shaft coupling	Y	NA	2	Y-W3	NA	C	
Spool piece	Y	NA	2	Y-W3	NA		
Armature	Y	NA	2	Y-W3	NA		
Flywheel	Y	NA	2	Y-W3	NA		
Motor bolting	Y	NA	2	Y-W3	NA		
Upper oil cooler							
Tube side-CCW	Y	NA	3	Y-W3	III-3		
Shell side - oil	Y	NA	3	Y-W3	NA		
Lower oil cooler							
Tube cooling coil	Y	NA	3	Y-W3	III-3		
Oil reservoir	Y	NA	3	Y-W3	NA		
Air water coolers	Y	C	3	Y-W3	III-3		
Motor stand and frame	Y	NA	2	Y-W3	NA		
Piping							
RC hot, cold, and crossover leg piping, fittings and fabrication	Y	A	1	Y-W1	III-1	C	
Surge pipe, fittings and fabrication	Y	A	1	Y-W1	III-1	C	
System to miscellaneous boundary valves	Y	A	1	Y-B	III-1	C	
Pressurizer spray line	Y	A	1	Y-B	III-1	C	
Pressurizer relief and safety valves to pressurizer relief tank	N	D	NNS	N	B31.1	C	
Pressurizer to relief/safety valves	Y	A	1	Y-B	III-1	C	
Piping/valves	Y	A	1	Y-W1	III-1	C	
Piping/valves	Y	B	2	Y-B	III-2	C	
Piping/valves	Y	C	3	Y-B	III-3	C	
Piping/valves	N	D	NNS	N	B31.3	A/C/R	
Valves							
Pressurizer safety valves	Y	A	1	Y-W1	III-1	C	
Pressurizer power-operated relief valves	Y	A	1	Y-W1	III-1	C	Class 1E power supply
PORV Block Valves	Y	A	1	Y-W1	III-1	C	Class 1E power supply
Valves to RCS boundary	Y	A	1	Y-W1	III-1	C	
Pressurizer relief tank boundary valves not required for containment isolation or part of RCS boundary	N	D	NNS	N	B31.1	C	
Pressurizer relief tank boundary valves required to preserve dedicated letdown path for post accident safe shutdown	Y	C	3	Y-W1	III-1	C	

TABLE 3.2-1 (Sheet 3)

CLASSIFICATIONS OF STRUCTURES, COMPONENTS, AND SYSTEMS (14)

System/Component	Seismic Category I (1)	Quality Group Classification (2)	ANS Safety Class (3)	Quality Assurance (4)	Principal Construction Codes and Standards (5)	Location (6)	Remarks
1.2 Chemical and Volume Control System (Figure 9.3-8)							
Letdown and Charging Loop							
Regenerative heat exchanger							
Tube side - letdown	Y	B	2	Y-W1	III-2/TEMA-R	C	
Shell side - charging	Y	B	2	Y-W1	III-2/TEMA-R	C	
Letdown heat exchanger							
Tube side - letdown	Y	B	2	Y-W1	III-2/TEMA-R	A	
Shell side - CCW	Y	C	3	Y-W1	III-3/TEMA-R	A	
Letdown orifices	Y	B	2	Y-W2	III-2	A	
Excess letdown heat exchanger							
Tube side - letdown	Y	B	2	Y-W1	III-2/TEMA-R	C	
Shell side - CCW	Y	C	3	Y-W1	III-3/TEMA-R	C	
Seal water return heat exchanger							
Tube side - letdown/ sealwater	Y	B	2	Y-W1	III-2/TEMA-R	A	
Shell side - CCW	Y	C	3	Y-W1	III-3/TEMA-R	A	
Mixed bed demineralizers	N	D(A)	NNS	Y-W2	VIII(7)	A	
Cation bed demineralizers	N	D(A)	NNS	Y-W2	VIII(7)	A	
Boron meter	N	D	NNS	N	B31.1	A	
RC filter	Y	B	2	Y-W1	III-2	A	
Volume control tank	Y	B	2	Y-W1	III-2	A	
Centrifugal charging pump	Y	B	2	Y-W1	III-2	A	Class 1E power supply. CCW is required.
Suction pulsation dampener	Y	B	2	Y-B	III-2	A	
Discharge pulsation dampener	Y	B	2	Y-B	III-2	A	
Normal charging pump	Y	B	2	Y-W1	III-2	A	Non-Class 1E power supply.
Seal water injection filter	Y	B	2	Y-W1	III-2	A	
Seal water return filter	Y	B	2	Y-W1	III-2	A	
Boric Acid Makeup Subsystem							
Boric acid tank	Y	C	3	Y-B	III-3	A	
Boric acid transfer pump	Y	C	3	Y-W1	III-3	A	Diesel backed non-Class 1E power supply
Boric acid filter	Y	C	3	Y-W2	III-3	A	
Boric acid batching tank	N	D	NNS	N	VIII	A	
Boron injection makeup pump	N	D	NNS	N	MS	A	
Chemical mixing tank	N	D	NNS	N	VIII	A	

TABLE 3.2-1 (Sheet 4)

CLASSIFICATIONS OF STRUCTURES, COMPONENTS, AND SYSTEMS (14)

System/Component	Seismic Category I (1)	Quality Group Classification (2)	ANS Safety Class (3)	Quality Assurance (4)	Principal Construction Codes and Standards (5)	Location (6)	Remarks
Boron Thermal Regeneration Subsystem							
Moderating HX							
Tube side - letdown	N	D(A)	NNS	N	VIII(7)	A	
Shell side - letdown	N	D(A)	NNS	N	VIII(7)	A	
Letdown chiller HX							
Tube side - letdown	N	D(A)	NNS	N	VIII(7)	A	
Shell side - chilled wtr	N	D	NNS	N	VIII(7)	A	
Letdown reheat HX							
Tube side - normal charging	Y	B	2	Y-W1	III-2	A	
Shell side - letdown	Y	D(A)	2	N	VIII(7)	A	
Chiller unit	N	D	NNS	N	NA	A	
Chiller pump	N	D	NNS	N	MS	A	
Chiller surge tank	N	D	NNS	N	VIII	A	
Thermal regeneration demineralizers	N	D(A)	NNS	N	VIII(7)	A	
Piping/valves	Y	A	1	Y-W1	III-1	C	
Piping/valves	Y	B	2	Y-B	III-2	A/C	
Piping/valves	Y	C	3	Y-B	III-3	A/C	
Piping/valves	N	D	NNS	N	B31.1	A/C	
1.3 Residual Heat Removal System (Figure 5.4-7)							
RHR Pumps	Y	B	2	Y-W1	III-2	A	Class 1E power supply. CCW required.
RHR Heat Exchanger							
Tube side - RC	Y	B	2	Y-W1	III-2	A	
Shell side - CCW	Y	C	3	Y-W1	III-3		
Recirculation valve encapsulation	Y	B	2	Y-B	III-2	A	
Piping/valves	Y	A	1	Y-W1	III-1	C	
Piping/valves	Y	B	2	Y-B	III-2	A/C	
Piping/valves	Y	C	3	YB	III-3	A	
Piping/valves	N	D	NNS	N	B31.1	A/C	
1.4 Safety Injection System (Figure 6.3-1)							
Accumulators	Y	B	2	Y-W1	III-2	C	
Boron injection tank	Y	B	2	Y-W1	III-2	A	
Boron injection surge tank	Y	C	3	Y-W2	III-3	A	
Refueling water storage tank	Y	B	2	Y-B	III-2	O	
Safety injection pumps	Y	B	2	Y-W1	III-2	A	Class 1E power supply. CCW required.
Boron injection recirculation pumps	Y	C	3	Y-W2	III-3	A	Diesel-backed, non-Class 1E power supply
Boron injection flush orifices	Y	C	3	Y-W2	III-3	A	
Piping/valves	Y	A	1	Y-W1	III-1	C	
Piping/valves	Y	B	2	Y-B	III-2	A/C	
Piping/valves	Y	C	3	YB	III-3	A	
Piping/valves	N	D	NNS	N	B31.1	A/C	

TABLE 3.2-1 (Sheet 5)

CLASSIFICATIONS OF STRUCTURES, COMPONENTS, AND SYSTEMS (14)

	System/Component	Seismic Category I (1)	Quality Group Classification (2)	ANS Safety Class (3)	Quality Assurance (4)	Principal Construction Codes and Standards (5)	Location (6)	Remarks
1.5	Containment Spray System (Figure 6.2.2-1)							
	Containment spray additive tank	Y	B	2	Y-B	III-2	A	
	Containment spray pump	Y	B	2	Y-B	III-2	A	Class 1E power supply
	Spray additive eductor	Y	B	2	Y-B	III-2	A	
	Spray headers	Y	B	2	Y-B	III-2	C	
	Nozzles	Y	B	2	Y-B	III-2	C	
	Recirculation valve encapsulation	Y	B	2	Y-B	III-2	A	
	Containment recirculation sump screen	Y	NA	2	Y-B	NA	C	
	Piping/Valves	Y	B	2	Y-B	III-2	A/C	
	Piping/Valves	N	D	NNS	N	B31.1	A/C	
1.6	Containment Cooling System (Figure 9.4-6)							
	Containment air cooler cooling coil							
	Tube side - ESW	Y	C	3	Y-B	III-3	C	
	Shell side - air	Y	NA	2	Y-B	NA	C	
	Containment air cooler fan	Y	NA	2	Y-B	NA	C	
	Containment air cooler fan motor	Y	NA	2	Y-B	IEEE-334	C	Class 1E power supply
	Piping/valves	Y	C	3	Y-B	III-3	C	
	Piping (15)	N	D	NNS	N	B31.1	C	
	Ductwork dampers	N	NA	NNS	N	NA	C	
1.7	Containment Isolation							
	Piping	Y	B	2	Y-B	III-2	C/A	
	Flued heads	Y	B	2	Y-B	III-2	C/A	
	Valves	Y	B	2	Y-B	III-2	C/A	
1.8	Containment Hydrogen Control System (Figure 6.2.5-1 and 9.4-1)							
	Containment hydrogen recombiner	Y	NA	2	Y-B	NEMA	C	Class 1E power supply
	Containment hydrogen mixing fans	Y	NA	2	Y-B	NA	C	Class 1E power supply
	Containment hydrogen mixing fan motors	Y	NA	2	Y-B	NEMA	C	
	Containment hydrogen analyzer	Y	B	2	Y-B	NA	A	Class 1E power supply
	Piping/valves	Y	B	2	Y-B	III-2	A/C	
	Piping/valves (15)	N	NA	NNS	N	B31.1	A	

TABLE 3.2-1 (Sheet 6)

CLASSIFICATIONS OF STRUCTURES, COMPONENTS, AND SYSTEMS (14)

System/Component	Seismic Category I (1)	Quality Group Classification (2)	ANS Safety Class (3)	Quality Assurance (4)	Principal Construction Codes and Standards (5)	Location (6)	Remarks
2.0 WATER SYSTEMS							
2.1 Service Water System (Figure 9.2-1)							
Service water pumps	N	D	NNS	N	MS	I	
2.2 Essential Service Water System (11) (Figure 9.2-2)							
Essential service water pump	Y	C	3	Y-B	III-3	E	Class 1E power supply
Essential service water pump prelube storage tank	Y	C	3	Y-B	III-3	E	
Essential service water self-cleaning strainers	Y	C	3	Y-B	III-3	E	
Essential service water traveling screens	Y	NA	3	Y-B	NA	I	Class 1E power supply
Essential service water piping	Y	C	3	Y-B	III-3	A/B/D/F/I/O	
Essential service water prelube storage tank filter	Y	C	3	Y-B	III-3	E	
Piping/valves	Y	C	3	Y-B	III-3	A/B/C/D/E/F/0/V	
Piping/valves	N	D	NNS	N	B31.1	A/B/C/D/E/F/R/T/O	
2.3 Component Cooling Water System (Figure 9.2-15)							
Component cooling water pump	Y	C	3	Y-B	III-3	A	Class 1E power supply
Component cooling water heat exchanger							
Tube side - ESW	Y	C	3	Y-B	III-3/TEMA-R	A	
Shell side - CCW	Y	C	3	Y-B	III-3/TEMA-R	A	
Component cooling water surge tank	Y	C	3	Y-B	III-3	A	
Component cooling water chemical addition tank	N	D	NNS	N	VIII	A	
Piping/valves	Y	C	3	Y-C	III-3	A/C/F/R	
Piping/valves	N	D	NNS	N	B31.1	A/C/F/R	
2.4 Fuel Pool Cooling and Cleanup System (Figure 9.1-3)							
Fuel pool cooling pump	Y	C	3	Y-B	III-3	F	Class 1E power supply
Fuel pool skimmer pump	N	D	NNS	N	MS	F	
Fuel pool cleanup pump	N	D	NNS	N	MS	F	
Fuel pool cooling heat exchanger							
Tube side - fuel storage pool	Y	C	3	Y-B	III-3/TEMA-R	F	
Shell side - CCW water	Y	C	3	Y-B	III-3/TEMA-R		

TABLE 3.2-1 (Sheet 7)

CLASSIFICATIONS OF STRUCTURES, COMPONENTS, AND SYSTEMS (14)

	System/Component	Seismic Category I (1)	Quality Group Classifi-cation (2)	ANS Safety Class (3)	Quality Assurance (4)	Principal Construction Codes and Standards (5)	Location (6)	Remarks
	Fuel pool cleanup demineralizer	N	D	NNS	N	VIII	R	
	Skimmer strainer	N	D	NNS	N	B31.1	F	
	Fuel pool cleanup filter	N	D	NNS	N	VIII	R	
	Skimmer filter	N	D	NNS	N	VIII	R	
	Piping and valves for fuel pool cooling system and essential service water system intertie	Y	C	3	Y-B	III-3	F	
	piping/valves	Y	C	3	Y-B	III-3	C/F	
	Piping/valves	N	D	NNS	N	ANSI B31.1	C/F/R	
2.5	Ultimate Heat Sink (Section 9.2.5)							
	Excavated cooling pond and dam	Y	NA	3	Y-U	ACI-318-71	O	
3.0	FUEL HANDLING AND STORAGE							
	Fuel transfer system							Non-Class 1E power supply
	Conveyor system	N	NA	NNS	NA	NA	C/F	
	Remainder of system	N	NA	NNS	N	NA	C/F	
	RCC changing fixture	N	NA	NNS	N	NA	C	
	Fuel transfer							
	Flange	Y	B	2	Y-W2	III/MC	C	
	Tube	Y	B	2	Y-W2	III/MC	C/F	
	Valve	N	D	NNS	N	MS	F	
	Sleeve	Y	B	2	Y-B	III/MC	C/F	
	Spent fuel storage racks	Y	NA	3	Y-B	NA	F	
	New fuel storage racks	Y	NA	3	Y-W2	NA	F	
	Reactor vessel head lifting device	N	NA	NNS	N	NA	C	
	Reactor vessel missile shield	Y	NA	NA	Y-W	AISC	C	
	Polar crane	S	NA	3	Y-B	NA	C	Non-Class 1E power supply
	Refueling machine	N	NA	NNS	Y-W2	NA	C	Non-Class 1E power supply
	Cask handling crane	S	NA	3	Y-B	NA	F	Non-Class 1E power supply
	Spent fuel pool bridge crane	S	NA	3	Y-B	NA	F	Non-Class 1E power supply
	Internals lifting device	N	NA	NNS	N	NA	C	
	Spent fuel pool handling tool	Y	NA	3	Y-W2	NA	F	
	Refueling Cavity Elevator	N	NA	NNS	Y-U	NA	C	Non-Class 1E power supply

TABLE 3.2-1 (Sheet 8)

CLASSIFICATIONS OF STRUCTURES, COMPONENTS, AND SYSTEMS (14)

System/Component	Seismic Category I (1)	Quality Group Classifi-cation (2)	ANS Safety Class (3)	Quality Assurance (4)	Principal Construction Codes and Standards (5)	Location (6)	Remarks
4.0 RADWASTE MANAGEMENT SYSTEMS							
4.1 Boron Recycle System (Figure 9.3-11)							
Tanks							
Recycle holdup	N	D(A)	NNS	N	API-650/III-3	R	
Recycle evaporator reagent	N	D(A)	NNS	N	VIII	R	(21)
Pumps							
Recycle evaporator feed	N	D(A)	NNS	N	MS(7)	R	
Recycle evaporator concentrates	N	D(A)	NNS	N	MS(7)	R	(21)
Filters							
Recycle evaporator feed	N	D(A)	NNS	N	VIII(7)	R	
Recycle evaporator condensate	N	D(A)	NNS	N	VIII	R	(21)
Recycle evaporator concentrate	N	D(A)	NNS	N	VIII	R	(21)
Miscellaneous							
Recycle evaporator package	N	D(A)	NNS	N	VIII(7)	R	(21)
Recycle evaporator feed demineralizer	N	D(A)	NNS	N	VIII(7)	R	
Recycle evaporator condensate demin-eralizer	N	D(A)	NNS	N	VIII	R	(21)
Recycle holdup tank vent eductor	N	D(A)	NNS	N	B31.1(7)	R	
Piping/valves	N	D(A)	NNS	N	B31.1	A/R	
Piping/valves	N	D	NNS	N	B31.1	A/R	
4.2 Liquid Radwaste System (Figure 11.2-1)							
Tanks							
Laundry and hot shower	N	D(A)	NNS	N	VIII	R	
RC drain	N	D(A)	NNS	N	VIII	C	
Floor drain	N	D(A)	NNS	N	VIII	R	
Waste holdup	N	D(A)	NNS	N	VIII	R	
Waste monitor	N	D(A)	NNS	N	VIII	R	
Chemical drain	N	D(A)	NNS	N	VIII	R	
Discharge monitor	N	D(A)	NNS	N	API-650	0	
Waste evap. reagent	N	D(A)	NNS	N	VIII	R	
Waste evap. condensate	N	D(A)	NNS	N	VIII	R	
Laundry water storage	N	D(A)	NNS	N	VIII	R	

TABLE 3.2-1 (Sheet 9)

CLASSIFICATIONS OF STRUCTURES, COMPONENTS, AND SYSTEMS (14)

System/Component	Seismic Category I (1)	Quality Group Classifi-cation (2)	ANS Safety Class (3)	Quality Assurance (4)	Principal Construction Codes and Standards (5)	Location (6)	Remarks
Pumps							
RC drain tank	N	D(A)	NNS	N	MS	R	
Waste evap. feed	N	D(A)	NNS	N	MS	R	
Waste evap. con-densate tank	N	D(A)	NNS	N	MS	R	
Chemical drain tank	N	D(A)	NNS	N	MS	R	
Laundry and hot shower tank	N	D(A)	NNS	N	MS	R	
Floor drain tank	N	D(A)	NNS	N	MS	R	
Waste monitor tank	N	D(A)	NNS	N	MS	R	
Waste evap. distillate	N	D(A)	NNS	N	MS	R	
Waste evap. concentrate	N	D(A)	NNS	N	MS	R	
Spent resin sluice	N	D(A)	NNS	N	MS	R	
Laundry water storage tank	N	D(A)	NNS	N	MS	R	
Discharge monitor tank transfer	N	D(A)	NNS	N	MS	R	
Filters							
Waste evap. feed	N	D(A)	NNS	N	VIII	R	
Waste evap. con-densate	N	D(A)	NNS	N	VIII	R	
Laundry and hot shower	N	D(A)	NNS	N	VIII	R	
Waste monitor tank	N	D(A)	NNS	N	VIII	R	
Floor drain tank	N	D(A)	NNS	N	VIII	R	
Miscellaneous							
RC drain tank heat exchanger							
Tube side - RC drains	N	D(A)	NNS	N	VIII	C	
Shell side - CCW	Y	C	3	Y-W1	III-3	C	
Laundry and hot shower strainer	N	D(A)	NNS	N	NA	R	
Waste evaporator package	N	D(A)	NNS	N	VIII	R	(21)
Waste monitor tank demineralizer	N	D(A)	NNS	N	VIII	R	
Waste evap. con-densate demineral-izer	N	D(A)	NNS	N	VIII	R	
Floor drain tank strainer	N	D(A)	NNS	N	NA	R	
Liquid waste							
Charcoal adsorber	N	D(A)	NNS	N	VIII	R	
Laundry and hot shower charcoal adsorber	N	NA	NNS	N	VIII	R	
Demineralizer Skid	N	D(A)	NNS	N	VIII	R	

TABLE 3.2-1 (Sheet 10)

CLASSIFICATIONS OF STRUCTURES, COMPONENTS, AND SYSTEMS (14)

System/Component	Seismic Category I (1)	Quality Group Classifi-cation (2)	ANS Safety Class (3)	Quality Assurance (4)	Principal Construction Codes and Standards (5)	Location (6)	Remarks
Penetration piping	Y	B	2	Y-B	III-2	C/A	
Piping/valves	Y	C	3	Y-B	III-3	C	
Piping/valves	N	D(A)	NNS	N	B31.1	A/C/E/R/T	
Piping/valves	N	D	NNS	N	B31.1	A/R/T	
4.3 Gaseous Radwaste System (Figure 11.3-1)							
Waste gas decay tanks	D	D(A)	NNS	N	VIII(7)	R	
Waste gas compressor package	D	D(A)	NNS	N	MS/VIII(7)	R	
Catalatic hydrogen recombiner package	D	D(A)	NNS	N	VIII(7)	R	
Gas traps	D	D(A)	NNS	N	VIII(7)	R	
Waste gas drain filter	D	D(A)	NNS	N	VIII	R	
Gas decay tank drain pump	D	D(A)	NNS	N	MS	R	
Gaseous radwaste drain collection tank	N	D(A)	NNS	N	VIII	R	
Piping/valves	D	D(A)	NNS	N	B31.1	A/R	
Piping/valves	N	D	NNS	N	B31.1	A/R	
4.4 Steam Generator Blowdown System (Figure 10.4-8)							
Tanks							
Surge tank	N	D(A)	NNS	N	VIII	R	
Pumps							
Discharge	N	D(A)	NNS	N	MS	R	
Drain	N	D(A)	NNS	N	MS	A	
Recirculation	N	D	NNS	N	MS	T	
Miscellaneous							
Blowdown regener-ative heat exchanger	N	D(A)	NNS	N	VIII	T	
Blowdown nonregen-erative heat exchanger	N	D(A)	NNS	N	VIII	T	
Mixed-bed demineralizer	N	D(A)	NNS	N	VIII(7)	R	
Filters	N	D(A)	NNS	N	VIII	R	
Strainers	N	D(A)	NNS	N	VIII	R	
Penetration piping	Y	B	2	Y-B	III-2	C/A	
Recirculation sample cooler	N	D	NNS	N	MS	T	
Piping/valves	Y	B	2	Y-B	III-2	A/C	
Piping/valves	N	D(A)	NNS	N	B31.1	B/R/T	
Piping/valves	N	D	NNS	N	B31.1	B/R/T	

TABLE 3.2-1 (Sheet 11)

CLASSIFICATIONS OF STRUCTURES, COMPONENTS, AND SYSTEMS (14)

System/Component	Seismic Category I (1)	Quality Group Classifi-cation (2)	ANS Safety Class (3)	Quality Assurance (4)	Principal Construction Codes and Standards (5)	Location (6)	Remarks
4.5 Solid Radwaste System (Figure 11.4-1)							
Caustic addition tank	N	D	NNS	N	VIII	R	
Evaporator bottoms tank (primary)	N	D(A)	NNS	N	VIII	R	
Evaporator bottoms tank pump (primary)	N	D(A)	NNS	N	MS	R	
Spent resin tank (primary)	N	D(A)	NNS	N	VIII(7)	R	
Spent resin tank (secondary)	N	D(A)	NNS	N	VIII	R	
Spent resin sluice pump (primary)	N	D(A)	NNS	N	MS(7)	R	
Spent resin sluice pump (secondary)	N	D(A)	NNS	N	MS	R	
Evaporator bottoms tank (sec)	N	D(A)	NNS	N	VIII	R	
Evaporator bottoms tank pump (secondary)	N	D(A)	NNS	N	MS	R	
Acid addition tank	N	D	NNS	N	VIII	R	
Acid addition metering pump	N	D	NNS	N	MS	R	
Caustic addition metering pump	N	D	NNS	N	MS	R	
Resin charging tank (CVCS)	N	D	NNS	N	VIII	R	
Resin charging tank (radwaste)	N	D	NNS	N	VIII	R	
Spent resin sluice filter (primary)	N	D(A)	NNS	N	VIII	R	
Spent resin sluice filter (secondary)	N	D(A)	NNS	N	VIII	R	
Dry waste compactor	N	NA	NNS	N	MS	R	
Solid radwaste bridge crane	N	NA	NNS	N	NA	R	

TABLE 3.2-1 (Sheet 12)

CLASSIFICATIONS OF STRUCTURES, COMPONENTS, AND SYSTEMS (14)

System/Component	Seismic Category I (1)	Quality Group Classification (2)	ANS Safety Class (3)	Quality Assurance (4)	Principal Construction Codes and Standards (5)	Location (6)	Remarks
5.0 SECONDARY CYCLE SYSTEMS							
5.1 Main Steam System (Figure 10.3-1)							
Piping							
Penetration (SG to isolation valves)	Y	B	2	Y-B	III-2	C/A	
To auxiliary FW pump turbine	Y	C	3	Y-B	III-3	A	
Turbine bypass	N	D	NNS	N	B31.1	T	
Other	N	D	NNS	N	B31.1	T	
Valves							
Main steam isolation valves	Y	B	2	Y	III-2	A	Class 1E power supply
SG safety and atmospheric relief valves	Y	B	2	Y-B	III-2	A	Class 1E power supply
Piping/valves	Y	B	2	Y-B	III-2	A/C	
Piping/valves	Y	C	3	Y-B	III-3	A	
Piping/valves	N	D	NNS	N	B31.1	A/T	
Turbine bypass	N	D	NNS	N	B31.1	T	
5.2 Main Feedwater System (Figure 10.4-6)							
Feedwater heaters	N	D	NNS	N	VIII/TEMA-C	T	
Heater drain tank	N	D	NNS	N	VIII	T	
Heater drain pump	N	D	NNS	N	MS	T	
Feedwater pump	N	D	NNS	N	MS	T	
Penetration piping (isolation valves to SG)	Y	B	2	Y-B	III-2	C/A	
Main feedwater isolation valves	Y	B	2	Y	III-2	A	Class 1E power supply
Motor-driven feedwater pump	N	D	NNS	N	MS	T	
Reheater drain tank	N	D	NNS	N	VIII	T	
Moisture separator drain tank	N	D	NNS	N	VIII	T	
Piping/valves	Y	B	2	Y-B	III-2	A/C	
Piping/valves	N	D	NNS	N	B31.1	A/T	
5.3 Chemical Addition System (Figure 10.4-7)	N	D	NNS	N	VIII	T	
5.4 Auxiliary Feedwater System (Figures 10.4-9 and 10.4-10)							
Motor-driven auxiliary feedwater pump	Y	C	3	Y-B	III-3	A	Class 1E power supply
Turbine-driven auxiliary feedwater pump	Y	C	3	Y-B	III-3	A	Class 1E power supply

TABLE 3.2-1 (Sheet 13)

CLASSIFICATIONS OF STRUCTURES, COMPONENTS, AND SYSTEMS (14)

System/Component	Seismic Category I (1)	Quality Group Classifi-cation (2)	ANS Safety Class (3)	Quality Assurance (4)	Principal Construction Codes and Standards (5)	Location (6)	Remarks
Piping/valves	Y	B	2	Y-B	III-2	A	
Piping/valves	Y	C	3	Y-B	III-3	A	
Piping/valves	N	D	NNS	N	B31.1	A/0	
5.5 Turbine Gland Sealing System (Figure 10.4-4)							
Steam packing exhauster	N	D	NNS	N	NA	T	
Fans	N	NA	NNS	N	NA	T	
5.6 Condenser Air Removal System (Figure 10.4-3)							
Condensers	N	D	NNS	N	NA	T	
Vacuum pump	N	NA	NNS	N	NA	T	
Charcoal adsorber unit	N	NA	NNS	N	NA	T	
5.7 Condensate Demineralizer System (Figure 10.4-5)							
Deep-bed condensate demineralizers	N	D	NNS	N	VIII	T	
Resin separation and regeneration tank	N	D	NNS	N	VIII	T	
Anion regeneration tank	N	D	NNS	N	VIII	T	
5.8 Secondary Liquid Waste System (Figure 10.4-12)							
SLW evaporator	N	D(A)	NNS	N	VIII	R	(21)
SLW charcoal adsorber	N	D	NNS	N	VIII	R	
SLW demineralizer	N	D	NNS	N	VIII	R	
SLW oil interceptor	N	D	NNS	N	NA	T	
SLW drain collector tank	N	D	NNS	N	VIII	T	
SLW monitor tank	N	D	NNS	N	VIII	R	
SLW drain collector tank pump	N	D	NNS	N	MS	T	
SLW discharge pump	N	D	NNS	N	MS	R	
SLW evaporator feed filter	N	D	NNS	N	VIII	R	
SLW evaporator reagent tank	N	D	NNS	N	VIII	R	
High TDS transfer tank	N	D	NNS	N	VIII	T	
High TDS transfer pump	N	D	NNS	N	MS	T	
High TDS collector tank	N	D	NNS	N	VIII	T	
High TDS collector tank pump	N	D	NNS	N	MS	T	
Low TDS transfer tank	N	D	NNS	N	VIII	T	
Low TDS collector tank pump	N	D	NNS	N	MS	T	
Low TDS collector tank	N	D	NNS	N	VIII	T	

TABLE 3.2-1 (Sheet 14)

CLASSIFICATIONS OF STRUCTURES, COMPONENTS, AND SYSTEMS (14)

System/Component	Seismic Category I (1)	Quality Group Classifi-cation (2)	ANS Safety Class (3)	Quality Assurance (4)	Principal Construction Codes and Standards (5)	Location (6)	Remarks
Low TDS collector tank pump	N	D	NNS	N	MS	T	
Low TDS filters	N	D	NNS	N	VIII	R	
SLW oil intercepter transfer pump	N	D	NNS	N	MS	T	
Piping/valves	N	D(A)	NNS	N	B31.1	A/B/R/T	
Piping/valves	N	D	NNS	N	B31.1	A/B/R/T	(21)
5.9 Condensate Storage and Transfer System (Figure 9.2-12)							
Condensate storage tank	N	D	NNS	N	API 650	O	
Non-safety auxiliary feedwater pump	N	D	NNS	N	NA	T	Built to ASME Section III, Class 3, procured as non-safety
Piping/valves	N	D	NNS	N	B31.1	O/T	
6.0 SERVICE SYSTEMS							
6.1 Auxiliary Steam (Figure 9.5.9-1)							
Auxiliary steam boiler	N	D	NNS	N	I	T	
Auxiliary steam reboiler	N	D	NNS	N	NA	T	
Auxiliary steam deaerator	N	D	NNS	N	VIII	T	
Condensate recovery tanks	N	D	NNS	N	VIII	A/R	
Condensate recovery tank transfer pumps	N	D	NNS	N	MS	A/R	
6.2 Standby Diesel Generator Engine (Figures 9.5.5-1 and 9.5.6-1)							
Lube oil cooler	Y	C	3	Y-B	III-3	D	
Keep-warm lube oil pump	Y	(Note 20)	3	Y-B	(Note 20)	D	
Main Lube oil strainer (duplex)	Y	C	3	Y-B	III-3	D	
Fuel oil filter	Y	C	3	Y-B	III-3	D	
Lube oil heater	Y	C	3	Y-B	III-3	D	
Lube oil level control tank	Y	C	3	Y-B	(Note 17)	D	
Starting air compressor filter	N	NA	NNS	N	MS	D	
Diesel rocker lube oil strainer	Y	(Note 18)	NA	Y-B	MS	D	
Diesel oil separator	Y	(Note 18)	NA	Y-B	MS	D	
Motor driven rocker pre-lube pump	Y	(Note 18)	NA	Y-B	MS	D	
Starting air dryer pre-filter	N	NA	NNS	N	MS	D	
Starting air instrument distr. filter	N	NA	NNS	N	MS	D	
Lube oil suction strainer	Y	NA	NA	Y-B	MS	D	

TABLE 3.2-1 (Sheet 15)

CLASSIFICATIONS OF STRUCTURES, COMPONENTS, AND SYSTEMS (14)

System/Component	Seismic Category I (1)	Quality Group Classification (2)	ANS Safety Class (3)	Quality Assurance (4)	Principal Construction Codes and Standards (5)	Location (6)	Remarks
Engine driven fuel oil pump	Y	(Note 18)	NA	Y-B	MS	D	
Engine driven intercooler pump	Y	(Note 18)	NA	Y-B	MS	D	
Engine driven jacket water pump	Y	(Note 18)	NA	Y-B	MS	D	
Engine driven lube oil pump	Y	(Note 18)	NA	Y-B	MS	D	
Engine driven rocker lube pump	Y	(Note 18)	NA	Y-B	MS	D	
Ejector	Y	(Note 18)	NA	Y-B	MS	D	
Rocker reservoir tank	Y	(Note 18)	NA	Y-B	MS	D	
Fuel rack supply air tank	Y	C	3	Y-B	III-3	D	
Starting air pulsation dampener	N	NA	NNS	N	MS	D	
Lube oil filter	Y	C	3	Y-B	III-3	D	
Starting air tanks	Y	C	3	Y-B	III-3	D	
Jacket water heat exchanger	Y	C	3	Y-B	III-3	D	
Jacket water expansion tank	Y	C	3	Y-B	III-3	D	
Keep-warm jacket water pump	Y	C	3	Y-B	III-3	D	
Intake air filter	Y	(Note 18)	NA	Y-B	MS	D	
Intake air silencer	Y	(Note 18)	NA	Y-B	MS	D	
Exhaust silencer	Y	(Note 18)	NA	Y-B	MS	D	
Engine/generator control panels	Y	NA	NA	Y-B	MS	D	
Intercooler water heat exchanger	Y	C	3	Y-B	III-3	D	
Interconnecting piping	Y	C	3	Y-B	III-3	D	
Fuel oil strainer	Y	C	3	Y-B	III-3	D	
Auxiliary lube oil tank	Y	C	3	Y-B	III-3	D	
Jacket water (keepwarm) heater	Y	C	3	Y-B	III-3	D	
Engine gauge panel	Y	NA	NA	Y-B	MS	D	
Starting air compressor	N	NA	NNS	N	MS	D	
Starting air dryer	N	NA	NNS	N	MS	D	
Standby diesel engine	Y	(Note 19)	NA	Y-B	MS	D	
Piping/valves	Y	C	3	Y-B	III-3	D	
Piping/valves	N	D	NNS	N	B31.1	D	
6.3 Emergency Fuel Oil System (Figure 9.5.4-1)							
Emergency fuel oil storage tank	Y	C	3	Y-B	III-3	O	
Emergency fuel oil transfer pump	Y	C	3	Y-B	III-3	O	Class 1E power supply
Emergency fuel oil day tank	Y	C	3	Y-B	III-3	D	
Emergency fuel oil strainers	Y	C	3	Y-B	III-3	D	
Piping/valves	Y	C	3	Y-B	III-3	D/O	
Piping/valves	N	D	NNS	N	B31.1	D/O	

TABLE 3.2-1 (Sheet 16)

CLASSIFICATIONS OF STRUCTURES, COMPONENTS, AND SYSTEMS (14)

	System/Component	Seismic Category I (1)	Quality Group Classification (2)	ANS Safety Class (3)	Quality Assurance (4)	Principal Construction Codes and Standards (5)	Location (6)	Remarks
6.4	Compressed Air (Figure 9.3-1)							
	Instrument air compressors	N	D	NNS	N	NA	T	
	Air receivers	N	D	NNS	N	VIII	T	
	Emergency accumulators	Y	C	3	Y-B	III-3	A	
	Piping/valves	Y	C	3	Y-B	III-3	A	
	Piping/valves	N	D	NNS	N	B31.1	A/B/C/D/F/O/R/T	
6.5	Service Gases (Figure 9.3-9)	N	D	NNS	N	NA		
6.6	Fire Protection (Figure 9.5.1-1)							
	Standpipes, headers, and valves	N	NA	NNS	N	NFPA	A/B/C/D/F/O/R/T	
	Sprinkler systems, halogenated extinguishing systems, hose racks, portable extinguishers	N	NA	NA	N	NFPA/UL/ANI/FM	A/B/C/D/F/O/R/T	
	Fire detection and alarm system	N	NA	NA	N	NFPA/UL/ANI/FM	A/B/C/D/F/O/R/T	
	Main control room fire protection system annunciator and control panel	N	NA	NA	N	MS	B	
	Fire pumps	N	NA	NNS	N	NFPA	I	Non-Class 1E 1 motor driven, 1 diesel
	Piping/valves	Y	NA	NNS	N	NFPA	D3	
6.7	Floor and Equipment Drainage System (Figure 9.3-5)							
	General piping, pumps, and sumps	N	NA	NA	N	B31.1	A/B/C/D/F/R/T	
	Auxiliary building isolation valves	Y	C	3	Y-B	III-3	A	
6.8	Nuclear Sampling System (Figure 9.3-23, 18.2-15)							
	Nuclear sampling panels	N	D	NNS	N	MS	A/R	
	Piping/valves	Y	B	2	Y-B	III-2	A/C	
	Piping/valves	N	NA	NNS	N	B31.1	A/C	
6.9	Process Sampling System (Figure 9.3-4)							
	Process sampling panels	N	D	NNS	N	MS	T	

TABLE 3.2-1 (Sheet 17)

CLASSIFICATIONS OF STRUCTURES, COMPONENTS, AND SYSTEMS (14)

System/Component	Seismic Category I (1)	Quality Group Classification (2)	ANS Safety Class (3)	Quality Assurance (4)	Principal Construction Codes and Standards (5)	Location (6)	Remarks
7.0 HEATING, VENTILATING, AND AIR CONDITIONING							
7.1 Control Building							
7.1.1 Control Room Air Conditioning System (Figure 9.4-1)							
Control room air conditioning unit							
Unit	Y	NA	3	Y-B	MS, NEMA (Motor)		B Class 1E power supply
Condenser	Y	C	3	Y-B	III-3 (water Side) VIII, Div 1, (refrigerant side)	A	
Control room filtration system absorber train	Y	NA	3	Y-B	ANSI	A	
Control room filtration fan							
Fan	Y	NA	3	Y-B	MS	A	
Motor	Y	NA	3	Y-B	NEMA	A	Class 1E power supply
Control room pressurization system absorber train							
Unit	Y	NA	3	Y-B	ANSI	A	
Motor	Y	NA	3	Y-B	UL	A	Class 1E power supply
Control room pressurization fan							
Fan	Y	NA	3	Y-B	MS	A	
Motor	Y	NA	3	Y-B	NEMA	A	Class 1E power supply
Ductwork/dampers	Y	NA	3	Y-B	See Section 9.4.1	A	
7.1.2 Class 1E Electrical Equipment Air Conditioning System (Figure 9.4-1)							
Class 1E electric equipment Air conditioning System							
Unit	Y	NA	3	Y-B	IEEE-323	B	Class 1E power supply
Condenser	Y	NA	3	Y-B	III-3 (water side), VIII Div 1, (refrigerant side)	B	
Ductwork/Dampers	Y	NA	3	Y-B	MS, NEMA (Motor) (See Section 9.4.1)	B	
Recirculation fan System	Y	NA	3	Y-B	IEEE-323, NEMA (motor)	B	Class 1E power supply
7.1.3 Balance of Control Building HVAC Equipment (Figure 9.4-1)							
Ductwork/dampers	Y	NA	3	Y-B	See Section 9.4.1	B	Control building isolation
Unit heaters & duct heaters	N	NA	NNS	N	UL	B	Non-class 1E power supply
Fans & fan motors	N	NA	NNS	N	NEMA (Motor) MS (Fan)	B	Non-class 1E power supply
Fan coil units	N	NA	NNS	N	MS	B	Non-class 1E power supply
Booster coils	N	NA	NNS	N	MS	B	Non-class 1E power supply

TABLE 3.2-1 (Sheet 18)

CLASSIFICATIONS OF STRUCTURES, COMPONENTS, AND SYSTEMS (14)

System/Component	Seismic Category I (1)	Quality Group Classification (2)	ANS Safety Class (3)	Quality Assurance (4)	Principal Construction Codes and Standards (5)	Location (6)	Remarks
Supply air units	N	NA	NNS	N	MS, NEMA	B	Non-class 1E power supply
Cooling coils	N	NA	NNS	N	MS	B	Non-class 1E power supply
Ductwork/dampers	N	NA	NNS	N	See Section 9.4.1	B	
7.2 Fuel Building (Figure 9.4-2)							
7.2.1 Emergency Exhaust System							
Emergency exhaust fan	Y	NA	3	Y-B	MS	F	
Emergency exhaust fan motor	Y	NA	3	Y-B	IEEE 323	F	Class 1E power supply
Emergency exhaust charcoal adsorber train	Y	NA	3	Y-B	R.G.1.52	F	
Emergency exhaust electric heater	Y	NA	3	Y-B	IEEE 323	F	Class 1E power supply
Ductwork/dampers	Y	NA	3	Y-B	See Section 9.4.2	F	
7.2.2 Pump Room Coolers							
Pump room cooler							
Unit	Y	NA	3	Y-B	MS	F	
Motor	Y	NA	3	Y-B	NEMA	F	Class 1E power supply
Coil	Y	C	3	Y-B	III-3	F	
7.2.3 Balance of Fuel Building HVAC Equipment							
Unit heaters	N	NA	NNS	N	MS, UL (Electrical only)	F	Non-class 1E power supply
Supply air units	N	NA	NNS	N	MS	F	Non-class 1E power supply
Heating coil units	N	NA	NNS	N	MS	F	Non-class 1E power supply
Cooling coils	N	NA	NNS	N	MS	F	Non-class 1E power supply
Ductwork/dampers	Y	NA	3	Y-B	See Section 9.4.2	F	Fuel building isolation
Ductwork/dampers	N	NA	NNS	N	See Section 9.4.2	F	
7.3 Auxiliary Building (Figure 9.4-3)							
Pump Room and Penetration Room Coolers							
Pump/penetration room cooler							
Unit	Y	NA	3	Y-B	MS	A	
Motor	Y	NA	3	Y-B	IEEE-323	A	Class 1E power supply
Coil	Y	C	3	Y-B	III-3	A	

TABLE 3.2-1 (Sheet 19)

CLASSIFICATIONS OF STRUCTURES, COMPONENTS, AND SYSTEMS (14)

System/Component	Seismic Category I (1)	Quality Group Classifi-cation (2)	ANS Safety Class (3)	Quality Assurance (4)	Principal Construction Codes and Standards (5)	Location (6)	Remarks
7.3.2 Balance of Auxiliary Building HVAC Equipment							
Fans & fan motors	N	NA	NNS	N	MS (Fans)	A	Non-class 1E power supply
Unit heaters & duct heaters	N	NA	NNS	N	MS, UL (Electrical)	A	Non-class 1E power supply
Filter adsorber units	N	NA	NNS	N	ANSI	A	Non-class 1E power supply
Supply air units	N	NA	NNS	N	MS	A	Non-class 1E power supply
Fan coil units	N	NA	NNS	N	MS	A	Non-class 1E power supply
Exhaust scrubbers	N	NA	NNS	N	MS	A	Non-class 1E power supply
Ductwork/dampers	Y	NA	3	Y-B	See Section 9.4.3	A	Auxiliary building isolation
Ductwork/dampers	N	NA	NNS	N	See Section 9.4.3	A	
7.4 Diesel Generator Building Ventilation System (Figure 9.4-7)							
Diesel generator building ventilation fan							
Fan	Y	NA	3	Y-B	MS	D	
Motor	Y	NA	3	Y-B	IEEE-323	D	Class 1E power supply
7.5 Auxiliary, Fuel, Radwaste, Turbine Buildings, Access Control Exhaust HVAC, and Containment Purge (Figures 9.4-1, 9.4-2, 9.4-3, 9.4-4, 9.4-5, 9.4-6)							
Exhaust fans	N	NA	NNS	N	NA	A	
Supply fan	N	NA	NNS	N	NA	A	
Filter units	N	NA	NNS	N	NA	A	
Recirculation units	N	NA	NNS	N	NA	A	
Unit heater	N	NA	NNS	N	NA	A	
7.6 Essential Service Water Pump House HVAC (Figure 9.4-8)							
Unit heaters	N	NA	NNS	N	MS	E/O	Non-class 1E power supply
Essential service water pump house fan							
Fan	Y	NA	3	Y-B	MS	E	
Motor	Y	NA	3	Y-B	IEEE 323	E	Class 1E power supply
Ductwork/dampers	Y	NA	3	Y-B	See Section 9.4.8	E/O	

TABLE 3.2-1 (Sheet 20)

CLASSIFICATIONS OF STRUCTURES, COMPONENTS, AND SYSTEMS (14)

System/Component	Seismic Category I (1)	Quality Group Classifi-cation (2)	ANS Safety Class (3)	Quality Assurance (4)	Principal Construction Codes and Standards (5)	Location (6)	Remarks
7.7 Containment Purge System HVAC (Figure 9.4-6)							
Supply air units	N	NA	NNS	N	MS	A	Non-class 1E power supply
Fans & fan motors	N	NA	NNS	N	NEMA (motors) MS (fans)	A	Non-class 1E power supply
Filter adsorbers unit	N	NA	NNS	N	ANSI	A	
Ductwork/dampers	Y	NA	3	Y-B	See Section 9.4.6	A	Auxiliary building isolation adiati-monitor mounting
Ductwork/dampers	N	NA	NNS	N	See Section 9.4.6	A/C	
7.8 Miscellaneous Building HVAC (Figure 9.4-3)							
Fans & fan motors	N	NA	NNS	N	NEMA (motors) MS (fans)	A/C	
Supply air unit	N	NA	NNS	N	MS	A	
Unit heaters & duct heaters	N	NA	NNS	N	MS UL (Electrical only)		A/C/O/R
Ductwork/dampers	Y	NA	3	Y-B	See Section 9.4.3	A	Auxiliary building isolation
Ductwork/dampers	N	NA	NNS	N	See Section 9.4.3	A/C	
7.9 ESW Vertical Loop Chase Ductwork/Dampers	N	NA	NNS	N	See Section 9.4.11		V
Unit heaters	N	NA	NNS	N	MS UL (Electrical only)		
8.0 CIVIL/ARCHITECTURAL							
8.1 Structures and Buildings							
Reactor building	Y	NA	2	Y-B	BC-TOP-5A, III/MC AISC	C	
Refueling pool and other internal RB structures	Y	NA	NA	Y-B	ACI-318-71 AISC	C	
Control building	Y	NA	NA	Y-B	ACI 318-71 AISC	B	
Auxiliary building	Y	NA	NA	Y-B	ACI 318-71 AISC	A	
Fuel building	Y	NA	NA	Y-B	ACI 318-71 AISC	F	
Fuel storage pool	Y	NA	NA	Y-B	ACI 318-71	F	
Radwaste building	D	NA	NA	N	ACI 318-71 AISC	R	
Solid radwaste storage warehouse	N	NA	NA	N	NA	O	
Turbine building	N	NA	NA	N	ACI 318-71 AISC UBC-1973	T	
Mixed Waste Storage (Owens Corning)	N	NA	NA	N	NA		
Station Blackout Diesel Generator Missile Barrier	N	NA	NA	N	IBC - 2006 ACI 318-05 AISC	0	

TABLE 3.2-1 (Sheet 21)

CLASSIFICATIONS OF STRUCTURES, COMPONENTS, AND SYSTEMS (14)

System/Component	Seismic Category I (1)	Quality Group Classification (2)	ANS Safety Class (3)	Quality Assurance (4)	Principal Construction Codes and Standards (5)	Location (6)	Remarks
Essential service water system pumphouse	Y	NA	NA	Y-B	ACI 318-71 AISC	O	
Essential service water system electrical duct banks and manholes	Y	NA	NA	Y-B	ACI 318-71	O	
Essential service water system caissons	Y	NA	NA	Y-B	ACI 318-71 AISC	O	
Essential service water system access vaults	Y	NA	NA	Y	ACI 318-71	0	
Moveable tornado missile barriers	Y	NA	NA	Y-B	ACI 318-71 AISC	O/T	
Site drainage (13)	N	NA	NA	N	NA	O	
Essential service water system discharge point	N	NA	NA	N	NA	O	
Diesel generator building	Y	NA	NA	Y-B	ACI 318-71 AISC	D	
Supports and foundations for all non-NSSS Category I equipment and tanks	Y	NA	NA	Y-B	ACI 318-71 AISC	A/B/C/D/ F/1/O	
Refueling water storage tank	Y	B	2	Y-B	III-2	O	
Access vault for emergency fuel oil tank	Y	NA	NA	Y-B	ACI 318-71 AISC	O	
ESW Vertical Loop Chase	Y	NA	NA	Y	ACI 318-71-AISC	V	
8.2 Materials for Category I Structures							
Containment liner plate	Y	NA	NA	Y-B	III - MC VIII	C	Refer to Sections 3.8.1 and 3.8.2 for additional information
Containment personnel and equipment hatches	Y	NA	NA	Y-B	III - MC	C	
Watertight doors	Y	NA	NA	Y-B	NA	A	
Pipe whip restraints	Y	NA	NA	Y-B	NA		
Missile resistant doors	Y	NA	NA	Y-B	NA		
Pressure resistant doors	Y	NA	NA	Y-B	NA		
Bullet resistant doors	Y	NA	NA	N	NA		
Water stops	N	NA	NA	N	NA	C/A	
Pool liner plate and gates	N	NA	NA	N	NA	C/F	
Radiation shielding doors	Y	NA	NA	N	NA		

TABLE 3.2-1 (Sheet 22)

CLASSIFICATIONS OF STRUCTURES, COMPONENTS, AND SYSTEMS (14)

	System/Component	Seismic Category I (1)	Quality Group Classification (2)	ANS Safety Class (3)	Quality Assurance (4)	Principal Construction Codes and Standards (5)	Location (6)	Remarks
9.0	CONTROL AND INSTRUMENTATION (Table 7.1-1)							See Note 14
	BOP engineered safety features actuation system	Y	NA	NA	Y-B	IEEE 279	B	
	NSSS engineering safety features actuation and reactor protection system	Y	NA	NA	Y-W3	IEEE 279	A/B/C	
	Reactor control system	N	NA	NA	N	CH-7	A/C	
	Postaccident containment radiation monitors and safety-related airborne radiation monitors	Y	NA	NA	Y-B	CH-7	F/A/B	
	Excore neutron monitoring system Excore neutron monitor	N	NA	NA	N-O	CH-7		
	Postaccident monitoring system	Y	NA	NA	Y-W3	CH-7	A/B/C/F	
	Main control board	Y	NA	NA	Y-B/W3	CH-7	B	
	Safety-related auxiliary control panels	Y	NA	NA	Y-B/W3	CH-7		
	Instrument piping, tubing, fittings, and valves that are connected to quality group Class A or B process systems (9) (10)	Y	B	2	Y-B	III-2	C/A	
	Instrument piping, tubing, fittings, and valves that are connected to safety Class 3 process systems (10)	Y	C	3	Y-B	III-3	A/B/C/D/F	
	Instrument piping, tubing, fittings, and valves that are connected to NNS process systems	N	D	NNS	N	B31.1	A/B/C/D/F/I/O/R/T	
10.0	ELECTRICAL POWER SYSTEMS							
10.1	Class 1E Lower Medium Voltage System							
	Metal-clad switchgear 4.16 kV	Y	NA	NA	Y-B	IEEE-308, 336	C	
	5 kV power cable	Y	NA	NA	Y-B	IEEE-308, 336	C/A/D/I	
	Large induction motors, 250 hp and larger	Y	NA	NA	Y-B	IEEE-308, 336, NEMA MG-1	A/I	

TABLE 3.2-1 (Sheet 23)

CLASSIFICATIONS OF STRUCTURES, COMPONENTS, AND SYSTEMS (14)

System/Component	Seismic Category I (1)	Quality Group Classification (2)	ANS Safety Class (3)	Quality Assurance (4)	Principal Construction Codes and Standards (5)	Location (6)	Remarks
10.2 Class 1E Low Voltage System							
Load center unit substations	Y	NA	NA	Y-B	IEEE-308, 336	C/A/I	
Motor control centers	Y	NA	NA	Y-B	IEEE-308, 336	C/A/D/I	
600 Volt power and control cable	Y	NA	NA	Y-B	IEEE-308, 336	A/C/D/F/ I/R	
Integral and fractional hp induction motors	Y	NA	NA	Y-B	IEEE-308, 336, 344 NEMA MG-1	A/C/D/F/ I/R	
600 Volt fire-resistive power and control cable	Y	NA	NA	N	IEEE-344	A/B/D/E/F I/O/R/T/U	
10.3 Class 1E 125 V DC System							
Batteries and battery charger	Y	NA	NA	Y-B	IEEE-308, 336	C	
DC distribution panels	Y	NA	NA	Y-B	IEEE-308, 336	C	
Emergency lighting dc	Y	NA	NA	Y-B	MS	C	
10.4 Class 1E Instrument AC Power							
Vital ac power supply	Y	NA	NA	Y-B	IEEE-308, 336	C	
120 V ac vital panels	Y	NA	NA	Y-B	IEEE-308, 336	C	
600 V instrument cable	Y	NA	NA	Y-B	IEEE-308, 336	A/C/D/ F/I	
10.5 Reactor Building Cable Penetrations	Y	B	2	Y-B	IEEE-317, 336	A/C	
10.6 Conduit Supports and Tray Supports	Y	NA	NA	Y-B	ASTM	All	
10.7 Raceway Installation	Y	NA	NA	Y-B	IEEE-336	All	
10.8 Load Shedding and Emergency Load Sequencing	Y	NA	NA	Y-B	IEEE-308, 336	C	
10.9 Auxiliary Relay Racks	Y	NA	NA	Y-B	ICEA, NEMA IEEE-336	A/C	
10.10 Transformers							
Essential service water	Y	NA	NA	Y-B	IEEE-308	I	
Regulating	Y	NA	NA	Y-B	IEEE-308	C	
10.11 Status Indicating Systems	Y	NA	NA	Y-B/W3	IEEE-308, 336	C	
10.12 Local Control Stations	Y	NA	NA	Y-B	IEEE-308, 336	A/D/F	

NOTES TO TABLE 3.2-1

(1) Y - Component is functionally and structurally designed and constructed to meet seismic Category I requirements, as defined in Regulatory Guide 1.29.

S - Category I for structural integrity only.

N - Component is non-Category I. Component is seismically designed and constructed if position C.2 of Regulatory Guide 1.29 applies per Table 3.2-3.

D - Designed and constructed to seismic requirements given in Regulatory Guide 1.143.

(2) A, B, C, D, D(A) - Quality group classification as defined in Regulatory Guide 1.26.
NA - Not applicable to safety classification. Design requirements for components and piping associated with the Quality Group D(A) portions of this system which contain radioactive fluid are augmented by Note 1 of Table 3.2-2.

(3) 1, 2, 3, NNS - Safety classifications as defined in ANSI N18.2. Except for the deviation described in section 3.2.3.
NA - Not applicable to safety classification.

(4) Quality Assurance Program

All components with Y indicate that the component is subject to utility Quality Assurance Program during plant operation.

Y-B Component was subject to the Bechtel Q-listed Quality Assurance Program during design and construction.

Y-U Component was subject to the utility Q-listed Quality Assurance Program during design and construction.

Y-W1 Component was subject to "Quality Control System Requirements," Westinghouse QCS-1 during design and construction.

Y-W2 Component was subject to "Quality Requirements for Manufacture of Nuclear Plant Equipment," Westinghouse QCS-2 during design and construction.

Y-W3 Component was subject to the quality assurance program of one of the Westinghouse manufacturing divisions during design and construction.

N Component was subject to the requirements of applicable codes and standards and the manufacturer's standard quality assurance program during design and construction.

Y-A Component was subject to the quality assurance program of ABB-Combustion Engineering Nuclear Services during design and construction.

(5) The principal construction codes and standards are identified as:

I:	ASME Boiler and Pressure Vessel Code, Section I
III and 1, 2, 3, MC,NG:	ASME Boiler and Pressure Vessel Code, Section III, Division 1, Class 1, 2, 3, MC, or NG
VIII:	ASME Boiler and Pressure Vessel Code, Section VIII, Division 1

NOTES TO TABLE 3.2-1 (Sheet 2)

B31.1	ANSI B31.1, Code for Power Piping
TEMA C, R	Tubular Exchanger Manufacturers Association, Class C or Class R
IEEE-279:	Institute of Electrical and Electronics Engineers, Criteria for Protection Systems for Nuclear Power Generating Stations - 1971
IEEE-308:	Institute of Electrical and Electronics Engineers, Standard Criteria for Class IE Power Systems for Nuclear Power Generating Stations - 1974
IEEE-317:	Institute of Electrical and Electronics Engineers, Standard for Electric Penetration Assemblies in Containment Structures for Nuclear Power Generating Stations - 1976, 1983
IEEE-323:	Institute of Electrical and Electronics Engineers, Standard for Qualifying Class IE Equipment for Nuclear Power Generating Stations - 1974
IEEE-334:	Institute of Electrical and Electronics Engineers, Standard for Type Tests of Continuous Duty Class IE Motors for Nuclear Power Generating Stations - 1974
IEEE-344:	Institute of Electrical and Electronics Engineers, Recommended Practices for Seismic Qualification of Class IE Equipment for Nuclear Power Generating Stations - 1975, 1987
IEEE-336:	Institute of Electrical and Electronics Engineers, Installation, Inspection, and Testing Requirements for Instrumentation and Electric Equipment During the Construction of Nuclear Power Generating Stations - 1971
IEEE-383:	Institute of Electrical and Electronics Engineers, Standard for Type Test of Class IE Electric Cables, Field Splices, and Connections for Nuclear Power Generating Stations - 1974, 1983
NFPA:	National Fire Protection Association
ANI:	American Nuclear Insurers
ARI:	Air Conditioning and Refrigeration Institute
ACI 318-71:	American Concrete Institute, Building Code Requirements for Reinforced Concrete
UBC-1973:	Uniform Building Code (state and/or local building codes may be substituted where they supersede UBC-1973)
ICEA:	Insulated Cable Engineers Association
ASTM:	American Society for Testing and Materials
ANSI:	American National Standards Institute
NEC:	National Electric Code

NOTES TO TABLE 3.2-1 (Sheet 3)

AISC:	American Institute of Steel Construction, Specifications for the Design, Fabrication, and Erection of Structural Steel for Buildings, 7th Edition, adopted February 12, 1969, and Supplement Numbers 1, 2, and 3
BC-TOP-5-A:	Prestressed Concrete Nuclear Reactor Containment Structures, Revision 3
NEMA:	National Electrical Manufacturers Association
UL:	Underwriters' Laboratories, Inc.
FM:	Factory Mutual
NA:	Design requirements specified by designer with appropriate consideration of the intended service and operating conditions
API 650:	American Petroleum Institute, Welded Steel Tanks for Oil Storage - Atmospheric Tanks
MS:	Manufacturer's Standard
CH-7:	Refer to Chapter 7

(6) Location:

A. Auxiliary building

B. Control building

C. Reactor building

D. Diesel generator building

E. Essential service water pumphouse

F. Fuel building

I. Intake structure

O. Outdoors onsite

R. Radwaste building

T. Turbine building

U. Fire pumphouse

V. ESW Vertical Loop Chase

NOTES TO TABLE 3.2-1 (Sheet 4)

(7) Table indicates the required code based on its safety-related importance as dictated by service and functional requirements and by the consequences of their failure. Note that the actual equipment may be supplied to a higher principal construction code than required.

(8) Access for inspection and test required. However, no formal quality program approval is required.

(9) A 3/8-inch restriction is provided for all instrument connections to Quality Group A liquid piping to change the instrument piping Quality Group classification from A to B. A 3/4 instrument connection is used on Quality Group A piping connected to pressurizer steam space to change the instrument piping quality group classification from A to B as described in section 5.2.1.1.

(10) Requirements of ASME Boiler and Pressure Vessel Code Section III are met, except that the instrument sensing line between the instrument shutoff valve and the instrument is not hydrostatically tested. The instrument sensing line between the process tap and the instrument shutoff valve will be hydrostatically tested in accordance with the Code.

(11) Pressure boundary is Safety Class 1; heaters are electrically NNS.

(12) Safety-related instruments and controls are described in USAR Sections 7.1 to 7.6.

(13) The site drainage system consists of many components including roof drains, site storm drains, culverts and ditches for which no credit is taken in component roof loading or site flooding analyses. However, major modifications to Category I building roofs and the plant railroad spur, roads, and graded surfaces, which are in Zones 1 and 2 of Figure 2.4-3, will be evaluated to ensure that such modifications will not result in flooding of Category I structures.

(14) Almost all of the systems listed in Table 3.2-1 include instrumentation and control (I&C) devices. However, it is not the intent of Table 3.2-1 to address this type of detail. The addition of all instrumentation and control devices could triple the size of the listing, adding unnecessary detail that would tend to confuse instead of enhance the understanding of the table.

The electrical equipment qualification list (Appendix A of the NUREG-0588 Submittal) provides a detailed lising of all Class 1E powered I&C devices. These devices are included in each system that they serve (e.g. EG-FT-0108 is a flow transmitter in the component cooling water system [EG]). The I&C devices can be divided into two categories, NSSS and BOP supplied. Each type can be identified in the fourth column of Appendix A. The BOP supplied devices that are purchased by the Bechtel I&C Group have a specification number that begins with the letter "J" (e.g., J-301 for EG-FT-0108). The NSSS supplied devices are identified in the fourth column by the respective Westinghouse number EQDP number (e.g., ESE-4). Classification of power supplies, motors, piping and valves, ductwork and dampers and associated supports, hangers and restraints are not delineated in Table 3.2-1 because of the extensive listing required. Their classification is consistent with the boundaries shown on the Piping and Instrumentation Diagrams.

(15) Vents, drains, test connections, ect., only.

(16) Deleted

(17) The Lube Oil Level Control Tank was fabricated by the manufacturer under a Quality Assurance Program per ASME and is constructed of ASME material. The tank has a rectangular configuration not covered by ASME, but the tank is essentially atmospheric and not pressure retaining.

(18) Component is supplied with the standard diesel engine as an integral part of the engine or whose design and reliability have been proven through years of previous diesel engine service. The standards used in design, manufacture, and inspection are the manufacturer's standards, developed by the manufacturer's manufacturing and testing experience. The design is considered equivalent to ASME Section III Class 3 requirements with regard to functional operability and inservice reliability.

NOTES TO TABLE 3.2-1 (Sheet 5)

(19) The diesel engine and the engine-mounted and separately skid-mounted portions of the auxiliary support systems piping and components normally furnished with the diesel generator package are designed to the guidelines of the Diesel Engine Manufacturers Association (DEMA) standards. The diesel engine and its mounted auxiliary support systems piping and components also conform to the requirements of IEEE Standard 387-1977, "Standard Criteria for Diesel-Generator Units Applied as Standby Power Supplies for Nuclear Power Generating Stations, " which endorses the DEMA Standards, and Regulatory Guide 1.9. The diesel engine and its auxiliary support systems meet the quality control requirements of 10 CFR 50, Appendix B.

(20) The component design and reliability has been proven through years of previous service. The standards used in design, manufacture and inspection are the manufacturer's standards developed by manufacturing and testing experience. The design meets seismic category I requirements and is equivalent to the originally supplied ASME Section III component.

(21) Equipment is no longer in service.

TABLE 3.2-2

CODE REQUIREMENTS FOR COMPONENTS AND QUALITY GROUPS

QUALITY GROUPS

Component	A	B	C	D(1)
Pressure vessels	ASME B & PV Code Section III, Class 1	ASME B & PV Code Section III, Class 2	ASME B & PV Code Section III, Class 3	ASME B & PV Code Section VIII, Div. 1 or 2, or Section I
Reactor containment pressure vessels (steel)	--	ASME B & PV Code Section III, Class MC	--	--
Pumps	ASME B & PV Code Section III, Class 1	ASME B & PV Code Section III, Class 2	ASME B & PV Code Section III, Class 3	Manufacturer's Standard2
Valves	ASME B & PV Code Section III, Class 1	ASME B & PV Code Section III, Class 2	ASME B & PV Code Section III, Class 3	ANSI B31.1.0 Power Piping
Piping	ASME B & PV Code Section III, Class 1	ASME B & PV Code Section III, Class 2	ASME B & PV Code Section III, Class 3	ANSI B31.1.0 Power Piping
0-15 psig storage tanks	--	ASME B & PV Code Section III, Class 2	ASME B & PV Code Section III, Class 3	API-620 or or equivalent
Atmospheric storage	--	ASME B & PV Code Section III, Class 2	ASME B & PV Code Section III, Class 3	API-650 or API-620 or equivalent (Section III for stainless steel)2
Heat exchangers	ASME B & PV Code Section III, Class 1 and TEMA "R"	ASME B & PV Code Section III, Class 2 and TEMA "R"	ASME B & PV Code Section III, Class 3 and TEMA "R"	ASME B & PV Code Section VIII, Div. 1 and TEMA "C"

1. Construction of portions of systems identified by as D(A) Note 2 of Table 3.2-1 use the following augmenting criteria, to the maximum extent possible:

   a. Welded construction. Flanged jointed or suitable rapid disconnect fittings are used only where dictated by maintenance or operational requirements.

   b. Process lines 2-1/2 inches nominal pipe size or above are butt welded (no backing rings are used on resin or evaporator bottom lines). Process lines 2 inches or smaller are socket welded. Instrumentation lines are not considered process lines, and screwed connections may be used. Manual valves are butt welded, except where flanges are dictated.

TABLE 3.2-2 (Sheet 2)

c. Material used for construction of pressure-retaining components, primarily carbon steel or austenitic stainless steel, complies with applicable sections of the codes and standards for quality group D. Malleable wrought or cast iron materials and plastic piping are not used. Manufacturer's material certification of compliance is required.

d. All welding constituting the pressure boundary of pressure-retaining components is performed by qualified welders employing qualified welding procedures per ASME Code Section IX.

e. High quality non-metallic hoses are used to connect vendor supplied liquid radwaste processing mobile skids to the liquid radwaste system.

2. No ASME code stamp is required.

TABLE 3.2-3
DESIGN COMPARISON TO REGULATORY
POSITIONS OF REGULATORY GUIDE 1.29
REVISION 3, DATED SEPTEMBER 1978, TITLED
SEISMIC DESIGN CLASSIFICATION

This comparison is presented for the BOP portion of the design. Refer to Appendix 3A for the Westinghouse discussion.

Regulatory Guide 1.29 Position	WCGS
1. The following structures, systems, and components of a nuclear power plant, including their foundations and supports, are designated as Seismic Category I and should be designed to withstand the effects of the SSE and remain functional. The pertinent quality assurance requirements of Appendix B to 10 CFR Part 50 should be applied to all activities affecting the safety-related functions of these structures, systems, and components.	1. All plant items which are necessary to cope with a LOCA, secondary side break inside containment, or to shut the plant down safely following an SSE in the absence of a LOCA are designed for the SSE. There are, however, some plant items not required following an SSE but which are required to cope with other natural phenomena. For example, a plant item which is required to function only during or following a tornado in order to achieve a safe shutdown must be considered to perform a safety function, but the design of the item for an SSE is unnecessary. Further, there are plant items which serve to mitigate the consequence of certain in-plant occurrences (other than LOCA) which are not considered to occur simultaneously with an SSE. Examples of the latter occurrences are fuel handling or spent fuel cask accidents and loss of control room habitability. Thus, certain items not listed in Regulatory Guide 1.29

TABLE 3.2-3 (Sheet 2)

Regulatory Guide 1.29 Position	WCGS
	are considered to serve a safety function and subject to quality assurance coverage in accordance with 10 CFR Part 50, Appendix B. Table 3.2-1 itemizes those safety-related structures, systems, and components which are designed for a safe shutdown earthquake.
a. The reactor coolant pressure boundary.	a. Complies.
b. The reactor core and reactor vessel internals.	b. Complies.
c. Systems[1] or portions of systems that are required for (1) emergency core cooling, (2) postaccident containment heat removal, or (3) postaccident containment atmosphere cleanup (e.g., hydrogen removal system).	c. Complies. See Item 2 below.
d. Systems[1] or portions of systems that are required for (1) reactor shutdown, (2) residual heat removal, or (3) cooling the spent fuel storage pool.	d. Complies. See Item 2 below.
e. Those portions of the steam systems of boiling water reactors. . .	e. Not applicable to WCGS.
f. Those portions of the steam and feedwater systems of pressurized water reactors extending from and including the secondary side of steam	f. Complies with the exception that the words "or remote manual" are considered to be inserted after the word "automatic." This option is

TABLE 3.2-3 (Sheet 3)

Regulatory Guide 1.29 Position	WCGS
generators up to and including the outermost containment isolation valves, and connected piping of 2-1/2 inches or larger nominal pipe size up to and including the first valve (including a safety or relief valve) that is either normally closed or capable of automatic closure during all modes of normal reactor operation.	included to avoid an unnecessary complication (leading to decreased plant reliability) in the line which is not normally provided with automatic closing valves. Note that valves in lines emanating from the steam generator are for secondary side isolation, not containment isolation.
g. Cooling water, component cooling, and auxiliary feedwater systems[1] or portions of these systems, including the intake structures, that are required for (1) emergency core cooling, (2) postaccident containment heat removal, (3) postaccident containment atmosphere cleanup, (4) residual heat removal from the reactor, or (5) cooling the spent fuel storage pool.	g. Complies.
h. Cooling water and seal water systems1 or portions of these systems that are required for functioning of reactor coolant system components important to safety, such as reactor coolant pumps.	h. Complies.

TABLE 3.2-3 (Sheet 4)

Regulatory Guide 1.29 Position	WCGS
i. Systems[1] or portions of systems that are required to supply fuel for emergency equipment.	i. Complies.
j. All electric and mechanical devices and circuitry between the process and the input terminals of the actuator systems involved in generating signals that initiate protective action.	j Complies.
k. Systems[1] or portions of systems that are required for (1) monitoring of systems important to safety and (2) actuation of systems important to safety.	k. Complies.
l. The spent fuel storage pool structure, including the fuel racks.	l. Complies, with the clarification that the pool liner plate and gates are not designated as seismic Category I. (See Section 9.1.2)
m. The reactivity control systems, e.g., control rods, control rod drives, and boron injection system.	m. Complies.
n. The control room, including its associated equipment needed to maintain the control room within safe habitability limits for personnel and safe environmental limits for vital equipment.	n. Complies.

TABLE 3.2-3 (Sheet 5)

Regulatory Guide 1.29 Position	WCGS
o. Primary and secondary reactor containment.	o. Complies. Note that the WCGS design does not incorporate a secondary containment.
p. Systems[1], other than radioactive waste management systems, not covered by items 1.a through 1.o above that contain radioactive material and whose postulated failure would result in conservatively calculated potential offsite doses (using meteorology as prescribed by Regulatory Guide 1.4, "Assumptions Used for Evaluating the Potential Radiological Consequences of a Loss-of-Coolant Accident for Pressurized Water Reactors") that are more than 0.5 rem to the whole body or its equivalent to any part of the body.	p. Complies. Note that Regulatory Guide 1.143 provides guidance on radioactive waste management systems and structural seismic design. Table 3.2-1 indicates those systems for which the D (Augmented) design criteria are applied. The dividing line value of 0.5 rem is inappropriate for the types of failures which the guide addresses. Quality Group D or D (Augmented) is applied to such systems unless their failure would result in offsite doses approaching the guide values of 10 CFR Part 100.
q. The Class IE electric systems, including the auxiliary systems for the onsite electric power supplies, that provide the emergency electric power needed for functioning of plant features included in items 1.a through 1.p above.	q. Complies; however in certain cases Class lE conduits are supported from non-Category I seismic walls. Although not Category I, these reinforced block walls are analyzed for SSE loads in accordance with position Z and are subject to the QA program described in Position 4.

TABLE 3.2-3 (Sheet 6)

Regulatory Guide 1.29 Position	WCGS
2. Those portions of structures, systems, or components whose continued function is not required but whose failure could reduce the functioning of any plant feature included in items 1.a through 1.q above to an unacceptable safety level or could result in incapacitating injury to occupants of the control room should be designed and constructed so that the SSE would not cause such failure.	2. Complies, including the following clarification: Those portions of structures, systems, or components whose continued function is not required but whose failure could reduce the functioning of any plant feature to an unacceptable level included in items 1.a through 1.q above, which is required for safe shutdown of the plant, following a DBA, are designed and constructed so that the SSE will not cause such a failure. Although LOCA or major natural phenomenon or DBE is not postulated to occur at the time of an SSE, in addition to those safety-related items required for post-accident safe shutdown all systems required to mitigate the consequences of LOCAs and secondary side breaks inside containment are protected from nonseismic items. Since tornadoes are not postulated to occur with an SSE, the contents of the boric acid tank room are not protected from adverse seismic interactions. This system is only relied upon following a tornado induced loss of the RWST. The system is designed in accordance with position 1.m above.

TABLE 3.2-3 (Sheet 7)

Regulatory Guide 1.29 Position	WCGS
	For these items, a quality program which includes identification, design, and installation is used to meet the intent of Paragraph C.4.
3. Seismic Category I design requirements should extend to the first seismic restraint beyond the defined boundaries. Those portions of structures, systems, or components that form interfaces between Seismic Category I features should be designed to Seismic Category I requirements.	3. Seismic Category I design analysis requirements are extended to the first seismic restraint beyond the defined boundaries. Since seismic analysis of a piping system requires division of the system into discrete segments terminated by fixed points, this means that the seismic analysis cannot be terminated at a seismic restraint, but is extended to include the interface piping out to the first point in the system which can be treated as an anchor to the plant structure. Inasmuch as the seismic analysis is based upon minimum material properties and documented system hydrostatic and performance tests are made, the nonsafety-related portion of the system (including supports) past the interface boundary valve is not seismic Category I and will not be Q-Listed.

TABLE 3.2-3 (Sheet 8)

Regulatory Guide 1.29 Position	WCGS
	For these items, a quality program which includes identification, design, and installation is used to meet the intent of Paragraph C.4.
4. The pertinent quality assurance requirements of Appendix B to 10 CFR Part 50 should be applied to all activities affecting the safety-related functions of those portions of structures, systems, and components covered under Regulatory Positions 2 and 3 above.	4. The items covered under Regulatory Positions 2 and 3 above are not considered to be seismic Category I and are not considered to be Q-listed. For these items, a quality assurance program is applied which is commensurate with the safety consideration involved. The following practices adequately meet the intended requirements: a. Design and design control for such items are carried out in the same manner as that for items which directly serve as a safety function. This includes the performance of appropriate design reviews. b. Design includes consideration of loads imposed during an SSE. c. Field work is performed under the direction of experienced field construction superintendents and is inspected under a QA program.

[1]The system boundary includes those portions of the system required to accomplish the specified safety function and connected piping up to and including the first valve (including a safety or relief valve) that is either normally closed or capable of automatic closure when the safety function is required.

TABLE 3.2-4

DESIGN COMPARISON TO REGULATORY GUIDE 1.26 REVISION 3, DATED FEBRUARY 1976, TITLED "QUALITY GROUP CLASSIFICATIONS AND STANDARDS FOR WATER-, STEAM-, AND RADIOACTIVE-WASTE CONTAINING COMPONENTS OF NUCLEAR POWER PLANTS"

Quality group classifications and standards for plant systems and components meet the intent of Regulatory Guide 1.26. However, certain clarifications and specific exceptions to the guide are necessary.

In Paragraphs A and B of the regulatory guide, there is a different usage of the term "important to safety" than that used elsewhere in the regulations and regulatory guides. The guide includes components which fall into quality group D under the definition of "important to safety," which implies that a quality assurance program in accordance with 10 CFR 50, Appendix B, should be applied. These quality assurance requirements are neither applied to quality group D components nor are they applied to quality group D (augmented) components. The definition of the term "important to safety," insofar as quality assurance (Appendix B) is concerned, is considered to be that which appears in the introduction of Regulatory Guide 1.29.

Regulatory Guide 1.26 establishes the quality group classification for steam and water containing components. However, the guidance is also used to establish the quality group classification of other systems. These systems are designed, fabricated, erected, and tested to quality standards commensurate with the safety function to be performed. Table 3.2-1 itemizes the classification for these systems and components. Section 3.9.3 discusses design for components not covered by the ASME Code. Below is a comparison of the WCGS design with each of the regulatory guide positions.

Regulatory Guide 1.26 Position	WCGS
1. The group B quality standards given in Table 1 of the guide should be applied to water and steam-containing pressure vessels, heat exchangers (other than turbines and condensers), storage tanks, piping, pumps, and valves that are either part of the reactor	1. Complies.

TABLE 3.2-4 (Sheet 2)

Regulatory Guide 1.26 Position	WCGS
coolant pressure boundary defined in Section 50.2(v) but excluded from the requirements of Section 50.55a pursuant to footnote 2 of that section or not part of the reactor coolant pressure boundary but part of:	
a. Systems or portions of systems important to safety that are designed for (1) emergency core cooling, (2) postaccident containment heat removal, or (3) postaccident fission product removal.	a. Complies.
b. Systems or portions of systems important to safety that are designed for (1) reactor shutdown or (2) residual heat removal.	b. Systems which perform the functions of reactor shutdown and residual heat removal are placed in Quality Group B, as indicated by the guide. This is limited to in clude only the minimum of those systems which must function in the performance of an orderly safe shutdown and maintenance of the plant in the safe (hot) shutdown condition. Those systems which may be used in the performance of a normal cold shutdown (such as the reactor coolant pumps) or incidentally in the removal of residual heat from the reactor [i.e., heat removal is not their prime function (such as portions of the CVCS)] are not placed in Quality Group B.

TABLE 3.2-4 (Sheet 3)

Regulatory Guide 1.26 Position	WCGS
c. Those portions of the steam systems of boiling water reactors...	c. Not applicable to WCGS.
d. Those portions of the steam and feedwater systems of pressurized water reactors extending from and including the secondary side of steam generators up to and including the outermost containment isolation valves and connected piping up to and including the first valve (including a safety or relief valve) that is either normally closed or capable of automatic closure during all modes of normal reactor operation.	d. Specific exceptions taken to placing portions of main steam and feedwater lines in quality group B are as follows: (1) The words "or remote manual" are considered to be inserted after the word "automatic." This option is included to avoid an unnecessary complication (leading to decreased plant reliability) in lines which would not normally be provided with automatic closing valves. (2) Note that valves in lines emanating from the steam generator are for secondary side isolation, not containment isolation.
e. Systems or portions of systems that are connected to the reactor coolant pressure boundary and are not capable of being isolated from the boundary during all modes of normal reactor operation by two valves, each of which is either normally closed or capable of automatic closure.	e. Complies.

TABLE 3.2-4 (Sheet 4)

Regulatory Guide 1.26 Position	WCGS
2. The group C quality standards given in Table 1 of the guide should be applied to water-, steam-, and radioactive-waste containing pressure vessels, heat exchangers (other than turbines and condensers), storage tanks, piping, pumps, and valves not part of the reactor coolant pressure boundary or included in quality group B but part of:	2. Complies as noted below.
a. Cooling water and auxiliary feedwater systems or portions of these systems important to safety that are designed for (1) emergency core cooling, (2) postaccident containment heat removal, (3) postaccident containment atmosphere cleanup, or (4) residual heat removal from the reactor and from the spent fuel storage pool (including primary and secondary cooling systems). Portions of these systems that are required for their safety functions and that (1) do not operate during any mode of normal reactor operation and (2) cannot be tested adequately should be classified as group B.	a. Complies.
b. Cooling water and seal water systems or portions of these systems important to safety that are designed for functioning of components and systems important to safety, such as reactor coolant pumps, diesels, and control room.	b. Complies.

TABLE 3.2-4 (Sheet 5)

Regulatory Guide 1.26 Position	WCGS
c. Systems or portions of systems that are connected to the reactor coolant pressure boundary and are capable of being isolated from that boundary during all modes of normal reactor operation by two valves, each of which is either normally closed or capable of automatic closure.	c. Complies.
d. Systems, other than radioactive waste management systems, not covered by items 2.a through 2.c above that contain radioactive material and whose postulated failure would result in conservatively calculated potential offsite doses (using meteorology as recommended by Regulatory Guide 1.4, "Assumptions Used for Evaluating the Potential Radiological Consequences of a Loss-of-Coolant Accident for Pressurized Water Reactors") that exceed 0.5 rem to the whole body or its equivalent to any part of the body. For those systems located in Seismic Category I structures, only single component failures need be assumed. However, no credit for automatic isolation from other components in the system or for treatment of released material should be taken unless the isolation or treatment capability is designed	d. Complies. Note that Regulatory Guide 1.143 provides guidance on radioactive waste management system design. Table 3.2-1 indicates those systems to which the D (Augmented) design criteria are applied. The dividing line value of 0.5 rem is inappropriate for the types of failures which the guide addresses. Quality Group D [or D (Augmented)] is applied to such systems unless their failure would result in offsite doses approaching the guideline values of 10 CFR Part 100. Radwaste systems, except for portions of the steam generator blowdown system located in the turbine building, are located within a seismically designed building as permitted by Regulatory Guide 1.143, and only single component failures are considered.

TABLE 3.2-4 (Sheet 6)

Regulatory Guide 1.26 Position	WCGS
to the appropriate seismic quality group standards and can withstand loss of offsite power and a single failure of an active component.	
3. The group D quality standards given in Table 1 of this guide should be applied to water- and steam-containing components not part of the reactor coolant pressure boundary or included in quality groups B or C but part of systems or portions of systems that contain or may contain radioactive material.	3. Complies. In addition, quality standards for D (Augmented) systems are consistent with Regulatory Guide 1.143.

TABLE 3.2-5

DESIGN COMPARISON TO REGULATORY GUIDE 1.143, FOR COMMENTS DATED JULY, 1978, TITLED "DESIGN GUIDANCE FOR RADIOACTIVE WASTE MANAGEMENT SYSTEMS, STRUCTURES, AND COMPONENTS INSTALLED IN LIGHT-WATER-COOLED NUCLEAR POWER PLANTS"

Design requirements of this regulatory guide are applied to components, systems, and structures which fall under the D (augmented) classification established by Regulatory Guide 1.26, position C.2.d and Regulatory Guide 1.29, Position C.1.p. The design requirements of this guide are therefore applied to the following systems or portions of systems:

a. Purification portion of CVCS

b. Boron thermal regeneration portion of CVCS

c. Boron recycle system

d. Liquid radwaste system

e. Gaseous radwaste system

f. Secondary liquid waste evaporator

g. Steam generator blowdown system

h. Solid radwaste system

The radioactive waste management systems are considered to begin at the interface valve(s) in each line from other systems provided for collecting wastes that may contain radioactive materials and to include related instrumentation and control systems. The radioactive waste management systems terminate at the point of controlled discharge to the environment, at the point of recycle back to storage for reuse in the reactor, or at the point of storage of packaged solid wastes prior to shipment offsite to a licensed burial ground. The steam generator blowdown system begins at, but does not include, the outermost isolation valve on the blowdown line, and terminates at the point of controlled discharge to the environment, at the point of interface with other liquid waste systems, or at the point of recycle back to the secondary systems.

TABLE 3.2-5 (Sheet 2)

Regulatory 1.143 Position	WCGS
1. Systems Handling Radioactive Materials in Liquids	
1.1 The liquid radwaste treatment system, including the steam generator blow-down system downstream of the second containment isolation valve, should meet the following criteria:	1.1 Applies to the systems identified above.
1.1.1 These systems should be designed and tested to requirements set forth in the codes and standards listed in Table 1, supplemented by the provisions in 1.1.2 and in regulatory position 4 of this guide.	1.1.1 Complies. See Table 3.2-2.
1.1.2 Materials for pressure-retaining components should conform to the requirements of the specifications for materials listed in Section II of the ASME Boiler and Pressure Vessel Code, except that malleable, wrought, or cast iron materials and plastic pipe should not be used. Materials should be compatible with the chemical, physical and radioactive environment of specific applications. Manufacturers' material certificates of compliance with material specifications, such as those contained in the codes referenced in Table 1, may be provided in lieu of certified material test reports.	1.1.2 Complies. Carbon steel, stainless steel, or similar materials compatible with the chemical, physical, and radioactive environment are used for pressure retaining components. The use of malleable, wrought, or cast iron materials or plastic pipe is not allowed. High quality non-metallic hoses are used to connect vendor supplied mobile skids to the liquid radwaste system. Material certificates of compliance or certified material test reports are required for the materials purchased. Polyethylene or polypropylene tanks may be used in cases where the corrosive constituents make this material a superior choice. Reinforced hoses may be used at interface points between mobile process equipment and piping.
1.1.3 Foundations and walls of structures that house the liquid radwaste system should be designed to the seismic criteria described in regulatory position 5 of this guide, to a height sufficient to contain the maximum liquid inventory expected to be in the building.	1.1.3 Complies. See Section 3.8.6.4.

TABLE 3.2-5 (Sheet 3)

Regulatory 1.143 Position	WCGS
1.1.4 Equipment and components used to collect, process, and store liquid radioactive waste need not be designed to the seismic criteria given in regulatory position 5 of this guide.	1.1.4 Complies. Liquid contained sources are not seismically designed.
1.2 All tanks located outside the reactor containment and containing radioactive materials in liquids should be designed to prevent uncontrolled releases of radioactive materials due to spillage (in buildings or from outdoor tanks). The following design features should be included for tanks that may contain radioactive materials:	1.2 See response to 1.2.1 through 1.2.5.
1.2.1 All tanks inside and outside the plant, including the condensate storage tanks, should have provisions to monitor liquid levels. Potential overflow conditions should actuate alarms both locally and in the control room.	1.2.1 Complies. See Table 11.2-2.
1.2.2 All tank overflows and drains and sample lines should be routed to the liquid radwaste treatment system1.	1.2.2 Complies. See Table 11.2-2.
1.2.3 Indoor tanks should have curbs or elevated thresholds with floor drains routed to the liquid radwaste treatment system1.	1.2.3 Complies. See Table 11.2-2.
1.2.4 The design should include provisions to prevent leakage from entering unmonitored systems and ductwork in the area.	1.2.4 Complies. See Sections 9.4 and 11.3.
1.2.5 Outdoor tanks should have a dike or retention pond capable of preventing runoff in the event of a tank overflow and should have provisions for sampling collected liquids and routing them to the liquid radwaste treatment system.	1.2.5 Complies. No outdoor tanks fall under the D(augmented) classification, and no dikes are provided.
2. Gaseous Radwaste Systems	
2.1 The gaseous radwaste treatment system 2 should meet the following criteria:	2.1 See response to 2.1.1 through 2.1.3.
2.1.1 The systems should be designed and tested to requirements set forth in the codes and standards listed in Table 1 supplemented by the provisions noted in 2.1.2 and in regulatory position 4 of this guide.	2.1.1 Complies. See Table 3.2-2.

TABLE 3.2-5 (Sheet 4)

Regulatory 1.143 Position	WCGS
2.1.2 Materials for pressure-retaining components should conform to the requirements of the specifications for materials listed in Section II of the ASME Boiler and Pressure Vessel Code, except that malleable, wrought, or cast iron materials and plastic pipe should not be used. Materials should be compatible with the chemical, physical, and radioactive environment of specific applications. Manufacturers' material certificates of compliance with material specifications, such as those contained in the codes referenced in Table 1, may be provided in lieu of certified materials test reports.	2.1.2 Complies. Carbon steel, stainless steel, or similar materials compatible with the chemical, physical, and radioactive environment are used for pressure-retaining components. The use of malleable, wrought, or cast iron materials or plastic pipe is not allowed. Material certificates of compliance or certified material test reports are required for the material.
2.1.3 Those portions of the gaseous radwaste treatment system that are intended to store or delay the release of gaseous radioactive waste, including portions of structures housing these systems, should be designed to the seismic design criteria given in regulatory position 5 of this guide. For the systems that normally operate at pressures above 1.5 atmospheres (absolute), these criteria should apply to isolation valves, equipment, interconnecting piping, and components located between the upstream and downstream valves used to isolate these components from the rest of the system (e.g., waste gas storage tanks in the PWR) and to the building housing this equipment. For systems that operate near ambient pressure and retain gases on charcoal adsorbers, these criteria should apply to the tank support elements (e.g., charcoal delay tanks in a BWR) and the building housing the tanks.	2.1.3 Complies as indicated in response to position 5. The gaseous radwaste system operates above 1.5 atmospheres.
3. Solid Radwaste System	
3.1 The solid radwaste system consists of slurry waste collection and settling tanks, spent resin storage tanks, phase separators, and components and subsystems used to solidify radwastes prior to offsite shipment. The solid radwaste handling and treatment system should meet the following criteria:	3.1 See response to 3.1.1 through 3.1.4.

TABLE 3.2-5 (Sheet 5)

Regulatory Guide 1.143 Position	WCGS
3.1.1 The system should be designed and tested to the requirements set forth in the codes and standards listed in Table 1 supplemented by the provisions noted in 3.1.2 and in regulatory position 4 of the guide.	3.1.1 Complies. See Table 3.2-2. Fiberglass reinforced plastic tanks, in accordance with appropriate articles of Section 10, ASME BPV Code, are used to dewater wastes prior to storage and offsite shipment.
3.1.2 Materials for pressure-retaining components should conform to the requirements of the specifications for materials listed in Section II of the ASME Boiler and Pressure Vessel Code, except that malleable, wrought, or cast iron materials and plastic pipe should not be used. Materials should be compatible with the chemical, physical and radioactive environment of specific applications. Manufacturers' material certificates of compliance with material specifications, such as those contained in the codes referenced in Table 1, may be provided in lieu of certified materials test reports.	3.1.2 Complies. Carbon steel, stainless steel, or other similar materials compatible with the chemical, physical, and radioactive environment are used for pressure-retaining components. The use of malleable, wrought, or cast iron material or plastic pipe is not allowed. Material certificates of compliance or certified material test reports are required for the material purchased.
3.1.3 Foundations and adjacent walls of structures that house the solid radwaste system should be designed to the seismic criteria given in regulatory position 5 of this guide to a height sufficient to contain the maximum liquid inventory expected to be in the building.	3.1.3 Complies, as described in Section 3.8.6.4.
3.1.4 Equipment and components used to collect, process, or store solid radwastes need not be designed to seismic criteria given in regulatory position 5 of this guide.	3.1.4 Complies. Contained sources are not seismically designed.
4.0 Additional Design, Construction, and Testing Criteria	
In addition to the requirements inherent in the codes and standards listed in Table 1, the following criteria, as a minimum, should be implemented for components and systems considered in this guide:	
4.1 The quality assurance provisions described in regulatory position 6 of this guide should be applied.	4.1 Complies, as described in position 6.

TABLE 3.2-5 (Sheet 6)

Regulatory 1.143 Position	WCGS
4.2 Process piping systems include the first root valve on sample and instrument lines. Pressure-retaining components of process systems should use welded construction to the maximum practicable extent. Flanged joints or suitable rapid disconnect fittings should be used only where maintenance or operational requirements clearly indicate that such construction is preferable. Screwed connections in which threads provide the only seal should not be used, except for instrumentation connections where welded connections are not suitable. Process lines should not be less than 3/4 inch (nominal I.D.). Screwed connections backed up by seal welding, mechanical joints, or socket welding may be used on lines 3/4 inch or larger but less than 2-1/2 inches (nominal I.D.). For lines 2-1/2 inches above, pipe welds should be of the butt-joint type. Non-consumable backing rings should not be used in lines carrying resins or other particulate material. All welding constituting the pressure boundary of pressure-retaining components should be performed in accordance with ASME Boiler and Pressure Vessel Code Section IX.	4.2 Complies.

TABLE 3.2-5 (Sheet 7)

Regulatory 1.143 Position	WCGS
4.3 Piping systems should be hydrostatically tested in their entirety, except at atmospheric tank connections where no isolation valves exist. Pressure testing should be performed on as large a portion of the in-place systems as practicable. Testing of piping systems should be performed in accordance with applicable ASME or ANSI codes, but in no case at less than 75 psig. The test pressure should be held for a minimum of 30 minutes with no leakage indicated.	4.3 Complies except that WCGS has replaced the hydrostatic test with equally acceptable alternative tests. Since the NRC has approved the use of Code Case N-416-1 at WCGS (with additional conditions which are also included in the D-Augmented Program) to eliminate hydro test of safety related piping replacements, modifications and repairs, WCGS has granted similar relief for ANSI B31.1 piping. The ASME Section XI Code case N-416-1 illustrates the opinion of ASME code experts that hydrostatic tests provide little additional confidence of system integrity for replacements, modifications and repairs. The ASME Section III design requirements and acceptance criteria for Class 3 piping (as imposed by ASME Section XI) are similar to B31.1 design requirements and acceptance criteria. Although Section XI has lower pressure test requirements, with the imposition of additional surface examinations, the conclusion is still valid in reviewing ANSI hydrostatic test requirements. The performance of a hydrostatic test typically results in difficulty with existing valve leakage, particularly at existing boundary valves, which can preclude meeting the hydrostatic test requirements without rebuilding these boundary valves and retesting. The purpose of the hydro test has nothing to do with boundary valves, thus hydro testing results in additional work and delays not associated with the reason for performing the hydro test. Additionally, the performance of a hydrostatic test can result in damage to piping systems and components whereas alternative in-service leak test and visual exams and non-intrusive PT or MT, does not.

TABLE 3.2-5 (Sheet 8)

Regulatory 1.143 Position	WCGS
4.4 Testing provisions should be incorporated to enable periodic evaluation of the operability and required functional performance of active components of the system.	4.4 Complies. The systems are in intermittent or continuous use, which demonstrates the systems' performance and structural and leaktight integrity.
5. Seismic Design for Radwaste Management Systems and Structures Housing Radwaste Management Systems.	
5.1 Gaseous Radwaste Management System3.	5.1 See 5.1.1 through 5.1.3.
5.1.1 For the evaluation of the gaseous radwaste system described in regulatory position 2.1.3, a simplified seismic analysis procedure to determine seismic loads may be used. The simplified procedure consists of considering the system as a single-degree-of-freedom system and picking up a seismic response value from applicable floor response spectra, after the fundamental frequency of the system is determined. The floor response spectra should be obtained analytically (regulatory position 5.2) from the application of the Regulatory Guide 1.60 design response spectra normalized to the maximum ground acceleration for the operating basis earthquake (OBE), as established in the application, at the foundation of the building housing the gaseous radwaste system. More detailed guidance can be found in Regulatory Guide 1.122, "Development of Floor Design Response spectra for Seismic Design of Floor-Supported Equipment or Components."	5.1.1 The gaseous radwaste system is seismically analyzed, considering a single degree of freedom and the floor response spectra discussed in position 5.2.
5.1.2 The allowable stresses to be used for steel system support elements should be those given in "Specification for the Design, Fabrication, and Erection of Structural Steel for Buildings," adopted in February 1969. The one-third allowable stress increase provisions for combinations involving earthquake loads, indicated in Section 1.5.6 of the specification, should be included. For design of concrete structures, use of ACI 349-76 as endorsed in Regulatory Guide 1.142, "Safety-Related Concrete Structures for Nuclear Power Plants (Other Than Reactor Vessels and Containments)," is acceptable.	5.1.2 Complies.

TABLE 3.2-5 (Sheet 9)

Regulatory Guide 1.143 Position	WCGS
5.1.3 The construction and inspection requirements for the support elements should comply with those stipulated in AISC or ACI Codes as appropriate.	5.1.3 Complies.
5.2 Buildings Housing Radwaste Systems	5.2 Complies. Section 3.8.6.4 addresses the requirements of 5.2.1 through 5.2.6.
5.2.1 Input motion at the foundation of the building housing the radwaste systems should be defined. This motion should be defined by normalizing the Regulatory Guide 1.60 spectra to the maximum ground acceleration selected for the plant OBE. A simplified analysis should be performed to determine appropriate seismic loads and floor response spectra pertinent to the location of the system, i.e., an analysis of the building by a several-degrees-of-freedom mathematical model and the use of an approximate method to generate the floor response spectra for radwaste systems and the seismic loads for the buildings. No time history analysis is required.	
5.2.2 The simplified method for determining seismic loads for the building consists of (a) calculating the first several modal frequencies and participation factors for the building, (b) determining modal seismic loads using regulatory position 5.2.1 input spectra, and (c) combining modal seismic loads in one of the ways described in Regulatory Guide 1.92, "Combining Modal Responses and Spatial Components in Seismic Response Analysis."	
5.2.3 With regard to generation of floor response spectra for radwaste systems, simplified methods that give approximate floor response spectra without need for performing a time history analysis may be used.	
5.2.4 The load factors and load combinations to be used for the building should be those given in ACI 349-76 as endorsed in Regulatory Guide 1.142. The allowable stresses for steel components should be those given in the AISC Manual. (See regulatory position 5.1.2.)	

TABLE 3.2-5 (Sheet 10)

Regulatory Guide 1.143 Position	WCGS
5.2.5 The construction and inspection requirements for the building elements should comply with those stipulated in the AISC or ACI Code, as appropriate.	
5.2.6 The foundation media of structures housing the radwaste systems should be selected and designed to prevent liquefaction from the effects of the maximum ground acceleration selected for the plant OBE.	
5.3 In lieu of the criteria - and procedures defined above, optional shield structures constructed around and supporting the radwaste systems may be erected to protect the radwaste systems from effects of housing structural failure. If this option is adopted, the procedures described in regulatory position 5.2 need only be applied to the shield structures while treating the rest of the housing structures as nonseismic Category I.	5.3 The criteria and procedures of 5.2 are used.
6. Quality Assurance for Radwaste Management Systems	6. The quality assurance program for D (augmented) components and systems was provided in Chapter 17.0 of the PSAR.
Since the impact of these systems on safety is limited, a quality assurance program corresponding to the full extent of Appendix B to 10 CFR Part 50 is not required. However, to ensure that systems will perform their intended function, a quality assurance program sufficient to ensure that all design, construction, and testing provisions are met should be established and documented. The following quality assurance program is acceptable to the NRC staff. It is reprinted by permission of the American Nuclear Society from ANSI N199-1976, "Liquid Radioactive Waste Processing System for Pressurized Water Reactor Plants."	

TABLE 3.2-5 (Sheet 11)

Regulatory Guide 1.143 Position	WCGS
"4.2.3 Quality Control. The design, procurement, fabrication, and construction activities shall conform to the quality control provisions of the codes and standards specified herein. In addition, or where not covered by the referenced codes and standards, the following quality control features shall be established.	
"4.2.3.1 System Designer and Procurer	
(1) Design and Procurement Document Control--Design and procurement documents shall be independently verified for conformance to the requirements of this standard by individual(s) within the design organization who are not the originators of the document. Changes to these documents shall be verified or controlled to maintain conformance to this standard.	
"(2) Control of Purchased Material, Equipment and Services--Measures to ensure that suppliers of materials, equipment, and construction services are capable of supplying these items to the quality specified in the procurement documents shall be established. This may be done by an evaluation or a survey of the suppliers' products and facilities.	
"(3) Instructions shall be provided in procurement documents to control the handling, storage, shipping, and preservation of material and equipment to prevent damage, deterioration, or reduction of cleanness.	

TABLE 3.2-5 (Sheet 12)

Regulatory Guide 1.143 Position	WCGS
"4.2.3.2 System Constructor	
(1) Inspection. In addition to required code inspections, a program for inspection of activities affecting quality shall be established and executed by, or for, the organization performing the activity to verify conformance with the documented instructions, procedures, and drawings for accomplishing the activity. This shall include the visual inspection of components prior to installation for conformance with procurement documents and the visual inspection of items and systems following installation, cleanness, and passivation(where applied).	
"(2) Inspection, Test, and Operating Status. Measures should be established to provide for the identification of items which have satisfactorily passed required inspections and tests.	
"(3) Identification and Corrective Action for Items of Nonconformance. Measures should be established to identify items of nonconformance with regard to the requirements of the procurement documents or applicable codes and standards and to identify the action taken to correct such items."	
In Section 4.2.3.2(3), "items of nonconformance" should be interpreted to include failures, malfunctions, deficiencies, deviations, and defective material and equipment.	
Sufficient records should be maintained to furnish evidence that the measures identified above are being implemented. The records should include results of reviews and inspections and should be identifiable and retrievable.	

TABLE 3.2-5 (Sheet 13)

Regulatory Guide 1.143 Position	WCGS

NOTES:

1 Retention by an intermediate sump or drain tank designed for handling radioactive materials and having provisions for routing to the liquid radwaste system is acceptable.

2 For a BWR, this includes the system provided for treatment of normal offgas releases from the main condenser vacuum system beginning at the point of discharge from the condenser air removal equipment; for a PWR, this includes the system provided for the treatment of gases stripped from the primary coolant.

3 For those systems that require seismic capabilities, as indicated in Regulatory Position 2.1.3.

3.3 WIND AND TORNADO LOADINGS

All seismic Category I structures which are required for post-accident safe shutdown, contain equipment required for post-accident safe shutdown, are required to protect reactor coolant system integrity, or which protect stored fuel assemblies are designed to withstand the effects of a tornado and the most severe wind phenomena encountered at the site (see Section 2.3) (GDC-2). These structures are identified in Table 3.3-1.

A tabulation of systems and components and their location by room number, except for the RWST, needed for a post-accident safe shutdown and to ensure the integrity of the reactor coolant pressure boundary is provided in Table 7.4-6. All of the components and systems identified in Table 7.4-6, which include those requiring tornado protection, are housed within the protective structures identified in Table 3.5-2. All of those structures are designed to provide tornado protection. The protective structure requirements for the RWST are discussed in Section 6.3.2.2. Since there are no systems or components within the remaining plant structures whose failure could lead to significant offsite radiological consequences, those buildings have not been designed to provide tornado protection for systems contained therein. The structures, systems, and components identified in Appendix A to Regulatory Guide 1.117 have been provided with tornado protection.

BC-TOP-3-A (Ref. 1) defines tornado and extreme wind loadings and criteria, and furnishes data, formulae, and procedures for determining maximum wind loading on structures or parts of structures.

3.3.1 WIND LOADINGS

3.3.1.1 Design Wind Velocity

The design wind velocity for all seismic Category I structures is 100 mph at 30 feet above ground for a 100-year recurrence interval.

The bases for the wind velocity selection and supporting data and wind histories are contained in Section 2.3 and in Section 2.0 of BC-TOP-3-A. The design wind velocity envelops all of the site wind conditions.

As referenced in BC-TOP-3-A, ANSI A58.1 (Ref. 2) is used as the basis for determining the vertical velocity distribution and gust factors. The wind pressure values used are those tabulated in Section 6 of ANSI A58.1 for exposure "C," which is flat, open country. Table 5 of ANSI A58.1 is used to determine the effective velocity pressures on buildings and structures. Table 6 of ANSI

A58.1 is used to determine the effective velocity pressures on parts and portions of buildings and structures. A basic wind speed of 100 mph is used, and the tables take into account the effects of vertical velocity distribution and gust factors.

3.3.1.2 Determination of Applied Forces

The procedures used to translate the wind velocity into applied forces on the structures are contained in ANSI A58.1 and Sections 2.0 and 4.0 of BC-TOP-3-A. These procedures include the applicable effects of wind force distribution and shape coefficients.

For seismic Category I structures which are designed for tornado loading, the applied forces due to wind are calculated to determine if they are less severe than the applied forces due to tornado loadings. The applied tornado-force magnitude and distribution are determined, as described in Section 3.3.2.2 below.

Appropriate load combinations, stress levels, and load factors discussed in Section 3.8 are considered in determining the governing loads.

3.3.2 TORNADO LOADINGS

Tornado loadings for structural analysis are obtained in accordance with BC-TOP-3-A. Compliance with Regulatory Guide 1.76 is discussed in Appendix 3A.

3.3.2.1 Applicable Design Parameters

Tornado loads are not assumed to be coincident with any accident condition or earthquake.

Tornado characteristics are established in accordance with Table I of Regulatory Guide 1.76 for tornado intensity region I. A maximum windspeed of 360 mph, which consists of a maximum rotational speed of 290 mph at a radius of 150 feet combined with a maximum translational speed of 70 mph, is used. In order to maximize transit time of the tornado across exposed plant features, a minimum translational speed of 5 mph is used. An atmospheric pressure drop of 3.0 psi, at a linear rate of 2.0 psi per second, is also used.

Tornado-generated missiles are discussed in Section 3.5.1.4.

3.3.2.2 Determination of Forces on Structures

The procedures used to transform the tornado loadings into an effective pressure on exposed surfaces of structures are outlined in Section 3.5 of BC-TOP-3-A. The effects of shape coefficients and pressure distribution are included in these procedures.

All seismic Category I structures are designed to prevent venting, with the exception of the main steam tunnel (Area 5 of the auxiliary building above El. 2026) and the fuel building. The main steam tunnel and the fuel building are vented to the atmosphere with the exterior walls and roofs designed to resist the full pressure differential (3.0 psi) due to the design basis tornado. The interior walls and slabs are designed to resist the differential pressures between compartments that occur as a result of venting the structure. The methods employed to determine the differential pressures are found in Section 3.5.2 of BC-TOP-3-A.

The procedures used to transform the tornado-generated missile loadings into effective loads are discussed in Section 3.5.3.

Tornado wind velocity pressure effects, atmospheric pressure change effects, and missile impact effects are combined in accordance with Section 3.4 of BC-TOP-3-A. These combined effects constitute the total tornado effect (W_t), which is then combined with other loads as specified in Section 3.8.

3.3.2.3 Effect of Failure of Structure or Components Not Designed For Tornado Loads

Non-Category I structures are not designed for tornado loads. Non-Category I structures adjacent to seismic Category I structures include the turbine building and communications corridor. The structural framing of these buildings is designed to preclude gross collapse upon safety-related structures or components under loads imposed by the design basis tornado. Other non-Category I structures are located so that their collapse would not endanger safety-related structures or components.

3.3.3 REFERENCES

1. Tornado and Extreme Wind Design Criteria for Nuclear Power Plants, Bechtel Power Corporation, BC-TOP-3-A, San Francisco, California, Revision 3, August, 1974.

2. American National Standards Institute (ANSI), Building Code Requirements for Minimum Design Loads in Buildings and Other Structures, A58.1-1972.

TABLE 3.3-1

TORNADO-RESISTANT BUILDINGS AND ENCLOSURES

Reactor building
Control building
Fuel building
Auxiliary building
Diesel generator building
Diesel fuel oil storage tank access vaults
Turbine building (for structural framing integrity only)
Communications corridor (for structural framing integrity only)
ESWS Pumphouse
ESWS Electrical Manholes
ESWS Access Vaults
Station Blackout Diesel Generator Missile Barrier (for structure only, unoccupied by personnel)
ESW Vertical Loop Chase

3.4 WATER LEVEL (FLOOD) DESIGN

The criteria used to establish the design basis flood levels for the powerblock comply with Regulatory Guides 1.59 and 1.102, to the extent described in Appendix 3A.

3.4.1 FLOOD PROTECTION

3.4.1.1 Flood Protection Measures for Seismic Category I Structures

3.4.1.1.1 External Flood Protection

All seismic Category I structures and the systems they house are designed to withstand the effects of natural phenomena, such as flooding and groundwater level (GDC-2). Flood elevations, including the probable maximum flood (PMF) and the maximum groundwater elevations used in the design of powerblock seismic Category I structures for buoyancy and hydrostatic pressure, are shown in Tables 1.2-1 and 3.4-1 and are discussed in Section 2.4.

The seismic Category I essential service water system (ESWS) pumphouse and Access Vault AV6 are subject to the forces resulting from the probable maximum precipitation (PMP) coincident with wave activity in the portion of the cooling lake containing the ultimate heat sink (UHS). The resulting design flood elevation in the UHS under this condition is described in Sections 2.4.3.6 and 2.4.10.

The ESWS pumphouse extends into the UHS intake channel and takes suction from it through penetrations below both the design normal lake elevation and flood elevation (see Figures 3.8-131, 3.8-132, and 3.8-133). The only safety-related components in the ESWS pumphouse that are considered covered with flood water in the design flood are the casings, shafts, and impellers of the ESWS pumps and components of the traveling water screens, which are capable of normal function while surrounded by the design flood.

The ESWS Access Vault AV6 is located below site grade near the shoreline of the cooling lake. The access vault is protected from wave run-up by revetment and sheet pile wall to the east, south and west.

Powerblock seismic Category I structures are not protected above grade for flooding because there are no above-grade floods at the structure locations. Safety-related systems located below grade are protected from groundwater inleakage by a combination of a waterproofing system for the structures and other features such as the location of safety-related systems in watertight compartments, sump pumps, alarms and other water level indications and administrative controls. The waterproofing system will minimize groundwater inleakage. Should groundwater inleakage occur, the design features and administrative controls would protect the safety related systems. Refer to Section 1.2 for figures of systems below grade. In addition, an interior floor drainage system, as described in Section 9.3.3, is provided within the structures.

Although not serving a safety-related function, additional waterproofing is provided below grade by means of waterstops and waterproofing materials to minimize inleakage. Waterstops are provided at expansion and construction joints and electrical duct bank penetraions located below grade.

An auxiliary waterproofing system is installed on the vertical exterior surfaces of walls below grade of all powerblock seismic Category I buildings, except the reactor building. The minimum 5-foot thickness of base mats provides adequate waterproofing of floor areas with the exception of the ESW Vertical Loop Chase which has waterproofing below the structure's base mat. The minimum 7-foot-thick vertical wall and internal steel liner plate provide sufficient waterproofing of the reactor cavity and instrumentation tunnel. There is no functional requirement for waterproofing of the tendon gallery.

Below grade penetrations are provided with waterproof seals to minimize groundwater intrusion. Typical waterproofing details are shown in Figure 3.4-1.

3.4.1.1.2 Internal Flooding Protection

All safety-related equipment rooms located below grade are protected from back-flooding by the remote location of waste-processing components in the radwaste building. The floor and equipment drains in powerblock seismic Category I buildings drain to sumps in the lowest level of the building in which they are located. These sumps are pumped to the floor drain tank or the waste hold-up tank located in the radwaste building. Should these tanks rupture or leak, flow into safety-related areas will not occur since the tanks are located below the radwaste building flood level.

Equipment and floor drains below the 7-foot flood level of the auxiliary building drain to sumps within the same compartment or are provided with drain caps. Several water tight areas have been established in the auxiliary building to provide protection of all safety-related equipment. Drainage areas and protection of the safety-related equipment in this area is described in Section 9.3.3 and Figure 9.3-6.

As described in Sections 9.3.3 and 11.2, the drainage and liquid radwaste systems are designed to preclude backflow from occurring in the safety-related equipment in the auxiliary building. Appendix 3B provides an evaluation of the effect of postulated flooding generated within the plant.

3.4.1.2 Ground Water Elevations

The design basis for ground water for buoyancy and subsurface hydrostatic loadings on all site-related, seismic Category I structures is full hydrostatic pressure at all depths below elevation 1999.5 feet, refer to Section 2.4.13.5. Seismic Category I structures are protected below grade by waterproofing, waterstops at construction joints and electrical duct bank penetrations, and boot seals at pipe penetrations, where necessary. With the exception of sump pumps installed in ESW electrical manholes, no permanent dewatering system is provided to relieve the effects of ground water. Table 3.4-2 describes the site-related, seismic Category I structures that house safety-related equipment and identifies exterior penetrations that are below the design basis ground water elevation.

3.4.1.3 Permanent Dewatering Systems

The permanent dewatering systems are not a safety-related system, and their failure does not compromise any safety-related system or prevent a safe shutdown of the reactor. Also, no permanent dewatering sytem, with the exception of the sump pumps installed in the ESW electrical manholes, is required.

3.4.2 ANALYSIS PROCEDURES

Natural phenomena, such as flood current, wind wave, or hurricane (tsunamis cannot occur at WCGS), that are associated with dynamic water forces are not applicable to the powerblock seismic Category I structures, since the grades for these structures are located above the probable maximum flood elevations.

3.4.2.1 Design Basis Flood for the ESWS Pumphouse

The design of the walls of the ESWS pumphouse, for the static and dynamic effects of the postulated wind-wave activity shown in Table 3.4-3, is in accordance with the load factors and loading combinations stated in Section 3.8 for live loads not coincident with earthquake or tornado loads. The load from the maximum postulated static water elevation in the UHS is applied as a hydrostatic force, and the dynamic effect of the nonbreaking waves in the UHS is converted to an equivalent hydrostatic force to the elevation shown in Table 3.4-3. Refer to Section 2.4 for a description of the bases for the data in Table 3.4-3.

3.4.2.2 Design Basis Groundwater

Structures as a whole and component parts are designed for the hydrostatic forces from the maximum groundwater level, in accordance with the load factors and loading combinations stated in Section 3.8.

TABLE 3.4-1

PMF, GROUNDWATER, REFERENCE, AND ACTUAL PLANT ELEVATIONS

Structure	Probable Max. Flood Level ft. - msl	Design Ground-water Elevation ft.	Reference Plant Grade ft.	Actual Plant Grade ft. - msl
Reactor building	1095.00	1999.50	1099.50	1099.50
Control building	1095.00	1999.50	1099.50	1099.50
Fuel building	1095.00	1999.50	1099.50	1099.50
Auxiliary building	1095.00	1999.50	1099.50	1099.50
Diesel generator building	1095.55 (1) (2)	1999.50	1099.50	1099.50
ESWS intake pumphouse	1100.20 (1) (3)	1999.50	1099.50	1099.50
ESWS discharge point	1100.20 (1) (3)	1999.50	1099.50	1099.50
ESWS Access Vault AV6	1100.20 (1)	1999.50	1099.50	1099.50
ESW Vertical Loop Chase	1095.00	1999.50	1099.50	1099.50

NOTES:

1) Maximum flooding with wave runup

2) At powerblock

3) At ESWS intake pumphouse - face of vertical wall

TABLE 3.4-2

SITE-RELATED, CATEGORY I STRUCTURES
WITH PENETRATIONS BELOW THE GROUND WATER ELEVATIONS

Structure and Figure References	Areas Below Ground Water Level and Their Penetrations	Safety-Related Components in Areas Below Ground Water Level	Inleakage Protection	Discussion
ESWS Pumphouse Figures 3.8-131, 3.8-132, 3.8-133	1. Sumps for ESWS pumps and traveling water screens and 11.17 feet x 6 feet penetrations for water entry from UHS intake channel	1. Casings, shafts, impellers of the ESWS pumps, and traveling water screen components	1. None	1. Sumps are normally full of water
	2. Pits for ESWS and chemical addition pipes, their sleeved penetrations and ESWS electrical duct banks and their penetrations through the walls of the pits	2. ESWS pipes, check valves, and electrical cables	2. Waterproofing on exterior faces of pit walls and slabs, waterstops at construction joints and electrical duct bank penetrations, and boot seals between the ESWS pipes and their sleeves	Any inleakage would be visible and accessible for removal from the pumphouse operating floor.
ESWS electrical Manholes Figure 3.8-140	All manholes which have numerous penetrations for electrical duct banks	Electrical cable	Waterstops at construction joints and penetrations	Cables are specified for use in wet conditions. Administrative controls monitor cable tray supports. Sump pumps are installed in ESW electrical manholes.
ESWS access Vaults Figure 3.8-143	Access pits which have ESWS piping penetrations thru walls	ESWS pipes	Waterproofing on exterior faces of walls and bottom of basemat; waterstops at construction joints, waterproofing and waterstops at pipe penetrations.	Stilling well with manhole provided for water level indication outside of vault and administrative controls to monitor inleakage.
ESW Vertical Loop Chase Figures 3.8-103 Sh 2, 3.8-104 Sh 2, 3.8-118	Substructure where ESWS piping penetrates thru Control Building wall	ESWS Pipes	Waterproofing on exterior faces of walls and slabs; waterstops at construction joints and water proofing and waterstops at pipe penetrations.	Any inleakage would be routed to the sump

TABLE 3.4-3

WIND-GENERATED WAVE DATA FOR
THE ESWS PUMPHOUSE

	Case 1	Case 2
Wind speed	40 mph	90 mph
Significant wave height, Hs	3.0 ft	5.7 ft
Maximum wave height, Hm	5.0 ft	9.52 ft
Static water surface elevation	1995 ft	1988 ft
Dynamic (equivalent static) water surface elevation at the face of the ESWS pumphouse for period of wave motion	2000.2 ft	1998.5 ft
Max. period of wave motion	3.32 secs	4.15 secs

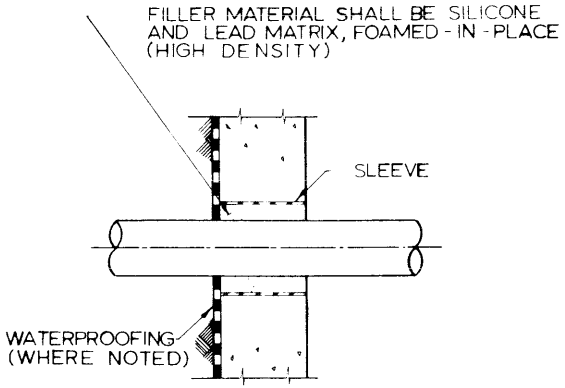

TYPICAL PENETRATION IN WALLS

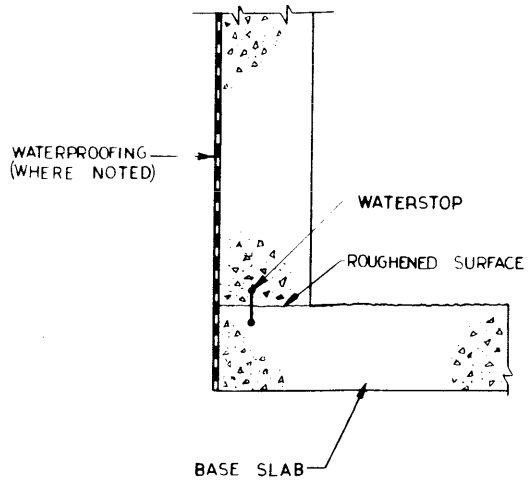

NOTE

ALL WATERPROOFING WILL BE CARRIED TO GRADE ELEVATION.

TYPICAL WATERPROOFING APPLICATION

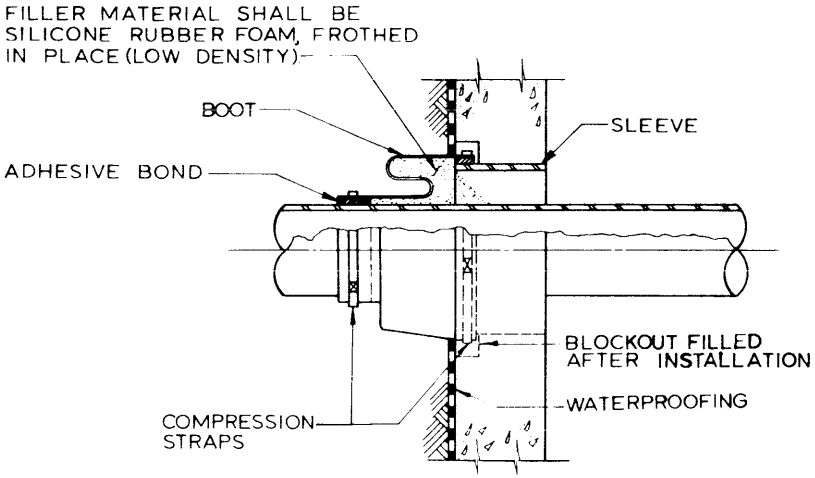

ALTERNATE PENETRATION IN WALLS WHEN FLEXIBILITY OF PIPING IS REQUIRED

Rev. 0

WOLF CREEK
UPDATED SAFETY ANALYSIS REPORT

FIGURE 3.4-1

TYPICAL WATERPROOFING DETAILS

3.5 MISSILE PROTECTION

Adequate protection is provided to ensure that those portions of the essential structures, systems, or components whose failure would result in the failure of the integrity of the reactor coolant system, reduce the functioning to an unacceptable level of any plant feature required for a post-accident safe shutdown, or lead to offsite radiological consequences are designed and constructed so as not to fail or cause such a failure in the event of a postulated credible missile impact. The recommendations of Regulatory Guides 1.13 and 1.115 as they pertain to internally and externally generated missiles are met. The response to Regulatory Guide 1.14 and Regulatory Guide 1.27 in regard to missiles is included in Appendix 3A.

Appendix 3B provides an evaluation of the effect of postulated missiles generated within the plant. The following sections provide the bases for the selection of the missiles, protection requirements for external missiles, and details of the barrier design.

3.5.1 MISSILE SELECTION AND DESCRIPTIONS

There are four general sources from which missiles are postulated. These are:

a. Rotating component failure

b. Pressurized component failure

c. Tornadoes

d. Missiles associated with activities in the proximity of the site

The locations where the missiles may be generated are categorized as follows:

a. Internally generated missiles

b. Turbine missiles

c. Externally generated (outside the plant building) missiles during tornadoes

3.5.1.1 Internally Generated Missiles (Outside Containment)

There are two general sources of postulated missiles within the plant:

a. Rotating component failures

b. Pressurized component failure

3.5.1.1.1 Rotating Component Failure Missiles

Missiles generated by postulated failures of rotating components, their source and characteristics, and missile protection provided are discussed in Appendix 3B.

Missile selection is based on the following conditions:

a. All rotating components which are operated during normal operating plant conditions are capable of becoming missiles.

b. The energy in a rotating part associated with component failure is assumed to occur at 120-percent overspeed.

c. The energy of the missile is sufficient to perforate the protective housing.

3.5.1.1.2 Pressurized Component Failure Missiles

Missiles generated by postulated failures of pressurized components, their source and characteristics, and missile protection provided are discussed in Appendix 3B. The bases for selection are:

a. Pressurized components in systems whose service temperature exceeds 200°F or whose design pressure exceeds 275 psig are evaluated as to their potential for becoming a missile.

b. Temperature or other detectors installed in high energy piping are evaluated as potential missiles if failure of a single circumferential weld could cause their ejection.

c. Welded dead-end flanges are evaluated as potential missiles if the failure of a single circumferential weld could cause their ejection.

d. Valves of ANSI 900-psig rating and above, constructed in accordance with Section III of the ASME Boiler and Pressure Vessel Code, are pressure seal, bonnet-type valves. For pressure seal bonnet valves, bonnets are prevented from becoming missiles by the retaining ring, which would have to fail in shear, and by the yoke, which would capture the bonnet or reduce bonnet energy.

   Because of the highly conservative design of the retaining ring of these valves, bonnet ejection is highly improbable, and hence bonnets are not considered credible missiles.

e. Most valves of ANSI 600-psig rating and below are valves with bolted bonnets. Valve bonnets are prevented from becoming missiles by limiting stresses in the bonnet-to-body bolting material by rules set forth in the ASME Boiler and Pressure Vessel Code, Section III, and by designing flanges in accordance with applicable code requirements. Even if bolt failure were to occur, the likelihood of all bolts experiencing a simultaneous complete severance failure is very remote. The widespread use of valves with bolted bonnets and the low historical incidence of complete severance valve bonnet failures confirm that bolted valve bonnets need not be considered as credible missiles.

f. Valve stems are not considered as potential missiles if at least one feature, in addition to the stem threads, is included in their design to prevent ejection. Valves with backseats are prevented from becoming missiles by this feature. In addition, air- or motor-operated valve stems will be effectively restrained by the valve operators.

g. Nuts, bolts, nut and bolt combinations, and nut and stud combinations have only a small amount of stored energy and thus are of no concern as potential missiles.

3.5.1.2 Internally Generated Missiles (Inside Containment)

Sources of internally generated missiles outside the containment are also applicable to the inside of the containment (see Section 3.5.1.1 for discussion).

3.5.1.3 Turbine Missiles

The turbine generator stores large amounts of rotational kinetic energy in its rotors. In the unlikely event of a major mechanical failure, this energy may be transformed into both rotational and translational energy of rotor fragments. These fragments may impact the surrounding stationary parts. If the energy-absorbing capability of these stationary turbine generator parts is insufficient, external missiles will be released. These ejected missiles may impact various plant structures, including those housing safety-related equipment. The plant layout, as shown in the general arrangement drawings (Section 1.2), is a peninsular arrangement for the turbine generator. This layout minimizes the possibility of a turbine missile impacting the other plant structures and equipment essential for post-accident safe shutdown requirements. Section 10.2.3.6 describes the inspection requirements and the testing of valves, which prevent turbine overspeed that would cause the missile generation.

The turbine generator was manufactured by General Electric Company (GE), and is described in Section 10.2.

During Refueling 18 (RF18), three replacement LP-steampaths comprised of rotors, inner casings and diaphragms, and a single HP steampath consisting of a rotor and diaphragms were installed. The last stage buckets for the LP rotors increased from 38” to 43”. Each rotor was manufactured by GE from a single piece of alloy steel forging, employing integral wheels and couplings (monoblock design), which resulted in a reduced rotor stresses and reduced potential for cracking. Therefore, the probability for turbine missiles was re-evaluated. During Refuel 19 (RF19), the existing General Electric Mark II Electro-Hydraulic Control (EHC) System and Emergency Trip System (ETS) was replaced with a Westinghouse Ovation Digital EHC Turbine Control System (DCS). The replacement system is based on the Ovation platform supplied by Emerson Process Management (EPM). The Turbine Control System (TCS) architecture is based on combined functional and hardware redundancy to create a robust and reliable system. In order to increase reliability of the new TCS, the Ovation system is provided with redundancy as follows:

1. Two 100% capable controllers, one primary and one backup dedicated to overspeed protection and trip functions – Ovation Emergency Trip System (ETS).
2. Two 100% capable controllers, one primary and one backup dedicated to turbine control and providing backup overspeed protection and trip functions – Ovation Operator Auto/Overspeed Protection and Control (OA/OPC).
3. The system is configured to provide cross trips between the two sets of redundant controllers.

The ETS and the OA/OPC controllers interface with two sets of diverse and independent speed probes, which measure turbine speed. One set consists of three passive speed probes, which interface with the ETS controller. The other set consists of three active speed probes, which interface with the OA/OPC controller.

To provide diverse overspeed protection, three additional passive speed sensors are fed to independent Woodward ProTech GII modules to provide an independent, diverse hardwired overspeed trip from the Ovation. Three independent Woodward ProTech GII modules determine the speed of the turbine by measuring the frequency of the output signal from each of the speed sensors. Woodward ProTech GII modules are also configured to energize an output relay when the speed feedback exceeds the setpoint of 111% of rated speed. This setpoint is set independently in each of the Woodward ProTech GII modules. The normally closed contacts from these output relays are wired to the trip circuit for the ETS Testable Dump Manifolds (TDM) solenoids. When an overspeed condition is detected, the contact from the Woodward ProTech GII module opens, and the ETS TDM solenoid is de-energized. This function is independent from the Ovation ETS controller logic and the ETS Speed Detector Modules (SDM) hardwired trip.

Studies of known failures of turbine generator rotating elements have indicated that they be classified into two general types:

a. Failure of rotating components at or near normal operating speed.
b. Failure of components that control the admission of steam to the turbine, resulting in excessive shaft rotational speed and consequent mechanical failure.

3.5.1.3.1 Low-Speed Missiles

Brittle Fracture Failure: The brittle fracture failure mechanism in rotors with shrunk on wheels is due to the initiation and growth of stress corrosion cracks to critical size in the exposed wheel keyway surfaces. The probability of this failure mode is dependent on environment, speed, temperature and material properties, as well as, inspection methods and inspection intervals. For a shrunk-on wheel operated at, or near, normal running speed, the probability of bursting and thus of missile generation, is dominated by this brittle fracture mechanism.

The new rotors are of monoblock construction and do not have shrunk on wheels. Therefore, the formerly dominant brittle fracture failure mechanism, above, is eliminated in monoblock rotors.

3.5.1.3.2 High-Speed Missiles

Significant steps in mechanical design have been taken in order to prevent turbine overspeed. The turbine generators for SNUPPS are provided with an overspeed protection system employing EHC.

Table 1 of Reference 1 lists turbines that have experienced bursts of rotating parts. The only turbine in that list that experienced a high-speed burst is the Uskmouth No. 5 turbine designed and built by a British manufacturer. It was equipped with a control system which, in GE terminology, is described as mechanical-hydraulic controls (MHC).

Valve opening actuation for the main steam turbine inlet valves is provided by a high pressure hydraulic system which is totally independent of the bearing lubrication system. Valve closing actuation is provided by springs and aided by steam forces following the reduction or relief of hydraulic pressure. The system is designed so that loss of hydraulic fluid pressure leads to valve closing and consequent shutdown.

The main steam turbine inlet valves are provided in series arrangement. A group of stop valves actuated by either of two overspeed-trip signals is followed by a group of control valves modulated by the speed-governing system, and tripped by either overspeed-trip signal. These systems are described in Section 10.2.2.3.2.

The intermediate valves are arranged in series-pairs, with an intermediate stop valve and intercept valve in one casing. The closure of either one of the two valves will close off the corresponding steam line. Thus, a single failure of any component will not lead to destructive overspeed. A multiple failure at the instant of load loss would be required, involving combinations of undetected electronic faults and/or mechanically stuck valves and/or hydraulic fluid contamination. The probability of such joint occurrences is extremely low, due both to the inherently high reliability of the design of the components and frequent inservice testing. For further description and functioning of intercept valves, refer to Section 10.2.2.3.2.

3.5.1.3.3 Overspeed Probability

Ductile Failure: The probability of ductile failure for a rotor of any type is a function of speed, temperature and material tensile strength. In order to experience ductile failure, stresses within the rotor need to be close to, or exceed, the tensile strength of the material for the given operating temperature. The consideration of ductile failure herein assumes design component temperatures.

The stresses in the rotor increase as speed increases, thus it is important to consider the probability of achieving a speed where ductile failure may occur. The previously approved GE probabilistic analysis of turbine over-speed is applicable to units with monoblock rotors. The over-speed analysis considers the characteristics of the turbine control system, the unit configuration and test requirements for the steam valves and other over-speed protection devices. This over-speed analysis shows that the probability of attaining a given over-speed decreases rapidly as the speed increases. As long as the control system is maintained and tested in accordance with Westinghouse's recommendations, the annual probability of attaining a speed greater than or equal to 120% of normal speed is 2.44×10^{-6} (Ref. 8).

3.5.1.3.4 Probability of Damage

The evaluation of turbine missile effects is commonly characterized by the following equation:

$P_4 = P_1 \times P_2 \times P_3$

Where:
P_4 = Annual probability of unacceptable damage resulting from a turbine missile.
P_1 = Annual probability of turbine failure resulting in the ejection of turbine rotor (or internal structure) fragments through the turbine casing.
P_2 = The probability that a turbine missile strikes a critical plant target, given generation.
P_3 = The probability that the critical target is unacceptably damaged, given a missile strike.

The NRC licensing guidelines (Regulatory Guide 1.115 and NUREG-1048) use this formulation to describe hypothetical turbine missiles and specifies that the probability of unacceptable damage from turbine missiles should be less than or equal to 1 in 10 million per year (i.e., P_4 should be $<1 \times 10^{-7}$ per year per plant). Further definition in the guidelines, due to uncertainties associated with the calculation of P_2 and P_3, state the product of strike and damage probabilities to be 1×10^{-3} per year for a favorable oriented turbine, and 1×10^{-2} per year for an unfavorable oriented turbine. The total turbine missile generation probability (P_1) requirements should be less than 1×10^{-4} per year for a favorable oriented turbine, and 1×10^{-5} per year for an unfavorable oriented turbine. The Wolf Creek turbine is favorably oriented (Ref. 6).

This discussion summarizes the NRC approved methodology used to determine the annual missile generation probability (P_1) for all GE steam turbines. The methodology summary of this discussion is consistent with the 1984 and 1993 GE Proprietary Missile Probability Reports, which focused on shrunk-on wheels of the low-pressure turbines as the critical source of turbine missiles. The methodology has been updated to include integral (monoblock) rotors.

Methodology:

The methodology of missile generation probability analysis deals with one element of the overall missile issue, which is the probability (P_1) of generating a turbine missile from the LP turbine external to the LP inner casing and LP hood structure. P_1 is defined by the following equation:

$$P_1 = P_A \times P_B \times P_c$$

Where:
P_A = The probability of the turbine attaining speeds higher than those occurring during normal operation (overspeed).
P_B = The estimation of rotor burst probability as a function of speed.
P_c = The probability of a rotor fragment penetrating the turbine casing and thus generating an external missile.

Probability of Turbine Overspeed (P_A):

The probability of a rotor burst and the probability that a fragment will penetrate the turbine casing are both dependent on the speed at which rotor burst is assumed to occur. Under normal operating conditions, the turbine speed is close to the rated speed (1800 rpm). When an abnormal event occurs, such as a full load rejection and failure of elements of the control system, turbine speeds significantly higher than the rated speed may occur. A major component of the analysis is to estimate the probability of attaining various overspeed levels.

Rotor Burst Probability (P_B):

One rotor failure mode considered is brittle burst, specifically as the result of a crack located in the radial-axial plane growing to a critical size. Brittle burst scenarios addressed are: 1) an undetected internal forging flaw that grows cyclically to critical size, and 2) a time dependent SCC that initiates on the outer body surface and grows to a critical size. A second failure mode due to tensile failure is also included in the methodology. This ductile failure mode contributes to the rotor burst probability particularly during abnormally high overspeed occurrences.

Probability of Casing Penetration (P_C):

The third major component of the missile probability analysis methodology deals with the probability of a rotor burst fragment penetrating the turbine casing. This method considers the kinetic energy of the assumed fragment at the instant of burst as well as the energy absorbing capability of the stationary components of the low pressure turbine.

Results:

GE issued a formal missile probability assessment letter (Ref. 6) to WCNOC that verified the new turbine rotor configuration met the NRC annual missile probability limit (P_1) of 1×10^{-4}, subject to testing, managed inspections and implementation of any specified corrective actions identified as a result of the test/inspections. Westinghouse provided the reliability analysis for their new Ovation Digital EHC Turbine Control System (Ref. 7), which states the total failure probability attributed to the failure of the turbine control system is 1.07×10^{-9} per year. Based upon References 1, 6 and 7, the new calculated P1 for the Wolf Creek turbines is:

$$P_1 \leq 2.44 \times 10^{-6} \text{ per year}$$

The new calculated P4 (Ref. 8) is provided in Table 3.5-3.

3.5.1.4 Missiles Generated by Natural Phenomena

Tornado-generated missiles were considered as the limiting natural-phenomena hazard in the design of all structures which are required for post-accident safe shutdown. The missiles considered in design are as listed in Table 3.5-1.

Vertical velocities of 70 percent of the indicated horizontal velocities are considered for all missiles, except the 1-inch-diameter steel rod which is critical for penetration and is assumed to have a vertical velocity equal to the horizontal velocity. These design basis missiles are in accordance with Standard Review Plan 3.5.1.4, Revision 1 (Draft).

3.5.1.5 Missiles Generated by Events Near the Site

As described in Section 2.2.3, there are no postulated explosions or military activities in the site vicinity that could generate missiles.

3.5.1.6 Aircraft Hazards

The Burlington Municipal Airport has been replaced by the Coffey County Airport which opened in 1989 and is not described in Section 2.2.1.3. The hazards associated with the new airport have been evaluated and do not constitute a significant hazard as defined in Standard Review Plan, Section 3.5.1.6. The following evaluation applies to hazards due to the Coffey County Airport.

a. The following small airport is within 5 miles of the station:

   1. the Coffey County Airport located 4.5 miles north-northwest of the site. It is classified as a small aircraft airport servicing primarily single and twin engine piston type aircraft.

b. There are no airports between 5 and 10 miles of the station.

c. There are no airports outside 10 miles of the plant with the projected annual number of operations greater than 1000 d (d=miles from site to airport).

d. There is a low-altitude federal airway and a high-altitude jet route passing within 2 miles of the plant which have widths of 8 and 16 nautical miles, respectively. In addition, there is a low level military training route whose centerline passes within 17 miles of the plant. A probability analysis of the aircraft accidents on these routes has indicated that the probability of accidents leading to radiological consequences worse than the exposure guidelines of 10 CFR 100 is less than 10-7 per year. The details of this analysis are given in the following.

V-234 is an east-west low-altitude route, and its centerline passes within 3.9 miles of the plant site. It has a width of 8 nautical miles. V-131 is a north-south route passing within 6.1 miles of the plant site. It has a width of 8 nautical miles. Daily traffic on these routes and from direct flights traversing the airspace overlying Wolf Creek is reported to be 161 flights.

J-110 is a high-altitude east-west jet route passing within 0.5 miles of the plant site. It has a width of 16 nautical miles. Daily traffic on this route and from direct flights traversing the airspace overlying Wolf Creek is reported to be 132 flights.

IR-502 is a military low-level training route whose centerline passes within 17 miles of the plant. It has a width of 8 nautical miles, and the annual number of flights on this route is 1,560. Conservatively, the hazard from this route has been accounted for in the analysis with the assumption of an in-flight crash rate 2 times higher than that for general aviation.

The traffic count on low-altitude air routes does not include the aircraft operating under visual flight rules (VFR). It is conservatively assumed that the VFR traffic is equal to the IFR (instrumental flight rule) traffic reported above. The increase of traffic in the future is practically offset by a decrease in accident rates. The area of the safety-related structures in the plant whose damaged would lead to unacceptable radiological consequences is calculated to be 0.008 mi^2.

AIRCRAFT IMPACT PROBABILITY DUE TO AIR TRAFFIC

The probability, PFA, of an aircraft crashing into the plant and leading to radiological consequences in excess of 10 CFR 100 exposure guidelines is calculated as follows:

$$PFAY = C\ A \left(\frac{N_L}{W_L} + \frac{2N_T}{W_T} + \frac{N_H}{W_H}\right)$$

where: C = inflight crash rate per mile for aircraft using airway = 4×10^{-10};

A = area of safety-related structures whose damage would lead to unacceptable radiological consequences = 0.008 mi^2;

N_L = number of aircraft movements on low-altitude federal air routes V-234 and V-131 [161 x 2] = 322/day = 117,530/year;

W_L = width of low-altitude air route = 8 nautical miles = 9.2 miles;

N_T = number of aircraft movements on the training route IR-502 = 1,560/year;

W_T = width of training route IR-502 (plus twice the distance from the airway edge to the site since the site is outside the airway) = 34.0 miles;

N_H = number of aircraft movements on high-altitude federal jet route J-110 = 132/day = 48,180/year; and

W_H = width of jet route J-110 = 18.4 miles.

Using these data, the probability of an aircraft crashing into the plant and causing unacceptable radiological consequences is calculated as 5.0×10^{-8} per year.

AIRCRAFT IMPACT PROBABILITY DUE TO COFFEY COUNTY AIRPORT

The Standard Review Plan (section 2.2) specifies a method for calculating the probability of aircraft impact due to airports located near a nuclear power

plant. The probability per year of an aircraft crashing into the site (PA) is calculated by using the following expression:

$PA = C \times N \times A$

where:

C = probability per square mile of a crash per aircraft movement N = number of aircraft movements
A = effective plant area (in square miles)

Where multiple aircraft types and/or trajectories are involved this expression may be summed for each separate aircraft type and trajectory considered. Aircraft using the Coffey County Airport are lumped into a single category for the purposes of calculating the effective area as described below. No credit was taken for separate trajectories.

Numerical values for "C" are given in the standard review plan as a function of the distance from the airport to the nuclear power plant. The Coffey County Airport is located approximately 4.5 miles from Wolf Creek. The probability for general aviation aircraft for airports from 4 to 5 miles from nuclear power plants is given as 1.2×10^{-8} per aircraft movement. The safety of general aviation has improved significantly in the intervening years and therefore the SRP crash probabilities are now very conservative. The National Transportation Safety Board publishes the "Annual Review of Aircraft Accident Data-U.S. General Aviation." These publications were reviewed for the period of 1982 through 1986 (the most recent 5 years of available data) and the number of aircraft accidents occurring within 5 miles of airports has decreased by more than half in this 5 year period alone.

The effective area of the plant "A" is the portion of the plant that is susceptible to impact from a given type of aircraft and could result in radiological consequences greater than 10 CFR 100 guidelines. For the large commercial and military aircraft considered in the impact probability due to air traffic, a value of 0.008 miles^2 was used. However, for the small general aviation aircraft utilizing the Coffey County Airport a significantly smaller value is appropriate. Calculations show than an effective area of 0.0016 miles^2 may conservatively be used for general aviation aircraft with approach speeds of <140 mph and weighing <12,500 pounds. These parameters envelope the expected aircraft usage at Coffey County Airport through the year 2000.

Substituting the values described above along with actual usage levels results in:

$PA = 4.0 \times 10^{-8}$

When combined with the probability originally calculated for air routes of 5×10^{-8} this results in a total probability of aircraft impacts causing significant radiological releases of 9×10^{-8} per year. This result remains below the value of 1×10^{-7} per year given in the SRP as acceptable for siting of nuclear power plants.

Since the aircraft movements at the airports and on the air routes do not pose any undue risk to the safe operation of WCGS Unit No. 1, no design-basis aircraft impact is postulated.

3.5.2 SYSTEMS TO BE PROTECTED

The sources of internal missiles which, if generated, could affect the safety of the plant are considered in Appendix 3B.

The turbine and tornado missiles which, if generated, could affect the safety of the plant are discussed in Section 3.5.1.

All safety-related systems and components to be protected from tornado missiles are enclosed within protective structures which meet the requirements of Regulatory Guide 1.117. A tabulation of protective structures, their minimum wall thickness, and concrete strength are given in Table 3.5-2. The protective structure requirements for the RWST are discussed in Section 6.3. Openings to these structures are designed to prevent the entry of the design basis missile when the result would preclude the safety functions of the enclosed system or components. Prevention of missile entry includes the use of missile doors, barriers and shields at openings and adjacent buildings as shields in penetration areas. The missile barriers are designed utilizing the procedures given in Section 3.5.3.

Further description of the seismic Category I structures is provided in Section 3.8.1 for the reactor building and Section 3.8.4 for other structures.

The probability of significant damage (P_4) to critical components in the plant due to turbine failure has been assessed by first determining the separate probabilities of turbine failure and missile ejection (P_1, Refer to Section 3.5.1.3.4), such as a missile striking an entire structure of safety significance (P_2), and significant damage occurring to the component (P_3, Refer to Section 3.5.1.3.4). Then the overall annual probability $P_4 = P_1 \times P_2 \times P_3$.

The probability of a high or low trajectory, turbine missile striking a structure housing a critical component (P_2) is found to be 3.80×10^{-4} at the Wolf Creek site. Refer to Table 3.5-1. In addition, the probability of a high trajectory turbine missile striking a structure housing a critical component is 2.72×10^{-4} which is based on a total available target area of 110,991 square feet.

The annual probability (P_4) of a turbine missile damaging a critical component at the Wolf Creek site is found to be 2.49×10^{-9}. This value is less than 10^{-7} and is sufficiently low so that no specific protective measures are required for turbine missiles. Refer to Table 3.5-3.

Figure 3.5-1 identifies the safety-related structures, including those outside the power block, within the turbine missile trajectory.

Protective measures are provided to minimize the effect of potential tornado-generated missiles. The protective structures, shields, and barriers are designed utilizing the procedures given in Section 3.5.3.

The portions of the essential service water system (ESWS) located outside the power block requiring protective structures, shields, and barriers are discussed below.

3.5.2.1 Essential Service Water System Pumphouse

The ESWS pumphouse is a tornado-resistant, reinforced concrete structure with an operating floor at elevation 2000 ft. The separation of the trains of the ESWS is provided by an interior barrier wall. A tornado-resistant skimmer wall

at the ultimate heat sink (UHS) interface provides protection for the ESWS traveling water screens and the ESWS pumps, whose suction ends are located 28 feet below the normal surface of the UHS. Tornado-resistant shields protect the inlets and outlets of the ventilation system at the roof elevation and protect the personnel doors at grade level. Tornado-resistant covers protect the roof openings. Tornado-resistant shields cover the ESWS Pumphouse forebay pits to protect the ESWS Warming Lines.

Figures 3.8-131, 3.8-132, 3.8-133, and 3.8-145 show the tornado missile protection for the safety-related penetrations in the ESWS pumphouse.

3.5.2.2 Essential Service Water System Pipes, Electrical Duct Banks and Manholes

All ESWS pipes are buried a minimum depth of 4.5 feet to resist the effects of tornado-generated missiles and frost penetration. The ESWS discharge piping and warming lines use alternate methods for missile and frost protection. The ESWS discharge piping, from the last access vault to the discharge point, are encased in 4,000 psi compressive strength concrete with a minimum of 2 feet cover above the top of the pipe for missile protection. The discharge piping frost protection is provided by normal flow through the piping. The ESWS warming lines, on the north and south side of the pumphouse are covered with 3’-6” of granular compacted backfill (CCF1) and 9” of reinforced concrete for missile protection. The normal warming line frost protection is provided by normal flow through the piping. All ESWS electrical duct banks are reinforced concrete structures which are buried at a minimum depth of 4 feet to resist the effects of tornado-generated missiles and frost penetration.

The buried ESWS electrical manholes are tornado-resistant, reinforced concrete structures with missile-resistant manway covers and roofs. Figure 3.8-140 shows the tornado missile protection for the ESWS electrical manholes.

3.5.2.3 Essential Service Water System Access Vaults

Essential Service Water System Access Vaults

The buried ESWS access vaults are tornado-resistant, reinforced concrete structures with missile-resistanct access and manway covers. Figure (3.8-143) shows the tornado missile protection for the ESWS access vaults.

3.5.2.4 Essential Service Water System Discharge Point

The submerged ESWS discharge piping follows the grade of the lakebed from the shoreline to the discharge point at 23 feet below the normal surface of the Ultimate Heat Sink. The discharge point is sufficiently protected from tornado-missile damage by being submerged.

3.5.2.5 Diesel Generator Building

The barrier separating the two diesel generators is a 2-foot-thick reinforced concrete wall. The wall reinforcement is such that the wall is capable of withstanding the impact of all the externally generated missiles identified in Table 3.5-1.

There are four openings in the wall, but they are located within 3 feet of the north end of the building. This location and the small size of the openings (1

foot square or smaller) effectively prevents any internally generated missiles from passing through the openings and damaging equipment in the adjacent area. In addition, these openings actually serve as penetrations for piping and are sealed.

3.5.2.5.1 Diesel Engine Missiles

The WCGS diesel engine is a low speed (514 rpm) engine which has a vented crank case. The engine manufacturer has never experienced nor knows of any crank case explosions or engine failures which resulted in missiles.

As noted above, the internal wall separating the two diesel engines is designed to withstand a tornado missile impact. In the highly unlikely event that the engine did generate an external missile, the energy of that missile would be significantly less than that of the tornado missile.

3.5.2.5.2 Air Tank Missiles

The air tanks are seismically mounted on their skids, which are in turn seismically anchored to the floor. Rupture of a tank would not generate missiles whose energy exceeds that of a tornado missile.

3.5.2.5.3 Pipe Break Missiles

There are no high energy lines in the diesel generator building. The only moderate energy lines are those directly associated with each diesel engine. Therefore, a postulated failure of a moderate energy line would be considered the diesel single failure. There are no open penetrations between rooms, and therefore, flooding of one room will not degrade the opposite diesel engine.

3.5.2.5.4 Fuel Oil Storage Tank

The fuel oil storage tank fill and vent lines rise above grade within the diesel generator building and then penetrate the building wall to the outside. The portion of these lines within the building is seismically restrained. Failure of these lines does not jeopardize operation of the diesel.

If the fill line is unusable, the tank manhole can be used as the fill and vent connection if the tanks have to be replenished.

In addition to the transfer line, the storage tank and the day tank are also interconnected via the overflow and recirculation line. Should the storage tank vent be totally restricted, venting can occur through the day tank. (It should be noted that the vent sizes are based on filling operations and not engine operations. The operating vent requirements are significantly less than those required for filling). In the unlikely event that both tank vents are completely restricted, either tank can be vented by alternative means..

Since failure of the nonseismic storage tank vent and fill lines will not prevent system operation, no tornado protection is provided.

3.5.2.6 Diesel Exhaust Stack

Although the WCGS safety-related structures and components are designed for the design basis tornado and the design basis tornado missiles, the diesel exhaust stacks can reasonably be exempt from the requirement for specific missile barriers without jeopardizing the health and safety of the public. During the PSAR review stage, the NRC staff questioned the tornado missile protection provided for the stacks (Question 020.13, 430.38), and reached the same conclusion for the present design.

After the construction permit review was complete, the NRC issued Regulatory Guide 1.117 "Tornado Design Classification," which is applicable to Construction Permit applications docketed after May 30, 1978. Even though this guide is not applicable to WCGS, it was addressed in the USAR, and its provisions are adequately met to state that the design is in compliance with the regulatory recommendations.

The basis for this conclusion includes consideration of 1) the exhaust stacks inherent resistance to damage from credible missiles and the acceptability of penetration and/or significant denting, 2) the improbability of design basis tornadoes and the low probability that the design basis missiles could exist at the high elevations required, and 3) the significant protection afforded the stacks by existing plant structures. The arguments below demonstrate that it is extremely unlikely that a tornado missile will damage an exhaust stack and inhibit diesel operation. It is even more unlikely that both stacks could be damaged.

3.5.2.6.1 Design

The diesel stacks are seismically supported, 35 feet apart, and inherently resistant to damage from tornado missiles due to their large diameter (42-inch O.D.) and 3/8-inch-thick steel wall construction. High kinetic energy missiles could, however, deform the stack or even penetrate it if the impact area is small relative to the kinetic energy. Penetration or significant deformation will not adversely affect the function of the stack since they are oversized.

The total allowable pressure drop for the exhaust system for rated power output is 10 inches of water. The pressure drop from the engine through the exhaust silencer and to the diesel building roof line is approximately 5 inches of water. The exposed portion of pipe above the diesel generator roof is only 50 feet long and has an allowable length of more than 926 feet (corresponding to an allowable pressure drop of 5 inches of water). If this pipe were only 32 inches in diameter, its allowable length would be 280 feet. Thus significant local damage due to denting or penetration by a tornado missile is acceptable because full power diesel operation would not be impaired.

3.5.2.6.2 Missile Selection Criteria

The improbability of any missile of high density and high energy being elevated to the heights of the diesel stacks is obvious from NUREG-0121 "An Assessment of the Basis for Selection Criteria for Protection Against Tornado-Entrained Debris." Exerpts from NUREG-0121 and Operating Agent remarks are presented in Table 3.5-5 . These discussions are provided to highlight the low probability of any high density, high energy missile which approaches the characteristics of the current set of design basis missiles.

3.5.2.6.3 Structural Protection

The following discussion addresses horizontal missile trajectories and missiles recently ejected from the maximum windfield. Missiles falling from greater heights are not specifically addressed, since it is considered extremely improbable that a design basis missile will exceed the heights of the surrounding buildings. USAR Figures 1.2-26, 1.2-27, and 1.2-28 provide detailed plan and elevation views of the stacks and surrounding structures.

Figure 3.5-2 depicts the plant location of the diesel stacks and the inherent protection provided for them by the surrounding power block structures from tornado missiles which could potentially affect the full power operation of the diesel. For analysis purposes approach of missiles on the diesel stacks has been considered for seven zones. (Zones A through G are indicated on Figure 3.5-2) The exact boundaries of each zone are not strictly defined since the stacks are 35 feet apart and tumbling missiles would affect the zone boundaries.

Zone A Protection is provided by the control building to a height of 87 feet. Only the top 10 feet of the stacks are exposed to missiles which must rise above nine stories and traverse the control building roof prior to impacting the stacks.

Zone B The turbine building roof is approximately 140 feet high and would effectively preclude design basis missiles from reaching the diesel stacks. The control building again affords protection for most of the stacks.

Zone C The containment structure provides complete protection from missiles from this direction.

Zone D The fuel building is 106 feet high and provides complete protection from credible missiles possessing sufficient energy to inflict adverse damage.

Zone E The diesel generator intake penthouse provides protection up to 66 feet above grade. The radwaste building will also provide protection up to 55 feet above grade and effectively disrupt the funnel and windfield to help eject previously entrained missiles prior to their reaching the diesel building.

Zone F The diesel generator intake penthouse provides protection up to 66 feet above grade to effectively shield the exhaust stacks from high energy missiles.

Zone G This relatively narrow zone is the least protected direction for which missiles could emanate and impact the stacks. However, missiles of concern would have to be raised over five stories while being accelerated to high velocities. These missiles would have to be ejected from the maximum windfield at a significant distance from the control/diesel building to reach the stacks. Once a funnel reaches these buildings, the windfield will be disturbed, and entrained missiles will be less likely to have been accelerated to high velocities. For a tornado approaching from the east, missiles in the leading edge of the windfield when the funnel reaches the diesel building will be traveling in a north/south direction and not impact the stacks.

3.5.3 BARRIER DESIGN PROCEDURES

The plant layout is based on optimizing the physical separation of redundant or diverse safety-related components and systems from each other and from nonsafety-related items. Therefore, in the event a hazard occurs within the plant, there is a minimum effect on other systems or components required for a post-accident safe shutdown. Missile-resistant barriers and structures are designed to withstand and absorb missile-impact loads to prevent damage to the protected structures, systems, and components.

3.5.3.1 Tornado Missile Barrier Design Procedures

Tornado-resistant structures may sustain local missile damage, such as partial penetration and local cracking and/or permanent deformation, provided that structural integrity is maintained, perforation is precluded, and the contained seismic Category I systems, components, and equipment are not subjected to damage by secondary missiles, such as from concrete spalling and scabbing.

The wall and roof thicknesses provided to resist the effects of tornado-generated missiles are considered to be more than adequate. It is considered that a thickness of 24 inches for reinforced concrete with a minimum strength of 4,000 psi for the walls and (either 21 inches for the roof with minimum concrete strength of 4,000 psi or 18 inches for the roof with minimum concrete strength of 5,000 psi) roof slabs of seismic Category I structures are adequate to resist the impact of tornado-generated missiles for both penetration and structural response. This is based on the results of the test program, "Missile Impact Testing of Reinforced Concrete Panels," (Ref. 3) and on the EPRI Report, "Full-Scale Tornado Missile Impact," (Ref. 4).

The ESW Vertical Loop Chase structure (walls and roof) is constructed from 1/2 inch thick carbon steel plate that works in conjunction with the hollow steel section (HSS) tubular steel substructure to provide an adequate means to resist the impact of tornado-generated missiles for both penetration and structural response.

3.5.3.2 Barrier Design Procedures for Internally Generated Missiles

In general, when separation is not feasible, additional protection from internal missiles is provided by barriers. The procedures and calculations employed in the design of missile-resistant barriers for turbine missiles and other internally generated missiles are described in Reference 5. In the design calculations for missile resistant barriers, ductility ratios never were greater than 10. Therefore additional details are not required here. Appendix 3B discusses the protection required for internally generated missiles.

3.5.4 REFERENCES

1. Hypothetical Turbine Missiles Probability of Occurrence, General Electric Memo Report Dated March 14, 1973.

2. Delete

3. "Missile Impact Testing of Reinforced Concrete Panels," Calspan Report No. HC-5609-D-1, Calspan Corporation, Buffalo, New York, January 1975.

4. Stephenson, A. E., "Full-Scale Tornado Missile Impact," EPRI Report No. NP-440, July 1977.

5. "Design of Structures for Missile Impact," BC-TOP-9-A, Revision 2, Bechtel Power Corporation, San Francisco, California, September 1974.

6. Turbine Missile Analysis Statement, General Electric Correspondence to WCNOC, dated 10/20/2009. Correspondence Number 10-00055.

7. WNA-AR-00155-SAP, "Turbine Control System Upgrade Reliability and Fault Tree Analysis", Rev. 1.

8. Calculation AC-M-005, "Turbine Missile Probability Study", Rev. 0.

9. Calculation 020544.14.01-C-003, "Tornado Missile Impact Analysis of ESW Piping System Steel Tower", Rev. 0.

TABLE 3.5-1

CHARACTERISTICS OF POSTULATED TORNADO MISSILES

Missile	Weight, lbs	Horizontal Velocity, fps
Wood plank, 4" x 12" x 12’ long	115	272
Steel pipe, 6" diameter, schedule 40, 15’ long	286	170
Steel rod, 1" diameter, 3’ long	9	167
Utility pole, 13.5" diameter, 35’ long	1,123	180
Steel pipe, 12" diameter, schedule 40, 15’ long	749	154
Automobile, 16.4’ x 6.6’ x 4.3’	3,991	194

TABLE 3.5-2

STRUCTURES PROVIDING TORNADO MISSILE BARRIER PROTECTION

Structure	Nominal Concrete Thickness	90-Day Strength
Reactor building	4 ft - wall	4,000 psi
	3 ft - dome	4,000 psi
Auxiliary building	2 ft - wall	4,000 psi
	1 1/2 ft - roof	5,000 psi
Control building	2 ft - wall	4,000 psi
	1 1/2 ft - roof	5,000 psi
Diesel generator building	2 ft - wall	4,000 psi
	1 1/2 ft - roof	5,000 psi
Fuel building	2 ft - wall	4,000 psi
	1 1/2 ft - roof	5,000 psi
ESW Vertical Loop Chase	1/2 is ASTM A36 carbon steel plate and 5/8 in HSS tubing – wall 1/2 in ASTM A36 carbon steel plate and 5/8 in HSS tubing - roof	NA

TABLE 3.5-3

TURBINE MISSILE PROBABILITIES
HIGH ENERGY, HIGH AND LOW TRAJECTORY

Missile Source	Target Structure	Striking Probability, P_2
Turbine	Power Block	1.30×10^{-4}
Turbine	ESWS Pumphouse (High Trajectory)	0.17×10^{-4}
Turbine	ESWS Pumphouse (Low Trajectory on Vertical Wall)	1.08×10^{-4}
Turbine	Buried ESWS Pipes and Duct Banks	1.25×10^{-4}
	TOTAL P_2 =	3.80×10^{-4}

$P_4 = P_1 \times P_2 \times P_3$

P_1 = Less than or equal to 2.49×10^{-6} per year (Refer to Section 3.5.1.3.4)

$P_2 \times P_3 = 1 \times 10^{-3}$ per year (Refer to Section 3.5.1.3.4)

$P_4 = 2.49 \times 10^{-9}$ per year*

* This probability meets the NRC requirements stated in section 3.5.1.3.4, that P_4 should be less than 10^{-7} per year per plant.

TABLE 3.5-4

RANGE OF MAXIMUM AND MINIMUM TURBINE MISSILE VELOCITIES (FPS)

Turbine Wheel Groups(1)

	I		II		III	
	Max.	Min.	Max.	Min.	Max.	Min.
V_a(2)	470	393	550	413	610	400
V_b(2)	620	484	750	521	780	498
V_c(2)	930	625	880	625	910	625
V_d(2)	(3)	1040	(3)	1053	(3)	996

NOTES:

(1) The turbine manufacturer has divided the various turbine wheels into three groups for analysis purposes.

(2) Velocities have been categorized, V_a through V_d, to represent four different failure modes considered possible by the manufacturer.

(3) The minimum velocity required to perforate the structure roof and strike a target, V_{min}, is greater than the maximum velocity achievable for the postulated failure mode, V_{max}.

TABLE 3.5-5

NUREG 0121 APPLICABILITY TO DIESEL STACK DESIGN

Excerpt From NUREG 0121	Remarks
Any set of design basis tornado missiles should consider: 1. Object likely to be in the plant vicinity. 2. Objects in the vicinity and likely to become airborne and hurled by a tornado windfield. 3. Airborne objects likely to damage plant structures if impacted at high speed.	
Of the present list of seven missiles, only missile "G", the automobile, clearly meets all three tests. For the other high density missiles the potential for lofting and acceleration is questionable." (NUREG-0121, Page 2)	
	The automobile and utility poles are not credibly postulated above 30 feet. The minimum height of the exposed stack is 47.5 feet.
The information in WASH 1300 suggests that the design basis tornado is itself no more probable than 10^{-7} per year and that the median tornado windspeed of all U.S. tornadoes studied was about 45 m/sec. Fewer than 10 percent of these studied tornadoes were deduced to have windspeeds above 70 m/sec., fewer than 1 percent above 90 m/sec., and fewer than 0.1 percent above 130 m/sec.	
In regard to damage potential, typical missiles in a 10^{-7} per year tornado become very rare in a 10-6 per year tornado, and are physically impossible in tornadoes having higher incidence rates. (NUREG-0121, Pages 3 and 4)	
	Only the near design basis tornado missiles have sufficient energy to cause adverse damage to the diesel stacks.

TABLE 3.5-5 (Sheet 2)

A rigid body may be lifted into a windfield by any or all conceivable mechanisms: (1) aerodynamic lift..., (2) drag lift , (3) suction... These last two mechanisms, however, are of great importance only to ojbects directly in the path of the tornado vortex. The first mechanism, aerodynamic lift, can be postulated to affect missiles over a much greater area. (NUREG-0121, Pages 6 and 7)

Unless a missile is lifted while in the vortex of the tornado, it will not achieve any significant height unless its aerodynamic properties are unique. Missiles of concern to the diesel stack would have to be lifted between 47 and 97 feet while remaining in the vortex and high wind speed region of the tornado in order to be accelerated to significant velocities.

Missiles that do not "fly" will experience predominantly horizontal forces and will be accelerated by them. At some point in their trajectory, a maximum velocity will be reached, after which the missile must decelerate. (NUREG-0121, Page 8)

The missiles of concern are dense and usually of poor airfoil design and are therefore unlikely to "fly" to the heights required to damage the diesel stacks.

In order to achieve any significant fraction of the maximum tangential wind speed, a massive missile must pass through the maximum wind, and the most significant single parameter of a missile trajectory in determining that missiles' maximum velocity is the distance traveled within the maximum windfield... such missiles are lifted and accelerated only by the highest velocity winds but can not be easily deflected from a nearly straight path in order to follow the tornado vortex. (NUREG-0121, Pages 12 and 13)

TABLE 3.5-5 (Sheet 3)

	Massive missiles fly straight and therefore do not remain in the maximum windfield for long durations. Once out of the maximum windfield they fall rapidly due to gravity. Therefore the missiles which could damage the diesel stacks would have to be raised to heights greater than 47.5 feet or be in or near the maximum windspeed section of the tornado at the moment of impact.
The study has shown that it is relatively easy for a missile to acquire about 10 percent of the maximum tornado windspeed by a brief passage in the windfield, but to acquire significantly higher velocities, a comparatively long distance must be traveled within the windfield. However, massive missiles cannot stay within a windfield long enough to attain high velocities because of centrifugal forces. (NUREG-0121, Page 23)	
	Only high energy missiles are of concern to the diesel stack functionality.
Real tornadoes are not uniform windfield, but distorted helical flows... Should a tornado pass over the barrier while a missile is entrained therefore, there is a significant probability that the missile will not, in fact, impact the barrier. (NUREG-0121, Page 17)	
	The surface of the diesel stack which is normal to the flight of a postulated missile is small. Glancing blows of a missile or impacts of an end of a tumbling missile will not adversely affect the diesel stacks.

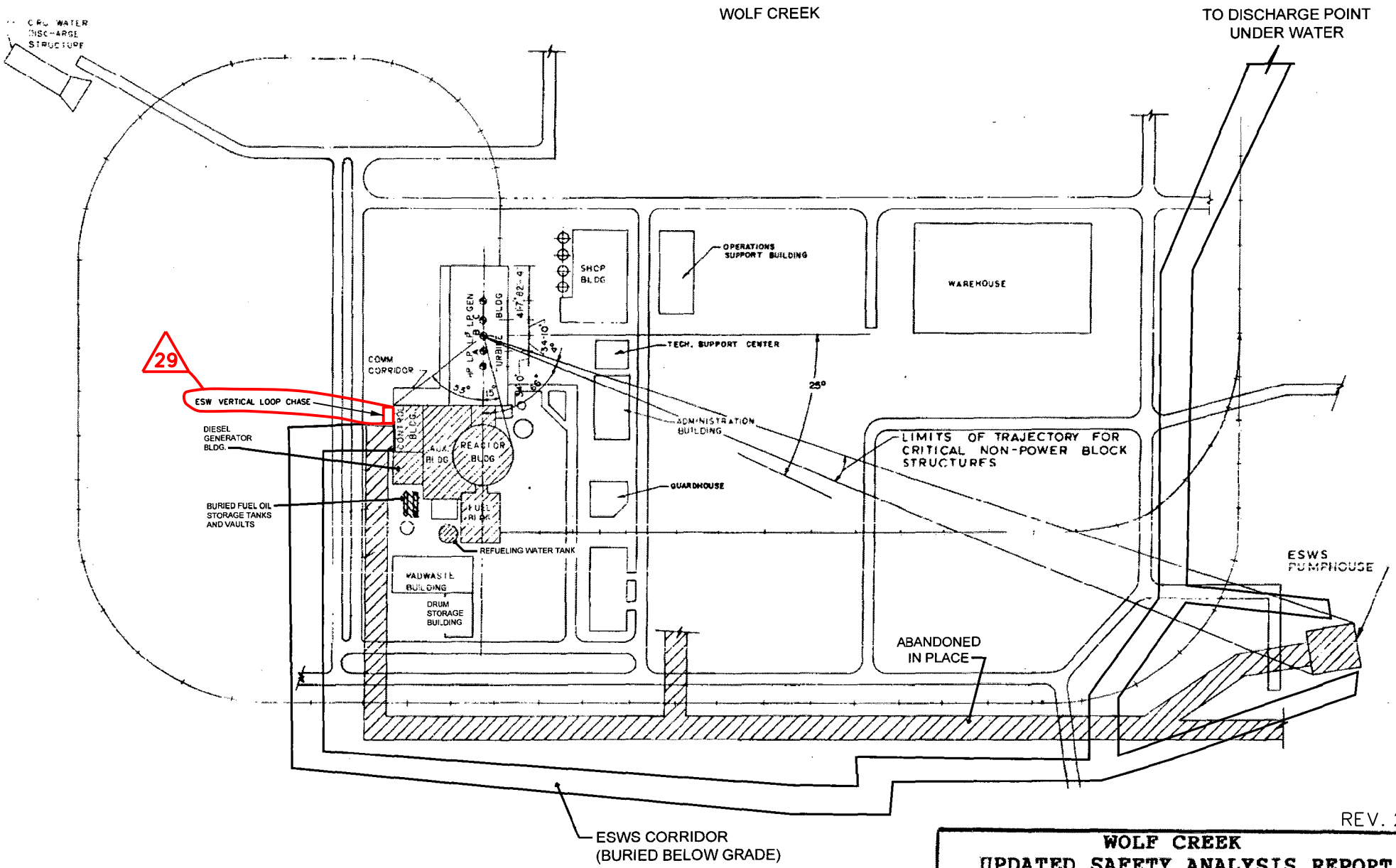

REV. 29

WOLF CREEK
UPDATED SAFETY ANALYSIS REPORT

FIGURE 3.5-1

TURBINE MISSILE TRAJECTORY

STRUCTURES HOUSING SYSTEMS AND COMPONENTS THAT ARE ESSENTIAL IN ATTAINING AND MAINTAINING A SAFE SHUTDOWN OF THE PLANT.

WOLF CREEK

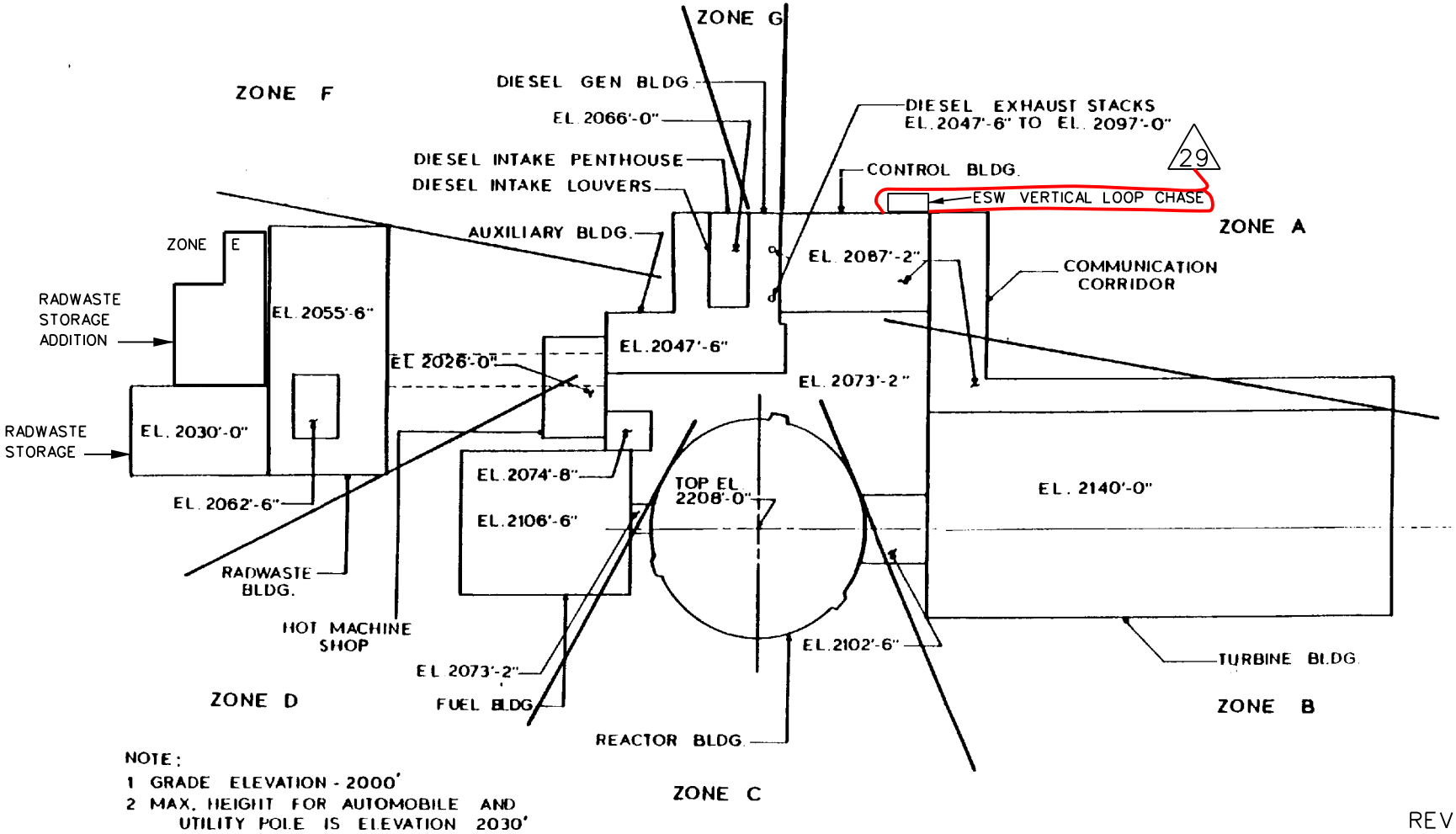

NOTE:
1 GRADE ELEVATION - 2000'
2 MAX. HEIGHT FOR AUTOMOBILE AND UTILITY POLE IS ELEVATION 2030'

REV.29

WOLF CREEK UPDATED SAFETY ANALYSIS REPORT
FIGURE 3.5-2 STRUCTURAL PROTECTION FOR DIESEL EXHAUST STACKS FROM TORNADO MISSILES

3.6 PROTECTION AGAINST THE DYNAMIC EFFECTS ASSOCIATED WITH THE POSTULATED RUPTURE OF PIPING

Pipe failure protection is provided in accordance with the requirements of 10 CFR 50, Appendix A, GDC 4.

In the event of a high- or moderate-energy pipe failure within the plant, adequate protection is provided to ensure that those portions of the essential structures, systems, or components whose failure could compromise the integrity of the reactor coolant system or reduce the functioning of any plant feature required for a post-accident safe shutdown to an unacceptable level are designed, constructed, and protected so as not to fail or cause such a failure.

Appendix 3B, Hazards Analysis, provides several examples of the evaluations made of the effects of postulated pipe failures within the plant. The following sections provide the bases for selection of the pipe failures, the determination of the resultant effects, and details of the protection requirements.

3.6.1 POSTULATED PIPING FAILURES IN FLUID SYSTEMS INSIDE AND OUTSIDE CONTAINMENT

Table 3.6-1 provides a matrix which indicates high-energy systems, moderate-energy systems and safety-related systems.

Selection of pipe failure locations for evaluation of the consequences on nearby essential systems, components, and structures, is presented in Section 3.6.2 and, except for the reactor coolant loop, is in accordance with Regulatory Guide 1.46, and NRC BTPs ASB 3-1 and MEB 3-1.

The dynamic effects from postulated pipe breaks have been eliminated from the structural design basis of the reactor coolant system primary loop piping, as allowed by revised General Design Criterion 4 (Reference 15). The elimination of these breaks is the result of the application of leak-before-break (LBB) technology, as presented in Reference 16, 17, and 18, and approved for WCGS by the NRC (Reference 19).

3.6.1.1 Design Bases

The following design bases relate to the evaluation of the effects of the pipe failures determined in Section 3.6.2.

a. The selection of the failure type is based on whether the system is high- or moderate-energy, based on normal operating conditions of the system.

   High-energy piping includes those systems or portions of systems in which the maximum operating temperature exceeds 200 F or the maximum operating pressure exceeds 275 psig, during normal plant conditions.

Piping systems or portions of systems pressurized above atmospheric pressure during normal plant conditions and not identified as high-energy are considered moderate-energy.

Piping systems which exceed 200°F or 275 psig for 2 percent or less of the time the system is in operation or which experience high-energy pressures or temperatures for less than 1 percent of the plant operation time are considered moderate-energy.

b. Except for the reactor coolant system, the worst case operational plant conditions (including startup, operation at power, hot standby, shutdown, and upset conditions) are used to determine the piping system support/restraint requirements and to determine blowdown rates for jet impingement loads. For the reactor coolant system, including all Class 1 branch piping, the normal power operation conditions are used as described in Reference 1.

c. Moderate-energy pipe cracks were evaluated for wetting from spray, flooding, and other environmental effects.

d. Each longitudinal or circumferential break in high-energy fluid system piping or leakage crack in moderate-energy fluid system piping was considered separately as a single postulated initial event occurring during normal plant conditions.

e. Offsite power was assumed to be unavailable if a trip of the turbine-generator system or reactor protection system was a direct consequence of the postulated piping failure, unless it was more conservative to assume that offsite power was available (e.g., a feedwater line break with offsite power available leads to a larger inventory of water for flooding considerations).

f. A single active component failure was assumed in systems used to mitigate the consequences of the postulated piping failure and to safely shut down the reactor, except as noted in Paragraph g below. The single active component failure was assumed to occur in addition to the postulated piping failure and any direct consequences of the piping failure, such as unit trip and loss of offsite power.

g. When the postulated piping failure occurs and results in damage to one of two or more redundant or diverse safety-related trains, single failures of components in other trains (and associated supporting trains) are not assumed. Postulated failures are precluded, by design, from affecting the opposite train or from resulting in a DBA. The safety-related systems are designed to the following criteria: a) seismic Category I standards, b) powered from both offsite and onsite sources, and c) constructed, operated, and inspected to quality assurance, testing, and in-service inspection standards appropriate for nuclear safety systems.

h. All available systems, including those actuated by operator actions, are employed to mitigate the consequences of a postulated piping failure to the extent clarified in the following paragraphs:

1. In determining the availability of the systems, account was taken of the postulated failure and its direct consequences, such as unit trip and loss of offsite power, and of the assumed single active component failure and its direct consequences. The feasibility of carrying out operator actions was determined on the basis of ample time and adequate access to equipment being available for the proposed actions. Although a postulated high/moderate-energy line failure outside the containment may ultimately require a cold shutdown, operation at power or hot standby was assumed as allowed by the plant technical specifications. During this period plant personnel would assess the situation and make repairs.

2. The use of nonseismic Category I equipment is clarified in the following paragraphs:

(a) For nonseismic Category I piping failures, it was assumed that a safe shutdown earthquake could be the cause of the failure. Thus, only seismic Category I equipment could be used to bring the plant to a post-accident safe shutdown.

(b) For seismic Category I and seismically supported nonseismic Category I piping failures, it was assumed that the failure was caused by some mechanism other than an earthquake. Thus, nonseismic Category I equipment could be used to

bring the plant to a post-accident safe shutdown, subject to the power being available to operate such equipment as discussed in Paragraph h(1) above.

i. A whipping pipe was not considered capable of rupturing impacted pipes of equal or greater nominal pipe diameter and equal or greater thickness, assuming that only "piping" was determined to do the impacting. A whipping pipe was considered capable of developing a through wall leakage crack in a pipe of larger nominal pipe size with thinner wall, assuming that only "piping" was determined to do the impacting. Where the potential existed for valves or other components in the whipping pipe to impact the targets, the above criterion was not utilized and the whipping pipe was not allowed to impact a safety-related component.

j. Pipe whip was assumed to occur in the plane defined by the piping geometry and to cause movement in the direction of the jet reaction.

   If unrestrained, a whipping pipe having a constant energy source sufficient to form a plastic hinge was considered to form a plastic hinge and rotate about the nearest rigid restraint, anchor, or wall penetration. If the direction of the initial pipe movement, caused by the thrust force, is such that the whipping pipe impacts a flat surface normal to its direction of travel, it was assumed that the pipe comes to rest against that surface, with no pipe whip in other directions.

   If unrestrained, a whipping pipe without a constant energy source (i.e., a break at a closed valve with only one side subject to pressure) was not considered capable of forming a plastic hinge and rotating, provided that its movement could be defined and evaluated.

   Pipe whip restraints are provided wherever postulated pipe breaks have any possibility of affecting any system or component required for the mitigation of that break or post-accident safe shutdown of the plant. Unrestrained pipe breaks are limited to those areas of the plant that are physically separated from the systems and components required for pipe break mitigation or post-accident safe shutdown.

k. The calculation of thrust and jet impingement forces considers any line restrictions (e.g., flow limiter) between the pressure source and break location and the absence of energy reservoirs, as applicable.

l. Initial pipe break events were not assumed to occur in pump and valve bodies because of their greater wall thicknesses.

m. A survey of all potential internal flooding sources was performed for all rooms with safety-related components. This survey determined the worst case internal flooding event for each room. From this survey, calculations were performed to determine the worst case flood level in each of these rooms. A summary of these flood levels is provided in Table 3.6-6. Additional information on containment flooding is provided in Sections 6.2.2.1.3 and 6.3.2.2. Assumptions used in arriving at the worst case flooding event are as follows:

1. One break or crack occurs at a time

2. Nonseismic lines will experience guillotine breaks during seismic events

3. Drain pipes are assumed to be dry before the break or crack

4. Rooms drain through the floor drain(s). No credit is taken for drainage through uncapped or unsealed equipment drains. Typically, no credit is taken for drainage out under doors.

5. Pipes which are supported II/I and are moderate energy during normal plant operating modes are assumed to develop moderate energy cracks only.

3.6.1.2 Description

Systems, components, and equipment required to safely shut down the plant and mitigate the consequences of postulated piping failures (hereinafter called essential) were reviewed, in order to comply with the design bases, to determine their susceptibility to the failure effects. The break and crack locations were determined in accordance with Section 3.6.2. Figure 3.6-1 and 3.6-3 show the high-energy pipe break locations and break types.

Those essential systems which are subject to the consequences of pipe failure are summarized in Table 3.6-1. The type of hazard (i.e., whipping, jet impingement, spraying, and flooding) is

shown. This summary was based on the detailed failure mode analysis discussed in Section 3.6.1.3, Section 3.6.2.5, and Appendix 3B.

The design comparison to Regulatory Guide 1.46 positions, incorporating the comparison to NRC BTP MEB 3-1 and NRC BTP ASB 3-1, is provided in Table 3.6-2.

Pressure response analyses were performed for the subcompartments containing high-energy piping. For a detailed discussion of the line breaks selected, and pressure results, refer to Section 6.2.1.2 and Table 3.6-4 for subcompartments inside the containment and Table 3.6-4 for subcompartments located outside the containment. The analytical methods used for pressure response analysis are in accordance with Reference 12.

Appendix 3B discusses hazards analysis and Table 3B-1 shows a typical hazards analysis.

In the control building, the effects of postulated failures of high energy lines would not impair the integrity or operability of safety related structures, systems or components. There are no effects upon the habitability of the control room from pipe break or pipe whip. Further discussion of the control room habitability systems is provided in Section 6.4.

3.6.1.3 Safety Evaluation

3.6.1.3.1 General

An analysis of postulated pipe failures was performed to identify those safety-related systems, components, and equipment that provide protective actions required to mitigate the consequences of the failure.

By means of protective measures such as separation, barriers, and pipe whip restraints, discussed below, the effects of breaks and cracks are prevented from damaging essential items to an extent that would impair their design function or necessary component operability.

Typical measures used for protecting the essential systems, components, and equipment are outlined below and discussed in detail in Section 3.6.2.4. The ability of specific safety-related systems to withstand a single active failure concurrent with the postulated event is discussed, as applicable.

When the results of the pipe failure effects analysis showed that the effects of a postulated high-energy break or moderate-energy crack, on a reasonable basis, were isolated, physically remote, or restrained by protective measures, from essential systems or components, no further dynamic hazards analysis was performed.

3.6.1.3.2 Protection Mechanisms

3.6.1.3.2.1 General

The plant layout arrangement is based on maximizing the physical separation of redundant or diverse safety-related components and systems from each other and from nonsafety-related items. Therefore, in the event a pipe failure occurs within the plant, there is a minimal effect on other essential systems or components which are required for post-accident safe shutdown of the plant or to mitigate the consequences of the failure.

The effects associated with a particular high-energy break or moderate-energy crack must be mechanistically consistent with the failure. Thus, actual pipe dimensions, piping layouts, material properties, and equipment arrangements are considered in defining the specific measures for protection against actual pipe movement and other associated consequences of postulated failures.

Protection against the dynamic effects of pipe failures is provided in the form of pipe whip restraints, barriers, equipment shields, and physical separation of piping, equipment, and instrumentation. The precise method chosen depends largely upon considerations such as accessibility, maintenance, and proximity to other pipes.

SEPARATION - The plant arrangement provides separation, to the extent practicable, between redundant safety systems (including their auxiliaries and support systems) in order to prevent loss of safety function as a result of hazards different from those for which the system is required to function, as well as for the specific event for which the system is required to be functional. Separation between redundant safety systems, with their related auxiliary supporting features, therefore, was the basic protective measure incorporated in the design to protect against the dynamic effects of postulated pipe failures.

In general, layout of the facility followed a multistep process to ensure adequate separation.

a. Safety-related systems were located away from high-energy piping, where practicable.

b. Redundant (e.g., "A" and "B" trains) safety systems were located in separate compartments.

c. As necessary, specific components were enclosed to retain the redundancy required for those systems that must function as a consequence of specific piping failure.

d. Drainage systems were reviewed to assure their adequacy for flooding prevention.

BARRIERS, SHIELDS, and ENCLOSURES - Protection requirements were met through the protection afforded by the walls, floors, columns, abutments, and foundations, in many cases. Where adequate protection did not already exist due to separation, additional barriers, deflectors, or shields were provided to meet the functional protection requirements.

Some of the barriers utilized for protection against pipe whip inside the containment are the following: The secondary shield wall serves as a barrier between the reactor coolant loops and the containment liner. In addition, the refueling cavity walls, operating floor, and secondary shield walls minimize the possibility of an accident, which may occur in any one reactor coolant loop from affecting another reactor coolant loop or the containment liner. That portion of the steam and feedwater lines located within the containment was routed behind barriers which separate these lines from all reactor coolant piping. The barriers described above will withstand loadings caused by jet forces and pipe whip impact forces.

Further discussion of barriers and shields is provided in Section 3.6.2.4.

PIPING RESTRAINT PROTECTION - Measures for protection against pipe whip, as a result of high-energy pipe breaks, were provided where, following a single break, the unrestrained pipe movement of either end of the ruptured pipe could damage, to an unacceptable level, any structure, system, or component required to place the plant in a post-accident safe shutdown condition or mitigate the consequences of the rupture.

The design criteria for and description of restraints are given in Section 3.6.2.3.

3.6.1.3.3 Specific Protection Considerations

a. Nonessential systems and system components are not required for the post-accident safe shutdown of the reactor, nor are they required for the limitation of the offsite release in the

event of a pipe rupture. However, while none of this equipment is needed during or following a pipe break event, pipe whip protection is considered where a high-energy nonessential system or component failure could initiate a pipe break event in an essential system or component, or another nonessential system, whose failure could affect an essential system.

b. High-energy containment penetrations are subject to special protection mechanisms. As shown in Figure 3.6-1, isolation restraints are located as close as practical to the containment isolation valves associated with these penetrations. These restraints are provided in order to maintain the operability of the isolation valves and the integrity of the penetration due to a break either upstream or downstream of the penetration and outside the respective isolation restraints.

c. Instrumentation which is required to function following a pipe rupture is protected.

d. High-energy fluid system piping restraints and protective measures are designed so that a postulated break in one piping system cannot, in turn, lead to a rupture of other nearby piping system or components, if the secondary rupture would result in consequences that would be considered unacceptable for the initial postulated break.

e. For any postulated LOCA, the structural integrity of the containment structure is maintained.

f. The escape of steam, water, combustible or corrosive fluids, gases, and heat in the event of a pipe rupture will not preclude:

    1. Subsequent access to any areas, as required, to cope with the postulated pipe rupture

    2. Habitability of the control room

    3. The ability of essential instrumentation, electric power supplies, components, and controls to perform their safety function to the extent necessary to mitigate the consequences of the pipe rupture and achieve and maintain post-accident safe shutdown.

3.6.2 DETERMINATION OF BREAK LOCATIONS AND DYNAMIC EFFECTS ASSOCIATED WITH THE POSTULATED RUPTURE OF PIPING

This section describes: the design bases for locating postulated breaks/cracks in high-energy/moderate-energy piping inside and outside of the containment; the procedures used to define the jet thrust reaction at the break location; the procedures used to define the jet impingement loading on adjacent essential structures, systems, or components; restraint design; and protective assembly design.

3.6.2.1 Criteria Used to Define High/Moderate-Energy Break/Crack Locations and Configurations

Except for the reactor coolant loop (RCL), NRC Branch Technical Position (BTP) MEB 3-1 was used as the basis of the criteria for the postulation of high-energy pipe breaks. Specific moderate-energy pipe crack locations were not ascertained and, therefore, they were assumed to occur at any location, except as noted in Section 3.6.2.1.2.4.

A postulated pipe break is defined as a sudden, gross failure of the pressure boundary of a pipe either in the form of a complete circumferential severance (i.e., a guillotine break) or as development of a sudden longitudinal, uncontrolled crack (i.e., a longitudinal split) and is postulated for a high-energy fluid system only. For moderate-energy fluid systems, pipe failures are confined to postulation of controlled cracks in piping. These cracks affect the surrounding environmental conditions only, and do not result in whipping of the cracked piping.

WCGS complies with either Rev. 0 or Rev. 2 of MEB 3-1. MEB 3-1, Rev. 0 criteria was used in the initial design and Rev. 2 criteria may be used for subsequent analysis. MEB 3-1, Rev. 2 criteria is included in Table 3.6-2.

The allowable stress limits for MEB 3-1, Rev. 0 is based on ASME Section III, 1974 Edition and Rev. 2 is based on 1986 Edition. However, for Class 2 and 3 pipe stress analysis, allowable from ASME Section III, Edition 1974 can be used instead of Edition 1986.

3.6.2.1.1 High-Energy Break Locations

With the exception of those portions of the piping identified in Section 3.6.2.1.le, breaks were postulated only in high-energy piping at the following locations:

a. ASME B&PV Code, Section III - Class 1 Piping

   1. In the pressurizer surgeline, there are a limited number of locations which are more susceptible to failure by virtue of stress or fatigue than the remainder of the system.

      Breaks are eliminated from RCS primary loops. The elimination of these breaks is the result of the application of leak-before-break (LBB) technology (References 16, 17, and 18) allowed by the revised GDC-4. (Reference 15)

      The discrete break locations and orientations in the surge line are derived on the basis of stress and fatigue analysis.

The postulated break locations for the pressurizer surge line were determined with the use of a detailed ASME Code NB-3200 piping analysis together with the MEB 3-1 Rev. 2, June 1987 break criteria (see Reference 7). The Surge line intermediate break locations were deleted (see Reference 20).

The original design basis criteria for the reactor coolant loop (Reference 1) postulated eleven pipe break locations. Eight of these pipe break locations have subsequently been eliminated from the WCGS structural design basis as a result of the application of LBB technology. The detailed fracture mechanics techniques used in this evaluation are discussed in References 16, 17, and 18. Application of LBB allow the elimination of the dynamic effects of pipe rupture for these eight locations. To provide the high margins of safety required by GDC-4, the nonmechanistic pipe rupture design basis is maintatined for containment design and ECCS analyses, and the postulated pipe ruptures are retained for electrical and mechanical equipment environmental qualification.

2. Pipe breaks are postulated to occur in the following locations in Class 1 piping runs or branch runs outside the primary reactor coolant loops as follows:

   (a) The terminal ends of the piping or branch run.

   (b) Any intermediate locations between the terminal ends where stresses, calculated using equations (12) and (13) of the ASME B&PV Code, Section III, Subsection NB, exceed 2.4 Sm, where Sm is the design stress intensity, as given in the ASME B&PV Code, and the stress range calculated, using equation (10) of the ASME B&PV Code, exceeds 2.4 Sm.

   (c) Any intermediate locations between terminal ends where the cumulative usage factor, derived from the piping fatigue analysis, under the loadings associated with the OBE and operational plant conditions, exceeds 0.1.

   (d) If the stresses and usage factor do not exceed the limits in (b) and (c), intermediate breaks are postulated at points of maximum stresses calculated by using Equation 10 of subarticle NB-3653, ASME B&PV Code, Section III.

   A complete discussion of the reactor coolant loop break location is provided in Reference 1.

b. ASME B&PV Code, Section III - Class 2 and 3 Piping Within Protective Structures

1. Breaks are postulated to occur at terminal ends, including:

   (a) Piping-pressure vessel or equipment nozzle intersection

   (b) High-energy/moderate-energy boundary

   (c) Pipe to anchor intersection

   (d) A branch intersection point was not considered a terminal end if: 1) the branch and the main piping systems were modeled in the same static, dynamic, and thermal analyses, 2) the intersection is not rigidly constrained to the building structure, or 3) the branch and main run are of comparable size and fixity (i.e., the nominal size of the branch is at least one-half of that of the main).

2. At intermediate locations between terminal ends, where the maximum stress ranges as calculated by the sum of equations (9) and (10) in Subarticle NC-3652 of the ASME B&PV Code, Section III considering normal and upset plant conditions (i.e., sustained loads, occasional loads, and thermal expansion) including an OBE event, exceed 0.8 $(1.2S_h + S_A)$ based on 1974 ASME code or 0.8 $(1.8\ S_h + S_A)$ based on 1986 ASME code, where S_h and S_A are the allowable stress at maximum hot temperature and allowable stress range for thermal expansion, respectively, for Class 2 and 3 piping, as defined in Subarticle NC-3600 of the ASME B&PV Code, Section III.

3.(a) In piping systems where the stresses were lower than the limits in 2. above, a minimum of two intermediate break locations were postulated solely on the basis of highest calculated stress levels. This location may be a pipe to valve weld, pipe to fitting weld, or near clamped support attachment point. Where the piping consisted of a straight run and was shorter than 10 pipe diameters in length with no fittings, welded attachments, or valves, a minimum of one location was chosen, based on the highest stress.

   (b) However, Branch Technical Position MEB 3-1, Revision 2, issued in 1987 no longer mentions arbitrary intermediate pipe ruptures as described in 3(a) above. Piping stress analyses performed subsequent to the issuance of MEB 3-1 in 1987, do not require arbitrary intermediate break location if the stresses were lower than the limits in 2 above.

c. ASME B&PV Code, Section III - Class 2 and 3 Piping Not Enclosed Within Protective Structures

   No Class 2 or 3 high-energy piping is located outside the protective structures.

d. Non-Nuclear Piping (i.e., not ASME Section III Class 1, 2, or 3)

Breaks in the seismically analyzed high energy non-nuclear piping were postulated at the following locations in each run or branch run:

1. Terminal ends of the run*

2. At all intermediate fittings (e.g., elbows,* tees, reducers, welded attachments, and valves)

   Breaks in non-nuclear seismically analyzed high energy piping subsequent to adopting BTP MEB 3-1 Rev. 2 are postulated according to the criteria for ASME Section III Class 2 & 3 piping as described in subsection 3.6.2.1.1.b.2

Leakage cracks in nonseismic Category I piping are postulated in worse case locations.

e. High-Energy Piping in Containment Penetration Areas

The portion of the containment penetration area piping defined above, extending from the outside of the inboard isolation restraint to the outside of the outboard isolation restraint, shall be considered and hereafter referred to as the "no break zone" (NBZ).

"No break zone" boundaries are shown on Figure 3.6-1.

Breaks were not postulated in this area because stresses did not exceed those specified in Section 3.6.2.1.1.b.2.

The maximum stress in the "no break zone," except within the isolation restraints, did not exceed $1.8S_h$ per equation (9), Subarticle NC-3652 of ASME Section III when subjected to the combined loadings of internal pressure, deadweight, and postulated pipe break beyond the "no break zone." The maximum stress within the isolation restraints in the "no break zone" is limited such that no plastic hinge will form in this region.

The number of circumferential and longitudinal piping welds and branch connections was minimized.** Welded attachments for pipe supports or other purposes to these portions of piping were avoided except where detailed stress analyses could be performed to demonstrate compliance with the limits of Section 3.6.2.1.1.

---

*With one clarification: On approximately 2.67 feet of pipe on FB-081-HBD-2" and 0.5 feet of pipe on FB-093-HBD-3" between the 8-inch auxiliary steam header and the closed high energy/ moderate energy boundary valves on these lines, breaks were not postulated. It was judged that the runs were short enough to prevent guillotine breaks and that any breaks that did occur would be in the 8-inch auxiliary steam header. Breaks in the 8-inch header were postulated and evaluated in the vicinity of the connections for lines 081 and 093.

** All four main steam isolation valves were relocated 2 feet south from their original locations to improve accessibility and maintainability (Ref. DCP 9952). To accomplish this, a 2 foot section of the main steam pipe spool was

added to the north of each isolation valve and the pipe spool south of the isolation valve was cut short by 2 feet. As a result, four additional longitudinal pipe welds and four circumferential field welds were introduced where 100% volumetric examination were performed and the No Break Zone stress limits are satisfied. The introduction of these new welds is therefore acceptable.

When required for isolation valve operability, structural integrity, or the containment integrity, whip restraints capable of resisting torsional and bending moments produced by a postulated pipe break either upstream or downstream of the "no break zone" were located reasonably close to the isolation valves or penetration.

These restraints do not prevent the access required to conduct inservice inspection of the welds within the restraints specified in Section XI of the ASME Code. Inservice examinations completed during each inspection interval provide 100-percent volumetric examination of circumferential and longitudinal pipe welds within the boundary of the "no break zone", with the exception of small piping socket welds which undergo 100-percent surface examination during each inspection interval or as required per the risk-informed process for piping as outlined in EPRI report 1006937, Rev. 0-A. See Section 6.6 for further discussion of inservice inspection.

Terminal end breaks were not postulated on the main steam, main feedwater, and steam generator blowdown piping at the flued heads inside the containment. The "no break zone" is considered to extend up to and including the pipe to flued head weld inside containment, therefore, the terminal end location falls within the "no break zone" boundary. Inservice examinations, described in Section 6.6, commensurate with the "no break zone" are performed on the main steam, feedwater, and steam generator blowdown piping inside the containment up to the nearest pipe whip restraint. For postulated breaks beyond the first whip restraint, the stress limit ($1.8S_h$) given in Section 3.6.2.1.1.e. may be exceeded for the portion of piping from the first pipe whip restraint up to and including the pipe to flued head weld; however, the integrity for this portion of piping is verified.

The restraints outside the containment on the main steam, main feedwater, and steam generator blowdown lines were located as close as possible to the containment to accommodate the design for the auxiliary building steam tunnel and minimize stresses. The length of the steam tunnel, the location of 5-way restraints in the north wall of the auxiliary building, and the location of isolation restraints just below the floor penetrations, for connecting piping routed to other areas of the auxiliary building, resulted in low stresses considering:

1. Seismic differential building movements

2. Space requirements for safety valves, isolation valves, flued heads, and other piping and components

3. Minimum space for maintenance

4. Maximum accessibility for inservice inspections performed every inspection interval

3.6.2.1.2 Types of Breaks/Cracks Postulated

3.6.2.1.2.1 ASME Section III - Class 1 Reactor Coolant Loop Piping - High-Energy

The types of breaks postulated in the ASME Section III, Class 1 primary reactor coolant loop are discussed in Reference 1.

3.6.2.1.2.2 ASME Section III Piping Other Than Reactor Coolant Loop Piping - High-Energy

The following types of breaks were postulated to occur at the locations determined in accordance with Section 3.6.2.1.1.

a. Breaks were not postulated in piping where nominal diameter is 1 inch or less.

b. At terminal ends, only circumferential breaks were postulated.

c. At intermediate locations where both the stress and usage factors were less than the limits of Section 3.6.2.1.1, only circumferential breaks were postulated.

d. At intermediate locations where the stress and/or usage factor exceeded the limits of Section 3.6.2.1.1, only circumferential breaks were postulated in piping less than 4-inch nominal pipe diameter but greater than the size exemption stated in a. above. In piping 4 inches and larger, circumferential and longitudinal breaks were postulated. However, if the longitudinal stress range was at least 1.5 times the circumferential stress range, only circumferential breaks were postulated. Similarly, if the circumferential stress range was at least 1.5 times the longitudinal stress range, only longitudinal breaks were postulated.

3.6.2.1.2.3 Non-Nuclear Piping - High-Energy

For non-nuclear piping, the following combination of breaks was evaluated:

a. Circumferential breaks in piping larger than 1 inch

b. Longitudinal breaks in piping 4 inches and larger, except at terminal ends.

3.6.2.1.2.4 ASME Section III and Non-Nuclear Piping - Moderate - Energy

Through-wall leakage cracks were postulated in moderate-energy piping larger than 1 inch located within, or outside and adjacent to, protective structures, except as noted in the following:

a. Through-wall leakage cracks were not postulated in those portions of piping between containment isolation valves, since this piping meets the requirements of ASME Code, Section III, Subarticle NE-1120 and is designed so that the maximum stress range does not exceed 0.4 $(1.2S_h + S_A)$.

b. Through-wall leakage cracks were not postulated in moderate-energy fluid system piping located in the same area in which a break in high-energy fluid system piping was postulated, provided that such cracks would not result in more limiting environmental conditions than the high-energy pipe break.

c. Through-wall leakage cracks were not postulated in ASME Code, Section III, Class 2 or 3 piping and stress analyzed non-nuclear seismic Category I class piping, provided that the maximum stress range in the piping, as calculated by the sum of EQN(9) and EQN(10) in Subarticle NC-3652 of the ASME Code, Section III, considering normal and upset plant conditions, was less than 0.4 $(1.2S_h + S_A)$

d. Cracks were not postulated when a review of the piping layout and plant arrangement drawings showed that the effects of through-wall leakage cracks at any location in the piping designed to seismic or nonseismic standards were isolated or physically remote from structures, systems, and components required for post-accident safe shutdown.

Cracks were postulated to occur individually at locations that resulted in the maximum effects from fluid spraying and flooding, with the consequent hazards or environmental conditions. Flooding effects were determined on the basis of a conservatively estimated time period required to effect corrective actions. Further discussion of flooding effects is provided in Appendix 3B.

3.6.2.1.3 Break/Crack Configuration

3.6.2.1.3.1 High-Energy Break Configuration

The ends of a circumferentially ruptured pipe were assumed to be displaced laterally by a distance equal to or greater than one pipe diameter until and unless one end was restrained in the lateral direction.

Movement was assumed to be in the direction of the jet reaction initially, and total path controlled by the piping geometry.

The orientation of a longitudinal break, except when otherwise justified by a detailed stress analysis, was considered to cause piping movement normal to the plane of the piping system. The flow area of such a break was equal to the cross-sectional flow area of the pipe. Longitudinal breaks were assumed to be oriented (but not concurrently) at two diametrically opposed points on the piping circumference. Longitudinal and circumferential breaks were not postulated concurrently.

3.6.2.1.3.2 Moderate-Energy Crack Configuration

Moderate-energy crack openings were assumed to be a circular orifice of cross-sectional flow area equal to that of a rectangle one-half the pipe inside diameter in length and one-half pipe wall thickness in width.

3.6.2.2 Analytical Methods to Define Forcing Functions and Response Models

3.6.2.2.1 Forcing Functions for Pipe Whip and Jet Impingement

To determine the forcing function, the fluid conditions at the upstream source and at the break exit dictates the analytical approach and approximations that are used. For most applications, one of the following situations exist:

a. Superheated or saturated steam
b. Saturated or subcooled water
c. Cold water (non-flashing)

The following three sections describe simplified models that take into account the fluid conditions. Where more complex analysis is warranted, such as for the main steam line, a RELAP4 analysis can be performed, as described in Section 3.6.2.2.1.4. For a discussion of the jet thrust forcing functions from reactor coolant loop breaks, see Section 3.6.2.2.1.5.

3.6.2.2.1.1 Superheated or Saturated Steam Break Analysis

For superheated or saturated steam, steady state thrust forces are calculated from the ideal gas relationship. This relationship has been calculated using Fanno lines, assuming homogeneous flow for superheated steam, in Reference 5, Figure 2-1. When the fluid expands into the wet region, it is treated as having a specific heat ratio of 1.1. Whether the specific heat ratio is 1.1 or 1.3, the values of Figure 2-1 of Reference 5 are used.

The initial value of the thrust is $P_o A_e$, where P_o is the source pressure in psia and A_e is the exit area in square inches. If the steady state thrust at initial source conditions is higher than $P_o A_e$, no transient time is calculated, and the steady state thrust is assumed for the entire time frame. Where significant friction results in steady state thrusts below $P_o A_e$, $P_o A_e$ is applied for the initial transient, and the steady state thrust is applied for the remainder of the time frame.

The unsteady state forces due to time-dependent wave and blowdown force during the initial stages persist for several wave propagations. From Reference 8, time is approximated as time to empty the initial contents of the piping at an average flowrate. For choked flow:

$$t_{ss} = \frac{2\rho_o A_e L}{144\left(W + W_f\right)} = \frac{2\rho_o L}{144\left[\frac{W_i}{A_e} + \frac{W_f}{A_e}\right]} = \frac{2\rho_o L}{G_i + G_f}$$

$$G_i = 144\left(\frac{W_i}{A_e}\right) = C_o\rho_o\left[\frac{2}{k+1}\right]^{\left(\frac{k+1}{K-1}\right)}; \qquad G_f = 144\left(\frac{W_f}{A_e}\right) = \left(\frac{G_f}{G_{max}}\right) G_{max}$$

Where:

t_{ss} = time to reach steady state, sec

W_i = initial flowrate, lbm/sec

W_f = final flowrate, lbm/sec

A_e = break area, square inches

L = length of pipe from break to source, ft

G_i = initial mass flowrate per square foot, lbm/sec-ft^2

G_f = final mass flowrate per square foot, lbm/sec-ft^2

ρ_o = source density, lbm/ft^3

C_o = source sonic velocity, ft/sec

k = effective specific heat ratio

G_{max} = maximum mass flowrate per square foot, lb/sec-ft^2

For jet impingement forces, the Moody expansion model is coupled with the Reference 5 steady state thrust to determine jet pressure.

For pressure/temperature (P/T) analysis, the blowdown rate is based on steady state flow and is determined from Figure 14 of the ASME steam tables (Ref. 9), or calculated using the perfect gas law.

This analysis method is based on a converging nozzle at the entrance to the pipe. If a flow restriction is included, it is assumed that a shock wave exists immediately downstream, and the resultant force is lower than as calculated above (see Figure 2-2 of Reference 5).

3.6.2.2.1.2 Saturated or Subcooled Water Break Analysis

For subcooled or saturated water, steady state thrust forces are calculated, using the Henry/Fauske model for frictionless flow. As with steam, the initial value of the thrust is $P_o A_e$. However, since frictionless flow is used, the steady state thrust always exceeds $P_o A_e$ and the steady state thrust is applied for the entire time frame, except where upstream restrictions are presented as noted in 3.6.1.1.k.

For jet impingement forces, the Moody expansion model defined in Reference 5 is coupled with the steady state thrust to determine jet pressure.

3.6.2.2.1.3 Cold Water Break Analysis

For cold water, steady state thrust is calculated, using Reference 5, Equation 7, coupled with the frictional effects, as demonstrated below:

$$\frac{F}{P_o A_e} = \frac{2 - 2\ (Pa/Po)}{1 + f\ (L/D)}$$

where:

F = steady state thrust, lbf

P_o = source pressure, psia

A_e = break area, in^2

P_a = ambient pressure, psia

f = Darcy's friction factor

L/D = equivalent length of a resistance in pipe diameters

The initial value of the thrust is $P_o\ A_e$. If the steady state thrust at initial source conditions is higher than $P_o\ A_e$, no transient time is calculated, and the steady state thrust is assumed for the entire time frame. Where significant friction results in steady state thrusts below $P_o\ A_e$, $P_o\ A_e$ is applied for the initial transient, and the steady thrust is applied for the remainder of the time frame.

The unsteady state forces due to time-dependent wave and blowdown forces during the initial stages persist for several wave propagations. From Reference 8, time is approximated as:

$$t_{ss} = \frac{L}{C_o}\ \frac{1}{2}\ \frac{1}{(V_i/V_{ss})}\ \ln\left(\frac{199(1 - V_i/V_{ss})}{1 + V_i/V_{ss}}\right)$$

$$V_i = (144)\ (32.2)\ (P_o - P_a)\ \frac{\gamma_o}{C_o}\ ;\ V_{ss} = \sqrt{\frac{(P_o - P_a)\ (\gamma_o)\ (2)\ (32.2)\ (144)}{1 + f(L / D)}}$$

t_{ss} = time to reach steady state, sec

L = length of pipe from break to source or upstream restriction, ft

γ_o = specific volume, ft^3/lbm

V_i = initial velocity, ft/sec

V_{ss} = steady state velocity, ft/sec

Jet impingement forces are calculated using the relations of Section 2.3 of Reference 5, assuming a 10 degree expansion throughout the entire jet expansion.

For flooding analysis, the blowdown rate is based on a basis derivation of the Bernoulli Theorem. The blowdown rate is:

$$W_e = \frac{A_e}{144}\sqrt{\left(\frac{P_o - P_a}{1+f(L/D)}\frac{144}{\rho_o} - \frac{Z_e - Z_o}{1+f(L/D)}\right)2g}$$

where:

W_e = steady state blowdown rate, ft^3/sec

$\frac{Z_e - Z_o}{1+f(L/D)}$ may be neglected when it is positive, for conservatism.

3.6.2.2.1.4 RELAP4 Analysis

RELAP4 (Ref. 10) is a computer program developed primarily to describe the thermal-hydraulic transient behavior of water-cooled nuclear reactors subjected to a loss of coolant. This code was used to describe transients resulting from breaks in both main steam and feedwater lines.

For the main steam lines, breaks inside and outside the containment were postulated. For the feedwater lines, only breaks outside the containment were considered. Both types of breaks, i.e., double-ended guillotine and slot breaks, were analyzed.

For the calculation of the loading history, resulting from the above breaks on the piping elbows, the approach suggested in Ref. 8 and 11 was followed. For this purpose, the fluid properties calculated by RELAP4 were utilized.

3.6.2.2.1.5 Time Functions of Jet Thrust Force on Ruptured and Intact Reactor Coolant Loop Piping

In order to determine the thrust and reactive force loads to be applied to the reactor coolant loop during the postulated LOCA, it is necessary to have a detailed description of the hydraulic transient. Hydraulic forcing functions are calculated for the ruptured and intact reactor coolant loops as a result of a postulated LOCA. These forces result from the transient flow and pressure histories in the reactor coolant system. The calculation is performed in two steps. The first step is to calculate the transient pressure, mass flow rates, and thermodynamic properties as a function of time. The second step uses the results obtained from the hydraulic analysis, along with input of areas and direction coordinates, and calculates the time-history of forces at appropriate locations (e.g., elbows) in the reactor coolant loops.

The hydraulic model represents the behavior of the coolant fluid within the entire RCS. Key parameters calculated by the hydraulic model are pressure, mass flow rate, and density. These are supplied to the thrust calculation, together with plant layout information, to determine the time-dependent loads exerted by the fluid on the loops. In evaluating the hydraulic forcing functions during a postulated LOCA, the pressure and momentum flux terms are dominant. The inertia and gravitational terms are taken into account in evaluation of the local fluid conditions in the hydraulic model.

The blowdown hydraulic analysis is required to provide the basic information concerning the dynamic behavior of the reactor core environment for the loop forces. This requires the ability to predict the flow, quality, and pressure of the fluid throughout the reactor system. The MULTIFLEX Code (Ref. 2) was developed with a capability to provide this information.

The MULTIFLEX Code calculates the hydraulic transients within the entire primary coolant system. This hydraulic program considers a coupled fluid-structure interaction by accounting for the deflection of the core support barrel.

The depressurization of the system is calculated, using the method of characteristics applicable to transient flow of a homogeneous fluid in thermal equilibrium.

The ability to treat multiple flow branches and a large number of mesh points gives the MULTIFLEX Code the required flexibility to represent the various flow passages within the primary RCS. The system geometry is represented by a network of one-dimensional flow passages.

The THRUST computer program was developed to compute the transient (blowdown) hydraulic loads resulting from a LOCA.

The blowdown hydraulic loads on primary loop components are computed from the equation.

$$F = 144A \left((P - 14.7) + \frac{\dot{m}^2}{144 \rho g_c A_m} \right)$$

Which includes both the static and dynamic effects. The symbols and units are:

F = force, lb_f

A = aperture area, ft^2

P = system pressure, psia

$\dot{m}$ = mass flow rate, lb_m/sec

ρ = density, lb_m/ft^3

g_c = gravitational constant (32.174 $ft\text{-}lb_m/lb_f\text{-}sec^2$)

A_m = mass flow area, ft^2

In the model used to compute forcing functions, the reactor coolant loop system is represented by a model similar to that employed in the blowdown analysis. The entire loop layout is represented in a global coordinate system. Each node is fully described by: 1) blowdown hydraulic information and 2) the orientation of the streamlines of the force nodes in the system, which includes flow areas, and projection coefficients along the three axes of the global coordinate system. Each node is modeled as a separate control volume, with one or two flow apertures associated with it. Two apertures are used to simulate a change in flow direction and area. Each force is divided into its x, y, and z components, using the projection coefficients. The force components are then summed over the total number of apertures in any one node to give a total x force, total y force, and total z force. These thrust forces serve as input to the piping/restraint dynamic analysis.

The THRUST Code (which uses MULTIFLEX results as input) calculates forces exactly the same way as the STHRUST Code (which uses SATAN- IV [Ref. 3] results as input).

The STHRUST Code is described in Reference 4.

3.6.2.2.2 Response Models

3.6.2.2.2.1 Response Model for Other Than Reactor Coolant Loop

The dynamic analysis of system piping is described in Section 3.9(B).

3.6.2.2.2.2 Response Model of the Reactor Coolant Loop Piping, Equipment Supports, and Pipe Whip Restraints

The dynamic analysis of the reactor coolant loop piping for LOCA loadings is described in Section 3.9(N) and Reference 1.

3.6.2.3 Dynamic Analysis Methods to Verify Integrity and Operability

3.6.2.3.1 Dynamic Analysis Methods to Verify Integrity and Operability for Other Than Reactor Coolant Loop

The analytical methods of Reference 5, with the amplifying clarifications and assumptions discussed in Section 3.6.2.2, were used to determine the jet impingement effects and loading effects applicable to components and systems resulting from postulated pipe breaks and cracks.

This information was then used in the protection evaluation described in this section, Section 3.6.2.3. This section describes the design of restraints used to protect the essential systems, components, and equipment from the effects of pipe whip.

3.6.2.3.2 Dynamic Analysis Methods to Verify Integrity and Operability for the Reactor Coolant Loop

3.6.2.3.2.1 General

A LOCA is assumed to occur for a branch line break down to the restraint of the second normally open automatic isolation valve (Case II in Figure 3.6-2) on outgoing lines[1] and down to and including the second check valve (Case III in Figure 3.6-2) on incoming lines normally with flow. A pipe break beyond the

[1]It is assumed that motion of the unsupported line containing the isolation valves could cause failure of the operators of both valves to function.

restraint or second check valve will not result in an uncontrolled loss of reactor coolant if either of the two valves in the line closes.

Accordingly, both of the automatic isolation valves are suitably protected and restrained as close to the valves as possible so that a pipe break beyond the restraint will not jeopardize the integrity and operability of the valves. Further, periodic testing capability of the valves to perform their intended function is essential. This criterion takes credit for only one of the two valves performing its intended function. For normally closed isolation or incoming check valves (Cases I and IV in Figure 3.6-2), a LOCA is assumed to occur for pipe breaks on the reactor side of the valve.

Branch lines connected to the reactor coolant loop (RCL) are defined as "large" for the purpose of this criteria and as having an inside diameter greater than 4 inches up to the largest connecting line, generally the pressurizer surge line. Rupture of these lines results in a rapid blowdown from the RCL, and protection is basically provided by the accumulators and the low head safety injection pumps (residual heat removal pumps).

Branch lines connected to the RCL are defined as "small" if they have an inside diameter equal to or less than 4 inches. This size is such that emergency core cooling system analyses, using realistic assumptions, show that no clad damage is expected for a break area of up to 12.5 square inches, corresponding to 4-inch inside diameter piping.

Engineered safety features are provided for core cooling and boration, pressure reduction, and activity confinement in the event of a LOCA or steam or feedwater line break accident to ensure that the public is protected in accordance with 10 CFR 100 guidelines. These safety systems are designed to provide protection for a reactor coolant system pipe rupture of a size up to and including a double-ended severance of a reactor coolant loop.

In order to assure the continued integrity of the vital components and the engineered safety systems, consideration is given to the consequential effects of the pipe break itself to the extent that:

a. The minimum performance capabilities of the engineered safety systems are not reduced below that required to protect against the postulated break.

b. The containment leaktightness is not decreased below the design value, if the break leads to a LOCA.[2]

c. Propagation of damage is limited in type and/or degree to the extent that:

1. A pipe break which is not a LOCA will not cause a LOCA or steam or feedwater line break.

2. An RCS pipe break will not cause a steam or feedwater system pipe break, and vice versa.

3.6.2.3.2.2 Large Reactor Coolant System Piping

Propagation of damage resulting from the rupture of a reactor coolant loop is permitted to occur but must not exceed the design basis for calculating containment and subcompartment pressures, loop hydraulic forces, reactor internals reaction loads, primary equipment support loads, or emergency core cooling system performance.

Large branch line piping, as defined in Section 3.6.2.3.2.1, is restrained to meet the following criteria, in addition to items a through c of Section 3.6.2.3.2.1, for a pipe break resulting in a LOCA.

a. Propagation of the break to the unaffected loops is prevented to assure the delivery capacity of the accumulators and low head pumps.

b. Propagation of the break in the affected loop is permitted to occur but does not exceed 20 percent of the flow area of the line which initially ruptured. This criterion has been voluntarily applied so as not to substantially increase the severity of the LOCA.

3.6.2.3.2.3 Small Branch Lines

In the unlikely event that one of the small pressurized lines, as defined in Section 3.6.2.3.2.1, should fail and result in a LOCA, the piping is restrained or arranged to meet the following criteria in addition to items a through c of Section 3.6.2.3.2.1.

---

[2]The containment is here defined as the containment structure liner and penetrations and the steam generator shell, the steam generator steam side instrumentation connections, the steam, feedwater, blowdown, and steam generator drain pipes within the containment structure.

a. Break propagation is limited to the affected leg, i.e., propagation to the other leg of the affected loop and to the other loops is prevented.

b. Propagation of the break in the affected leg is permitted but must be limited to a total break area of 12.5 square inches (4 inches inside diameter). The exception to this case is when the initiating small break is a cold leg high head safety injection line. Further propagation is not permitted for this case.

c. Damage to the high head safety injection lines connected to the other leg of the affected loop or to the other loops is prevented.

d. Propagation of the break to a high head safety injection line connected to the affected leg is prevented if the line break results in a loss of core cooling capability due to a spilling injection line.

3.6.2.3.2.4 Design and Verification of Adequacy of RCL Components and Supports

The methods described below are used in the Westinghouse design and verification of the adequacy of primary reactor coolant loop (RCL) components and supports. It is emphasized that these methods are used only to determine jet impingement loads on RCL components and supports.

The design basis postulated pipe rupture locations for the reactor coolant loop piping are determined, using the criteria given in Section 3.6.2. These design basis ruptures are used here as the rupture locations for consideration of jet impingement effects on primary equipment and supports.

The dynamic analysis, as discussed in Section 3.6.2.2.2, is used to determine maximum piping displacements at each design basis rupture location. These maximum piping displacements are used to compute the effective rupture flow area at each location. This area and rupture orientation are then used to determine the jet flow pattern and to identify any primary components and supports which are potential targets for jet impingement.

The jet thrust at the point of rupture is based on the fluid pressure and temperature conditions occurring during normal (100 percent) steady state operating conditions of the plant. At the point of rupture, the jet force is equal and opposite to the jet thrust. The force of the jet is conservatively assumed to be constant throughout the jet flow distance. The subcooled jet is

assumed to expand uniformly at a half angle of 10 degrees, from which the area of the jet at the target and the fraction of the jet intercepted by the target structure can be readily determined.

The shape of the target affects the amount of momentum change in the jet and thus affects the impingement force on the target. The target shape factor is used to account for target shapes which do not deflect the flow 90 degrees away from the jet axis.

The method used to compute the jet impingement load on a target is one of the following:

a. The dynamic effect of jet impingement on the target structure is evaluated by applying a step load whose magnitude is given by:

$$Fj = K_o P_o A_{mB} RS$$

where:

F_j = jet impingement load on target, lbf

K_o = dimensionless jet thrust coefficient based on initial fluid conditions in the broken loop

P_o = initial system pressure, lb/in.^{2}

A_{mB} = calculated maximum break flow area, in.^{2}

R = fraction of jet intercepted by target

S = target shape factor

Discharge flow areas for limited flow area circumferential breaks are obtained from reactor coolant loop analyses performed to determine the axial and lateral displacements of the broken ends as a function of time. A_{mB} is the maximum break flow area occurring during the transient, and is calculated as the total surface area through which the fluid must pass to emerge from the broken pipe. Using geometrical formulations, this surface area is determined to be a function of the pipe separation (axial and transverse) and the dimensions of the pipe (inside and outside diameter).

If simplified static analysis is performed instead of a dynamic analysis, the above jet load (F_j) is multiplied by a dynamic load factor. For an equivalent static analysis of the target structure, the jet impingement force is multiplied by a dynamic load factor of 2.0. This factor assumes that the target can be represented as essentially a one degree of freedom system, and the impingement force is conservatively applied as a step load.

The calculation of the dimensionless jet thrust coefficient and break flow area is discussed in Section 3.6.2.5.

b. The dynamic effect of jet impingement is evaluated by applying the following time-dependent load to the target structure.

$$F_j = K\ P\ A_B\ RS$$

where the system pressure P is a function of time; the jet thrust coefficient K is evaluated as a function of system pressure and enthalpy; and the break flow area AB is a function of time.

3.6.2.3.3 Types of Restraints

3.6.2.3.3.1 Restraints Other Than Reactor Coolant Loop Restraints

To satisfy varying requirements of available space, permissible pipe deflection, and equipment operability, the restraints are generally located as close as possible to the postulated breaks, in order to limit whipping of the failed pipe in a direction away from the break. Where necessary, guides were used to prevent uncontrolled motion of the pipe in a direction other than that caused by the primary motion generated by the blowdown force. A typical example is shown in Figure 3.6-4.

Restraints identified as isolation restraints are located to protect an essential portion of a piping system from postulated leaks either upstream or downstream of the protected area. These restraints limit pipe motion in all directions. A typical example of an isolation restraint is shown in Figure 3.6-5.

The restraints are of three design types. These include two types of large gap restraints and one type of close gap restraint.

a. Large gap restraints

In order to account for dynamic and gap effects, restraints utilizing either energy absorbing honeycomb material (EAHM) or stainless steel upset rods are used. Large gap restraints were employed where the resulting piping motion may be tolerated without causing a rupture elsewhere in the piping system.

EAHM restraints are the large gap restraints most frequently used. This type of restraint consists of substructures which are allowed to behave plastically within acceptable ductility ratios and have an energy dissipating material (stainless steel honeycomb) between the pipe and the substructure. A typical example of an EAHM restraint is shown in Figure 3.6-6.

The upset rod restraint prevents uncontrolled pipe motion by using its capacity to undergo considerable plastic deformation, thereby absorbing the kinetic energy of the whipping pipe. A typical example of a rod restraint is shown in Figure 3.6-7.

b. Close Gap Restraints

Close gap restraints were installed where large piping motions permitted by large gap restraints could not be tolerated. The primary purpose of close gap restraints is to limit pipe stresses in areas which are designated as no-break zones. A typical example of a close gap restraint is shown in Figure 3.6-8.

3.6.2.3.3.2 Restraints for Reactor Coolant Loop

Pipe restraints and locations are discussed in Section 5.4.14.

3.6.2.3.4 Analytical Methods

3.6.2.3.4.1 Restraints Other Than Reactor Coolant Loop Restraints

a. Location of restraints

For purposes of locating restraints, the collapse moment of the pipe is determined in the following manner:

$M_p = kS_yS$ for stainless steel pipe

where: $k = 2.5$

S_y = yield stress at pipe operating temperature

S = elastic modulus of pipe

$$M_p = 1.07\, S_u \frac{R_o^{3.14} - R_i^{3.14}}{R_o^{0.14}}$$ for carbon steel pipe (Ref. 13)

where: S_u = ultimate stress at pipe operating temperature

R_o = outside radius of pipe

R_i = inside radius of pipe

Restraints (with the exception of isolation restraints) are located as close to the postulated break as practicable. Restraints located so that a collapse moment will not form in the pipe required no further evaluation because the pipe whip is limited by the rigidity of the piping. If, due to physical limitations, restraints were located so that collapse mechanisms in the pipe may form, the consequences of the whipping pipe and the jet impingement effect were further investigated. Guides were provided where necessary to control pipe motion.

b. Design of Restraints

One of the following three methods, depending upon the type of restraint, was used to determine the response of the piping/restraint/supporting structure to the jet thrust developed by the postulated pipe rupture. These methods are energy balance, jet thrust with dynamic load factor of 2, and dynamic analysis using a lumped parameter model. All methods address the following effects, as appropriate:

1. Stiffness characteristics of the piping system, restraint system, major components, and supporting walls and structures

2. Transient forcing functions acting on the piping system, and jet thrusts on structures

3. Elastic and inelastic deformation of piping and/or restraints

4. Insulation thickness

5. Seismic and thermal movements (for determination of clearance values)

The energy balance method of analysis is discussed in Section 3.0 of Reference 5. This method is the primary method used for large gap restraints as described below:

Forcing Function - obtained from Reference 5.

Resistance Response of Piping System - the resistance of piping system (load-deflection response) was achieved by a static analysis (by inputting the force at the postulated pipe break location). The displacement obtained for a corresponding force gave the force-deflection response of the piping system in the elastic range. A perfectly plastic response for the piping system was assumed when the intensified stress (due to the stress intensification factor of the fitting) at the first elbow beyond the pipe whip restraint reached yield stress of the material.

Restraint Response:

EAHM Restraints - This is basically an energy dissipating material which is supported by a substructure. This substructure is allowed to behave plastically within acceptable ductility ratios as defined in BC-TOP-9A. The kinetic energy of the impacting pipe is absorbed by the collapse of the crushable honeycomb core. The substructure, in turn, is designed to absorb the sudden, impulsive dynamic loading created by the crushing EAM (Energy Absorbing Material). The properties as a function of cell size and web size of the honeycomb core were obtained by test by the manufacturer for the specific material used.

The EAHM restraint resistance R_r was determined from equation (1) below:

$$FY = R_r\ (Y - Y_g) + R_p\ \frac{Y_p}{2} + R_p\ (Y - Y_p) \qquad (1)$$

$$R_r = \frac{FY - R_p\left(Y - \frac{Y_p}{2}\right)}{Y - Y_g}$$

where: F = pipe jet thrust

Y = total pipe displacement

Y_g = gap between pipe and restraint

R_P = maximum pipe resistance

Y_P = elastic displacement of pipe

where: $R_r < A_m P_C$ and $\alpha t > (Y - Y_g)$ (2)

where: A_m = cross sectional area of energy absorbing honeycomb material

P_C = crushing strength of the energy absorbing honeycomb material

α = allowable deformation in percent of total thickness (t)

t = total thickness of the energy absorbing honeycomb material

For a suitable value of P_C, A_m is determined from equation (2). Where crushable honeycomb energy absorbing material is used, the material will not experience a deflection in excess of that which is defined by the horizontal portion of its load deflection curve as determined by test, under designed loads.

Upset Rod Restraints

The analytical procedures used to size the upset rod restraint are based on an energy balance method similar to that used for the EAHM restraint design. These are illustrated using a simplified example. Assuming the jet thrust force as constant with time, the strain energy absorbed by the rod in deflecting from its initial configuration to the maximum allowable strain (50% ultimate strain) is equal to the work generated by jet thrust force. In equation form this becomes:

$$W = F\ (Y_g + L_e e) = \frac{2n\pi d^2}{4}\ L_e(u)$$

where: W = total strain energy

L_e = effective length of the restraint determined by test

n = number of upset rods per restraint

d = diameter of rod

u = strain energy per unit volume conservatively idealized to represent the material properties

e = maximum strain allowed

Assuming a plastic collision between the pipe and the restraint and ignoring the energy absorbed by the pipe (in this example) the rod can be sized by solving for (d).

Substructures for both the EAHM and upset rod restraints are allowed to behave plastically throughout a postulated pipe break event. Ductility ratios are in accordance with BC-TOP-9A. A ductility ratio of three is used for anchor bolts and welded studs, based on test data. Design methods are in accordance with Sections 3.8.3 and 3.8.4.

For some close-gap restraints, the simplified jet thrust with load factor method was used. Briefly, the force on the restraint was taken as equal to the jet thrust (pressure x area x thrust coefficient) multiplied by a dynamic load factor. This load factor was conservatively assumed to be 2, the largest possible for a restraint which was virtually in contact with the pipe. (If the clearance between pipe and restraint was large enough to permit the whipping pipe to attain significant velocity before contacting the restraint, thus causing impact effects, other analytical methods were used.)

As an alternate to the energy balance method of analysis, a dynamic analysis of the isolation restraints using a lumped parameter model is employed. The model is shown in Figure 3.6-9.

To calculate the isolation restraint design loads, resulting from a postulated piping failure, a dynamic analysis is performed. PIPE RUP (see 3.9(B).7, Ref. 4) was used to perform this analysis. The isolation restraint is designed such that in the event of a postulated piping failure, inside or outside containment, the "no break zone" criteria per Section 3.6.2.1.1e is met.

3.6.2.3.4.2 Reactor Coolant Loop Restraints

As described in Section 3.9(N), the forces associated with the rupture of reactor piping systems are considered in combination

with normal operating loads and earthquake loads for the design of supports and restraints in order to assure the continued integrity of vital components and engineered safety features.

The stress limits for reactor coolant piping and supports are discussed in Section 3.9(N).

3.6.2.4 Protective Assembly Design Criteria

3.6.2.4.1 Jet Impingement Barriers and Shields

Barriers and shields, which may be either of steel or concrete construction, are provided to protect essential equipment from the effects of jet impingement resulting from postulated pipe breaks. Barriers differ from shields in that they may also accept the impact of whipping pipes. Barriers and shields include walls and floors and structures specifically designed to provide protection from postulated pipe breaks. Barrier and shield design is based on the methods of Reference 5, Section 3.0, and the elastic- plastic methods for dynamic analysis included in Reference 14. Design criteria and loading combinations are in accordance with Sections 3.8.3 and 3.8.4.

3.6.2.4.2 Auxiliary Guardpipes

The use of guardpipes has been minimized by plant arrangement and routing of high-energy piping. Where they are used, guardpipes are designed to withstand all environmental, jet impingement, and impact effects of postulated breaks of the enclosed pipe. Design criteria, loading combinations, and methods of analysis are similar to those for barriers and shields described in Section 3.6.2.4.1.

3.6.2.5 Material to be Submitted for the Operating License Review

3.6.2.5.1 Piping Systems Other Than Reactor Coolant Loop

Pipe break locations were obtained in accordance with the criteria of Section 3.6.2.1. Pipe crack locations were postulated to occur at any location, as stated in Section 3.6.2.1.

High-energy piping with break locations identified are provided in isometric drawings, Figure 3.6-1. Break types are also shown (i.e., circumferential or longitudinal). The stress results which were utilized to determine the break types and locations are given in Table 3.6-3. If there are changes in the pipe stress analysis, the stress tables will be updated only when those changes affect

the break locations shown on the figures previously mentioned. Associated stress nodes are shown in Figure 3.6-1. High-energy pipe break effects analysis is discussed room-by-room in Table 3.6-4.

Each piping isometric (Figure 3.6-1) references the appropriate sheet of Table 3.6-4 by which the effects analysis is discussed for all breaks on that isometric drawing. Table 3.6-4 discussion includes pipe whip, jet impingement, flooding, room pressurization, temperature effect, and humidity effects.

Moderate-energy piping crack locations are defined in Section 3.6.2.1.2.4. Evaluation of the effects of moderate-energy cracks is discussed in Appendix 3B.

The augmented inservice inspection plan is discussed in Section 6.6.8.

Pipe whip restraints are designed in accordance with Section 3.6.2.3. Restraint locations and orientation for each high-energy break are shown in Figure 3.6-1. Barriers and shields are designed in accordance with the criteria of Section 3.6.2.4. Jet thrust and impingement forces were determined in accordance with Section 3.6.2.2. Thrust forces for each break are presented in Figure 3.6-1.

3.6.2.5.2 Reactor Coolant Loop

a. Figure 3.6-3 identifies the design basis break locations and orientations for the reactor coolant loops.

   The primary plus secondary stress intensity ranges and the fatigue cumulative usage factors at the design break locations specified in Reference 1 are given in Table 3.6-5 for a reference fatigue analysis. The reference analysis was prepared to be applicable for many plants. It uses seismic umbrella moments which are higher than those used in Reference 1, in which the primary stress is equal to the limits of equation 9 in NB-3650 (Section III of the ASME Boiler and Pressure Vessel Code) at many locations in the system, where in Reference 1 one location was at the limit. Therefore, the results of the reference analysis may differ slightly from Reference 1, but the philosophy and conclusions of Reference 1 are valid. There are no other locations in the model used in the reference fatigue analysis, consistent with Reference 1, where the stress intensity ranges and/or usage factors exceed the criteria of 2.4 S_m and 0.2, respectively.

Actual plant moments for WCGS are also given in Table 3.6-5 at the design basis break locations. As noted in Table 3.6-5, the reference analysis thermal moments are exceeded by the WCGS moments at three locations. The change in the usage factors was insignificant. Thus, there are no other locations in the reactor coolant loop, consistent with Reference 1, where additional breaks are required to be postulated.

b. Pipe whip restraints associated with the main reactor coolant loop are described in Section 5.4.14.

c. The methods and analysis procedures used to determine jet impingement loads associated with the rupture of the reactor coolant loop piping are discussed in Section 3.6.2.3. These loads are used to determine the adequacy of the primary equipment and supports.

d. Design loading combinations and applicable criteria for ASME Class 1 components and supports are provided in Section 3.9(N).1.4. Pipe rupture loads include not only the jet thrust forces acting on the piping but also jet impingement loads on the primary equipment and supports.

e. The original design basis criteria for the reactor coolant loop (Reference 1) postulated eleven pipe break locations. Eight of these pipe break locations have subsequently been eliminated from the WCGS structural design basis as a result of the application of LBB technology. The detailed fracture mechanics techniques used in this evaluation are discussed in References 16, 17, and 18. Application of LBB allow the elimination of the dynamic effects of pipe rupture for these eight locations. To provide the high margins of safety required by GDC-4, the nonmechanistic pipe rupture design basis is maintained for containment design, ECCS analyses, and the postulated pipe ruptures are retained for electrical and mechanical equipment environmental qualification.

3.6.3 REFERENCES

1. "Pipe Breaks for the LOCA Analysis of the Westinghouse Primary Coolant Loop," WCAP-8082-P-A (Proprietary) and WCAP-8172-A (Non-Proprietary), January 1975.

2. Takeuchi, K., et al., "MULTIFLEX-A FORTRAN-IV Computer Program for Analyzing Thermal-Hydraulic-Structure System Dynamics," WCAP-8708-P-A", Volumes 1 and 2 (Proprietary) and WCAP-8709-A, Volumes 1 and 2 (Non-Proprietary), February 1976.

3. Bordelon, F. M., "A Comprehensive Space-Time Dependent Analysis of Loss-of-Coolant (SATAN-IV Digital Code)," WCAP-7750, August 1971.

4. "Documentation of Selected Westinghouse Structural Analysis Computer Codes," WCAP-8252, Revision l, May 1977.

5. "Design for Pipe Break Effects," BN-TOP-2, Revision 2, Bechtel Power Corporation, May 1974.

6. NRC Branch Technical Position ASB 3-1, "Protection Against Postulated Piping Failures in Fluid Systems Outside Containment," Revision 0 November 24, 1975, SPLB 3-1, Revision 2, October 1990.

7. NRC Branch Technical Position MEB 3-1, "Postulated Break and Leakage Locations in Fluid System Piping Outside Containment," Revision 0 November 24, 1975, and Revision 2, June 1987.

8. Moody, F. J., "Fluid Reaction and Impingement Loads," presented at the ASCE Specialty Conference, Chicago, Ill., December 1973.

9. American Society of Mechanical Engineers, "Thermodynamic and Transport Properties of Steam Comprising Tables and Charts for Steam and Water," 1967 Edition.

10. Aerojet Nuclear Company, "RELAP4/MOD5 - A Computer Program for Transient Thermal-Hydraulic Analysis of Nuclear Reactors and Related Systems," Volumes I-III, ANCR-NUREG-1335, September 1976.

11. Moody, F. J., "Time-Dependent Pipe Forces Caused by Blowdown and Flow Stoppage," ASME Paper No. 73-FE-23, June 1973.

12. "Subcompartment Pressure Analyses," BN-TOP-4, Revision 1, Bechtel Power Corporation, October 1977.

13. Gerber, T. L., "Plastic Deformation of Piping Due to Pipe-Whip Loading," ASME Paper No. 74-NE-1, June 1974.

14. Biggs, J. M., Introduction to Structural Dynamics, McGraw-Hill Book Company, New York, 1964.

15. Modification of General Design Criterion 4 Requirements for Protection Against Dynamic Effects of Postulated Pipe Ruptures -- Final Rule (Broad Scope), 52 FR 41288, October 27, 1987.

16. WCAP-10691, "Technical Basis for Eliminating Large Primary Loop Pipe Rupture as a Structural Design Basis for Callaway and Wolf Creek Plants," October, 1984.

17. WCAP-9558, "Mechanistic Fracture Evaluation of Reactor Coolant Pipe Containing A Postulated Circumferential Through-Wall Crack," Revision 2, June, 1981.

18. WCAP-10456, "The Effects of Thermal Aging on the Structural Integrity of Cast Stainless Steel Piping for Westinghouse NSSS," November, 1983.

19. NUREG-0881, Supplement No. 5, "Safety Evaluation Report related to the operation of Wolf Creek Generating Station, Unit No. 1," USNRC, March, 1985.

20. "Structural Evaluation of the Wolf Creek and Callaway Pressurizer Surge Lines, Considering the Effects of Thermal Stratification," WCAP-12893, Rev. 0, March 1991.

21. "Structural Analysis of the Reactor Coolant Loop for Standard Nuclear Unit Power Plant System," WCAP-9728.

22. Generic Letter 87-11, "Relaxation in Arbitrary Intermediate Pipe Rupture Requirements," June 19, 1987.

23. WCAP-9728, Volume 1, Revision 5, Supplement 1, "Wolf Creek Cold Leg/Reactor Vessel Nozzle Safe-end Thickness Nonconformance Evaluation", September 2010 (calculation BB-S-019).

24. WCAP-17592-P, Revision 0, "Wolf Creek Stress Report Addendum for the Reactor Vessel Inlet Nozzle" (calculation BB-S-018).

WOLF CREEK

TABLE 3.6-1

SAFETY RELATED SYSTEMS

AND

HIGH AND MODERATE ENERGY SYSTEMS

SYSTEM	ESF			LOCATED IN SAFETY RELATED STRUCTURES				HIGH/ MODERATE ENERGY					
	TOTAL SYSTEM	PORTIONS OF SYSTEM	CONTAINMENT ISO. ONLY	CONTAINMENT BUILDING	AUXILIARY BUILDING	FUEL BUILDING	CONTROL BUILDING	HIGH ENERGY SYSTEMS#	PIPE WHIP	MODERATE ENERGY SYSTEM#	COMPARTMENT PRESSURE	JET IMPINGEMENT	FLOODING
MAIN STEAM		●		●	●			●	●		●	●	●
MAIN TURBINE													
CONDENSATE													
FEEDWATER		●		●	●			●	●		●	●	●
FEEDWATER HEATER EXTRACTION, DRAINS AND VENTS													
CONDENSATE DEMINERALIZER													
AUXILIARY FEEDWATER	●				●					●			●
DEMINERALIZED WATER MAKEUP STORAGE AND TRANSFER					●	●				●			●
CONDENSATE TRANSFER AND STORAGE					●					●			●
CONDENSATE AND FEEDWATER CHEMICAL CONTROL													
REACTOR COOLANT	●			●				●	●		●	●	●
CHEMICAL AND VOLUME CONTROL		●		●	●			●	●	●	●	●	●
REACTOR MAKEUP WATER			●	●	●	●				●			●
STEAM GENERATOR BLOWDOWN		●		●	●			●	●	●	●	●	●
BORATED REFUELING WATER STORAGE	●				●					●			●
STEAM SEALS													
MAIN TURBINE LUBE OIL													
GENERATOR HYDROGEN AND CARBON DIOXIDE													
GENERATOR SEAL OIL													
STATOR COOLING WATER													
LUBE OIL STORAGE, TRANSFER & PURIFICATION													
CONDENSER AIR REMOVAL													
MAIN TURBINE CONTROL OIL													
CIRCULATING WATER										●			●
SERVICE WATER					●					●			●
CLOSED COOLING WATER										●			●
FUEL POOL COOLING & CLEANUP	●			●	●	●				●			●
ESSENTIAL SERVICE WATER•	●			●	●	●	●			●			●
COMPONENT COOLING WATER	●			●	●	●				●			●
RESIDUAL HEAT REMOVAL•••	●			●	●			●	●	●	●	●	●
HIGH PRESSURE COOLANT INJECTION•••	●			●	●			●	●	●	●	●	●
CONTAINMENT SPRAY	●			●	●						●		●
ACCUMULATOR SAFETY INJECTION	●			●				●	●		●	●	●
AUXILIARY STEAM GENERATOR													
AUXILIARY STEAM					●			●	●		●	●	●
AUXILIARY TURBINES		●			●			●	●		●	●	●
PLANT HEATING				●	●	●	●			●			●
CENTRAL CHILLED WATER				●	●	●	●			●			●

Rev. 6

WOLF CREEK

TABLE 3.6-1 (SHEET 2)

SYSTEM	ESF			LOCATED IN SAFETY RELATED STRUCTURES				HIGH/ MODERATE ENERGY					
	TOTAL SYSTEM	PORTIONS OF SYSTEM	CONTAINMENT ISO. ONLY	CONTAINMENT BUILDING	AUXILIARY BUILDING	FUEL BUILDING	CONTROL BUILDING	HIGH ENERGY SYSTEMS#	PIPE WHIP	MODERATE ENERGY SYSTEM#	COMPARTMENT PRESSURE	JET IMPINGEMENT	FLOODING
ESSENTIAL SERVICE WATER PUMP HOUSE BUILDING HVAC•	●												
TURBINE BUILDING HVAC													
MISC. BUILDING HVAC		●			●								
FUEL BUILDING HVAC		●				●							
RADWASTE BUILDING HVAC													
CONTROL BUILDING HVAC		●					●						
AUXILIARY BUILDING HVAC		●			●	●							
DIESEL BUILDING HVAC••	●												
CONTAINMENT COOLING		●		●									
CONTAINMENT ATMOS. CONTROL				●									
CONTAINMENT HYDROGEN CONTROL	●			●	●								
CONTAINMENT PURGE		●		●	●								
GASEOUS RADWASTE					●					●			
LIQUID RADWASTE		●		●	●			●	●	●		●	●
SOLID RADWASTE										●			
DECONTAMINATION			●	●	●	●				●			●
BORON RECYCLE					●					●			●
SECONDARY LIQUID WASTE SYSTEM					●					●			●
EMERGENCY FUEL OIL••	●									●			●
COMPRESSED AIR		●		●	●	●	●	●		●			
FIRE PROTECTION				●	●	●	●			●			●
DOMESTIC WATER					●	●	●			●			●
FUEL HANDLING,FUEL STORAGE & REACTOR VESSEL SERVICE		●		●		●							
SERVICE GAS (CO_2, N_2, AND O_2)				●	●	●	●	●		●			
STANDBY DIESEL ENGINE••	●							●		●			
NUCLEAR SAMPLING			●	●	●	●		●		●			
SANITARY DRAINAGE							●						
CHEMICAL AND DETERGENT WASTE					●								
OILY WASTE••				●	●		●						
FLOOR & EQUIPMENT DRAINS			●	●	●	●	●						
CHEMICAL ADDITION TO AUX BOILER													
CONTAINMENT ILRT			●	●	●								
BULK CHEMICAL STORAGE													
PROCESS SAMPLING													
BREATHING AIR			●	●	●					●			
ESW CHLORINATION										●			●

• Located in a safety-related area

•• Located in diesel building

••• High pressure associated with reactor coolant pressure boundary

Located in a safety-related area

● - Yes
(blank) - No

TABLE 3.6-2

DESIGN COMPARISON TO REGULATORY POSITIONS OF REGULATORY GUIDE 1.46, REVISION 0, DATED MAY 1973, TITLED "PROTECTION OF PIPE WHIP INSIDE CONTAINMENT"

The basis for compliance to Regulatory Guide 1.46 is the implementation of NRC Branch Technical Position (BTP) MEB 3-1, NRC BTP ASB 3-1, WCAP-8082-P-A, and WCAP-8172-A. The following provides a summary of the compliance with MEB 3-1 and ASB 3-1.

BTP ASB 3-1 Position	WCGS Compliance
B.1 Plant Arrangement Protection of essential systems and components against postulated piping failures in high or moderate energy fluid systems that operate during normal plant conditions and that are located outside of containment should be provided by one of the following plant arrangement considerations:	B.1 Complies. See Section 3.6.1.3
B.1.a. Plant arrangements should separate fluid system piping from essential systems and components. Separation should be achieved by plant physical layouts that provide sufficient distances between essential systems and components and fluid system piping such that the effects of any postulated piping failure therein (e.g., pipe whip, jet impingement, and the environmental conditions resulting from the escape of contained fluids as appropriate to high- or moderate-energy fluid system piping) cannot impair the integrity or operability of essential systems and components.	
B.1.b Fluid system piping or portions thereof not satisfying the provisions of B.1.a should be enclosed within structures or compartments designed to protect nearby essential systems and components. Alternatively, essential systems and components may be enclosed within structures or compartments designed to withstand the effects of postulated piping failures in nearby fluid systems.	
B.1.c Plant arrangements or system features that do not satisfy the provisions of either B.1.a or B.1.b should be limited to those for which the above provisions are impractical because of the stage of design or construction of the plant; because the plant design is based upon that of an earlier plant accepted by the staff as a base plant under the Commission's standardization and replication policy; or for other substantive reasons such as particular design features of the fluid systems. Such cases may arise, for example, (1) at inter-connections between fluid systems and essential systems and components, or (2) in fluid systems having dual functions (i.e., required to operate during normal plant conditions as well as to shut down the reactor). In these cases, redundant design features that are separated or otherwise protected from postulated piping failures, or	

TABLE 3.6-2 (Sheet 2)

BTP ASB 3-1 Position	WCGS Compliance
additional protection, should be provided so that the effects of postulated piping failures are shown by the analyses and guidelines of B.3 to be acceptable. Additional protection may be provided by restraints and barriers or by designing or testing essential systems and components to withstand the effects associated with postulated piping failures.	
B.2 Design Features	
B.2.a Essential systems and components should be designed to meet the seismic design requirements of Regulatory Guide 1.29.	B.2.a Complies, as described in Table 3.2-3.
B.2.b Protective structures or compartments, fluid system piping restraints, and other protective measures should be designed in accordance with the following:	
(1) Protective structures or compartments needed to implement B.1 should be designed to seismic Category I requirements. The protective structures should be designed to withstand the effects of a postulated piping failure (i.e., pipe whip, jet impingement, pressurization of compartments, water spray, and flooding, as appropriate) in combination with loadings associated with the operating basis earthquake and safe shutdown earthquake within the respective design load limits for structures. Piping restraints, if used, may be taken into account to limit effects of the postulated piping failure.	B.2.b.(1) Complies. See Sections 3.8.3 and 3.8.4 for loading combinations.
(2) High-energy fluid system piping restraints and protective measures should be designed such that a postulated break in one pipe cannot, in turn, lead to rupture of other nearby pipes or components if the secondary rupture could result in consequences that would be considered unacceptable for the initial postulated break. An unrestrained whipping pipe should be considered capable of (a) rupturing impacted pipes of smaller nominal pipe sizes and (b) developing through-wall leakage cracks in larger nominal pipe sizes with thinner wall thickness, except where experimental or analytical data for the expected range of impact energies demonstrate the capability to withstand the impact without failure.	B.2.b(2) Complies. See Section 3.6.1.1i.

TABLE 3.6-2 (Sheet 3)

BTP ASB 3-1 Position	WCGS Compliance
B.2.c Fluid system piping in containment penetration areas should meet the following design provisions:	B.2.c All high energy fluid system and selected moderate energy fluid piping in the containment penetration areas comply with the following criteria:
(1) Portions of fluid system piping between the required restraints located inside and outside containment beyond the isolation valves of single barrier containment structures (including any rigid connection to the containment penetration) that connect, on a continuous or intermittent basis, to the reactor coolant pressure boundary, or the steam and feedwater systems of PWR plants, should be designed to the stress limits specified in B.1.b or B.2.b of Branch Technical Position (BTP) MEB 3-1, attached to Standard Review Plan 3.6.2. These portions of high-energy fluid system piping should be provided with pipe whip restraints that are capable of resisting bending and torsional moments produced by a postulated piping failure either upstream or downstream of the containment isolation valves. The restraints should be located reasonably close to the containment isolation valves and should be designed to withstand the loadings resulting from a postulated piping failure beyond these portions of piping so that neither isolation valve operability nor the leaktight integrity of the containment will be impaired.	B.2.c.(1) High-energy (H-E) piping systems associated with the steam tunnel, i.e., main steam, feedwater, and steam generator blowdown, are provided with isolation restraints which protect the penetration piping in the steam tunnel. For further discussion of the main steam, feedwater and steam generator blowdown piping penetration areas, see Section 3.6.2.1.1.e. For all other H-E piping penetrations, isolation restraints have been provided reasonably close to the containment isolation valves to protect the "no break zone" piping, protect the integrity of the penetration, and protect the operability of the isolation valves (when present), assuming a rupture at the postulated intermediate breakpoints or terminal ends outside the regions defined as "no break zone." For further discussion see Section 36.2.1.1.e.
(2) Portions of fluid system piping between the required restraints located inside and outside containment beyond the isolation valves of dual barrier containment structures should also meet the design provisions of B.2.c.(1). In addition, those portions of piping that pass through the containment annulus, and whose postulated failure could affect the leaktight integrity of the containment structure or result in pressurization of the containment annulus beyond the design limits should be provided with an enclosing protective structure. For the purpose of establishing the design parameters (i.e., pressure, temperature) of the enclosing protective structure, a full flow area opening should be assumed in that portion of piping within the enclosing structure and vent areas should be taken into account, if provided, in the enclosing structure. Where guard pipes for individual process	B.2.c.(2) Not applicable to WCGS.

TABLE 3.6-2 (Sheet 4)

	BTP ASB 3-1 Position		WCGS Compliance
	pipes are used as an enclosing protective structure, such guard pipes should be designed to meet the requirements specified in B.1.b(6) of BTP MEB 3-1.		
(3)	Terminal ends of the piping runs extending beyond these portions of high-energy fluid system piping should be considered to originate at a point adjacent to the required pipe whip restraints located inside and outside containment.	B.2.c.(3)	Terminal ends of H-E piping fall within the "no break zone" boundary; therefore, no terminal end breaks are postulated except to calculate the design load for the isolation restraint.
(4)	Piping classification as required by Regulatory Guide 1.26 should be maintained without change until beyond the outboard restraint. If the restraint is located at the isolation valve, a classification change at the valve interface is acceptable.	B.2.c.(4)	Complies.
B.2.d.	Inservice examination and related design provisions should be in accordance with the following:		
(1)	The protective measures, structures, and guard pipes should not prevent the access required to conduct the inservice examinations specified in the ASME Boiler and Pressure Vessel Code, Section XI, Division 1, "Rules for Inspection and Testing of Components in Light-Water Cooled Plants."	B.2.d.(1)	Complies.
(2)	For those portions of fluid system piping identified in B.2.c, includes piping running from inboard to outboard restraints in containment penetration areas, the extent of inservice examinations completed during each inspection interval (IWA-2400, ASME Code, Section XI) should provide 100 percent volumetric examination of circumferential and longitudinal pipe welds within the boundary of these portions of piping.	B.2.d.(2)	Complies, with the exception of of small piping socket welds which will undergo 100 percent surface examination during each inspection interval or the extent of inservice examinations completed during each inspection interval are as required per the risk-informed process for piping as outlined in EPRI Report 1006437, Rev. 0-A. See Section 6.6 and 3.6.2.1.1e.
(3)	For those portions of fluid system piping enclosed in guard pipes, inspection ports should be provided in guard pipes to permit the required examination of circumferential pipe welds. Inspection ports should not be located in that portion of the guard pipe passing through the annulus of dual barrier containment structures.	B.2.d.(3)	WCGS has no guard pipes located in the penetration areas. Guard pipes utilized in other areas comply with this position.
(4)	The areas subject to examination should be defined in accordance with Examination Categories C-F and C-G for Class 2 piping welds in Tables IWC-2520.	B.2.d.(4)	Complies. See Section 6.6.

TABLE 3.6-2 (Sheet 5)

BTP ASB 3-1 Position	WCGS Compliance
B.3 Analyses and Effects of Postulated Piping Failures	
B.3.a To show that the plant arrangement and design features provide the necessary protection of essential systems and components, piping failures should be postulated in accordance with BTP MEB 3-1, attached to Standard Review Plant 3.6.2. In applying the provisions of BTP MEB 3-1, each longitudinal or circumferential break in high-energy fluid system piping or leakage crack in moderate-energy fluid system piping should be considered separately as a single postulated initial event occurring during normal plant conditions. An analysis should be made of the effects of each such event, taking into account the provisions of BTP MEB 3-1 and of the system and component operability considerations of B.3.b below. The effects of each postulated piping failure should be shown to result in offsite consequences within the guidelines of 10 CFR Part 100 and to meet the provisions of B.3.c and d below.	B.3.a Complies. See Section 3.6.1.1d, 3.6.1.1k, and Table 3.6-4.
B.3.b In analyzing the effects of postulated piping failures, the following assumptions should be made with regard to the operability of systems and components:	
(1) Offsite power should be assumed to be unavailable if a trip of the turbine-generator system or reactor protection system is a direct consequence of the postulated piping failure.	B.3.6.(1) Complies. See Section 3.6.1.1e.
(2) A single active component failure should be assumed in systems used to mitigate consequences of the postulated piping failure and to shut down the reactor, except as noted in B.3.b(3) below. The single active component failure is assumed to occur in addition to the postulated piping failure and any direct consequences of the piping failure, such as unit trip and loss of offsite power.	B.3.6.(2) Complies. See Section 3.6.1.1f.
(3) Where the postulated piping failure is assumed to occur in one of two or more redundant trains of a dual-purpose moderate-energy essential system, i.e., one required to operate during normal plant conditions as well as to shut down the reactor and mitigate the consequences of the piping failure, single failures of components in the other train or trains of that system only need not be assumed provided the system is designed to seismic Category I standards, is powered from both offsite and onsite sources, and is constructed, operated, and inspected to quality assurance, testing, and inservice inspection standards appropriate for nuclear safety systems. Examples of	B.3.b.(3) Complies. Section 3.61.1g defines a train to include those systems which support its function. Note that the criteria is also applied to single-purpose and high energy systems, since the same quality, design, construction, and inspection standards are used. The only applicable H-E piping system is CVCS charging.

TABLE 3.6-2 (Sheet 6)

	BTP ASB 3-1 Position	WCGS Compliance
	systems that may, in some plant designs, qualify as dual-purpose essential systems are service water systems, component cooling systems, and residual heat removal systems.	
	(4) All available systems, including those actuated by operator actions, may be employed to mitigate the consequences of a postulated piping failure. In judging the availability of systems, account should be taken of the postulated failure and its direct consequences such as unit trip and loss of offsite power, and of the assumed single active component failure and its direct consequences. The feasibility of carrying out operator actions should be judged on the basis of ample time and adequate access to equipment being available for the proposed actions.	B.3.b.(4) Complies. See Section 3.6.1.1h.
B.3.c.	The effects of a postulated piping failure, including environmental conditions resulting from the escape of contained fluids, should not preclude habitability of the control room or access to surrounding areas important to the safe control of reactor operations needed to cope with the consequences of the piping failure.	B.3.c Complies.
B.3.d	A postulated failure of piping not designed to seismic Category I standards should not result in any loss of capability of essential systems and components to withstand the further effects of any single active component failure and still perform all functions required to shut down the reactor and mitigate the consequences of the postulated piping failure.	B.3.d Complies. See Section 3B.2.1.

TABLE 3.6-2 (Sheet 7)

BTP MEB 3-1 Position	WCGS Compliance
B.1 High-Energy Fluid System Piping	
B.1.a Fluid Systems Separated from Essential Systems and Components For the purpose of satisfying the separation provisions of plant arrangement as specified in B.1.a of Branch Technical Position BTP ASB 3-1, a review of the piping layout and plant arrangement drawings should clearly show the effects of postulated piping breaks at any location are isolated or physically remote from essential systems and components. At the designer's option, break locations as determined from 1.c and 1.d of this position may be assumed for this purpose.	B.1.a Complies. See Section 3.6.1.3.2
B.1.b Fluid System Piping In Containment Penetration Areas Breaks need not be postulated in those portions of piping identified in B.2.c of BTP ASB 3-1 provided they meet the requirements of the ASME Code, Section III, Subarticle NE-1120 and the following additional design requirements:	B.1.b Complies.
(1) The following design stress and fatigue limits should not be exceeded. For ASME Code, Section III, Class 1 Piping (a) The maximum stress range should not exceed $2.4S_m$ (b) The maximum stress range between any two load sets (including the zero load set) should be calculated by Eq. (10) in Paragraph NB-3653, ASME Code, Section III, for normal and upset plant conditions and an operating basis earthquake (OBE) event transient. If the calculated maximum stress range of Eq. (10) exceeds the limit of B.1.b(1)(a) but is not greater than $3S_m$, the limit of B.1.b(1)(c) should be met. If the calculated maximum stress range of Eq. (10) exceeds 3Sm, the stress ranges calculated by both Eq. (12) and Eq. (13) in Paragraph NB-3653 should meet the limit of B.1.b(1)(a) and the limit of B.1.b(1)(c).	B.1.b(1)(a)-(d) There is no Class 1 piping in containment penetration areas on WCGS.

TABLE 3.6-2 (Sheet 8)

BTP MEB 3-1 Position	WCGS Compliance
(c) The cumulative usage factor should be less than 0.1 if consideration of fatigue limits is required according to B.1.b(1)(b).	
(d) The maximum stress, as calculated by Eq. (9) in Paragraph NB-3652 under the loadings resulting from a postulated piping failure beyond these portions of piping should not exceed 2.25Smexcept that following a failure outside containment, the pipe between the outboard isolation valve and the first restraint may be permitted higher stresses provided a plastic hinge is not formed and operability of the valves with such stresses is assured in accordance with the requirements specified in SRP 3.9.3. Primary loads include those which are deflection limited by whip restraints.	
For ASME Code, Section III, Class 2 Piping	
(e) The maximum stress ranges as calculated by the sum of Eq. (9) and (10) in Paragraph NC-3652, ASME Code, Section III, considering normal and upset plant conditions (i.e., sustained loads, occasional loads, and thermal expansion) and an OBE event should not exceed 0.8(1.2Sh + SA).	B.1.b(1)(e) Complies.
(f) The maximum stress, as calculated by Eq. (9) in Paragraph NC-3652 under the loadings resulting from a postulated piping failure of fluid system piping beyond these portions of piping should not exceed 1.8Sh. Primary loads include those which are deflection limited by whip restraints. The exceptions permitted in (d) may also be applied provided that when the piping between the outboard isolation valve and the restraint is constructed in accordance with the Power Piping Code ANSI B31.1 (see ASB 3-1 B.2.c[4]), the piping shall either be of seamless construction with full radiography of all circumferential welds, or all longitudinal and circumferential welds shall be fully radiographed.	B.1.b.(1)(f) Complies. For further discussion see Section 3.6.2.1.1.e.
(2) Welded attachments, for pipe supports or other purposes, to these portions of piping should be avoided except where detailed stress analyses, or tests, are performed to demonstrate compliance with the limits of B.1.b(1).	B.1.b.(2) Welded attachments to these portions of the piping are minimized. Attachments for welded pipe supports are reviewed separately for local stresses and the limits of B.1.b(1) are met.

TABLE 3.6-2 (Sheet 9)

BTP MEB 3-1 Position	WCGS Compliance
	Stress Analysis is performed to demonstrate that Eq. (9) and (10) stresses do not exceed 0.8 (1.2 Sh + SA).
(3) The number of circumferential and longitudinal piping welds and branch connections should be minimized. Where guard pipes are used, the enclosed portion of fluid system piping should be seamless construction unless specific access provisions are made to permit inservice volumetric examination of the longitudinal welds.	B.1.b.(3) Complies. Guard pipes are not used in the containment penetration areas.
(4) The length of these portions of piping should be reduced to the minimum length practical.	B.1.b.(4) See compliance statement to BTP ASB 3-1 position B.2.c.(1).
(5) The design of pipe anchors or restraints (e.g., connections to containment penetrations and pipe whip restraints) should not require welding directly to the outer surface of the piping (e.g., flued integrally-forged pipe fittings may be used) except where such welds are 100 percent volumetrically examinable in service and a detailed stress analysis is performed to demonstrate compliance with the limits of B.1.b(1).	B.1.b.(5) All high-energy containment penetrations are flued integrally-forged piped fittings. Pipe whip restraints do not require welding directly to the outer surface of the piping, except where 100-percent volumetric examination and a review for local stresses are performed. The main steam and main feedwater lines outside the containment have flued integrally-forged pipe fitting whip restraints.
(6) Guard pipes provided for those portions identified in B.2.c(2) of BTP ASB 3-1 should be constructed in accordance with the rules of Class MC, Subsection NE of the ASME Code, Section III, where the guard pipe is part of the containment boundary. In addition, the entire guard pipe assembly should be designed to meet the following requirements and tests: (a) The design pressure and temperature should not be less than the maximum operating pressure and temperature of the enclosed pipe under normal plant conditions. (b) The design stress limits of Paragraph NE-3131(c) should not be exceeded under the loading associated with containment design pressure and temperature in combination with the safe shutdown earthquake. (c) Guard pipe assemblies should be subjected to a single pressure test at a pressure not less than its design pressure.	B.1.b.(6) WCGS has no guard pipes located in the containment penetration areas.

TABLE 3.6-2 (Sheet 10)

BTP MEB 3-1 Position	WCGS Compliance
B.1.c. Fluid Systems Enclosed Within Protective Structures	
(1) With the exceptions of those portions of piping identified in B.1.b, breaks in Class 2 and 3 piping (ASME Code, Section III) should be postulated at the following locations in those portions of each piping and branch run within a protective structure or compartment designed to satisfy the plant arrangement provisions of B.1.b or B.1.c of BTP ASB 3-1.	
(a) At terminal ends of the run if located within the protective structure. Terminal ends are identified in ASB 3-1 B.2.c.(3).	B.1.c.(1)(a) Complies. See Section 3.6.2.1.1b. and compliance statement to BTP ASB 3-1 position B.2.c.(3).
(b) At intermediate locations selected by one of the following criteria:	B.1.c.(1)(b) Complies. Intermediate breaks are selected solely on the basis of highest calculated stress (i.e., breaks may not be separated by a change in direction of the piping run or located at a weld).
(i) At each pipe fitting (e.g., elbow, tee, cross, flange, and nonstandard fitting), welded attachment, and valve. Where the piping contains no fittings, welded attachments, or valves, at one location at each extreme of the piping within the protective structure. A terminal end, as determined by B.1.c(1)(a), may be considered as one of these extremes.	
(ii) At each location where the stresses 1) exceed 0.8(1.2Sh + SA) but at not less than two separated locations chosen on the basis of highest stress, 2) Where the piping consists of a straight run without fittings, welded attachments, and valves, and all stresses are below 0.8(1.2Sh + SA), a minimum of one location chosen on the basis of highest stress.	
(2) Breaks in non-nuclear class piping should be postulated at the following locations in each piping or branch run:	B.1.c.(2) Break postulation in non-nuclear class piping complies. See Section 3.6.2.1.1d. Non-nuclear, high-energy pipes are either refrained from impacting or affecting the separating structure or the separating structure are designed for full effects.
(a) At terminal ends of the run if located within the protective structure.	
(b) At each intermediate pipe fitting, welded attachment, and valve.	
If a structure separates a high energy line from an essential component, that separating structure should be designed to withstand the consequences of the pipe	

TABLE 3.6-2 (Sheet 11)

BTP MEB 3-1 Position	WCGS Compliance
break in the high energy line which produces the greatest effect at the structure irrespective of the fact that the above criteria might not require such a break location to be postulated.	
(3) Applicable to (1) and (2) above: If a structure separates a high energy line from an essential component, that separating structure should be designed to withstand the consequences of the pipe break in the high energy line which produces the greatest effect at the structure irrespective of the fact that the above criteria might not require such a break location to be postulated.	B.1.c.(3) Separating structures are analyzed to withstand the dynamic effects of the postulated pipe breaks as defined in B.1.c.(1) and B.1.c.(2) above.
B.1.d <u>Fluid Systems Not Enclosed Within Protective Structures</u>	
(1) With the exceptions of those portions of piping identified in B.1.b, breaks in Class 2 and 3 piping (ASME Code, Section III) should be postulated at the following locations in those portions of each piping and branch run routed outside of, but alongside, above, or below, a protective structure or compartment containing <u>essential systems and components</u> and designed to satisfy the plant arrangement provisions of B.1.b or B.1.c or BTP ASB 3-1.	B.1.d.(1) No Class 2 or 3 high-energy piping is located outside of the protective structures.
Such piping should be considered as located adjacent to a protective structure if the distance between the piping and structure is insufficient to preclude impairment of the integrity of the structure from the effects of a postulated piping failure assuming the piping is unrestrained.	
(a) At <u>terminal ends</u> of the run if located adjacent to the protective structure. Terminal ends are identified in ASB 3-1 B.2.c.(3).	
(b) At intermediate locations selected by one of the following criteria:	
(i) At each pipe fitting (e.g., elbow, tee, cross, flange, and nonstandard fitting), welded attachment, and valve. Where the piping contains no fittings, welded attachments, or valves, at one location at each extreme of the piping run adjacent to the protective structure.	

TABLE 3.6-2 (Sheet 12)

BTP MEB 3-1 Position	WCGS Compliance
(ii) At each location where the stresses 1) exceed $0.8(1.2S_h + SA)$ but at not less than two separated locations chosen on the basis of highest stress. 2) Where the piping consists of a straight run without fittings, welded attachment, or valves, and all stresses are below $0.8(1.2S_h + SA)$, a minimum of one location chosen on the basis of highest stress.	
(2) Breaks in non-nuclear class piping should be postulated at the following locations in each piping or branch run: (a) At terminal ends of the run if located adjacent to the protective structure. (b) At each intermediate pipe fitting, welded attachment, and valve.	B.1.d.(2) Complies. With one clarification: On approximately 2.67 feet of pipe on FB-081-HBD-2" and 0.5 feet of pipe on FB-093-HBD-3" between the 8-inch auxiliary steam header and the normally closed high energy/moderate energy boundary valves, breaks were not postulated. It was judged that the runs were short enough to prevent guillotine breaks and that any breaks that did occur would be in the 8-inch auxiliary steam header. Breaks in the 8-inch header were postulated and evaluated in the vicinity of the connections for lines 081 and 093.
(3) Applicable to (1) and (2) above: If a structure separates a high energy line from an essential component, that separating structure should be designed to withstand the consequences of the pipe break in the high energy line which produces the greatest effect at the structure irrespective of the fact that the above criteria might not require such a break location to be postulated.	B.1.d.(3) Complies.
B.1.e. The designer should identify each piping run he has considered to postulate the break locations required by B.1.c and B.1.d above. In complex systems such as those containing arrangements of headers and parallel piping running between headers, the designer should identify and include all such piping within a designated run in order to postulate the number of breaks required by these criteria.	B.1.e. Complies. See Section 3.6.2.5.

TABLE 3.6-2 (Sheet 12a)

BTP MEB 3-1 Position	WCGS Compliance
B.2. Moderate-Energy Fluid System Piping	
B.2.a. Fluid Systems Separated from Essential Systems and Components For the purpose of satisfying the separation provisions of plant arrangement as specified in B.1.a of BTP ASB 3-1, a review of the piping layout and plant arrangement drawings should clearly show that the effects of through-wall leakage cracks at any location in piping designed to seismic and non-seismic standards are isolated or physically remote from essential systems and components.	B.2.a. Complies. See Section 3.6.1.3 and Appendix 3B.

TABLE 3.6-2 (Sheet 13)

	BTP MEB 3-1 Position	WCGS Compliance
B.2.b	Fluid System Piping Between Containment Isolation Valves Leakage cracks need not be postulated in those portions of piping identified in B.2.c. of (BTP) ASB 3-1 provided they meet the requirements of the ASME Code, Section III, Subarticle NE-1120, and are designed such that the maximum stress range does not exceed $0.4(1.2S_h + SA)$ for ASME Code, Section III, 1985 2 piping.	B.2.b. Complies. See Section 3.6.2.1.2.4.
B.2.c	Fluid Systems Within, or Outside and Adjacent to, Protective Structures i. Through-wall leakage cracks should be postulated in seismic Category I fluid system piping located within, or outside and adjacent to, protective structures designed to satisfy the plant arrangement provisions of B.1.b. or B.1.c of BTP ASB 3-1, except (1) where exempted by B.2.b and B.2.d, or (2) where the maximum stress range in these portions of Class 2 or 3 piping (ASME Code, Section III), or non-nuclear piping is less than $0.4(1.2S_h + SA)$. The cracks should be postulated to occur individually at locations that result in the maximum effects from fluid spraying and flooding, with the consequent hazards or environmental conditions developed. ii. Through-wall leakage cracks should be postulated in fluid system piping designed to non-seismic standards as necessary to satisfy B.3.d of BTP ASB 3-1.	B.2.c. See compliance statement to B.2.b above.
B.2.d	Moderate-Energy Fluid Systems in Proximity to High-Energy Fluid Systems Cracks need not be postulated in moderate-energy fluid system piping located in an area in which a break in high-energy fluid system piping is postulated, provided such cracks would not result in more limiting environmental conditions than the high-energy piping break. Where a postulated leakage crack in the moderate-energy fluid system piping results in more limiting environmental conditions than the break in proximate high-energy fluid system piping, the provisions of B.2.c should be applied.	B.2.d. Complies. See compliance statement to B.2.b above.

TABLE 3.6-2 (Sheet 14)

BTP MEB 3-1 Position	WCGS Compliance
B.2.e. Fluid Systems Qualifying as High-Energy or Moderate-Energy Systems	B.2.e. Complies. See Section 3.6.1.1a
Through-wall leakage cracks instead of breaks may be postulated in the piping of those fluid systems that qualify as high-energy fluid systems for only short operational periods3 but qualify as moderate-energy fluid systems for the major operational period.	
B.3. Type of Breaks and Leakage Cracks in Fluid System Piping	
B.3.a Circumferential Pipe Breaks	
The following circumferential breaks should be postulated in high-energy fluid system piping at the locations specified in B.1 of this position:	
(1) Circumferential breaks should be postulated in fluid system piping and branch runs exceeding a nominal pipe size of 1 inch, except where the maximum stress range1 exceeds the limits specified in B.1.c(1)(b)(ii) and B.1.d(1)(b)(ii) but the circumferential stress range is at least 1.5 times the axial stress range. Instrument lines, one inch and less nominal pipe or tubing size should meet the provisions of Regulatory Guide 1.11.	B.3.a.(1) Complies. See Section 3.6.2.1.2.2.
(2) Where break locations are selected without the benefit of stress calculations, breaks should be postulated at the piping welds to each fitting, valve, or welded attachment. Alternatively, a single break location at the section of maximum stress range may be selected as determined by detailed stress analyses (e.g., finite element analyses) or test on a pipe fitting.	B.3.a.(2) Complies. All high-energy Class 1, 2, and 3 piping is analyzed by stress calculations. Non-nuclear class high-energy piping breaks are postulated at all welds, fittings, welded attachments, etc.
(3) Circumferential breaks should be assumed to result in pipe severance and separation amounting to at least a one-diameter lateral displacement of the ruptured piping sections unless physically limited by piping restraints, structural members, or piping stiffness as may be demonstrated by inelastic limit analysis (e.g., a plastic hinge in the piping is not developed under loading).	B.3.a.(3) Complies.
(4) The dynamic force of the jet discharge at the break location should be based on the effective cross-sectional flow area of the pipe on a calculated fluid pressure as modified by an analytically or experimentally determined thrust coefficient. Limited pipe	B.3.a.(4) See Section 3.6.2.2.1.

TABLE 3.6-2 (Sheet 15)

BTP MEB 3-1 Position	WCGS Compliance
displacement at the break location, line restrictions, flow limiters, positive pump-controlled flow, and the absence of energy reservoirs may be taken into account, as applicable, in the reduction of jet discharge.	
(5) Pipe whipping should be assumed to occur in the plane defined by the piping geometry and configuration, and to cause pipe movement in the direction of the jet reaction.	B.3.a.(5) Complies. See Section 3.6.1.1j.
B.3.b. Longitudinal Pipe Breaks	
The following longitudinal breaks should be postulated in high-energy fluid system piping at the locations of the circumferential breaks specified in B.3.a:	
(1) Longitudinal breaks in fluid system piping and branch runs should be postulated in nominal pipe sizes 4-inch and larger, except where the maximum stress range1 exceeds the limits specified in B.1.c(1)(b)(ii) and B.1.d(1)(b)(ii) but the axial stress range is at least 1.5 times the circumferential stress range.	B.3.b.(1) Complies. See Section 3.6.2.1.2.2.
(2) Longitudinal breaks need not be postulated at: (a) Terminal ends provided the piping at the terminal ends contains no longitudinal pipe welds (if longitudinal welds are used, the requirements of B.3.b(1) apply). (b) At intermediate locations where the criterion for a minimum number of break locations must be satisfied.	B.3.b.(2) Per Section 3.6.2.1.2.2, only circumferential breaks are postulated at terminal ends, even if a longitudinal pipe weld is present at that point. At intermediate locations, the exception of this position was complied with.
(3) Longitudinal breaks should be assumed to result in an axial split without pipe severance. Splits should be oriented (but not concurrently) at two diametrically-opposed points on the piping circumference such that the jet reaction causes out-of-plane bending of the piping configuration. Alternatively, a single split may be assumed at the section of highest tensile stress as determined by detailed stress analysis (e.g., finite element analysis).	B.3.b.(3) Complies. See Section 3.6.2.1.3.1.
(4) The dynamic force of the fluid jet discharge should be based on circular elliptical (2D x 1/2D) break area equal to the effective cross-sectional flow area of the pipe at the break location and on a calculated	B.3.b.(4) See Section 3.6.2.2.1.

TABLE 3.6-2 (Sheet 16)

BTP MEB 3-1 Position	WCGS Compliance
fluid pressure modified by an analytically or experimentally determined thrust coefficient as determined for a circumferential break at the same location. Line restrictions, flow limiters, positive pump-controlled flow, and the absence of energy reservoirs may be taken into account, as applicable, in the reduction of jet discharge.	
(5) Piping movement should be assumed to occur in the direction of the jet reaction unless limited by structural members, piping restraints, or piping stiffness as demonstrated by inelastic limit analysis.	B.3.b.(5) Complies.
B.3.c Through-Wall Leakage Cracks	
The following through-wall leakage cracks should be postulated in moderate-energy fluid system piping at the locations specified in B.2 of this position:	
(1) Cracks should be postulated in moderate-energy fluid system piping and branch runs exceeding a nominal pipe size of 1 inch.	B.3.c.(1) Complies.
(2) Fluid flow from a crack should be based on a circular opening of area equal to that of a rectangle one-half pipe-diameter in length and one-half pipe wall thickness in width.	B.3.c.(2) Complies.
(3) The flow from the crack should be assumed to result in an environment that wets all unprotected components within the compartment, with the consequent flooding in the compartment and communicating compartments. Flooding effects should be determined on the basis of a conservatively estimated time period required to effect corrective actions.	B.3.c.(3) Complies.

TABLE 3.6-2 (Sheet 17)

BTP MEB 3-1 Position (footnotes)

1. Stresses under normal and upset plant conditions, and an OBE event as calculated by Eq. (9) and (10), Para. NC-3652 of the ASME Code, Section III.

2. Select two locations with at least 10% difference in stress, or, if stresses differ by less than 10%, two locations separated by a change of direction of the pipe run.

3. An operational period is considered "short" if the fraction of time that the system operates within the pressure-temperature conditions specified for high-energy fluid systems is about 2 percent of the time that the system operates as a moderate-energy fluid system (e.g., systems such as the reactor decay heat removal system qualify as moderate-energy fluid systems; however, systems such as auxiliary feedwater systems operated during PWR reactor startup, hot standby, or shutdown qualify as high-energy fluid systems).

TABLE 3.6-2a

DESIGN COMPARISON TO REGULATORY POSITIONS OF BRANCH TECHNICAL POSITION MEB 3-1, REVISION 2, DATED JUNE 1987, TITLED "POSTULATED RUPTURE LOCATIONS IN FLUID SYSTEM PIPING INSIDE AND OUTSIDE CONTAINMENT"*

*NOTE: Regulatory Guide 1.46, Revision 0, dated 1973, titled "Protection of Pipe Whip Inside Containment," was withdrawn per 50FR9732 March 11, 1985.

BTP 3-1 Position	WCGS Compliance
B.1 High-Energy Fluid Systems Piping	
B.1.a Fluid Systems Separated From Essential Systems and Components For the purpose of satisfying the separation provisions of plant arrangement as specified in B.1.a of Branch Technical Position (BTP) ASB 3-1, a review of the piping layout and plant arrangement drawings should clearly show the effects of postulated piping breaks at any location are isolated or physically remote from essential systems and components.[1] At the designer's option, break locations as determined from B.1.c. of this position may be assumed for this purpose.	B.1.a Complies. See Section 3.6.1.3.2.
B.1.b Fluid System Piping in Containment Penetration Areas Breaks and cracks need not be postulated in those portions of piping from containment wall to and including the inboard or outboard isolation valves provided they meet the requirements of the ASME Code, Section III, Subarticle NE-1120 and the following additional design requirements:	B.1.b Complies. Arbitrary intermediate breaks postulated envelope all environmental effects from breaks.
B.1.b.(1) The following design stress and fatigue limits should not be exceeded:	
For ASME Code, Section III, Class 1 Piping	B.1.b.(1).(a) through B.1.b.(1).(c). There is no piping in Containment penetration area at WCGS
B.1.b.(1).(a) The maximum stress range between any two load sets (including the zero load set) should not exceed 2.4 S_m, and should be calculated[2] by Eq. (10) in NB-3653, ASME Code, Section III. If the calculated maximum stress range of Eq. (10) exceeds 2.4 S_m, the stress ranges calculated by both Eq. (12) and Eq. (13) in Paragraph NB-3653 should meet the limit of 2.4 S_m.	
B.1.b.(1).(b) The cumulative usage factor should be less than 0.1.	
B.1.b.(1).(c) The maximum stress, as calculated by Eq. (9) in NB-3652 under the loadings resulting from a postulated piping failure beyond these, portions of piping should not exceed the lesser of 2.25 S_m and 1.8 S_y, except that following a failure outside containment, the pipe between the outboard isolation valve and the first restraint may be permitted higher stresses provided a plastic hinge is not formed and operability of the valves with such stresses is assured in accordance with the requirements specified in SRP Section 3.9.3. Primary loads include those which are deflection limited by whip restraints.	

TABLE 3.6-2a (sheet 2)

	BTP 3-1 Position	WCGS Compliance
	For ASME Code, Section III, Class 1 Piping	
B.1.b.(1).(d)	The maximum stress as calculated by the sum of Eqs. (9) and (10) in Paragraph NC-3652, ASME Code, Section III, considering those loads and conditions thereof for which level A and level B stress limits have been specified in the system's Design Specification (i.e., sustained loads, occasional loads, and thermal expansion), including an OBE event should not exceed $0.8(1.8\ S_h + S_A)$. The S_h and S_A are allowable stresses at maximum (hot) temperature and allowable stress range for thermal expansion, respectively, as defined in Article NC-3600 of the ASME Code, Section III.	B.1.b.(1).(d) Complies.
B.1.b.(1).(e)	The maximum stress, as calculated by Eq. (9) in NC-3653 under the loadings resulting from a postulated piping failure of fluid system piping beyond these portions of piping should not exceed the lesser of $2.25\ S_h$ and $1.8\ S_y$. Primary loads include those which are deflection limited by whip restraints. The exceptions permitted in (c) above may also be applied, provided that when the piping between the outboard isolation valve and the restraint is constructed in accordance with the Power Piping Code ANSI B31.1 (see ASB 3-1 B.2.c(4)), the piping shall either be of seamless construction with full radiography of all circumferential welds, or all longitudinal and circumferential welds shall be fully radiographed.	B.1.b.(1).(e) Complies. See Section B.1.b.1.a
B.1.b.(2)	Welded attachments, for pipe supports or other purposes, to these portions of piping should be avoided, except where detailed stress analyses, or tests, are performed to demonstrate compliance with the limits of B.1.b.(1).	Welded attachments to these portions of piping are minimized. Attachments for welded pipe supports are reviewed separately for local stress and the limits of B.1.b.(1) are met. Stress analysis is performed to demonstrate that Eq.(9) and (10) do not exceed stress limits of B.1.b.(1).(d).
B.1.b.(3)	The number of circumferential and longitudinal piping welds and branch connections should be minimized. Where guard pipes are used, the enclosed portion of fluid system piping should be seamless construction and without circumferential welds unless specific access provisions are made to permit inservice volumetric examination of the longitudinal and circumferential welds.	B.1.b.(3) Complies. Guard pipes are not used in the containment penetration area.
B.1.b.(4)	The length of these portions of piping should be reduced to the minimum length practical.	B.1.b.(4) Complies.
B.1.b.(5)	The design of pipe anchors or restraints (e.g., connections to containment penetrations and pipe whip restraints) should not require welding directly to the outer surface of the piping (e.g., flued integrally forged pipe fittings may be used), except where such welds are 100 percent volumetrically examinable in service and a detailed stress analysis is performed to demonstrate compliance with the limits of B.1.b.(1).	B.1.b.(5) All high-energy containment penetrations are flued integrally-forged piped fittings. Pipe whip restraints do not require welding directly to the outer surface of the piping, except where 100 percent volumetric examinations are performed. The main steam and main feedwater lines outside containment have flued integrally-forged pipe fitting whip restraints.

TABLE 3.6-2a (sheet 3)

BTP 3-1 Position	WCGS Compliance
B.1.b.(6) Guard pipes provided for those portions of piping in the containment penetration areas should be constructed in accordance with the rules of Class MC, Subsection NE of the ASME Code, Section III, where the guard pipe is part of the containment boundary. In addition, the entire guard pipe assembly should be designed to meet the following requirements and tests:	B.1.b.(6) WCGS has no guard pipes located in the contianment penetration areas
B.1.b.(6).(a) The design pressure and temperature should not be less than the maximum operating pressure and temperature of the enclosed pipe under normal plant conditions.	
B.1.b.(6).(b) The Level C stress limits in NE-3220, ASME Code, Section III, should not be exceeded under the loadings associated with containment design pressure and temperature in combination with the safe shutdown earthquake.	
B.1.b.(6).(c) Guard pipe assemblies should be subjected to a single pressure test at a pressure not less than its design pressure.	
B.1.b.(6).(d) Guard pipe assemblies should not prevent the access required to conduct the inservice examination specified in B.1.b.(7). Inspection ports, if used, should not be located in that portion of the guard pipe through the annulus of dual barrier containment structures.	
B.1.b.(7) A 100% volumetric inservice examination of all pipe welds should be conducted during each inspection interval as defined in IWA-2400, ASME Code, Section XI.	B.1.b.(7) Complies, with the exception of small bore socket welds which undergo 100 percent surface examination, or the extent of inservice examinations completed during each inspection interval are as required per the risk informed process for piping as outlined in EPRI report 1006437, Rev. 0-A
B.1.c <u>Postulation of Pipe Breaks in Areas Other Than Containment Penetration</u>	
B.1.c.(1) With the exceptions of those portions of piping identified in B.1.b, breaks in Class 1 piping (ASME Code, Section III) should be postulated at the following locations in each piping and branch run: (a) At terminal ends[3]. (b) At intermediate locations where the maximum stress range[2] as calculated by Eq. (10) exceeds 2.4 S_m. (c) At intermediate locations where the cumulative usage factor exceeds 0.1. As a result of piping reanalysis due to differences between the design configuration and the as-built configuration, the highest stress or cumulative usage factor locations may be shifted; however, the initially determined intermediate break locations need not be changed unless one of the following conditions exist: (i) The dynamic effects from the new (as-built) intermediate break locations are not mitigated by the original pipe-whip restraints and jet shields. (ii) A change is required in pipe parameters such as major differences in pipe size, wall thickness, and routing.	B.1.c.(1) Complies.* See Section 3.6.2.1.1(a)2 * *No Class 1 piping is located outside the protective structures.*

TABLE 3.6-2a (sheet 4)

BTP 3-1 Position	WCGS Compliance
B.1.c.(2) With the exceptions of those portions of piping identified in B.1.b, breaks in Class 2 and 3 piping (ASME Code, Section III) should be postulated at the following locations in those portions of each piping and branch run:	No Class 2 or 3 high-energy piping is located outside the protective structures
B.1.c.(2).(a) At terminal ends	B.1.c.(2).(a) Complies.* See Sections 3.6.2.1. and compliance statement to BTP ASB 3-1 position B.2.c.(3).
B.1.c.(2).(b) At intermediate locations selected by one of the following criteria:	
B.1.c.(2).(b).(i) At each pipe fitting (e.g., elbow, tee, cross, flange, and nonstandard fitting), welded attachment, and valve. Where the piping contains no fittings, welded attachments, or valves, at one location at each extreme of the piping run adjacent to the protective structure.	B.1.c.(2).(b).(i) Complies. Intermediate breaks are selected on the basis of high stresses but arbitrary intermediate breaks are postulated. See Section 3.6.2.1.1.b.3.
B.1.c.(2).(b).(ii) At each location where stresses calculated[2] by the sum of Eqs. (9) and (10) in NC/ND-3653, ASME Code, Section III, exceed 0.8 times the sum of the stress limits given in NC/ND-3653. As a result of piping reanalysis, due to differences between the design configuration and the as-built configuration, the highest stress locations may be shifted; however, the initially determined intermediate break locations may be used unless a redesign of the piping resulting in a change in pipe parameters (diameter, wall thickness, routing) is required, or the dynamic effects from the new (as-built) intermediate break locations are not mitigated by the original pipe-whip restraints and jet shields.	B.1.c.(2).(b).(ii) Complies. See Sections 3.6.2.1.1.a.2.(e) and 3.6.2.1.1.b.2.
B.1.c.(3) Breaks in seismically analyzed non-ASME Class piping are postulated according to the same requirements as for ASME Class 2 and 3 piping above.[4]	B.1.c.(3) Complies. See Section 3.6.2.1.1.a
B.1.c.(4) Applicable to (1), (2), and (3) above: If a structure separates a high-energy line from an essential component, that separating structure should be designed to withstand the consequences of the pipe break in the high-energy line which produces the greatest effect at the structure irrespective of the fact that the above criteria might not require such a break location to be postulated.	B.1.c.(4) Complies. Separating structures are analyzed to withstand the dynamic effects of the postulated pipe breaks as defined in B.1.c.(1) and B.1.c.(2).
B.1.c.(5) Safety-related equipment must be environmentally qualified in accordance with SRP Section 3.11. Required pipe ruptures and leakage cracks (whichever controls) must be included in the design bases for environmental qualification of electrical and mechanical equipment both inside and outside the containment.	B.1.c.(5) Complies. See Sections 3.11(B) and 3.11(N).
B.1.d The designer should identify each piping run he has considered to postulate the break locations required by B.1.c above. In complex systems such as those containing arrangements of headers and parallel piping running between headers, the designer should identify and include all such piping within a designated run in order to postulate the number of breaks required by these criteria.	B.1.d Complies. See Section 3.6.2.5.

TABLE 3.6-2a (sheet 5)

BTP 3-1 Position	WCGS Compliance
B.1.e With the exceptions of those portions of piping identified in B.1.b, leakage cracks should be postulated as follows: (1) For ASME Code, Section III, Class 1 piping, at axial locations where the calculated stress range[2] by Eq. (10) in NB-3653 exceeds 1.2 S_m. (2) For ASME Code, Section III, Class 2 and 3 or nonsafety class (not ASME Class 1, 2, or 3) piping, at axial locations where the calculated stress[2] by the sum of Eqs. (9) and (10) in NC/ND-3653 exceeds 0.4 times the sum of the stress limits given in NC/ND-3653. (3) Nonsafety class piping which has not been evaluated to obtain stress information should have leakage cracks postulated at axial locations that produce the most severe environmental effects.	B.1.e.(1) through (3): Leakage cracks need not be postulated for Class 1 piping analyzed initially in the design stage. Environmental effects resulting from AIBs were considered.
B.2 Moderate-Energy Fluid System Piping	
B.2.a Fluid Systems Separated from Essential Systems and Components For the purpose of satisfying the separation provisions of plant arrangement as specified in B.1.a. of BTP ASB 3-1, a review of the piping layout and plant arrangement drawings should clearly show that the effects of through-wall leakage cracks at any location in piping designated to seismic and non-seismic standards are isolated or physically remote from essential systems and components.	B.2.a Complies. See Section 3.6.1.3 and Appendix 3B.
B.2.b Fluid System Piping in Containment Penetration Areas Leakage cracks need not be postulated in those portions of piping from containment wall to and including the inboard or outboard isolation valves provided they meet the requirements of the ASME Code, Section III, NE-1120, and the stresses calculated[2] by the sum of Eqs. (9) and (10) in ASME Code, Section III, NC-3653 do not exceed 0.4 times the sum of the stress limits given in NC-3653.	B.2.b Complies. See Section 3.6.2.1.2.4.
B.2.c Fluid Systems in Areas Other Than Containment Penetration	
B.2.c.(1) Leakage cracks should be postulated in piping located adjacent to structures, systems, or components important to safety, except:	
B.2.c.(1).(a) Where exempted by B.2.b or B.2.d,	B.2.c.(1).(a) Complies
B.2.c.(1).(b) For ASME Code, Section III, Class 1 piping, the stress range calculated[2] by Eq. (10) in NB-3653 is less than 1.2 S_m, and	B.2.c.(1).(b) Complies See compliance statement to B.1.e.(1)
B.2.c.(1).(c) For ASME Code, Section III, Class 2 or 3 and nonsafety-class piping, the stresses calculated[2] by the sum of Eqs. (9) and (10) in NC/ND-3653 are less than 0.4 times the sum of the stress limits given in NC/ND-3653.	B.2.c.(1).(c) Complies See Section 3.6.2.1.2.4(c)
B.2.c.(2) Leakage cracks, unless the piping system is exempted by (1) above, should be postulated at axial and circumferential locations that result in the most severe environmental consequences.	B.2.c.(2) Complies. See Section 3.6.2.1.1
B.2.c.(3) Leakage cracks should be postulated in fluid system piping designed to non-seismic standards as necessary to satisfy B.3.d of BTP ASB 3-1.	B.2.c.(3) Complies. See compliance statement to B.2.b.

TABLE 3.6-2a (sheet 6)

BTP 3-1 Position	WCGS Compliance
B.2.d Moderate-Energy Fluid Systems in Proximity to High-Energy Fluid Systems Leakage cracks need not be postulated in moderate-energy fluid system piping located in an area in which a break in high-energy fluid system piping is postulated, provided such leakage cracks would not result in more limiting environmental conditions than the high-energy piping break. Where a postulated leakage crack in the moderate-energy fluid system piping results in more limiting environmental conditions than the break in proximate high-energy fluid system piping, the provisions of B.2.c. should be applied.	B.2.d Complies. See compliance statement to B.2.b.
B.2.e Fluid Systems Qualifying as High-Energy or Moderate-Energy Systems Leakage cracks instead of breaks may be postulated in the piping of those fluid systems that qualify as high-energy fluid systems for only short operational periods[5] but qualify as moderate-energy fluid systems for the major operational period.	B.2.e Complies. See Section 3.6.1.1.a
B.3 Type of Breaks and Leakage Cracks in Fluid System Piping	
B.3.a Circumferential Pipe Breaks The following circumferential breaks should be postulated individually in high-energy fluid system piping at the locations specified in B.1 of this position:	
B.3.a.(1) Circumferential breaks should be postulated in fluid system piping and branch runs exceeding a nominal pipe size of 1 inch, except where the maximum stress range[2] exceeds the limits specified in B.1.c.(1) and B.1.c.(2), but the circumferential stress range is at least 1.5 times the axial stress range. Instrument lines, 1 inch and less nominal pipe or tubing size should meet the provisions of Regulatory Guide 1.11.	B.3.a.(1) Complies. See Section 3.6.2.1.2.2
B.3.a.(2) Where break locations are selected without the benefit of stress calculations, breaks should be postulated at the piping welds to each fitting, valve, or welded attachment.	B.3.a.(2) Complies. All high-energy Class 1, 2 and 3 piping is analyzed by stress calculations. Non-nuclear class high energy piping breaks are postulated at all welds, fittings, welded attachments, etc.
B.3.a.(3) Circumferential breaks should be assumed to result in pipe severance and separation amounting to at least a one-diameter lateral displacement of the ruptured piping sections unless physically limited by piping restraints, structural members, or piping stiffness as may be demonstrated by inelastic limit analysis (e.g., a plastic hinge in the piping is not developed under loading).	B.3.a.(3) Complies.
B.3.a.(4) The dynamic force of the jet discharge at the break location should be based on the effective cross-sectional flow area of the pipe and on a calculated fluid pressure as modified by an analytically or experimentally determined thrust coefficient. Limited pipe displacement at the break location, line restrictions, flow limiters, positive pump-controlled flow, and the absence of energy reservoirs may be taken into account, as applicable, in the reduction of jet discharge.	B.3.a.(4) Complies. See Section 3.6.2.2.1.

TABLE 3.6-2a (sheet 7)

	BTP 3-1 Position	WCGS Compliance
B.3.a.(5)	Pipe whipping should be assumed to occur in the plane defined by the piping geometry and configuration, and to initiate pipe movement in the direction of the jet reaction.	B.3.a.(5) Complies. See Section 3.6.1.1.j
B.3.b	Longitudinal Pipe Breaks The following longitudinal breaks should be postulated in high-energy fluid system piping at the locations of the circumferential breaks specified in B.3.a.:	
B.3.b.(1)	Longitudinal breaks in fluid system piping and branch runs should be postulated in nominal pipe sizes 4-inch and larger, except where the maximum stress range[2] exceeds the limits specified in B.1.c.(1) and B.1.c.(2), but the axial stress range is at least 1.5 times the circumferential stress range.	B.3.b.(1) Complies. See Section 3.6.2.1.2.2.
B.3.b.(2)	Longitudinal breaks need not be postulated at terminal ends.	B.3.b.(2): Per Section 3.6.2.1.2.2, only breaks are postulated at terminal end, even if a longitudinal pipe weld is present at that point.
B.3.b.(3)	Longitudinal breaks should be assumed to result in an axial split without pipe severance. Splits should be oriented (but not concurrently) at two diametrically opposed points on the piping circumference such that the jet reactions causes out-of-plant bending of the piping configuration. Alternatively, a single split may be assumed at the section of highest tensile stress as determined by detailed stress analysis (e.g., finite element analysis).	B.3.b.(3) Complies. See Section 3.6.2.1.3.1.
B.3.b.(4)	The dynamic force of the fluid jet discharge should be based on a circular or elliptical (2D x ½D) break area equal to the effective cross-sectional flow area of the pipe at the break location and on a calculated fluid pressure modified by an analytically or experimentally determined thrust coefficient as determined for a circumferential break at the same location. Line restrictions, flow limiters, positive pump-controlled flow, and the absence of energy reservoirs may be taken into account, as applicable, in the reduction of jet discharge.	B.3.b.(4) Complies. See Section 3.6.2.2.1.
B.3.b.(5)	Piping movement should be assumed to occur in the direction of the jet reaction unless limited by structural members, piping restraints, or piping stiffness as demonstrated by inelastic limit analysis.	B.3.b.(5) Complies.
B.3.c	Leakage Crack Leakage cracks should be postulated at those axial locations specified in B.1.e for high-energy fluid system piping and in those piping systems not exempted in B.2.c (1) for moderate-energy fluid system piping.	
B.3.c.(1)	Leakage cracks need not be postulated in 1-inch and smaller piping.	B.3.c.(1) Complies.

TABLE 3.6-2a (sheet 8)

	BTP 3-1 Position	WCGS Compliance
B.3.c.(2)	For high-energy fluid system piping, the leakage cracks should be postulated to be in those circumferential locations that result in the most severe environmental consequences. For moderate-energy fluid system piping, see B.2.c.(2).	Leakage cracks for high-energy piping need not be postulated for those analyzed initially in the design stage. Environmental effects resulting from AIBs were considered.
B.3.c.(3)	Fluid flow from a leakage crack should be based on a circular opening of area equal to that of a rectangle one-half pipe diameter in length and one-half pipe wall thickness in width.	B.3.c.(3) Complies.
B.3.c.(4)	The flow from the leakage crack should be assumed to result in an environment that wets all unprotected components within the compartment, with consequent flooding in the compartment and communicating compartments. Flooding effects should be determined on the basis of a conservatively estimated time period required to effect corrective actions.	B.3.c.(4) Complies.

BTP MEB 3-1, REV. 2 FOOTNOTES

[1]Systems and components required to shut down the reactor and mitigate the consequences of a postulated pipe rupture without offsite power.

[2]For those loads and conditions in which Level A and Level B stress limits have been specified in the Design Specification (including the operating basis earthquake).

[3]Extremities of piping runs that connect to structures, components (e.g., vessels, pumps, valves), or pipe anchors that act as rigid constraints to piping motion and thermal expansion. A branch connection to a main piping run is a terminal end of the branch run, except where the branch run is classified as part of a main run in the stress analysis and is shown to have a significant effect on the main run behavior. In piping runs which are maintained pressurized during normal plant conditions for only a portion of the run (i.e., up to the first normally closed valve), a terminal end of such runs is the piping connection to this closed valve.

[4]Note that, in addition, breaks in non-seismic (i.e., non-Category I) piping are to be taken into account as described in Section II.2.k, "Interaction of Other Piping with Category I Piping," of SRP Section 3.9.2.

[5]The operational period is considered "short" if the fraction of time that the system operates within the pressure-temperature conditions specified for high-energy fluid systems is about 2 percent of the time that the system operates as a moderate-energy fluid system (e.g., systems such as the reactor decay heat removal system qualify as moderate-energy fluid systems; however, systems such as auxiliary feedwater systems operated during PWR reactor startup, hot standby, or shutdown qualify as high-energy fluid systems).

TABLE 3.6-3

Historical Information

HIGH-ENERGY PIPE BREAK
INITIAL STRESS ANALYSIS
RESULTS

SYSTEM - MAIN STEAM SYSTEM
Pipebreak Isometric No.: Figure 3.6-1(AB01) Sheet 1

Prob. No. P-001
Issue - 8

Node	Stress (psi) Primary	Secondary	Total	Pipe Break Stress Limit (psi) $0.8\ (S_A + 1.2S_h)$
1**	11,227	5,286	16,563	37,800
5B Bend	14,595	16,696	31,291	37,800
5M Bend	14,460	16,976	31,436	37,800
20B Bend	14,719	13,441	28,160	37,800
40B Bend	16,003	5,745	21,748	37,800
50B Bend	17,627	6,282	23,909	37,800
50E	18,414	6,137	24,551	37,800
80B Bend	19,919	12,338	32,257	37,800
80E	20,470	10,814	31,284	37,800
90B Bend	15,884	7,346	23,230	37,800
90M Bend	16,122	7,086	23,208	37,800
101*	10,708	5,734	16,442	37,800

* - Indicates Terminal End
** - Indicates Terminal End Break

TABLE 3.6-3 (Sheet 1A)

SYSTEM - MAIN STEAM SYSTEM (Loop 1) Prob. No. P-001 (0520511-C-0001)
Pipebreak Isometric No.: Figure 3.6-1(AB01)
Sheet 1

Node	Stress (psi) Primary	Secondary	Total	Pipe Break Stress Limit (psi) $0.8\ (S_A + 1.2S_h)$
1**	10,461	6,612	17,073	37,800
5 B Bend	13,273	19,617	32,889	37,800
5 M + Bend	11,560	19,865	31,425	37,800
20 B Bend	13,267	15,743	29,010	37,800
20 M	12,905	15,635	28,540	37,800
40 B Bend	17,351	8,009	25,360	37,800
50 B Bend	18,576	8,663	27,238	37,800
50 E	18,760	8,680	27,440	37,800
80 B + Bend	15,240	12,284	27,524	37,800
80 E [180]	15,708	11,439	27,147	37,800
90 B [88] Bend	12,907	14,833	27,740	37,800
90 AM Bend	13,144	15,533	28,676	37,800
101*	9,560	10,704	20,264	37,800

* - Indicates Terminal End
** - Indicates Terminal End Break
\+ - Arbitrary Break Location,, deleted per MEB 3-1, Rev. 2
[] Indicates the new Node Points from calc 0520511-C-001

TABLE 3.6-3 (Sheet 2)

Historical Information

SYSTEM - MAIN STEAM SYSTEM
Pipebreak Isometric No.: Figure 3.6-1(AB01) Sheet 1

Prob. No. P-001A
Issue - 8

Node	Stress (psi) Primary	Secondary	Total	Pipe Break Stress Limit (psi) $0.8\ (S_A + 1.2S_h)$
1**	11,568	5,289	16,857	37,800
5B Bend	15,241	16,546	31,787	37,800
5M Bend	15,094	16,769	31,863	37,800
20B Bend	15,681	14,774	30,455	37,800
20M	15,573	15,088	30,661	37,800
40B Bend	16,700	7,575	24,275	37,800
40E	17,401	8,352	25,753	37,800
50B Bend	18,676	4,671	23,347	37,800
50E	18,566	4,812	23,378	37,800
80B Bend	21,192	13,457	34,649	37,800
80M Bend	21,450	12,702	34,152	37,800
90B Bend	16,620	7,785	24,405	37,800
90M Bend	16,624	8,441	25,065	37,800
101*	11,239	5,830	17,069	37,800

* - Indicates Terminal End
** - Indicates Terminal End Break

TABLE 3.6-3 (Sheet 2A)

SYSTEM - MAIN STEAM SYSTEM (Loop 2) Prob. No. P-001A (0520511-C-002)
Pipebreak Isometric No.: Figure 3.6-1(AB01)
Sheet 1

Node	Stress (psi) Primary	Secondary	Total	Pipe Break Stress Limit (psi) $0.8\ (S_A + 1.2S_h)$
1**	10,689	6,658	17,347	37,800
5 B Bend	14,085	19,761	33,845	37,800
5 M Bend +	11,762	19,896	31,657	37,800
20 B Bend	13,644	17,467	31,111	37,800
20 M	13,276	17,636	30,912	37,800
40 B Bend	17,758	8,704	26,461	37,800
40 E	13,008	10,629	23,637	37,800
50 B Bend	18,526	9,475	28,001	37,800
50 E	18,016	8,718	26,733	37,800
80 B Bend +	16,103	11,529	27,632	37,800
80 M Bend	16,680	10,696	27,375	37,800
80 E [180]	16,374	10,489	26,863	37,800
90 B [88] Bend	13,420	15,944	29,373	37,800
90AM Bend	13,702	17,349	31,051	37,800
101*	9,089	11,541	20,631	37,800

* - Indicates Terminal End
** - Indicates Terminal End Break
\+ - Arbitrary Break Location,, deleted per MEB 3-1, Rev. 2
[] Indicates the new Node Points from calc 0520511-C-002

TABLE 3.6-3 (Sheet 3)

Historical Information

SYSTEM - MAIN STEAM SYSTEM
Pipebreak Isometric No.: Figure 3.6-1(AB01) Sheet 1

Prob. No. P-002
Issue - 8

Node	Stress (psi) Primary	Secondary	Total	Pipe Break Stress Limit (psi) $0.8\ (S_A + 1.2S_h)$
1**	11,945	3,697	15,642	37,800
5B Bend	15,639	11,633	27,272	37,800
5M	15,518	11,803	27,321	37,800
20B Bend	16,599	9,296	25,895	37,800
20M Bend	16,430	9,430	25,860	37,800
40B Bend	17,366	7,135	24,501	37,800
40E	16,185	7,560	23,745	37,800
60B Bend	26,965	10,054	37,019	37,800
60E	23,473	10,860	34,333	37,800
101*	16,315	1,782	18,097	37,800

* - Indicates Terminal End
** - Indicates Terminal End Break

TABLE 3.6-3 (Sheet 3A)

SYSTEM - MAIN STEAM SYSTEM (Loop 4) Prob. No. P-002 (0520511-C-004)
Pipebreak Isometric No.: Figure 3.6-1(AB01)
Sheet 1

Node	Stress (psi) Primary	Secondary	Total	Pipe Break Stress Limit (psi) $0.8\ (S_A + 1.2S_h)$
1**	13,568	9,793	23,361	37,800
5 B Bend	13,992	23,569	37,562	37,800
5 M +	10,440	21,199	31,639	37,800
20 B Bend	15,026	11,679	26,705	37,800
20 M Bend	14,241	13,231	27,472	37,800
40 B Bend	14,858	12,984	27,842	37,800
40 E	14,682	14,822	29,504	37,800
60 B Bend +	17,458	11,113	28,571	37,800
60 E	15,656	11,987	27,643	37,800
101*	11,587	1,906	13,493	37,800

* - Indicates Terminal End
** - Indicates Terminal End Break
\+ - Arbitrary Break Location,, deleted per MEB 3-1, Rev. 2

TABLE 3.6-3 (Sheet 4)

Historical Information

SYSTEM - MAIN STEAM SYSTEM
Pipebreak Isometric No.: Figure 3.6-1(AB01) Sheet 1

Prob. No. P-002A
Issue - 8

Node	Stress (psi) Primary	Secondary	Total	Pipe Break Stress Limit (psi) $0.8\ (S_A + 1.2S_h)$
1**	12,581	3,760	16,341	37,800
5B Bend	16,436	11,870	28,306	37,800
5M	16,333	12,073	28,406	37,800
20B Bend	17,813	9,169	26,982	37,800
20M	17,600	9,220	26,820	37,800
40B Bend	16,643	7,828	24,471	37,800
40E	16,995	8,152	25,147	37,800
60B Bend	24,608	10,520	35,128	37,800
60M	24,467	11,043	35,510	37,800
101*	15,677	1,999	17,676	37,800

* - Indicates Terminal End
** - Indicates Terminal End Break

TABLE 3.6-3 (Sheet 4A)

SYSTEM - MAIN STEAM SYSTEM (Loop 3) Prob. No. P-002A (0520511-C-003)
Pipebreak Isometric No.: Figure 3.6-1(AB01)
Sheet 1

Node	Stress (psi)			Pipe Break Stress Limit (psi)
	Primary	Secondary	Total	0.8 (S_A + 1.2S_h)
1**	10,921	8,212	19,133	37,800
5 B Bend	13,727	23,749	37,476	37,800
5 M +	10,228	21,371	31,599	37,800
20 B Bend	15,432	11,440	26,873	37,800
20 M	14,744	12,902	27,647	37,800
40 B Bend	14,150	13,322	27,472	37,800
40 E	16,029	15,425	31,455	37,800
60 B Bend	15,926	11,531	27,457	37,800
60 M +	15,247	12,212	27,459	37,800
101*	10,484	1,811	12,296	37,800

* - Indicates Terminal End
** - Indicates Terminal End Break
\+ - Arbitrary Break Location,, deleted per MEB 3-1, Rev. 2

TABLE 3.6-3 (Sheet 5)

Historical Information

SYSTEM - MAIN FEEDWATER SYSTEM INSIDE CONTAINMENT Prob. No. P-003
Pipebreak Isometric No.: Figure 3.6-1(AE04) Issue - 5
Sheet 2

Node	Stress (psi) Primary	Secondary	Total	Pipe Break Stress Limit (psi) $0.8\ (S_A + 1.2S_h)$
5*	5,486	5,662	11,148	32,400
20E	6,383	11,123	17,506	32,400
20M	6,161	11,708	17,869	32,400
27B Bend	5,230	18,658	23,888	32,400
27M	5,543	19,604	25,147	32,400
35M	6,099	11,578	17,677	32,400
35E	6,223	12,124	18,347	32,400
75M	5,194	13,530	18,724	32,400
95M	4,987	12,747	17,734	32,400
95E	4,964	13,095	18,059	32,400
100+	4,975	13,294	18,269	32,400
125**,++	5,323	17,612	22,935	32,400

* - Indicates Terminal End
** - Indicates Terminal End Break
++ - Terminal End Break includes Break at reducer

TABLE 3.6-3 (Sheet 5A)

Historical Information

SYSTEM - MAIN FEEDWATER SYSTEM (Loop 1) Prob. No. P-003 (0520511-C-005)
Pipebreak Isometric No.: Figure 3.6-1(AE04)
Sheet 2

Node	Stress (psi) Primary	Secondary	Total	Pipe Break Stress Limit (psi) $0.8\ (S_A + 1.2S_h)$
5*	7,993	2,638	10,631	32,400
20E	6,674	6,314	12,988	32,400
20AM	6,648	6,657	13,305	32,400
27 B (Bend)	5,725	12,039	17,764	32,400
27 M [27A] +	6,037	12,538	18,575	32,400
35 M	6,274	6,286	12,560	32,400
35 E	6,393	6,457	12,850	32,400
75 AM	10,528	15,097	25,624	32,400
95 M [95C]	13,845	10,985	24,829	32,400
95 E	9,893	16,120	26,013	32,400
100 [10R] +	10,405	19,074	29,479	32,400
125 [12N]**,++	11,002	23,373	34,376	32,400

* - Indicates Terminal End
** - Indicates Terminal End Break
\+ - Arbitrary Break Location, deleted per MEB 3-1, Rev. 2
++ - Terminal End Break includes Break at Reducer
[] - Indicates the new Node Points from calc 0520511-C-005

TABLE 3.6-3 (Sheet 5B)

SYSTEM - MAIN FEEDWATER SYSTEM (Loop 1) Prob. No. P-003 P0001
Pipebreak Isometric No.: Figure 3.6-1(AE04)
Sheet 2

Node	Stress (psi) Primary	Secondary	Total	Pipe Break Stress Limit (psi) $0.8\ (S_A + 1.2S_h)$
5*	8,470	2,638	11,108	32,400
20E	7,048	6,314	13,362	32,400
20AM	6,929	6,657	13,586	32,400
27 B (Bend)	6,092	12,039	18,131	32,400
27 M [27A] +	6,524	12,538	19,062	32,400
35 M	6,737	6,286	13,024	32,400
35 E	6,864	6,457	13,320	32,400
55 M	15,176	8,328	23,504	32,400
55 E	11,294	3,740	15,034	32,400
75 AM	11,003	15,097	26,099	32,400
95 M [95C]	14,334	10,985	25,319	32,400
95 E	10,372	16,120	26,492	32,400
100 [10R] +	10,875	19,074	29,949	32,400
125 [12N]**,++	11,482	23,373	34,855	32,400

* - Indicates Terminal End
** - Indicates Terminal End Break
\+ - Arbitrary Break Location, deleted per MEB 3-1, Rev. 2
++ - Terminal End Break includes Break at Reducer
[] - Indicates the new Node Points from calc P0001

TABLE 3.6-3 (Sheet 6)

Historical Information

SYSTEM - MAIN FEEDWATER SYSTEM INSIDE CONTAINMENT Prob. No. P-003A
Pipebreak Isometric No.: Figure 3.6-1(AE04) Issue - 8
Sheet 2

Node	Stress (psi) Primary	Secondary	Total	Pipe Break Stress Limit (psi) $0.8\ (S_A + 1.2S_h)$
5*	5,486	5,662	11,148	32,400
20E	6,383	11,123	17,506	32,400
20M	6,161	11,708	17,869	32,400
27B Bend	5,230	18,658	23,888	32,400
27M	5,543	19,604	25,147	32,400
35M	6,099	11,578	17,677	32,400
35E	6,223	12,124	18,347	32,400
75M	5,194	13,530	18,724	32,400
95M	4,987	12,747	17,734	32,400
95E	4,964	13,095	18,059	32,400
100	4,975	13,294	18,269	32,400
125**, ++	5,323	17,612	22,935	32,400

* - Indicates Terminal End
** - Indicates Terminal End Break
++ - Terminal End Break includes Break at Reducer

TABLE 3.6-3 (Sheet 6A)

Historical Information

SYSTEM - MAIN FEEDWATER SYSTEM (Loop 2) Prob. No. P-003A
Pipebreak Isometric No.: Figure 3.6-1(AE04)
Sheet 2

Node No.	Stress (psi) Primary	Secondary	Total	Pipe Break Stress Limit (psi) $0.8\ (S_A + 1.2S_h)$
5*	8,001	2,638	10,639	32,400
20 E	6,685	6,310	12,995	32,400
20AM	6,670	6,653	13,323	32,400
27B (Bend)	5,717	12,036	17,753	32,400
27M [27A] +	6,024	12,535	18,559	32,400
35M	6,239	6,102	12,341	32,400
35E	6,362	6,415	12,777	32,400
75AM	10,588	14,920	25,509	32,400
95M [95C]	13,933	10,928	24,861	32,400
95E	10,047	15,728	25,775	32,400
100 [10R] +	10,592	18,514	29,105	32,400
125 [12N]**,++	11,181	22,579	33,760	32,400

* - Indicates Terminal End
** - Indicates Terminal End Break
\+ - Arbitrary Break Location, deleted per MEB 3-1, Rev. 2
++ - Terminal End Break includes Break at Reducer
[] - Indicates the new Node Points from calc 0520511-C-006

TABLE 3.6-3 (Sheet 6B)

SYSTEM - MAIN FEEDWATER SYSTEM (Loop 2) Prob. No. P-003A (P0002)
Pipebreak Isometric No.: Figure 3.6-1(AE04)
Sheet 2

Node No.	Stress (psi) Primary	Secondary	Total	Pipe Break Stress Limit (psi) $0.8\ (S_A + 1.2S_h)$
5*	8,485	2,638	11,122	32,400
20 E	7,113	6,310	13,423	32,400
20AM	7,052	6,653	13,705	32,400
27B (Bend)	6,155	12,036	18,191	32,400
27M [27A] +	6,513	12,535	19,048	32,400
35M	6,715	6,102	12,818	32,400
35E	6,844	6,415	13,259	32,400
55M	15,458	8,497	23,956	32,400
55E	11,504	3,888	15,392	32,400
75AM	11,077	14,920	25,998	32,400
95M [95C]	14,425	10,928	25,354	32,400
95E	10,536	15,728	26,265	32,400
100 [10R] +	11,078	18,514	29,592	32,400
125 [12N]**,++	11,677	22,579	34,256	32,400

* - Indicates Terminal End
** - Indicates Terminal End Break
\+ - Arbitrary Break Location, deleted per MEB 3-1, Rev. 2
++ - Terminal End Break includes Break at Reducer
[] - Indicates the new Node Points from calc P0002
() - Stress values increased to consider min wall thickness at that location

TABLE 3.6-3 (Sheet 7)

Historical Information

SYSTEM - MAIN FEEDWATER SYSTEM
Pipebreak Isometric No.: Figure 3.6-1(AE05) Sheet 3

Prob. No. P-004
Issue - 5

Node	Stress (psi) Primary	Secondary	Total	Pipe Break Stress Limit (psi) $0.8\ (S_A + 1.2S_h)$
10*	5,991	4,776	10,767	32,400
20B Bend	5,468	17,391	22,859	32,400
20M	5,660	18,194	23,854	32,400
30M	5,271	18,237	23,508	32,400
30E	5,360	18,455	23,815	32,400
45B Bend	5,417	20,764	26,181	32,400
45M	5,670	20,672	26,342	32,400
71M	5,625	13,151	18,776	32,400
71E	5,842	14,116	19,958	32,400
90E	5,394	13,537	18,931	32,400
95	5,576	14,747	20,323	32,400
100**, ++	5,656	16,297	21,953	32,400

* - Indicates Terminal End
** - Indicates Terminal End Break
++ - Terminal End Break includes break at the reducer

TABLE 3.6-3 (Sheet 7A)

Historical Information

SYSTEM - MAIN FEEDWATER SYSTEM (Loop 4) Prob. No. P-004 (0520511-C-008)
Pipebreak Isometric No.: Figure 3.6-1(AE05)
Sheet 3

Node No.	Pipe Break Stress (psi) Primary	Secondary	Total	Stress Limit (psi) $0.8\ (S_A + 1.2S_h)$
10*	15,071	10,333	25,403	32,400
20B[19A](Bend)	10,241	20,915	31,155	32,400
20M +	10,913	21,052	31,965	32,400
30 M	9,396	21,270	30,667	32,400
30 E [32]	8,523	20,433	28,956	32,400
45B[D45](Bend)	10,157	10,092	20,249	32,400
45 M +	10,580	10,072	20,651	32,400
71M [71A]	8,575	13,939	22,514	32,400
71 E	8,859	12,770	21,629	32,400
90 E [91]	8,650	18,098	26,748	32,400
95	9,955	20,380	30,335	32,400
100[101]**,++,◊	10,665	23,861	34,526	32,400

* - Indicates Terminal End
** - Indicates Terminal End Break
\+ - Arbitrary Break Location, deleted per MEB 3-1, Rev. 2
++ - Terminal End Break includes Break at the Reducer
[] Indicates the new Node Points from calc 0520511-C-008
◊ Stress values increased to consider min wall thickness at that location

TABLE 3.6-3 (Sheet 7B)

SYSTEM - MAIN FEEDWATER SYSTEM (Loop 4) Prob. No. P-004 P0004
Pipebreak Isometric No.: Figure 3.6-1(AE05)
Sheet 3

Node No.	Stress (psi) Primary	Secondary	Total	Pipe Break Stress Limit (psi) $0.8\ (S_A + 1.2S_h)$
10*	10,350	10,169	20,519	32,400
20B[19A](Bend)	9,293	20,659	29,953	32,400
20M +	9,386	20,836	30,223	32,400
30 M	9,118	21,374	30,492	32,400
30 E [32]	8,157	20,515	28,672	32,400
45B[D45](Bend)	10,444	10,128	20,573	32,400
45 M +	10,898	10,095	20,993	32,400
71M [71A]	9,027	13,939	22,966	32,400
71 E	9,304	12,771	22,075	32,400
90 E [91]	9,107	18,101	27,208	32,400
95	10,411	20,385	30,796	32,400
100[101]**,++,◊	10,341	22,112	32,453	32,400

* - Indicates Terminal End
** - Indicates Terminal End Break
\+ - Arbitrary Break Location, deleted per MEB 3-1, Rev. 2
++ - Terminal End Break includes Break at the Reducer
[] Indicates the new Node Points from calc P0004
◊ Stress values increased to consider min wall thickness at that location

TABLE 3.6-3 (Sheet 8)

Historical Information

SYSTEM - MAIN FEEDWATER SYSTEM
Pipebreak Isometric No.: Figure 3.6-1(AE05) Sheet 3

Prob. No. P-004A
Issue - 7

Node	Stress (psi) Primary	Secondary	Total	Pipe Break Stress Limit (psi) $0.8\ (S_A + 1.2S_h)$
10*	5,991	4,776	10,767	32,400
20B Bend	5,468	17,391	22,859	32,400
20M	5,660	18,194	23,854	32,400
30M	5,271	18,237	23,508	32,400
30E	5,360	18,455	23,815	32,400
45B Bend	5,417	20,764	26,181	32,400
45M	5,670	20,672	26,342	32,400
71M	5,625	13,151	18,776	32,400
71E	5,842	14,116	19,958	32,400
90E	5,394	13,537	18,931	32,400
95	5,576	14,747	20,323	32,400
100**, ++	5,656	16,297	21,953	32,400

* - Indicates Terminal End
** - Indicates Terminal End Break
++ - Terminal End Break includes break at the reducer

TABLE 3.6-3 (Sheet 8A)

Historical Information

SYSTEM - MAIN FEEDWATER SYSTEM (Loop 3) Prob. No. P-004A (0520511-C-007)

Pipebreak Isometric No.: Figure 3.6-1(AE05) Sheet 3

Node No.	Stress (psi) Primary	Secondary	Total	Pipe Break Stress Limit (psi) $0.8\ (S_A + 1.2S_h)$
10*	15,013	10,381	25,394	32,400
20B Bend	10,257	21,160	31,416	32,400
20M +	10,918	21,295	32,212	32,400
30M	9,424	21,362	30,785	32,400
30E	8,550	20,511	29,061	32,400
45B Bend	10,183	10,327	20,511	32,400
45M +	10,599	10,733	21,332	32,400
71M [71A]	8,584	13,303	21,887	32,400
71E	8,927	12,833	21,760	32,400
90E	8,690	18,347	27,037	32,400
95	9,998	20,709	30,707	32,400
100[101]**, ++	9,940	22,504	32,445	32,400

* - Indicates Terminal End
** - Indicates Terminal End Break
\+ - Arbitrary Break Location, deleted per MEB 3-1, Rev. 2
++ - Terminal End Break includes break at the reducer
[] - Indicates the new Node Points from calc 0520511-C-007

TABLE 3.6-3 (Sheet 8B)

SYSTEM - MAIN FEEDWATER SYSTEM (Loop 3) Prob. No. P-004A P0003
Pipebreak Isometric No.: Figure 3.6-1(AE05)
Sheet 3

Node No.	Stress (psi) Primary	Secondary	Total	Pipe Break Stress Limit (psi) $0.8\ (S_A + 1.2S_h)$
10*	10,265	10,163	20,428	32,400
20B Bend	9,282	20,829	30,111	32,400
20M +	9,378	21,013	30,392	32,400
30M	9,106	21,516	30,622	32,400
30E	8,167	20,632	28,799	32,400
45B Bend	10,470	10,360	20,831	32,400
45M +	10,919	10,761	21,680	32,400
71M [71A]	9,045	13,303	22,348	32,400
71E	9,403	12,834	22,237	32,400
90E	9,147	18,350	27,497	32,400
95	10,457	20,714	31,171	32,400
100[101]**, ++	10,408	22,511	32,919	32,400

* - Indicates Terminal End
** - Indicates Terminal End Break
\+ - Arbitrary Break Location, deleted per MEB 3-1, Rev. 2
++ - Terminal End Break includes break at the reducer
[] - Indicates the new Node Points from calc P0003

TABLE 3.6-3 (Sheet 9)

SYSTEM - HIGH PRESSURE COOLANT INJECTION
Pipebreak Isometric No.: Figure 3.6-1(EM02) Sheet 27

Prob. No. P-21
Issue - 5

Node	Stress (psi) Primary	Secondary	Total	Pipe Break Stress Limit (psi) $0.8\ (S_A + 1.2S_h)$
5 TNGT	9,870	8,286	18,156	39,448
30 TNGT	6,465	15,943	22,408	39,448
50* TNGT	6,905	2,214	9,119	39,448
164 TNGT	10,870	1,806	12,676	39,448
180* TNGT	7,065	2,669	9,734	39,448
67	8,481	2,353	10,834	39,448
100M Bend	7,440	2,849	10,289	39,448
116*	8,440	1,732	10,172	39,448
255E	5,421	6,884	12,305	39,448
266 TNGT	13,353	1,280	14,633	39,448
320B Bend	3,975	24,019	27,994	39,448
340*	5,264	2,834	8,098	39,448

* - Indicates Terminal End

TABLE 3.6-3 (Sheet 10)

SYSTEM - MAIN STEAM - AUXILIARY BUILDING
Pipebreak Isometric No.: Figure 3.6-1(AB01) Sheet 1

Prob. No. P-026
Issue - 7

Node	Stress (psi) Primary	Secondary	Total	Pipe Break Stress Limit (psi) $0.8\ (S_A + 1.2S_h)$
5	9,170	16,814	25,984	37,800
25	7,063	3,446	10,509	37,800
33	8,902	9,195	18,097	37,800
45F	17,924	0	17,924	38,700
60	12,519	2,299	14,818	37,800
83	6,924	2,309	9,233	37,800
300	8,922	18,909	27,831	37,800
294	8,722	9,636	18,408	37,800
291	9,004	5,890	14,894	37,800
289	8,768	6,571	15,339	37,800
287	11,351	1,228	12,579	37,800
282	9,313	978	10,291	37,800

NOTE: This problem meets No Break Zone Criteria

* - Indicates Terminal End

TABLE 3.6-3 (Sheet 11)

SYSTEM - MAIN STEAM
Pipebreak Isometric No.: Figure 3.6-1(AB01) Sheet 1

Prob. No. P-27BY
Issue - 7

Node	Stress (psi) Primary	Secondary	Total	Pipe Break Stress Limit (psi) $0.8\ (S_A + 1.2S_h)$
100	16,223	12,234	28,457	32,400
105	11,667	8,978	20,645	32,400
106	12,783	10,526	23,309	32,400
160	15,292	10,316	25,608	32,400
170	15,535	9,142	24,677	32,400
185	14,959	5,561	20,520	32,400
200	11,764	14,004	25,768	32,400
202	9,127	6,284	15,411	32,400
210	9,000	15,582	24,582	32,400
215	10,651	20,208	30,859	32,400
145	16,002	14,908	30,910	32,400
142	12,292	6,952	19,244	32,400
190	9,239	20,320	29,559	32,400
205	9,322	17,696	27,018	32,400

NOTE: This problem meets No Break Zone Criteria

* - Indicates Terminal End

TABLE 3.6-3 (Sheet 12)

SYSTEM - MAIN FEEDWATER SYSTEM
Pipebreak Isometric No.: Figure 3.6-1(AE04) Sheet 2

Prob. No. P-028
Issue - 2

Node	Stress (psi) Primary	Secondary	Total	Pipe Break Stress Limit (psi) $0.8\ (S_A + 1.2S_h)$
675	10,325	2,511	12,836	32,400
720	10,658	5,742	16,400	32,400
775	9,992	9,295	19,287	32,400
820	10,239	5,684	15,923	32,400
575	9,941	7,507	17,448	32,400
620	10,007	6,673	16,680	32,400
875	10,415	3,109	13,524	32,400
920	10,028	6,765	16,793	32,400

NOTE: This problem meets No Break Zone Criteria

* - Indicates Terminal End

TABLE 3.6-3 (Sheet 13)

SYSTEM - CVCS - LETDOWN TO REHEAT HEAT EXCHANGER Prob. No. P-29B1
Pipebreak Isometric No.: Figure 3.6-1(BG11) Issue - 5
Sheet 23

Node	Stress (psi) Primary	Secondary	Total	Pipe Break Stress Limit (psi) $0.8\ (S_A + 1.2S_h)$
815*	4,568	4,363	8,931	37,712
840M Bend	6,486	19,775	26,261	37,712
860M Bend	7,607	14,689	22,296	37,712
980M Bend	6,722	11,961	18,683	37,712
878*	4,607	1,121	5,728	37,712
840B Bend	6,402	18,665	25,067	37,712
860B Bend	7,478	14,535	22,013	37,712

* - Indicates Terminal End

TABLE 3.6-3 (Sheet 14)

SYSTEM - CVCS LETDOWN TO REHEAT HEAT EXCHGR-AUX BLDG

Prob. No. P-29B2
Issue - 4

Pipebreak Isometric No.: Figure 3.6-1(BG11) Sheet 23

Node	Stress (psi) Primary	Secondary	Total	Pipe Break Stress Limit (psi) $0.8\ (S_A + 1.2S_h)$
716*	3,232	739	3,971	37,710
774B Bend	8,047	16,567	24,614	37,710
774M Bend	8,568	16,075	24,643	37,710
774E Bend	9,078	13,917	22,995	37,710
778E Bend	8,635	13,483	22,118	37,710
778M Bend	8,377	13,614	21,991	37,710
804M Bend	4,296	9,459	13,755	37,710
818*	4,269	1,444	5,713	37,710
752M Bend	5,935	14,275	20,210	37,710

* - Indicates Terminal End

TABLE 3.6-3 (Sheet 15)
Historical Information

SYSTEM - CVCS LETDOWN FLOW - AUX BLDG
Pipebreak Isometric No.: Figure 3.6-1(BG11) Sheet 23
(BG03) Sheet 20
(BG22) Sheet 25

Prob. No. P-29B3
Issue - 6

Node	Stress (psi) Primary	Secondary	Total	Pipe Break Stress Limit (psi) $0.8\ (S_A + 1.2S_h)$
450*	4,860	2,692	7,553	37,685
415M Bend	4,961	8,844	13,805	37,685
395	11,182	6,518	17,700	37,685
390	13,332	16,192	29,524	37,685
385*	15,129	13,726	28,855	37,685
705E Bend	5,497	19,064	24,501	37,685
507	11,814	7,909	19,723	37,685
515	12,289	11,476	23,764	37,685
485	12,871	13,855	26,727	37,685
415	4,961	8,844	13,805	37,685

* - Indicates Terminal End

TABLE 3.6-3 (Sheet 15A)

SYSTEM – CVCS LETDOWN TO FLOW – AUX BLDG
Pipebreak Isometric No: Figure 3.6-1 (BG11) Sheet 23
(BG03) Sheet 20
(BG22) Sheet 25

Prob. No P-029B3
Altran Calc. No. 02101-C-003, Rev. 0

Node	Stress (psi)			Pipe Break Stress Limit (psi) $0.8\ (S_A + 1.2\ S_h)$
	Primary (EQN 9)	Secondary (EQN 10)	Total (EQN 9 + EQN 10)	
450*	5,077	4,822	9,899	37,685
415 M Bend	4,084	12,960	17,043	37,685
395 **	7,647	8,743	16,390	37,685
390 **	13,284	19,176	32,460	37,685
385*	12,344	12,329	24,673	37,685
705 E Bend **	5,301	19,103	24,404	37,685
507 **	7,471	7,423	14,894	37,685
515 **	6,780	11,856	18,637	37,685
485	8,902	24,322	33,224	37,685
415	4,084	12,960	17,043	37,685

* - Indicates Terminal End
** - Indicates that intermediate Break is deleted (per MEB 3-1, Rev. 2)

TABLE 3.6-3 (Sheet 16)
Historical Information

SYSTEM - CVCS LETDOWN TO REHEAT BLDG
Pipebreak Isometric No.: Figure 3.6-1(BG11) Sheet 23
(BG03) Sheet 20
(BG22) Sheet 25

Prob. No. P-29B3
Issue - 5

Node	Stress (psi) Primary	Secondary	Total	Pipe Break Stress Limit (psi) $0.8\ (S_A + 1.2S_h)$
818*	7,489	5,231	12,720	37,685
834M Bend	4,085	24,439	28,523	37,685
838B Bend	4,027	24,530	28,557	37,685
815*	6,347	2,843	9,190	37,685
790M Bend	4,089	21,269	25,357	37,685
720B	5,567	17,335	22,902	37,685
868	6,653	13,257	19,910	37,685

* - Indicates Terminal End

TABLE 3.6-3 (Sheet 16A)

SYSTEM – CVCS LETDOWN TO REHEAT BLDG
Pipebreak Isometric No: Figure 3.6-1 (BG11) Sheet 23
(BG03) Sheet 20
(BG22) Sheet 25

Prob. No P-029B3
Altran Calc. No. 02101-C-003, Rev. 0

Node	Stress (psi)			Pipe Break Stress Limit (psi) $0.8\ (S_A + 1.2\ S_h)$
	Primary (EQN 9)	Secondary (EQN 10)	Total (EQN 9 + EQN 10)	
818*	10,021	17,863	27,884	37,685
834 M Bend **	4,672	24,440	29,112	37,685
838 B Bend**	5,038	23,808	28,846	37,685
815*	11,367	10,977	22,344	37,685
790 M Bend	9,196	21,952	31,147	37,685
720 B	7,731	18,862	26,593	37,685
868	6,453	12,341	18,793	37,685

* - Indicates Terminal End

** - Indicates that Intermediate Break is deleted per MEM 3-1, Rev. 2

TABLE 3.6-3 (Sheet 17)

SYSTEM - CHEMICAL AND VOLUME CONTROL
Pipebreak Isometric No.: Figure 3.6-1(BG09) Sheet 21

Prob. No. P-31
Issue - 7

Node	Stress (psi) Primary	Secondary	Total	Pipe Break Stress Limit (psi) $0.8\ (S_A + 1.2S_h)$
780	12,017	3,373	15,390	39,657
785* Bend	7,297	3,256	10,553	39,657
805	8,187	4,923	13,110	39,657
810M Bend	8,024	7,057	15,081	39,657
815	7,414	6,423	13,837	39,657
874M Bend	6,676	7,385	14,061	39,657
875T	8,333	748	9,081	39,657
873M Bend	6,395	5,078	11,473	39,657
903	6,688	906	7,594	39,657
906*	6,825	1,108	7,933	39,657
891*	6,451	2,228	8,679	39,657
995*	6,653	45	6,698	39,657
932*	6,712	69	6,781	39,657

* - Indicates Terminal End

TABLE 3.6-3 (Sheet 18)

SYSTEM - CHEMICAL AND VOLUME CONTROL
Pipebreak Isometric No.: Figure 3.6-1(BG09) Sheet 21

Prob. No. P-33
Issue - 7

Node	Stress (psi) Primary	Secondary	Total	Pipe Break Stress Limit (psi) $0.8\ (S_A + 1.2S_h)$
140*	4,876	9,159	14,035	39,680
130 TNGT	5,265	12,715	17,980	39,680
95 TNGT	10,483	3,872	14,355	39,680
385M Bend	9,739	7,415	17,154	39,680
85T	11,178	5,113	16,291	39,680
465	8,537	3,706	12,243	39,680
425**	12,930	9,416	22,346	39,680
505**	12,091	12,432	24,523	39,680
580**	14,075	11,878	25,953	39,680
25T**	11,131	17,068	28,199	39,680

* - Indicates Terminal End

TABLE 3.6-3 (Sheet 18A)

SYSTEM - CHEMICAL AND VOLUME CONTROL Prob. No. P-033-007-CN005
Pipebreak Isometric No.: Figure 3.6-1(BG09)
Sheet 21

Node	Stress (psi) Primary	Secondary	Total	Pipe Break Stress Limit (psi) $0.8\ (S_A + 1.2S_h)$
140*	3,235	8,078	11,312	39,610
130 TNGT	3,393	11,240	14,633	39,610
95 TNGT	4,878	1,618	6,496	39,610
385M Bend	4,953	5,326	10,279	39,610
85T	5,330	3,700	9,030	39,610
465	4,288	2,518	6,806	39,610
425**	6,406	6,578	12,984	39,610
505**	7,779	19,100	26,879	39,610
580**	8,838	19,993	28,830	39,610
25T**	6,381	16,697	23,078	39,610

* - Indicates Terminal End
** - No Break Zone

TABLE 3.6-3 (Sheet 19)

SYSTEM - CHEMICAL AND VOLUME CONTROL
Pipebreak Isometric No.: Figure 3.6-1(BG09) Sheet 21

Prob. No. P-033A
Issue - 6

Node	Stress (psi) Primary	Secondary	Total	Pipe Break Stress Limit (psi) $0.8\ (S_A + 1.2S_h)$
140*	3,249	677	3,926	39,448
164	5,627	25,146	30,773	39,448
165M** Bend	3,446	14,055	17,501	39,448
181	8,686	10,360	19,046	39,448
240	3,703	5,056	8,759	39,448
305*	5,651	594	6,245	39,448
380*	5,714	1,109	6,823	39,448

* - Indicates Terminal End

** - Indicates Intermediate Breaks That Have Been Replaced

TABLE 3.6-3 (Sheet 20)

SYSTEM - CVCS LETDOWN - AUX BLDG
Pipebreak Isometric No.: Figure 3.6-1(BG0) Sheet 20

Prob. No. 0720515-C-003
(P-036 Issue - 6)

Node	Stress (psi) Primary	Secondary	Total	Pipe Break Stress Limit (psi) $0.8\ (S_A + 1.2S_h)$
80*	3772	3099	6872	40376
163**	4661	6374	11035	40376
180M** Bend	6902	1927	8828	40376
190*	3590	1134	4724	40376
255*	9732	2518	12250	40376
225*	5543	1141	6684	40376

* - Indicates Terminal End
** - Indicates Intermediate Break Deleted per MEB 3-1, Rev. 2

TABLE 3.6-3 (Sheet 21)

SYSTEM - TURBINE DRIVEN AUXILIARY FEEDWATER PUMP Prob. No. P-060
Pipebreak Isometric No.: Figure 3.6-1(FC01) Issue - 10
Sheet 49
(AB01) Sheet 1

Node	Stress (psi) Primary	Secondary	Total	Pipe Break Stress Limit (psi) $0.8\ (S_A + 1.2S_h)$
15*	4,140	2,006	6,146	32,400
30M Bend	4,433	2,839	7,272	32,400
35E Bend	5,288	3,945	9,233	32,400
35M Bend	4,968	3,732	8,700	32,400
48T	7,820	10,955	18,775	32,400
50*	8,759	15,837	24,596	32,400
215T**	4,374	4,294	8,668	32,400
260**	6,260	8,444	14,704	32,400
275**	6,295	12,807	17,102	32,400
285**	5,861	16,742	22,603	32,400
410** Bend	4,265	9,537	14,162	32,400
410M** Bend	4,208	8,496	13,704	32,400

* - Indicates Terminal End
** - Meets No Break Zone Criteria

TABLE 3.6-3 (Sheet 22)
Historical Information

SYSTEM - CHEMICAL AND VOLUME CONTROL SYSTEM Prob. No. P-069
Pipebreak Isometric No.: Figure 3.6-1(BG02)
Sheet 19
(BG10) Sheet 22
(BG09) Sheet 21
(EM02) Sheet 37

Node	Stress (psi) Primary	Secondary	Total	Pipe Break Stress Limit (psi) $0.8\ (S_A + 1.2S_h)$
170*	3,824	16,258	20,082	39,610
93 TNGT	4,806	273	5,079	39,610
140*	5,252	2,086	7,338	39,610
955 E	5,283	5,649	10,932	39,610
900	5,606	2,438	7,932	39,610
870* TNGT	4,596	4,181	8,777	39,610
650*	4,746	10	4,756	39,610
310*	4,928	362	5,290	39,610
266	5,445	14,584	20,029	39,610
270 M Bend	4,679	14,656	19,335	39,610
730 TNGT	13,020	5,658	18,678	39,610
A75 TNGT	13,736	3,119	16,855	39,610
745 B Bend	4,927	1,325	6,252	39,610
155 M	4,025	9,259	13,284	39,610
50	5,912	8,091	14,003	39,610
970*	5,361	11,601	16,962	39,610

* - Indicates Terminal End

TABLE 3.6-3 (Sheet 22A)

SYSTEM - CHEMICAL AND VOLUME CONTROL SYSTEM Prob. No. P-069-005-CN001
Pipebreak Isometric No.: Figure 3.6-1
(BG02) Sheet 19
(BG10) Sheet 22
(BG09) Sheet 21
(EM02) Sheet 37

Node	Stress (psi)			Pipe Break Stress Limit (psi) $0.8\ (S_A + 1.2S_h)$
	Primary (EQN 9)	Secondary (EQN 10)	Total (EQN 9 + EQN 10)	
170*	6,364	26,619	32,983	39,610
93 TNGT**	8,372	550	8,922	39,610
140*	8,844	3,174	12,019	39,610
650*	4,751	20	4,771	39,610
310*	6,028	730	6,758	39,610
266**	5,767	12,516	18,283	39,610
270 M Bend**	4,956	12,241	17,197	39,610
730 TNGT**	19,235	7,270	26,504	39,610
A75**	5,141	590	5,730	39,610
745**	6,269	1,584	7,852	39,610
155 M**	4,978	11,573	16,551	39,610
50**	7,152	7,681	14,833	39,610
970*	5,312	182	5,494	39,610

* - Indicates Terminal End
** - Indicates that Intermediate Break is deleted (per MEB 3-1, R/2)

TABLE 3.6-3 (Sheet 23)
(Historical Information)

SYSTEM - CHEMICAL VOLUME CONTROL SYSTEM Prob. No. P-069
Pipebreak Isometric No.: Figure 3.6-1(BG02)
Sheet 19
(BG10) Sheet 22
(BG09) Sheet 21
(EM02) Sheet 37

Node	Stress (psi) Primary	Secondary	Total	Pipe Break Stress Limit (psi) $0.8\ (S_A + 1.2S_h)$
95F TNGT	13,338	22,072	33,410	39,610
95C	16,645	17,209	35,854	39,610
885M	5,173	3,685	8,858	39,610
620*	5,310	541	5,851	39,610
625 TNGT	10,642	5,560	16,202	39,610
604 E	5,119	14,293	19,412	39,610
601 TNGT	5,615	17,256	22,871	39,610
641	12,488	2,385	14,873	39,610
626 B Bend	10,120	5,459	15,579	39,610
574 M	11,868	1,861	13,729	39,610
573* TNGT	8,461	1,409	9,870	39,610
545 TNGT	10,951	10,004	20,955	39,610
62A*	7,741	1,667	9,408	39,610
75	9,631	7,767	17,398	39,610
91	14,254	7,365	21,619	39,610

* - Indicates Terminal End

TABLE 3.6-3 (Sheet 23A)

SYSTEM - CHEMICAL VOLUME CONTROL SYSTEM Prob. No. P-069-005-CN001
Pipebreak Isometric No.: Figure 3.6-1
(BG02) Sheet 19
(BG10) Sheet 22
(BG09) Sheet 21
(EM02) Sheet 37

Node	Stress (psi)			Pipe Break Stress Limit (psi) $0.8\ (S_A + 1.2S_h)$
	Primary (EQN 9)	Secondary (EQN 10)	Total (EQN 9 + EQN 10)	
574**	8,282	1,200	9,482	39,610,
573* TNGT	6,509	934	7,443	39,610,
545**	9,414	14,221	23,635	39,610,
75**	7,470	9,504	16,974	39,610,
91**	16,898	11,793	28,691	39,610,
575**	9,102	502	9,603	39,610,

* - Indicates Terminal end
** - Indicates that Intermediate Break is deleted (per MEB 3-1, R/2)

TABLE 3.6-3 (Sheet 24)
Historical Information

SYSTEM - CHEMICAL AND VOLUME CONTROL SYSTEM Prob. No. P-069
Pipebreak Isometric No.: Figure 3.6-1
(BG02) Sheet 19
(BG10) Sheet 22
(BG09) Sheet 21
(EM02) Sheet 37

Node	Stress (psi)			Pipe Break Stress Limit (psi)
	Primary	Secondary	Total	$0.8\ (S_A + 1.2S_h)$
A92	8,117	11,489	19,609	39,610
425B	4,506	11,901	16,407	39,610
C92B*	4,924	1,952	6,876	39,610
D92* TNGT	13,774	6,720	20,494	39,610
575	13,044	1,384	14,428	39,616

* - Indicates Terminal End

TABLE 3.6-3 (Sheet 24A)

SYSTEM – CHEMICAL AND VOLUME CONTROL SYSTEM
Pipebreak Isometric No: Figure 3.6-1 (BG02) Sheet 19
(BG10) Sheet 22
(BG09) Sheet 21
(EM02) Sheet 37

Prob. No P-069B
Altran calc. No. 02101-C-004, Rev. 0

Node	Stress (psi)			Pipe Break Stress Limit (psi) $0.8\ (S_A + 1.2\ S_h)$
	Primary (EQN 9)	Secondary (EQN 10)	Total (EQN 9 + EQN 10)	
970*	6950	26093	33043	39,610
955 E	4797	3997	8794	39,610
900	5307	1992	7299	39,610
870 TNGT*	6203	5160	11362	39,610
95F TNGT **	9678	18198	27876	39,610
95C	14274	14910	29184	39,610
885 M **	4868	2597	7465	39,610
620*	6681	668	7350	39,610
625 TNGT **	4756	962	5718	39,610
603 E	4684	9386	14069	39,610
601 TNGT **	5105	11939	17044	39,610
641	6074	2071	8145	39,610
626	7077	5369	12447	39,610
62A*	7233	3407	10641	39,610
A92 **	5602	1700	7302	39,610
425	3002	12832	15834	39,610
C92 B	7353	1163	8516	39,610
D92* TNGT	6924	1031	7954	39,610

* - Indicates Terminal End
** - Indicates that Intermediate Break is deleted (per MEB 3-1, Rev. 2)

TABLE 3.6-3 (Sheet 25)

SYSTEM - CVCS MINIMUM CHGNG FLOW - AUX BLDG Prob. No. BG-5-007
Pipebreak Isometric No.: Figure 3.6-1 Issue - 0
(BG01) Sheet 18
(BG02) Sheet 19

Node	Stress (psi) Primary	Secondary	Total	Pipe Break Stress Limit (psi) $0.8\ (S_A + 1.2\ S_h)$
22*	9,941	1863	11,804	39,448
265	8,460	3,065	11,525	39,448
16E	5,432	2,617	8,049	39,448
810*	4,846	2,313	7,159	39,448
800*	5,742	2,993	8,735	39,448
A50*	9,685	628	10,313	39,448
170*	12,575	5,409	17,984	39,448
185M Bend	5,485	4,656	10,141	39,448
265	7,448	1,941	9,389	39,448
230	8,454	5,333	13,787	39,448
18	7,348	13,494	21,177	39,448

* - Indicates Terminal End

TABLE 3.6-3 (Sheet 25A)

SYSTEM - CVCS MINIMUM CHGNG FLOW - AUX BLDG
Pipebreak Isometric No.: Figure 3.6-1
BG01 Sheet 18
BG02 Sheet 19

Prob. No.
BG-S-007-001-CN001

Node Point	Stress (psi) Primary	Secondary	Total	Pipe Break Stress Limit $0.8\ (S_A + 1.2S_h)$ (psi)
22*	6707	2029	8736	39448
265	5541	3049	8591	39448
16E	5136	2607	7743	39448
810B	5003	2580	7583	39448
800*	5384	3143	8527	39448
A50*	6975	6756	13731	39448
170*	10449	3121	13570	39448
185M	4622	4351	8973	39448
265	5783	1992	7776	39448
230	7309	4780	12089	39448
18	5859	13054	18913	39448

* - Indicated Terminal end

NOTE: All intermediate breaks are deleted per MEB 3-1, Rev. 2 criteria.

TABLE 3.6-3 (Sheet 26)

SYSTEM - CVCS MINIMUM CHGNG FLOW - AUX BLDG Prob. No. P-73B
Pipebreak Isometric No.: Figure 3.6-1(BG01) Issue - 7
Sheet 18
(BG09) Sheet 21

Node	Stress (psi) Primary	Secondary	Total	Pipe Break Stress Limit (psi) $0.8\ (S_A + 1.2S_h)$
22* TNGT	9,762	506	10,268	39,564
27 TNGT	7,186	654	7,840	39,564
28 TNGT	8,006	5,505	13,511	39,564
48	6,423	6,406	12,829	39,564
74A**	10,028	2,180	12,208	39,564
86** M Bend	9,314	5,494	14,808	39,564
193**	15,745	6,730	22,475	39,564
995*	5,079	31	5,110	39,564
834	8,204	7,578	15,782	39,564
846 TNGT	9,650	5,852	15,502	39,564
68M	4,801	2,329	7,130	39,564
56M	4,410	6,788	11,198	39,564
821	12,261	6,779	19,040	39,564

* - Indicates Terminal End

** - No Break Zone

TABLE 3.6-3 (Sheet 27)

SYSTEM - CHEMICAL AND VOLUME CONTROL SYSTEM Prob. No. P-119
Pipebreak Isometric No.: Figure 3.6-1(BG22) Issue - 6
Sheet 25

Node	Stress (psi) Primary	Secondary	Total	Pipe Break Stress Limit (psi) $0.8\ (S_A + 1.2S_h)$
45BB	5,349	13,958	19,307	37,244
47M	5,017	19,116	24,133	37,244
49	18,238	15,476	34,395	37,244
60T	15,515	7,989	23,504	37,244
145M	9,021	19,464	28,485	37,244
160M	10,232	21,632	31,864	37,244
220M	4,066	18,211	22,277	37,244
245E	4,087	19,998	24,085	37,244
270*	3,980	3,553	7,533	37,244

* - Indicates Terminal End

TABLE 3.6-3 (Sheet 28)

SYSTEM - CHEMICAL AND VOLUME CONTROL
Pipebreak Isometric No.: Figure 3.6-1(BG21) Sheet 24
(BG24) Sheet 27

Prob. No. P-139
Issue - 5

Node	Stress (psi) Primary	Secondary	Total	Pipe Break Stress Limit (psi) $0.8\ (S_A + 1.2S_h)$
20*	13,641	9,820	23,461	37,240
65 TNGT	8,565	8,504	17,069	37,240
90 TNGT	8,540	11,166	19,706	37,240
100*	10,452	9,764	20,216	37,240
240M Bend	7,136	14,007	21,143	37,240
297*	7,146	3,900	11,046	37,240
215 TNGT	10,092	14,558	24,650	37,240
225M Bend	6,782	5,103	11,885	37,240
250B Bend	6,211	13,513	19,724	37,240

* - Indicates Terminal End

TABLE 3.6-3 (Sheet 29)

SYSTEM - CHEMICAL AND VOLUME CONTROL
Pipebreak Isometric No.: Figure 3.6-1(BG21) Sheet 24
(BG24) Sheet 27

Prob. No. P-139
Issue - 5

Node	Stress (psi) Primary	Secondary	Total	Pipe Break Stress Limit (psi) $0.8\ (S_A + 1.2S_h)$
280M Bend	7,992	6,451	14,443	37,240
444*	8,019	18,804	26,823	37,240
440 Bend	6,562	18,647	25,209	37,240
405 Bend	11,567	11,023	22,590	37,240
400T	15,646	15,351	30,997	37,240
70 TNGT	7,727	9,066	16,793	37,240
285M Bend	8,932	9,331	18,263	37,240

* - Indicates Terminal End

TABLE 3.6-3 (Sheet 30)

SYSTEM - CVCS AUXILIARY SPRAY
Pipebreak Isometric No.: Figure 3.6-1(BG24) Sheet 27

Prob. No. P-140
Issue - 5

Node	Stress (psi) Primary	Secondary	Total	Pipe Break Stress Limit (psi) $0.8\ (S_A + 1.2S_h)$
444T* TNGT	7,205	8,198	15,403	37,240
450M Bend	5,176	11,886	17,062	37,240
670 Bend	5,129	14,730	19,859	37,240
735M Bend	6,303	15,643	21,946	37,240
770E	4,961	2,141	7,102	37,240
771*	8,247	12,883	21,130	37,240
645	9,178	5,768	14,946	37,240
716A	7,972	20,565	28,587	37,240
620A	6,850	19,919	26,779	37,240

* - Indicates Terminal End

TABLE 3.6-3 (Sheet 31)

SYSTEM - CHEMICAL AND VOLUME CONTROL
Pipebreak Isometric No.: Figure 3.6-1(BG22) Sheet 25

Prob. No. P-145
Issue - 5

Node	Stress (psi) Primary	Secondary	Total	Pipe Break Stress Limit (psi) $0.8\ (S_A + 1.2S_h)$
5* TNGT	9,781	333	10,114	37,200
77	7,599	1,377	8,976	37,200
25	13,788	19,220	33,008	37,200
40	17,437	20,592	38,029	37,200
45B Bend	7,419	5,020	12,439	37,200
105*	6,218	885	7,103	37,200
90	7,484	1,246	8,730	37,200
10	7,334	1,087	8,421	37,200

* - Indicates Terminal End

TABLE 3.6-3 (Sheet 32)
Historical Information

SYSTEM - CHEMICAL AND VOLUME CONTROL
Pipebreak Isometric No.: Figure 3.6-1(BG22) Sheet 25

Prob. No. P-146
Issue - 5

Node	Stress (psi) Primary	Secondary	Total	Pipe Break Stress Limit (psi) $0.8\ (S_A + 1.2S_h)$
5*	5,469	5,201	10,670	37,648
30T	7,194	23,858	31,052	37,648
35T	8,722	13,492	22,214	37,648
40T	8,741	10,360	19,101	37,648
44T	10,526	12,356	22,882	37,648
48	11,182	8,537	19,719	37,648
80T	12,578	6,878	19,456	37,648
102T	12,189	22,635	34,824	37,648
106	12,288	10,262	22,550	37,648
130T	15,138	6,132	21,270	37,648
202T	11,671	8,697	20,368	37,648
401*	15,986	22,849	38,835	37,648
315*	7,077	630	7,707	37,648

* - Indicates Terminal End

TABLE 3.6-3 (Sheet 32A)

SYSTEM - CHEMICAL AND VOLUME CONTROL Prob. No. CN-SMT-00-67
Pipebreak Isometric No.: Figure 3.6-1(BG22)
Sheet 25

Node	Pipe Break Stress (psi)	Stress Limit (psi)		
	Primary	Secondary	Total	0.8 (S_A + 1.8S_h)
5*	++	++	17703	44900
30T**	-	-	35353	44900
35T**	-	-	38168	44900
40T**	-	-	30511	44900
44T**	-	-	13967	44900
48**	-	-	27826	44900
80T**	-	-	19441	44900
102T**	-	-	19867	44900
106**	-	-	28425	44900
130T**	-	-	17219	44900
202T**	-	-	12706	44900
401*	++	++	++	44900
315*	++	++	++	44900

* Indicates Terminal End
** Indicates, that Intermediate Break is deleted (MEB 3-1, R/2)
++ Break as required by MEB 3-1.

TABLE 3.6-3 (Sheet 33)

SYSTEM - CVCS CHGNG AND EXCESS LETDOWN Prob. No. P-147
Pipebreak Isometric No.: Figure 3.6-1(BG23) Issue - 4
Sheet 26

Node	Stress (psi) Primary	Secondary	Total	Pipe Break Stress Limit (psi) $0.8\ (S_A + 1.2S_h)$
5*	5,987	754	6,741	40,240
150M Bend	7,001	4,015	11,016	40,240
150E Bend	6,379	4,240	10,619	40,240
157	8,399	4,473	12,872	40,240
160E Bend	6,617	4,062	10,679	40,240
250M** Bend	5,993	2,700	8,693	40,240
300**	10,369	3,212	13,581	40,240

* - Indicates Terminal End

TABLE 3.6-3 (Sheet 34)

SYSTEM - STEAM GENERATOR BLOWDOWN
Pipebreak Isometric No.: Figure 3.6-1(BM21) Sheet 29

Prob. No. P-196(1)
Issue - 2

Prob. No. P-196(2)
Issue - 1

Node	Stress (psi) Primary	Secondary	Total	Pipe Break Stress Limit (psi) $0.8\ (S_A + 1.2S_h)$
5 TNGT	6,814	5,314	12,128	32,400
35	5,529	330	5,859	32,400
50	5,468	206	5,674	32,400

NOTE: This problem meets no Break Zone Criteria

* - Indicates Terminal End

TABLE 3.6-3 (Sheet 35)

SYSTEM - STEAM GENERATOR BLOWDOWN
Pipebreak Isometric No.: Figure 3.6-1(BM01) Sheet 29

Prob. No. P-197(1)
Issue - 2

Prob. No. P-197(2)
Issue - 1

Node	Stress (psi) Primary	Secondary	Total	Pipe Break Stress Limit (psi) $0.8\ (S_A + 1.2S_h)$
5T	6,020	8,200	14,220	32,400
15	5,799	7,290	13,089	32,400
20	6,796	3,440	10,236	32,400
35	5,394	472	5,866	32,400
50	5,323	306	5,629	32,400

NOTE: This problem meets no Break Zone Criteria

* - Indicates Terminal End

TABLE 3.6-3 (Sheet 36)
Historical Information

SYSTEM - STEAM GENERATOR BLOWDOWN
Pipebreak Isometric No.: Figure 3.6-1(BM01) Sheet 29
(BM20) Sheet 35
(BM05) Sheet 31

Prob. No. P-219
Issue - 7

Node	Stress (psi) Primary	Secondary	Total	Pipe Break Stress Limit (psi) $0.8\ (S_A + 1.2S_h)$
5	4,755	16,362	21,117	32,400
20B	3,085	6,435	9,520	32,400
95	6,559	412	6,971	32,400
178*	17,893	20,834	38,727	32,400
A20	4,491	33,600	38,091	32,400
A30	3,863	16,605	20,468	32,400
B38	8,283	9,143	17,426	32,400
B60	8,162	11,297	19,459	32,400
A80	4,765	1,877	6,642	32,400
A63	7,333	1,011	8,344	32,400
192T	6,677	28,319	34,996	32,400
240*	3,614	383	3,997	32,400
203	2,783	4,180	6,963	32,400
260	4,818	1,328	6,146	32,400
255	5,480	1,233	6,713	32,400
E80	7,237	3,362	10,599	32,400

* - Indicates Terminal End

TABLE 3.6-3 (Sheet 36A)

SYSTEM - STEAM GENERATOR BLOWDOWN Prob. No. CN-SMT-01-9
Pipebreak Isometric No.: Figure 3.6-1(BM01)
Sheet 29
(BM20) Sheet 35
(BM05) Sheet 31

Node	Stress (psi) Primary	Secondary	Total	Pipe Break Stress Limit (psi) $0.8\ (S_A + 1.8S_h)$
5	-	-	20533	39600
20B	-	-	12029	39600
95	-	-	11085	39600
178*	++	++	30571	39600
A20**	-	-	34571	39600
A30	-	-	24366	39600
B38	-	-	21529	39600
B60	-	-	24642	39600
A80	-	-	7968	39600
A63	-	-	9793	39600
192T**	-	-	37778	39600
240*	++	++	3608	39600
203	-	-	6658	39600
260	-	-	4934	39600
255	-	-	5486	39600
E80	-	-	7331	39600

* - Indicates Terminal End
** - Indicates, that Intermediate Break is deleted. (MEB 3-1, Rev. 2)
++ - Break as required by MEB 3-1.

TABLE 3.6-3 (Sheet 37)
Historical Information

SYSTEM - STEAM GENERATOR BLOWDOWN
Pipebreak Isometric No.: Figure 3.6-1(BM01) Sheet 29
(BM20) Sheet 25
(BM05) Sheet 31

Prob. No. BM-S-002 (P-219)
Issue - 0

Node	Stress (psi) Primary	Secondary	Total	Pipe Break Stress Limit (psi) $0.8\ (S_A + 1.2S_h)$
F20	4,414	9,291	13,705	32,400
F25*	5,868	19,607	25,475	32,400
C40*	12,973	49,035	62,008	32,400
C35	8,364	26,846	35,210	32,400

* - Indicates Terminal End

TABLE 3.6-3 (Sheet 37A)

SYSTEM - STEAM GENERATOR BLOWDOWN Prob. No. CN-SMT-01-9
Pipebreak Isometric No.: Figure 3.6-1(BM01)
Sheet 29
(BM20) Sheet 35
(BM05) Sheet 31

Node	Stress (psi) Primary	Secondary	Total	Pipe Break Stress Limit (psi) $0.8\ (S_A + 1.8S_h)$
F20	-	-	10133	39600
F25*	++	++	20181	39600
C40*	++	++	46789	39600
C35	-	-	24750	39600

* - Indicates Terminal End
++ - Break as required by MEB 3-1.

TABLE 3.6-3 (Sheet 38)
Historical Information

SYSTEM - STEAM GENERATOR BLOWDOWN
Pipebreak Isometric No.: Figure 3.6-1(BM01) Sheet 29
(BM03) Sheet 31
(BM17) Sheet 32

Prob. No. BM-S-003 (P-220)
Issue - 0

Node	Stress (psi) Primary	Secondary	Total	Pipe Break Stress Limit (psi) $0.8\ (S_A + 1.2S_h)$
5	6,796	2,597	9,393	32,400
85	9,521	7,261	16,782	32,400
145	3,372	2,208	5,580	32,400
155	9,035	29,447	38,482	32,400
165*	11,311	31,678	42,989	32,400
45B	5,662	29,264	34,926	32,400
195*	6,471	1,921	8,392	32,400
210	6,931	1,104	8,035	32,400
220	15,047	1,948	16,995	32,400
345*	5,211	14,312	19,523	32,400
349	8,781	31,728	40,509	32,400
350	5,613	14,057	19,670	32,400
352	4,334	13,963	18,297	32,400
365	5,026	16,317	21,343	32,400
400	16,645	9,399	26,044	32,400
435	13,446	37,686	51,132	32,400
467	10,115	23,717	33,832	32,400
470*	10,385	33,637	44,022	32,400

* - Indicates Terminal End

TABLE 3.6-3 (Sheet 38A)

SYSTEM - STEAM GENERATOR BLOWDOWN Prob. No. CN-SMT-01-10
Pipebreak Isometric No.: Figure 3.6-1(BM01)
Sheet 29
(BM03) Sheet 31
(BM17) Sheet 32

Node	Stress (psi) Primary	Secondary	Total	Pipe Break Stress Limit (psi) $0.8\ (S_A + 1.8S_h)$
5	-	-	6844	39600
85	-	-	38607	39600
145	-	-	5303	39600
155***	-	-	43342	39600
165*	++	++	37103	39600
45B***	-	-	48992	39600
195*	++	++	4678	39600
210	-	-	3329	39600
220*	++	++	13824	39600
345*	++	++	16760	39600
349***	-	-	46918	39600
350	-	-	22519	39600
352	-	-	21063	39600
365	-	-	18843	39600
400	-	-	15186	39600
435**	-	-	11778	39600
467	-	-	2411	39600
470*	++	++	32967	39600

* - Indicates Terminal End
++ - Break as required by MEB 3-1.
** - Indicates, that Intermediate Break is deleted. (MEB 3-1, Rev. 2)
*** - Indicates, that Intermediate Break is required

TABLE 3.6-3 (Sheet 39)
Historical Information

SYSTEM - STEAM GENERATOR BLOWDOWN
Pipebreak Isometric No.: Figure 3.6-1(BM02) Sheet 30
(BM18) Sheet 33
(BM03) Sheet 18

Prob. No. P-221
Issue - 7

Node	Stress (psi) Primary	Secondary	Total	Pipe Break Stress Limit (psi) $0.8\ (S_A + 1.2S_h)$
10	4,776	4,836	9,612	32,400
20	8,810	6,180	14,990	32,400
25	8,026	3,388	11,414	32,400
105	4,909	2,319	7,228	32,400
135	13,731	1,136	14,867	32,400
140	11,955	1,434	13,389	32,400
165	10,705	3,063	13,768	32,400
175	11,891	2,239	14,130	32,400
225	4,591	2,539	7,130	32,400
240	4,923	4,748	9,671	32,400
255	4,019	5,380	9,399	32,400
100*	6,600	5,503	12,103	32,400
300	12,530	4,672	17,202	32,400
306	4,956	5,570	10,526	32,400
313	5,306	5,269	10,575	32,400
325	4,364	5,350	9,714	32,400
385	5,625	6,652	12,277	32,400
350	4,964	5,013	9,977	32,400
390*	12,459	22,786	35,245	32,400

* - Indicates Terminal End

TABLE 3.6-3 (Sheet 39A)

SYSTEM - STEAM GENERATOR BLOWDOWN Prob. No. CN-SMT-00-50
Pipebreak Isometric No.: Figure 3.6-1(BM02)
Sheet 30
(BM18) Sheet 33

Node	Stress (psi) Primary	Secondary	Total	Pipe Break Stress Limit (psi) $0.8\ (S_A + 1.8S_h)$
10**	-	-	7120	39600
20**	-	-	8959	39600
25**	-	-	8627	39600
105**	-	-	13275	39600
135**	-	-	6006	39600
140A**	-	-	7857	39600
165**	-	-	7988	39600
175**	-	-	36504	39600
225**	-	-	8276	39600
240**	-	-	10138	39600
255**	-	-	8546	39600
100*	++	++	20756	39600
300**	-	-	38600	39600
325**	-	-	17725	39600
385**	-	-	11946	39600
350**	-	-	10287	39600
390*	++	++	35779	39600

* Indicates Terminal End
** Indicates, that Intermediate Break is deleted.
*** Break as required by MEB 3-1.

TABLE 3.6-3 (Sheet 40)
Historical Information

SYSTEM - STEAM GENERATOR BLOWDOWN
Pipebreak Isometric No.: Figure 3.6-1(BM02) Sheet 20
(BM18) Sheet 33
(BM03) Sheet 21

Prob. No. CN-SMT-00-50

Node	Stress (psi) Primary	Secondary	Total	Pipe Break Stress Limit (psi) $0.8\ (S_A + 1.2S_h)$
360	3,498	3,340	6,838	32,400
375	6,836	4,890	11,726	32,400
380	6,365	7,164	13,529	32,400
330	12,099	6,056	18,155	32,400
345	11,927	1,446	13,373	32,400
400	11,055	9,507	20,562	32,400
410	6,577	4,858	11,435	32,400
423	7,503	4,089	11,592	32,400
455	6,307	12,139	18,446	32,400
475	4,936	12,702	17,638	32,400
500	16,024	2,383	18,407	32,400
501	16,421	5,300	21,721	32,400
555*	15,386	30,025	45,411	32,400
520	10,931	2,136	13,067	32,400
523	6,026	1,848	7,874	32,400
545	5,313	13,634	18,947	32,400
550	9,409	20,609	30,018	32,400
440	8,542	11,117	19,659	32,400
462	6,233	29,455	35,688	32,400

* - Indicates Terminal End

TABLE 3.6-3 (Sheet 40A)

SYSTEM - STEAM GENERATOR BLOWDOWN Prob. CN-SMT-00-50
Pipebreak Isometric No.: Figure 3.6-1(BM02)
Sheet 30
(BM18) Sheet 33

Node	Stress (psi) Primary	Secondary	Total	Pipe Break Stress Limit (psi) $0.8\ (S_A + 1.8S_h)$
360**	-	-	6163	39600
375**	-	-	10762	39600
380**	-	-	13875	39600
330**	-	-	15705	39600
345**	-	-	10590	39600
400**	-	-	20916	39600
410**	-	-	11096	39600
423**	-	-	11214	39600
455**	-	-	15016	39600
475A**	-	-	10812	39600
500**	-	-	17879	39600
501A**	-	-	25294	39600
555*	++	++	36339	39600
520**	-	-	13725	39600
523**	-	-	14630	39600
545**	-	-	11021	39600
550**	-	-	17681	39600
440**	-	-	10177	39600
462**	-	-	19837	39600
550A**	-	-	23369	39600

* Indicates Terminal End
** Indicates, that Intermediate Break is deleted (MEB 3-1, R/2)
++ Break as required by MEB 3-1.

TABLE 3.6-3 (Sheet 41)
Historical Information

SYSTEM - STEAM GENERATOR BLOWDOWN
Pipebreak Isometric No.: Figure 3.6-1(BM02) Sheet 20
(BM18) Sheet 33
(BM03) Sheet 21

Prob. No. P-221
Issue - 7

Node	Stress (psi) Primary	Secondary	Total	Pipe Break Stress Limit (psi) $0.8\ (S_A + 1.2S_h)$
601	17,610	7,171	24,781	32,400
602	5,785	5,818	11,603	32,400
615	4,411	3,523	7,934	32,400
640*	8,409	1,733	10,142	32,400
605	6,239	5,663	11,902	32,400
637	7,774	1,167	8,941	32,400

* - Indicates Terminal End

TABLE 3.6-3 (Sheet 41A)

SYSTEM - STEAM GENERATOR BLOWDOWN Prob. CN-SMT-00-50
Pipebreak Isometric No.: Figure 3.6-1(BM02)
Sheet 30
(BM03) Sheet 31

Node	Stress (psi) Primary	Secondary	Total	Pipe Break Stress Limit (psi) $0.8\ (S_A + 1.8S_h)$
602**	-	-	9435	39600
615**	-	-	5963	39600
640*	++	++	6438	39600
605**	-	-	9377	39600
637**	-	-	6550	39600
615A**	-	-	6648	39600

* Indicates Terminal End
** Indicates, that Intermediate Break is deleted (MEB 3-1, R/2)
++ Break as required by MEB 3-1.

TABLE 3.6-3 (Sheet 42)
Historical Information

SYSTEM - STEAM GENERATOR BLOWDOWN Prob. No. CN-SMT-00-65
Pipebreak Isometric No.: Figure 3.6-1(BM02) Sheet 30
(BM03) Sheet 31
(BM19) Sheet 34

Node	Stress (psi) Primary	Secondary	Total	Pipe Break Stress Limit (psi) $0.8\ (S_A + 1.2S_h)$
F10	12,803	3,033	15,836	32,400
A20T	16,282	20,916	37,198	32,400
305BB	8,638	11,797	20,435	32,400
C25	12,505	1,785	14,290	32,400
610	13,678	2,908	16,586	32,400
D20	14,305	10,435	24,741	32,400
302*	12,579	26,968	39,547	32,400
C77*	10,058	40,831	50,889	32,400
F60*	3,472	32,927	36,399	32,400
590	5,493	2,691	8,134	32,400
556T	17,337	8,672	26,009	32,400
C75M	6,707	26,877	33,584	32,400

* - Indicates Terminal End

TABLE 3.6-3 (Sheet 42A)

SYSTEM - STEAM GENERATOR BLOWDOWN Prob. No. CN-SMT-00-65
Pipebreak Isometric No.: Figure 3.6-1(BM02) Sheet 30
(BM03) Sheet 31

Node	Stress (psi) Primary	Secondary	Total	Pipe Break Stress Limit (psi) $0.8\ (S_A + 1.8S_h)$
F10**	-	-	9612	39600
A20T**	-	-	29753	39600
305BB**	-	-	23513	39600
C25**	-	-	7636	39600
610**	-	-	7718	39600
D20**	-	-	25518	39600
303*	++	++	43441	39600
C77	++	++	32550	39600
F60*	++	++	32516	39600
590**	-	-	7469	39600
556T**	-	-	10855	39600
C75M**	-	-	19833	39600

* Indicates Terminal End
** Indicates, that Intermediate Break is deleted (MEB 3-1, R/2)
++ Break as required by MEB 3-1.

TABLE 3.6-3 (Sheet 43)
Historical Information

SYSTEM - MAIN STEAM ATMOSPHERIC DUMP LINE Prob. No. P-225
Pipebreak Isometric No.: Figure 3.6-1(AB01) Issue - 6
Sheet 1

Node	Stress (psi) Primary	Secondary	Total	Pipe Break Stress Limit (psi) $0.8\ (S_A + 1.2S_h)$
520B Bend	7,816	19,035	26,851	32,400
545T	8,980	5,552	14,532	32,400
555B Bend	10,257	8,012	18,269	32,400
575	4	0	4	32,400
580T	7,945	10,808	18,753	32,400

NOTE: This problem meets no Break Zone Criteria.

* - Indicates Terminal End

TABLE 3.6-3 (Sheet 43A)

SYSTEM – MAIN STEAM ATMOSPHERIC DUMP LINE
Pipebreak Isometric No: Figure 3.6-1 (AB01) Sheet 1

Prob. No P-225
Altran Calc. No. 02101-C-006, Rev. 0

Node	Stress (psi)			Pipe Break Stress Limit (psi) $0.8\ (S_A + 1.2\ S_h)$
	Primary (EQN 9)	Secondary (EQN 10)	Total (EQN 9 + EQN 10)	
520B Bend	8,556	10,317	18,873	32,400
545T	9,390	5,721	15,112	32,400
555B Bend	8,091	5,664	13,755	32,400
575	0	0	0	32,400
580T	6,842	10,754	17,596	32,400

NOTE: This problem meets no Break Zone Criteria

- Indicates Terminal End

TABLE 3.6-3 (Sheet 44)

SYSTEM - CHEMICAL AND VOLUME CONTROL
Pipebreak Isometric No.: Figure 3.6-1(BG21) Sheet 24

Prob. No. P-254A
Issue - 3

Node	Stress (psi) Primary	Secondary	Total	Pipe Break Stress Limit (psi) $0.8\ (S_A + 1.2S_h)$
175*	7,033	3,674	10,707	37,244
170M Bend	7,523	3,240	10,763	37,244
170B Bend	7,214	2,869	10,083	37,244
155	6,784	6,413	13,197	37,244
140	6,907	13,563	20,470	37,244
130M Bend	5,388	21,301	26,689	37,244
105	6,526	9,440	15,966	37,244
95*	7,931	1,664	9,595	37,244

* - Indicates Terminal End

TABLE 3.6-3 (Sheet 45)

SYSTEM - REACTOR COOLANT SYSTEM - REACTOR BLDG

Prob. No. P-276
Issue - 2

Node	Stress (psi) Primary	Secondary	Total	Pipe Break Stress Limit (psi) $0.8\ (S_A + 1.2S_h)$
40*	5,489	1,169	6,658	39,656
85	6,745	12,128	18,873	39,656
125	6,469	22,604	29,073	39,656
70	7,585	8,461	16,046	39,656
100	8,657	6,634	15,291	39,656
50B	7,387	6,998	14,385	39,656
55E	7,389	6,983	14,372	39,656
75E	5,140	8,352	13,492	39,656
80B	5,899	6,720	12,619	39,656

* - Indicates Terminal End

TABLE 3.6-3 (Sheet 46)

SYSTEM - REACTOR COOLANT SYSTEM
Pipebreak Isometric No.: Figure 3.6-1(BB09) Sheet 14

Prob. No. P-277
Issue - 7

Node	Stress (psi) Primary	Secondary	Total	Pipe Break Stress Limit (psi) $0.8\ (S_A + 1.2S_h)$
35*	5,702	239	5,941	39,610
70M** Bend	6,432	5,898	12,330	39,610
70E** Bend	6,343	5,520	11,863	39,610
75	7,694	2,933	10,627	39,610
47E Bend	6,357	772	7,129	39,610
105T**	6,168	826	6,994	39,610
65B	6,467	2,251	8,718	39,610
55	5,786	2,750	8,536	39,610

* - Indicates Terminal End
** - Meets No Break Zone Criteria

TABLE 3.6-3 (Sheet 47)

SYSTEM - REACTOR COOLANT SYSTEM
Pipebreak Isometric No.: Figure 3.6-1(BB11) Sheet 15

Prob. No. P-278
Issue - 6

Node	Stress (psi) Primary	Secondary	Total	Pipe Break Stress Limit (psi) $0.8\ (S_A + 1.2S_h)$
20*	13,745	4,760	18,505	39,610
55M Bend	13,287	2,895	16,182	39,610
55E Bend	13,311	2,817	16,128	39,610
100M Bend	6,518	5,115	11,633	39,610
100B Bend	6,424	4,680	11,104	39,610
165	8,832	1,393	10,225	39,610
50	8,585	2,253	10,838	39,610
95	7,239	938	8,177	39,610
135	6,781	1,050	7,831	39,610
31	12,106	8,039	20,145	39,610

* - Indicates Terminal End

TABLE 3.6-3 (Sheet 48)
(Historical Information)

SYSTEM - ACCUMULATOR SAFETY INJECTION (LOOP 1) Prob. No. 234
Pipebreak Isometric No.: Figure 3.6-1
(EP01) Sheet 40 See SNP-6566
(AB27) Sheet 51

NODE NO.	EQUATION 12 STRESS (PSI)	EQUATION 13 STRESS (PSI)	CUM. USAGE FACTOR	ALLOWABLE STRESS ($2.4S_m$) PSI
15*	++	++	++	++
30**	16,220	40,930	0.40	19,360
115**	49,838	29,247	0.47	46,440
450*	++	++	++	++
455**	39,187+	13,206	0.001	46,440
485**	24,860	41,796	0.30	46,440
495*	++	++	++	++
665*	++	++	++	++
210*	++	++	++	++
955*	++	++	++	++
960**	++	++	++	++
975*	++	++	++	++

*Terminal End Break
**Intermediate Break
++Break as required by MEB 3-1, Rev 0

TABLE 3.6-3 (Sheet 48A)
Revised Stress Analysis Results

SYSTEM - ACCUMULATOR SAFETY INJECTION (LOOP 1) Prob. No. 234
Pipebreak Isometric NO.: Figure 3.6-1 (EP01) Sheet 40 Issue – N/A
Figure 3.6-1 (HB27) Sheet 51 See SAP-96-129

BECHTEL NODE NUMBERS	WESTINGHOUSE NODE NUMBERS	EQUATION 12 STRESS (KSI)	EQUATION 13 STRESS (KSI)	CUM. USAGE FACTOR	ALLOWABLE STRESS (KSI)
15*	3020	++	++	++	++
30**	3050	16.8	43.50	0.24	50.50
115**	3150	59.60	48.10	0.98	58.10
450*	5000	++	++	++	++
455**	5003				
485**	5070	53.6	48.00	0.33	58.10
495*	5100	++	++	++	++
665*	4100	++	++	++	++
210*	3340	++	++	++	++
955*	6500	++	++	++	++
960/970**	6510	++	++	++	++
975*	6520	++	++	++	++

* Terminal End Break

** Intermediate Break

\+ Break can be deleted per Arbitrary Break Elimination of MEB 3-1, Rev 2

++ Break as required by MEB 3-1 Rev. 0

TABLE 3.6-3 (Sheet 49)
(Historical Information)

SYSTEM - ACCUMULATOR SAFETY INJECTION (LOOP 4) Prob. No. 235
Pipebreak Isometric No.: Figure 3.6-1
(EP01) Sheet 40 See SNP-6566
(HB27) Sheet 57

NODE NO.	EQUATION 12 STRESS (PSI)	EQUATION 13 STRESS (PSI)	CUM. USAGE FACTOR	ALLOWABLE STRESS ($2.4S_m$) PSI
15*	++	++	++	++
35**	11,821	40,930	0.40	39,360
65**	40,262	30,865	0.47	46,440
348*	++	++	++	++
860*	++	++	++	++
360**	53,022	41,796	0.30	46,440
365*	16,175	10,800	0.001	46,440
720*	++	++	++	++
300*	++	++	++	++
405*	++	++	++	++
410**	++	++	++	++
425**	++	++	++	++
430*	++	++	++	++

*Terminal End Break
**Intermediate Break
++Break as required by MEB 3-1, Rev. 0

TABLE 3.6-3 (Sheet 49A)
Revised Stress Analysis Results

System - Accumulator Safety Injection (Loop 4) **Prob. No. 235**
Pipebreak Isometric No: Figure 3.6-1(EP01)Sheet 40 **Issue – N/A**
Figure 3.6-1 (HB27) Sheet 51 **See SAP-96-129**

BECHTEL NODE NUMBERS	WESTINGHOUSE NODE NUMBERS	EQUATION 12 STRESS (KSI)	EQUATION 13 STRESS (KSI)	CUM. USAGE FACTOR	ALLOWABLE STRESS (KSI)
15*	3020	++	++	++	++
35**	3080	18.8	40.9	0.24	50.50
65**	3590	42.2	35.0	0.98	58.10
348*	4070	++	++	++	++
860*	3840	++	++	++	++
360**	4320	39.5	58.9	0.33	58.10
365 +	4170				
720*	4200	++	++	++	++
300*	3542	++	++	++	++
405*	5790	++	++	++	++
410/420 **	5800	++	++	++	++
425**	5820	++	++	++	++
430*	5840	++	++	++	++

* **Terminal End Break**

** **Intermediate Break**

++ **Break as Require by MEB 3-1 Rev. 0**

\+ **Break can be eliminate per Arbitrary Intermediate Break elimination (MEB 3 1, Revision 2)**

TABLE 3.6-3 (Sheet 50)
(Historical Information)

SYSTEM - ACCUMULATOR SAFETY INJECTION (LOOP 3) Prob. No. 236
Pipebreak Isometric No.: Figure 3.6-1
(EP02) Sheet 41 See SNP-6566
(HB27) Sheet 51

NODE NO.	EQUATION 12 STRESS (PSI)	EQUATION 13 STRESS (PSI)	CUM. USAGE FACTOR	ALLOWABLE STRESS ($2.4S_m$) PSI
15*	++	++	++	++
35**	12,014	40,930	0.40	39,360
85**	43,197	27,785	0.47	46,440
525*	++	++	++	++
450*	++	++	++	++
535**	9,326	11,690	0.001	46,440
550**	17,241	41,796	0.30	46,440
610*	++	++	++	++
205*	++	++	++	++
955*	++	++	++	++
960**	++	++	++	++
972**	++	++	++	++
975*	++	++	++	++

*Terminal End Break
**Intermediate Break
++Break as required by MEB 3-1, Rev. 0

TABLE 3.6-3 (Sheet 50A)
Revised Stress Analysis Results

SYSTEM: ACCUMULATOR SAFETY INJECTION (LOOP 3) **Prob. No. 236**
Pipebreak Isometric No: Figure 3.6-1(EP02)Sheet 41 **Issue – N/A**
Figure 3.6-1 (HB27) Sheet 51 **See SAP-96-129**

BECHTEL NODE NUMBERS	WESTINGHOUSE NODE NUMBERS	EQUATION 12 STRESS (KSI)	EQUATION 13 STRESS (KSI)	CUM. USAGE FACTOR	ALLOWABLE STRESS (KSI)
15*	3020	++	++	++	++
35**	3050	24.4	41.00	0.24	50.50
85**	3160 / 4000	41.2	30.50	0.98	58.10
525*	5000	++	++	++	++
450*	4050	++	++	++	++
535+	5012				58.10
550 (1)	5040	55.3	59.60	0.33	++
610*	5070	++	++	++	++
205*	3395	++	++	++	++
955*	6500	++	++	++	++
960/970**	6510	++	++	++	++
972**	6525	++	++	++	++
975*	6540	++	++	++	++

* Terminal End Break

** Intermediate Break

\+ Break can be deleted per Arbitrary Break Elimination of MEB 3-1, Rev. 2

++ Break as required by MEB 3-1 Rev. 0

(1) Break reinstated. Usage Factor 7.1 and Stresses are above the allowable.

TABLE 3.6-3 (Sheet 51)
(Historical Information)

SYSTEM - ACCUMULATOR SAFETY INJECTION (LOOP 2)
Pipebreak Isometric No.: Figure 3.6-1 (EPO2) Sheet 41 (HB27) Sheet 51

Prob. No. 237
Issue - N/A
See SNP-6566

NODE NO.	EQUATION 12 STRESS (PSI)	EQUATION 13 STRESS (PSI)	CUM. USAGE FACTOR	ALLOWABLE STRESS ($2.4S_m$) PSI
12*	++	++	++	++
25**	15,142	40,930	0.40	39,408
110**	47,117	29,997	0.47	46,446
485*	++	++	++	++
445*	++	++	++	++
500*	30,524	16,451	0.001	46,440*
508*	47,747	51,850	0.30	46,440
570*	++	++	++	++
220*	++	++	++	++
905*	++	++	++	++
910**	++	++	++	++
925**	++	++	++	++
930*	++	++	++	++

*Terminal End Break
**Intermediate Break
++Break as required by MEB 3-1

TABLE 3.6-3 (Sheet 51A)
Revised Stress Analysis Results

SYSTEM - ACCUMULATOR SAFETY INJECTION (LOOP 2) **Prob. No. 237**
Pipebreak Isometric No: Figure 3.6-1 (EP02) Sheet 41 **Issue - N/A**
Figure 3.6-1 (HB27) Sheet 51 **See SAP-6566**

BECHTEL NODE NUMBERS	WESTINGHOUSE NODE NUMBERS	EQUATION 12 STRESS (KSI)	EQUATION 13 STRESS (KSI)	CUM. USAGE FACTOR	ALLOWABLE STRESS (KSI)
12*	3020	++	++	++	++
25**	3050	14.3	41.00	0.24	50.50
110**	3160	45.2	43.10	0.98	58.10
485*	5000	++	++	++	++
445*	4050	++	++	++	++
500*	5030				
508**	5050	40.9	59.80	0.33	58.10
570*	5060	++	++	++	++
220*	3385	++	++	++	++
905*	6500	++	++	++	++
910**	6510	++	++	++	++
925**	6530	++	++	++	++
930*	6550	++	++	++	++

* Terminal End Break
** Intermediate Break
\+ Break can be deleted per Arbitrary Break elimination of MEB 3-1, Rev. 2
++ Break as required by MEB 3-1, Rev. 0

TABLE 3.6-3 (Sheet 52)

THIS SHEET HAS BEEN DELETED

TABLE 3.6-3 (Sheet 53)

THIS SHEET HAS BEEN DELETED

TABLE 3.6-3 (Sheet 54)

THIS SHEET HAS BEEN DELETED

TABLE 3.6-3 (Sheet 55)

THIS SHEET HAS BEEN DELETED

TABLE 3.6-3 (Sheet 56)
(Historical Information)

SYSTEM - PRESSURIZER SPRAY
Pipebreak Isometric No.: Figure 3.6-1(BB04)
Sheet 9
Sheet 27 (BG24)

Prob. No. 242
Issue - N/A
See SNP-6566

NODE NO.	EQUATION 12 STRESS (PSI)	EQUATION 13 STRESS (PSI)	CUM. USAGE FACTOR	ALLOWABLE STRESS ($2.4S_m$) PSI
520*	++	++	++	++
10*	++	++	++	++
310*	++	++	++	++
580**	10,422	43,543	0.039	39,413
270*	++	++	++	++
270**	7,894	53,785	0.03	39,413
285**	38,200	27,023	0.126	39,413
285 to 305	20,174	10,070	0.390	39,413
305**	38,200	27,023	0.126	39,413
600**	4,664	48,374	0.21	39,413

*Terminal End Break
**Intermediate Break
++Break as required by MEB 3-1

TABLE 3.6-3 (Sheet 56A)

Revised Stress Analysis Results

SYSTEM: PRESSURIZER SPRAY
PIPE BREAK ISOMETRIC NO. FIGURE 3.6-1
CN005

PROBLEM NO. P - 242
BB-S-036-000-

(BB04) SHEET 9
(BG24) SHEET 27

WESTINGHOUSE CALC. NO. WCAP-9728,
VOLUME IV (REVISION 2, ADDENDA)

Bechtel Node Nos.	Westinghouse Node Nos.	Westinghouse Piping Section No.	Westinghouse Piping Component Name	Maximum Eq. 12 Stress (psi)	Maximum Eq. 13 Stress (psi)	Cumulative Usage Factor	Allowable Stress $3S_m$ (psi)
520*	3020	1	4” TRA	++	++	++	++
10*	4020	1	4” TRA	++	++	++	++
310*	27	5	4” TRA Nozzle	++	++	++	++
580**	5100	2	2” x ¾” TEA	7,000	52,400	0.883	52,500
270*	5010	2	6” x 2” BRA	++	++	++	++
270**	3570	4	6” RUP	14,400	45,700	0.168	50,500
285**	3640 - 3645	5	4” ELL	37,000	18,300	0.126	48,530
285 to 305	3645 to 3735	5	Various	23,300	14,000	0.400	48,530
305**	3730	5	4” ELL	37,000	18,300	0.126	48,530
600**+	5150	2	2” TRA	7,900	35,400	0.093	52,500

* Terminal End Break

** Intermediate Break

++ Break as Require by MEB 3-1 Rev. 0

\+ Break can be eliminated per Arbitrary Intermediate Break elimination (MEB 3-1, Revision 2)

Note: Westinghouse piping section numbers as specified above include more than one components with maximum cumulative usage factor. The stress values and cumulative usage factors listed above are the maximum values for a component.

TABLE 3.6-3 (Sheet 57)
(Historical Information)

SYSTEM - AUXILIARY PRESSURIZER SPRAY
Pipebreak Isometric No.: Figure 3.6-1(BB04) Sheet 9
(BG04) Sheet 27

Prob. No. P-242
Issue - N/A
See SNP-6566

NODE NO.	EQUATION 12 STRESS (PSI)	EQUATION 13 STRESS (PSI)	CUM. USAGE FACTOR	ALLOWABLE STRESS ($2.4S_m$) PSI
615**	4,669	48,374	0.20	39,413
See Note 1				
771*	++	++	++	++

NOTE 1: Class 1 equations and allowables used although this break is on the Class 2 portion of the line.

*Terminal End Break
**Intermediate Break
++Break as required by MEB 3-1

TABLE 3.6-3 (Sheet 57A)
Revised Stress Analysis Results

05 SYSTEM: PRESSURIZER SPRAY
PIPE BREAK ISOMETRIC NO. FIGURE 3.6-1
(BB04) SHEET 9
(BG24) SHEET 27

PROBLEM NO. P - 242
BB-S-036-000-CN0
WESTINGHOUSE CALC. NO. WCAP-9728,
VOLUME IV (REVISION 2, ADDENDA)

Bechtel Node Nos.	Westinghouse Node Nos.	Westinghouse Piping Section No.	Westinghouse Piping Component Name	Maximum Eq. 12 Stress (psi)	Maximum Eq. 13 Stress (psi)	Cumulative Usage Factor	Allowable Stress $3S_m$ (psi)
615**	5180	2	2" TRA	7,900	35,400	0.093	52,500
See Note 1							
771*	5860	N/A	2" CLASS II PIPE	++	++	++	++

NOTE 1: Class 1 equations and allowables used although this break is on the Class 2 portion of the line.

* Terminal End Break

** Intermediate Break

++ Break as Require by MEB 3-1 Rev. 0

Note: Westinghouse piping section numbers as specified above include more than one components with maximum cumulative usage factor. The stress values and cumulative usage factors listed above are the maximum values for a component.

TABLE 3.6-3 (Sheet 58)
(Historical Information)

SYSTEM - PRESSURIZER RELIEF
PIPE BREAK ISOMETRIC NO.: FIG. 3.6-1 (BB02)
Sheet 8

Prob. No. 243A&B
Issue - 0
See SNP-6566

NODE NO.	EQUATION 12 STRESS (PSI)	EQUATION 13 STRESS (PSI)	CUM. USAGE FACTOR	ALLOWABLE STRESS ($2.4S_m$) PSI
415**	17,900	38,800	0.8022	38,640
395 to 375**	12,500	14,100	0.4112	38,640
375 to 340**	12,500	14,100	0.4112	38,640
300*	++	++	++	++
415 to 465**	12,500	14,100	0.4112	38,640
465** to 500**	12,500	14,100	0.4112	28,640
500**	++	++	++	++

*Terminal End Break
**Intermediate Break
++Break as required by MEB 3-1

TABLE 3.6-3 (Sheet 58A)
Revised Stress Analysis Results

SYSTEM: PRESSURIZER RELIEF
PIPE BREAK ISOMETRIC NO. FIGURE 3.6-1
(BB02) SHEET 8

PROBLEM NO. P-243A&B
BB-S-036-000-CN004
WESTINGHOUSE CALC. NO. WCAP-9728,
VOLUME IV (REVISION 2, ADDENDA)

Bechtel Node Nos.	Westinghouse Node Nos.	Westinghouse Piping Section No.	Westinghouse Piping Component Name	Maximum Eq. 12 Stress (psi)	Maximum Eq. 13 Stress (psi)	Cumulative Usage Factor	Allowable Stress $3S_m$ (psi)
415**	4740	4	6” x 3” TEA	29,100	38,800	0.850	48,300
395 to 375**	4800 to 4850	4	3” ELL	37,500	28,400	0.100	48,300
375 to 340**	4850 to 4950	4	3” RUV	46,800	39,700	0.970	48,300
340*	4950	4	++	++	++	++	++
415 to 465**	4740 to 5150	4	6” x 3” TEA	29,100	38,800	0.850	48,300
465 to 500**	5150 to 5250	4	3” RUV	46,800	39,700	0.970	48,300
500*	5250	4	++	++	++	++	++

* Terminal End Break

** Intermediate Break location

++ Break as Required by MEB 3-1 Rev. 0

Note: Westinghouse piping section numbers as specified above include more than one components with maximum cumulative usage factor. The stress values and cumulative usage factors listed above are the maximum values for a component.

TABLE 3.6-3 (Sheet 59)
(Historical Information)

SYSTEM - PRESSURIZER RELIEF
Pipebreak Isometric No.: Figure 3.6-1(BB02) Sheet 8

Prob. No. 243A&B
Issue - N/A
See SNP-6566

NODE NO.	EQUATION 12 STRESS (PSI)	EQUATION 13 STRESS (PSI)	CUM. USAGE FACTOR	ALLOWABLE STRESS ($2.4S_m$) PSI
175*	++	++	++	++
170**	60,000[a]	60,000(a)	0.163	38,640
165**	22,800	20,900	0.1054	38,640
165 to 160**	8,500	14,200	0.294	38,640
160 to 150**	29,300	39,300	0.931	38,640
150 to 145**	8,500	20,900	0.1054	38,640
145*	++	++	++	++
285*	++	++	++	++
275**	11,800	20,900	0.1054	38,640
275 to 270**	8,500	14,200	0.294	38,640
270 to 260**	29,300	39,300	0.931	38,640
260 to 255**	8,500	14,200	0.294	38,640
255*	++	++	++	++
5*	++	++	++	++
15**	22,800	20,900	0.1054	38,640
15 to 20**	8,500	14,200	0.294	38,640
20 to 30**	29,000	39,300	0.931	38,640

*Terminal End Break
**Intermediate Break
++Break as required by MEB 3-1
(a)As a result of constrained thermal expansion cycles.

TABLE 3.6-3 (Sheet 59A)
Revised Stress Analysis Results

SYSTEM: PRESSURIZER RELIEF
PIPE BREAK ISOMETRIC NO. FIGURE 3.6-1
(BB02) SHEET 8

PROBLEM NO. P-243A&B
BB-S-036-000-CN004
WESTINGHOUSE CALC. NO. WCAP-9728,
VOLUME IV (REVISION 2, ADDENDA)

Bechtel Node Nos.	Westinghouse Node Nos.	Westinghouse Piping Section No.	Westinghouse Piping Component Name	Maximum Eq. 12 Stress (psi)	Maximum Eq. 13 Stress (psi)	Cumulative Usage Factor	Allowable Stress $3S_m$ (psi)
175*	3010	1	++	++	++	++	++
170**	3020	1	++	++	++	++	++
165**	3040	1	6” ELL	47,400	25,400	0.700	48,300
165 to 160**	3040 to 3060	2	6” RUP	27,200	17,300	0.310	48,300
160 to 150**	3060 to 3090	2	6”x ¾” BRA	36,700	29,400	0.975	48,300
150 to 145**	3090 to 3130	2	6” RUF	24,700	35,800	0.910	48,300
145*	3130	2	++	++	++	++	++
285*	3810	1	++	++	++	++	++
275**	3840	1	6” ELL	47,400	25,400	0.700	48,300
275 to 270**	3840 to 3860	2	6” RUP	27,200	17,300	0.310	48,300
270 to 260**	3860 to 3890	2	6”x ¾” BRA	36,700	29,400	0.975	48,300
260 to 255**	3890 to 3930	2	6” RUF	24,700	35,800	0.910	48,300
255*	3930	2	++	++	++	++	++

* Terminal End Break

** Intermediate Break location

++ Break as Required by MEB 3-1 Rev. 0

Note: Westinghouse piping section numbers as specified above include more than one components with maximum cumulative usage factor. The stress values and cumulative usage factors listed above are the maximum values for a component.

TABLE 3.6-3 (Sheet 59B)
(Historical Information)

SYSTEM - PRESSURIZER RELIEF
Pipebreak Isometric No.: Figure 3.6-1(BB02) Sheet 8

Prob. No. 243A&B
Issue - N/A
See SNP-6566

NODE NO.	EQUATION 12 STRESS (PSI)	EQUATION 13 STRESS (PSI)	CUM. USAGE FACTOR	ALLOWABLE STRESS ($2.4S_m$) (PSI)
30 to 35**	8,500	14,200	0.294	38,640
35*	++	++	++	++
450*	++	++	++	++

* Terminal End Break
** Intermediate Break
++ Break as required by MEB 3-1

TABLE 3.6-3 (Sheet 59C)
Revised Stress Analysis Results

SYSTEM: PRESSURIZER RELIEF
PIPE BREAK ISOMETRIC NO. FIGURE 3.6-1
(BB02) SHEET 8

PROBLEM NO. P-243A&B
BB-S-036-000-CN004
WESTINGHOUSE CALC. NO. WCAP-9728,
VOLUME IV (REVISION 2, ADDENDA)

Bechtel Node Nos.	Westinghouse Node Nos.	Westinghouse Piping Section No.	Westinghouse Piping Component Name	Maximum Eq. 12 Stress (psi)	Maximum Eq. 13 Stress (psi)	Cumulative Usage Factor	Allowable Stress $3S_m$ (psi)
5*	4300	1	++	++	++	++	++
15**	4340	2	6” ELL	47,400	25,400	0.700	48,300
15 to 20**	4340 to 4370	2	6” RUP	27,200	17,300	0.310	48,300
20 to 30**	4370 to 4400	2	6”x ¾” BRA	36,700	29,400	0.975	48,300
30 to 35**	4400 to 4440	2	6” RUF	24,700	35,800	0.910	48,300
35*	4440	2	++	++	++	++	++
450*	4640	3	++	++	++	++	++

* Terminal End Break

** Intermediate Break location

++ Break as Required by MEB 3-1 Rev. 0

Note: Westinghouse piping section numbers as specified above include more than one components with maximum cumulative usage factor. The stress values and cumulative usage factors listed above are the maximum values for a component.

TABLE 3.6-3 (Sheet 60)
(Historical Information)

SYSTEM - CVCS EXCESS LETDOWN
Pipebreak Isometric No.: Figure 3.6-1(BG23) Sheet 26 (HB24) Sheet 50

Prob. No. 244
Issue - N/A
See SNP-6566

NODE NO.	EQUATION 12 STRESS (PSI)	EQUATION 13 STRESS (PSI)	CUM. USAGE FACTOR	ALLOWABLE STRESS ($2.4S_m$) PSI
5*	++	++	++	++
20**	36,138	22,210	0.290	39,413
30** & 40**	34,006	32,576	0.439	39,413
200**	36,168	13,324	0.001	39,413
205*	++	++	++	++
415*	++	++	++	++
410**	32,796	14,631	0.005	39,413
400*	++	++	++	++
15**	36,138	32,355	0.367	39,413

*Terminal End Break
**Intermediate Break
++Break as required by MEB 3-1

TABLE 3.6-3 (Sheet 60A)
Revised Stress Analysis Results

SYSTEM: EXCESS LETDOWN / DRAIN LOOP 1 & 4
PIPE BREAK ISOMETRIC NO. FIGURE 3.6-1
(BG23) SHEET 26
(HB24) SHEET 50

PROBLEM NO. P - 244
BB-S-036-000-CN005
WESTINGHOUSE CALC. NO. WCAP-9728,
VOLUME IV (REVISION 2, ADDENDA)

Loop No.	Bechtel Node Nos.	Westinghouse Node Nos.	Westinghouse Piping Section No.	Westinghouse Piping Component Name	Maximum Eq. 12 Stress (psi)	Maximum Eq. 13 Stress (psi)	Cumulative Usage Factor	Allowable Stress $3S_m$ (psi)
4	5*	4015	1	2" TRA	++	++	++	++
	15**	4050	1	2" x ¾" TEE	23,100	46,600	0.099	50,500
	20**	4080	1	2" X 2" TEE	43,800	20,800	0.099	50,500
	30** & 40**	4100 & 4140	1	2" TRA	16,500	32,600	0.010	50,500
	200**	6005	4	2" ELL/EL5	34,900	15,700	0.040	50,500
	205*	6060	4	2" TRA	++	++	++	++
1	415*	3010	4	2" TRA	++	++	++	++
	410**	3040	4	2" ELL	21,200	16,700	0.004	50,500
	400*	3060	4	2" TRA	++	++	++	++

* Terminal End Break

** Intermediate Break

++ Break as Require by MEB 3-1 Rev. 0

Note: Westinghouse piping section numbers as specified above include more than one components with maximum cumulative usage factor. The stress values and cumulative usage factors listed above are the maximum values for a component.

TABLE 3.6-3 (Sheet 61)
(Historical Information)

SYSTEM - CVCS LETDOWN
Pipebreak Isometric No.: Figure 3.6-1(BG22) Sheet 25 (HB24) Sheet 50

Prob. No. 245
Issue - N/A
SEE SNP-6566

NODE NO.	EQUATION 12 STRESS (PSI)	EQUATION 13 STRESS (PSI)	CUM. USAGE FACTOR	ALLOWABLE STRESS ($2.4S_m$) PSI
5*	++	++	++	++
10**	24,384	13,570	0.018	39,413
30**	50,693	<54,600	<1.0	39,413
50**	15,941	18,890	0.09	39,413
100**	7,476	18,890	0.09	39,413
205*	++	++	++	++
440*	++	++	++	++
435**	26,473	9,678	.012	39,413
430*	++	++	++	++
195**	50,693	<54,600	<1.0	39,413
125*	++	++	++	++

*Terminal End Break
**Intermediate Break
++Break as required by MEB 3-1

TABLE 3.6-3 (Sheet 61A)
Revised Stress Analysis Results

SYSTEM: NORMAL LETDOWN DRAIN LOOP 2 & 3
PIPE BREAK ISOMETRIC NO. FIGURE 3.6-1
(BG22) SHEET 25
(HB24) SHEET 50

PROBLEM NO. P - 245
BB-S-036-000-CN005
WESTINGHOUSE CALC. NO. WCAP-9728,
VOLUME IV (REVISION 2, ADDENDA)

Bechtel Node Nos.	Westinghouse Node Nos.	Westinghouse Piping Section No.	Westinghouse Piping Component Name	Maximum Eq. 12 Stress (psi)	Maximum Eq. 13 Stress (psi)	Cumulative Usage Factor	Allowable Stress $3S_m$ (psi)
5*	3020	1	3” TRA	++	++	++	++
10**	3040	1	3” ELL	23,800	22,156	0.015	50,500
30**	3100	2	3” x 2” BRA	42,100	44,584	0.968	50,500
50**	3200	2	3” TRA	17,200	37,000	0.098	50,500
100**	3380	2	3” TRA	17,200	37,000	0.098	50,500
205*	3940	4	2” TRA	++	++	++	++
440*	3520	4	2” TRA	++	++	++	++
435**	3530	4	2” EL5	24,300	21,356	0.031	50,500
430*	3550	5	2” TRA	++	++	++	++
195**	3910	4	2” RUP	22,700	20,603	0.014	50,500
125*	3430	2	3” TRA	++	++	++	++

* Terminal End Break

** Intermediate Break

++ Break as Require by MEB 3-1 Rev. 0

Note: Westinghouse piping section numbers as specified above include more than one components with maximum cumulative usage factor. The stress values and cumulative usage factors listed above are themaximum values for a component.

TABLE 3.6-3 (Sheet 61B)

THIS SHEET HAS BEEN DELETED

TABLE 3.6-3 (Sheet 62)

THIS SHEET HAS BEEN DELETED

TABLE 3.6-3 (Sheet 63)
(Historical Information)

SYSTEM - HPCI
Pipebreak Isometric No.: Figure 3.6-1(EM03) Sheet 38

Prob. No. 247 & 247A
Issue - N/A
See SNP-6566

NODE NO.	EQUATION 12 STRESS (PSI)	EQUATION 13 STRESS (PSI)	CUM. USAGE FACTOR	ALLOWABLE STRESS ($2.4S_m$) PSI
305*	++	++	++	40,560
310**	20,400	20,000	0.052	40,416
320**	20,400	20,000	0.052	40,416
325*	++	++	++	++
210*	++	++	++	++
215**	20,400	20,000	0.052	40,416
225**	20,400	20,000	0.052	40,416
235*	++	++	++	++
105*	++	++	++	++
120**	20,400	20,000	0.052	40,416
125**	20,400	20,000	0.052	40,416
130*	++	++	++	++
10*	++	++	++	++
25**	20,400	20,000	0.052	40,416
30**	20,400	20,000	0.052	40,416
35*	++	++	++	++

*Terminal End Break
**Intermediate Break
++Break as required by MEB 3-1

TABLE 3.6-3 (Sheet 63A)
Revised Stress Analysis Results

SYSTEM: BIT LOOP 1, 2, 3 & 4
PIPE BREAK ISOMETRIC NO. FIGURE 3.6-1
(EM03) SHEET 38

PROBLEM NO. P – 247A
BB-S-036-000-CN004
WESTINGHOUSE CALC. NO. WCAP – 9728,
VOLUME IV (REVISION 2, ADDENDA)

Bechtel Node Nos.	Westinghouse Node Nos.	Westinghouse Piping Section No.	Westinghouse Piping Component Name	Maximum Eq. 12 Stress (psi)	Maximum Eq. 13 Stress (psi)	Cumulative Usage Factor	Allowable Stress $3S_m$ (psi)
305* Loop 1	3020	1	++	++	++	++	++
310** Loop 1	3035	1	1 ½" EL5	33,400	25,605	0.050	50,500
320** Loop 1	3060	1	1 ½" EL5	33,400	25,605	0.050	50,500
325* Loop 1	3080	1	++	++	++	++	++
210* Loop 2	4020	1	++	++	++	++	++
215** Loop 2	4040	1	1 ½" EL5	33,400	25,605	0.050	50,500
225** Loop 2	4080	1	1 ½" EL5	33,400	25,605	0.050	50,500
235* Loop 2	4110	1	++	++	++	++	++
105* Loop 3	5020	1	++	++	++	++	++
120** Loop 3	5080	1	1 ½" EL5	33,400	25,605	0.050	50,500
125** Loop 3	5110	1	1 ½" EL5	33,400	25,605	0.050	50,500
130* Loop 3	5140	1	++	++	++	++	++
10* Loop 4	6020	1	++	++	++	++	++
25** Loop 4	6060	1	1 ½" EL5	33,400	25,605	0.050	50,500
30** Loop 4	6080	1	1 ½" EL5	33,400	25,605	0.050	50,500
35* Loop 4	6110	1	++	++	++	++	++

* Terminal End Break
** Intermediate Break
++ Break as Required by MEB 3-1 Rev. 0

Note: Westinghouse piping section numbers as specified above include more than one components with maximum cumulative usage factor. The stress values and cumulative usage factors listed above are the maximum values for a component.

TABLE 3.6-3 (Sheet 64)
(Historical Information)

SYSTEM - RHR AND HPCI
Pipebreak Isometric No.: Figure 3.6-1(EM03) Sheet 38

Prob. No. 248A
Issue - N/A
See SNP-6566

NODE NO.	EQUATION 12 STRESS (PSI)	EQUATION 13 STRESS (PSI)	CUM. USAGE FACTOR	ALLOWABLE STRESS ($2.4S_m$) PSI
175*	++	++	++	++
170**	15,854	15,340	<0.1	38,880
165*	++	++	++	++
290*	++	++	++	++
285**	18,638	16,848	<0.1	38,880
280*	++	++	++	++

*Terminal End Break
**Intermediate Break
++Break as required by MEB 3-1

TABLE 3.6-3 (Sheet 64A)
Revised Stress Analysis Results

SYSTEM: SI HOT LEG LOOP 2 AND 3
PIPE BREAK ISOMETRIC NO. FIGURE 3.6-1
(EM03) SHEET 38

PROBLEM NO. P – 248A
BB-S-036-000-CN005
WESTINGHOUSE CALC. NO. WCAP- 9728,
VOLUME IV (REVISION 2, ADDENDA)

Bechtel Node Nos.	Westinghouse Node Nos.	Westinghouse Piping Section No.	Westinghouse Piping Component Name	Maximum Eq. 12 Stress (psi)	Maximum Eq. 13 Stress (psi)	Cumulative Usage Factor	Allowable Stress $3S_m$ (psi)
175*	3020	1	6” TRA	++	++	++	++
170**	3040	1	6” ELL	24,600	22,300	0.011	50,500
165*	3060	1	6” TRA	++	++	++	++
290*	3620	1	6” TRA	++	++	++	++
285**	3640	1	6” ELL	24,600	22,300	0.011	50,500
280*	3670	1	6” TRA	++	++	++	++

* Terminal End Break

** Intermediate Break

++ Break as Require by MEB 3-1 Rev. 0

Note: Westinghouse piping section numbers as specified above include more than one components with maximum cumulative usage factor. The stress values and cumulative usage factors listed above are the maximum values for a component.

TABLE 3.6-3 (Sheet 65)
(Historical Information)

SYSTEM - SEAL INJECTION (LOOP 4) Prob. No. 249
Pipebreak Isometric No.: Figure 3.6-1
(BB07) Sheet 12 See SNP-6566

NODE NO.	EQUATION 12 STRESS (PSI)	EQUATION 13 STRESS (PSI)	CUM. USAGE FACTOR	ALLOWABLE STRESS ($2.4S_m$) PSI
10*	++	++	++	++
35**	12,043	10,915	0.0302	48,000
65**	12,043	10,915	0.0302	48,000

*Terminal End Break
**Intermediate Break
++Break as required by MEB 3-1, Rev. 0

TABLE 3.6-3 (Sheet 65A)
Revised Stress Analysis Results

SYSTEM: SEAL INJECTION (LOOP 4)

PIPE BREAK ISOMETRIC NO. FIGURE 3.6-1
(BB07) SHEET 12

PROBLEM NO. P - 249
BB-S-036-000-CN004
WESTINGHOUSE CALC. NO. WCAP-9728,
VOLUME IV (REVISION 2, ADDENDA)

Bechtel Node Nos.	Westinghouse Node Nos.	Westinghouse Piping Section No.	Westinghouse Piping Component Name	Maximum Eq. 12 Stress (psi)	Maximum Eq. 13 Stress (psi)	Cumulative Usage Factor	Allowable Stress $3S_m$ (psi)
10 *	3040	1	1½" RUP	++	++	++	++
35 **+	3140	1	2” ELL	11,300	34,274	0.010	60,000
65**+	3260	1	2” ELL	11,300	34,274	0.010	60,000
Pen 40	4010 ††	N/A	2” CLASS 2 PIPE				

†† Pen 40, this is a terminal end but is in the No Break Zone

* Terminal End Break

** Intermediate Break

++ Break as Required by MEB 3-1 Rev. 0

\+ Break can be eliminate per Arbitrary Intermediate Break elimination (MEB 3-1, Revision 2)

Note: Westinghouse piping section numbers as specified above include more than one components with maximum cumulative usage factor. The stress values and cumulative usage factors listed above are the maximum values for a component.

TABLE 3.6-3 (Sheet 66)
(Historical Information)

SYSTEM - RCP SEAL INJECTION (LOOP 1) Prob. No. 250
Pipebreak Isometric No.: Figure 3.6-1
(BB08) Sheet 13 See SNP-6566

NODE NO.	EQUATION 12 STRESS (PSI)	EQUATION 13 STRESS (PSI)	CUM. USAGE FACTOR	ALLOWABLE STRESS ($2.4S_m$) PSI
7*	++	++	++	++
20**	6,375	34,200	0.0456	48,000
40**	6,375	34,200	0.0456	48,000
140**	++	++	++	++

*Terminal End Break
**Intermediate Break
++Break as required by MEB 3-1, Rev. 0

TABLE 3.6-3 (Sheet 66A)
Revised Stress Analysis Results

SYSTEM: RCP SEAL INJECTION (LOOP 1)

PROBLEM NO. P – 250
BB-S-036-000-CN004

PIPE BREAK ISOMETRIC NO. FIGURE 3.6-1
(BB08) SHEET 13

WESTINGHOUSE CALC. NO. WCAP-9728,
VOLUME IV (REVISION 2, ADDENDA)

Bechtel Node Nos.	Westinghouse Node Nos.	Westinghouse Piping Section No.	Westinghouse Piping Component Name	Maximum Eq. 12 Stress (psi)	Maximum Eq. 13 Stress (psi)	Cumulative Usage Factor	Allowable Stress $3S_m$ (psi)
7*	3120	1	++	++	++	++	++
20**+	3160	1	2” TEA	26,600	23,700	0.015	60,000
40**+	3240	1	2” TEA	26,600	23,700	0.015	68,000
140*	3580	N/A	2” CLASS 2 PIPE	++	++	++	++

* Terminal End Break

** Intermediate Break

++ Break as Require by MEB 3-1 Rev. 0

\+ Break can be eliminated per Arbitrary Intermediate Break elimination (MEB 3-1, Revision 2)

Note: Westinghouse piping section numbers as specified above include more than one components with maximum cumulative usage factor. The stress values and cumulative usage factors listed above are the maximum values for a component.

TABLE 3.6-3 (Sheet 67)
(Historical Information)

SYSTEM - RCP SEAL INJECTION (LOOP 3) Prob. No. 251
Pipebreak Isometric No.: Figure 3.6-1
(BB09) Sheet 14 See SNP-6566

NODE NO.	EQUATION 12 STRESS (PSI)	EQUATION 13 STRESS (PSI)	CUM. USAGE FACTOR	ALLOWABLE STRESS ($2.4S_m$) PSI
7*	++	++	++	++
15**	8,988	47,035	0.0456	48,000
25**	8,988	47,035	0.4564	48,000
130**	++	++	++	++

*Terminal End Break
**Intermediate Break
++Break as required by MEB 3-1, Rev 0

TABLE 3.6-3 (Sheet 67A)
Revised Stress Analysis Results

SYSTEM: RCP SEAL INJECTION (LOOP 3)
PIPE BREAK ISOMETRIC NO. FIGURE 3.6-1
(BB09) SHEET 14

PROBLEM NO. P - 251
WESTINGHOUSE CALC. NO. WCAP-9728,
VOLUME IV (REVISION 2, ADDENDA)

Bechtel Node Nos.	Westinghouse Node Nos.	Westinghouse Piping Section No.	Westinghouse Piping Component Name	Maximum Eq. 12 Stress (psi)	Maximum Eq. 13 Stress (psi)	Cumulative Usage Factor	Allowable Stress $3S_m$ (psi)
7*	3020	1	++	++	++	++	++
NEW +	3050	1	1 ½" x 2" REA	19,800	59,400	0.076	60,000
15** +	3070	1	2" x 2" TEE	5,800	36,300	0.016	60,000
25** +	3100	1	2" x 2" TEE	5,800	36,300	0.016	60,000
130*	4140	N/A	2" CLASS 2 PIPE	++	++	++	++

* Terminal End Break

** Intermediate Break

++ Break as Require by MEB 3-1 Rev. 0

\+ Break can be eliminated per Arbitrary Intermediate Break elimination (MEB 3-1, Revision 2)

Note: Westinghouse piping section numbers as specified above include more than one components with maximum cumulative usage factor. The stress values and cumulative usage factors listed above are the maximum values for a component.

Table 3.6-3 (Sheet 68)
(Historical Information)

System - RCP Seal Injection (Loop 2) Prob. No. 252
Pipe Break Isometric No.: Figure 3.6-1(BB11) Sheet 15 Issue - N/A

NODE NO.	EQUATION 12 STRESS (PSI)	EQUATION 13 STRESS (PSI)	CUM. USAGE FACTOR	ALLOWABLE STRESS ($2.4S_m$) PSI
7*	++	++	++	++
25**	7,845	41,114	0.0254	48,000
20**	14,330	32,699	0.0157	48,000

* Terminal End Break
** Intermediate Break
++ Terminal Break as Required by MEB 3-1

Table 3.6-3 (Sheet 68A)
Revised Stress Analysis Results

System - RCP Seal Injection (Loop 2) Prob. No. 252
Pipe Break Isometric No.: Figure 3.6-1(BB11) Sheet 15 Issue - N/A

NODE NO.	EQUATION 12 STRESS (KSI)	EQUATION 13 STRESS (KSI)	CUM. USAGE FACTOR	ALLOWABLE STRESS (KSI)
7*	++	++	++	++
20+				
25+				
110*	++	++	++	++

* Terminal End Break
\+ Break can be deleted per Arbitrary Break Elimination of MEB 3-1, Rev. 2
++ Break as Required by MEB 3-1, Rev. 0

TABLE 3.6-3 (Sheet 69)
(Historical Information)

SYSTEM - CVCS
Pipebreak Isometric No.: Figure 3.6-1(BG21) Sheet 24

Prob. No. 253
Issue - N/A
See SNp-6566

NODE NO.	EQUATION 12 STRESS (PSI)	EQUATION 13 STRESS (PSI)	CUM. USAGE FACTOR	ALLOWABLE STRESS ($2.4S_m$) PSI
5*	++	++	++	++
10** & 20**	26,126	40,000	0.4384	40,469
50**	22,023	40,000	0.7734	40,469
30**	8,024	31,820	0.8337	40,469
45**	8,024	31,820	0.8337	40,469
60**	22,023	40,000	0.7734	40,469
See Note 1				
105*	++	++	++	++
See Note 2				

NOTE 1: Class 1 equations and allowables used although this break is on the Class 2 portion of the line.

NOTE 2: Class 2 break

*Terminal End Break
**Intermediate Break
++Break as required by MEB 3-1

TABLE 3.6-3 (Sheet 69A)
Revised Stress Analysis Results

SYSTEM: ALTERNATE CHARGING LOOP 4
PIPE BREAK ISOMETRIC NO. FIGURE 3.6-1
(BG21) SHEET 24

PROBLEM NO. P - 253
BB-S-036-000-CN004
WESTINGHOUSE CALC. NO. WCAP-9728,
VOLUME IV (REVISION 2, ADDENDA)

Bechtel Node Nos.	Westinghouse Node Nos.	Westinghouse Piping Section No.	Westinghouse Piping Component Name	Maximum Eq. 12 Stress (psi)	Maximum Eq. 13 Stress (psi)	Cumulative Usage Factor	Allowable Stress $3S_m$ (psi)
5*	3020	1	3” TRA	++	++	++	++
10** & 20**	3030 & 3050	1	3” TRA	24,900	40,000	0.910	50,500
50**	3150	2	3” TRA	18,800	40,000	0.910	50,500
30**	4010	2	3” x ¾” BRA	29,600	33,500	0.930	50,500
45**	5010	2	3” x ¾” BRA	29,600	33,500	0.930	50,500
60**	3170	2	3” TRA	18,800	40,000	0.910	50,500
See Note 1							
105*	3320	2	3” TRA	++	++	++	++
See Note 2							

NOTE 1: Class 1 equations and allowables used although this break is on the Class 2 portion of the line.
NOTE 2: Class 2 break

* Terminal End Break

** Intermediate Break

++ Break as Require by MEB 3-1 Rev. 0

Note: Westinghouse piping section numbers as specified above include more than one components with maximum cumulative usage factor. The stress values and cumulative usage factors listed above are the maximum values for a component.

TABLE 3.6-3 (Sheet 70)
(Historical Information)

SYSTEM - CVCS
Pipebreak Isometric No.: Figure 3.6-1(BG21) Sheet 24

Prob. No. 254
Issue - N/A
See SNP-6566

NODE NO.	EQUATION 12 STRESS (PSI)	EQUATION 13 STRESS (PSI)	CUM. USAGE FACTOR	ALLOWABLE STRESS ($2.4S_m$) PSI
10*	++	++	++	++
35** & 45**	23,225	40,000	0.4384	40,469
55**	27,156	40,000	0.7734	40,469
17**	7,629	31,820	0.8337	40,469
52**	31,087	31,820	0.736	40,469
65**	27,156	40,000	0.7734	40,469
See Note 1				
95*	++	++	++	++
See Note 2				

Note 1: Class 1 equations and allowables used although this break is on the Class 2 portion of the line.

Note 2: Class 2 break

*Terminal End Break
**Intermediate Break
++Break as required by MEB 3-1

TABLE 3.6-3 (Sheet 70A)
Revised Stress Analysis Results

SYSTEM: NORMAL CHARGING LOOP 1
PIPE BREAK ISOMETRIC NO. FIGURE 3.6-1
(BG21) SHEET 24

PROBLEM NO. P - 254
BB-S-036-000-CN005
WESTINGHOUSE CALC. NO. WCAP-9728,
VOLUME IV (REVISION 2, ADDENDA)

Bechtel Node Nos.	Westinghouse Node Nos.	Westinghouse Piping Section No.	Westinghouse Piping Component Name	Maximum Eq. 12 Stress (psi)	Maximum Eq. 13 Stress (psi)	Cumulative Usage Factor	Allowable Stress $3S_m$ (psi)
10*	3020	1	3" TRA	++	++	++	++
35** & 45**	3120 & 3150	1	3" TRA	28,100	40,000	0.910	50,500
55**	3230	2	3" TRA	28,200	40,000	0.910	50,500
17**	4010	1	3" x ¾" BRA	9,200	31,800	0.900	50,500
52**	5010	2	3" X 1" BRA	31,700	31,800	0.930	50,500
65**	3260	2	3" TRA	28,200	40,000	0.910	50,500
See Note 1							
95*	3400	2	3" TRA	++	++	++	++
See Note 2							

NOTE 1: Class 1 equations and allowables used although this break is on the Class 2 portion of the line.
NOTE 2: Class 2 break

* Terminal End Break

** Intermediate Break

++ Break as Require by MEB 3-1 Rev. 0

Note: Westinghouse piping section numbers as specified above include more than one components with maximum cumulative usage factor. The stress values and cumulative usage factors listed above are the maximum values for a component.

TABLE 3.6-3 (Sheet 71)
(Historical Information)

SYSTEM - RHR
Pipebreak Isometric No.: Figure 3.6-1(EJ04) Sheet 36
(EM05) Sheet 36

Prob. No. 255
Issue - N/A
See SNP-6566

NODE NO.	EQUATION 12 STRESS (PSI)	EQUATION 13 STRESS (PSI)	CUM. USAGE FACTOR	ALLOWABLE STRESS ($2.4S_m$) PSI
10*	++	++	++	++
15**	20,386	18,673	<0.1	38,880
20**	20,386	18,673	<0.1	38,880
195*	++	++	++	++
40*	++	++	++	++
200**	2,224	18,788	<0.1	38,880
205*	++	++	++	++

*Terminal End Break
**Intermediate Break
++Break as required by MEB 3-1

TABLE 3.6-3 (Sheet 71A)
Revised Stress Analysis Results

SYSTEM: RHR LOOP 1
PIPE BREAK ISOMETRIC NO. FIGURE 3.6-1
(EJ04) SHEET 36
(EM05) SHEET 39

PROBLEM NO. P - 255
BB-S-036-000-CN004
WESTINGHOUSE CALC. NO. WCAP-9728,
VOLUME IV (REVISION 2, ADDENDA)

Bechtel Node Nos.	Westinghouse Node Nos.	Westinghouse Piping Section No.	Westinghouse Piping Component Name	Maximum Eq. 12 Stress (psi)	Maximum Eq. 13 Stress (psi)	Cumulative Usage Factor	Allowable Stress $3S_m$ (psi)
10*	3020	1	12" TRA	++	++	++	++
15**	3030	1	12" ELL	27,000	25,925	0.03	48,600
20**	3050	1	12" ELL	27,000	25,925	0.03	48,600
195*	4000	1	6" RUP	++	++	++	++
40*	3090	1	6" TRA	++	++	++	++
200**	4020	1	6" ELL	10,500	23,425	0.011	48,600
205*	4040	1	6" TRA	++	++	++	++

* Terminal End Break

** Intermediate Break

++ Break as Require by MEB 3-1 Rev. 0

Note: Westinghouse piping section numbers as specified above include more than one components with maximum cumulative usage factor. The stress values and cumulative usage factors listed above are the maximum values for a component.

TABLE 3.6-3 (Sheet 72)
(Historical Information)

SYSTEM - RHR
Pipebreak Isometric No.: Figure 3.6-1(EJ04) Sheet 36 (EMO5) Sheet 39

Prob. No. 256
Issue - N/A
See SNP-6566

NODE NO.	EQUATION 12 STRESS (PSI)	EQUATION 13 STRESS (PSI)	CUM. USAGE FACTOR	ALLOWABLE STRESS ($2.4S_m$) PSI
10*	++	++	++	++
15**	35,839	19,821	<0.1	38,880
20**	35,839	19,821	<0.1	38,880
195*	++	++	++	++
45*	++	++	++	++
200**	4,413	16,965	<0.1	38,880
220*	++	++	++	++

*Terminal End Break
**Intermediate Break
++Break as required by MEB 3-1

TABLE 3.6-3 (Sheet 72A)
Revised Stress Analysis Results

SYSTEM: RHR LOOP 1
PIPE BREAK ISOMETRIC NO. FIGURE 3.6-1
(EJ04) SHEET 36
(EM05) SHEET 39

PROBLEM NO. P - 256
BB-S-036-000-CN005
WESTINGHOUSE CALC. NO. WCAP-9728,
VOLUME IV (REVISION 2, ADDENDA)

Bechtel Node Nos.	Westinghouse Node Nos.	Westinghouse Piping Section No.	Westinghouse Piping Component Name	Maximum Eq. 12 Stress (psi)	Maximum Eq. 13 Stress (psi)	Cumulative Usage Factor	Allowable Stress $3S_m$ (psi)
10*	3020	1	12" TRA	++	++	++	++
15**	3030	1	12" ELL	31,300	29,700	0.030	48,600
20**	3060	1	12" ELL	31,300	29,700	0.030	48,600
195*	4000	1	6" RUP	++	++	++	++
45*	3180	2	12" TRA	++	++	++	++
200**	4020	1	6" ELL	4,000	18,456	0.011	48,600
220*	4400	1	6" TRA	++	++	++	++

* Terminal End Break

** Intermediate Break

++ Break as Require by MEB 3-1 Rev. 0

Note: Westinghouse piping section numbers as specified above include more than one components with maximum cumulative usage factor. The stress values and cumulative usage factors listed above are the maximum values for a component.

TABLE 3.6-3 (Sheet 73)

SYSTEM - REACTOR COOLANT SYSTEM PRIMARY LOOP
Pipebreak Isometric No.: Figure 3.6-3(BB01)

Prob. No. 257
Issue - N/A
See SAP-91-165

NODE NO.	EQUATION 12 STRESS (PSI)	EQUATION 13 STRESS (PSI)	CUM. USAGE FACTOR	ALLOWABLE STRESS ($2.4S_m$) PSI
2020*	++	++	++	++
**				
**				
2490*	++	++	++	++

*Terminal End Break
**Intermediate Break Location, Deleted Per MEB 3-1 Rev. 2-June 1987
++Break as required by MEB 3-1

TABLE 3.6-3 (Sheet 73A)

SYSTEM: PRESSURIZER SURGE LINE
PIPE BREAK ISOMETRIC NO. FIGURE 3.6-3 (BB01)

PROBLEM NO. P - 257
WESTINGHOUSE CALC. NO. WCAP-9728, VOLUME IV (REVISION 2, ADDENDA)

Bechtel Node Nos. Note 1	Westinghouse Node Nos.	Westinghouse Piping Section No.	Westinghouse Piping Component Name	Maximum Eq. 12 Stress (psi)	Maximum Eq. 13 Stress (psi)	Cumulative Usage Factor	Allowable Stress $2.4S_m$ (psi)
2020*	3030	N/A	RCL Nozzle	++	++	++	++
N/A	**	N/A	N/A				
N/A	**	N/A	N/A				
2490*	3530	N/A	PZR Nozzle	++	++	++	++

* Terminal End Break

** Intermediate Break location, deleted per MEB 3-1 Rev. 2 June 1987

++ Break as Required by MEB 3-1 Rev. 0

Note: These node numbers are based on Westinghouse original loop analysis not Bechtel.

TABLE 3.6-3 (Sheet 74)

PROBLEM NO. FB-S-011 R/0

SYSTEM – AUX STEAM CONDENSATE TRANSFER PUMP DISCHARGE OUTSIDE CONTAINMENT

PIPE BREAK ISOMETRIC NO. FIGURE 3.6-1 (FB10) SHEET 47

Node	Stress (PSI)			Pipe Break Stress Limit (PSI) $0.8\ (S_A + 1.2\ S_h)$
	Primary (EQN 12)	Secondary (EQN 13)	Total (EQN 12 + EQN 13)	
5*TNGT	940	2,467	3,407	32,400
10	907	4,696	5,602	32,400
55	1,082	8,135	9,216	32,400
70 TNGT	1,164	2,388	3,552	32,400
75	610	1,292	1,902	32,400
80*	436	1,185	1,620	32,400

* - Indicates Terminal End

Note: Arbitrary Intermediate Breaks are not required.

TABLE 3.6-3 (Sheet 75)

PROBLEM NO. FB-S-010 R/0

SYSTEM – AUX STEAM DE-AERATOR FEED PUMP DISCHARGE OUTSIDE CONTAINMENT

PIPE BREAK ISOMETRIC NO. FIGURE 3.6-1 (FB04) SHEET 43 AND (FB13) SHEET 48

Node	Stress (PSI)			Pipe Break Stress Limit (PSI) $0.8\ (S_A + 1.2\ S_h)$
	Primary (EQN 12)	Secondary (EQN 13)	Total (EQN 12 + EQN 13)	
160*	5,522	6,460	11,982	32,400
180 TNGT	5,371	2,295	7,667	32,400
220*	6,260	6,411	12,671	32,400
240 TNGT	5,832	2,592	8,424	32,400
338 TNGT	2,470	1,072	3,543	32,400
342*	1,627	5,457	7,084	32,400
730*	12,363	9,439	21,802	32,400
724 TNGT	6,173	8,089	14,262	32,400

* - Indicates Terminal End

Note: Arbitrary Intermediate Breaks are not required per MEB 3-1, Rev 2.

TABLE 3.6-4

HIGH-ENERGY PIPE BREAK
EFFECTS ANALYSIS RESULTS

Room No. 1101 Elev. 1974'-0" General Floor Area No. 1

I. Sheets of Figure 3.6-1 showing high-energy (H-E) piping in this room 44, 45

II. Effects Analysis

A. Room 1101; non-LOCA Breaks.

1. General: Breaks at all intermediate fittings (e.g., elbows, tees, reducers, welded attachments, and valves) in lines FB-032-HBD-8" having an auxiliary steam supply source and FB-050-HBD-3" having a condensate return source. No restrictions are considered in the calculation of thrust forces.

2. Criteria: The non-LOCA break criteria has been met. (See Note C)

3. Pipe whip: 8-inch and 3-inch auxiliary steam piping restrained per Figure 3.6-1, Sheets 44, 45 such that no whipping occurs.

4. Jet impingement: Auxiliary steam and condensate jets impact safety-related targets required for post accident safe shutdown. Function of the essential targets is ensured.

5. Room pressurization: Breaks in the auxiliary steam supply header will result in peak local pressures greater than 0.2 psid; however, no structures, systems, or components required for post-accident safe shutdown will be adversely affected due to the short duration of the blowdown.

6. Temperature and humidity: Humidity is 100 percent following the breaks. The transient temperature is harsh and provides a limiting case for equipment qualification.

TABLE 3.6-4 (Sheet 2)

Room No. 1102 Elev. 1974'-0" Chiller and Surge Tank Area

I. Sheet of Figure 3.6-1 showing high-energy (H-E) piping in this room 44, 45

II. Effects Analysis

A. Room 1102; non-LOCA Breaks.

1. General: Breaks at all intermediate fittings (e.g., elbows, tees, reducer, welded attachments, and elbows) as follows: FB-032-HBD-8", with auxiliary steam supply source and FB-050-HBD-3" with condensate return source. No restrictions are considered in the calculation of thrust forces.

2. Criteria: The non-LOCA break criteria has been met. (See Note C)

3. Pipe whip: Nonsafety-related auxiliary steam piping whips such that no safety-related items are impacted. Whip restraints are, therefore, not required.

4. Jet impingement: Jets do not impact any safety-related equipment in the area.

5. Room pressurization: Breaks in the auxiliary steam supply header will result in peak local pressures greater than 0.2 psid; however, no structures, systems, or components required for post-accident safe shutdown will be adversely affected due to the short duration of the blowdown.

6. Temperature and humidity: Humidity is 100 percent following the breaks. The transient temperature is harsh and provides a limiting case for equipment qualification.

TABLE 3.6-4 (Sheet 3)

Room No. 1104 Elev. 1974'-0" Letdown Reheat Heat Exchanger Room

I. Sheets of Figure 3.6-1 showing high-energy (H-E) piping in this room 23

II. Effects Analysis

A. Room 1104; non-LOCA Breaks.

1. General: Breaks BGl1-07, 08 are non-LOCA breaks. BGl1-07 has sources from CVCS letdown off Loop 3 and from letdown reheat HX. BG11-08 has letdown reheat HX source with no loop source because of check valve 7039. No restrictions are considered in the calculation of thrust forces.

2. Criteria: The non-LOCA break criteria has been met. (See Note C)

3. Pipe whip: Nothing in this room is required for safe shutdown. Therefore, pipes are unrestrained and free to whip.

4. Jet impingement: No jet targets are required for safe shutdown.

5. Room pressurization: Adequate vent area is provided to ensure the integrity of all structures, systems, and components required for post-accident safe shutdown. Items not required for post-accident safe shutdown will not fail in a manner that could affect post-accident safe shutdown equipment.

6. Temperature and humidity: No safety-related equipment is in the area; therefore, these breaks do not result in limiting temperature and humidity conditions for equipment qualification.

TABLE 3.6-4 (Sheet 4)

Room No. 1105 Elev. 1974'-0" Auxiliary Heat Exchanger Valve Compartment

I. Sheets of Figure 3.6-1 showing high-energy (H-E) piping in this room 23

II. Effects Analysis

A. Room 1105; non-LOCA Breaks.

1. General: Break BG11-06 is a non-LOCA break having sources from CVCS letdown off Loop 3 and from letdown reheat HX. No restrictions are considered in the calculation of thrust forces.

2. Criteria: The non-LOCA break criteria has been met. (See Note C)

3. Pipe whip: Whip targets are uniquely associated with CVCS letdown flow path. Redundant letdown path available to ensure post-accident safe shutdown. Whip restraints are, therefore, not required.

4. Jet impingement: No jet targets are required for safe shutdown.

5. Room pressurization: Adequate vent area is provided to ensure the integrity of all structures, systems, and components required for post-accident safe shutdown. Items not required for safe shutdown will not fail in a manner that could affect post-accident safe shutdown equipment.

6. Temperature and humidity: No safety-related equipment is in the area; therefore, these breaks do not result in limiting temperature and humidity conditions for equipment qualification.

TABLE 3.6-4 (Sheet 5)

Room No. 1107 Elev. 1974'-0" Centrifugal Charging Pump Room B

I. Sheets of Figure 3.6-1 showing high-energy (H-E) piping in this room 19, 21, 22, 37

II. Effects Analysis

A. Room 1107; non-LOCA Breaks.

1. General: Breaks BG02-04, 12* have CCP B source; no source from CCP A because of check valve 8481B. Breaks BG09-31*, 32, 33 have one source from CCP A/CCP B and no other source due to check valve BG-V589. Breaks BG02-13* and BG09-33 have sources from CCP B and from CCP A. Breaks BG10-04, 05* on miniflow line have CCP B source; downstream source is moderate energy. Break EM02-07* has CCP B/CCP A source and moderate energy source downstream. No restrictions are considered in the calculation of thrust forces.

2. Criteria: The non-LOCA break criteria has been met. (See Note C)

3. Pipe Whip: EJFIS0611 is located such that it is not impacted. All other equipment in this room is uniquely associated with CCP B. Redundant charging path is available through CCP A. Whip restraints are, therefore, not required.

4. Jet impingement: No jet targets are required for safe shutdown.

5. Room pressurization: Cold water breaks only, P/T analysis not applicable.

6. Temperature and humidity: See 5 above.

* The following intermediate breaks are deleted: BG02-12, BG02-13, BG09-31, BG10-05 & EM02-07.

TABLE 3.6-4 (Sheet 6)

Room No. 1114 Elev. 1974'-0" Centrifugal Charging Pump Room A

I. Sheets of Figure 3.6-1 showing high-energy (H-E) piping in this room 19, 21, 22

II. Effects Analysis

A. Room 1114; non-LOCA Breaks.

1. General: Breaks BG02-01 and BG09-35*, 36* have CCP A source; no source from CCP B because of check valves 8481A and V590, respectively. Break BG02-18 has both CCP A and CCP B source. Breaks BG10-01*, 03, & 06* on Miniflow line have CCP A source; downstream source is moderate energy. No restrictions are considered in the calculation of thrust forces.

2. Criteria: The non-LOCA break criteria has been met. (See Note C)

3. Pipe whip: All equipment in this room is uniquely associated with CCP A. Redundant charging path is available through CCP B. Whip restraints are, therefore, not required.

4. Jet impingement: No jet targets are required for safe shutdown.

5. Room pressurization: Cold water breaks only, P/T analysis not applicable.

6. Temperature and humidity: See 5 above.

* Intermediate Breaks BG02-18, BG09-35, BG09-36, BG10-01, & BG10-06 are deleted.

TABLE 3.6-4 (Sheet 7)

Room No. 1115 Elev. 1974'-0" Normal
Charging Pump Room

I. Sheets of Figure 3.6-1 showing high-energy (H-E) piping in this room 18, 19, 21

II. Effects Analysis

A. Room 1115; non-LOCA Breaks.

1. General: Breaks BG01-01, and 04* have a NCP source with no CCP A/B source because of check valve 8497. Break BG01-06 has a NCP source with a moderate energy source downstream of valve HV 8109. Breaks BG01-07*, 08, 09, 11, and 14 have both NCP and CCP A/B sources with no regenerative HX source because of check valve 8381. Breaks BG02-07, 10, and 11 and the downstream break on BG09-34 have both NCP and CCP A/B sources. The upstream break on BG09-34 has a NCP source only. No restrictions are considered in the calculation of thrust forces.

2. Criteria: The non-LOCA break criteria has been met. (See Note C)

3. Pipe whip: All equipment in this room is uniquely associated with Normal charging path. Redundant charging path is available through either CCP path. Whip restraints are, therefore, not required.

4. Jet impingement: No jet targets are required for safe shutdown.

5. Room pressurization: Cold water breaks only, P/T analysis not applicable.

6. Temperature and humidity: See 5 above.

- Intermediate breaks BG01-04 and BG01-07 are deleted per MEB 3-1, Rev. 2, criteria.

TABLE 3.6-4 (Sheet 8)

Contents of this page were moved to TABLE 3.6-4 (Sheet 7)

TABLE 3.6-4 (Sheet 9)

Room No. 1117 Elev. 1974'-0" Boric Acid Tank Room B

I. Sheets of Figure 3.6-1 showing high-energy (H-E) piping in this room 44, 45

II. Effects Analysis

A. Room 1117; non-LOCA Breaks.

1. General: Breaks at all intermediate fittings (e.g., elbows, tees, reducers, welded attachments, and valves) in line FB-082-HBD-2" with a condensate return source. No restrictions are considered in the calculation of thrust forces.

2. Criteria: The non-LOCA break criteria has been met (See Note C)

3. Pipe whip: No items required for post-accident safe shutdown are impacted. Whip restraints are, therefore, not required.

4. Jet impingement: No jet targets are required for safe shutdown.

5. Room pressurization: Breaks in condensate return lines will not pressurize the area.

6. Temperature and humidity: No equipment in this room is required for post-accident safe shutdown; additionally, breaks in condensate return lines do not generate a harsh temperature or humidity environment.

TABLE 3.6-4 (Sheet 10)

Room No. 1122 Elev. 1974'-0" General Floor Area No. 3

I. Sheets of Figure 3.6-1 showing high-energy (H-E) piping in this room 37, 45

II. Effects Analysis

A. Room 1122; non-LOCA Breaks.

1. General: Breaks at all intermediate fittings (e.g., elbows, tees, reducers, welded attachments, and valves) in lines FB-095-HBD-3" and FB-050-HBD-3" with condensate return source. No restrictions are considered in calculation of thrust forces.

2. Criteria: The non-LOCA break criteria has been met. (See Note C)

3. Pipe whip: No items required for post-accident safe shutdown are impacted. Whip restraints are, therefore, not required.

4. Jet impingement: An 8-inch ESW line to the auxiliary feedwater system, et al, is impacted. Function of this essential line is ensured.

5. Room pressurization: Breaks in condensate return lines will not pressurize the area.

6. Temperature and humidity: Breaks in condensate return lines do not generate a harsh temperature or humidity environment.

TABLE 3.6-4 (Sheet 11)

Room No. 1124 Elev. 1974'-0" Letdown Heat Exchanger Valve Compartment

I. Sheets of Figure 3.6-1 showing high-energy (H-E) piping in this room 20

II. Effects Analysis

A. Room No. 1124; non-LOCA Breaks.

1. General: Breaks BG03-01, 02* and the branch break on BG03-03* have a combined source from CVCS letdown/ letdown. Break BG03-12* and the upstream and downstream breaks on BG03-03* have one source from CVCS letdown and one limited source from the letdown HX. Breaks BG03-09*, 10, 11, 13* and 16* have one source only - from CVCS letdown. The downstream source is moderate energy. No restrictions are considered in the calculation of thrust forces.

2. Criteria: The non-LOCA break criteria has been met. (See Note C)

3. Pipe whip: All equipment in this room is uniquely associated with normal letdown. Redundant letdown is available for shutdown. Whip restraints are, therefore, not required.

4. Jet impingement: No jet targets are required for safe shutdown.

5. Room pressurization: Breaks in the CVCS letdown lines will result in peak local pressures greater than 0.2 psid; however, no structures, systems, or components required for post-accident safe shutdown will be adversely affected due to the short duration of the blowdown. Items not required for post-accident safe shutdown will not fail in a manner that could affect post-accident safe shutdown equipment.

6. Temperature and humidity: No post-accident safe shutdown equipment is in the area; therefore, these breaks do not result in limiting temperature and humidity conditions for equipment qualification.

* The following intermediate breaks are deleted per MEB 3-1, Rev 2: BG03-02, BG03-03, BG03-12, BG03-09, BG03-13, & BG03-16.

TABLE 3.6-4 (Sheet 12)

Room No. 1125 Elev. 1974'-0" Letdown Heat Exchanger Room

I. Sheets of Figure 3.6-1 showing high-energy (H-E) piping in this room 20, 23

II. Effects Analysis

A. Room No. 1125; non-LOCA Breaks.

1. General: Break BG03-05 has one source from CVCS letdown and one limited source from the letdown HX. Break BG03-15* has one combined source from CVCS letdown/letdown HX. Break BG03-06 has one source from CVCS letdown. No restrictions are considered in the calculation of thrust forces.

2. Criteria: The non-LOCA break criteria has been met. (See Note C)

3. Pipe whip: All equipment in this room is uniquely associated with normal letdown. Redundant letdown is available for shutdown. Whip restraints are, therefore, not required.

4. Jet impingement: No jet targets are required for safe shutdown.

5. Room pressurization: Breaks in the CVCS letdown supplied lines will result in peak local pressures greater than 0.2 psid; however, no structures, systems, or components required for post-accident safe shutdown will be adversely affected due to the short duration of the blowdown. Items not required for post-accident safe shutdown will not fail in a manner that could affect post-accident safe shutdown equipment.

6. Temperature and humidity: No safety-related equipment is in the area; therefore, these breaks do not result in limiting temperature and humidity conditions for equipment qualification.

* The intermediate break BG03-15 is deleted.

TABLE 3.6-4 (Sheet 13)

Room No. 1126 Elev. 1974'-0" Boron Injection Tank Room

I. Sheets of Figure 3.6-1 showing high-energy (H-E) piping in this room 37

II. Effects Analysis

A. Room 1126, non-LOCA Breaks.

1. General: Breaks EM02-06, 16 have CCP A source; EM02-05 has CCP B source. For all breaks, the BIT source downstream is moderate energy. No restrictions are considered in the calculation of thrust forces.

2. Criteria: The non-LOCA break criteria has been met. (See Note C)

3. Pipe whip: Breaks EM02-05 and 06 are restrained per Figure 3.6-1, Sheet 37, such that whipping is prevented.

4. Jet impingement: All equipment in this room is uniquely associated with BIT and redundant means of boration exist for shutdown. Therefore, since any high energy break in the room will flood all the essential BIT equipment, jet impingement is not applicable.

5. Room pressurization: Cold water breaks only, P/T analysis not applicable.

6. Temperature and humidity: See 5 above.

TABLE 3.6-4 (Sheet 14)

Room No. 1127 Elev. 1974'-0" Stairwell A-2

I. Sheet of Figure 3.6-1 showing high-energy (H-E) piping in this room 45

II. Effects Analysis

A. Room No. 1127; non-LOCA Breaks.

1. General: Breaks at all intermediate fittings (e.g., elbows, tees, reducers, welded attachments, and valves) in lines FB-050-HBD-3" and FB-095-HBD-3" having source from condensate return. The calculation of thrust forces is not required, since these condensate lines are open to atmospheric pressure.

2. Criteria: The non-LOCA break criteria has been met. (See Note C)

3. Pipe whip: See Item 1 above.

4. Jet impingement: See Item 1 above.

5. Room pressurization: Breaks in the condensate return lines will not pressurize the area.

6. Temperature and humidity: Condensate water in these lines will not adversely affect any safety-related equipment required for post-accident safe shutdown.

TABLE 3.6-4 (Sheet 15)

Room No. 1128 Elev. 1974'-0" General Area No. 5

1. Sheets of Figure 3.6-1 showing high-energy (H-E) piping in this room 45

II. Effects Analysis

A. Room No. 1128; non-LOCA Breaks.

1. General: Breaks at all intermediate fittings (e.g., elbows, tees, reducers, welded attachments, and valves) in lines FB-050-HBD-3" and FB-095-HBD-3" having source from condensate return. The calculation of thrust forces is not required, since these condensate lines are open to atmospheric pressure.

2. Criteria: The non-LOCA break criteria has been met. (See Note C)

3. Pipe whip: See Item 1 above.

4. Jet impingement: See Item 1 above.

5. Room pressurization: Breaks in the condensate return lines will not pressurize the area.

6. Temperature and humidity: Condensate water in these lines will not adversely affect any safety-related equipment required for post-accident safe shutdown.

7. Any rise in temperature and humidity due to the postulated breaks in Room 1129 will not affect adversely any safety related equipment required for post-accident safe shutdown.

TABLE 3.6-4 (Sheet 16)

Room No. 1129 Elev. 1974'-0" Auxiliary Steam Condensate Recovery and Storage Tank Room

I. Sheet of Figure 3.6-1 showing high-energy (H-E) piping in this room 43, 45, 46, 47, 48

II. Effects Analysis

A. Room No. 1129; non-LOCA Breaks.

1. General: Breaks at all intermediate fittings (e.g., elbows, tees, reducers, welded attachments, and valves) as follows: *line FB-110-HBD-2", lines FB-050, 095, 116-HBD-3", line FB-078-HBD-4", and lines FB-051, 052, 053-HBD-6" have condensate sources. The calculation of thrust forces is not required, since these lines carry condensate at low or atmospheric pressure.

   Lines FB-001, 054, 055-HBD-4" and lines FB-056, 057-HBD-2" have source from auxiliary steam deaerator feed pumps. These lines and FB-110-HBD-2" have been seismically analyzed and their stresses meet subsection 3.6.2.1.1.b.2 criteria. Hence, arbitrary intermediate breaks are not required to be postulated.
   Non-LOCA terminal end breaks FB04-02, FB04-03, FB13-01 and FB10-01 were postulated. No restrictions were considered in the calculation of thrust forces.

2. Criteria: The non-LOCA break criteria has been met. (See Note C)

3. Pipe whip: Pipe support FB10-H501 is designed to take pipe break load. Pipe supports FB13-H512, FB04-H001 & FB04-H002 are designed to take pipe break loads. No essential equipment is impacted.

4. Jet impingement: No essential equipment is impacted by jets.

5. Room pressurization: Breaks in the condensate return lines will not pressurize the area. The pressure increases marginally (~ 0.5 psi) due to terminal end breaks and has no impact on any essential equipment.

6. Temperature and humidity: Condensate water in these lines, a steam/condensate mixture in line FB-110-HBD-2" and lines FB-001, 054, 055-HBD-4" and lines FB-056, 057-HBD-2" will not adversely affect any safety-related equipment required for post-accident safe shutdown.

   *Line FB-110-HBD-2" has the potential to carry a mixture of condensate and steam and has been reclassified as high-energy line.

TABLE 3.6-4 (Sheet 17)

Room No. 1130 Elev. 1974'-0" North Corridor

I. Sheets of Figure 3.6-1 showing high-energy (H-E) piping in this room 44, 45

II. Effects Analysis

A. Room 1130; non-LOCA Breaks.

1. General: Breaks at all intermediate fittings (e.g., elbows, tees, reducers, welded attachments, and valves) as follows: FB-032-HBD-8" with auxiliary steam supply source, FB-095-HBD-3" and FB-050-HBD-3" with condensate return source. No restrictions are used in the calculation of thrust forces.

2. Criteria: The non-LOCA break criteria has been met. (See Note C)

3. Pipe whip: No essential equipment is impacted. Whip restraints are, therefore, not required.

4. Jet impingement: No jet targets are required for safe shutdown.

5. Room pressurization: Breaks in the auxiliary steam supply header will result in peak local pressures greater than 0.2 psid; however, no structures, systems, or components required for post-accident safe shutdown will be adversely affected, due to the short duration of the blowdown.

6. Temperature and humidity: Humidity is 100 percent following the breaks. The transient temperature is harsh and provides a limiting case for equipment qualification.

TABLE 3.6-4 (Sheet 18)

High energy lines which were formerly in Room 1201 (Sheet 17), Room 1202 (Sheet 18), and Room 1321 (Sheet 27) have been declassified to moderate energy.

TABLE 3.6-4 (Sheet 19)

Room No. 1203 Elev. 1988'-0" Pipe Space B

I. Sheets of Figure 3.6-1 showing high-energy (H-E) piping in this room 19, 20, 21, 22, 23

II. Effects Analysis

A. Room No. 1203; non-LOCA Breaks.

1. General: Breaks BG02-14, 15 have a CCP B source and a CCP A source. Breaks BG09-06, 07, 08, 19, 20, 23, 29, and 30; Break BG09-38, which is a Callaway only break; and Breaks BG09-41 and 42, which are Wolf Creek only breaks; have a charging pumps source only, since check valves BB-V118, V148, V178, and V208 are between the breaks and downstream source. Breaks BGll-02*, 03, 04, 05, and 13* have a CVCS letdown from Loop 3 source and a limited source from the letdown reheat heat exchanger. Breaks BG09-01, 02, 12, 13 have CCP A and CCP B sources. Breaks BG11-09, 10, 11, 12 have a CVCS letdown from Loop 3 source only. There is no source in the opposite direction due to closed valve TCV-381A. No restrictions are considered in the calculation of thrust forces.

2. Criteria: The non-LOCA break criteria has been met. (See Note C)

3. Pipe whip: Breaks BG02-14, 15; BG09-01, 02, 12, 13; and BGll-02*, 03, 04, 10, 11, 12, 13* and the downstream break on BGll-09 are restrained per Figure 3.6-1, Sheets 21 and 23, such that no essential equipment is impacted.

4. Jet impingement: Two CVCS lines to the seal water injection filters, a CVCS CCP charging line, a CVCS CCP miniflow line, an RHR heat exchanger discharge line, and an RHR SI suction line are impacted by jets. Function of all these essential lines is ensured.

* The following intermediate breaks are deleted: BG11-02, BG11-13.

TABLE 3.6-4 (Sheet 19 - cont)

5. Room pressurization: Breaks in the CVCS letdown line will result in pressures greater than 0.2 psid. However, no post-accident safe shutdown equipment will be adversely affected due to the short duration of the blowdown.

6. Temperature and humidity: No equipment in this room is required for post-accident safe shutdown; therefore, the resultant temperature and humidity do not affect the qualification of any equipment.

TABLE 3.6-4 (Sheet 20)

Room No. 1204 Elev. 1988'-0" Pipe Space A

I. Sheets of Figure 3.6-1 showing high-energy (H-E) piping in this room 18, 19, 21, 37

II. Effects Analysis

A. Room No. 1204; non-LOCA Breaks.

1. General: Break BG02-16* is located at a 3-inch tee. The sources for the three break points are as follows: upstream - CCP B and CCP A, Branch (B) - CCP A and CCP B, downstream - CCP A/CCP B. Break BG02-17* has one CCP A/CCP B source. Break BG09-11 has two CCP A/CCP B combined sources. Breaks EM02-08, 09, 10, and 11 have a CCP B source with a moderate energy source downstream. Break BG09-40 is a Wolf Creek only break with a combined CCP A/CCP source from both directions. Breaks EM02-12*, 13, 14, and 15 have a CCP A source with a moderate energy source downstream. No restrictions are considered in the calculation of thrust forces.

2. Criteria: The non-LOCA break criteria has been met. (See Note C)

3. Pipe whip: All three breaks on BG02-16*, the upstream break on BG02-17*, and break BG09-11 are restrained per Figure 3.6-1, Sheets 19, 21, and 23, such that no essential equipment is impacted.

4. Jet impingement: A CVCS CCP charging line, a CVCS CCP miniflow line, an ESW room cooler return line, and a CCW room cooler return line are impacted by jets. Function of all these essential lines is ensured.

5. Room pressurization: Cold water breaks only, P/T analysis not applicable.

6. Temperature and humidity: See 5 above.

* Intermediate Breaks BG02-16, BG02-17, EM02-12 are deleted.

TABLE 3.6-4 (Sheet 21)

Room No. 1207 Elev. 1989'-0" Pipe Chase

I. Sheets of Figure 3.6-1 showing high-energy (H-E) piping in this room 43, 46, 47

II. Effects Analysis

A. Room No. 1207; non-LOCA Breaks.

1. General: Breaks at all intermediate fittings (e.g.,elbows, tees, reducers, welded attachments, and valves) as follows: FB-078-HBD-4" has a condensate return source with a moderate energy source downstream.

   FB-110-HBD-2" has a condensate return source from both ends. It has potential to carry steam. FB-001-HBD-4" has an auxiliary steam deaerator feed pumps source with a moderate energy source from the auxiliary steam deaerator. Both lines have been reclassified as high-energy lines and analyzed seismically to meet stresses per subsection 3.6.2.1.1.b.2 criteria. Therefore, arbitrary intermediate breaks are not postulated on these lines. No restrictions are considered in the calculation of thrust forces.

   Terminal end break FB10-02 has a penetration designed such that no condensation/steam released due to a break will enter Room 1207.

   Non-LOCA terminal end break FB04-01 was postulated in adjacent Room 1329, which has an access opening for the ladder to Room 1207. However, the anchor at the penetration is designed such that no steam will enter Room 1329 in the event of a terminal end break.

2. Criteria: The non-LOCA break criteria has been met. (See Note C)

3. Pipe whip: No essential equipment is impacted. Whip restraints are, therefore, not required. Pipe support FB10-H502 is designed to take pipe break load.

4. Jet impingement: No essential equipment is impacted by jets.

5. Room pressurization: - Cold water breaks only, P/T analysis not applicable. Penetration and anchor are designed such that no steam will enter Room 1207 in the event of a postulated terminal end break.

6. Temperature and humidity: See 5 above.

TABLE 3.6-4 (Sheet 22)

Room No. 1301 Elev. 2000'-0" Corridor No. 1

I. Sheets of Figure 3.6-1 showing high-energy (H-E) piping in this room 44, 45

II. Effects Analysis

A. Room No. 1301; non-LOCA Breaks.

1. General: Breaks at all intermediate fittings (e.g., elbows, tees, reducers, welded attachments, and valves) as follows: FB-032-HBD-8" has an auxiliary steam supply source, FB-082-HBD-2", FB-096-HBD-3", and FB-095-HBD-3" have a condensate return source. No restrictions are considered in the calculation of thrust forces.

2. Criteria: The non-LOCA break criteria has been met. (See Note C)

3. Pipe whip: The 8-inch auxiliary steam piping whips into non-safety-related equipment. Whip restraints are, therefore, not required.

4. Jet impingement: No essential equipment is impacted by jets.

5. Room pressurization: Breaks in the auxiliary steam supply header will result in peak local pressures greater than 0.2 psid; however, no structures, systems, or components required for post-accident safe shutdown will be adversely affected due to the short duration of the blowdown.

6. Temperature and humidity: Humidity is 100 percent following the breaks. The transient temperature is harsh and provides a limiting case for equipment qualification.

TABLE 3.6-4 (Sheet 23)

Room No. 1302 Elev. 2000'-0" Filter Compartments - (5)

I. Sheets of Figure 3.6-1 showing high-energy (H-E) piping in this room 21

II. Effects Analysis

A. Room No. 1302; non-LOCA Breaks.

1. General: Breaks BG09-09, 10, 14, and 15 have a charging pump source only since check valves BB-V118, V148, V178, and V208 are between the breaks and the downstream source. No restrictions are considered in the calculation of thrust forces.

2. Criteria: The non-LOCA break criteria has been met. (See Note C)

3. Pipe whip: All equipment in each compartment is uniquely associated with the seal water filters and a redundant path through CCW is available to the seals. Whip restraints are, therefore, not required.

4. Jet impingement: No jet targets are required to ensure post-accident safe shutdown.

5. Room pressurization: Cold water breaks only, P/T analysis not applicable.

6. Temperature and humidity: See 5 above.

TABLE 3.6-4 (Sheet 24)

Room No. 1304 Elev. 2013'-6" Auxiliary Feedwater Pipe Chase

I. Sheets of Figure 3.6-1 showing high-energy (H-E) piping in this room NA

II. Effects Analysis

Safety-related piping in this room is associated with portions of the auxiliary feedwater system which experience high-energy conditions less than 1 percent of the plant operation time. This piping is therefore considered moderate energy per Section 3.6.1.la, and high-energy line breaks are not applicable.

1. General: No breaks are postulated in this room as noted above.

2. Criteria: N/A

3. Pipe whip: N/A

4. Jet impingement N/A

5. Room pressurization: The subcompartment pressurization analysis for the auxiliary feedwater valve compartments and pipe chases is based on a maximum break size of 3/4-inch nozzle on a back-up gas accumulator tank pressurized with N2 gas.

   The results of the analysis indicate that the existing vent area is adequate to limit the room pressure to the design value of 1.5 psig.

6. Temperature and humidity: No extreme temperature or humidity environments are experienced as a result of the back-up gas accumulator tank nozzle break.

TABLE 3.6-4 (Sheet 25)

Room No. 1305 Elev. 2013'-6" Auxiliary Feedwater Pipe Chase

I. Sheets of Figure 3.6-1 showing high-energy (H-E) piping in this room NA

II. Effects Analysis

Safety-related piping in this room is associated with portions of the auxiliary feedwater system which experience high-energy conditions less than 1 percent of the plant operation time. This piping is therefore considered moderate energy per Section 3.6.1.la, and high-energy line breaks are not applicable.

1. General: No breaks are postulated in this room as noted above.

2. Criteria: N/A

3. Pipe whip: N/A

4. Jet impingement: N/A

5. Room pressurization: The subcompartment pressurization analysis for the auxiliary feedwater valve compartments and pipe chases is based on a maximum break size of 3/4-inch nozzle on a back-up gas accumulator tank pressurized with N2 gas.

   The results of the analysis indicate that the existing vent area is adequate to limit the room pressure to the design value of 1.5 psig.

6. Temperature and humidity: No extreme temperature or humidity environments are experienced as a result of the back-up gas accumulator tank nozzle break.

TABLE 3.6-4 (Sheet 26)

Room No. 1306 Elev. 2000'-0" Filter Valve Compartments - (5)

I. Sheets of Figure 3.6-1 showing high-energy (H-E) piping in this room 21

II. Effects Analysis

A. Room No. 1306; non-LOCA Breaks.

1. General: Break BG09-39 is a Callaway only break and has a charging pump source only since check valves "1" and "I" BB-V118, V148, V178, and V208 are located between the break and the downstream source. No restrictions are considered in the calculation of thrust forces.

2. Criteria: The non-LOCA break criteria has been met. (See Note C)

3. Pipe whip: All equipment in each compartment is uniquely associated with the seal water filters and a redundant path through CCW is available to the seals. Whip restraints are, therefore, not required.

4. Jet impingement: No jet targets are required to ensure post-accident safe shutdown.

5. Room pressurization: Cold water breaks only, P/T analysis not applicable.

6. Temperature and humidity: See 5 above.

TABLE 3.6-4 (Sheet 27)

Room No. 1322 (No Break Zone) - Elev. 2000'-0"
Pipe Penetration Room B

I. Sheets of Figure 3.6-1 showing high-energy (H-E) piping in this room 21

II. Effects Analysis

A. Room No. 1322; No Postulated Breaks.

1. General: This area is a designated no break zone. (See Section 3.6.2.1.le)

2. Criteria: NA

3. Pipe whip: None, no postulated breaks.

4. Jet impingement: Analysis is not applicable in "no break zone."

5. Room pressurization: No breaks, cold water cracks only, therefore P/T analysis is not applicable.

6. Temperature and humidity: See Section 5 above.

TABLE 3.6-4 (Sheet 28)

Room No. 1323 (No Break Zone) Elev. 2000'-0" Pipe Penetration Room A

I. Sheets of Figure 3.6-1 showing high-energy (H-E) piping in this room 18

II. Effects Analysis

A. Room No. 1323; No Postulated Breaks.

1. General: This area is a designated no break zone. (See Section 3.6.2.1.le)

2. Criteria: NA

3. Pipe whip: None, no postulated breaks.

4. Jet impingement: Analysis is not applicable in "no break zone."

5. Room pressurization: No breaks, cold water cracks, P/T analysis is not applicable.

6. Temperature and humidity: See 5 above.

TABLE 3.6-4 (Sheet 29)

Room No. 1324 Elev. 2000'-0" Auxiliary Feedwater Pumps Valve Compartment No. 1

I. Sheets of Figure 3.6-1 showing high-energy (H-E) piping in this room NA

II. Effects Analysis

Safety-related piping in this room is associated with portions of the auxiliary feedwater system which experience high-energy conditions less than 1 percent of the plant operation time. This piping is therefore considered moderate energy per Section 3.6.1.la, and high-energy line breaks are not applicable.

1. General: No breaks are postulated in this room as noted above.

2. Criteria: N/A

3. Pipe whip: N/A

4. Jet impingement: N/A

5. Room pressurization: The subcompartment pressurization analysis for the auxiliary feedwater valve compartments and pipe chases is based on a maximum break size of 3/4-inch nozzle on a back-up gas accumulator tank pressurized with N2 gas.

   The results of the analysis indicate that the existing vent area is adequate to limit the room pressure to the design value of 1.5 psig.

6. Temperature and humidity: No extreme temperature or humidity environments are experienced as a result of the back-up gas accumulator tank nozzle break.

TABLE 3.6-4 (Sheet 30)

Room No. 1325 Elev. 2000'-0" Auxiliary Feedwater Pump Room B

I. Sheets of Figure 3.6-1 showing high-energy (H-E) piping in this room NA

II. Safety-related piping in this room is associated with portions of the auxiliary feedwater system which experience high-energy conditions less than 1 percent of the plant operation time. This piping is therefore considered moderate energy per Section 3.6.1.la, and high-energy line breaks are not applicable.

TABLE 3.6-4 (Sheet 31)

Room No. 1326 Elev. 2000'-0" Auxiliary Feedwater Pump Room A

I. Sheets of Figure 3.6-1 showing high-energy (H-E) piping in this room NA

II. Safety-related piping in this room is associated with portions of the auxiliary feedwater system which experience high-energy conditions less than 1 percent of the plant operation time. This piping is therefore considered moderate energy per Section 3.6.1.1a, and high-energy line breaks are not applicable.

TABLE 3.6-4 (Sheet 32)

Room No. 1327 Elev. 2000'-0" Auxiliary Feedwater Pump Valve Component No. 2

I. Sheets of Figure 3.6-1 showing high-energy (H-E) piping in this room NA

II. Effects Analysis

Safety-related piping in this room is associated with portions of the auxiliary feedwater system which experience high-energy conditions less than 1 percent of the plant operation time. This piping is therefore considered moderate energy per Section 3.6.1.1a, and high-energy line breaks are not applicable.

1. General: No breaks are postulated in this room as noted above.

2. Criteria: N/A

3. Pipe whip: N/A

4. Jet impingement: N/A

5. Room pressurization: The subcompartment pressurization analysis for the auxiliary feedwater valve compartments and pipe chases is based on a maximum break size of 3/4-inch nozzle on a back-up gas accumulator tank pressurized with N2 gas.

   The results of the analysis indicate that the existing vent area is adequate to limit the room pressure to the design value of 1.5 psig.

6. Temperature and humidity: No extreme temperature or humidity environments are experienced as a result of the back-up gas accumulator tank nozzle break.

TABLE 3.6-4 (Sheet 33)

Room No. 1328 Elev. 2000'-0" Auxiliary Feedwater Pump Valve Compartment No. 3

I. Sheets of Figure 3.6-1 showing high-energy (H-E) piping in this room NA

II. Effects Analysis

Safety-related piping in this room is associated with portions of the auxiliary feedwater system which experience high-energy conditions less than 1 percent of the plant operation time. This piping is therefore considered moderate energy per Section 3.6.1.la, and high-energy line breaks are not applicable.

1. General: No breaks are postulated in this room as noted above.

2. Criteria: N/A

3. Pipe whip: N/A

4. Jet impingement: N/A

5. Room pressurization: The subcompartment pressurization analysis for the auxiliary feedwater valve compartments and pipe chases is based on a maximum break size of 3/4-inch nozzle on a back-up gas accumulator tank pressurized with N2 gas.

   The results of the analysis indicate that the existing vent area is adequate to limit the room pressure to the design value of 1.5 psig.

6. Temperature and humidity: No extreme temperature or humidity environments are experienced as a result of the back-up gas accumulator tank nozzle break.

TABLE 3.6-4 (Sheet 34)

Room No. 1329 Elev. 2000'-0" Vestibule

I. Sheets of Figure 3.6-1 showing high-energy (H-E) piping in this room 43

II. Effects Analysis

A. Room 1329; Non-LOCA Breaks.

1. General: FB-001-HBD-4" has auxiliary steam deaerator feed pump source. No restrictions are considered in the calculation of thrust forces.

   Arbitrary intermediate breaks in this line are not postulated as the line has been seismically analyzed and the stresses meet subsection 3.6.2.1.1.b.2 criteria. Non-LOCA terminal end break, FB04-01, is postulated in a specially designed penetration such that no steam will enter Room 1329 in the event of a terminal end break.

2. Criteria: The non-LOCA break criteria has been met. (See Note C)

3. Pipe whip: No essential equipment is impacted. Pipe support FB04-H034 is designed to take pipe break load.

4. Jet impingement: No jet targets are required to assure post-accident safe shutdown.

5. Room pressurization: Penetration and anchor are designed such that no steam will enter Room 1329 in the event of a postulated terminal end break.

6. Temperature and humidity: See 5 above.

TABLE 3.6-4 (Sheet 35)

Room No. 1330 Elev. 2000'-0" Auxiliary Feedwater Pump Valve Compartment No. 4

I. Sheets of Figure 3.6-1 showing high-energy (H-E) piping in this room NA

II. Effects Analysis

Safety-related piping in this room is associated with portions of the auxiliary feedwater system which experience high-energy conditions less than 1 percent of the plant operation time. This piping is therefore considered moderate energy per Section 3.6.1.la, and high-energy line breaks are not applicable.

1. General: No breaks are postulated in this room as noted above.

2. Criteria: N/A

3. Pipe whip: N/A

4. Jet impingement: N/A

5. Room pressurization: The subcompartment pressurization analysis for the auxiliary feedwater valve compartments and pipe chases is based on a maximum break size of 3/4-inch nozzle on a back-up gas accumulator tank pressurized with N2 gas.

   The results of the analysis indicate that the existing vent area is adequate to limit the room pressure to the design value of 1.5 psig.

6. Temperature and humidity: No extreme temperature or humidity environments are experienced as a result of the back-up gas accumulator tank nozzle break.

TABLE 3.6-4 (Sheet 36)

Room No. 1331 Elev. 2000'-0" Auxiliary Feedwater Pump Room C

I. Sheets of Figure 3.6-1 showing high-energy (H-E) piping in this room 49, 46

II. Effects Analysis

A. Room 1331; Non-LOCA Breaks.

1. General: Breaks FC01-01, 02, 09, and 10 have main steam supply to turbine AFP source; source from auxiliary steam supply is considered moderate energy. Breaks at all intermediate fittings (e.g., elbows, tees, reducers, welded attachments, and valves) in FB-078-HBD-4" have condensate return source. No restrictions are considered in the calculation of thrust forces for the FC breaks. No thrust force calculations are required on the FB line since it is at atmospheric pressure.

2. Criteria: The non-LOCA break criteria has been met. (See Note C)

3. Pipe whip: Breaks FC01-02, 09 and the upstream break on FC01-10 are restrained per Figure 3.6-1, Sheet 49, such that whipping is prevented.

4. Jet impingement: No jet targets are required to ensure post-accident safe shutdown.

5. Room pressurization: See Appendix 3B, Section 3.B.4.1.

6. Temperature and humidity: See Appendix 3B, Section 3.B.4.1.

TABLE 3.6-4 (Sheet 37)

Room No. 1407 Elev. 2026'-0" Boric Acid Batching Tank

I. Sheets of Figure 3.6-1 showing high-energy (H-E) piping in this room 45

II. Effects Analysis

A. Room 1407; Non-LOCA Breaks.

1. General: Breaks at all intermediate fittings (e.g., elbows, tees, reducers, welded attachments, and valves) in FB-082-HBD-2" with condensate return source. No restrictions are considered in the calculation of thrust forces.

2. Criteria: The non-LOCA break criteria has been met. (See Note C)

3. Pipe whip: No essential equipment is impacted. Whip restraints are, therefore, not required.

4. Jet impingement: No jet targets are required for safe shutdown.

5. Room pressurization: Cold water breaks only, P/T analysis not applicable.

6. Temperature and humidity: See 5 above.

TABLE 3.6-4 (Sheet 38)

Room No. 1411 (No Break Zone) - Elevation 2026'-0"
Main Steam/Main Feedwater Isolation
Valve Compartment

I. Sheets of Figure 3.6-1 showing high-energy (H-E) piping in this room 1, 2, 3, 29, 30

II. Effects Analysis

A. Room 1411; No Postulated Breaks.

1. General: This area is a designated no break zone. (See Section 3.6.2.1.le)

2. Criteria: NA

3. Pipe whip: There is no pipe whip because there are no postulated breaks in the no break zone.

4. Jet impingement: See 3 above.

5. Room pressurization: See Appendix 3B, Section 3B.4.2.

6. Temperature and humidity: See Appendix 3B, Section 3B.4.2.

TABLE 3.6-4 (Sheet 39)

Room No. 1412 (No Break Zone) - Elev. 2026'-0"
Main Steam/Main Feedwater Isolation
Valve Compartment

I. Sheets of Figure 3.6-1 showing high-energy (H-E) piping in this room 1, 2, 3, 29, 30, 49

II. Effects Analysis

A. Room 1412; No Postulated Breaks.

1. General: This area is a designated no break zone. (See Section 3.6.2.1.le)

2. Criteria: NA

3. Pipe whip: There is no pipe whip because there are no postulated breaks in the no break zone.

4. Jet impingement: See 3 above.

5. Room pressurization: See Appendix 3B, Section 3B.4.2.

6. Temperature and humidity: See Appendix 3B, Section 3B.4.2.

TABLE 3.6-4 (Sheet 40)

Room No. 2000 Main Steam

I. Sheets of Figure 3.6-1 showing high-energy (H-E) piping in this room 1

II. Effects Analysis

A. Problem No. 001, Steam Generator A, Secondary Systems Breaks.

1. General: Breaks AB01-01, 02, and 03 have sources from steam generator A and turbine building. No restrictions were considered in the calculation of thrust forces. Breaks AB01-02 and 03 can be deleted per arbitrary break elimination.

2. Criteria: The secondary systems break criteria has been met. (See Note D)

3. Pipe whip: Breaks are restrained per Figure 3.6-1, Sheet 1, such that no whipping occurs.

4. Jet impingement: The jets from these breaks do not impact any essential systems.

5. Room pressurization: See Section 6.2.1.1.3a

6. Temperature and humidity: See Section 6.2.1.1.3a

7. Flooding: See Section 6.3.2.2

B. Problem No. 001A, Steam Generator B, Secondary Systems Breaks.

1. General: Breaks AB01-05, 06, and 07 have sources from steam generator B and turbine building. No restrictions were considered in the calculation of thrust forces. Breaks AB01-06 and 07 can be deleted per arbitrary break elimination.

2. Criteria: The secondary systems break criteria has been met. (See Note D)

TABLE 3.6-4 (Sheet 40 - cont)

3. Pipe whip: Breaks are restrained per Figure 3.6-1, Sheet 1, such that no whipping occurs.

4. Jet impingement: The jets from these breaks do not impact any essential systems.

5. Room pressurization: See Section 6.2.1.1.3a

6. Temperature and humidity: See Section 6.2.1.1.3a

C. Problem No. 002, Steam Generator D, Secondary Systems Breaks.

1. General: Breaks AB01-13, 14, and 15 have sources from steam generator D and turbine building. No restrictions were considered in the calculation of thrust forces. Breaks AB01-14 and 15 can be deleted per arbitrary break elimination.

2. Criteria: The secondary systems break criteria has been met. (See Note D)

3. Pipe whip: Breaks are restrained per Figure 3.6-1, Sheet 1, such that no whipping occurs.

4. Jet impingement: The jets from these breaks do not impact any essential systems.

5. Room pressurization: See Section 6.2.1.1.3a

6. Temperature and humidity: See Section 6.2.1.1.3a

D. Problem No. 002A, Steam Generator C, Secondary Systems Breaks.

1. General: Breaks AB01-09, 10, and 11 have sources from steam generator C and turbine building. No restrictions were considered in the calculation of thrust forces. Breaks AB01-10 and 11 can be deleted per arbitrary break elimination.

2. Criteria: The secondary systems break criteria has been met. (See Note D)

3. Pipe whip: Breaks are restrained per Figure 3.6-1, Sheet 1, such that no whipping occurs.

TABLE 3.6-4 (Sheet 40 cont)

4. Jet impingement: The only target essential to mitigating the consequences of the break is a 10-inch component cooling water return line from the reactor coolant pumps (RCPs). Function of this essential system is ensured.

5. Room pressurization: See Section 6.2.1.1.3a

6. Temperature and humidity: See Section 6.2.1.1.3a,c

TABLE 3.6-4 (Sheet 41)

Room No. 2000 Main Feedwater

I. Sheets of Figure 3.6-1 showing high-energy (H-E) piping in this room 2

II. Effects Analysis

A. Problem No. 003, Steam Generator A, Secondary Systems Breaks.

1. General: Breaks AE04-01, 02, and 03 have sources from steam generator A and feedwater heaters. No restrictions were considered in the calculation of thrust forces. Breaks AE04-02 and 03 can be deleted per arbitrary break elimination.

2. Criteria: The secondary systems break criteria has been met. (See Note D)

3. Pipe whip: Breaks are restrained per Figure 3.6-1, Sheet 2, such that no whipping occurs.

4. Jet impingement: The targets essential to mitigating the consequences of the breaks are the containment cooler C supply and return lines. Function of these essential systems is ensured.

5. Room pressurization: See Section 6.2.1.1.3a

6. Temperature and humidity: See Section 6.2.1.1.3a

B. Problem No. 003A, Steam Generator B, Secondary Systems Breaks.

1. General: Breaks AE04-04, 05, and 06 have sources from steam generator B and feedwater heaters. No restrictions were considered in the calculation of thrust forces. Breaks AE04-05 and 06 can be deleted per arbitrary break elimination.

2. Criteria: The secondary systems break criteria has been met. (See Note D)

TABLE 3.6-4 (Sheet 41 - cont)

3. Pipe whip: Breaks are restrained per Figure 3.6-1, Sheet 2, such that no whipping occurs.

4. Jet impingement: The targets essential to mitigating the consequences of the breaks are containment cooler C supply and return lines. Function of these essential systems is ensured.

5. Room pressurization: See Section 6.2.1.1.3a

6. Temperature and humidity: See Section 6.2.1.1.3a

C. Problem No. 004A, Steam Generator C, Secondary Systems Breaks.

1. General: Breaks AE05-01, 02, and 03 have sources from steam generator C and feedwater heaters. No restrictions were considered in the calculation of thrust forces. Breaks AE05-02 and 03 can be deleted per arbitrary break elimination.

2. Criteria: The secondary systems break criteria has been met. (See Note D)

3. Pipe whip: Breaks are restrained per Figure 3.6-1, Sheet 2, such that no whipping occurs.

4. Jet impingement: The targets essential to mitigating the consequences of the breaks are containment cooler A and C essential service water supply and return lines, RCP-B thermal barrier cooling coil inlet and outlet lines, and component cooling water supply and return header to RCP-B and C. Function of these essential systems is ensured.

5. Room pressurization: See Section 6.2.1.1.3a

6. Temperature and humidity: See Section 6.2.1.1.3a

TABLE 3.6-4 (Sheet 42)

Room No. 2000 Main Feedwater

I. Sheets of Figure 3.6-1 showing high-energy (H-E) piping in this room 3

II. Effects Analysis

A. Problem No. 004, Steam Generator D, Secondary Systems Breaks

1. General: Breaks AE05-04, 05, and 06 have sources from steam generator D and feedwater heaters. No restrictions were considered in the calculation of thrust forces. Breaks AE05-05 and 06 can be deleted per arbitrary break elimination.

2. Criteria: The secondary systems break criteria has been met. (See Note D)

3. Pipe whip: Breaks are restrained per Figure 3.6-1, Sheet 3, such that no whipping occurs.

4. Jet impingement: The targets essential to mitigating the consequences of the breaks are component cooling water supply and return header to RCP-A and D, and RCP-A thermal barrier cooling coil inlet and outlet lines. Function of these essential systems is ensured.

5. Room pressurization: See Section 6.2.1.1.3a

6. Temperature and humidity: See Section 6.2.1.1.3a,c

TABLE 3.6-4 (Sheet 43)

Room No. 2000 Reactor Coolant System -Pressurizer Relief

I. Sheets of Figure 3.6-1 showing high-energy (H-E) piping in this room 8

II. Effects Analysis

A. Problem No. 234A, Pressurizer-LOCA Breaks.

1. General: Breaks BB02-01, 02, 03, 04, 05, 06, 07, 08, 09, 10, 11, 12, 13, 14, 15, 16, 17, 18, 19, 20, 21, 22, 25, 27, 29, 30, and 31 are LOCA breaks having an H-E source from the pressurizer. The downstream source is moderate energy. No restrictions were considered in the calculation of thrust forces.

2. Criteria: The large-LOCA break criteria has been met. (See Note A)

3. Pipe whip: Whipping occurs. However, no essential systems are impacted. Whip restraints are not required.

4. Jet impingement: The jets from these breaks do not impact any essential systems.

5. Room pressurization: See Section 6.2.1.1.3a

6. Temperature and humidity: See Section 6.2.1.1.3a,c

TABLE 3.6-4 (Sheet 44)

Room No. 2000 Pressurizer Spray

I. Sheets of Figure 3.6-1 showing high-energy (H-E) piping in this room 9

II. Effects Analysis

A. Problem No. 242, Loops No. 1 and 2, LOCA Breaks.

1. General: Break BB04-05 is a large LOCA break having sources from the RCS cold leg, Loops No. 1 and 2, the pressurizer, and the regenerative HX. No restrictions were considered in the calculation of thrust forces.

2. Criteria: The large LOCA break criteria has been met. (See Note A)

3. Pipe whip: The break is restrained per Figure 3.6-1, Sheet 9, such that no whipping occurs.

4. Jet impingement: The jet from this break does not impact any essential systems.

5. Room pressurization: See Section 6.2.1.1.3a

6. Temperature and humidity: See Section 6.2.1.1.3a

7. Flooding: See Section 6.3.2.2

B. Problem No. 242, Loops No. 1 and 2, LOCA Breaks.

1. General: Breaks BB04-01, 02, 07, 08, 09, 10, 11, 12, and 13 are LOCA breaks having sources from RCS cold leg, Loops No. l and 2, the pressurizer and the regenerative HX. No restrictions were considered in the calculation of thrust forces.

2. Criteria: The small LOCA break criteria has been met. (See Note B)

3. Pipe whip: The breaks are restrained per Figure 3.6-1, Sheet 9. Whipping occurs for some breaks. However, no essential systems are impacted.

4. Jet impingement: The only target essential to mitigating the consequences of the break is a 2-inch-high head safety-injection line to RCS hot leg Loop No. 1. Function of this essential system is ensured.

5. Room pressurization: See Section 6.2.1.1.3a

6. Temperature and humidity: See Section 6.2.1.1.3a

TABLE 3.6-4 (Sheet 45)

THIS PAGE HAS BEEN DELETED

TABLE 3.6-4 (Sheet 46)

THIS PAGE HAS BEEN DELETED

TABLE 3.6-4 (Sheet 47)

Room No. 2000 RCP-D Seal Injection

I. Sheets of Figure 3.6-1 showing high-energy (H-E) piping in this room 12

II. Effects Analysis

A. Problem No. 249, Loop No. 4 - LOCA Breaks.

1. General: Breaks BB07-01, 03, and 05 are LOCA breaks having sources from the RCS, Loop No. 4, and charging pumps. The thrust force calculation takes into account the fact that the charging pump source is restricted by a throttle valve in the injection line. No other restrictions are considered in the calculation of thrust forces. Breaks BB07-03 and 05 can be deleted per arbitrary break elimination. (Ref. Sect. 3.6.2.1)

2. Criteria: The small LOCA break criteria has been met. (See Note B)

3. Pipe whip: whipping occurs; however, no essential systems are impacted.

4. Jet impingement: No essential systems are impacted.

5. Room pressurization: See Section 6.2.1.1.3a

6. Temperature and humidity: See Section 6.2.1.1.3a,c

TABLE 3.6-4 (Sheet 48)

Room No. 2000 RCP-A Seal Injection

I. Sheets of Figure 3.6-1 showing high-energy (H-E) piping in this room 13

II. Effects Analysis

A. Problem No. 250, Loop No. 1 - LOCA Breaks.

1. General: Breaks BB08-09, 10, and 11 are LOCA breaks having sources from the RCS Loop No. 1 and the charging pumps. The thrust force calculation takes into account the fact that the charging pump source is restricted by a throttle valve in the injection line. No other restrictions are considered in the calculation of thrust forces. Breaks BB08-10 and 11 can be deleted per arbitrary break elimination (Ref. Sect. 3.6.2.1)

2. Criteria: The small LOCA break criteria has been met. (See Note B)

3. Pipe whip: Breaks are restrained per Figure 3.6-1, Sheet 13. Whipping occurs for some breaks. However, no essential systems are impacted.

4. Jet impingement: The jets from these breaks do not impact any essential systems.

5. Room pressurization: See Section 6.2.1.1.3a

6. Temperature and humidity: See Section 6.2.1.1.3a

B. Problem No. 250, Loop No. l - Non-LOCA Breaks.

1. General: Break BB08-04 has a source from the charging pumps only. No source available from RCP A due to double check valves BB-V120 and V121 located between the break and RCP A. The thrust force calculation takes into account the fact that the charging pump source is restricted by a throttle valve in the injection line.

TABLE 3.6-4 (Sheet 48 - cont)

2. Criteria: The non-LOCA break criteria has been met. (See Note C)

3. Pipe whip: Pipe not capable of whipping due to low thrust force.

4. Jet impingement: The jet from this break does not impact any essential systems.

5. Room pressurization: See Section 6.2.1.1.3a

6. Temperature and humidity: See Section 6.2.1.1.3a

C. Problem No. 276, Loop No. 1 - Non-LOCA Breaks.

1. General: Breaks BB08-03, 12, and 13 are non-LOCA breaks having source from the charging pumps only. No source available from RCP A due to double check valves BB-V120 and V121 located between the breaks and RCP A. The thrust force calculation takes into account the fact that the charging pump source is restricted by a throttle valve in the injection line.

2. Criteria: The non-LOCA break criteria has been met. (See Note C)

3. Pipe whip: Pipe not capable of whipping due to low thrust force.

4. Jet impingement: The jets from these breaks do not impact any essential systems.

5. Room pressurization: See Section 6.2.1.1.3a

6. Temperature and humidity: See Section 6.2.1.1.3a

TABLE 3.6-4 (Sheet 49)

Room No. 2000 RCP-C Seal Injection

I. Sheets of Figure 3.6-1 showing high-energy (H-E) piping in this room 14

II. Effects Analysis

A. Problem No. 251, Loop No. 3 - LOCA Breaks.

1. General: Breaks BB09-09, 10, and 11 are LOCA breaks having sources from the RCS Loop No. 3 and the charging pumps. The thrust force calculation takes into account that the charging pump source is restricted by a throttle valve in the injection line. No other restrictions are considered in the calculation of thrust forces. Breaks BB09-10, and 11 can be deleted per arbitrary break elimination. (Ref. Sect. 3.6.2.1).

2. Criteria: The small LOCA break criteria has been met. (See Note B)

3. Pipe whip: Pipe geometry prevents whipping.

4. Jet impingement: The jets from these breaks do not impact any essential systems.

5. Room pressurization: See Section 6.2.1.1.3a

6. Temperature and humidity: See Section 6.2.1.1.3a

B. Problem No. 251, Loop No. 3 - Non-LOCA Breaks.

1. General: Break BB09-04 has source from the charging pump only. No source available from RCP C due to double check valves BB-V180 and V181 located between break and RCP C. The thrust force calculation takes into account that the charging pump source is restricted by a throttle valve in the injection line.

TABLE 3.6-4 (Sheet 49 - cont)

2. Criteria: The non-LOCA break criteria has been met. (See Note C)

3. Pipe whip: Pipe not capable of whipping due to low thrust force.

4. Jet impingement: No essential systems are impacted.

5. Room pressurization: See Section 6.2.1.1.3a

6. Temperature and humidity: See Section 6.2.1.1.3a

C. Problem No. 277, Loop No. 3 - Non-LOCA Breaks.

1. General: Breaks BB09-03, 12, and 13 are non-LOCA breaks having source from the charging pumps only. No source available from RCP C due to double check valves BB-V180 and V181 located between breaks and RCP C. The thrust force calculation takes into account that the charging pump source is restricted by a throttle valve in the injection line.

2. Criteria: The non-LOCA break criteria has been met. (See Note C)

3. Pipe whip: Pipe not capable of whipping due to low thrust force.

4. Jet impingement: The targets essential to mitigating the consequences of the accident are seal injection to RCP-D and component cooling water injection (CCW) from the excess letdown heat exchanger. Function of these systems is ensured.

5. Room pressurization: See Section 6.2.1.1.3a

6. Temperature and humidity: See Section 6.2.1.1.3a

TABLE 3.6-4 (Sheet 50)

Room No. 2000 RCP-B Seal Injection

I. Sheets of Figure 3.6-1 showing high-energy (H-E) piping in this room 15

II. Effects Analysis

A. Problem No. 252, Loop No. 2 - LOCA Breaks.

1. General: Breaks BBll-10, 11, and 12 are LOCA breaks having sources from the RCS Loop No. 2 and the charging pumps. The thrust force calculation takes into account that the charging pump source is restricted by a throttle valve in the injection line. No other restrictions are considered in the calculation of thrust forces. Breaks BB11-10 and 12 can be deleted per arbitrary break elimination.

2. Criteria: The small LOCA break criteria has been met. (See Note B)

3. Pipe whip: Whipping occurs; however, no essential systems are impacted.

4. Jet impingement: No essential systems are impacted.

5. Room pressurization: See Section 6.2.1.1.3a

6. Temperature and humidity: See Section 6.2.1.1.3a

B. Problem No. 252 Loop No. 2 - Non-LOCA Breaks.

1. General: Break BBll-05 has source from the charging pump only. No source available from RCP B due to double check valves BB-V150 and V151 located between break and RCP B. The thrust force calculation takes into account that the charging pump source is restricted by a throttle valve in the injection line.

TABLE 3.6-4 (Sheet 50 - cont)

2. Criteria: The non-LOCA break criteria has been met. (See Note C)

3. Pipe whip: Pipe not capable of whipping due to low thrust force.

4. Jet impingement: No essential systems are impacted.

5. Room pressurization: See Section 6.2.1.1.3a

6. Temperature and humidity: See Section 6.2.1.1.3a

C. Problem No. 278, Loop No. 2 - Non-LOCA Breaks.

1. General: Breaks BBll-02, 03, 04, 13 (Wolf Creek only), and 14 (Callaway only) are non-LOCA breaks having source from the charging pumps only. No source available from RCP B due to double check valves BB-V150 and V151 located between breaks and RCP B. The thrust force calculation takes into account that the charging pump source is restricted by a throttle valve in the injection line.

2. Criteria: The non-LOCA break criteria has been met. (See Note C)

3. Pipe whip: Pipe not capable of whipping due to low thrust force.

4. Jet impingement: No essential systems are impacted.

5. Room pressurization: See Section 6.2.1.1.3a

6. Temperature and humidity: See Section 6.2.1.1.3a

TABLE 3.6-4 (Sheet 51)

THIS PAGE HAS BEEN DELETED

TABLE 3.6-4 (Sheet 52)

THIS PAGE HAS BEEN DELETED

TABLE 3.6-4 (Sheet 53)

Room No. 2000 CVCS - Normal and Alternate Charging - Loops No. 1 and 4

I. Sheets of Figure 3.6-1 showing high-energy (H-E) piping in this room 24

II. Effects Analysis

A. Problem No. 254, Loop No. 1-LOCA Breaks.

1. General: Breaks BG21-18, 22, and 23 are LOCA breaks having sources from the RCS cold leg Loop No. 1 and regenerative heat exchanger. No restrictions were considered in the calculation of thrust forces.

2. Criteria: The small-LOCA break criteria has been met. (See Note B)

3. Pipe whip: The breaks are restrained per Figure 3.6-1, Sheet 24. Whipping occurs for some breaks. However, no essential systems are impacted.

4. Jet impingement: No essential systems are impacted.

5. Room pressurization: See Section 6.2.1.1.3a

6. Temperature and humidity: See Section 6.2.1.1.3a

B. Problem No. 254, Loop No. 1 - Non-LOCA Breaks.

1. General: Breaks BG21-24 and 25 have a source from the regenerative heat exchanger only. No source available from RCS Cold Leg Loop No. 1 due to double check valves BB-8378A and 8378B located between the breaks and Loop No. 1. No restrictions were considered in the calculation of thrust forces.

TABLE 3.6-4 (Sheet 53 - cont)

2. Criteria: The non-LOCA break criteria has been met. (See Note C)

3. Pipe whip: The breaks are restrained per Figure 3.6-1, Sheet 24. Whipping occurs for some breaks. However, no essential systems are impacted.

4. Jet impingement: No essential systems are impacted.

5. Room pressurization: See Section 6.2.1.1.3a

6. Temperature and humidity: See Section 6.2.1.1.3a

C. Problem No. 254A, Loop 1 - Non-LOCA Breaks.

1. General: Breaks BG21-08, 09, 10, and 11 have a source from the regenerative heat exchanger only. No source available from RCS cold leg Loop No. 1 due to double check valves BB-8378A and 8378B located between the breaks and Loop No. 1. No restrictions were considered in the calculation of thrust forces.

2. Criteria: The non-LOCA break criteria has been met. (See Note C)

3. Pipe whip: The breaks are restrained per Figure 3.6-1, Sheet 24, such that no whipping occurs.

4. Jet impingement: No essential systems are impacted.

5. Room pressurization: See Section 6.2.1.1.3a

6. Temperature and humidity: See Section 6.2.1.1.3a

D. Problem No. 253, Loop No. 4 - LOCA Breaks.

1. General: Breaks BG21-12, 14, and 15 have sources from the RCS cold leg Loop No. 4 and regenerative heat exchanger. No restrictions were considered in the calculation of thrust forces.

2. Criteria: The small-LOCA break criteria has been met. (See Note B)

TABLE 3.6-4 (Sheet 53 - cont)

3. Pipe whip: The breaks are restrained per Figure 3.6-1, Sheet 24. Whipping occurs for some breaks. However, no essential systems are impacted.

4. Jet impingement: The only target essential to mitigating the consequences of the break is the hot leg safety-injection line. Function of this essential system is ensured.

5. Room pressurization: See Section 6.2.1.1.3a

6. Temperature and humidity: See Section 6.2.1.1.3a

E. Problem No. 253, Loop No. 4 - Non-LOCA Breaks.

1. General: Breaks BG21-16 and 17 have a source from the regenerative heat exchanger only. No source is available from RCS cold leg Loop No. 4 due to double check valves BB-8379A and 8379B located between the breaks and Loop No. 4. No restrictions were considered in the calculation of thrust forces.

2. Criteria: The non-LOCA break criteria has been met. (See Note C)

3. Pipe whip: The breaks are restrained per Figure 3.6-1, Sheet 24. Whipping occurs for some breaks. However, no essential systems are impacted.

4. Jet impingement: The only target essential to mitigating the consequences of the breaks is the 12-inch RHR pump suction, Loop No. 4. Function of this essential system is ensured.

5. Room pressurization: See Section 6.2.1.1.3a

6. Temperature and humidity: See Section 6.2.1.1.3a

F. Problem No. 139, Loops 1 and 4 - Non-LOCA Breaks.

1. General: Breaks BG21-01, 02, 03, 04, 05, 06, and 07 have a source from the regenerative heat exchanger only. No source available from RCS cold leg Loops No. 1 and 4 due to double check valves BB-8379A and TABLE

8379B located between the breaks and the loops. No restrictions were considered in the calculation of thrust forces.

2. Criteria: The non-LOCA break criteria has been met. (See Note C)

3. Pipe whip: The breaks are restrained per Figure 3.6-1, Sheet 24, such that no whipping occurs.

4. Jet impingement: The only target essential to mitigating the consequences of the breaks is the CCW line from RCP-C thermal barrier cooling coil. Function of this essential system is ensured.

5. Room pressurization: See Section 6.2.1.1.3a

6. Temperature and humidity: See Section 6.2.1.1.3a,c

TABLE 3.6-4 (Sheet 54)

Room No. 2000 CVCS - Letdown

I. Sheets of Figure 3.6-1 showing high-energy (H-E) piping in this room 25

II. Effects Analysis

A. Problem No. 245, Loop No. 3 - LOCA Breaks.

1. General: Breaks BG22-19, 24, 25, 26, 27, and 28 are LOCA breaks having sources from RCS crossover leg Loop No. 3 and the regenerative heat exchanger. No restrictions were considered in the calculation of thrust forces. Breaks BB22-25, 24 and 19 can be deleted per arbitrary break elimination.

2. Criteria: The small LOCA break criteria has been met. (See Note B)

3. Pipe whip: The breaks are restrained per Figure 3.6-1, Sheet 25. Whipping occurs for some breaks. However, no essential systems are impacted.

4. Jet impingement: The only target essential to mitigating the consequences of the breaks is seal injection to RCP-B. Function of this essential system is ensured.

5. Room pressurization: See Section 6.2.1.1.3a

6. Temperature and humidity: See Section 6.2.1.1.3a

B. Problem No. 245, Loop No. 3 - Non-LOCA Breaks.

1. General: Break BG22-18 is a non-LOCA break having source from regenerative heat exchanger. No source available from RCS crossover leg due to closure of one of two isolation valves, BG-LCV 459 and LCV 460. No restrictions were considered in the calculation of thrust forces.

2. Criteria: The non-LOCA break criteria has been met. (See Note C)

TABLE 3.6-4 (Sheet 54 - cont)

3. Pipe whip: Break is restrained per Figure 3.6-1, Sheet 25, such that no whipping occurs.

4. Jet impingement: No essential systems are impacted.

5. Room pressurization: See Section 6.2.1.1.3a

6. Temperature and humidity: See Section 6.2.1.1.3a

C. Problem No. 145, Loop No. 3 - Non-LOCA Breaks.

1. General: Breaks BG22-01, 02, 03, and 04 are non-LOCA breaks having source from regenerative heat exchanger. No source available from RCS crossover leg due to closure of one of two isolation valves, BG-LCV459 and LCV460. No restrictions were considered in the calculation of thrust forces.

2. Criteria: The non-LOCA break criteria has been met. (See Note C)

3. Pipe whip: Breaks are restrained per Figure 3.6-1, Sheet 25, such that no whipping occurs.

4. Jet impingement: No essential systems are impacted.

5. Room pressurization: See Section 6.2.1.1.3a

6. Temperature and humidity: See Section 6.2.1.1.3a

D. Problem No. 146, Loop No. 3 - Non-LOCA Breaks.

1. General: Breaks BG22-05, 06*, 07*, 08, 09, and 13* are non-LOCA breaks having sources from regenerative heat exchanger and letdown heat exchanger. No restrictions were considered in the calculation of thrust forces.

2. Criteria: The non-LOCA break criteria has been met. (See Note C)

* Intermediate Break BG22-06, BG22-07 and BG22-13 are deleted.

TABLE 3.6-4 (Sheet 54 - cont)

3. Pipe whip: Breaks are restrained per Figure 3.6-1, Sheet 25, such that no whipping occurs.

4. Jet impingement: No essential systems are impacted.

5. Room pressurization: See Section 6.2.1.1.3a

6. Temperature and humidity: See Section 6.2.1.1.3a

E. Problem No. 119, Loop No. 3 - Non-LOCA Breaks.

1. General: Breaks BG22-10, 12, and 14 are non-LOCA breaks having sources from regenerative heat exchanger and letdown heat exchanger. No restrictions were considered in the calculation of thrust forces.

2. Criteria: The non-LOCA break criteria has been met. (See Note C)

3. Pipe whip: Breaks are restrained per Figure 3.6-1, Sheet 25. Whipping occurs for some breaks. However, no essential systems are impacted.

4. Jet impingement: The targets essential to mitigating the consequences of the breaks are seal injection to RCP-B and C, and CCW from the excess letdown HX and the excess letdown line. Function of these essential systems is ensured. A shield, attached to whip restraint BG22-16, is provided to protect valve BGHV8153A from breaks BG-22-12 and 14.

5. Room pressurization: See Section 6.2.1.1.3a

6. Temperature and humidity: See Section 6.2.1.1.3a,c

TABLE 3.6-4 (Sheet 55)

Room No. 2000 CVCS Charging and Excess Letdown

I. Sheets of Figure 3.6-1 showing high-energy (H-E) piping in this room 26

II. Effects Analysis

A. Problem No. 244, Loop No. 4 - LOCA Breaks.

1. General: Breaks BG23-11 are LOCA breaks having source from RCS crossover leg. The downstream sources are moderate energy. No restrictions were considered in the calculation of thrust forces. Breaks BB23-10 and 08 can be deleted per arbitrary break elimination.

2. Criteria: The small LOCA break criteria has been met. (See Note B)

3. Pipe whip: Whipping occurs; however, no essential systems are impacted.

4. Jet impingement: No essential systems are impacted.

5. Room pressurization: See Section 6.2.1.1.3a

6. Temperature and humidity: See Section 6.2.1.1.3a,c

B. Problem No. 147, Non-LOCA Breaks.

1. General: BG23-01, 02, and 03 are non-LOCA breaks having sources from the regenerative heat exchanger and the charging pumps. No restrictions were considered in the calculation of thrust forces.

2. Criteria: The non-LOCA break criteria has been met. (See Note C)

3. Pipe whip: The breaks are restrained per Figure 3.6-1, Sheet 26. Whipping occurs for some breaks. However, no essential systems are impacted.

4. Jet impingement: The only target essential to mitigating the consequences of the breaks is a CCW line from RCP-B thermal barrier. Function of the essential system is ensured.

5. Room pressurization: See Section 6.2.1.1.3a

6. Temperature and humidity: See Section 6.2.1.1.3a,c

TABLE 3.6-4 (Sheet 56)

Room No. 2000 CVCS Auxiliary Spray

I. Sheets of Figure 3.6-1 showing high-energy (H-E) piping in this room 27

II. Effects Analysis

A. Problem No. 242, LOCA Break.

1. General: Break BG24-20 has sources from the RCS Cold Leg Loops No. 1 and 2 and the regenerative heat exchanger. No restrictions were considered in the calculation of thrust forces.

2. Criteria: The small LOCA break criteria has been met. (See Note B)

3. Pipe whip: Break is restrained per Figure 3.6-1, Sheet 27. Whipping occurs; however, no essential systems are impacted.

4. Jet impingement: No essential systems are impacted.

5. Room pressurization: See Section 6.2.1.1.3a

6. Temperature and humidity: See Section 6.2.1.1.3a

B. Problem No. 242, Non-LOCA Breaks.

1. General: Breaks BG24-08 and 19 have a regenerative heat exchanger source only since the breaks are located between the regenerative heat exchanger and check valve BBV084. No restrictions were considered in the calculation of thrust forces.

2. Criteria: The non-LOCA break criteria has been met. (See Note C)

TABLE 3.6-4 (Sheet 56 - cont)

3. Pipe whip: Breaks are restrained per Figure 3.6-1, Sheet 27, such that no whipping occurs.

4. Jet impingement: No essential systems are impacted.

5. Room pressurization: See Section 6.2.1.1.3a

6. Temperature and humidity: See Section 6.2.1.1.3a

C. Problem No. 140, Non-LOCA Breaks.

1. General: Breaks BG24-03, 07, 15 and 17 (Callaway only), 16 and 18 (Wolf Creek only) have a regenerative heat exchanger source only, since the breaks are located between the regenerative heat exchanger and check valve BBV084. No restrictions were considered in the calculation of thrust forces.

2. Criteria: The non-LOCA break criteria has been met. (See Note C)

3. Pipe whip: Breaks are restrained per Figure 3.6-1, Sheet 27. Whipping occurs for some breaks. However, no essential systems are impacted.

4. Jet impingement: The targets essential to mitigating the consequences of the breaks are seal injection to RCP-D, CCW from RCP-D thermal barrier cooling coil, and CCW line to the excess letdown HX and the excess letdown line. Function of these essential systems is ensured.

5. Room pressurization: See Section 6.2.1.1.3a

6. Temperature and humidity: See Section 6.2.1.1.3a

D. Problem No. 139, Non-LOCA Breaks.

1. General: Breaks BG24-01 and 02 have a regenerative heat exchange source only, since the breaks are located between the regenerative heat exchanger and check valve BBV084. No restrictions were considered in the calculation of thrust forces.

2. Criteria: The non-LOCA break criteria has been met. (See Note C)

TABLE 3.6-4 (Sheet 56 - cont)

3. Pipe whip: Breaks are restrained per Figure 3.6-1, Sheet 27, such that there are no whip targets.

4. Jet impingement: No essential systems are impacted.

5. Room pressurization: See Section 6.2.1.1.3a

6. Temperature and humidity: See Section 6.2.1.1.3a

TABLE 3.6-4 (Sheet 57)

Room No. 2000 Steam Generator A&D Blowdown

I. Sheets of Figure 3.6-1 showing high-energy (H-E) piping in this room 29

II. Effects Analysis

A. Problem No. 219, Secondary Systems Breaks.

1. General: Break BM01-04 has a steam generator D source and a turbine building source. No restrictions were considered in the calculation of thrust forces.

2. Criteria: The secondary systems break criteria has been met. (See Note D)

3. Pipe whip: Whipping occurs; however, no essential systems are impacted.

4. Jet impingement: No essential systems are impacted.

5. Room pressurization: See Section 6.2.1.1.3a

6. Temperature and humidity: See Section 6.2.1.1.3a

B. Problem No. 220, Secondary Systems Breaks

1. General: Breaks BM01-01 and 02 have a steam generator A source and a turbine building source. No restrictions were considered in the calculation of thrust forces.

2. Criteria: The secondary systems break criteria has been met. (See Note D)

3. Pipe whip: Breaks are restrained per Figure 3.6-1, Sheet 29, such that no whipping occurs.

4. Jet impingement: The targets essential to mitigating the consequences of the breaks are seal injection to RCP-A and the CCW return header from RCP-A, B, C, and D thermal barrier cooling coils. Function of these essential systems is ensured.

5. Room pressurization: See Section 6.2.1.1.3a

6. Temperature and humidity: See Section 6.2.1.1.3a

TABLE 3.6-4 (Sheet 58)

Room No. 2000 Steam Generator B&C Blowdown

I. Sheets of Figure 3.6-1 showing high-energy (H-E) piping in this room 30

II. Effects Analysis

A. Problem No. 221, Secondary Systems Breaks.

1. General: Break BM02-04 has a steam generator B source and a turbine building source. No restrictions were considered in the calculation of thrust forces.

2. Criteria: The secondary systems break criteria has been met. (See Note D)

3. Pipe whip: Break is restrained per Figure 3.6-1, Sheet 30 such that no whipping occurs.

4. Jet impingement: The only target essential to mitigating the consequences of the breaks is the CCW line from the thermal barrier cooling coil RCP-C. Function of this essential system is ensured.

5. Room pressurization: See Section 6.2.1.1.3a

6. Temperature and humidity: See Section 6.2.1.1.3a

B. Problem No. 222, Secondary Systems Breaks.

1. General: Break BM02-01 has a steam generator C source and a turbine building source. No restrictions were considered in the calculation of thrust forces.

2. Criteria: The secondary systems break criteria has been met. (See Note D)

3. Pipe whip: Break is restrained per Figure 3.6-1, Sheet 30 such that no whipping occurs.

4. Jet impingement: No essential systems are impacted.

5. Room pressurization: See Section 6.2.1.1.3a

6. Temperature and humidity: See Section 6.2.1.1.3a

TABLE 3.6-4 (Sheet 59)

Room No. 2000 Steam Generator A, B, C, D Blowdown

I. Sheets of Figure 3.6-1 showing high-energy (H-E) piping in this room 31

II. Effects Analysis

A. Problem No. 220, Secondary Systems Breaks.

1. General: Breaks BM03-06 and 07 have a H-E source from steam generator A. Downstream source is moderate energy. No restrictions were considered in the calculation of thrust forces.

2. Criteria: The secondary systems break criteria has been met. (See Note D)

3. Pipe whip: Breaks are restrained per Figure 3.6-1, Sheet 31, such that no whipping occurs.

4. Jet impingement: No essential systems are impacted.

5. Room pressurization: See Section 6.2.1.1.3a

6. Temperature and humidity: See Section 6.2.1.1.3a

B. Problem No. 221, Secondary Systems Breaks.

1. General: Break BM03-01 has a H-E source from steam generator B. Downstream source is moderate energy. No restrictions were considered in calculation of thrust forces.

2. Criteria: The secondary systems break criteria has been met. (See Note D)

3. Pipe whip: Break is restrained per Figure 3.6-1, Sheet 31, such that no whipping occurs.

4. Jet impingement: No essential systems are impacted.

TABLE 3.6-4 (Sheet 59 - cont)

5. Room pressurization: See Section 6.2.1.1.3a

6. Temperature and humidity: See Section 6.2.1.1.3a

C. Problem No. 222, Secondary Systems Breaks.

1. General: Breaks BM03-02 and 03* have a H-E source from steam generator C. Downstream source is moderate energy. No restrictions were considered in calculation of thrust forces.

2. Criteria: The secondary systems break criteria has been met. (See Note D)

3. Pipe whip: Breaks are restrained per Figure 3.6-1, Sheet 31; such that no whipping occurs.

4. Jet impingement: No essential systems are impacted.

5. Room pressurization: See Section 6.2.1.1.3a

6. Temperature and humidity: See Section 6.2.1.1.3a

D. Problem No. 219, Loop No. 4, Secondary Systems Breaks.

1. General: Breaks BM03-04 and 05* have a H-E source from steam generator D. Downstream source is moderate energy. No restrictions were considered in the calculation of thrust forces.

2. Criteria: The secondary systems break criteria has been met. (See Note D)

3. Pipe whip: Breaks are restrained per Figure 3.6-1, Sheet 31, such that no whipping occurs.

4. Jet impingement: No essential targets are impacted.

5. Room pressurization: See Section 6.2.1.1.3a

6. Temperature and humidity: See Section 6.2.1.1.3a

* Intermediate Break BM03-03 and BM03-05 are deleted.

TABLE 3.6-4 (Sheet 60)

Room No. 2000 Steam Generator A Sample and Tube Sheet Drain

I. Sheets of Figure 3.6-1 showing high-energy (H-E) piping in this room 32

II. Effects Analysis

A. Problem No. 220, Secondary Systems Breaks.

1. General: Breaks BM17-02*, 03, 04, 05*, 06, and 07 (Callaway only) have sources from steam generator A. No restrictions were considered in the calculation of thrust forces:

2. Criteria: The secondary systems break criteria has been met. (See Note D)

3. Pipe whip: Breaks are restrained per Figure 3.6-1, Sheet 32, such that no whipping occurs.

4. Jet impingement: The targets essential to mitigating the consequences of the breaks are the seal injection to RCP-A and CCW from thermal barrier cooling coil, RCP-A. Function of the essential systems is ensured.

5. Room pressurization: See Section 6.2.1.1.3a

6. Temperature and humidity: See Section 6.2.1.1.3a

* Intermediate Breaks BM17-02 and BM17-05 are deleted.

TABLE 3.6-4 (Sheet 61)

Room No. 2000 Steam Generator B Sample and Tube Sheet Drain

I. Sheets of Figure 3.6-1 showing high-energy (H-E) piping in this room 33

II. Effects Analysis

A. Problem No. 221, Secondary Systems Breaks.

1. General: Breaks BM18-01, 04, 05*, 06*, and 07* have sources from steam generator B. No restrictions were considered in the calculation of thrust forces.

2. Criteria: The secondary systems break criteria has been met. (See Note D)

3. Pipe whip: Breaks are restrained per Figure 3.6-1, Sheet 33. Whipping occurs for some breaks. However, no essential systems are impacted.

4. Jet impingement: The only target essential to mitigating the consequences of the breaks is the feedwater line to steam generator C. Function of this essential system is ensured.

5. Room pressurization: See Section 6.2.1.1.3a

6. Temperature and humidity: See Section 6.2.1.1.3a,c

* Intermediate Breaks BM18-05, BM18-06 and BM18-07 are deleted.

TABLE 3.6-4 (Sheet 62)

Room No. 2000 Steam Generator C Sample and Tube Sheet Drain

I. Sheets of Figure 3.6-1 showing high-energy (H-E) piping in this room 34

II. Effects Analysis

A. Problem No. 222, Secondary Systems Breaks.

1. General: Breaks BM19-01, 02*, 03*, and 04 have sources from steam generator C. No restrictions were considered in the calculation of thrust forces.

2. Criteria: The secondary systems break criteria has been met. (See Note D)

3. Pipe whip: Breaks are restrained per Figure 3.6-1, Sheet 34. Whipping occurs for some breaks. However, no essential systems are impacted.

4. Jet impingement: No essential systems are impacted.

5. Room pressurization: See Section 6.2.1.1.3a

6. Temperature and humidity: See Section 6.2.1.1.3a

* Intermediate Breaks BM19-02, BM19-03 are deleted.

TABLE 3.6-4 (Sheet 63)

Room No. 2000 Steam Generator D Sample and Tube Sheet Drain

I. Sheets of Figure 3.6-1 showing high-energy (H-E) piping in this room 35

II. Effects Analysis

A. Problem No. 219, Secondary Systems Breaks.

1. General: Breaks BM20-01, * and 04 have sources from steam generator D. No restrictions were considered in the calculation of thrust forces.

2. Criteria: The secondary systems break criteria has been met. (See Note D)

3. Pipe whip: Breaks are restrained per Figure 3.6-1, Sheet 35. Whipping occurs for some breaks. However, no essential systems are impacted.

4. Jet impingement: The targets essential to mitigating the consequences of the breaks are seal injection to RCP-A, CCW from the thermal barrier cooling coil, RCP-A and D, and the CCW return header, RCP-A, B, C, D. Function of these essential systems is ensured.

5. Room pressurization: See Section 6.2.1.1.3a

6. Temperature and humidity: See Section 6.2.1.1.3a

* Intermediate Breaks BM20-03, BM20-03 are deleted.

TABLE 3.6-4 (Sheet 64)

Room No. 2000 Residual Heat Removal, Loops No. 1 and 4

I. Sheets of Figure 3.6-1 showing high-energy (H-E) piping in this room 36

II. Effects Analysis

A. Problem No. 255, Loop No. 1, LOCA Breaks.

1. General: Breaks EJ04-06, 07, 08, 09, and 10 have a H-E source from the RCS Hot Leg, Loop No. 1. Sources from the RHR and S.I. pumps are moderate energy. Breaks EJ04-07 and 08 can be deleted per arbitrary break elimination.

2. Criteria: The large LOCA break criteria has been met. (See Note A)

3. Pipe whip: The breaks are restrained per Figure 3.6-1, Sheet 36. Whipping occurs for some breaks. However, no essential systems are impacted.

4. Jet impingement: No essential systems are impacted.

5. Room pressurization: See Section 6.2.1.1.3a

6. Temperature and humidity: See Section 6.2.1.1.3a

7. Flooding: See Section 6.3.2.2

B. Problem No. 256, Loop No. 4, LOCA Breaks.

1. General: Breaks EJ04-01, 02, 03, 04, and 05 have a H-E source from the RCS hot leg, Loop No. 4. Sources from the RHR and S.I. pumps are moderate energy. Breaks EJ04-03 and 04 can be deleted per arbitrary break elimination.

2. Criteria: The large LOCA break criteria has been met. (See Note A)

3. Pipe whip: The breaks are restrained per Figure 3.6-1, Sheet 36. Whipping occurs for some breaks. However, no essential systems are impacted.

TABLE 3.6-4 (Sheet 64 - cont)

4. Jet impingement: The only target essential to mitigating the consequences of the breaks is seal injection to RCP-B. Function of this essential system is ensured.

5. Room pressurization: See Section 6.2.1.1.3a

6. Temperature and humidity: See Section 6.2.1.1.3a

7. Flooding: See Section 6.3.2.2

TABLE 3.6-4 (Sheet 65)

Room No. 2000 High Pressure Coolant Injection - Loops 2 and 3

I. Sheets of Figure 3.6-1 showing high-energy (H-E) piping in this room 38

II. Effects Analysis

A. Problem No. 248A, Loop No. 2 - LOCA Breaks.

1. General: EM03-08, 28, and 29 are LOCA breaks having a H-E source from the RCS hot leg Loop No. 2. Sources from the hot leg recirculation line and S.I. pumps are moderate energy. No restrictions were considered in the calculation of thrust forces. Breaks EM03-28 can be deleted per arbitrary break elimination.

2. Criteria: The large LOCA break criteria has been met. (See Note A)

3. Pipe whip: The breaks are restrained per Figure 3.6-1, Sheet 38, such that there are no whip targets.

4. Jet impingement: No essential systems are impacted.

5. Room pressurization: See Section 6.2.1.1.3a

6. Temperature and humidity: See Section 6.2.1.1.3a

B. Problem No. 248A, Loop No. 3, LOCA Breaks.

1. General: Breaks EM03-05, 26, and 27 are LOCA breaks having a H-E source from the RCS hot leg Loop No. 3. Sources from the hot leg recirculation line and S.I. pumps are moderate energy. No restrictions were considered in the calculation of thrust forces. Breaks EM03-26 can be deleted per arbitrary break elimination.

TABLE 3.6-4 (Sheet 65 - cont)

2. Criteria: The large LOCA break criteria has been met. (See Note A)

3. Pipe whip: The breaks are restrained per Figure 3.6-1, Sheet 38, such that there are no whip targets.

4. Jet impingement: No essential systems are impacted.

5. Room pressurization: See Section 6.2.1.1.3a

6. Temperature and humidity: See Section 6.2.1.1.3a

C. Problem No. 247A, Loop No. 1, LOCA Breaks.

1. General: Breaks EM03-15, 16, 17, and 18 are LOCA breaks having a H-E source from the RCS cold leg Loop No. 1. Source from the boron injection tank is moderate energy. No restrictions were considered in the calculation of thrust forces. Breaks EM03-16 and 17 can be deleted per arbitrary break elimination.

2. Criteria: The small LOCA break criteria has been met. (See Note A)

3. Pipe whip: The breaks are restrained per Figure 3.6-1, Sheet 38, such that no whipping occurs.

4. Jet impingement: No essential systems are impacted.

5. Room pressurization: See Section 6.2.1.1.3a

6. Temperature and humidity: See Section 6.2.1.1.3a

D. Problem No. 247A, Loop No. 2, LOCA Breaks.

1. General: Breaks EM03-09, 10, 11, and 12 are LOCA breaks having a H-E source from the RCS cold leg Loop No. 2. Source from the boron injection line is moderate energy. No restrictions were considered in the calculation of thrust forces. Breaks EM03-10 and 11 can be deleted per arbitrary break elimination.

2. Criteria: The small LOCA break criteria has been met. (See Note A)

TABLE 3.6-4 (Sheet 65 - cont)

3. Pipe whip: The breaks are restrained per Figure 3.6-1, Sheet 38, such that no whipping occurs.

4. Jet impingement: The only target essential to mitigating the consequences of the breaks is BIT to RCS cold leg Loop No. 3. Function of this essential system is ensured.

5. Room pressurization: See Section 6.2.1.1.3a

6. Temperature and humidity: See Section 6.2.1.1.3a

E. Problem No. 247A, Loop No. 3, LOCA Breaks.

1. General: Breaks EM03-01, 02, 03, and 04 are LOCA breaks having a H-E source from the RCS cold leg Loop No. 3. Source from the boron injection tank is moderate energy. No restrictions were considered in the calculation of thrust forces. Breaks EM03-02 and 03 can be deleted per arbitrary break elimination.

2. Criteria: The small LOCA break criteria has been met. (See Note A)

3. Pipe whip: The breaks are restrained per Figure 3.6-1, Sheet 38. Whipping occurs for some breaks. However, no essential systems are impacted.

4. Jet impingement: No essential systems are impacted.

5. Room pressurization: See Section 6.2.1.1.3a

6. Temperature and humidity: See Section 6.2.1.1.3a

F. Problem No. 247A, Loop No. 4, LOCA Breaks.

1. General: Breaks EM03-19, 20, 21, and 22 are LOCA breaks having a H-E source from the RCS cold leg loop No. 4. Source from the boron injection tank is moderate energy. No restrictions were considered in the calculation of thrust forces. Breaks EM03-20 and 21 can be deleted per arbitrary break elimination.

2. Criteria: The small LOCA break criteria has been met. (See Note A)

3. Pipe whip: The breaks are restrained per Figure 3.6-1, Sheet 38. Whipping occurs for some breaks. However, no essential systems are impacted.

4. Jet impingement: No essential systems are impacted.

5. Room pressurization: See Section 6.2.1.1.3a

6. Temperature and humidity: See Section 6.2.1.1.3a

TABLE 3.6-4 (Sheet 66)

Room No. 2000 High Pressure Coolant Injection - Loops 1 & 4

I. Sheets of Figure 3.6-1 showing high-energy (H-E) piping in this room 39

II. Effects Analysis

A. Problem No. 255, Loop No. 1, LOCA Breaks

1. General: Breaks EM05-03 and 04 have a H-E source from the RCS hot leg, Loop No. 1. Source from the S.I. pump is moderate energy. No restrictions were considered in the calculation of thrust forces. Breaks EM05-03 can be deleted per arbitrary break elimination.

2. Criteria: The large-LOCA break criteria has been met. (See Note A)

3. Pipe whip: Whipping occurs; however, no essential systems are impacted.

4. Jet impingement: No essential targets are impacted.

5. Room pressurization: See Section 6.2.1.1.3a

6. Temperature and humidity: See Section 6.2.1.1.3a

B. Problem No. 256, Loop No. 4, LOCA Breaks.

1. General: Breaks EM05-01 and 02 have a H-E source from the RCS hot leg, Loop No. 4. Source from the S.I. pump is moderate energy. No restrictions were considered in the calculation of thrust forces. Breaks EM05-02 can be deleted per arbitrary break elimination.

2. Criteria: The large-LOCA break criteria has been met. (See Note A)

3. Pipe whip: Whipping occurs; however, no essential systems are impacted.

4. Jet impingement: No essential systems are impacted.

5. Room pressurization: See Section 6.2.1.1.3a

6. Temperature and humidity: See Section 6.2.1.1.3a

TABLE 3.6-4 (Sheet 67)

Room No. 2000 Accumulator Injection, Loops 1 & 4

I. Sheets of Figure 3.6-1 showing high-energy (H-E) piping in this room 40

II. Effects Analysis

A. Problem No. 234, Loop No. 1 - LOCA Breaks.

1. General: Breaks EP01-01 and 04 are LOCA breaks having sources from the RCS cold leg Loop No. 1 and accumulator tank A. No restrictions were considered in the calculation of thrust forces.

2. Criteria: The large LOCA break criteria has been met. (See Note A)

3. Pipe whip: The breaks are restrained per Figure 3.6-1, Sheet 40, such that no whipping occurs.

4. Jet impingement: No essential systems are impacted.

5. Room pressurization: See Section 6.2.1.1.3a

6. Temperature and humidity: See Section 6.2.1.1.3a

B. Problem No. 234, Loop No. 1 - Non-LOCA Break.

1. General: Breaks EP01-05, 07, 18, 19, 20, 22, and 27 have a H-E source from accumulator tank A only. No source available from Loop No. 1 due to check valve BB-8948B located between the breaks and Loop No. 1. Sources from the RHR and SI pumps are moderate energy. No restrictions were considered in the calculation of thrust forces. Break EP01-27 can be deleted per arbitrary break elimination (Ref. Sect. 3.6.2.1)

2. Criteria: The non-LOCA break criteria has been met. (See Note C)

3. Pipe whip: Breaks are restrained per Figure 3.6-1, Sheet 40. Whipping occurs for some breaks. However, no essential systems are impacted.

TABLE 3.6-4 (Sheet 67 - cont)

4. Jet impingement: The only target essential to mitigating the consequences of the breaks is the cold leg Loop No. 2 safety-injection line. Function of this essential system is ensured.

5. Room pressurization: See Section 6.2.1.1.3a

6. Temperature and humidity: See Section 6.2.1.1.3a

C. Problem No. 235, Loop 4 - LOCA Breaks.

1. General: Breaks EP01-10 and 13 are LOCA breaks having sources from the RCS cold leg Loop No. 4 and accumulator tank D. No restrictions were considered in the calculation of thrust forces.

2. Criteria: The large LOCA break criteria has been met. (See Note A)

3. Pipe whip: The breaks are restrained per Figure 3.6-1, Sheet 40, such that no whipping occurs.

4. Jet impingement: The targets essential to mitigating the consequences of the breaks are seal injection to RCP-C and RCP-B. Function of this essential system is ensured.

5. Room pressurization: See Section 6.2.1.1.3a

6. Temperature and humidity: See Section 6.2.1.1.3a

D. Problem No. 235, Loop 4 - Non-LOCA Breaks.

1. General: Breaks EP01-08, 14, 15, 16, 17, 26, and 28 have a H-E source from accumulator tank D only. No source available from Loop No. 4 due to check valve BB-8948D located between the breaks and Loop No. 4. Sources from the RHR and SI pumps are moderate energy. No restrictions were considered in the calculation of thrust forces. Break EP01-26 can be deleted per arbitrary break elimination (Ref. Sect. 3.6.2.1)

2. Criteria: The non-LOCA break criteria has been met. (See Note C)

TABLE 3.6-4 (Sheet 67 - cont)

3. Pipe whip: The breaks are restrained per Figure 3.6-1, Sheet 40, such that the whip targets are not required for post accident safe shutdown or to mitigate the consequences of the accident.

4. Jet impingement: The targets essential to mitigating the consequences of the breaks are seal injection to RCP-A, B, and C, component cooling water to excess letdown HX, and to the thermal barrier cooling coil, RCP-D, and the excess letdown heat exchanger discharge line. Function of these essential targets is ensured.

5. Room pressurization: See Section 6.2.1.1.3a

6. Temperature and humidity: See Section 6.2.1.1.3a

TABLE 3.6-4 (Sheet 68)

Room No. 2000 Accumulator Injection - Loops 2 and 3

I. Sheets of Figure 3.6-1 showing high-energy (H-E) piping in this room 41

II. Effects Analysis

A. Problem No. 237, Loop No. 2 - LOCA Breaks.

1. General: Breaks EP02-01 and 04 are LOCA breaks having sources from the RCS cold leg, Loop No. 2 and accumulator tank B. No restrictions were considered in the calculation of thrust forces.

2. Criteria: The large LOCA break criteria has been met. (See Note A)

3. Pipe whip: The breaks are restrained per Figure 3.6-1, Sheet 41, such that no whipping occurs.

4. Jet impingement: No essential systems are impacted.

5. Room pressurization: See Section 6.2.1.1.3a

6. Temperature and humidity: See Section 6.2.1.1.3a

B. Problem No. 237, Loop No. 2 - Non-LOCA Breaks.

1. General: Breaks EP02-05, 06, 16, 17, 18, 19, and 20 have a H-E source from accumulator tank B only. No source available from Loop No. 2 due to check valve BB-8948B located between the breaks and Loop No. 2. Sources from the RHR & S.I. pumps are moderate energy. No restrictions were considered in the calculation of thrust forces. Breaks EP02-19 can be deleted per arbitrary break elimination.

2. Criteria: The non-LOCA break criteria has been met. (See Note C)

TABLE 3.6-4 (Sheet 68 - cont)

3. Pipe whip: The breaks are restrained per Figure 3.6-1, Sheet 41, such that no whipping occurs.

4. Jet impingement: The only target essential to mitigating the consequences of the breaks is component cooling water from the thermal barrier cooling coil, RCP-B. Function of this essential system is ensured.

5. Room pressurization: See Section 6.2.1.1.3a

6. Temperature and humidity: See Section 6.2.1.1.3a

C. Problem No. 236, Loop No. 3 - LOCA Breaks.

1. General: Breaks EP02-08 and 11 are LOCA breaks having sources from the RCS cold leg Loop No. 3 and accumulator tank C. No restrictions were considered in the calculation of thrust forces.

2. Criteria: The large LOCA break criteria has been met. (See Note A)

3. Pipe whip: The breaks are restrained per Figure 3.6-1, Sheet 41, such that no whipping occurs.

4. Jet impingement: The only target essential to mitigating the consequences of the breaks is seal injection to RCP-B. Function of this essential system is ensured.

5. Room pressurization: See Section 6.2.1.1.3a

6. Temperature and humidity: See Section 6.2.1.1.3a

D. Problem No. 236, Loop 3 - Non-LOCA Breaks.

1. General: Breaks EP02-07, 12, 13, 14, 15, 22, and 23 have a H-E source from accumulator tank C only. No source available from Loop No. 3 due to check valve BB-8948C located between the breaks and Loop No. 3. Sources from the RHR and S.I. pumps are moderate energy. No restrictions were considered in the calculation of thrust forces. Break EP02-23 can be deleted per arbitrary break elimination. (Ref. Sect. 3.6.2.1)

2. Criteria: The non-LOCA break criteria has been met. (See Note C)

3. Pipe whip: Breaks are restrained per Figure 3.6-1, Sheet 41. Whipping occurs for some breaks. However, no essential systems are impacted.

4. Jet impingement: No essential systems are impacted.

5. Room pressurization: See Section 6.2.1.1.3a

6. Temperature and humidity: See Section 6.2.1.1.3a,c

TABLE 3.6-4 (Sheet 69)

Room No. 2000 Loop Drains

I. Sheets of Figure 3.6-1 showing high-energy (H-E) piping in this room 50

II. Effects Analysis

A. Problem No. 245, Loop No. 2 - LOCA Breaks.

1. General: Breaks HB24-03, 04, and 07 have a H-E source from the crossover leg, Loop No. 2. The downstream source is moderate energy. No restrictions were considered in the calculation of thrust forces. Breaks HB24-07 can be deleted per arbitrary break elimination.

2. Criteria: The small-LOCA break criteria has been met. (See Note B)

3. Pipe whip: Whipping occurs for some breaks. However, no essential systems are impacted.

4. Jet impingement: No essential systems are impacted.

5. Room pressurization: See Section 6.2.1.1.3a

6. Temperature and humidity: See Section 6.2.1.1.3a

B. Problem No. 245, Loop No. 3 - LOCA Breaks.

1. General: Break HB24-05 has a H-E source from the crossover leg, Loop No. 3. The downstream source is moderate energy. No restrictions were considered in the calculation of thrust forces.

2. Criteria: The small-LOCA break criteria has been met. (See Note B)

3. Pipe whip: Whipping occurs for some breaks. However, no essential systems are impacted.

4. Jet impingement: No essential systems are impacted.

TABLE 3.6-4 (Sheet 69 - cont)

5. Room pressurization: See Section 6.2.1.1.3a

6. Temperature and humidity: See Section 6.2.1.1.3a

C. Problem No. 244, Loop No. 1 - LOCA Breaks.

1. General: Breaks HB24-01, 02, and 06 have a H-E source from the crossover leg, Loop No. 1. The downstream source is moderate energy. No restrictions were considered in the calculation of thrust forces. Breaks HB24-06 can be deleted per arbitrary break elimination.

2. Criteria: The small-LOCA break criteria has been met. (See Note B)

3. Pipe whip: Whipping occurs for some breaks. However, no essential systems are impacted.

4. Jet impingement: The only target essential to mitigating the consequences of the breaks is the safety injection to RCS hot leg Loop No. 1. Function of this essential system is ensured.

5. Room pressurization: See Section 6.2.1.1.3a

6. Temperature and humidity: See Section 6.2.1.1.3a

TABLE 3.6-4 (Sheet 70)

Room No. 2000 Liquid Radwaste

I. Sheets of Figure 3.6-1 showing high-energy (H-E) piping in this room 51

II. Effects Analysis

A. Problem No. 234, Non-LOCA Breaks.

1. General: Breaks HB27-01, 02, and 09 have a H-E source from the accumulator tank A. The reactor coolant drain tank pump source is moderate energy. No restrictions were considered in the calculation of thrust forces.

2. Criteria: The non-LOCA break criteria has been met. (See Note C)

3. Pipe whip: Whipping occurs for some breaks. However, no essential systems are impacted.

4. Jet impingement: No essential systems are impacted.

5. Room pressurization: See Section 6.2.1.1.3a

6. Temperature and humidity: See Section 6.2.1.1.3a,c

B. Problem No. 235, Non-LOCA Breaks.

1. General: Breaks HB27-07, 08, 10, and 11 have a H-E source from the accumulator tank D. The reactor coolant drain tank pump source is moderate energy. No restrictions were considered in the calculation of thrust forces.

2. Criteria: The non-LOCA break criteria has been met. (See Note C)

3. Pipe whip: Whipping occurs for some breaks. However, no essential systems are impacted.

4. Jet impingement: No essential systems are impacted.

TABLE 3.6-4 (Sheet 70 - cont)

5. Room pressurization: See Section 6.2.1.1.3a

6. Temperature and humidity: See Section 6.2.1.1.3a

C. Problem No. 236, Non-LOCA Breaks.

1. General: Breaks HB27-05, 06, 12, and 13 have a H-E source from the accumulator tank C. The reactor coolant drain tank pump source is moderate energy. No restrictions were considered in the calculation of thrust forces.

2. Criteria: The non-LOCA break criteria has been met. (See Note C)

3. Pipe whip: Whipping occurs for some breaks. However, no essential systems are impacted.

4. Jet impingement: No essential systems are impacted.

5. Room pressurization: See Section 6.2.1.1.3a

6. Temperature and humidity: See Section 6.2.1.1.3a,c

D. Problem No. 237, Non-LOCA Breaks.

1. General: Breaks HB27-03, 04, 14, and 15 have a H-E source from the accumulator tank B. The reactor coolant drain tank pump source is moderate energy. No restrictions were considered in the calculation of thrust forces.

2. Criteria: The non-LOCA break criteria has been met. (See Note C)

3. Pipe whip: Whipping occurs for some breaks. However, no essential systems are impacted.

4. Jet impingement: No essential systems are impacted.

5. Room pressurization: See Section 6.2.1.1.3a

6. Temperature and humidity: See Section 6.2.1.1.3a,c

TABLE 3.6-4 (Sheet 71)

Room 2000 Pressurizer Surge Line

I. Pressurizer surge line pipe breaks are shown on Figure 3.6-3

II. Effects Analysis

A. Pressurizer Surge Line, Loop 4 - LOCA Breaks. (P-257)

1. General: Breaks 12, and 15 are LOCA breaks having sources from the RCS hot leg Loop 4 and the pressurizer. No restrictions were considered in the calculation of thrust forces.

2. Criteria: The large-LOCA break criteria has been met. (See Note A)

3. Pipe whip: Breaks are restrained per Figure 3.6-3. The whip targets are not required for post-accident safe shutdown or to mitigate the consequences of the accident.

4. Jet impingement: The only target essential to mitigating the consequences of the breaks is accumulator safety injection, Loop No. 1. Function of this essential system is ensured.

5. Room pressurization: See Section 6.2.1.1.3a

6. Temperature and humidity: See Section 6.2.1.1.3a,c

TABLE 3.6-4 (Sheet 72)

Room No. 2000 Reactor Coolant Loop 1

I. Reactor coolant loop pipe breaks are shown on Figure 3.6-3

II. Effects Analysis

A. Reactor Coolant Loop 1 - LOCA Breaks.

1. General: Breaks BB01-01, 03, 04, 05, 06, 07, and 08 are limited-area circumferential LOCA breaks. Sources are from both ends of each leg which produce radial disc jets. Break BB01-02 is a longitudinal slot break with source from RCS hot leg which produces a simple conical jet. No restrictions were considered in the calculation of thrust forces. Breaks BB01-02 and 05 can be deleted per arbitrary break elimination.

2. Criteria: The large LOCA break criteria has been met. (See Note A)

3. Pipe whip: Whip restraints designed by Westinghouse limit displacement, such that no whipping occurs.

4. Jet impingement: Function of jet targets is not required for post-accident safe shutdown or to mitigate the consequences of the accident.

5. Room pressurization: See Section 6.2.1.1.3a

6. Temperature and humidity: See Section 6.2.1.1.3a,c

B. Reactor Coolant Loop 2 - LOCA Breaks.

1. General: Breaks BB01-01, 03, 04, 05, 06, 07, and 08 are limited-area circumferential LOCA breaks. Sources are from both ends of each leg which produce radial disc jets. Break BB01-02 is a longitudinal slot break

TABLE 3.6-4 (Sheet 72 - cont)

with source from RCS hot leg which produces a simple conical jet. No restrictions were considered in the calculation of thrust forces. Breaks BB01-02 and 05 can be deleted per application of LLB technology.

2. Criteria: The large LOCA break criteria has been met. (See Note A)

3. Pipe whip: Whip restraints designed by Westinghouse limit displacement, such that no whipping occurs.

4. Jet impingement: The targets essential to mitigating the consequences of the breaks are CCW from RCP-C thermal barrier and RHR injection to intact coolant Loop No. 3. Function of these systems is ensured.

5. Room pressurization: See Section 6.2.1.1.3a

6. Temperature and humidity: See Section 6.2.1.1.3a,c

C. Reactor Coolant Loop 3 - LOCA Breaks.

1. General: Breaks BB01-01, 03, 04, 05, 06, 07, and 08 are limited-area circumferential LOCA breaks. Sources are from both ends of each leg which produce radial disc jets. Break BB01-02 is a longitudinal slot break with source from RCS hot leg which produces a simple conical jet. No restrictions were considered in the calculation of thrust forces. Breaks BB01-02 and 05 can be deleted per application of LLB technology.

2. Criteria: The large LOCA break criteria has been met. (See Note A)

3. Pipe whip: Whip restraints designed by Westinghouse limit displacement, such that no whipping occurs.

4. Jet impingement: The only target essential to mitigating the consequences of the breaks is seal injection to RCP-B. Function of this system is ensured.

5. Room pressurization: See Section 6.2.1.1.3a

6. Temperature and humidity: See Section 6.2.1.1.3a,c

TABLE 3.6-4 (Sheet 72 - cont)

D. Reactor Coolant Loop 4 - LOCA Breaks.

1. General: Breaks BB01-01, 03, 04, 05, 06, 07, and 08 are limited-area circumferential LOCA breaks. Sources are from both ends of each leg which produce radial disc jets. Break BB01-02 is a longitudinal slot break with source from RCS hot leg which produces a simple conical jet. No restrictions were considered in the calculation of thrust forces. Breaks BB01-02 and 05 can be deleted per application of LLB technology.

2. Criteria: The large LOCA break criteria has been met. (See Note A)

3. Pipe whip: Whip restraints designed by Westinghouse limit displacement, such that no whipping occurs.

4. Jet impingement: The targets essential to mitigating the consequences of the breaks are seal injection to RCP-B and RCP-C. Function of this system is ensured.

5. Room pressurization: See Section 6.2.1.1.3a

6. Temperature and humidity: See Section 6.2.1.1.3a,c

TABLE 3.6-4 (Sheet 73)

NOTES:

A. LARGE LOCA BREAK CRITERIA

1. The effects of large LOCA breaks must be limited to the following:

   a. Containment integrity must be maintained.

   b. Propagation to the secondary system is not allowed.

   c. No break propagation to the three remaining intact LOOPS is allowed.

   d. For branch line breaks, break propagation in the affected LOOP must be limited to an increase of 20 percent of the initial break area.

   e. For main coolant loop pipe breaks, break propogation limits are stated in PIP Vol. 1-3, Tab 10.

2. The following "ESSENTIAL" functions are required for mitigation of the pipe break via the ECCS systems.

   a. Accumulator safety injection to the three intact loops.

   b. Low head (RHR) safety injection to the three intact loops.

   c. Reactor coolant system equipment supports must maintain their functions.

3. The following other systems located inside the containment must maintain their design redundancy:

   a. Containment Spray (EN)

   b. Containment Cooling (GN)

   c. Containment Hydrogen Control (GS)

   d. Containment Isolation

4. The following safety actuation signals must be capable of being generated from instrumentation within the containment.

   a. Reactor Trip

   b. Safety Injection Signal

TABLE 3.6-4 (Sheet 73 - cont)

NOTES:

c. Containment Isolation Phase A and Phase B

d. Containment Spray Actuation

5. All safety-related equipment located outside of the containment is operable and subject to single failure criteria.

6. No non-safety-related equipment either inside or outside the containment is required for mitigation of the effects of this LOCA.

B. SMALL LOCA BREAK CRITERIA

1. The effects of small LOCA breaks must be limited to the following:

a. Containment integrity must be maintained.

b. Rupture of steam-feedwater lines must be prevented.

c. Break propagation must be limited to the affected leg.

d. Break propagation in the affected leg must be limited to 12.5 square inches (4 inches ID).

e. Damage to the high head safety injection lines connected to the other leg of the affected loop or to the other loops must be prevented.

f. Propagation of the break to the high head safety injection line connected to the affected leg must be prevented if the line break results in a loss of core cooling capability due to a spilling injection line.

2. The following ESSENTIAL functions are required for mitigation of the pipe break:

a. High head safety injection via the ECCS systems.

b. Boration via one of the following paths:

1. Boration via the BIT path to the four loops.

2. Boration via the RCP seals for all four loops

3. Boration via normal charging

TABLE 3.6-4 (Sheet 73 - cont)

NOTES:

c. Reactor coolant system equipment supports and restraints must maintain their functions.

3. The following other systems located inside the containment must maintain their design redundancy:

a. Containment Spray (EN)

b. Containment Cooling (GN)

c. Containment Hydrogen Control (GS)

d. Containment Isolation

4. The following safety actuation signals must be capable of being generated from instrumentation within the containment:

a. Reactor Trip

b. Safety Injection Signal

c. Containment Isolation Phase A and Phase B

d. Containment Spray Actuation

5. All safety-related equipment located outside the containment is operable and subject to single failure criteria.

6. No non-safety related equipment either inside or outside containment is required for mitigation of the effects of this LOCA.

C. NON-LOCA BREAK CRITERIA

1. The effects of non-LOCA breaks must be limited to the following:

a. Containment integrity must be maintained.

b. A non-LOCA break must not cause a loss of coolant or secondary systems line break.

c. The essential functions required for post-accident safe shutdown due to a non-LOCA break must be maintained. (See Section 7.4)

TABLE 3.6-4 (Sheet 73 - cont)

NOTES:

2. The following other systems located inside containment must maintain their design redundancy:

   a. Containment Cooling (GN)

   b. Containment Isolation

3. The following safety actuation signals must be capable of being generated from instrumentation within the containment:

   a. Reactor Trip

   b. Containment Isolation

   c. Safety Injection Signal

4. No non-safety-related equipment either inside or outside containment is required for post-accident safe shutdown due to a non-LOCA pipe break.

D. SECONDARY SYSTEMS BREAK CRITERIA

1. The effects of secondary systems breaks must be limited to the following:

   a. Containment integrity must be maintained.

   b. Propagation to the primary system is not allowed.

   c. The essential functions required for post-accident safe shutdown due to a secondary systems break must be maintained. (see Sections 15.1.5 and 15.2.8 and Section 7.4)

2. The following other systems located inside the containment must maintain their design redundancy:

   a. Containment Spray (EN)

   b. Containment Cooling (GN)

   c. Containment Isolation

3. The following safety actuation signals must be capable of being generated from instrumentation within containment:

   a. Reactor Trip

NOTES:

   b. Safety Injection Signal

   c. Containment Isolation

   d. Containment Spray

4. No non-safety-related equipment either inside or outside containment is required for post-accident safe shutdown due to a secondary systems pipe break.

TABLE 3.6-5

STRESS INTENSITY RANGES AND CUMULATIVE USAGE FACTORS AT DESIGN BREAK LOCATIONS IN THE REACTOR COOLANT LOOP 4

Pipe Break Isometric No.: Figure 3.9(N)-1a

Node [a] No.	Equation 12 Stress (ksi)	Equation 13 Stress (ksi)	Cum. Usage Factor	Allowable Stress (ksi)
404	40.4	54.8	0.98	56.7
415	40.4	54.8	0.98	56.7
438	20.0	50.6	0.70	56.7
459	20.0	50.6	0.70	56.7
468	31.3	48.1	0.70	56.7
484	31.3	48.1	0.70	56.7

Notes:

(a) Node numbers for loop 1 are defined in FIG. 3.9(N)-1a

TABLE 3.6-6

SUMMARY OF FLOOD LEVELS IN ALL SAFETY-RELATED ROOMS

AUXILIARY BUILDING

Room No.	Flood Level Above Floor Elevation
1101	3' 6"
1102	3' 6"
1103	3' 6"
1104	3' 6"
1105	3' 6"
1106	3' 6"
1107	0"
1108	0"
1109	6’2"
1110	6’2"
1111	6’2""
1112	6’2"
1113	0"
1114	0"
1115	3' 6"
1116	3' 6"
1117	3' 6"
1119	0' 0"
1120	3' 6"
1121	10' 6"
1122	3' 6"
1123	3' 6"
1124	3' 6"
1125	3' 6"
1126	6'9"
1127	15'7"
1128	3' 6"
1129	3' 6"
1130	3' 6"
1201	0' 0"
1202	0' 0"
1203	4' 1"
1204	0' 0"
1205	0' 0"
1206	0' 0"
1207	0' 0"
1301	2'10"
1302	0' 0"
1304	0' 0"
1305	0' 0"
1306	0' 0"
1307	0' 0"
1308	0' 0"
1309	2' 4"

AUXILIARY BUILDING (Cont.)

Room No.	Flood Level Above Floor Elevation
1310	3'1"
1311	10"
1312	10"
1313	0"
1314	2'10"
1315	2'10"
1316	0' 0"
1317	0' 0"
1318	0"
1320	2'10"
1321	0' 0"
1322	0"
1323	0"
1324	0"
1325	0"
1326	0"
1327	0"
1328	0"
1329	0' 0"
1330	0"
1331	1' 11"
1401	0' 7"
1402	0' 7"
1403	0' 8"
1405	0' 0"
1406	0' 7"
1407	0' 0"
1408	0' 7"
1409	0' 0"
1410	0' 2"
1411	1' 4"
1412	l' 4"
1413	0' 0"
1501	0"
1502	0' 2"
1503	0' 2"
1504	0' 2"
1505	0' 2"
1506	0' 2"
1507	0' 2"
1508	0' 0"
1509	0' 0"
1512	0' 0"
1513	0' 2"

TABLE 3.6-6 (Sheet 2)

REACTOR BUILDING

Room No.	Flood Level Elevation
2000	
LOCA	<2004'-8"
MSLB	<2004'-6"

FUEL BUILDING

Room No.	Flood Level Above Floor Elevation
6102	1' 6"
6104	1' 6"
6105	1' 6"
6203	1' 6"
6303	2' 5"
6304	0' 0"

CONTROL BUILDING

Room No.	Flood Level Above Floor Elevation
3101	2’10'
3301	0' 0"
3302	0' 2"
3403	2' 5"
3404	0' 0"
3405	0' 0"
3407	0' 0"
3408	0' 0"
3409	2' 9"
3410	0' 0"
3411	0' 0"
3413	0' 0"
3414	0' 0"
3415	0' 0"
3416	0' 0"
3501	0' 1"
3605	0' 0"
3801	0' 7"

DIESEL BUILDING

Room No.	Flood Level Above Floor Elevation
5201	0' 4"
5203	0' 4"

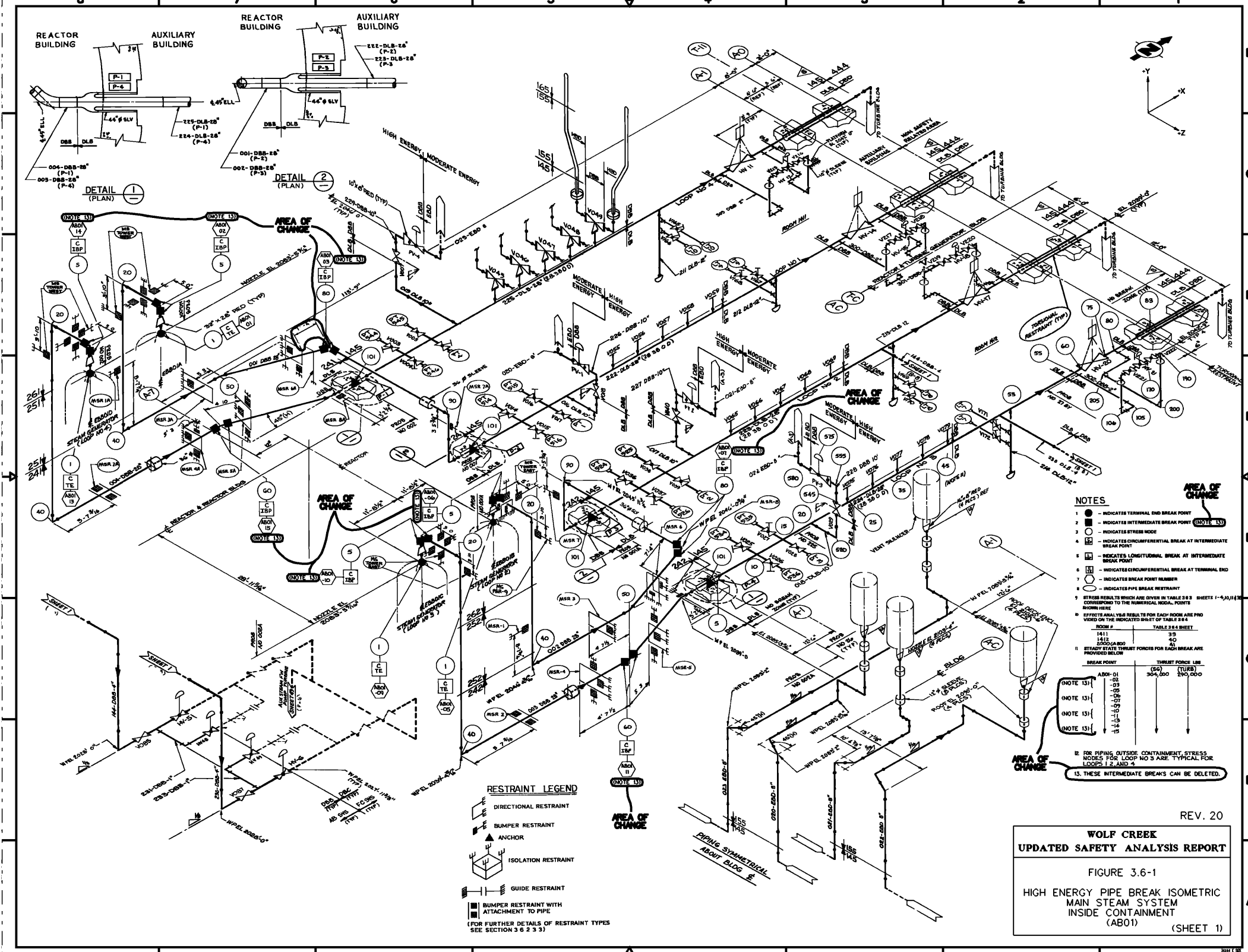
REACTOR BUILDING
AUXILIARY BUILDING
DETAIL 1 (PLAN)
DETAIL 2 (PLAN)
HIGH ENERGY, MODERATE ENERGY
AREA OF CHANGE
NOTES
1 ● – INDICATES TERMINAL END BREAK POINT
2 ■ – INDICATES INTERMEDIATE BREAK POINT (NOTE 13)
3 ○ – INDICATES STRESS NODE
4 – INDICATES CIRCUMFERENTIAL BREAK AT INTERMEDIATE BREAK POINT
5 – INDICATES LONGITUDINAL BREAK AT INTERMEDIATE BREAK POINT
6 – INDICATES CIRCUMFERENTIAL BREAK AT TERMINAL END
7 – INDICATES BREAK POINT NUMBER
8 – INDICATES PIPE BREAK RESTRAINT
9 STRESS RESULTS WHICH ARE GIVEN IN TABLE 3.6.3 SHEETS 1-4,10,11 & 30 CORRESPOND TO THE NUMERICAL NODAL POINTS SHOWN HERE
10 EFFECTS ANALYSIS RESULTS FOR EACH ROOM ARE PROVIDED ON THE INDICATED SHEET OF TABLE 3.6.4
ROOM # | TABLE 3.6.4 SHEET
1411 | 39
1412 | 40
2200 (AB01) | 41
11 STEADY STATE THRUST FORCES FOR EACH BREAK ARE PROVIDED BELOW
BREAK POINT | THRUST FORCE LBS (SG) | (TURB)
AB01-01 | 304,000 | 290,000
(NOTE 13) -02 -03 -05 -06
(NOTE 13) -07 -09 -10
(NOTE 13) -11 -13 -14
(NOTE 13) -15
12 FOR PIPING OUTSIDE CONTAINMENT, STRESS NODES FOR LOOP NO 3 ARE TYPICAL FOR LOOPS 1, 2, AND 4
13. THESE INTERMEDIATE BREAKS CAN BE DELETED.
RESTRAINT LEGEND
DIRECTIONAL RESTRAINT
BUMPER RESTRAINT
ANCHOR
ISOLATION RESTRAINT
GUIDE RESTRAINT
BUMPER RESTRAINT WITH ATTACHMENT TO PIPE
(FOR FURTHER DETAILS OF RESTRAINT TYPES SEE SECTION 3.6.2.3.3)
PIPING SYMMETRICAL ABOUT BLDG ℄
REV. 20
WOLF CREEK
UPDATED SAFETY ANALYSIS REPORT
FIGURE 3.6-1
HIGH ENERGY PIPE BREAK ISOMETRIC
MAIN STEAM SYSTEM
INSIDE CONTAINMENT
(AB01)
(SHEET 1)

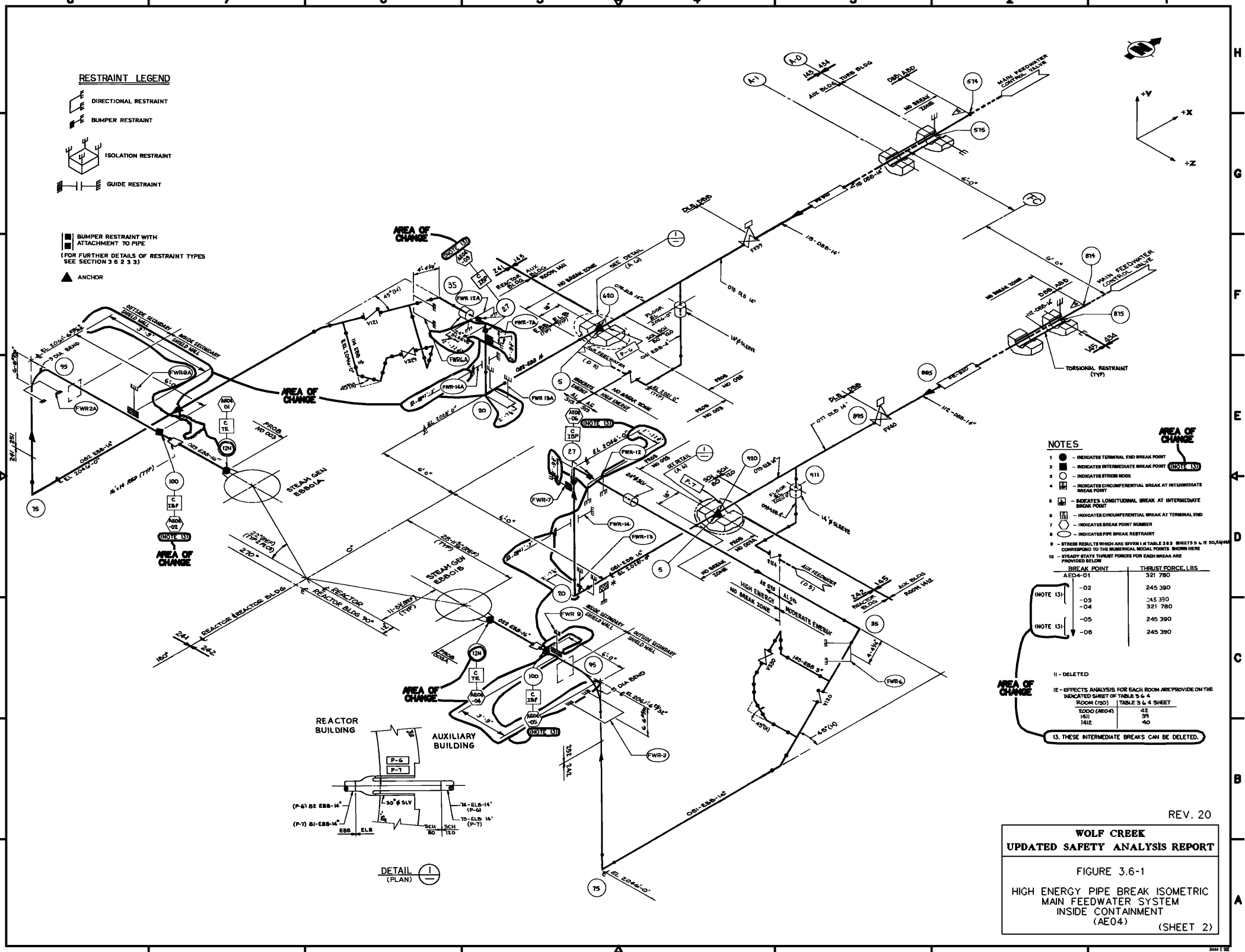

NOTES

1 ● – INDICATES TERMINAL END BREAK POINT
2 ■ – INDICATES INTERMEDIATE BREAK POINT (NOTE 13)
3 ○ – INDICATES STRESS NODE
4 – INDICATES CIRCUMFERENTIAL BREAK AT INTERMEDIATE BREAK POINT
5 – INDICATES LONGITUDINAL BREAK AT INTERMEDIATE BREAK POINT
6 – INDICATES CIRCUMFERENTIAL BREAK AT TERMINAL END
7 ⬡ – INDICATES BREAK POINT NUMBER
8 ⬭ – INDICATES PIPE BREAK RESTRAINT
9 – STRESS RESULTS WHICH ARE GIVEN IN TABLE 3 6 3 SHEETS 5 6 1E 20,24,26A CORRESPOND TO THE NUMERICAL NODAL POINTS SHOWN HERE
10 – STEADY STATE THRUST FORCES FOR EACH BREAK ARE PROVIDED BELOW

BREAK POINT	THRUST FORCE, LBS
AE04-01	321 780
-02	245 390
-03	245 390
-04	321 780
-05	245 390
-06	245 390

11 - DELETED

12 - EFFECTS ANALYSIS FOR EACH ROOM ARE PROVIDE ON THE INDICATED SHEET OF TABLE 3 6 4

ROOM (ISO)	TABLE 3 6 4 SHEET
2000 (AE04)	42
1411	39
1412	40

13. THESE INTERMEDIATE BREAKS CAN BE DELETED.

REV. 20

WOLF CREEK
UPDATED SAFETY ANALYSIS REPORT

FIGURE 3.6-1

HIGH ENERGY PIPE BREAK ISOMETRIC
MAIN FEEDWATER SYSTEM
INSIDE CONTAINMENT
(AE04)
(SHEET 2)

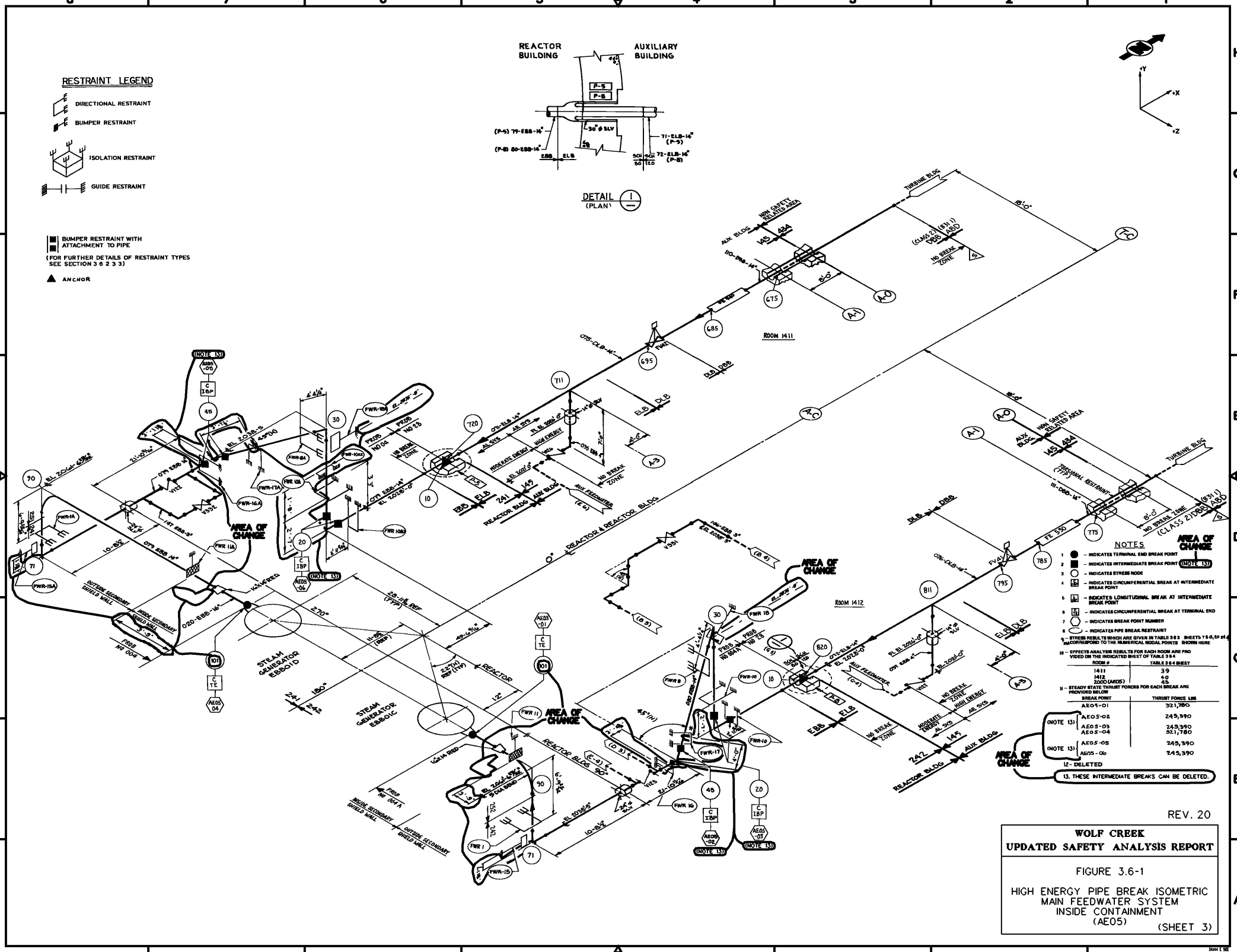
RESTRAINT LEGEND
DIRECTIONAL RESTRAINT
BUMPER RESTRAINT
ISOLATION RESTRAINT
GUIDE RESTRAINT
BUMPER RESTRAINT WITH ATTACHMENT TO PIPE
(FOR FURTHER DETAILS OF RESTRAINT TYPES SEE SECTION 3 6 2 3 3)
ANCHOR
REACTOR BUILDING
AUXILIARY BUILDING
DETAIL 1 (PLAN)
ROOM 1411
ROOM 1412
REACTOR & REACTOR BLDG
STEAM GENERATOR EBBOID
STEAM GENERATOR EBBOIC
AREA OF CHANGE
TURBINE BLDG
AUX BLDG
NON SAFETY RELATED AREA
NO BREAK ZONE
(CLASS 2) (831.1)
NOTES
1 – INDICATES TERMINAL END BREAK POINT
2 – INDICATES INTERMEDIATE BREAK POINT (NOTE 13)
3 – INDICATES STRESS NODE
4 – INDICATES CIRCUMFERENTIAL BREAK AT INTERMEDIATE BREAK POINT
5 – INDICATES LONGITUDINAL BREAK AT INTERMEDIATE BREAK POINT
6 – INDICATES CIRCUMFERENTIAL BREAK AT TERMINAL END
7 – INDICATES BREAK POINT NUMBER
8 – INDICATES PIPE BREAK RESTRAINT
9 – STRESS RESULTS WHICH ARE GIVEN IN TABLE 3 6 3 SHEETS 7 & 8, 5 & 6 CORRESPOND TO THE NUMERICAL NODAL POINTS SHOWN HERE
10 – EFFECTS ANALYSIS RESULTS FOR EACH ROOM ARE PROVIDED ON THE INDICATED SHEET OF TABLE 3 6 4
ROOM # | TABLE 3 6 4 SHEET
1411 | 3 9
1412 | 4 0
2000 (AE05) | 4 5
11 – STEADY STATE THRUST FORCES FOR EACH BREAK ARE PROVIDED BELOW
BREAK POINT | THRUST FORCE LBS
AE05-01 | 321,780
(NOTE 13) AE05-02 | 245,390
AE05-03 | 245,390
AE05-04 | 321,780
(NOTE 13) AE05-05 | 245,390
AE05-06 | 245,390
12 – DELETED
13. THESE INTERMEDIATE BREAKS CAN BE DELETED.
REV. 20
WOLF CREEK
UPDATED SAFETY ANALYSIS REPORT
FIGURE 3.6-1
HIGH ENERGY PIPE BREAK ISOMETRIC
MAIN FEEDWATER SYSTEM
INSIDE CONTAINMENT
(AE05)
(SHEET 3)

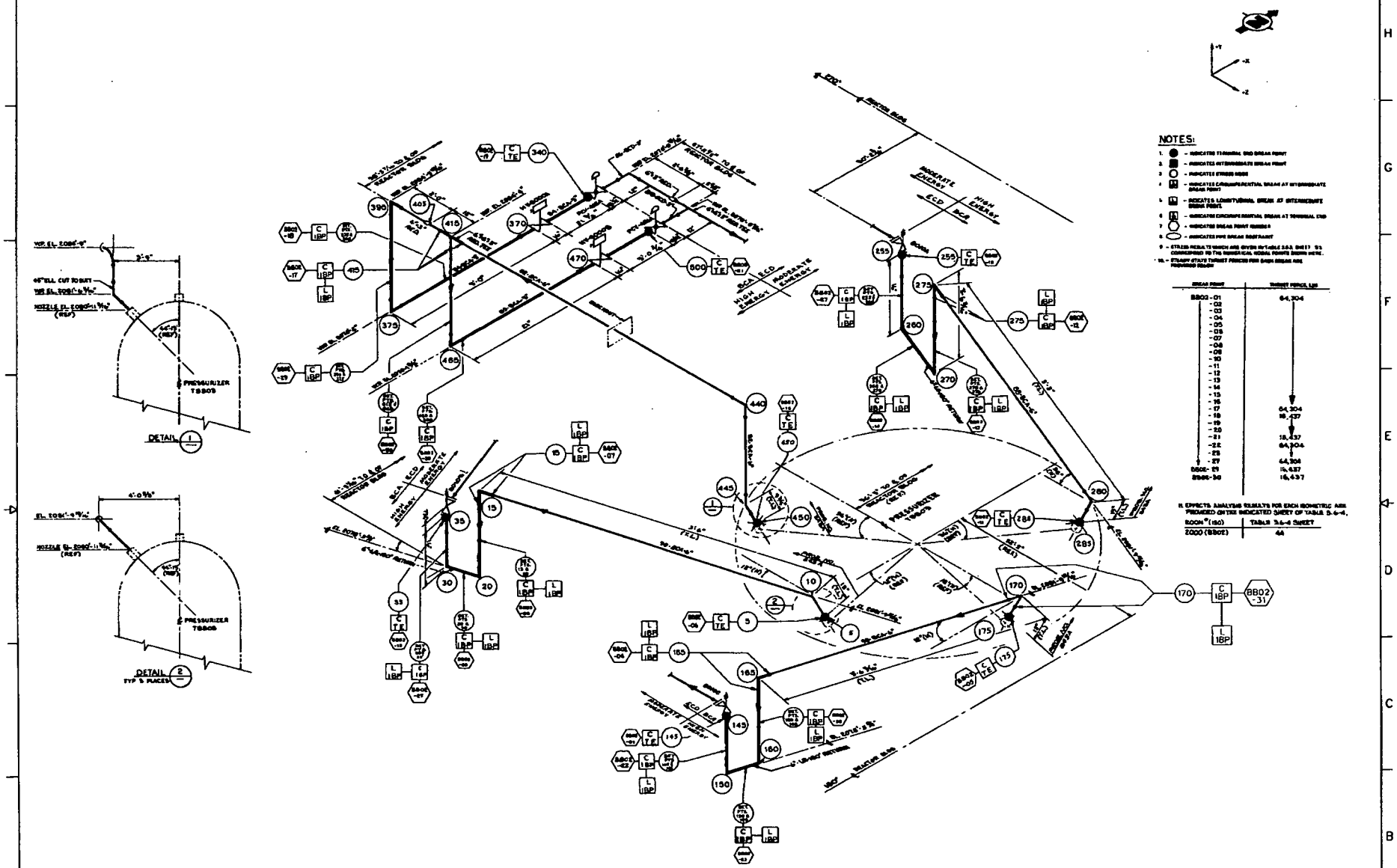

Rev 7

WOLF CREEK
UPDATED SAFETY ANALYSIS REPORT

FIGURE 3.6-1

HIGH ENERGY PIPE BREAK ISOMETRIC
REACTOR COOLANT SYSTEM
PRESSURIZER RELIEF
(BB02)

SHEET 8

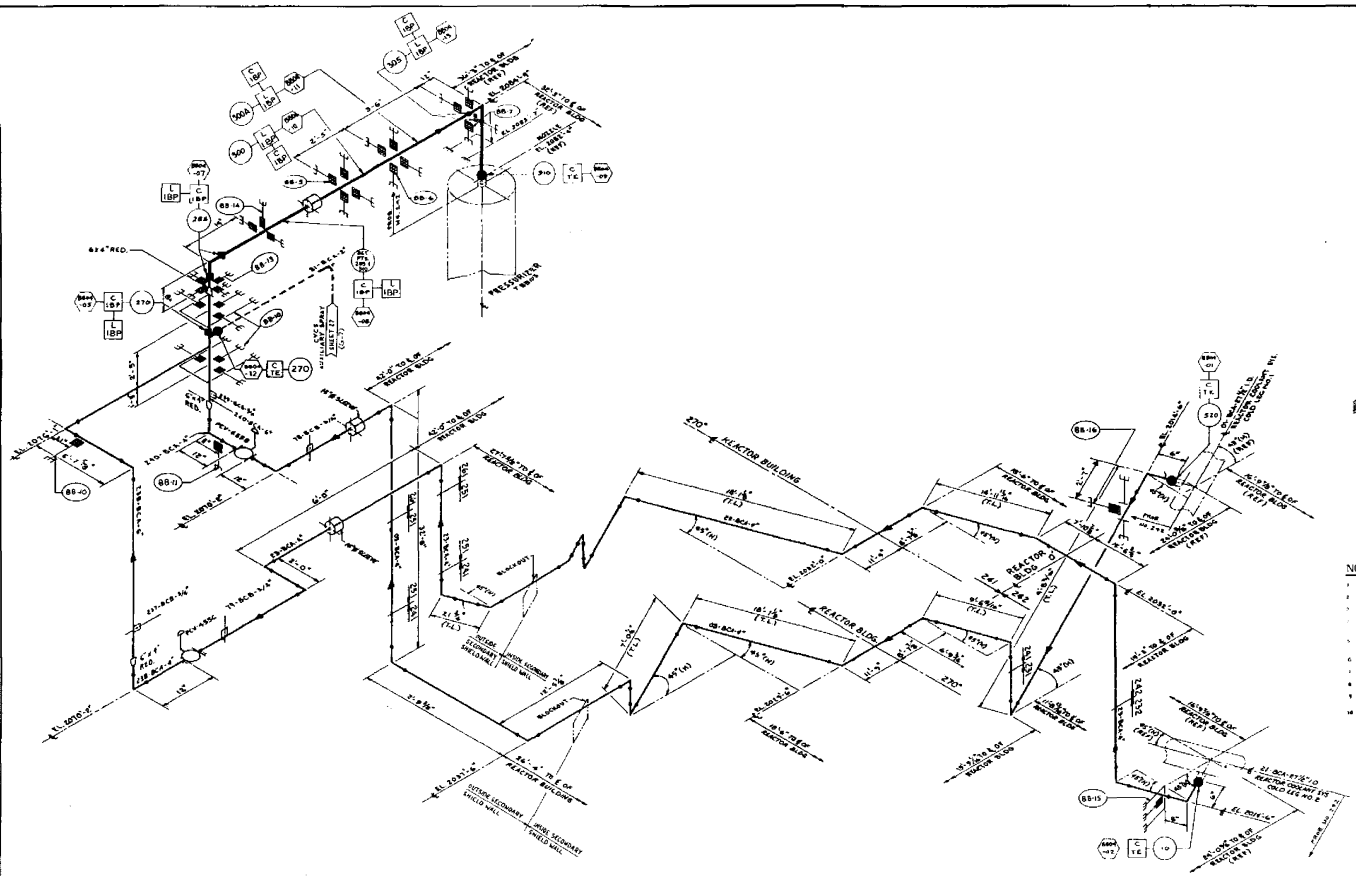

Rev. 0

WOLF CREEK
UPDATED SAFETY ANALYSIS REPORT

FIGURE 3.6-1

HIGH ENERGY PIPE BREAK ISOMETRIC
REACTOR COOLANT SYSTEM
PRESSURIZER SPRAY
(BB04)

SHEET 9

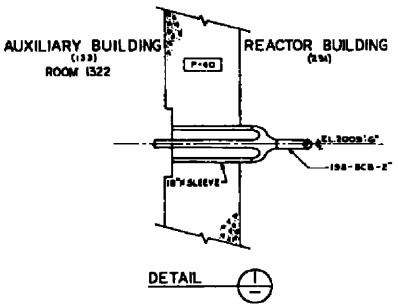

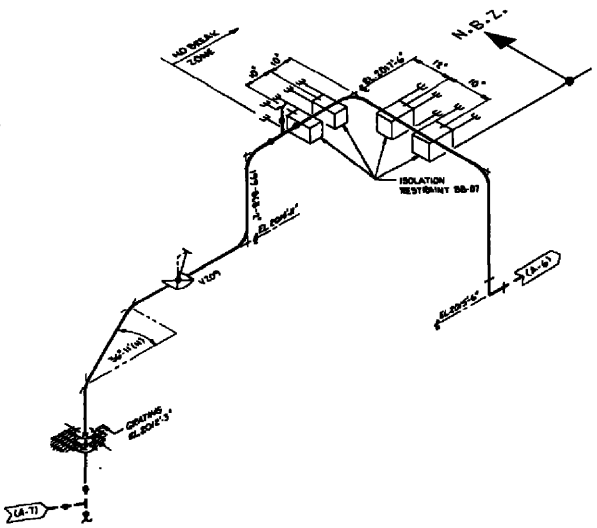

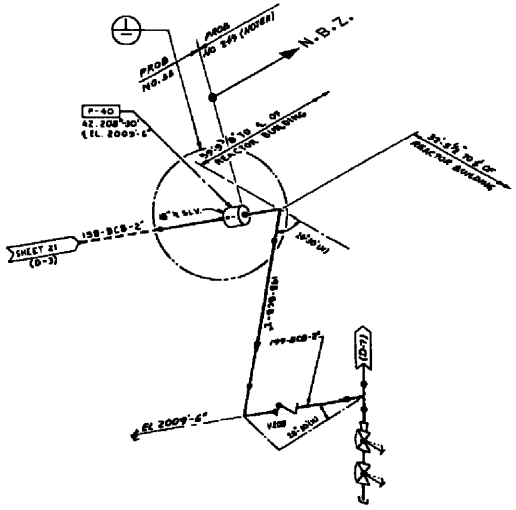

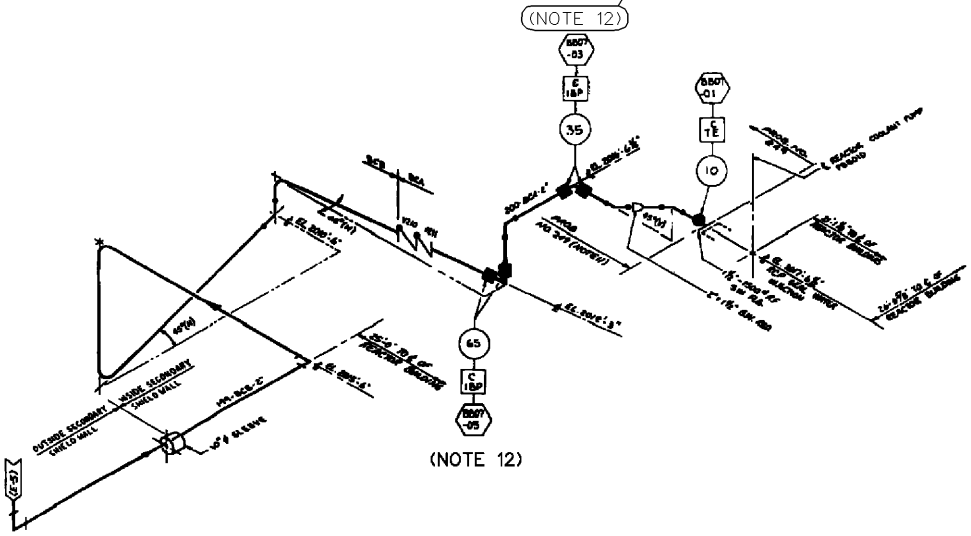

RESTRAINT LEGEND

- DIRECTIONAL RESTRAINT
- BUMPER RESTRAINT
- ISOLATION RESTRAINT
- GUIDE RESTRAINT
- BUMPER RESTRAINT WITH ATTACHMENT TO PIPE

(FOR FURTHER DETAILS OF RESTRAINT TYPES SEE SECTION 3.6.2.3.3)

▲ ANCHOR

+Y
+X
+Z

NOTES:

1. ● - INDICATES TERMINAL END BREAK POINT
2. ■ - INDICATES INTERMEDIATE BREAK POINT (NOTE 12)
3. ○ - INDICATES STRESS NODE
4. - INDICATES CIRCUMFERENTIAL BREAK AT INTERMEDIATE BREAK POINT
5. - INDICATES LONGITUDINAL BREAK AT INTERMEDIATE BREAK POINT.
6. - INDICATES CIRCUMFERENTIAL BREAK AT TERMINAL END
7. - INDICATES BREAK POINT NUMBER
8. - INDICATES PIPE BREAK RESTRAINT
9. - STRESS RESULTS WHICH ARE GIVEN IN TABLE 3.6.3, SHEET 58 CORRESPOND TO THE NUMERICAL NODAL POINTS SHOWN HERE
10. - STEADY STATE THRUST FORCES FOR EACH BREAK ARE PROVIDED BELOW

BREAK POINT	THRUST FORCE, LBS
BB07-01 (LOOP)	4968
BB07-01 (CVCS)	192
BB07-03 (LOOP)	4968
BB07-03 (CVCS)	192
(NOTE 12) BB07-05 (LOOP)	4968
(NOTE 12) BB07-05 (CVCS)	192

11. EFFECTS ANALYSIS RESULTS FOR EACH ISOMETRIC ARE PROVIDED ON THE INDICATED SHEET OF TABLE 3.6-4.

ROOM# (130)	TABLE 3.6-4 SHEET
2000 (BB07)	48

12. THESE INTERMEDIATE BREAKS CAN BE DELETED.

AREA OF CHANGE

REV. 19

WOLF CREEK
UPDATED SAFETY ANALYSIS REPORT

FIGURE 3.6-1

HIGH ENERGY PIPE BREAK ISOMETRIC
REACTOR COOLANT SYSTEM
SEAL WATER INJECTION
INSIDE CONTAINMENT
(BB07)

(SHEET 12)

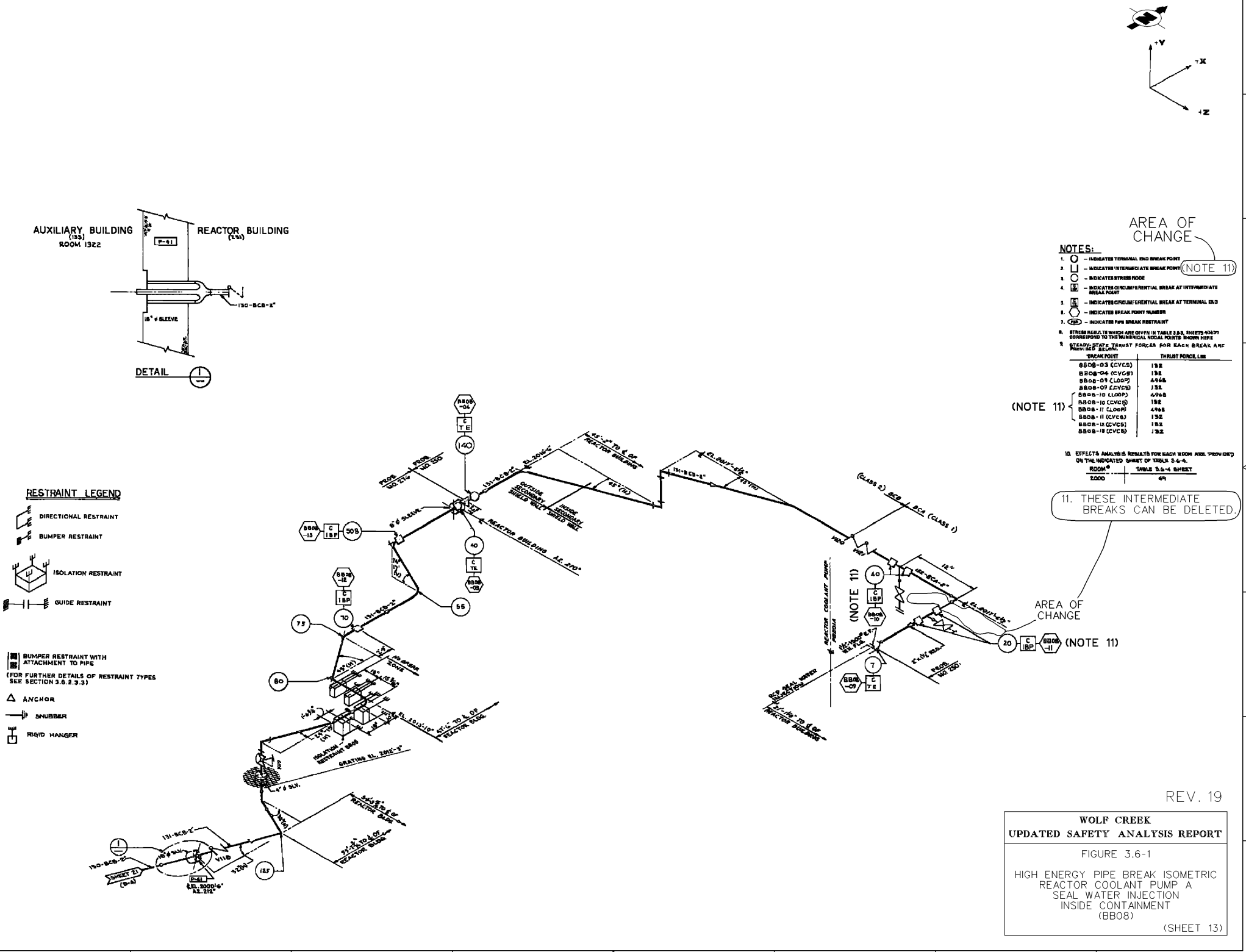

REV. 19

WOLF CREEK
UPDATED SAFETY ANALYSIS REPORT

FIGURE 3.6-1

HIGH ENERGY PIPE BREAK ISOMETRIC
REACTOR COOLANT PUMP A
SEAL WATER INJECTION
INSIDE CONTAINMENT
(BB08)

(SHEET 13)

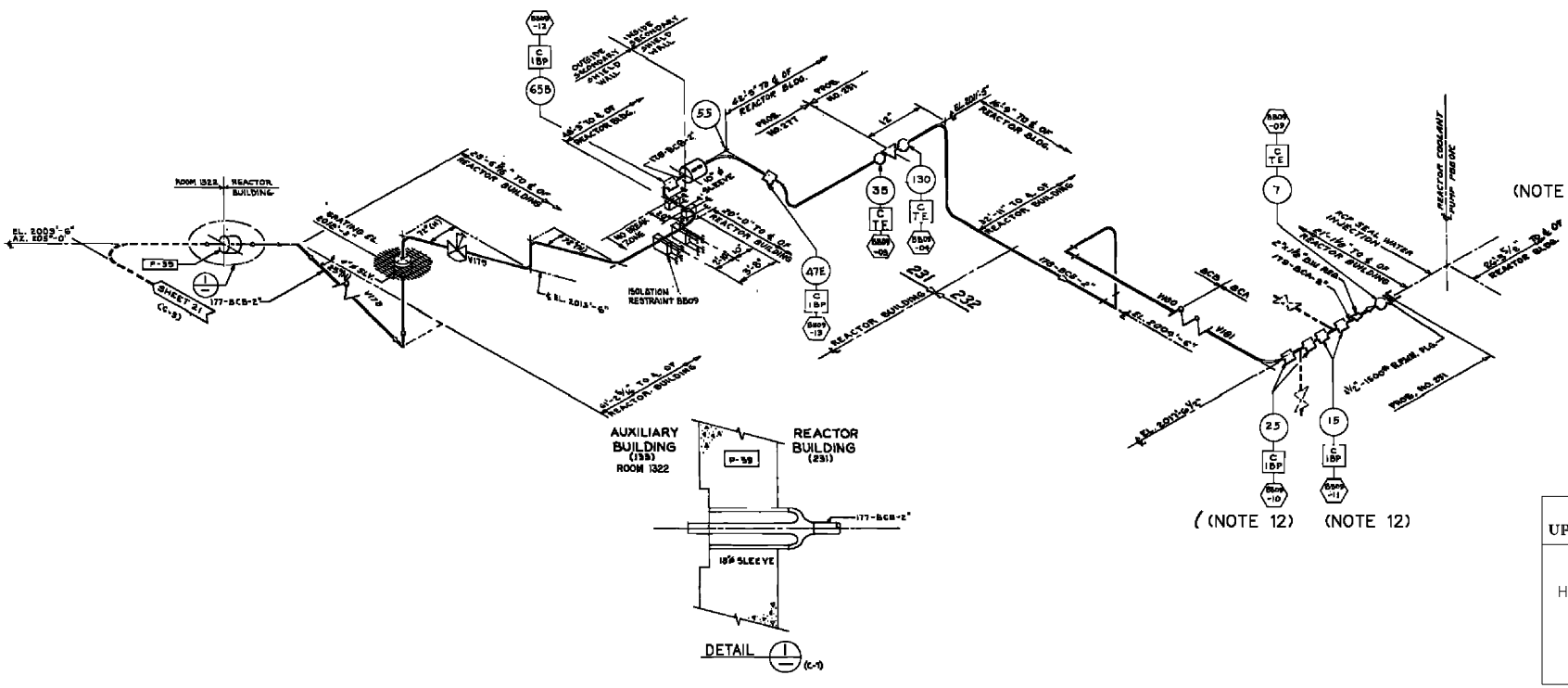

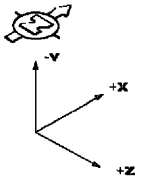

RESTRAINT LEGEND

- DIRECTIONAL RESTRAINT
- BUMPER RESTRAINT
- ISOLATION RESTRAINT
- GUIDE RESTRAINT
- BUMPER RESTRAINT WITH ATTACHMENT TO PIPE

(FOR FURTHER DETAILS OF RESTRAINT TYPES SEE SECTION 3.6.2.3.3)

△ ANCHOR

NOTES:

1. ○ – INDICATES TERMINAL END BREAK POINT
2. □ – INDICATES INTERMEDIATE BREAK POINT (NOTE 12)
3. ○ – INDICATES STRESS NODE
4. – INDICATES CIRCUMFERENTIAL BREAK AT INTERMEDIATE BREAK POINT.
5. – INDICATES LONGITUDINAL BREAK AT INTERMEDIATE BREAK POINT.
6. – INDICATES CIRCUMFERENTIAL BREAK AT TERMINAL END
7. ⬡ – INDICATES BREAK POINT NUMBER
8. – INDICATES PIPE BREAK RESTRAINT
9. STRESS RESULTS WHICH ARE GIVEN IN TABLE 3.6-3 SHEETS 41 & 60 CORRESPOND TO THE NUMERICAL NODAL POINTS SHOWN HERE.
10. STEADY-STATE THRUST FORCES FOR EACH BREAK ARE PROVIDED BELOW.

BREAK POINT	THRUST FORCE, LBS
BB09-03 (CVCS)	132
BB09-04 (CVCS)	132
BB09-09 (LOOP)	4,968
BB09-09 (CVCS)	132
BB09-10 (LOOP)	4,968
BB09-10 (CVCS)	132
BB09-11 (LOOP)	4,968
BB09-11 (CVCS)	132
BB09-12 (CVCS)	132
BB09-13 (CVCS)	132

(NOTE 12)

11. EFFECTS ANALYSIS RESULTS FOR EACH ROOM ARE PROVIDED ON THE INDICATED SHEETS OF TABLE 3.6-4

ROOM#	TABLE 3.6-4 SHEET
1322	26
1000	50

AREA OF CHANGE

12. THESE INTERMEDIATE BREAKS CAN BE DELETED.

REV. 19

WOLF CREEK
UPDATED SAFETY ANALYSIS REPORT

FIGURE 3.6-1

HIGH ENERGY PIPE BREAK ISOMETRIC
REACTOR COOLANT PUMP C
SEAL WATER INJECTION
INSIDE CONTAINMENT
(BB09)

(SHEET 14)

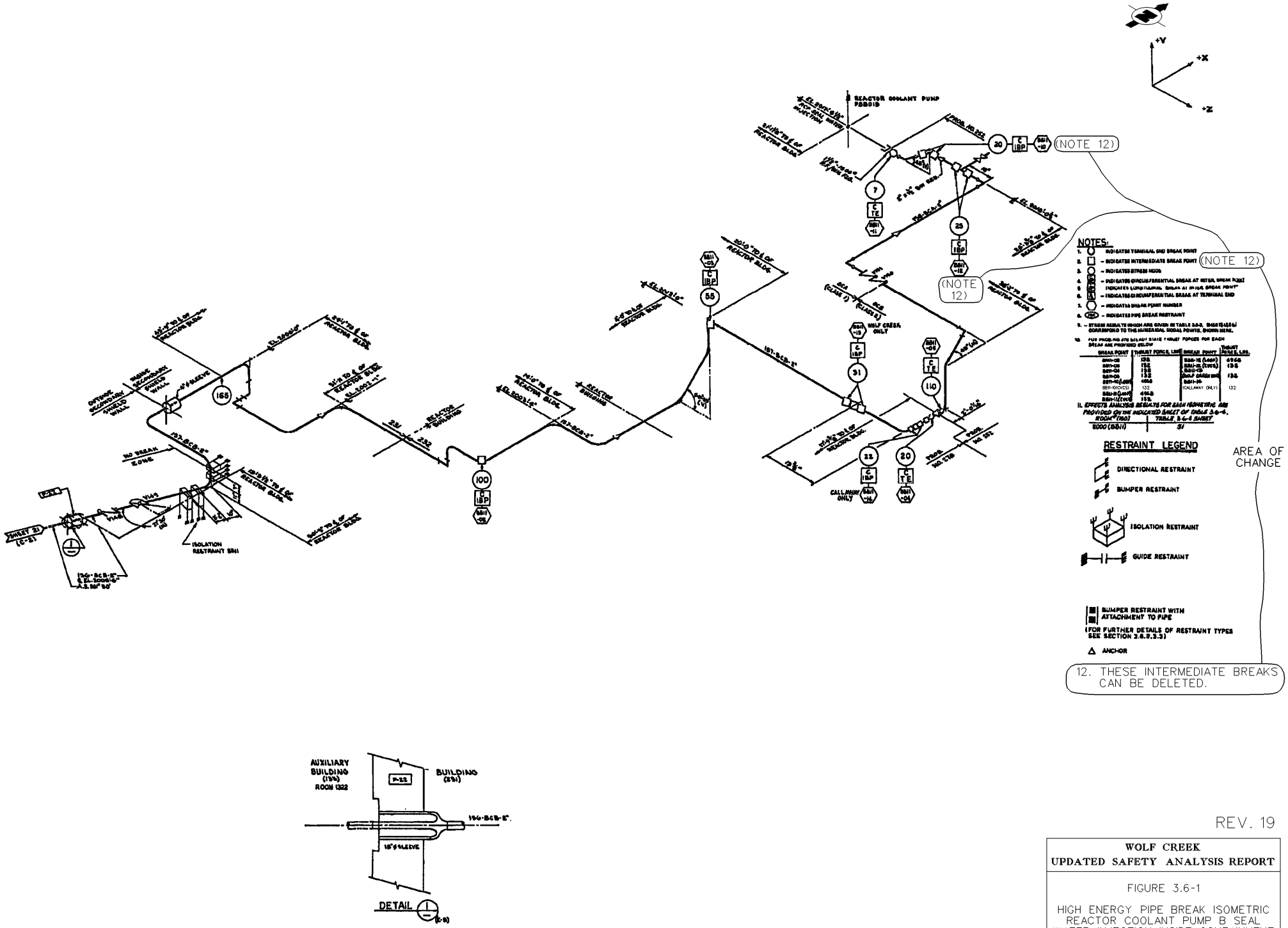

REV. 19

WOLF CREEK
UPDATED SAFETY ANALYSIS REPORT

FIGURE 3.6-1

HIGH ENERGY PIPE BREAK ISOMETRIC REACTOR COOLANT PUMP B SEAL WATER INJECTION INSIDE CONTAINMENT (BB11)

(SHEET 15)

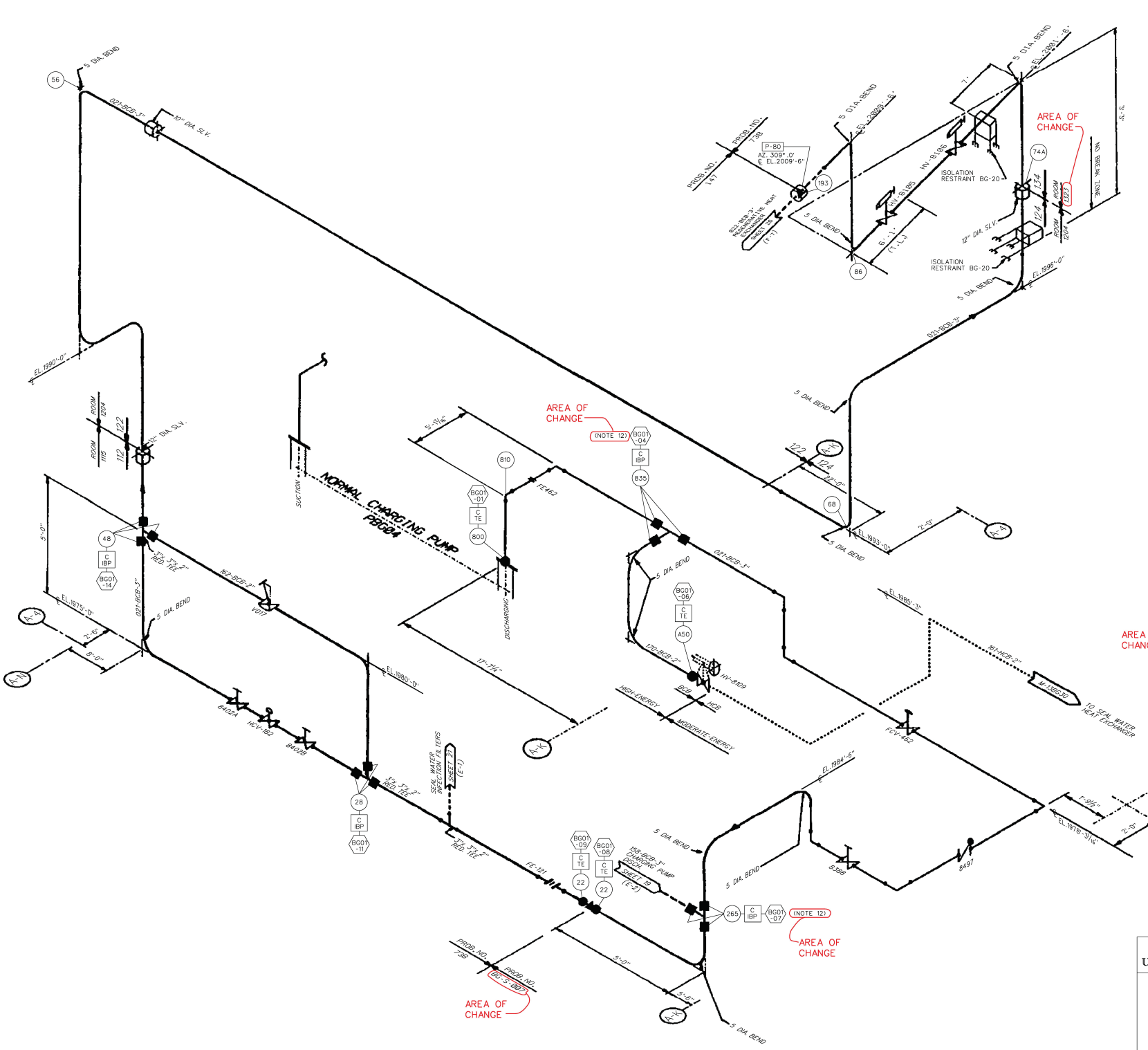

NOTES:

1. ● - INDICATES TERMINAL END BREAK POINT
2. ■ - INDICATES INTERMEDIATE END BREAK POINT
3. ○ - INDICATES STRESS NODE
4. IBP - INDICATES CIRCUMFERENTIAL BREAK AT INTERMEDIATE BREAK POINT
5. IBP - INDICATES LONGITUDINAL BREAK AT INTERMEDIATE BREAK POINT
6. TE - INDICATES CIRCUMFERENTIAL BREAK AT TERMINAL END
7. ⬡ - INDICATES BREAK POINT NUMBER
8. PBR - INDICATES PIPE BREAK RESTRAINT
9. - STRESS RESULTS WHICH ARE GIVEN IN TABLE 3.6-3, SHEETS 13, 14, & 15 CORRESPOND TO THE NUMERICAL NODAL POINTS SHOWN HERE.
10. - STEADY STATE THRUST FORCES FOR EACH BREAK ARE PROVIDED BELOW.

BREAK POINT	THRUST FORCE, LBS.
BG01-01	37,000
BG01-02	DELETED
BG01-03	DELETED
BG01-04(3")	37,000
BG01-04(2")	15,697
BG01-06	37,000
BG01-07	33,000
BG01-08	33,000
BG01-09	33,000
BG01-11(3")	33,000
BG01-11(2")	14,000
BG01-13	DELETED
BG01-14(3")	33,000
BG01-14(2")	14,000

RESTRAINT LEGEND

- DIRECTIONAL RESTRAINT
- BUMPER RESTRAINT
- ISOLATION RESTRAINT
- GUIDE RESTRAINT
- BUMPER RESTRAINT WITH ATTACHMENT TO PIPE

(FOR FURTHER DETAILS OF RESTAINT TYPES SEE SECTION 3.6.2.3.3)

▲ ANCHOR

11. - EFFECTS ANALYSIS RESULTS FOR EACH ROOM ARE PROVIDED ON THE INDICATED SHEET OF TABLE 3.6-4.

ROOM*	TABLE 3.6-4 SHEET
1204	20
1323	28
1115	7

AREA OF CHANGE

12. - INTERMEDIATE BREAKS BG01-04 (DP 835) & BG01-07 (DP 265) ARE DELETED PER MEB 3-1, REV. 2.

AREA OF CHANGE

REV. 32

WOLF CREEK
UPDATED SAFETY ANALYSIS REPORT

FIGURE 3.6-1

HIGH ENERGY PIPE BREAK ISOMETRIC
NCP TO REGEN HX
CVCS - OUTSIDE CONTAINMENT
(BG01)

(SHEET 18)

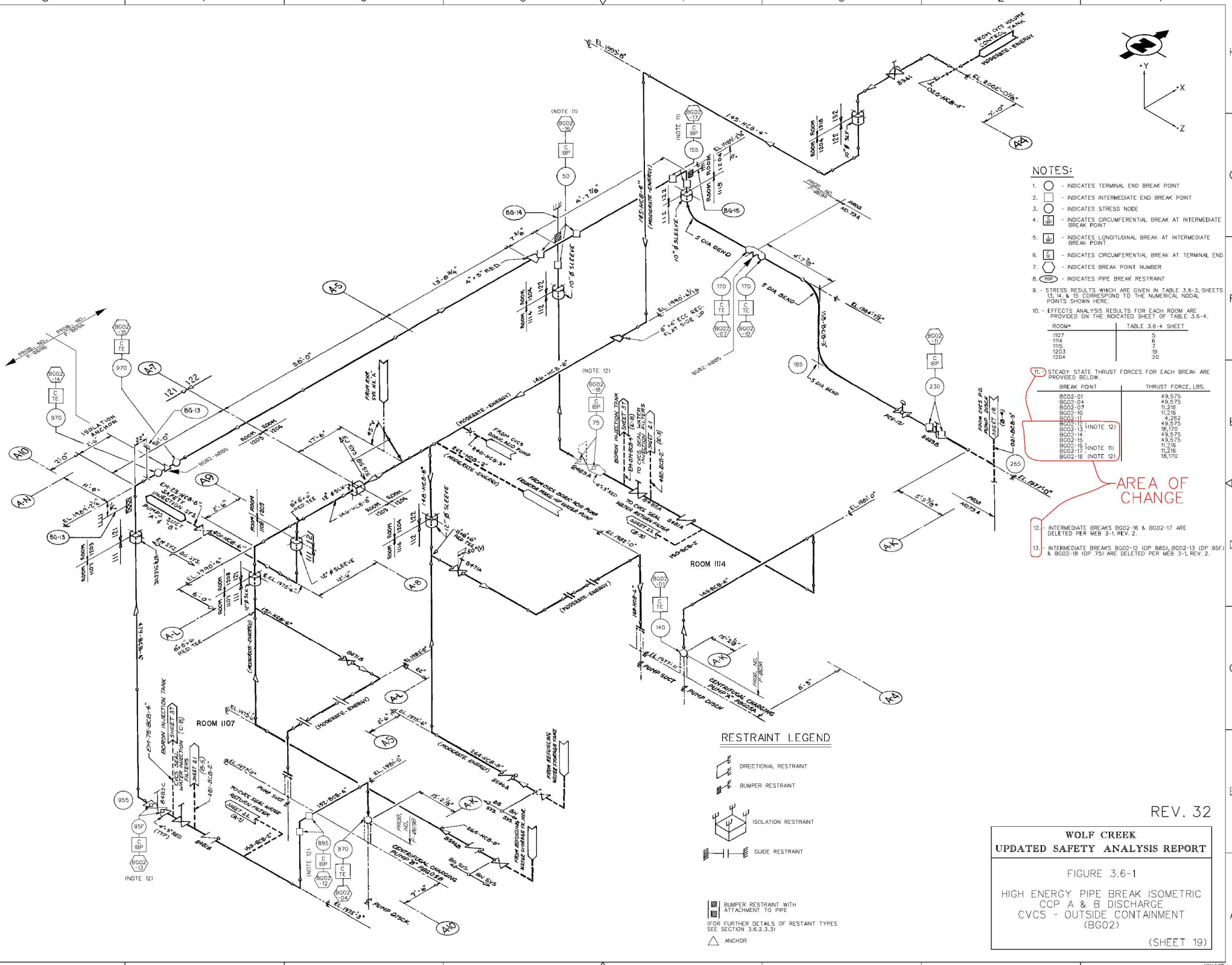

NOTES:

1. ○ - INDICATES TERMINAL END BREAK POINT
2. □ - INDICATES INTERMEDIATE END BREAK POINT
3. ○ - INDICATES STRESS NODE
4. C IBP - INDICATES CIRCUMFERENTIAL BREAK AT INTERMEDIATE BREAK POINT
5. L IBP - INDICATES LONGITUDINAL BREAK AT INTERMEDIATE BREAK POINT
6. C TE - INDICATES CIRCUMFERENTIAL BREAK AT TERMINAL END
7. ⬡ - INDICATES BREAK POINT NUMBER
8. PBR - INDICATES PIPE BREAK RESTRAINT
9. - STRESS RESULTS WHICH ARE GIVEN IN TABLE 3.6-3, SHEETS 13, 14, & 15 CORRESPOND TO THE NUMERICAL NODAL POINTS SHOWN HERE.
10. - EFFECTS ANALYSIS RESULTS FOR EACH ROOM ARE PROVIDED ON THE INDICATED SHEET OF TABLE 3.6-4.

ROOM*	TABLE 3.6-4 SHEET
1107	5
1114	6
1115	7
1203	19
1204	20

11. - STEADY STATE THRUST FORCES FOR EACH BREAK ARE PROVIDED BELOW.

BREAK POINT	THRUST FORCE, LBS.
BG02-01	49,575
BG02-04	49,575
BG02-07	11,216
BG02-10	11,216
BG02-11	4,262
BG02-12 (NOTE 12)	49,575
BG02-13	18,170
BG02-14	49,575
BG02-15	49,575
BG02-16 (NOTE 11)	11,216
BG02-17	11,216
BG02-18 (NOTE 12)	18,170

AREA OF CHANGE

12. - INTERMEDIATE BREAKS BG02-16 & BG02-17 ARE DELETED PER MEB 3-1, REV. 2.
13. - INTERMEDIATE BREAKS BG02-12 (DP 885), BG02-13 (DP 95F) & BG02-18 (DP 75) ARE DELETED PER MEB 3-1, REV. 2.

REV. 32

WOLF CREEK
UPDATED SAFETY ANALYSIS REPORT

FIGURE 3.6-1

HIGH ENERGY PIPE BREAK ISOMETRIC
CCP A & B DISCHARGE
CVCS - OUTSIDE CONTAINMENT
(BG02)

(SHEET 19)

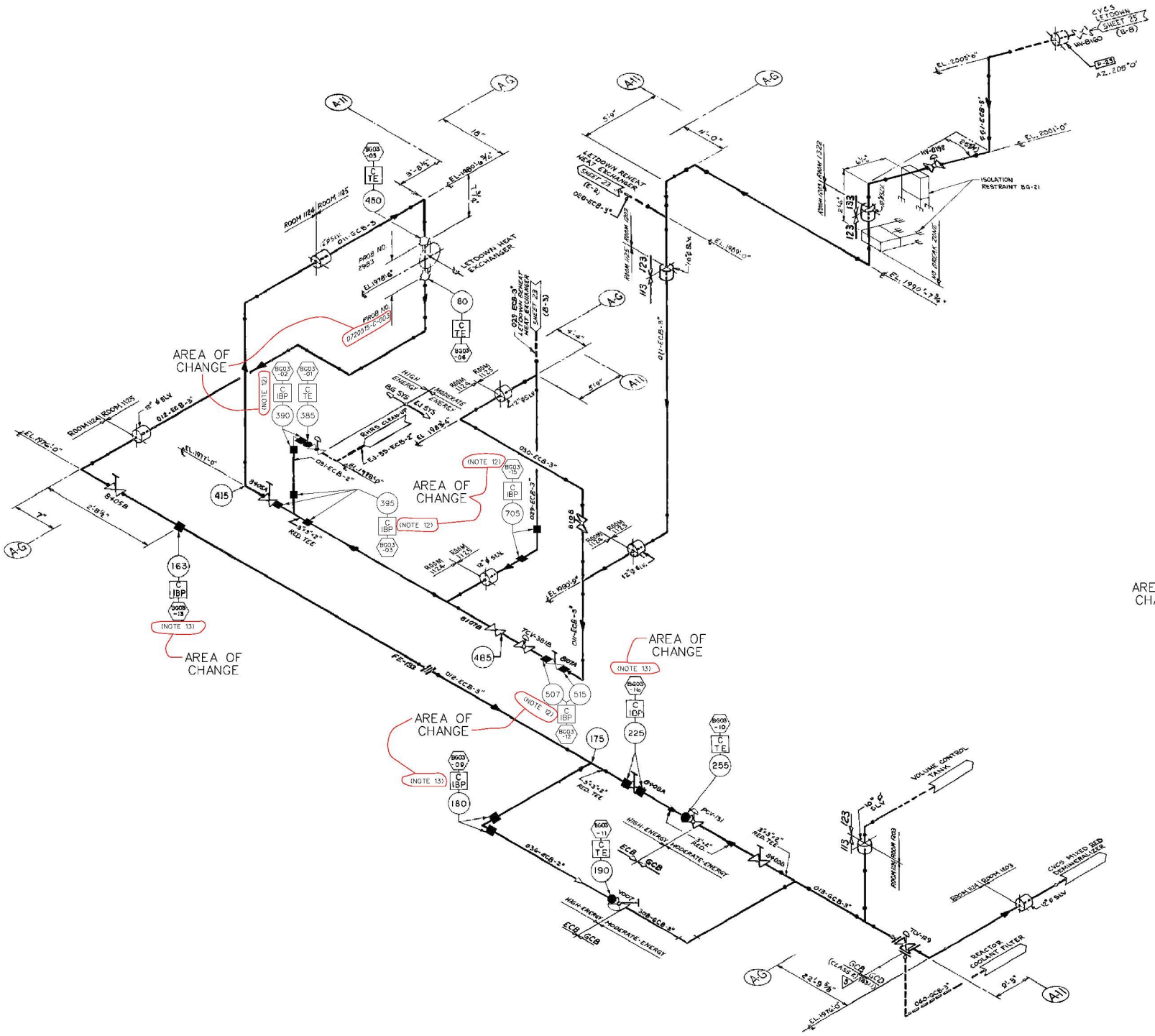

NOTES:

1. ● - INDICATES TERMINAL END BREAK POINT
2. ■ - INDICATES INTERMEDIATE BREAK POINT
3. ○ - INDICATES STRESS NODE
4. - INDICATES CIRCUMFERENTIAL BREAK AT INTERMEDIATE BREAK POINT
5. - INDICATES LONGITUDINAL BREAK AT INTERMEDIATE BREAK POINT
6. - INDICATES CIRCUMFERENTIAL BREAK AT TERMINAL END
7. ⬡ - INDICATES BREAK POINT NUMBER
8. ⬭ - INDICATES PIPE BREAK RESTRAINT
9. - STRESS RESULTS WHICH ARE GIVEN IN TABLE 3.6.3 SHEETS 15 & 19 CORRESPOND TO THE NUMERICAL NODAL POINTS SHOWN HERE.
10. - STEADY STATE THRUST FOCES FOR EACH BREAK ARE PROVIDED BELOW.

	BREAK POINT	THRUST FORCE, LBS
	BG03-01	4,026
	BG03-02	4,026
	BG03-03	4,026 (2" BREAK)
(NOTE 12)	BG03-03	8,872 (3" BREAK) LETDOWN HX SOURCE
	BG03-03	8,587 (3" BREAK) CVCS LET-DOWN SOURCE
	BG03-05	8,872
	BG03-06	8,872
(NOTE 13)	BG03-09	1,088
	BG03-10	2,705
	BG03-11	1,088
(NOTE 12)	BG03-12	8,587 CVCS LETDOWN SOURCE
(NOTE 12)	BG03-12	8,872 LETDOWN HX SOURCE
(NOTE 13)	BG03-13	2,705
(NOTE 12)	BG03-15	8,872 LETDOWN HX SOURCE
(NOTE 12)	BG03-15	8,857 CVCS LETDOWN SOURCE
(NOTE 13)	BG03-16	2,705

RESTRAINT LEGEND

- DIRECTIONAL RESTRAINT
- BUMPER RESTRAINT
- ISOLATION RESTRAINT
- GUIDE RESTRAINT
- BUMPER RESTRAINT WITH ATTACHMENT TO PIPE

(FOR FURTHER DETAILS OF RESTRAINT TYPES SEE SECTION 3.6.2.3.3)

△ ANCHOR

11. EFFECTS ANALYSIS RESULTS FOR EACH ROOM ARE PROVIDED ON THE INDICATED SHEET OF TABLE 3.6-4

ROOM#	TABLE 3.6-4 SHEET
1123	25
1122	19
1125	11
1124	10

12. INTERMEDIATE BREAKS BG03-02 (DP 390), BG03-03 (DP 395), BG03-12 (DP 507, 515), & BG03-15 (DP 705) ARE DELETED PER MEB 3-1, REV. 2.

13. INTERMEDIATE BREAKS BG03-09 (DP 180), BG03-13 (DP 163), BG03-16 (DP 225) ARE DELETED PER MEB 3-1, REV. 2.

REV. 32

WOLF CREEK
UPDATED SAFETY ANALYSIS REPORT

FIGURE 3.6-1

HIGH ENERGY PIPE BREAK ISOMETRIC
CVCS - LETDOWN OUTSIDE CONTAINMENT
(BG03)

(SHEET 20)

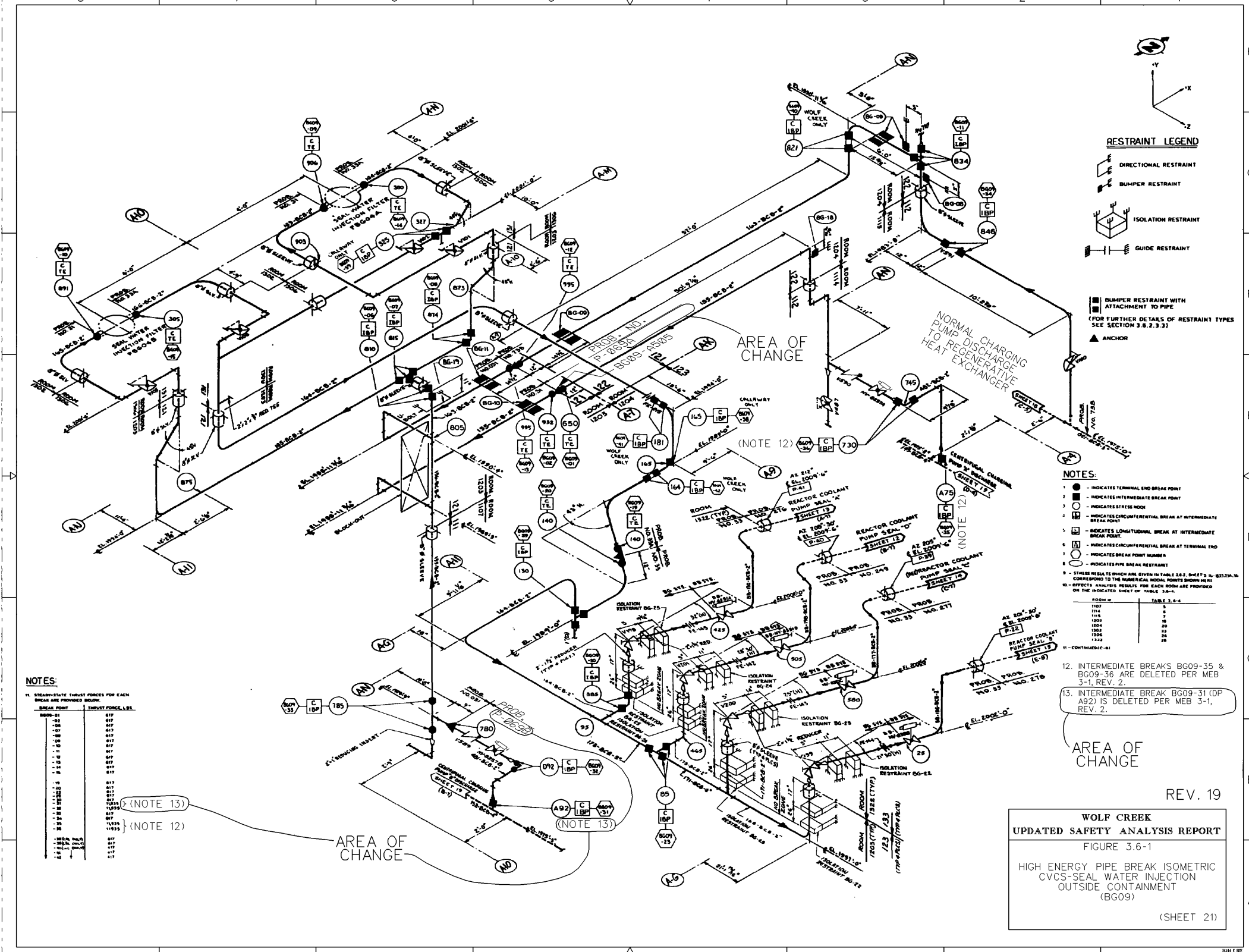
RESTRAINT LEGEND
DIRECTIONAL RESTRAINT
BUMPER RESTRAINT
ISOLATION RESTRAINT
GUIDE RESTRAINT
BUMPER RESTRAINT WITH ATTACHMENT TO PIPE
(FOR FURTHER DETAILS OF RESTRAINT TYPES SEE SECTION 3.8.2.3.3)
ANCHOR
NOTES:
1 ● - INDICATES TERMINAL END BREAK POINT
2 ■ - INDICATES INTERMEDIATE BREAK POINT
3 ○ - INDICATES STRESS NODE
4 - INDICATES CIRCUMFERENTIAL BREAK AT INTERMEDIATE BREAK POINT
5 - INDICATES LONGITUDINAL BREAK AT INTERMEDIATE BREAK POINT.
6 - INDICATES CIRCUMFERENTIAL BREAK AT TERMINAL END
7 ⬡ - INDICATES BREAK POINT NUMBER
8 ⬭ - INDICATES PIPE BREAK RESTRAINT
9 - STRESS RESULTS WHICH ARE GIVEN IN TABLE 3.6-2, SHEETS 14-, 13, 13A, 16 CORRESPOND TO THE NUMERICAL NODAL POINTS SHOWN HERE
10 - EFFECTS ANALYSIS RESULTS FOR EACH ROOM ARE PROVIDED ON THE INDICATED SHEET OF TABLE 3.6-4.
ROOM #
TABLE 3.6-4
1107 8
1114 6
1115 7
1203 19
1204 20
1302 23
1306 24
1322 25
11 - CONTINUED (C-5)
12. INTERMEDIATE BREAKS BG09-35 & BG09-36 ARE DELETED PER MEB 3-1, REV. 2.
13. INTERMEDIATE BREAK BG09-31 (DP A92) IS DELETED PER MEB 3-1, REV. 2.
AREA OF CHANGE
NORMAL CHARGING PUMP DISCHARGE TO REGENERATIVE HEAT EXCHANGER
PROB. NO. P-0655A
BG09-0505
PROB. NO. P-0695
SEAL WATER INJECTION FILTER FBG04A
SEAL WATER INJECTION FILTER FBG04B
WOLF CREEK ONLY
COLLAWAY ONLY
REACTOR COOLANT PUMP SEAL "A"
REACTOR COOLANT PUMP SEAL "D"
REACTOR COOLANT PUMP SEAL "C"
REACTOR COOLANT PUMP SEAL "B"
CENTRIFUGAL CHARGING PUMP "B" DISCHARGE
ISOLATION RESTRAINT BG-25
ISOLATION RESTRAINT BG-24
ISOLATION RESTRAINT BG-22
ISOLATION RESTRAINT BG-18
ISOLATION RESTRAINT BG-19
ISOLATION RESTRAINT BG-20
ISOLATION RESTRAINT BG-21
ISOLATION RESTRAINT BG-23
ISOLATION RESTRAINT BG-13
ISOLATION RESTRAINT BG-14
ISOLATION RESTRAINT BG-15
ISOLATION RESTRAINT BG-16
ISOLATION RESTRAINT BG-17
ISOLATION RESTRAINT BG-12
ISOLATION RESTRAINT BG-11
ISOLATION RESTRAINT BG-10
ISOLATION RESTRAINT BG-09
ISOLATION RESTRAINT BG-08
ISOLATION RESTRAINT BG-07
ISOLATION RESTRAINT BG-06
ISOLATION RESTRAINT BG-05
ISOLATION RESTRAINT BG-04
ISOLATION RESTRAINT BG-03
ISOLATION RESTRAINT BG-02
ISOLATION RESTRAINT BG-01
NOTES:
11. STEADY-STATE THRUST FORCES FOR EACH BREAK ARE PROVIDED BELOW.
BREAK POINT
THRUST FORCE, LBS
BG09-01 617
-02 617
-03 617
-04 617
-05 617
-06 617
-07 617
-08 617
-09 617
-10 617
-11 617
-12 617
-13 617
-14 617
-15 617
-16 617
-17 617
-18 617
-19 617
-20 617
-21 617
-22 617
-23 617
-24 617
-25 617
-26 617
-27 617
-28 617
-29 617
-30 617
-31 617
-32 617
-33 617
-34 617
-35 617
-36 617
(NOTE 13)
(NOTE 12)
AREA OF CHANGE
REV. 19
WOLF CREEK
UPDATED SAFETY ANALYSIS REPORT
FIGURE 3.6-1
HIGH ENERGY PIPE BREAK ISOMETRIC
CVCS-SEAL WATER INJECTION
OUTSIDE CONTAINMENT
(BG09)
(SHEET 21)

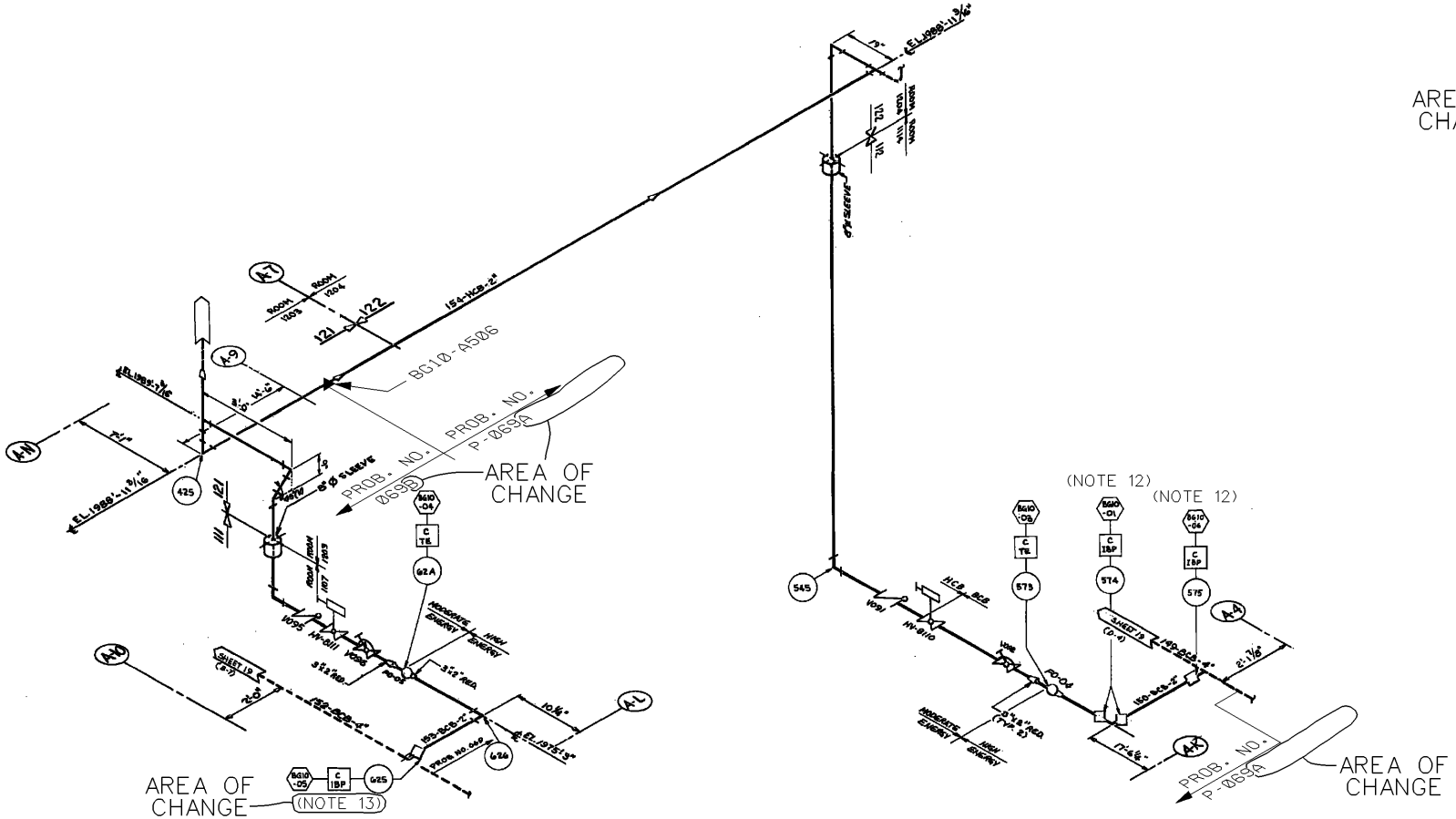

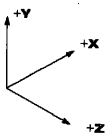

NOTES:

1. ○ – INDICATES TERMINAL END BREAK POINT
2. □ – INDICATES INTERMEDIATE BREAK POINT
3. ○ – INDICATES STRESS NODE
4. – INDICATES CIRCUMFERENTIAL BREAK AT INTERM. BREAK POINT
5. – INDICATES LONGITUDINAL BREAK AT INTERM. BREAK POINT
6. – INDICATES CIRCUMFERENTIAL BREAK AT TERMINAL END
7. ⬭ – INDICATES BREAK POINT NUMBER
8. ⬭ – INDICATES PIPE BREAK RESTRAINT
9. – STRESS RESULTS WHICH ARE GIVEN IN TABLE 3.6-3, SHEETS 29 & 29A CORRESPOND TO THE NUMERICAL NODAL POINTS SHOWN HERE.
10. – EFFECTS ANALYSIS RESULTS FOR EACH ROOM ARE PROVIDED ON THE INDICATED SHEET OF TABLE 3.6-4.

ROOM #	TABLE 3.6-4 SHEET
1107	5
1114	6
1203	19
1204	20

11. – STEADY STATE THRUST FORCES FOR EACH BREAK ARE PROVIDED BELOW.

BREAK POINT	THRUST FORCE, LBS
(NOTE 12) BG10-01	5,272
BG10-03	5,272
BG10-04	5,272
(NOTE 13) BG10-05	5,272
(NOTE 12) BG10-06	5,272

AREA OF CHANGE

12. INTERMEDIATE BREAKS BG10-01 & BG10-06 ARE DELETED PER MEB 3-1, REV. 2.

13. INTERMEDIATE BREAK BG10-05 (DP 625) IS DELETED PER MEB 3-1, REV. 2

REV. 19

WOLF CREEK
UPDATED SAFETY ANALYSIS REPORT

FIGURE 3.6-1

HIGH ENERGY PIPE BREAK ISOMETRIC
CCP A - B MINIFLOW
CVCS - OUTSIDE CONTAINMENT
(BG10)

(SHEET 22)

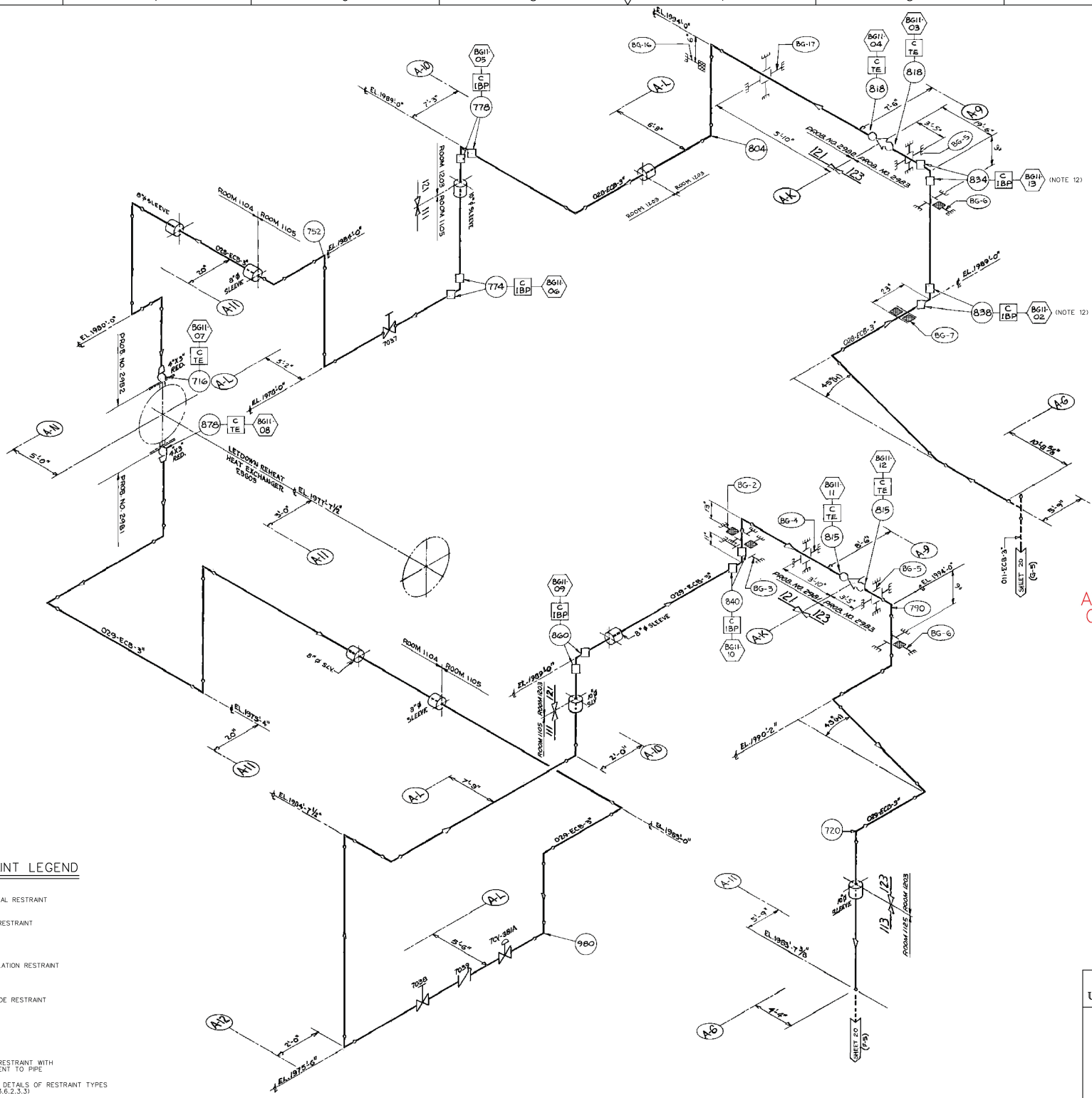

NOTES:

1. ○ - INDICATES TERMINAL END BREAK POINT
2. □ - INDICATES INTERMEDIATE END BREAK POINT
3. ○ - INDICATES STRESS NODE
4. IBP - INDICATES CIRCUMFERENTIAL BREAK AT INTERMEDIATE BREAK POINT
5. IBP - INDICATES LONGITUDINAL BREAK AT INTERMEDIATE BREAK POINT
6. TE - INDICATES CIRCUMFERENTIAL BREAK AT TERMINAL END
7. ⬡ - INDICATES BREAK POINT NUMBER
8. ⬭ - INDICATES PIPE BREAK RESTRAINT
9. - STRESS RESULTS WHICH ARE GIVEN IN TABLE 3.6-3, SHEETS 13, 14, & 15 CORRESPOND TO THE NUMERICAL NODAL POINTS SHOWN HERE.
10. - EFFECTS ANALYSIS RESULTS FOR EACH ROOM ARE PROVIDED ON THE INDICATED SHEET OF TABLE 3.6-4.

ROOM*	TABLE 3.6-4 SHEET
1104	3
1105	4
1125	12
1203	19

11. - STEADY STATE THRUST FORCES FOR EACH BREAK ARE PROVIDED BELOW.

BREAK POINT	THRUST FORCE, LBS.
BG11-02 (NOTE 12)	8,587
BG11-03	8,587
BG11-04	8,587
BG11-05	8,587
BG11-06	8,587
BG11-07	14,797
BG11-08	15,278
BG11-09	7,36
BG11-10	7,36
BG11-11	7,36
BG11-12	7,36
BG11-13 (NOTE 12)	8,587

12. - INTERMEDIATE BREAKS BG11-02 (DP838) & BG11-13 (DP 834) ARE DELETED PER MEB 3-1, REV. 2.

AREA OF CHANGE

RESTRAINT LEGEND

- DIRECTIONAL RESTRAINT
- BUMPER RESTRAINT
- ISOLATION RESTRAINT
- GUIDE RESTRAINT
- BUMPER RESTRAINT WITH ATTACHMENT TO PIPE

(FOR FURTHER DETAILS OF RESTRAINT TYPES SEE SECTION 3.6.2.3.3)

△ ANCHOR

REV. 32

WOLF CREEK
UPDATED SAFETY ANALYSIS REPORT

FIGURE 3.6-1

HIGH ENERGY PIPE BREAK ISOMETRIC
LETDOWN TO REHEAT HX
CVCS - OUTSIDE CONTAINMENT
(BG11)

(SHEET 23)

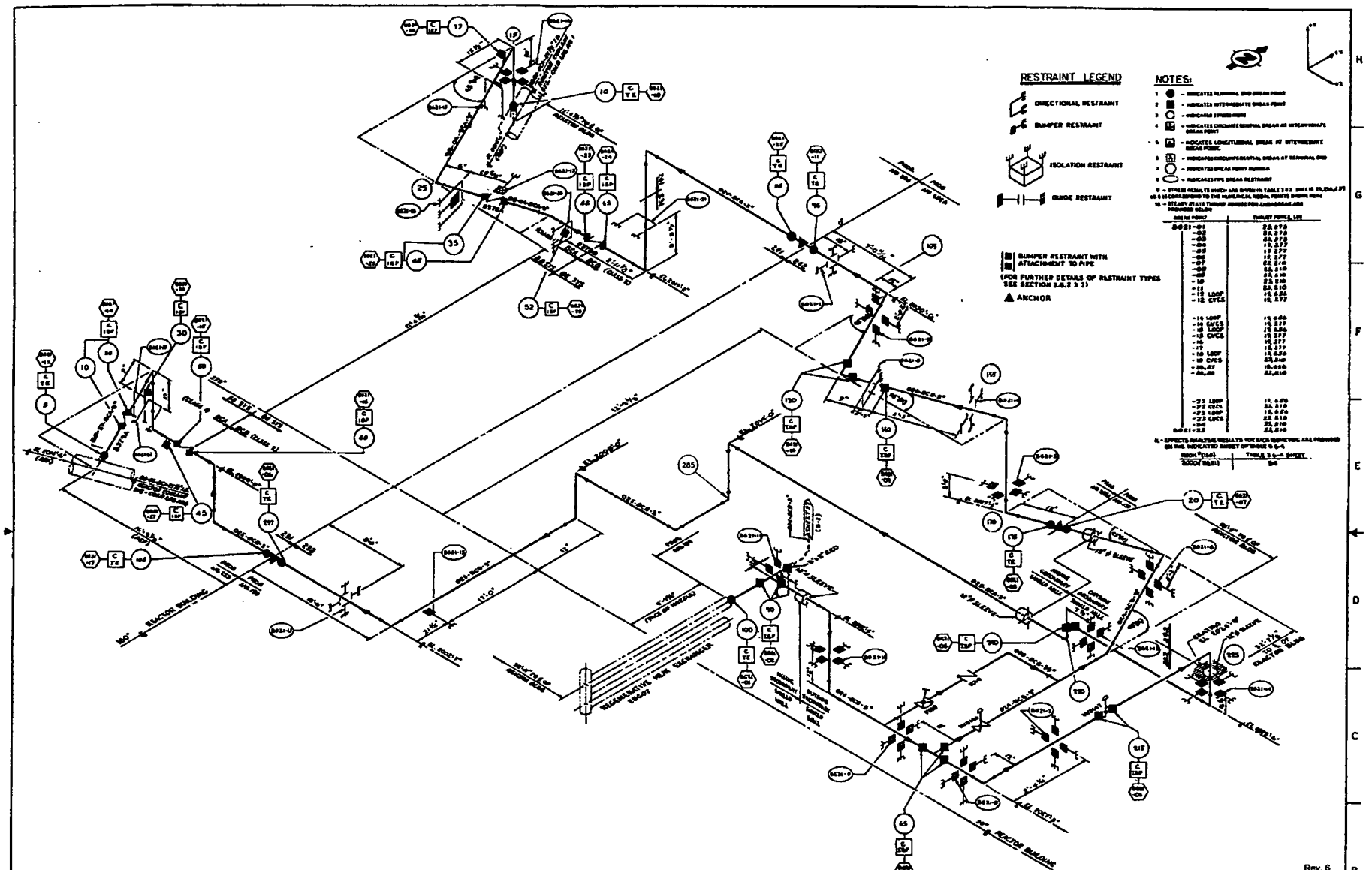

WOLF CREEK
UPDATED SAFETY ANALYSIS REPORT

FIGURE 3.6-1

HIGH ENERGY PIPE BREAK ISOMETRIC
NORMAL & ALTERNATE CHARGING
CVCS - INSIDE CONTAINMENT
(BG21)

SHEET 24

NOTES (CONT'D):

13. INTERMEDIATE BREAKS BG22-06, BG22-07, BG22-13, BG22-19, BG22-24, & BG22-25 ARE DELETED.

AREA OF CHANGE

BREAK POINT	THRUST FORCE LBS	
BG22-05	24000 (BOTH SOURCES)	
BG22-06	3,900	(NOTE 13)
BG22-07 (2")	3,900	
BG22-07 (3")	8,594	
BG22-08	3,900	
BG22-09	8,594	
BG22-10	8,594	
BG22-12	8,594	
BG22-13 (2")	3,900	(NOTE 13)
BG22-13 (3")	8,594	
BG22-14	8,594	
BG22-18	21,839	
BG22-19 (CVCS)	21,839	
BG22-19 (LOOP)	11,115	
BG22-24 (CVCS)	21,839	
BG22-24 (LOOP)	11,115	
BG22-25 (CVCS)	21,839	
BG22-25 (LOOP)	11,115	
BG22-26 (CVCS)	21,839	
BG22-26 (LOOP)	11,115	
BG22-27 (CVCS)	21,839	
BG22-27 (LOOP)	11,115	
BG22-28	7,791	

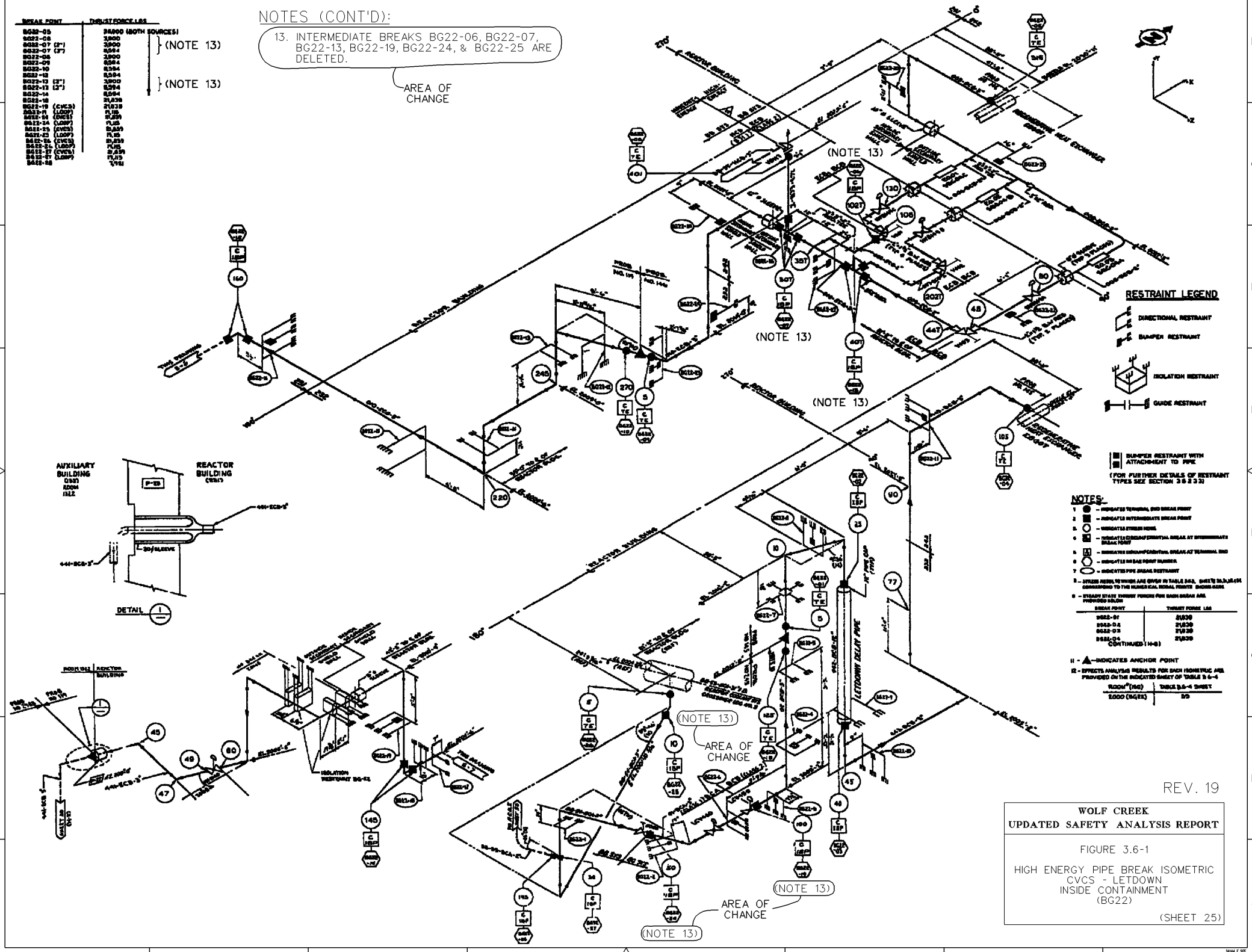

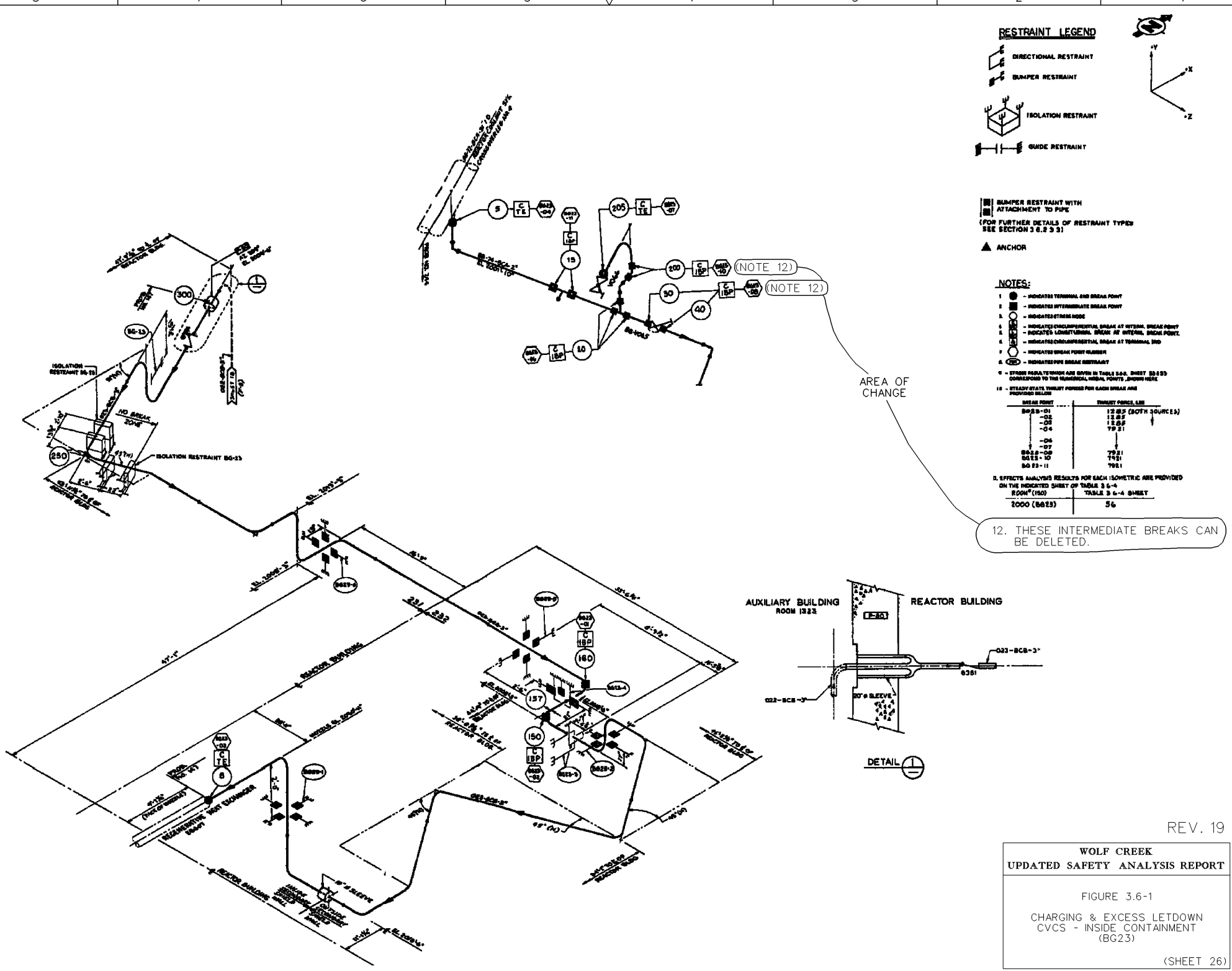

WOLF CREEK
UPDATED SAFETY ANALYSIS REPORT

FIGURE 3.6-1

CHARGING & EXCESS LETDOWN
CVCS - INSIDE CONTAINMENT
(BG23)

(SHEET 26)

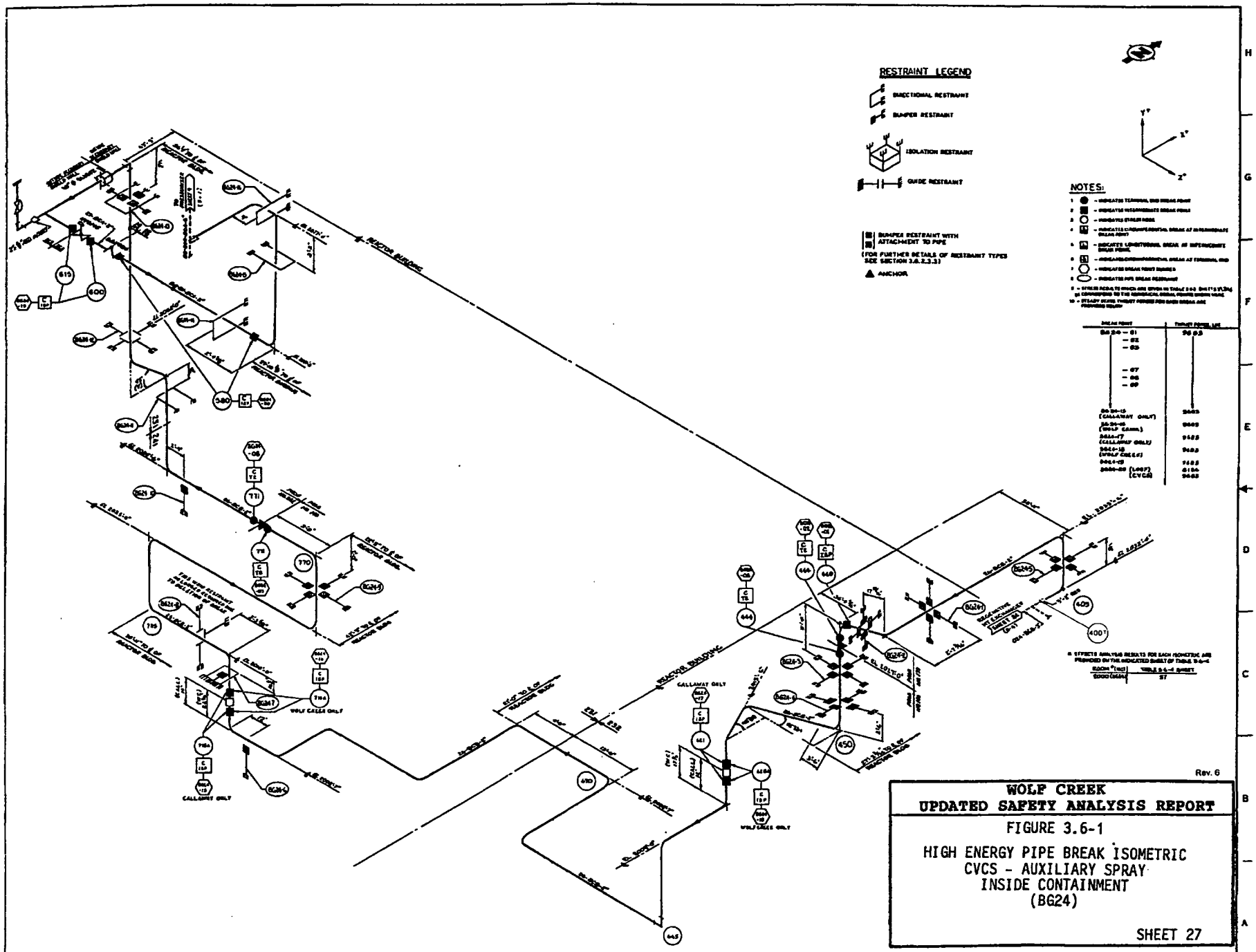
RESTRAINT LEGEND
DIRECTIONAL RESTRAINT
BUMPER RESTRAINT
ISOLATION RESTRAINT
GUIDE RESTRAINT
BUMPER RESTRAINT WITH ATTACHMENT TO PIPE
(FOR FURTHER DETAILS OF RESTRAINT TYPES SEE SECTION 3.6.2.3.3)
ANCHOR
NOTES:
REACTOR BUILDING
CALLAWAY ONLY
WOLF CREEK ONLY
Rev. 6
WOLF CREEK
UPDATED SAFETY ANALYSIS REPORT
FIGURE 3.6-1
HIGH ENERGY PIPE BREAK ISOMETRIC
CVCS - AUXILIARY SPRAY
INSIDE CONTAINMENT
(BG24)
SHEET 27

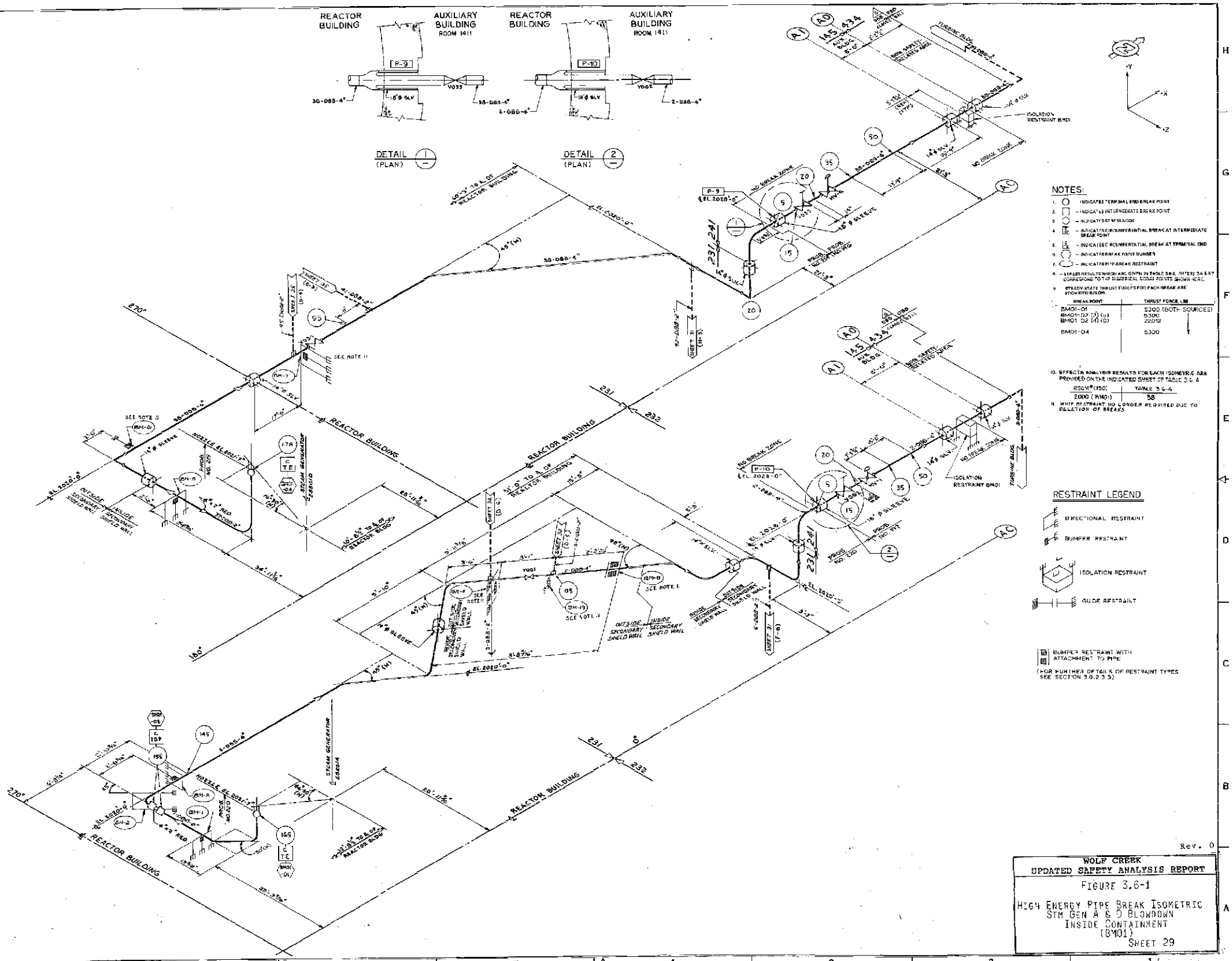

Rev. 0

WOLF CREEK
UPDATED SAFETY ANALYSIS REPORT

FIGURE 3.6-1

HIGH ENERGY PIPE BREAK ISOMETRIC
STM GEN A & D BLOWDOWN
INSIDE CONTAINMENT
(BM01)
SHEET 29

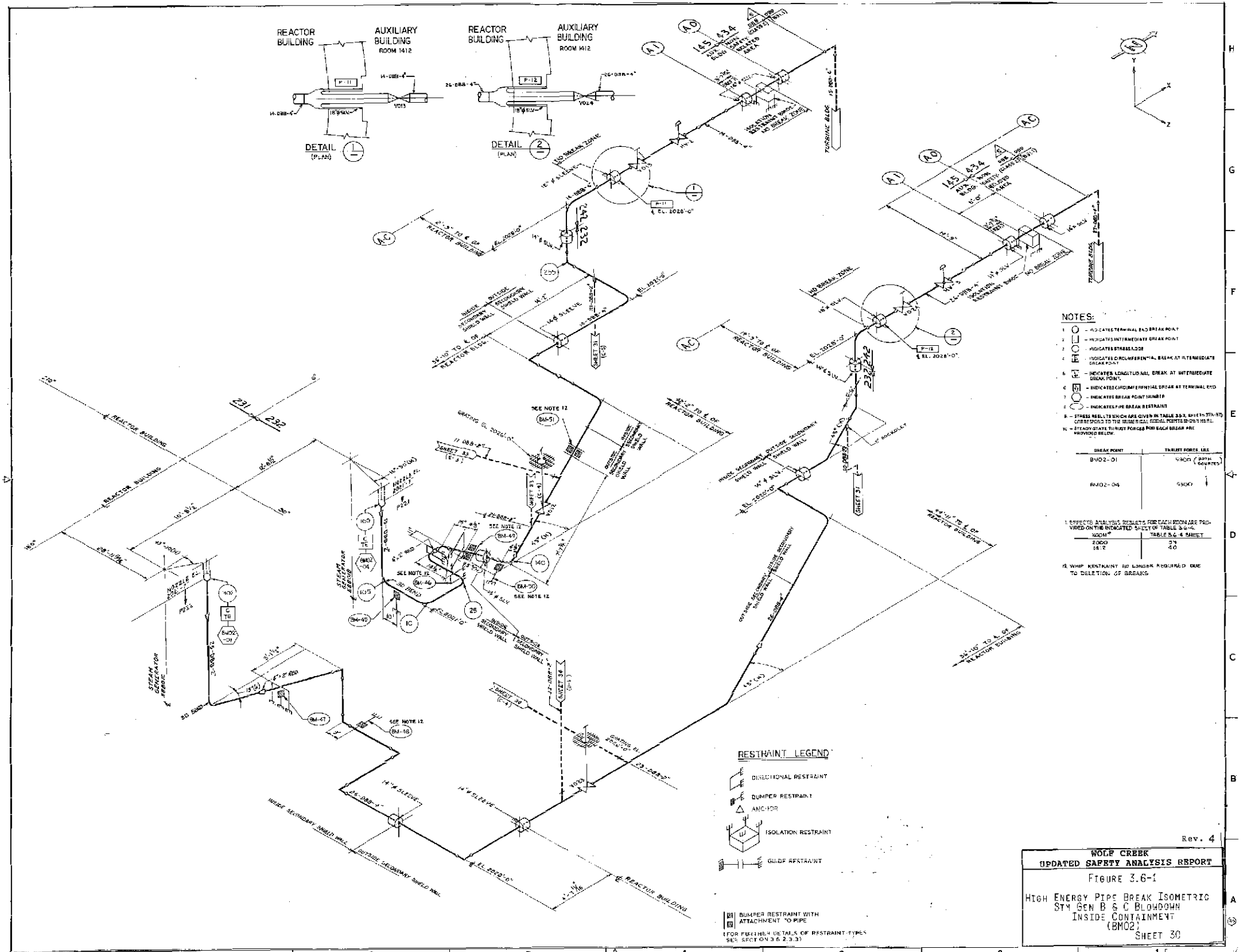

Rev. 4

WOLF CREEK
UPDATED SAFETY ANALYSIS REPORT

FIGURE 3.6-1

HIGH ENERGY PIPE BREAK ISOMETRIC
STM GEN B & C BLOWDOWN
INSIDE CONTAINMENT
(BM02)
SHEET 30

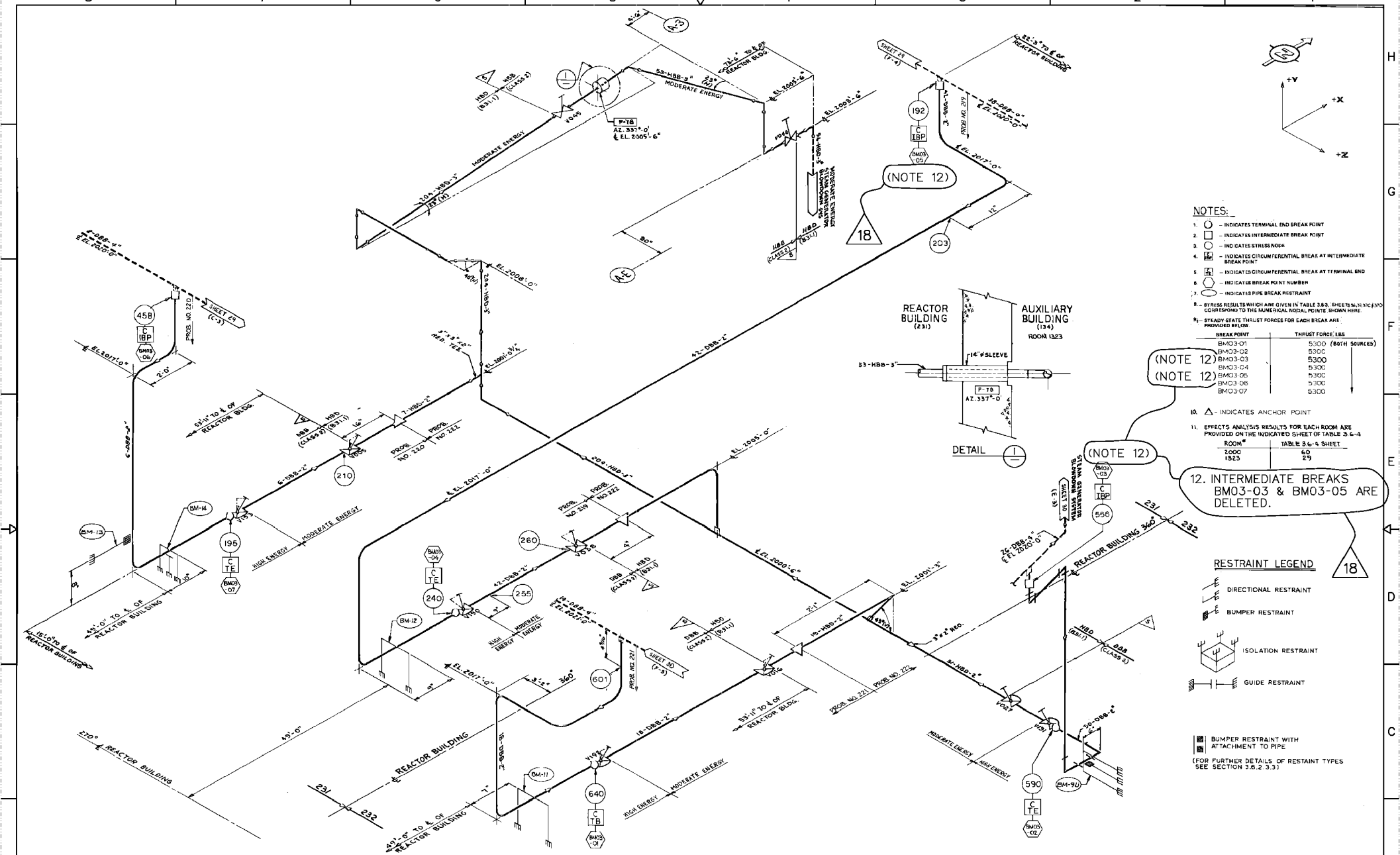

REV. 18

WOLF CREEK
UPDATED SAFETY ANALYSIS REPORT

FIGURE 3.6-1

HIGH ENERGY PIPE BREAK ISOMETRIC
STM GEN A, B, C, D BLOWDOWN
INSIDE CONTAINMENT
(BM03)

(SHEET 31)

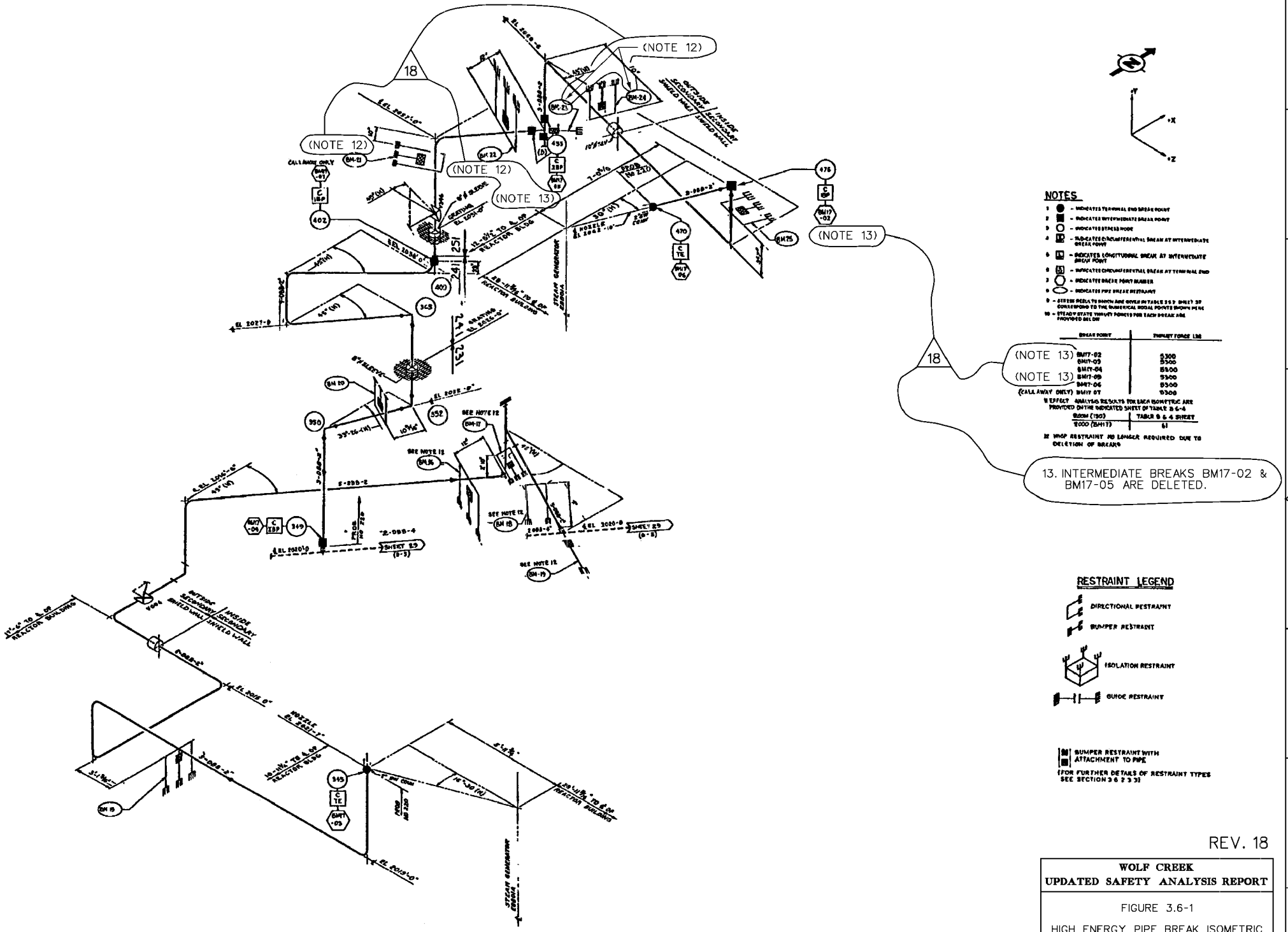

REV. 18

WOLF CREEK
UPDATED SAFETY ANALYSIS REPORT

FIGURE 3.6-1

HIGH ENERGY PIPE BREAK ISOMETRIC
STM GEN A SAMPLE & TUBE SHT DRAIN
INSIDE CONTAINMENT
(BM17)

(SHEET 32)

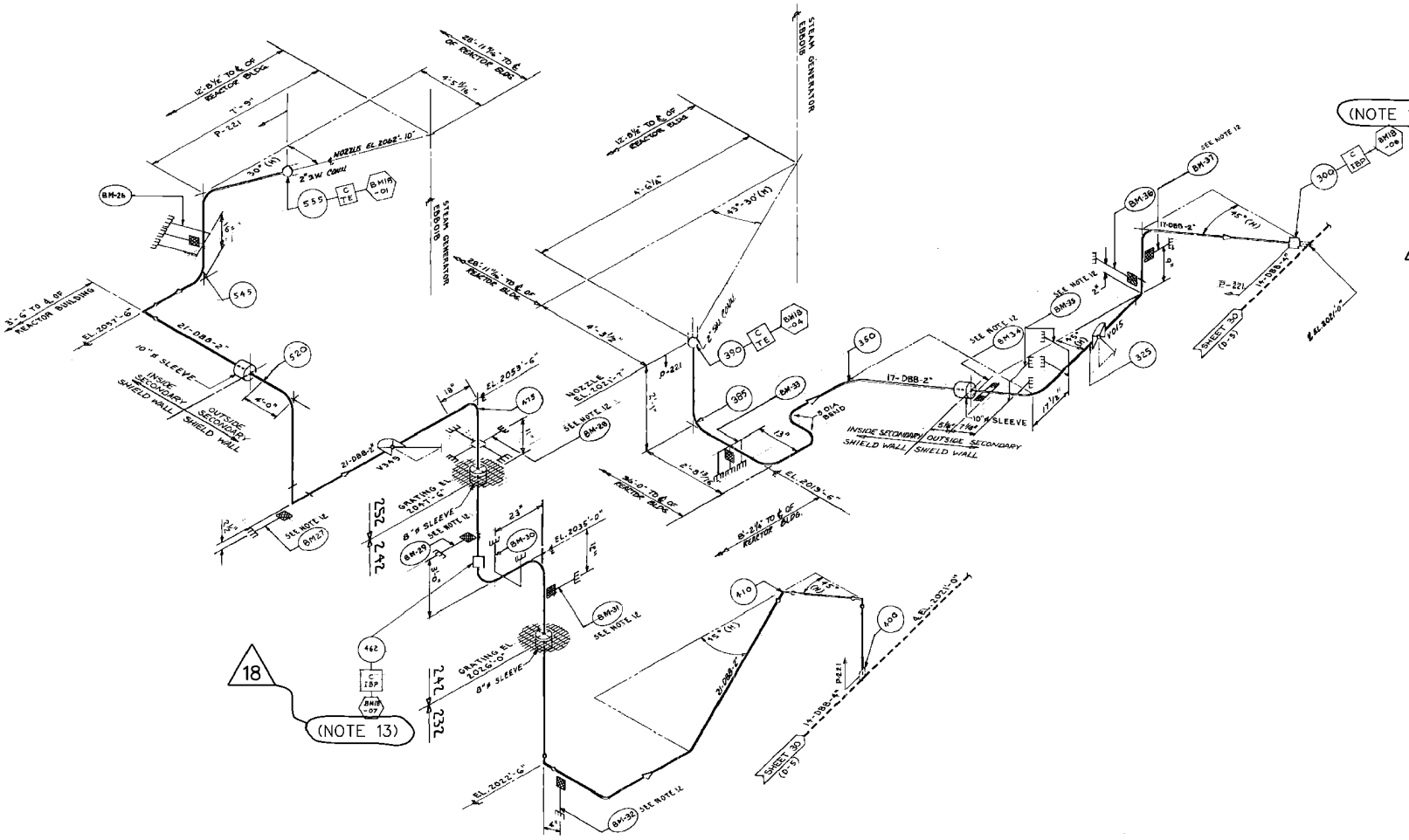

NOTES:

1. ○ – INDICATES TERMINAL END BREAK POINT
2. ⊓ – INDICATES INTERMEDIATE BREAK POINT
3. ○ – INDICATES STRESS NODE
4. – INDICATES CIRCUMFERENTIAL BREAK AT INTERMEDIATE BREAK POINT.
5. – INDICATES LONGITUDINAL BREAK AT INTERMEDIATE BREAK POINT.
6. – INDICATES CIRCUMFERENTIAL BREAK AT TERMINAL END
7. ⬡ – INDICATES BREAK POINT NUMBER
8. ⬭ – INDICATES PIPE BREAK RESTRAINT
9. – STRESS RESULTS WHICH ARE GIVEN IN TABLE 3.6-3, SHEETS 37A,37B & 37C CORRESPOND TO THE NUMERICAL NODAL POINTS SHOWN HERE.
10. – STEADY-STATE THRUST FORCES FOR EACH BREAK ARE PROVIDED BELOW.

BREAK POINT	THRUST FORCE, LBS
BM18-01	5300
BM18-04	5300
BM18-05	5300
BM18-06	5300
BM18-07	5300

11. EFFECTS ANALYSIS RESULTS FOR EACH ISOMETRIC ARE PROVIDED ON THE INDICATED SHEET OF TABLE 3.6-4.

ROOM# (ISO)	TABLE 3.6-4 SHEET
2000 (BM18)	G2

12. WHIP RESTRAINT NOT REQUIRED DUE TO DELETION OF BREAKS

(NOTE 13)

13. INTERMEDIATE BREAKS BM18-06 & BM18-07 ARE DELETED.

RESTRAINT LEGEND

- DIRECTIONAL RESTRAINT
- BUMPER RESTRAINT
- ISOLATION RESTRAINT
- GUIDE RESTRAINT
- BUMPER RESTRAINT WITH ATTACHMENT TO PIPE

(FOR FURTHER DETAILS OF RESTRAINT TYPES SEE SECTION 3.6.2.3.3)

Λ ANCHOR

REV. 18

WOLF CREEK
UPDATED SAFETY ANALYSIS REPORT

FIGURE 3.6-1

HIGH ENERGY PIPE BREAK ISOMETRIC
STM GEN B SAMPLE & TUBE SHT. DRAIN
INSIDE CONTAINMENT
(BM18)

(SHEET 33)

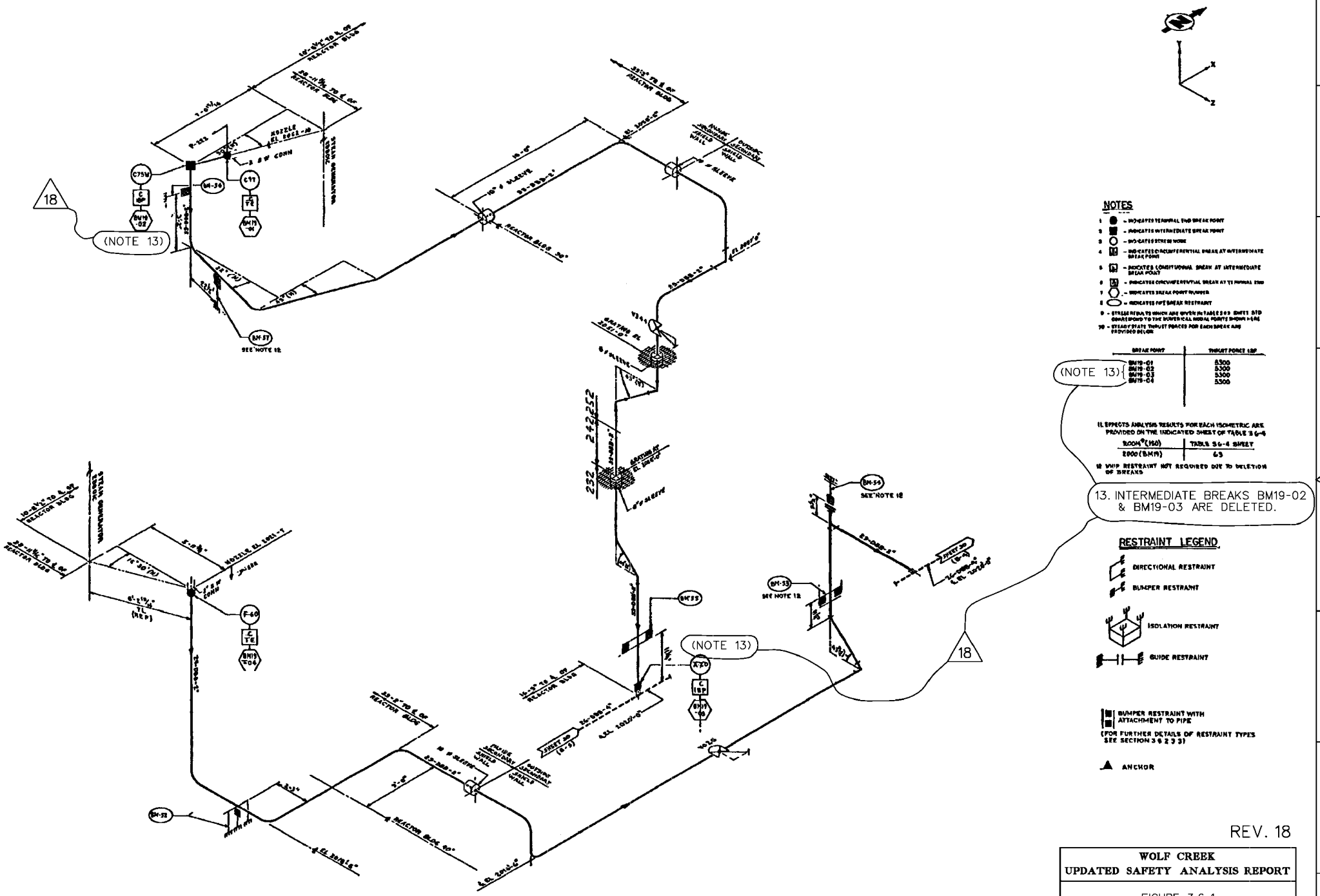

REV. 18

WOLF CREEK
UPDATED SAFETY ANALYSIS REPORT

FIGURE 3.6-1

HIGH ENERGY PIPE BREAK ISOMETRIC
STM GEN C SAMPLE & TUBE SHT DRAIN
INSIDE CONTAINMENT
(BM19)

(SHEET 34)

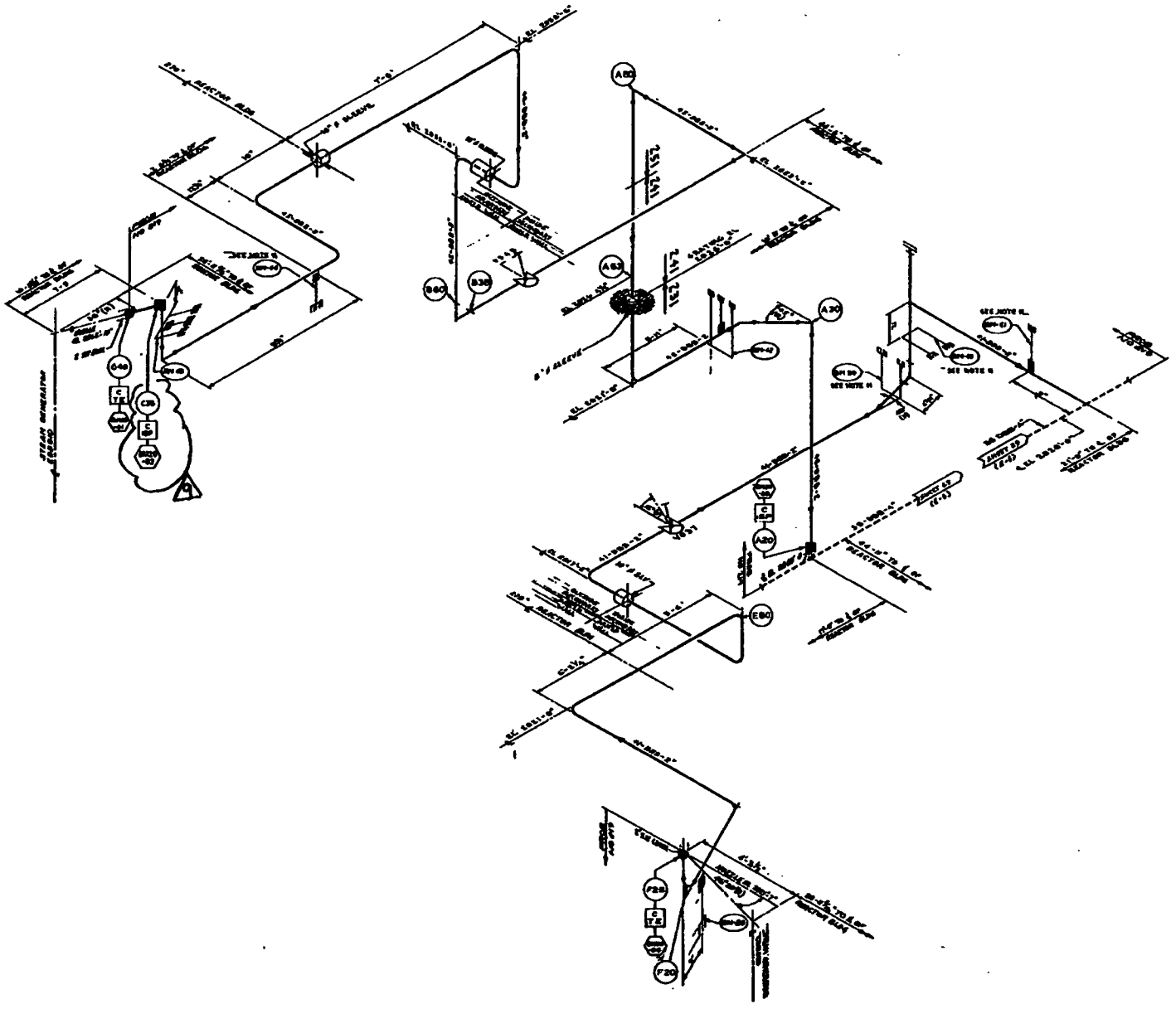

NOTES

RESTRAINT LEGEND

DIRECTIONAL RESTRAINT

BUMPER RESTRAINT

ISOLATION RESTRAINT

GUIDE RESTRAINT

BUMPER RESTRAINT WITH ATTACHMENT TO PIPE

FOR FURTHER DETAILS OF RESTRAINT TYPES SEE SECTION 3.6.2.3.3

USAR FIG. 3.6-1 REV. 9

WOLF CREEK

HIGH ENERGY PIPE BREAK ISOMETRIC STM GEN D SAMPLE & TURB SHEET DRAIN INSIDE CONTAINMENT (BM20) SHEET 33

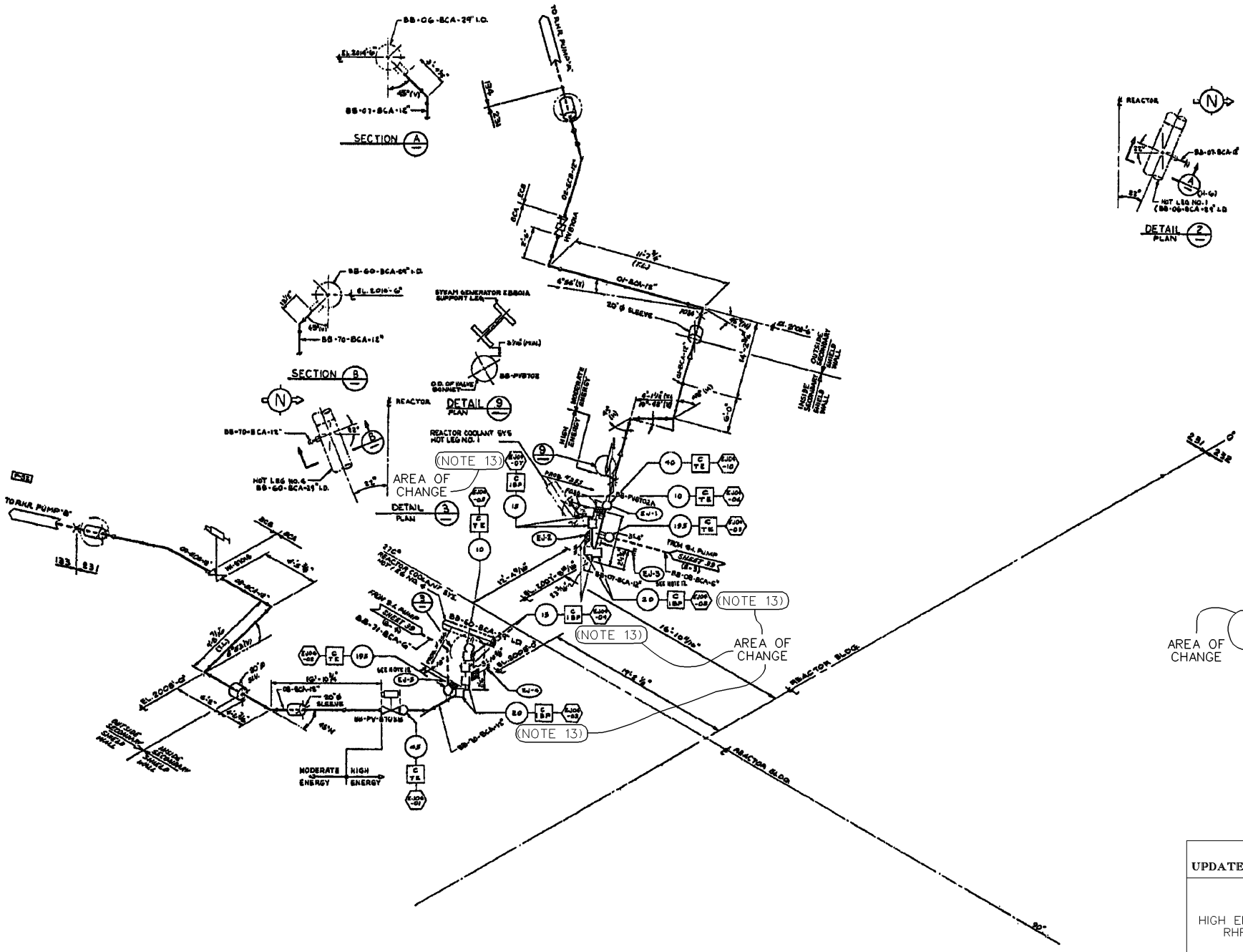

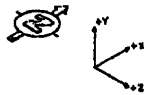

RESTRAINT LEGEND

- DIRECTIONAL RESTRAINT
- BUMPER RESTRAINT
- ISOLATION RESTRAINT
- GUIDE RESTRAINT
- BUMPER RESTRAINT WITH ATTACHMENT TO PIPE

(FOR FURTHER DETAILS OF RESTRAINT TYPES SEE SECTION 3.6.2.3.3)

△ ANCHOR

AREA OF CHANGE

NOTES:

1. ○ – INDICATES TERMINAL END BREAK POINT
2. □ – INDICATES INTERMEDIATE BREAK POINT (NOTE 13)
3. ○ – INDICATES STRESS NODE
4. – INDICATES CIRCUMFERENTIAL BREAK AT INTERMEDIATE BREAK POINT
5. – INDICATES LONGITUDINAL BREAK AT INTERMEDIATE BREAK POINT.
6. – INDICATES CIRCUMFERENTIAL BREAK AT TERMINAL END
7. ⬡ – INDICATES BREAK POINT NUMBER
8. ⬭ – INDICATES PIPE BREAK RESTRAINT
9. – STRESS RESULTS WHICH ARE GIVEN IN TABLE 3.6-3, SHEET 36 WILL CORRESPOND TO THE NUMERICAL NODAL POINTS SHOWN HERE
10. – STEADY-STATE THRUST FORCES FOR EACH BREAK ARE PROVIDED BELOW.

BREAK POINT	THRUST FORCE, LBS
EJ04-01	270,690
-02	66,111
-03	270,690
-04	↓
-05	↓
-06	↓
-07	↓
-08	270,690
-09	66,111
EJ04-10	270,690

11. EFFECTS ANALYSIS RESULTS FOR EACH ISOMETRIC ARE PROVIDED ON THE INDICATED SHEET OF TABLE 3.6-4.

9.00N°(1.0) / 5000 (EJ04)	TABLE 3.6-4 SHEET 66

12. WHIP RESTRAINT NO LONGER REQUIRED DUE TO DELETION OF BREAKS.

AREA OF CHANGE

13. THESE INTERMEDIATE BREAKS CAN BE DELETED.

REV. 19

WOLF CREEK
UPDATED SAFETY ANALYSIS REPORT

FIGURE 3.6-1

HIGH ENERGY PIPE BREAK ISOMETRIC
RHR SUCTION - LOOPS 1 & 4
INSIDE CONTAINMENT
(EJ04)

(SHEET 36)

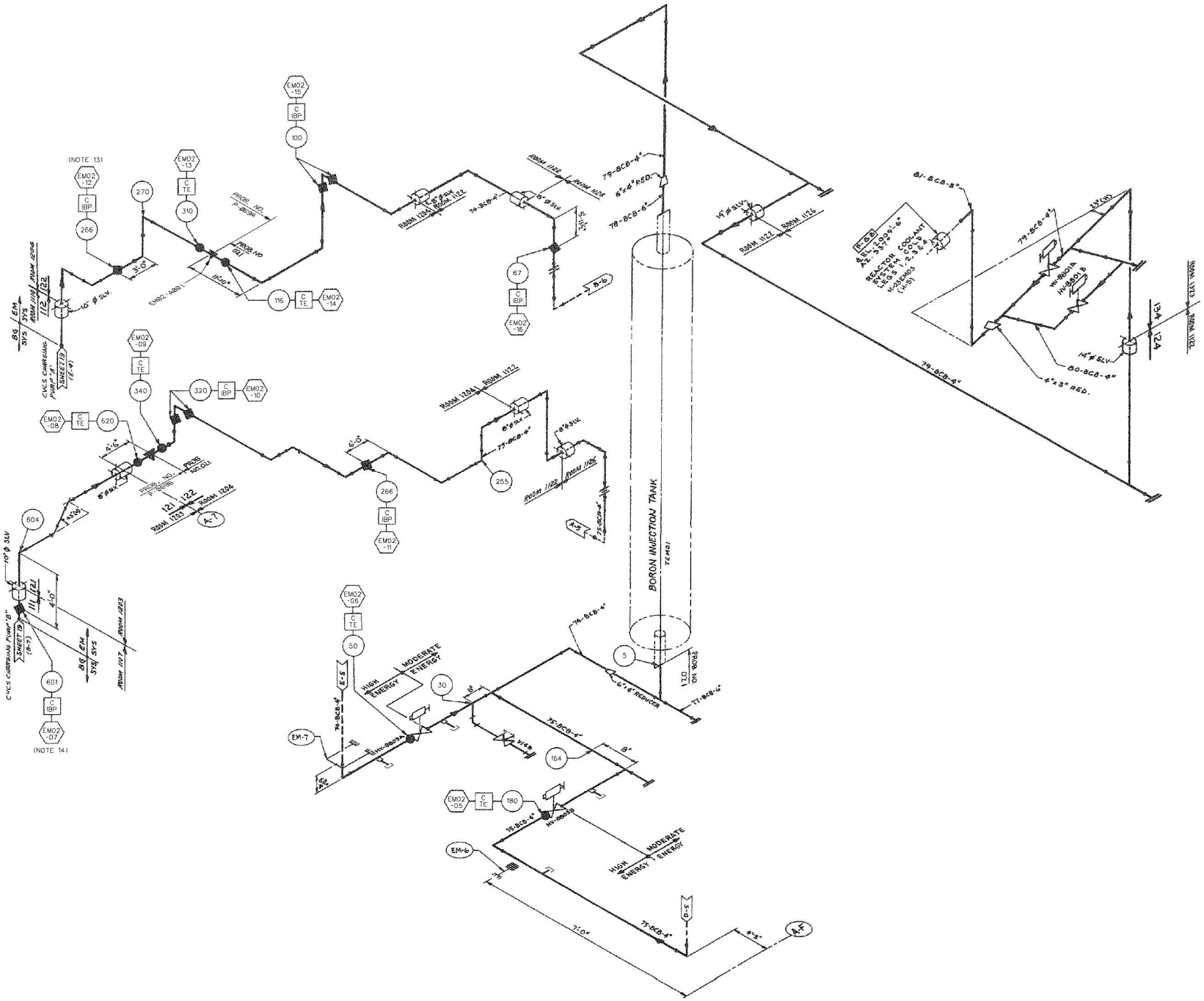

NOTES:

1. ● - INDICATES TERMINAL END BREAK POINT
2. ■ - INDICATES INTERMEDIATE END BREAK POINT
3. ○ - INDICATES STRESS NODE
4. C IBP - INDICATES CIRCUMFERENTIAL BREAK AT INTERMEDIATE BREAK POINT
5. IBP - INDICATES LONGITUDINAL BREAK AT INTERMEDIATE BREAK POINT
6. C TE - INDICATES CIRCUMFERENTIAL BREAK AT TERMINAL END
7. ⬡ - INDICATES BREAK POINT NUMBER
8. ⬭ - INDICATES PIPE BREAK RESTRAINT
9. - STRESS RESULTS WHICH ARE GIVEN IN TABLE 3.6-3, SHEETS 59, 23 & 23A CORRESPOND TO THE NUMERICAL NODAL POINTS SHOWN HERE.
10. - STEADY STATE THRUST FORCES FOR EACH BREAK ARE PROVIDED BELOW.

BREAK POINT	THRUST FORCE, LBS.
EM02-05	5962
-06	↓
-07 (NOTE 14)	↓
-08	↓
-09	↓
-10	↓
-11	↓
-12 (NOTE 13)	↓
-13	↓
-14	↓
-15	↓
EM02-16	5962

11. ▲ - INDICATES ANCHOR POINT

AREA OF CHANGE

RESTRAINT LEGEND

DIRECTIONAL RESTRAINT

BUMPER RESTRAINT

ISOLATION RESTRAINT

GUIDE RESTRAINT

BUMPER RESTRAINT WITH ATTACHMENT TO PIPE

(FOR FURTHER DETAILS OF RESTRAINT TYPES SEE SECTION 3.6.2.3.3)

12. EFFECTS ANALYSIS RESULTS FOR EACH ROOM ARE PROVIDED ON THE INDICATED SHEET OF TABLE 3.6-4.

ROOM*	TABLE 3.6-4 SHEET
1323	28
1122	10
1126	13
1204	20
1114	6
1203	19
1107	5

AREA OF CHANGE

13. INTERMEDIATE BREAK EM02-12 IS DELETED PER MEB 3-1, REV. 2.

14. INTERMEDIATE BREAK EM02-07 IS DELETED PER MEB 3-1, REV. 2.

REV. 32

WOLF CREEK
UPDATED SAFETY ANALYSIS REPORT

FIGURE 3.6-1

HIGH ENERGY PIPE BREAK ISOMETRIC
BORON INJECTION TANK INLET
SIS OUTSIDE CONTAINMENT
(EM02)

(SHEET 37)

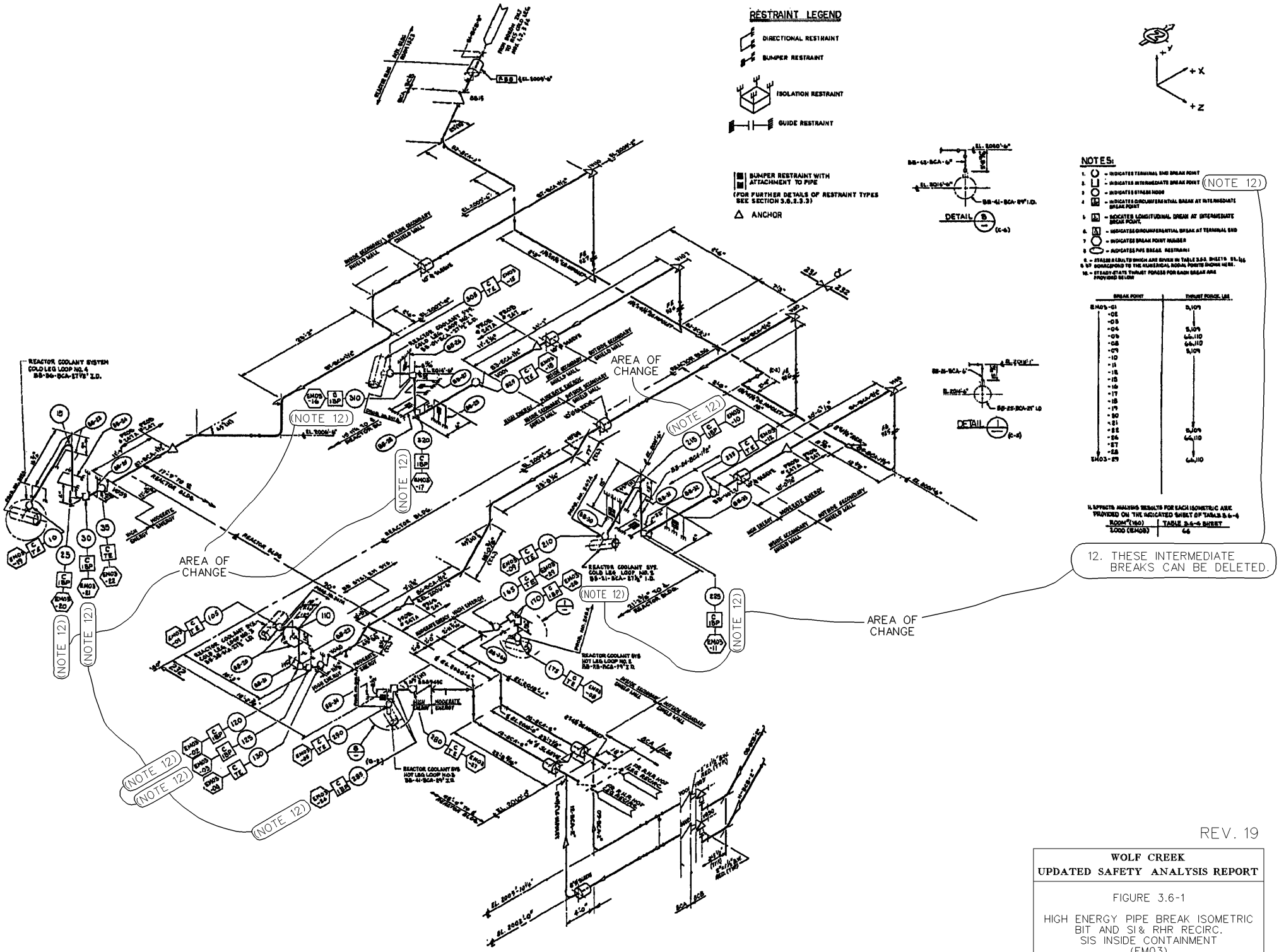

WOLF CREEK
UPDATED SAFETY ANALYSIS REPORT

FIGURE 3.6-1

HIGH ENERGY PIPE BREAK ISOMETRIC
BIT AND SI & RHR RECIRC.
SIS INSIDE CONTAINMENT
(EM03)

(SHEET 38)

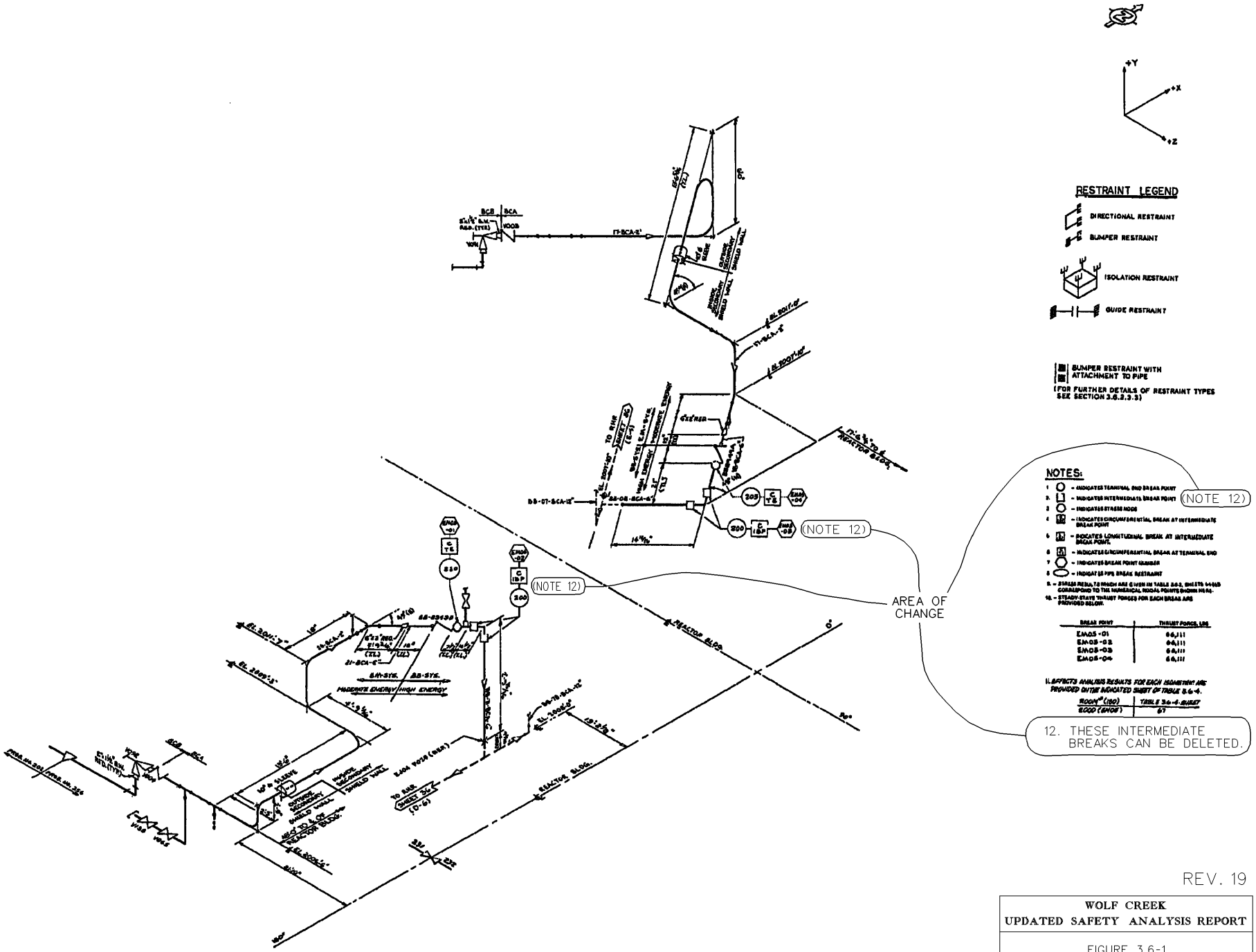

REV. 19

WOLF CREEK
UPDATED SAFETY ANALYSIS REPORT

FIGURE 3.6-1

HIGH ENERGY PIPE BREAK ISOMETRIC
SI DISCHARGE - LOOPS 1 & 4
SIS INSIDE CONTAINMENT
(EM05)

(SHEET 39)

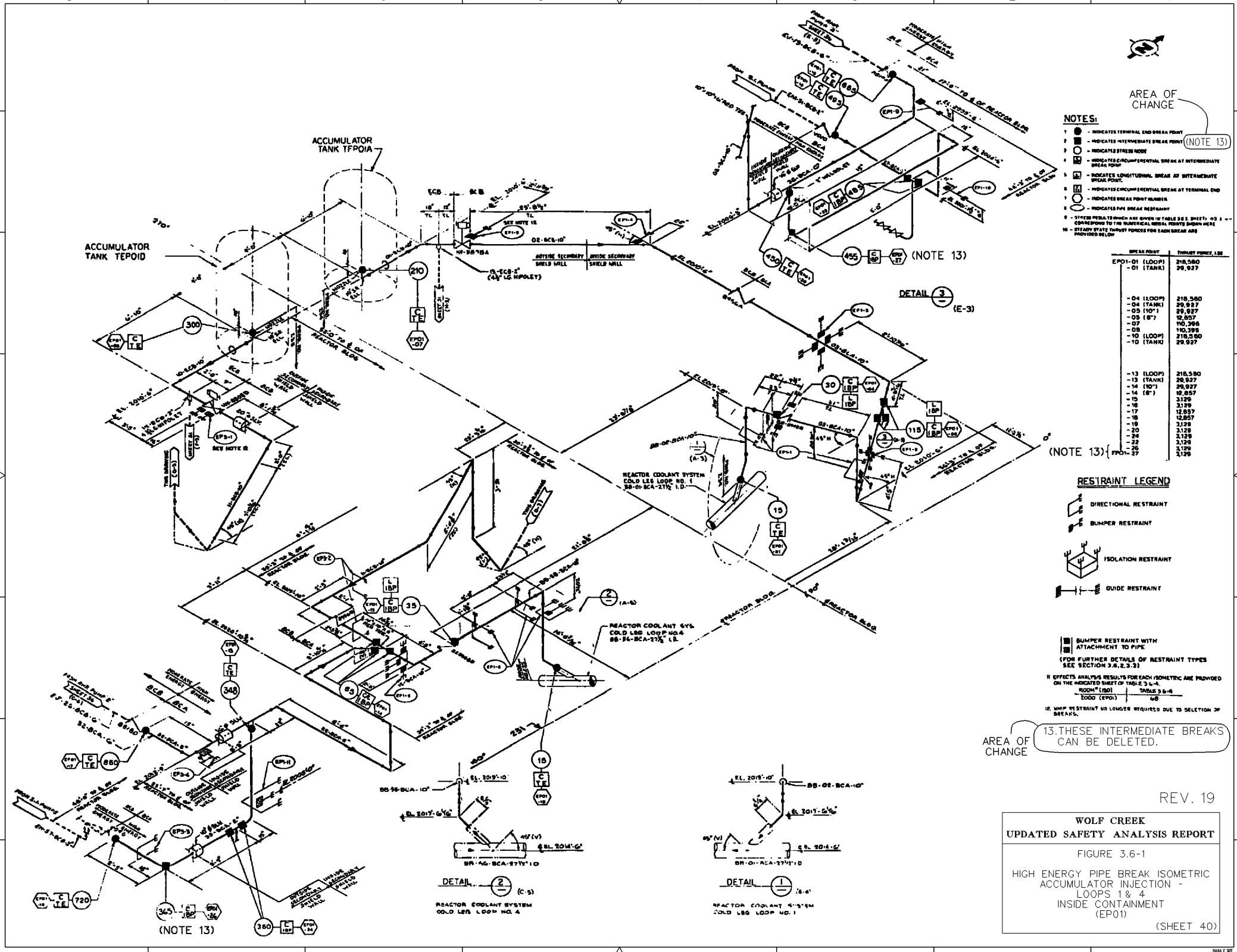
ACCUMULATOR TANK TEPOIA
ACCUMULATOR TANK TEPOID
REACTOR BLDG
OUTSIDE SECONDARY SHIELD WALL
INSIDE SECONDARY SHIELD WALL
SEE NOTE 12
(NOTE 13)
DETAIL 3 (E-3)
REACTOR COOLANT SYSTEM COLD LEG LOOP NO. 1
REACTOR COOLANT SYS. COLD LEG LOOP NO.4
DETAIL 2 (C-5)
REACTOR COOLANT SYSTEM COLD LEG LOOP NO. 4
DETAIL 1 (B-6)
REACTOR COOLANT SYSTEM COLD LEG LOOP NO. 1
AREA OF CHANGE
NOTES:
1 - INDICATES TERMINAL END BREAK POINT
2 - INDICATES INTERMEDIATE BREAK POINT
3 - INDICATES STRESS NODE
4 - INDICATES CIRCUMFERENTIAL BREAK AT INTERMEDIATE BREAK POINT
5 - INDICATES LONGITUDINAL BREAK AT INTERMEDIATE BREAK POINT
6 - INDICATES CIRCUMFERENTIAL BREAK AT TERMINAL END
7 - INDICATES BREAK POINT NUMBER
8 - INDICATES PIPE BREAK RESTRAINT
9 - STRESS RESULTS WHICH ARE GIVEN IN TABLE 3.6.3, SHEET(S) 40 & 41 CORRESPOND TO THE NUMERICAL MODAL POINTS SHOWN HERE
10 - STEADY STATE THRUST FORCES FOR EACH BREAK ARE PROVIDED BELOW
BREAK POINT | THRUST FORCE, LBS
EP01-01 (LOOP) 218,580
-01 (TANK) 29,927
-04 (LOOP) 218,580
-04 (TANK) 29,927
-05 (10") 29,927
-05 (8") 12,857
-07 110,396
-08 110,395
-10 (LOOP) 218,580
-10 (TANK) 29,927
-13 (LOOP) 218,580
-13 (TANK) 29,927
-14 (10") 29,927
-14 (8") 12,857
-15 3,129
-16 3,129
-17 12,857
-18 12,857
-19 3,129
-20 3,129
-24 3,129
-22 3,129
-26 3,129
-27 3,129
(NOTE 13)
RESTRAINT LEGEND
DIRECTIONAL RESTRAINT
BUMPER RESTRAINT
ISOLATION RESTRAINT
GUIDE RESTRAINT
BUMPER RESTRAINT WITH ATTACHMENT TO PIPE
(FOR FURTHER DETAILS OF RESTRAINT TYPES SEE SECTION 3.6.2.3.3)
H EFFECTS ANALYSIS RESULTS FOR EACH ISOMETRIC ARE PROVIDED ON THE INDICATED SHEET OF TABLE 3.6-4.
ROOM (ISO) | TABLE 3.6-4
LOOO (EP01) | 48
IF WHIP RESTRAINT NO LONGER REQUIRED DUE TO DELETION OF BREAKS.
AREA OF CHANGE
13. THESE INTERMEDIATE BREAKS CAN BE DELETED.
REV. 19
WOLF CREEK
UPDATED SAFETY ANALYSIS REPORT
FIGURE 3.6-1
HIGH ENERGY PIPE BREAK ISOMETRIC
ACCUMULATOR INJECTION -
LOOPS 1 & 4
INSIDE CONTAINMENT
(EP01)
(SHEET 40)

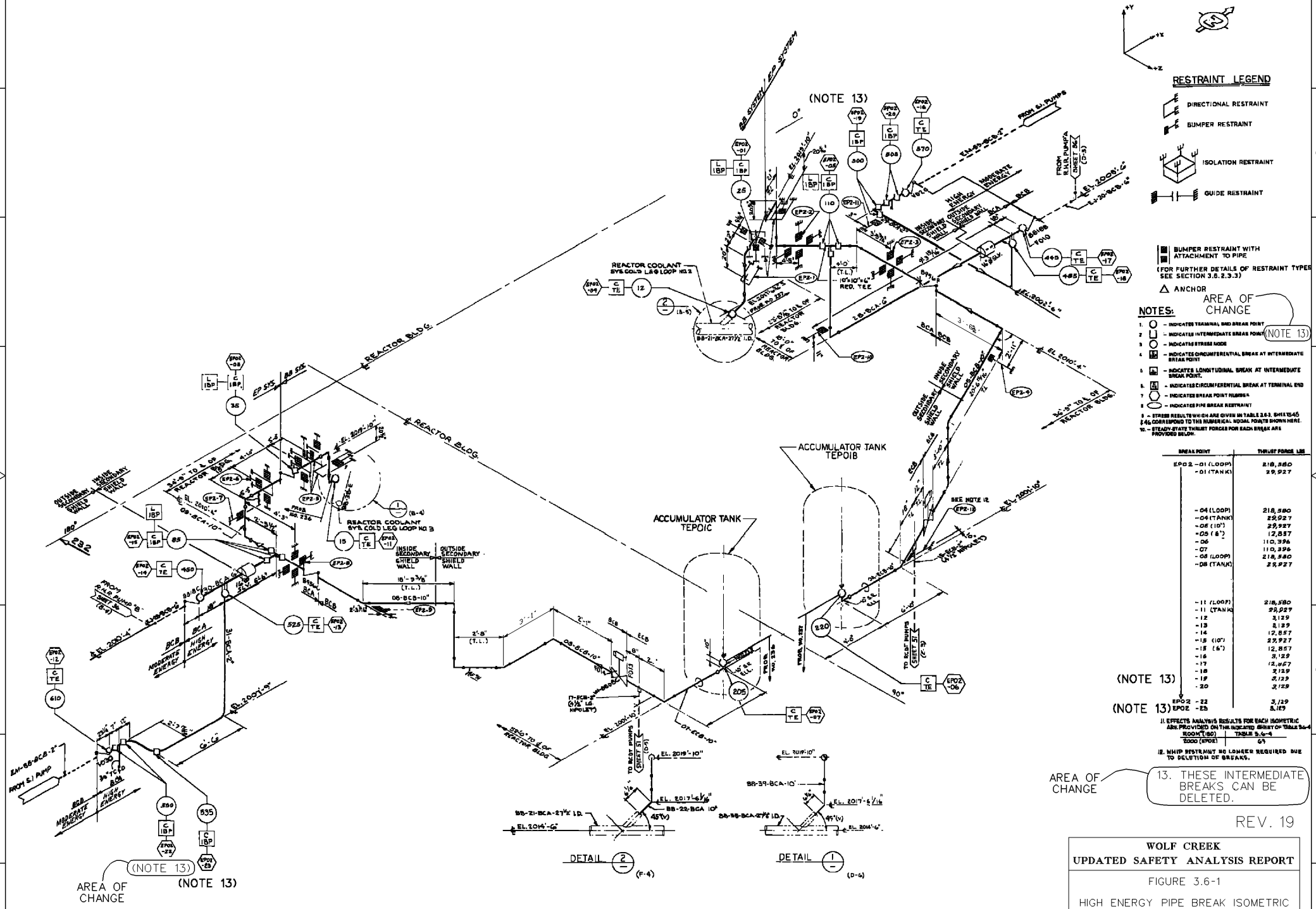

WOLF CREEK
UPDATED SAFETY ANALYSIS REPORT

FIGURE 3.6-1

HIGH ENERGY PIPE BREAK ISOMETRIC
ACCUMULATOR INJECTION -
LOOPS 2 & 3
INSIDE CONTAINMENT
(EP02)

(SHEET 41)

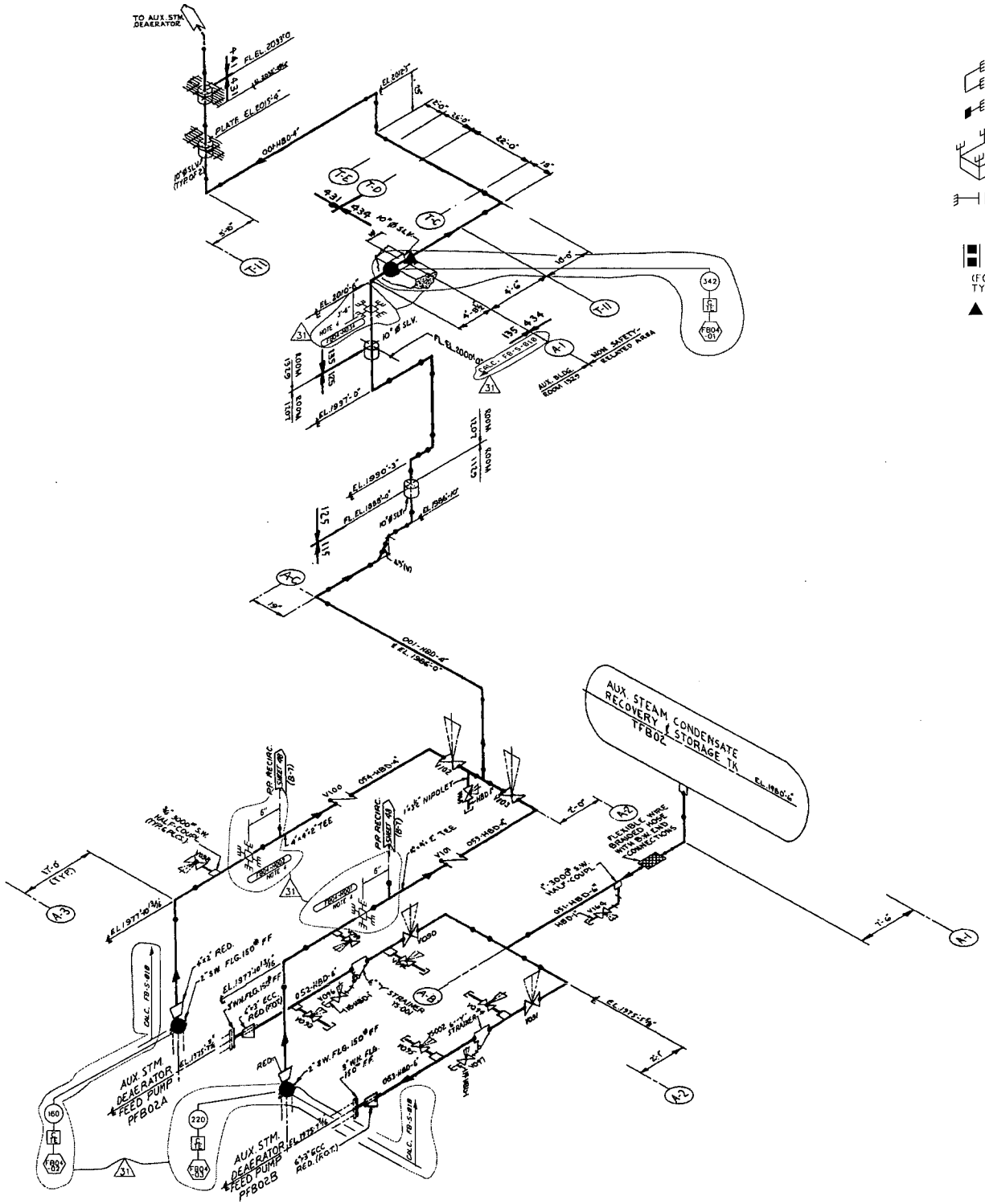

DIRECTIONAL RESTRAINT

BUMPER RESTRAINT

ISOLATION RESTRAINT

GUIDE RESTRAINT

BUMPER RESTRAINT WITH ATTACHMENT TO PIPE

(FOR FURTHER DETAILS OF RESTRAINT TYPES SEE SECTION 3.6.2.3.3)

▲ ANCHOR

LEGEND:

- ● - INDICATES TERMINAL END BREAK POINT
- ■ - INDICATES INTERMEDIATE BREAK POINT
- ○ - INDICATES STRESS NODE
- CBP - INDICATES CIRCUMFERENTIAL BREAK AT INTERMEDIATE BREAK POINT
- LBP - INDICATES LONGITUDINAL BREAK AT INTERMEDIATE BREAK POINT
- CTE - INDICATES CIRCUMFERENTIAL BREAK AT TERMINAL END
- ⬡ - INDICATES BREAK POINT NUMBER
- ⬭ - INDICATES PIPE BREAK RESTRAINT

STRESS RESULTS WHICH ARE GIVEN IN TABLE 3.6.3 SHEET 75 CORRESPONDS TO THE NUMERICAL NODAL POINTS SHOWN HERE.

STEADY STATE THRUST FOCES FOR EACH BREAK ARE PROVIDED BELOW.

NOTES:

1. BREAK LOCATIONS FOR THIS PIPING ARE DEFINED IN SECTION 3.6.2.1.1d. BREAK TYPES ARE DEFINED IN SECTION 3.6.2.1.2.3

2. EFFECTS ANALYSIS RESULTS FOR EACH ROOM ARE PROVIDED ON THE INDICATED SHEET OR TABLE 3.6-4.

ROOM*	TABLE 3.6-4 SHEET
1129	16
1207	21
1329	34

3. STEADY STATE THRUST FORCES FOR EACH LINE AND BREAK ARE PROVIDED BELOW.

LINE*	THRUST, FORCE, LBF
051-HBD-6"	173
052-HBD-6"	173
053-HBD-6"	173
001-HBD-4"	2000
054-HBD-4"	2000
055-HBD-4"	2000

BREAK*	THRUST, FORCE, CBF
FB04-01	2000
FB04-02	2000
FB04-03	2000

31 4. EXISTING PIPE SUPPORT HAS BEEN MODIFIED TO TAKE ALSO THE PIPE BREAK LOADS AT THE TERMINAL ENDS. PIPE BREAK RESTRAINT NUMBER IS THE SAME AS THE PIPE SUPPORT NUMBER.

REV. 31

WOLF CREEK
UPDATED SAFETY ANALYSIS REPORT

FIGURE 3.6-1

HIGH ENERGY PIPE BREAK ISOMETRIC
AUX STM DEAERATOR FEED PUMP DISCH
OUTSIDE CONTAINMENT
(FB04)

(SHEET 43)

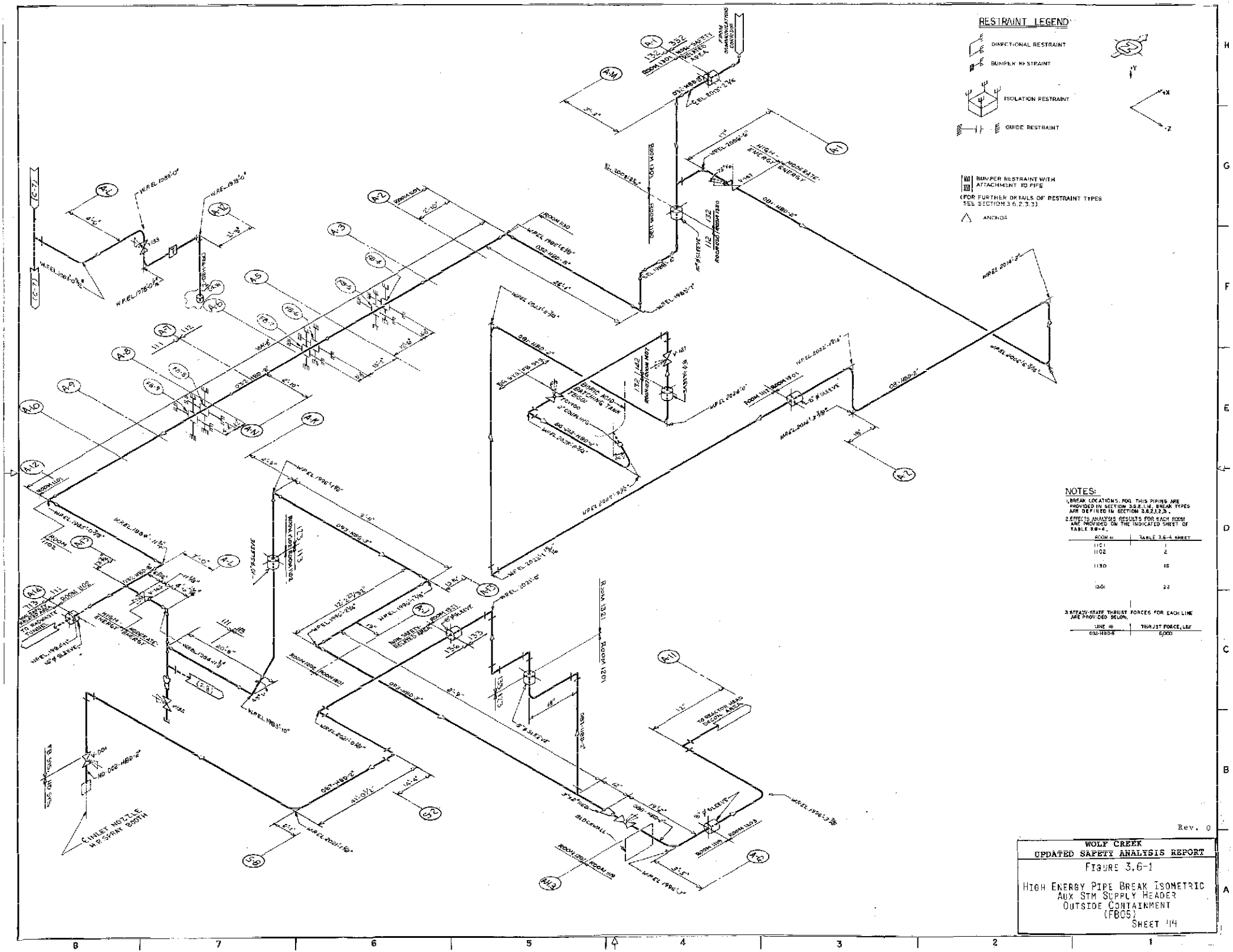

WOLF CREEK
UPDATED SAFETY ANALYSIS REPORT

FIGURE 3.6-1

HIGH ENERGY PIPE BREAK ISOMETRIC
AUX STM SUPPLY HEADER
OUTSIDE CONTAINMENT
(FBOS)
SHEET 14

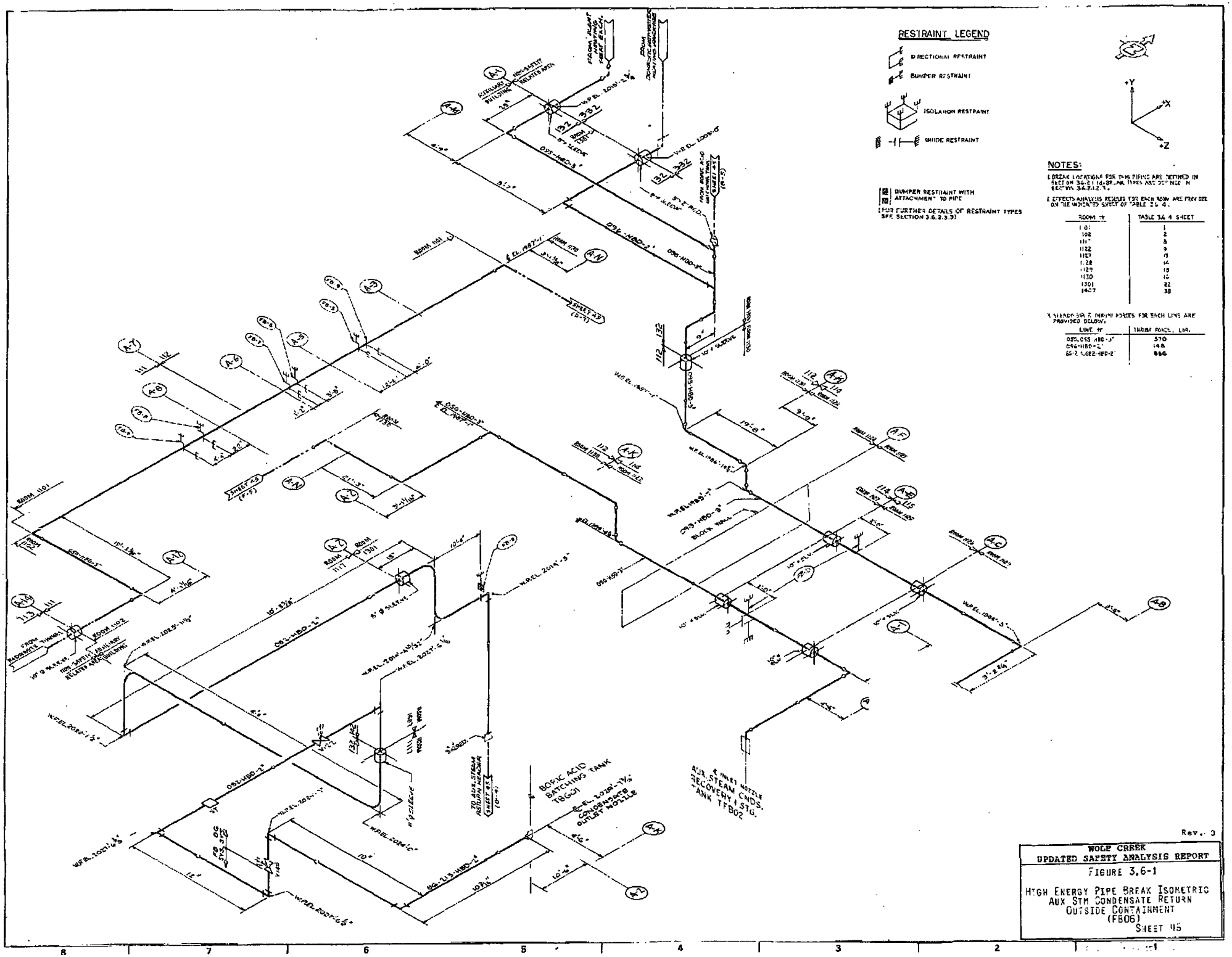

NOTES:

1. BREAK LOCATIONS FOR THIS PIPING ARE DEFINED IN SECTION 3.6.2.1.1.4. BREAK TYPES ARE DEFINED IN SECTION 3.6.2.1.2.3.
2. EFFECTS ANALYSIS RESULTS FOR EACH ROOM ARE PROVIDED ON THE INDICATED SHEET OF TABLE 3.6.4.

ROOM #	TABLE 3.6.4 SHEET
1101	1
1102	2
1117	8
1122	9
1127	13
1128	14
1129	15
1130	16
1301	22
1407	38

3. STEADY-STATE THRUST FORCES FOR EACH LINE ARE PROVIDED BELOW.

LINE #	THRUST FORCE, LBS.
055,095 HBD-3"	570
096-HBD-2"	148
86-2 1,082-HBD-2"	886

WOLF CREEK
UPDATED SAFETY ANALYSIS REPORT

FIGURE 3.6-1

HIGH ENERGY PIPE BREAK ISOMETRIC
AUX STM CONDENSATE RETURN
OUTSIDE CONTAINMENT
(FB06)
SHEET 45

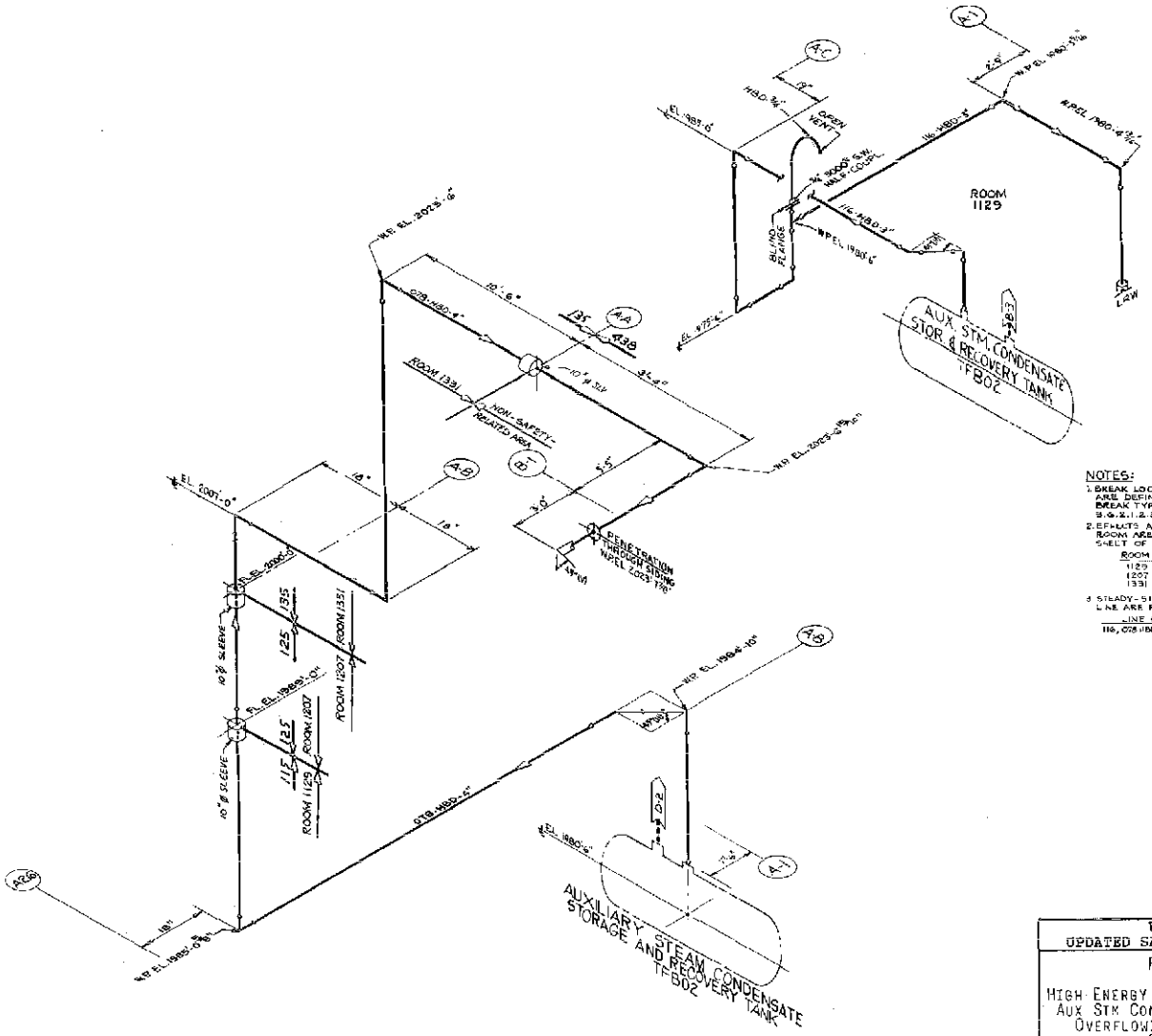

NOTES:

1. BREAK LOCATIONS FOR THIS PIPING ARE DEFINED IN SECTION 3.6.2.1.1.d. BREAK TYPES ARE DEFINED IN SECTION 3.6.2.1.2.a.
2. EFFECTS ANALYSIS RESULTS FOR EACH ROOM ARE PROVIDED ON THE INDICATED SHEET OF TABLE 3.6-4.

ROOM #	TABLE 3.6-4 SHEET
1129	15
1207	51
1331	57

3. STEADY-STATE THRUST FORCES FOR EACH LINE ARE PROVIDED BELOW.

LINE #	THRUST FORCE, LBF
118, 028 1180-4	0

RESTRAINT LEGEND

- DIRECTIONAL RESTRAINT
- BUMPER RESTRAINT
- ISOLATION RESTRAINT
- GUIDE RESTRAINT
- BUMPER RESTRAINT WITH ATTACHMENT TO PIPE

(FOR FURTHER DETAILS OF RESTRAINT TYPES SEE SECTION 3.6.2.3.3)

△ ANCHOR

Rev. 0

WOLF CREEK
UPDATED SAFETY ANALYSIS REPORT

FIGURE 3.6-1

HIGH ENERGY PIPE BREAK ISOMETRIC
AUX STM COND STOR & RECOV TANK
OVERFLOWING & VENT OUTSIDE
CONTAINMENT
(FB09) SHEET 46

NOTES:

BREAK LOCATION FOR THIS PIPING ARE DEFINED IN SECTION 3.6.2.1.1.1. BREAK TYPES ARE DEFINED IN SECTION 3.6.2.1.2.3.

EFFECTS ANALYSIS RESULTS FOR EACH ROOM ARE PROVIDED ON THE INDICATED SHEET OF TABLE 3.6-4.

ROOM •	TABLE 3.6-4 SHEET
1129	16
1207	22

30

STEADY-STATE THRUST FORCES FOR EACH LINE ARE PROVIDED BELOW.

LINE •	THRUST FORCE, LBS.
110-HBD-2"	475

● INDICATES TERMINAL END BREAK POINT

○ INDICATES STRESS NODE

C TE INDICATES CIRCUMFERENTIAL BREAK AT TERMINAL END

⬡ INDICATES BREAK POINT NUMBER

▭ INDICATES PIPE BREAK RESTRAINT

STRESS RESULTS WHICH ARE GIVEN IN TABLE 3.6-3 SHEET 74 CORRESPOND TO THE NUMERICAL NODEL POINTS SHOWN HERE

RESTRAINT LEGEND

SUPPORT RESTRAINT

▲ ANCHOR

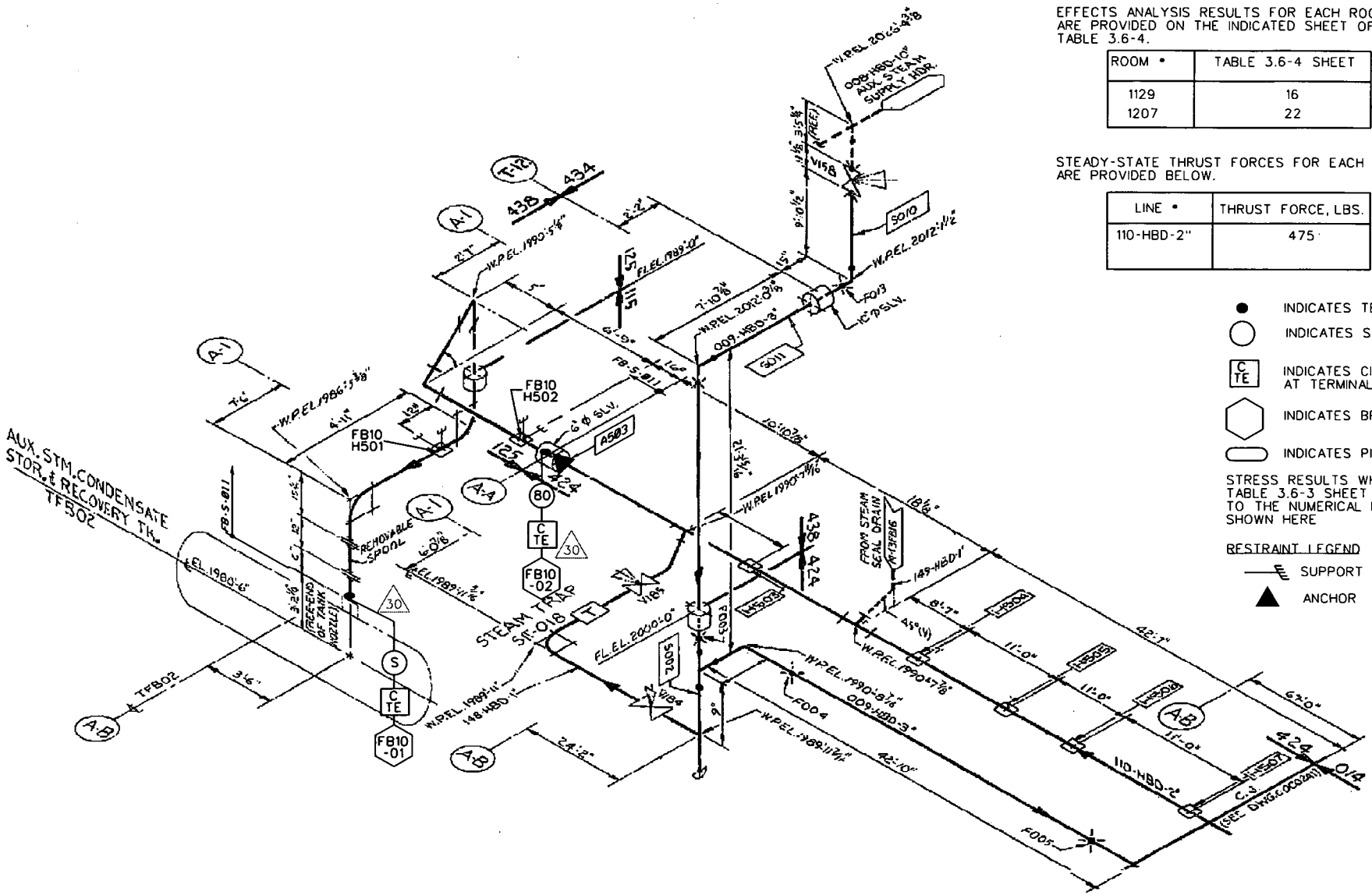

REV.30

WOLF CREEK
UPDATED SAFETY ANALYSIS REPORT

FIGURE 3.6-1

HIGH ENERGY PIPE BREAK ISOMETRIC
AUX STEAM COND TRANSFER PUMP
DISCHARGE OUTSIDE CONTAINMENT
(FB10)

SHEET 47

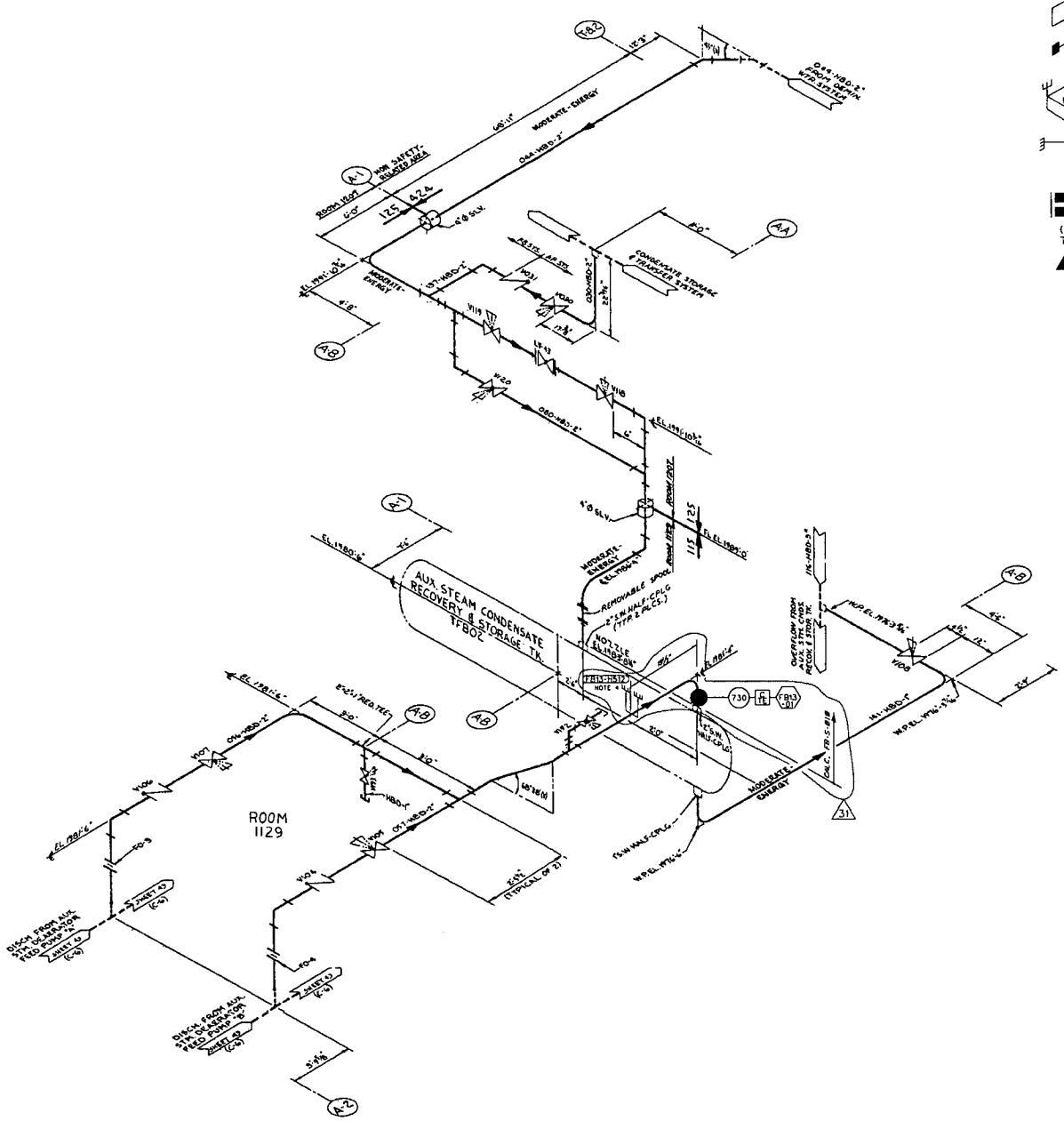

DIRECTIONAL RESTRAINT

BUMPER RESTRAINT

ISOLATION RESTRAINT

GUIDE RESTRAINT

BUMPER RESTRAINT WITH ATTACHMENT TO PIPE

(FOR FURTHER DETAILS OF RESTRAINT TYPES SEE SECTION 3.6.2.3.3)

▲ ANCHOR

LEGEND:

- ● - INDICATES TERMINAL END BREAK POINT
- ■ - INDICATES INTERMEDIATE BREAK POINT
- ○ - INDICATES STRESS NODE
- C BP - INDICATES CIRCUMFERENTIAL BREAK AT INTERMEDIATE BREAK POINT
- L BP - INDICATES LONGITUDINAL BREAK AT INTERMEDIATE BREAK POINT
- C TE - INDICATES CIRCUMFERENTIAL BREAK AT TERMINAL END
- ⬡ - INDICATES BREAK POINT NUMBER
- ⬭ - INDICATES PIPE BREAK RESTRAINT

STRESS RESULTS WHICH ARE GIVEN IN TABLE 3.6.3 SHEET 75 CORRESPONDS TO THE NUMERICAL NODAL POINTS SHOWN HERE.

STEADY STATE THRUST FOCES FOR EACH BREAK ARE PROVIDED BELOW.

NOTES:

1. BREAK LOCATIONS FOR THIS PIPING ARE DEFINED IN SECTION 3.6.2.1.1d. BREAK TYPES ARE DEFINED IN SECTION 3.6.2.1.2.3

2. EFFECTS ANALYSIS RESULTS FOR EACH ROOM ARE PROVIDED ON THE INDICATED SHEET OR TABLE 3.6-4.

ROOM*	TABLE 3.6-4 SHEET
1129	16
1207	21

3. STEADY STATE THRUST FORCES FOR EACH LINE AND BREAK ARE PROVIDED BELOW.

LINE*	THRUST, FORCE, LBF
056-HBD-2"	475
057-HBD-2"	475

BREAK*	THRUST, FORCE, CBF
FB13-01	475

31 4. EXISTING PIPE SUPPORT HAS BEEN MODIFIED TO TAKE ALSO THE PIPE BREAK LOADS AT THE TERMINAL ENDS. PIPE BREAK RESTRAINT NUMBER IS THE SAME AS THE PIPE SUPPORT NUMBER.

REV. 31

WOLF CREEK
UPDATED SAFETY ANALYSIS REPORT

FIGURE 3.6-1

HIGH ENERGY PIPE BREAK ISOMETRIC
AUX STM DEAERATOR FEED PUMP
RECIRC
OUTSIDE CONTAINMENT
(FB13)

(SHEET 48)

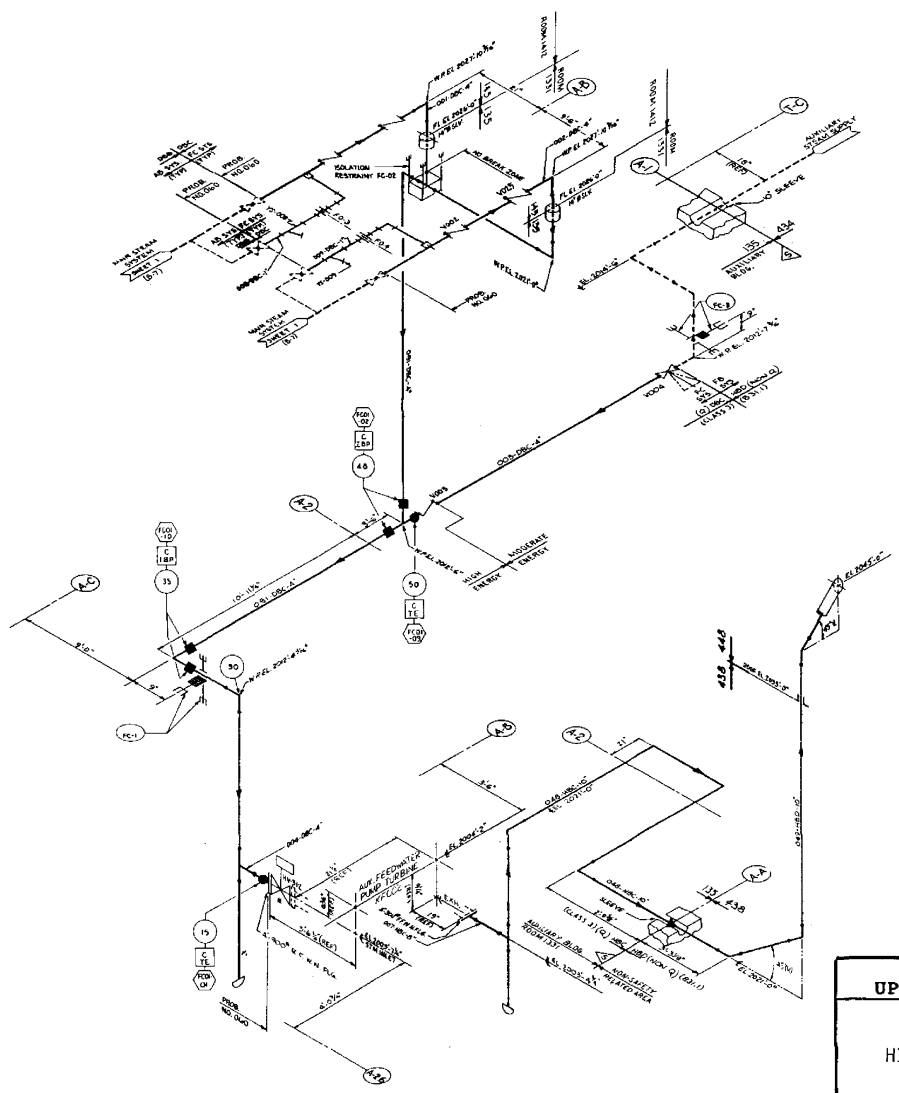

Rev. 0

WOLF CREEK
UPDATED SAFETY ANALYSIS REPORT

FIGURE 3.6-1

HIGH ENERGY PIPE BREAK ISOMETRIC
MAIN STM SUPPLY TO TURB AFP
OUTSIDE CONTAINMENT
(FC01)

SHEET 49

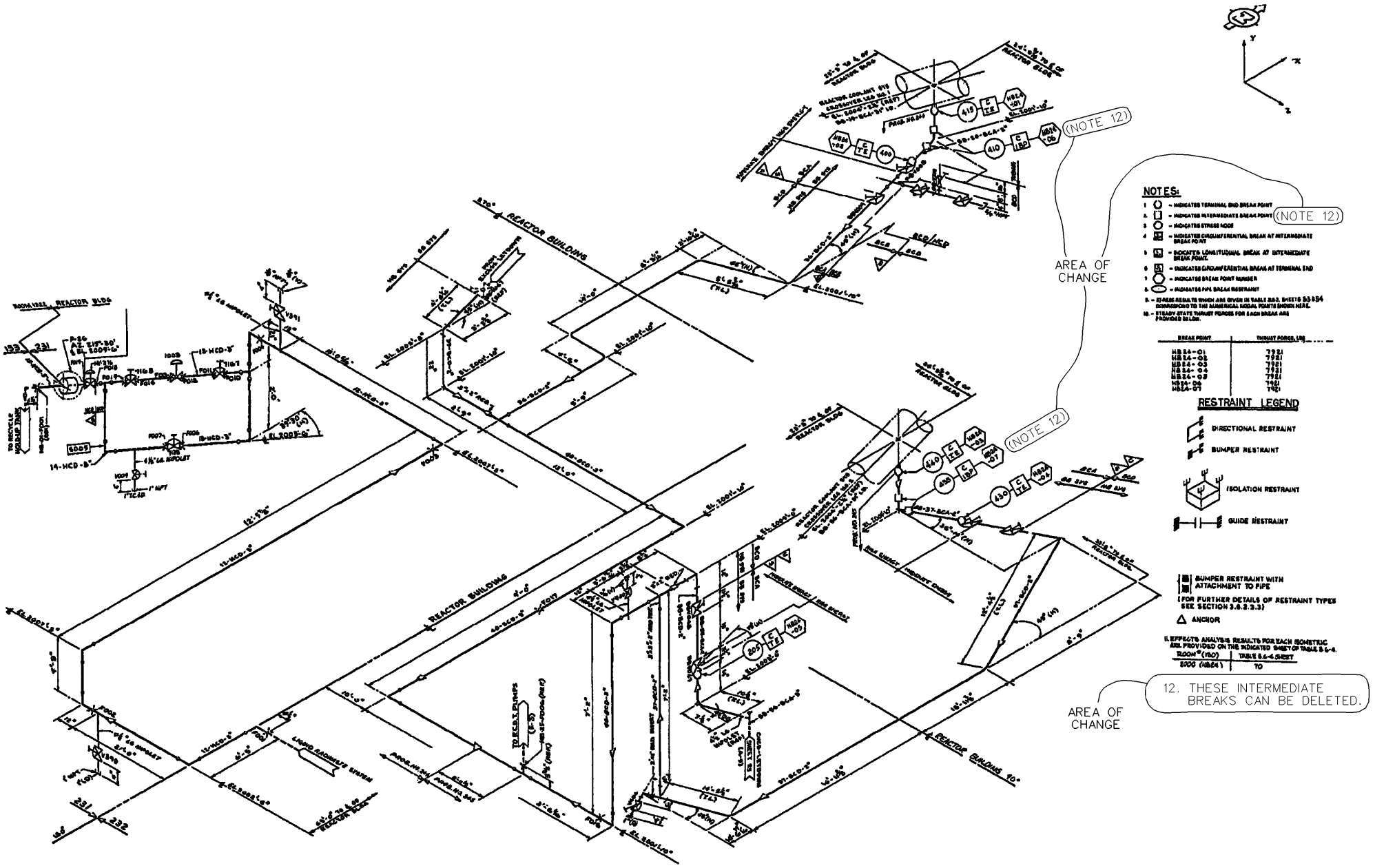

WOLF CREEK
UPDATED SAFETY ANALYSIS REPORT

FIGURE 3.6-1

HIGH ENERGY PIPE BREAK ISOMETRIC
REACTOR COOLANT - LOOP DRAINS
INSIDE CONTAINMENT
(HB24)

(SHEET 50)

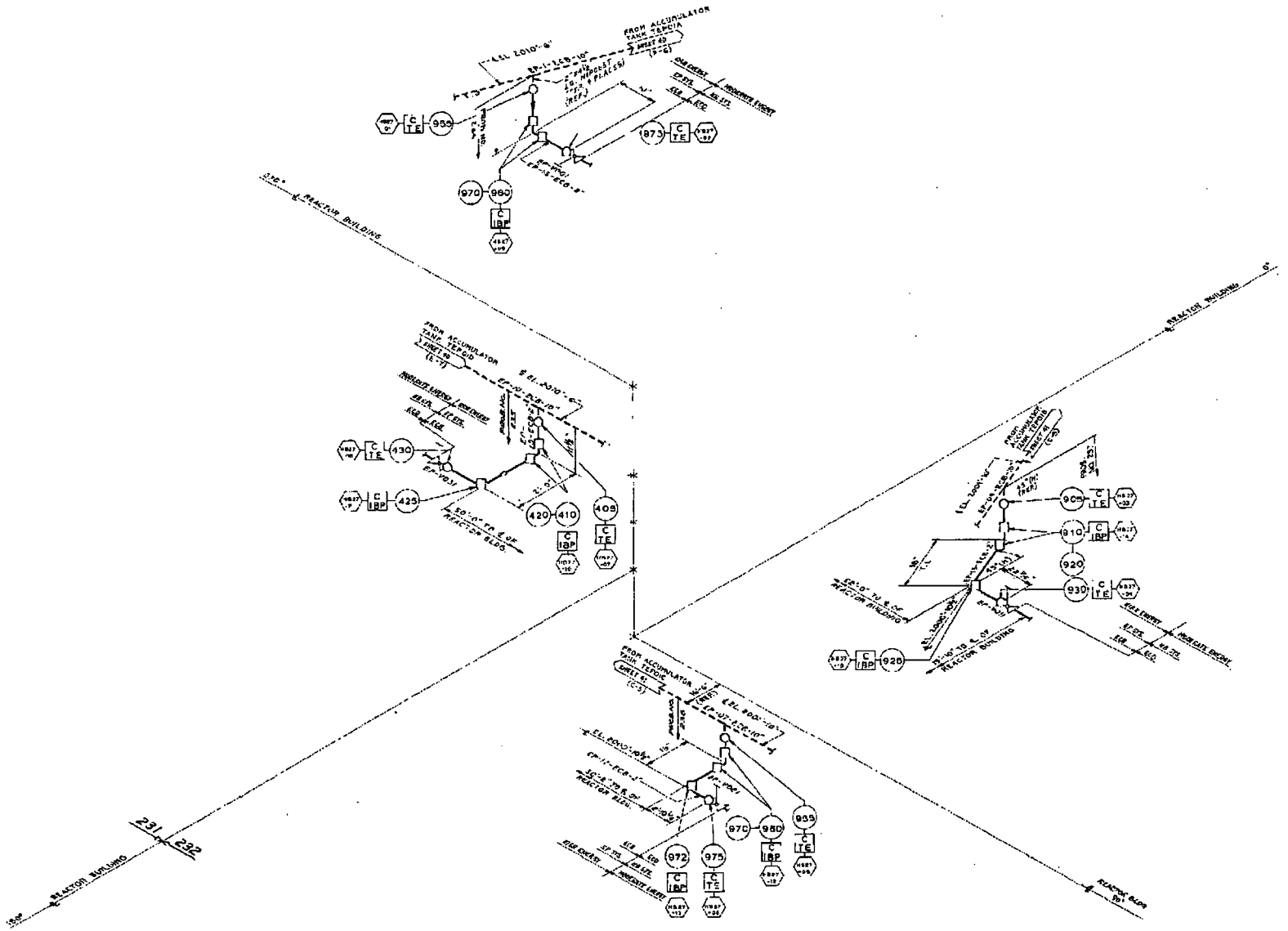

NOTES:

1. ○ - INDICATES TERMINAL END BREAK POINT
2. □ - INDICATES INTERMEDIATE BREAK POINT
3. ○ - INDICATES STRESS NODE
4. ▭ - INDICATES CIRCUMFERENTIAL BREAK AT INTERMEDIATE BREAK POINT
5. ▭ - INDICATES LONGITUDINAL BREAK AT INTERMEDIATE BREAK POINT
6. ⬡ - INDICATES CIRCUMFERENTIAL BREAK AT TERMINAL END
7. ⬡ - INDICATES BREAK POINT NUMBER
8. ⬭ - INDICATES PIPE BREAK RESTRAINT
9. - STRESS ANALYSIS RESULTS [illegible] IN TABLE 3.6-3, SHEETS 43 - 44 CORRESPONDING TO THE NUMERICAL NODAL POINTS [illegible]
10. - STEADY-STATE THRUST FORCES FOR EACH BREAK ARE PROVIDED BELOW.

BREAK POINT	THRUST FORCE LBS
HB27-01	4597
-02	
-03	
-04	
-05	
-06	
-07	
-08	
-09	
-10	
-11	
-12	
-13	
-14	
HB27-15	4597

F. STRESS ANALYSIS RESULTS FOR EACH ISOMETRIC ARE PROVIDED ON THE INDICATED SHEET OF TABLE 3.6-4

ROOM# (ISO)	TABLE 3.6-4 SHEET
220 (HB27)	71

Rev. 0

WOLF CREEK
UPDATED SAFETY ANALYSIS REPORT

FIGURE 3.6-1

HIGH ENERGY PIPE BREAK ISOMETRIC
ACCUMULATOR TANK DRAINS
INSIDE CONTAINMENT
(HB27)
SHEET 51

CASE I — OUTGOING LINES WITH NORMALLY CLOSED VALVE

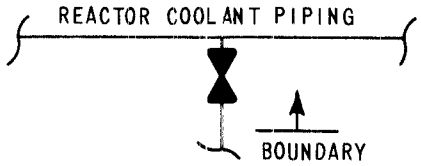

NOTE: PRESSURIZER SAFETY VALVES ARE INCLUDED UNDER THIS CASE.

CASE II — OUTGOING LINES WITH NORMALLY OPEN VALVES

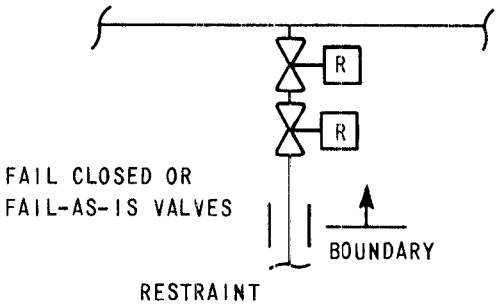

NOTE: THE REACTOR COOLANT PUMP NO. 1 SEAL IS ASSUMED TO BE EQUIVALENT TO FIRST VALVE

CASE III — INCOMING LINES NORMALLY WITH FLOW

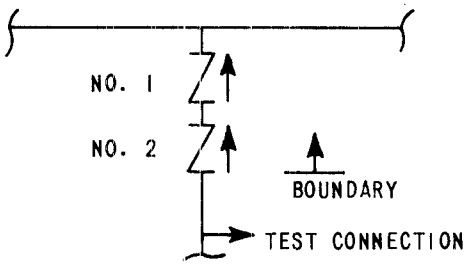

CASE IV — INCOMING LINES NORMALLY WITHOUT FLOW

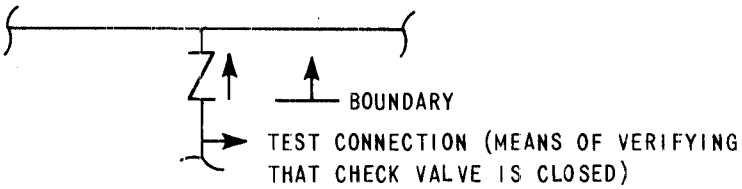

CASE V — ALL INSTRUMENTATION TUBING AND INSTRUMENTS CONNECTED DIRECTLY TO THE REACTOR COOLANT SYSTEM IS CONSIDERED AS A BOUNDARY. HOWEVER, A BREAK WITHIN THIS BOUNDARY RESULTS IN A RELATIVELY SMALL FLOW WHICH CAN NORMALLY BE MADE UP WITH THE CHARGING SYSTEM.

Rev. 0

WOLF CREEK
UPDATED SAFETY ANALYSIS REPORT

FIGURE 3.6-2

LOSS OF REACTOR COOLANT ACCIDENT BOUNDARY LIMITS

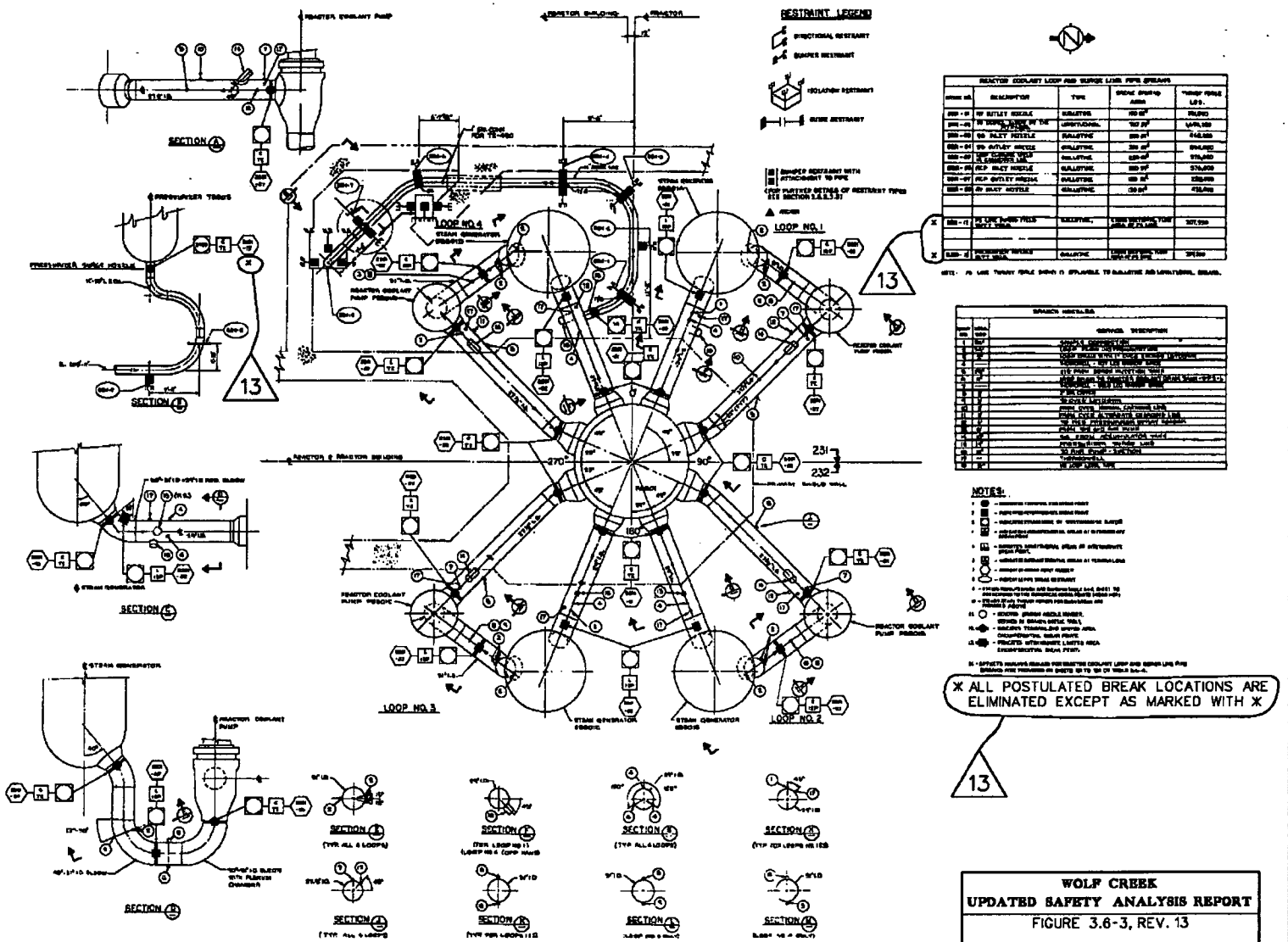

WOLF CREEK
UPDATED SAFETY ANALYSIS REPORT

FIGURE 3.6-3, REV. 13

LOCATION OF POSTULATED BREAKS IN REACTOR COOLANT (INCLUDING PRESSURIZER SURGE LINE)

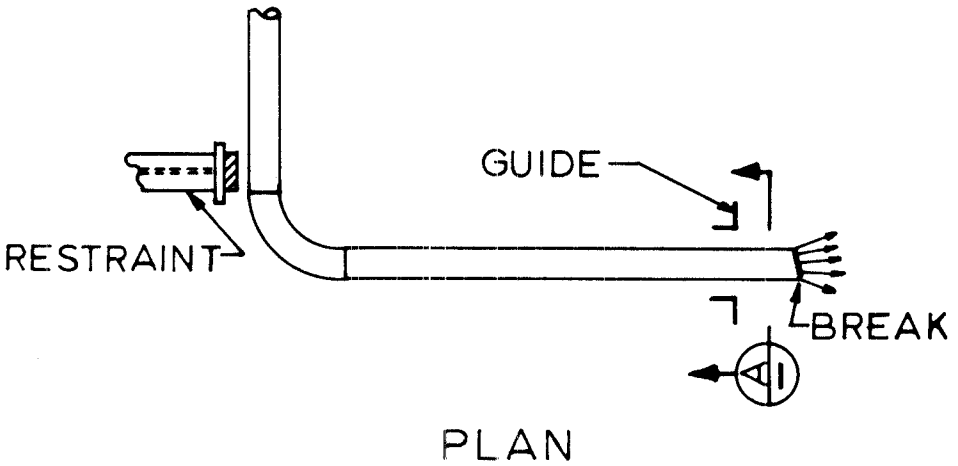

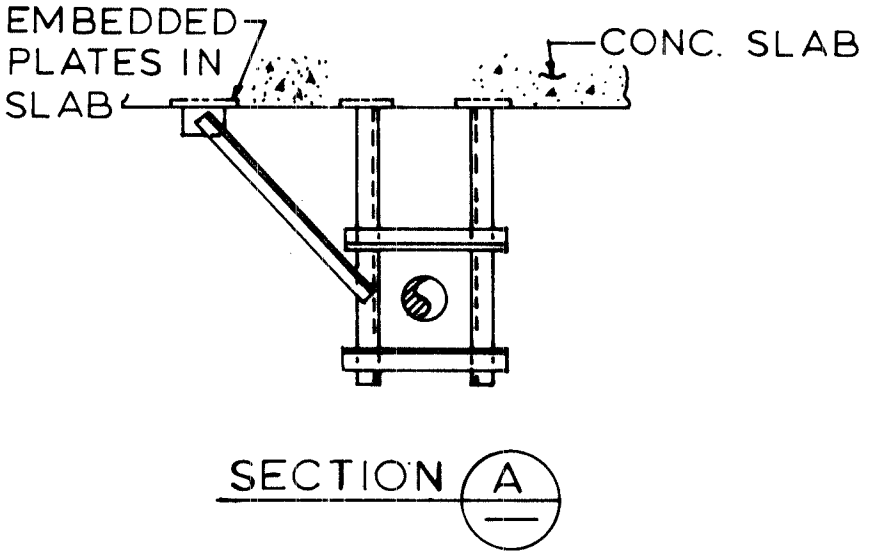

Rev. 0

WOLF CREEK
UPDATED SAFETY ANALYSIS REPORT

FIGURE 3.6-4

TYPICAL PIPING GUIDE INSTALLATION

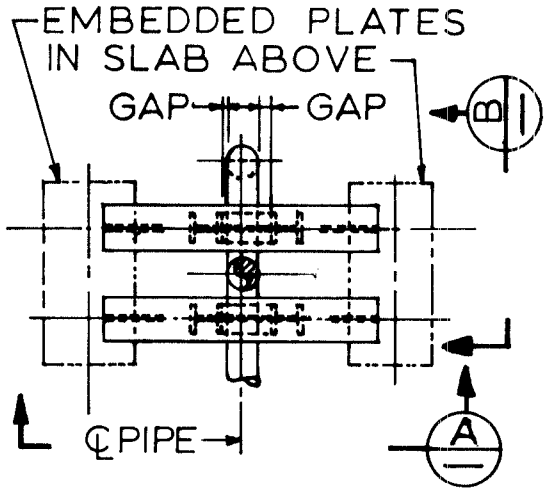

PLAN

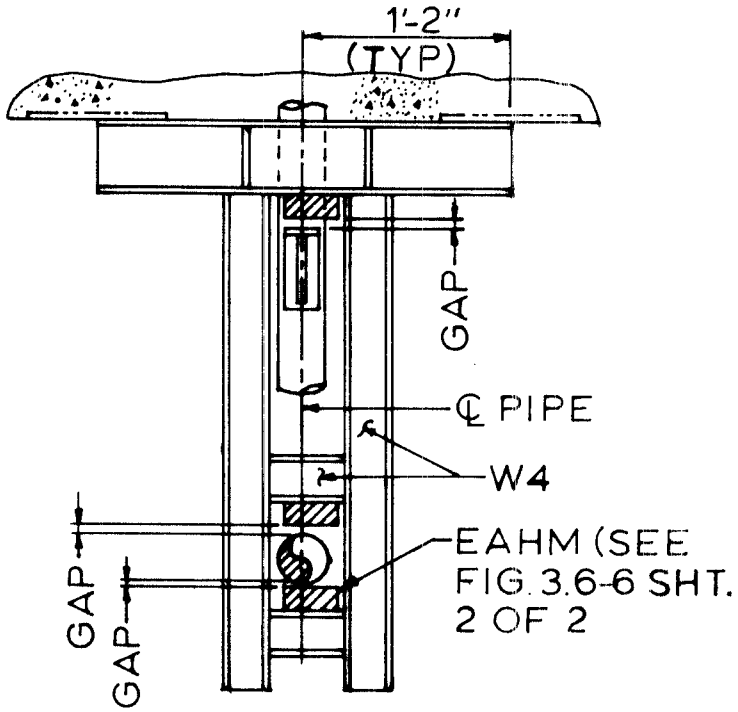

SECTION A

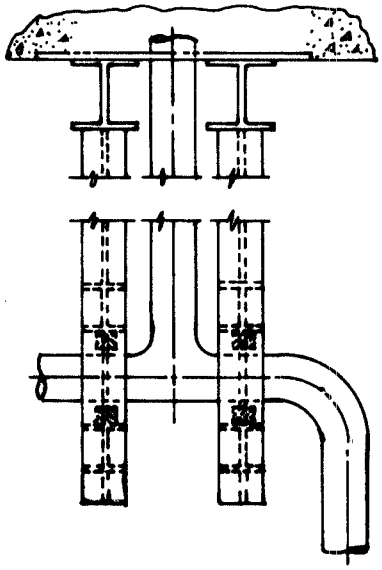

SECTION B

Rev. 0

WOLF CREEK
UPDATED SAFETY ANALYSIS REPORT

FIGURE 3.6-5

TYPICAL ISOLATION RESTRAINT

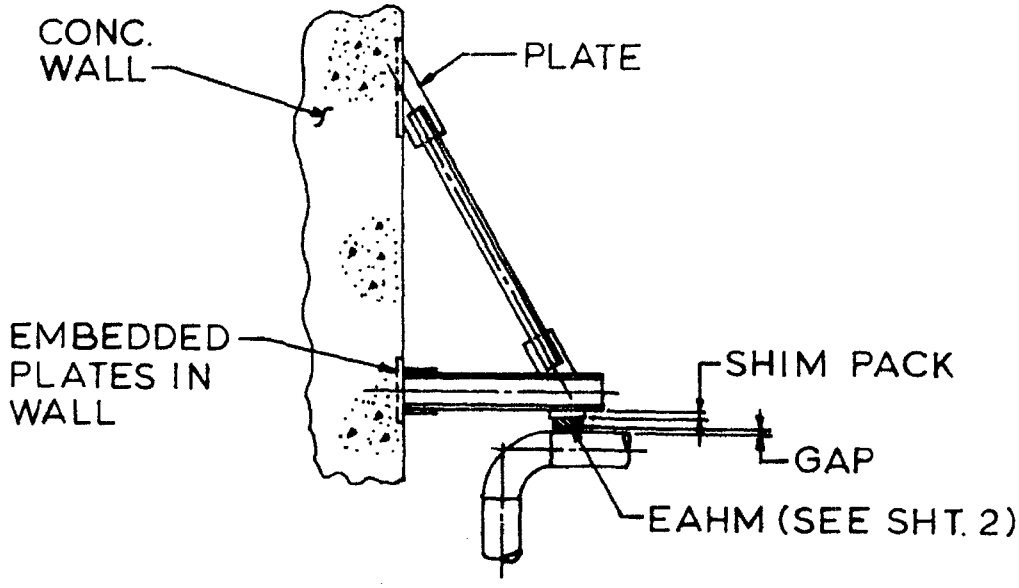

Rev. 0

WOLF CREEK
UPDATED SAFETY ANALYSIS REPORT

FIGURE 3.6-6

ENERGY ABSORBING HONEYCOMB MATERIAL - LARGE GAP RESTRAINT

SHEET 1

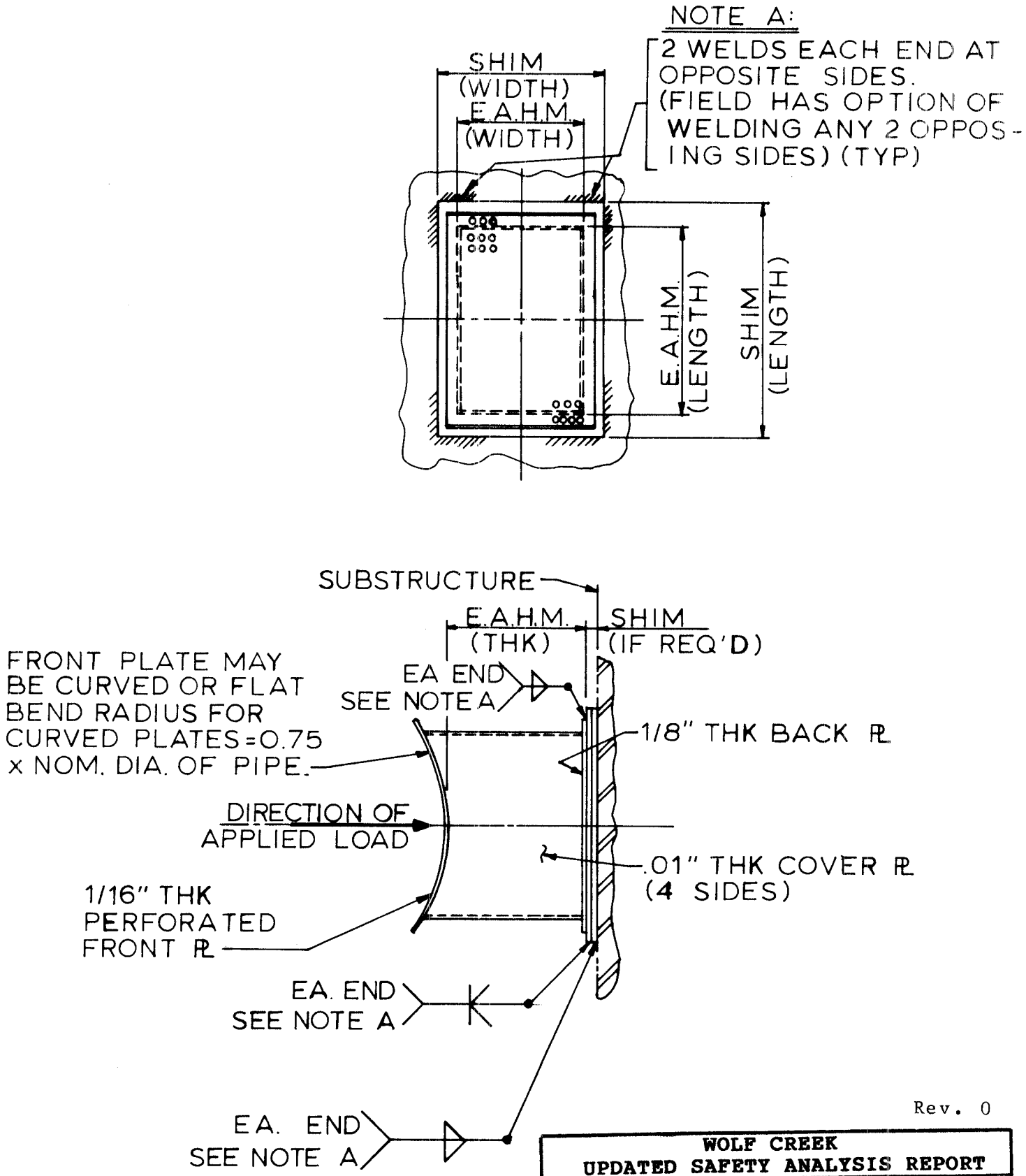

Rev. 0

WOLF CREEK
UPDATED SAFETY ANALYSIS REPORT

FIGURE 3.6-6

TYPICAL PREFABRICATED ENERGY ABSORBING HONEYCOMB MATERIAL INSTALLATION

SHEET 2

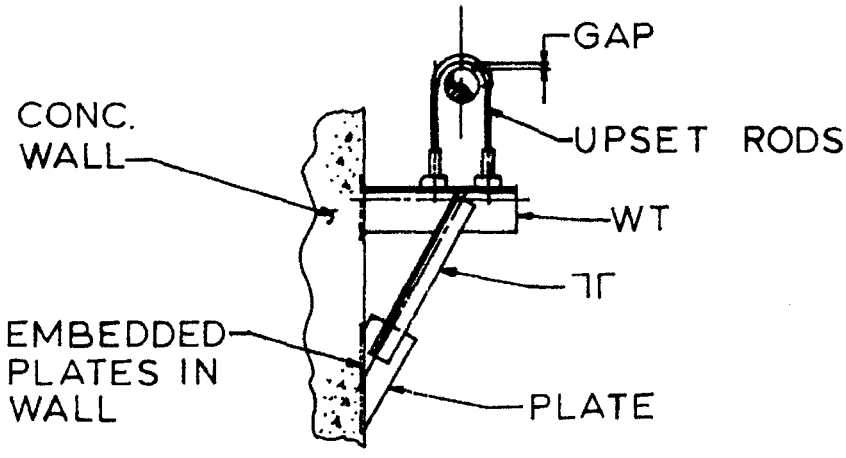

Rev. 0

WOLF CREEK
UPDATED SAFETY ANALYSIS REPORT

FIGURE 3.6-7

TYPICAL UPSET ROD LARGE GAP RESTRAINT

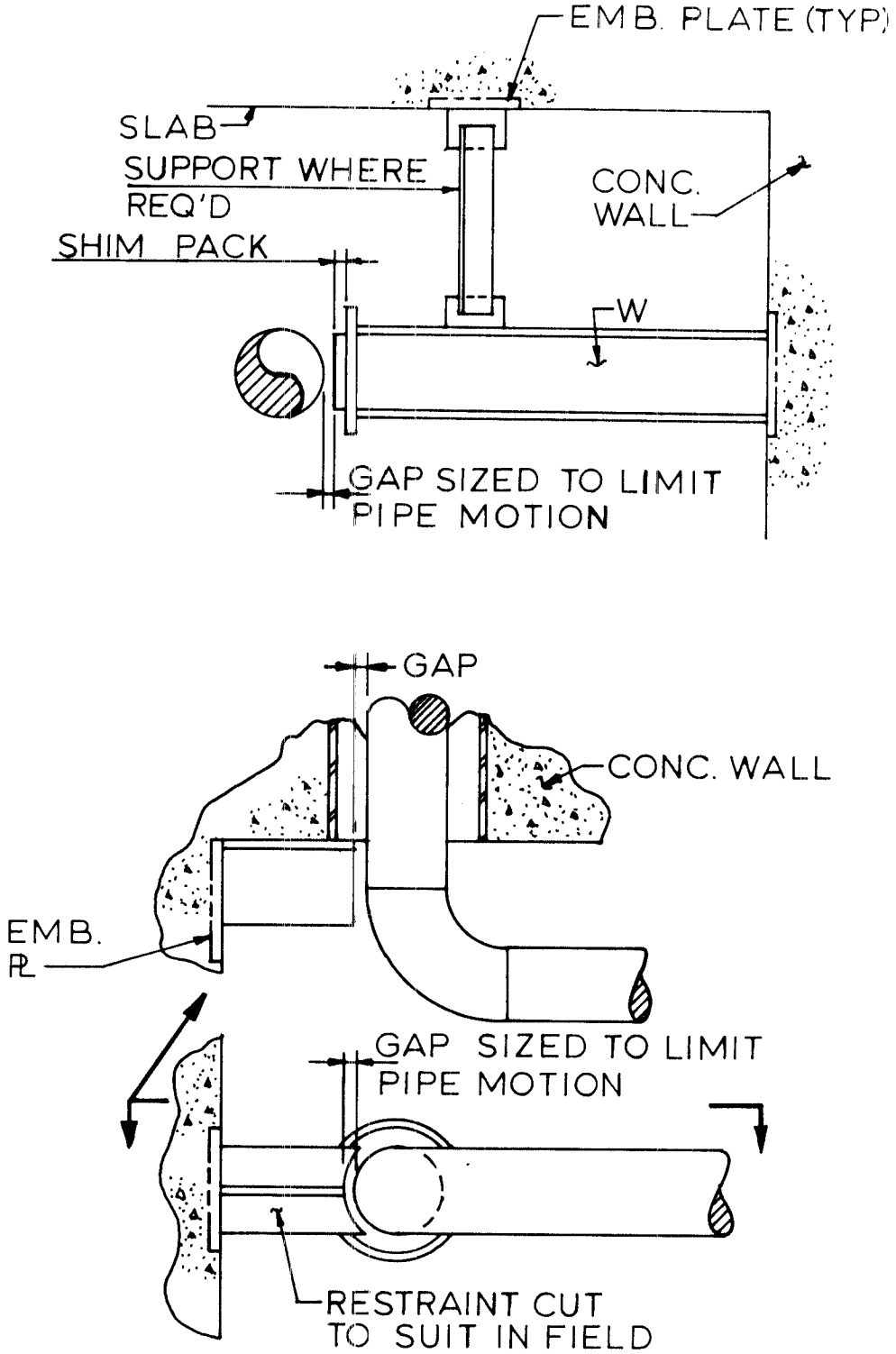

Rev. 0

WOLF CREEK
UPDATED SAFETY ANALYSIS REPORT

FIGURE 3.6-8

TYPICAL CLOSE GAP RESTRAINT

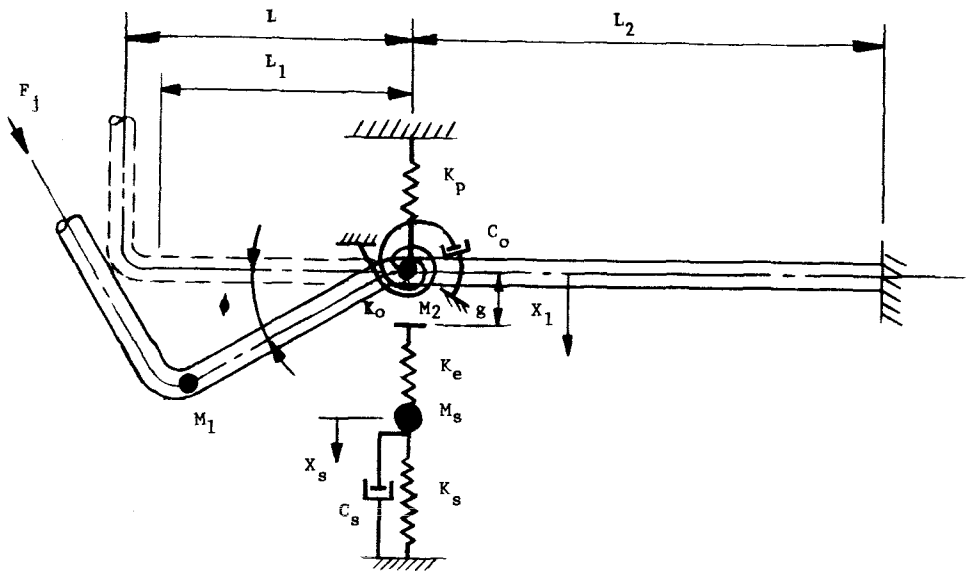

F_j = Jet thrust reaction force (See Reference 5)

M_1 = Effective mass of rotating pipe (between broken end of pipe and restraint)

M_2 = Effective mass of rotating portion of pipe between fixity and restraint

M_s = Effective mass of restraint substructure

K_o = Elastic-plastic clock spring representing stiffness of pipe at a restraint due to deflection/rotation caused by F_j (plastic hinge determined by equations in Section 3.6.2.3.4(a))

K_p = Elastic spring representing stiffness of pipe between point of fixity and restraint

K_e = Elastic-plastic spring representing energy dissipating device. (Active only in compression - provides rebound capability.)

K_s = Elastic-plastic spring representing stiffness of restraint substructure.

C_o = Effective damping of pipe (effective translational damping)

C_s = Effective damping of substructure

L = Distance from elbow to restraint

L_1 = Distance from elbow to restraint to effective mass of rotating pipe

L_2 = Distance from restraint to point of fixity

g = Initial gap between pipe and restraint

ϕ = Degree of freedom representing rotation of the elbow at the restraint

X_1 = Degree of freedom representing translational motion of pipe at the restraint

X_s = Degree of freedom representing the motion of the restraint substructure

Note: The coupled second order differential equations developed using Lagrangian dynamics representing the model, are solved by a time step integration procedure via computer to yield the time history acceleration velocities and displacements of the defined masses.

Rev. 0

WOLF CREEK
UPDATED SAFETY ANALYSIS REPORT

FIGURE 3.6-9

LUMPED-PARAMETER MODEL PIPE RESTRAINT SYSTEM

3.7(B) SEISMIC DESIGN

In addition to the steady state loads imposed on the system under normal operating conditions, the design of equipment and equipment supports requires that consideration also be given to abnormal loading conditions, such as earthquakes. Seismic loadings are considered for earthquakes of two magnitudes: Safe Shutdown Earthquake (SSE) and Operating Basis Earthquake (OBE). The SSE is defined as the maximum vibratory ground motion at the plant site that can be reasonably predicted from geologic and seismic evidence. The OBE is that earthquake which, considering the local geology and seismology, can be reasonably expected to occur during the plant life.

For Westinghouse-supplied items, refer to Section 3.7(N).

The following material is in addition to Section 3.7(N) and applies to structures, systems, and components not supplied by Westinghouse. This section describes the techniques and discusses the parameters used to develop seismic loadings and criteria for seismic Category I structures, systems, and components.

The seismic responses of the major seismic Category 1 structures (containment, auxiliary/control, diesel generator, and fuel building) were originally generated for four sites (Callaway, Wolf Creek, Sterling, and Tyrone). Seismic design envelopes were developed by use of the most restrictive site conditions imposed by any one of the four original sites or by generic design criteria which are conservative for each of the sites. With the cancellation of the Tyrone plant, however, the four site enveloping approach was modified, for work not yet completed, to include only the remaining three sites. The seismic design envelopes were not revised to reflect the cancellation of the Sterling plant; therefore, since the design of all powerblock structures, systems, and components is based on the responses for three or four sites, the powerblock design is conservative for the remaining two sites. A further discussion of the multiple site enveloping criteria, as applied to the seismic design of the WCGS powerblock, is contained in Section 3.7(B).2.2.

The seismic response of the seismic Category 1 ESW vertical loop chase structure was generated by using the design envelope developed for the auxiliary/control building.

3.7(B).1 SEISMIC INPUT

3.7(B).1.1 Design Response Spectra

The site design response spectra in compliance with Regulatory Guide 1.60 are illustrated in Figures 3.7(B)-1 and 3.7(B)-2, in both the horizontal and vertical directions for the SSE. For the OBE, the design response spectra values were taken as 60 percent

of the SSE. The values shown are for the site with maximum amplification. Section 2.5.2 and Section 2.5 of BC-TOP-4-A (Ref. 3) discuss the effects of focal and epicentral distances from the site, depths between the focus of the seismic disturbances and the site, existing earthquake records, and the associated amplification of the response spectra.

Earthquake duration influences only the number of loading cycles on equipment because the equipment is designed for the elastic range in accordance with the analytical procedures outlined in BC-TOP-4-A. A 20.48-second duration is considered to be adequate for the time-history type of analysis used for the structures and equipment.

The design response spectra and earthquake time-histories are applied in the free field at finished grade for all sites.

3.7(B).1.1.1 Bases for Site Dependent Analysis

Section 2.5.2 and BC-TOP-4-A, Sections 2.4 and 2.5, describe the bases for specifying the vibratory ground motion for design use.

3.7(B).1.2 Design Time History

Synthetic earthquake time-histories were generated because the response spectra of recorded earthquake motions do not necessarily envelope the site's design spectra. Figures 3.7(B)-3 and 3.7(B)-4 show the synthetic earthquake time-history motions in the horizontal and vertical directions, respectively. The time-histories shown were truncated to 20.48 seconds for use in the FLUSH finite element analyses discussed in Section 3.7(B).2.4.2. Figures 2-13, 2-14, 2-17, and 2-18 of BC-TOP-4-A show that the response spectra of the synthetic time-histories for the horizontal and vertical directions envelope the corresponding design spectra for 1 percent, 2 percent, 5 percent, 7 percent, and 10 percent damping. Section 2.5.1 of BC-TOP-4-A describes the generation of a typical synthetic earthquake time-history.

Typical foundation-level, free-field acceleration response spectra for each of the three sites are presented in Figures 3.7(B)-9A through D. Their envelope is presented in Figure 3.7(B)-10. All curves overlay the WCGS 60-percent design response spectra.

Due to site amplification of the seismic input, deconvolution of the SNUPPS control motion applied at grade will inevitably show an attenuation of the foundation level response relative to grade level input motion. Attenuation is maximized at frequencies

corresponding to the soil deposit fundamental frequencies. Hence, at particular frequencies, the computed foundation-level, free-field response spectra for WCGS can be expected to and does fall below the WCGS 60-percent design spectra at some frequencies, similar to the ground spectrum and as shown by the Humboldt Bay results (Ref. 1).

3.7(B).1.3 Critical Damping Values

For seismic Category I structures, systems, and components not supplied by Westinghouse, the range of damping values (in percent of critical) is shown in Table 3.7(B)-1, is discussed in Sections 2.2 and 3.2.1 of BC-TOP-4-A, and is in compliance with Regulatory Guide 1.61 as discussed in Appendix 3A. The applicable allowable stress values are given in Section 3.8 for the various loading combinations, which include seismic loadings.

The testing of cable tray systems, as discussed in Section 3.10(B).3, clearly demonstrates that a substantial amount of energy is absorbed by friction between the adjacent moving cables and through friction between cables and the cable tray. This phenomenon was also observed to be amplitude dependent. That is, the greater the input level the more pronounced were these losses. Equating these losses during the test program resulted in predicted equivalent viscous damping of up to 50 percent in some cases. After tabulating the results of the several hundred earthquake-type vibration tests and cable tray systems, the allowable damping as a function of the level of seismic input motion was determined. A maximum value of 15 percent of critical was used for cable tray damping. Damping of supports for conduit is 7 percent of critical, regardless of input level.

3.7(B).1.4 Supporting Media for Seismic Category I Structures

In the FLUSH finite element analyses, the containment building was supported on stabilized backfill down to a depth of 25 feet below grade. Also in the analyses, the auxiliary/control building was founded directly on in-situ material. The diesel generator and fuel buildings for Wolf Creek analyses were supported on crushed rock. The crushed rock extended from the bottom of the base mats down to a depth below grade of 13 feet in the Wolf Creek analyses.

Descriptions of the supporting media at the Wolf Creek site are provided in Section 2.5.

A list of the major seismic Category I structures and the depth of the soil and/or backfill deposits over the bedrock for each structure is given in Table 3.7(B)-2.

The foundation embedment depth and minimum base dimension for each seismic Category I structure are provided in Table 3.7(B)-3, along with the method of seismic analysis utilized for each structure.

3.7(B).2 SEISMIC SYSTEM ANALYSIS

3.7(B).2.1 Seismic Analysis Methods

Seismic Category I structures, systems, and components were classified in accordance with NRC Regulatory Guide 1.29, as shown in Section 3.2. These structures, systems, and components were analyzed for two earthquake conditions, the SSE and the OBE.

The analytical methods utilized for the analysis of the different seismic Category I structures are summarized in Table 3.7(B)-3.

Lumped-mass models were developed for the containment, fuel auxiliary/control, and diesel generator buildings, following the techniques discussed in Section 3.2 of BC-TOP-4-A. Figures 3.7(B)-17 through 3.7(B)-20 present the models developed for these structures. Mass and cross-sectional properties were calculated for the two principal normal horizontal directions and the vertical direction. The lumped-mass models of the major seismic Category I structures were incorporated, along with models of the significant non-Category I structures, into finite element models, of which Figure 3.7(B)-13 is typical. Time history analyses were performed using these finite element models, following procedures described in Section 3.7(B).2.4.2.

The results obtained from these analyses included maximum accelerations, inertia forces, shears, axial forces, moments, and floor response spectra. It was not possible to obtain displacements directly from the finite element analyses. Consequently, the procedure outline in Section 3.7(B).2.4.2 was used to determine building displacements.

The other seismic Category I structures (refueling water storage tank and valve house, emergency fuel oil storage tanks, and associated access vaults) are small compared to the major structures and are not directly adjacent to the major structures.

Consequently, structure-to-structure interaction between the major seismic Category I Structures and these remaining seismic Category I structures is considered to be minimal. Therefore, the remaining structures were not included in the main finite element models.

The ESW Vertical Loop Chase seismic Category I structure is small in size compared to the major structures and is directly adjacent to the control building. Consequently, the structure-to-structure interaction between the auxiliary/control building and ESW Vertical Loop Chase was analyzed using the original design envelope for the auxiliary/control building. The interaction with the major structure and the ESW Vertical Loop Chase is considered minimal.

3.7(B).2.2 Natural Frequencies and Response Loads

A summary of significant natural frequencies for the major seismic Category I structures is provided in Table 3.7(B)-4. The seismic responses generated for these structures, including accelerations, inertia forces, shears, axial forces, moments, and displacements are provided in Table 3.7(B)-5 through 3.7(B)-8. Typical floor response spectra are presented in Figures 3.7(B)-14 and 3.7(B)-15 for the polar crane and upper steam generator support locations, respectively.

All seismic responses were originally generated for the four SNUPPS sites, using the average soil properties for each site. As discussed previously, the responses, from either three or four sites, were enveloped and used in the design of all structures. Likewise, all subsystems and components were designed using either the three or four site envelopes of the floor response spectra of the site specific spectra. The effects of soil property variation on seismic responses were accounted for by the multiple site enveloping procedures detailed above.

3.7(B).2.3 Procedure Used for Modeling

3.7(B).2.3.1 Lump Mass Modeling

A description of the procedure used to locate lumped masses for the seismic system analyses for seismic Category I structures and equipment is provided in Section 3.2 of BC-TOP-4-A. A similar discussion for piping systems is provided in Section 3.2 of BP-TOP-1 (Ref. 4).

3.7(B).2.3.2 Finite Element Modeling

Procedures used for finite element analysis modeling in seismic system analyses of seismic Category I structures is in accordance with the FLUSH computer program criteria, Reference 2.

3.7(B).2.4 Soil/Structure Interaction

Foundation embedment depth below grade, minimum base dimension, and method of analysis are given in Table 3.7(B)-3.

The effect of soil-structure interaction was taken into account by coupling the structural model with the foundation medium.

3.7(B).2.4.1 Lumped Parameter Representation

A seismic analysis utilizing a lumped mass model on an elastic half space with strain independent soil properties was performed for comparison with the FLUSH finite element results. The purpose of this comparison was to provide a check on the FLUSH analysis. Figure 3.7(B)-12 shows the soil-structure model developed for the containment building. The response spectrum curves obtained by utilizing elastic half space analytical techniques compared favorably with the envelope curves developed for design use on WCGS.

3.7(B).2.4.2 Finite Element Representation

The finite element method of analysis was used to determine the seismic responses of the four major seismic Category I structures and the emergency fuel oil storage tanks. Additionally, displacement of the four major Category I structures was determined by using the DISCOM computer program (see Section 3.8(A).1.24) along with time histories from the finite element analysis.

Figure 3.7(B)-13 shows a finite element model typical of the ones used to analyze to major power structures. The analytical model is provided with transmitting boundaries on both the left and right sides. The model also consists of two types of elements--displacement-compatible isoparametric quadrilateral elements (solid elements) and linear bending elements (beam elements). Usage of transmitting boundaries, elements, and analytical techniques are described in Reference 2. The computer program FLUSH, of the same reference, was used to perform the analysis.

Models, typically shown in Figure 3.7(B)-13, were used to perform soil-structure interaction analyses. The site dependent soil properties were used. The vertical dimension of each soil element is equal to or less than Cs/5f, where Cs is the lowest soil element shear wave velocity reached during iterations and f is the highest frequency of interest to be transmitted through the soil profile. The highest frequency used was 25 Hz. In the analyses for the same buildings with site dependent soil parameters, the structural elements remained unchanged.

The site dependent soil properties consisted of strain dependent damping and modulus relationships for each material. In general, the soil properties are nonlinear in character. An iterative process was used to obtain equivalent linear properties which are strain dependent. The methods generally used for such an analysis are included in the computer program FLUSH.

3.7(B).2.5 Development of Floor Response Spectra

Acceleration time-histories obtained from the FLUSH finite element analyses were used in computing the floor response spectra for the major seismic Category I structures. The spectra were generated following the procedures outlined in Section 5.2 of BC-TOP-4-A, using the SPECTRA computer program (see subparagraph 3.8A.12).

3.7(B).2.6 Three Components of Earthquake Motion

Procedures for considering the three components of earthquake motion in determining the seismic response of structures, systems, and components follow the recommendations of Regulatory Guide 1.92 and are described in Section 4.3 of BC-TOP-4-A and Section 5.1 of BP-TOP-1.

3.7(B).2.7 Combination of Modal Responses

Combination is done according to the criterion of "the square-root-of-the-sum-of-the-squares" (SRSS).

Section 4.2.1 of BC-TOP-4-A describes the techniques used to combine modal responses for structures and equipment. For piping systems, closely spaced modes were determined per NRC Regulatory Guide 1.92, Equation 4.

3.7(B).2.7.1 Significant Dynamic Response Modes

The static load equivalent or static analysis method involves the multiplication of the total weight of the equipment or component member by the specified seismic acceleration. Multiple degree-of-freedom systems which may have had frequencies in the resonance region of the amplified response spectra curves were analyzed by using a static load of 1.5 times the peak acceleration or the applicable floor response spectra to account for the contribution of higher modes. Multiplication factors less than 1.5 were not used.

Multiplication factors were not used in the equivalent static load method of analysis of conduit and cable tray supports which were multiple-degree-of-freedom, simple span, or cantilever beams. In these cases, other conservatisms such as lumping of masses (i.e., at the center of the simple beam span or at the end of the cantilever beam), consideration of mode shapes, and/or verification by dynamic analysis precludes the need for the use of multiplication factors.

Components which can adequately be characterized as a single-degree-of-freedom system were analyzed by using directly the seismic acceleration from the applicable floor response spectra.

For piping, refer to BP-TOP-1, Section 2.3.2, and Appendix D.

3.7(B).2.8 Interaction of Nonseismic Category I Structures With Seismic Category I Structures

With the use of the computer program FLUSH (see Table 3.7(B)-3), seismic analyses of all seismic Category I structures included the effects of adjacent, significant nonseismic Category I structures.

In addition, neither structural failure nor interference causing displacements during an SSE were permitted.

Elastic analyses have been performed to assure that the nonseismic Category I structures will not collapse onto seismic Category I structures when subjected to an SSE and will be allowed to reach 0.9 fy or 0.9 of any failure mode. Section 3.4 of BP-TOP-1 describes the techniques used to consider the interaction of seismic Category I piping with nonseismic Category I piping.

3.7(B).2.9 Effects of Parameter Variations on Floor Response Spectra

Section 5.2 of BC-TOP-4-A describes the effects on floor response spectra due to expected variations of structural properties, dampings, soil properties, foundation-structure interaction, etc.

3.7(B).2.10 Use of Constant Vertical Static Factors

Constant vertical load factors were not used for the analysis of seismic Category I structures, systems, and components. The methodology for vertical seismic analysis of structures is discussed in Sections 3.0, 4.0, and 5.0 of BC-TOP-4-A. The methodology for vertical seismic considerations for equipment is in accordance with IEEE 344, as amended in Section 3.10(B).

3.7(B).2.11 Method Used to Account for Torsional Effects

Torsional effects, if significant, were included in the horizontal models at locations of major mass and/or structure eccentricity. Section 3.2 and Appendix C of BC-TOP-4-A show the techniques used to account for torsional effects.

3.7(B).2.12 Comparison of Responses

Not applicable, since only the time-history method of analysis is used on major seismic Category I structures.

3.7(B).2.13 Methods for Seismic Analysis of Dams

Refer to Section 2.5.6.

3.7(B).2.14 Determination of Seismic Category I Structure Overturning Moments

The effects of overturning moments were evaluated by the simplified, conservative static application of forces caused by the SSE. The more sophisticated energy methods shown in Section 4.4 of BC-TOP-4-A were used when the static method indicated unrealistic results. This section also includes a description of the methods used to compute foundation reactions and to account for vertical earthquake effects.

3.7(B).2.15 Analysis Procedure for Damping

The analysis procedure employed to account for damping in different elements of the model of a coupled system is described in Sections 3.2 and 3.3 of BC-TOP-4-A. The criteria used to account for composite damping in the coupled system with different elements are included. The analysis is based on the use of seismic Category I structural models which include a simplified version of the NSSS model provided by the NSSS supplier.

3.7(B).3 SEISMIC SUBSYSTEM ANALYSIS

3.7(B).3.1 Seismic Analysis Methods

Also see Section 3.7(B).2.1.

Section 2.0 and Appendix D of BP-TOP-1 describe the basis for the simplified dynamic analysis technique used in lieu of response spectrum analyses for piping. Simplified dynamic analysis was not used for seismic Category I structures, systems, and components other than piping.

3.7(B).3.2 Determination of Number of Earthquake Cycles

Fatigue analysis, where required by the codes, was performed by the supplier as part of the stress report. The earthquake transients are a part of the mechanical loading conditions specified in the equipment specifications. The origin of their determination was separate and distinct from those transients resulting from fluid pressure and temperature. The fluid pressure and temperature transients are given in Section 3.9(N).1.1. A description of the procedures followed in fatigue evaluations is given in Section 3.7(N).3.2.

The procedures used to determine the number of earthquake cycles for piping during one seismic event are discussed in Section 6.2 of BP-TOP-1. Equipment was designed on the basis of analytical results. The design criteria for equipment assumed elastic behavior. Therefore, the number of loading cycles need not be considered in the design. Fatigue was not considered in the design of seismic Category I structures, because the occurrence of full design earthquake loads is too infrequent to warrant consideration of fatigue design, and the calculated stresses and strains are below yield.

3.7(B).3.3 Procedure Used for Modeling

See Section 3.7(B).2.3.

3.7(B).3.4 Basis for Selection of Frequencies

Fundamental frequencies of subsystems and components were calculated in accordance with the procedures outlined in Section 4.2.1 of BC-TOP-4-A. To avoid resonance, the fundamental frequencies of subsystems and components were, where possible, selected in such a way as to avoid excessive load amplifications. If the subsystem's or component's frequencies fell within the amplified region of the forcing functions, the subsystems or components were adequately designed for the applicable loads.

3.7(B).3.5 Use of Equivalent Static Load Method of Analysis

See Section 3.7(B).2.7.1.

3.7(B).3.6 Three Components of Earthquake Motion

See Section 3.7(B).2.6.

3.7(B).3.7 Combination of Modal Responses

The seismic design of the piping and equipment included the effect of the seismic response of the supports, equipment, structures, and components. The system and equipment response was determined, using three earthquake components--two horizontal and one vertical. The design ground response spectra specified in Section 3.7(B).1 were the bases for generating these three input components. The input may be the floor time-history motions or floor response spectra. These floor time-history motions and/or floor response spectra are generated for two perpendicular horizontal directions (i.e., N-S and E-W), and the vertical direction. System and equipment analysis was performed with these input components applied in the N-S, E-W, and vertical directions. The damping values used in the analysis were those given in Table 3.7(B)-1.

In computing the system and equipment response by modal analysis, the square root of the sum of the squares of the modal contributions was used to combine all significant modal responses in each direction (see Section 3.7(B).2.7).

The combined total response was calculated, also using the SRSS formula applied to the resultant unidirectional responses. For instance, for each item of interest, such as displacement, force, stresses, etc., the total response is obtained by applying the above-described method.

This method can be written in equation form. The resultant response at a given node point for the item of interest, for example, σ, is

$$s = \sum_{i=1}^{3} s_i^2 \quad {}^{1/2} \qquad 3.7(B)\text{-}1$$

where σ i is the response in the i-th direction defined as

$$i = \sum_{j=1}^{N} s_{ij}^2 \quad {}^{1/2} \qquad 3.7(B)\text{-}2$$

with subscripts i and j in Equations 3.7(B)-1 and 3.7(B)-2 representing the i-th direction of input and the j-th mode (for a total of N significant modes). The term ij is the maximum response in the j-th mode for input in the i-th direction, as determined by response spectrum modal analysis.

The system and equipment response can also be determined, using time-history analyses.

3.7(B).3.8 Analytical Procedures for Piping

Section 2 of BP-TOP-1 describes the analytical techniques applicable to piping systems outside of the Westinghouse scope. Section 4 of BP-TOP-1 discusses the effect of differential building movement on piping.

3.7(B).3.9 Multiple Supported Equipment and Components With Distinct Inputs

See Section 3.7(B).3.8.

3.7(B).3.10 Use of Constant Vertical Static Factors

See Section 3.7(B).2.10.

3.7(B).3.11 Torsional Effects of Eccentric Masses

The significant torsional effects of valves and other eccentric masses are taken into account in the seismic piping analyses by the techniques discussed in Section 3.2 of BP-TOP-1.

3.7(B).3.12 Buried Seismic Category I Piping Systems and Tunnels

Procedures are defined in Section 6.0 of BC-TOP-4-A. All buried components are designed to remain functional after a seismic event by limiting the calculated stresses under all loading combinations, including earthquakes.

3.7(B).3.13 Interaction of Other Piping With Seismic Category I Piping

Section 3.4 of BP-TOP-1 describes the techniques used to consider the interaction of seismic Category I piping with nonseismic Category I piping.

3.7(B).3.14 Seismic Analyses for Reactor Internals

See Section 3.7(N).3.14.

3.7(B).3.15 Analysis Procedure for Damping

See Section 3.7(B).2.15.

3.7(B).3.16 Seismic Analysis for Cable Trays

The scope of the cable tray and conduit raceway test program included the evaluation of a large number of variable in the design of cable trays. Included in the test report are discussions of the following variables:

- Type of tray
- Type and length of hanger
- Location of splices
- Number of tiers
- Trapeze and cantilever support

- Connection details, such as

  single clip angle
  double clip angle
  guesseted clip
  tray to strut type hanger

- Type and location of bracing

- Amount of cable fill

- Size and distribution of cables

- Cable ties

- Combined conduit and tray systems

- Sprayed fire protection material

In order to evaluate the effects of these and other variables, over 2,000 individual dynamic vibration tests were performed over a period of 11 months of testing. As a result of these tests, over 50 volumes of raw data were generated and evaluated. The results of the evaluation of these data form the basis for the conclusion contained in the test report and the design recommendations implemented in the WCGS design.

In addition to the wide range of variables that were evaluated, tests were performed on tray and strut systems similar to the WCGS design.

As a result of the evaluation of the variables described above and the testing of hardware and support configurations similar to the WCGS design, a set of design recommendations was formulated. These recommendations were developed to be generally applicable to a wide variety of hardware and specifically applicable to the support configurations used by this project and the other test program participants. For example, the recommended damping in intermittently braced strut supported trapeze hanger systems was determined from the data of over 100 dynamic tests on these type of systems. Figure 3.7(B)-21 shows the recommended damping as a function of floor acceleration in the form of a bilinear curve.

As can be seen from this curve, the recommended damping, for the most part, represents a lower bound of all the data obtained from the test program. Similar conservative recommendations were formulated from the results of the test program for other aspects of design. Consequently, it is concluded that the design recom-

mendations formulated as a result of the cable tray and conduit raceway test program are broadly applicable to the design of strut supported raceway systems and were conservatively applied in the design of the raceway supports.

The test fixture used to test cable trays was specifically designed for this test program. Its inverted pendulum design permitted seismic input to suspended tray support systems. Additionally, the fixture was designed to accommodate a 40-foot-long tray system segment of up to five tiers and a hanger of up to 13 feet in length. Sufficient width was provided in the test bay to accommodate two parallel runs, including cross connections and attached conduit. This facility allowed for testing of long, multitiered tray systems with various bracing arrangements.

The test program included tests of a large number of varied tray types and support types in various configurations. These test configurations were used during the testing program in order to simulate the actual field installed conditions. Supports with or without bracing and with multitier cable trays were tested. In addition, a combined system configuration comprised of various tray fittings such as tees, elbow, vertical bend, and multitiers of straight cable tray runs was tested. In view of the scope of testing and the various test setups, it was concluded that these tests simulate conditions encountered in the field and, therefore, the results of the testing would be applicable to the design of cable trays on the WCGS project.

In a linear dynamic analysis velocity dependent forces (i.e. viscous damping) were introduced to account for various mechanisms of energy dissipation. These mechanisms include such things as: friction and slip-in bolted connections, hysteresis, fluids, and no doubt other mechanisms as well. Since these various mechanisms cannot be accounted for explicitly in a linear analysis, their effect is lumped in a single viscous damping. Dynamic testing is used to determine an effective viscous damping, appropriate for seismic response. This procedure is common to all structural dynamic analysis.

During the cable tray and conduit raceway test program, the random vibration of cables was identified as one of the significant energy dissipating mechanisms. This occurred because the cables represent most of the mass of the system, are able to move relative to each other, and were not rigidly attached to the supporting tray.

During the tests, this phenomenon manifested itself as a noticeable relative movement and impact of the cables within the tray. As is the case with other energy dissipating mechanisms, this effect was quantified in terms of an equivalent viscous damping based upon the relationship between the recorded response and the applied input to each test specimen. The test report entitled "Cable Tray and Conduit Raceway Seismic Test Program" provides a detailed discussion of the methods used to compute an equivalent viscous damping from the recorded results of the dynamic tests. This discussion can be found in Section 5 with supplementary information Appendices G, H, and I.

The cable tray and conduit raceway test input loading was applied at 45-degree (vector biaxial) because the shake table used was limited to vector biaxial motion. In choosing the 45-degree relationship (i.e, horizontal equals vertical), the floor response spectra of many containments and auxiliary buildings were reviewed, and this equality of horizontal and vertical motion was deemed most appropriate.

IEEE-344, and NRC regulatory guides recommend, but do not require, independent biaxial input. In the case of raceways, the modes of vibration are symmetrical and are dominantly either horizontal or vertical and so would be adequately excited by vector biaxial motion. As the different modes of a given raceway generally have quite distinct resonant frequencies, there is no problem introduced by the zero phase between horizontal and vertical loading (i.e., vertical and horizontal responses will be randomly varying in and out of phase even though the vertical and horizontal inputs are in phase). Independent biaxial input is preferred in nonsymmetrical cases and in the possible but unusual case of testing a structure with a mode whose axis of sensitivity would be at 90 degrees to the vector biaxial input, and hence not excited. The raceways are simple structure systems with distinct vertical, transverse, and longitudinal modes; this was confirmed during testing. Therefore, the test results are not affected by the use of vector biaxial input.

As described above, widely spaced modes of vibration with little cross coupling were observed during the testing. For example, longitudinal swaying modes were quite low (1.8 Hz), transverse modes followed (3.2 Hz) with tray modes following at 6.1 and 15 Hz for a typical 4'6" single tier unbraced raceway. This data is illustrated in Figures 7.8 and 7.13 of Volume 1 (of test report "Cable Tray and Conduit Raceway Seismic Test Program") for a 100-percent cable loaded raceway of 0.10 g peak raceways are illustrated in relevant data.

The purpose of the cable tray test program was essentially to verify the mathematical model used in the analysis, not to seismically qualify the raceway systems by testing only.

Damping of the cable tray system is dependent on the amount of cable in the trays and the input amplitude of vibration. Figure 3.7B-22 presents the lower bound values of equivalent viscous damping as a function of input floor response spectrum ZPA and amount of cable in tray. To be able to use the maximum value of damping, 20 percent, the instructure response spectra must have at least a ZPA value of 0.35 g and the tray must be at least 509 percent full by weight of cable.

During the cable tray and conduit raceway seismic test program, various tests were performed on conduit runs on a trapeze raceway to determine their dynamic characteristics. A large number of variables were considered in this test program. The description and results of conduit raceway testing can be found in Section 8 of the test report.

The critical damping value computed from test data is 7 percent at 0.1 g input acceleration. High damping value trend was observed for input acceleration higher than 0.1 g. But at present time, for design of conduit raceway system it is recommended to use 7 percent critical damping for all levels of input acceleration at and above 0.1 g. For lower input acceleration, it is recommended to use linear interpolation from 7 percent to 0 percent damping for 0.1 g input to zero input acceleration. Seismic Qualification of Category 1 instrumentation and Electrical Equipment is discussed in Section 3.10(B).

The computed damping values from the various tests are tabulated in Appendix K of the test report. Data was taken from these tables and plotted as shown in Figure 3.7(B)-21. On this figure, the data points of computed equivalent viscous damping are plotted as a function of input acceleration (floor spectrum ZPA) for over 100 tests of various braced strut hanger tray systems. These results represented all the data from simulated earthquake inputs. Low level sinusoidal and snap back test data are not included, since they are not directly applicable. Since these tests represented a wide variety of tray type, connection details, struts, and cable configuration, there is a broad scatter in the data. These data, however, do clearly show that the recorded responses of the tested tray systems are best described by a dynamic system with an equivalent viscous damping. It should be noted that the data realistically can be utilized with accepted curve fitting techniques to obtain a "best-fit" curve which reflects the statistical average of the test data. Such an approach would result in a maximum damping value far in excess of the

conservative 20 percent value. However, in the interest of conservatism, a bilinear curve, which effectively bounds the lower end of nearly all the points, was utilized. This curve is given in Figure 3.7(B)-21. This curve represents the recommended design values of equivalent viscous damping.

In addition to the determination of equivalent viscous damping, as described in the test report, linear analysis was performed on finite element models of several of the tray system test setups. These analyses confirmed that a very high viscous damping was required in order to predict responses similar to those recorded during the dynamic testing. These analyses confirmed that the application of the damping values recommended for design in a linear analysis was consistent with the results of the test program and, therefore, would result in a conservative design of support systems.

Stainless steel 600 volt fire-resistive control and power cables are routed independent of raceways. Fire-resistive cable will be supported by stainless steel unistrut attached to the concrete walls at intervals governed by span loading. Generally, the supports will be standard design used for small conduit, except for the use of stainless steel unistrut and clamps. Seismic testing and analysis verify the adequacy of the supports for fire-resistive cable.

3.7(B).4 SEISMIC INSTRUMENTATION

3.7(B).4.1 Comparison with Regulatory Guide 1.12, Rev. 2 (March 1997)

The seismic instrumentation program complies with Regulatory Guide 1.12, Revision 2, except for the location of one (1) instrument. The regulatory guide position, as stated in TABLE 3.7(B)-9, paragraph 1.2 item 3 is that accelerographs should be located at two elevations (except the foundation) on a structure inside containment. The Wolf Creek design has two (2) accelerographs, one (1) located inside containment and the other located at a different elevation on the outside containment wall. The design complies with the intent of the regulatory guide in that two (2) accelerographs measure the containment structure response at two (2) different locations of the containment. And as stated in the regulatory guide, neither of these two (2) accelerographs are located on the containment foundation.

3.7(B).4.2 Location and Description of Instrumentation

A seismic instrumentation program is provided to monitor the effect of earthquakes at the plant site and to collect data necessary to evaluate the safety impact of an earthquake on seismic Category I structures, systems, and components. Detailed location for accelerographs is chosen to coincide with significant points in the seismic model. All seismic instrumentation is designed to seismic Category I requirements, including the battery emergency power supplies for each individual accelerograph and for the instrumentation located in the main control room. Power for normal operation, and power for maintaining the charge on the emergency power supply batteries is provided from the non-Class IE 120V ac instrument bus.

3.7(B).4.2.1 Strong Motion Accelerometer/Recorder

Triaxial accelerographs are installed at appropriate locations throughout the plant to provide data on the frequency, amplitude, and phase relationship of the seismic response of the containment structure and the seismic input to other seismic Category I structures, systems, and components. A triaxial accelerograph consists of a self contained, battery backed up, powered triaxial accelerometer and recorder in a single enclosure. Each accelerograph functions to detect, measure and store data from a seismic event.

One accelerograph is located in the free field EL. 2000’ – 0” (SGAR0001), such that it will measure the input vibration, or ground motion, at a location outside of a structure of the plant

Accelerographs are also provided on the containment base, EL. 2000’ – 0” (SGAE0001); on the containment building at the operating floor level EL. 2056’ – 6” (SGAE0002) above and axially aligned with the accelerograph on the base slab and in the auxiliary building, near the control room air filters (El. 2047'-6") (SGAE0005); on the auxiliary/ control building base slab EL 1974’ – 0” (SGAE0004) and on the Floor, Area 1, reactor building, EL.2026’-0” (SGAE0003).

3.7(B).4.2.2 Seismic Trigger

Each triaxial accelerograph has an adjustable seismic trigger. This hardware or “hard trigger” is set in each triaxial accelerograph to be above the ground motion level of the location to avoid false triggers. When triaxial accelerograph (SGAR0001) located in the free field and triaxial accelerograph (SGAE0001) located on the containment base both trigger, the “AND” combination is sensed by the Network Control Center (NCC) (SGAR0009), located in the main control room. A software trigger or “soft trigger” is sent to all triaxial accelerographs to capture and process the event data.

3.7(B).4.2.3 Network Control Center (SGAR009)/Supporting Equipment

An NCC and additional supporting equipment is mounted in cabinet SG058 in the main control room. The NCC and supporting equipment provide the following functions:

- The NCC monitors the status of each triaxial accelerograph and provides messages of off normal status.
- The NCC polls all triaxial accelerographs and provides a signal (soft trigger) to all triaxial accelerographs if a seismic event is detected.
- The NCC provides polls all triaxial accelerographs and automatically down loads seismic events.
- The NCC provides self test functions.
- The NCC provides outputs to alarms in the main control room.
- DC power supplies: Two (2) power supplies are provided. One (1) supplies power and maintains the charge in batteries for triaxial accelerographs located in the free field and throughout the plant. The second power supply provides power to the NCC. This supply is battery backed up, so that the NCC will be operational in the event of a loss in cabinet 120V ac power.
- A Laptop PC performs the data retrieval system function.

The function of the system can be described as the remotely located accelographs store the event data, the NCC polls the accelerographs, and downloads the data, and the PC monitors the NCC and automatically downloads and analyzes the data for a seismic event.

The PC is also used for parameter setting in the remotely located accelerographs and in the NCC.

3.7(B).4.3 Control Room Operator Notification

An annunciator in the main control room is actuated whenever the seismic monitoring system has been triggered, calling the operator's attention to the fact that an event has occurred. Additional annunciation in the main control room is actuated if OBE and SSE levels are triggered.

Following a seismic event, all accessible data will be processed for an initial determination of the earthquake level. Where the site-related safety items (ultimate heat sink, etc.) are designed to an OBE less than the power block OBE, the unit will be shut down and site related items examined when an event of site OBE magnitude or greater occurs. If no evidence of damage is detected, the unit will be returned to service and the NRC notified.

3.7(B).4.4 Comparison of Measured and Predicted Responses

If the OBE has been exceeded, a response spectrum will be automatically calculated and displayed on a PC located in the main control room for the instrument location. This spectrum will be automatically compared to the design seismic spectrum.

3.7(B).5 REFERENCES

1. "Seismic Soil-Structure Interaction Effects at Humboldt Bay Power Plant," Journal of the Geotechnical Engineering Division, Vol. 103, No. GT10, October 1977.

2. Lysmer, J., et al., "Efficient Finite Element Analysis of Seismic Structure-Soil-Structure Interaction," Earthquake Engineering Research Center, University of California, Berkeley, Cal., Report No. EERC 75-34, November 1975.

3. Seismic Analyses of Structures and Equipment for Nuclear Power Plants, BC-TOP-4-A, Revision 3, Bechtel Power Corporation, San Francisco, California, November 1974.

4. Seismic Analysis of Piping Systems, BP-TOP-1, Revision 3, Bechtel Power Corporation, San Francisco, California, January 1976.

5. "Nuclear Reactors and Earthquakes", TID-7024, U.S. Atomic Energy Commission, Division of Technical Information, August 1963.

TABLE 3.7(B)-1

DAMPING VALUES FOR SEISMIC CATEGORY I STRUCTURES, SYSTEMS, AND COMPONENTS
(Percent of Critical Damping)

Structure or Component	Operating Basis[1] Earthquake	Safe Shutdown Earthquake
Equipment and large-diameter piping systems[2], pipe diameter greater than 12 in.[3]	2	3
Small-diameter piping systems, diameter equal to or less than 12 in.[3]	1	2
Welded steel structures	2	4
Bolted steel structures	4	7
Prestressed concrete structures	2	5
Reinforced concrete structures	4	7

1. In the dynamic analysis of active components, as defined in Regulatory Guide 1.48, these values should also be used for the SSE.

2. Includes both material and structural damping. If the piping system consists of only one or two spans with little structural damping, then use the values for small diameter piping.

3. The damping values provided in ASME Code Case N-411 may be utilized for piping systems as an alternative to those identifed above subject to the conditions listed in Regulatory Guide 1.84.

4. The damping values discussed in section 4153.8 of ASME NOG-1-2004 may be utilzied for containment polar crane analysis as an alternative.

TABLE 3.7(B)-2

DEPTH OF SOIL DEPOSITED OVER BEDROCK
MAJOR SEISMIC CATEGORY I STRUCTURES

Structure	Elev. of Bottom of Base Mat	Average Elev. of Top of Rock	Depth of Soil Over Rock (feet)
Reactor building	1088’-6"	1065’-0"	23.5
Control building	1068’-0"	1065’-0"	3.0
Fuel building	1093’-6"	1063’-0"	30.5
Auxiliary building	1068’-0"	1065’-0"	3.0
Diesel Generators building	1089’-6"	1065’-0"	24.5

TABLE 3.7(B)-3

FOUNDATION DEPTH BELOW GRADE, MINIMUM BASE DIMENSION AND METHOD OF ANALYSIS FOR SEISMIC CATEGORY I STRUCTURES

Structure	Foundation Embedment Depth Below Grade (feet)	Minimum Base Dimension (feet)	Ratio of Embedment Depth to Minimum Base Dimension	Method of Analysis (1)
Reactor building	11	154	0.071	a
Control and auxiliary building	31.5	222	0.142	a
Fuel building	6	91	0.066	a
Diesel generators building	10	66.3	0.151	a
Refueling water storage tank and foundation	4.5	42.7	0.105	e
RWST valve house	13	13.1	0.992	b
Emergency fuel oil storage tanks (EFOST)	-	-	-	d
Vaults for EFOST	6	13.7	0.438	c
ESW Vertical Loop Chase	29.5	16.33	1.806	b

(1) Method of analysis

a Finite-element method, FLUSH computer program

b Response spectrum modal analysis technique

c Single lumped mass-spring method - vaults are buried below grade with top at grade.

d Finite element method in conjunction with the techniques for buried structures outlined in Section 6.0 of Reference 3.

e Combination BSAP computer program and conventional hand techniques performed per the requirements of reference 5.

TABLE 3.7(B)-4

SUMMARY
FIRST MODE NATURAL FREQUENCIES
(Hertz)

	SSE			OBE		
Building	N-S	E-W	Vert.	N-S	E-W	Vert.
Containment	4.4	4.4	13.0	4.4	4.4	13.0
Aux./Control	9.0	9.0	3.6	9.0	8.0	6.8
Fuel	7.0	5.0	9.5	6.7	5.0	9.5

TABLE 3.7 (B) — 5A

RESPONSE ACCELERATIONS (G's)
CONTAINMENT BUILDING
SSE
NORTH-SOUTH DIRECTION

REF. FIGURE 3.7(B) - 17

MASS POINT EL.	SITE			ENVELOPE
	CALLAWAY	STERLING	WOLF CREEK	
2206'-6"	0.423	0.727	0.707	0.727
2170'-9"	0.376	0.650	0.626	0.650
2135'-0"	0.322	0.558	0.528	0.558
2119'-0"	0.298	0.516	0.484	0.516
2100'-0"	0.270	0.466	0.429	0.466
2080'-0"	0.242	0.425	0.376	0.425
2056'-6"	0.208	0.373	0.338	0.373
2051'-2"	0.201	0.361	0.329	0.361
2039'-0"	0.185	0.335	0.310	0.335
2028'-0"	0.169	0.313	0.293	0.313
2013'-5"	0.157	0.287	0.270	0.287
2000'-0"	0.160	0.267	0.250	0.267
2090'-4"	0.202	0.324	0.283	0.324
2060'-0"	0.175	0.301	0.270	0.301
2047'-6"	0.169	0.294	0.265	0.294
2034'-0"	0.234	0.286	0.261	0.286
2022'-6"	0.155	0.279	0.258	0.279
2012'-0"	0.155	0.274	0.254	0.274
2000'-0"	0.160	0.267	0.250	0.267

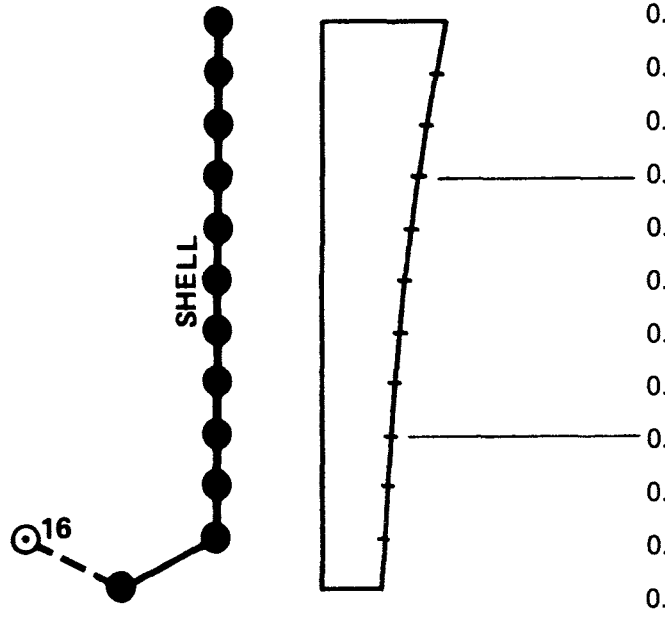

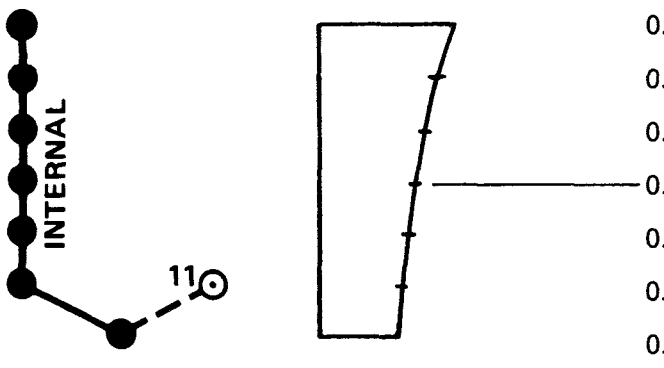

TABLE 3.7 (B) — 5B

RESPONSE ACCELERATIONS (G's)
CONTAINMENT BUILDING
SSE
EAST-WEST DIRECTION

REF. FIGURE 3.7(B) - 17

MASS POINT EL.	SITE			ENVELOPE
	CALLAWAY	STERLING	WOLF CREEK	
2206'-6"	0.403	0.891	0.814	0.891
2170'-9"	0.357	0.781	0.706	0.781
2135'-0"	0.310	0.651	0.576	0.651
2119'-0"	0.291	0.593	0.521	0.593
2100'-0"	0.265	0.528	0.452	0.528
2080'-0"	0.238	0.457	0.394	0.457
2056'-6"	0.205	0.374	0.355	0.374
2051'-2"	0.198	0.362	0.347	0.362
2039'-0"	0.182	0.335	0.327	0.335
2028'-0"	0.176	0.311	0.304	0.311
2013'-5"	0.175	0.283	0.281	0.283
2000'-0"	0.173	0.263	0.256	0.263
2090'-4"	0.364	0.432	0.373	0.432
2060'-0"	0.248	0.312	0.292	0.312
2047'-6"	0.227	0.301	0.283	0.301
2034'-0"	0.204	0.288	0.276	0.288
2022'-6"	0.186	0.277	0.271	0.277
2012'-0"	0.175	0.270	0.264	0.270
2000'-0"	0.173	0.263	0.256	0.263

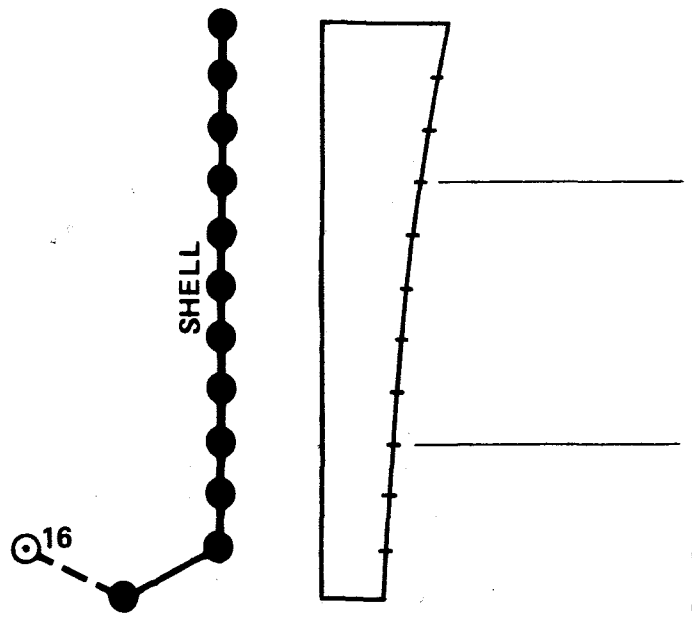

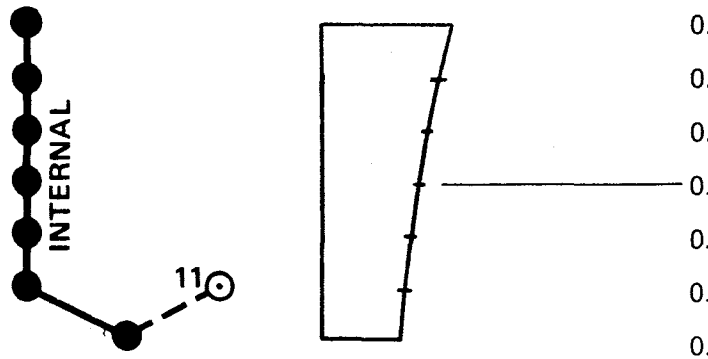

TABLE 3.7 (B) — 5C

RESPONSE ACCELERATIONS (G's)
CONTAINMENT BUILDING
SSE
VERTICAL DIRECTION

REF. FIGURE 3.7(B) - 17

MASS POINT EL.	SITE			ENVELOPE
	CALLAWAY	STERLING	WOLF CREEK	
2206'-6"	0.330	0.466	0.388	0.466
2170'-9"	0.323	0.456	0.378	0.456
2135'-0"	0.303	0.428	0.349	0.428
2119'-0"	0.293	0.414	0.335	0.414
2100'-0"	0.278	0.392	0.314	0.392
2080'-0"	0.266	0.365	0.289	0.365
2056'-6"	0.264	0.328	0.282	0.328
2051'-2"	0.264	0.319	0.280	0.319
2039'-0"	0.262	0.302	0.275	0.302
2028'-0"	0.261	0.294	0.271	0.294
2013'-5"	0.259	0.282	0.265	0.282
2000'-0"	0.257	0.273	0.259	0.273
2090'-4"	0.262	0.280	0.267	0.280
2060'-0"	0.261	0.279	0.265	0.279
2047'-6"	0.261	0.278	0.264	0.278
2034'-0"	0.260	0.277	0.263	0.277
2022'-6"	0.259	0.276	0.262	0.276
2012'-0"	0.258	0.275	0.261	0.275
2000'-0"	0.257	0.273	0.259	0.273

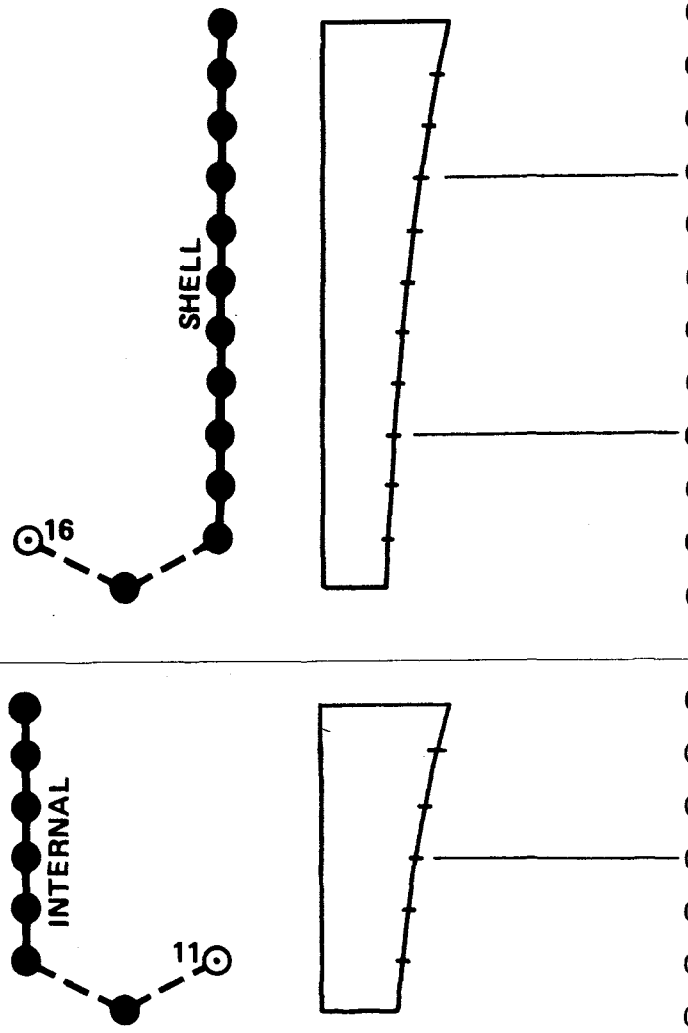

TABLE 3.7 (B) — 5D

RESPONSE INERTIA FORCES (KIPS)
CONTAINMENT BUILDING
SSE
NORTH-SOUTH DIRECTION

REF. FIGURE 3.7(B) - 17

MASS POINT EL.	SITE			ENVELOPE
	CALLAWAY	STERLING	WOLF CREEK	
2206'-6"	1590	2700	2630	2700
2170'-9"	2830	4840	4660	4840
2135'-0"	1930	3330	3150	3330
2119'-0"	1780	3050	2860	3050
2100'-0"	1490	2530	2370	2530
2080'-0"	1470	2480	2260	2480
2056'-6"	830	1360	1220	1360
2051'-2"	480	800	700	800
2039'-0"	580	940	830	940
2028'-0"	590	960	800	960
2013'-5"	590	1180	770	1180
2000'-0"	—	—	—	
2090'-4"	270	440	390	440
2060'-0"	270	460	420	460
2047'-6"	1290	2300	1930	2300
2034'-0"	530	1000	850	1000
2022'-6"	630	1200	1160	1200
2012'-0"	1190	2100	1640	2100
2000'-0"	—	—	—	

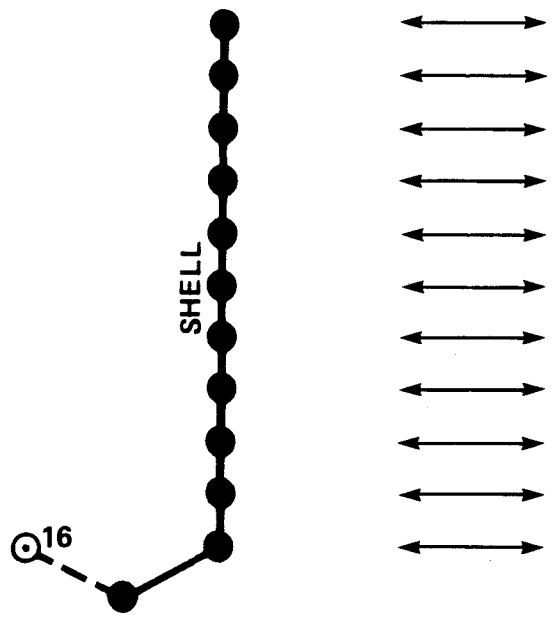

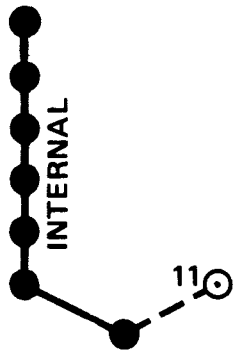

TABLE 3.7 (B) — 5E

RESPONSE INERTIA FORCES (KIPS)
CONTAINMENT BUILDING
SSE
EAST-WEST DIRECTION

Rev. 0

REF. FIGURE 3.7(B) - 17

MASS POINT EL.	SITE			ENVELOPE
	CALLAWAY	STERLING	WOLF CREEK	
2206'-6"	1520	3310	3040	3310
2170'-9"	2630	5820	5270	5820
2135'-0"	1860	3880	3460	3880
2119'-0"	1720	3500	3080	3500
2100'-0"	1450	2850	2480	2850
2080'-0"	1450	2730	2330	2730
2056'-6"	840	1450	1210	1450
2051'-2"	490	880	710	880
2039'-0"	590	1020	780	1020
2028'-0"	610	960	770	960
2013'-5"	620	940	700	940
2000'-0"	—	—	—	
2090'-4"	410	470	430	470
2060'-0"	380	480	450	480
2047'-6"	1590	2430	1910	2430
2034'-0"	720	1020	750	1020
2022'-6"	870	1210	1440	1440
2012'-0"	1620	1930	1470	1930
2000'-0"	—	—	—	

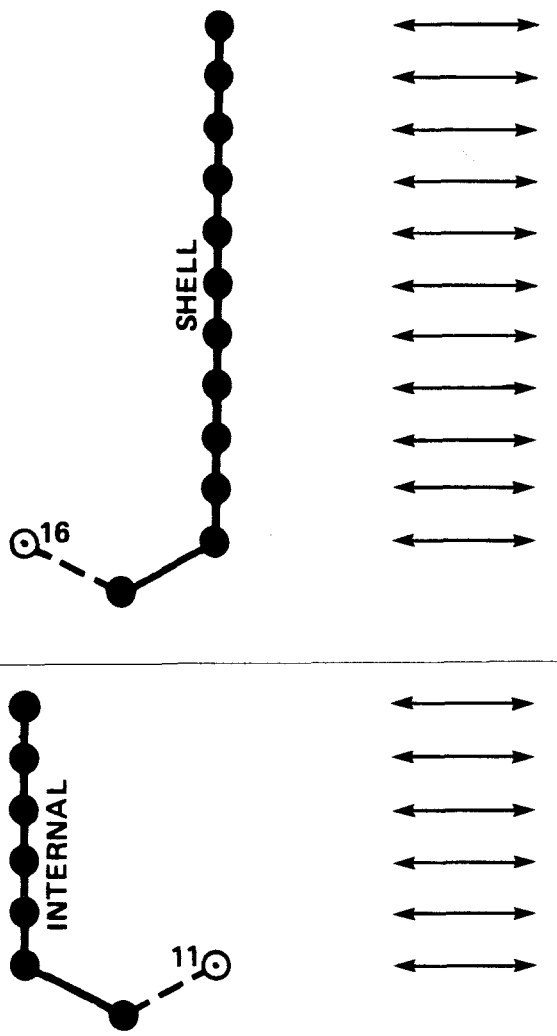

TABLE 3.7 (B) — 5F

RESPONSE INERTIA FORCES (KIPS)
CONTAINMENT BUILDING
SSE
VERTICAL DIRECTION

REF. FIGURE 3.7(B) - 17

MASS POINT EL.	SITE			ENVELOPE
	CALLAWAY	STERLING	WOLF CREEK	
2206'-6"	1220	1760	1400	1760
2170'-9"	2380	3440	2740	3440
2135'-0"	1790	2590	2020	2590
2119'-0"	1710	2480	1920	2480
2100'-0"	1500	2170	1650	2170
2080'-0"	1560	2250	1700	2250
2056'-6"	930	1350	980	1350
2051'-2"	550	790	580	790
2039'-0"	680	990	700	990
2028'-0"	710	1010	710	1010
2013'-5"	740	1040	710	1040
2000'-0"	—	—	—	
2090'-4"	360	390	370	370
2060'-0"	400	420	410	420
2047'-6"	1250	1340	1280	1340
2034'-0"	900	950	910	950
2022'-6"	1630	1740	1650	1740
2012'-0"	1690	1800	1720	1800
2000'-0"	—	—	—	

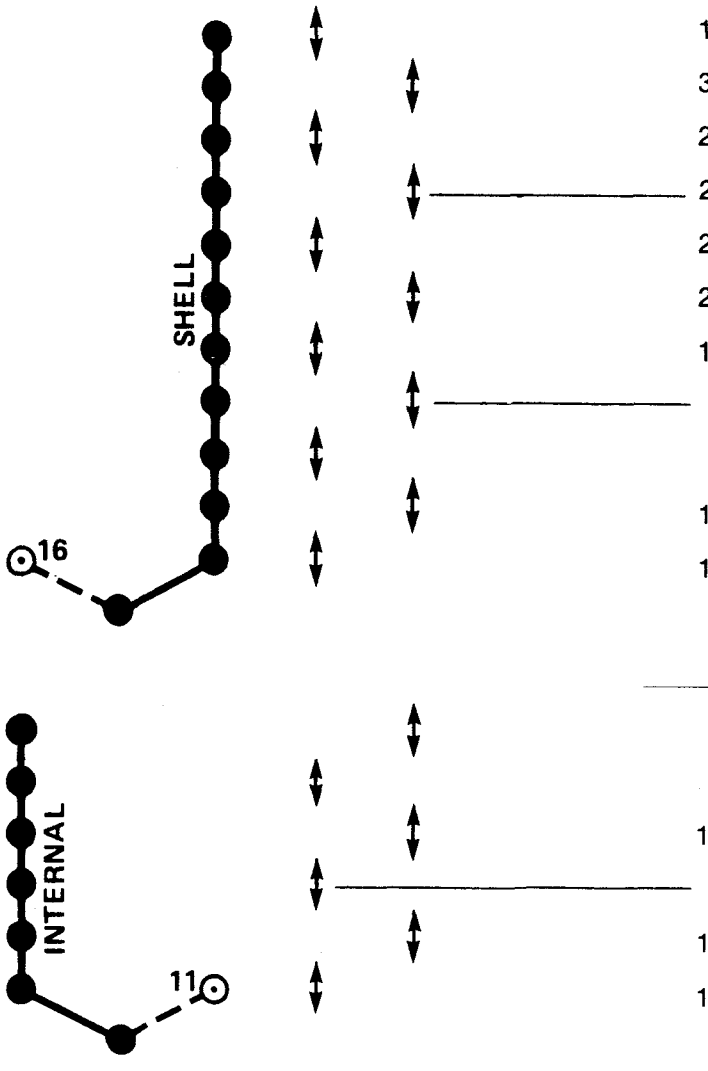

TABLE 3.7 (B) — 5G

RESPONSE SHEAR FORCES (KIPS)
CONTAINMENT BUILDING
SSE
NORTH-SOUTH DIRECTION

REF. FIGURE 3.7(B) - 17

MASS POINT EL.	SITE			ENVELOPE
	CALLAWAY	STERLING	WOLF CREEK	
2206'-6"				2700
	1590	2700	2630	
2170'-9"				7540
	4420	7540	7290	
2135'-0"				10,870
	6350	10,870	10,440	
2119'-0"				13,920
	8130	13,920	13,300	
2100'-0"				16,450
	9620	16,450	15,670	
2080'-0"				18,930
	11,090	18,930	17,930	
2056'-6"				20,290
	11,920	20,290	19,150	
2051'-2"				21,090
	12,400	21,090	19,850	
2039'-0"				22,030
	12,980	22,030	20,680	
2028'-0"				22,990
	13,570	22,990	21,480	
2013'-5"				24,170
	14,160	24,170	22,250	
2000'-0"				
2090'-4"				440
	270	440	390	
2060'-0"				900
	540	900	810	
2047'-6"				3200
	1830	3200	2740	
2034'-0"				4200
	2360	4200	3590	
2022'-6"				5400
	2990	5400	4750	
2012'-0"				7500
	4180	7500	6390	
2000'-0"				

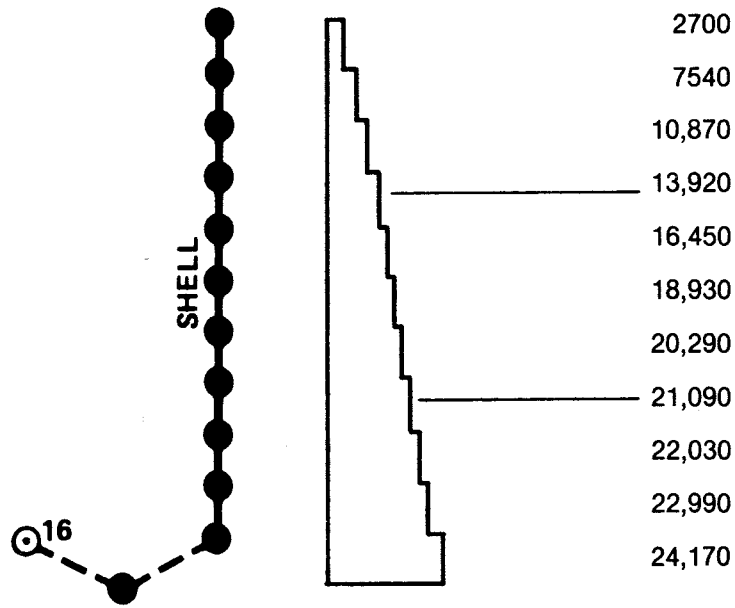

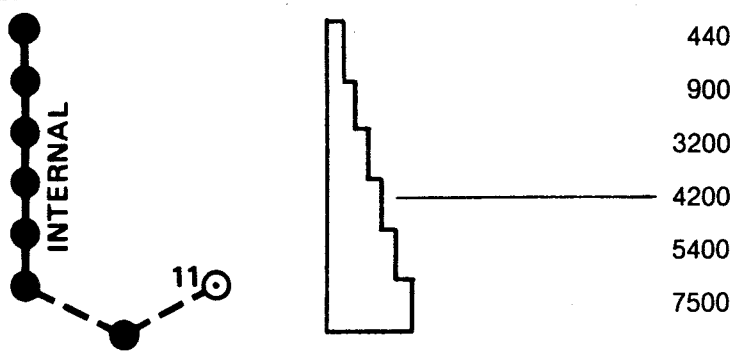

TABLE 3.7 (B) — 5H

RESPONSE SHEAR FORCES (KIPS)
CONTAINMENT BUILDING
SSE
EAST-WEST DIRECTION

REF. FIGURE 3.7(B) - 17

MASS POINT EL.	SITE			ENVELOPE
	CALLAWAY	STERLING	WOLF CREEK	
2206'-6"				3310
	1520	3310	3040	
2170'-9"				9130
	4150	9130	8310	
2135'-0"				13,010
	6010	13,010	11,770	
2119'-0"				16,510
	7730	16,510	14,850	
2100'-0"				19,360
	9180	19,360	17,330	
2080'-0"				22,090
	10,630	22,090	19,660	
2056'-6"				23,540
	11,470	23,540	20,870	
2051'-2"				24,420
	11,960	24,420	21,580	
2039'-0"				25,440
	12,550	25,440	22,360	
2028'-0"				26,400
	13,160	26,400	23,130	
2013'-5"				27,340
	13,780	27,340	23,830	
2000'-0"				
2090'-4"				470
	410	470	430	
2060'-0"				950
	790	950	880	
2047'-6"				3380
	2380	3380	2790	
2034'-0"				4400
	3100	4400	3540	
2022'-6"				5610
	3970	5610	4980	
2012'-0"				7540
	5590	7540	6450	
2000'-0"				

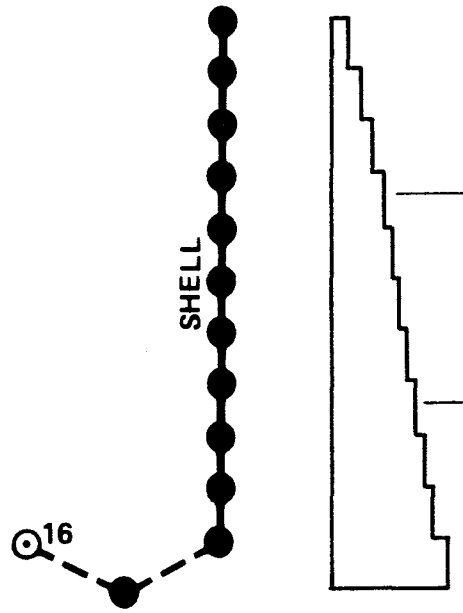

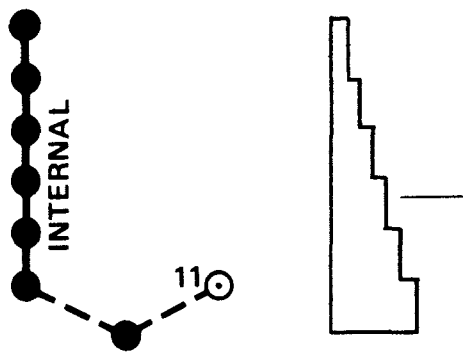

TABLE 3.7 (B) — 5I

RESPONSE AXIAL FORCES (KIPS)
CONTAINMENT BUILDING
SSE
VERTICAL DIRECTION

Rev. 0

REF. FIGURE 3.7(B) - 17

MASS POINT EL.	SITE			ENVELOPE
	CALLAWAY	STERLING	WOLF CREEK	
2206'-6"				1760
	1220	1760	1400	
2170'-9"				5200
	3600	5200	4140	
2135'-0"				7790
	5390	7790	6160	
2119'-0"				10,270
	7100	10,270	8080	
2100'-0"				12,440
	8600	12,440	9730	
2080'-0"				14,690
	10,160	14,690	11,430	
2056'-6"				16,040
	11,090	16,040	12,410	
2051'-2"				16,830
	11,640	16,830	12,990	
2039'-0"				17,820
	12,320	17,820	13,690	
2028'-0"				18,830
	13,030	18,830	14,400	
2013'-5"				19,870
	13,770	19,870	15,110	
2000'-0"				
2090'-4"				390
	360	390	370	
2060'-0"				810
	760	810	780	
2047'-6"				2150
	2010	2150	2060	
2034'-0"				3100
	2910	3100	2970	
2022'-6"				4840
	4540	4840	4620	
2012'-0"				6640
	6230	6640	6340	
2000'-0"				

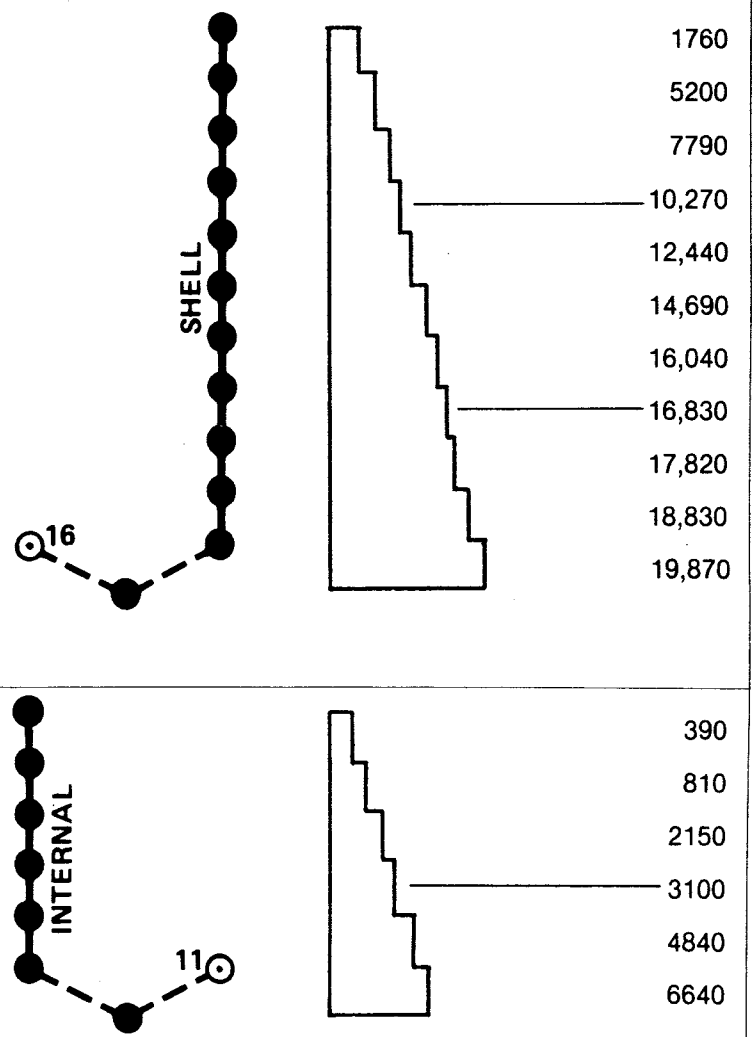

TABLE 3.7 (B) — 5J

RESPONSE BENDING MOMENTS (MILLIONS OF KIP-FEET)
CONTAINMENT BUILDING
SSE
NORTH-SOUTH DIRECTION

REF. FIGURE 3.7(B) - 17

MASS POINT EL.	SITE			ENVELOPE
	CALLAWAY	STERLING	WOLF CREEK	
2206'-6"	0/0.0084	0/0.0159	0/0.0107	0/0.0159
2170'-9"	0.0622/0.0802	0.1051/0.1389	0.1030/0.1299	0.1051/0.1389
2135'-0"	0.2362/0.2534	0.4000/0.4267	0.3906/0.4189	0.4000/0.4267
2119'-0"	0.3552/0.3712	0.6005/0.6252	0.5860/0.6121	0.6005/0.6252
2100'-0"	0.5259/0.5414	0.8896/0.9132	0.8651/0.8898	0.8896/0.9132
2080'-0"	0.7336/0.7503	1.2421/1.2644	1.2032/1.2289	1.2421/1.2644
2056'-6"	1.0108/1.0210	1.7111/1.7252	1.6503/1.6652	1.7111/1.7252
2051'-2"	1.0845/1.0903	1.8334/1.8416	1.7673/1.7760	1.8334/1.8416
2039'-0"	1.2413/1.2488	2.0972/2.1070	2.0168/2.0286	2.0972/2.1070
2028'-0"	1.3916/1.3992	2.3500/2.3598	2.2560/2.2658	2.3500/2.3598
2013'-5"	1.5972/1.6052	2.6950/2.7028	2.5774/2.5872	2.6950/2.7028
2000'-0"	1.7954	3.0223	2.8851	3.0223
2090'-4"	0/0.0020	0/0.0031	0/0.0027	0/0.0031
2060'-0"	0.0043/0.0048	0.0069/0.0072	0.0061/0.0063	0.0069/0.0072
2047'-6"	0.0113/0.0137	0.0185/0.0200	0.0164/0.0176	0.0185/0.0200
2034'-0"	0.0357/0.0382	0.0622/0.0636	0.0534/0.5470	0.0622/0.0636
2022'-6"	0.0635/0.0678	0.1117/0.1151	0.0958/0.0989	0.1117/0.1151
2012'-0"	0.0980/0.1018	0.1718/0.1737	0.1483/0.1502	0.1718/0.1737
2000'-0"	0.1482	0.2636	0.2268	0.2636

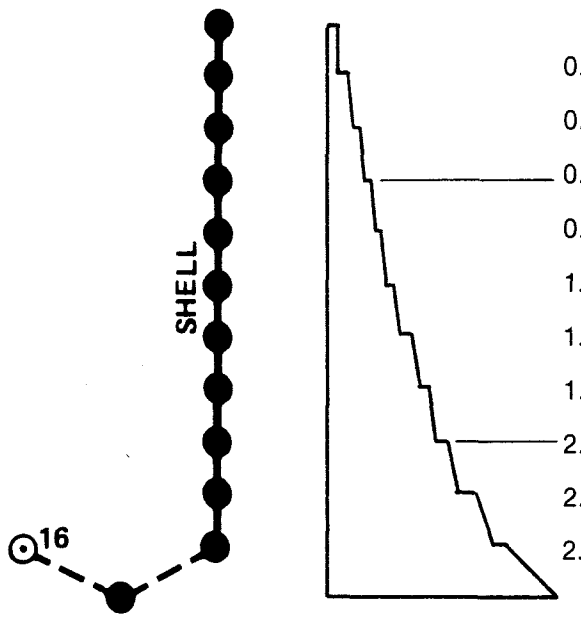

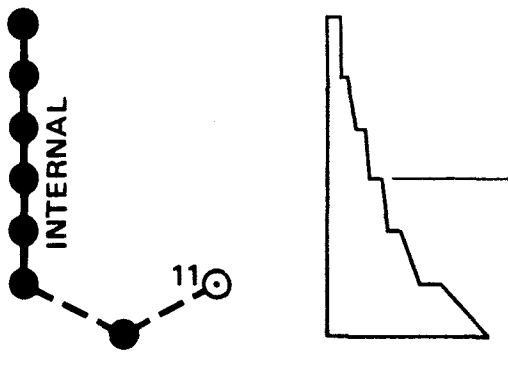

TABLE 3.7 (B) — 5K

RESPONSE BENDING MOMENTS (MILLIONS OF KIP-FEET)
CONTAINMENT BUILDING
SSE
EAST-WEST DIRECTION

REF. FIGURE 3.7(B) - 17

MASS POINT EL.	SITE			ENVELOPE
	CALLAWAY	STERLING	WOLF CREEK	
2206'-6"	0/0.0103	0/0.0147	0/0.0118	0/0.0147
2170'-9"	0.0614/0.0821	0.1304/0.1663	0.1206/0.1559	0.1304/0.1663
2135'-0"	0.2293/0.2513	0.4925/0.5302	0.4532/0.4898	0.4925/0.5302
2119'-0"	0.3438/0.3642	0.7381/0.7730	0.6782/0.7121	0.7381/0.7730
2100'-0"	0.5018/0.5212	1.0868/1.1196	0.9943/1.0261	1.0868/1.1196
2080'-0"	0.6887/0.7089	1.5068/1.5410	1.3728/1.4055	1.5068/1.5410
2056'-6"	0.9526/0.9614	2.0600/2.0796	1.8677/1.8865	2.0600/2.0796
2051'-2"	1.0225/1.0276	2.2050/2.2168	1.9972/2.0090	2.2050/2.2168
2039'-0"	1.1731/1.1795	2.5127/2.5264	2.2716/2.2834	2.5127/2.5264
2028'-0"	1.3175/1.3242	2.8048/2.8185	2.5304/2.5421	2.8048/2.8185
2013'-5"	1.5161/1.5231	3.2026/3.2144	2.8792/2.8910	3.2026/3.2144
2000'-0"	1.7079	3.5790	3.2124	3.5790
2090'-4"	0/0.0033	0/0.0039	0/0.0033	0/0.0039
2060'-0"	0.0069/0.0080	0.0079/0.0095	0.0068/0.0087	0.0079/0.0095
2047'-6"	0.0179/0.0191	0.0203/0.0223	0.0184/0.0213	0.0203/0.0223
2034'-0"	0.0512/0.0518	0.0665/0.0677	0.0545/0.0556	0.0665/0.0677
2022'-6"	0.0875/0.0891	0.1182/0.1216	0.0964/0.0988	0.1182/0.1216
2012'-0"	0.1308/0.1308	0.1804/0.1819	0.1503/0.1517	0.1804/0.1819
2000'-0"	0.1978	0.2722	0.2285	0.2722

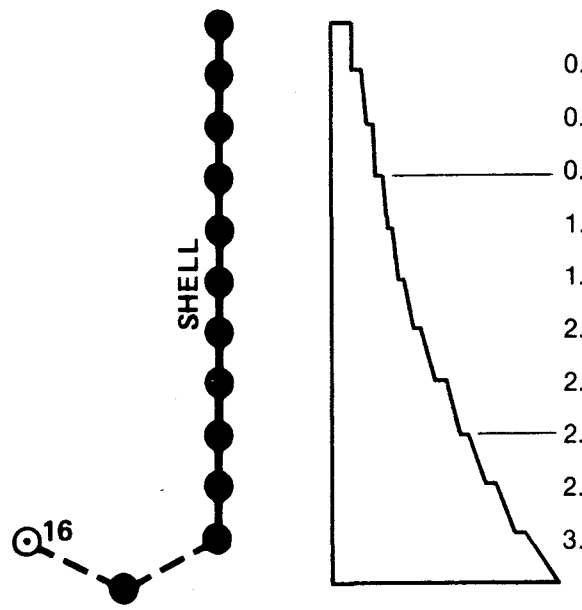

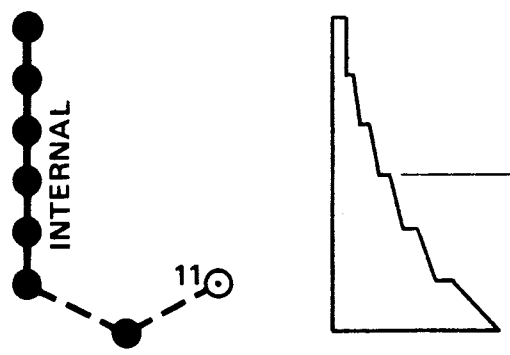

WOLF CREEK

TABLE 3.7 (B) — 5L

RESPONSE DISPLACEMENTS (INCHES)
CONTAINMENT BUILDING
SSE
NORTH-SOUTH DIRECTION

Rev. 0

REF. FIGURE 3.7(B) - 17

MASS POINT EL.	SITE			ENVELOPE
	CALLAWAY	STERLING	WOLF CREEK	
2206'-6"	0.423	0.371	0.370	0.423
2170'-9"	0.382	0.322	0.321	0.382
2135'-0"	0.335	0.262	0.262	0.335
2119'-0"	0.314	0.235	0.236	0.314
2100'-0"	0.288	0.201	0.203	0.288
2080'-0"	0.260	0.165	0.167	0.260
2056'-6"	0.227	0.122	0.125	0.227
2051'-2"	0.220	0.112	0.115	0.220
2039'-0"	0.203	0.090	0.094	0.203
2028'-0"	0.188	0.071	0.076	0.188
2013'-5"	0.169	0.046	0.052	0.169
2000'-0"	0.152	0.023	0.031	0.152
2090'-4"	0.225	0.072	0.080	0.225
2060'-0"	0.204	0.055	0.063	0.204
2047'-6"	0.196	0.049	0.057	0.196
2034'-0"	0.181	0.042	0.050	0.181
2022'-6"	0.167	0.036	0.044	0.167
2012'-0"	0.160	0.030	0.038	0.160
2000'-0"	0.152	0.023	0.031	0.152

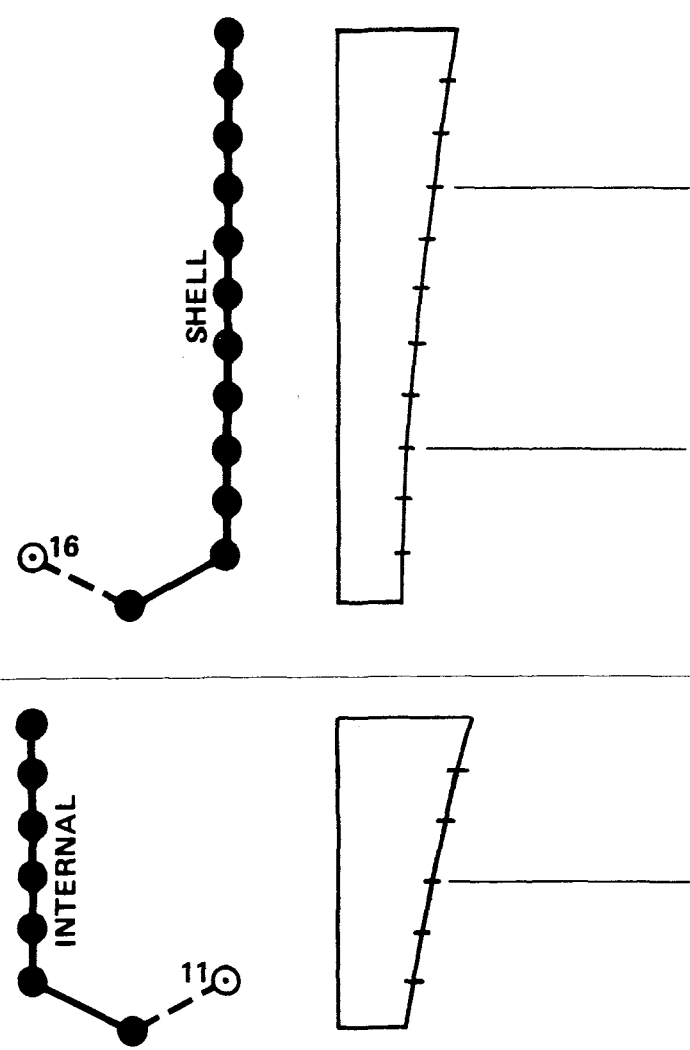

TABLE 3.7 (B) — 5M

RESPONSE DISPLACEMENTS (INCHES)
CONTAINMENT BUILDING
SSE
EAST-WEST DIRECTION

Rev. 0

REF. FIGURE 3.7(B) - 17

MASS POINT EL.	SITE			ENVELOPE
	CALLAWAY	STERLING	WOLF CREEK	
2206'-6"	0.440	0.471	0.439	0.471
2170'-9"	0.397	0.406	0.379	0.406
2135'-0"	0.349	0.328	0.308	0.349
2119'-0"	0.327	0.293	0.277	0.327
2100'-0"	0.301	0.250	0.238	0.301
2080'-0"	0.273	0.203	0.196	0.273
2056'-6"	0.240	0.148	0.146	0.240
2051'-2"	0.233	0.136	0.135	0.233
2039'-0"	0.216	0.108	0.110	0.216
2028'-0"	0.201	0.083	0.088	0.201
2013'-5"	0.181	0.052	0.061	0.181
2000'-0"	0.164	0.025	0.036	0.164
2090'-4"	0.234	0.098	0.104	0.234
2060'-0"	0.209	0.073	0.081	0.209
2047'-6"	0.200	0.064	0.072	0.200
2034'-0"	0.190	0.053	0.062	0.190
2022'-6"	0.181	0.043	0.053	0.181
2012'-0"	0.173	0.035	0.045	0.173
2000'-0"	0.164	0.025	0.036	0.164

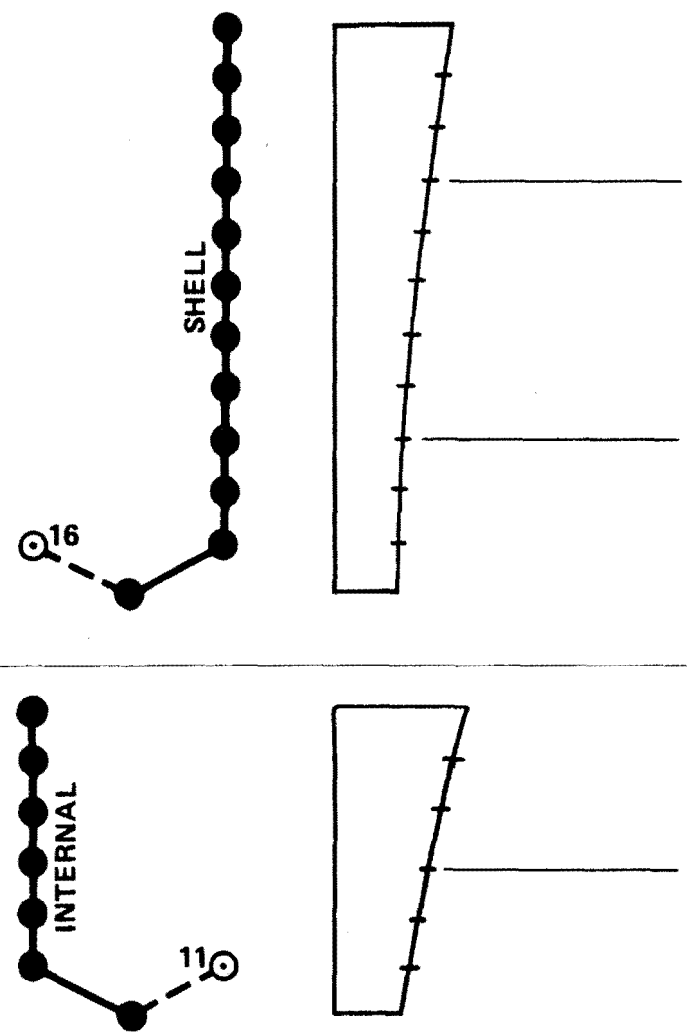

TABLE 3.7 (B) — 5N

RESPONSE DISPLACEMENTS (INCHES)
CONTAINMENT BUILDING
SSE
VERTICAL DIRECTION

REF. FIGURE 3.7(B) - 17

MASS POINT EL.	SITE			ENVELOPE
	CALLAWAY	STERLING	WOLF CREEK	
2206'-6"	0.0207	0.0260	0.0213	0.0260
2170'-9"	0.0202	0.0253	0.0206	0.0253
2135'-0"	0.0186	0.0230	0.0186	0.0230
2119'-0"	0.0178	0.0219	0.0176	0.0218
2100'-0"	0.0166	0.0201	0.0160	0.0201
2080'-0"	0.0149	0.0178	0.0140	0.0178
2056'-6"	0.0126	0.0147	0.0112	0.0147
2051'-2"	0.0120	0.0139	0.0105	0.0139
2039'-0"	0.0106	0.0119	0.0089	0.0119
2028'-0"	0.0092	0.0101	0.0073	0.0101
2013'-5"	0.0072	0.0075	0.0052	0.0075
2000'-0"	0.0053	0.0049	0.0030	0.0053
2090'-4"	0.0075	0.0073	0.0053	0.0075
2060'-0"	0.0071	0.0068	0.0049	0.0071
2047'-6"	0.0069	0.0066	0.0047	0.0069
2034'-0"	0.0067	0.0063	0.0044	0.0067
2022'-6"	0.0063	0.0060	0.0041	0.0063
2012'-0"	0.0059	0.0056	0.0037	0.0059
2000'-0"	0.0053	0.0049	0.0030	0.0053

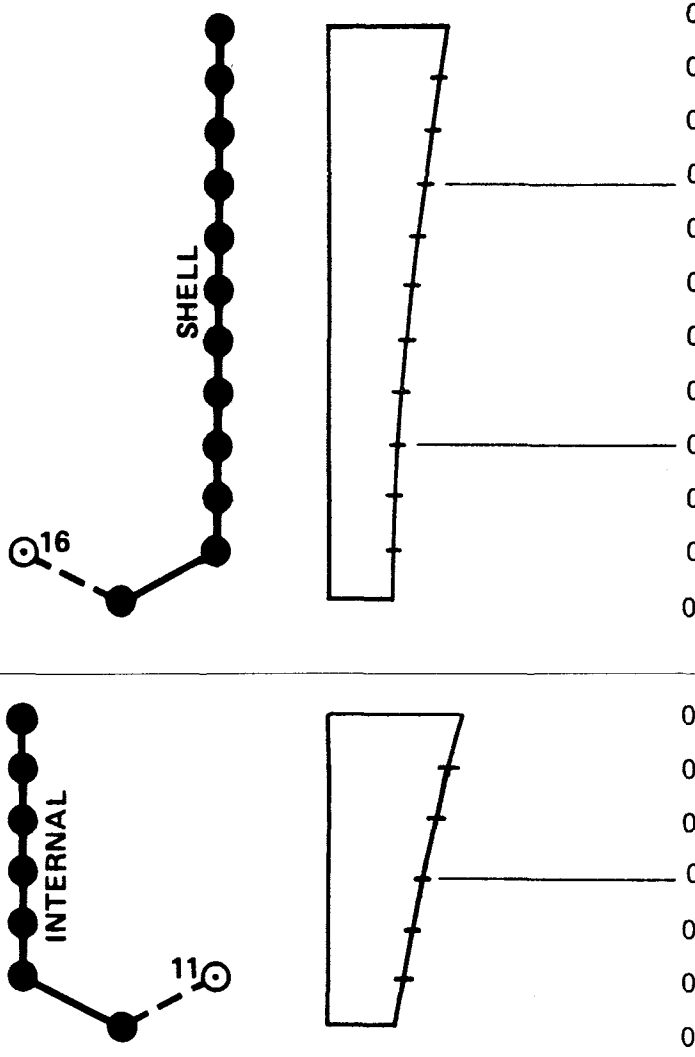

TABLE 3.7 (B) — 5O

RESPONSE ACCELERATIONS (G's)
CONTAINMENT BUILDING
OBE
NORTH-SOUTH DIRECTION

Rev. 0

REF. FIGURE 3.7(B) - 17

MASS POINT EL.	SITE			ENVELOPE
	CALLAWAY	STERLING	WOLF CREEK	
2206'-6"	0.232	0.509	0.411	0.509
2170'-9"	0.211	0.439	0.365	0.439
2135'-0"	0.187	0.356	0.310	0.356
2119'-0"	0.176	0.321	0.285	0.321
2100'-0"	0.163	0.284	0.253	0.284
2080'-0"	0.148	0.253	0.220	0.253
2056'-6"	0.129	0.216	0.181	0.216
2051'-2"	0.125	0.207	0.174	0.207
2039'-0"	0.116	0.186	0.162	0.186
2028'-0"	0.110	0.171	0.154	0.171
2013'-5"	0.107	0.152	0.142	0.152
2000'-0"	0.103	0.139	0.132	0.139
2090'-4"	0.125	0.177	0.146	0.177
2060'-0"	0.113	0.157	0.141	0.157
2047'-6"	0.112	0.154	0.139	0.154
2034'-0"	0.108	0.149	0.137	0.149
2022'-6"	0.104	0.145	0.135	0.145
2012'-0"	0.104	0.142	0.133	0.142
2000'-0"	0.103	0.139	0.132	0.139

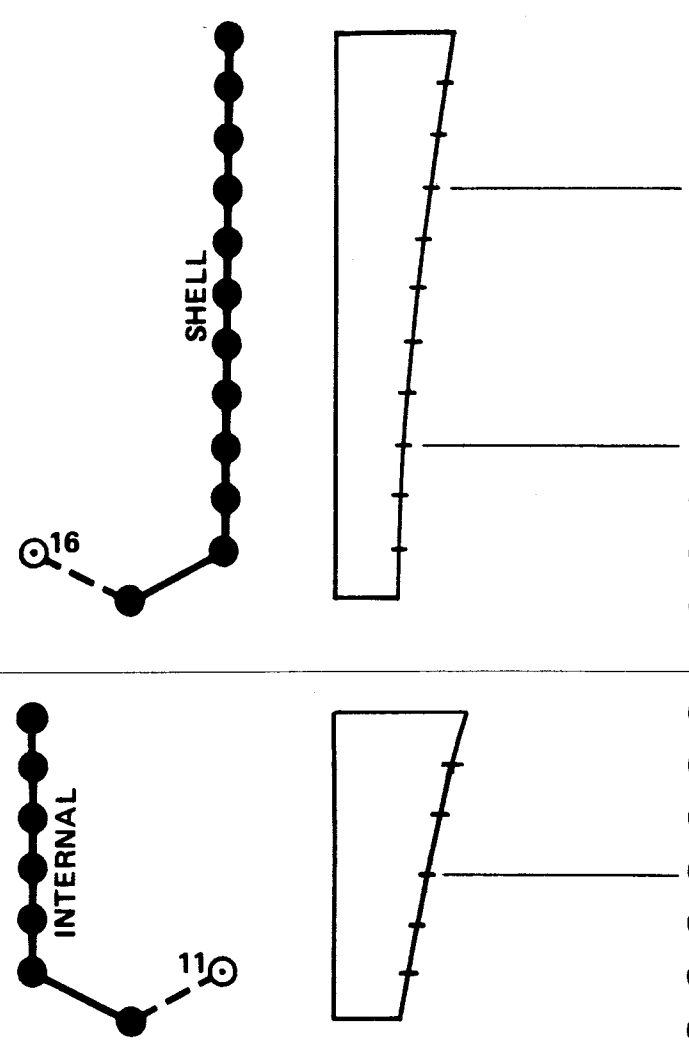

TABLE 3.7 (B) — 5P

RESPONSE ACCELERATIONS (G's)
CONTAINMENT BUILDING
OBE
EAST-WEST DIRECTION

REF. FIGURE 3.7(B) - 17

MASS POINT EL.	SITE			ENVELOPE
	CALLAWAY	STERLING	WOLF CREEK	
2206'-6"	0.240	0.524	0.546	0.546
2170'-9"	0.217	0.462	0.474	0.474
2135'-0"	0.187	0.394	0.389	0.394
2119'-0"	0.178	0.363	0.351	0.363
2100'-0"	0.164	0.324	0.305	0.324
2080'-0"	0.148	0.281	0.258	0.281
2056'-6"	0.128	0.227	0.204	0.227
2051'-2"	0.124	0.215	0.192	0.215
2039'-0"	0.113	0.187	0.166	0.187
2028'-0"	0.106	0.163	0.156	0.163
2013'-5"	0.101	0.142	0.143	0.143
2000'-0"	0.098	0.134	0.131	0.134
2090'-4"	0.177	0.251	0.223	0.251
2060'-0"	0.131	0.159	0.151	0.159
2047'-6"	0.122	0.154	0.147	0.154
2034'-0"	0.111	0.146	0.144	0.146
2022'-6"	0.102	0.139	0.141	0.141
2012'-0"	0.100	0.135	0.136	0.136
2000'-0"	0.098	0.134	0.131	0.134

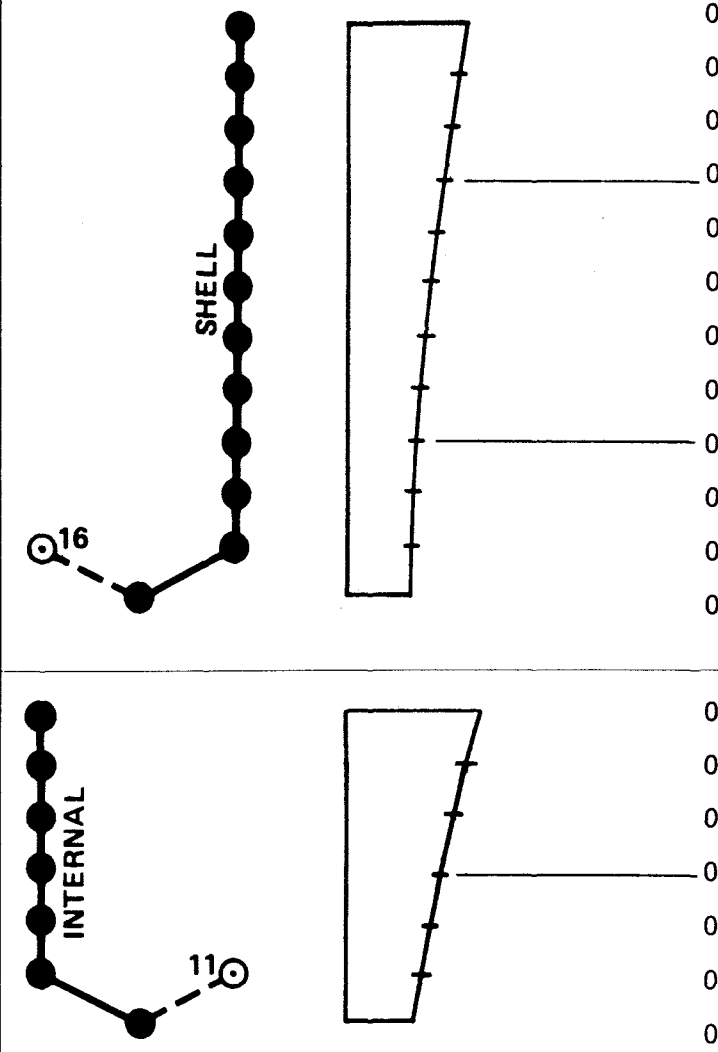

TABLE 3.7 (B) — 5Q

RESPONSE ACCELERATIONS (G's)
CONTAINMENT BUILDING
OBE
VERTICAL DIRECTION

Rev. 0

REF. FIGURE 3.7(B) - 17

MASS POINT EL.	SITE			ENVELOPE
	CALLAWAY	STERLING	WOLF CREEK	
2206'-6"	0.219	0.269	0.223	0.269
2170'-9"	0.214	0.264	0.218	0.264
2135'-0"	0.200	0.248	0.202	0.248
2119'-0"	0.193	0.240	0.194	0.240
2100'-0"	0.182	0.228	0.182	0.228
2080'-0"	0.169	0.213	0.171	0.213
2056'-6"	0.151	0.192	0.157	0.192
2051'-2"	0.146	0.187	0.156	0.187
2039'-0"	0.140	0.175	0.152	0.175
2028'-0"	0.139	0.164	0.148	0.164
2013'-5"	0.137	0.150	0.143	0.150
2000'-0"	0.136	0.144	0.139	0.144
2090'-4"	0.139	0.150	0.144	0.150
2060'-0"	0.139	0.149	0.143	0.149
2047'-6"	0.138	0.149	0.142	0.149
2034'-0"	0.138	0.148	0.142	0.148
2022'-6"	0.137	0.147	0.141	0.147
2012'-0"	0.137	0.145	0.140	0.145
2000'-0"	0.136	0.144	0.139	0.144

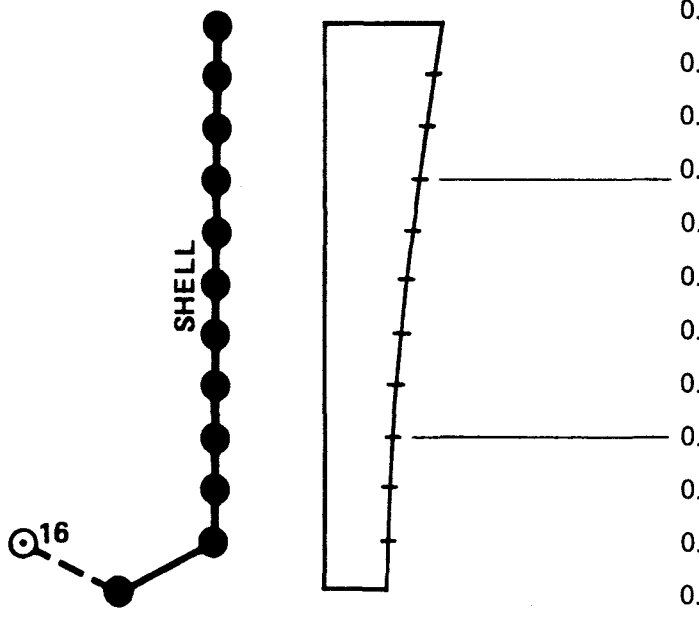

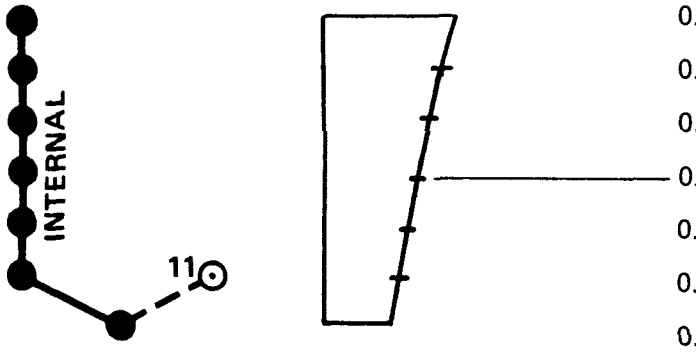

TABLE 3.7 (B) — 5R

RESPONSE INERTIA FORCES (KIPS)
CONTAINMENT BUILDING
OBE
NORTH-SOUTH DIRECTION

REF. FIGURE 3.7(B) - 17

MASS POINT EL.	SITE			ENVELOPE
	CALLAWAY	STERLING	WOLF CREEK	
2206'-6"	850	1920	1510	1920
2170'-9"	1530	3320	2700	3320
2135'-0"	1110	2140	1830	2140
2119'-0"	1030	1910	1680	1910
2100'-0"	890	1510	1390	1510
2080'-0"	910	1380	1350	1380
2056'-6"	540	700	740	740
2051'-2"	340	390	430	430
2039'-0"	380	440	500	500
2028'-0"	410	380	500	500
2013'-5"	440	570	470	570
2000'-0"	—	—	—	
2090'-4"	160	220	200	220
2060'-0"	170	240	220	240
2047'-6"	890	1140	1050	1140
2034'-0"	330	390	520	520
2022'-6"	390	690	580	690
2012'-0"	850	1100	940	1100
2000'-0"	—	—	—	

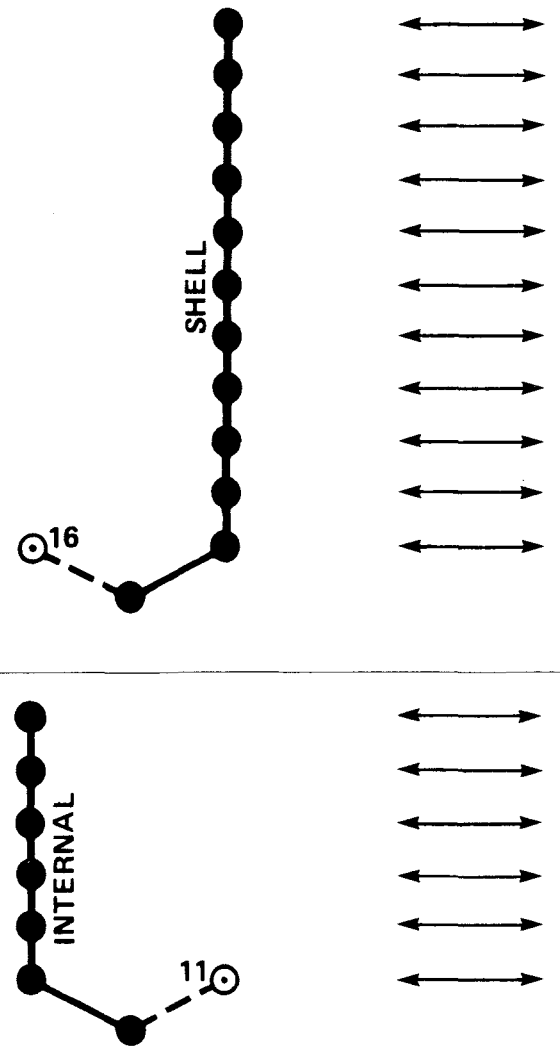

TABLE 3.7 (B) — 5S

RESPONSE INERTIA FORCES (KIPS)
CONTAINMENT BUILDING
OBE
EAST-WEST DIRECTION

REF. FIGURE 3.7(B) - 17

MASS POINT EL.	SITE			ENVELOPE
	CALLAWAY	STERLING	WOLF CREEK	
2206'-6"	890	1940	2020	2020
2170'-9"	1620	3390	3530	3530
2135'-0"	1140	2350	2320	2350
2119'-0"	1060	2140	2070	2140
2100'-0"	900	1780	1680	1780
2080'-0"	910	1730	1570	1730
2056'-6"	530	930	810	930
2051'-2"	310	550	470	550
2039'-0"	380	630	540	630
2028'-0"	380	610	520	610
2013'-5"	400	570	470	570
2000'-0"	—	—	—	
2090'-4"	210	250	240	250
2060'-0"	190	240	230	240
2047'-6"	1180	1470	1050	1470
2034'-0"	370	350	360	370
2022'-6"	350	730	820	820
2012'-0"	900	3860	860	3860
2000'-0"	—	—	—	

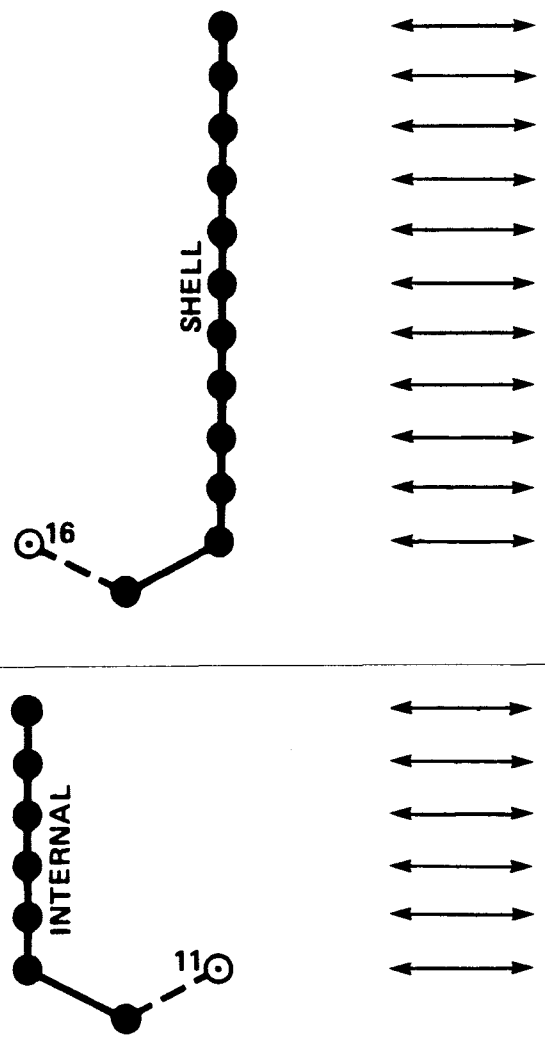

TABLE 3.7 (B) — 5T

RESPONSE INERTIA FORCES (KIPS)
CONTAINMENT BUILDING
OBE
VERTICAL DIRECTION

Rev. 0

REF. FIGURE 3.7(B) - 17

MASS POINT EL.	SITE			ENVELOPE
	CALLAWAY	STERLING	WOLF CREEK	
2206'-6"	820	1010	830	1010
2170'-9"	1600	1990	1610	1990
2135'-0"	1190	1500	1190	1500
2119'-0"	1140	1430	1140	1430
2100'-0"	990	1260	990	1260
2080'-0"	1030	1310	1020	1310
2056'-6"	610	780	590	780
2051'-2"	360	460	350	460
2039'-0"	440	580	430	580
2028'-0"	450	590	500	590
2013'-5"	470	610	530	610
2000'-0"	—	—	—	
2090'-4"	200	200	200	200
2060'-0"	210	230	210	230
2047'-6"	670	700	680	700
2034'-0"	490	510	490	510
2022'-6"	870	910	880	910
2012'-0"	910	950	910	950
2000'-0"	—	—	—	

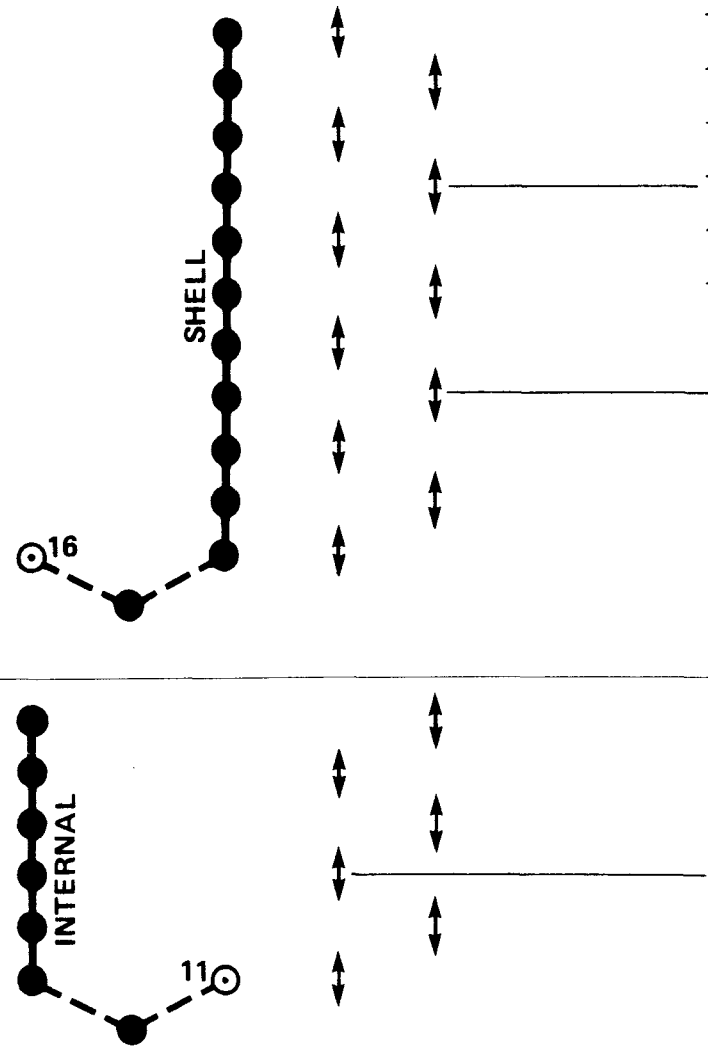

TABLE 3.7 (B) — 5U

RESPONSE SHEAR FORCES (KIPS)
CONTAINMENT BUILDING
OBE
NORTH-SOUTH DIRECTION

Rev. 0

REF. FIGURE 3.7(B) - 17

MASS POINT EL.	SITE			ENVELOPE
	CALLAWAY	STERLING	WOLF CREEK	
2206'-6"				1920
	850	1920	1510	
2170'-9"				5240
	2380	5240	4210	
2135'-0"				7380
	3490	7380	6040	
2119'-0"				9290
	4520	9290	7720	
2100'-0"				10,800
	5410	10,800	9110	
2080'-0"				12,180
	6320	12,180	10,460	
2056'-6"				12,880
	6860	12,880	11,200	
2051'-2"				13,270
	7200	13,270	11,630	
2039'-0"				13,710
	7580	13,710	12,130	
2028'-0"				14,090
	7990	14,090	12,630	
2013'-5"				14,660
	8430	14,660	13,100	
2000'-0"				
2090'-4"				220
	160	220	200	
2060'-0"				460
	330	460	420	
2047'-6"				1600
	1220	1600	1470	
2034'-0"				1990
	1550	1990	1990	
2022'-6"				2680
	1940	2680	2570	
2012'-0"				3780
	2790	3780	3510	
2000'-0"				

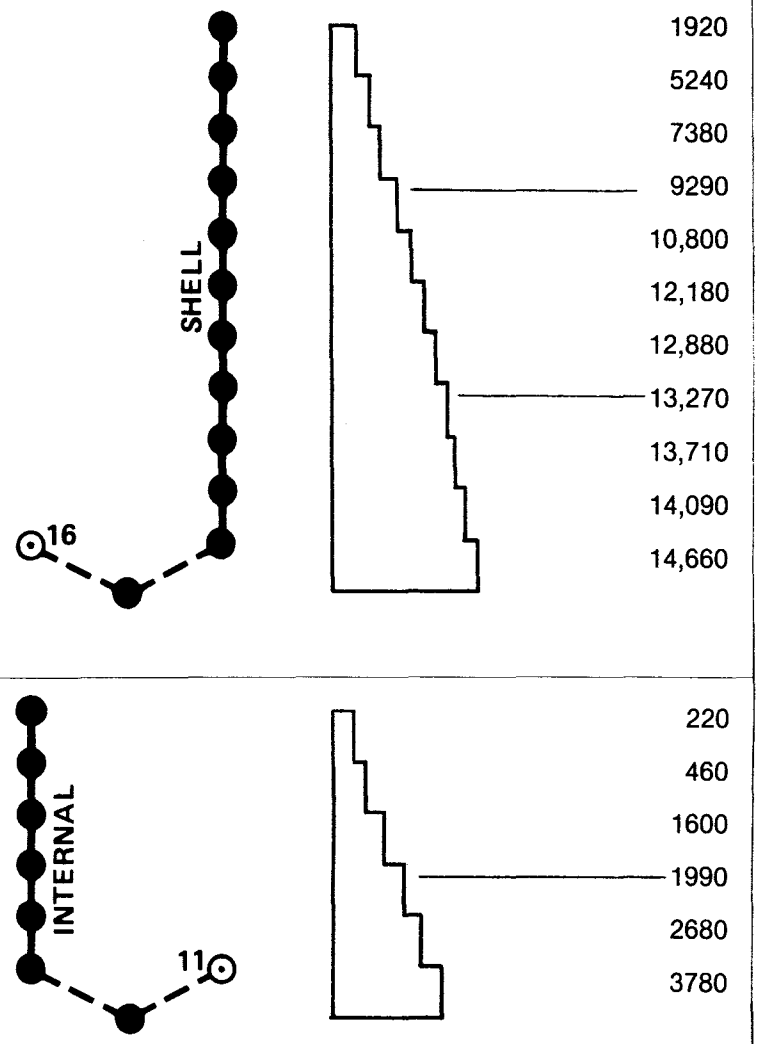

TABLE 3.7 (B) — 5V

RESPONSE SHEAR FORCES (KIPS)
CONTAINMENT BUILDING
OBE
EAST-WEST DIRECTION

Rev. 0

REF. FIGURE 3.7(B) - 17

MASS POINT EL.	SITE			ENVELOPE
	CALLAWAY	STERLING	WOLF CREEK	
2206'-6"	890	1940	2020	2020
2170'-9"	2510	5330	5550	5550
2135'-0"	3650	7680	7870	7870
2119'-0"	4710	9820	9940	9940
2100'-0"	5610	11,600	11,620	11,620
2080'-0"	6520	13,330	13,190	13,330
2056'-6"	7050	14,260	14,000	14,260
2051'-2"	7360	14,810	14,470	14,810
2039'-0"	7740	15,440	15,010	15,440
2028'-0"	8120	16,050	15,530	16,050
2013'-5"	8520	16,620	16,000	16,620
2000'-0"				
2090'-4"	210	250	240	250
2060'-0"	400	490	470	490
2047'-6"	1580	1960	1520	1960
2034'-0"	1950	2310	1880	2310
2022'-6"	2300	3040	2700	3040
2012'-0"	3200	6900	3560	6900
2000'-0"				

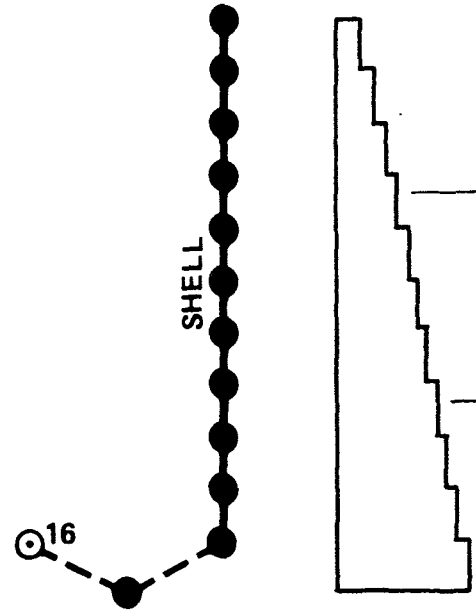

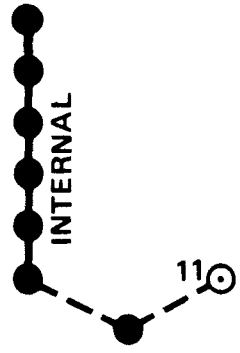

TABLE 3.7 (B) — 5W

RESPONSE AXIAL FORCES (KIPS)
CONTAINMENT BUILDING
OBE
VERTICAL DIRECTION

Rev. 0

REF. FIGURE 3.7(B) - 17

MASS POINT EL.	SITE			ENVELOPE
	CALLAWAY	STERLING	WOLF CREEK	
2206'-6"				1010
	820	1010	830	
2170'-9"				3000
	2420	3000	2440	
2135'-0"				4500
	3610	4500	3630	
2119'-0"				5930
	4750	5930	4770	
2100'-0"				7190
	5740	7190	5760	
2080'-0"				8500
	6770	8500	6780	
2056'-6"				9280
	7380	9280	7370	
2051'-2"				9740
	7740	9740	7720	
2039'-0"				10,320
	8180	10,320	8150	
2028'-0"				10,910
	8630	10,910	8650	
2013'-5"				11,520
	9100	11,520	9180	
2000'-0"				
2090'-4"				200
	200	200	200	
2060'-0"				430
	410	430	410	
2047'-6"				1130
	1080	1130	1090	
2034'-0"				2550
	1570	1640	1580	
2022'-6"				3500
	2440	2550	2460	
2012'-0"				
	3350	3500	3370	
2000'-0"				

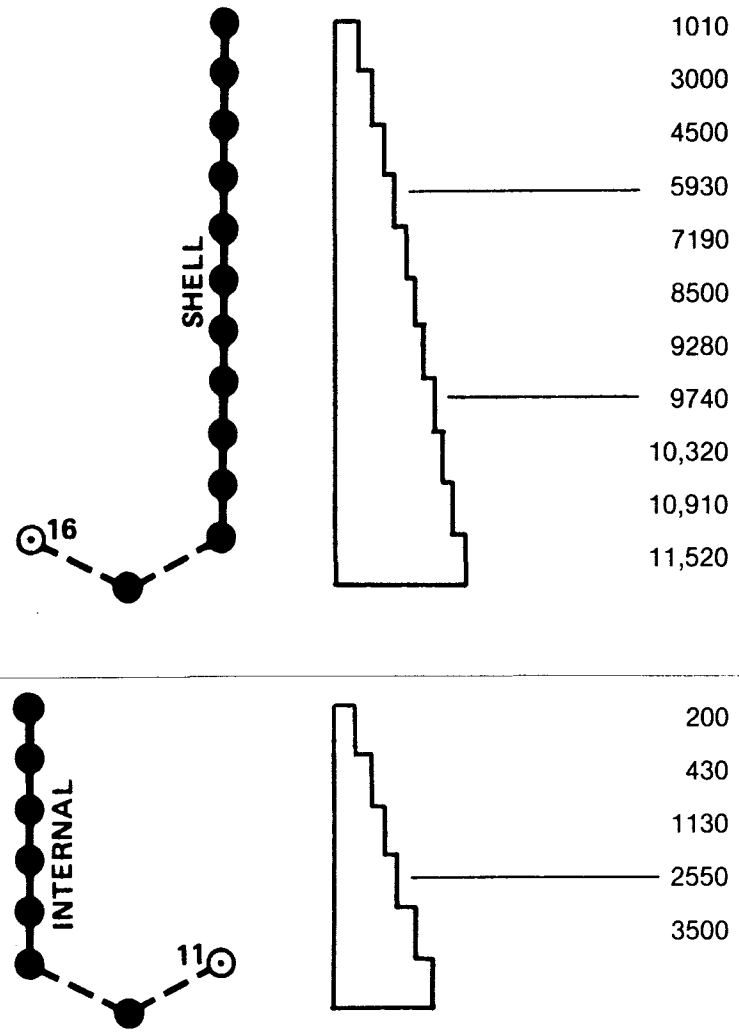

WOLF CREEK

TABLE 3.7 (B) — 5X

RESPONSE BENDING MOMENTS (MILLIONS OF KIP-FEET)
CONTAINMENT BUILDING
OBE
NORTH-SOUTH DIRECTION

Rev. 0

REF. FIGURE 3.7(B) - 17

MASS POINT EL.	SITE			ENVELOPE
	CALLAWAY	STERLING	WOLF CREEK	
2206'-6"	0/0.0039	0/0.0109	0/0.0063	0/0.0109
2170'-9"	0.0323/0.0390	0.0766/0.0999	0.0590/0.0758	0.0766/0.0999
2135'-0"	0.1241/0.1310	0.2873/0.3114	0.2240/0.2395	0.2873/0.3114
2119'-0"	0.1868/0.1932	0.4296/0.4520	0.3361/0.3504	0.4296/0.4520
2100'-0"	0.2791/0.2852	0.6284/0.6492	0.4971/0.5106	0.6284/0.6492
2080'-0"	0.3936/0.4000	0.8651/0.8865	0.6929/0.7070	0.8651/0.8865
2056'-6"	0.5486/0.5525	1.1729/1.1850	0.9528/0.9610	1.1729/1.1850
2051'-2"	0.5892/0.5913	1.2538/1.2609	1.0206/1.0263	1.2538/1.2609
2039'-0"	0.6787/0.6815	1.4224/1.4306	1.1668/1.1725	1.4224/1.4306
2028'-0"	0.7650/0.7680	1.5813/1.5894	1.3058/1.3114	1.5813/1.5894
2013'-5"	0.8844/0.8875	1.7950/1.8020	1.4955/1.5008	1.7950/1.8020
2000'-0"	1.0004	1.9953	1.6766	1.9953
2090'-4"	0/0.0012	0/0.0017	0/0.0014	0/0.0017
2060'-0"	0.0026/0.0029	0.0035/0.0037	0.0031/0.0033	0.0035/0.0037
2047'-6"	0.0070/0.0080	0.0093/0.0102	0.0084/0.0093	0.0093/0.0102
2034'-0"	0.0234/0.0243	0.0293/0.0301	0.0286/0.0291	0.0293/0.0301
2022'-6"	0.0416/0.0432	0.0525/0.0540	0.0515/0.0526	0.0525/0.0540
2012'-0"	0.0630/0.0652	0.0821/0.0830	0.0789/0.0790	0.0821/0.0830
2000'-0"	0.0951	0.1261	0.1212	0.1261

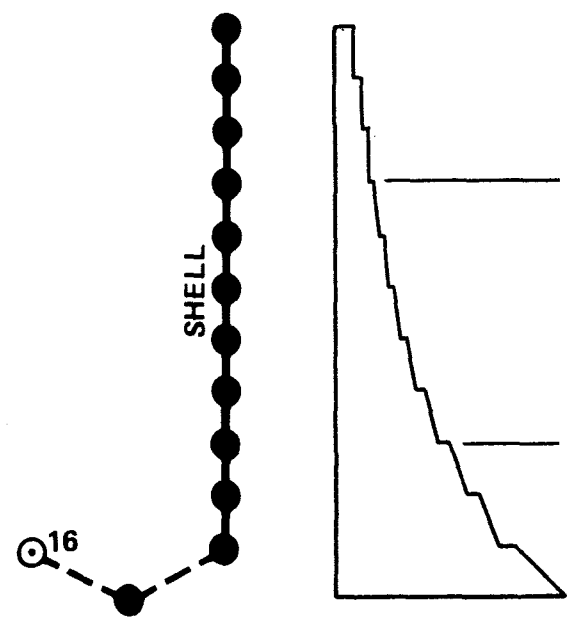

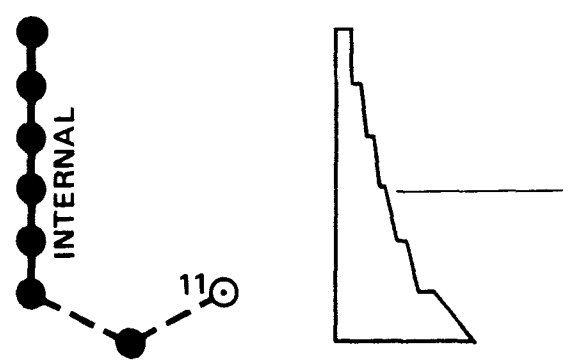

TABLE 3.7 (B) — 5Y

RESPONSE BENDING MOMENTS (MILLIONS OF KIP-FEET)
CONTAINMENT BUILDING
OBE
EAST-WEST DIRECTION

Rev. 0

REF. FIGURE 3.7(B) - 17

MASS POINT EL.	SITE			ENVELOPE
	CALLAWAY	STERLING	WOLF CREEK	
2206'-6"	0/0.0048	0/0.0092	0/0.0078	0/0.0092
2170'-9"	0.0345/0.0422	0.0766/0.0987	0.0802/0.1034	0.0802/0.1034
2135'-0"	0.1319/0.1402	0.2885/0.3116	0.3016/0.3259	0.3016/0.3259
2119'-0"	0.1985/0.2064	0.4322/0.4535	0.4518/0.4741	0.4518/0.4741
2100'-0"	0.2958/0.3032	0.6345/0.6546	0.6631/0.6840	0.6631/0.6840
2080'-0"	0.4155/0.4234	0.8834/0.9024	0.9165/0.9383	0.9165/0.9383
2056'-6"	0.5766/0.5815	1.2156/1.2270	1.2481/1.2609	1.2481/1.2609
2051'-2"	0.6192/0.6219	1.3030/1.3095	1.3355/1.3428	1.3355/1.3428
2039'-0"	0.7115/0.7148	1.4898/1.4976	1.5190/1.5276	1.5190/1.5276
2028'-0"	0.7999/0.8034	1.6676/1.6754	1.6927/1.7011	1.6927/1.7011
2013'-5"	0.9220/0.9257	1.9094/1.9171	1.9277/1.9357	1.9277/1.9357
2000'-0"	1.0402	2.1403	2.1501	2.1501
2090'-4"	0/0.0016	0/0.0021	0/0.0020	0/0.0021
2060'-0"	0.0034/0.0040	0.0043/0.0054	0.0040/0.0053	0.0043/0.0054
2047'-6"	0.0090/0.0100	0.0111/0.0124	0.0107/0.0128	0.0111/0.0124
2034'-0"	0.0313/0.0318	0.0362/0.0384	0.0297/0.0307	0.0362/0.0384
2022'-6"	0.0542/0.0561	0.0609/0.0641	0.0517/0.0535	0.0609/0.0641
2012'-0"	0.0786/0.0791	0.0930/0.0951	0.0789/0.0795	0.0930/0.0951
2000'-0"	0.1175	0.1549	0.1220	0.1549

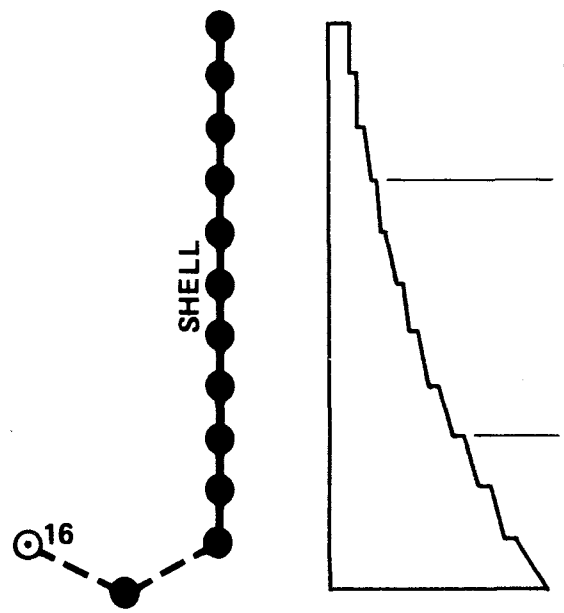

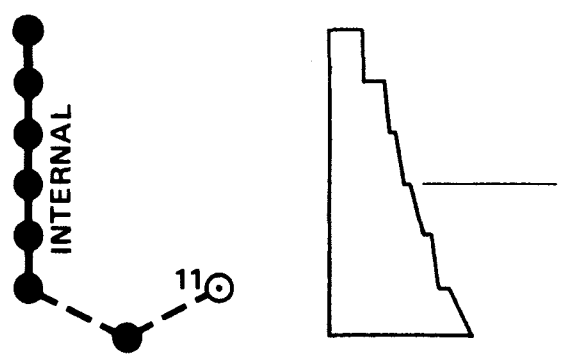

TABLE 3.7 (B) — 5Z

RESPONSE DISPLACEMENTS (INCHES)
CONTAINMENT BUILDING
OBE
NORTH-SOUTH DIRECTION

REF. FIGURE 3.7(B) - 17

MASS POINT EL.	SITE			ENVELOPE
	CALLAWAY	STERLING	WOLF CREEK	
2206'-6"	0.190	0.247	0.213	0.247
2170'-9"	0.170	0.212	0.185	0.212
2135'-0"	0.147	0.170	0.151	0.170
2119'-0"	0.137	0.152	0.136	0.152
2100'-0"	0.124	0.129	0.117	0.129
2080'-0"	0.110	0.104	0.096	0.110
2056'-6"	0.093	0.075	0.071	0.093
2051'-2"	0.089	0.069	0.065	0.089
2039'-0"	0.080	0.054	0.052	0.080
2028'-0"	0.072	0.041	0.041	0.072
2013'-5"	0.062	0.025	0.027	0.062
2000'-0"	0.053	0.012	0.014	0.053
2090'-4"	0.080	0.042	0.044	0.080
2060'-0"	0.071	0.031	0.033	0.071
2047'-6"	0.067	0.027	0.029	0.067
2034'-0"	0.063	0.023	0.025	0.063
2022'-6"	0.060	0.019	0.021	0.060
2012'-0"	0.057	0.016	0.018	0.057
2000'-0"	0.053	0.012	0.014	0.053

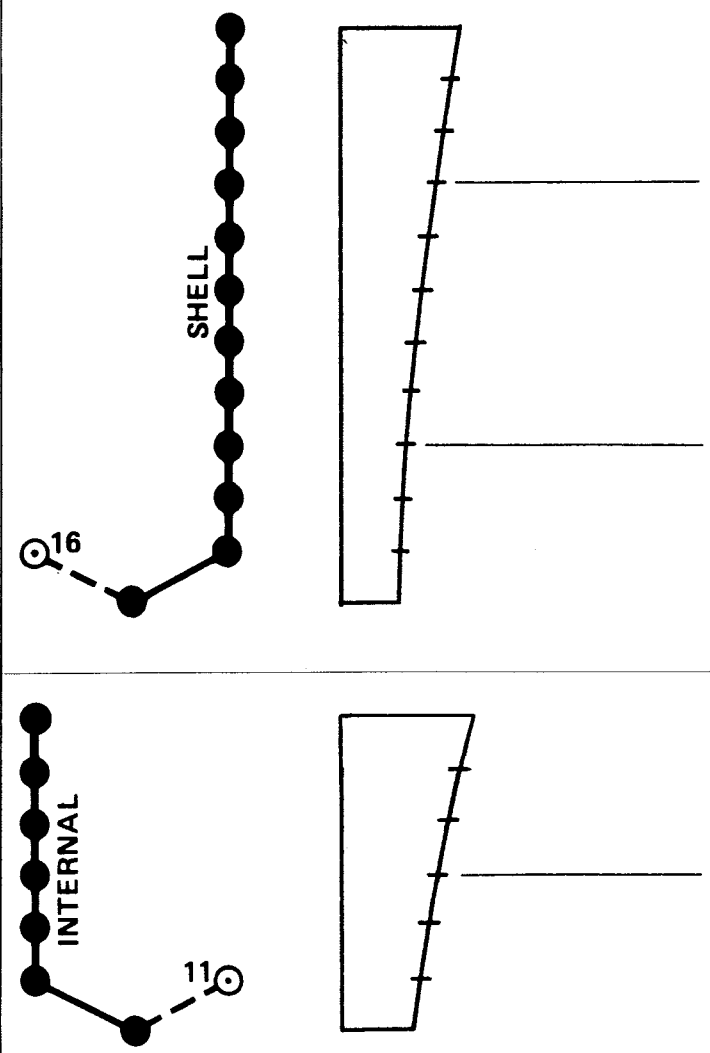

TABLE 3.7 (B) — 5AA

RESPONSE DISPLACEMENTS (INCHES)
CONTAINMENT BUILDING
OBE
EAST-WEST DIRECTION

REF. FIGURE 3.7(B) - 17

MASS POINT EL.	SITE			ENVELOPE
	CALLAWAY	STERLING	WOLF CREEK	
2206'-6"	0.201	0.271	0.274	0.274
2170'-9"	0.180	0.234	0.236	0.236
2135'-0"	0.156	0.190	0.191	0.191
2119'-0"	0.145	0.170	0.171	0.171
2100'-0"	0.132	0.145	0.146	0.146
2080'-0"	0.118	0.118	0.119	0.119
2056'-6"	0.101	0.086	0.088	0.101
2051'-2"	0.097	0.079	0.081	0.097
2039'-0"	0.088	0.063	0.065	0.088
2028'-0"	0.080	0.049	0.051	0.080
2013'-5"	0.070	0.031	0.033	0.070
2000'-0"	0.060	0.015	0.017	0.060
2090'-4"	0.093	0.057	0.059	0.093
2060'-0"	0.081	0.042	0.045	0.081
2047'-6"	0.077	0.037	0.039	0.077
2034'-0"	0.072	0.031	0.033	0.072
2022'-6"	0.068	0.025	0.028	0.068
2012'-0"	0.064	0.020	0.023	0.064
2000'-0"	0.060	0.015	0.017	0.060

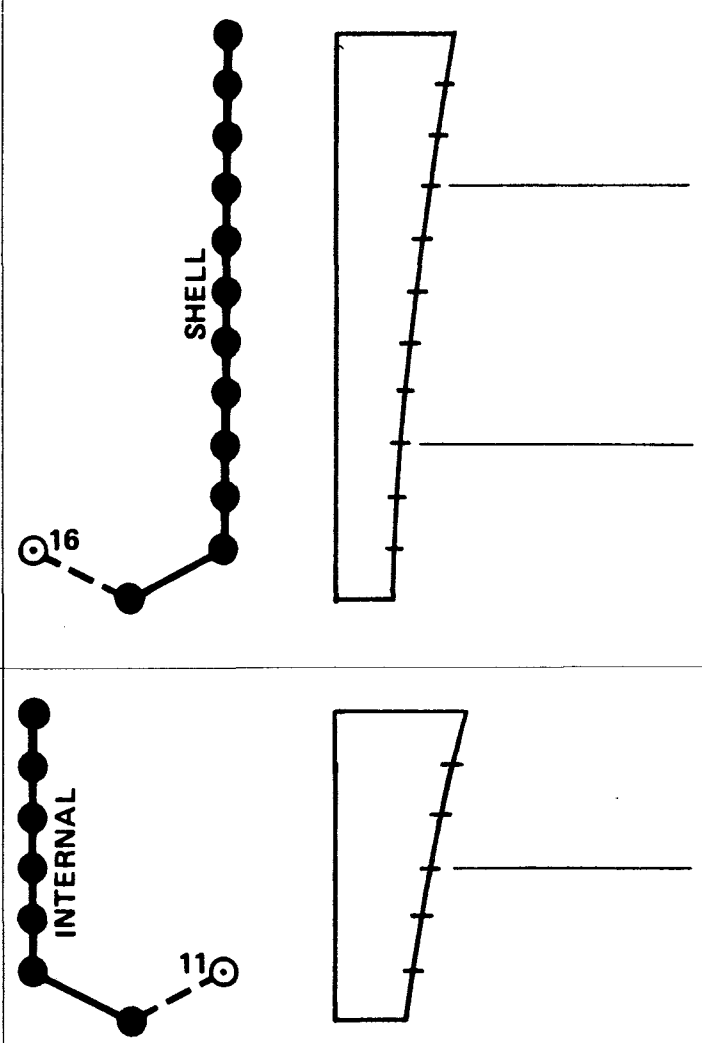

WOLF CREEK

TABLE 3.7 (B) — 5AB

RESPONSE DISPLACEMENTS (INCHES)
CONTAINMENT BUILDING
OBE
VERTICAL DIRECTION

Rev. 0

REF. FIGURE 3.7(B) - 17

MASS POINT EL.	SITE			ENVELOPE
	CALLAWAY	STERLING	WOLF CREEK	
2206'-6"	0.0115	0.0163	0.0125	0.0163
2170'-9"	0.0112	0.0158	0.0120	0.0158
2135'-0"	0.0103	0.0144	0.0108	0.0144
2119'-0"	0.0098	0.0136	0.0102	0.0136
2100'-0"	0.0090	0.0125	0.0093	0.0125
2080'-0"	0.0081	0.0110	0.0081	0.0110
2056'-6"	0.0067	0.0090	0.0065	0.0090
2051'-2"	0.0064	0.0085	0.0061	0.0085
2039'-0"	0.0056	0.0073	0.0051	0.0073
2028'-0"	0.0048	0.0062	0.0042	0.0062
2013'-5"	0.0037	0.0045	0.0029	0.0045
2000'-0"	0.0028	0.0030	0.0016	0.0030
2090'-4"	0.0039	0.0052	0.0027	0.0052
2060'-0"	0.0036	0.0043	0.0025	0.0043
2047'-6"	0.0035	0.0041	0.0024	0.0041
2034'-0"	0.0034	0.0038	0.0023	0.0038
2022'-6"	0.0032	0.0036	0.0021	0.0036
2012'-0"	0.0030	0.0033	0.0019	0.0033
2000'-0"	0.0026	0.0030	0.0016	0.0030

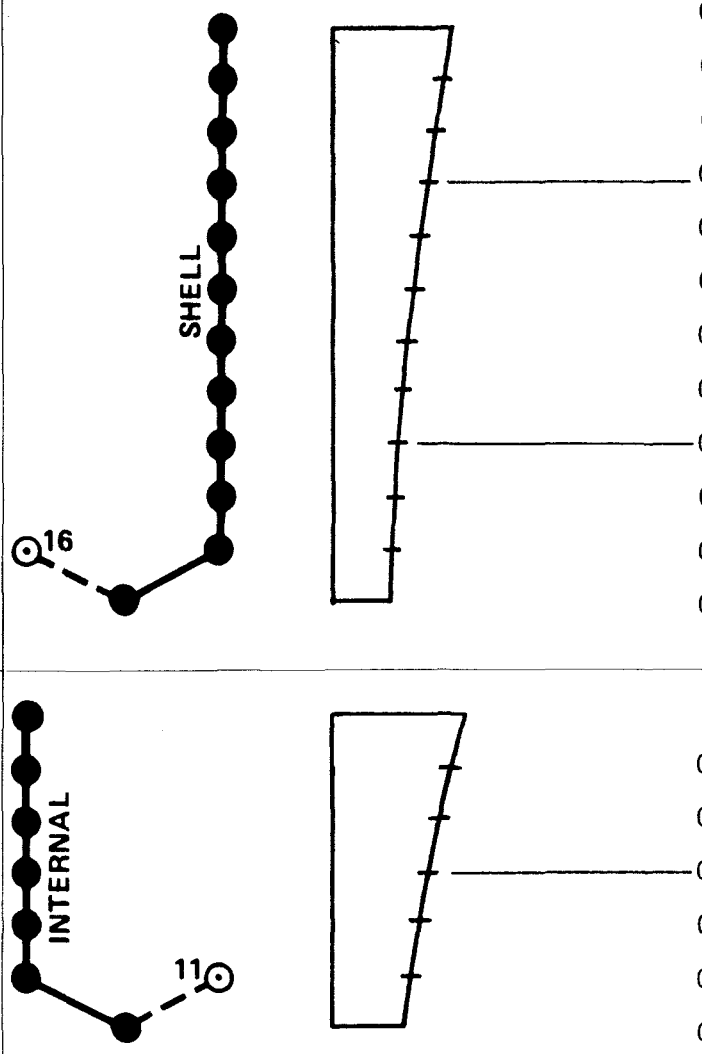

WOLF CREEK

TABLE 3.7 (B) — 6A

RESPONSE ACCELERATIONS (G's)
FUEL BUILDING
SSE
NORTH-SOUTH DIRECTION

Rev. 0

REF. FIGURE 3.7(B) - 18

MASS POINT EL.	SITE			ENVELOPE
	CALLAWAY	STERLING	WOLF CREEK	
2106'-6"	0.606	0.635	0.461	0.635
2083'-6"	0.504	0.521	0.362	0.521
2047'-6"	0.331	0.330	0.270	0.331
2026'-0"	0.260	0.287	0.255	0.287
2000'-0"	0.202	0.271	0.252	0.271

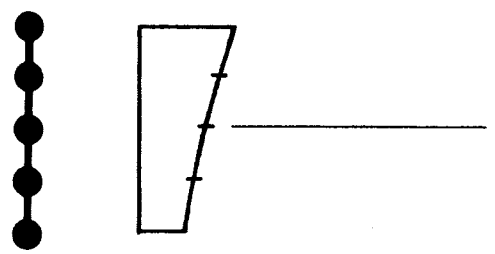

WOLF CREEK

TABLE 3.7 (B) — 6B

RESPONSE ACCELERATIONS (G's)
FUEL BUILDING
SSE
EAST-WEST DIRECTION

Rev. 0

REF. FIGURE 3.7(B) - 18

MASS POINT EL.	SITE			ENVELOPE
	CALLAWAY	STERLING	WOLF CREEK	
2106'-6"	0.418	0.793	0.586	0.793
2083'-6"	0.371	0.644	0.529	0.644
2047'-6"	0.307	0.367	0.426	0.426
2026'-0"	0.272	0.282	0.375	0.375
2000'-0"	0.242	0.265	0.318	0.318

WOLF CREEK

TABLE 3.7 (B) — 6C

RESPONSE ACCELERATIONS (G's)
FUEL BUILDING
SSE
VERTICAL DIRECTION

Rev. 0

REF. FIGURE 3.7(B) - 18

MASS POINT EL.	SITE			ENVELOPE
	CALLAWAY	STERLING	WOLF CREEK	
2106'-6"	0.328	0.330	0.389	0.389
2083'-6"	0.327	0.321	0.382	0.382
2047'-6"	0.322	0.295	0.362	0.362
2026'-0"	0.320	0.284	0.353	0.353
2000'-0"	0.316	0.276	0.337	0.337

WOLF CREEK

TABLE 3.7 (B) — 6D

RESPONSE INERTIA FORCES (KIPS)
FUEL BUILDING
SSE
NORTH-SOUTH DIRECTION

Rev. 0

REF. FIGURE 3.7(B) - 18

MASS POINT EL.	SITE			ENVELOPE
	CALLAWAY	STERLING	WOLF CREEK	
2106'-6"	3100	3150	2340	3150
2083'-6"	2300	2340	1640	2340
2047'-6"	3300	3400	2150	3400
2026'-0"	4100	4030	3910	4100
2000'-0"	—	—	—	

WOLF CREEK

TABLE 3.7 (B) — 6E

RESPONSE INERTIA FORCES (KIPS)
FUEL BUILDING
SSE
EAST-WEST DIRECTION

Rev. 0

REF. FIGURE 3.7(B) - 18

MASS POINT EL.	SITE			ENVELOPE
	CALLAWAY	STERLING	WOLF CREEK	
2106'-6"	2090	3950	2950	3950
2083'-6"	1650	2890	2380	2890
2047'-6"	3010	3820	4400	4400
2026'-0"	4430	4100	6180	6180
2000'-0"	—	—	—	

WOLF CREEK

TABLE 3.7 (B) — 6F

RESPONSE INERTIA FORCES (KIPS)
FUEL BUILDING
SSE
VERTICAL DIRECTION

Rev. 0

REF. FIGURE 3.7(B) - 18

MASS POINT EL.	SITE			ENVELOPE
	CALLAWAY	STERLING	WOLF CREEK	
2106'-6"	1630	1670	2000	2000
2083'-6"	1450	1460	1770	1770
2047'-6"	3280	3070	3860	3860
2026'-0"	5170	4700	5980	5980
2000'-0"	—	—	—	

WOLF CREEK

TABLE 3.7 (B) — 6G

RESPONSE SHEAR FORCES (KIPS)
FUEL BUILDING
SSE
NORTH-SOUTH DIRECTION

Rev. 0

REF. FIGURE 3.7(B) - 18

MASS POINT EL.	SITE			ENVELOPE
	CALLAWAY	STERLING	WOLF CREEK	
2106'-6"	3100	3150	2350	3150
2083'-6"	5400	5490	3980	5490
2047'-6"	8700	8890	6130	8890
2026'-0"	12,800	12,920	10,040	12,920
2000'-0"				

WOLF CREEK

TABLE 3.7 (B) — 6H

RESPONSE SHEAR FORCES (KIPS)
FUEL BUILDING
SSE
EAST-WEST DIRECTION

Rev. 0

REF. FIGURE 3.7(B) - 18

MASS POINT EL.	SITE			ENVELOPE
	CALLAWAY	STERLING	WOLF CREEK	
2106'-6"				3950
	2090	3950	2950	
2083'-6"				6840
	3740	6840	5330	
2047'-6"				10,660
	6750	10,660	9730	
2026'-0"				15,910
	11,180	14,760	15,910	
2000'-0"				

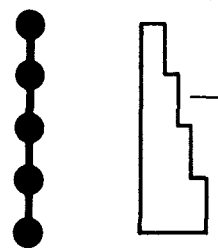

WOLF CREEK

TABLE 3.7 (B) — 6I

RESPONSE AXIAL FORCES (KIPS)
FUEL BUILDING
SSE
VERTICAL DIRECTION

Rev. 0

REF. FIGURE 3.7(B) - 18

MASS POINT EL.	SITE			ENVELOPE
	CALLAWAY	STERLING	WOLF CREEK	
2106'-6"				2000
	1630	1670	2000	
2083'-6"				3770
	3080	3130	3770	
2047'-6"				7630
	6360	6200	7630	
2026'-0"				13,610
	11,530	10,900	13,610	
2000'-0"				

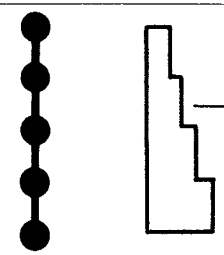

WOLF CREEK

TABLE 3.7 (B) — 6J

RESPONSE BENDING MOMENTS (MILLIONS OF KIP-FEET)
FUEL BUILDING
SSE
NORTH-SOUTH DIRECTION

Rev. 0

REF. FIGURE 3.7(B) - 18

MASS POINT EL.	SITE			ENVELOPE
	CALLAWAY	STERLING	WOLF CREEK	
2106'-6"	0 /0.0269	0/0.0240	0/0.0230	0/0.0269
2083'-6"	0.0981/0.1317	0.0965/0.1257	0.0767/0.1050	0.0981/0.1317
2047'-6"	0.3247/0.3776	0.3234/0.3661	0.2483/0.2916	0.3247/0.3776
2026'-0"	0.5635/0.6161	0.5574/0.5972	0.4212/0.4631	0.5635/0.6161
2000'-0"	0.9383	0.9330	0.6718	0.9383

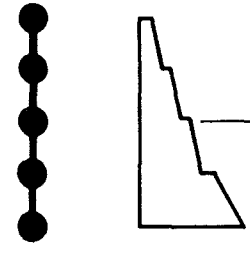

WOLF CREEK

TABLE 3.7 (B) — 6K

RESPONSE BENDING MOMENTS (MILLIONS OF KIP-FEET)
FUEL BUILDING
SSE
EAST-WEST DIRECTION

Rev. 0

REF. FIGURE 3.7(B) - 18

MASS POINT EL.	SITE			ENVELOPE
	CALLAWAY	STERLING	WOLF CREEK	
2106'-6"	0/0.0149	0/0.0215	0/0.0240	0/0.0240
2083'-6"	0.0576/0.0762	0.1124/0.1436	0.0855/0.1204	0.1124/0.1436
2047'-6"	0.2051/0.2239	0.3896/0.4279	0.2899/0.3285	0.3896/0.4279
2026'-0"	0.3640/0.3828	0.6571/0.6938	0.5099/0.5279	0.6571/0.6938
2000'-0"	0.6601	1.0776	0.9415	1.0776

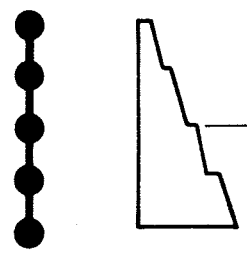

WOLF CREEK

TABLE 3.7 (B) — 6L

RESPONSE DISPLACEMENTS (INCHES)
FUEL BUILDING
SSE
NORTH-SOUTH DIRECTION

Rev. 0

REF. FIGURE 3.7(B) - 18

MASS POINT EL.	SITE			ENVELOPE
	CALLAWAY	STERLING	WOLF CREEK	
2106'-6"	0.311	0.124	0.115	0.311
2083'-6"	0.275	0.101	0.092	0.275
2047'-6"	0.216	0.060	0.056	0.216
2026'-0"	0.186	0.041	0.039	0.186
2000'-0"	0.154	0.021	0.022	0.154

WOLF CREEK

TABLE 3.7 (B) — 6M

RESPONSE DISPLACEMENTS (INCHES)
FUEL BUILDING
SSE
EAST-WEST DIRECTION

Rev. 0

REF. FIGURE 3.7(B) - 18

MASS POINT EL.	SITE			ENVELOPE
	CALLAWAY	STERLING	WOLF CREEK	
2106'-6"	0.473	0.212	0.293	0.473
2083'-6"	0.393	0.172	0.245	0.393
2047'-6"	0.260	0.097	0.160	0.260
2026'-0"	0.184	0.065	0.117	0.184
2000'-0"	0.095	0.031	0.067	0.095

WOLF CREEK

TABLE 3.7 (B) — 6N

RESPONSE DISPLACEMENTS (INCHES)
FUEL BUILDING
SSE
VERTICAL DIRECTION

Rev. 0

REF. FIGURE 3.7(B) - 18

MASS POINT EL.	SITE			ENVELOPE
	CALLAWAY	STERLING	WOLF CREEK	
2106'-6"	0.050	0.017	0.045	0.050
2083'-6"	0.049	0.016	0.044	0.049
2047'-6"	0.047	0.013	0.041	0.047
2026'-0"	0.046	0.012	0.039	0.046
2000'-0"	0.044	0.010	0.036	0.044

WOLF CREEK

TABLE 3.7 (B) — 6O

RESPONSE ACCELERATIONS (G's)
FUEL BUILDING
OBE
NORTH-SOUTH DIRECTION

Rev. 0

REF. FIGURE 3.7(B) - 18

MASS POINT EL.	SITE			ENVELOPE
	CALLAWAY	STERLING	WOLF CREEK	
2106'-6"	0.313	0.363	0.269	0.363
2083'-6"	0.249	0.297	0.214	0.297
2047'-6"	0.172	0.188	0.144	0.188
2026'-0"	0.133	0.156	0.138	0.156
2000'-0"	0.109	0.142	0.134	0.142

WOLF CREEK

TABLE 3.7 (B) — 6P

RESPONSE ACCELERATIONS (G's)
FUEL BUILDING
OBE
EAST-WEST DIRECTION

Rev. 0

REF. FIGURE 3.7(B) - 18

MASS POINT EL.	SITE			ENVELOPE
	CALLAWAY	STERLING	WOLF CREEK	
2106'-6"	0.252	0.462	0.384	0.462
2083'-6"	0.221	0.372	0.319	0.372
2047'-6"	0.173	0.205	0.207	0.207
2026'-0"	0.149	0.151	0.187	0.187
2000'-0"	0.132	0.134	0.163	0.163

WOLF CREEK

TABLE 3.7 (B) — 6Q

RESPONSE ACCELERATIONS (G's)
FUEL BUILDING
OBE
VERTICAL DIRECTION

Rev. 0

REF. FIGURE 3.7(B) - 18

MASS POINT EL.	SITE			ENVELOPE
	CALLAWAY	STERLING	WOLF CREEK	
2106'-6"	0.191	0.168	0.214	0.214
2083'-6"	0.188	0.163	0.210	0.210
2047'-6"	0.180	0.152	0.200	0.200
2026'-0"	0.176	0.149	0.195	0.195
2000'-0"	0.169	0.143	0.186	0.186

WOLF CREEK

TABLE 3.7 (B) — 6R

RESPONSE INERTIA FORCES (KIPS)
FUEL BUILDING
OBE
NORTH-SOUTH DIRECTION

Rev. 0

REF. FIGURE 3.7(B) - 18

MASS POINT EL.	SITE			ENVELOPE
	CALLAWAY	STERLING	WOLF CREEK	
2106'-6"	1540	1790	1350	1790
2083'-6"	1140	1340	970	1340
2047'-6"	1670	1930	1250	1930
2026'-0"	2010	2290	1890	2290
2000'-0"	—	—	—	

WOLF CREEK

TABLE 3.7 (B) — 6S

RESPONSE INERTIA FORCES (KIPS)
FUEL BUILDING
OBE
EAST-WEST DIRECTION

Rev. 0

REF. FIGURE 3.7(B) - 18

MASS POINT EL.	SITE			ENVELOPE
	CALLAWAY	STERLING	WOLF CREEK	
2106'-6"	1280	2310	1490	2310
2083'-6"	1000	1660	1890	1890
2047'-6"	1780	2130	2100	2130
2026'-0"	2350	2240	2490	2490
2000'-0"	—	—	—	

WOLF CREEK

TABLE 3.7 (B) — 6T

RESPONSE INERTIA FORCES (KIPS)
FUEL BUILDING
OBE
VERTICAL DIRECTION

Rev. 0

REF. FIGURE 3.7(B) - 18

MASS POINT EL.	SITE			ENVELOPE
	CALLAWAY	STERLING	WOLF CREEK	
2106'-6"	1000	860	1070	1070
2083'-6"	800	740	950	950
2047'-6"	1800	1560	2060	2060
2026'-0"	2900	2400	3190	3190
2000'-0"	—	—	—	

WOLF CREEK

TABLE 3.7 (B) — 6U

RESPONSE SHEAR FORCES (KIPS)
FUEL BUILDING
OBE
NORTH-SOUTH DIRECTION

Rev. 0

REF. FIGURE 3.7(B) - 18

MASS POINT EL.	SITE			ENVELOPE
	CALLAWAY	STERLING	WOLF CREEK	
2106'-6"				1790
	1540	1790	1350	
2083'-6"				3130
	2680	3130	2320	
2047'-6"				5060
	4350	5060	3570	
2026'-0"				7350
	6360	7350	5460	
2000'-0"				

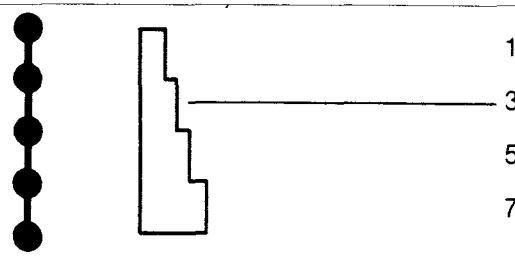

WOLF CREEK

TABLE 3.7 (B) — 6V

RESPONSE SHEAR FORCES (KIPS)
FUEL BUILDING
OBE
EAST-WEST DIRECTION

Rev. 0

REF. FIGURE 3.7(B) - 18

MASS POINT EL.	SITE			ENVELOPE
	CALLAWAY	STERLING	WOLF CREEK	
2106'-6"				2310
	1280	2310	1490	
2083'-6"				3970
	2280	3970	3380	
2047'-6"				6100
	4060	6100	5480	
2026'-0"				8340
	6410	8340	7970	
2000'-0"				

WOLF CREEK

TABLE 3.7 (B) — 6W

RESPONSE AXIAL FORCES (KIPS)
FUEL BUILDING
OBE
VERTICAL DIRECTION

Rev. 0

REF. FIGURE 3.7(B) - 18

MASS POINT EL.	SITE			ENVELOPE
	CALLAWAY	STERLING	WOLF CREEK	
2106'-6"	1000	860	1070	1070
2083'-6"	1800	1600	2020	2020
2047'-6"	3600	3160	4080	4080
2026'-0"	6500	5560	7270	7270
2000'-0"				

WOLF CREEK

TABLE 3.7 (B) — 6X

RESPONSE BENDING MOMENTS (MILLIONS OF KIP-FEET)
FUEL BUILDING
OBE
NORTH-SOUTH DIRECTION

Rev. 0

REF. FIGURE 3.7(B) - 18

MASS POINT EL.	SITE			ENVELOPE
	CALLAWAY	STERLING	WOLF CREEK	
2106'-6"	0/0.0144	0/0.0139	0/0.0126	0/0.0144
2083'-6"	0.0483/0.0657	0.0550/0.0717	0.0437/0.0593	0.0550/0.0717
2047'-6"	0.1608/0.1860	0.1847/0.2085	0.1426/0.1665	0.1847/0.2085
2026'-0"	0.2795/0.3043	0.3175/0.3394	0.2431/0.2661	0.3175/0.3394
2000'-0"	0.4662	0.5306	0.3915	0.5306

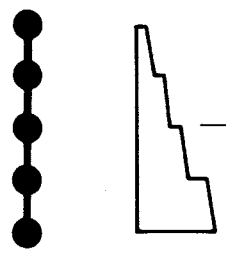

WOLF CREEK

TABLE 3.7 (B) — 6Y

RESPONSE BENDING MOMENTS (MILLIONS OF KIP-FEET)
FUEL BUILDING
OBE
EAST-WEST DIRECTION

Rev. 0

REF. FIGURE 3.7(B) - 18

MASS POINT EL.	SITE			ENVELOPE
	CALLAWAY	STERLING	WOLF CREEK	
2106'-6"	0/0.0083	0/0.0127	0/0.0151	0/0.0151
2083'-6"	0.0348/0.0445	0.0657/0.0841	0.0585/0.0805	0.0657/0.0841
2047'-6"	0.1247/0.0.1352	0.2272/0.2493	0.1931/0.2206	0.2272/0.2493
2026'-0"	0.2225/0.2335	0.3805/0.4015	0.3269/0.3451	0.3805/0.4015
2000'-0"	0.4001	0.6183	0.5522	0.6183

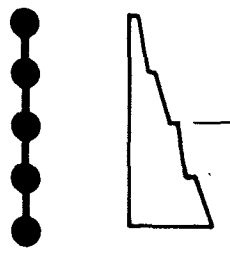

WOLF CREEK

TABLE 3.7 (B) — 6Z

RESPONSE DISPLACEMENTS (INCHES)
FUEL BUILDING
OBE
NORTH-SOUTH DIRECTION

Rev. 0

REF. FIGURE 3.7(B) - 18

MASS POINT EL.	SITE			ENVELOPE
	CALLAWAY	STERLING	WOLF CREEK	
2106'-6"	0.119	0.069	0.060	0.119
2083'-6"	0.104	0.056	0.048	0.104
2047'-6"	0.079	0.033	0.028	0.079
2026'-0"	0.066	0.023	0.019	0.066
2000'-0"	0.052	0.011	0.009	0.052

WOLF CREEK

TABLE 3.7 (B) — 6AA

RESPONSE DISPLACEMENTS (INCHES)
FUEL BUILDING
OBE
EAST-WEST DIRECTION

Rev. 0

REF. FIGURE 3.7(B) - 18

MASS POINT EL.	SITE			ENVELOPE
	CALLAWAY	STERLING	WOLF CREEK	
2106'-6"	0.206	0.114	0.154	0.206
2083'-6"	0.171	0.092	0.127	0.171
2047'-6"	0.111	0.050	0.078	0.111
2026'-0"	0.079	0.033	0.054	0.079
2000'-0"	0.040	0.014	0.027	0.040

WOLF CREEK

TABLE 3.7 (B) — 6AB

RESPONSE DISPLACEMENTS (INCHES)
FUEL BUILDING
OBE
VERTICAL DIRECTION

Rev. 0

REF. FIGURE 3.7(B) - 18

MASS POINT EL.	SITE			ENVELOPE
	CALLAWAY	STERLING	WOLF CREEK	
2106'-6"	0.026	0.008	0.020	0.026
2083'-6"	0.025	0.008	0.020	0.025
2047'-6"	0.024	0.006	0.018	0.024
2026'-0"	0.023	0.005	0.017	0.023
2000'-0"	0.022	0.004	0.016	0.022

MASS POINT EL.	SITE			ENVELOPE
	CALLAWAY	STERLING	WOLF CREEK	
2102'-6"	0.467	0.499	0.322	0.499
2090'-0"	0.430	0.463	0.304	0.463
2087'-2"	0.417	0.450	0.299	0.450
2073'-6"	0.386	0.420	0.285	0.420
2065'-0"	0.358	0.391	0.273	0.391
2047'-6"	0.306	0.320	0.244	0.320
2032'-0"	0.262	0.286	0.227	0.286
2026'-0"	0.244	0.282	0.223	0.282
2016'-0"	0.216	0.275	0.219	0.275
2000'-0"	0.196	0.261	0.216	0.261

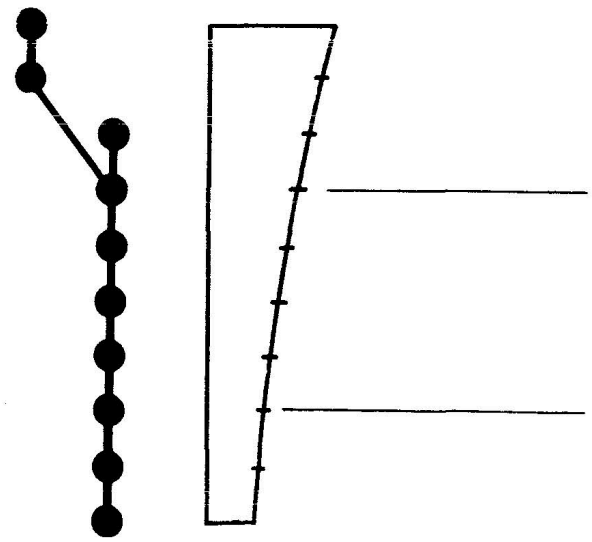

REV 29 NOTE:
Attachment of ESW Vertical Loop Chase does not affect the response accelerations of the Auxiliary/Control Building.

TABLE 3.7(B)-7A
RESPONSE ACCELERATIONS (G"s)
AUXILIARY/CONTROL BUILDING SSE
NORTH-SOUTH DIRECTION

REF. FIGURE 3.7(B) - 19

MASS POINT EL.	SITE			ENVELOPE
	CALLAWAY	STERLING	WOLF CREEK	
2102'-6"	0.506	0.552	0.364	0.552
2090'-0"	0.475	0.523	0.342	0.523
2087'-2"	0.453	0.496	0.320	0.496
2073'-6"	0.409	0.448	0.283	0.448
2065'-0"	0.378	0.416	0.257	0.416
2047'-6"	0.333	0.336	0.246	0.336
2032'-0"	0.291	0.295	0.239	0.295
2026'-0"	0.273	0.290	0.236	0.290
2016'-0"	0.242	0.281	0.231	0.281
2000'-0"	0.209	0.267	0.226	0.267

REV 29 NOTE:
Attachment of ESW Vertical Loop Chase does not affect the response accelerations of the Auxiliary/Control Building.

REV. 29
WOLF CREEK
UPDATED SAFETY ANALYSIS REPORT

TABLE 3.7(B)-7B
RESPONSE ACCELERATIONS (G's)
AUXILIARY/CONTROL BUILDING SSE
EAST-WEST DIRECTION

REF. FIGURE 3.7(B) - 19

MASS POINT EL.	SITE			ENVELOPE
	CALLAWAY	STERLING	WOLF CREEK	
2102'-6"	0.256	0.275	0.258	0.275
2090'-0"	0.255	0.273	0.258	0.273
2087'-2"	0.255	0.271	0.257	0.271
2073'-6"	0.254	0.267	0.256	0.267
2065'-0"	0.253	0.262	0.256	0.262
2047'-6"	0.250	0.252	0.253	0.253
2032'-0"	0.247	0.250	0.250	0.250
2026'-0"	0.246	0.248	0.249	0.249
2016'-0"	0.244	0.246	0.247	0.247
2000'-0"	0.240	0.245	0.244	0.245

REV 29 NOTE:
Attachment of ESW Vertical Loop Chase does not affect the response accelerations of the Auxiliary/Control Building.

REV. 29
WOLF CREEK
UPDATED SAFETY ANALYSIS REPORT

TABLE 3.7(B)-7C
RESPONSE ACCELERATIONS (G's)
AUXILIARY/CONTROL BUILDING SSE
VERTICAL DIRECTION

REF. FIGURE 3.7(B) - 19

MASS POINT EL.	SITE			ENVELOPE
	CALLAWAY	STERLING	WOLF CREEK	
2102'-6"	230	240	160	240
2090'-0"	640	680	450	680
2087'-2"	1280	1370	920	1370
2073'-6"	3520	3810	2590	3810
2065'-0"	1730	1860	1300	1860
2047'-6"	3780	4110	3150	4110
2032'-0"	1550	1670	1400	1670
2026'-0"	3040	2940	2600	3040
2016'-0"	2250	2130	2010	2250
2000'-0"	—	—	—	

REV 29 NOTE:
Attachment of ESW Vertical Loop Chase does not affect the response accelerations of the Auxiliary/Control Building.

REV. 29
WOLF CREEK
UPDATED SAFETY ANALYSIS REPORT

TABLE 3.7(B)-7D
RESPONSE INERTIA FORCES (KIPS)
AUXILIARY/CONTROL BUILDING SSE
NORTH-SOUTH DIRECTION

REF. FIGURE 3.7(B) - 19

MASS POINT EL.	SITE			ENVELOPE
	CALLAWAY	STERLING	WOLF CREEK	
2102'-6"	250	270	180	270
2090'-0"	700	780	510	780
2087'-2"	1390	1520	980	1520
2073'-6"	3730	4090	2590	4090
2065'-0"	1820	2000	1230	2000
2047'-6"	3980	4330	2600	4330
2032'-0"	1770	1760	1460	1770
2026'-0"	3390	3100	2880	3390
2016'-0"	2530	2250	2390	2530
2000'-0"	—	—	—	

REV 29 NOTE:
Attachment of ESW Vertical Loop Chase does not affect the response accelerations of the Auxiliary/Control Building.

REV. 29
WOLF CREEK
UPDATED SAFETY ANALYSIS REPORT

TABLE 3.7(B)-7E
RESPONSE INERTIA FORCES (KIPS)
AUXILIARY/CONTROL BUILDING SSE
EAST-WEST DIRECTION

MASS POINT EL.	SITE			ENVELOPE
	CALLAWAY	STERLING	WOLF CREEK	
2102'-6"	130	130	120	130
2090'-0"	380	390	380	390
2087'-2"	790	800	770	800
2073'-6"	2330	2330	2290	2330
2065'-0"	1230	1210	1210	1230
2047'-6"	3240	3110	3180	3240
2032'-0"	1600	1530	1580	1600
2026'-0"	3070	3010	3020	3070
2016'-0"	2560	2510	2520	2560
2000'-0"	—	—	—	

REV 29 NOTE:
Attachment of ESW Vertical Loop Chase does not affect the response accelerations of the Auxiliary/Control Building.

REV. 29
WOLF CREEK
UPDATED SAFETY ANALYSIS REPORT

TABLE 3.7(B)-7F
RESPONSE INERTIA FORCES (KIPS)
AUXILIARY/CONTROL BUILDING SSE
VERTICAL DIRECTION

REF. FIGURE 3.7(B) - 19

MASS POINT EL.	SITE			ENVELOPE
	CALLAWAY	STERLING	WOLF CREEK	
2102'-6"				240
	230	240	160	
2090'-0"				920
	870	920	610	
2087'-2"				1370
	1280	1370	920	
2073'-6"				6100
	5670	6100	4120	
2065'-0"				7960
	7400	7960	5420	
2047'-6"				12,070
	11,180	12,070	8570	
2032'-0"				13,740
	12,730	13,740	9970	
2026'-0"				16,680
	15,770	16,680	12,570	
2016'-0"				18,810
	18,020	18,810	14,580	
2000'-0"				

REV 29 NOTE:
Attachment of ESW Vertical Loop Chase does not affect the response accelerations of the Auxiliary/Control Building.

REV. 29
WOLF CREEK
UPDATED SAFETY ANALYSIS REPORT

TABLE 3.7(B)-7G
RESPONSE SHEAR FORCES (KIPS)
AUXILIARY/CONTROL BUILDING SSE
NORTH-SOUTH DIRECTION

REF. FIGURE 3.7(B) - 19

MASS POINT EL.	SITE			ENVELOPE
	CALLAWAY	STERLING	WOLF CREEK	
2102'-6"				270
2090'-0"	250	270	180	1050
2087'-2"	950	1050	690	1520
2073'-6"	1390	1520	980	6660
2065'-0"	6070	6660	4260	8660
2047'-6"	7890	8660	5490	12,990
2032'-0"	11,870	12,990	8090	14,750
2026'-0"	13,640	14,750	9550	17,850
2016'-0"	17,030	17,850	12,430	20,100
2000'-0"	19,560	20,100	14,820	

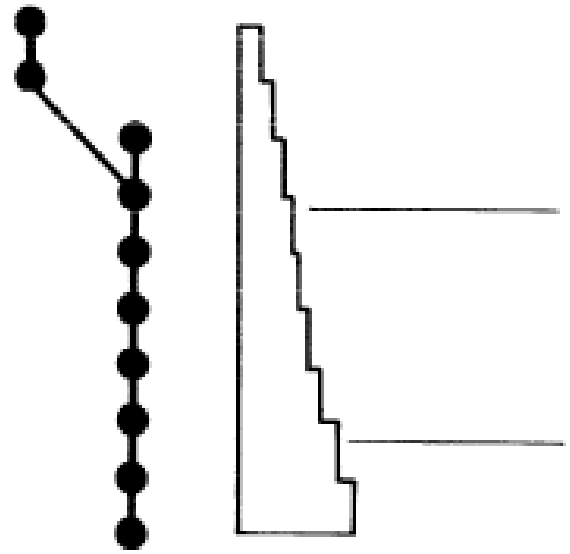

REV 29 NOTE:
Attachment of ESW Vertical Loop Chase does not affect the response accelerations of the Auxiliary/Control Building.

REV. 29
WOLF CREEK
UPDATED SAFETY ANALYSIS REPORT

TABLE 3.7(B)-7H
RESPONSE SHEAR FORCES (KIPS)
AUXILIARY/CONTROL BUILDING SSE
EAST-WEST DIRECTION

REF. FIGURE 3.7(B) – 19

MASS POINT EL.	SITE			ENVELOPE
	CALLAWAY	STERLING	WOLF CREEK	
2102'-6"				130
	130	130	120	
2090'-0"				520
	510	520	500	
2087'-2"				800
	790	800	770	
2073'-6"				3650
	3630	3650	3560	
2065'-0"				4860
	4860	4860	4770	
2047'-6"				8100
	8100	7970	7950	
2032'-0"				9700
	9700	9500	9530	
2026'-0"				12,770
	12,770	12,510	12,550	
2016'-0"				15,330
	15,330	15,020	15,070	
2000'-0"				

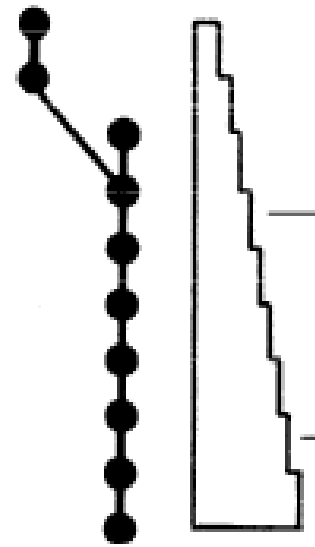

REV 29 NOTE:
Attachment of ESW Vertical Loop Chase does not affect the response accelerations of the Auxiliary/Control Building.

REV. 29
WOLF CREEK
UPDATED SAFETY ANALYSIS REPORT

TABLE 3.7(B)-7I
RESPONSE AXIAL FORCES (KIPS)
AUXILIARY/CONTROL BUILDING SSE
VERTICAL DIRECTION

REF. FIGURE 3.7(B) - 19

MASS POINT EL.	SITE			ENVELOPE
	CALLAWAY	STERLING	WOLF CREEK	
2102'-6"	0/0.0029	0/0.0031	0/0.0020	0/0.0031
2090'-0"	0.0033/0.0177	0.0034/0.0186	0.0022/0.0123	0.0034/0.0186
2087'-2"	0/0.0041	0/0.0036	0/0.0030	0/0.0041
2073'-6"	0.0216/0.0795	0.0218/0.0707	0.0142/0.0525	0.0218/0.0795
2065'-0"	0.1277/0.1585	0.1225/0.1455	0.0820/0.1028	0.1277/0.1585
2047'-6"	0.2879/0.3598	0.2847/0.3370	0.1844/0.2280	0.2879/0.3598
2032'-0"	0.5332/0.5652	0.5240/0.5463	0.3420/0.3544	0.5332/0.5652
2026'-0"	0.6416/0.7013	0.6287/0.6694	0.4120/0.4347	0.6416/0.7013
2016'-0"	0.8571/0.9032	0.8360/0.8633	0.5523/0.5682	0.8571/0.9032
2000'-0"	1.1914	1.1644	0.7824	1.1914

REV 29 NOTE:
Attachment of ESW Vertical Loop Chase does not affect the response accelerations of the Auxiliary/Control Building.

REV. 29
WOLF CREEK
UPDATED SAFETY ANALYSIS REPORT

TABLE 3.7(B)-7J
RESPONSE BENDING MOMENTS
(MILLIONS OF KIP-FEET)
AUXILIARY/CONTROL BUILDING SSE
NORTH-SOUTH DIRECTION

REF. FIGURE 3.7(B) - 19

MASS POINT EL.	SITE			ENVELOPE
	CALLAWAY	STERLING	WOLF CREEK	
2102'-6"	0.0002/0.0034	0.0002/0.0036	0.0002/0.0024	0.0002/0.0036
2090'-0"	0.0041/0.0198	0.0042/0.0214	0.0029/0.0142	0.0042/0.0214
2087'-2"	0/0.0026	0/0.0019	0/0.0016	0/0.0026
2073'-6"	0.0216/0.0808	0.0227/0.0721	0.0144/0.0506	0.0227/0.0808
2065'-0"	0.1325/0.1682	0.1288/0.1541	0.0867/0.1061	0.1325/0.1682
2047'-6"	0.3062/0.3740	0.3057/0.3524	0.2023/0.2380	0.3062/0.3740
2032'-0"	0.5577/0.5919	0.5537/0.5765	0.3622/0.3795	0.5577/0.5919
2026'-0"	0.6727/0.7169	0.6649/0.6938	0.4332/0.4551	0.6727/0.7169
2016'-0"	0.8805/0.9187	0.8722/0.8963	0.5607/0.5788	0.8805/0.9187
2000'-0"	1.2141	1.2179	0.7656	1.2179

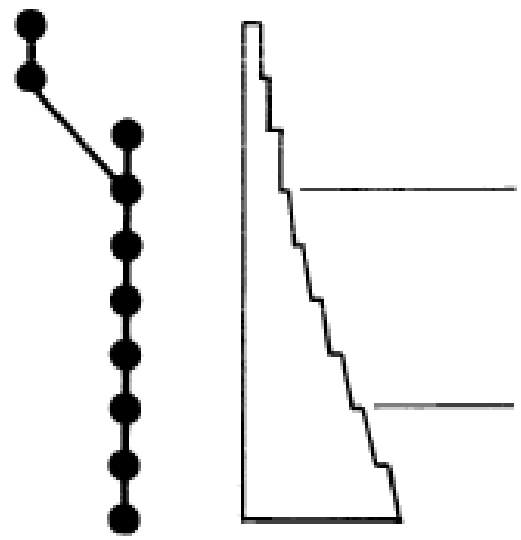

REV 29 NOTE:
Attachment of ESW Vertical Loop Chase does not affect the response accelerations of the Auxiliary/Control Building.

REV. 29
WOLF CREEK
UPDATED SAFETY ANALYSIS REPORT

TABLE 3.7(B)-7K
RESPONSE BENDING MOMENTS
(MILLIONS OF KIP-FEET)
AUXILIARY/CONTROL BUILDING SSE
EAST-WEST DIRECTION

REF. FIGURE 3.7(B) – 19

MASS POINT EL.	SITE			ENVELOPE
	CALLAWAY	STERLING	WOLF CREEK	
2102'-6"	0.255	0.061	0.078	0.255
2090'-0"	0.250	0.057	0.075	0.250
2087'-2"	0.249	0.055	0.075	0.249
2073'-6"	0.245	0.051	0.072	0.245
2065'-0"	0.241	0.047	0.070	0.241
2047'-6"	0.231	0.037	0.063	0.231
2032'-0"	0.223	0.028	0.057	0.223
2026'-0"	0.219	0.024	0.054	0.219
2016'-0"	0.213	0.018	0.050	0.213
2000'-0"	0.203	0.007	0.043	0.203

REV 29 NOTE:
Attachment of ESW Vertical Loop Chase does not affect the response accelerations of the Auxiliary/Control Building.

REV. 29
WOLF CREEK
UPDATED SAFETY ANALYSIS REPORT

TABLE 3.7(B)-7L
RESPONSE DISPLACEMENTS (INCHES) AUXILIARY/CONTROL BUILDING SSE
NORTH-SOUTH DIRECTION

REF. FIGURE 3.7(B) - 19

MASS POINT EL.	SITE			ENVELOPE
	CALLAWAY	STERLING	WOLF CREEK	
2102'-6"	0.254	0.080	0.080	0.254
2090'-0"	0.249	0.076	0.077	0.249
2087'-2"	0.246	0.073	0.075	0.246
2073'-6"	0.239	0.066	0.071	0.239
2065'-0"	0.234	0.061	0.068	0.234
2047'-6"	0.221	0.048	0.059	0.221
2032'-0"	0.210	0.037	0.052	0.210
2026'-0"	0.205	0.032	0.049	0.205
2016'-0"	0.197	0.025	0.044	0.197
2000'-0"	0.185	0.012	0.036	0.185

REV 29 NOTE:
Attachment of ESW Vertical Loop Chase does not affect the response accelerations of the Auxiliary/Control Building.

REV. 29
WOLF CREEK
UPDATED SAFETY ANALYSIS REPORT

TABLE 3.7(B)-7M
RESPONSE DISPLACEMENTS (INCHES) AUXILIARY/CONTROL BUILDING SSE
EAST-WEST DIRECTION

REF. FIGURE 3.7(B) – 19

MASS POINT EL.	SITE			ENVELOPE
	CALLAWAY	STERLING	WOLF CREEK	
2102'-6"	0.018	0.007	0.012	0.018
2090'-0"	0.018	0.007	0.012	0.018
2087'-2"	0.018	0.007	0.012	0.018
2073'-2"	0.017	0.006	0.012	0.017
2065'-0"	0.017	0.006	0.012	0.017
2047'-6"	0.016	0.005	0.011	0.016
2032'-0"	0.015	0.004	0.010	0.015
2026'-0"	0.015	0.003	0.009	0.015
2016'-0"	0.014	0.003	0.008	0.014
2000'-0"	0.013	0.001	0.007	0.013

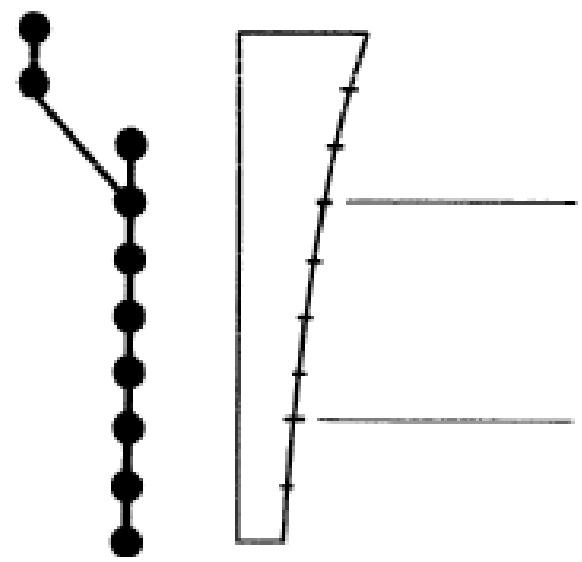

REV 29 NOTE:
Attachment of ESW Vertical Loop Chase does not affect the response accelerations of the Auxiliary/Control Building.

REV. 29
WOLF CREEK
UPDATED SAFETY ANALYSIS REPORT

TABLE 3.7(B)-7N
RESPONSE DISPLACEMENTS (INCHES) AUXILIARY/CONTROL BUILDING SSE VERTICAL DIRECTION

REF. FIGURE 3.7(B) - 19

MASS POINT EL.	SITE			ENVELOPE
	CALLAWAY	STERLING	WOLF CREEK	
2102'-6"	0.265	0.284	0.170	0.284
2090'-0"	0.249	0.264	0.157	0.264
2087'-2"	0.243	0.257	0.156	0.257
2073'-6"	0.228	0.240	0.150	0.240
2065'-0"	0.215	0.224	0.145	0.224
2047'-6"	0.181	0.185	0.131	0.185
2032'-0"	0.153	0.163	0.126	0.163
2026'-0"	0.141	0.158	0.125	0.158
2016'-0"	0.125	0.152	0.122	0.152
2000'-0"	0.106	0.140	0.118	0.140

REV 29 NOTE:
Attachment of ESW Vertical Loop Chase does not affect the response accelerations of the Auxiliary/Control Building.

REV. 29
WOLF CREEK
UPDATED SAFETY ANALYSIS REPORT

TABLE 3.7(B)-7O
RESPONSE ACCELERATIONS (G's)
AUXILIARY/CONTROL BUILDING
OBE NORTH-SOUTH DIRECTION

REF. FIGURE 3.7(B) – 19

MASS POINT EL.	SITE			ENVELOPE
	CALLAWAY	STERLING	WOLF CREEK	
2102'-6"	0.270	0.326	0.207	0.326
2090'-0"	0.258	0.309	0.195	0.309
2087'-2"	0.250	0.292	0.186	0.292
2073'-6"	0.230	0.264	0.170	0.264
2065'-0"	0.215	0.244	0.157	0.244
2047'-6"	0.188	0.199	0.137	0.199
2032'-0"	0.173	0.166	0.132	0.173
2026'-0"	0.166	0.159	0.130	0.166
2016'-0"	0.153	0.152	0.127	0.153
2000'-0"	0.130	0.141	0.123	0.141

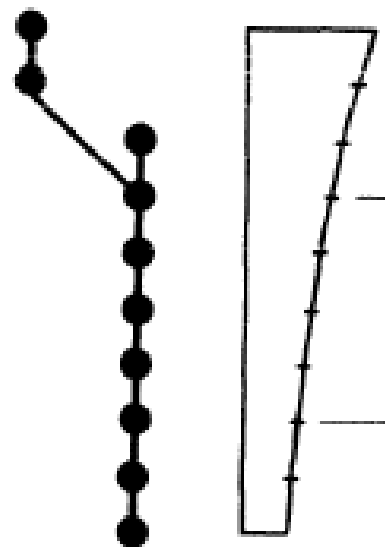

REV 29 NOTE:
Attachment of ESW Vertical Loop Chase does not affect the response accelerations of the Auxiliary/Control Building.

REV. 29
WOLF CREEK
UPDATED SAFETY ANALYSIS REPORT

TABLE 3.7(B)-7P
RESPONSE ACCELERATIONS (G's)
AUXILIARY/CONTROL BUILDING
OBE EAST-WEST DIRECTION

REF. FIGURE 3.7(B) - 19

MASS POINT EL.	SITE			ENVELOPE
	CALLAWAY	STERLING	WOLF CREEK	
2102'-6"	0.134	0.159	0.133	0.159
2090'-0"	0.134	0.158	0.132	0.158
2087'-2"	0.134	0.157	0.132	0.157
2073'-6"	0.134	0.154	0.132	0.154
2065'-0"	0.133	0.151	0.132	0.151
2047'-6"	0.132	0.142	0.131	0.142
2032'-0"	0.130	0.134	0.130	0.134
2026'-0"	0.130	0.131	0.129	0.131
2016'-0"	0.129	0.130	0.128	0.130
2000'-0"	0.127	0.127	0.127	0.127

REV 29 NOTE:
Attachment of ESW Vertical Loop Chase does not affect the response accelerations of the Auxiliary/Control Building.

REV. 29
WOLF CREEK
UPDATED SAFETY ANALYSIS REPORT

TABLE 3.7(B)-7Q
RESPONSE ACCELERATIONS (G's)
AUXILIARY/CONTROL BUILDING
OBE VERTICAL DIRECTION

REF. FIGURE 3.7(B) – 19

MASS POINT EL.	SITE			ENVELOPE
	CALLAWAY	STERLING	WOLF CREEK	
2102'-6"	130	140	80	140
2090'-0"	370	390	230	390
2087'-2"	740	780	480	780
2073'-6"	2080	2190	1380	2190
2065'-0"	1030	1080	690	1080
2047'-6"	2340	2390	1700	2390
2032'-0"	980	980	770	980
2026'-0"	1770	1740	1410	1770
2016'-0"	1300	1270	1110	1300
2000'-0"	—	—	—	

REV 29 NOTE:
Attachment of ESW Vertical Loop Chase does not affect the response accelerations of the Auxiliary/Control Building.

REV. 29
WOLF CREEK
UPDATED SAFETY ANALYSIS REPORT

TABLE 3.7(B)-7R
RESPONSE INERTIA FORCES (KIPS)
AUXILIARY/CONTROL BUILDING
OBE NORTH-SOUTH DIRECTION

REF. FIGURE 3.7(B) - 19

MASS POINT EL.	SITE			ENVELOPE
	CALLAWAY	STERLING	WOLF CREEK	
2102'-6"	130	160	100	160
2090'-0"	390	460	290	460
2087'-2"	770	890	570	890
2073'-6"	2110	2400	1530	2400
2065'-0"	1040	1180	760	1180
2047'-6"	2320	2530	1620	2530
2032'-0"	970	1020	660	1020
2026'-0"	1900	1800	1380	1900
2016'-0"	1610	1310	1310	1610
2000'-0"	—	—	—	

REV 29 NOTE:
Attachment of ESW Vertical Loop Chase does not affect the response accelerations of the Auxiliary/Control Building.

REV. 29
WOLF CREEK
UPDATED SAFETY ANALYSIS REPORT

TABLE 3.7(B)-7S
RESPONSE INERTIA FORCES (KIPS)
AUXILIARY/CONTROL BUILDING
OBE EAST-WEST DIRECTION

REF. FIGURE 3.7(B) - 19

MASS POINT EL.	SITE			ENVELOPE
	CALLAWAY	STERLING	WOLF CREEK	
2102'-6"	70	80	60	80
2090'-0"	190	220	200	220
2087'-2"	410	470	400	470
2073'-6"	1210	1360	1200	1360
2065'-0"	640	700	620	700
2047'-6"	1680	1780	1670	1780
2032'-0"	840	830	820	840
2026'-0"	1590	1590	1580	1590
2016'-0"	1330	1270	1320	1330
2000'-0"	—	—	—	

REV 29 NOTE:
Attachment of ESW Vertical Loop Chase does not affect the response accelerations of the Auxiliary/Control Building.

TABLE 3.7(B)-7T
RESPONSE INERTIA FORCES (KIPS)
AUXILIARY/CONTROL BUILDING
OBE VERTICAL DIRECTION

REF. FIGURE 3.7(B) - 19

MASS POINT EL.	SITE			ENVELOPE
	CALLAWAY	STERLING	WOLF CREEK	
2102'-6"				140
2090'-0"	130	140	80	530
2087'-2"	500	530	310	780
2073'-6"	740	780	480	3500
2065'-0"	3320	3500	2170	4580
2047'-6"	4350	4580	2860	6970
2032'-0"	6690	6970	4560	7950
2026'-0"	7670	7950	5330	9690
2016'-0"	9440	9690	6740	10,960
2000'-0"	10,740	10,960	7850	

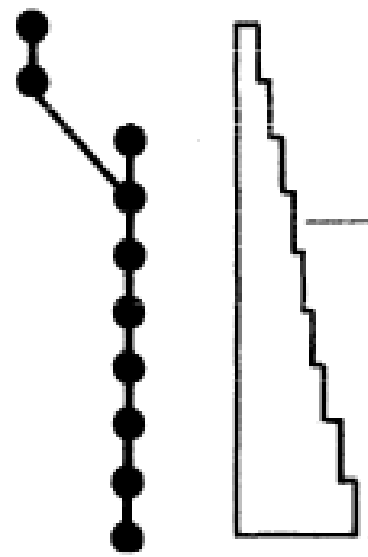

REV 29 NOTE:
Attachment of ESW Vertical Loop Chase does not affect the response accelerations of the Auxiliary/Control Building.

REV. 29
WOLF CREEK
UPDATED SAFETY ANALYSIS REPORT

TABLE 3.7(B)-7U
RESPONSE SHEAR FORCES (KIPS)
AUXILIARY/CONTROL BUILDING
OBE NORTH-SOUTH DIRECTION

REF. FIGURE 3.7(B) - 19

MASS POINT EL.	SITE			ENVELOPE
	CALLAWAY	STERLING	WOLF CREEK	
2102'-6"				160
	130	160	100	
2090'-0"				620
	520	620	390	
2087'-2"				890
	770	890	570	
2073'-6"				3910
	3400	3910	2490	
2065'-0"				5090
	4440	5090	3250	
2047'-6"				7620
	6760	7620	4870	
2032'-0"				8640
	7730	8640	5530	
2026'-0"				10,440
	9630	10,440	6910	
2016'-0"				11,750
	11,240	11,750	8220	
2000'-0"				

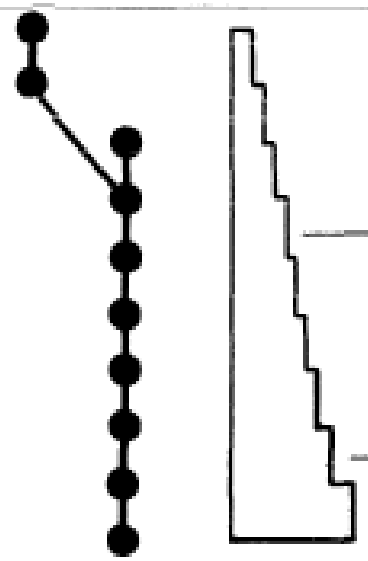

REV 29 NOTE:
Attachment of ESW Vertical Loop Chase does not affect the response accelerations of the Auxiliary/Control Building.

REV. 29
WOLF CREEK
UPDATED SAFETY ANALYSIS REPORT

TABLE 3.7(B)-7V
RESPONSE SHEAR FORCES (KIPS)
AUXILIARY/CONTROL BUILDING
OBE EAST-WEST DIRECTION

REF. FIGURE 3.7(B) - 19

MASS POINT EL.	SITE			ENVELOPE
	CALLAWAY	STERLING	WOLF CREEK	
2102'-6"				80
	70	80	60	
2090'-0"				300
	260	300	260	
2087'-2"				470
	410	470	400	
2073'-6"				2130
	1880	2130	1860	
2065'-0"				2830
	2520	2830	2480	
2047'-6"				4610
	4200	4610	4150	
2032'-0"				5440
	5040	5440	4970	
2026'-0"				7030
	6630	7030	6550	
2016'-0"				8300
	7960	8300	7870	
2000'-0"				

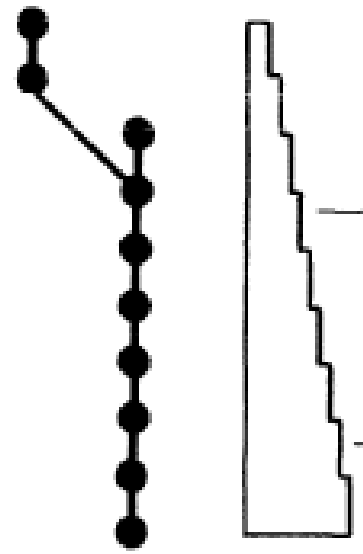

REV 29 NOTE:
Attachment of ESW Vertical Loop Chase does not affect the response accelerations of the Auxiliary/Control Building.

REV. 29
WOLF CREEK
UPDATED SAFETY ANALYSIS REPORT

TABLE 3.7(B)-7W
RESPONSE AXIAL FORCES (KIPS)
AUXILIARY/CONTROL BUILDING
OBE VERTICAL DIRECTION

REF. FIGURE 3.7(B) - 19

MASS POINT EL.	SITE			ENVELOPE
	CALLAWAY	STERLING	WOLF CREEK	
2102'-6"	0/0.0016	0/0.0018	0/0.0011	0/0.0018
2090'-0"	0.0018/0.0100	0.0019/0.0107	0.0012/0.0062	0.0019/0.0107
2087'-2"	0/0.0018	0/0.0022	0/0.0020	0/0.0022
2073'-6"	0.0119/0.0393	0.0125/0.0402	0.0078/0.0333	0.0125/0.0402
2065'-0"	0.0675/0.0807	0.0700/0.0829	0.0489/0.0634	0.0700/0.0829
2047'-6"	0.1568/0.1879	0.1630/0.1924	0.1043/0.1369	0.1630/0.1924
2032'-0"	0.2916/0.3055	0.3006/0.3130	0.1865/0.2003	0.3006/0.3130
2026'-0"	0.3514/0.3772	0.3608/0.3834	0.2209/0.2458	0.3608/0.3834
2016'-0"	0.4717/0.4898	0.4804/0.4958	0.2837/0.3003	0.4804/0.4958
2000'-0"	0.6617	0.6711	0.4020	0.6711

REV 29 NOTE:
Attachment of ESW Vertical Loop Chase does not affect the response accelerations of the Auxiliary/Control Building.

REV. 29
WOLF CREEK
UPDATED SAFETY ANALYSIS REPORT

TABLE 3.7(B)-7X
RESPONSE BENDING MOMENTS
(MILLIONS OF KIP-FEET)
AUXILIARY/CONTROL BUILDING
OBE NORTH-SOUTH DIRECTION

REF. FIGURE 3.7(B) - 19

MASS POINT EL.	SITE			ENVELOPE
	CALLAWAY	STERLING	WOLF CREEK	
2102'-6"	0.0001/0.0018	0.0001/0.0021	0.0001/0.0014	0.0001/0.0021
2090'-0"	0.0021/0.0106	0.0025/0.0127	0.0016/0.0080	0.0025/0.0127
2087'-2"	0/0.0011	0/0.0011	0/0.0001	0/0.0011
2073'-6"	0.0115/0.0365	0.0133/0.0424	0.0085/0.0283	0.0133/0.0424
2065'-0"	0.0654/0.0785	0.0757/0.0905	0.0486/0.0588	0.0757/0.0905
2047'-6"	0.1561/0.1808	0.1795/0.2067	0.1154/0.1338	0.1795/0.2067
2032'-0"	0.2856/0.2979	0.3248/0.3378	0.2094/0.2184	0.3248/0.3378
2026'-0"	0.3444/0.3602	0.3898/0.4066	0.2518/0.2633	0.3898/0.4066
2016'-0"	0.4548/0.4684	0.5110/0.5248	0.3301/0.3396	0.5110/0.5248
2000'-0"	0.6395	0.7128	0.4593	0.7128

REV 29 NOTE:
Attachment of ESW Vertical Loop Chase does not affect the response accelerations of the Auxiliary/Control Building.

REV. 29
WOLF CREEK
UPDATED SAFETY ANALYSIS REPORT

TABLE 3.7(B)-7Y
RESPONSE BENDING MOMENTS
(MILLIONS OF KIP-FEET)
AUXILIARY/CONTROL BUILDING
OBE EAST-WEST DIRECTION

REF. FIGURE 3.7(B) - 19

MASS POINT EL.	SITE			ENVELOPE
	CALLAWAY	STERLING	WOLF CREEK	
2102'-6"	0.108	0.035	0.036	0.108
2090'-0"	0.106	0.033	0.034	0.106
2087'-2"	0.105	0.032	0.034	0.105
2073'-6"	0.103	0.030	0.032	0.102
2065'-0"	0.100	0.027	0.031	0.100
2047'-6"	0.095	0.022	0.028	0.095
2032'-0"	0.090	0.016	0.024	0.090
2026'-0"	0.088	0.014	0.023	0.088
2016'-0"	0.084	0.011	0.021	0.084
2000'-0"	0.079	0.005	0.016	0.079

REV 29 NOTE:
Attachment of ESW Vertical Loop Chase does not affect the response accelerations of the Auxiliary/Control Building.

REV. 29
WOLF CREEK
UPDATED SAFETY ANALYSIS REPORT

TABLE 3.7(B)-7Z
RESPONSE DISPLACEMENTS (INCHES) AUXILIARY/CONTROL BUILDING
OBE NORTH-SOUTH DIRECTION

REF. FIGURE 3.7(B) - 19

MASS POINT EL.	SITE			ENVELOPE
	CALLAWAY	STERLING	WOLF CREEK	
2102'-6"	0.106	0.048	0.039	0.106
2090'-0"	0.103	0.046	0.038	0.103
2087'-2"	0.102	0.044	0.037	0.102
2073'-6"	0.098	0.040	0.034	0.098
2065'-0"	0.095	0.037	0.032	0.095
2047'-6"	0.089	0.029	0.027	0.089
2032'-0"	0.083	0.023	0.022	0.083
2026'-0"	0.080	0.020	0.020	0.080
2016'-0"	0.076	0.015	0.017	0.076
2000'-0"	0.070	0.008	0.013	0.070

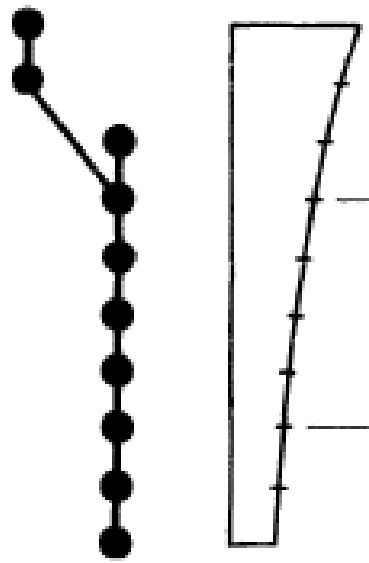

REV 29 NOTE:
Attachment of ESW Vertical Loop Chase does not affect the response accelerations of the Auxiliary/Control Building.

REV. 29
WOLF CREEK
UPDATED SAFETY ANALYSIS REPORT

TABLE 3.7(B)-7AA
RESPONSE DISPLACEMENTS (INCHES) AUXILIARY/CONTROL BUILDING
OBE EAST-WEST DIRECTION

REF. FIGURE 3.7(B) - 19

MASS POINT EL.	SITE			ENVELOPE
	CALLAWAY	STERLING	WOLF CREEK	
2102'-6"	0.007	0.004	0.006	0.007
2090'-0"	0.007	0.004	0.006	0.007
2087'-2"	0.007	0.004	0.005	0.007
2073'-6"	0.007	0.004	0.005	0.007
2065'-0"	0.007	0.004	0.005	0.007
2047'-6"	0.006	0.003	0.005	0.006
2032'-0"	0.006	0.003	0.004	0.006
2026'-0"	0.005	0.002	0.004	0.005
2016'-0"	0.005	0.002	0.003	0.005
2000'-0"	0.004	0.001	0.003	0.004

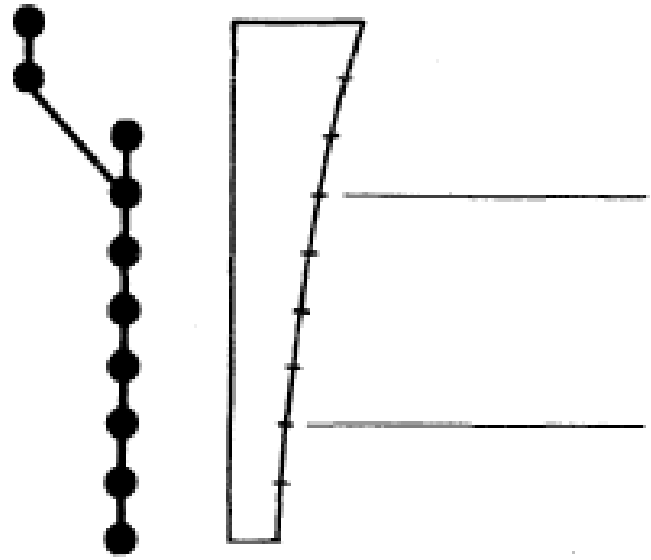

REV 29 NOTE:
Attachment of ESW Vertical Loop Chase does not affect the response accelerations of the Auxiliary/Control Building.

REV. 29
WOLF CREEK
UPDATED SAFETY ANALYSIS REPORT

TABLE 3.7(B)-7AB
RESPONSE DISPLACEMENTS (INCHES) AUXILIARY/CONTROL BUILDING
OBE VERTICAL DIRECTION

TABLE 3.7 (B) — 8A

RESPONSE ACCELERATIONS (G's)
DIESEL GENERATOR BUILDING
SSE
NORTH-SOUTH DIRECTION

Rev. 0

REF. FIGURE 3.7(B) - 20

MASS POINT EL.	SITE			ENVELOPE
	CALLAWAY	STERLING	WOLF CREEK	
2066'-0"	0.581	0.470	0.375	0.581
2047'-2"	0.477	0.399	0.325	0.477
2027'-6"	0.374	0.317	0.290	0.374
2000'-0"	0.256	0.246	0.255	0.256

WOLF CREEK

TABLE 3.7 (B) — 8B

RESPONSE ACCELERATIONS (G's)
DIESEL GENERATOR BUILDING
SSE
EAST-WEST DIRECTION

Rev. 0

REF. FIGURE 3.7(B) - 20

MASS POINT EL.	SITE			ENVELOPE
	CALLAWAY	STERLING	WOLF CREEK	
2066'-0"	0.585	0.524	0.516	0.585
2047'-2"	0.468	0.457	0.423	0.468
2027'-6"	0.318	0.317	0.287	0.318
2000'-0"	0.184	0.258	0.243	0.258

WOLF CREEK

TABLE 3.7 (B) — 8C

RESPONSE ACCELERATIONS (G's)
DIESEL GENERATOR BUILDING
SSE
VERTICAL DIRECTION

Rev. 0

REF. FIGURE 3.7(B) - 20

MASS POINT EL.	SITE			ENVELOPE
	CALLAWAY	STERLING	WOLF CREEK	
2066'-0"	0.263	0.251	0.266	0.266
2047'-2"	0.263	0.250	0.266	0.266
2027'-6"	0.261	0.247	0.264	0.264
2000'-0"	0.258	0.244	0.260	0.260

TABLE 3.7 (B) — 8D

RESPONSE INERTIA FORCES (KIPS)
DIESEL GENERATOR BUILDING
SSE
NORTH-SOUTH DIRECTION

Rev. 0

REF. FIGURE 3.7(B) - 20

MASS POINT EL.	SITE			ENVELOPE
	CALLAWAY	STERLING	WOLF CREEK	
2066'-0"	670	550	440	670
2047'-2"	1450	1230	1010	1450
2027'-6"	670	580	490	670
2000'-0"	—	—	—	

WOLF CREEK

TABLE 3.7 (B) — 8E

RESPONSE INERTIA FORCES (KIPS)
DIESEL GENERATOR BUILDING
SSE
EAST-WEST DIRECTION

Rev. 0

REF. FIGURE 3.7(B) - 20

MASS POINT EL.	SITE			ENVELOPE
	CALLAWAY	STERLING	WOLF CREEK	
2066'-0"	710	620	600	710
2047'-2"	1470	1400	1300	1470
2027'-6"	580	580	510	580
2000'-0"	—	—	—	

WOLF CREEK

TABLE 3.7 (B) — 8F

RESPONSE INERTIA FORCES (KIPS)
DIESEL GENERATOR BUILDING
SSE
VERTICAL DIRECTION

Rev. 0

REF. FIGURE 3.7(B) - 20

MASS POINT EL.	SITE			ENVELOPE
	CALLAWAY	STERLING	WOLF CREEK	
2066'-0"	300	290	310	310
2047'-2"	800	750	790	800
2027'-6"	460	440	460	460
2000'-0"	—	—	—	

WOLF CREEK

TABLE 3.7 (B) — 8G

RESPONSE SHEAR FORCES (KIPS)
DIESEL GENERATOR BUILDING
SSE
NORTH-SOUTH DIRECTION

Rev. 0

REF. FIGURE 3.7(B) - 20

MASS POINT EL.	SITE			ENVELOPE
	CALLAWAY	STERLING	WOLF CREEK	
2066'-0"				670
2047'-2"	670	550	440	2120
2027'-6"	2120	1780	1450	2790
2000'-0"	2790	2360	1940	

WOLF CREEK

TABLE 3.7 (B) — 8H

RESPONSE SHEAR FORCES (KIPS)
DIESEL GENERATOR BUILDING
SSE
EAST-WEST DIRECTION

Rev. 0

REF. FIGURE 3.7(B) - 20

MASS POINT EL.	SITE			ENVELOPE
	CALLAWAY	STERLING	WOLF CREEK	
2066'-0"	710	620	600	710
2047'-2"	2180	2020	1900	2180
2027'-6"	2760	2600	2410	2760
2000'-0"				

WOLF CREEK

TABLE 3.7 (B) — 8I

RESPONSE AXIAL FORCES (KIPS)
DIESEL GENERATOR BUILDING
SSE
VERTICAL DIRECTION

Rev. 0

REF. FIGURE 3.7(B) - 20

MASS POINT EL.	SITE			ENVELOPE
	CALLAWAY	STERLING	WOLF CREEK	
2066'-0"				310
	300	290	310	
2047'-2"				1100
	1100	1040	1100	
2027'-6"				1560
	1560	1480	1560	
2000'-0"				

WOLF CREEK

TABLE 3.7 (B) — 8J

RESPONSE BENDING MOMENTS (MILLIONS OF KIP-FEET)
DIESEL GENERATOR BUILDING
SSE
NORTH-SOUTH DIRECTION

Rev. 0

REF. FIGURE 3.7(B) - 20

MASS POINT EL.	SITE			ENVELOPE
	CALLAWAY	STERLING	WOLF CREEK	
2066'-0"	0/0.0007	0/0.0004	0/0.0004	0/0.0007
2047'-2"	0.0134/0.0212	0.0108/0.0145	0.0087/0.0120	0.0134/0.0212
2027'-6"	0.0629/0.0698	0.0496/0.0525	0.0405/0.0434	0.0629/0.0698
2000'-0"	0.1460	0.1175	0.0967	0.1460

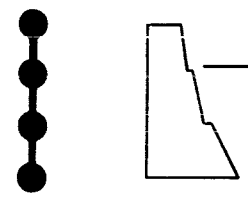

TABLE 3.7 (B) — 8K

RESPONSE BENDING MOMENTS (MILLIONS OF KIP-FEET)
DIESEL GENERATOR BUILDING
SSE
EAST-WEST DIRECTION

Rev. 0

REF. FIGURE 3.7(B) - 20

MASS POINT EL.	SITE			ENVELOPE
	CALLAWAY	STERLING	WOLF CREEK	
2066'-0"	0/0.0032	0/0.0015	0/0.0023	0/0.0032
2047'-2"	0.0163/0.0235	0.0131/0.0166	0.0138/0.0195	0.0163/0.0235
2027'-6"	0.0664/0.0706	0.0564/0.0582	0.0570/0.0601	0.0664/0.0706
2000'-0"	0.1464	0.1296	0.1264	0.1464

WOLF CREEK

TABLE 3.7 (B) — 8L

RESPONSE DISPLACEMENTS (INCHES)
DIESEL GENERATOR BUILDING
SSE
NORTH-SOUTH DIRECTION

Rev. 0

REF. FIGURE 3.7(B) - 20

MASS POINT EL.	SITE			ENVELOPE
	CALLAWAY	STERLING	WOLF CREEK	
2066'-0"	0.278	0.043	0.048	0.278
2047'-2"	0.248	0.034	0.037	0.248
2027'-6"	0.215	0.022	0.024	0.215
2000'-0"	0.168	0.007	0.005	0.168

WOLF CREEK

TABLE 3.7 (B) — 8M

RESPONSE DISPLACEMENTS (INCHES)
DIESEL GENERATOR BUILDING
SSE
EAST-WEST DIRECTION

Rev. 0

REF. FIGURE 3.7(B) - 20

MASS POINT EL.	SITE			ENVELOPE
	CALLAWAY	STERLING	WOLF CREEK	
2066'-0"	0.347	0.090	0.124	0.347
2047'-2"	0.304	0.077	0.102	0.304
2027'-6"	0.245	0.049	0.067	0.245
2000'-0"	0.160	0.009	0.015	0.160

WOLF CREEK

TABLE 3.7 (B) — 8N

RESPONSE DISPLACEMENTS (INCHES)
DIESEL GENERATOR BUILDING
SSE
VERTICAL DIRECTION

Rev. 0

REF. FIGURE 3.7(B) - 20

MASS POINT EL.	SITE			ENVELOPE
	CALLAWAY	STERLING	WOLF CREEK	
2066'-0"	0.010	0.004	0.007	0.010
2047'-2"	0.010	0.004	0.007	0.010
2027'-6"	0.008	0.003	0.006	0.008
2000'-0"	0.006	0.001	0.004	0.006

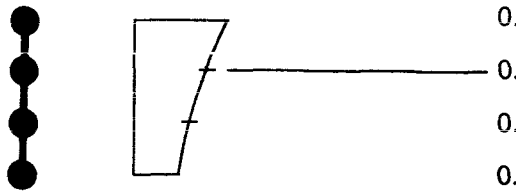

WOLF CREEK

TABLE 3.7 (B) — 8O

RESPONSE ACCELERATIONS (G's)
DIESEL GENERATOR BUILDING
OBE
NORTH-SOUTH DIRECTION

Rev. 0

REF. FIGURE 3.7(B) - 20

MASS POINT EL.	SITE			ENVELOPE
	CALLAWAY	STERLING	WOLF CREEK	
2066'-0"	0.261	0.259	0.205	0.261
2047'-2"	0.221	0.218	0.177	0.221
2027'-6"	0.180	0.168	0.149	0.180
2000'-0"	0.130	0.129	0.134	0.134

TABLE 3.7 (B) — 8P

RESPONSE ACCELERATIONS (G's)
DIESEL GENERATOR BUILDING
OBE
EAST-WEST DIRECTION

REF. FIGURE 3.7(B) - 20

MASS POINT EL.	SITE			ENVELOPE
	CALLAWAY	STERLING	WOLF CREEK	
2066'-0"	0.291	0.320	0.291	0.320
2047'-2"	0.238	0.282	0.241	0.282
2027'-6"	0.158	0.197	0.163	0.197
2000'-0"	0.102	0.136	0.130	0.136

TABLE 3.7 (B) — 8Q

RESPONSE ACCELERATIONS (G's)
DIESEL GENERATOR BUILDING
OBE
VERTICAL DIRECTION

REF. FIGURE 3.7(B) - 20

MASS POINT EL.	SITE			ENVELOPE
	CALLAWAY	STERLING	WOLF CREEK	
2066'-0"	0.142	0.131	0.140	0.142
2047'-2"	0.142	0.130	0.139	0.142
2027'-6"	0.140	0.129	0.136	0.140
2000'-0"	0.137	0.127	0.131	0.137

WOLF CREEK

TABLE 3.7 (B) — 8R

RESPONSE INERTIA FORCES (KIPS)
DIESEL GENERATOR BUILDING
OBE
NORTH-SOUTH DIRECTION

Rev. 0

REF. FIGURE 3.7(B) - 20

MASS POINT EL.	SITE			ENVELOPE
	CALLAWAY	STERLING	WOLF CREEK	
2066'-0"	300	310	240	310
2047'-2"	670	670	550	670
2027'-6"	320	310	310	320
2000'-0"	—	—	—	

WOLF CREEK

TABLE 3.7 (B) — 8S

RESPONSE INERTIA FORCES (KIPS)
DIESEL GENERATOR BUILDING
OBE
EAST-WEST DIRECTION

Rev. 0

REF. FIGURE 3.7(B) - 20

MASS POINT EL.	SITE			ENVELOPE
	CALLAWAY	STERLING	WOLF CREEK	
2066'-0"	350	380	350	380
2047'-2"	730	860	750	860
2027'-6"	280	360	290	360
2000'-0"	—	—	—	

TABLE 3.7 (B) — 8T

RESPONSE INERTIA FORCES (KIPS)
DIESEL GENERATOR BUILDING
OBE
VERTICAL DIRECTION

Rev. 0

REF. FIGURE 3.7(B) - 20

MASS POINT EL.	SITE			ENVELOPE
	CALLAWAY	STERLING	WOLF CREEK	
2066'-0"	170	150	160	170
2047'-2"	430	400	420	430
2027'-6"	250	230	230	250
2000'-0"	—	—	—	

TABLE 3.7 (B) — 8U

RESPONSE SHEAR FORCES (KIPS)
DIESEL GENERATOR BUILDING
OBE
NORTH-SOUTH DIRECTION

Rev. 0

REF. FIGURE 3.7(B) - 20

MASS POINT EL.	SITE			ENVELOPE
	CALLAWAY	STERLING	WOLF CREEK	
2066'-0"				310
	300	310	240	
2047'-2"				980
	970	980	790	
2027'-6"				1290
	1290	1290	1100	
2000'-0"				

TABLE 3.7 (B) — 8V

RESPONSE SHEAR FORCES (KIPS)
DIESEL GENERATOR BUILDING
OBE
EAST-WEST DIRECTION

Rev. 0

REF. FIGURE 3.7(B) - 20

MASS POINT EL.	SITE			ENVELOPE
	CALLAWAY	STERLING	WOLF CREEK	
2066'-0"				380
	350	380	350	
2047'-2"				1240
	1080	1240	1100	
2027'-6"				1600
	1360	1600	1390	
2000'-0"				

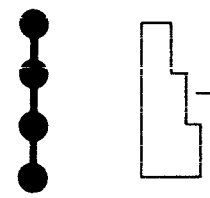

WOLF CREEK

TABLE 3.7 (B) — 8W

RESPONSE AXIAL FORCES (KIPS)
DIESEL GENERATOR BUILDING
OBE
VERTICAL DIRECTION

Rev. 0

REF. FIGURE 3.7(B) - 20

MASS POINT EL.	SITE			ENVELOPE
	CALLAWAY	STERLING	WOLF CREEK	
2066'-0"	170	150	160	170
2047'-2"	600	550	580	600
2027'-6"	850	780	810	850
2000'-0"				

WOLF CREEK

TABLE 3.7 (B) — 8X

RESPONSE BENDING MOMENTS (MILLIONS OF KIP-FEET)
DIESEL GENERATOR BUILDING
OBE
NORTH-SOUTH DIRECTION

Rev. 0

REF. FIGURE 3.7(B) - 20

MASS POINT EL.	SITE			ENVELOPE
	CALLAWAY	STERLING	WOLF CREEK	
2066'-0"	0/0.0003	0/0.0002	0/0.0002	0/0.0003
2047'-2"	0.0059/0.0087	0.0060/0.0082	0.0048/0.0066	0.0060/0.0087
2027'-6"	0.0278/0.0302	0.0275/0.0293	0.0221/0.0237	0.0278/0.0302
2000'-0"	0.0655	0.0647	0.0525	0.0655

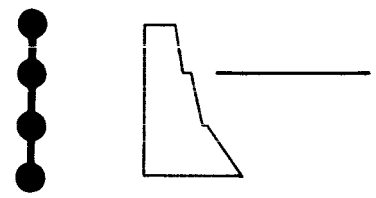

WOLF CREEK

TABLE 3.7 (B) — 8Y

RESPONSE BENDING MOMENTS (MILLIONS OF KIP-FEET)
DIESEL GENERATOR BUILDING
OBE
EAST-WEST DIRECTION

Rev. 0

REF. FIGURE 3.7(B) - 20

MASS POINT EL.	SITE			ENVELOPE
	CALLAWAY	STERLING	WOLF CREEK	
2066'-0"	0/0.0013	0/0.0008	0/0.0012	0/0.0013
2047'-2"	0.0078/0.0111	0.0079/0.0099	0.0078/0.0107	0.0079/0.0111
2027'-6"	0.0323/0.0341	0.0343/0.0353	0.0323/0.0338	0.0343/0.0353
2000'-0"	0.0716	0.0793	0.0720	0.0793

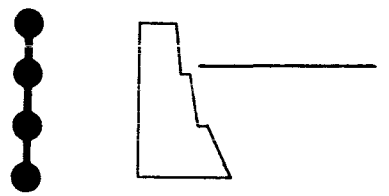

WOLF CREEK

TABLE 3.7 (B) — 8Z

RESPONSE DISPLACEMENTS (INCHES)
DIESEL GENERATOR BUILDING
OBE
NORTH-SOUTH DIRECTION

Rev. 0

REF. FIGURE 3.7(B) - 20

MASS POINT EL.	SITE			ENVELOPE
	CALLAWAY	STERLING	WOLF CREEK	
2066'-0"	0.101	0.022	0.025	0.101
2047'-2"	0.090	0.017	0.019	0.090
2027'-6"	0.078	0.011	0.013	0.078
2000'-0"	0.061	0.003	0.003	0.061

WOLF CREEK

TABLE 3.7 (B) — 8AA

RESPONSE DISPLACEMENTS (INCHES)
DIESEL GENERATOR BUILDING
OBE
EAST-WEST DIRECTION

Rev. 0

REF. FIGURE 3.7(B) - 20

MASS POINT EL.	SITE			ENVELOPE
	CALLAWAY	STERLING	WOLF CREEK	
2066'-0"	0.132	0.054	0.064	0.132
2047'-2"	0.115	0.046	0.053	0.115
2027'-6"	0.090	0.029	0.034	0.090
2000'-0"	0.055	0.005	0.007	0.055

WOLF CREEK

TABLE 3.7 (B) — 8AB

RESPONSE DISPLACEMENTS (INCHES)
DIESEL GENERATOR BUILDING
OBE
VERTICAL DIRECTION

Rev. 0

REF. FIGURE 3.7(B) - 20

MASS POINT EL.	SITE			ENVELOPE
	CALLAWAY	STERLING	WOLF CREEK	
2066'-0"	0.005	0.002	0.004	0.005
2047'-2"	0.005	0.002	0.003	0.005
2027'-6"	0.004	0.002	0.003	0.004
2000'-0"	0.003	0.001	0.002	0.003

TABLE 3.7(B)-9

DESIGN COMPARISON WITH R.G. 1.12, REVISION 2, DATED MARCH 1997, TITLED NUCLEAR POWER PLANT INSTRUMENTATION FOR EARTHQUAKES

Regulatory Guide 1.12 Position	WCGS	Instr. Tag No.
C. REGULATORY POSITION		
1.2 A Triaxial time history accelerograph should be provided at the following locations:	Complies - See items 1 through 5 below.	
1. Free Field	Complies.	SGAR0001
2. Containment Foundation	Complies.	SGAE0001
3. Two elevations (excluding the foundation) on a structure inside containment.	Complies with exception that one instrument is located inside containment and one instrument is located outside containment on the containment wall to support ALARA.	SGAE0002, SGAE0003
4. An independent Seismic Category I structure foundation where the response is different from that of the containment structure.	Complies.	SGAE0004
5. An elevation (excluding the foundation) on an independent Seismic Category I structure selected in 4 above.	Complies.	SGAE0005
6. If seismic isolators are used, instrumentation should be placed on both the rigid and isolated portions of the same or an adjacent structure, as appropriate, at approximately the same elevations.	N/A - Seismic isolators are not used at WCGS.	
1.3 The specific loctions for instrumentation should be determined by the nuclear plant designer to obtain the most pertinent information consistent with maintaining occupational radiation exposures ALARA for the location, installation, and maintenance of seismic instrumentation. In general:	Complies - See 1.3.1 through 1.3.5 below.	

TABLE 3.7(B)-9 (sheet 2)

DESIGN COMPARISON WITH R.G. 1.12, REVISION 2, DATED MARCH 1997, TITLED NUCLEAR POWER PLANT INSTRUMENTATION FOR EARTHQUAKES

1.3.1 The free-field sensors should be located and installed so that they record the motion of the ground surface and so that the effects associated with surface features, buildings, and components on the recorded ground motion will be insignificant.	Complies.	SGAR0001
1.3.2 The in-structure instrumentation should be placed at locations that have been modeled as mass points in the building dynamic analysis so that the measured motion can be directly compared with the design spectra. The instrumentation should not be located on a secondary structural frame member that is not modeled as a mass point in the building dynamic model.	Complies.	
1.3.3 A design review of the location, installation, and maintenance of proposed instrumentation for maintaining exposures ALARA should be performed by the facility in the planning stage in accordance with Regulatory Guide 8.8, "Information Relevant to Ensuring that Occupational Radiation Exposures at Nuclear Power Stations Will Be As Low As Is Reasonably Achievable."	Complies.	
1.3.4 Instrumentation should be placed in a location with as low a dose rate as is practical, consistent with other requirements.	Complies.	
1.3.5 Instruments should be selected to require minimal maintenance and in-service inspection, as well as minimal time and numbers of personnel to conduct installation and maintenance.	Complies.	

TABLE 3.7(B)-9 (sheet 3)

DESIGN COMPARISON WITH R.G. 1.12, REVISION 2, DATED MARCH 1997, TITLED NUCLEAR POWER PLANT INSTRUMENTATION FOR EARTHQUAKES

2. INSTRUMENTATION AT MULTI-UNIT SITES Instrumentation in addition to that installed for a single unit will not be required if essentially the same seismic response is expected at the other units based on the seismic analysis used in the seismic design of the plant. However, if there are separate control rooms, annunciation should be provided to both control rooms as specified in Regulatory Position 7.	N/A-WCGS is a single unit.	
3. SEISMIC INSTRUMENTATION OPERABILITY The seismic instrumentation should operate during all modes of plant operation, including periods of plant shutdown. The maintenance and repair procedures should provide for keeping the maximum number of instruments in service during plant operation and shutdown.	Complies.	
4. INSTRUMENTATION CHARACTERISTICS	Complies - See 4.1, through 4.9 below	
4.1 The design should include provisions for in-service testing. The instruments should be capable of periodic channel checks during normal plant operation.	Complies - System designed with continuous and periodic self test capability.	
4.2 The instruments should have the capability for in-place functional testing.	Complies - In addition to continuous self test capability; system has a periodic self test capability.	
4.3 Instrumentation that has sensors located in inaccessible areas should contain provisions for data recording in an accessible location, and the instrumentation should provide an external remote alarm to indicate actuation.	Complies - Ring buffer provided in each recorder with a maximum pre-event recording time of 17 seconds; maximum post event time of 30 seconds.	

TABLE 3.7(B)-9 (sheet 4)

DESIGN COMPARISON WITH R.G. 1.12, REVISION 2, DATED MARCH 1997, TITLED NUCLEAR POWER PLANT INSTRUMENTATION FOR EARTHQUAKES

4.4 The instrumentation should record, at a minimum, 3 seconds of low-amplitude motion prior to seismic trigger actuation, continue to record the motion during the period in which the earthquake motion exceeds the seismic trigger threshold, and continue to record low-amplitude motion for a minimum of 5 seconds beyond the last exceedance of the seismic trigger threshold.	Complies – Ring buffer provided in each recorder with a maximum pre-event recording time of 17 seconds; maximum post event time of 30 seconds.	
4.5 The instrumentation should be capable of recording 25 minutes of sensed motion.	Complies – 2 Mbytes of internal SRAM for each recorder provides a maximum recording time of approximately 40 minutes in highest resolution (20 bit) setting of recorder.	
4.6 The battery should be of sufficient capacity to power the instrumentation to sense and record (see Regulatory Position 4.5) 25 minutes of motion over a period of not less than the channel check test interval (Regulatory Position 8.2). This can be accomplished by providing enough battery capacity for a minimum of 25 minutes of system operation at any time over a 24-hour period, without recharging, in combination with a battery charger whose line power is connected to an uninterruptible power supply or a line source with an alarm that is checked at least every 24 hours. Other combinations of larger battery capacity and alarm intervals may be used.	Complies – The batteries have sufficient capacity to power each recorder for > 40 hours.	

TABLE 3.7(B)-9 (sheet 5)

DESIGN COMPARISON WITH R.G. 1.12, REVISION 2, DATED MARCH 1997, TITLED NUCLEAR POWER PLANT INSTRUMENTATION FOR EARTHQUAKES

4.7 Accelertion Sensors	Complies – See 4.7.1 and 4.7.2 below.	
4.7.1 The dynamic range should be 1000:1 zero to peak, or greater; for example, 0.001g to 1.0g.	Complies – Dynamic range of sensors (included in the motion recorder) is >84 dB or >15,800 to 1 or 0.0001 g to 1.0 g which equals 10,000 to 1.	
4.7.2 The frequency range should be 0.20 Hz to 50 Hz or an equivalent demonstrated to be adequate by computational techniques applied to the resultant accelerogram.	Complies – Frequency range of DC to 150 Hz (-3dB)	
4.8 Recorder	Complies – See 4.8.1 through 4.8.3 below.	
4.8.1 The sample rate should be at least 200 samples per second in each of the three directions.	Complies – Motion recorder has a sample rate of 200 sps.	
4.8.2 The bandwidth should be at least from 0.20 Hz to 50 Hz.	Complies – Motion recorders have a bandwidth of DC to 50 Hz.	
4.8.3 The dynamic range should be 100:1 or greater, and the instrumentation should be able to record at least 1.0g zero to peak.	Complies – Motion recorders have a minimum dynamic range (for 16 bit A/D converter) of 96dB or > 65,000 to 1. The recorders can record + or – 2.0 g zero to peak.	
4.9 Seismic Trigger. The actuating level should be adjustable and within the range of 0.001g to 0.02g.	Complies – Trigger level is adjustable on all three (3) axes from 0.0005 to 0.05 g. The system trigger is set within the range as stated in 4.9	
5. INSTRUMENTATION INSTALLATION	Complies – See 5.1 through 5.3 below.	

TABLE 3.7(B)-9 (sheet 6)

DESIGN COMPARISON WITH R.G. 1.12, REVISION 2, DATED MARCH 1997, TITLED NUCLEAR POWER PLANT INSTRUMENTATION FOR EARTHQUAKES

5.1 The instrumentation should be designed and installed so that the mounting is rigid.	Complies.	
5.2 The instrumentation should be oriented so that the horizontal components are parallel to the orthogonal horizontal axes assumed in the seismic analysis.	Complies.	
5.3 Protection against accidental impacts should be provided.	Complies.	
6. INSTRUMENTTION ACTUATION	Complies – See 6.1 through 6.3 below.	
6.1 Both vertical and horizontal input vibratory ground motion should actuate the same time-history accelerograph. One or more seismic triggers may be used to accomplish this.	Complies – The time history accelerographs contain triaxial accelerometers. The accelerographs will trigger on the selected values if present on any axis.	
6.2 Spurious triggering should be avoided.	Complies – Coincidence or voting logic will reduce or eliminate spurious triggering.	
6.3 The seismic trigger mechanisms of the time-history accelerograph should be set for a threshold ground acceleration of not more than 0.02g.	Complies – The trigger of the free field strong motion accelerometer /recorder is set for 0.02g.	
7. REMOTE INDICATION Triggering of the free-field or any foundation-level time-history accelerograph should be annunciated in the control room. If there is more than one control room at the site, annunciation should be provided to each control room.	Complies – Triggering is annunciated in the MCR.	

TABLE 3.7(B)-9 (sheet 7)

DESIGN COMPARISON WITH R.G. 1.12, REVISION 2, DATED MARCH 1997, TITLED NUCLEAR POWER PLANT INSTRUMENTATION FOR EARTHQUAKES

8. MAINTENANCE	Complies - See 8.1 and 8.2 below.	
8.1 The purpose of the maintenance program is to ensure that the equipment will perform as required. As stated in Regulatory Position 3, the maintenance and repair procedures should provide for keeping the maximum number of instruments in service during plant operation and shutdown.	Complies.	
8.2 Systems are to be given channel checks every 2 weeks for the first 3 months of service after startup. Failures of devices normally occur during initial operation. After the initial 3-month period and 3 consecutive successful checks, monthly channel checks are sufficient. The monthly channel check is to include checking the batteries. The channel functional test should be performed every 6 months. Channel calibration should be performed during each refueling outage at a minimum.	Complies.	

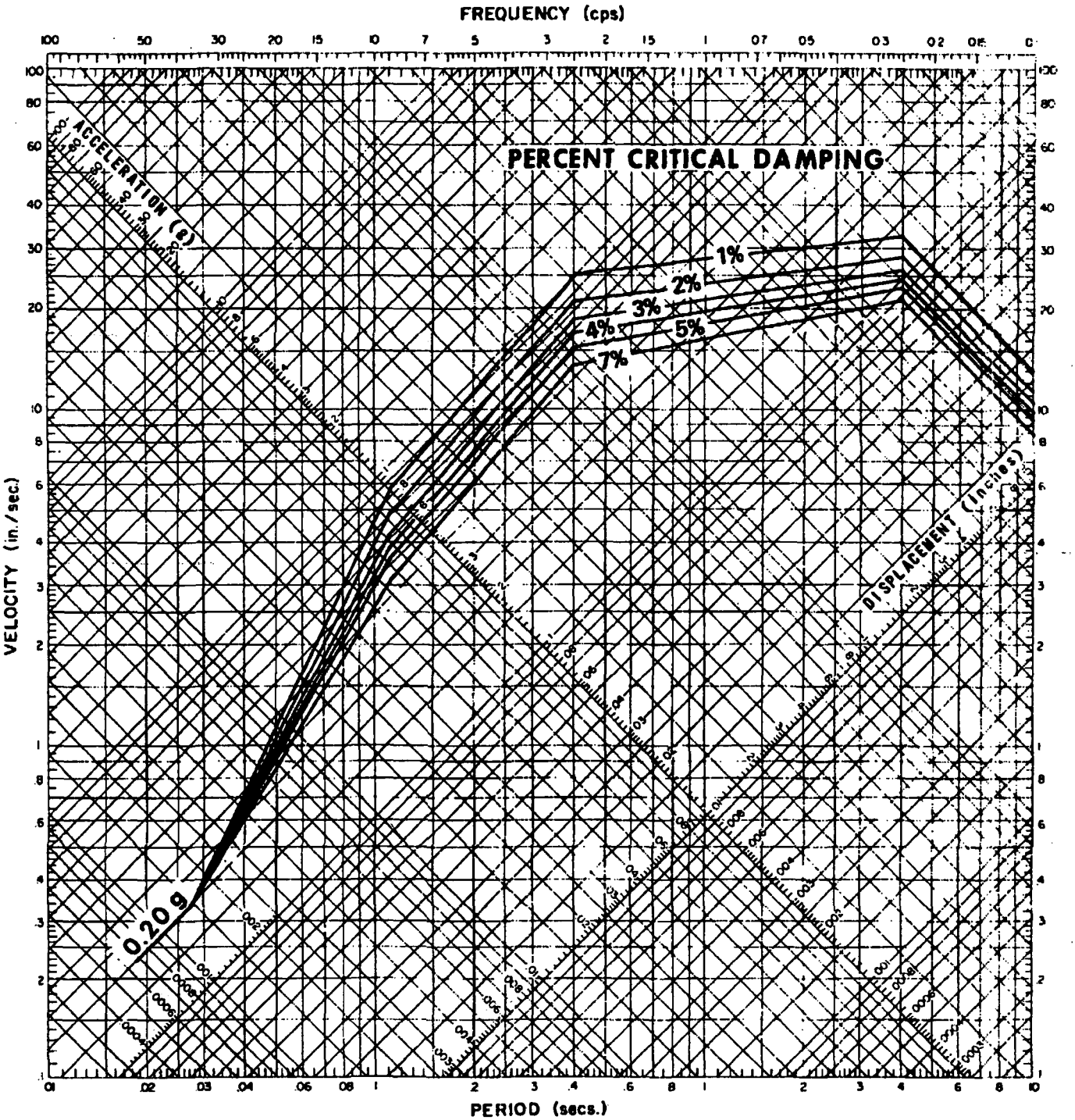

WOLF CREEK REV.22 UPDATED SAFETY ANALYSIS REPORT
FIGURE 3.7(B)-1 SSE HORIZONTAL GROUND SPECTRA 0.20g (WCGS)

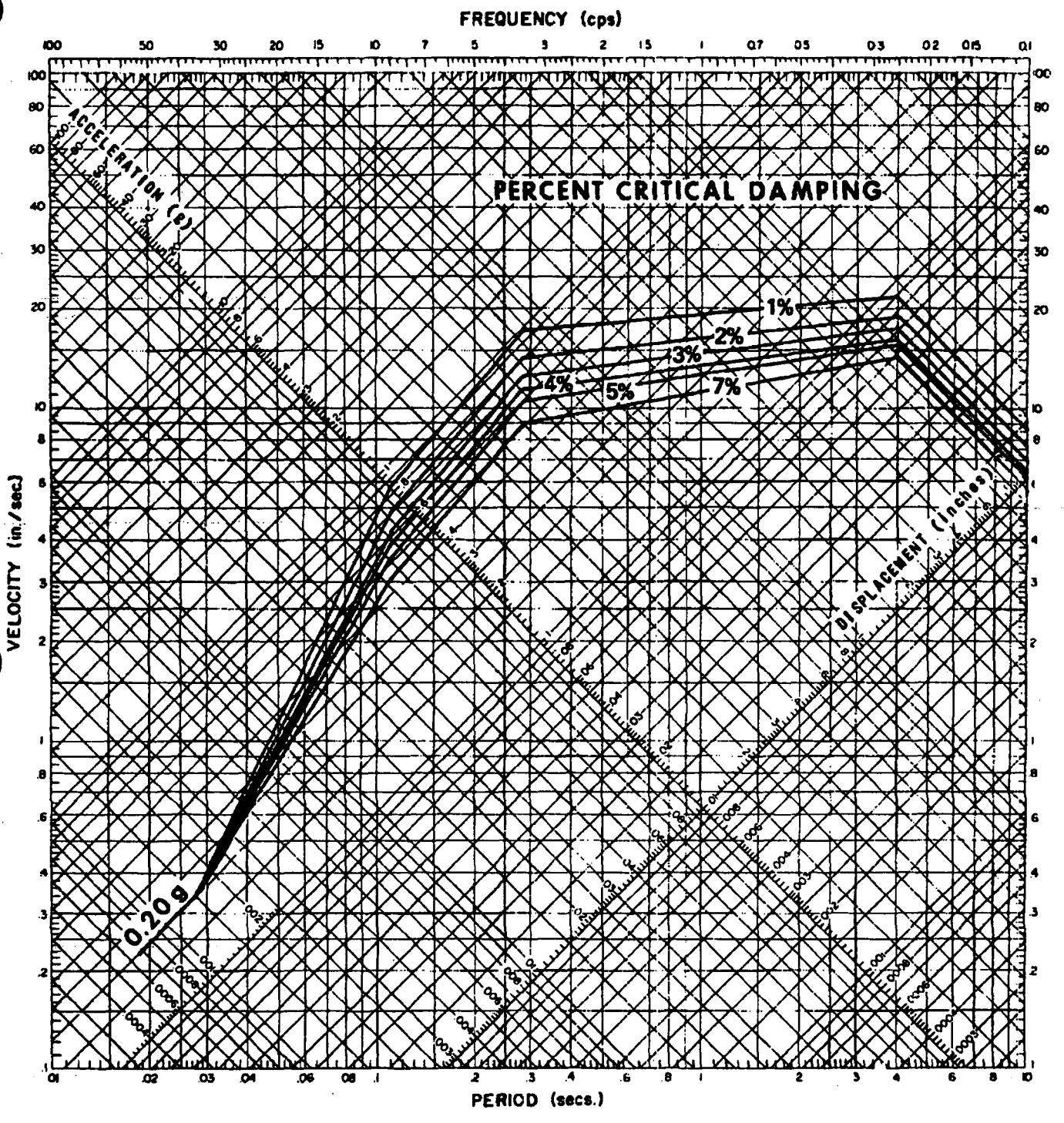

WOLF CREEK REV.22 UPDATED SAFETY ANALYSIS REPORT
FIGURE 3.7(B)-2 SSE VERTICAL GROUND SPECTRA 0.20g (WCGS)

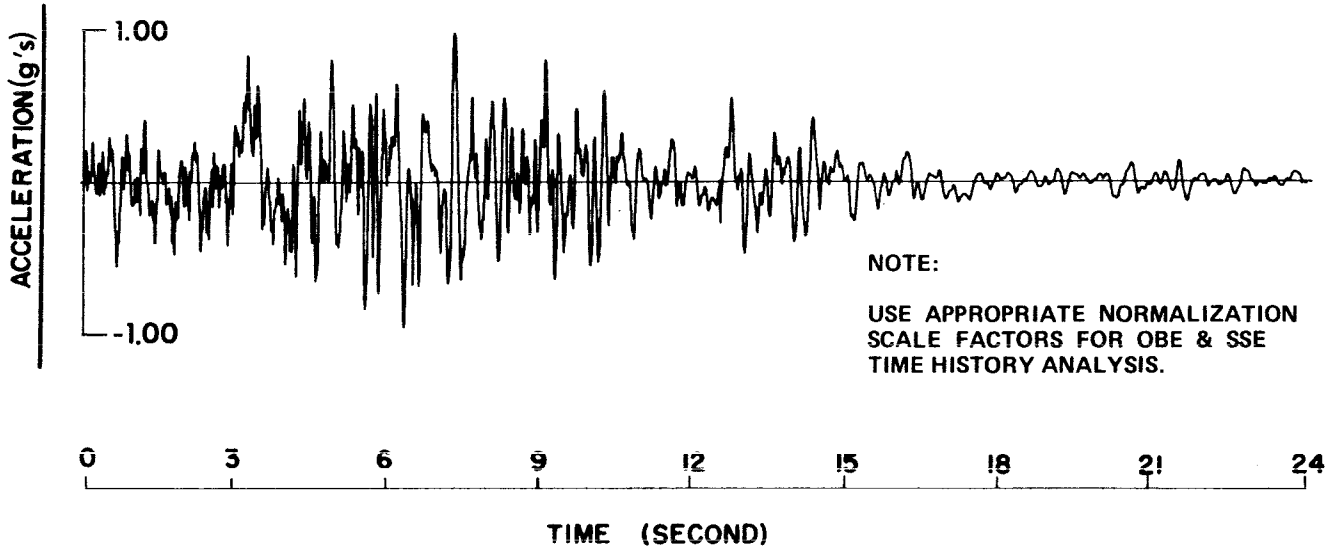

Rev. 0

WOLF CREEK
UPDATED SAFETY ANALYSIS REPORT

FIGURE 3.7(B)-3

SYNTHESIZED TIME HISTORY
HORIZONTAL (OBE AND SSE)

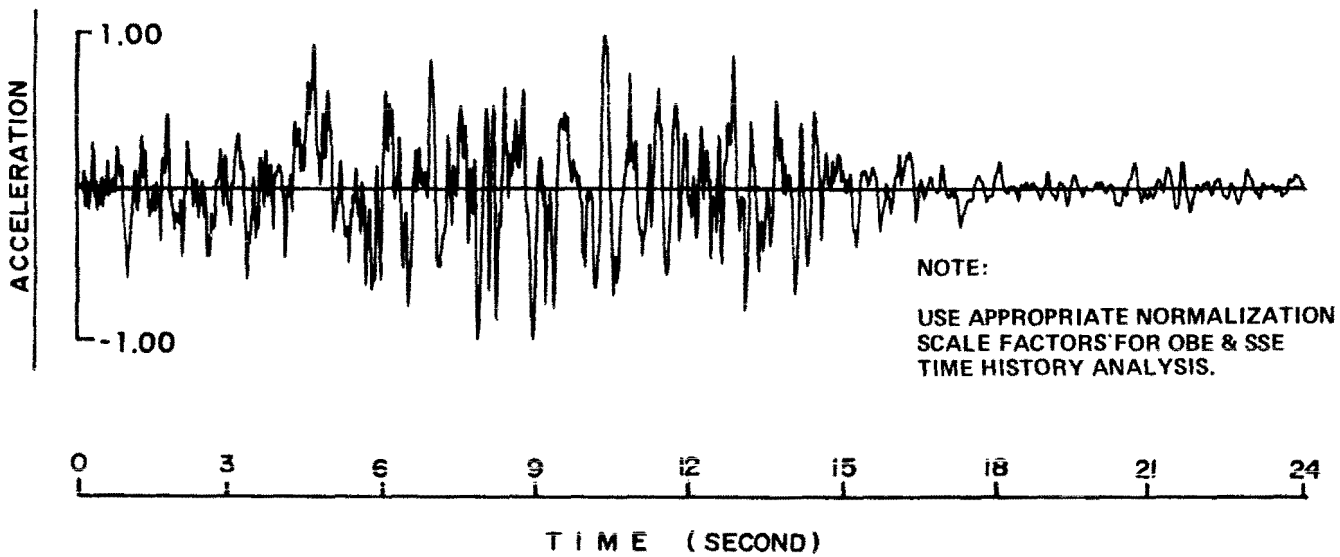

Rev. 0

WOLF CREEK
UPDATED SAFETY ANALYSIS REPORT

FIGURE 3.7(B)-4

SYNTHESIZED TIME HISTORY VERTICAL (OBE AND SSE)

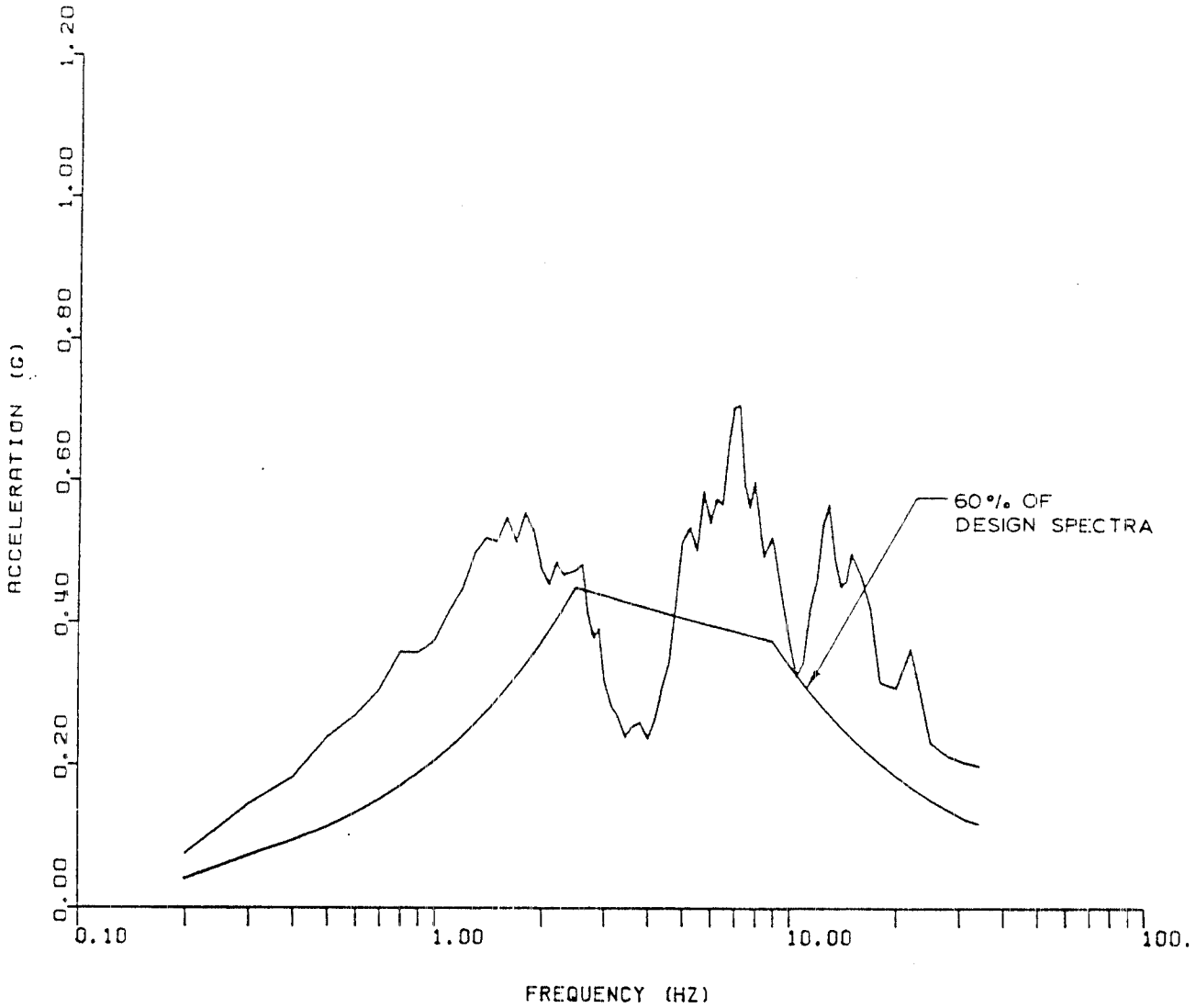

Rev. 1

WOLF CREEK
UPDATED SAFETY ANALYSIS REPORT

Figure 3.7(B) - 9A

Typical Free-Field Base
Elevation Spectra Callaway Site

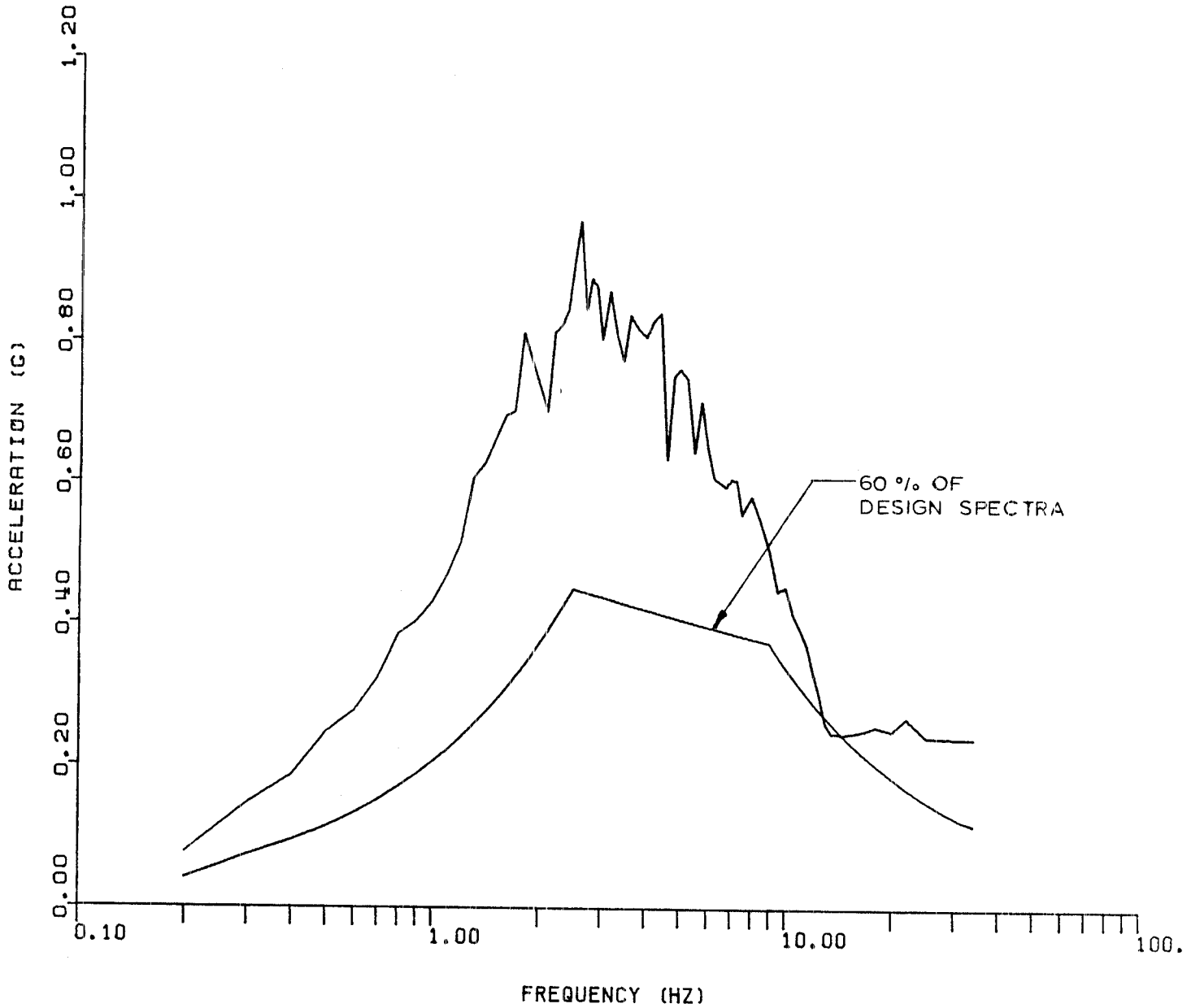

Rev. 0

WOLF CREEK
UPDATED SAFETY ANALYSIS REPORT

FIGURE 3.7(B)-9B

TYPICAL FREE-FIELD BASE
ELEVATION SPECTRA
STERLING SITE

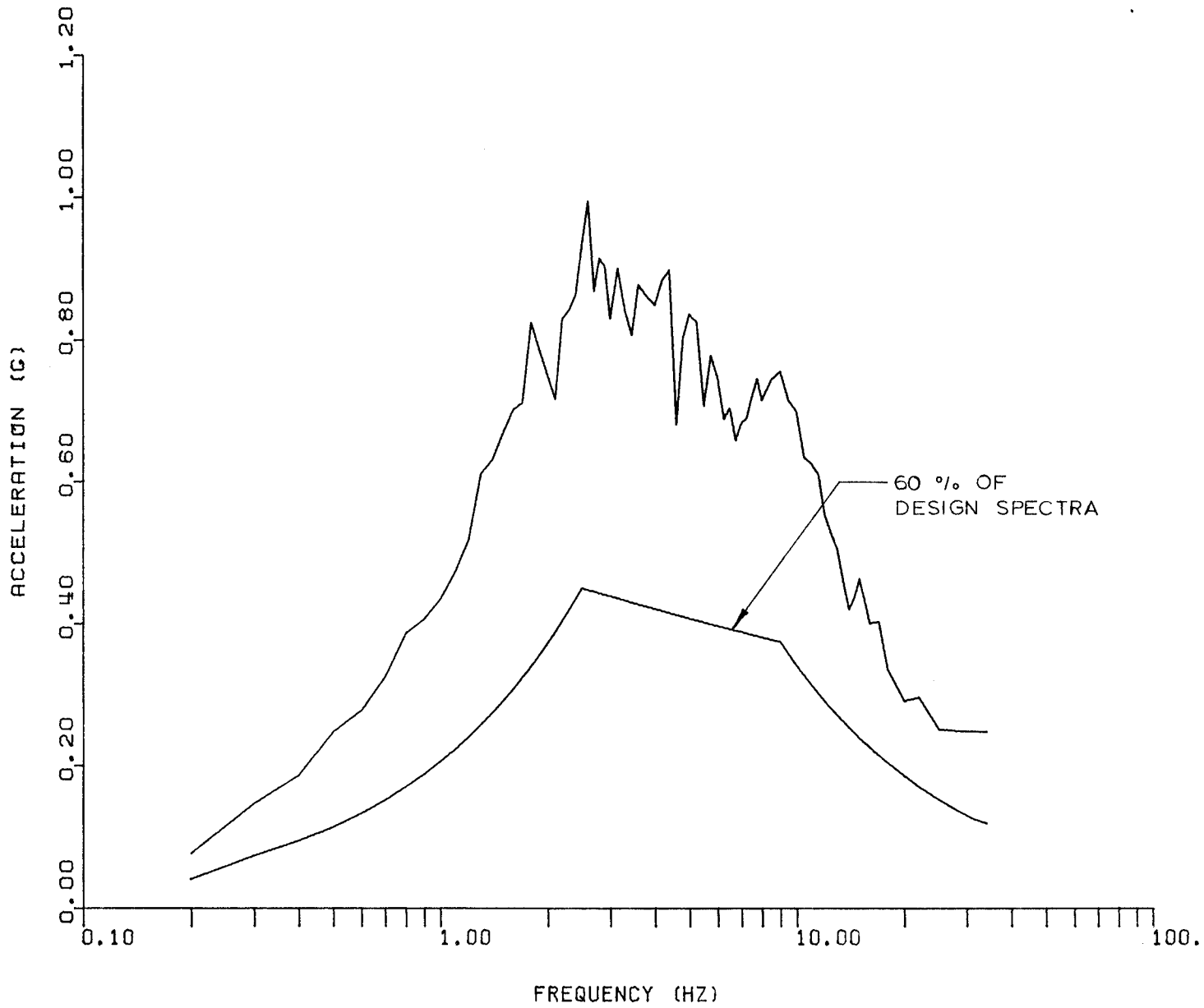

Rev. 0

WOLF CREEK
UPDATED SAFETY ANALYSIS REPORT

FIGURE 3.7(B)-9C

TYPICAL FREE-FIELD BASE
ELEVATION SPECTRA
TYRONE SITE

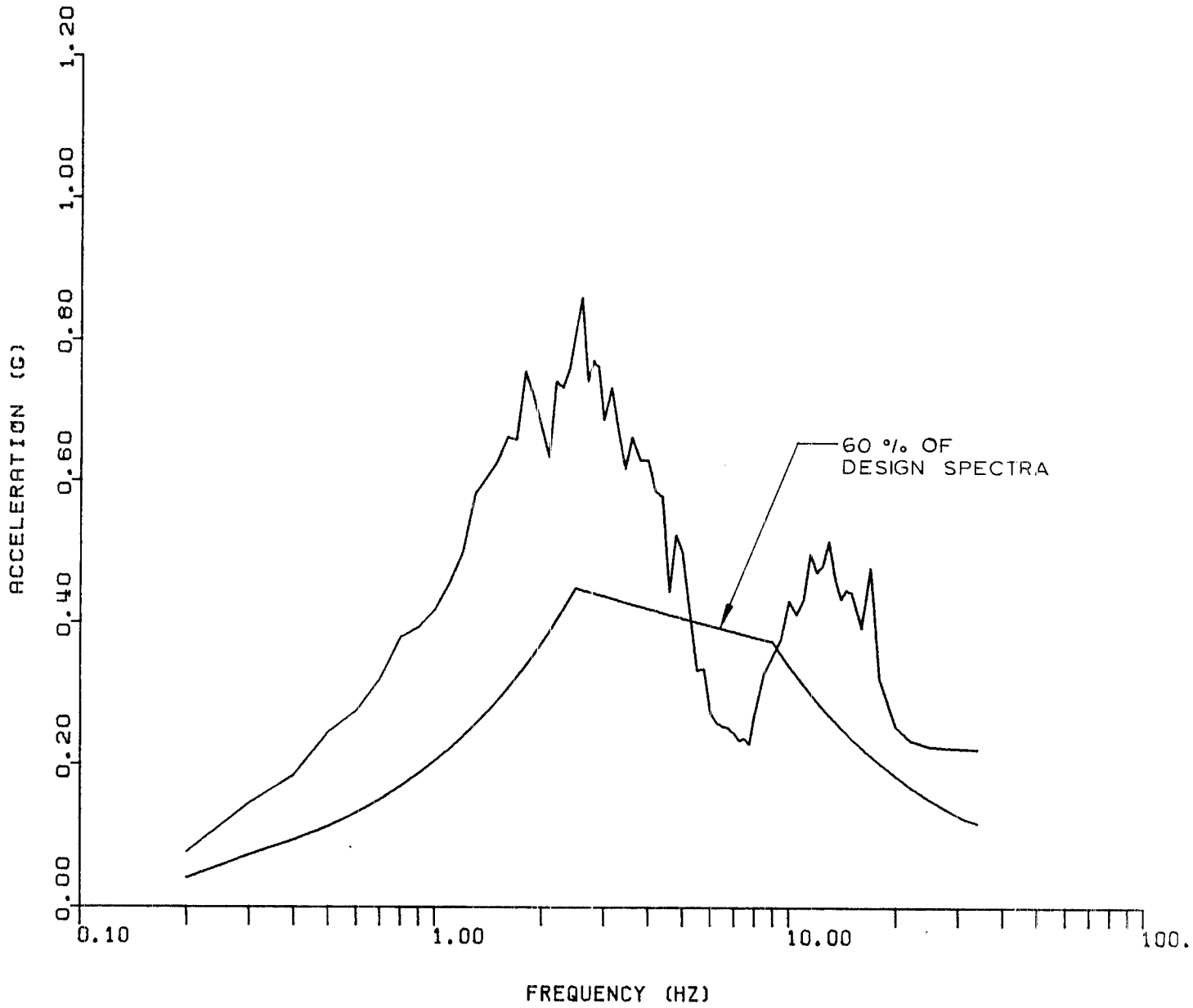

Rev. 0

WOLF CREEK
UPDATED SAFETY ANALYSIS REPORT

FIGURE 3.7(B)-90

TYPICAL FREE-FIELD BASE ELEVATION SPECTRA WOLF CREEK SITE

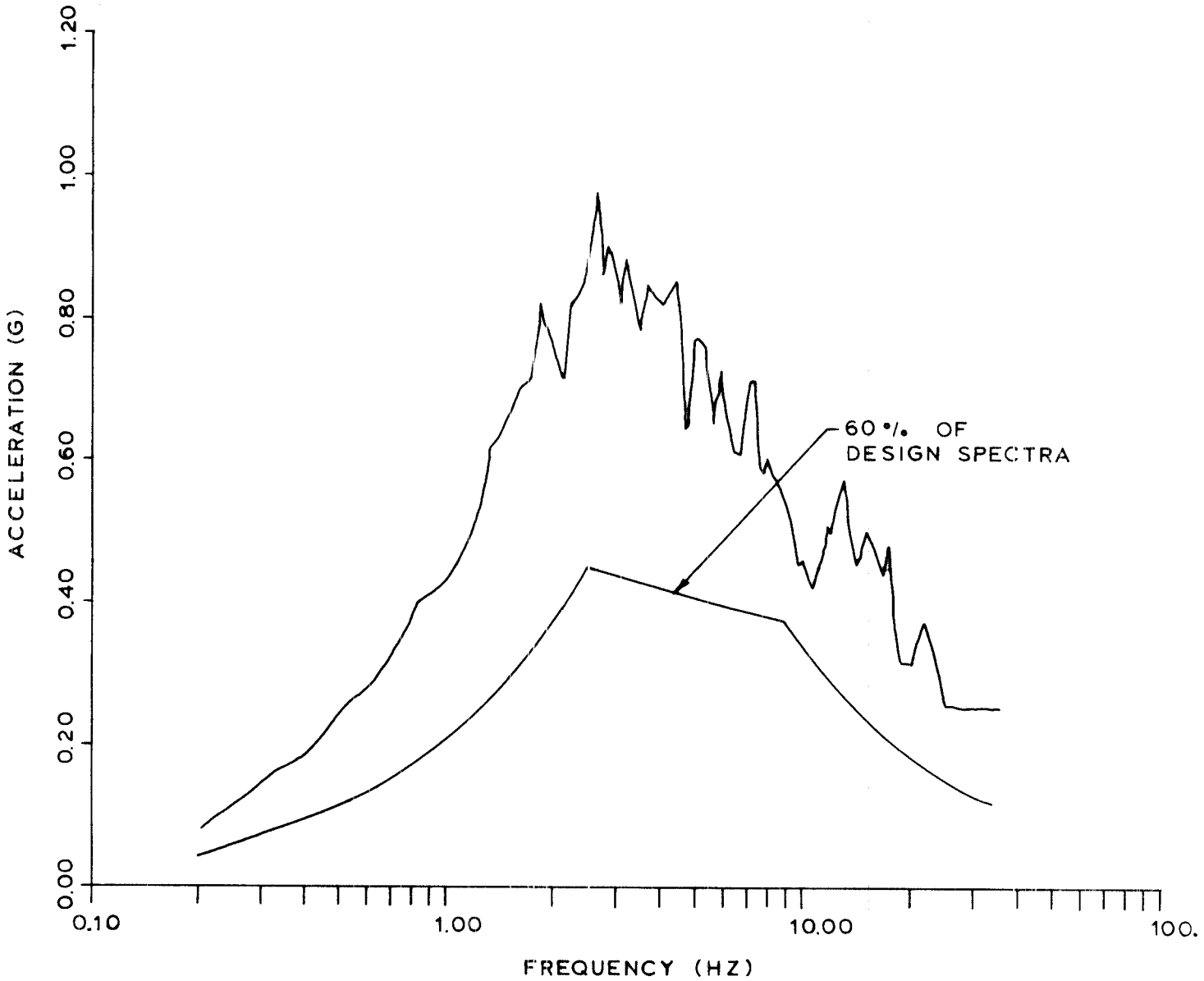

Rev. 0

WOLF CREEK
UPDATED SAFETY ANALYSIS REPORT

FIGURE 3.7(B)-10

TYPICAL FREE-FIELD BASE ELEVATION SPECTRA THREE SITE ENVELOPE

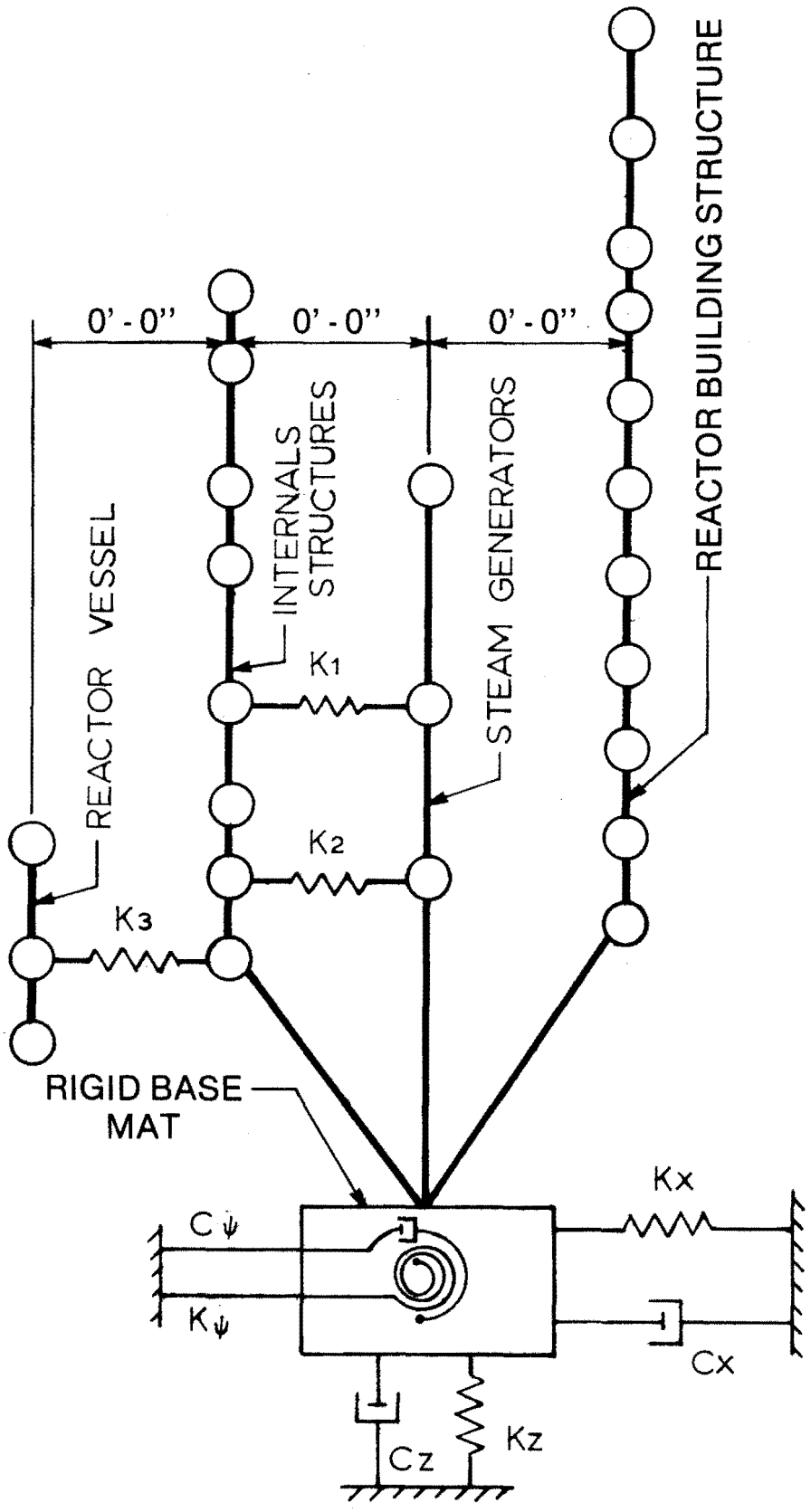

Rev. 0

WOLF CREEK
UPDATED SAFETY ANALYSIS REPORT

FIGURE 3.7(B)-12

MATHEMATICAL MODEL FOR REACTOR BUILDING AND INTERNAL STRUCTURES

CALLAWAY	WOLF CREEK	STERLING	TYRONE
101.0	79.5	54.0	60.0
96.0	75.0	49.0	55.5
91.0	70.5	44.0	48.0
86.0	63.25	37.7	44.0
82.7	61.0	34.5	40.0
79.3	58.5	31.4	37.0
76.0	56.0	29.0	35.0
73.0	53.0	25.2	30.0
69.0	50.0	23.0	29.0
64.0	48.0	18.9	22.5
58.0	46.0	15.75	18.75
49.5	44.0	12.58	15.0
41.0	38.0	9.45	11.25
27.3	31.5	6.29	7.5
13.70	15.5	4.0	3.75
0.0	0.0	0.0	0.0

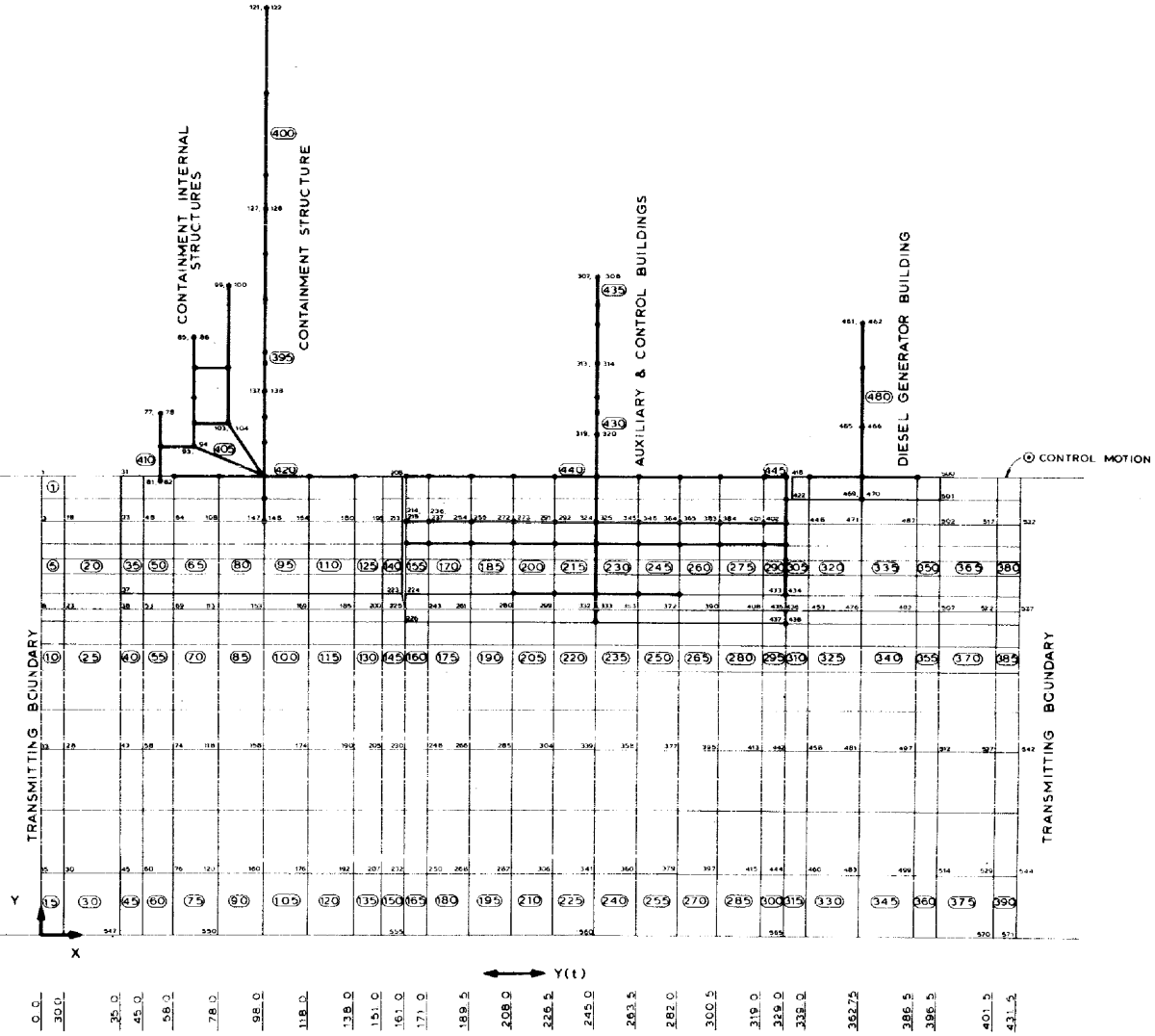

Rev. 0

WOLF CREEK
UPDATED SAFETY ANALYSIS REPORT

FIGURE 3.7(B)-13

THE FINITE-ELEMENT MODEL

DAMPING VALUES
.0300, .0500, .0700

WOLF CREEK

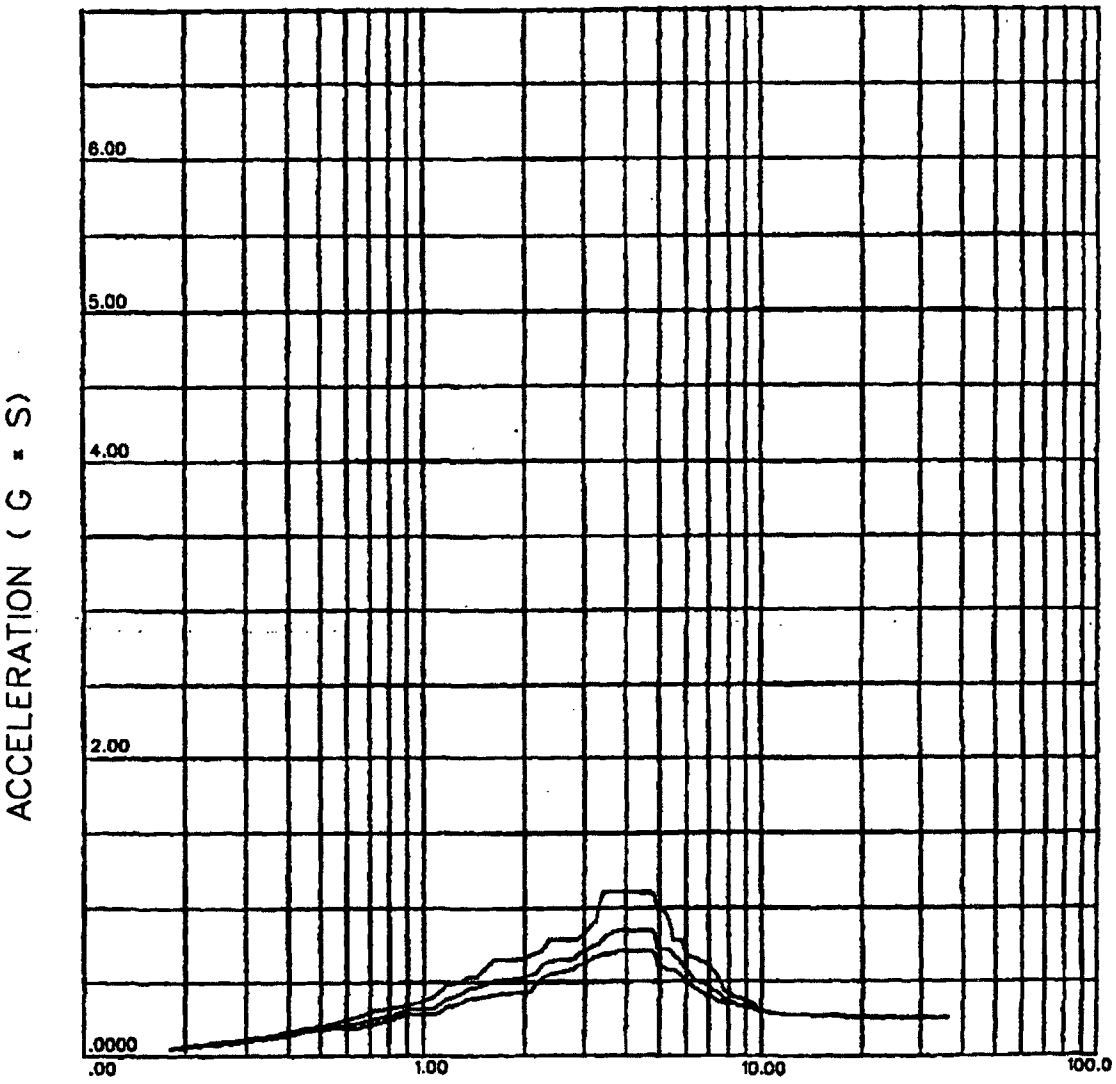

DESIGN FLOOR RESPONSE SPECTRA

WOLF CREEK REV.22 UPDATED SAFETY ANALYSIS REPORT
FIGURE 3.7(B)-14A SPECTRA - CONTAINMENT BUILDING SSE. NORTH-SOUTH DIRECTION. POLAR CRANE LOCATION. CALLAWAY SITE

DAMPING VALUES
.0300, .0500, .0700

WOLF CREEK

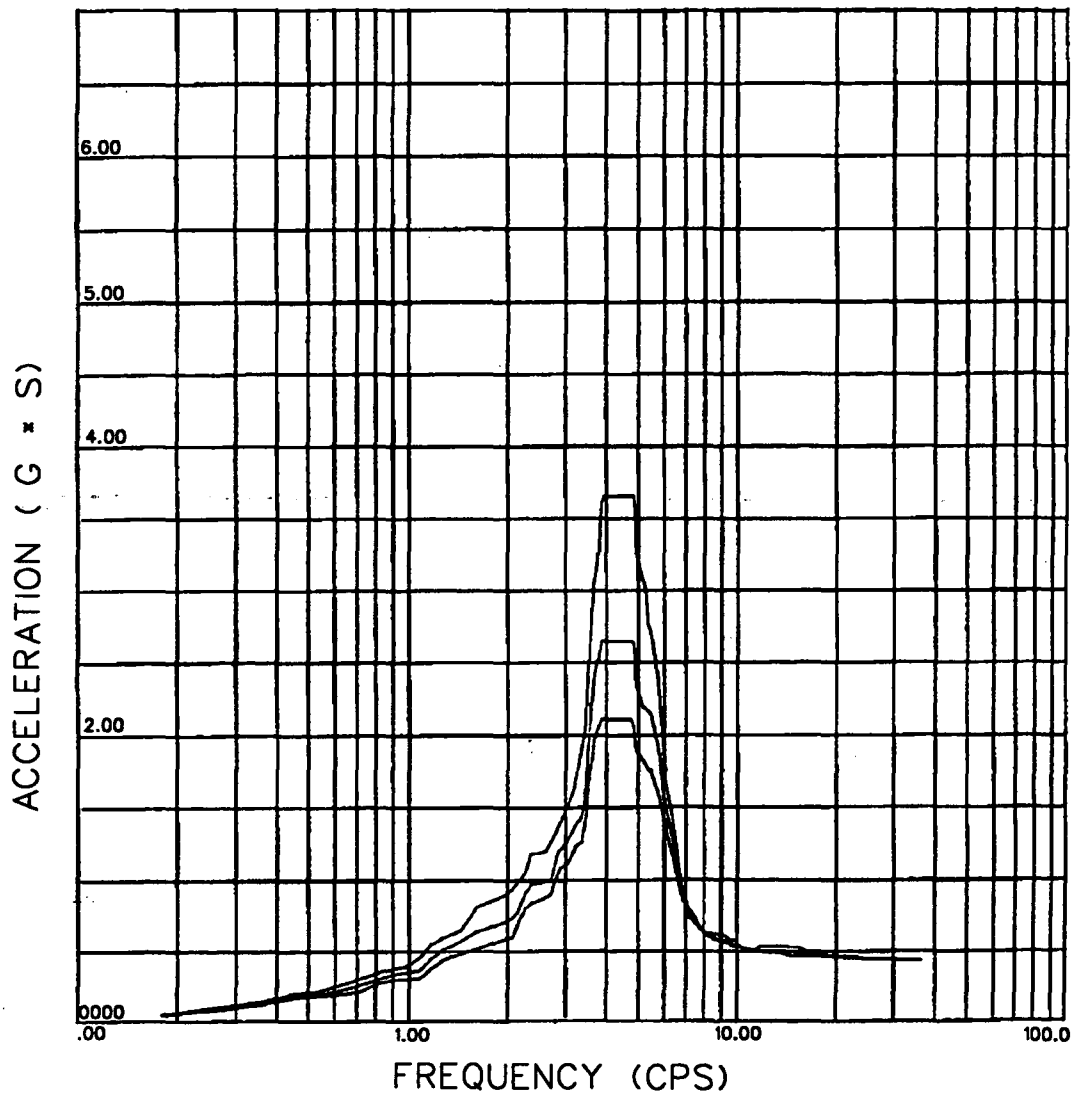

STERLING REACTOR BLDG. SHELL EL. 2119'-0" NORTH SSE

DESIGN FLOOR RESPONSE SPECTRA

WOLF CREEK UPDATED SAFETY ANALYSIS REPORT	REV.22
FIGURE 3.7(B)-14B SPECTRA - CONTAINMENT BUILDING SSE. NORTH-SOUTH DIRECTION. POLAR CRANE LOCATION. STERLING SITE	

DAMPING VALUES

.0300, .0500, .0700

WOLF CREEK

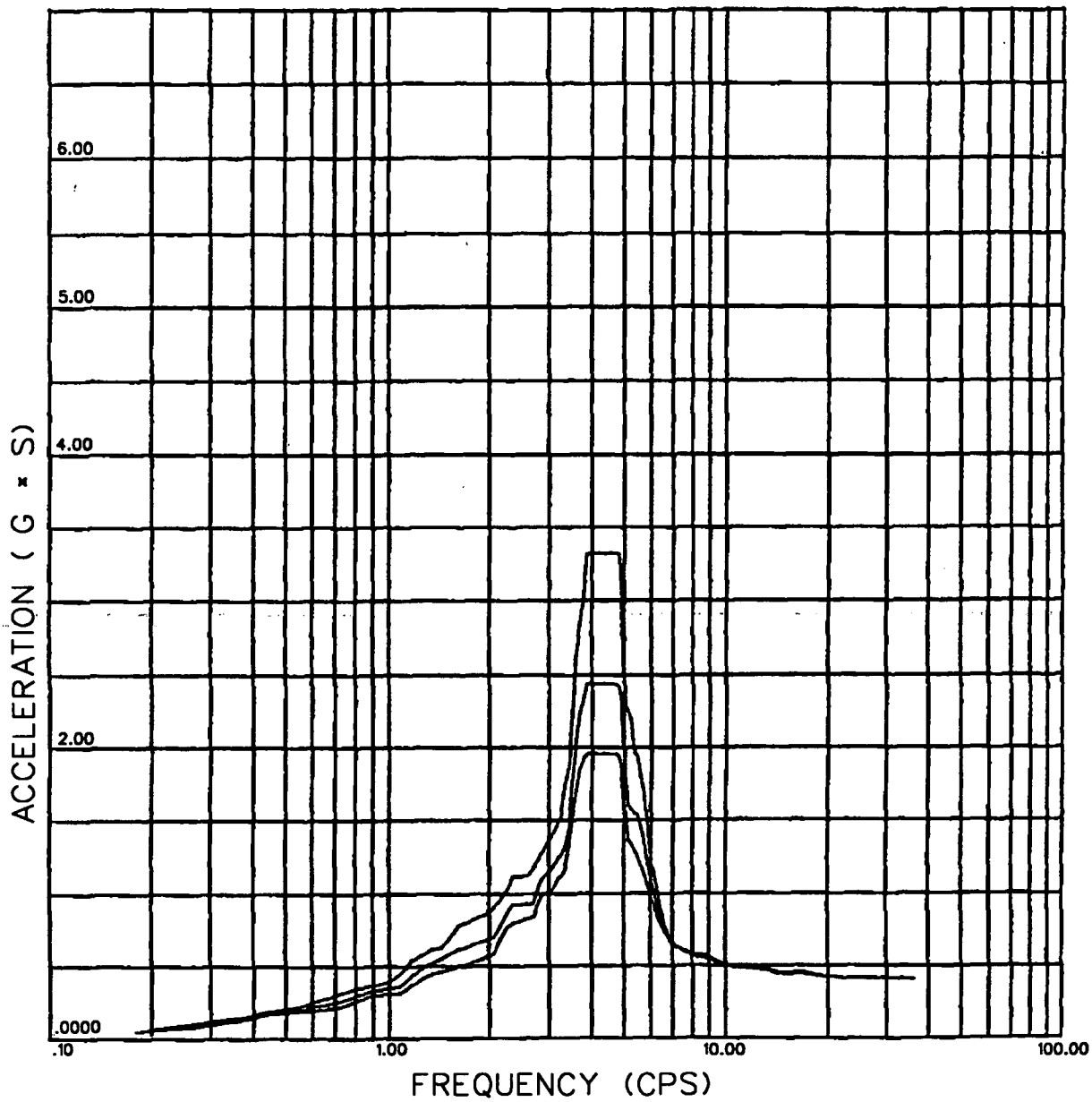

WOLF CREEK REACTOR BLDG. SHELL EL. 2119'-0" NORTH SSE

DESIGN FLOOR RESPONSE SPRCTRA

WOLF CREEK UPDATED SAFETY ANALYSIS REPORT	REV.22
FIGURE 3.7(B)-14D SPECTRA - CONTAINMENT BUILDING SSE. NORTH-SOUTH DIRECTION. POLAR CRANE LOCATION. WOLF CREEK SITE	

WOLF CREEK

DAMPING VALUES

.0300, .0500, .0700

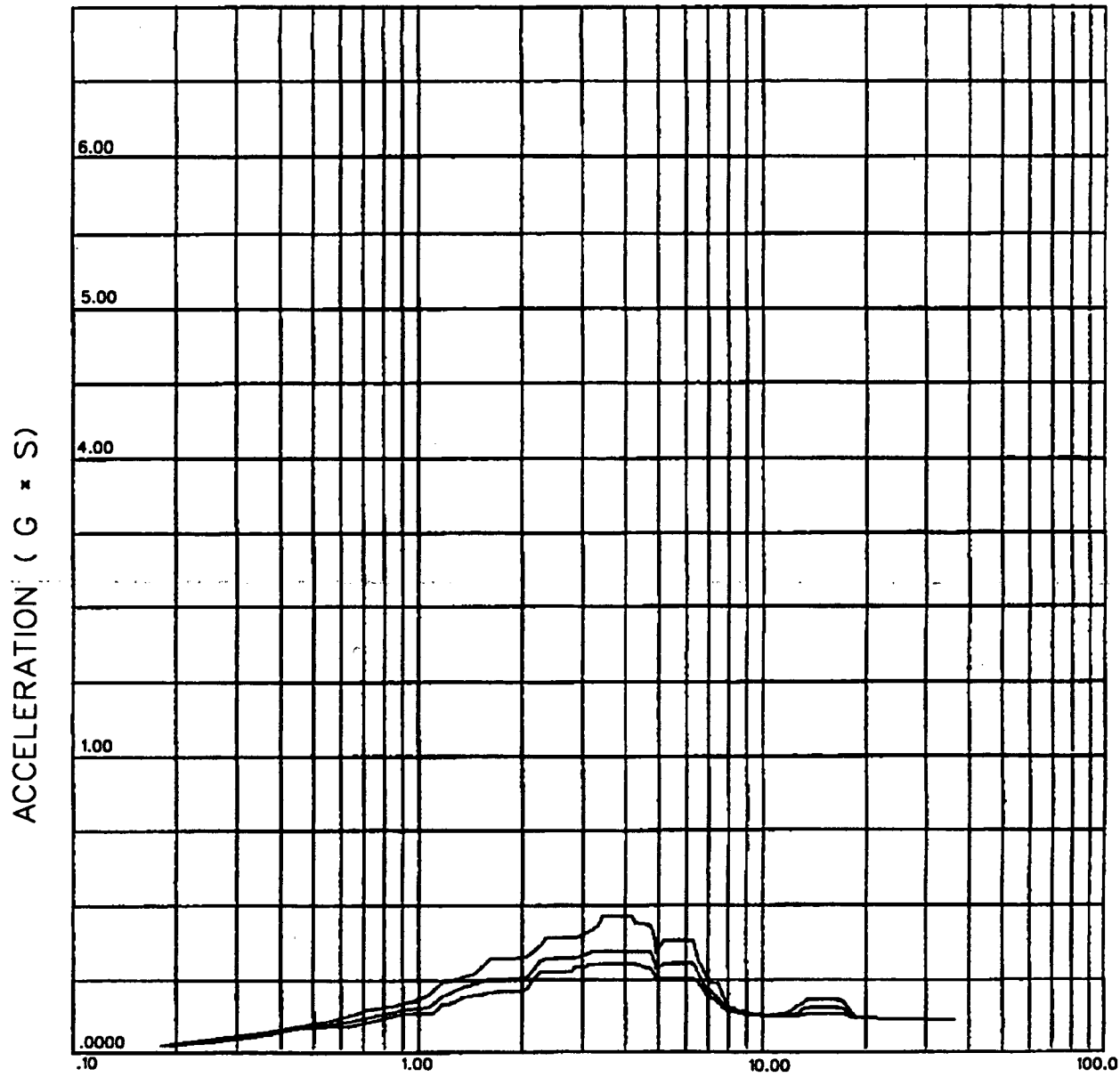

DESIGN FLOOR RESPONSE SPECTRA

CALLAWAY REACTOR BLDG. SHELL EL. 2119'-0" EAST SSE

WOLF CREEK UPDATED SAFETY ANALYSIS REPORT	REV.22
FIGURE 3.7(B)-14E SPECTRA - CONTAINMENT BUILDING SSE. EAST-WEST DIRECTION. POLAR CRANE LOCATION. CALLAWAY SITE	

DAMPING VALUES

.0300, .0500, .0700

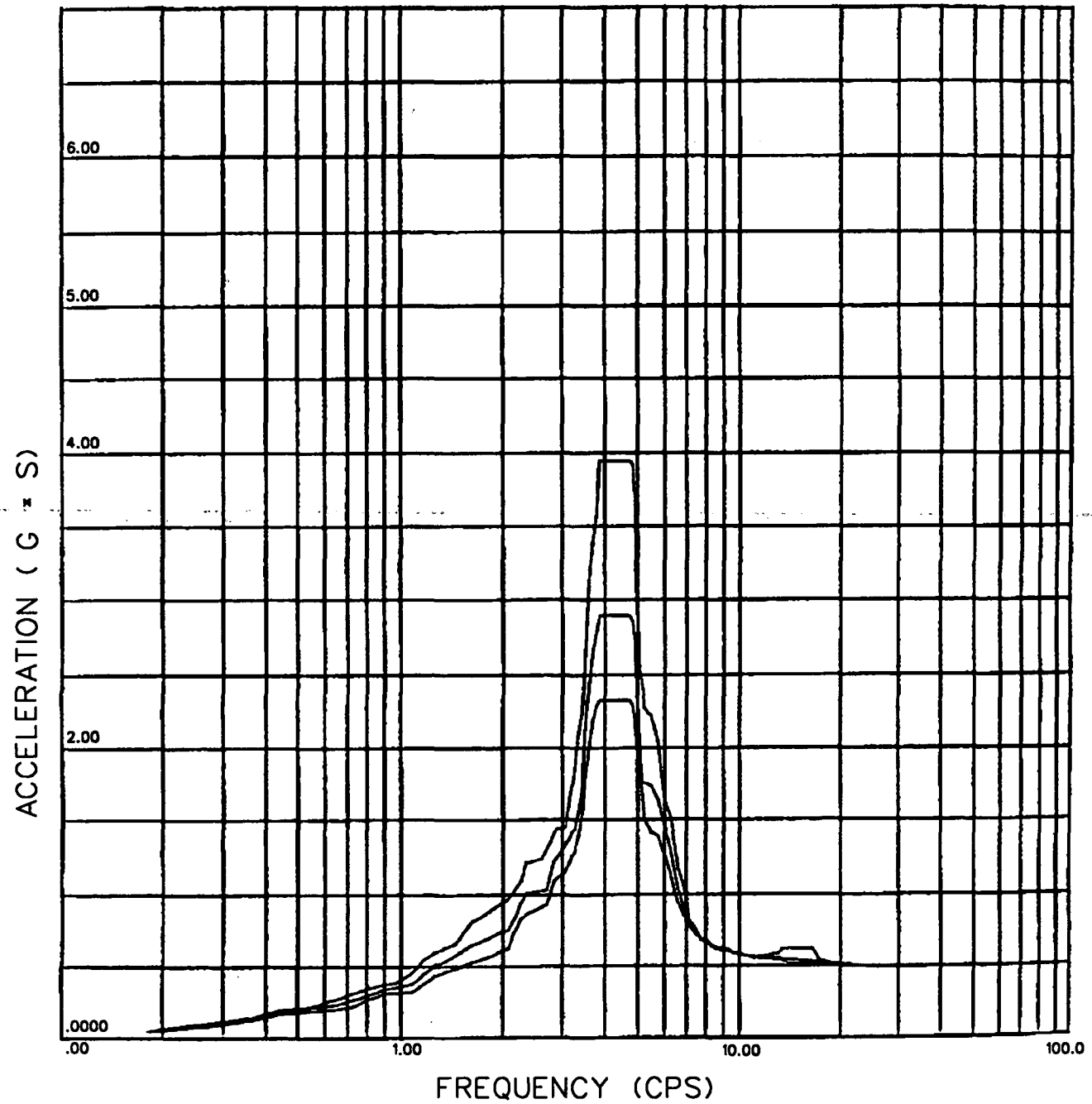

STERLING REACTOR BLDG. SHELL EL. 2119'-0" EAST SSE

DESIGN FLOOR RESPONSE SPECTRA

WOLF CREEK UPDATED SAFETY ANALYSIS REPORT	REV.22
FIGURE 3.7(B)-14F SPECTRA - CONTAINMENT BUILDING SSE. EAST-WEST DIRECTION. POLAR CRANE LOCATION. STERLING SITE	

DAMPING VALUES
.0300, .0500, .0700

WOLF CREEK

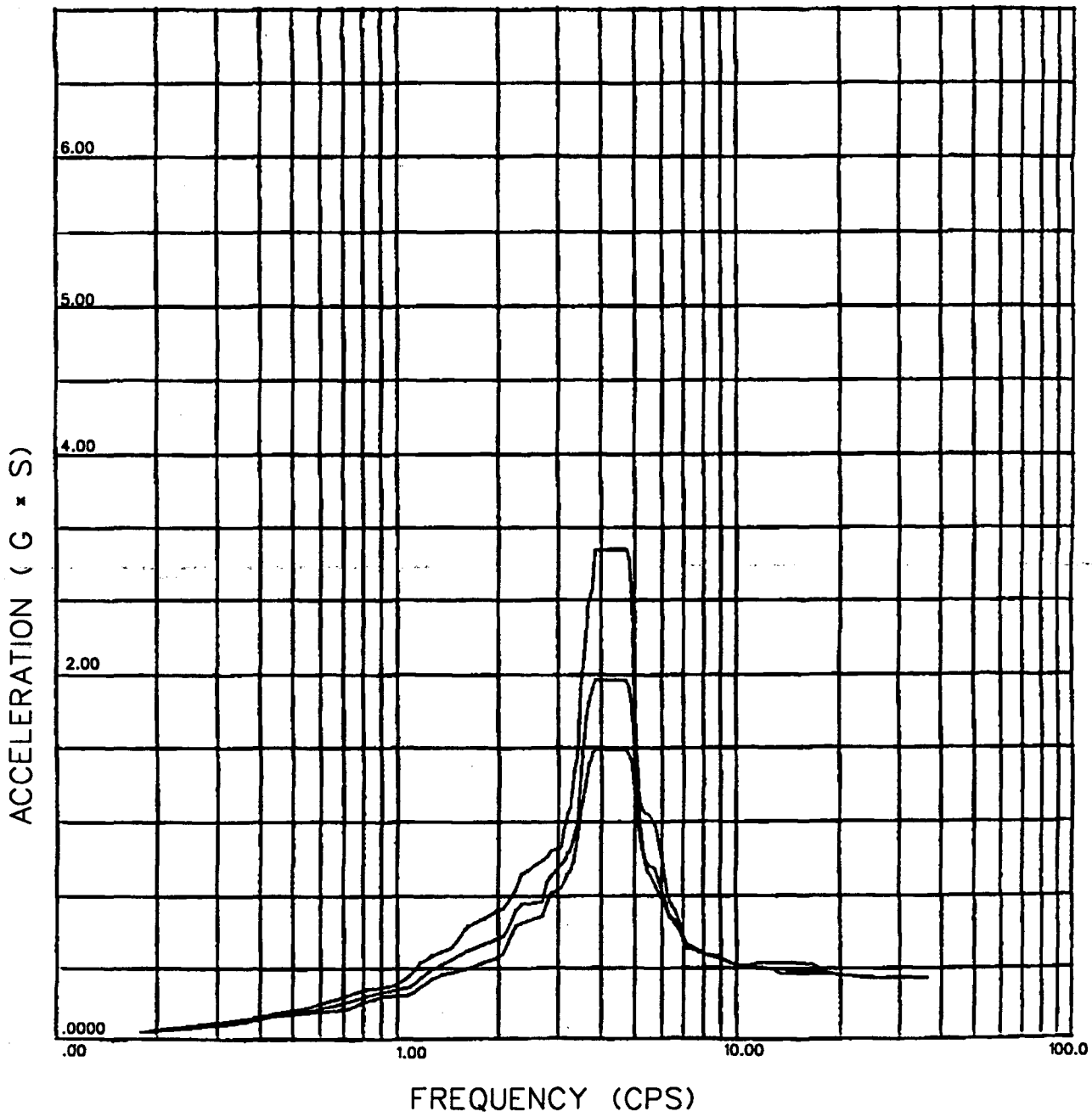

WOLF CREEK REACTOR BLDG. SHELL EL. 2119'-0" EAST SSE
DESIGN FLOOR RESPONSE SPECTRA

WOLF CREEK REV.22 UPDATED SAFETY ANALYSIS REPORT
FIGURE 3.7(B)-14H SPECTRA - CONTAINMENT BUILDING SSE. EAST-WEST DIRECTION. POLAR CRANE LOCATION. WOLF CREEK SITE

DAMPING VALUES
.0300, .0500, .0700

WOLF CREEK

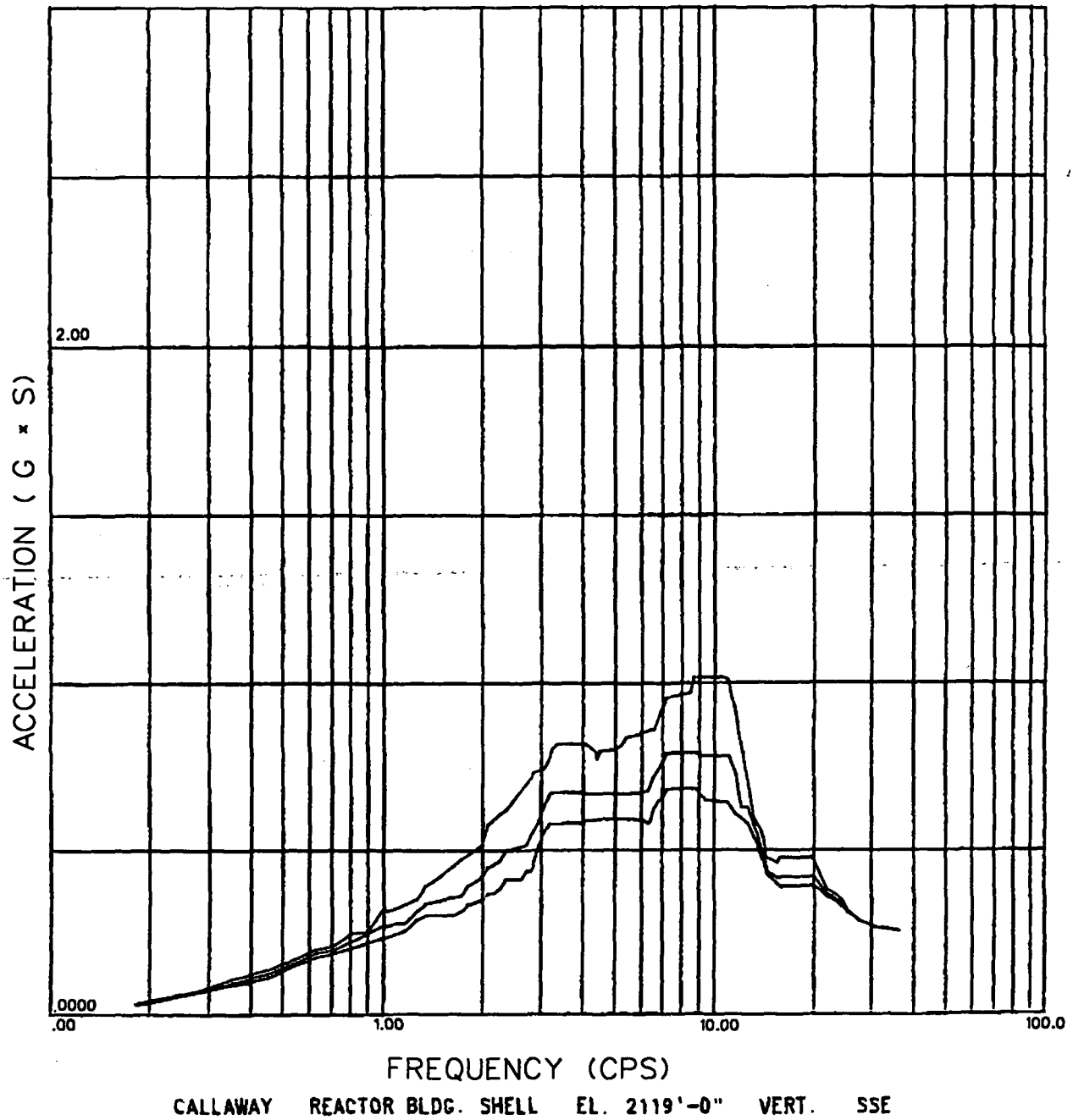

CALLAWAY REACTOR BLDG. SHELL EL. 2119'-0" VERT. SSE

DESIGN FLOOR RESPONSE SPECTRA

WOLF CREEK UPDATED SAFETY ANALYSIS REPORT	REV.22
FIGURE 3.7(B)-141 SPECTRA - CONTAINMENT BUILDING SSE. VERTICAL DIRECTION. POLAR CRANE LOCATION. CALLAWAY SITE	

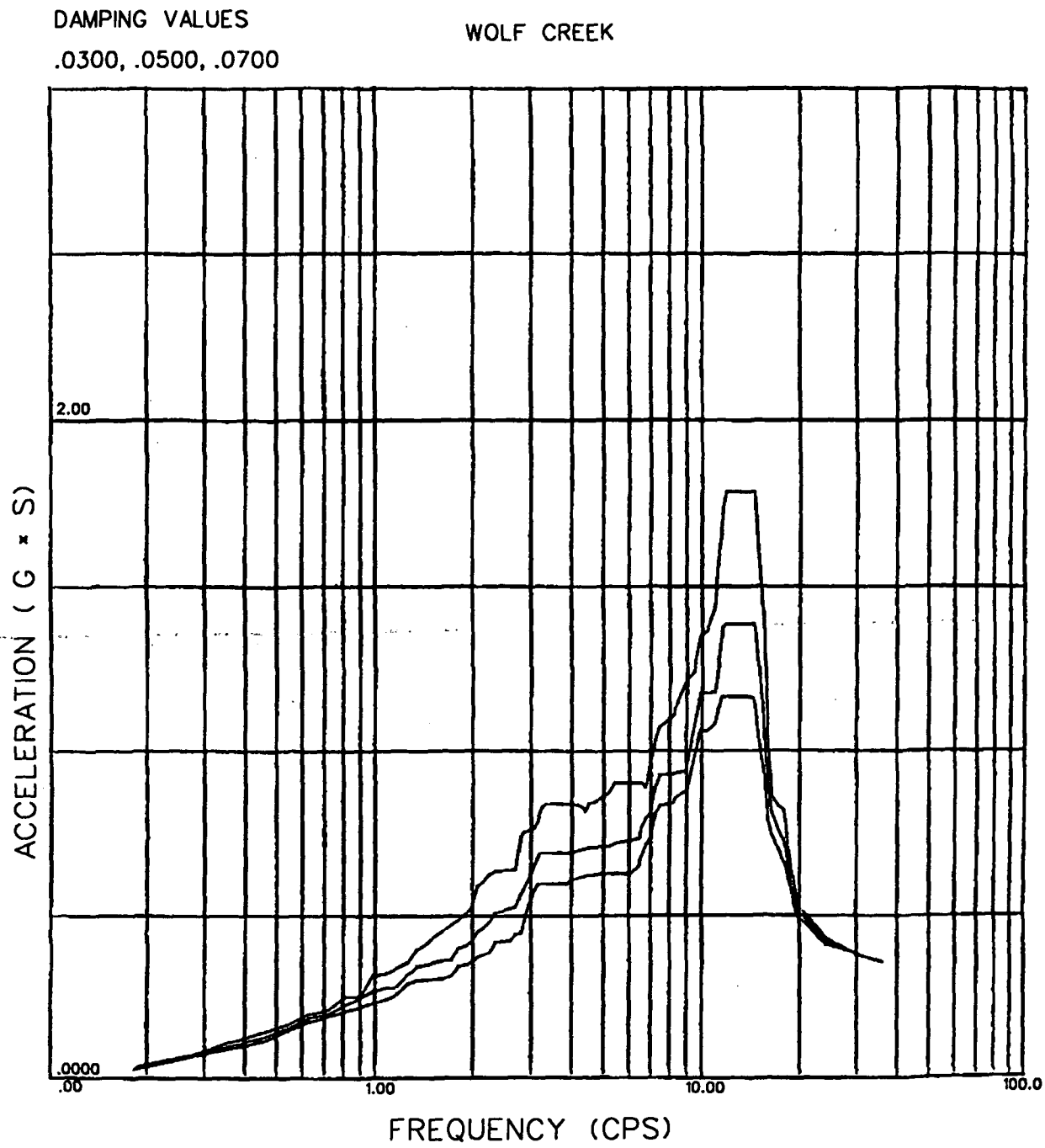

STERLING REACTOR BLDG. SHELL EL. 2119'-0" VERT. SSE

DESIGN FLOOR RESPONSE SPECTRA

WOLF CREEK REV.22 UPDATED SAFETY ANALYSIS REPORT
FIGURE 3.7(B)-14J SPECTRA - CONTAINMENT BUILDING SSE. VERTICAL DIRECTION. POLAR CRANE LOCATION. STERLING SITE

DAMPING VALUES

.0300, .0500, .0700

WOLF CREEK

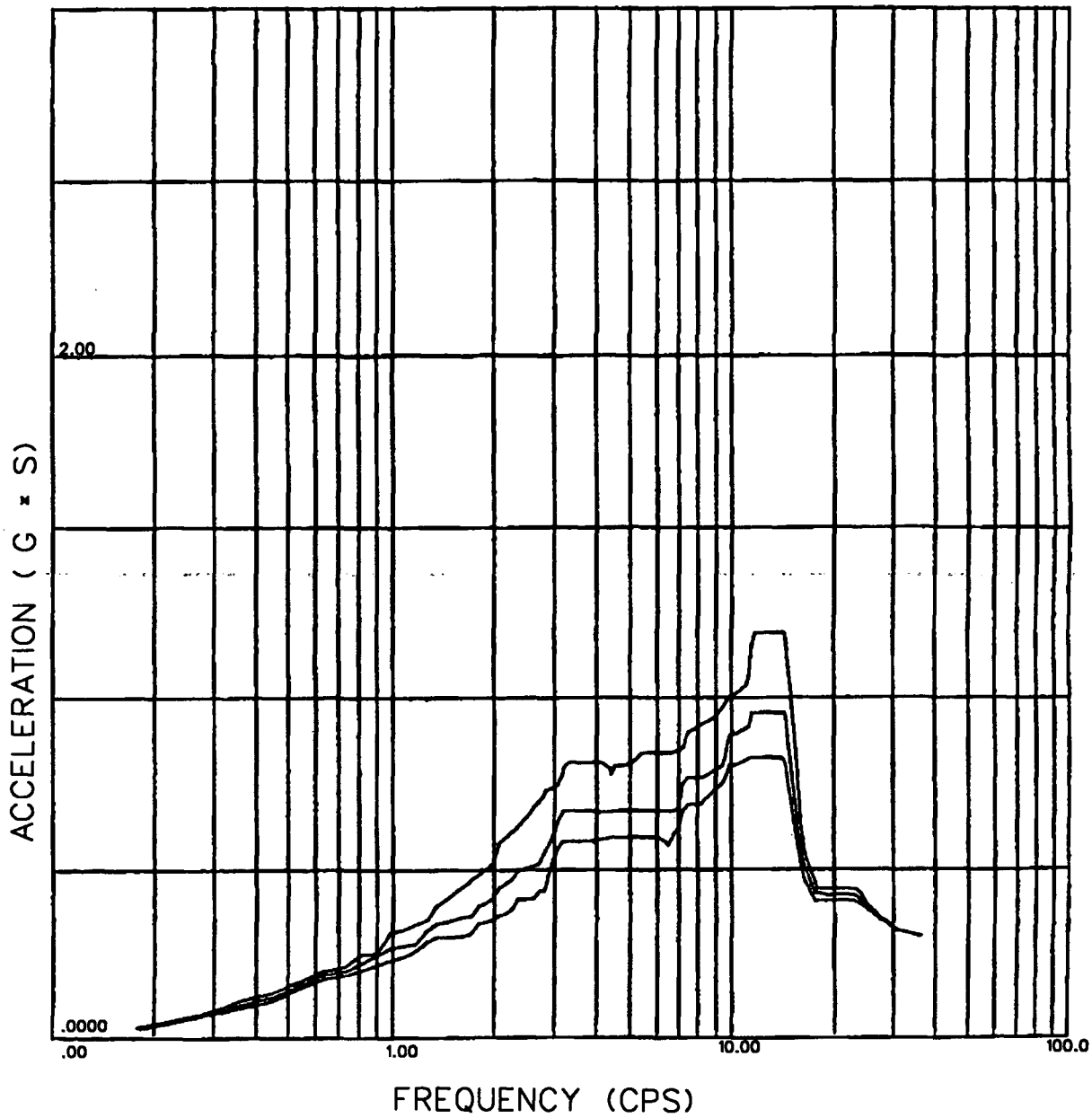

WOLF CREEK REACTOR BLDG. SHELL EL. 2119'-0" VERT. SSE

DESIGN FLOOR RESPONSE SPECTRA

WOLF CREEK UPDATED SAFETY ANALYSIS REPORT	REV.22
FIGURE 3.7(B)-14L SPECTRA - CONTAINMENT BUILDING SSE.VERTICAL DIRECTION. POLAR CRANE LOCATION. WOLF CREEK SITE	

DAMPING VALUES

.0300, .0500, .0700

WOLF CREEK

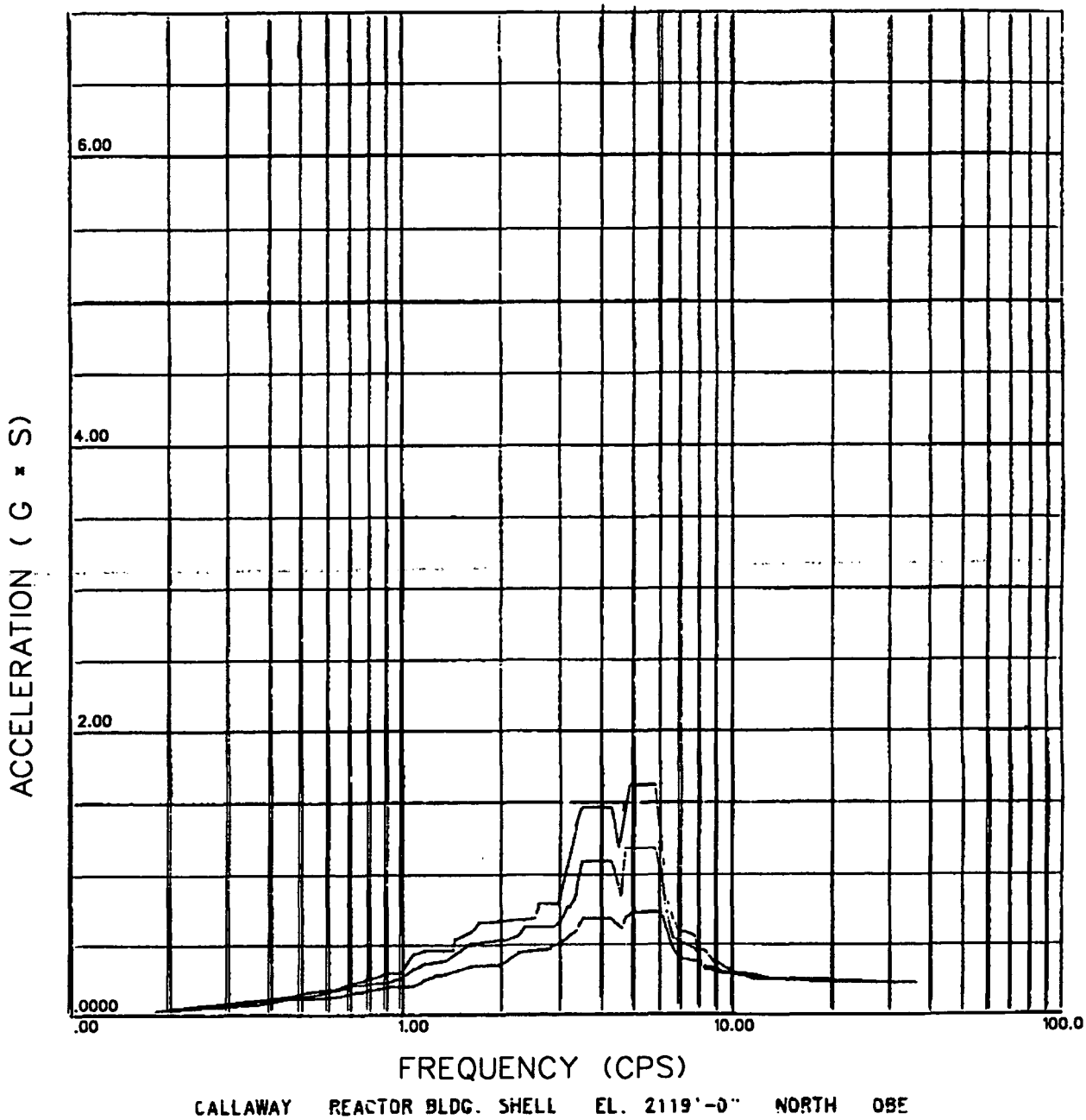

CALLAWAY REACTOR BLDG. SHELL EL. 2119'-0" NORTH OBE

DESIGN FLOOR RESPONSE SPECTRA

WOLF CREEK REV.22 UPDATED SAFETY ANALYSIS REPORT
FIGURE 3.7(B)-14M SPECTRA - CONTAINMENT BUILDING OBE. NORTH-SOUTH DIRECTION. POLAR CRANE LOCATION. CALLAWAY SITE

DAMPING VALUES

.0300, .0500, .0700

WOLF CREEK

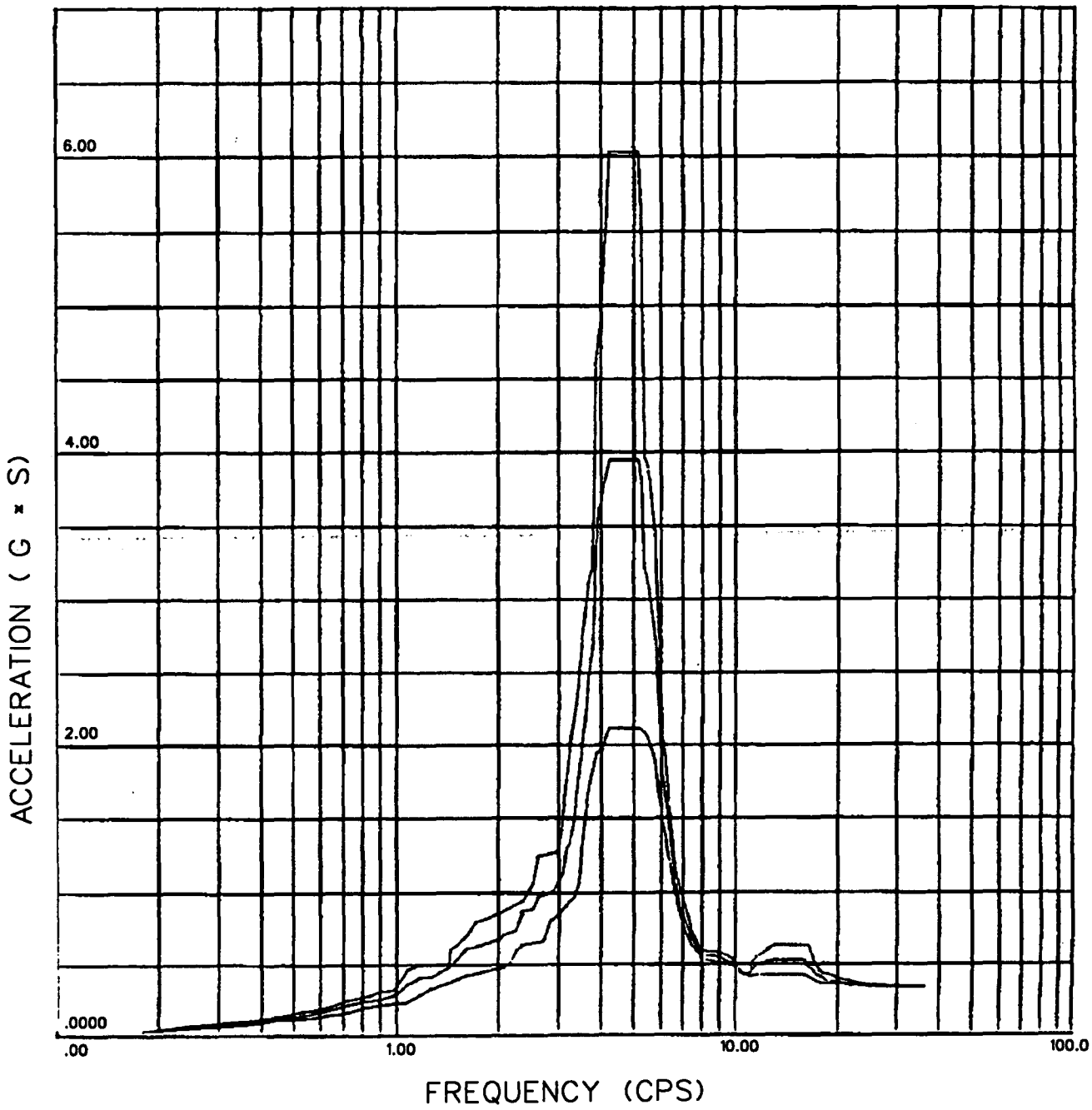

STERLING REACTOR BLDG. SHELL EL. 2119'-0" NORTH OBE

DESIGN FLOOR RESPONSE SPECTRA

WOLF CREEK REV.22 UPDATED SAFETY ANALYSIS REPORT
FIGURE 3.7(B)-14N SPECTRA - CONTAINMENT BUILDING OBE. NORTH-SOUTH DIRECTION. POLAR CRANE LOCATION. STERLING SITE

DAMPING VALUES
.0300, .0500, .0700

WOLF CREEK

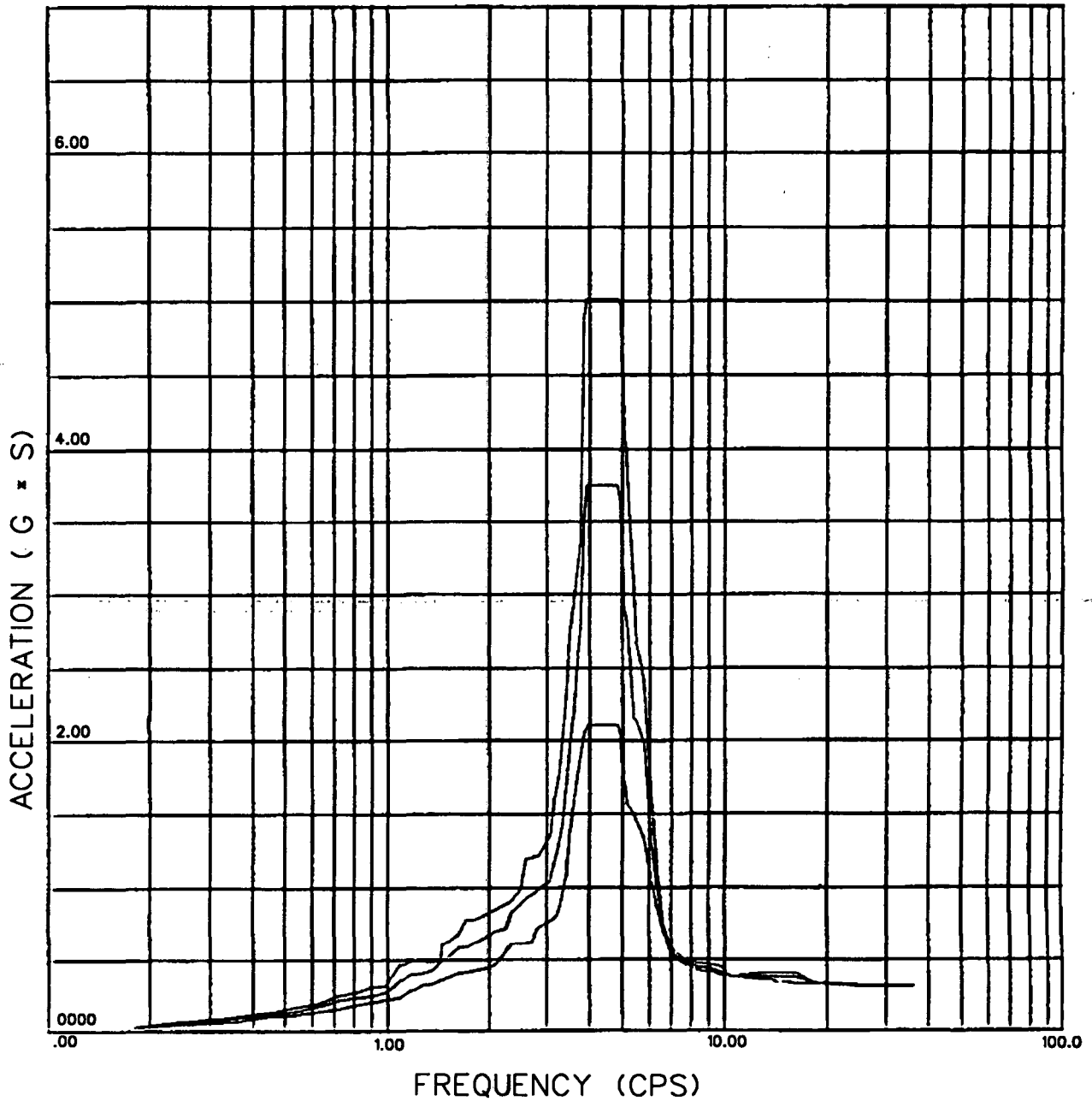

WOLF CREEK REACTOR BLDG. SHELL EL. 2119'-0" NORTH OBE
DESIGN FLOOR RESPONSE SPECTRA

WOLF CREEK REV.22 UPDATED SAFETY ANALYSIS REPORT
FIGURE 3.7(B)-14P SPECTRA - CONTAINMENT BUILDING OBE. NORTH-SOUTH DIRECTION. POLAR CRANE LOCATION. WOLF CREEK SITE

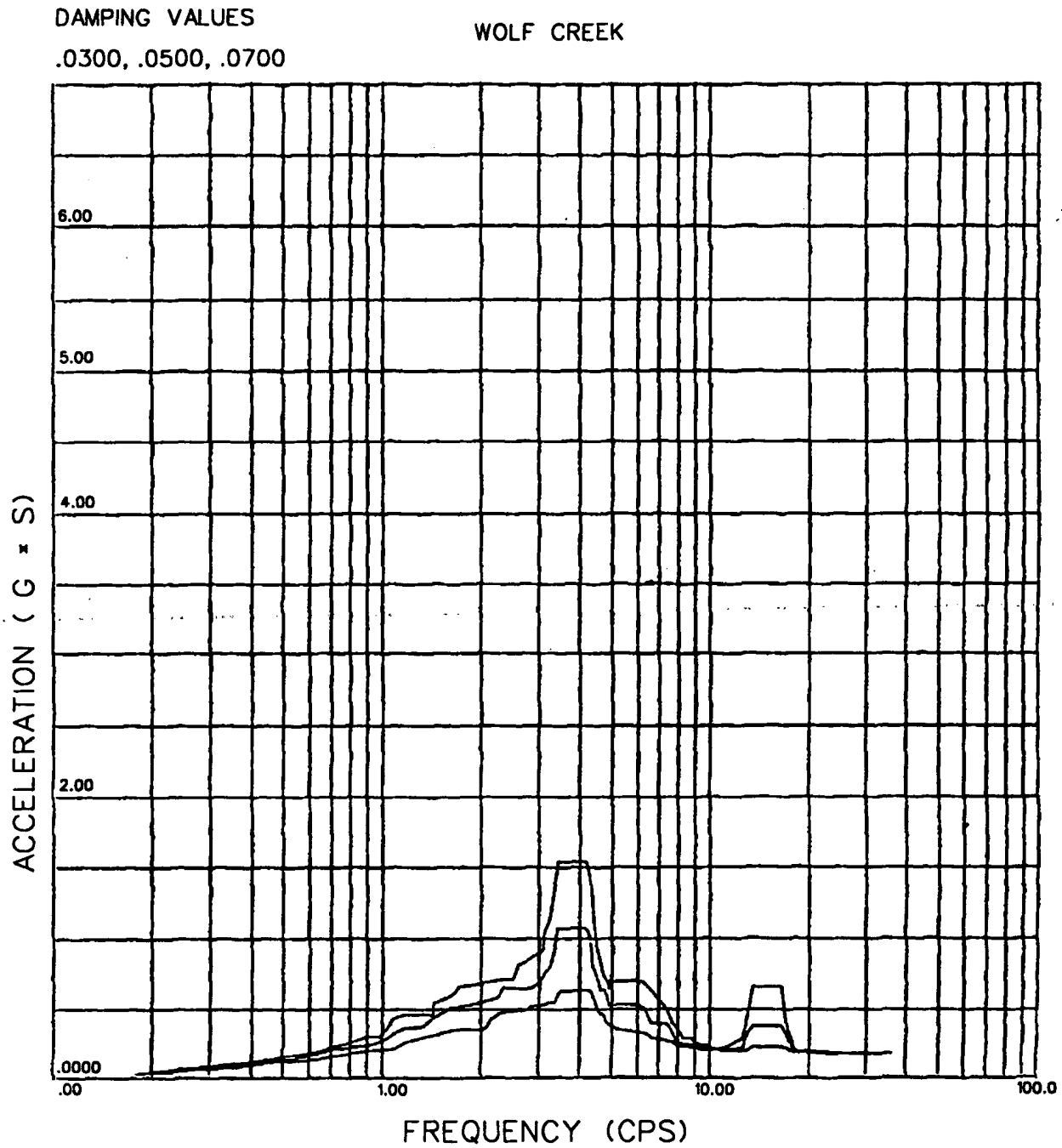

CALLAWAY REACTOR BLDG. SHELL EL. 2119'-0" EAST OBE

DESIGN FLOOR RESPONSE SPECTRA

WOLF CREEK REV.22 UPDATED SAFETY ANALYSIS REPORT
FIGURE 3.7(B)-14Q SPECTRA - CONTAINMENT BUILDING OBE. EAST-WEST DIRECTION. POLAR CRANE LOCATION. CALLAWAY SITE

DAMPING VALUES

.0300, .0500, .0700

WOLF CREEK

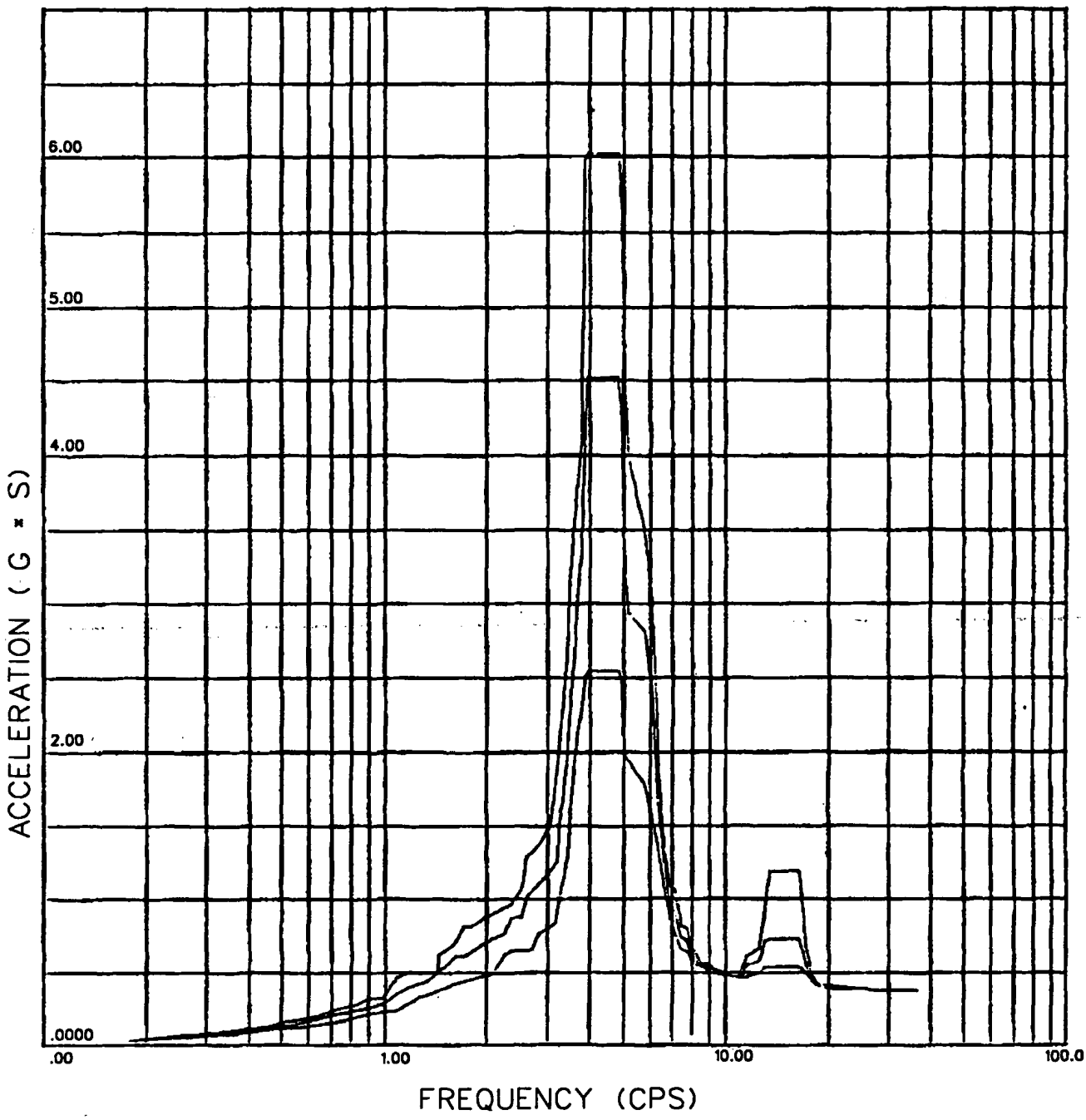

STERLING REACTOR BLDG. SHELL EL. 2119'-0" EAST OBE

DESIGN FLOOR RESPONSE SPECTRA

WOLF CREEK REV.22 UPDATED SAFETY ANALYSIS REPORT
FIGURE 3.7(B)-14R SPECTRA - CONTAINMENT BUILDING OBE. EAST-WEST DIRECTION. POLAR CRANE LOCATION. STERLING SITE

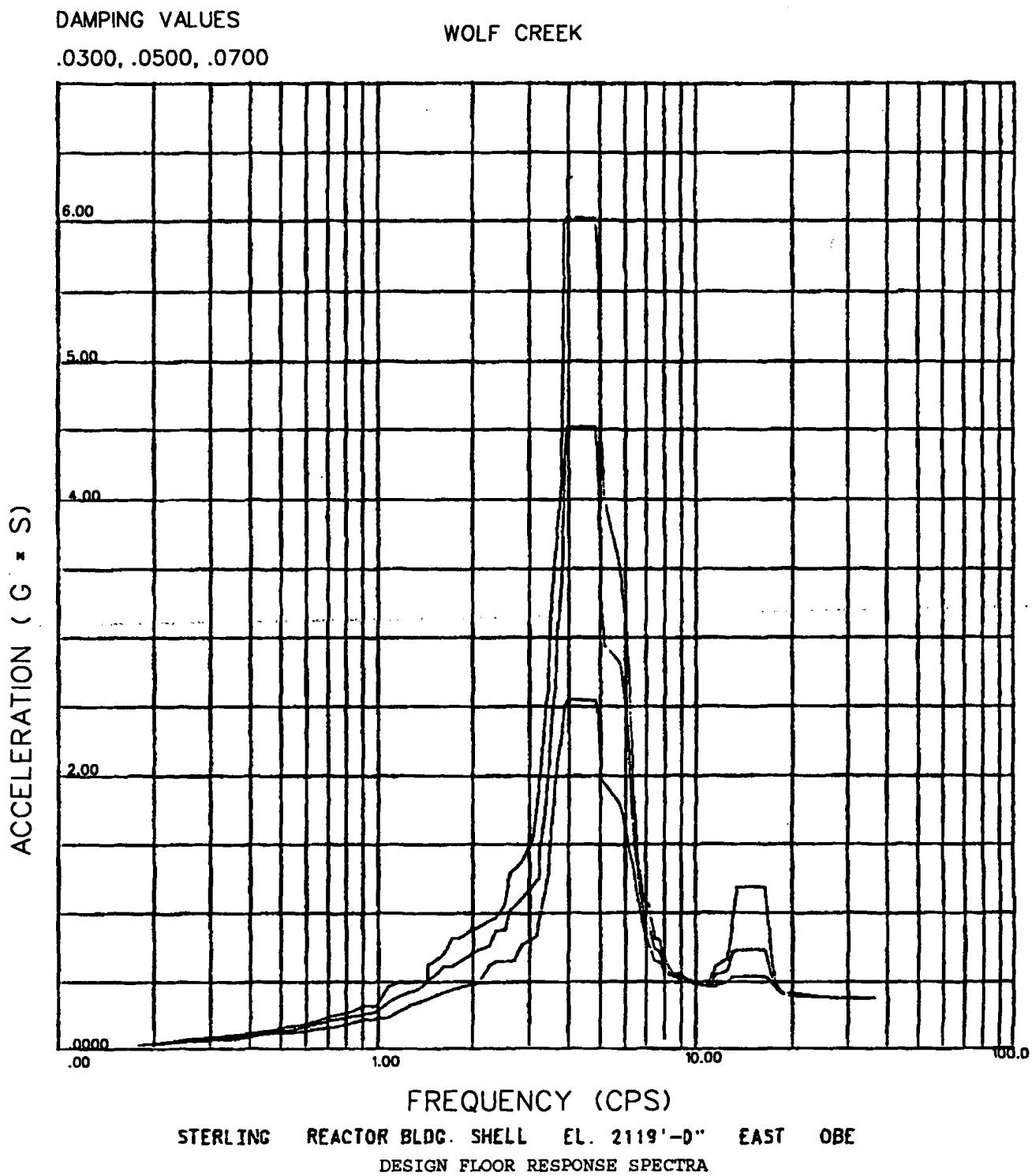

STERLING REACTOR BLDG. SHELL EL. 2119'-0" EAST OBE

DESIGN FLOOR RESPONSE SPECTRA

WOLF CREEK REV.22 UPDATED SAFETY ANALYSIS REPORT
FIGURE 3.7(B)-14T SPECTRA - CONTAINMENT BUILDING OBE. EAST-WEST DIRECTION. POLAR CRANE LOCATION. WOLF CREEK SITE

DAMPING VALUES

.0300, .0500, .0700

WOLF CREEK

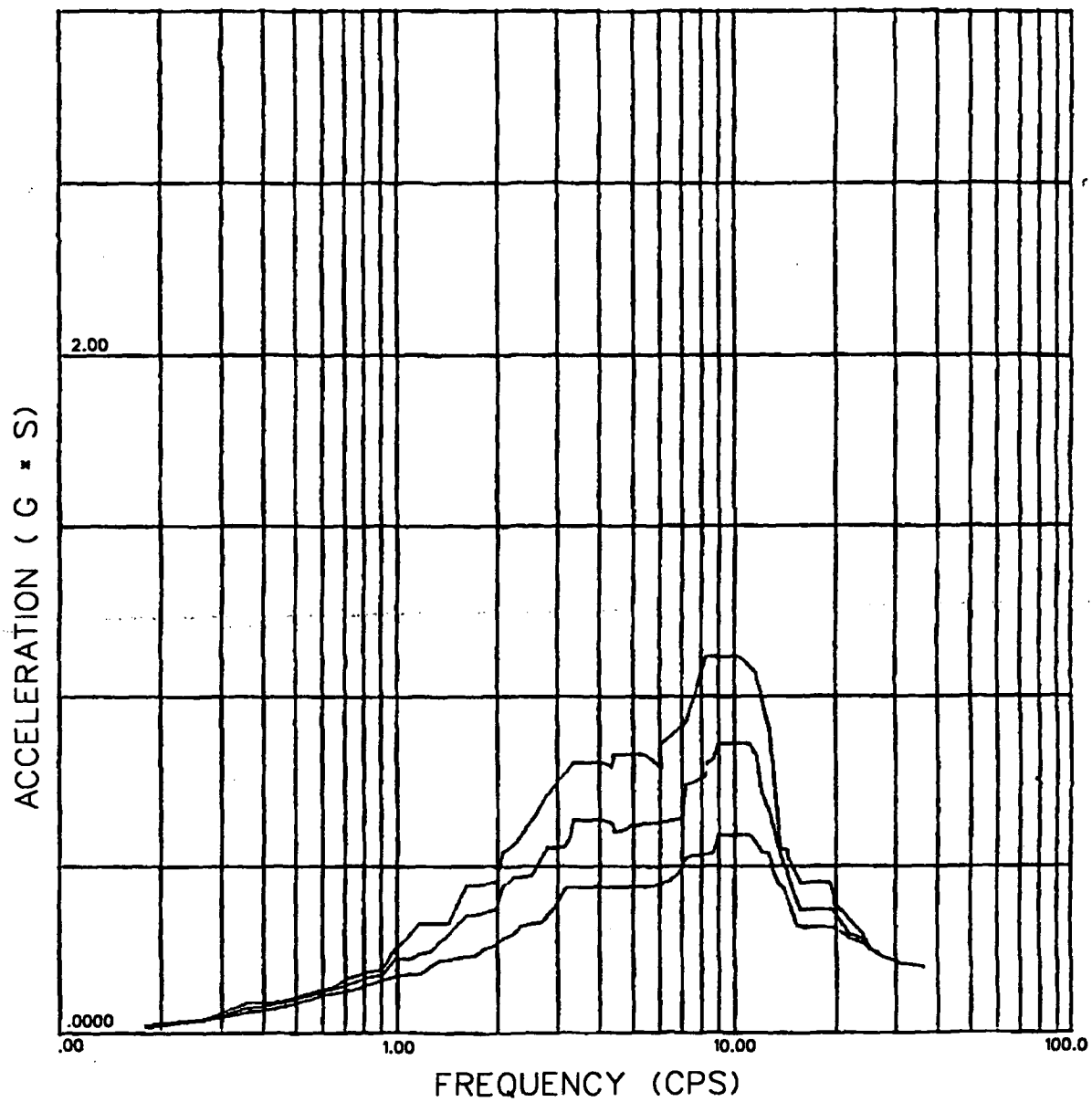

CALLAWAY REACTOR BLDG. SHELL EL. 2119'-0" VERT. OBE

DESIGN FLOOR RESPONSE SPECTRA

WOLF CREEK REV.22 UPDATED SAFETY ANALYSIS REPORT
FIGURE 3.7(B)-14U SPECTRA - CONTAINMENT BUILDING OBE. VERTICAL DIRECTION POLAR CRANE LOCATION. CALLAWAY SITE

DAMPING VALUES

.0300, .0500, .0700

WOLF CREEK

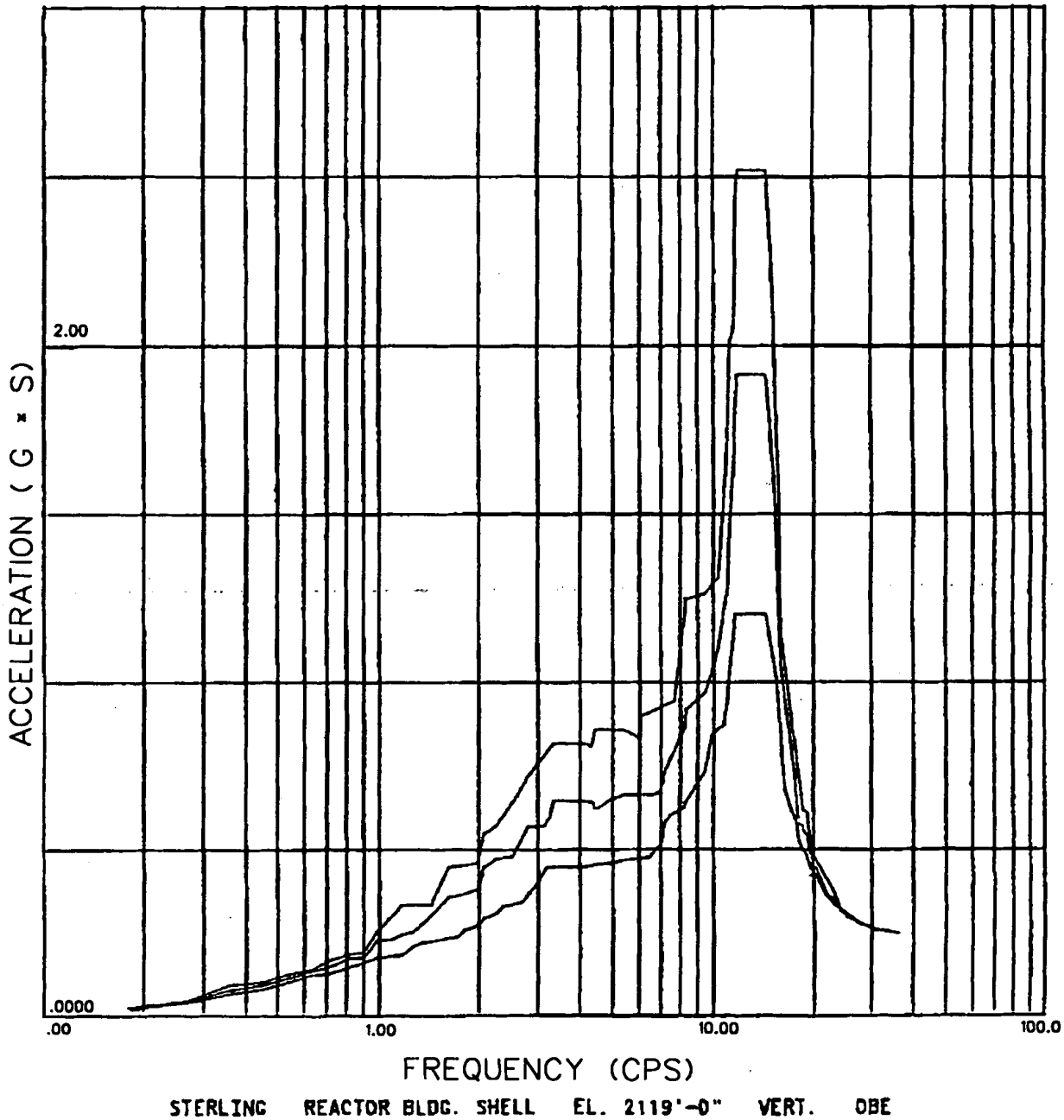

STERLING REACTOR BLDG. SHELL EL. 2119'-0" VERT. OBE

DESIGN FLOOR RESPONSE SPECTRA

WOLF CREEK UPDATED SAFETY ANALYSIS REPORT	REV.22
FIGURE 3.7(B)-14V SPECTRA - CONTAINMENT BUILDING OBE. VERTICAL DIRECTION. POLAR CRANE LOCATION. STERLING SITE	

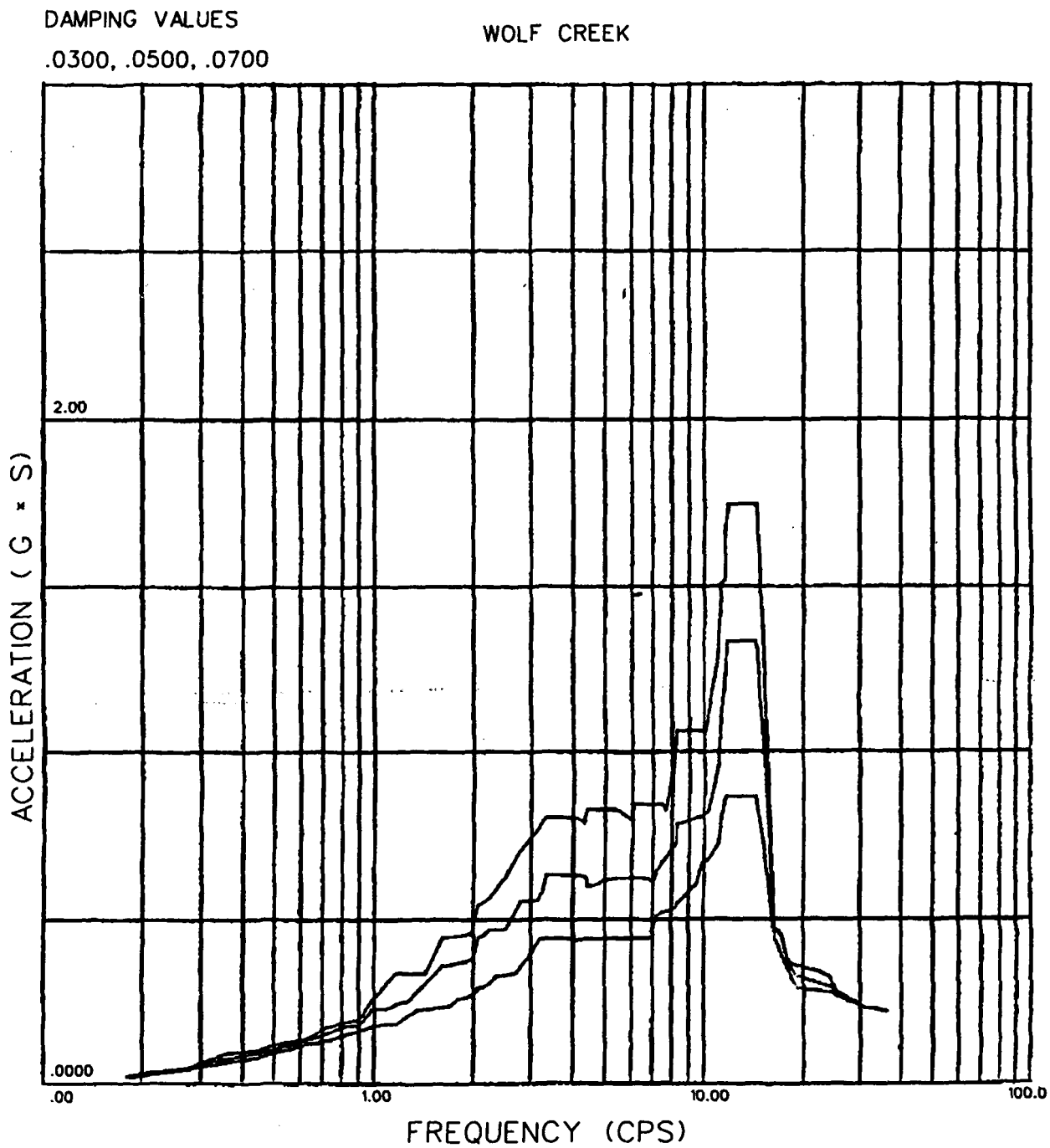

WOLF CREEK REACTOR BLDG. SHELL EL. 2119'-0" VERT. OBE

DESIGN FLOOR RESPONSE SPECTRA

WOLF CREEK UPDATED SAFETY ANALYSIS REPORT	REV.22
FIGURE 3.7(B)-14X SPECTRA - CONTAINMENT BUILDING OBE. VERTICAL DIRECTION. POLAR CRANE LOCATION. STERLING SITE	

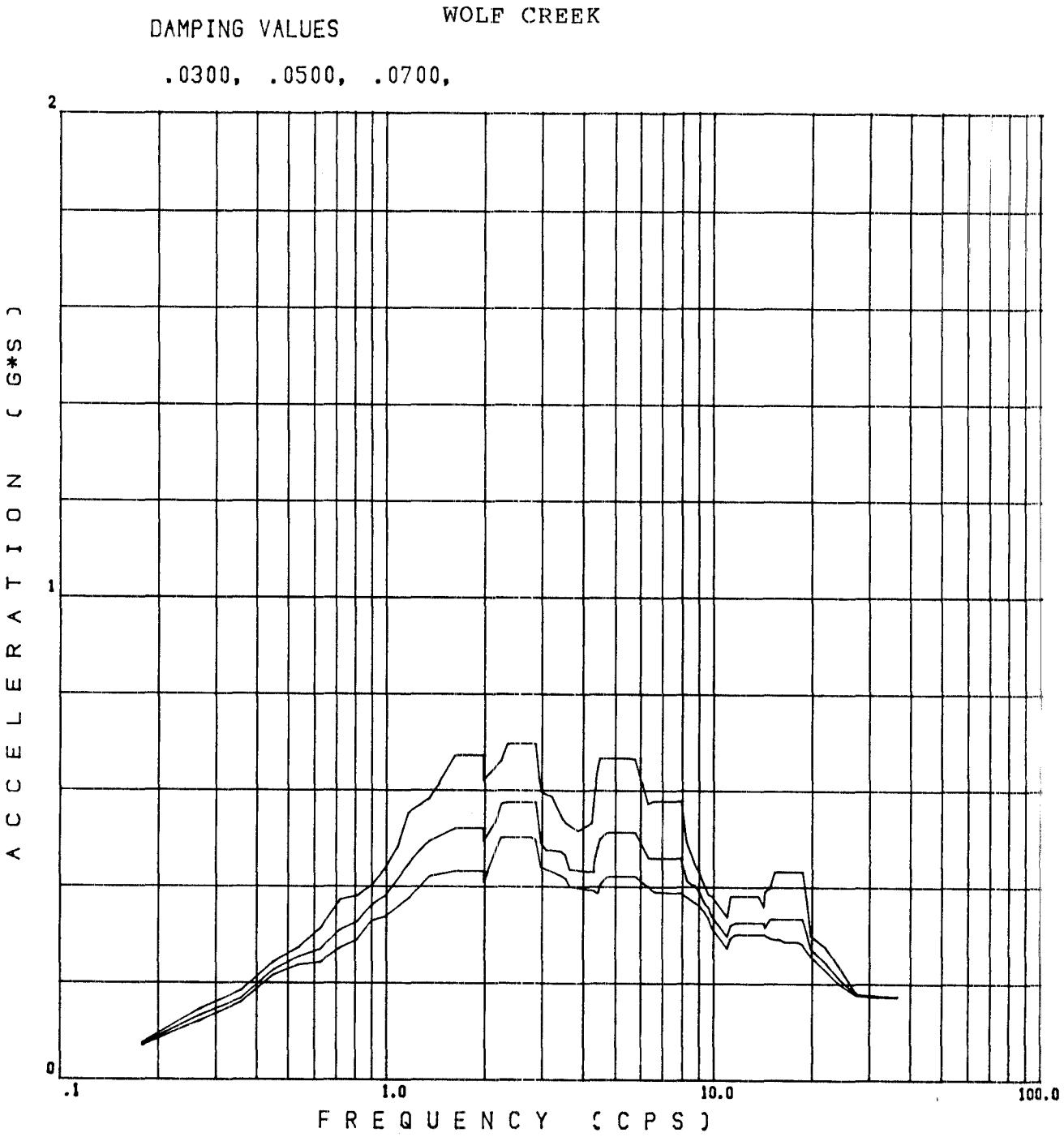

DESIGN FLOOR RESPONSE SPECTRA

Rev. 0

WOLF CREEK
UPDATED SAFETY ANALYSIS REPORT

FIGURE 3.7(B)-15A

SPECTRA - CONTAINMENT BUILDING SSE, NORTH-SOUTH DIRECTION, STEAM GENERATOR UPPER SUPPORT, CALLAWAY SITE

WOLF CREEK

DAMPING VALUES

.0300, .0500, .0700,

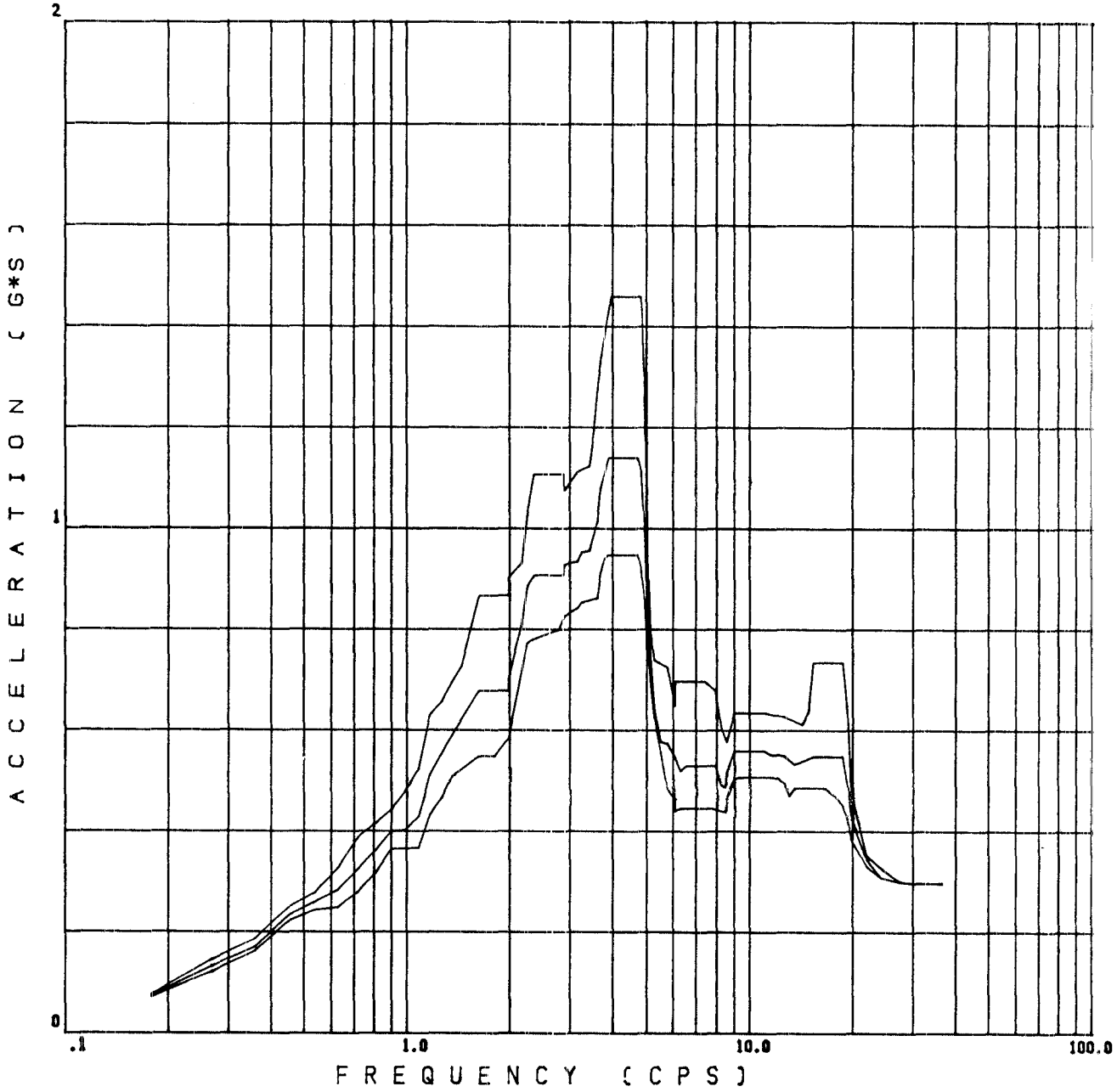

DESIGN FLOOR RESPONSE SPECTRA

Rev. 0

WOLF CREEK
UPDATED SAFETY ANALYSIS REPORT

FIGURE 3.7(B)-15B

SPECTRA - CONTAINMENT BUILDING SSE, NORTH-SOUTH DIRECTION, STEAM GENERATOR UPPER SUPPORT, STERLING SITE

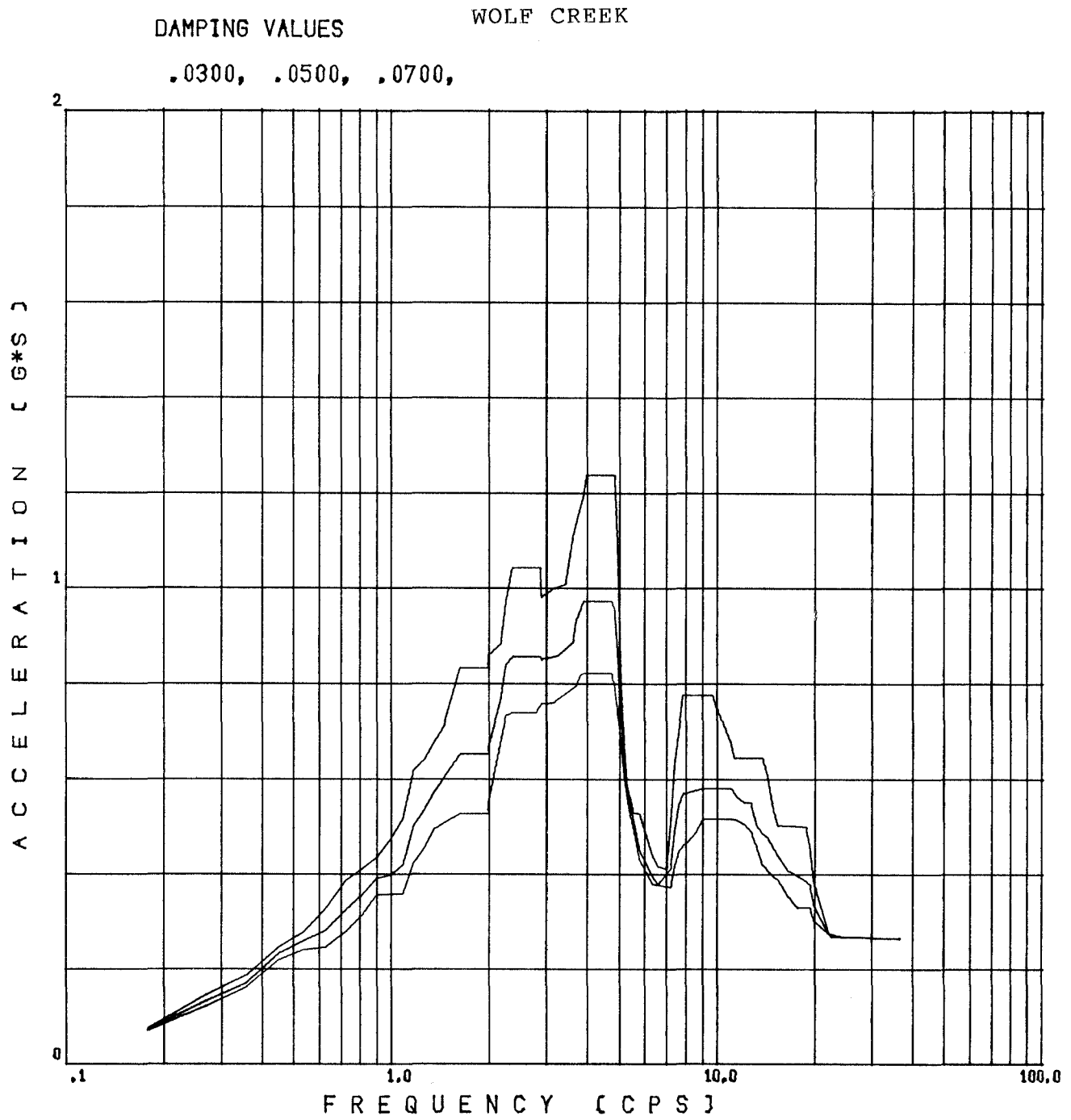

DESIGN FLOOR RESPONSE SPECTRA

Rev. 0

WOLF CREEK
UPDATED SAFETY ANALYSIS REPORT

FIGURE 3.7(B)-15D

SPECTRA - CONTAINMENT BUILDING SSE, NORTH-SOUTH DIRECTION, STEAM GENERATOR UPPER SUPPORT, WOLF CREEK SITE

DAMPING VALUES WOLF CREEK

.0300, .0500, .0700,

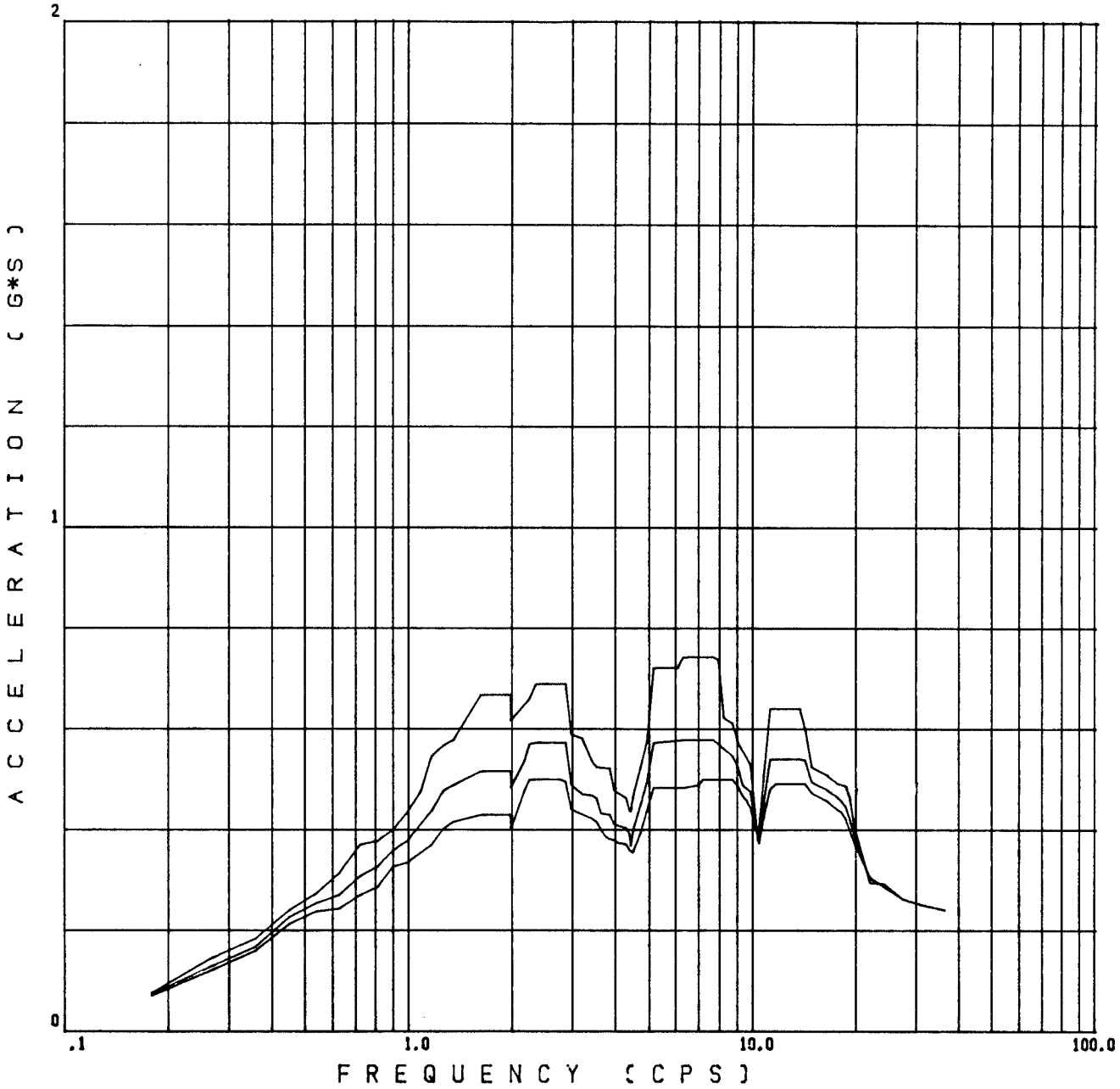

DESIGN FLOOR RESPONSE SPECTRA

Rev. 0

WOLF CREEK
UPDATED SAFETY ANALYSIS REPORT

FIGURE 3.7(B)-15E

SPECTRA - CONTAINMENT BUILDING SSE, EAST-WEST DIRECTION, STEAM GENERATOR UPPER SUPPORT, CALLAWAY SITE

DAMPING VALUES WOLF CREEK

.0300, .0500, .0700,

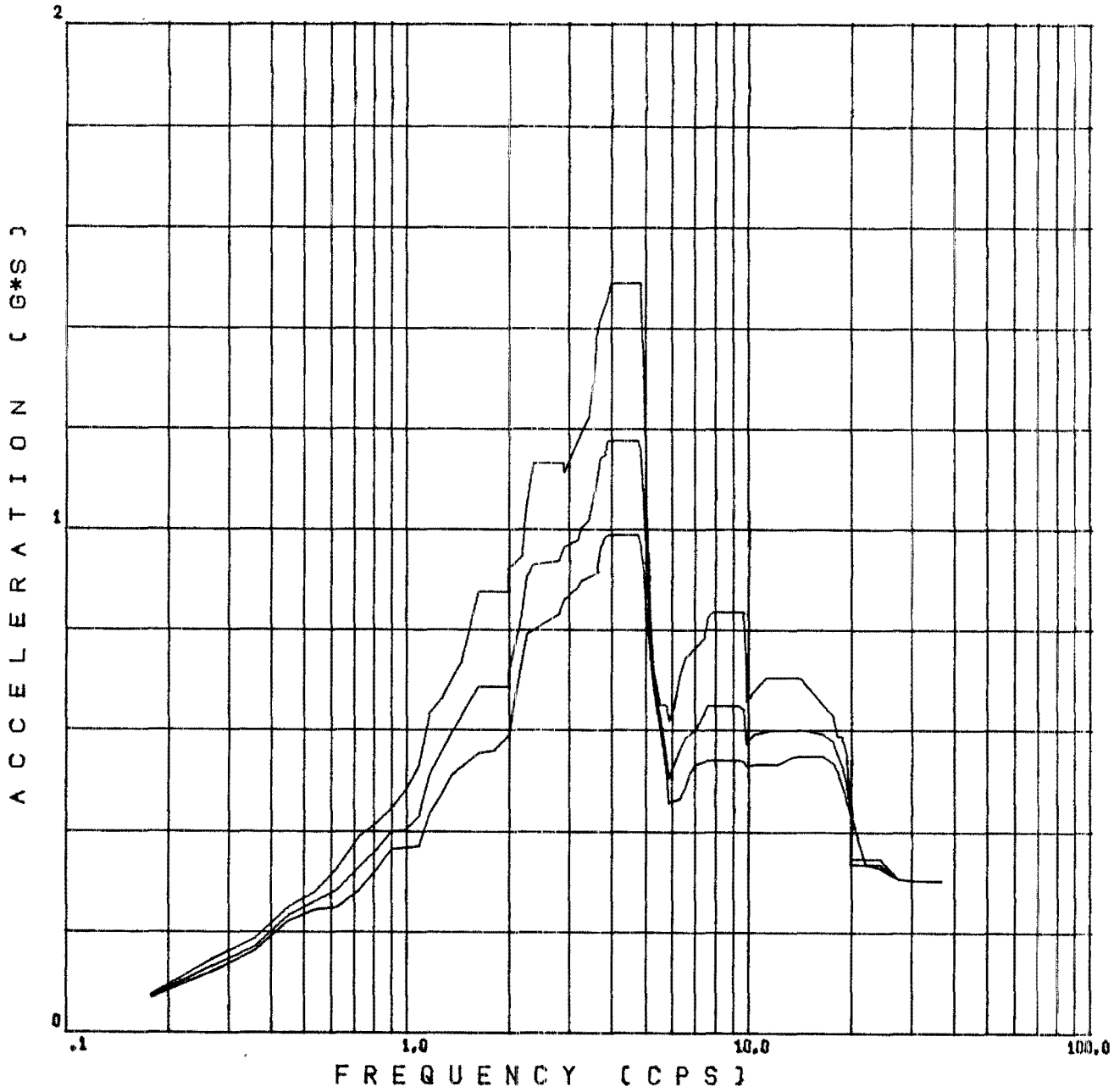

DESIGN FLOOR RESPONSE SPECTRA

Rev. 0

WOLF CREEK
UPDATED SAFETY ANALYSIS REPORT

FIGURE 3.7(B)-15F

SPECTRA - CONTAINMENT BUILDING SSE, EAST-WEST DIRECTION, STEAM GENERATOR UPPER SUPPORT, STERLING SITE

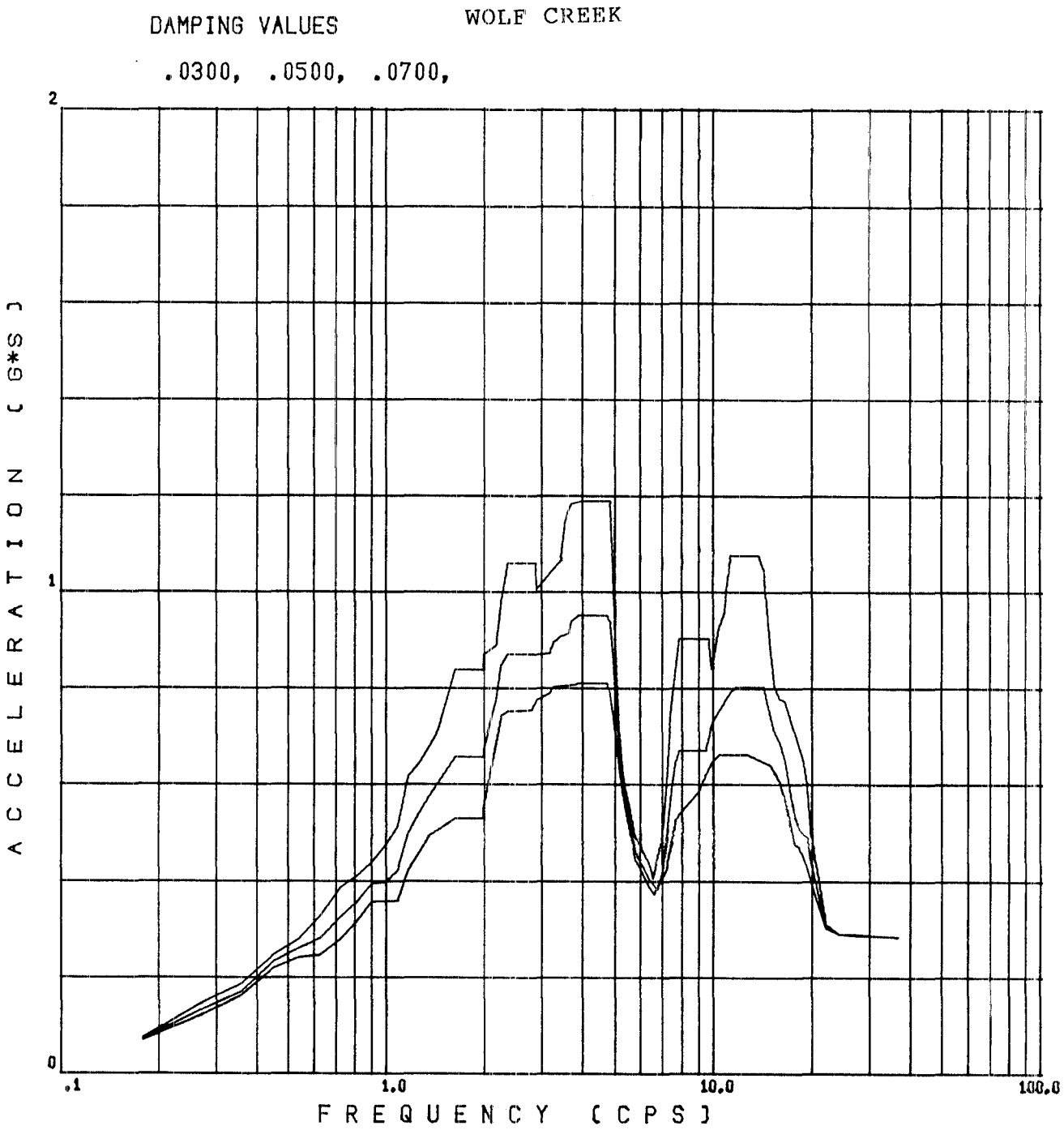

DESIGN FLOOR RESPONSE SPECTRA

Rev. 0

WOLF CREEK
UPDATED SAFETY ANALYSIS REPORT

FIGURE 3.7(B)-15H

SPECTRA - CONTAINMENT BUILDING SSE, EAST-WEST DIRECTION, STEAM GENERATOR UPPER SUPPORT, WOLF CREEK SITE

DAMPING VALUES WOLF CREEK

.0300, .0500, .0700,

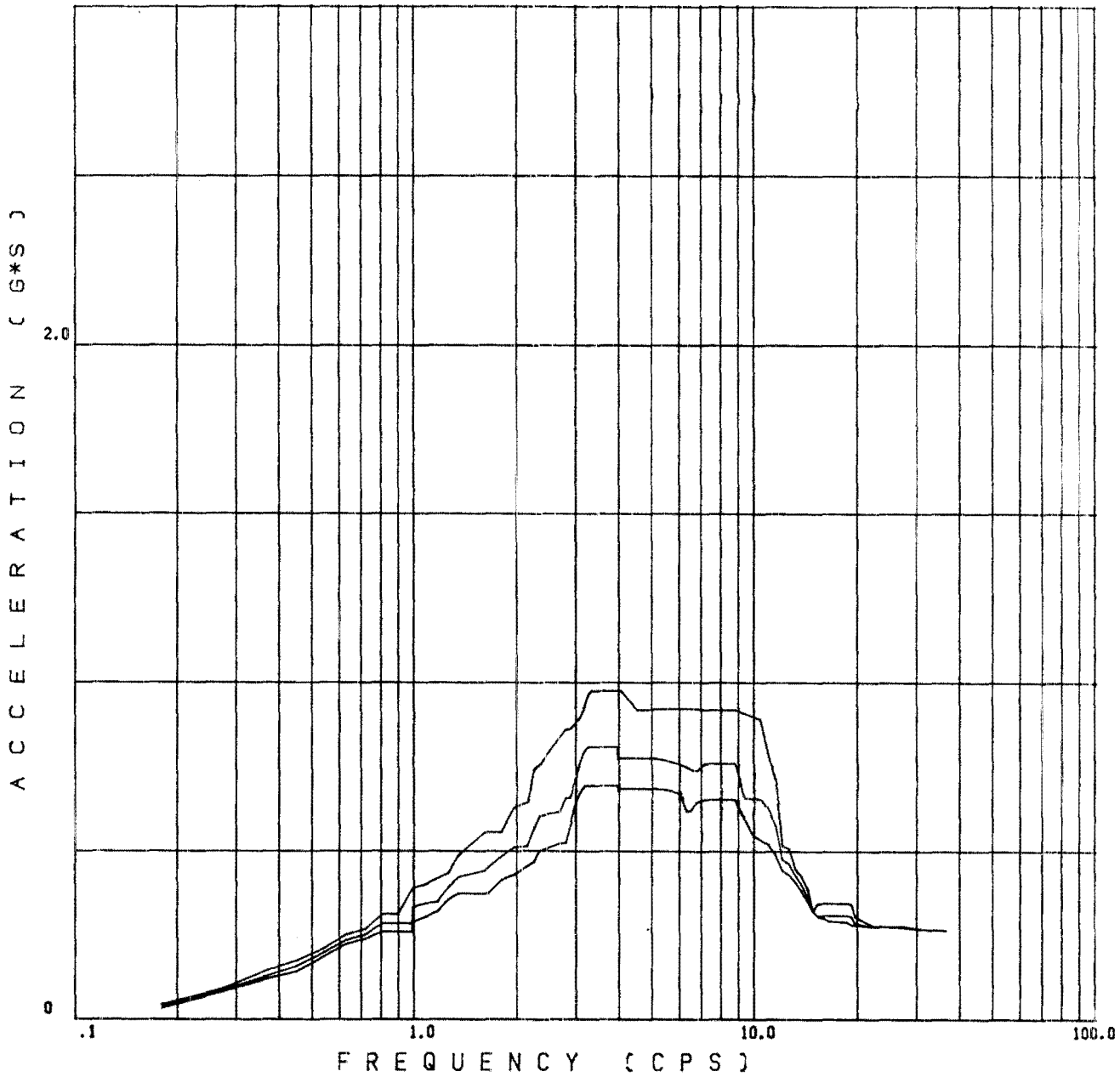

DESIGN FLOOR RESPONSE SPECTRA

Rev. 0

WOLF CREEK
UPDATED SAFETY ANALYSIS REPORT

FIGURE 3.7(B)-15I

SPECTRA - CONTAINMENT BUILDING SSE, VERTICAL DIRECTION, STEAM GENERATOR UPPER SUPPORT, CALLAWAY SITE

DAMPING VALUES WOLF CREEK

.0300, .0500, .0700,

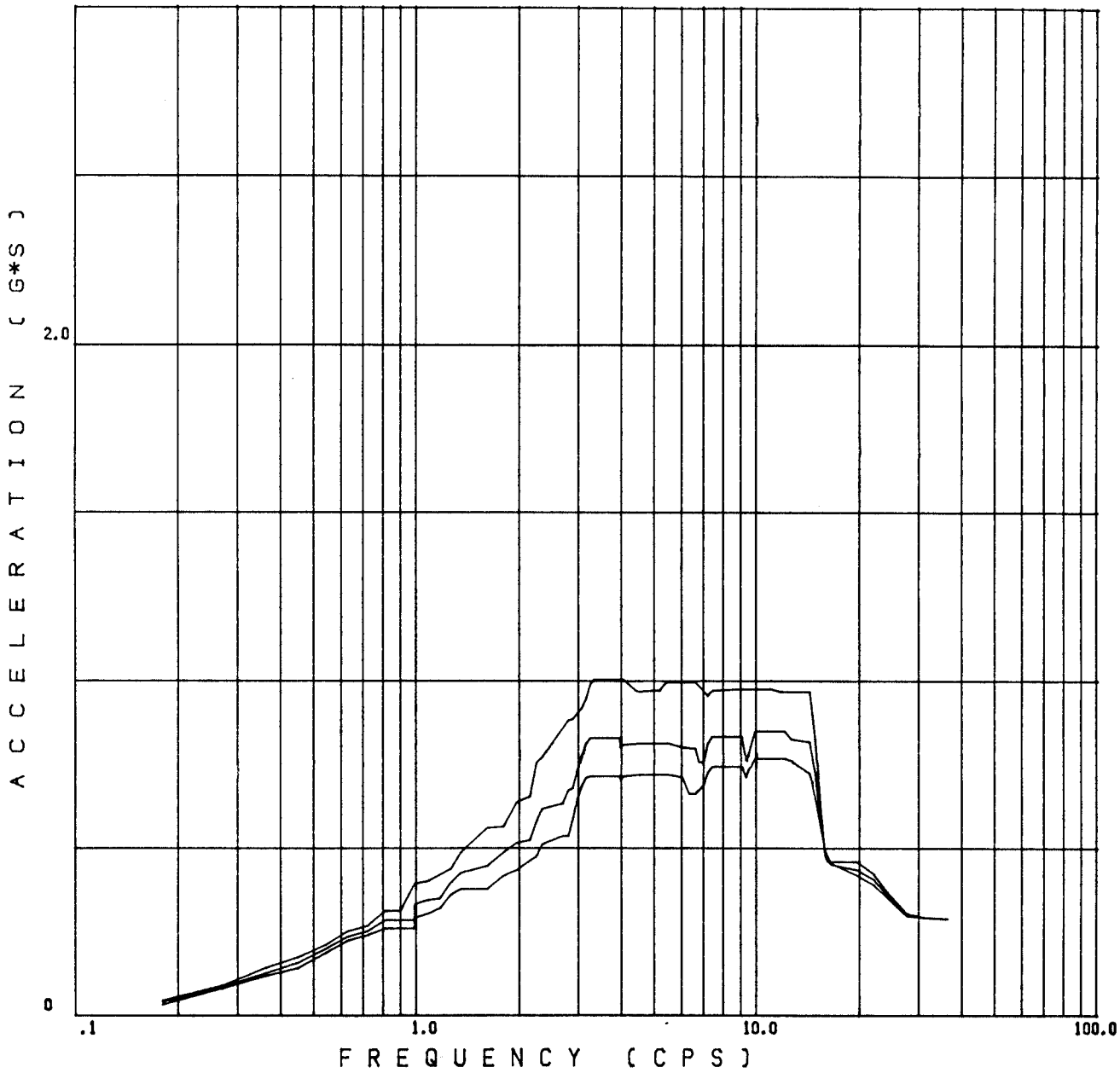

DESIGN FLOOR RESPONSE SPECTRA

Rev. 0

WOLF CREEK UPDATED SAFETY ANALYSIS REPORT
FIGURE 3.7(B)-15J SPECTRA - CONTAINMENT BUILDING SSE, VERTICAL DIRECTION, STEAM GENERATOR UPPER SUPPORT, STERLING SITE

WOLF CREEK

DAMPING VALUES

.0300, .0500, .0700,

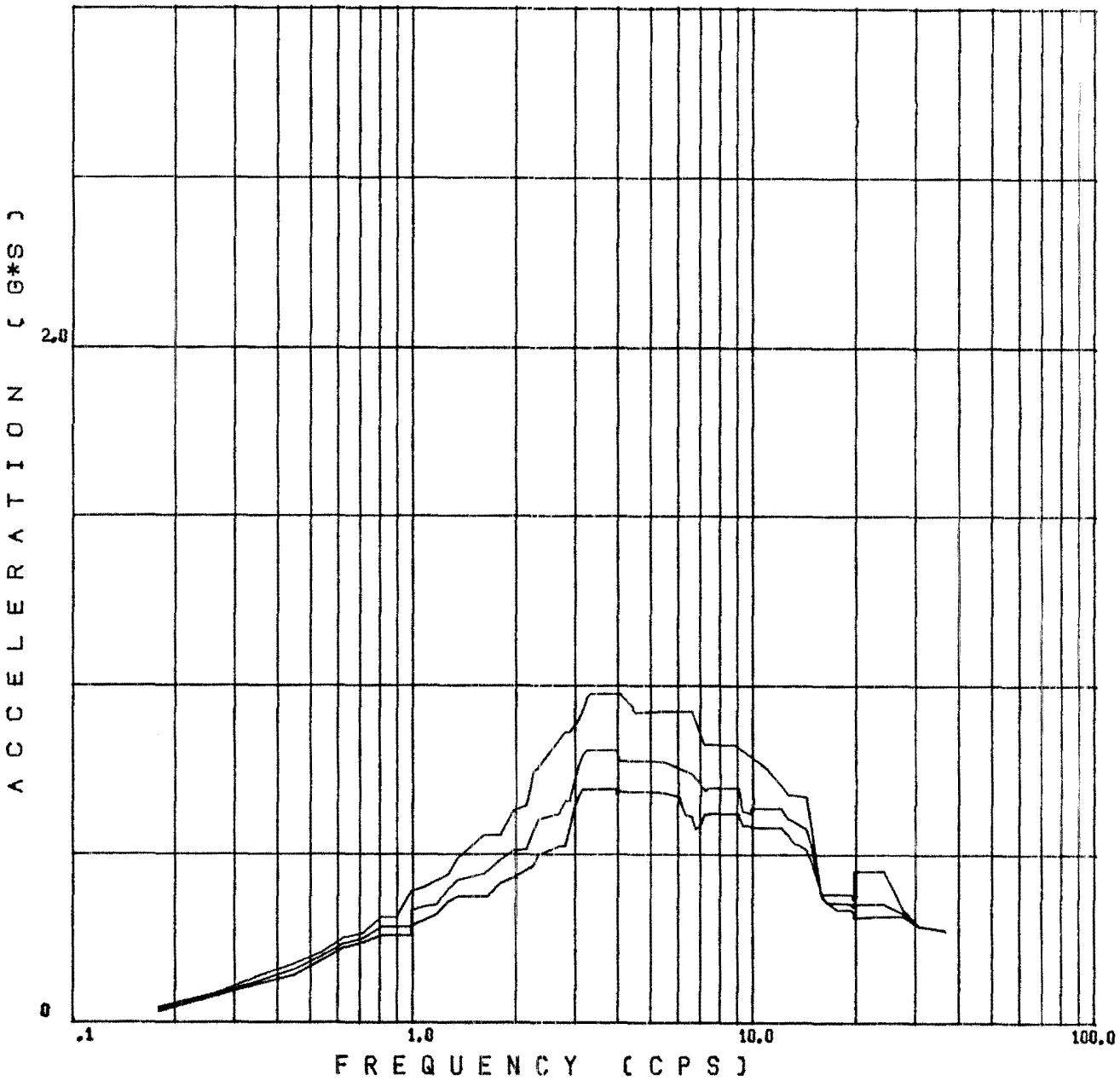

DESIGN FLOOR RESPONSE SPECTRA

Rev. 0

WOLF CREEK
UPDATED SAFETY ANALYSIS REPORT

FIGURE 3.7(B)-15L

SPECTRA - CONTAINMENT BUILDING SSE, VERTICAL DIRECTION, STEAM GENERATOR UPPER SUPPORT, WOLF CREEK SITE

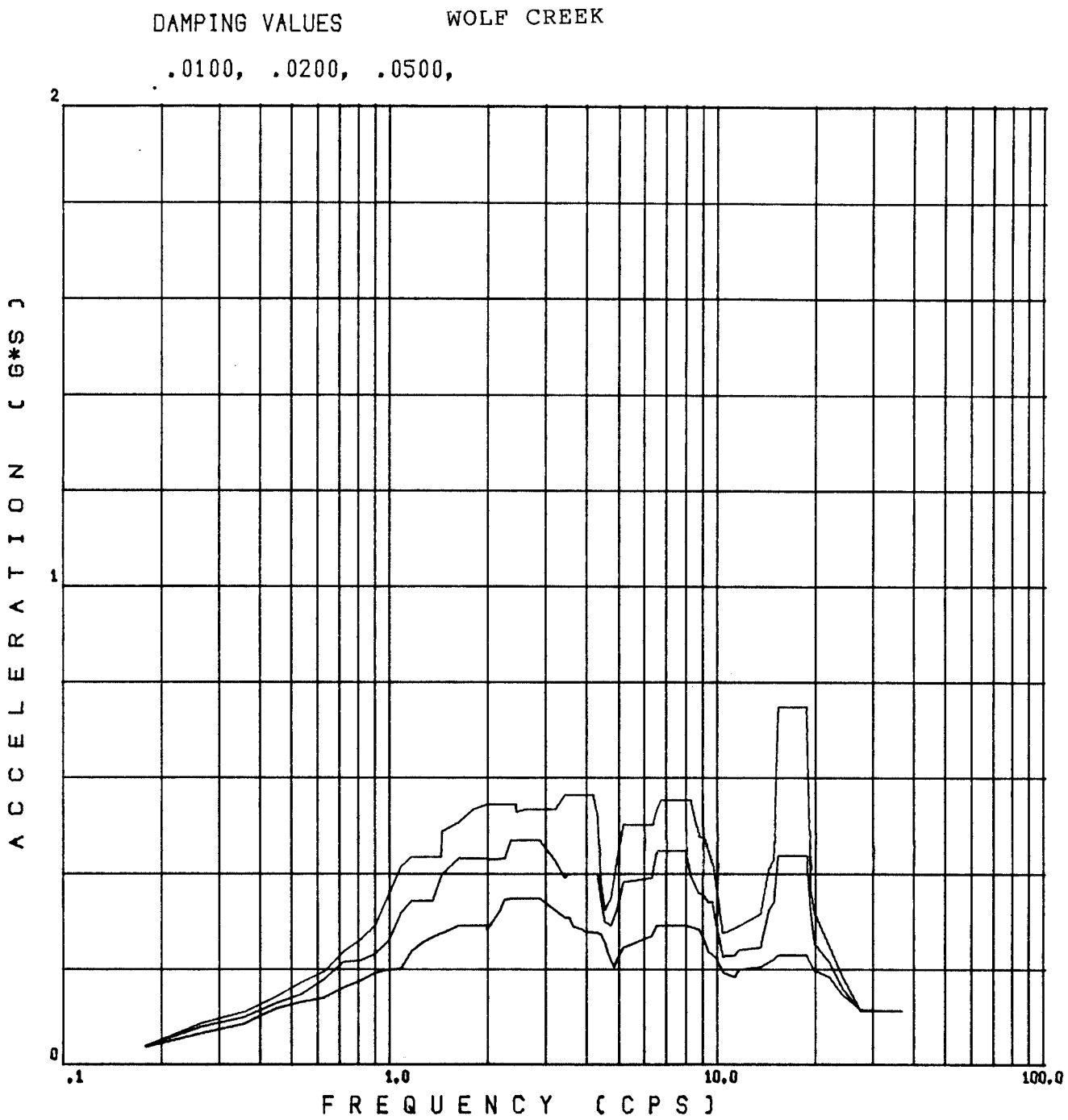

DESIGN FLOOR RESPONSE SPECTRA

Rev. 0

WOLF CREEK
UPDATED SAFETY ANALYSIS REPORT

FIGURE 3.7(B)-15M

SPECTRA - CONTAINMENT BUILDING OBE, NORTH-SOUTH DIRECTION, STEAM GENERATOR UPPER SUPPORT, CALLAWAY SITE

WOLF CREEK

DAMPING VALUES

.0100, .0200, .0500,

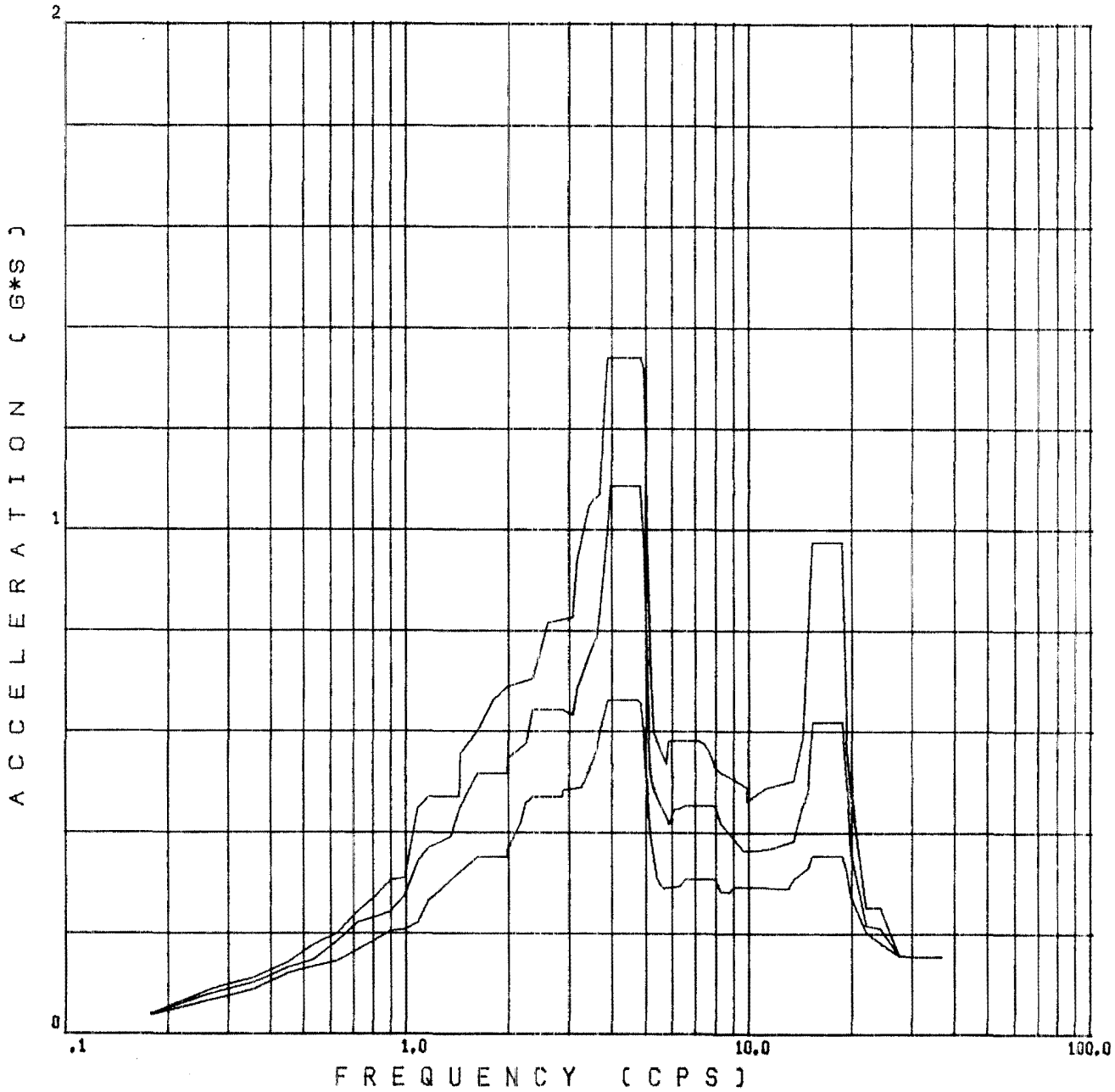

DESIGN FLOOR RESPONSE SPECTRA

Rev. 0

WOLF CREEK
UPDATED SAFETY ANALYSIS REPORT

FIGURE 3.7(B)-15N

SPECTRA - CONTAINMENT BUILDING OBE, NORTH-SOUTH DIRECTION, STEAM GENERATOR UPPER SUPPORT, STERLING SITE

WOLF CREEK

DAMPING VALUES

.0100, .0200, .0500,

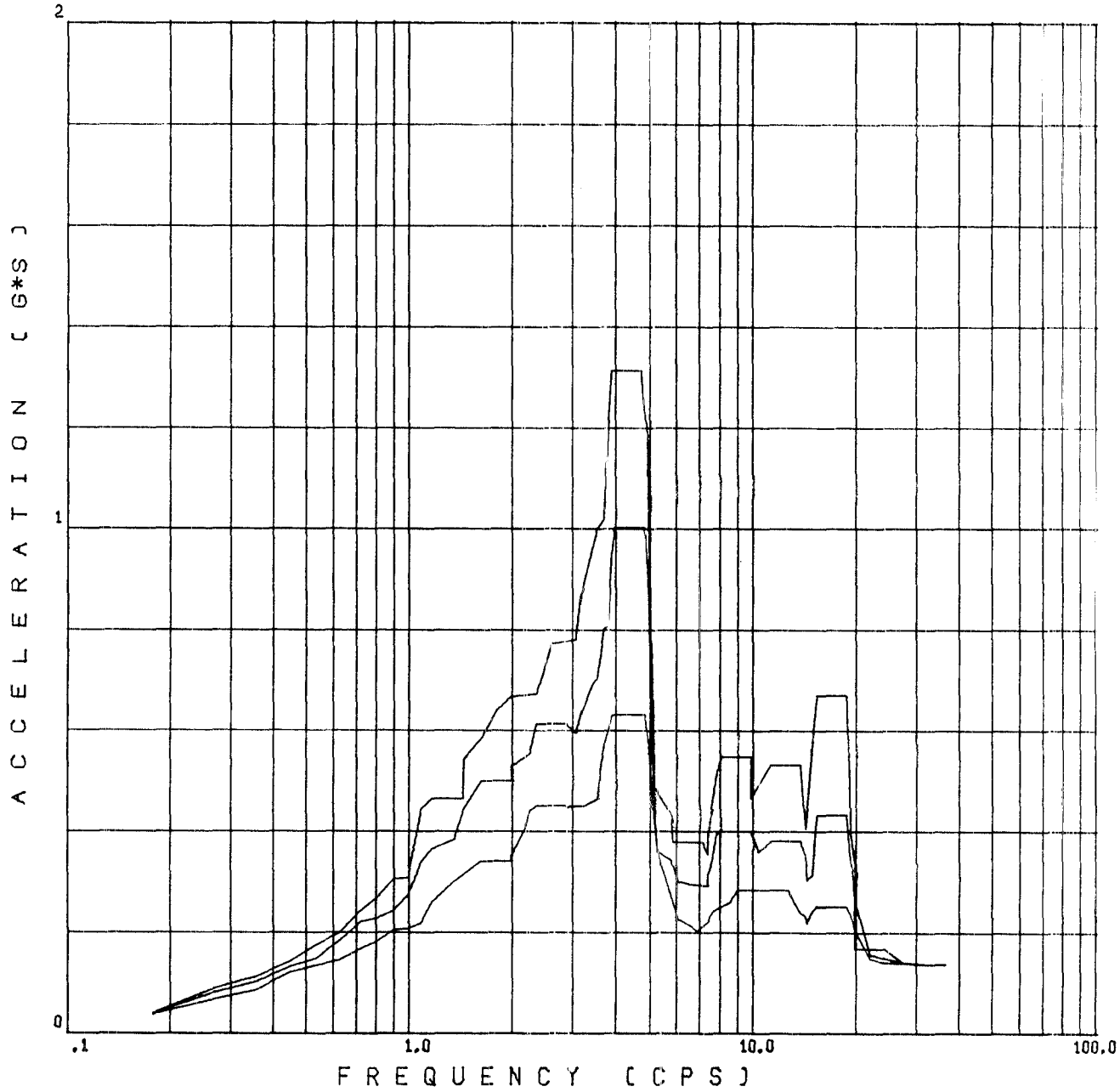

DESIGN FLOOR RESPONSE SPECTRA

Rev. 0

WOLF CREEK
UPDATED SAFETY ANALYSIS REPORT

FIGURE 3.7(B)-15P

SPECTRA - CONTAINMENT BUILDING OBE, NORTH-SOUTH DIRECTION, STEAM GENERATOR UPPER SUPPORT, WOLF CREEK SITE

WOLF CREEK

DAMPING VALUES

.0100, .0200, .0500,

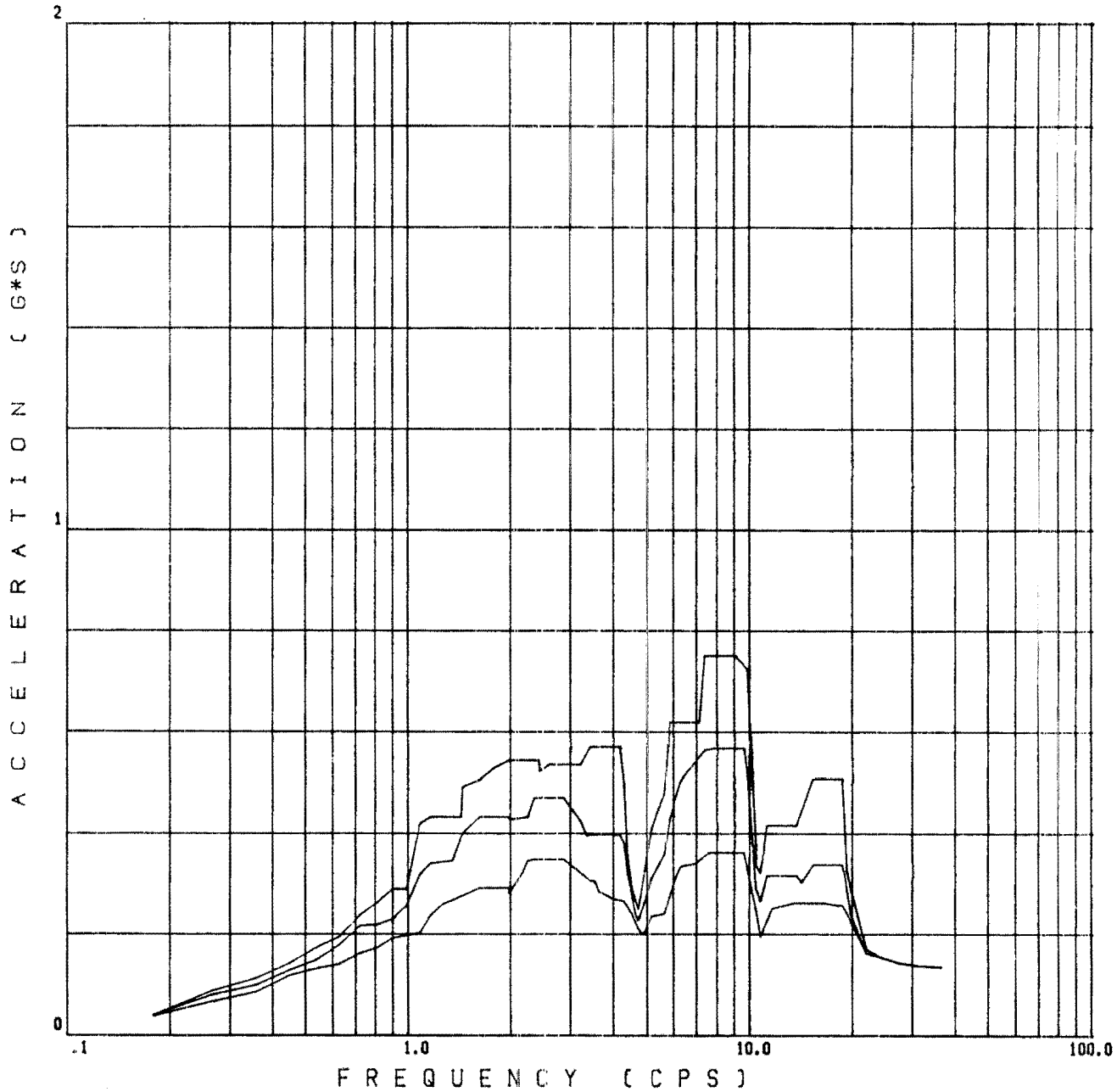

DESIGN FLOOR RESPONSE SPECTRA

Rev. 0

WOLF CREEK
UPDATED SAFETY ANALYSIS REPORT

FIGURE 3.7(B)-15Q

SPECTRA - CONTAINMENT BUILDING OBE, EAST-WEST DIRECTION, STEAM GENERATOR UPPER SUPPORT, CALLAWAY SITE

WOLF CREEK

DAMPING VALUES

.0100, .0200, .0500,

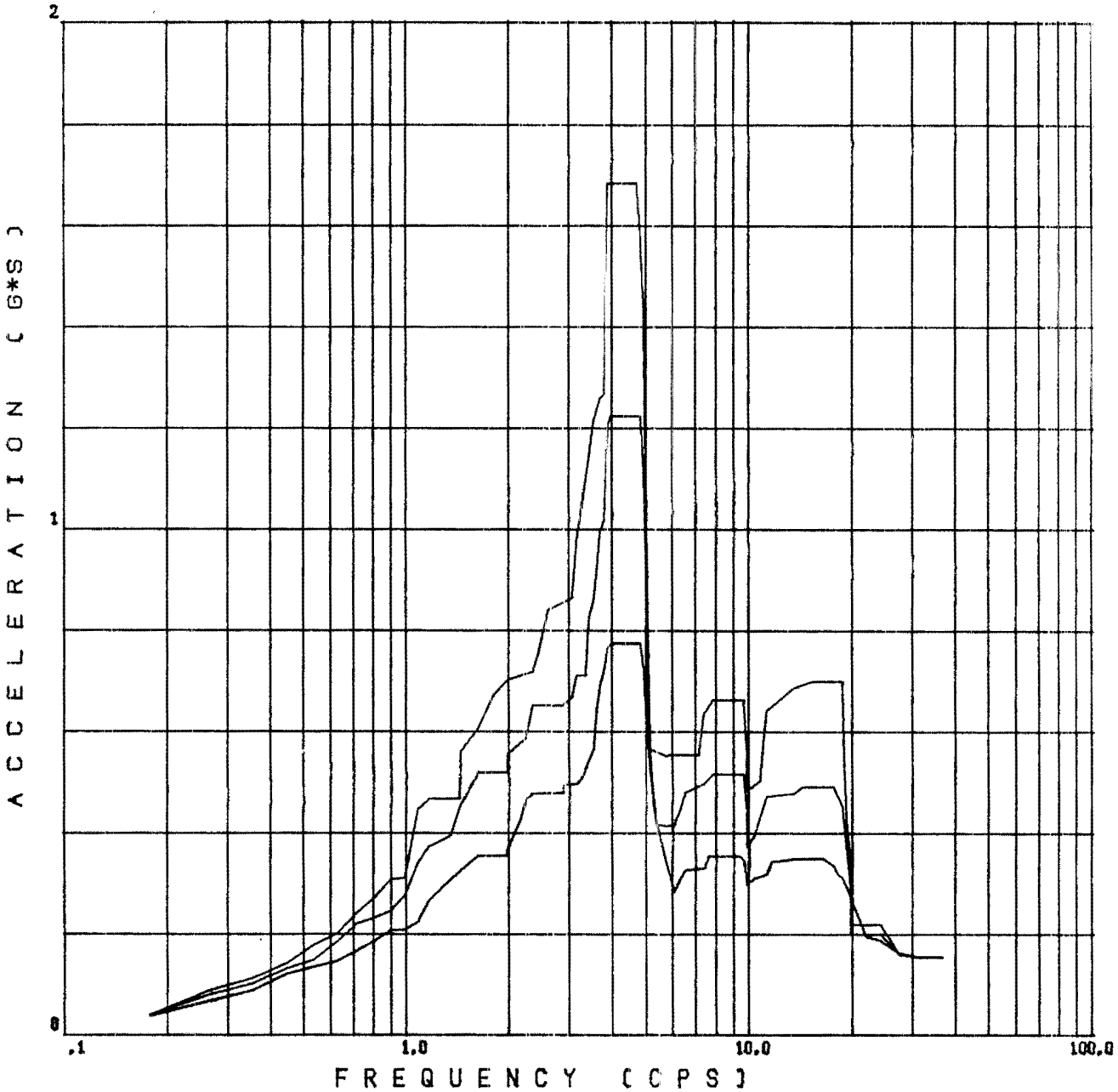

DESIGN FLOOR RESPONSE SPECTRA

Rev. 0

WOLF CREEK
UPDATED SAFETY ANALYSIS REPORT

FIGURE 3.7(B)-15R

SPECTRA - CONTAINMENT BUILDING OBE, EAST-WEST DIRECTION, STEAM GENERATOR UPPER SUPPORT, STERLING SITE

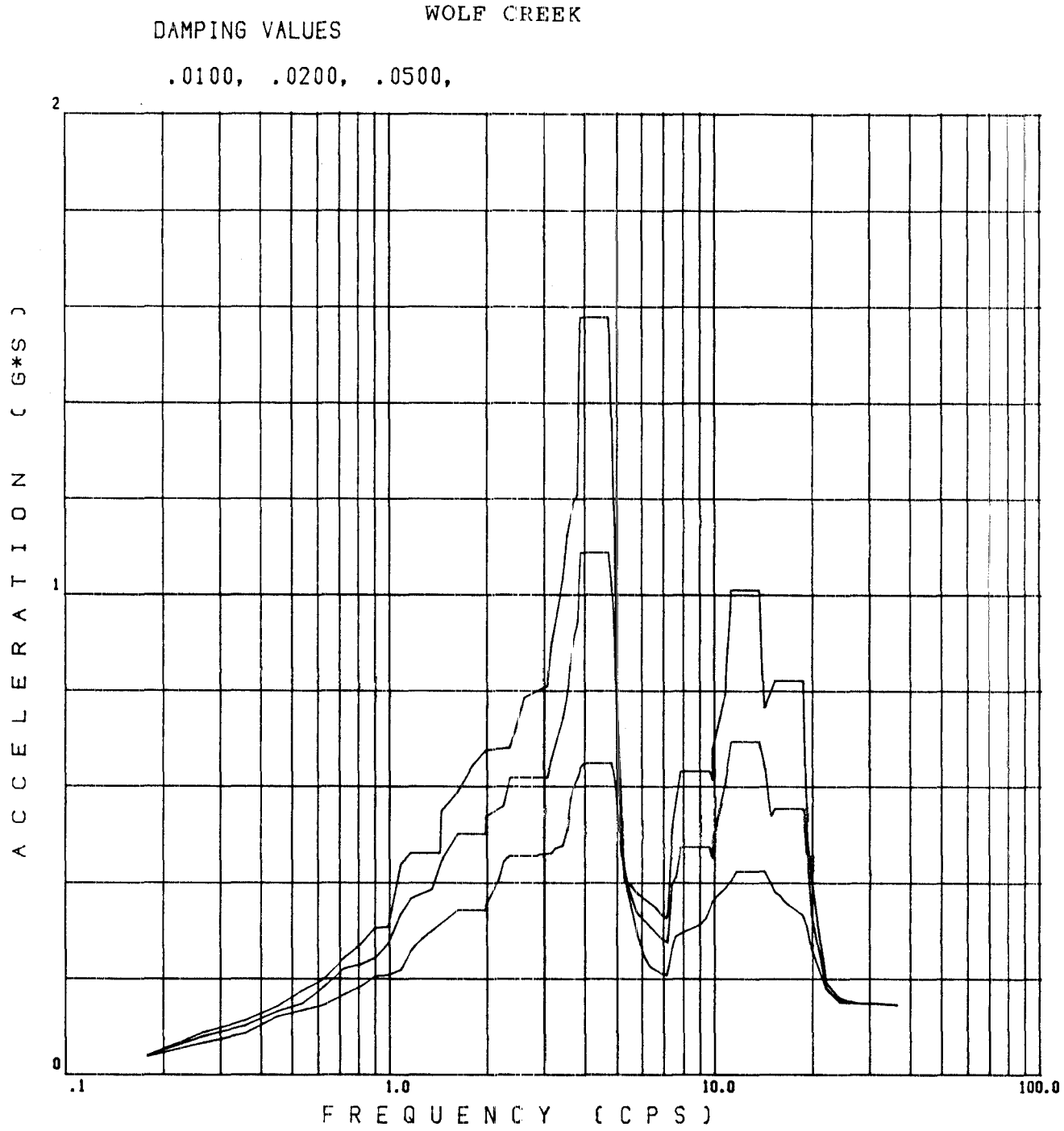

DESIGN FLOOR RESPONSE SPECTRA

Rev. 0

WOLF CREEK
UPDATED SAFETY ANALYSIS REPORT

FIGURE 3.7(B)-15T

SPECTRA - CONTAINMENT BUILDING OBE, EAST-WEST DIRECTION, STEAM GENERATOR UPPER SUPPORT, WOLF CREEK SITE

DAMPING VALUES WOLF CREEK

.0100, .0200, .0500,

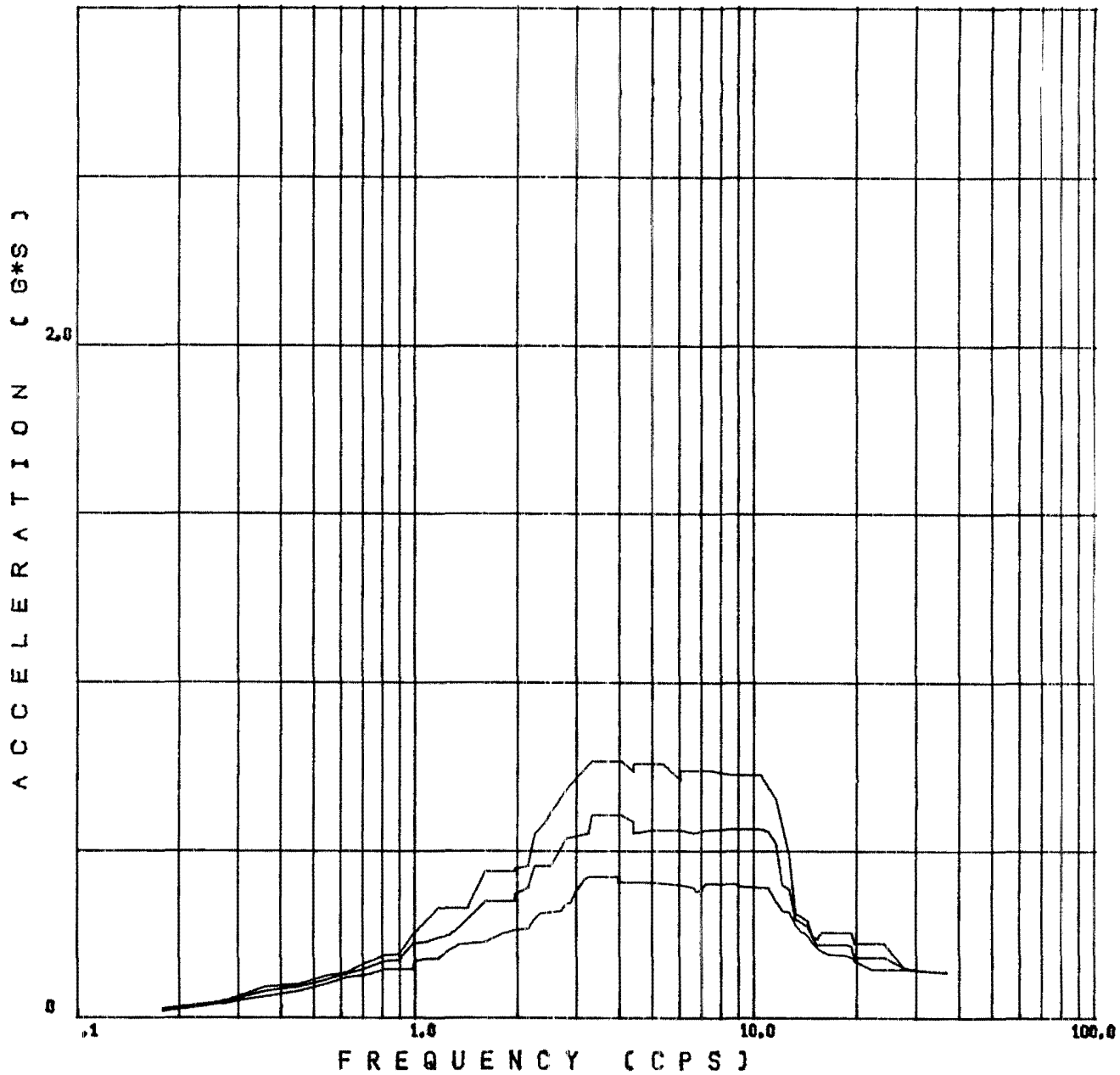

DESIGN FLOOR RESPONSE SPECTRA

Rev. 0

WOLF CREEK
UPDATED SAFETY ANALYSIS REPORT

FIGURE 3.7(B)-15U

SPECTRA - CONTAINMENT BUILDING OBE, VERTICAL DIRECTION, STEAM GENERATOR UPPER SUPPORT, CALLAWAY SITE

WOLF CREEK

DAMPING VALUES

.0100, .0200, .0500,

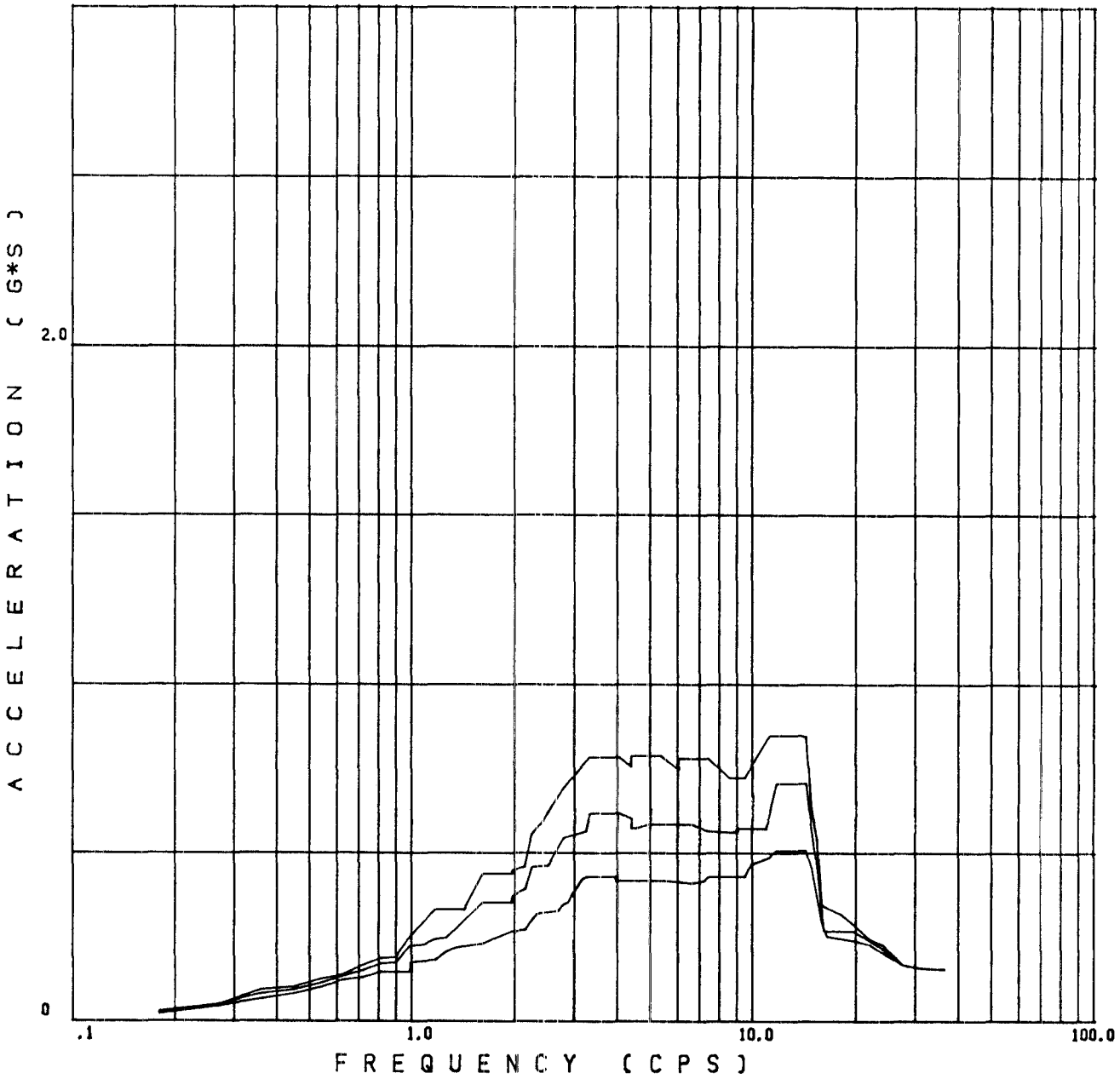

DESIGN FLOOR RESPONSE SPECTRA

Rev. 0

WOLF CREEK UPDATED SAFETY ANALYSIS REPORT
FIGURE 3.7(B)-15V SPECTRA - CONTAINMENT BUILDING OBE, VERTICAL DIRECTION, STEAM GENERATOR UPPER SUPPORT, STERLING SITE

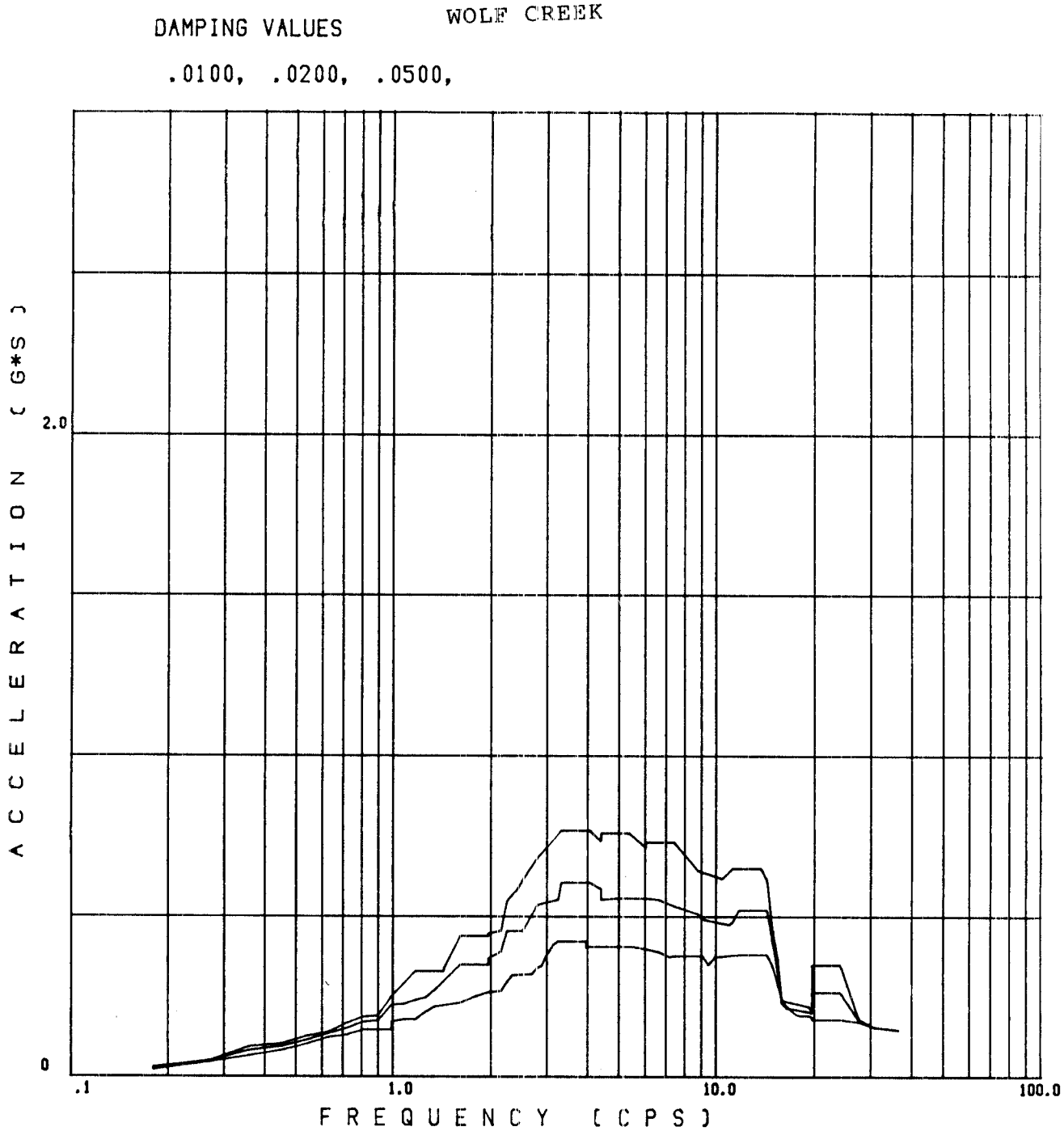

DESIGN FLOOR RESPONSE SPECTRA

Rev. 0

WOLF CREEK
UPDATED SAFETY ANALYSIS REPORT

FIGURE 3.7(B)-15X

SPECTRA - CONTAINMENT BUILDING OBE, VERTICAL DIRECTION, STEAM GENERATOR UPPER SUPPORT, WOLF CREEK SITE

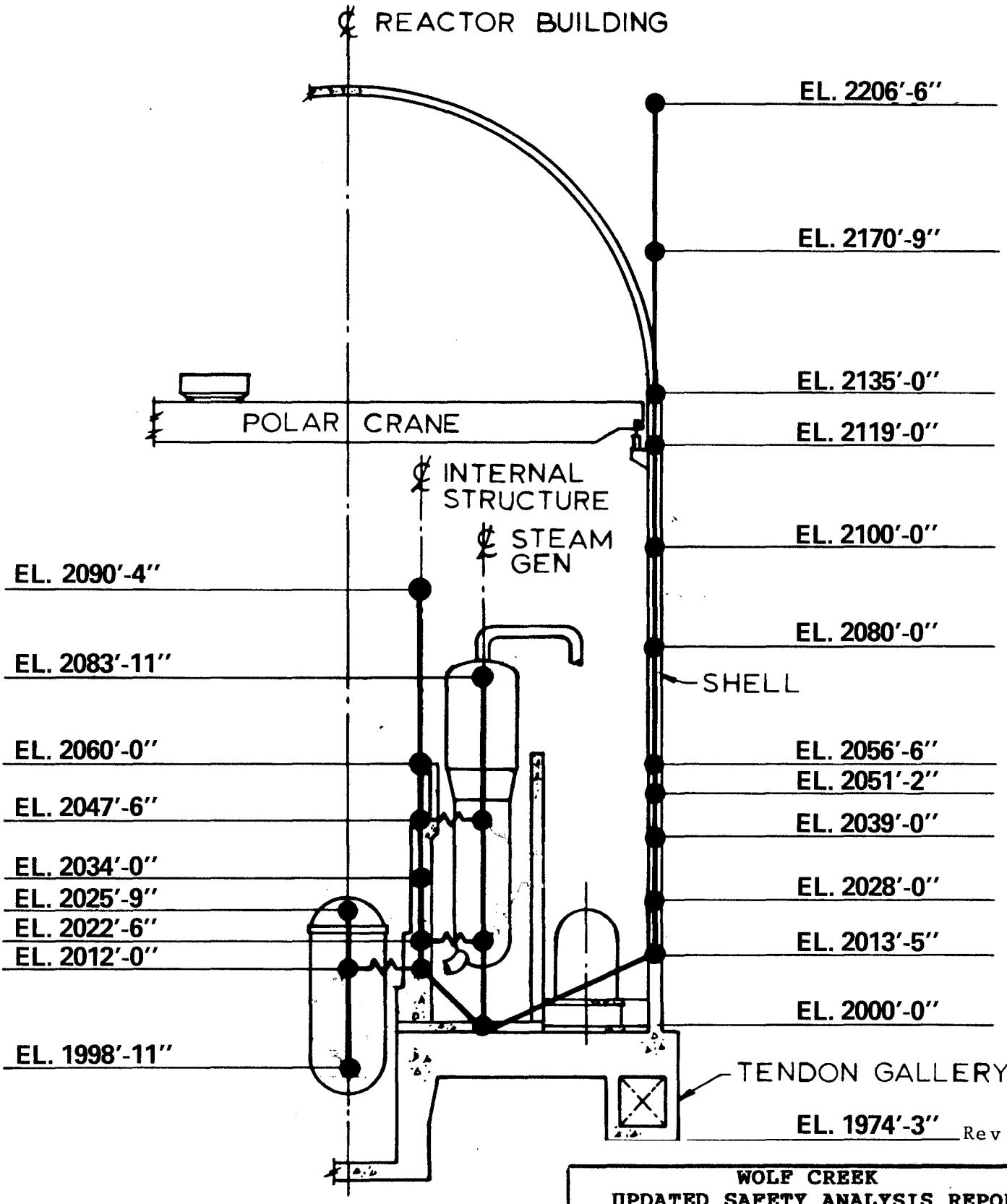

Rev. 0

WOLF CREEK
UPDATED SAFETY ANALYSIS REPORT

FIGURE 3.7(B)-17

LUMPED-MASS/FLUSH MODEL, CONTAINMENT BUILDING

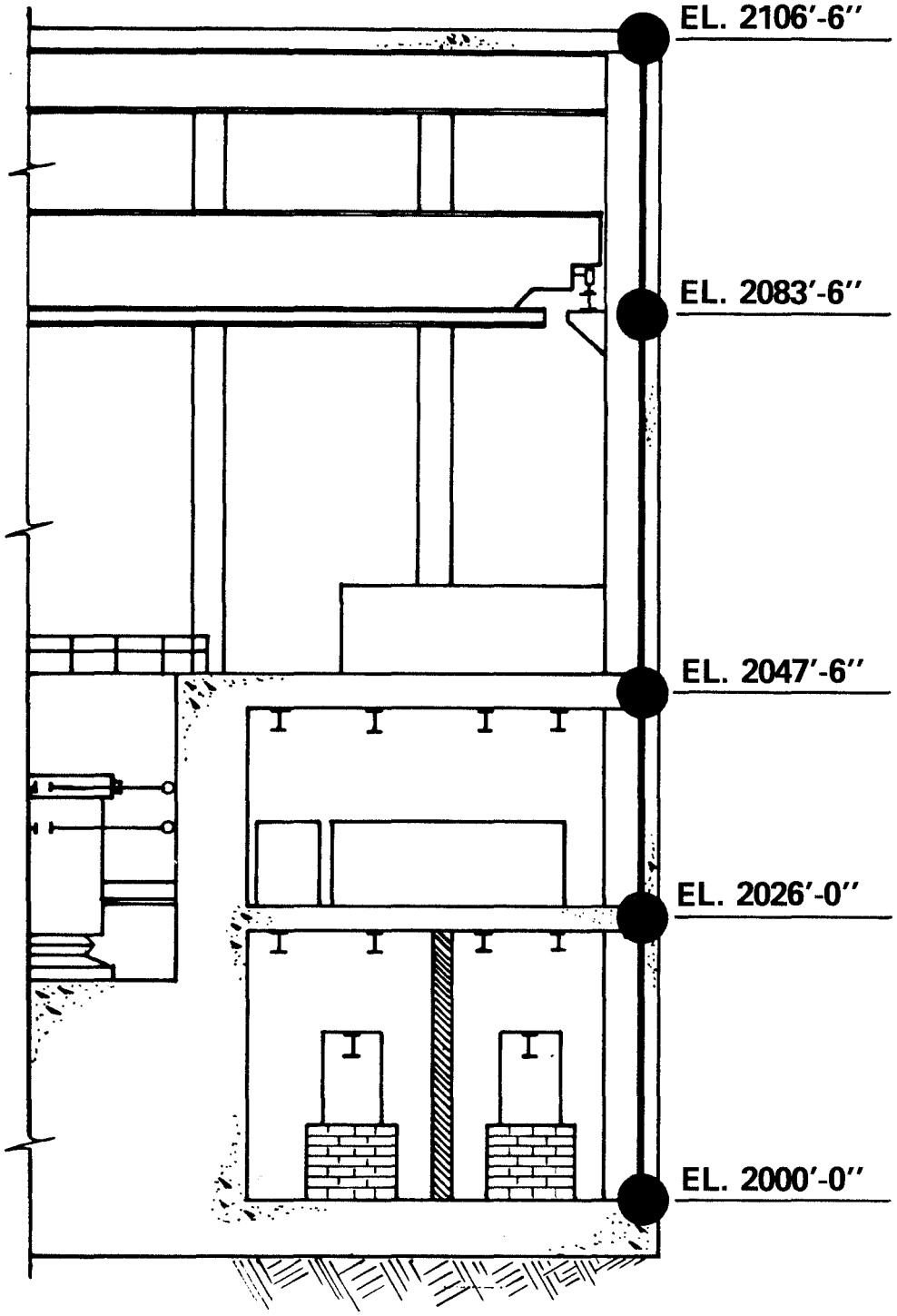

Rev. 0

WOLF CREEK
UPDATED SAFETY ANALYSIS REPORT

FIGURE 3.7(B)-18

LUMPED-MASS/FLUSH MODEL, FUEL BUILDING

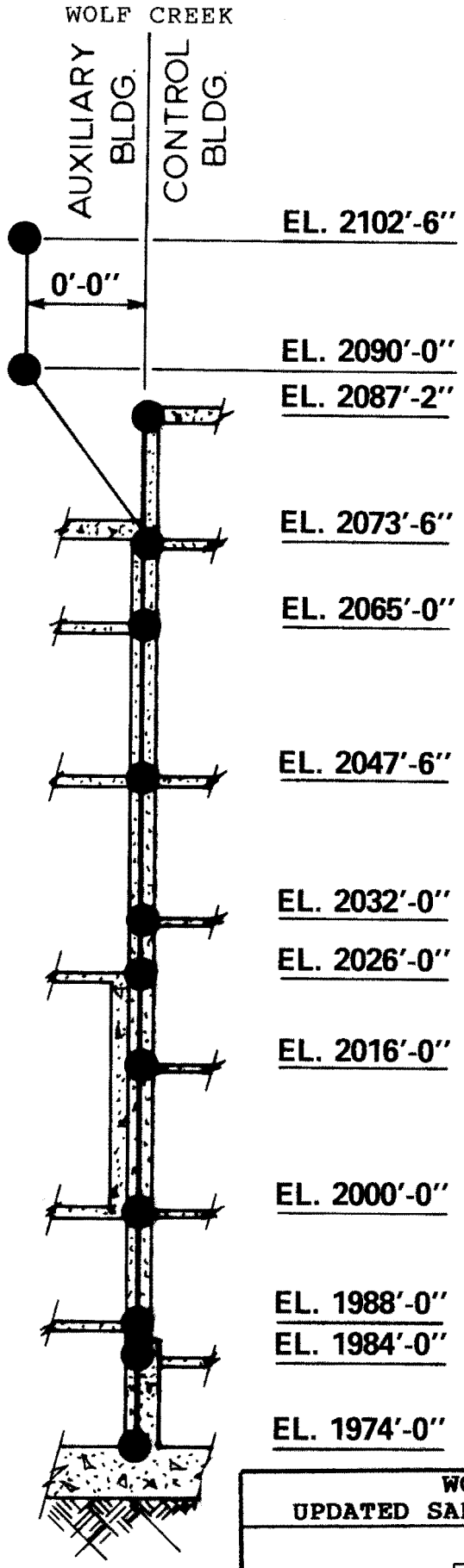

Rev. 0

WOLF CREEK
UPDATED SAFETY ANALYSIS REPORT

FIGURE 3.7(B)-19

LUMPED-MASS/FLUSH MODEL, AUXILIARY/CONTROL BUILDING

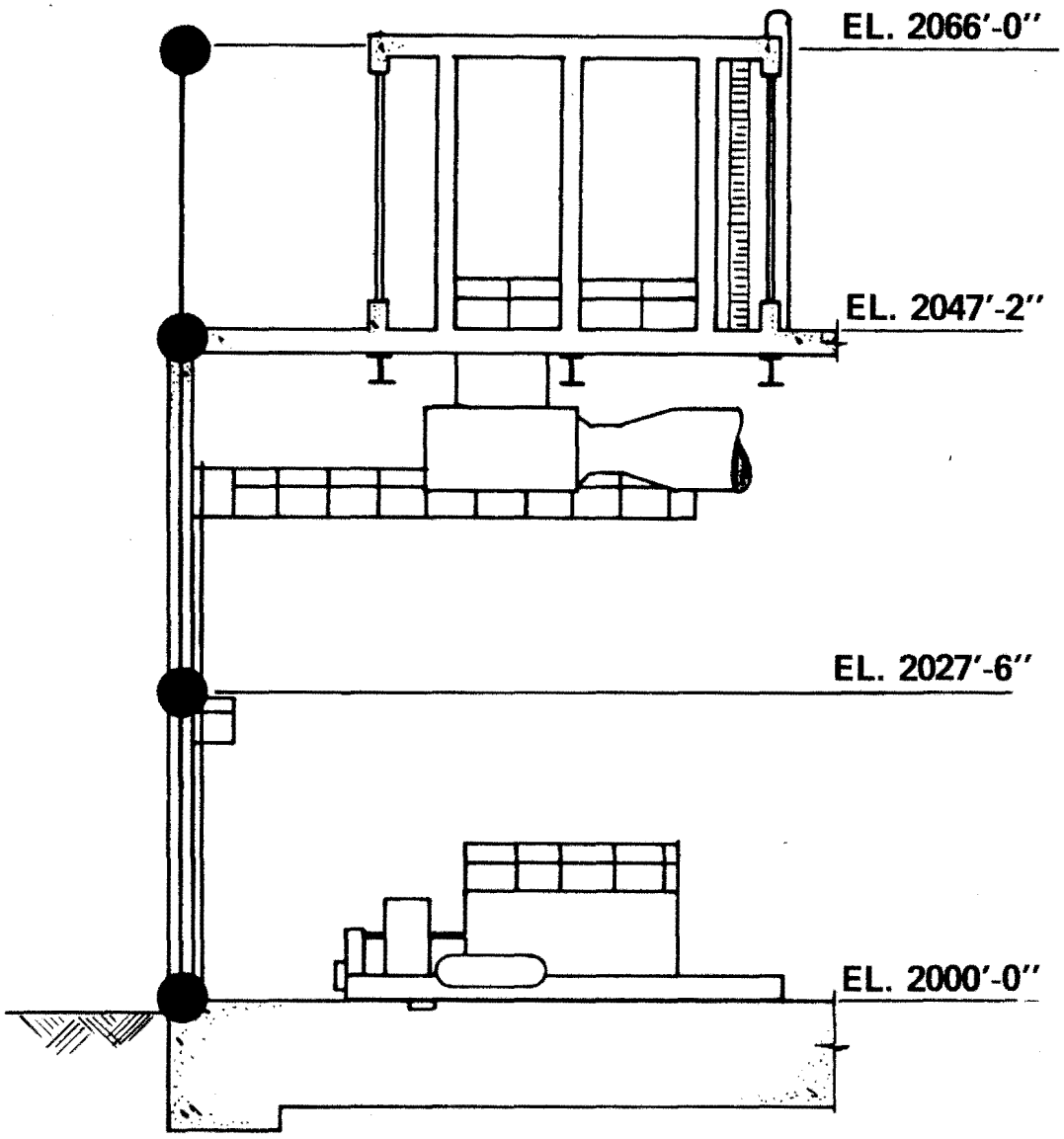

Rev. 0

WOLF CREEK
UPDATED SAFETY ANALYSIS REPORT

FIGURE 3.7(B)-20

LUMPED-MASS/FLUSH MODEL, DIESEL GENERATOR BUILDING

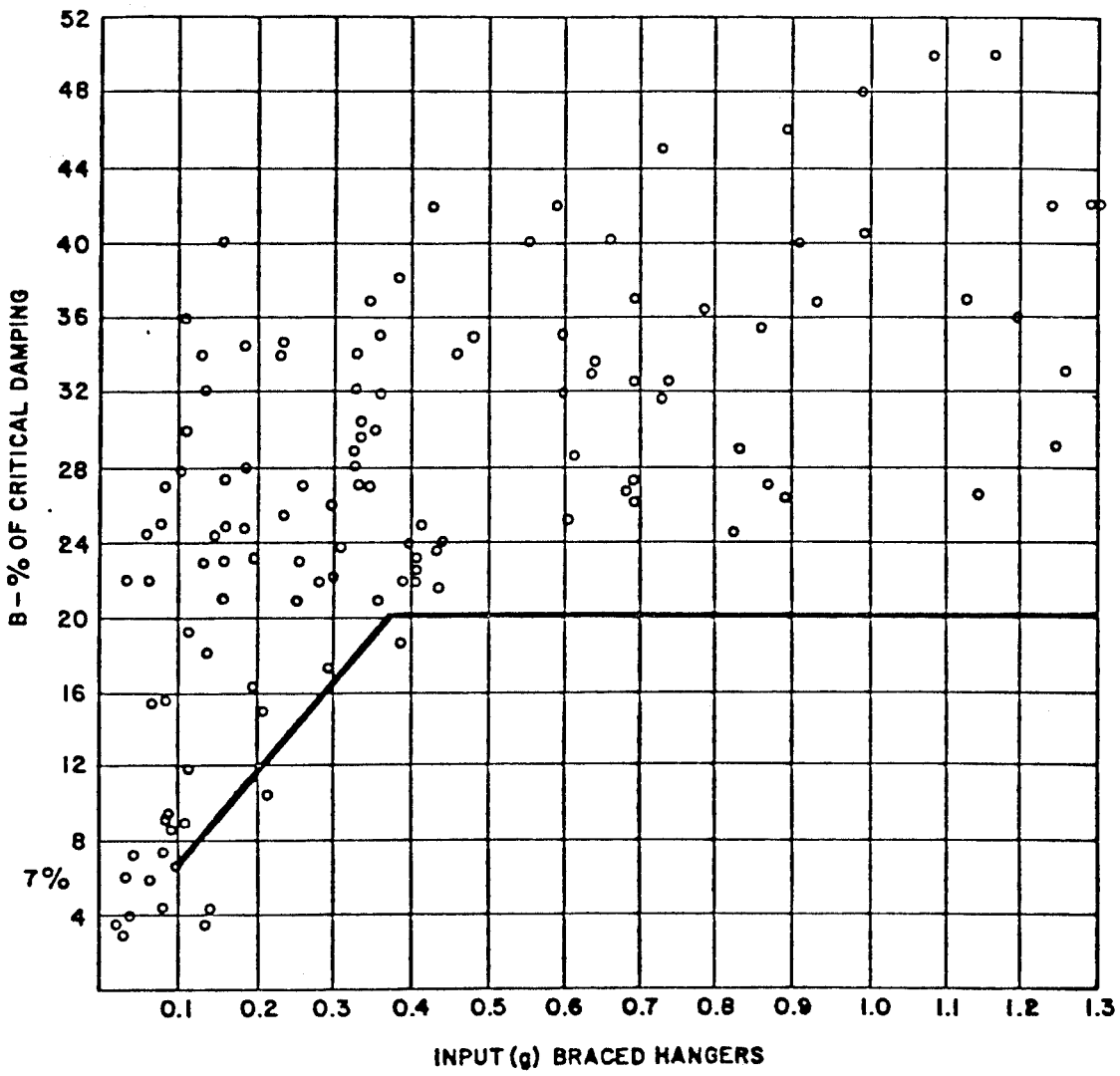

Rev. 0

WOLF CREEK
UPDATED SAFETY ANALYSIS REPORT

FIGURE 3.7(B)-21

DAMPING VS. INPUT LEVEL FOR BRACED HANGER SYSTEMS

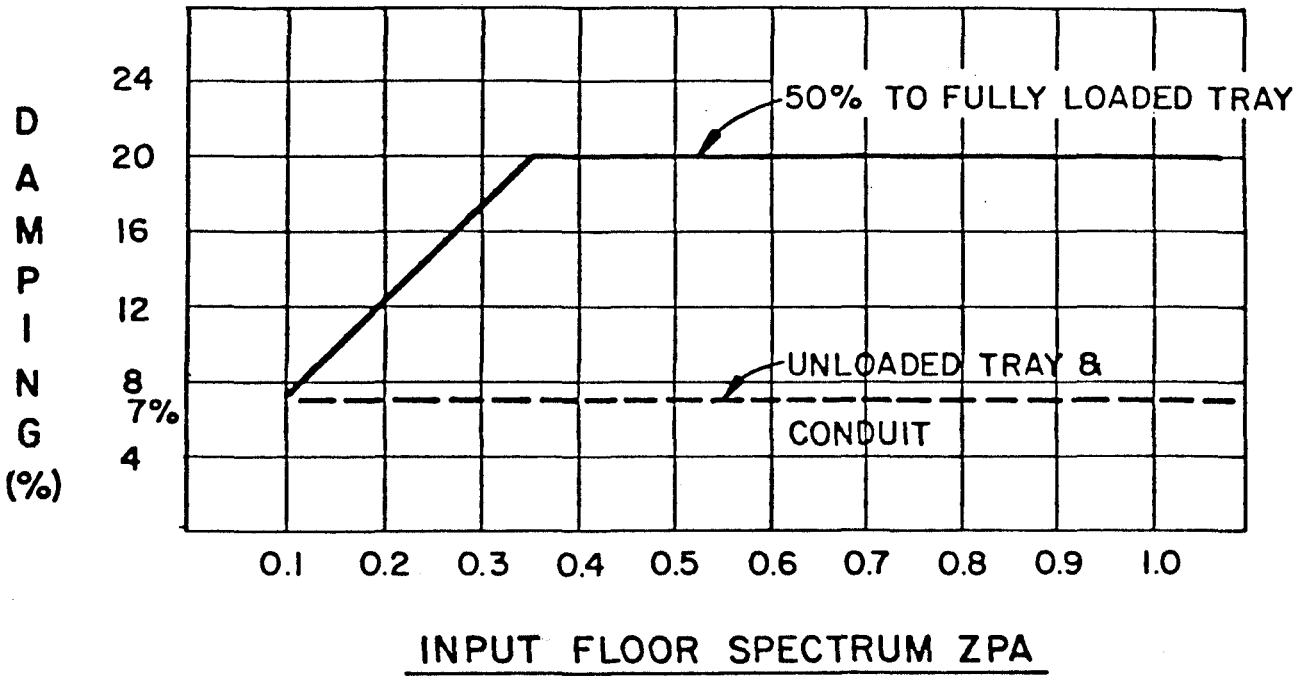

Rev. 0

WOLF CREEK
UPDATED SAFETY ANALYSIS REPORT

FIGURE 3.7(B)-22

LOWER BOUND DAMPING AS A FUNCTION OF INPUT ZPA

APPENDIX 3.7(B)A

IMPEDANCE FUNCTIONS FOR A RIGID CIRCULAR FOUNDATION ON A LAYERED VISCOELASTIC MEDIUM

A.1 FORMULATION OF THE PROBLEM

A.1.1 Statement of the Problem

In what follows, a study is made of the forced harmonic vibrations of a rigid circular footing of radius a placed on the surface of a layered viscoelastic medium. The layered medium consists of N-1 parallel layers resting on a viscoelastic half-space. Both the layers and the elastic half-space are assumed to be homogeneous and isotropic with densities r_i, shear moduli G_i, and Poisson's ratios s_i (i = 1, 2,...N), respectively. In addition, depending on the type of internal friction considered, the relative viscosity coefficient (G_1'/G_i) (for Voigt type dissipation) or the hysteretic damping coefficient $e_i = G_1'/2G_i$ (for hysteretic type dissipation) are assumed to be known for each one of the media forming the soil deposit. The geometry of the model and the coordinate systems used are shown in Figure 3.7(B)A-1.

A welded type of contact is assumed to exist between adjacent layers. Thus, the stresses and displacements are continuous across each interface. The contact between the foundation and the surface of the top layer is assumed to be relaxed, i.e., the contact is frictionless for vertical and rocking vibrations and pressureless for horizontal vibrations.

The boundary conditions at z = 0 expressed in terms of displacement and stress components in cylindrical coordinates are the following:

a. Vertical Vibrations

$u_z\ (r,\ q,\ 0) = D_v e^{iwt}$ $\quad 0 \le r \le a$ (A-1.a)

$s_{zz}(r,\ q,\ 0) = 0$ $\quad r > a$ (A-1.b)

$s_{zr}(r,\ q,\ 0) = s_{zq}(r,w,0) = 0$ $\quad 0 < r <$ infin (A-2)

b. Rocking Vibrations

$u_z(r, q, 0) = ar \cos q e^{iwt}$ $\quad 0 \leq r \leq a$ (A-3.a)

$s_{zz}(r, q, 0) = 0$ $\quad r > a$ (A-3.b)

$s_{zr}(r, q, 0) = s_{zq}(r, q, 0) = 0$ $\quad 0 < r < infin$ (A-4)

c. Horizontal Vibrations

$u_r(r, q, 0) = D_H \cos q \, e^{iwt}$

$u_q(r, q, 0) = - D_H \sin q \, e^{iwt}$ $\quad 0 < r < a$ (A-5)

$s_{zr}(r, q, 0) = s_{zq}(r, q, 0) = 0$ $\quad r > a$ (A-6)

$s_{zz}(r, q, 0) = 0$ $\quad 0 < r < infin$ (A-7)

In the equations above, D_v is the amplitude of the vertical displacement of the center of the rigid foundation, is the amplitude of the rocking angle about the y-axis (é = p/2), Δ H is the amplitude of the horizontal displacement of the foundation in the direction of the x-axis (q = 0), and w is the frequency of the steady-state vibrations.

The continuity conditions at the interface $z = H_i$ are:

$u_r^i (r, q, H_i) = u_r^{i+1}(r, q, H_i)$ (A-8.a)

$u_q^i (r, q, H_i) = u_e^{i+1}(r, q, H_i)$ (A-8.b)

$u_z^i (r, q, H_i) = u_z^{i+1}(r, q, H_i)$, (i=1, 2, ...N) (A-8.c)

$u_{zr}^i (r, q, H_i) = s_r^{i+1}(r, q, H_i)$, (A-9.a)

$$s^{i}_{zq}\ (r,\ q,\ H_i) = s^{i+1}_{zq}(r,\ q,\ H_i), \qquad \text{(A-9.b)}$$

$$s^{i}_{zz}\ (r,\ q,\ H_i) = s^{i+1}_{zz}(r,\ q,\ H_i),\ (i=1,\ 2,\ \ldots N) \qquad \text{(A-9.c)}$$

where the superscript i indicates the ith layer. In addition, the displacement and stress components in the underlying half-space must tend to zero as $(r^2 + z^2)$ tends to infinity.

A.1.2 Types of Energy Dissipation

In this study, two types of energy dissipation are considered, namely the Voigt viscous model and the hysteretic model.

The stress-strain relationships for harmonic vibrations of a solid with Voigt type damping are of the form (Ref. A-1)

$$s_{zz} = (\ l + iwl')q + 2(m + i\ w\ m')e_{zz} \qquad \text{(A-10.a)}$$

$$s_{zx} = 2(m + i\ w\ m')\ e_{xz} \qquad \text{(A-10.b)}$$

where

$$q = e_{xx} + e_{yy} + e_{zz} \qquad \text{(A-10.c)}$$

In equations (A-10.a) and (A-10.b), w is the frequency of the excitation, l and m are Lame's constants, and l ', m' are the viscosities. It is clear from equations (A-10.a) and (A-10.b) that the viscoelastic problem may be solved if the solution of the corresponding purely elastic problem is known by substituting in the elastic solution l and m by the complex moduli

$$l^* = (1 + i\ \ l'/\ l) \qquad \text{(A-11.a)}$$

$$m^* = m(1 + i\ m'/m) \qquad \text{(A-11.b)}$$

In order to simplify the problem, it is assumed that

$$\frac{l\ '}{l} = \frac{m'}{m} \qquad \text{(A-12)}$$

In this case, the remaining complex constants are given by:

$$E^* = \frac{(3\ l^* + 2m^*)m^*}{{}^*l + m^*} \quad E(1 + iwm'/m) \qquad \text{(A-13.a)}$$

$$k^* = l^* + \frac{2}{3} m^* = k(1 + iwm'/m) \qquad \text{(A-13.b)}$$

$$s^* = \frac{{}^3 l^*}{2(l^* + m^*)} = s \qquad \text{(A-13.c)}$$

where E, k, and w are the Young's modulus, the bulk modulus, and Poisson's ratio, respectively. The assumption given by equation (A-12) has the advantage that the Poisson's ratio for the viscoelastic medium is real and equal to the Poisson's ratio of the corresponding elastic medium. One disadvantage, however, is the fact that the bulk modulus is complex, and consequently there are losses associated with changes of volume.

Equation (A-10.b) indicates that for shear deformations the stress-strain relationship could be described by an ellipse. The energy loss per cycle is given by the area of the ellipse and the corresponding 'specific loss' is

$$\frac{DW}{W} = 2p\ \frac{wm'}{m} \qquad \text{(A-14)}$$

where W is the elastic energy stored when the strain is a maximum. Equation (A-14) indicates that for a Voigt solid the "specific loss," or the energy loss per cycle, is proportional to the frequency of the excitation. The elliptical stress-strain loop in this case is a direct result of the viscosity of the medium.

Laboratory tests on soils indicate that the "specific loss" D W/W is independent of the frequency of the excitation and that the stress-strain loop is not an ellipse (Ref. A-2 - A-6). It appears then that the mechanism of energy loss in soils is not of the viscous type but rather is a direct result of the anelastic behavior of soils. In spite of this anelastic behavior, an approximate approach is to assume that the soil may be treated in a similar way as a viscoelastic medium, except that in this case the complex shear modulus æ* and the "specific loss" are taken to be equal to

$$m^* = m(1 + 2ie\ ) \qquad \text{(A-15)}$$

$$\frac{DW}{W} = 4pe \qquad \text{(A-16)}$$

where e is a damping constant independent of frequency. This model of internal damping is also called constant hysteretic type damping. The damping constant e is analogous to the percentage of critical damping under resonant conditions, or during free vibrations (Ref. A-3). The hysteretic damping constant is strain dependent: values for low strain may be less than 0.02, while for high strains e may reach values of 0.15 or 0.20.

In what follows, the shear modulus m is designated by G, and the shear viscosity m' is designated by G'.

A.1.3 Integral Representation

A solution of the equations of motion in cylindrical coordinates satisfying the conditions at the interface between layers, as well as the conditions at infinity, may be obtained by application of the correspondence principle to a representation derived by Sezawa and reported in references A-7 and A-8.

The displacement and stress components of interest on z = 0 are given by

$$u_r\ (r,\ q,\ 0) = a\ u_r^*\ (r')\cos(nq)$$

$$u_q\ (r,\ q,\ 0) = a\ u_q^*\ (r')\sin(nq) \qquad \text{(A-17)}$$

$$u_z\ (r,\ q,\ 0) = a\ u_z^*\ (r')\cos(nq)$$

$$s_{zr}(r,\ q,\ 0) = G^*_{lszr}\ (r')\cos(nq)$$

$$s_{zq}(r,\ q,\ 0) = G^*_{lszq}\ (r')\sin(nq) \qquad \text{(A-18)}$$

$$d_{zz}(r,\ q,\ 0) = G^*_{lszz}\ (r')\cos(nq)$$

where n = 0 for vertical vibrations, n = 1 for rocking and horizontal vibrations, r' = r/a, and

$$u_r^*(r') \pm u_q^*(r') = \pm\ 2 \int_0^{infin} \left(k \frac{D_{11}(k)C_1(k) + D_{12}(k)C_2(k)}{DR} \pm \frac{D_{33}C_3(k)}{D_L} \right) \cdot J_{n\pm1}\ (a_o kr')dk \qquad \text{(A-19)}$$

$$u_z^*(r') = +2 \int_0^{infin} k \frac{D_{21}(k)C_1(k) + D_{22}(k)C_2(k)}{DR} J_n(a_o kr')dk \qquad \text{(A-20)}$$

$$s_{zr}^*(r') \pm s_{zq}^*(r') = \pm 2a_o \int_o^{infin} [kC_1(k) \pm C_3(k)] J_{n\pm1}(a_o kr')dk \qquad \text{(A-21)}$$

$$s_{zz}^*(r') = 2a_o \int_o^{infin} kC_2(k)J_n(a_o kr')dk \qquad \text{(A-22)}$$

In equations (A-19) - (A-22), $a_o = {}^w a/b_1$ is a dimensionless frequency defined in terms of the shear wave velocity b_1 of the top layer. The functions D_{ij} $(i,j = 1,2)$, b_R, b_{33}, and b_L appearing in equations (A-19) - (A-22) depend on the properties of the soil column, and are given in Appendix 3.7(B).B. The functions $C_1(k)$, $C_2(k)$, and $C_3(k)$ are to be determined by the boundary conditions on $z = 0$. The term $J_n(a_o kr')$ is an infinite series known as the Bessel function of the first kind of order n while the term $J_{n+1}(a_o kr')$ is of the order n+1. For vertical and rocking vibrations, equations (A-2) and (A-4) together with equation (A-21) imply that

$$C_1(k) = C_3(k) = 0. \qquad \text{(A-23)}$$

Similarly, for horizontal vibrations, equations (A-7) and (A-22) imply that

$$C_2(k) = 0. \qquad \text{(A-24)}$$

Before imposing the remaining boundary conditions, it is convenient to introduce the following substitutions (Ref. A-7, A- 9)

a. Vertical Vibrations

$$C_2(k) = -\frac{D_v K_1^2}{pa(1-s_1)} ao \int_0^{infin} fv(t)\cos(a_o kt)dt \qquad \text{(A-25)}$$

b. Rocking Vibrations

$$C_2(k) = -\left(\frac{2aK_1^2}{p(1-a_1)} \quad a_o\right) \int_0^1 fR(t)\sin(a_o kt)dt \qquad \text{(A-26)}$$

c. Horizontal Vibrations

$$C_1(k) = \left[\frac{2D_H K_1^2}{pa(2-s1)} \quad a_o\right] \int_0^1 \{-f_1(t)\cos(a_o kt)$$

$$- f_2(t)\left[\cos(a_o kt) - \frac{\sin(a_o kt)}{a_o kt}\right]\} \quad dt \qquad \text{(A-27)}$$

$$C_3(k) = -\left[\frac{2D_H K_1^2}{pa(s-s_1)} \; a_o k\right] \int_0^1 \{f_1(t)\cos(a_o kt)$$

$$- (1-s_1)f_2(t)[\cos(a_o kt)$$

$$- \sin(aokt)/aokt]\} \; dt \qquad \text{(A-28)}$$

where $f_V(t)$, $f_R(t)$, and $f_1(t)$, $f_2(t)$ are functions to be determined by equations (A-1), (A-3), and (A-5), respectively. Also, $K_1^2 = (1 + i\, wG_1'/G_1)^{-1}$ for Voigt-type damping and $K_1^2 = (1 + 2ie_1)^{-1}$ for hysteretic-type damping. The substitutions indicated above satisfy directly the stress boundary conditions prescribed in equations (A-1), (A-3), and (A-6).

A.2 INTEGRAL EQUATIONS AND IMPEDANCE FUNCTIONS

Substitution from equations (A-25) - (A-28), together with equations (A-23) and (A-24), into equations (A-17), (A-19), and (A-20), and imposition of the remaining displacement boundary conditions leads to the following integral equations for the unknown functions $f_V(t)$, $f_R(t)$, and $f_2(t)$

a. Vertical Vibrations

$$fV(t) + \int_0^1 K(t,t')f_V(t')dt' = 1 \qquad (0 \le t \le 1) \qquad \text{(A-29)}$$

where

$$K(t,t') = L_1(|t - t'|) + L_1(t + t') \qquad \text{(A-30)}$$

$$L_1(t) = -\frac{a_o}{p} \int_0^{infin} \left(\frac{KD_{22}}{(1-s_1) D_R K_1^2} + 1 \right) \cos\ (a_o kt)\, dk \qquad \text{(A-31)}$$

b. Rocking Vibrations

$$f_R(t) + \int_0^1 K(t,t') f_R(t')\, dt' = t \qquad (0 \le t \le 1) \qquad \text{(A-32)}$$

where

$$K(t,t') = L_1(|t - t'|) - L_1(t + t') \qquad \text{(A-33)}$$

The function $L_1(t)$ in equation (A-33) is defined by equation (A-31).

c. Horizontal Vibrations

$$f_1(t) + \int_0^1 [K_{11}(t,t') f_1(t') + K_{12}(t,t') f_2(t')]\, dt' = 0$$

$(0 \le t \le 1)$ (A-34)

$$(1 - s_1) f_2(t) + \int_0^1 [K_{21}(t,t') s_1(t') + K_{22}(t,t') f_2(t')]\, dt' = 0$$

$(0 \le t \le 1)$ (A-35)

where

$$K_{11}(t,t') = \frac{2ao}{p} \left(\frac{1}{2-s_1} \right) \int_0^{infin} \left((1-s_1) H_1(k) + H_2(k) \right) \cos(a_o kt) \cos(a_o kt')\, dk$$

(A-36)

$$K_{12}(t,t') = -\frac{2ao}{p} \left(\frac{1-s_1}{2-s_1} \right) \int_0^{infin} [H_1(k) - H_2(k)] \cos(a_o kt) \left(\cos(a_o kt') - \frac{\sin(a_o kt')}{aokt} \right) dk$$

(A-37)

$$K_{21}(t,t') = \frac{2a_o}{p}\left(\frac{1-s1}{2-s1}\right)\int_0^{infin}[H_1(k) - H_2(k)]\left(\cos(a_o kt) - \frac{\sin(a_o kt)}{a_o kt}\right)\cos(a_o kt')\,dk \qquad \text{(A-38)}$$

$$K_{22}(t,t') = \frac{2a_o}{?}\left(\frac{1-s1}{2-s1}\right)\int_0^{infin}[H_1(k) + (1-s_1)H_2(k)]$$

$$\left(\cos(a_o kt) - \frac{-\sin(a_o kt)}{a_o kt}\right)$$

$$\left(\cos(a_o kt) - \frac{-\sin(a_o kt)}{a_o kt}\right)\,dk$$

$$H_1(k) = \frac{k}{K_1^2\ (1-s1)}\quad \frac{D_{11}}{D_R} - 1 \qquad \text{(A-40)}$$

$$H_2(k) = \frac{kD_{33}}{K_1^2 D_L} - 1 \qquad \text{(A-41)}$$

The integral equations (A-29), (A-32), (A-34), and (A-35) are of the Fredholm type and have a form suitable for numerical solution. Once these integral equations have been solved, the entire displacement and stress field may be evaluated by substitution from equations (A-25) - (A-28) into equations (A-19) - (A-22). In particular, the total vertical load V, the rocking moment about the y-axis M, and the total horizontal load in the x- direction H may be found to be given by

$$V = \frac{4G_1 aD_v eiwt}{(1-s_1)k_1^2}\int_0^1 f(t)\,dt \qquad \text{(A-42)}$$

$$M = \frac{8G_1 a^3 aeiwt}{(1-s_1)k_1^2}\int_0^1 tf_R\,dt \qquad \text{(A-43)}$$

$$H = \frac{4G_1 a D_v e^{iwt}}{(2-s_1)k_1^2} \int_0^1 f1(t)dt \qquad \text{(A-44)}$$

Equations (A-42), (A-43), and (A-44) constitute the force- displacement relationship for the circular foundation. It should be mentioned that in deriving these equations, the terms coupling the horizontal and rocking vibrations have been neglected.

It is convenient to write equations (A-42) - (A-44) in the following form:

$$V = \frac{4G_1 a}{1-s_1} [k_{VV}(a_o) + ia_o c_{VV}(a_o)] D_v e^{iwt} \qquad \text{(A-45)}$$

$$M = \frac{8G_1 a^3}{3(1-s_1)} [k_{MM}(a_o) + ia_o c_{MM}(a_o)] a e^{iwt} \qquad \text{(A-46)}$$

$$H = \frac{2G_1 a}{2-s_1} [k_{HH}(a_o) + ia_o c_{HH}(a_o)] D_H e^{iwt} \qquad \text{(A-47)}$$

where,

$$k_{VV}(a_o) = \int_0^1 \mathrm{Re}\left(\frac{f_v(t)}{K_1^2}\right)dt,$$

$$c_{VV}(a_o) = \frac{1}{a_o} \int_0^1 \mathrm{Im}\left(\frac{f_v(t)}{K_1^2}\right)dt \qquad \text{(A-48)}$$

$$k_{MM}(a_o) = 3 \int_0^1 \mathrm{Re}\left(\frac{t f_R(t)}{K_1^2}\right)dt$$

$$c_{MM}(a_o) = \frac{3}{a_o} \int_0^1 \mathrm{Im}\left(\frac{t f_R(t)}{K_1^2}\right)dt \qquad \text{(A-49)}$$

$$k_{HH}(a_o) = \int_0^1 \mathrm{Re}\left(\frac{f_1(t)}{K_1^2}\right)dt$$

$$c_{HH}(a_o) = \frac{1}{a_o} \int_0^1 \mathrm{Im}\left(\frac{?_1(t)}{K_1^2}\right) dt$$

(A-50)

The terms inside the square brackets in equations (A-45), (A-46), and (A-47) are the normalized impedance functions for vertical, rocking, and horizontal vibrations; the factors outside the parentheses correspond to the static values (a_o=0) of the impedance functions for an elastic half-space having the properties of the top layer. The functions $k_{VV}(a_o)$, $k_{MM}(a_o)$, and $k_{HH}(a_o)$, corresponding to the real part, Re, of the impedance functions, will be called here stiffness coefficients, while the functions $c_{VV}(a_o)$, $c_{MM}(a_o)$, and $c_{HH}(a_o)$, proportional to the imaginary part, Im, of the impedance functions, will be designed here as damping coefficients. Both the stiffness and damping coefficients are functions not only of the dimensionless frequency ao but also depend on the properties of the different media forming the soil column.

In solving the problem of the horizontal vibrations, a further approximation has been introduced by assuming that $2^{(t)}$ is sufficiently small so that the integral equations (A-34) and (A- 35) may be reduced to

$$\tilde{f}_1(t) + \int_0^1 K_{11}(t,t')\tilde{f}_1(t')dt' = 1 \qquad (0 \leq t \leq 1) \qquad \text{(A-51)}$$

where the kernal $K_{11}(t,t')$ is given by equation (A-36). The basis for this approximation is that for the case of a uniform half- space, the function $f_2(t)$ is much smaller than $f_1(t)$, in particular, for the static case $f_2(t) = 0$. The above approximation is equivalent to the requirement that åzy = 0 under the foundation and thus corresponds to a further relaxation of the boundary conditions.

A.3 NUMERICAL SOLUTION

The numerical procedure used to solve the integral equations (A- 29), (A-32), and (A-51) consists of reducing these equations to a system of algebraic equations that are solved by standard methods. A key step in this procedure is the evaluation of the kernels K(t, t') given by equations (A-30), (A-33), and (A-36).

In the case of a medium with no internal friction, the functions ΔR and ΔL have zeros for real values of k and, consequently, the integrands in equations (A-31) and (A-36) are singular at these points. This situation complicates the numerical evaluation of the kernels. However, if there is internal friction then the zeros of ΔR and ΔL are complex, and consequently the numerical evaluation of the kernels is simplified. The kernels are evaluated numerically by use of Filon's method of integration up to a sufficiently large value of k, the rest is evaluated analytically by using the asymptotic forms of the integrands for large k.

A.4 REFERENCES

A-1 Kolsky, H., Stress Waves in Solids, Dover Publications, Inc., New York, 1963.

A-2 Richart, F. R., Hall, J. R., and Woods, R. D., Vibration of Soils and Foundations, Prentice-Hall, Inc., New Jersey, 1970.

A-3 Dobry, R., "Damping in Soils: Its Hysteretic Nature and the Linear Approximation," Research Report R70-14, Massachusetts Institute of Technology, Department of Civil Engineering, Cambridge, Mass., 1970.

A-4 Krizek, R. J., and Franklin, A. G., "Energy Dissipation in Soft Clay," Proc. Int. Symp. on Wave Propagation and Dynamic Properties of Earth Materials, University of New Mexico Press, Albuquerque, 1967, pp. 797-807.

A-5 Seed, H. B., and Idriss, I. M., "Soil Moduli and Damping Factors for Dynamic Response Analysis," Report EERC 70-10, University of California, Berkeley, 1970.

A-6 Hardin, B. O., and Drnevich, V. P., "Shear Modulus and Damping in Soils: Measurements and Parameter Effects," Proc. Am. Soc. Civ. Engs., Vol. 98, No. SM6, 1972, pp. 603-624.

A-7 Luco, J. E., and Westmann, R. A., "Dynamic Response of Circular Footings," Journal of the Engineering Mechs. Div., ASCE, Vol. 97, No. EM5, 1971, pp. 1381-1395.

A-8 Bycroft, G. N., "Forced Vibrations of a Rigid Circular Plate on a Semi-Infinite Elastic Space or on an Elastic Stratum," Phil. Trans., Royal Soc. of London, Vol. 248, 1956, pp. 327-368.

A-9 Luco, J. E., "Impendance Functions for a Rigid Foundation on a Layered Medium", Nuclear Engineering and Design, 1974.

WOLF CREEK

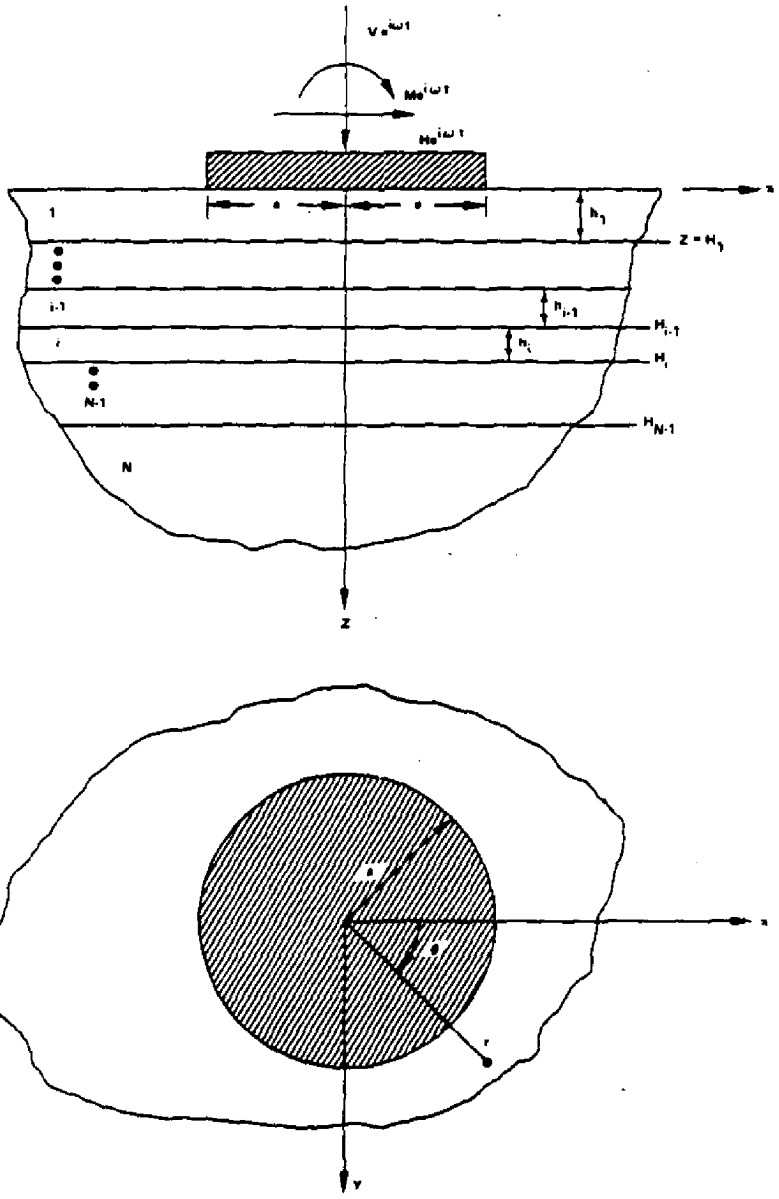

Rev. 0

WOLF CREEK UPDATED SAFETY ANALYSIS REPORT
FIGURE 3.7(B)A-1 DESCRIPTION OF THE MODEL

APPENDIX 3.7(B)B

SOIL DEPENDENT DISPLACEMENT FUNCTIONS FOR THE SOLUTION OF THE EQUATIONS OF MOTION

The functions $_{ij}(k)$ (i,j = 1, 2) and $_R(k)$ entering in equations (A-19) and (A-20) are defined by

$$\begin{bmatrix} \Delta 11(k) & \Delta 12(k) \\ \Delta 21(k) & \Delta 22(k) \end{bmatrix} = \left(T^*_{11}A + T^*_{12}B\right) \text{adj} \left(T^*_{21}A + T^*_{22}B \right) \tag{B-1}$$

and,

$$\Delta R = \det \left(T^*_{21}A + T^*_{22}B\right) \tag{B-2}$$

where the matrices [A] and [B] are given by

$$[A] = \begin{bmatrix} -k & v'_N \\ V_N & -k \end{bmatrix} \tag{B-3}$$

$$[B] = \frac{G^*_N}{G_1} \begin{bmatrix} -2v_N k & \left(2k^2 - K^2_N\right) \\ -\left(2K^2 - K^2_N\right) & 2v'_N k \end{bmatrix} \tag{B-4}$$

and T^*ij (i, j = 1, 2) are the submatrices of the total transfer matrix T^* associated with the set of layers overlying the base half-space. The total transfer matrix T^*

$$[T^*] = \left[\begin{array}{c|c} T^*_{11} & T^*_{12} \\ \hline T^*_{21} & T^*_{22} \end{array}\right] \tag{B-5}$$

may be obtained in terms of the transfer matrices for each layer T_j (j = 1, N-1) by means of the following product:

$$[T^*] = [T1][T2].....[T_j]....[T_{N-1}] \tag{B-6}$$

The transfer matrix for the jth layer is in turn given by

$$[T_j] = \left[\begin{array}{c|c} T^j_{11} & T^j_{12} \\ \hline T^j_{21} & T^j_{22} \end{array}\right] \tag{B-7}$$

where,

$$T_{11}^{j} = -\frac{1}{k_j^2}\begin{bmatrix} -2k2CH_j + (2k2 - K_j^2)CHP_j & -k(2k^2 - k_j^2)SH_j + 2kv_j^{'}SHP_j \\ 2kv_j^2SH_j - k(2k^2 - K_j^2)SHP_j & (2k^2 - K_j^2)CH_j - 2k^2CHP_j \end{bmatrix}$$

$$T_{12}^{j} = -\frac{\rho_1}{\rho_j}\begin{bmatrix} -k^2SH_j + v_j^{'2}\ SHP_j & k(CH_j - CHP_j) \\ k(CH_j - CHP_j) & -v_j^2SH_j + K^2SHP_j \end{bmatrix} \qquad \text{(B-8)}$$

$$T_{21}^{j} = -\frac{1}{K_j^4}\left(\frac{\rho_i}{\rho_1}\right)\begin{bmatrix} -4v_j^2k^2SH_j + (2k^2 - K_j^2)SHP_j & -2K(2k^2 - K_j^2)(CH_j - CHP_j) \\ -2k(2k^2 - K_j^2)(CH_j - CHP_j) & -(2k^2 - K_j^2)^2SH_j + 4v_j^{'2}k^2SHP_j \end{bmatrix}$$

$$T_{22}^{j} = -\frac{1}{K_j^2}\begin{bmatrix} -2k^2CH_j + (2k^2 - K_j^2)CHP_j & -2kv_j^2SH_j - k(2k^2 - K_j^2)SHP_j \\ -k(2k^2 - K_j^2)SH_j + 2v_j^{'2}k\ SHP_j & (2k^2 - K_j^2)CH_j - 2k^2CHP_j \end{bmatrix}$$

The different terms entering in equations (B-3) to (B-8) are defined by

$$v_j = \left(k^2 - \gamma_j^2K_j^2\right)^{1/2} \qquad v_j^{'} = \left(k^2 - k_j^2\right)^{1/2}$$

$$\gamma_j^2 = \frac{(1 - 2\sigma_j)}{2}\ (1-\sigma_j) \qquad k_j^2 = \frac{G_1\rho_j}{G_j^{*}\rho_1}$$

$$G_j^{*} = G_j\left(1 + \frac{i\omega G_j^{'}}{G_j}\right), \text{ or, } G_j^{*} = G_j\ (1 + 2i\xi j)$$

$$SH_j = \sinh\frac{(a_o v_j\lambda_j)}{v_j} \qquad SHP_j = \sinh\frac{(a_o v_j^{'}\lambda_j)}{v_j^{'}} \qquad \text{(B-9)}$$

$$CH_j = \cosh\ (a_o v_j\lambda_j) \qquad CHP_j = \cosh\ (a_o v_j^{'}\lambda_j)$$

$$\lambda_j = \frac{h_j}{a}$$

$$a_o = \frac{\omega a}{\beta_1}$$

where σ_j, ρ_j, G_j, G_j'/G_j, and h_j, respectively, are the Poisson's ratio, density, shear modulus, relative viscosity, and thicknessof the jth layer. In the last two equations of (B-9), a is theradius of the circular foundation, ω is the frequency of the steady-state vibrations, and β is the shear wave velocity of the top layer. The first form of G_j^* corresponds to the Voigt-type damping, while the second corresponds to the hysteretic-type damping, ξj being the hysteretic dampingconstant for the jth layer. The functions $\Delta 33(k)$ and $\Delta L(k)$entering in equation (A19) are defined by

$$\Delta 33(k) = L_{11}^* + L_{12}^* \frac{v_N' G_N^*}{G_1} \qquad \text{(B-10)}$$

$$\Delta L(k) = L_{21}^* + L_{22}^* \frac{v_N' G_N^*}{G_1} \qquad \text{(B-11)}$$

where L^* (i, j = 1,2) are the elements of the transfer matrix L^*. The transfer matrix L^*

$$[L^*] = \begin{pmatrix} L_{11}^* + L_{12}^* \\ L_{21}^* + L_{22}^* \end{pmatrix} \qquad \text{(B-12)}$$

is defined in terms of the transfer matrices for each layer by

$$[L^*] = [L1] \cdot [L2] \ldots [L_j] \ldots [L_{N-1}] \qquad \text{(B-13)}$$

in which,

$$[L_j] = \begin{pmatrix} CHP_j & \frac{G_1}{G_j^*} SHPj \\ \frac{G_j^*}{G_1} V_j'^2 SHP_j & CHP_j \end{pmatrix} \qquad \text{(B-14)}$$

3.7(N) SEISMIC DESIGN

For the OBE loading condition, the nuclear steam supply system is designed to be capable of continued safe operation. The design for the SSE is intended to ensure:

a. That the integrity of the reactor coolant pressure boundary is not compromised;

b. That the capability to shut down the reactor and maintain it in a safe condition is not compromised; and

c. That the capability to prevent or mitigate the consequences of accidents which could result in potential offsite exposures comparable to the guideline exposures of 10 CFR 100 is not compromised.

It is necessary to ensure that required critical structures and components do not lose their capability to perform their safety function. Not all critical components have the same functional safety requirements. For example, a safety injection pump must retain its capability to function normally during the SSE. Therefore, the deformation in the pump must be restricted to appropriate limits in order to ensure its ability to function. On the other hand, many components can experience significant permanent deformation without loss of function. Piping and vessels are examples of the latter where the principal requirement is that they retain their contents and allow fluid flow.

The seismic requirements for safety-related instrumentation and electrical equipment are covered in Sections 3.10(N) and (B). The safety class definitions, classification lists, operating condition categories, and the methods used for seismic qualification of mechanical equipment are given in Section 3.2.

3.7(N).1 SEISMIC INPUT

3.7(N).1.1 Design Response Spectra

Refer to Section 3.7(B).1.1.

3.7(N).1.2 Design Time History

Refer to Section 3.7(B).1.2.

3.7(N).1.3 Critical Damping Values

The damping values given in Table 3.7(N)-1 are used for the systems analysis of Westinghouse equipment. These are consistent with the damping values recommended in Regulatory Guide 1.61, except in the case of the primary coolant loop system components and large piping (excluding reactor pressure vessel internals) for which the damping values of 2 percent and 4 percent are used as established in testing programs reported in Reference 1. The damping values for control rod drive mechanisms (CRDMs) and the fuel assemblies of the nuclear steam supply system, when used in seismic system analysis, are in conformance with the values for welded and/or bolted steel structures (as appropriate) listed in Regulatory Guide 1.61.

Tests on fuel assembly bundles justified conservative component damping values of 7 percent for OBE and 10 percent for SSE to be used in the fuel assembly component qualification. Documentation of the fuel assembly tests is found in Reference 2.

The damping values used in component analysis of CRDMs and their seismic supports were developed by testing programs performed by Westinghouse. These tests were performed during the design of the CRDM support; the support was designed so that the damping in Table 3.7(N)-1 could be conservatively used in the seismic analysis. The CRDM support system is designed with plates at the top of the mechanism and gaps between mechanisms. These are encircled by a box section frame which is attached by tie rods to the refueling cavity wall. The test conducted was on a full-size CRDM complete with rod position indicator coils, attachment to a simulated vessel head, and variable gap between the top of the pressure housing support plate and a rigid bumper representing the support. The internal pressure of the CRDM was 2,250 psi, and the temperature on the outside of the pressure housing was 400°F.

The program consisted of transient vibration tests in which the CRDM was deflected a specified initial amount and suddenly released. A logarithmic decrement analysis of the decaying transient provides the effective damping of the assembly. The effect on damping of variations in the drive shaft axial position, upper seismic support clearance, and initial deflection amplitude was investigated.

The upper support clearance had the largest effect on the CRDM damping, with the damping increasing with increasing clearance. With an upper clearance of 0.06 inch, the measured damping was approximately 8 percent. The clearance in a typical upper seismic CRDM support is a minimum of 0.10 inch. The increasing damping

with increasing clearances trend from the test results indicated that the damping would be greater than 8 percent for both the OBE and the SSE, based on a comparison between typical deflections during these seismic events to the initial deflections of the mechanisms in the test. Component damping values of 5 percent are, therefore, conservative for both the OBE and the SSE.

These damping values are used and applied to CRDM component analysis by response spectra techniques.

3.7(N).1.4 Supporting Media for Seismic Category I Structures

Refer to Section 3.7(B).1.4.

3.7(N).2 SEISMIC SYSTEM ANALYSIS

This section describes the methods of seismic analysis performed for safety-related components and systems within Westinghouse's scope.

3.7(N).2.1 Seismic Analysis Methods

Those components and systems that must remain functional in the event of the SSE (seismic Category I) are identified by applying the criteria of Section 3.2.1.

In general, the dynamic analyses are performed, using a modal analysis plus either the response spectrum analysis or integration of the uncoupled modal equations as described in Sections 3.7(N).2.1.3 and 3.7(N).2.1.4, respectively, or by direct integration of the coupled differential equations of motion described in Section 3.7(N).2.1.5.

3.7(N).2.1.1 Dynamic Analysis - Mathematical Model

The first step in any dynamic analysis is to model the structure or component, i.e., convert the real structure or component into a system of masses, springs, and dashpots suitable for mathematical analysis. The essence of this step is to select a model so that the displacements obtained will be a good representation of the motion of the structure or component. Stated differently, the true inertia forces should not be altered so as to appreciably affect the internal stresses in the structure or component. Some typical modeling techniques are presented in Reference 3.

Equations of Motion

Consider the multidegree of freedom system shown in Figure 3.7(N)- 1. Making a force balance on each mass point r, the equations of motion can be written in the form:

$$m_r \ddot{y}_r + \sum^{i} c_{ri} \dot{u}_i + \sum^{i} k_{ri} u_i = 0 \qquad [3.7(N)-1]$$

where:

m_r = the value of the mass or mass moment of rotational inertia at mass point r

$\ddot{y}_r$ = absolute translational or angular acceleration of mass point r

c_{ri} = damping coefficient - external force or moment required at mass point r to produce a unit translational or angular velocity at mass point i, maintaining zero translational or angular velocity at all other mass points. Force or moment is positive in the direction of positive translational or angular velocity

$\dot{u}_i$ = translational or angular velocity of mass point i relative to the base

k_{ri} = stiffness coefficient - the external force (moment) required at mass point r to produce a unit deflection (rotation) at mass point i, maintaining zero displacement (rotation) at all other mass points

Force (moment) is positive in the direction of positive displacement (rotation)

u_i = displacement (rotation) of mass point i relative to the base

As an example, note that Figure 3.7(N)-1 does not attempt to show all of the springs (and none of the dashpots) which are represented in Equation 3.7(N)-1.

Since:

$$\ddot{y}_r = \ddot{u}_r \ddot{y}_s \qquad [3.7(N)-2]$$

where:

$\ddot{y}_s$ = absolute translational (angular) acceleration of the base

$\ddot{u}_r$ = translational (angular) acceleration of mass point r relative to the base

Equation 3.7(N)-1 can be written as:

$$m_r \ddot{u}_r + \sum^{i} c_{ri} \dot{u}_i + \sum^{i} k_{ri} u_i = -m_r \ddot{y}_s \qquad [3.7(N)-3]$$

For a single degree of freedom system with displacement u, mass m, damping c, and stiffness k, the corresponding equation of motion is:

$$m\ddot{u} + c\dot{u} + ku = \ddot{y}_s \qquad [3.7(N)-4]$$

3.7(N).2.1.2 Modal Analysis

Natural Frequencies and Mode Shapes

The first step in the modal analysis method is to establish the normal modes, which are determined by eigen solution of Equation 3.7(N)-3. The right hand side and the damping term as set equal to zero for this purpose, as illustrated in Reference 4 (Pages 83 through 111). Thus, Equation 3.7(N)-3 becomes:

$$m_r \ddot{u}_r + \sum^{i} k_{ri} u_i = 0 \qquad [3.7(N)-5]$$

The equation given for each mass point r in Equation 3.7(N)-5 can be written as a system of equations in matrix form as:

$$[M] \{\ddot{\Delta}\} + [K] \{\Delta\} = 0 \qquad [3.7(N)-6]$$

where:

[M] = mass and rotational inertia matrix

$\{\Delta\}$ = column matrix of the general displacement and rotation at each mass point relative to the base

[K] = square stiffness matrix

$\{\ddot{\Delta}\}$ = column matrix of general translational and angular accelerations at each mass point relative to the base, $d^2 \{\Delta\}/dt^2$

Harmonic motion is assumed, and the {D} is expressed as:

$$\{\Delta\} = \{\delta\} \sin \omega t \qquad [3.7(N)-7]$$

where:

$\{\delta\}$ = column matrix of the spatial displacement and rotation at each mass point relative to the base

ω = natural frequency of harmonic motion in radians per second

The displacement function and its second derivative are substituted into Equation 3.7(N)-6 and yield:

$$[K] \{\delta\} = \omega^2 [M] \{\delta\} \qquad 3.7(N)-8]$$

The determinant $[K] - \omega^2 [M] |$ is set equal to zero and is then solved for the natural frequencies. The associated mode shapes are then obtained from Equation 3.7(N)-8. This yields n natural frequencies and mode shapes where n equals the number of dynamic degrees of freedom of the system. The mode shapes are all orthogonal to each other and are sometimes referred to as normal mode vibrations. For a single degree of freedom system, the stiffness matrix and mass matrix are single terms and the determinant $|[K] - \omega^2 [M]|$ when set equal to zero yields simply:

$$k - \omega^2 m = 0$$

or: [3.7(N)-9]

$$\omega = \sqrt{\frac{k}{m}}$$

where w is the natural angular frequency in radians per second. The natural frequency in cycles per second is, therefore:

$$f = \frac{1}{2\pi}\sqrt{\frac{k}{m}} \qquad [3.7(N)-10]$$

To find the mode shapes, the natural frequency corresponding to a particular mode, ω_n can be substituted in Equation 3.7(N)-8.

Modal Equations

The response of a structure or component is always some combination of its normal modes. Good accuracy can usually be obtained by using only the first few modes of vibration. In the normal mode method, the mode shapes are used as principal coordinates to reduce the equations of motion to a set of uncoupled differential equations that describe the motion of each mode n. These equations may be written as (Ref. 4, Pages 116 through 125):

$$A_n + 2\omega_n p_n A_n + \omega_n^2 A_n = -\tau_n \ddot{y}_s \qquad [3.7(N)-11]$$

where the modal displacement or rotation, A_n, is related to the displacement or rotation of mass point r in mode n, u_{rn}, by the equation:

$$u_{rn} = A_n \phi_{rn} \qquad [3.7(N)-12]$$

where:

ω_n = natural frequency of mode n in radians per second

p_n = critical damping ratio of mode n

τ_n = modal participation factor of mode n given by:

$$\tau_n = \frac{\sum^{n} m_r \phi'_{rn}}{\sum^{n} m_r \phi^2_{rn}} \qquad [3.7(N)-13]$$

where:

ϕ'_{rn} = value of ϕ_{rn} in the direction of the earthquake

The essence of the modal analysis lies in the fact that Equation 3.7(N)-11 is analogous to the equation of motion for a single degree of freedom system that will be developed from Equation 3.7(N)-4. Dividing Equation 3.7(N)-4 by m gives:

$$\ddot{u} + \frac{c}{m}\dot{u} + \frac{k}{m}u = -\ddot{y}_s \qquad [3.7(N)-14]$$

The critical damping ratio of the single degree of freedom system, p, is defined by the equation:

$$p = \frac{c}{c_c} \qquad [3.7(N)-15]$$

where the critical damping coefficient is given by the expression:

$$c_c = 2\ m\omega \qquad [3.7(N)-16]$$

Substituting Equation 3.7(N)-16 into Equation 3.7(N)-15 and solving for c/m gives:

$$\frac{c}{m} = 2\omega p \qquad [3.7(N)-17]$$

Subsituting this expression and the expression for k/m given by Equation 3.7(N)-9 into Equation 3.7(N)-14 gives:

$$\ddot{u} + 2\omega p\dot{u} + \omega^2 u = -\ddot{y}_s \qquad [3.7(N)-18]$$

Note the similarity of Equations 3.7(N)-11 and 3.7(N)-18. Thus each mode may be analyzed as though it were a single degree of freedom system, and all modes are independent of each other. By this method, a fraction of critical damping, i.e., c/c_c , may be assigned to each mode, and it is not necessary to identify or evaluate individual damping coefficients, i.e., c. However, assigning only a single damping ratio to each mode has a drawback. There are three ways used to overcome this limitation when considering a slightly damped structure (e.g., steel) supported by a massive moderately damped structure (e.g., concrete).

The first method is to develop and analyze separate mathematical models for both structures, using their respective damping values. The massive, moderately damped support structure is analyzed first. The calculated response at the support points for the slightly damped structures is used as a forcing function for the subsequent detailed analysis. The second method is to inspect the mode shapes to determine which modes correspond to the slightly damped structure and then use the damping associated with the structure having predominant motion. The third method is to use the Rayleigh damping method based on computed modal energy distribution.

3.7(N).2.1.3 Response Spectrum Analysis

The response spectrum is a plot showing the variation in the maximum response (Ref. 5, Pages 24 through 51) (displacement,

velocity, and acceleration) of a single degree of freedom system versus its natural frequency of vibration when subjected to a time-history motion of its base.

The response spectrum concept can be best explained by outlining the steps involved in developing a spectrum curve. Determination of a single point on the curve requires that the response (displacement, velocity, and acceleration) of a single degree of freedom system with a given damping and natural frequency is calculated for a given base motion.

The variations in response are established, and the maximum absolute value of each is plotted as an ordinate with the natural frequency used as the abscissa. The process is repeated for other assumed values of frequency in sufficient detail to establish the complete curve. Other curves corresponding to different fractions of critical damping are obtained in a similar fashion. Thus, the determination of each point of the curve requires a complete dynamic response analysis, and the determination of a complete spectrum may involve hundreds of such analyses. However, once a response spectrum plot is generated for the particular base motion, it may be used to analyze each structure and component with the base motion. The spectral acceleration, velocity, and displacement are related by the equation:

$$Sa_n = \omega_n S_{vn} = \omega_n 2 Sd_n \qquad [3.7(N)-19]$$

There are two types of response spectra that must be considered. If a given building is shown to be rigid and to have a hard foundation, the ground response spectrum or ground time-history is used. It is referred to as a ground response spectrum. If the building is flexible and/or has a soft foundation, the ground response spectrum is modified to include these effects. The response spectrum at various support points must be developed. These are called floor response spectra.

3.7(N).2.1.4 Integration of Modal Equations

This method can be separated into the following two basic parts:

a. Integration procedure for the uncoupled modal Equation 3.7(N)-11 to obtain the modal displacements and accelerations as a function of time.

b. Using these modal displacements and accelerations to obtain the total displacements, accelerations, forces, and stresses.

Integration Procedure

Integration of these uncoupled modal equations is done by step-by-step numerical integration. The step-by-step numerical integration procedure consists of selecting a suitable time interval, Δt, and calculating modal acceleration, $\tilde{A}_n$, modal velocity, $\ddot{A}_n$, and modal displacement, A_n, at discrete time stations Δt apart, starting at $t = 0$ and continuing through the range of interest for a given time-history of base acceleration.

Total Displacements, Accelerations, Forces, and Stresses

From the modal displacements and accelerations, the total displacements, accelerations, forces, and stresses can be determined as follows:

a. Displacement of mass point r in mode n as a function of time is given by Equation 3.7(N)-12 as:

$$u_{rn} = A_n \phi_{rn} \qquad [3.7(N)\text{-}20]$$

with the corresponding acceleration of mass point r in mode n as:

$$\ddot{u}_{rn} = \tilde{A}_n \phi_{rn} \qquad [3.7(N)\text{-}21]$$

b. The displacement and acceleration values obtained for the various modes are superimposed algebraically to give the total displacement and acceleration at each time interval.

c. The total acceleration at each time interval is multiplied by the mass to give an equivalent static force. Stresses are calculated by applying these forces to the model or from the deflections at each time interval.

3.7(N).2.1.5 Integration of Coupled Equations of Motion

The dynamic transient analysis is a time-history solution of the response of a given structure to known forces and/or displacement forcing functions. The structure may include linear or nonlinear elements, gaps, interfaces, plastic elements, and viscous and Coulomb dampers. Nodal displacements, nodal forces, pressure, and/or temperatures may be considered as forcing functions. Nodal displacements and elemental stresses for the complete structure are calculated as functions of time.

The basic equations for the dynamic analysis are as follows:

$$[M]\{\ddot{x}\} + [C]\{\dot{x}\} + [K]\{x\} = \{F(t)\} \qquad [3.7(N)\text{-}22]$$

where the terms are as defined earlier and $\{F(t)\}$ may include the effects of applied displacements, forces, pressures, temperatures, or nonlinear effects such as plasticity and dynamic elements with gaps. Options of translational accelerations input to a structural system and the inclusion of static deformation and/or preload may be considered in the nonlinear dynamic transient analysis. The option of translational input such as uniform base motion to a structural system is considered by introducing an intertia force term of $-M\{\ddot{z}\}$ to the right hand side of the basic Equation 3.7(N)-22, i.e.,

$$[M]\{\ddot{x}\} + [C]\{\dot{x}\} + [K]\{x\} = \{F(t)\} - [M]\{\ddot{z}\} \qquad [3.7(N)\text{-}23]$$

The vector $\{z\}$ is defined by its components $\ddot{z}_i$ where i refers to each degree of freedom of the system. $\ddot{z}_i$ is equal to a_1, a_2, or a_3 if the i-th degree for freedom is aligned with the direction of the system translational acceleration a_1, a_2, or a_3, respectively. $\ddot{z}_i = 0$ if the i-th degree of freedom is not aligned with any direction of the system translational acceleration. Typical application of this option is a structural system subjected to a seismic excitation of a given ground acceleration record. The displacement $\{x\}$ obtained from the solution of Equation 3.7(N)-23 is the displacement relative to the ground.

The option of the inclusion of initial static deformation or preload in a nonlinear transient dynamic structural analysis is considered by solving the static problem prior to the dynamic analysis. At each state of integration in transient analysis, the portion of internal forces due to static deformation is always balanced by the portion of the forces which is statically applied. Hence, only the portion of the forces which deviates from the static loads will produce dynamic effects. The output of this analysis is the total result due to static and dynamic applied loads.

One available method for the numerical integration of Equations 3.7(N)-22 and 3.7(N)-23 is the Newmark Beta integration scheme proposed by Chan, Cox, and Benfield (Ref. 6). In this integration scheme, Equations 3.7(N)-22 and 3.7(N)-23 are replaced by:

$$\frac{1}{(\Delta t)2}[M]\{x_{n+2}-2x_{n+1}+x_n\}+\frac{1}{2(\Delta t)}\{x_{n+2}-x_n\}[C]$$
$$+[K]\{\beta x_{n+2}+(1-2\beta)x_{n+1}+\beta x_n\}$$
$$=\{\beta F_{n+2}+(1-2\beta)F_{n+1}+\beta F_n\} \qquad [3.7(N)-24]$$
$$n+2 \qquad n+1 \quad B \quad n$$

Where:

n, n+1, n+2 = past, present, and future (updated) values of the variables

β = parameter to be selected on the basis of numerical stability and accuracy

F = the total right hand side of the equation of motion (Equation 3.7(N)-22 or 3.7(N)-23)

$\Delta t = t_{n+2} - t_{n+1} = t_{n+1} - t_n$

The value of β is chosen equal to 1/3 in order to provide a margin of numerical stability for nonlinear problems. Since the numerical stability of Equation 3.7(N)-24 is mostly determined by the left hand side terms of that equation, the right hand side terms were replaced by F n+2 . Furthermore, since the time increment may vary between two successive time substeps, Equation 3.7(N)-24 may be modified as follows:

$$\frac{2}{\Delta t+\Delta t_1}[M]\left(\frac{x_{n+2}-x_{n+1}}{\Delta t}-\frac{x_{n+1}-x_n}{\Delta t_1}\right)$$

$$\frac{1}{\Delta t+\Delta t_1}[C](x_{n+2}-x_n)+\frac{1}{3}[K](x_{n+2}+x_{n+1}+x_n)=F_{n+2}$$

[3.7(N)-25]

By factoring x_{n+2}, x_{n+1}, and x_n, and rearranging terms, Equation 3.7(N)-26 is obtained as follows:

$$\{C_5[M]+C_3[C]+(1/3)[K]\}\{x_{n+2}\}=F_{N+2}$$
$$+\{C_7[M]-(1/3)[K]\}\{x_{n+1}\}$$
$$+\{-C_2[M]+C_3[C]-(1/3)[K]\}\{x\ n\} \qquad [3.7(N)-26]$$

where:

$$C_2 = \frac{2}{\Delta t_1(\Delta t + \Delta t_1)}$$

$$C_3 = \frac{1}{\Delta t + \Delta t_1}$$

$$C_5 = \frac{2}{\Delta t(\Delta t + \Delta t_1)}$$

$$C_7 = C_2 + C_5$$

The above set of simultaneous linear equations is solved to obtain the present values of nodal displacements $\{x_t\}$ in terms of the previous (known) values of the nodal displacements. Since [M], [C], and [K] are included in the equation, they can also be time or displacement dependent.

3.7(N).2.2 Natural Frequencies and Response Loads

Refer to Section 3.7(B).2.2.

3.7(N).2.3 Procedures Used for Modeling

Procedures used for modeling are discussed in Section 3.7(N).2.1.1.

3.7(N).2.4 Soil/Structure Interaction

Refer to Section 3.7(B).2.4.

3.7(N).2.5 Development of Floor Response Spectra

Refer to Section 3.7(B).2.5.

3.7(N).2.6 Three Components of Earthquake Motion

The seismic design of the piping and equipment includes the effect of the seismic response of the supports, equipment, structures, and components. The system and equipment response is determined, using three earthquake components--two horizontal and one vertical. The design ground response spectra are the bases for generating these three input components. Floor response spectra are generated for two perpendicular horizontal directions (i.e., N-S, E-W) and the vertical direction. System and equipment analysis is

performed with these input components applied in the N-S, E-W, and vertical direction. The damping values used in the analysis are those given in Table 3.7(N)-1.

In computing the system and equipment response-by-response spectrum modal analysis, the methods of Section 3.7(N).2.7 are used to combine all significant modal responses to obtain the combined unidirectional responses.

The combined total response is then calculated, using the square root of the sum of the squares formula applied to the resultant unidirectional responses. For instance, for each item of interest such as displacement, force, stresses, etc., the total response is obtained by applying the above-described method. The mathematical expression for this method (with R as the item of interest) is:

$$R_C = \left(\sum_{T=1}^{3} R_T^2 \right)^{1/2} \qquad [3.7(N)-27]$$

where:

$$R_T = \left(\sum_{i=1}^{N} R_{Ti}^2 \right)^{1/2} \qquad [3.7(N)-28]$$

where:

R_C = total combined response at a point

R_T = value of combined response of direction T

R_{Ti} = absolute value of response for direction T, mode i

N = total number of modes considered

The subscripts can be reversed without changing the results of the combination.

Again, for the case of closely spaced modes, R_T in Equation 3.7(N)-28 shall be replaced with RT as given by Equation 3.7(N)-29 in Section 3.7(N).2.7.

3.7(N).2.7 Combination of Modal Response

The total unidirectional seismic response is obtained by combining the individual modal responses, utilizing the square root of the sum of the squares method. For systems having modes with closely spaced frequencies, this method is modified to include the

possible effect of these modes. The groups of closely spaced modes are chosen so that the difference between the frequencies of the first mode and the last mode in the group does not exceed 10 percent of the lower frequency. Groups are formed, starting from the lowest frequency and working toward successively higher frequencies. No one frequency is in more than one group. Combined total response for systems which have such closely spaced modal frequencies is obtained by adding to the square root of the sum of the squares of all modes the product of the responses of the modes in each group of closely spaced modes and a coupling factor. This can be represented mathematically as:

$$R_T^2 = \sum_{i-1}^{N} R_i^2 + 2 \sum_{j=1}^{S} \sum_{K=M_j}^{N_j-1} \sum_{\ell=K+1}^{N_j} R_K R_\ell \varepsilon_{K\ell} \qquad [3.7(N)-29]$$

where:

R_T = total unidirectional response

R_i = absolute value of response of mode i

N = total number of modes considered

S = number of groups of closely spaced modes

M_j = lowest modal number associated with group j of closely spaced modes

N_j = highest modal number associated with group j of closely spaced modes

$\varepsilon_{K\ell}$ = coupling factors with:

$$\varepsilon_{K\ell} = \left\{1 + \left[\frac{\omega_K' - \omega_\ell'}{(\beta K \omega K + \beta \ell \omega \ell)}\right]^2\right\}^{-1} \qquad [3.7(N)-30]$$

and

$$\omega_K' = \omega K \left[1 - (\beta_K'^2)\right]^{1/2} \qquad [3.7(N)-31]$$

$$\beta_K' = \beta_K + \frac{2}{\omega_K t_d} \qquad [3.7(N)-32]$$

where:

ω_K = frequency of closely spaced mode k

β_K = fraction of critical damping in closely spaced mode k

t_d = duration of the earthquake

An example of this equation applied to a system can be supplied with the following considerations. Assume that the predominant contributing modes have frequencies as given below:

Mode	1	2	3	4	5	6	7	8
Frequency	5.0	8.0	8.3	8.6	11.0	15.5	16.0	20

There are two groups of closely spaced modes, namely with modes {2,3,4} and {6, 7}. Therefore:

S = 2 number of groups of closely spaced modes

M_1 = 2 lowest modal number associated with group 1

N_1 = 4 highest modal number associated with group 1

M_2 = 6 lowest modal number associated with group 2

N_2 = 7 highest modal number associated with group 2

N = 8 total number of modes considered

The total response for this system is, as derived from the expansion of Equation 3.7(N)-29:

$$R_T^2 = R_1^2 + R_2^2 + R_3^2 + \ldots + R_8^2$$

$$+ 2 R_2 R_3 \varepsilon_{23} + 2 R_2 R_4 \varepsilon_{24}$$

$$+ 2 R_3 R_4 \varepsilon_{34} + 2 R_6 R_7 \varepsilon_{67} \qquad [3.7(N)-33]$$

3.7(N).2.8 Interaction of Non-Category I Structures With Seismic Category I Structures

Refer to Section 3.7(B).2.8.

3.7(N).2.9 Effects of Parameter Variations on Floor Response Spectra

Refer to Section 3.7(B).2.9.

3.7(N).2.10 Use of Constant Vertical Static Factors

Constant vertical static factors are not used as the vertical floor response load for the seismic design of safety classed systems and components within Westinghouse's scope of responsibility. All such systems and components are analyzed in the vertical direction.

3.7(N).2.11 Methods Used to Account for Torsional Effects

Refer to Section 3.7(B).2.11.

3.7(N).2.12 Comparison of Responses

Refer to Section 3.7(B).2.12.

3.7(N).2.13 Methods for Seismic Analysis of Dams

Refer to Section 3.7(B).2.13.

3.7(N).2.14 Determination of Seismic Category I Structure Overturning Moments

Refer to Section 3.7(B).2.14.

3.7(N).2.15 Analysis Procedure for Damping

In instances under the standard scope of Westinghouse supply and analysis, either the lowest damping value associated with the elements of the system is used for all modes, or an equivalent modal damping value is determined by testing programs, such as was done for the reactor coolant loop (Ref. 5).

3.7(N).3 SEISMIC SUBSYSTEM ANALYSIS

This section describes the seismic analysis performed on subsystems within Westinghouse's scope of responsibility.

3.7(N).3.1 Seismic Analysis Methods

Seismic analysis methods for subsystems within Westinghouse's scope of responsibility are given in Section 3.7(N).2.1.

3.7(N).3.2 Determination of Number of Earthquake Cycles

For each OBE, the system and component will have a maximum response corresponding to the maximum induced stresses.

The effect of these maximum stresses for the total number of OBEs must be evaluated to assure resistance to cyclic loading.

The OBE is conservatively assumed to occur 20 times over the life of the plant. The number of maximum stress cycles for each occurrence depends on the system and component damping values, complexity of the system and component, and duration and frequency contents of the input earthquake. A precise determination of the number of maximum stress cycles can only be made, using time- history analysis for each item which is not feasible. Instead, a time-history study has been conducted to arrive at a realistic number of maximum stress cycles for all Westinghouse systems and components.

To determine the conservative equivalent number of cycles of maximum stress associated with each occurrence, an evaluation was performed, considering both equipment and its supporting building structure as single degree of freedom systems. The natural frequencies of the building and the equipment are conservatively chosen to coincide. The damping in the equipment and building is equivalent to the damping values in Table 3.7(N)-1.

The results of this study indicate that the total number of maximum stress cycles in the equipment having peak acceleration above 90 percent of the maximum absolute acceleration did not exceed 8 cycles.

If the equipment was assumed to be rigid in a flexible building, the number of cycles exceeding 90 percent of the maximum stress was not greater than 3 cycles.

This study was conservative since it was performed with single degree of freedom models which tend to produce a more uniform and unattenuated response than a complex interacting system. The conclusions indicate that 10 maximum stress cycles for flexible equipment (natural frequencies less than 33 Hz) and 5 maximum stress cycles for rigid equipment (natural frequencies greater than 33 Hz) for each of 20 OBE occurrences should be used for fatigue evaluation of Westinghouse systems and components.

3.7(N).3.3 Procedure Used for Modeling

Refer to Section 3.7(N).2.1 for modeling procedures for subsystems in Westinghouse's scope of responsibility.

3.7(N).3.4 Basis for Selection of Frequencies

The analysis of equipment subjected to seismic loading involves several basic steps, the first of which is the establishment of the intensity of the seismic loading. Considering that the seismic input originates at the point of support, the response of the equipment and its associated supports, based upon the mass and stiffness characteristics of the system will determine the seismic accelerations which the equipment must withstand.

Three ranges of equipment/support behavior which affect the magnitude of the seismic acceleration are possible:

a. If the equipment is rigid relative to the structure, the maximum acceleration of the equipment mass approaches that of the structure at the point of equipment support. The equipment acceleration value in this case corresponds to the low period region of the floor response spectra.

b. If the equipment is very flexible, relative to the structure, the equipment will show very little response.

c. If the periods of the equipment and supporting structure are nearly equal, response occurs and must be taken into account.

In all cases, equipment under earthquake loadings is designed to be within Code allowable stresses.

Also, as noted in Section 3.7 (N).3.2, rigid equipment/support systems have natural frequencies greater than 33 Hz.

3.7(N).3.5 Use of Equivalent Static Load Method of Analysis

The static load equivalent or static analysis method involves the multiplication of the total weight of the equipment or component number by the specified seismic acceleration coefficient. The magnitude of the seismic acceleration coefficient is established on the basis of the expected dynamic response characteristics of the component. Components which can be adequately characterized as single degree of freedom systems are considered to have a modal participation factor of one. Seismic acceleration coefficients

for multidegree of freedom systems which may be in the resonance region of the amplified response spectra curves are increased by 50 percent to account conservatively for the increased modal participation.

3.7(N).3.6 Three Components of Earthquake Motion

Methods used to account for three components of earthquake motion for subsystems in Westinghouse's scope of responsibility are given in Section 3.7(N).2.6.

3.7(N).3.7 Combination of Modal Responses

Methods used to combine modal responses for subsystems in Westinghouse's scope of responsibility are given in Section 3.7(N).2.7.

3.7(N).3.8 Analytical Procedures for Piping

The Class 1 piping systems are analyzed to the rules of the ASME Code, Section III, NB-3650. When response spectrum methods are used to evaluate piping systems supported at different elevations, the following procedures are used. The effect of differential seismic movement of piping supports is included in the piping analysis, according to the rules of the ASME Code, Section III, NB-3653. According to ASME definitions, these displacements cause secondary stresses in the piping system. The response quality of interest induced by differential seismic motion of the support is computed statically by considering the building response on a mode-by-mode basis.

In the response spectrum dynamic analysis for evaluation of piping systems supported at different elevations, the most severe floor response spectrum corresponding to the support locations is used. Westinghouse does not have in their scope of analysis any piping systems interconnected between buildings.

3.7(N).3.9 Multiple Supported Equipment Components with Distinct Inputs

When response spectrum methods are used to evaluate reactor coolant system primary components interconnected between floors, the procedures of the following paragraphs are used. There are no components in the Westinghouse scope of analysis which are connected between buildings. The primary components of the reactor coolant system are supported at no more than two floor elevations.

A dynamic response spectrum analysis is first made, assuming no relative displacement between support points. The response spectra used in this analysis is the most severe floor response spectra.

Secondly, the effect of differential seismic movement of components interconnected between floors is considered statically in the integrated system analysis and in the detailed component analysis. The results of the building analysis are reviewed on a mode-by-mode basis to determine the differential motion in each mode. Per ASME Code rules, the stress caused by differential seismic motion is clearly secondary for piping (NB-3650) and component supports (NF-3231). For components, the differential motion will be evaluated as a free end displacement, since, per NB-3213.19, examples of a free end displacement are motions "that would occur because of relative thermal expansion of piping, equipment, and equipment supports, or because of rotations imposed upon the equipment by sources other than the piping." The effect of the differential motion is to impose a rotation on the component from the building. This motion, then, being a free end displacement and being similar to thermal expansion loads, will cause stresses which will be evaluated with ASME Code methods, including the rules of NB-3227.5 used for stresses originating from restrained free end displacements.

The results of these two steps, the dynamic inertia analysis and the static differential motion analysis, are combined absolutely with due consideration for the ASME classification of the stresses.

3.7(N).3.10 Use of Constant Vertical Static Factors

Constant vertical load factors are not used as the vertical floor response load for the seismic design of safety-related components and equipment within Westinghouse’s scope of responsibility.

3.7(N).3.11 Torsional Effects of Eccentric Masses

The effect of eccentric masses, such as valves and valve operators, is considered in the seismic piping analyses. These eccentric masses are modeled in the system analysis, and the torsional effects caused by them are evaluated and included in the total system response. The total response must meet the limits of the criteria applicable to the safety class of piping.

3.7(N).3.12 Buried Seismic Category I Piping Systems and Tunnels

Refer to Section 3.7(B).3.12.

3.7(N).3.13 Interaction of Other Piping with Seismic Category I Piping

Refer to Section 3.7(B).3.13.

3.7(N).3.14 Seismic Analyses for Reactor Internals

Fuel assembly component stresses induced by horizontal seismic disturbances are analyzed through the use of finite element computer modeling.

The time-history floor response based on a standard seismic time- history normalized to SSE levels is used as the seismic input. The reactor internals and the fuel assemblies are modeled as spring and lumped mass systems or beam elements. The component seismic response of the fuel assemblies is analyzed to determine design adequacy. A detailed discussion of the analyses performed for typical fuel assemblies is contained in Reference 2.

Fuel assembly lateral structural damping obtained experimentally is presented in Reference 2 (Figure B-4). The data indicates that no damping values less than 10 percent were obtained for fuel assembly displacements greater than 0.11 inch for the SSE.

The distribution of fuel assembly amplitudes decreases as one approaches the center of the core. The average amplitude for the minimum displacement fuel assembly is well above 0.11 inch for the SSE.

Fuel assembly displacement time-history for the SSE seismic input is illustrated in Reference 2 (Figure 2-3).

The CRDMs are seismically analyzed to confirm that system stresses under the combined loading conditions, as described in Section 3.9(N).1, do not exceed allowable levels, as defined by the ASME Code, Section III for "Upset" and "Faulted" conditions. The CRDM is mathematically modeled as a system of lumped and distributed masses. The model is analyzed under appropriate seismic excitation, and the resultant seismic bending moments along the length of the CRDM are calculated. The corresponding stresses are then combined with the stresses from the other loadings required, and the combination is shown to meet ASME Code, Section III requirements.

3.7(N).3.15 Analysis Procedure for Damping

Analysis procedures for damping for subsystems in Westinghouse’s scope of responsibility are given in Section 3.7(N).2.15.

3.7 (N).4 SEISMIC INSTRUMENTATION

Refer to Section 3.7(B).4.

3.7(N).5 REFERENCES

1. "Damping Values of Nuclear Power Plant Components," WCAP-7921-AR, May, 1974.

2. Gesinski, L. T. and LeBastard, G., "Safety Analysis of the 8-Grid 17 x 17 Fuel Assembly for Combined Seismic and Loss of Coolant Accident," WCAP-8236, Addendum 1 (Proprietary), and WCAP-8288, Addendum 1 (Non-Proprietary), March 1974.

3. Lin, C. W., "How to Lump the Masses - A Guide to the Piping Seismic Analysis," ASME Paper 74-NE-7 presented at the Pressure Vessels and Piping Conference, Miami, Florida, June, 1974.

4. Biggs, J. M., Introduction to Structural Dynamics, McGraw-Hill, New York, 1964.

5. Thomas, T. H., et al., "Nuclear Reactors and Earth quakes," TID-7024, U. S. Atomic Energy Commission, Washington, D. C., August, 1963.

6. Chan, S. P., Cox, H. L., and Benfield, W. A., "Transient Analysis of Forced Vibration of Complex Structural-Mechanical Systems," J. Royal Aeronautical Society, July, 1962.

TABLE 3.7(N)-1

DAMPING VALUES USED FOR SEISMIC SYSTEMS
ANALYSIS FOR WESTINGHOUSE SUPPLIED EQUIPMENT

Item	Damping (Percent of Critical) Upset Conditions (OBE)	Faulted Condition (SSE, DBA)
Primary coolant loop system components and large piping*	2	4
Small piping	1	2
Welded steel structures	2	4
Bolted and/or riveted steel structures	4	7

1. The damping values provided in ASME Code Case N-411 may be utilized for piping systems as an alternative to those identified above subject to the conditions listed in Regulatory Guide 1.84.

*Applicable to 12-inch or larger diameter piping.

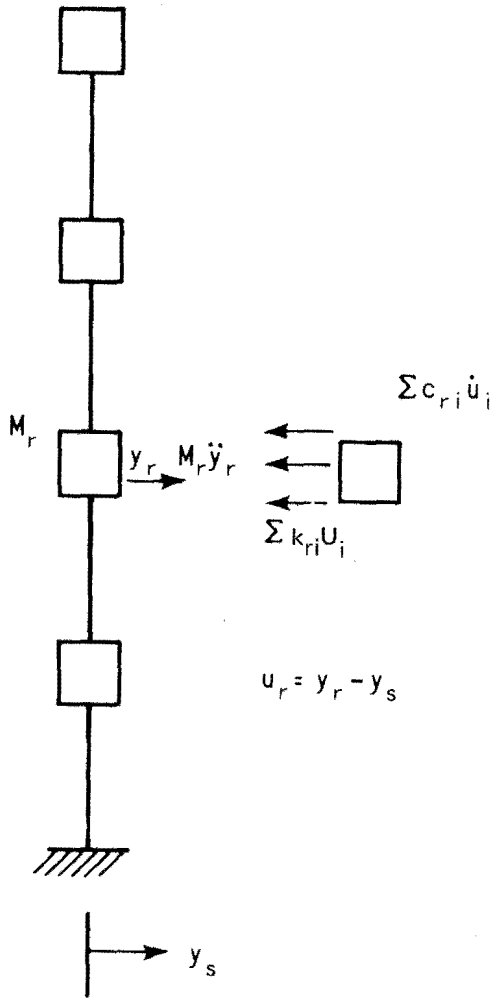

Rev. 0

WOLF CREEK
UPDATED SAFETY ANALYSIS REPORT

FIGURE 3.7(N)-1

MULTI-DEGREE-OF-FREEDOM SYSTEM

3.7(S) SEISMIC DESIGN

The following material applies to the nonpowerblock site-related, seismic Category I structures, systems, and components.

3.7(S).1 SEISMIC INPUT

3.7(S).1.1 Design Response Spectra

The site design response spectra in compliance with Regulatory Guide 1.60 are illustrated in Figures 3.7(S)-1 and 3.7(S)-2, in both the horizontal and vertical directions for the 0.12g safe shutdown earthquake (SSE). For the operating basis earthquake (OBE), the design response spectra values are taken as 50 percent of the SSE. Section 2.5.2 and BC-TOP-4A, Section 2.5, discuss the effects of focal and epicentral distances from the site, depths between the focus of the seismic disturbances and the site, existing earthquake records, and the associated amplification of the response spectra. Appendix 3C contains a seismic evaluation of the Wolf Creek Generating Station structures using the Lawrence Livermore Laboratories spectrum. This spectrum is enveloped by a Regulatory Guide 1.60 spectrum anchored at 0.15g and is illustrated in Figures 3.7(S)-13 and 3.7(S)-14.

A 20.48-second duration is considered to be adequate for the time-history type of analysis used for the structures and equipment.

The design response spectra and earthquake time-histories are applied in the free field at finished grade.

3.7(S).1.1.1 Bases for Site Dependent Analysis

Section 2.5.2 and BC-TOP-4A, Sections 2.4 and 2.5, describe the bases for specifying the vibratory ground motion for design use.

3.7(S).1.2 Design Time-History

Synthetic earthquake time-histories were generated because the response spectra of recorded earthquake motions do not necessarily envelop the site's design spectra. USAR Figures 3.7(B)-3 and 3.7(B)-4 show the synthetic earthquake time-history motions for the SSE in the horizontal and vertical directions, respectively. Figures 3.7(S)-3 through 3.7(S)-8 show that the 10-percent, 7-percent, and 5-percent damping response spectra of the site synthetic time-history in the horizontal and vertical directions envelop the corresponding design spectra. Section 2.5.1 of BC-TOP-4A describes the generation of a typical synthetic earthquake time-history.

A typical foundation-level, free-field acceleration response spectrum is presented in Figure 3.7(S)-9. The curve overlies the 60-percent design response spectrum.

Conservative design seismic loads and floor response spectra are obtained by use of the computed foundation free-field response spectra and by broadening the floor response spectra by + 10 percent.

3.7(S).1.3 Supporting Media for Seismic Category I Structures

A description of the supporting media for site-related seismic Category I structures is provided in Section 2.5.4. Figure 3.7(S)-10 provides the free-field soil profile.

Table 3.7(S)-1 presents all non powerblock site-related seismic Category I structures and respective depths of soil or backfill deposits over bedrock.

3.7(S).2 SEISMIC SYSTEM ANALYSIS

3.7(S).2.1 Seismic Analysis Methods

Refer to Appendix 3C, USAR Section 3.7(B).2.1 and the following table and figure for information on seismic analysis methods.

1. Table 3.7(S)-2 lists the methods of analysis for the site-related seismic Category I structures.

2. Figure 3.7(S)-11 shows the typical mathematical model for the ESWS pumphouse.

3.7(S).2.2 Natural Frequencies and Response Loads

The SSE fundamental mode natural frequencies for the ESWS pumphouse are 7.0 Hz in both the north-south and east-west directions, and 8.1 Hz in the vertical direction. The OBE fundamental mode natural frequencies for the ESWS pumphouse are 7.2 Hz in both the north-south and east-west directions, and 9.5 Hz in the vertical direction. A summary of response parameters determined by seismic analysis is provided in Table 3.7(S)-3A, -3B, identifying their characteristic responses.

Typical floor response spectra are presented in Figure 3.7(S)-12 for both SSE and OBE.

3.7(S).2.3 Soil/Structure Interaction

Refer to USAR Section 3.7(B).2.4 and Table 3.7(S)-2 where foundation embedment depth below grade, minimum base dimension, and method of analysis are given. Refer to USAR Section 3.7(B).2.4 for a description of the FLUSH, finite element method of analysis. Structures completely buried below grade (ESWS Caissons and electrical manholes) move with the ground motion as a single, lumped mass. To account for the inertial effects of the walls and slabs due to the ground motion, the mass of the walls and slabs are multiplied by the site SSE and OBE. To account for the effects of soil pressures on the walls due to the ground motion, additional soil pressures as a function of the site SSE and OBE are applied to the walls [refer to Figure 2.5-107a & 107b]. This procedure is conservative in the design of buried structures. Since response spectra are not needed for equipment qualification, finite element analysis is not performed.

3.7(S).2.4 Methods for Seismic Analysis of Dams

The procedure for the seismic analysis of seismic Category I dams is provided in Section 2.5.6.5. The assumptions made, the boundary conditions used, and the procedure by which strain-dependent soil properties are incorporated in the analysis are also provided in Section 2.5.6.5. Appendix 3C also contains the results of the seismic evaluation of the UHS dam using the Lawrence Livermore Laboratories spectrum.

TABLE 3.7(S)-1

DEPTH OF SOIL DEPOSITED OVER BEDROCK
SITE-RELATED SEISMIC CATEGORY I STRUCTURES

Structure	Approximate Elev. of Bottom of Base Mat	Average Elev. Of Top of Rock	Average Depth of Soil Over Rock (feet)
ESWS Pumphouse	1952'-10"	1960'-0"	0
ESWS Electrical Manholes	1979'-5"	1962'-0"	17.5

TABLE 3.7(S)-2

FOUNDATION DEPTH BELOW GRADE, MINIMUM BASE DIMENSION AND METHOD OF ANALYSIS FOR SITE-RELATED SEISMIC CATEGORY I STRUCTURES

Structure	Approximate Foundation Embedment Depth Below Grade (feet)	Approximate Minimum Base Dimension (feet)	Ratio of Embedment Depth to Minimum Base Dimension	Method of Analysis
ESWS Pumphouse	47	40	1.175	1
ESWS Electrical Manholes	20	11	1.818	2

1 Finite-element method, FLUSH computer program.

2 Single lumped mass-spring method - structures are buried below grade.

WOLF CREEK
TABLE 3.7(S)-3A
SPECTRAL RESPONSE SUMMARY
ESWS PUMPHOUSE
0.12G SSE

REF. FIGURE 3.7(S)-11

			NORTH-SOUTH DIRECTION						EAST-WEST DIRECTION						VERTICAL DIRECTION				
MASS POINT NO.	ELEVATION	LUMPED WEIGHT (KIPS)	FLUSH MODEL NODE POINT NO.	MAX. ACCEL'S (G'S)	INERTIA FORCES (KIPS)	SHEAR FORCES (KIPS)	BENDING MOMENTS (KIP-FT)	DISPLACE-MENTS (INCHES)	FLUSH MODEL NODE POINT NO.	MAX. ACCEL'S (G'S)	INERTIA FORCES (KIPS)	SHEAR FORCES (KIPS)	BENDING MOMENTS (KIP-FT)	DISPLACE-MENTS (INCHES)	FLUSH MODEL NODE POINT NO.	MAX. ACCEL'S (G'S)	INERTIA FORCES (KIPS)	AXIAL FORCES (KIPS)	DISPLACE-MENT (INCHES)
4	2038'-8"	534	93	.438	234		0	.082	141	.216	115		0	.073	141	.197	105		.031
						234						115						105	
3	2025'-0"	1,647	94	.336	586		3,200	.075	142	.187	307		1,570	.074	142	.195	321		.030
						820						422						426	
–	2012'-6"	905	95	.281	254		13,450	–	143	.161	146		6,850	–	143	.190	172		–
						1,074						568						598	
2	2000'-0"	3,792	96	.207	786		26,870	.070	144	.141	534		13,950	.080	144	.178	676		.026
						1,860						1,102						1,274	
–	1985'-0"	2,801	99	.130	363		54,770	–	227	.110	308		30,480	–	227	.139	390		–
						2,223						1,410						1,664	
–	1969'-0"	2,613	102	.103	269		90,340	–	230	.103	269		53,040	–	230	.121	317		–
						2,492						1,679						1,981	
1	1958'-0"	2,758	104	.102	280		117,750	.081	232	.102	281		71,510	.089	232	.116	319		.010
						2,772						1,960						2,300	
–	1953'-0"	–	105	–	–		131,610	–	233	–	–		81,310	–	233	–	–		–

WOLF CREEK
TABLE 3.7(S)-3B
SPECTRAL RESPONSE SUMMARY
ESWS PUMPHOUSE
0.06G OBE

REF. FIGURE 3.7(S)-11

			NORTH-SOUTH DIRECTION						EAST-WEST DIRECTION						VERTICAL DIRECTION				
MASS POINT NO.	ELEVATION	LUMPED WEIGHT (KIPS)	FLUSH MODEL NODE POINT NO.	MAX. ACCEL'S (G'S)	INERTIA FORCES (KIPS)	SHEAR FORCES (KIPS)	BENDING MOMENTS (KIP-FT)	DISPLACE-MENTS (INCHES)	FLUSH MODEL NODE POINT NO.	MAX. ACCEL'S (G'S)	INERTIA FORCES (KIPS)	SHEAR FORCES (KIPS)	BENDING MOMENTS (KIP-FT)	DISPLACE-MENTS (INCHES)	FLUSH MODEL NODE POINT NO.	MAX. ACCEL'S (G'S)	INERTIA FORCES (KIPS)	AXIAL FORCES (KIPS)	DISPLACE-MENT (INCHES)
4	2038'-8"	534	93	.225	120		0	.024	141	.103	55		0	.026	141	.098	52		.015
						120						55						52	
3	2025'-0"	1,647	94	.185	305		1,640	.022	142	.091	150		750	.027	142	.097	159		.015
						425						205						211	
–	2012'-6"	905	95	.150	136		6,950	–	143	.081	73		3,310	–	143	.094	85		–
						561						278						296	
2	2000'-0"	3,792	96	.115	437		13,970	.021	144	.073	275		6,790	.030	144	.088	333		.012
						998						553						629	
–	1985'-0"	2,801	99	.079	222		28,940	–	227	.061	171		15,080	–	227	.070	197		–
						1,220						724						826	
–	1969'-0"	2,613	102	.055	143		48,460	–	230	.053	139		26,670	–	230	.062	161		–
						1,363						863						987	
1	1958'-0"	2,758	104	.053	145		63,450	.033	232	.053	145		36,160	.036	232	.059	163		.004
						1,508						1,008						1,150	
–	1953'-0"	–	105	–	–		70,990	–	233	–	–		41,200	–	233	–	–		–

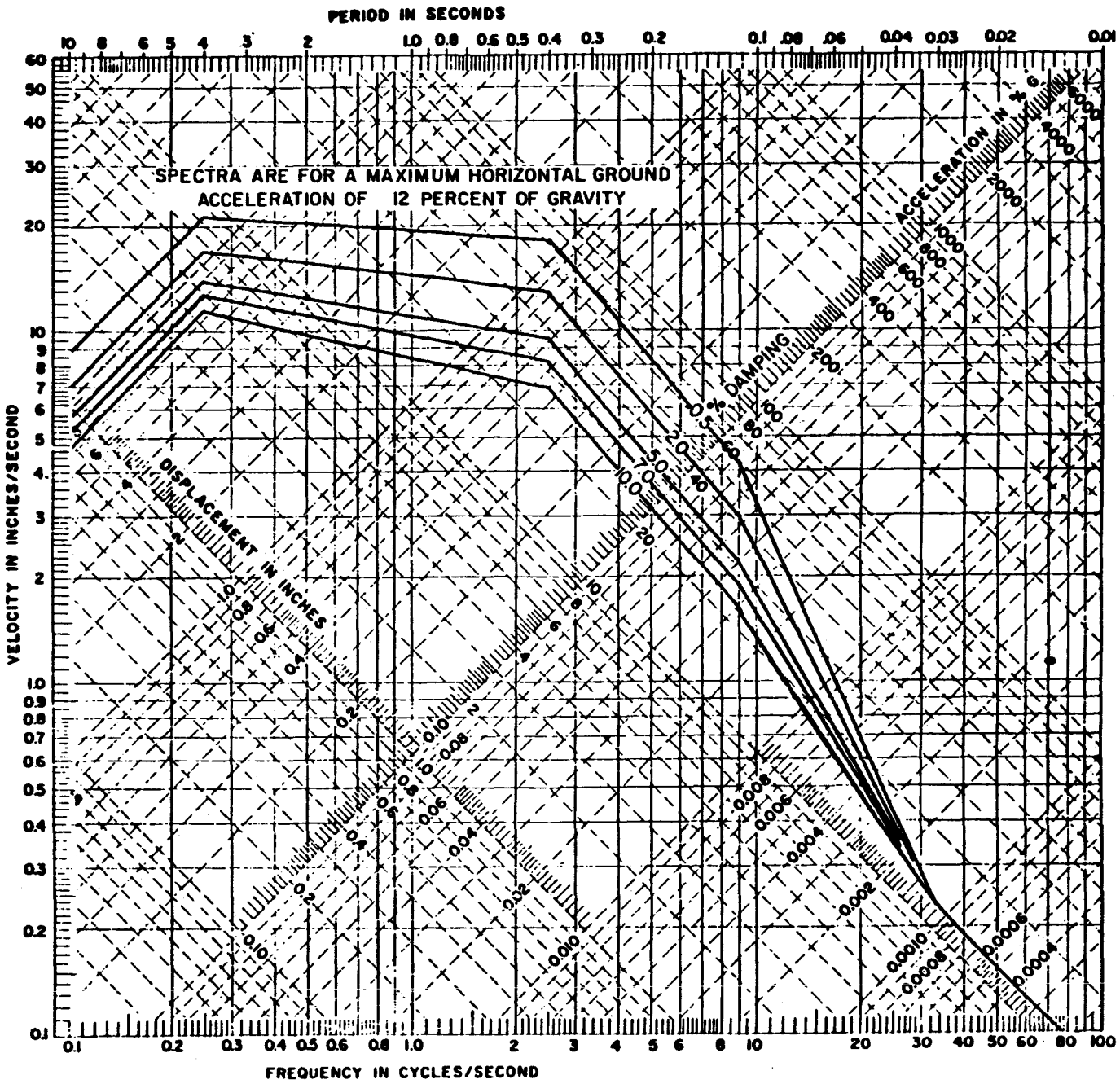

WOLF CREEK
UPDATED SAFETY ANALYSIS REPORT

FIGURE 3.7(S)-1
SAFE SHUTDOWN EARTHQUAKE
HORIZONTAL GROUND SPECTRA
(0.12g)

Rev. 14

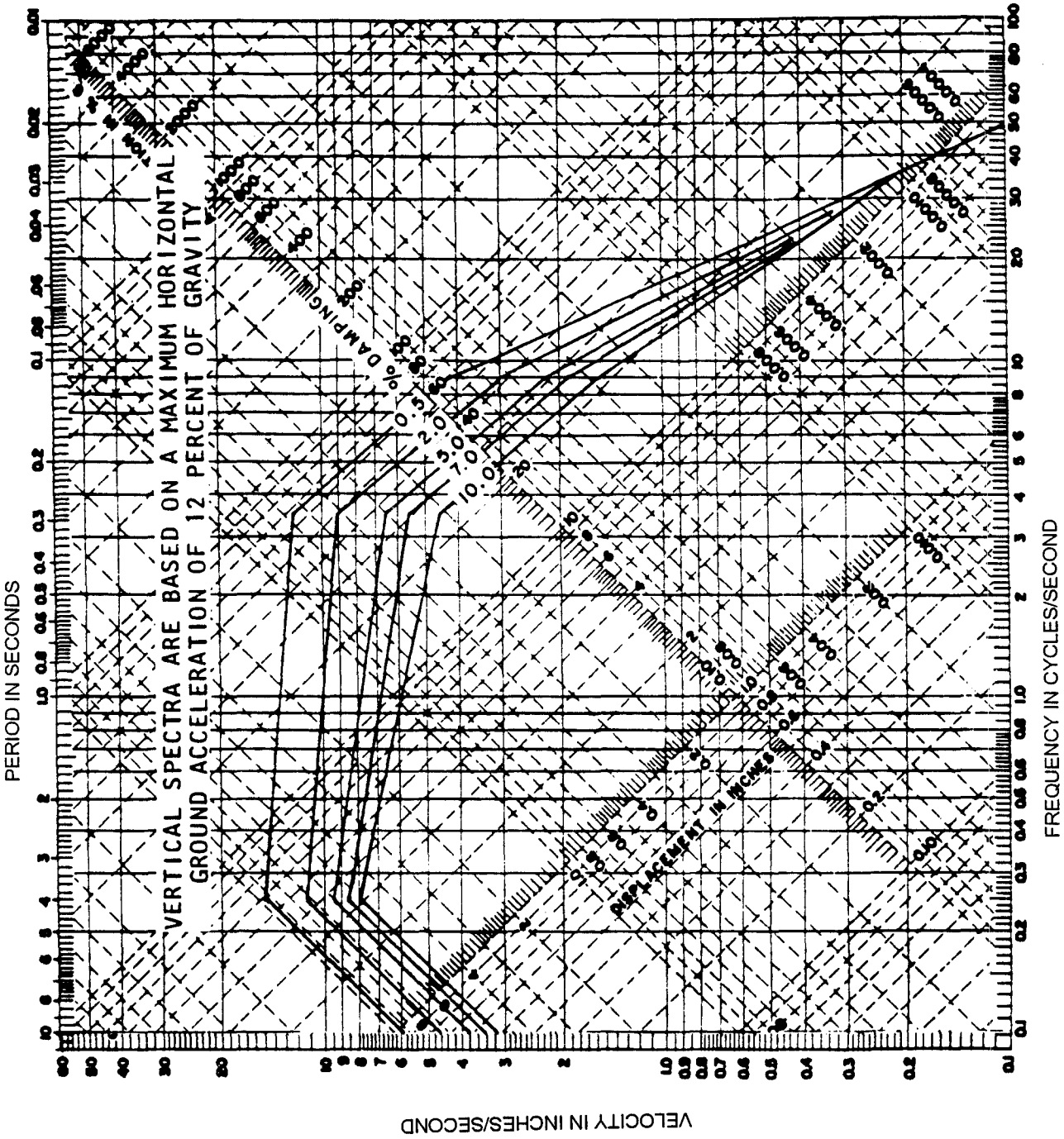

Rev. 14

WOLF CREEK
UPDATED SAFETY ANALYSIS REPORT

FIGURE 3.7(S)-2
SAFE SHUTDOWN EARTHQUAKE
VERTICAL GROUND SPECTRA
(0.12g)

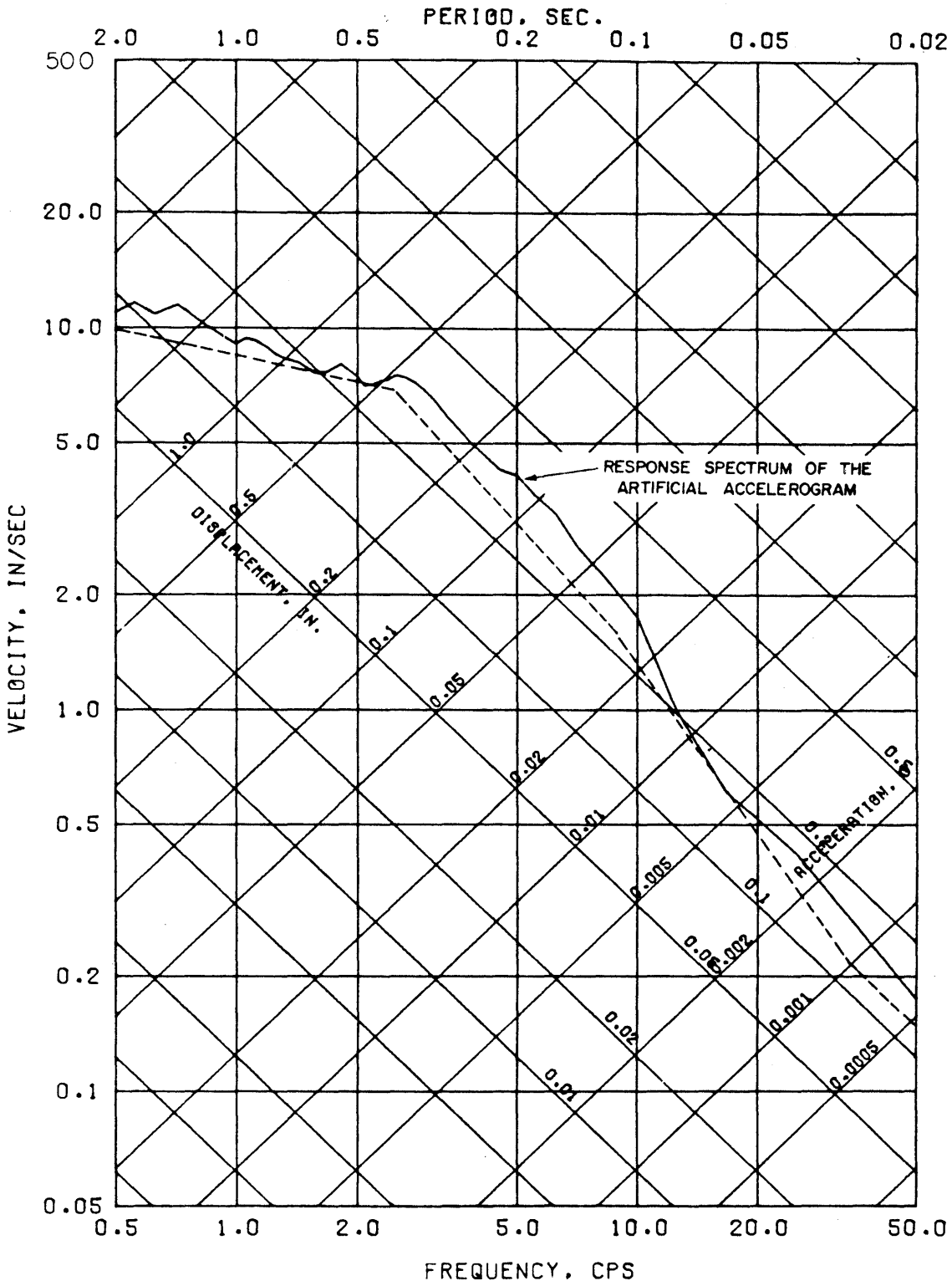

Rev. 0

WOLF CREEK
UPDATED SAFETY ANALYSIS REPORT

FIGURE 3.7(S)-3

HORIZONTAL DESIGN RESPONSE SPECTRA FOR 0.12G HORIZONTAL GROUND ACCELERATION (10% DAMPING)

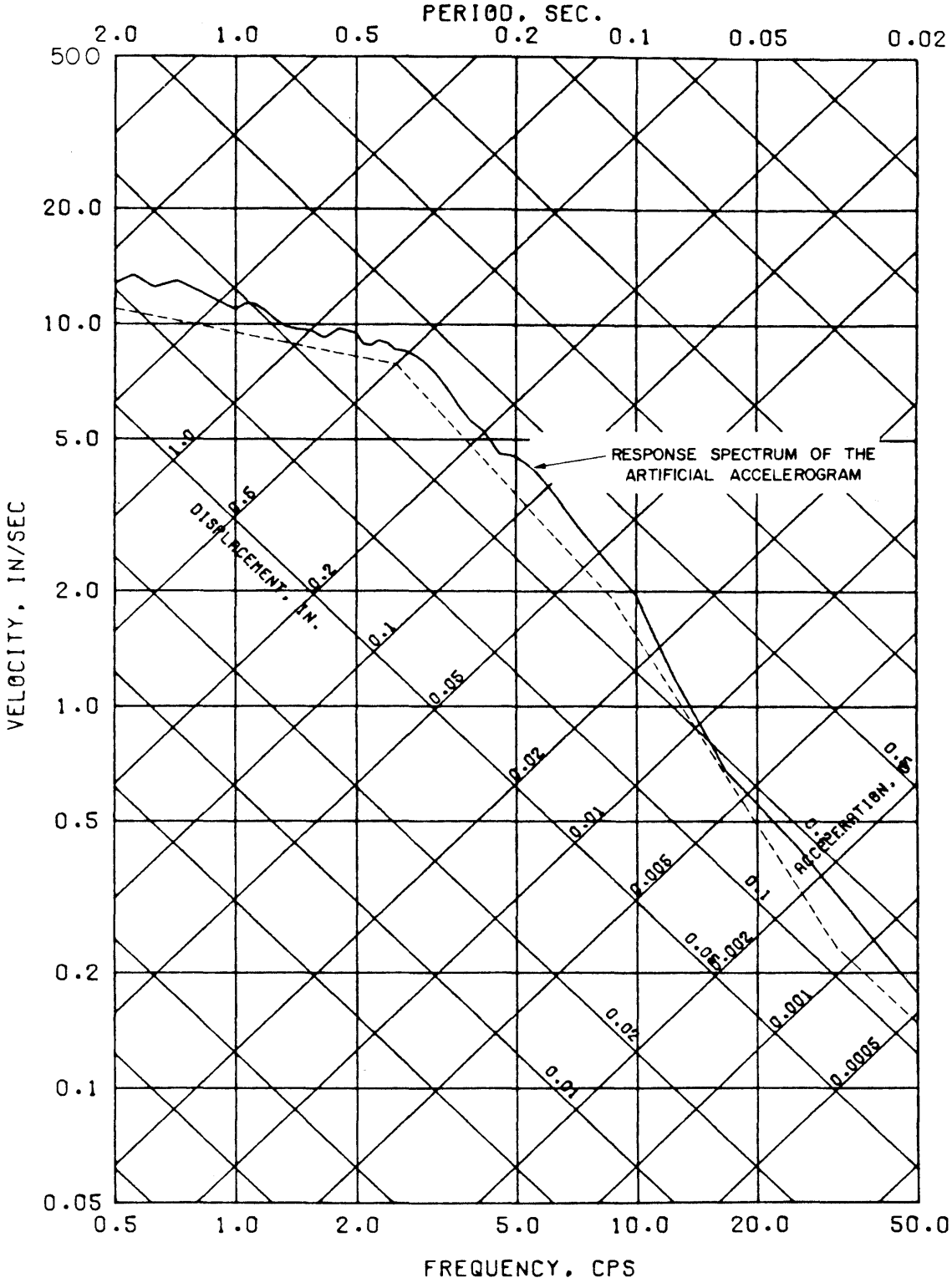

Rev. 0

WOLF CREEK
UPDATED SAFETY ANALYSIS REPORT

FIGURE 3.7(S)-4

HORIZONTAL DESIGN RESPONSE SPECTRA FOR 0.12G HORIZONTAL GROUND ACCELERATION (7% DAMPING)

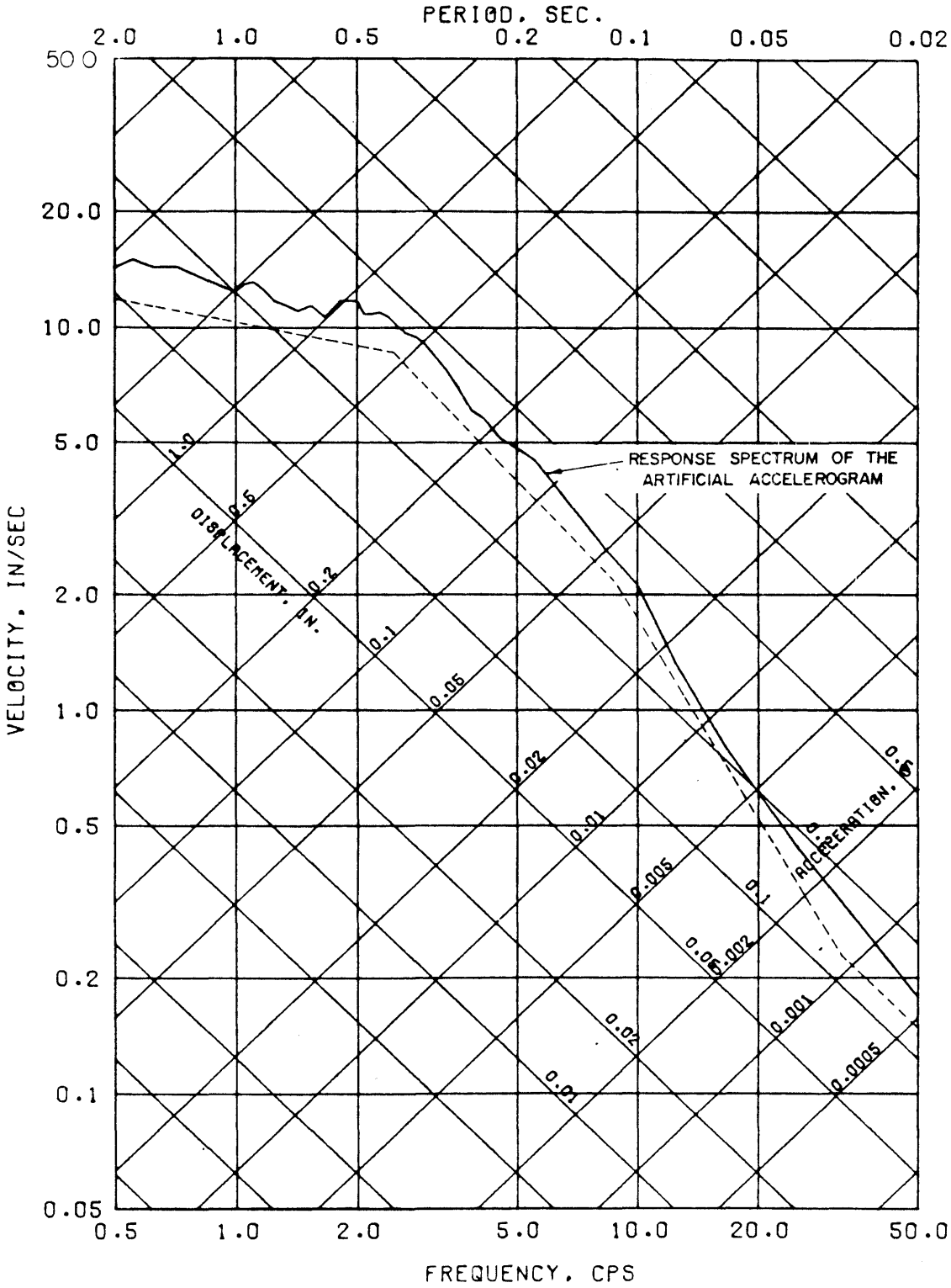

Rev. 0

WOLF CREEK
UPDATED SAFETY ANALYSIS REPORT

FIGURE 3.7(S)-5

HORIZONTAL DESIGN RESPONSE SPECTRA FOR 0.12G HORIZONTAL GROUND ACCELERATION (5% DAMPING)

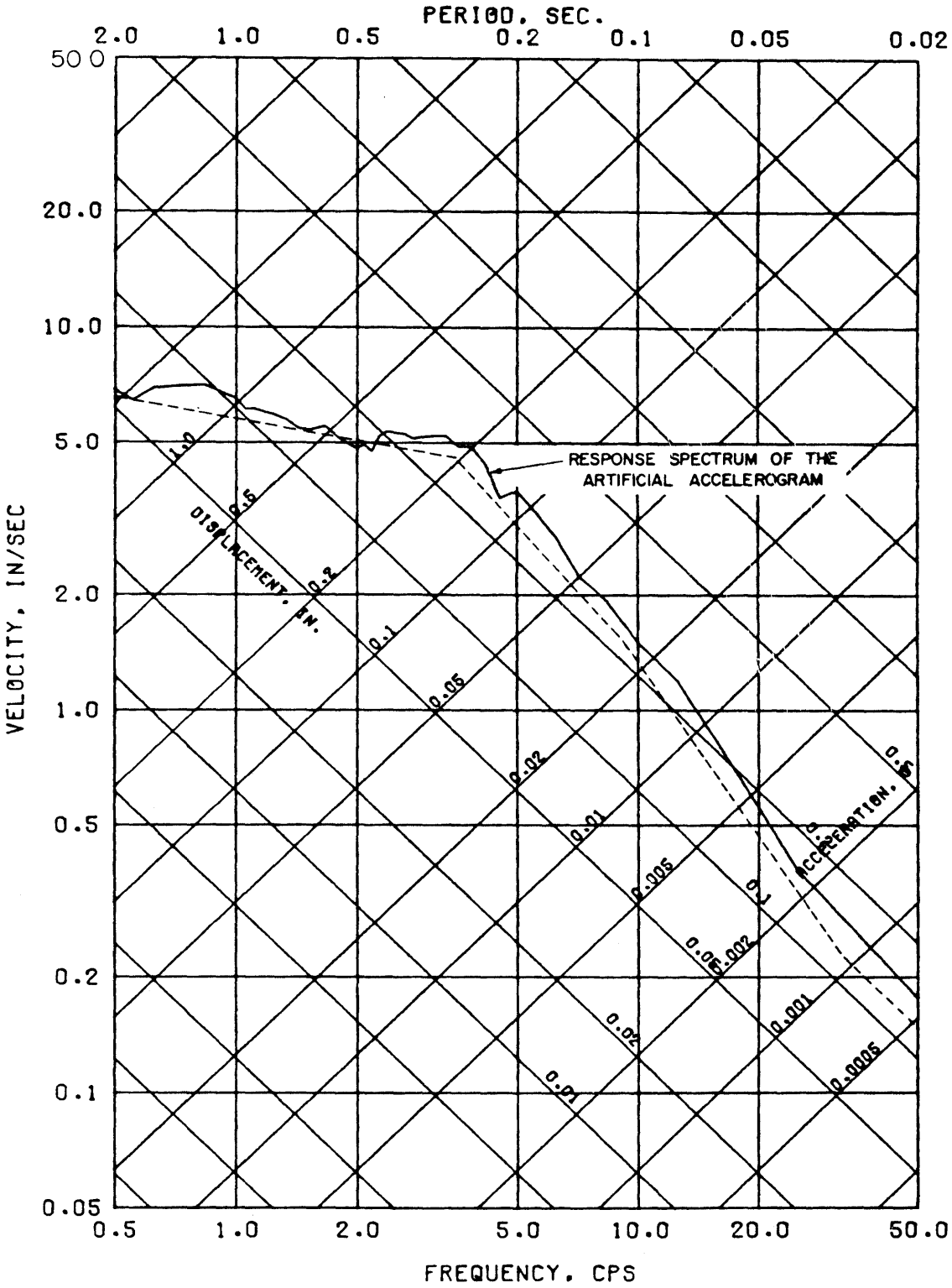

Rev. 0

WOLF CREEK
UPDATED SAFETY ANALYSIS REPORT

FIGURE 3.7(S)-6

VERTICAL DESIGN RESPONSE SPECTRA FOR 0.12G HORIZONTAL GROUND ACCELERATION (10% DAMPING)

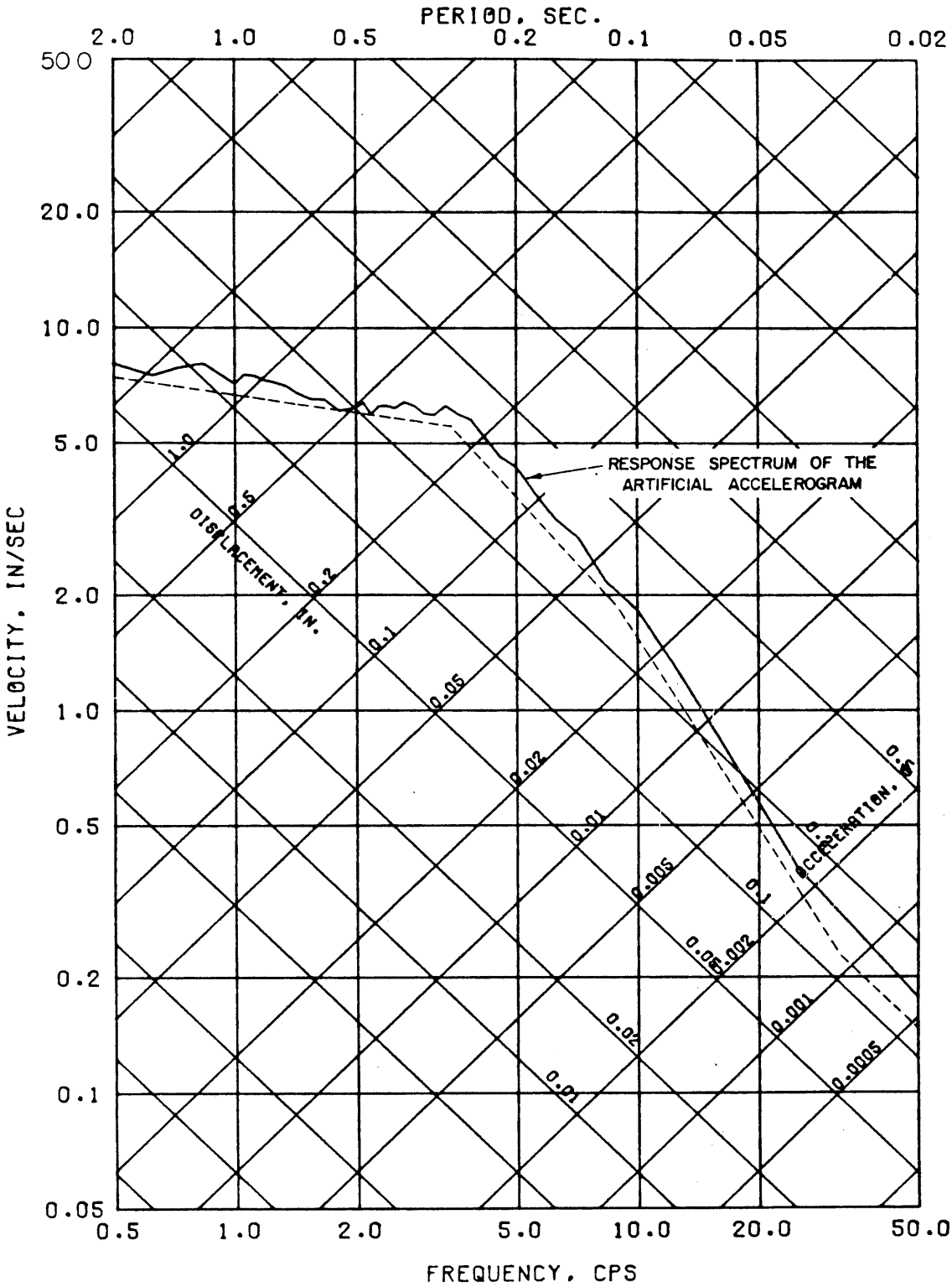

Rev. 0

WOLF CREEK
UPDATED SAFETY ANALYSIS REPORT

FIGURE 3.7(S)-7

VERTICAL DESIGN RESPONSE SPECTRA FOR 0.12G HORIZONTAL GROUND ACCELERATION (7% DAMPING)

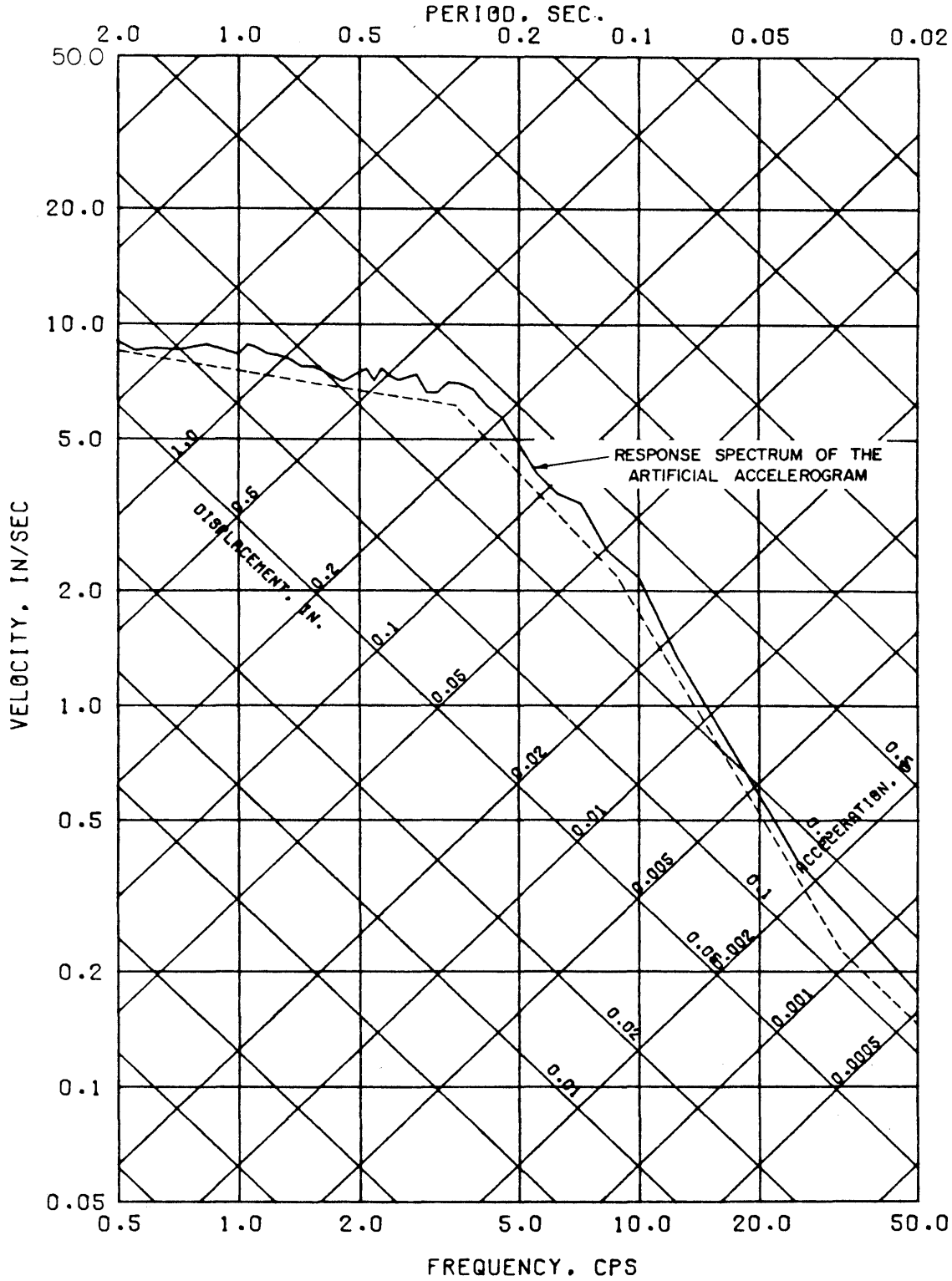

Rev. 0

WOLF CREEK
UPDATED SAFETY ANALYSIS REPORT

FIGURE 3.7(S)-8

VERTICAL DESIGN RESPONSE SPECTRA FOR 0.12G HORIZONTAL GROUND ACCELERATION (5% DAMPING)

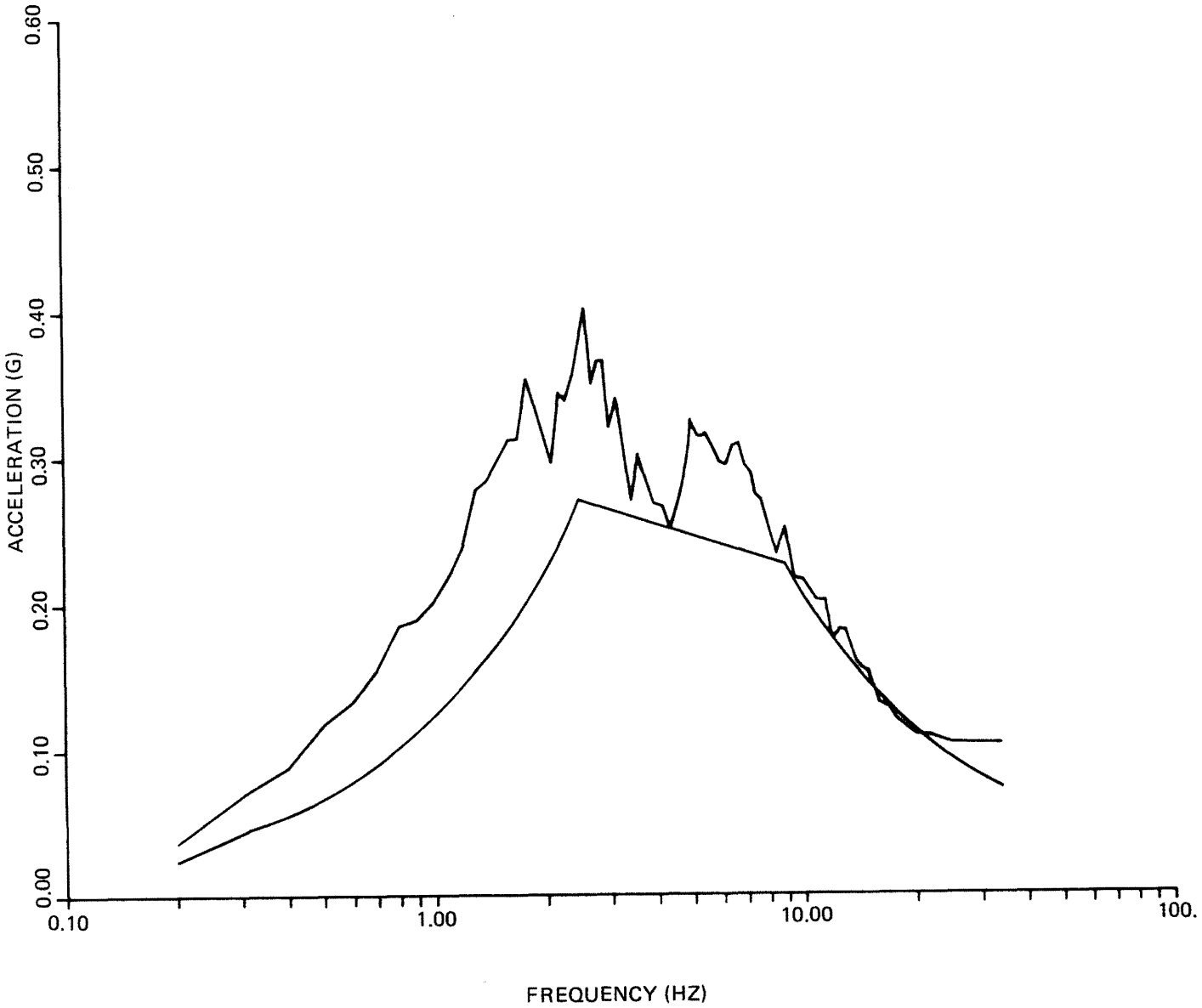

Rev. 0

WOLF CREEK
UPDATED SAFETY ANALYSIS REPORT

FIGURE 3.7(S)-9

TYPICAL FREE FIELD BASE ELEVATION SPECTRA ESWS PUMPHOUSE

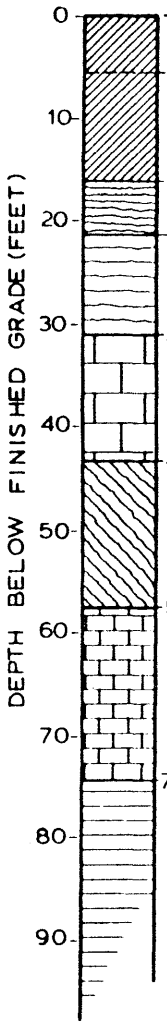

MATERIAL	LAYER THICKNESS (FEET)	SSE = 0.12g TYPICAL SHEAR MODULUS G (KSF)	SSE = 0.12g TYPICAL DAMPING FRACTION	OBE = 0.06g TYPICAL SHEAR MODULUS G (KSF)	OBE = 0.06g TYPICAL DAMPING FRACTION	POISSON'S RATIO	UNIT WEIGHT (PCF)	REMARKS
COHESIVE OVERBURDEN	3	750	.035	930	.031	.40	125	STRAIN DEPENDENT SHEAR MODULUS, AND DAMPING. Gmax = 1,300 KSF AT .0001% STRAIN.
	3	540	.063	690	.042			
	5	1,060	.060	1,350	.041	.45	130	STRAIN DEPENDENT SHEAR MODULUS, AND DAMPING. Gmax = 2,500 KSF AT .0001% STRAIN. REDUCTION CURVES SAME AS ABOVE.
	5	910	.073	1,200	.050	.45	130	
UPPER HEUMADER SHALE	5	2,440 TO 2,460	.04	3,300 TO 3,350	.04	.40	135	STRAIN DEPENDENT SHEAR MODULUS, CONSTANT DAMPING. Gmax = 5,000 KSF AT .0001% STRAIN.
LOWER HEUMADER SHALE	10	5,660 TO 5,750	.04	6,070 TO 6,260	.04	.35	150	STRAIN DEPENDENT SHEAR MODULUS, CONSTANT DAMPING. Gmax = 8,000 KSF AT .0001% STRAIN.
PLATTSMOUTH LIMESTONE	12	270,000	.02	270,000	.02	.30	165	CONSTANT SHEAR MODULUS, AND DAMPING.
HEEBNER, LEAVENWORTH, SNYDERVILLE FORMATION	14	58,000	.04	58,000	.04	.30	140	CONSTANT SHEAR MODULUS, AND DAMPING.
TORONTO LIMESTONE	17	270,000	.02	270,000	.02	.30	160	CONSTANT SHEAR MODULUS, AND DAMPING.
INTERBEDDED SHALES	BEDROCK		—		—	—		RIGID BOUNDARY FOR FLUSH PROGRAM. $V_S \geq 4,000$ FPS.

Rev. 1

WOLF CREEK
UPDATED SAFETY ANALYSIS REPORT

Figure 3.7(S)-10

Free Field Media Typical Subsurface Profile And Soil Properties SSE and OBE

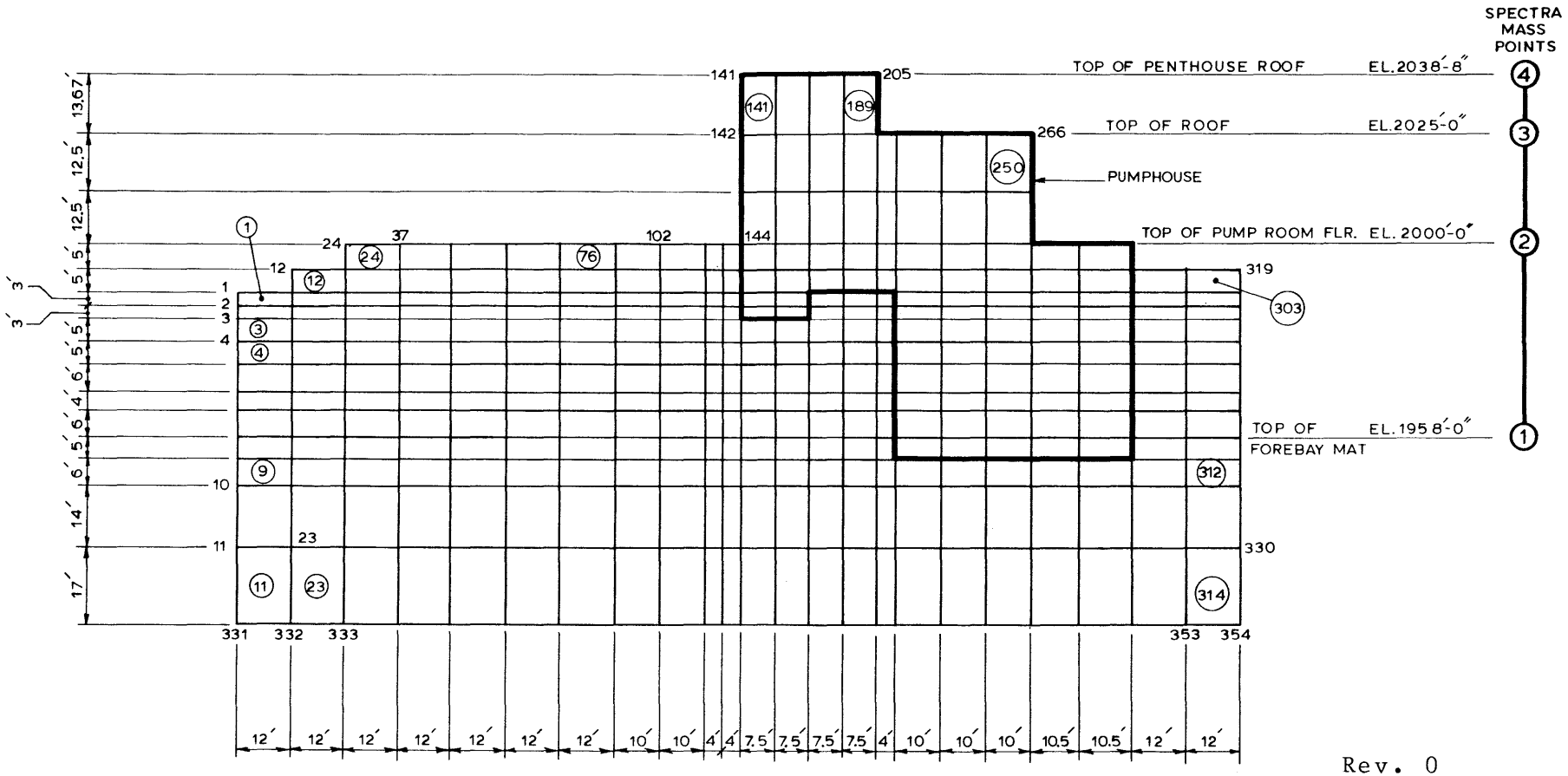

Rev. 0

WOLF CREEK
UPDATED SAFETY ANALYSIS REPORT

FIGURE 3.7(S)-11

MATHEMATICAL MODEL FOR ESWS PUMPHOUSE FOR EAST-WEST VERTICAL ANALYSIS

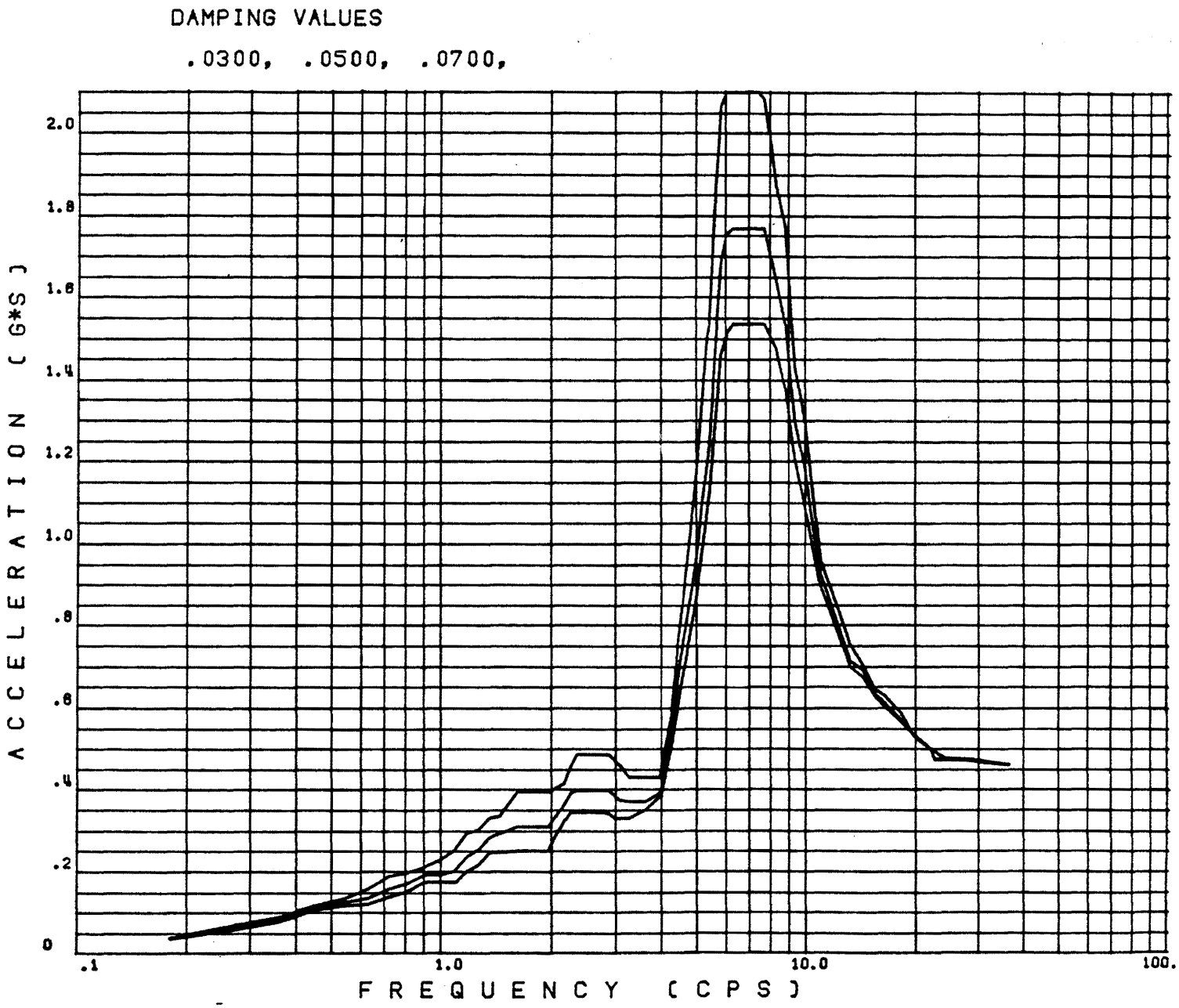

DESIGN FLOOR RESPONSE SPECTRA

MASS POINT 4/FLUSH NODE POINT 93
REF. FIGURE 3.7-11

Rev. 0

WOLF CREEK
UPDATED SAFETY ANALYSIS REPORT

FIGURE 3.7(S)-12A

SPECTRA-ESWS PUMPHOUSE, SSE, NORTH-SOUTH DIRECTION, TOP OF PENTHOUSE ROOF

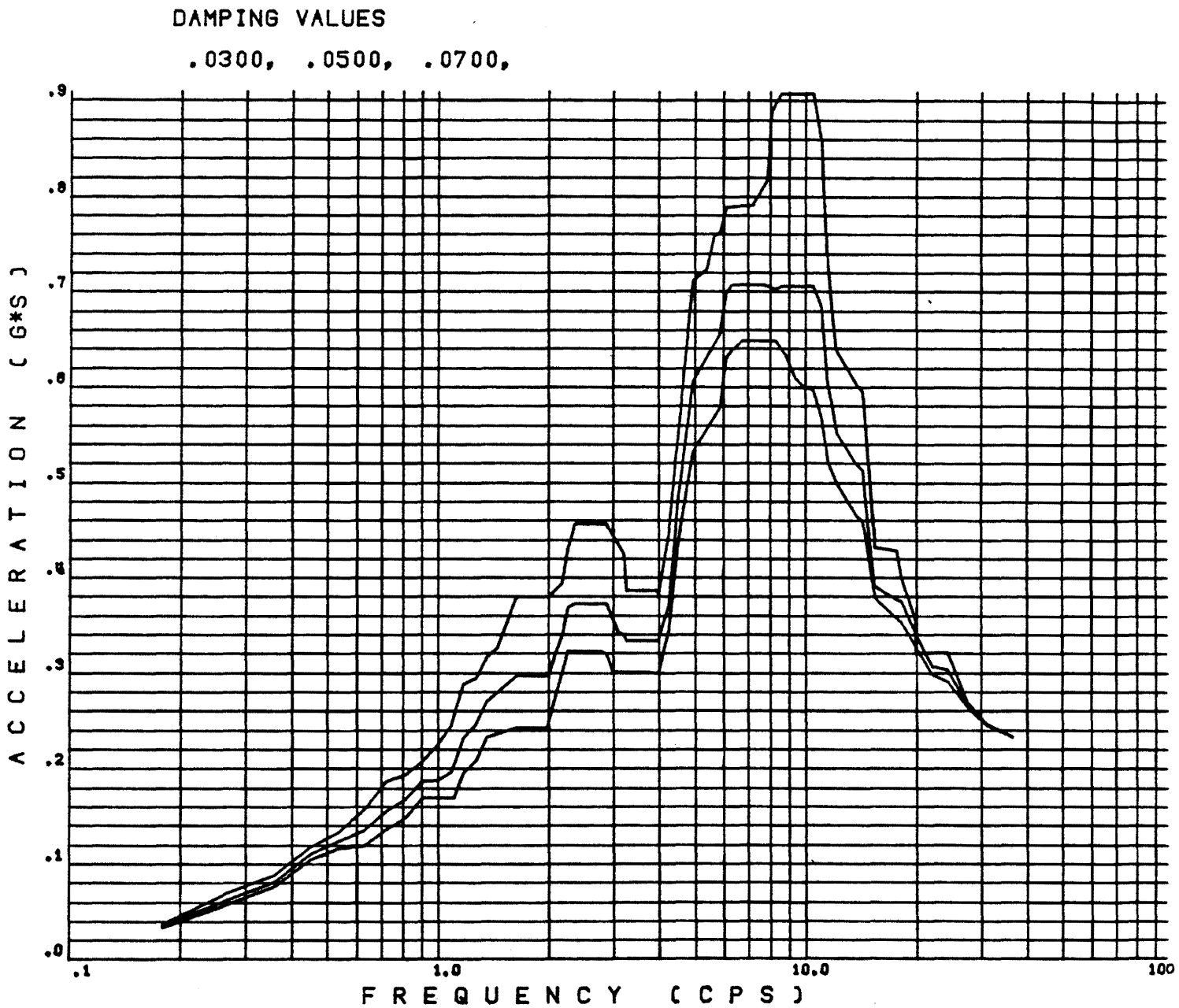

DESIGN FLOOR RESPONSE SPECTRA

MASS POINT 4/FLUSH NODE POINT 141
REF. FIGURE 3.7-11

Rev. 0

WOLF CREEK
UPDATED SAFETY ANALYSIS REPORT

FIGURE 3.7(S)-12B

SPECTRA-ESWS PUMPHOUSE, SSE, EAST-WEST DIRECTION, TOP OF PENTHOUSE ROOF

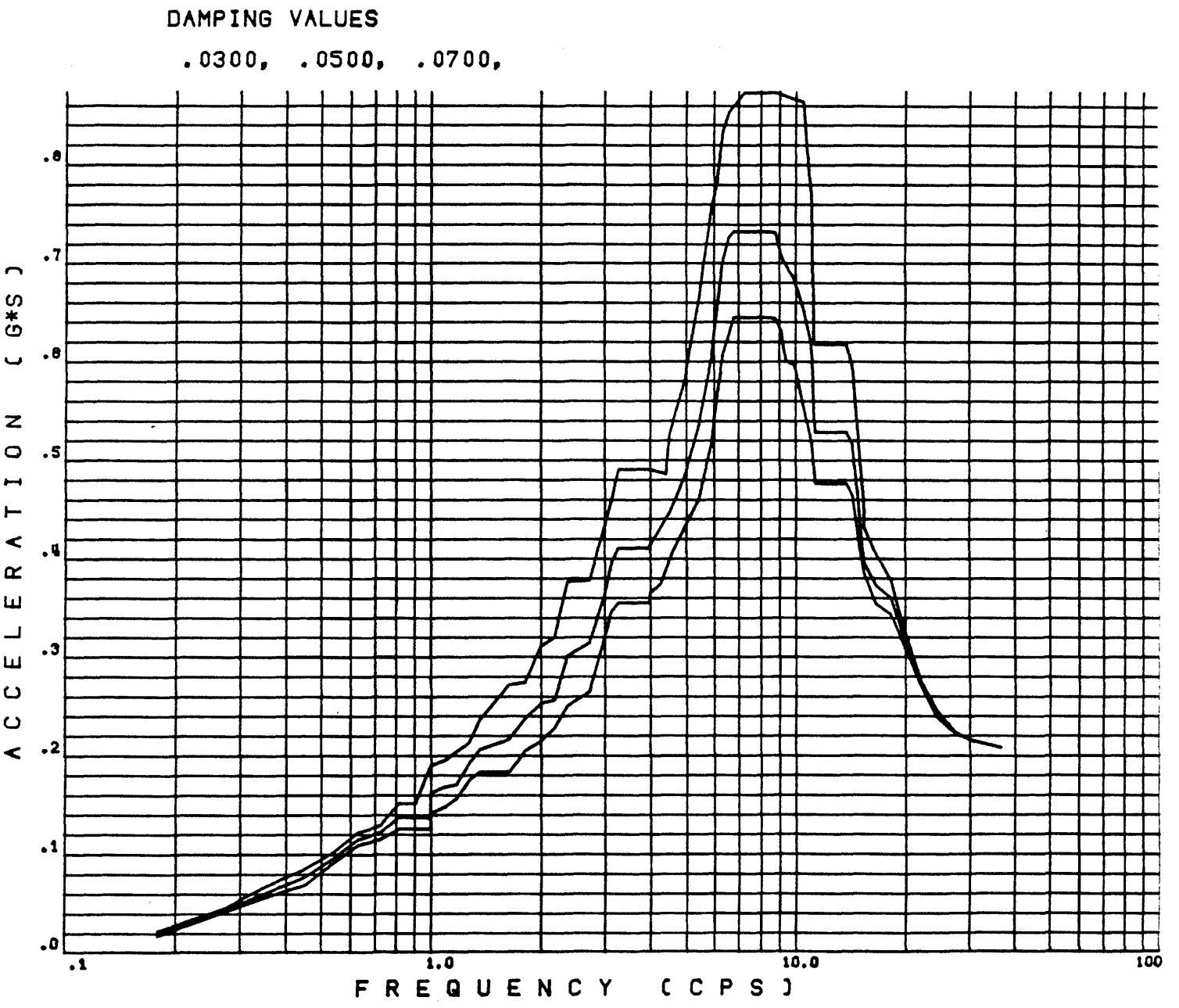

DESIGN FLOOR RESPONSE SPECTRA

MASS POINT 4/FLUSH NODE POINT 141
REF. FIGURE 3.7-11

Rev. 0

WOLF CREEK
UPDATED SAFETY ANALYSIS REPORT

FIGURE 3.7(S)-12C

SPECTRA-ESWS PUMPHOUSE, SSE, VERTICAL DIRECTION, TOP OF PENTHOUSE ROOF

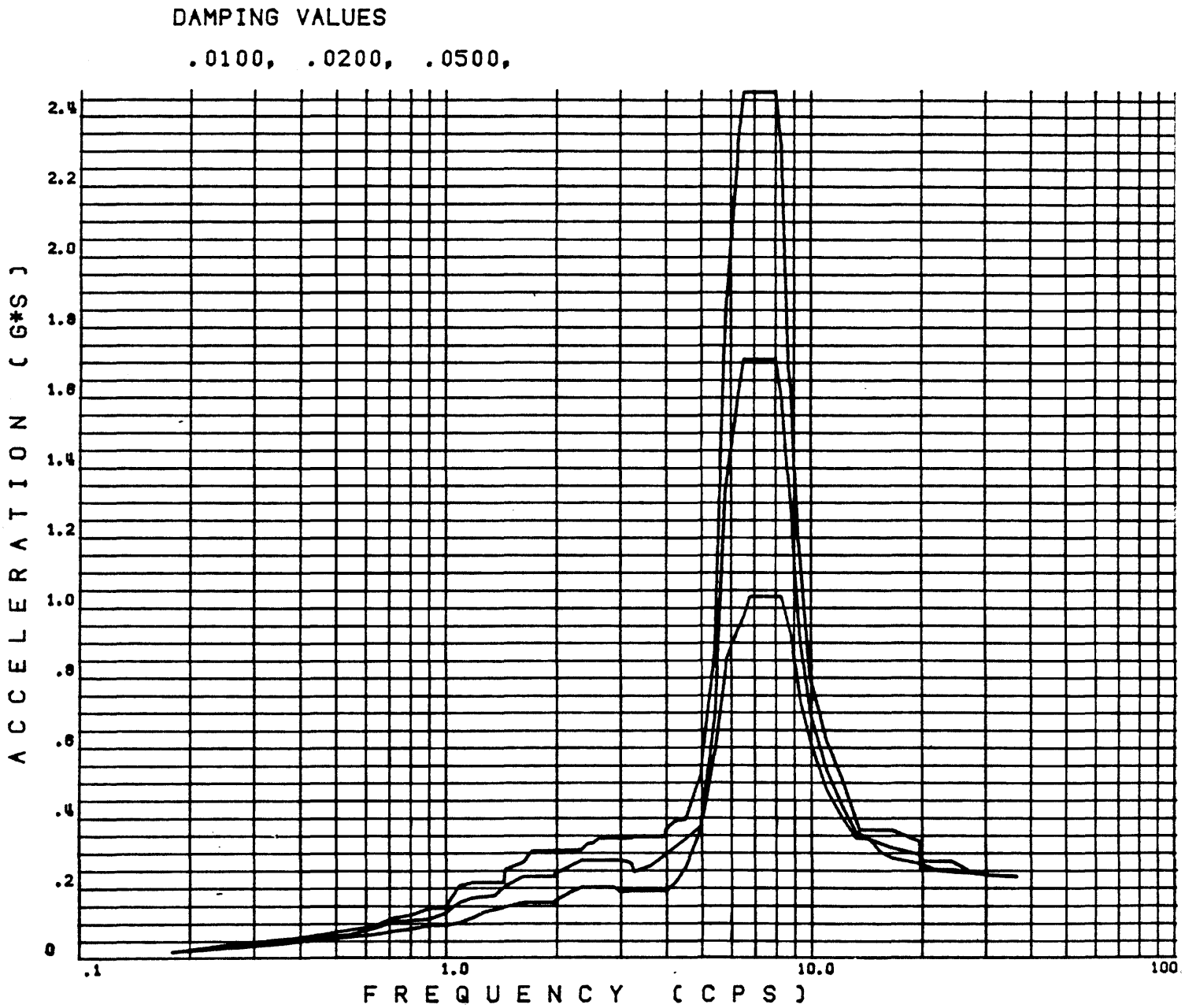

DESIGN FLOOR RESPONSE SPECTRA

MASS POINT 4/FLUSH NODE POINT 93
REF. FIGURE 3.7-11

Rev. 0

WOLF CREEK
UPDATED SAFETY ANALYSIS REPORT

FIGURE 3.7(S)-12D

SPECTRA-ESWS PUMPHOUSE, OBE, NORTH-SOUTH DIRECTION, TOP OF PENTHOUSE ROOF

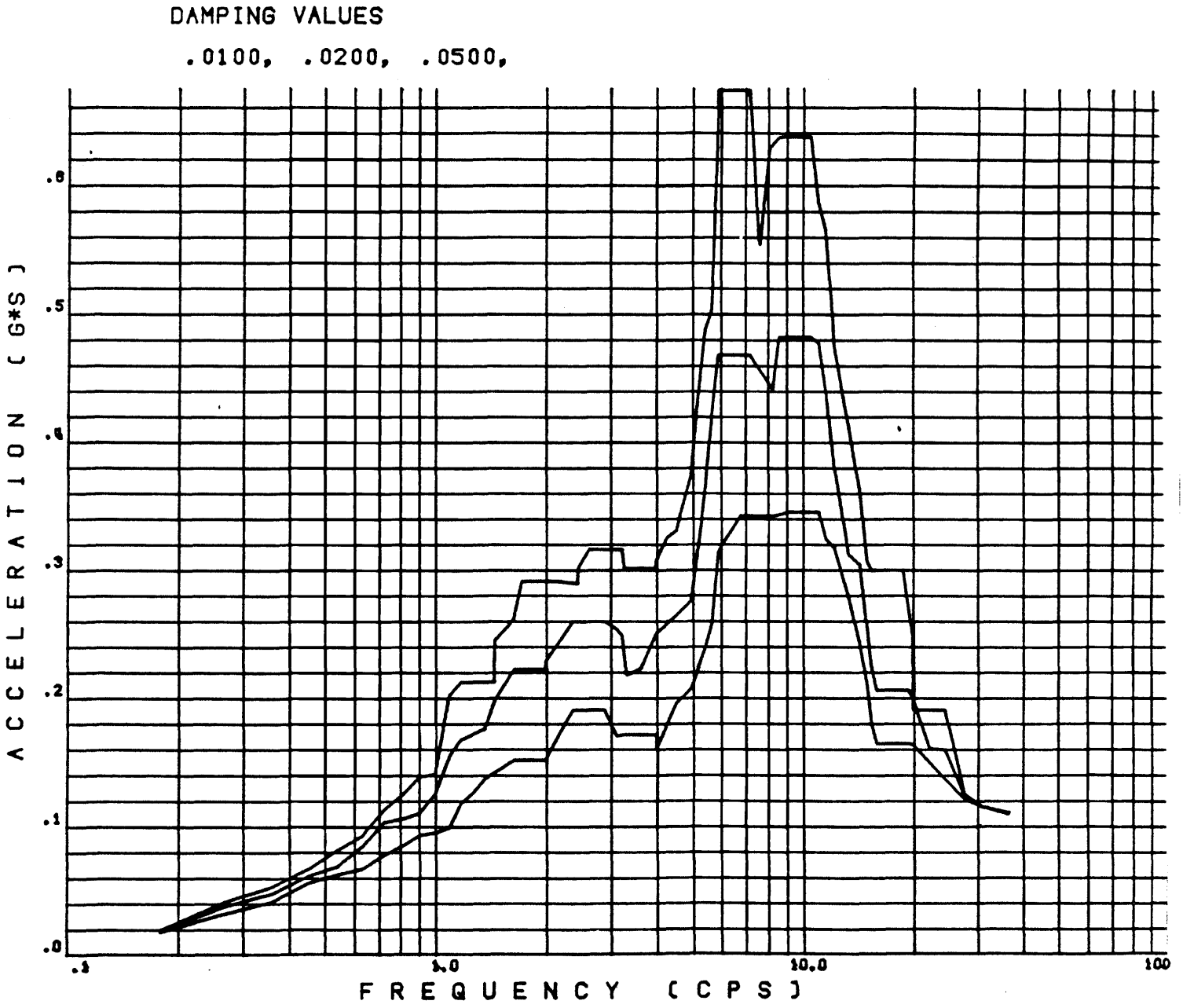

DESIGN FLOOR RESPONSE SPECTRA

MASS POINT 4/FLUSH NODE POINT 141
REF. FIGURE 3.7-11

Rev. 0

WOLF CREEK
UPDATED SAFETY ANALYSIS REPORT

FIGURE 3.7(S)-12E

SPECTRA-ESWS PUMPHOUSE, OBE, EAST-WEST DIRECTION, TOP OF PENTHOUSE ROOF

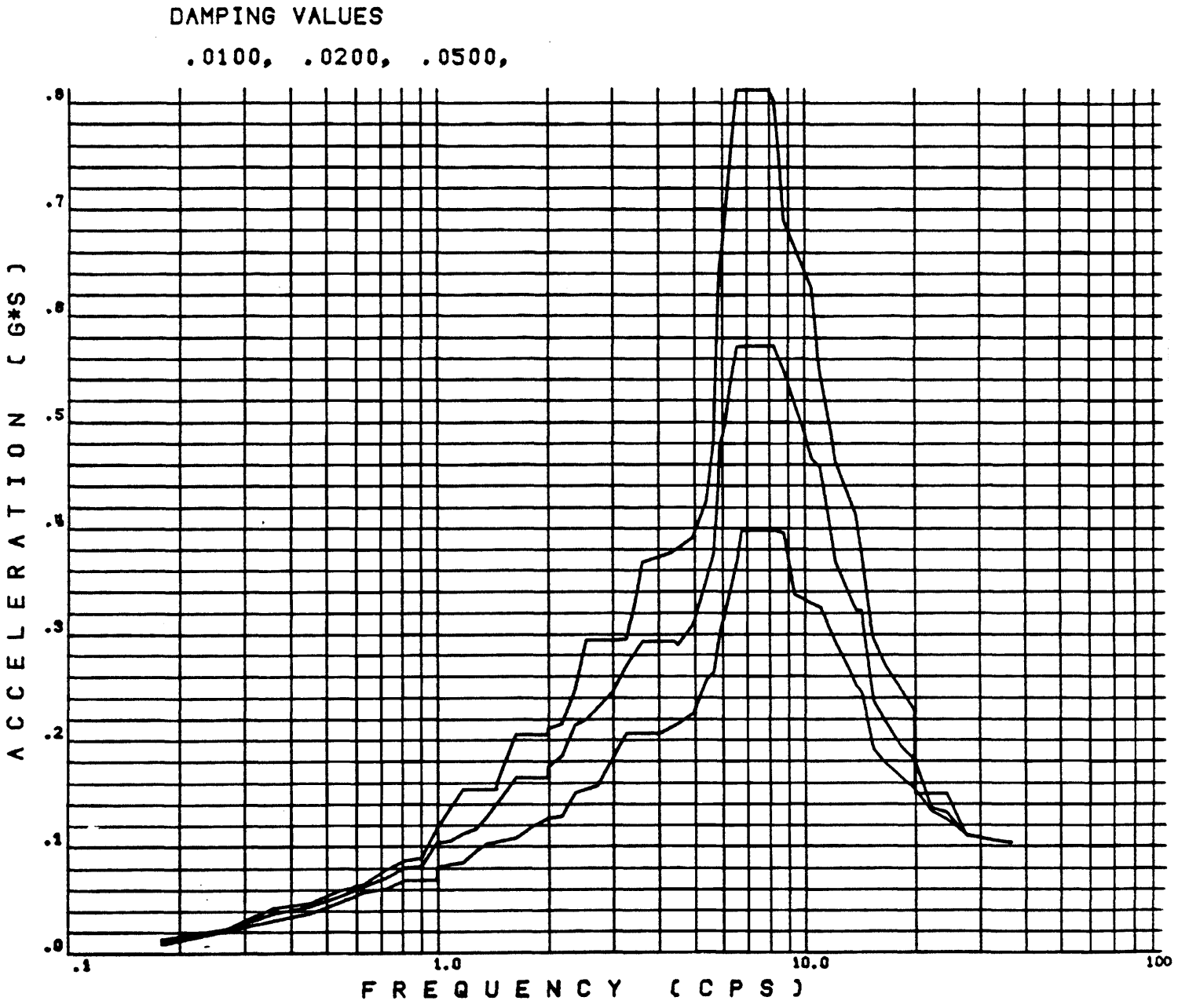

DESIGN FLOOR RESPONSE SPECTRA

MASS POINT 4/FLUSH NODE POINT 141
REF. FIGURE 3.7-11 Rev. 0

WOLF CREEK
UPDATED SAFETY ANALYSIS REPORT

FIGURE 3.7(S)-12F

SPECTRA-ESWS PENTHOUSE, OBE, VERTICAL DIRECTION, TOP OF PENTHOUSE ROOF

WOLF CREEK

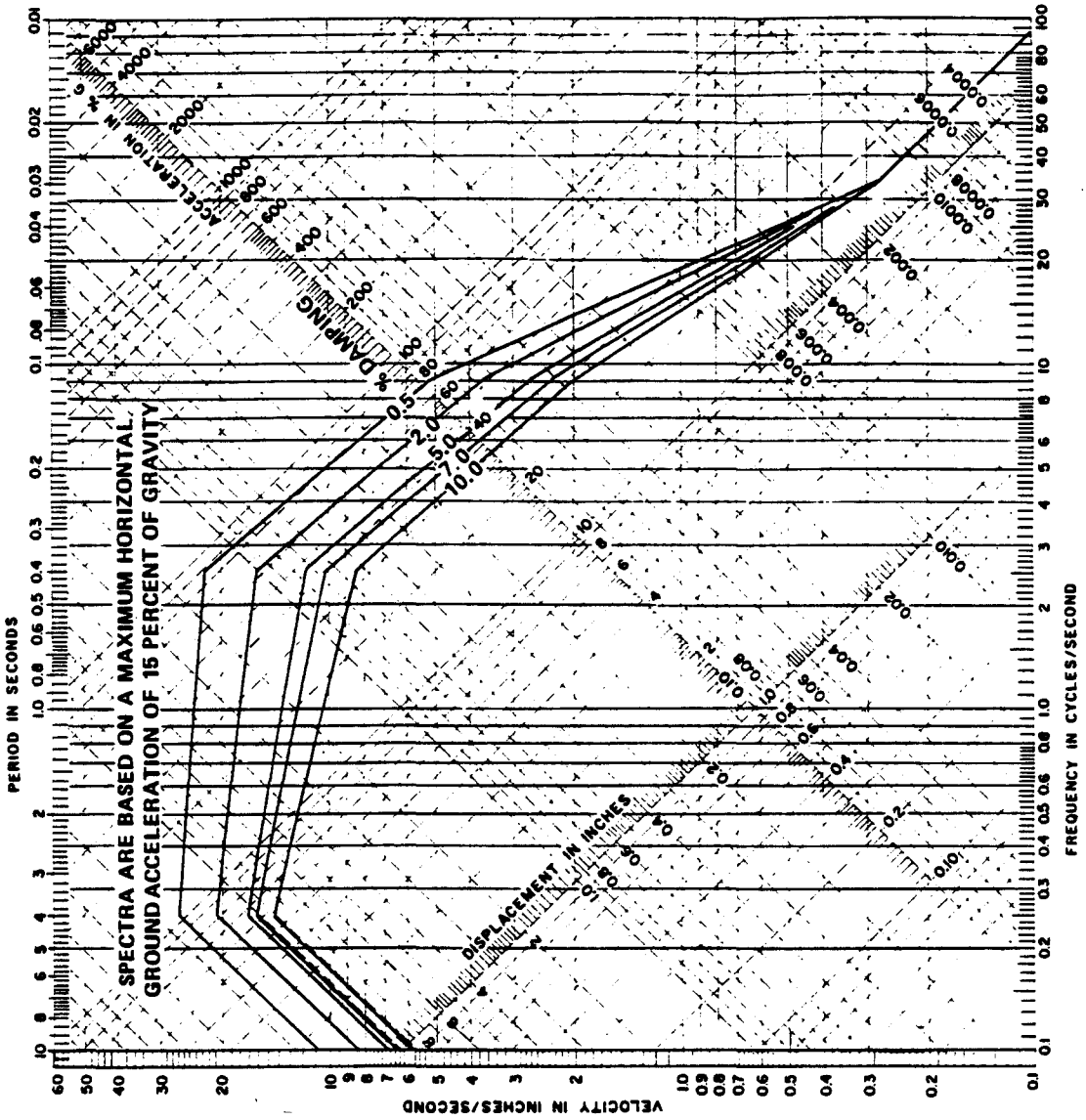

Rev. 14

WOLF CREEK
UPDATED SAFETY ANALYSIS REPORT

FIGURE 3.7(S)-13
SAFE SHUTDOWN EARTHQUAKE
HORIZONTAL GROUND SPECTRA
(0.15g)

WOLF CREEK

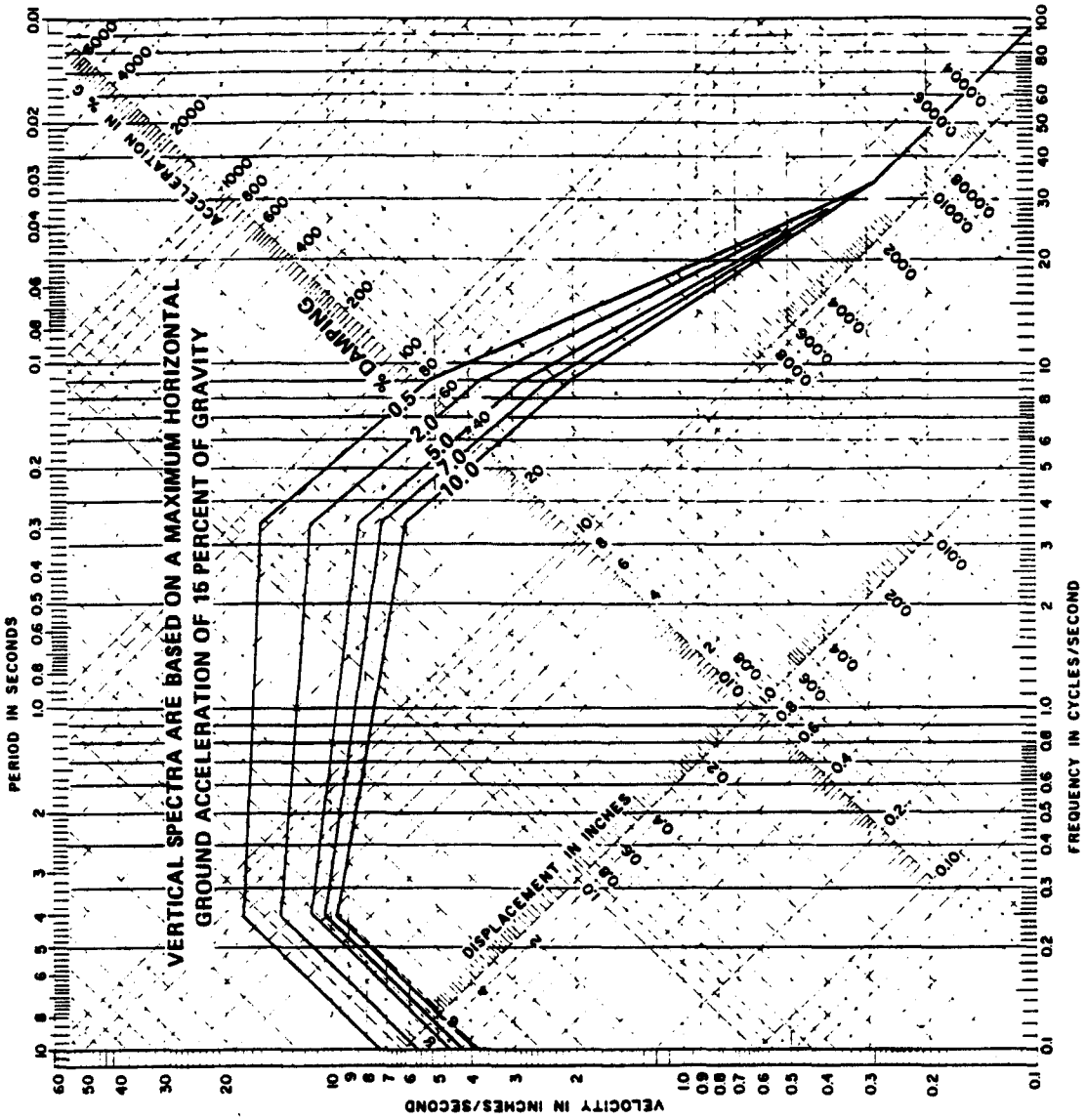

Rev. 14

WOLF CREEK
UPDATED SAFETY ANALYSIS REPORT

FIGURE 3.7(S)-14
SAFE SHUTDOWN EARTHQUAKE
VERTICAL GROUND SPECTRA
(0.15g)

3.8 DESIGN OF CATEGORY I STRUCTURES

This section provides information on the containment structure and its internal structures, other powerblock seismic Category I structures, and their foundations and supports.

3.8.1 CONCRETE CONTAINMENT

The containment structure is designed to house the reactor coolant system and is referred to as the reactor building in the following sections. The reactor building is part of the containment system designed to control the release of airborne radioactivity following postulated design basis accidents (DBAs) and to provide shielding for the reactor core and the reactor coolant system.

This section describes the structural design considerations for the reactor building. Section 6.2 describes the functional design of the containment to minimize leakage following a LOCA. Bechtel Topical Report BC-TOP-5-A provides additional structural information relative to the design, construction, testing, and surveillance of the prestressed concrete reactor building.

3.8.1.1 Description of the Reactor Building

3.8.1.1.1 General

The reactor building consists of a prestressed, reinforced concrete, cylindrical structure with a hemispherical dome and a conventionally reinforced concrete base slab with a central cavity and instrumentation tunnel to house the reactor vessel. A continuous peripheral tendon access gallery below the base slab is provided for the installation and inspection of the vertical post-tensioning system. Figures 3.8-1 through 3.8-7 illustrate this configuration and also show the relationship between the shell and its interior compartment walls and floors. The internal structures are isolated from the shell by means of an isolation gap to minimize interaction. In addition, the connections used to provide for vertical support of the structural steel floor framing at the shell allow for independent horizontal movement. Figure 1.2-1 shows the relationship between the reactor building and the surrounding structures. As shown, the shell is separated from its surrounding structures by a minimum 3-inch isolation gap to avoid interaction. In some instances, the gap is filled with a fireproof compressible material.

The base slab, cylinder, and dome are reinforced by bonded reinforcing steel, as required by the design loading conditions. Additional reinforcing is provided at discontinuities in the

structure and at major penetrations in the shell. The main reinforcing patterns for the base slab, cylinder wall, and dome are illustrated in Figures 3.8-8 through 3.8-14.

The interior of the reactor building is lined with carbon steel plates welded together to form a barrier which is essentially leak tight. A post-tensioning system is used to prestress the cylindrical shell and dome.

Principal nominal dimensions of the reactor building are as follows:

Interior diameter	140 ft
Interior height	205 ft
Height to spring line	135 ft
Base slab thickness	10 ft
Cylinder wall thickness	4 ft
Dome thickness	3 ft
Liner plate thickness	0.25 in.
Internal free volume	2.5×10^6 cubic ft

3.8.1.1.2 Post-Tensioning System

The tendon system employed to post-tension the cylindrical shell and dome of the reactor building is shown in Figure 3.8-15. The system uses unbonded tendons, each consisting of approximately 170 one-quarter-inch-diameter high strength steel wires and anchorage components consisting of stressing washers. The prestressing load is transferred by cold-formed button heads on the ends of the individual wires, through stressing washers, to the steel bearing plates embedded in the structure. The ultimate strength of each tendon is approximately 1,000 tons.

The unbonded tendons are installed in tendon ducts (sheathing) and tensioned in a predetermined sequence. The ducts, which form voids through the concrete between the anchorage points, consist of galvanized, spiral-wrapped, semirigid corrugated steel tubing. They are designed to retain their shape and resist the construction loads. The inside diameter of the ducts is sufficiently large to permit the installation of the tendons with minimum difficulty. Trumpets, which are enlarged ducts attached to the bearing plates, allow the wires to spread out at the anchorage to suit washer hole spacing and facilitate field cold formed button heading of the ends of the wires.

The tendon duct provides an enclosed space surrounding each tendon. After stressing, a petroleum-based corrosion inhibitor is pumped into the duct.

The vertical tendons consist of 86 inverted U-shaped tendons, which extend through the full height of the cylindrical wall over the dome and are anchored at the bottom of the base slab. The cylinder circumferential (hoop) tendons consist of 135 tendons anchored at three buttresses equally spaced around the outside of the reactor building. There are 30 additional hoop tendons discussed below. Each tendon is anchored at buttresses located 240 degrees apart. Three adjacent tendons, anchored at alternate buttresses, result in two complete hoop tendons. Refer to Figures 3.8-16 through 3.8-18 for tendon and buttress arrangement.

Prestressing of the hemispherical dome is achieved by a two-way pattern of the inverted U-shaped tendons and 30 hoop tendons, which start at the springline and continue up to an approximate 45-degree vertical angle from the springline. Figure 3.8-16 illustrates the arrangement of the tendons in the dome.

3.8.1.1.3 Liner Plate System

A carbon steel liner plate covers the entire inside surface of the reactor building (excluding penetrations). The liner is 1/4-inch thick but is thickened locally around the penetrations, large brackets, and major attachments. The liner plate, including the thickened plate, is anchored to the concrete structure. The vertical and dome liner plates are also used as forms for concrete placement. Typical details of the liner plate system are shown in Figures 3.8-19 through 3.8-22.

Refer to Section 3.8.2.1 for a description of the penetrations, including the equipment and personnel access hatches, piping penetration sleeves, electrical penetration sleeves, fuel transfer tube penetration sleeve, and purge line penetration sleeves.

Attachments to the liner plate which transfer loads through the liner plate to the base slab include equipment support anchors and reinforcing steel for the support of the internal structures. Refer to Figures 3.8-23 through 3.8-25 for typical details.

Major structural attachments to the wall which penetrate the liner plate include polar crane brackets, floor beam brackets, and pipe support brackets. Refer to Figures 3.8-26 and 3.8-27 for typical details.

Major structural attachments to the dome include various pipe support brackets. Refer to Figure 3.8-28 for typical details.

Miscellaneous thickened plates, which form a part of the liner plate, are provided and anchored in the concrete to provide supports. Leak chase channels and angles are also attached at seam

welds where the welds are inaccessible to nondestructive examination after construction. Refer to Figure 3.8-29 for typical details for these items.

3.8.1.1.4 Shell Discontinuities

The significant discontinuities in the shell structure are at the wall-to-base-slab connection, the buttresses, and the large penetration openings.

The shell wall interface at the base slab incorporated a straight wall-to-slab joint. Refer to Figure 3.8-10 for details of the lower wall configuration.

Buttresses project out from the exterior surface of the shell wall and dome to provide adequate space for the hoop tendon anchorage and tendon-stressing equipment. The anchorage surfaces of the buttress are normal to the tangent line of the anchored hoop tendons. Details are shown in Figure 3.8-30.

The concrete shell around the equipment hatch opening is thickened by the method shown in Figures 3.8-31 and 3.8-32.

3.8.1.1.5 Special Reinforcing Requirements

Special reinforcing is required in such areas as the major penetrations. Refer to Figures 3.8-31 through 3.8-35 for typical details in these areas.

3.8.1.2 Applicable Codes, Standards, and Specifications

The following codes, regulations, standards, and specifications were utilized in the reactor building design. Subsequent to operation, additional codes have been approved for use and are noted with an asterik.

3.8.1.2.1 Regulations

a. 10 CFR 50, "Licensing of Production and Utilization Facilities"

b. 10 CFR 100, "Reactor Site Criteria"

3.8.1.2.2 Codes

a. American Concrete Institute, Building Code Requirements for Reinforced Concrete (ACI-318-71)

b. American Institute of Steel Construction (AISC), Specification for the Design, Fabrication, and Erection of Structural Steel for Buildings, 7th Edition, adopted February 12, 1969, and Supplement Numbers 1, 2, and 3

c. ASME Boiler and Pressure Vessel Code - 1974 Edition or later

   Section II - Material Specifications
   Section III, Division 1 - Nuclear Power Plant Components
   Section V - Nondestructive Examination
   Section VIII - Pressure Vessels
   Section IX - Welding and Brazing Qualifications

d. American Welding Society, Structural Welding Code (AWS D1.1-75, *AWS D1.1-90, *AWS D1.1-2004)

e. Acceptable ASME Code cases per Regulatory Guides 1.84 and 1.85, as addressed in Appendix 3A

f. Appendix B, Steel Embedments, to the American Concrete Institute, Code Requirements for Nuclear Safety Related Concrete Structures, ACI 349-80 with the 1984 Supplement. The following sections of Appendix B relating specifically with expansion anchors will be applicable; Sections B.7.1 through B.7.5.

3.8.1.2.3 Standards and Specifications

Industry standards, such as those published by the American Society for Testing and Materials (ASTM) and the American Association of State Highway and Transportation Officials (AASHTO), are used whenever possible to describe material properties, testing procedures, fabrication, and construction methods. The applicable standards used are listed in Section 3.8.1.6.

Structural specifications are prepared to cover the areas related to the design of the reactor building. These specifications are prepared specifically for the WCGS project. These specifications emphasize the important points of the industry standards for the reactor building and reduce the options that would otherwise be permitted by the industry standards. These specifications cover the following areas:

a. Concrete material properties

b. Mixing, placing, and curing of concrete

c. Reinforcing steel and splices

d. Post-tensioning system

e. Liner plate system

3.8.1.2.4 Design Criteria

The following design criteria form the basis for the reactor building design. Specifically, the criteria contained in Appendix C of the Bechtel Power Corporation Topical Report BC-TOP-5-A are used in the design of the reactor building. Appendix C of BC-TOP-5-A presents a detailed description of compliance with Article CC-3000 of the proposed ASME Code, Section III, Division 2.

a. 10 CFR 50, Appendix A - GDC for Nuclear Power Plants (Compliance is discussed in Section 3.1)

   GDC Numbers 2, 4, 16, and 50

b. Bechtel Power Corporation topical reports, as referenced in Section 1.6

3.8.1.2.5 NRC Regulatory Guides

NRC Regulatory Guides 1.10, 1.15, 1.18, 1.19, 1.55, 1.84, 1.85, 1.94, and 1.103 are applicable to the design and construction of the reactor building. Specific editions and the extent of compliance with these guides are discussed in Appendix 3A.

3.8.1.3 Loads And Loading Combinations

The applicable loads and loading combinations used in the design and analysis of the reactor building structure, components, and localized areas are those listed in BC-TOP-5-A, Appendix C.

DESIGN ACCIDENT PRESSURE LOAD - Transients resulting from the DBA and other lesser accidents are presented in Section 6.2.1 and serve as the basis for the reactor building design pressure of 60 psig.

PRESTRESSING FORCES - The prestressing forces are related to the design pressure by selection of a level of prestress, as discussed in Section 6.2.1 of BC-TOP-5-A.

THERMAL LOADS - The temperature gradients through the reactor building wall are shown in Figure 3.8-36 for the operating condition and for the postulated DBA condition.

WIND AND TORNADO LOADS - The wind and tornado loads are in accordance with Section 3.3.

EARTHQUAKE LOADS - Earthquake loads are in accordance with Section 3.7.

HYDROSTATIC LOADS - Hydrostatic loads are in accordance with Section 3.4.

EXTERNAL PRESSURE LOAD - External pressure loading with a differential of 3 psig from outside to inside is considered. The external design pressure has conservatively been assumed to account for barometric pressure differentials after the reactor building is sealed. The reactor building is designed to be cooled below 50 F from the operating temperature of 120 F. The inadvertent actuation of the containment spray headers, which induce an external pressure load, is discussed in Section 6.2.1.

MISSILE AND POSTULATED PIPE RUPTURE EFFECTS - The internal and external missile and postulated pipe rupture loads are in accordance with Sections 3.5 and 3.6, respectively.

TEST PRESSURE LOAD - The structure is designed for a Structural Integrity Test pressure load of 69 psig.

POST-LOCA FLOODING - The post-LOCA flooding of the reactor building for the purpose of fuel recovery is not a design condition. Although there are no special provisions incorporated in the structural design of the reactor building or its interior structures for the purpose of fuel recovery after a LOCA, there is sufficient time following a LOCA for the plant operators and/or consultants to assess the extent of the damage to the reactor coolant system, the interior structures of the reactor building, and refueling equipment and to make the necessary provisions, including any additional equipment required, for the recovery of the fuel.

3.8.1.4 Design and Analysis Procedures

The procedures utilized in the analysis and design of the reactor building are in accordance with Sections 6.0 and 7.0 and Appendices B and C of BC-TOP-5-A.

Computer programs were relied upon to perform many of the computations required for the reactor building analysis. However, in many cases, classical methods and manual techniques were used for the analysis of localized areas of the reactor building and for preliminary proportioning. Manual calculations were generally used for (a) the initial proportioning of the dome, wall, and base slab, (b) evaluation of the effects of locally applied loads, such as pipe rupture or crane loads, (c) the preparation of input for the computer analyses, and (d) areas which do not lend themselves to computer applications. Section 7.0 of BC-TOP-5-A describes the analytical methods in more detail.

The design methods incorporated several phases, as described in Section 6.0 of BC-TOP-5-A. They involved the initial proportioning of structures, using the results of preliminary analyses documented in BC-TOP-5-A. Experience based on the completed design or parametric studies of other structures of a similar nature was used as well.

The final design phase incorporated and refined information gained in the earlier phases. It also incorporated closer approximations of the equipment and piping and related loads, based on the completion of the detailed engineering design. Improved assumptions regarding material properties, including the effects of creep, shrinkage, and the cracking of concrete, were used.

3.8.1.4.1 Overall Analysis

The reactor building is considered to be an axisymmetric structure for the overall analysis. Although there are deviations from this ideal shape, such as penetrations and buttresses, these deviations are sufficiently localized so as not to affect the overall analysis and are addressed by special local analyses.

The overall analysis of the reactor building for axisymmetric loads was performed by using the FINEL finite element computer program described in Appendix 3.8A for combinations of the individual loading cases of dead, live, thermal, pressure, and prestress loads. The entire reactor building is modeled with one finite element mesh consisting of the dome, shell, base slab, reactor cavity, and soil. The concrete structure is modeled by continuously interconnected elements. The liner plate is modeled by a layer of elements attached to the interior surfaces of the concrete structure. The finite element mesh is extended into the soil to account for the elastic nature of the foundation material and its effect on the structure. Since the same reactor building design is used at sites with different foundation properties, the analyses were performed taking into account the range of geotechnical parameters of the foundation media at all the sites. The tendon access gallery and instrumentation tunnel were analyzed as separate structures. The finite element model used for the analysis of the reactor building for axisymmetric loads is shown in Figures 3.8-37 through 3.8-39.

The overall analysis of the reactor building for nonaxisymmetric loads (i.e., seismic) was performed, using the SAP three-dimensional finite element computer program described in Appendix 3.8A. One-half of the reactor building is modeled, without the dome, about an axis of symmetry of the structure in plan. Appropriate boundary conditions were simulated at the top of the shell

and along the axis of symmetry to provide for strain compatibility. The shell, base slab, and reactor cavity are modeled with one finite element mesh. Soil springs are provided below the structure to account for the effect of the foundation material on the structure. Since the same reactor building design is used at sites with different foundation properties, the analyses were performed, taking into account the range of geotechnical parameters of the foundation media at all the sites. The upper portion of the shell, dome, tendon access gallery, and instrumentation tunnel are analyzed separately. The finite element model used for the analysis of the reactor building for nonaxisymmetric loads is shown in Figure 3.8-40.

3.8.1.4.2 Local Analysis

3.8.1.4 2.1 Large Penetration Openings

Large penetrations are defined as those having an inside diameter equal to or greater than 10 feet (2.5 times the reactor building nominal shell wall thickness). The equipment hatch and personnel lock fall into this category.

Local analyses of the reactor building shell in the area of large penetrations were performed using the SAP three-dimensional finite element computer program. The analytical models consist of a one-quarter segment mesh that follows the axes of symmetry of the penetration opening. The points defining the outermost boundary of the model at the boundaries is compatible with that of the undisturbed cylindrical shell. Boundary conditions along the axes of symmetry and the boundaries of the model are specified to provide for strain compatibility.

The SAP finite element models used for analyses of the equipment hatch and personnel hatch are shown in Figures 3.8-41 through 3.8-43.

3.8.1.4.2.2 Small Penetration Openings

Small penetration openings are defined as those having an inside diameter of less than 10 feet (2.5 times the reactor building nominal shell wall thickness). The local analysis of the shell in the area of small penetration openings is discussed in Sections 6.5 and 7.4 of BC-TOP-5-A.

3.8.1.4.2.3 Buttress and Tendon Anchorage Zones

Analysis and design of tendon anchorage zones and reinforcement in buttresses are discussed in Section 6.6 of BC-TOP-5-A and in BC-TOP-7 and BC-TOP-8.

3.8.1.4.3 Creep, Shrinkage, and Cracking of Concrete

In the design of the reactor building post-tensioning system, conservative values of creep and shrinkage for the concrete were utilized, based on past experience. The value used was verified by the evaluation of the tests performed on the concrete which was used in the reactor building shell. In establishing this value, the tests were performed on concrete that was used at each of the SNUPPS sites, and consideration was given to the differences in the environment between the test samples and the actual concrete in the structure.

The moments, forces, and shears were obtained on the basis of an uncracked section for all load combinations. However, in sizing the reinforcing steel required, the concrete was not relied upon for resisting tension. Thermal moments were modified by a cracked section analysis, using analytical techniques.

3.8.1.4.4 Tangential Shear

The design and analysis procedures for tangential shear are in accordance with Appendix C of BC-TOP-5-A.

3.8.1.4.5 Variation in Physical Material Properties

In the design and analysis of the reactor building, consideration was given to the effects of possible variations in the physical properties of materials on the analytical results. The variation in physical properties were accounted for by using allowable stress levels, below ultimate strength, for design of the structure under full service and factored load conditions.

3.8.1.4.6 Steel Liner Plate and Anchors

The analysis and design procedures utilized for the liner plate system are in accordance with BC-TOP-1 and Sections 6.8, 7.5, and Appendix C of BC-TOP-5-A.

3.8.1.4.7 Computer Programs

The computer programs used in the analysis and design of the reactor building are described in Appendix 3.8A.

3.8.1.5 Structural Acceptance Criteria

The fundamental acceptance criterion for the completed reactor building was successful completion of the Structural Integrity Test where measured responses were required to be within the limits

predicted by analyses. The limits were based on test load combinations and code values for stress, strain, or gross deformation for the range of material properties and construction tolerances specified, as described in Section 3.8.1.6.

The limits for allowable stresses and strains are given in Appendix C of BC-TOP-5-A and are compatible with nationally recognized codes of practice. In this way, the margins of safety associated with the design and construction of the reactor building are, as a minimum, the accepted margins associated with nationally recognized codes of practice.

The Structural Integrity Test yielded information on both the overall response of the reactor building and the response of localized areas. This information, together with the test information documented in BC-TOP-7 and BC-TOP-8, provided direct experimental evidence that the containment structure can withstand the design internal pressure.

The design and analysis methods, as well as the type of construction and construction materials, were chosen to allow assessment of the capability of the structure throughout its service life. Additionally, surveillance testing provides further assurances of the continuing ability of the structure to meet its design functions.

3.8.1.6 Materials, Quality Control, and Special Construction Techniques

This section contains information relating to the materials, quality control program, and special construction techniques used in the fabrication and construction of the reactor building.

3.8.1.6.1 Concrete

3.8.1.6.1.1 Materials

The cement was Type II, conforming to the Specification for Portland Cement (ASTM C150). The sum of tricalcium silicate and tricalcium aluminate did not exceed 58 percent. The cement contained no more than 0.60 percent by weight of alkalies calculated as Na_2O plus 0.658 K_2O. The limitation of the alkali content of the cement may have been waived provided that the aggregates passed required laboratory tests and had no history of alkali aggregate incompatibility. Certified copies of material test reports showing the chemical composition and physical properties were obtained for each load of cement delivered.

All aggregates conformed to the Specification for Concrete Aggregate (ASTM C33). For concrete with 1-1/2 inch maximum size aggregate, the coarse aggregate was a combination of 1-1/2 inch and 3/4 inch aggregate. The potential reactivity of the aggregate was established in accordance with ASTM C289. A petrographic examination of the aggregate was performed in accordance with ASTM C295. In addition to the specified gradation, the fine aggregate (sand) had a fineness modulus of not less than 2.5 nor more than 3.1. During normal concrete production, at least four of five successive test samples did not vary more than 0.20 from the average. Coarse aggregate was rejected if the loss, when subjected to the Los Angeles Abrasion Test (ASTM C131) using Grading A, exceeds 40 percent by weight at 500 revolutions. The particle shape of the coarse aggregate was generally rounded or cubicle and did not contain thin, flat, and elongated particles in excess of 15 percent by weight in any nominal size group. A thin, flat, and elongated particle is defined as a particle having a maximum dimension in excess of four times the minimum dimension.

Water and ice used in mixing concrete were free of injurious amounts of oil, acid, alkali, organic matter, and other deleterious substances and were tested in accordance with AASHTO T-26. When tested according to AASHTO T-26, the water did not cause unsoundness in the autoclave test, and did not change the final setting time by more than 1 hour, and the 7- and 28-day compressive strength of ASTM C109 cubes was not reduced by more than 10 percent when compared with results obtained with distilled water. Water was tested for pH, chlorides, and sulfates and did not contain more than 250 ppm of chlorides as Cl, nor more than 1,000 ppm of sulfates as SO_4.

The concrete also contained an air-entraining admixture and a water-reducing admixture. The air-entraining admixture was in accordance with the Specification for Air Entraining Admixtures for Concrete (ASTM C260). It was capable of entraining 3 to 6 percent air, was completely water soluble, and was completely dissolved when it enters the batch. The water reducing and retarding admixture conformed to the Specification for Chemical Admixtures for Concrete (ASTM C494), Types A and D. Type A was used when concrete temperature was below 70 F. Type D was used when concrete temperature was 70 F and above, except for floor slabs where its use was optional. Pozzolans, if used, conformed to the Specification for Fly Ash and Raw or Calcined Natural Pozzolans for Use in Portland Cement Concrete (ASTM C618).

3 8.1.6.1.2 Concrete Mix Design

Structural concrete used in the construction of the reactor building shell and dome has a compressive strength, fc', of 6,000 psi at 90 days. Structural concrete used in the construction of the reactor building base slab, reactor cavity, instrumentation tunnel, and tendon access gallery has a compressive strength, fc', of 5,000 psi at 90 days.

Structural specifications were prepared to identify the required concrete material properties and tests. Concrete conforms to the Specification for Ready-Mixed Concrete (ASTM C94), as modified herein. In lieu of the maximum water content specified in ASTM C94, the concrete was mixed so as to be placed at the specified slumps. The mix proportions were established in accordance with Paragraph 3.8 of ACI 301, Method 1. The required average strength was in accordance with Paragraph 3.8.2.3 of ACI 301. In lieu of the requirements in Paragraph 18.2 of ASTM C94, conformance to ASTM E329, with the exception of Paragraph 4 as it pertains to concrete, was required.

On December 12 and 13, 1977, the WCGS reactor building base mat was placed as a monolithic pour of approximately 6600 cubic yards of concrete. At the end of the 90 day curing period, some of the sixty-six sets of concrete cylinders tested exhibited strengths below the specified concrete strength of 5000 psi.

Tests conducted by the licensees (Portland Cement Association, 1979) and by the Corps of Engineers (Brown, 1979) led to the conclusion that the low strength test results were invalid and probably due to one or more failures to follow current standards of good practice in testing.

The NRC was unable to conclude that the low 90-day strengths were attributable to testing machine factors or testing conditions. The NRC required the licensees to complete a reanalysis of the base mat based upon the strength of the concrete determined according to ACI Standard 318-71 criteria from the 90-day cylinder test results (4460 psi). The reanalysis indicated that the WCGS base mat met all design criteria at the 4460 psi concrete strength.

The NRC, after an evaluation of the test and reanalysis results, concluded (Varga, 1979) that:

"...the base mat concrete strength has not retrogressed, that the strength of the base mat meets the original design criteria in the Wolf Creek PSAR, and that the mat will withstand the specified design loads and loading combinations without impairment of the structural integrity or its safety function."

3.8.1.6.1.3 Examination

During construction, concrete materials were regularly sampled and tested to ensure quality control. Table 3.8-1 shows the procedures used and the frequency of testing for the concrete materials used.

3.8.1.6.1.4 Placement

Conveying and placement of concrete were performed in accordance with the following codes and standards to the extent described below:

a. ACI 301 - Specifications for Structural Concrete for Buildings, Chapters 4, 6, 8, 9, 10, 11, 12, 13, 14, and 15 were used, except as noted below:

   1. In lieu of the requirements for the removal of forms specified in Paragraph 4.5.4, the following applies:

      Forms for columns, walls, sides of beams, slabs, girders, and other parts not supporting the weight of the concrete were removed as soon as practicable in order to avoid delay in curing and repairing surface imperfections. Wood forms or insulated steel forms for members over 3 feet in thickness were stripped within 24 hours or kept in place for a minimum of 7 days. If forms were stripped within 24 hours, the surfaces were cured by moist curing or membrane curing as specified in ACI 301, Chapter 12.

   2. In lieu of the requirements for the placing of mass concrete specified in Paragraph 14.4.1, the following applied:

      Slump was specified for particular locations and degree of congestion rather than holding a 2-inch maximum. An inadvertency margin for maximum slump above the stated maximum average value was included in the job standards.

3. In lieu of the requirements for curing and protection of mass concrete specified in Paragraph 14.5.1, the following applied:

   The minimum curing period was 7 days for heavily reinforced massive sections.

b. ACI 304, Recommended Practice for Measuring, Mixing, Transporting, and Placing Concrete, Chapters 5 and 6, were used without exception.

c. ACI 305, Recommended Practice for Hot-Weather Concreting, was used without exception.

d. ACI 306, Recommended Practice for Cold-Weather Concreting, was used without exception.

e. ACI 318, Building Code Requirements for Reinforced Concrete, Chapters 5 and 6 were used, except as noted below:

   In place of Paragraph 6.3.2.4, the specific provisions of the applicable codes that govern the system of which the embedded piping is a part applied. Examples of such applicable codes are: for nuclear piping, ASME Boiler and Pressure Vessel Code, Section III; and for nonnuclear piping, ANSI B31.1, Power Piping.

   The purpose of ACI 318, Paragraph 6.3.2.4, is to avoid the removal of concrete if a leak is developed in the pipe wall or joints. The testing requirements of Paragraph 6.3.2.4 were valid in the case of noncode piping; they were not valid for the piping that is required to conform to the acceptable industry codes such as the ASME B&PV Code for nuclear piping, ANSI B31.1 for nonnuclear power piping, and the applicable state or local plumbing codes. Where no such codes or code cases govern a particular pipe embedded in structural concrete, the requirements of ACI 318, Paragraph 6.3.2.4, were implemented.

f. ACI 347, Recommended Practice for Concrete Formwork, was used without exception.

g. ACI SP2, Manual of Concrete Inspection, applicable provisions relating to conveying and placement were used without exception.

h. ASTM C94, Specification for Ready-Mixed Concrete, applicable provisions relating to conveying and placement were used without exception.

The placement of concrete complied with the requirements of Regulatory Guide 1.55 to the extent described in Appendix 3A. No aluminum pipe or other conveying equipment containing aluminum that would be in contact with fresh concrete was used for conveying concrete to the point of placement.

3.8.1.6.2 Reinforcing Steel and Splices

3.8.1.6.2.1 Materials

Reinforcing bars for concrete are deformed bars meeting the requirements of the Specification for Deformed and Plain Billet-Steel Bars for Concrete Reinforcement (ASTM A 615), Grade 60. For each heat or mill shipment, whichever is less, certified copies of the material test reports covering the chemical and mechanical properties of the reinforcing bars were obtained.

Mechanical spices, when used, consisted of T-series and B-series Cadweld-type splices. Tubing used for splice sleeves conforms to the Specification for Seamless Carbon and Alloy Mechanical Tubing (ASTM A519), Grades 1018 or 1026. Certified copies of material test reports showing the results of the chemical and mechanical tests of material from each lot of splice sleeves were obtained. In addition, certification was obtained for each lot showing for each lot that the chemical composition of the powdered metal and the chemical and mechanical properties of the resulting filler material conformed to the manufacturer's standards.

3.8.1.6.2.2 Examination

During fabrication and construction, reinforcing steel and mechanical splices were regularly sampled and tested to ensure quality control. The examination methods, frequency, and acceptance standards in Regulatory Guide 1.10 for mechanical splices and Regulatory Guide 1.15 for reinforcing steel were used. Refer to Appendix 3A for a description of the extent of compliance with these regulatory guides.

3.8.1.6.2.3 Erection Tolerances

The reinforcing steel was placed in accordance with the tolerances specified in Paragraph 7.3.2 of ACI 318, except as noted below:

a. In place reinforcing steel cover tolerances for the containment were within the following limits:

Base slab	-0", +1 1/2"
Exterior walls	-0", +1 1/2"
Dome	-1", +1"

Exterior wall tolerances were maintained, except for local areas adjacent to some recesses on the exterior surface of the containment shell where a gradual sweep of the continuous reinforcing steel to clear the recesses could have resulted in these cover tolerances being exceeded.

However, the resulting cover was within the design allowable specified in BC-TOP-5-A, Appendix C, except for the two electrical penetration banks. The electrical penetration banks, centered at azimuth 222 -30', El. 2035'-3" and azimuth 319 -30', El. 2035'-3" have the outside face of concrete recessed 8 inches. The two banks are approximately 15 feet (vertical) by 48 feet (horizontal) and 15 feet by 39 feet, respectively. The transition zone where the continuous reinforcing sweeps gradually inward to clear the recess extends as much as 16 feet-8 inches away from the outside edge of the recess. Although the reinforcing steel in this area was generally within the limits indicated above, there are a few instances where, including placing tolerances, the cover could be as much as 13-3/4 inches.

b. Cadwelds and other connectors were not considered as reinforcing steel.

c. In no case was the cover reduced by more than one-third of the minimum specified design cover.

d. Minimum splice lengths and minimum embedment lengths were maintained to a tolerance of minus 2 inches. These minimum lengths may have been exceeded without limit, provided that the other requirements for cover and clearances were not violated.

e. The variation in spacing was ± 2 bar diameters, except that the minimum clear distance specified in Paragraphs 3.3.2 and 7.4 of ACI 318 was maintained. The total number of bars in any nominal 10-foot segment was maintained.

f. For longitudinal location of bends and ends of bars that were mechanically spliced, a tolerance of minus 2 inches at the discontinuous end of the member in which the splice occurs was acceptable. Conversely, the cover for this situation may have been increased by 2 inches.

3.8.1.6.3 Prestressing System

3.8.1.6.3.1 Materials

The prestressing system consists of load carrying and nonload carrying components. The load carrying components include the prestressing wires which make up the tendons, and anchorage components composed of bearing plates, anchor heads, and shims. Nonload carrying components include the tendon sheathing (including trumpet assemblies, couplers, vent and drain nipples, and other appurtenances), and corrosion prevention material.

The prestressing wire is cold-drawn, of the intermediate relaxation or stabilized type, and conforms to the Specification for Uncoated Stress-Relieved Wire for Prestressed Concrete (ASTM A421), Type BA. The materials used for the anchorage components are compatible with the tendon system.

Tendon sheathing consists of galvanized, spiral-wrapped, semirigid, corrugated tubing conforming to the requirements of the Specification for Steel Sheet, Zinc-Coated (Galvanized) by the Hot-Dip Process, Lock Forming Quality (ASTM A527) or the Specification for Steel Sheet, Zinc-Coated (Galvanized) by the Hot-Dip Process, Drawing Quality (ASTM A528), 22-gauge cold rolled carbon steel. Trumpet material conforms to the Specification for Electric Resistance-Welded Carbon and Alloy Steel Mechanical Tubing (ASTM A513), Grades MT1010 to 1029, or the Specification for Welded and Seamless Steel Pipe (ASTM A53), Grade B. Couplers and mending sections conform to ASTM A527 or ASTM A528. Vent and drain nipples consist of noncorrosive metal galvanized pipe, or equal.

After fabrication, a thin film of temporary corrosion protection material was applied to the prestressing steel. This material is compatible with the permanent corrosion prevention material and is removable with the use of a nonchlorinated petroleum solvent to permit the installation of attached anchorages.

The permanent corrosion-prevention coating applied to tendons is a petrolatum or microcrystalline wax-base material, containing additives to enhance the corrosion-inhibiting and wetting properties, as well as to form a bond with the tendon steel. The coating has the following properties for the lifetime of the structure and for the anticipated range of the temperature.

a. Freedom from cracking and brittleness

b. Continuous self-healing film over the coated surfaces

c. Chemical and physical stability

d. Nonreactivity with the surrounding and adjacent materials, such as concrete, tendons, and ducts

e. Moisture displacing characteristic

Each batch of coatings was analyzed for the presence of water soluble chlorides, nitrates, and sulphides.

3.8.1.6.3.2 Examination

Prior to construction, a number of tests were performed on the load-carrying components of the prestressing system to ensure that the performance requirements of the system were satisfied and quality control was maintained. In addition to the tests described below, an in-service surveillance program of the prestressing system is carried out, as discussed in Section 3.8.1.7.

All load-carrying components were subject to tensile tests. Materials produced to an ASTM specification were sampled and tested as required by that specification. Materials not produced to an ASTM specification were sampled and tested at the rate of one test for every 20 tons, or fraction thereof, produced from each heat of steel. The tensile strength, yield strength, elongation, and other pertinent data were reported on the Certified Materials Test Report.

The stress-relaxation properties of the wire, determined in accordance with the Recommended Practice for Stress-Relaxation Tests for Materials and Structures (ASTM E328), were obtained from the manufacturer for a minimum of three relaxation tests of 1,000 hours duration. In addition to those required by ASTM E328, the manufacturer's reports of the test included detailed test method, initial stress, final stress, test time, temperature limits, and mathematical tools used to interpret the test results.

Anchorage components were subjected to hardness tests. For anchorhead assemblies, the Method of Tests for Rockwell Hardness and Rockwell Superficial Hardness of Metallic Materials (ASTM E18) and the Method of Test for Brinell Hardness of Metallic Materials (ASTM E10) were conducted on 10 percent of the parts from each lot

(after heat treatment) on a random basis. If the hardness requirement was not met by any single part relative to acceptance standards set by design documents, then all parts from the lot were tested. Only those parts meeting the requirements were used.

The following tests were performed by the tendon manufacturer in order to qualify his system for use in the reactor building:

a. A static tensile test was conducted to destruction to obtain information on yield strength, tensile strength, and compliance with the following performance requirements:

   A full capacity tendon complete with anchorages will develop an ultimate strength equal to 100 percent of the minimum specified ultimate tensile strength of the prestressing steel, without exceeding the anticipated set of the anchorage elements.

   The total elongation under ultimate load of the tendon will not be less than 2 percent, measured in a minimum gauge length of 100 inches.

b. A high-cycle dynamic tensile test was conducted to ensure that the tendon can withstand, without failure, 500,000 cycles of stress variation from 60 to 66 percent of the tendon minimum specified ultimate tensile strength. A load cycle is defined as an increase from the lower load to the higher load and return. This test was performed on specimens having at least 10 percent of the full-sized prestressing steel area of one production tendon.

c. A low-cycle dynamic tensile test was conducted to ensure that the tendon could withstand, without failure, 50 cycles of stress variation from 40 to 80 percent of the tendon minimum specified ultimate tensile strength. This test was performed on specimens having at least 10 percent of the full sized prestressing steel area of a production tendon.

3.8.1.6.3.3 Erection Tolerances

The following are the erection tolerances from the theoretical location of the sheathing in the cylindrical wall:

a. Vertical sheathing

   ±2 inches in the circumferential direction

± 1/2 inch in the radial direction when measured from the liner plate or ±1 1/2 inches when measured from the reactor building theoretical centerline

±6 inches in elevation for points of tangency between the curved and straight sections

±2 inches per 10 feet - 0 inches for variation from the plumb, not cumulative

b. Horizontal sheathing

±2 inches in elevation

±1/2 inch in the radial direction when measured from the liner plate or ±1 1/2 inches when measured from the reactor building theoretical centerline

±6 inches in the circumferential direction for points of tangency between the curved and straight sections

c. Requirements at penetrations:

The general criterion for placing sheathing in the area of penetrations was to achieve a smooth configuration without sharp bends which would impair the insertion of the tendons or create undesirable loading combinations. The sheathing was also placed to meet the clear distance between any point on the sheathing and a penetration nozzle as well as the minimum distance between sheathing as given on the tendon placement drawings.

The following are the erection tolerances from the theoretical location of the sheathing in the dome:

a. Meridional sheathing

±2 inches in the circumferential direction

±1/2 inch in the radial direction when measured from the liner plate or ±1.5 inches when measured from the reactor building theoretical centerline

±6 inches in the meridional direction for points of tangency between the curved and straight sections

b. Horizontal sheathing

±2 inches in the meridional direction

±1/2 inch in the radial direction when measured from the liner plate or ±1.5 inches when measured from the reactor building theoretical centerline

±6 inches in the circumferential direction for points of tangency between the curved and straight sections

3.8.1.6.4 Liner Plate System

The reactor building is lined with welded steel plates, as outlined below, to ensure low leakage. These materials were chosen on the basis that they have sufficient strength and ductility to resist the expected strains from design criteria loading and, at the same time, preserve the required leaktightness of the reactor building. They are readily weldable by all commercially available arc and gas welding processes.

3.8.1.6.4.1 Materials

The 1/4-inch-thick liner plate material conforms to the requirements of the Specification for Low and Intermediate Tensile Strength Carbon Steel Plates for Pressure Vessels (ASME SA 285), Grade A. Thickened liner plates, ranging from 1/2 inch to 2 inches in thickness, were used at penetrations, brackets, and embedded assemblies and conform to the requirements of the Specification for Carbon Steel Plates for Pressure Vessels for Moderate and Lower Temperature Service (ASME SA516), Grade 70. In the event that significant loads are to be transmitted through the thickness dimension of the liner, nondestructive tests were performed to determine the capability of the liner materials used in these locations.

Materials for penetration sleeves conform to the requirements of the following specifications and are impact tested in accordance with Paragraph NE-2300 of Section III of the ASME Code at a temperature no greater than 0 F:

a. Seamless penetration sleeves conform to the Specification for Seamless and Welded Steel Pipe for Low-Temperature Service (ASME SA333), Grade 6.

b. Welded penetration sleeves conform to the Specification for Electric-Fusion Welded Steel Pipe for High Pressure Service (ASME SA155), KCF70, or pipe in accordance with ASME Code Class MC Vessels.

c. Penetration sleeve reinforcing plates conform to the Specification for Carbon Steel Plates for Pressure Vessels for Moderate and Lower Temperature Service (ASME SA516), Grade 70.

d. Penetration rods conform to the Specification for Carbon Steel Forgings for Piping Components (ASME SA105).

Material used for the liner plate anchors and embedments conform to the Specification for Structural Steel (ASTM A36) or the Specification for Pressure Vessel Plates, Carbon Steel, for Moderate- and Lower-Temperature Service (ASTM A516), Grade 70.

Materials used for test piping, fittings, plates, and shapes conform to the following:

a. Specification for Welded and Seamless Steel Pipe (ASTM A53)

b. Specification for Forgings, Carbon Steel, for Piping Components (ASTM A105)

c. Specification for Forged or Rolled Steel Pipe Flanges, Forged Fittings, and Valves and Parts for General Service (ASTM A181)

d. Specification for Piping Fittings for Wrought Carbon Steel and Alloy Steel for Moderate and Elevated Temperatures (ASTM A234)

e. Specification for Low and Intermediate Tensile Strength Carbon Steel Plates for Pressure Vessels (ASME SA285)

f. Specification for Pressure Vessel Plates, Carbon Steel, for Moderate- and Lower-Temperature Service (ASTM A516), Grade 70

g. Specification for Structural Steel (ASTM A36)

h. Specification for Low and Intermediate Tensile Strength Carbon Steel Plates of Structural Quality (ASTM A283)

Materials used for Cadweld sleeves conform to the Specification for Seamless Carbon and Alloy Mechanical Tubing (ASTM A519), Grades 1018 or 1026.

Materials used for pipe anchors conform to the Specification for Seamless Carbon Steel Pipe for High Temperature Service (ASTM A106), Grade B.

Welding electrode materials were selected on the basis of the welding process used and the type of materials to be joined and in accordance with the requirements of ASME Boiler and Pressure Vessel Code, Section III. Written control procedures for welding materials were required, which defined the measures used to control the use of the materials throughout all welding operations. Such controls provided for the complete traceability of welding materials used in the liner plate seams to all tests and examinations and to the welder.

Materials for machine bolts conform to the Specification for Carbon Steel Externally and Internally Threaded Standard Fasteners (ASTM A307). Materials for high-strength bolts conform to the Specification for High Strength Bolts for Structural Steel Joints, Including Suitable Nuts and Plain Hardened Washers (ASTM A325).

Materials for weld studs conform to the Specification for Steel Bars, Carbon, Cold-Finished, Standard Quality (ASTM A108), Grades 1010, 1015, 1016, 1017, 1018, or 1020.

Materials used for weld backing strips were compatible with the materials welded.

Where ASTM specifications are referenced, equivalent ASME materials may have been used.

Certificates of Compliance were obtained from the manufacturer for bolts, weld studs, weld backing strips, and welding fluxes. Certified copies of material test reports were obtained for all other liner plate system materials which include the actual results of all required chemical analyses, physical tests, mechanical tests, and examinations.

3.8.1.6.4.2 Examination

Nondestructive examination of the liner plate welds complies with Regulatory Guide 1.19 to the extent described in Appendix 3A.

3.8.1.6.4.3 Erection Tolerances

The liner plate and penetration assemblies are erected to the following tolerances requirements:

a. General Liner Plate

1. The radial location at any point on the liner plate shall not vary from the design radius by more than ±3 inches. Measurements shall be made at 30-degree spacings for each 10 feet of rise.

The radius of the hemispherical dome for all elevations between the as-built springline and 15 feet above it shall be within ±3 inches of the design radius.

The radius of the hemispherical dome for all points above a plane parallel to and 15 feet higher than the plane of the as-built springline shall not exceed the design radius plus 8 inches or be less than the design radius minus 12 inches.

2. Plates to be joined by butt welding shall be matched and retained in position during the welding. Misalignment in completed joints shall not exceed the limits shown in Table 3.8-2.

3. A 15-foot-long template curved to the required radius shall not show deviations of more than 1 inch when placed against the completed surface of the shell within a single plate section and not closer than 12 inches at any point to a welded seam. When the template is placed across one or more welded seams, the deviation shall not exceed 1 1/2 inches. The effect of change in plate thickness or of weld reinforcement shall be disregarded when determining deviations.

4. A 15-inch-long template curved to the required radius shall not show deviations of more than 1/8 inch inward or 3/8 inch outward when placed against the completed surface of the shell within a single plate section and not closer than 12 inches to a weld seam.

   A 30-inch-long template, curved to the required radius, shall not show deviations of more than 1/4 inch when placed against the completed surface of the shell within a single plate section.

5. The deviation from the true vertical for any 10-foot plate shall not vary by more than 3/4 inch. Plates of other depths shall be checked for linearly varying tolerances. The overall out-of-plumbness of the shell shall not exceed 3 inches.

6. A 10-foot straightedge held vertically shall not show deviations greater than ±3/4 inch in the horizontal direction between seam welds.

7. Local bends that deviate from the design radius or a vertical straightedge by an offset of more than 1/2 inch in 1 foot shall not be accepted. The template used to measure the local deviations shall be only 1 to 2 feet longer than the area of the deviation itself.

b. Penetration Assemblies

1. Items 1, 3, 5, and 7 in part "a" above also control the tolerance requirements for penetration assemblies.

2. Alignment of the axes of penetrations, as erected, shall not vary from the alignment shown on the design drawings by more than 2 degrees for pipes 12 inches in diameter or less and by more than one degree for pipes over 12 inches in diameter. Individual penetrations and penetration assemblies shall be located within ±1 inch of their design elevations and circumferential locations, at the cylindrical shell.

3.8.1.6.5 Quality Control

In addition to the quality control measures discussed in Sections 3.8 1.6.1, 3.8 1 6.2, 3.8.1.6.3, and 3.8 1 6.4, the construction quality control program was discussed in the Quality Assurance Design and Construction Manual which was contained in the PSAR.

3.8.1.6.6 Special Construction Techniques

The reactor building is constructed of concrete and steel, using proven methods common to heavy industrial construction. No special, new, or unique construction techniques were used.

3.8.1.7 Testing and Inservice Surveillance Requirements

3.8.1.7.1 Structural Integrity Test

Following construction, the reactor building was proof-tested at 115 percent of the design pressure. During this test, deflection measurements and concrete crack inspections were made to determine that the actual structural response is within the limits predicted by the design analyses.

The test procedure complied with the requirements of Regulatory Guide 1.18 to the extent described in Appendix 3A. The associated leak rate test procedure is described in Section 6.2.6. Section

9.0 of BC-TOP-5-A also describes test results obtained using a typical procedure as well as those obtained from early tests where a substantial amount of strain information was collected.

3.8.1.7.2 Long-Term Surveillance

The long-term surveillance program consists of evaluating the general conditions of the post-tensioning system. Data on wire corrosion levels and tendon lift-off forces are obtained and analyzed.

The surveillance tendons are designated as part of the inservice inspection program which conforms with Subsection IWE and IWL of Section XI, Division I of the ASME Boiler and Pressure Vessel Code as limited and modified by 10 CFR 50.55a.

DISCUSSION:

The post-tensioning system is described in Section 3.8.1.1.2. Details of the Inservice Tendon Surveillance Program are provided in BC-TOP-5-A, Section 9.3, with the exception of sections 9.3.2.2.2 and 9.3.4.9 for which other provisions are made in accordance with 10 CFR 50.55a as modified with the following clarification:

There is unobstructed access to all tendons with the exception of two tendons at el. 2073, Azimuth 281 degrees, which are blocked by the Auxiliary Building Roof. Four other tendons (two at approximate el. 2026 and two approximate els. 2047) at Azimuth 281 degrees are accessible for visual inspection only due to close proximity of elevated slabs. In addition, all tendons terminating at the C buttress above elevation 2079 have been deleted from the surveillance population due to lack of special equipment required for access. If it does become necessary to access these tendons in the future, the required equipment can be obtained. See Technical Specification 5.5.6 and Technical Requirement Manual TR 3.6.1.

3.8.2 CONTAINMENT SYSTEM STEEL ITEMS

This section describes the major penetrations and portions of penetrations intended to resist pressure which are not backed by structural concrete.

3.8.2.1 Description of Steel Items

The steel items that are part of the containment pressure boundary include access openings, such as the equipment hatch and personnel hatches, piping penetration sleeves, fuel transfer tube penetration sleeves, electrical penetration sleeves, and the purge line penetration sleeves.

3 8.2.1.1 Equipment and Personnel Access Hatches and Penetration Sleeves

The equipment hatch, shown in Figure 3.8-44, is a welded steel assembly with a double-gasketed, flanged, and bolted cover. Provision is made for leak testing of the flange-gasket combination by pressurizing the space between the gaskets.

One personnel hatch and one auxiliary hatch, both of which are welded steel assemblies, are provided as shown in Figures 3.8-45 and 3.8-46. Each hatch has two doors with double gaskets in series. In order to assure leaktightness, the space between the gaskets are normally pressurized. The doors are mechanically interlocked to ensure that one door cannot be opened unless the second door is sealed. The interlock can be deliberately overridden by the use of special tools and procedures. Each door is equipped with quick-acting valves for equalizing the pressure across the doors. The doors are not operable unless the pressure is equalized. Pressure equalization is possible from every point at which the associated door can be operated. The valves for the two doors are properly interlocked so that only one valve can be opened at one time and only when the opposite door is closed and

sealed. Each door is designed so that, with the other door open, it will withstand and seal against design and testing pressure of the containment vessel. There is visual indication outside each door showing whether the opposite door is open or closed. Provision is made outside each door for remotely closing and latching the opposite door so that in the event that one door is accidentally left open it can be closed by remote control. The access hatch barrels have nozzles which permit pressure testing of the hatch at any time. The hatches are protected from tornado missiles by enclosure structures or shields.

A moveable radiation and missile shield is provided on the outside of the reactor building to provide additional tornado missile protection for the inner equipment hatch door. The inner equipment hatch door is bolted in place with 20 bolts in Modes 1, 2, 3 and 4. The missile shield is bolted in place in Modes 1, 2, 3 when RCS pressure is greater than 1000 psig. Subsequently the missile shield may be unbolted and moved away from the equipment hatch opening provided it can be returned to its design location, without bolting, during adverse weather conditions. In Modes 5 and 6, the missile shield is no longer required because the inner equipment hatch door with 6 bolts installed provides adequate missile protection to safety related equipment inside the containment building. Administrative controls ensure that the equipment hatch door is in place in Modes 5 and 6 during adverse weather conditions that could result in the generation of tornado driven missiles.

The personnel hatch is enclosed within the auxiliary building. The auxiliary hatch is enclosed within an exterior tornado - resistant concrete structure. The personnel & auxiliary access hatch barrels are designated as ASME Section III, Class MC components.

The personnel and auxiliary access hatch barrels are designated as ASME Section III, Class MC components.

The hatch penetration sleeves project into the reactor building and are used to support the hatches. These items are made from carbon steels and conform to the requirements of ASME Section III, Subsection NE.

3.8.2.1.2 Piping Penetration Sleeves

Piping penetrations are divided into three general groups:

a. Type 1: Flued head penetrations used for most high energy piping. Examples of Type 1 penetrations are the main steam and main feedwater lines.

b. Type 2: Closure plate penetrations used for some high energy, all moderate energy, and all low energy general piping. The use of this type of penetration for high energy piping is limited to only those cases where an analysis based on combination of pressure, temperature, and line size has demonstrated the adequacy of the design.

c. Type 3: Spare penetrations reserved for future use or small access penetrations.

Typical details of the three types of piping penetrations are shown in Figure 3.8-47.

Type 1 piping penetrations consist of the following major steel items:

a. Process Pipe: This pipe, which is made of welded or seamless carbon or stainless steel and is welded to the flued head, conforms to the requirements of ASME Section III, Subsection NC.

b. Flued Head: This item is made from forged carbon or stainless steel and conforms to the requirements of ASME Section III, Subsection NC. It is designed to contain the full pressure of the process fluid and full reactor building pressure in parts adjoining the pipe sleeve. The connecting process pipes and the flued heads are designed and analyzed to be capable of carrying loads resulting from the failure of the process pipe, as described in Sections 3.6 and 3.9(B).

c. Pipe Sleeve: This steel item consists of the portion which projects into the reactor building and supports the flued head. It conforms to ASME Section III, Subsection NE, except that authorized inspection and stamping are not performed.

Type 2 piping penetrations consist of the following major steel items:

a. Process Pipe: This pipe, which is made of welded or seamless carbon or stainless steel and is welded to the closure plate, conforms to the applicable requirements of ASME Section III, Subsection NC.

b. Closure Plate: This item is made from carbon or stainless steel plate and conforms to the requirements of ASME Section III, Subsection NC.

c. Pipe Sleeve: This steel item consists of the portion which projects into the reactor building and supports the closure plate. It conforms to ASME Section III, Subsection NE, except that authorized inspection and stamping are not performed.

Type 3 spare penetrations consist of the following major items:

a. Solid Closure Plate (mechanical or welded) or Pipe Cap: This item is made from carbon steel and conforms to the requirements of ASME Section III, Subsection NE or NC.

b. Pipe Sleeve: This steel item consists of the portion which projects into the reactor building. It conforms to ASME Section III, Subsection NE, except that authorized inspection and stamping are not performed.

3.8.2.1.3 Fuel Transfer Tube Penetration Sleeve

The fuel transfer tube penetration is provided to transfer fuel between the refueling canal and the fuel storage pool during refueling operations of the reactor. The penetration consists of a 20-inch-diameter stainless steel pipe installed inside a 26-inch sleeve. The steel sleeve which projects into the reactor building conforms to ASME Section III, Subsection NE, except that authorized inspection and stamping are not performed. The inner pipe acts as the transfer tube. The sleeve is designed to provide integrity of the reactor building, allow for differential movement between structures, and prevent leakage through the fuel transfer tube in the event of an accident.

Figure 3.8-48 shows details of the fuel transfer tube penetration.

3.8.2.1.4 Electrical Penetration Sleeves

Steel sleeves, which form a portion of the containment pressure boundary, are provided for electrical/fiber optic penetrations. The electrical/fiber optic penetration header plates are designed as discussed in Section 8.1. The sleeve consists of the portion which projects out of the reactor building and supports the electrical/fiber optic assembly. It conforms to ASME Section III, Subsection NE, except that authorized inspection and stamping are not performed. Figure 3.8-49 shows the details of the electrical penetrations.

3.8.2.1.5 Purge Line Penetration Sleeves

The steel sleeves, which are embedded in the reactor building wall concrete, are welded to the purge line piping and form a part of the ASME Section III, Class 2 purge line piping system, as shown in Figure 3.8-50. The sleeves conform to ASME Section III, Subsection NC.

3 8.2.2 Applicable Codes, Standards, and Specifications

The following codes, regulations, standards, and specifications are utilized in the design of the steel portions of the reactor building that are intended to resist pressure but are not backed by structural concrete.

3.8.2.2.1 Regulations

a. 10 CFR 50, "Licensing of Production and Utilization Facilities"

3.8.2.2.2 Codes

a. ASME Boiler and Pressure Vessel Code - 1974 Edition and Later

   Section II - Material Specifications
   Section III, Division 1 - Nuclear Power Plant Components
   Section V - Nondestructive Examination
   Section IX - Welding and Brazing Qualifications

b. Acceptable ASME Code cases per Regulatory Guides 1.84 and 1.85, as addressed in Appendix 3A

3.8.2.2.3 Standards and Specifications

Nationally recognized industry standards, such as those published by the ASTM and IEEE, were used whenever possible to define material properties, testing procedures, fabrication, and construction methods. Applicable ASTM standard specifications for materials are those permitted by Article NE-2000 of Section III of the ASME Code. Applicable ASTM standard specifications for nondestructive methods of examination are those referenced in Appendix X, Article X-3000 of Section III of the ASME Code.

Structural specifications were prepared to cover the areas related to the design of steel portions of the containment pressure boundary. These specifications were prepared specifically for the SNUPPS Project (WCGS and Callaway). These specifications emphasized the important points of the industry standards for these items and reduce the options that would otherwise be permitted by the industry standards. These specifications covered the following areas:

a. Equipment and personnel access hatches

b. Piping penetration sleeves

c. Fuel transfer tube penetration sleeve

d. Electrical penetration sleeves

e. Purge line penetration sleeves

3.8.2.2.4 Design Criteria

a. 10 CFR 50, Appendix A - General Design Criteria for Nuclear Power Plants (Compliance is discussed in Section 3.1)

GDC 2, 4, 16, 50, and 53

b. 10 CFR 50, Appendix J - Primary Reactor Containment Leakage Testing for Water Cooled Power Reactors

c. Bechtel Power Corporation topical reports, as referenced in Section 1.6

3.8.2.2.5 NRC Regulatory Guides

NRC Regulatory Guides 1.29, 1.57, 1.60, 1.61, 1.63, 1.84, and 1.85 were applicable to the design and construction of the steel portions of the reactor building that are intended to resist pressure but are not backed by structural concrete. Specific editions and the extent of compliance with these guides is discussed in Appendix 3A.

3.8.2.3 Loads and Loading Combinations

3.8 2.3.1 Dead Loads (D)

The dead loads consist of the following typical loads:

a. Weight of the steel item

b. Weight of attached items

Weight of electrical connections, mechanisms, ladders, and platforms supported by the containment vessel shell

3.8.2.3.2 Live Loads (L)

The live loads consist of the following typical loads:

a. Live load on the personnel access hatch floor of 200 pounds per square foot

b. Operating fluid weight in attached piping

c. Live load on the equipment hatch floor, using an AASHO (American Association of State Highway Officials) HS-20-44 loading

3.8.2.3.3 Test Pressure Load (P_t)

The structure is designed for a structural integrity test pressure of 69 psig.

3.8.2.3.4 Test Temperature Thermal Load (T_t)

The thermal load associated with a temperature of 100 F is considered as a design basis for the structural integrity test. Testing may proceed at any temperature below this.

3.8.2.3.5 Thermal Loads (T_o, T_e, T_a)

a. Thermal loads produced by the presence of radial and axial temperature gradients during startup, normal, and shutdown conditions (T_o)

b. Thermal conditions causing external pressure (T_e)

c. Thermal conditions generated by the postulated DBA, including T_o(T_a)

3.8.2.3.6 Pipe Loads (R_o, R_e, R_a)

The following pipe loads, determined in accordance with procedures described in Section 3.9, were utilized in the design of steel items:

a. Pipe reactions produced during startup, normal, or shutdown conditions (R_o)

b. Pipe reactions under thermal conditions, causing external pressure (R_e)

c. Pipe reactions under thermal conditions generated by the postulated DBA, including R_o(R_a)

3.8.2.3.7 Seismic Loads (E, E')

The seismic loads used in the dynamic analysis of the steel items were developed by the use of either a response spectra or time history. The development of this response spectra and/or time history for the SSE and the OBE is discussed in Section 3.7(B) and (N).

3.8.2.3.8 External Pressure Load (P_e)

The design external pressure differential is 3 psig. Refer to Section 3.8.1.3 for a description of this load.

3.8.2.3.9 Pressure Loads (P_a)

Pressure equivalent static load generated by the postulated design basis accident.

3.8.2.3.10 Design Basis Accident (DBA) Loads (Y_r, Y_j, Ym)

In addition to P_a, T_a and R_a, the following loads are considered:

a. Equivalent static load generated by the reaction on the broken pipe during the design basis accident (Y_r)

b. Jet impingement equivalent static load generated by the broken pipe during the design basis accident (Y_j)

c. Missile impact equivalent static load generated by or during the design basis accident, such as pipe whipping (Y_m)

3.8.2.3.11 Loading Combinations

The following loading combinations are considered:

a. $D + L + P_t + T_t$

b. $D + L + T_o + R_o$

c. $D + L + T_o + R_o + E$

d. $D + L + T_a + R_a + P_a + E$

e. $D + L + T_e + R_e + P_e + E$

f. $D + L + T_a + R_a + P_a + E'$

g. $D + L + T_e + R_e + P_e + E'$

h. $D + L + T_a + R_a + P_a + Y_r + Y_j + Y_m + E'$

The post-LOCA flooding of the reactor building for the purpose of fuel recovery is not a design loading condition. Refer to Section 3.8.1.3 for a further discussion.

3.8.2.4 Design and Analysis Procedure

Except for the purge line penetration sleeves, the steel items described in Section 3.8.2.1 are designed and analyzed in accordance with Article NE-3000 of Subsection NE of the ASME Code, Section III, Division I and as augmented by the applicable provisions of Regulatory Guide 1.57.

The purge line penetration sleeves are analyzed and designed in accordance with ASME Section III, Subsection NC.

The following paragraphs provide individual descriptions of the design and analysis procedures performed to verify the structural integrity of the steel items.

3.8.2.4.1 Equipment and Personnel Access Hatches

The equipment and personnel access hatches described in Section 3.8.2.1.1 are supported entirely by the concrete shell of the reactor building. The barrels of the personnel hatches are welded to sleeves embedded in concrete which, in turn, are welded at the periphery to the liner plate. The liner plate in the vicinity of the penetration is thickened. The additional thickness in both the barrel and liner plate is provided to satisfy the area reinforcement requirements as well as to resist the external moments and shears due to the cantilevered construction. The discontinuity stresses induced by the combination of external dead and live loads, including the effects of seismic loadings, were evaluated.

The required analyses and limits for the resulting stress intensities are in accordance with Articles NE-3130 and NE-3200 of Section III of the ASME Code.

The doors for both ends of the personnel hatches are of a flat or dished type. The respective analyses are in accordance with Articles NE-3325 and NE-3326 of Section III of the ASME Code. The required analyses and the stress intensity limits are in accordance with Articles NE-3130 and NE-3200 of Section III of the ASME Code. The cover with the bolting flange is designed in accordance with Article NE-3326 of Section III of the ASME Code.

3.8.2.4.2 Piping and Electrical Penetration Sleeves

The penetration sleeves are welded to the thickened areas of the liner plate and are anchored to the reactor building concrete shell.

Penetration sleeves are subjected to various combinations of mechanical, thermal, and seismic loadings. The resulting forces due to these various combinations of loadings are combined with the effects of external and internal pressures. The areas within discontinuities are evaluated to determine the primary and secondary stress intensities.

If the penetration sleeves are subjected to cyclic service, the associated peak stress intensities were also evaluated. The required analysis and associated stress intensity limits are in

accordance with Articles NE-3130 and NE-3200 of Section III of the ASME Code.

3.8.2.4.3 Purge Line Penetration Sleeves

The design and analysis of the purge line penetration sleeves are similar to that described in Section 3.8.2.4.2 with stress intensity limits in accordance with ASME Section III, Subsection NC.

3.8.2.4.4 Fuel Transfer Tube Penetration Sleeve

The design and analysis of the fuel transfer tube penetration sleeve are as described in Section 3.8.2.4.2.

3.8.2.4.5 Computer Programs

The computer programs used in the analysis and design of the steel portions of the reactor building intended to resist pressure but not backed by concrete are described in Appendix 3.8A.

3.8 2.5 Structural Acceptance Criteria

The fundamental acceptance criterion for the completed reactor building was successful completion of the structural integrity test.

The structural acceptance criteria for steel items include allowable stress values, deformation limits, and factors of safety, and are established in accordance with ASME Section III, Subsection NC and NE, as applicable, and as augmented by the requirements of Regulatory Guide 1.57. No permanent deformations are allowed under any loading condition.

The steel items, which are an integral part of the reactor building pressure boundary, are designed to meet minimum leakage rate requirements. The leakage rate shall not exceed the acceptable value indicated in the applicable Technical Specification.

The design and analysis methods, as well as the type of construction materials, were chosen to allow assessment of the steel items' capability throughout the plant life. Additionally, surveillance testing provides further assurances of the steel items' continuing ability to meet their design functions. Surveillance requirements are discussed in Section 3.8.2.7.

The stress limits used for the design of the purge line penetration sleeves are in accordance with Subsection NC of Section III of the ASME Code. The stress limits used for the design of all other steel items are in accordance with Subsection NE of Section

III of the ASME Code as augmented by Regulatory Guide 1.57 and are shown in Table 3.8-3 for the load combinations stated in Section 3.8.2.3.11.

3.8.2.6 Materials, Quality Control, and Special Construction Techniques

The purge line penetration sleeves are fabricated from materials that meet the requirements specified in ASME Section III, Article NC-2000, except as modified by applicable, acceptable ASME Code cases in accordance with Regulatory Guides 1.84 and 1.85 as discussed in appendix 3A. All other steel items are fabricated from materials that meet the requirements specified in Article NE-2000 of Section III of the ASME Code, except as modified by applicable, acceptable ASME Code cases. Specific information relating to materials used for penetration sleeves is discussed in Section 3.8.1.6.4.1. Details of erection tolerances, quality control, and special construction techniques are provided in Sections 3.8.1.6.4, 3.8.1.6.5, and 3.8.1.6.6.

3.8.2.7 Testing and Inservice Surveillance Requirements

Testing and inservice surveillance for the steel items consists of leakage testing of the containment. The leakage tests and associated acceptance criteria are discussed in Section 6.2.6.

3.8.3 CONCRETE AND STEEL INTERNAL STRUCTURES OF STEEL OR CONCRETE CONTAINMENTS

3.8.3.1 Description of the Internal Structures

The internal structures consist of the following major components:

a. Reactor support system

b. Steam generator support system

c. Reactor coolant pump support system

d. Primary shield wall and reactor cavity

e. Secondary shield walls

f. Pressurizer support system

g. Refueling canal walls

h. Operating floor

i. Intermediate floors, platforms, and hatches

j. Simplified Head Assembly with Reactor missile shield

k. Polar crane support system

Descriptions of the supports for the reactor pressure vessel, steam generators, reactor coolant pump, pressurizer, and loop piping are further described in Section 5.4.14.

3.8.3.1.1 Reactor Support System

The general arrangement and principal features of the reactor support system are provided in Figures 3.8-51 and 3.8-52. The reactor vessel is supported by steel assemblies under alternate nozzles of the vessel. These assemblies are designed, furnished, and fabricated by the NSSS manufacturer (refer to Section 5.4.14). The supporting assemblies interface with structural steel built-up members that are almost entirely embedded in the primary shield wall. The reactor vessel is supported to resist normal-operating loads, seismic loads, and loads induced by postulated pipe rupture, including the loss-of-coolant accident. The support system limits the movement of the reactor vessel to within allowable limits under the applicable combinations of loadings, and is designed to minimize resistance to the thermal movements expected during operation.

3.8.3.1.2 Steam Generator Support System

The general arrangement and principal features of the steam generator support system are provided in Figures 3.8-53 through 3.8-55. The four steam generators are located in the loop compartments and are supported by steel assemblies which are designed, furnished, and fabricated by the NSSS manufacturer (refer to Section 5.4.14). Four vertical columns beneath each steam generator transfer vertical loads to the reactor building base slab. Lateral supports are provided at the lower portion of each steam generator to transfer horizontal loads to the primary shield wall (or refueling canal walls) and the secondary shield walls. These lateral supports interface with embedded anchor bolt assemblies in the walls. The upper part of each steam generator is supported by a support ring which is restrained by means of shear keys and compression bumpers. These shear keys and compression bumpers transfer horizontal loads to the refueling canal walls and the secondary shield walls by interfacing with embedded anchor bolt assemblies in the walls. The steam generators are supported and restrained to resist normal operating loads, seismic loads, and loads induced by pipe rupture. The support system prevents the rupture of

the primary coolant pipes due to a postulated rupture in the main steam and feedwater lines and vice versa. The system is designed to minimize resistance to the thermal movements expected during operation.

3.8.3.1.3 Reactor Coolant Pump Support System

The general arrangement and principal features of the reactor coolant pump support system are provided in Figures 3.8-56 and 3.8-57. Each of the four reactor coolant pumps is supported by three vertical columns and three tie rods which are designed, furnished, and fabricated by the NSSS manufacturer (refer to Section 5.4.14). The columns transfer vertical loads to the reactor building base slab. The tie rods transfer horizontal loads to the primary shield wall (or refueling canal walls) and the secondary shield walls by interfacing with structural steel built-up members which are embedded in the walls. The reactor coolant pumps are supported to prevent excessive deflections during normal operating, seismic, and pipe rupture conditions. Under LOCA loads, the pumps are prevented from becoming missiles or generating missiles that might damage other safety-related components. The system is designed to minimize resistance to the thermal movements expected during operation.

3.8.3.1.4 Primary Shield Wall and Reactor Cavity

The general arrangement and principal features of the primary shield wall are provided in Figures 3.8-58 through 3.8-61. The primary shield wall is a heavily reinforced concrete cylindrical structure extending from the base slab to the seal ring level, with a minimum thickness of 7 feet. The primary shield wall forms the reactor cavity and houses the reactor vessel, provides shielding, and is designed to withstand the pressure of a LOCA. The wall provides support for the reactor vessel, the steam generators, reactor coolant pumps, cross-over legs, and the refueling canal walls above the reactor cavity. Uplift loads arising from lateral forces acting on the wall are transferred to the reactor building base slab by means of the anchorage system. The inside surface of the reactor cavity is lined with welded carbon steel plates. Large penetrations in the primary shield wall are provided for the primary loop piping and the cavity ventilation system.

A permanent cavity seal ring (PCSR), to close the annulus between the reactor vessel and the sides of the reactor cavity to allow flooding the cavity for refueling purposes, is mounted between the reactor vessel flanges and the cavity liner. The PCSR is attached to the vessel flange and the liner by welding and is designed to remain in place during all plant operation and refueling activities. Integral to the PCSR is neutron shielding consisting of Reactor Experiments Type 207 borated polyethylene and type 277 refractory material. [Figure 3.8-61A]

Based on an equivalent 12" thick water shield provided by this integral PCSR/Neutron shield design, an average neutron dose rate at the top of the refueling pool has been calculated to be 1.8 rem/hour, using the Morse Monte Carlo code (Ref. 4). Dose rates in other areas of the containment were estimated using Cain's Hypothesis (Ref. 3) along with actual dose rate measurements (Ref. 6) taken at the Farley Nuclear Plant by Lawrence Livermore Laboratories (LLL). The dose rate values obtained using this technique are given below.

Location	Neutron Dose Rate (mrem/hr)
Equipment hatch	8-31
Personnel hatch	56

D. E. Hankins and R. V. Griffith (Ref. 3) of LLL found that the neutron-gamma dose rate ratio in the Farley containment was 7:1. Based on this ratio, the WCGS gamma dose rates are expected to be as follows.

Location	Gamma Dose Rate (mrem/hr)
Top of refueling pool	260
Equipment hatch	1-4
Personnel hatch	8

The neutron dosimetry method complies with Revision 1 of Regulatory Guide 8.14. Exposures are determined by time-dose calculations, using rem meters. There are no specific requirements for personnel entry into the containment during normal operating conditions. The frequency of entries are based on operational needs and indications of abnormal conditions within the containment.

Entries into the containment when the reactor is at power are made by at least two persons, one of whom provides health physics surveillance.

3.8.3.1.5 Secondary Shield Walls

The general arrangement and principal features of the secondary shield walls are provided in Figures 3.8-62 through 3.8-65. The reinforced concrete secondary shield walls are 3 feet 6 inches thick and are anchored to the reactor building base slab. The walls extend from the base slab to a level above the top of the steam generator tube bundle to provide shielding for the reactor coolant system.

Portions of the secondary shield walls above the operating floor are designed to be removable for steam generator removal. These reinforced concrete wall panels are bolted together at vertical joints to provide for structural continuity and integrity. They are keyed into the slab at the bottom of the panels and are prevented from becoming missiles during a seismic event.

The secondary shield walls, in conjunction with the primary shield wall and refueling canal walls, form the loop compartments and provide support for the steam generators, reactor coolant pumps, pressurizer, cross-over legs, piping, various equipment, platforms, and elevated floors.

3.8.3.1.6 Pressurizer Support System

The general arrangement and principal features of the pressurizer support system are provided in Figures 3.8-66 and 3.8-67. The pressurizer is located in a compartment formed by the secondary shield walls and the refueling canal walls, and is supported by steel assemblies which are designed, furnished, and fabricated by the NSSS manufacturer (refer to Section 5.4.14). The pressurizer support skirt at the bottom of the pressurizer interfaces with heavy structural steel framing which transfers vertical and lateral loads to the secondary shield walls by means of embeds. The upper portion of the pressurizer is supported laterally by lugs which are restrained by means of structural steel assemblies which interface with the embedded anchor bolt assemblies in the secondary shield walls. Using this system, the pressurizer is supported and restrained to resist normal operating loads, seismic loads, and loads induced by postulated pipe rupture. The upper lateral support system is designed to minimize resistance to the thermal movements expected during operation.

3.8.3.1.7 Refueling Canal Walls

The general arrangement and principal features of the refueling canal (pool) walls are provided in Figures 3.8-68 and 3.8-69. The refueling canal is located above and to the south of the reactor cavity on the fuel building side of the reactor. The entire refueling canal is constructed of minimum 4-foot-thick reinforced concrete walls internally lined with a 1/4-inch-thick stainless steel liner plate. The canal is flooded during the reactor refueling operation. The refueling canal walls, in conjunction with the secondary shield walls, form the loop compartments and provide support for the steam generators, reactor coolant pumps, piping, various equipment, platforms, and elevated floors.

3.8.3.1.8 Operating Floor

The general arrangement and principal features of the operating floor are provided in Figure 3.8-70. The operating floor level is divided between El. 2,047 feet 6 inches and El. 2,051 feet and is supported by the walls of the refueling pool, the secondary shield walls, and the reactor building shell. The floor supports at the shell consist of structural steel brackets welded to the shell liner and anchored into concrete. As described in Section 3.8.1.1 and shown in Figure 3.8-71, adequate separation is provided between the floor slab and the shell to allow for differential horizontal movement. The floor is constructed of reinforced concrete or steel grating, supported by structural steel framing.

Plugs and removable hatches are provided for equipment removal. They are keyed in to prevent their movement in the horizontal direction. During a seismic event, the vertical components of acceleration will not overcome gravity. Those plugs and removable hatches which are subject to loads during a LOCA are secured from becoming missiles.

3.8.3.1.9 Intermediate Floors and Platforms

The general arrangement and principal features of the intermediate floors are provided in Figures 3.8-72 and 3.8-73. The intermediate floor levels are at El. 2,026 and El. 2,068 feet 6 inches (partial floor). The floors, as well as miscellaneous platforms, are constructed and supported in a manner similar to the operating floor.

3.8.3.1.10, Simplified Head Assembly with Reactor Missile Shield

The Simplified head Assembly consists of a welded and bolted structure that integrates the reactor missile shield and the CRDM cooling system into the existing head assembly structure (Figure 3.8-74). The modification eliminates the concrete and steel missile shield, CRDM cooling system mounted on the missile shield, and the associated ductwork that was part of the original configuration. Three CRDM cooling fans are included in the modified head assembly and, with the addition of cooling shroud panels and an upper plenum structure, provide an upflow cooling arrangement that supplies the cooling air flow to the CRDM coils. Retractable CRDM and DRPI cable bridges, including cable connector plates, are part of the modification. After being disconnected, the cables remain on the bridges and are raised with the bridges to a vertical position for removal with the head assembly.

The reactor missile shield is integrated into the simplified head assembly. The missile shield consists of a two-inch thick steel plate, and is located approximately three feet above the top of the rod travel housings to provide protection against postulated CRDM missiles.

3.8.3.1.11 Polar Crane Support System

The general arrangement and principal features of the polar crane support system are provided in Figure 3.8-75. The polar crane is supported by structural steel built-up crane girders mounted on crane brackets evenly spaced around the inside face of the reactor building wall. The crane brackets are welded from steel plates and embedded in the reactor building wall concrete. Further details of these brackets are discussed in Section 3.8.1.1.3.

3.8.3.2 Applicable Codes, Standards, and Specifications

The following codes, regulations, standards, and specifications were utilized in the design of concrete and steel internal structures of the reactor building. Subsequent to operation, additional codes have been approved for use and are noted with an asterik.

Applicable codes, standards, and specifications for the reactor coolant component supports are discussed in Section 5.4.14.

3.8.3.2.1 Regulations

a. 10 CFR 50, "Licensing of Production and Utilization Facilities"

3.8.3.2.2 Codes

a. American Concrete Institute, Building Code Requirements for Reinforced Concrete (ACI 318-71)

b. American Institute of Steel Construction (AISC), Specification for the Design, Fabrication, and Erection of Structural Steel for Buildings, 7th Edition, adopted February 12, 1969, and Supplement Nos. 1, 2, and 3

c. American Institute of Steel Construction (AISC), Structural Joints Using ASTM A325 or A490 Bolts, May 8, 1974

d. American Institute of Steel Construction (AISC), Code of Standard Practice for Steel Buildings and Bridges, October, 1972

e. American Welding Society, Structural Welding Code (AWS Dl.1-75, *AWS D1.1-90, *AWS D1.1-2004, AWS D1.3-81, and AWS D9.1-80)

f. International Conference of Building Officials, Uniform Building Code, 1973

g. ASME Boiler and Pressure Vessel Code (1974 Edition, including Summer 1975 Addenda)

Section II - Material Specifications

Section III, Division 1 - Nuclear Power Plant Components

Section V - Nondestructive Examination

Section IX - Welding and Brazing Qualifications

h. Acceptable ASME Code cases per Regulatory Guides 1.84 and 1.85, as addressed in Appendix 3A.

i. Appendix B, Steel Embedments, to the American Concrete Institute, Code Requirements for Nuclear Safety Related Concrete Structures, ACI 349-80 with the 1984 Supplement. The following sections of Appendix B relating specifically with expansion anchors will be applicable; Sections B.7.1 through B.7.5.

3.8.3.2.3 Standards and Specifications

Industry standards, such as those published by the ASTM, were used whenever possible to specify material properties, testing procedures, fabrication, and construction methods. The applicable standards used are discussed in Section 3.8.3.6.

Structural specifications were prepared to cover the areas related to the design and construction of the reactor building internal structures. These specifications were prepared specifically for WCGS. These specifications emphasize important points of the industry standards for these structures and reduce options such as would otherwise be permitted by the industry standards. These specifications cover the following areas:

a. Concrete material properties

b. Mixing, placing, and curing of concrete

c. Reinforcing steel and splices

d. Structural steel

e. Stainless steel and carbon steel liner plate and embeds

f. Miscellaneous and embedded steel

g. Anchor bolts

h. Grating

i. RCS support embeds, pipe whip restraints, and embeds

3.8.3.2.4 Design Criteria

a. 10 CFR 50, Appendix A - GDC 2, 3, 4, and 16. (Compliance is discussed in Section 3.1)

b. Bechtel Power Corporation Topical Reports, as referenced in Section 1.6

3.8.3.2.5 NRC Regulatory Guides

NRC Regulatory Guides 1.10, 1.15, 1.55, 1.69, 1.84, 1.85, and 1.94 are applicable to the design and construction of the reactor

building internal structures. Specific editions and the extent of compliance with these guides is discussed in Appendix 3A.

3.8.3.3 Loads and Loading Combinations

The loads and loading combinations used in the design of these structures are provided in the sections below.

Loading combinations and design stress limits for the reactor coolant system component supports are discussed in Sections 3.9(N).1.1 and 3.9(N).1.4.7.

3.8.3.3.1 Definitions

The following nomenclature and definition of terms apply to the design of seismic Category I structures. All the major loads to be encountered and/or to be postulated are listed. All the loads listed, however, are not necessarily applicable to all structures and their elements. Loads and the applicable load combinations for which each structure is designed are dependent upon the conditions to which that particular structure is subjected (see Section 3.8.3.3.2). A full description of the loads and the analyses performed for each structure, is given in Section 3.8.4.4.

a. Normal Loads

Normal loads are those loads encountered during normal plant operation and shutdown. They include the following:

D = Dead loads or their related internal moments and forces, including any permanent equipment loads and hydrostatic loads

L = Live loads or their related internal moments and forces, including any moveable equipment loads and other loads which vary with intensity and occurrence, such as: Floor area loads, moveable equipment loads, lateral earth pressure, (Table 3.8-5 and Section 2.5.4) 100-year recurrence snowpack load (listed in Table 1.2-1), wind-generated wave loads (Table 3.4-3 and Sections 2.4.3 and 2.4.5) and all other live loads during plant operation (Table 3.8-4)

T_o = Thermal effects and loads during normal operating and shutdown conditions, based on the most critical transient or steady state condition

R_o = Pipe reactions during normal operating or shutdown conditions, based on the most critical transient or steady state condition

b. Severe Environmental Loads

Severe environmental loads are those loads that could infrequently be encountered during the plant life. They include the following:

E = Loads generated by the operating basis earthquake (OBE) as specified in Section 2.5.2

W = Loads generated by the design wind, as specified in Section 3.3.1

c. Extreme Environmental Loads

Extreme environmental loads are those loads which are credible but are highly improbable. They include the following:

E' = Loads generated by the safe shutdown earthquake (SSE) as specified in Section 2.5.2

W_t = Loads generated by the design basis tornado, as specified in Section 3.3.2. They include loads due to tornado wind pressure, loads due to the tornado-created differential pressures, and loads due to tornado-generated missiles.

N = Probable maximum winter precipitation (PMWP) in the form of snow, 129 psf applied to the roofs of safety-related structures, as specified in Table 1.2-1 and Section 2.4.2.

d. Abnormal Loads

Abnormal loads are those loads generated by a postulated high-energy pipe break accident within a building and/or compartment thereof. Included in this category are the following:

P_a = Pressure equivalent static load within or across a compartment and/or building, generated by the postulated break, and including an appropriate dynamic load factor to account for the dynamic nature of the load

T_a = Thermal loads under thermal conditions generated by the postulated break and including T o

R_a = Pipe reactions under thermal conditions generated by the postulated break and including R o

Y_r = Equivalent static load on the structure generated by the reaction on the broken high-energy pipe during the postulated break, and including an appropriate dynamic load factor to account for the dynamic nature of the load

Y_j = Jet impingement equivalent static load on a structure generated by the postulated break, and including an appropriate dynamic load factor to account for the dynamic nature of the load

Y_m = Missile impact equivalent static load on a structure generated by or during the postulated break, such as pipe whipping, and including an appropriate dynamic load factor to account for the dynamic nature of the load

In determining an appropriate equivalent static load for Y_r , Y_j , and Y_m , elasto-plastic behavior may have been assumed with appropriate ductility ratios and as long as excessive deflections would not result in loss of function of any safety-related system

e. Other Definitions

S = For concrete structures, S is the required section strength based on the working stress design methods and the allowable stresses defined in Section 8.10 of ACI 318-71.

For structural steel, S is the required section strength based on the elastic design methods and the allowable stresses defined in Part 1 of the AISC "Specification for the Design, Fabrication, and Erection of Structural Steel for Buildings," February 12, 1969.

The 33-percent increase in allowable stresses for concrete and steel due to seismic or wind loadings is not permitted.

U = For concrete structures, U is the section strength required to resist design loads based on methods described in ACI 318-71.

Y = For structural steel, Y is the section strength required to resist design loads and based on plastic design methods described in Part 2 of the AISC "Specification for the Design, Fabrication, and Erection of Structural Steel for Buildings," February 12, 1969.

3.8.3.3.2 Load Combinations

Structures and components except for the ESWS pipe are designed to resist the load combinations given below. Definitions of individual loads are given in Section 3.8.3.3.1. The ESWS pipes are designed to resist the load combinations given in Section 3.9.3

a. Concrete structures and components

The load combinations and load factors for each individual load on powerblock structures are given in Table 3.8-4. Wind (W), tornado (W_t), and probable maximum winter precipitation (N) loadings are not applicable for the design of internal structures. Load combination, load factors and required section strength using both the working stress design method and the ultimate strength design method for nonpowerblock structures are given in Table 3.8-6.

b. Steel structures and components

The load combinations for powerblock structure are given in Table 3.8-7. Wind (W), tornado (W_t), and probable maximum winter precipitation (N) loadings are not applicable for the design of internal structures. The load combinations, load factors, and required section strength, using both the elastic working stress design method and the plastic design method are given in Table 3.8-8.

3.8.3.3.3 Explanation of Load Combination Cases

a. Loading cases(1), (1a), and (1b) for Table 3.8-3

These cases include all loads which are expected to be applied during the normal plant operation, including the loads from thermal effects and pipe reactions.

b. Loading cases (1) to (3), (1a) to (3a), for Table 3.8-5, (2), (2a), (2b), (2b[1]), (3), (3a), (3b), (3b[1]) for Table 3.8-8

These cases include all loads which are expected to be applied during the normal plant operation, including the loads from the design wind and the OBE, as well as loads from thermal effects and pipe reactions.

c. Loading cases (4), (5), and (9) for Table 3.8-7, (4) to (6) for Table 3.8-3

These cases include events and the resulting loads which are highly improbable, such as the safe shutdown earthquake, tornado and the probable maximum winter precipitation in the form of snow.

d. Loading case (6) for Table 3.8-7

This case includes the pressure loads and temperature effects resulting from a postulated accident together with pipe rupture loading and generated missiles, where applicable. These loads are not applicable to non-powerblock seismic Category I structures.

e. Loading cases (7) and (8) from Table 3.8-7

These cases include a combination of postulated accident loading, together with loads generated by the operating basis earthquake (OBE) or the safe shutdown earthquake (SSE).

3.8.3.3.4 Specific Considerations

a. In cases (6) to (8), shown in Tables 3.8-5 and 3.8-7, the peak loading effects of pipe rupture and pressurization are considered as acting simultaneously unless time histories of the loading are developed to show the time relationship of the various loads.

b. The mass considered in developing earthquake loading is only the mass contributing to dead loads and identifiable live loads.

c. In all loading cases, the live load is considered to vary from zero to the maximum specified value in determining the most critical loading condition.

d. For load cases including either earthquake or tornado loads, the live load (L) is limited to only that live load expected to be present when the plant is operating.

3.8.3.3.5 Design Allowables

The section strengths given below are used to evaluate the capacity of the section under consideration.

a. Concrete structures and components.

1. Section strengths are determined in accordance with ACI 318.

2. When the effects of tornado missile impact or pipe rupture impulsive or impactive loading are combined in loading cases (5), (7), and (8) of Table 3.8-5, yield strain and displacement may be exceeded to the limits given in Section 4.3 of BC-TOP-9-A.

3. Yielding of reinforcement is permitted in loading cases (6) to (8) of Table 3.8-5 when T_a is combined with the other loadings, provided the following is satisfied:

(a) The effects of T_a are self-relieving.

(b) The ability of the structure to resist the other loadings is not jeopardized. The stress in concrete in compression is restricted to 0.85 f'_c.

b. Steel structures and components

1. Section strengths are determined in accordance with AISC Specification, Part I. The symbol S is defined as the AISC allowable stress. The permissible stress to be used for each loading case is given in Table 3.8-7.

2. When the effects of tornado missile impact or pipe rupture impulsive or impactive loading are combined in loading cases (5), (7), and (8) of Table 3.8-7, yield strain and displacement may be exceeded to the limits given in Section 4.3 of BC-TOP-9-A.

3. Yielding is permitted in loading cases (6) to (8) of Table 3.8-7 when T_a is combined with the other loadings, provided the following is satisfied:

(a) The effects of T_a are self-relieving.

(b) The ability of the structure to resist the other loadings is not jeopardized.

3.8.3.4 Design and Analysis Procedures

The basic techniques of analyzing the internal structures can be broadly classified into two groups: (1) conventional methods involving simplifying assumptions such as found in beam theory and (2) those based on plate and shell theories of different degrees of approximation. Analytical methods using computer programs, as described in Appendix 3.8A, were also used. Seismic analyses for the internal structures conformed to the procedures outlined in Section 3.7(B).

Internal concrete structures are designed using the strength methods defined in ACI-318. The proportioning of reinforcing steel in concrete structures was based upon accepted codes of practice and detailing methods.

Internal steel structures, except for the NSSS supports, are designed in accordance with AISC specifications. The selection of structural steel sections and the methods of fabrication and connection were in accordance with engineering codes and accepted industry practices. NSSS supports are designed in accordance with ASME Section III Division 1, Subsection NF.

The internal structures are designed to behave within the elastic range under design loads. However, the ability of the structures to perform beyond yield was considered for loads associated with a pipe break as it affects compartment pressurization, jet impingement and pipe whip, and structural loads associated with missile impact.

The loads and loading combinations used in the design of internal structures, as well as the design allowables, are presented in Section 3.8.3.3. As described in Section 3.8.3.1, the internal structures are designed to transfer loads to the foundation by means of anchorage systems. The applicable codes, standards, and specifications used are discussed in Section 3.8.3.2.

The following sections discuss, in greater detail, the procedures used for analyzing and designing the reactor coolant system supports, the primary shield wall and reactor cavity, the secondary shield walls, and the refueling canal walls.

3.8.3.4.1 Reactor Coolant System Supports

Models and methods of analysis for the reactor coolant system component supports are discussed in Section 3.9(N).1.4.4.

3.8.3.4.2 Primary Shield Wall and Reactor Cavity

The primary shield wall is designed to resist all of the applicable loads, including those due to differential pressure and temperature resulting from a LOCA, operating temperatures, OBE and SSE, and those loads transmitted through the reactor vessel supports. During normal plant operation, a thermal loading on the wall is generated by the attenuation heat of gamma and neutron radiation originating from the reactor core. An insulation and cooling system is provided on the inside face of the wall to reduce the severity of this loading by limiting the concrete temperatures to 150°F except for the area directly below the seal ring support which is limited to 220°F.

Analysis of the primary shield wall, depending on the loading condition being considered, was performed using classical techniques and the SAP, ASHSD, and FINEL computer programs described in Appendix 3.8A. The boundary conditions simulated actual conditions at the reactor building base slab and intersections with the refueling canal walls. Analyses for LOCA loads applicable to the primary shield wall, such as those for differential pressure and pipe rupture reaction forces, were treated as time-dependent loads by performing a static analysis and utilizing the peak of the forcing function amplified by an appropriately chosen dynamic load factor.

The methods used for determining the effective dynamic load factors are in accordance with recognized dynamic analysis methods, such as those described by Reference 1. The analysis considers the nonaxisymmetric application of loads to the structure. The finite element model used for the analysis of the primary shield wall is shown in Figure 3.8-83.

Design of the primary shield wall is performed, using the strength design methods described in ACI-318.

3.8.3.4.3 Secondary Shield Walls

The secondary shield walls are designed to resist all of the applicable loads, including those due to differential pressure and temperature resulting from a LOCA, RCS component support forces, OBE and SSE, dead and live loads from the operating floor and intermediate platforms and walkways, and those loads resulting from a postulated pipe break.

Analysis of the secondary shield walls were performed, using classical techniques and the SAP computer program described in Appendix 3.8A. Design for the effects of postulated pipe breaks were performed using BN-TOP-2.

The finite element model used for analyzing the secondary shield walls consists of a three-dimensional model of one-half of the structure in plan about an axis of symmetry. An additional finite element model was used for analyzing these secondary shield walls at the pressurizer. Appropriate boundary conditions were modeled to simulate actual conditions at the axis of symmetry and at the intersections with the base slab, refueling canal walls, floors, and RCS component supports. The analysis for time-dependent loads, such as those for differential pressure and pipe rupture reaction forces, was performed in a manner similar to that used for the primary shield wall. The finite element models used for the secondary shield walls are shown in Figures 3.8-79 through 3.8-82.

Design of the secondary shield walls was performed, using the strength design methods described in ACI-318.

3.8.3.4.4 Refueling Canal Walls

The refueling canal walls are designed to resist all of the applicable loads, including those due to differential pressure and temperature resulting from a LOCA, RCS component support forces, OBE and SSE, hydrostatic loading during the refueling operation, dead and live loads from the operating floor and intermediate platforms and walkways, and those loads resulting from a postulated pipe break.

Analysis of the refueling canal walls was performed, using classical techniques and the SAP computer program described in Appendix 3.8A. Design for the effects of postulated pipe breaks was performed using BN-TOP-2.

The finite element model used for analyzing the refueling canal walls consists of a three-dimensional model of the entire structure. Appropriate boundary conditions are modeled to simulate actual conditions at the intersections with the base slab, secondary shield walls, primary shield wall, floors, and RCS component supports. The analysis for time-dependent loads, such as those for differential pressure and pipe rupture reaction forces, is performed in a manner similar to that used for the primary shield wall. The finite element model used for the refueling canal walls is shown in Figures 3.8-77 and 3.8-78.

Design of the refueling canal walls is performed using the strength-design methods described in ACl-318.

3.8.3.5 Structural Acceptance Criteria

The structural acceptance criteria for the concrete and steel internal structures are defined in Section 3.8.3.3.

Stress criteria for the reactor coolant system component supports are discussed in Section 3.9(N).1.4.7.

3.8.3.6 Materials, Quality Control, and Special Construction Techniques

This section contains information relating to the materials, quality control programs, and special construction techniques used in the fabrication and construction of concrete and steel internal structures of the reactor building.

3.8.3.6.1 Concrete

Structural concrete used in the construction of the reactor building internal structures has a compressive strength, f'_c, of 4,000 psi at 28 days. The concrete materials, mix design, examination, and placement are described in Section 3.8.1.6.1.

3.8.3.6.2 Reinforcing Steel and Splices

The reinforcing steel and splices used in the construction of the reactor building internal structures, including materials, examination, and erection tolerances, are described in Section 3.8.1.6.2.

3.8.3.6.3 Structural Steel

The following sections describe the basic materials, examination, and erection of structural steel items.

3.8.3.6.3.1 Materials

Structural steel shapes, plates, and bars conform to the requirements of the Specification for Structural Steel (ASTM A36).

High strength bolting materials conform to the requirements of the Specification for High Strength Bolts for Structural Steel Joints, Including Suitable Nuts and Plain Hardened Washers (ASTM A325) or the Specification for Quenched and Tempered Alloy Steel Bolts for Structural Steel Joints (ASTM A490). Other bolting materials conform to the requirements of the Standard Specification for Low-Carbon Steel Fasteners (ASTM A307).

Welding electrode materials were selected on the basis of the welding process used and the type of materials to be joined and in accordance with the requirements of AWS Dl.1. Written welding material control procedures were required which define the measures used to control the use of the materials throughout all welding operations.

Certified material test reports were obtained for structural steel shapes, plates, and bars. All other structural steel materials were furnished with certificates of compliance.

3.8.3.6.3.2 Examination

Nondestructive examination of structural steel welds were performed in accordance with the requirements of AWS Dl.1 and as augmented by design documents prepared for the SNUPPS projects (WCGS and Callaway). Inspection of high strength bolted joints was performed in accordance with the requirements of the AISC Specification for Structural Joints Using ASTM A325 or A490 Bolts and as augmented by design documents prepared for the SNUPPS projects.

3.8.3.6.3.3 Erection

Structural steel was erected to the following codes, to the extent described:

a. AWS Dl.1 Structural Welding Code was used with the following exceptions:

   1. For visual weld inspection performed in accordance with AWS D1.1, undercut shall not exceed 1/32 inch.

   2. Fillet welds need not satisfy the convexity limitations of AWS D1.1 provided that all other parameters of acceptable weld profile are maintained.

   3. Fillet welds deposited on the opposite sides of a common plane of contact between two parts need not be interrupted at the corner common to both welds as specified by AWS D1.1. The connecting weld shall be inspected for defects such as undercut and cracking, but need not be inspected for size.

   4. As an alternate to AWS D1.1, visual weld inspection may be performed in accordance with EPRI NP-5380, Volume 1. (Electrical Power Research Institute - Visual Weld Acceptance Criteria for Structural Welding at Nuclear Power Plants (NCIG-01, Rev. 2). The alternative use of EPRI NP-5380 was implemented at Wolf Creek after February, 1988.

b. AISC Specification for the Design, Fabrication, and Erection of Structural Steel for Buildings, Sections 1.23 and 1.25, are used without exception.

c. AISC Specification for Structural Joints Using ASTM A325 and A490 Bolts is used without exception.

d. Erection tolerances are in accordance with the AISC Code of Standard Practice for Steel Buildings and Bridges without exception.

3.8.3.6.4 Restraints and Embedded Items

The following sections describe the basic materials, examination, and erection of pipe whip restraints, pipe whip restraint embeds, RCS component support embeds, and other miscellaneous embedded carbon and stainless steel items.

3.8.3.6.4.1 Materials

Structural steel plates, shapes, and bars conform to the requirements of the Specification for Structural Steel (ASTM A36) or the Specification for Pressure Vessel Plates, Carbon Steel, for Moderate- and Lower-Temperature Service (ASTM A516), Grade 70, or the Specification for Pressure Vessel Plates, Alloy Steel, Quenched and Tempered (ASTM A533), Class 2.

Materials for high strength steel bolts conform to the requirements of the AISC Specification for Structural Joints Using ASTM A325 or A490 bolts. Materials for other bolts and upset rods conform to the requirements of the Specification for Carbon Steel Externally and Internally Threaded Standard Fasteners (ASTM A307).

Materials for shear connector studs conform to the requirements of the Specification for Steel Bars, Carbon, Cold-Finished, Standard Quality (ASTM A108), Grades 1015 and 1020, cold drawn steel.

Materials for upset rods conform to the requirements of the Specification for Stainless and Heat-Resisting Steel Bars and Shapes for Use in Boilers and Other Pressure Vessels (ASTM A479) or to the requirements of the Specification for Carbon Steel Externally and Internally Threaded Standard Fasteners (ASTM A307).

Materials for structural pipe conform to the requirements of the Specification for Welded and Seamless Steel Pipe (ASTM A53), Grade B, or the Specification for Seamless Carbon Steel Pipe for High-Temperature Service (ASTM A106), Grade B, or the Specification for Blank and Hot Dipped Zinc Coated (Galvanized) Welded and Seamless Steel Pipe for Ordinary Uses (ASTM A120) or the American Petroleum Institute Specification for High Test Line Pipe (API-5L), Grade B, or the Specification for Cold-Formed Welded and Seamless Carbon Steel Structural Tubing in Rounds and Shapes (ASTM A500), Grade B, or the Specification for Hot-Formed Welded and Seamless Carbon Steel Structural Tubing (ASTM A501).

Materials for shear pins conform to the requirements of the Specification for Alloy-Steel and Stainless Steel Bolting Materials for High-Temperature Services (ASTM A193) Grade B7 or to the requirements of the Specification for Alloy Steel Bolting Materials for Special Applications (ASTM A540), Grade B23.

Materials for stainless steel plates conform to the requirements of the Specification for Heat Resisting Chromium and Chromium-Nickel Stainless Steel Plate, Sheet, and Strip for Fusion-Welded Unfired Pressure Vessels (ASTM A240).

Embedded anchor bolt materials conform to the applicable requirements of ASTM A36 or ASTM A193 or the Specification for Carbon and Alloy Steel Nuts for Bolts for High Pressure and High Temperature Service (ASTM A194) or ASTM A307 or ASTM A325 or the Specification for Quenched and Tempered Alloy Steel Bolts and Studs With Suitable Nuts (ASTM A354) or the Specification for Quenched and Tempered Steel Bolts and Studs (ASTM A449) or ASTM A490 or the Specification for Alloy Steel Bolting Materials for Special Applications (ASTM A540).

Welding electrode materials were selected based on the welding process used and the type of material being joined and in accordance with the requirements of AWS D1.1 or the ASME Code. Written welding material control procedures were required which define the measures used to control the use of the materials throughout all welding operations.

All materials used for restraints and embedded items described above were furnished with certified material test reports or certificates of compliance.

3.8.3.6.4.2 Examination

One of the following nondestructive examinations were selectively performed prior to operation on pipe whip restraint, pipe whip restraint embed, and RCS component support embed welds:

a. Visual examination of all welds

b. Magnetic particle or liquid penetrant examination of welds, in accordance with AWS Dl.1

c. Radiographic examination of welds in accordance with AWS Dl.1

All other welds are examined in accordance with AWS Dl.1.

High strength bolted joints are examined in accordance with the requirements of the AISC Specification for Structural Joints Using ASTM A325 or A490 Bolts.

Examination of embedded anchor bolt materials used for RCS component support embeds meets the requirements of Section NF-2580 of the ASME Code for Class 1 component supports.

3.8.3.6.4.3 Erection

Restraints and embedded items were erected in accordance with the following:

a. AWS Dl.1 Structural Welding Code is used, except that the qualification of welders and welding operators may, alternatively, be in accordance with ASME Section IX. In addition, weld procedures for joining structural steel and sleeves used for mechanical splicing of reinforcing steel may be qualified in accordance with ASME Section IX. The following exceptions are allowed for welding between anchor studs and plates embedded in concrete:

    1. Vertical leg of weld may be up to 1/16 inch smaller than that specified on drawings.

    2. Unequal legs are permitted.

    3. Weld profile and convexity requirements for these welds need not be imposed.

    4. An undercut of up to 1/16 inch for 10 percent of weld length may be permitted.

b. AISC Specification for the Design, Fabrication, and Erection of Structural Steel for Buildings Sections 1.23 and 1.25 are used without exception.

c. AISC Specification for Structural Joints Using ASTM A325 or A490 Bolts is used without exception.

d. Erection tolerances for pipe whip restraints, pipe whip restraint embeds, and RCS component support embeds are in accordance with the following:

    1. AISC Specification for the Design, Fabrication, and Erection of Structural Steel for Buildings, for rolled plates and shapes

2. AWS Dl.1 Structural Welding Code for welded assemblies

3. Additional tolerance requirements are specified in design documents for bearing or contact points, clearances, and transverse locations of restraints

e. Erection tolerances for other embedded items described above are the same as those for concrete forms. All embedded items are secured and protected during placement of concrete.

3.8.3.6.5 Reactor Coolant System Supports

Materials, quality control, and special construction techniques for the reactor coolant system supports are discussed in Section 5.4.14.

3.8.3.6.6 Quality Control

In addition to the quality control procedures discussed in Sections 3.8.3.6.1 through 3.8.3.6.5, the construction quality control program is discussed in the Quality Assurance Programs For Design and Construction Manual which was contained in the PSAR.

3.8.3.6.7 Special Construction Techniques

The reactor building internal structures are constructed using proven methods common to heavy industrial construction. No special, new, or unique construction techniques are used.

3.8.3.7 Testing and Inservice Surveillance Requirements

Tests and inspections for the reactor coolant system component supports are discussed in Section 5.4.14.

3.8.4 OTHER CATEGORY I STRUCTURES

3.8.4.1 Description of the Structures

The general arrangement of seismic Category I structures is shown in Figure 3.8-84. The seismic Category I structures other than the reactor building are:

a. Auxiliary building

b. Fuel building

c. Control building

d. Diesel generator building

e. Refueling water storage tank and valve house

f. Emergency fuel oil storage tanks and vault

g. Buried power block duct banks and piping

h. Essential Service Water System Pumphouse, pipes, and electrical ductbanks and manholes

i. Circulating and warming waterpipe encasements and Essential Service Water System Caissons

j. ESW Vertical Loop Chase

Seismic Category I structures are physically separated from adjacent structures by isolation joints, with the exception of the auxiliary and control buildings which share a common base slab and wall and the ESW Vertical Loop Chase which is attached to the west wall of the control building. The isolation joints at the roof, base slab, and exterior walls of buildings contain waterstops to provide environmental protection while allowing free rotation and translation between structures. Figure 3.8-85 shows typical isolation joint details.

3.8.4.1.1 Auxiliary Building

The auxiliary building is a multistory, structural steel and reinforced concrete structure which houses the safety injection system, residual heat removal system, CVCS monitoring system, auxiliary feedwater pumps, steam and feedwater isolation and relief valves, heat exchangers, other pumps, tanks, filters, and demineralizers, and heating and ventilating equipment. The arrangement of the auxiliary building is shown in Figures 3.8-86 through 3.8-93.

The auxiliary building shares a common base mat and wall with the control building. The building's interior is enclosed on one side by the reactor building wall.

The foundation for the auxiliary building is a two-way mat foundation with a minimum thickness of 5.0 feet. The lowest floor elevation is 25.5 feet below plant grade, except for the RHR and containment spray pumps pit which is 33.5 feet below grade. The roof is 74.7 feet above plant grade, except for the southwest corner which is 48 feet above grade, two penthouses which are 84 feet above grade, and the roof over the main steam tunnel, which is 103 feet above plant grade.

The intermediate floors and the roof are reinforced concrete slabs supported by structural steel beams and girders. The floor and roof framing are supported by exterior reinforced concrete bearing

walls and interior steel columns. The roof slab and exterior walls are designed to prevent penetration by tornado generated missiles.

Concrete plugs provided in the roof for equipment removal are designed to resist tornado missiles. These plugs and additional concrete plugs and removable hatches provided for servicing equipment within the building are adequately anchored or keyed into slabs to prevent displacement during a seismic event.

Blockouts are provided in the interior walls for equipment removal and servicing. These blockouts are closed with multiwythes of solid concrete blocks, laid such that the vertical and horizontal joints are not continuous. The blocks are seismically restrained on both faces.

Concrete block walls are reinforced to withstand seismic loadings.

3.8.4.1.2 Fuel Building

The fuel building is a rectangular, structural steel, reinforced concrete structure which houses the spent fuel pool, transfer canal, cask loading pool and cask washdown pit, spent fuel pool bridge crane, cask handling crane, and other miscellaneous equipment. The arrangement of the fuel building is shown in Figures 3.8-94 through 3.8-98.

The fuel building is supported on a two-way, reinforced concrete base mat which is founded 6 feet below plant grade. The minimum thickness of the mat is 6.5 feet, and the mat beneath the spent fuel pool is 12 feet thick. The top of the roof slab is 107 feet above plant grade.

The elevated floors and the roof are reinforced concrete slabs supported by structural steel beams and girders. The floor and roof framing are supported by reinforced concrete bearing walls. The exterior walls have integral reinforced concrete pilasters to stiffen the walls against lateral loads and to support the cask-handling crane girders. The roof and exterior walls are designed to prevent penetration by tornado generated missiles.

The walls and base slab of the fuel storage pool, transfer canal, and cask washdown pits are lined with stainless steel plates for ease of decontamination. A leak chase system provided to check the leaktightness of the liners, although leaktightness is not the primary liner function.

The cask handling crane is capable of moving a loaded fuel cask. The crane travel is limited to prevent movement over the spent fuel pool.

3.8.4.1.3 Control Building

The control building is a rectangular structural steel and reinforced concrete structure which houses the access control areas, control room, upper and lower cable spreading rooms, electrical and mechanical equipment rooms, and locker rooms. The arrangement of the control building is shown in Figures 3.8-99 through 3.8-104.

The control building shares a common base slab and wall with the auxiliary building. The bottom of the base mat is 31.5 feet below plant grade, and the mat thickness is 6 feet. The top of the roof is 81.7 feet above plant grade. The intermediate floors and roof are reinforced concrete slabs supported by structural steel beams and girders. The floor and roof framing are supported by exterior reinforced concrete bearing walls and interior steel columns. The roof slab and exterior walls are designed to prevent penetration by tornado-generated missiles.

Concrete block walls are reinforced to withstand seismic loadings.

3.8.4.1.4 Diesel Generator Building

The diesel generator building is a single-story, rectangular, structural steel and reinforced concrete structure which houses the standby diesel generators, fuel oil day tank, exhaust silencers, and exhaust stacks. The diesel generator building arrangement is shown in Figures 3.8-105 through 3.8-109.

The foundation for the diesel generator building is a 10.5-foot-thick base mat founded 10 feet below plant grade. The highest portion of the roof is 66.5 feet above plant grade. The roof is a reinforced concrete slab supported by structural steel beams and girders. The roof framing is supported by reinforced concrete bearing walls and steel columns. The roof and exterior walls are designed to prevent penetration by tornado-generated missiles.

3.8.4.1.5 Refueling Water Storage Tank

The refueling water storage tank consists of an above-grade cylindrical steel tank founded on a 5-foot-6-inch-thick reinforced concrete base slab and an associated valve house. Although serving a safety-related function and designed as a seismic Category I structure, the refueling water storage tank is not required for safe shutdown of the plant following a tornado event and is, therefore, not designed to resist the effects of the design-basis tornado. The steel tank is described in Section 6.3. Details of the tank foundation and valve house are shown in Figures 3.8-110 and 3.8-111.

3.8.4.1.6 Emergency Fuel Oil Storage Tanks

The emergency fuel oil storage tanks consist of two buried cylindrical steel tanks and associated reinforced concrete access vaults. The steel tanks are described in Section 9.5.4. Details of the access vaults are shown in Figures 3.8-112 and 3.8-113.

3.8.4.1.7 Buried Power Block Duct Banks and Piping

Buried, reinforced concrete electrical duct banks and steel piping that serve safety-related functions are classified as seismic Category I and are shown in Figures 3.8-114 and 3.8-115.

3.8.4.1.8 Essential Service Water System Pumphouse

The ESWS pumphouse is a tornado-resistant, rectangular (85 x 39 feet), conventionally reinforced-concrete structure. The pumphouse contains two 100-percent-capacity ESWS pumps, valves, two self-cleaning strainers, two traveling water screens, two trash racks, two transformers, two motor control centers, a redundant HVAC system, and piping. The separate redundant operating floors are at elevation 2000 feet (SNUPPS elevation) and separate forebays extend to elevation 1958 feet. The roof slab elevation is 2025 feet. A 15-x 36-foot apron slab is attached to the pumphouse and extends into the UHS intake channel. The pumphouse is of heavy shear wall construction with concrete slabs. Tornado-resistant missile shields protect the pumphouse forebay pits, the entrances and exits of the ventilation system at the roof elevation and the doors at grade. Removable hatch covers are bolted down to prevent their movement in the horizontal and vertical directions. Typical plans and sections are shown on Figures 3.8-131, 3.8-132, and 3.8-133.

3.8.4.1.9 Essential Service Water System Pipes

Two (redundant) below-grade, 30-inch-diameter pipes carry cooling water from the ESWS pumphouse to the powerblock. Two (redundant), below grade, 30-inch-diameter pipes in series with two (redundant), below grade, 24-inch-diameter pipes return cooling water from the powerblock to the ESWS discharge point. One (redundant) below grade, 30-inch-diameter pipe in series with 18-inch-diameter pipe and one (redundant) below grade 18-inch-diameter pipe carry warm water from the two 30-inch-diameter ESWS discharge pipes to the ESWS pumphouse forebay to prevent ice accumulation on the trash racks and traveling water screens. All pipes from the powerblock to the last access vault are buried a minimum depth of 4.5 feet to resist the effects of tornado missiles and frost penetration. The ESW vertical loop chase structure is designed to resist the effects of tornado missile penetration and the insulation installed on the ESW vertical loops resists the effects of frost penetration. The discharge piping from the last access vault to the slope of the UHS is encased in unreinforced concrete with 24 inch minimum thickness above the top of the pipe for protection from tornado missiles. The outlets for the 24-inch discharge pipes (discharge point) are below the minimum elevation (1968 feet) of the UHS to prevent their freezing. Typical plans and sections are shown on Figure 3.8-134, 3.8-135, 3.8-135a, and 3.8-136.

Pipes are of carbon and stainless steel with welded joints at connections, except at the insulating flanged connections to the piping within the ESWS pumphouse and connections between carbon steel and stainless steel. Buried pipe exteriors are coated and wrapped, and are cathodically protected. Additionally, the buried pipe is encased in controlled low strength material (CLSM) to provide additional corrosion resistance to the exterior of the ESWS piping. CLSM is not used for the submerged discharge piping and where the ESWS piping crosses above the circulating water piping and electrical duct bank, these cases are discussed further in sections 3.8.4.1.12 and 3.8.4.1.13, respectively. At points where the 30-inch-diameter, 4-inch-diameter and 18-inch-diameter pipes enter structures, provision is made for flexible, waterproof boot seals between the pipes and the structures (see Figure 3.8-138 and Figure 3.8-144) where necessary.

3.8.4.1.10 Deleted

3.8.4.1.11 Essential Service Water System Electrical Duct Banks and Manholes

Redundant, below-grade, reinforced-concrete electrical duct banks housing electrical cables are provided which transmit the required power to the ESWS pumphouse from the standard power block. They are buried a minimum depth of 4 feet to resist the effects of tornado missiles and frost penetration. Typical plans and sections are shown on Figures 3.8-134, 3.8-135, and 3.8-136.

At points where the electrical duct banks enter structures, provision is made for flexible filler and waterstops between the duct banks and the structures (see Figure 3.8-139).

Redundant, reinforced-concrete, tornado-resistant electrical manholes are provided to permit the pulling of electrical cables through the duct bank. Removable manhole covers are bolted down to prevent their movement in the horizontal and vertical directions. Typical plans and sections are shown on Figure 3.8-140.

3.8.4.1.12 Essential Service Water System Caissons

The ESWS piping that crosses above the below-grade, non-seismic Category I circulating water pipe and two electrical ductbanks are supported by eight caissons. Two caissons, one on each side of the circulating water piping, are used to support the ESWS supply and return piping for train “A” and train “B”. The caissons provide support to the ESWS piping to ensure continued ESWS function if the circulating water piping ruptured during a seismic event and undermined the ESWS piping.

3.8.4.1.13 Circulating and Warming Water Pipe Encasements

The below-grade, non-seismic Category I circulating and warming water pipes (Unit No. 1) and non-seismic Category I circulating water pipe (future Unit No. 2) are surrounded, as shown in Figure 3.8-137, by seismic Category I reinforced concrete encasements, where they pass under the ESWS duct bank. These reinforced concrete encasements consist of a minimum 1.5-foot-thick concrete encasements on all sides. In addition, the concrete encasements are extended a sufficient distance on either side of the ESWS duct bank to prevent their undermining if the non-seismic Category I pipes are ruptured during a seismic event.

3.8.4.1.14 Essential Service Water System Access Vaults

The below grade ESW access vaults (six total) are tornado resistant, conventionally reinforced structures (24′ x 39.5′, 10.5′ x 24, 12.25′ x 44′, 17.75′ x 46′, 105′ x 24′ and 27′ x 29.5′). Reinforced concrete barrier walls are provided between the redundant ESWS pipes where they share the same vault. The access vaults contain ESWS piping and are for the purpose of accessing these pipes. Refer to figure 3.8-143.

3.8.4.1.15 ESW Vertical Loop Chase

The ESW Vertical Loop Chase is a rectangular structural steel, metal plates and reinforced concrete structure (27′ X 15′-10″) which houses a vertical loop of the ESWS return pipes that mitigate water hammer effects. The arrangement of the ESW Vertical Loop Chase is shown in Figures 3.8-99 through 3.8-104. The ESW Vertical Loop Chase is attached to the west face of the control building. The foundation of the ESW Vertical Loop Chase is 4 feet thick base mat founded 29.5 feet below plant grade. The top of the roof is 87.8 feet above plant grade. The intermediate floors and roof are steel platforms and grating supported by structural steel beams and girders. The roof and exterior wall plates are designed to work in conjunction with chase structural steel to prevent penetration by tornado generated missiles.

3.8.4.2 Applicable Codes, Standards, and Specifications

The codes, regulations, standards, and specifications utilized in the design of the seismic Category I structures other than the reactor building are the same as those listed in Section 3.8.3.2, with the following exceptions:

a. Structural Specification for Maintenance Truss

b. Structural Specification for RCS Support Embeds, Pipe Whip Restraints, and Embeds

c. The applicable standards used are discussed in Section 3.8.4.6.

d. Regulatory Guide 1.46 and BN-Top-2 are not applicable to Essential Service Water System structures and circulating and warming water pipe encasements.

In addition to the documents listed in Section 3.8.3.2, the following documents are also utilized:

a. NRC Regulatory Guide 1.59 - Design Basis Floods for Nuclear Power Plants

b. NRC Regulatory Guide 1.76 - Design Basis Tornado for Nuclear Power Plants

c. Bechtel Power Corporation Topical Report BC-TOP-3A, Tornado and Extreme Wind Design Criteria for Nuclear Power Plants, Revision 3, August, 1974.

3.8.4.3 Loads and Load Combinations

The loads and load combinations used in the design of the seismic Category I structures other than the reactor building and ESWS pipe are the same as those described in Section 3.8.3.3 with the following exception. In accordance with the discussion in Section 3.8.4.1.1 and Appendix 3B.4 the terms Y_j, Y_r, and Y_m in Tables 3.8-5 and 3.8-7 do not apply to the main steam isolation valve room since no pipe breaks are postulated in that area. The loads and load combinations used in the design of the ESWS pipe are the same as those defined in Section 3.9.3.

3.8.4.4 Design and Analysis Procedures

The analysis of standard plant seismic Category I structures other than the reactor building was performed, using conventional analytical methods which are common to standard engineering practice and analytical methods using computer programs. Analytical methods using computer programs are described in Appendix 3.8A. Seismic analysis conformed to the procedures outlined in Section 3.7(B).

Concrete structures are designed, using the strength methods defined in ACI-318. The reinforcing steel is proportioned in accordance with accepted engineering formulae and conforms to the applicable codes and standards. The effects of design variables are accounted for by the use of conservative loads and load combinations and the use of load factors and capacity reduction factors.

Steel structures and components, except for tanks and piping, are designed in accordance with AISC specifications. The selection of steel sections is in accordance with accepted engineering formulae and conforms to the applicable codes and standards. The effects of design variables are accounted for by the use of conservative loads, load combinations, and allowable stresses.

These structures are designed to behave within the elastic range, under normal operating loads. However, the ability of the structures to perform beyond the yield point is considered for loads associated with missile impact, jet impingement, and pipe whip.

The loads, load combinations, and design allowables used in the design of these structures are presented in Section 3.8.4.3. The applicable codes, regulations, standards, and specifications used are discussed in Section 3.8.4.2.

The following sections discuss, in greater detail, the procedures used for the analysis and design of the auxiliary and control buildings, fuel building, diesel generator building, essential service water system pumphouse, ESWS pipes, ESWS electrical duct banks and manholes, ESWS caissons and circulating and warming water pipe encasements.

3.8.4.4.1 Auxiliary and Control Building

The auxiliary and control buildings are supported on a common base slab. All vertical loads are transferred to the base slab through reinforced concrete bearing walls and structural steel columns. All lateral loads are resisted by diaphragm action of the roof and intermediate floor slabs which transfer these loads to shear walls, which, in turn, transfer the lateral loads to the base slab. All lateral loads are transferred to the subgrade by friction and passive earth pressure. Typical connection details between the walls and slabs are shown in Figures 3.8-116 through 3.8-118.

The reinforced concrete roof and intermediate floor slabs are analyzed and designed for vertical loads as one-way or two-way slabs supported by bearing walls and structural steel beams and girders. The reinforced concrete interior and exterior walls are analyzed and designed for lateral loads as one-way or two-way slabs supported by the base slab, intermediate floor slabs, roof slab, and perpendicular walls.

Structural steel beams and girders supporting reinforced concrete slabs are analyzed and designed as composite sections.

The reinforced concrete base slab is analyzed and designed as a rigid slab on an elastic foundation.

The main steam isolation valve room is located in the north-west corner of the auxiliary building as shown in Figure 3B-2. It is designed to withstand the environmental effects, by means of venting, of a main steam or main feedwater line break equivalent to the flow area of a single-ended pipe rupture. Although no specific pipe breaks are postulated in the main steam/main feedwater isolation valve compartment, this consideration provides an additional level of assurance of operability to the building structure and the safety-related equipment in this compartment.

3.8.4.4.2 Fuel Building

The fuel building is supported on a base slab. All vertical loads are transferred to the base slab through the exterior walls, interior walls, and fuel storage pool walls. All lateral loads are

transferred to the base slab by diaphragm action of the roof slab and intermediate floor slabs which transfer loads to shear walls. All hydrostatic and hydrodynamic loads due to the presence of water in the fuel storage pool are transferred to the base slab through the fuel storage pool walls. All lateral loads are transferred to the subgrade by friction and passive earth pressure. Typical connection details between exterior, interior, and fuel storage pool walls and the base slab are shown in Figures 3.8-116 and 3.8-118.

The reinforced concrete roof and intermediate floor slabs were analyzed and are designed for vertical loads as one-way or two-way slabs supported by bearing walls and structural steel beams and girders. The fuel storage pool is analyzed and designed as an open top, reinforced concrete tank.

The reinforced concrete interior and exterior walls were analyzed and are designed for lateral loads as one-way slabs supported by the base slab, intermediate floor slabs, and roof slab. Structural steel beams and girders supporting reinforced concrete slabs are analyzed and designed as composite sections.

The reinforced concrete base slab was analyzed and is designed as a rigid slab on an elastic foundation.

3.8.4.4.3 Diesel Generator Building

The diesel generator building is supported on a base slab. All vertical loads are transferred to the base slab through exterior walls, interior walls, and columns. All lateral loads are transferred to the base slab by diaphragm action of roof slab and intermediate floor slab, which transfer loads to shear walls and bracing. All lateral loads are transferred to the subgrade by friction and passive earth pressure. Typical connection details between the exterior and interior walls and the base slab are shown in Figures 3.8-116 and 3.8-118.

The reinforced concrete roof and intermediate floor slabs are analyzed and designed for vertical loads as one-way or two-way slabs supported by the base slab, intermediate floor slab, roof slab, and intersection walls.

Structural steel beams and girders supporting reinforced concrete slabs are analyzed and designed as composite sections. The reinforced concrete base slab was analyzed and is designed as a rigid slab resting on an elastic foundation.

3.8.4.4.4 Essential Service Water System Pumphouse

The ESWS pumphouse is supported on a concrete floor slab at grade, a concrete pipe pit slab approximately 14 feet below grade, grade beams with varying depths below grade, and a forebay and apron slab approximately 47 feet below grade and in the ultimate heat sink (UHS). All vertical loads are transferred to the grade beams and floor, pipe pit, forebay, and apron slabs through exterior walls, interior walls, and columns. All lateral loads are transferred to the grade beams and floor, pipe pit, forebay, and apron slabs by diaphragm action of the roof and floor slabs which transfer loads to shear walls and by beam action for walls not acting as shear walls. All lateral loads are transferred to the subgrade by friction. The reinforced concrete roof and floor slabs are analyzed and designed for vertical loads as one-way or two-way slabs supported by bearing walls, concrete columns, and concrete beams.

The reinforced concrete interior and exterior walls were analyzed and designed for lateral loads as cantilevered, one-way, or two-way slabs supported by the grade beams and the floor, pipe pit, forebay, apron, and roof slabs. The forebay compartments within the UHS were analyzed and designed to resist the effects of hydrostatic and hydrodynamic loads. The reinforced concrete floor and forebay and apron slabs were analyzed and designed as rigid slabs resting on an elastic foundation.

3.8.4.4.5 Essential Service Water System Pipes

Refer to USAR Section 3.9(B).3.

3.8.4.4.6 Deleted

3.8.4.4.7 Essential Service Water System Electrical Duct Banks and Manholes

The reinforced concrete ESWS electrical duct banks are buried below grade. They were analyzed and designed as beams on elastic foundations for vertical loads. Differential movement between the duct banks and other seismic Category I structures was considered in the analysis and design. Refer to Figures 3.8-134, 3.8-135, and 3.8-136.

The ESWS electrical manholes are supported on base slabs. All vertical loads are transferred to the base slabs through exterior and interior walls. Since the manholes are horizontally continuous frames below grade, all lateral loads on the walls are balanced through the walls as reactions from adjacent walls. The roof slab is bolted to the walls and transfers lateral load to the walls through the bolts. Refer to Figure 3.8-140.

3.8.4.4.8 Essential Service Water System Caissons

The ESWS caissons are supported on limestone and are able to maintain support of the ESWS piping with or without backfill. All vertical loads are transferred through the caissons to bedrock. The lateral loads on the caissons are balanced due to the symmetrical nature of the caissons. The reinforced concrete and steel outer shell caissons were analyzed as caisson pile pipe supports. Refer to Figure 3.8-137 Sh. 2.

3.8.4.4.9 Circulating and Warming Water Pipe Encasements

The two below-grade circulating water pipe encasements and single below-grade warming water pipe encasements are supported on in situ material and lean concrete backfill. External loads on the encasements are balanced by the symmetrical nature of the encasements, and internal loads are contained by hoop action of the encasements. The reinforced concrete barrier walls were analyzed and designed for lateral loads (assuming there are no resisting lateral loads on one side) as cantilever beams.

3.8.4.4.10 Essential Service Water System Access Vaults

The buried ESWS access vaults (six total) are designed to be independent of each other. The vaults are supported on concrete base slabs, approximately 10 feet below grade. All vertical loads are transmitted to the base slabs through the walls. The lateral loads on the walls are balanced by the loads from the opposite end walls through the continuous frame action. The roof slabs are designed to span between the walls and the base slabs are designed as rigid slabs resting on elastic foundation. The roof slabs are designed to resist lateral movements with the use of corbels on the underside of the slab. Refer to figure 3.8-143.

3.8.4.4.11 ESW Vertical Loop Chase

The ESW Vertical Loop Chase is supported by a base slab. All vertical loads are transferred to the base slab through A36 carbon steel bearing walls and A500 structural steel columns and to the control building through a combination of grouted anchors and bolts. All lateral loads are resisted by diaphragm action of the roof and intermediate floor plates which transfer these loads to shear walls, which, in turn, transfer the lateral loads to the base slab. All lateral loads are transferred to the subgrade by friction and passive earth pressure. Typical connection details between the walls and slabs are shown in Figures 3.8-116 through 3.8-118. The steel plate roof and intermediate floor plate and grating are analyzed and designed for vertical loads as one-way or two-way plates supported by bearing walls and structural steel beams and girders. The plate metal exterior walls are analyzed an designed for lateral loads as one-way or two-way plates supported by the base slab, intermediate

floor plates, roof plate, and perpendicular walls. Structural steel beams and girders supporting plate and grating are analyzed and designed as composite sections. The reinforced concrete base slab is analyzed and designed as a rigid slab on an elastic foundation.

3.8.4.5 Structural Acceptance Criteria

The structural acceptance criteria for the seismic Category I structures other than the reactor building and ESWS pipes are the same as those defined in Section 3.8.3.3. The seismic Category I essential service water pipes are designed to the criteria defined in Section 3.9(B).3.

3.8.4.6 Materials, Quality Control, and Special Construction Techniques

The materials, quality control programs, and special construction techniques used in the fabrication and construction of seismic Category I structures other than the reactor building are described in the following sections.

3.8.4.6.1 Concrete

Structural concrete used in the construction of these structures has a minimum compressive strength, f'c' of 4,000 psi at 28 days. The concrete materials, mix design, examination, and placement are described in Section 3.8.1.6.1.

3.8.4.6.2 Reinforcing Steel and Splices

The reinforcing steel and splices used in the construction of these structures, including materials, examination, and erection tolerances, are described in Section 3.8.1.6.2

3.8.4.6.3 Structural Steel

The structural steel used in the construction of these structures, including materials, examination, and erection, are described in Section 3.8.3.6.3.

3.8.4.6.4 Embedded Items

The embedded carbon steel items used in the construction of these structures, including materials, examination, and erection, are described in Section 3.8.3.6.4.

3.8.4.6.5 Quality Control

The quality control measures are discussed in Sections 3.8.4.6.1 through 3.8.4.6.4. The construction quality control program is discussed in the Quality Assurance Programs For Design and Construction Manual which was contained in the PSAR.

3.8.4.6.6 Special Construction Techniques

These structures were constructed of concrete and steel, using proven methods common to heavy, industrial construction. No special, new, or unique construction techniques were used.

3.8.4.7 Testing and Inservice Surveillance Requirements

Testing and inservice surveillance are not required for seismic Category I structures other than the reactor building. Hence, no formal program of testing and inservice surveillance is required.

The ESWS is tested and inspected in accordance with the codes described in Section 9.2.1.2.5.

3.8.5 FOUNDATIONS

3.8.5.1 Description of the Foundations

Seismic Category I structures have reinforced concrete mat foundations resting on existing rock, undisturbed soil, or engineered backfill. All vertical loads are transferred to the subgrade by direct bearing of the base mat on the foundation media. Horizontal shears, such as those produced by winds and earthquakes, are transferred to the subgrade by friction along the bottom of the base mat. There is no waterproofing membrane between the base mats and the subgrade, with the exception of the ESW Vertical Loop Chase.

The foundation for each structure is separated by isolation joints from adjacent foundations and structures, with the exception of the auxiliary and control buildings which share a common base mat. All the foundations are adequately designed to prevent overturning due to horizontal loads.

The following sections describe the Category I foundations. Figures 3.8-116, 3.8-117, 3.8-118 and 3.8-8 through 3.8-11 shows the general arrangement of these foundations.

3.8.5.1.1 Reactor Building

The reactor building foundation is a 10-foot-thick reinforced concrete mat, 154 feet in diameter, founded 11 feet below plant grade. The central reactor cavity and instrumentation tunnel extend below the reactor building foundation, with the bottom of the 5.5-foot-thick foundation slab located 36 feet below grade. The 8-foot-wide tendon access gallery, located beneath the perimeter of the reactor building mat, has a 4.25-foot-thick foundation slab, the bottom of which is 25.25 feet below grade. The plan and details of the reactor building foundation are shown in Figures 3.8-1 and 3.8-8 through 3.8-11.

Refer to Section 3.8.3.1 for a description of the anchorage of internal structures and equipment to the foundation.

3.8.5.1.2 Auxiliary and Control Buildings

The auxiliary and control buildings are supported by a common, reinforced concrete mat foundation, with a minimum thickness of 5 feet, founded 31.5 feet below plant grade. The foundation under the RHR and containment spray pumps pit in the auxiliary building is a 6-foot-thick mat, the bottom of which is 38.5 feet below grade. The shape of the base mat in plan conforms to the arrangement of the building it supports, and the base mat is approximately 220 feet wide at its widest section. The plan and details of the foundation for the auxiliary and control buildings are shown in Figures 3.8-119 and 3.8-120.

The equipment in these buildings, such as tanks, heat exchangers, switchgear, and control panels, is rigidly attached to the base mat, intermediate floor slabs, or walls, by means of anchor bolts or welding to embedments in the concrete. All loads from equipment and internal structures not directly attached to the base mat are transferred to the base mat through structural steel columns, which are attached to the base mat by anchor bolts, or reinforced concrete bearing, and shear walls, which are anchored to the base mat by reinforcing steel dowels.

3.8.5.1.3 Fuel Building

The fuel building foundation is a 6.5-foot-thick reinforced concrete mat extending 6 feet below plant grade. The mat is essentially rectangular with overall dimensions of 137 feet long and 91 feet wide. The thickness of the mat below the spent fuel pool is increased to 12 feet. Figures 3.8-121, and 3.8-122 show the general arrangement and details of the fuel building foundation.

The spent fuel racks are supported by the base slab of the fuel storage pool. Other equipment is rigidly attached to the base mat, intermediate floors, or walls by means of anchor bolts or welding to embedments in the concrete. All loads from equipment and internal structures not directly attached to the base mat are transferred to the base mat through reinforced concrete walls and pilasters, which are anchored to the base mat by reinforcing steel dowels.

3.8.5.1.4 Diesel Generator Building

The diesel generator building is supported by a 10.5-foot-thick reinforcing concrete mat, the bottom of which is 10 feet below plant grade. The mat is rectangular, and is 88.25 feet long and 66.25 feet wide. Figure 3.8-123 shows the general arrangement and details of the diesel generator building foundation.

The diesel generators are rigidly attached to the base mat by means of anchor bolts. Other equipment is rigidly attached to the base mat, intermediate platforms, walls, or roof by means of anchor bolts or welding to structural steel framing or embedments in the concrete. Loads from equipment and internal structures not directly attached to the base mat are transferred to the base mat through structural steel columns, which are attached to the foundation by anchor bolts, or reinforced concrete walls, which are anchored to the base mat by reinforcing steel dowels.

3.8.5.1.5 Refueling Water Storage Tank

The refueling water storage tank is supported by a 5.5-foot-thick reinforced concrete base mat which extends 4.5 feet below plant grade. The base mat is octagonal, with a distance of 43 feet between parallel edges. Figures 3.8-110 and 3.8-111 show the general arrangement and details of the refueling water storage tank foundation.

The refueling water storage tank is rigidly attached to the base mat by means of anchor bolts which transfer all loads, including seismic lateral forces, to the foundation.

3.8.5.1.6 Essential Service Water System Pumphouse

At grade, the ESWS pumphouse foundation consists of a 1-foot-8-inch-thick reinforced concrete floor slab spanning between 2-foot-thick grade beams and a 13-foot-thick pipe incasement integral with the floor slab and extending approximately 14 feet and 10 feet, respectively, below grade. The floor slab and integral grade beams and incasement are attached to the pipe pit and the forebay walls which extend to the below-grade portions of the foundations. Below grade, the ESWS pumphouse foundation consists of (1) a 2-foot-8-inch-thick, reinforced concrete pipe pit slab located approximately 14 feet below grade and (2) a 3-foot-8-inch-thick reinforced concrete forebay slab located approximately 47 feet below grade, with an apron slab which varies in thickness. The apron slab provides a transition from the forebay slab to the bottom of the ultimate heat sink. In plan, the combined area of the foundations forms a rectangular-shaped foundation approximately 39 feet wide and 100 feet long. The general arrangement and details of the ESWS pumphouse foundation are shown in Figures 3.8-131, 3.8-132, and 3.8-133.

Horizontal shears, such as those that are seismically induced, are transferred to the subgrade foundation media by friction along the bottom of the floor slab in areas that are not waterproofed and through the rock and soil below the shear keys attached to the forebay and apron slabs.

Equipment such as the ESWS pumps, ESWS strainers, and ESWS traveling water screens is anchored to the floor slab by means of anchor bolts which transmit the equipment loads, including seismic forces, to the foundation. Other equipment and piping are anchored to walls, roofs, or to platforms anchored to the floor slab. Refer to Section 3.8.4.4.1 for a description of the anchorage of internal structures to the foundation.

3.8.5.1.7 Deleted

3.8.5.1.8 Essential Service Water System Electrical Manholes

The ESWS electrical manhole foundations consist of 1-foot-6-inch-thick reinforced concrete slabs below grade. The slabs are rectangular in shape and have varying dimensions. Typical general arrangements and details of the ESWS electrical manholes are shown in Figure 3.8-140.

Transfer of horizontal shears, such as those that are seismically induced, is by means of the walls of the ESWS electrical manholes bearing against the soil which completely surrounds the manholes. Electrical conduit within the manholes is anchored to the walls.

3.8.5.1.9 Essential Service Water System Caissons

The foundation for the ESWS caisson’s consists of a 46.5 inch diameter rock socket in the limestone bedrock filled with reinforced concrete. General arrangement of the caissons is shown in Figure 3.8-137 Sh. 2.

Transfer of horizontal shears, such as those that are seismically induced, is by means of the reinforced concrete caisson bearing against the limestone rock socket.

3.8.5.1.10 Circulating and Warming Water Pipe Encasements

The foundations for the circulating and warming water pipe encasements consist of the encasements themselves, which are buried below grade.

3.8.5.1.11 Essential Service Water System Access Vaults

The foundation for each ESWS access vault is independent of the other. The foundation for each vault consists of a minimum thickness of 3 feet, reinforced concrete slab. The plan dimensions of the vaults are (24′ x 39.5′, 10.5′ x 24, 12.25′ x 44′, 17.75′ x 46′, 10.5′ x 24′ and 27′ x 29.5′). Transfer of horizontal loads due to lateral earth pressure and due to seismic is by means of the walls bearing against the soil which completely surrounds the vaults. ESWS pipes are anchored at the slab.

3.8.5.1.12 ESW Vertical Loop Chase

The ESW Vertical Loop Chase is supported by a reinforced concrete mat foundation, with a minimum thickness of 4 feet, founded 29.5 feet below plant grade. The shape of the base mat in plan conforms to the arrangement of the building it supports, and the base mat is approximately 27 feet wide at its widest section. The plan and details of the foundation for the auxiliary and control buildings are shown in Figures 3.8-119 and 3.8-120. The ESW piping supports in this building are rigidly attached to the base mat, intermediate floor framing, or control building west wall, by means of anchor bolts or attached to the wall mounting plates. All loads from piping and the internal structures not directly attached to the base mat are transferred to the base mat through structural steel columns, which are attached to the base mat by anchor bolts. Vertical piping loads are transferred to the base mat through supports and lateral piping loads are transferred to the Control building west wall through supports.

3.8.5.2 Applicable Codes, Standards, and Specifications

Applicable codes, standards, and specifications are discussed in Section 3.8.4.2.

3.8.5.3 Loads and Load Combinations

Foundation loads and load combinations are discussed in Section 3.8.4.3.

3.8.5.4 Design and Analysis Procedures

The design and analysis procedures for the reactor building foundation are discussed in BC-TOP-5-A.

The foundations for other powerblock seismic Category I structures are analyzed as flat slabs on elastic supports. Loads are applied to the slab through structural steel columns and reinforced concrete walls, with the resulting foundation-bearing pressures being determined using well-established principles and methods of engineering mechanics.

The foundations for the powerblock seismic Category I structures are designed using the strength design methods defined in ACI 318. The reinforcing steel is proportioned in accordance with accepted engineering formulas and conforms to the applicable codes and standards. The effects of design variables are accounted for by the use of conservative loads and load combinations and the use of load factors and capacity reduction factors.

The foundations of these structures were analyzed, using well-established methods based on the general principles of engineering mechanics. Codes, standards, and specifications prescribed in Section 3.8.4.2 are used in the design and analysis of structures and systems.

3.8.5.5 Structural Acceptance Criteria

The foundations for powerblock seismic Category I structures are designed to meet the same structural acceptance criteria as the structures themselves. The criteria are discussed in Sections 3.8.1.5 and 3.8.4.3.

Minimum safety factors for seismic Category I foundations, for the load combinations given in Sections 3.8.1.3 and 3.8.4.3, are:

Overturning	1.50
Sliding	1.10
Buoyancy	1.25

The limiting conditions for the foundation media are given in Section 2.5.4.10.

The foundations of nonpowerblock structures are designed to meet the structural acceptance criteria described in Sections 3.8.4.2 and 3.8.4.3. The limiting conditions for the foundation medium, together with a comparison between actual capacity and structural loads, are found in Section 2.5.4.

Nonpowerblock structures meet or exceed the factors of safety shown in Table 3.8-9 for the load combinations for overturning, sliding, and flotation given in Table 3.8-9. Definitions of D, E, W, E', and W t are found in Section 3.8.4.3.1. H is the lateral soil pressure, and F' is the buoyant force of the ground water which is assumed at grade. No live loads are included in these combinations to help resist overturning, sliding, and flotation.

3.8.5.6 Materials, Quality Control, and Special Construction Techniques

The foundations for the seismic Category I structures are constructed of reinforced concrete, using proven methods common to heavy industrial construction. For further discussion, refer to Sections 3.8.1.6 and 3.8.4.6.

3.8.5.7 Testing and Inservice Surveillance Requirements

Testing and inservice surveillance are not required, nor planned, for the foundations of the seismic Category I structures.

3.8.6 RADWASTE BUILDING AND TUNNEL

3.8.6.1 Description of the Structures

3.8.6.1.1 Radwaste Building

The radwaste building is a rectangular, multistory, structural steel and reinforced concrete structure which houses radioactive waste treatment facilities, tanks, filters, and other miscellaneous equipment. Figures 3.8-124 through 3.8-130 show the general arrangement of the building.

The radwaste building is supported on a reinforced concrete mat foundation with a minimum thickness of 4.5 feet. The building extends 33.5 feet below plant grade. Intermediate floors are reinforced concrete slabs with metal decking, supported by structural steel beams and girders, and reinforced concrete bearing walls. The building has a built-up roof, the top of which is 56 feet above grade, supported by structural steel beams and girders. The roof and intermediate floor framing are supported by structural steel columns and reinforced concrete bearing walls.

The storage area of the radwaste building is a single story, structural steel building supported on a reinforced concrete mat foundation, the top of which is 6 inches above plant grade. This area is separated from the adjacent portion of the radwaste building by isolation joints and houses the radioactive waste handling facilities, and storage areas. The storage areas are enclosed by reinforced concrete and/or masonry shield walls. The building has a built-up roof with a high point 31 feet above plant grade.

3.8.6.1.2 Radwaste Pipe Tunnel

The radwaste pipe tunnel is a below grade, reinforced concrete, two-cell box structure connecting the auxiliary building and the radwaste building. It is separated from both buildings by isolation joints. The bottom of the tunnel is 25.5 feet below plant grade, and the top is 8 feet below grade. The tunnel provides access and carries electrical cable trays and piping between the auxiliary building and the radwaste building.

3.8.6.2 Applicable Codes, Standards and Specifications

These structures were designed in accordance with the codes and standards listed in the following sections. Subsequent to operation, additional codes have been approved for use and are noted with an asterik.

3.8.6.2.1 Codes

a. American Concrete Institute, Building Code Requirements for Reinforced Concrete (ACI 318-71).

b. American Institute of Steel Construction (AISC), Specification for the Design, Fabrication, and Erection of Structural Steel for Buildings, 7th Edition, adopted February 12, 1969, and Supplement Nos. 1, 2, and 3.

c. American Institute of Steel Construction (AISC), Structural Joints Using ASTM A325 or A490 Bolts, May 8, 1974.

d. American Institute of Steel Construction (AISC), Code of Standard Practice for Steel Buildings and Bridges, October, 1972.

e. American Welding Society, Structural Welding Code (AWS D-1.1-75, *AWS D1.1-90, *AWS D1.1-2004).

f. International Conference of Building Officials, Uniform Building Code, 1973.

g. Appendix B, Steel Embedments,to the American Concrete Institute, Code Requirements for the Nuclear Safety Related Concrete Structures, ACI 349-80 with 1984 Supplement. The following sections of Appendix B relating specifically with expansion anchors will be applicable; Sections B.7.1 through B.7.5.

3.8.6.2.2 Standards and Specifications

Nationally recognized industry standards, such as those published by the ASTM, are used whenever possible to describe material properties, testing procedures, fabrication, and construction methods. The applicable standards used are discussed in Section 3.8.3.6.

Structural specifications were prepared to cover the areas related to the design and construction of these structures. The specifications were prepared specifically for the SNUPPS project (WCGS and Callaway). They emphasize important points of the industry standards for these structures and reduce options such as would otherwise be permitted by the industry standards. The specifications covered the following areas:

a. Concrete material properties
b. Mixing, placing, and curing of concrete
c. Reinforcing steel and splices
d. Structural steel
e. Miscellaneous and embedded steel
f. Anchor bolts
g. Grating

3.8.6.3 Loads and Load Combinations

The radwaste building and tunnel are designed for the applicable loads and load combinations specified in the codes listed in Section 3.8.6.2.1.

3.8.6.4 Design and Analysis Procedures

3.8.6.4.1 Radwaste Building

The intermediate concrete floor slabs are designed for the combination of dead, live, and lateral loads, in accordance with ACI-318. The structural steel beams and girders are designed as composite sections, in accordance with the AISC manual.

The exterior reinforced concrete walls are designed as one-way or two-way slabs supported at the base slab, intermediate floors, roof, and transverse walls, as applicable. The loading combinations are given in ACI-318.

The base slab is designed as a slab on an elastic foundation for loads and load combinations given in ACI-318.

The seismic loads for the structure are obtained by the following procedures:

a. The input motion at the foundation of the radwaste building is defined by normalizing the Regulatory Guide 1.60 spectra to the OBE maximum ground acceleration of 0.12g, as outlined in Section 3.7(B).1.1. The damping values given in Table 3.7(B)-1 are used. These are consistent with the damping values recommended in Regulatory Guide 1.61.

   A simplified analysis was performed to determine appropriate seismic loads and floor response spectra pertinent to the location of the systems. The simplified analysis involved the modeling of the building by a several-degrees-of-freedom mathematical model and time-history analysis to generate the floor response spectra for radwaste systems and the seismic loads for the building. The design time-histories are defined in Section 3.7(B).1.2.

b. The simplified method for determination of seismic loads for the building consists of (1) calculation of modal frequencies and participation factors for the building, (2) determination of modal seismic loads by item a, input spectra, and (3) combination of modal seismic loads by the square-root-of-the-sum-of-the-squares (SRSS) rule. Only two orthogonal horizontal inputs need to be considered in two separate analyses, and the greater of the two results of the analyses is used for building design.

c. Time-history analysis is performed to generate floor response spectra. Item a, design time-histories, will be used as input.

d. The load factors and load combinations used for the building are those given in ACI-318. The allowable stresses for steel components are those given in the AISC Manual of Steel Construction.

e. The construction and inspection requirements for the building elements comply with those stipulated in the AISC or ACI Code, as appropriate.

f. The foundation media of the radwaste building does not liquefy during the operating basis earthquake.

3.8.6.4.2 Radwaste Pipe Tunnel

The radwaste tunnel was analyzed as a rigid box in the transverse direction. Dynamic soil and hydro pressures were obtained in accordance with Section 2.5.4.10.3. Longitudinally it is designed as a beam on an elastic foundation. The tunnel is isolated from the radwaste and auxiliary buildings by isolation joints. The load factors and the loading combinations are given in ACI-318.

3.8.6.5 Structural Acceptance Criteria

These structures are designed for structural acceptance criteria defined in the codes listed in Section 3.8.6.2.1.

3.8.6.6 Materials, Quality Control, and Special Construction Techniques

The materials, quality control programs, and special construction techniques used in the fabrication and construction of these structures are described in the following sections.

3.8.6.6.1 Concrete

Structural concrete used in the construction of these structures has a minimum compressive strength, f' c, of 4,000 psi at 28 days. The concrete materials, mix design, examination, and placement are described in Section 3.8.1.6.1.

3.8.6.6.2 Reinforcing Steel and Splices

The reinforcing steel and splices used in the construction of these structures, including materials, examination, and erection tolerances, are described in Section 3.8.1.6.2.

3.8.6.6.3 Structural Steel

The structural steel used in the construction of these structures, including materials, examination, and erection, are described in Section 3.8.3.6.3.

3.8.6.6.4 Embedded Items

The embedded carbon steel items used in the construction of these structures, including materials, examination, and erection, are described in Section 3.8.3.6.4.

3.8.6.6.5 Quality Control

The quality control measures are discussed in Section 3.8.5.6.

3.8.6.6.6 Special Construction Techniques

These structures are constructed of concrete and steel, using proven methods common to heavy, industrial construction. No special, new, or unique construction techniques are used.

3.8.6.7 Testing and Inservice Surveillance Requirements

Testing and inservice surveillance are not required for these structures. No formal program of testing and inservice surveillance is planned.

3.8.7 REFERENCES

1. Biggs, J. M., Introduction to Structural Dynamics, McGraw Hill, Inc., 1964.

2. Brown, F. R., 1979, Letter of July 5, 1979 to Karl V. Seyfrit, Director Region IV, Nuclear Regulatory Commission.

3. Hankins D. E. and Griffith R. V., "A Survey of Neutrons Inside the Containment of a Pressurized Water Reactor," ORNL/RSIC-43, Page 114, February, 1979.

4. Hopkins W. C., "Calculations of the Neutron Environment Inside PWR Containments," ORNL/RSIC-43, Page 127, February, 1979.

5. Portland Cement Association, 1979, Wolf Creek Generating Station Reactor Base Mat Concrete Second Testing Program: Report dated February 27, 1979, Construction Technology Laboratories Division.

6. Straker E. A., Stevena P. N., Irving D. C., and Cain V. R., "The MORSE Code -- A Multigroup Neutron and Gamma-Ray Monte Carlo Transport Code., ORNL-4585, September, 1975.

7. Varga, S. A., 1979, NRC internal memorandum of July 10, 1979 for G. W. Reirnmuth, Assistant Director Division of Reactor Construction Inspection, Office of Inspection and Enforcement.

WOLF CREEK

TABLE 3.8-1

CONTROL TESTS FOR CONCRETE

Material	Requirements	Test Method	Minimum Frequency
Cement	Standard physical and chemical properties	ASTM C150	Each 1,200 tons
Fly ash and pozzolans	Chemical and physical properties in accordance with ASTM C618	ASTM C3111	Each 200 tons
Aggregate	Gradation	ASTM C136	Once per shift during production
	Moisture content	ASTM C566	Once per shift during production
	Material finer than #200 sieve	ASTM C117	Daily during production
	Organic impurities	ASTM C40	Once per shift during production
	Flat and elongated particles	CRD C-119*	Twice per month during production
	Friable particles	ASTM C142	Monthly during production
	Lightweight particles	ASTM C123	Monthly during production
	Soft fragments	ASTM C235	Monthly during production
	Specific gravity and absorption	ASTM C127 (coarse) ASTM C128 (fine)	Initially
	Los Angeles abrasion	ASTM C131	Every 6 months during production
	Potential reactivity	ASTM C289	Every 6 months during production
	Soundness	ASTM C88	Every 6 months during production
Water and Ice	Effect on compressive strength	AASHTO T-26	Every 6 months. If chemical data indicates that the water quality is unchanged, the tests may be waived by the owner.
	Setting time	AASHTO T-26	
	Soundness	AASHTO T-26	
	Total solids	AASHTO T-26	
	Chlorides	AASHTO T-26	
Admixtures	Chemical composition	Infrared spectro-photometry	Composite of each shipment
Concrete	Mixer uniformity	ASTM C94	Initially and every 6 months
	Sampling method	ASTM C172	
	Compression cylinders	ASTM C31	
	Compressive strength	ASTM C39	One set of 2 cylinders from each 100 cubic yards or a minimum of one set per day for each mix design, for each strength test.
	Slump	ASTM C143	First batch mixed each shift and every 50 cubic yards placed.
	Air content	ASTM C231	First batch mixed each shift and every 50 cubic yards placed.
	Temperature	-	First batch mixed each shift and every 50 cubic yards placed.
	Unit weight	ASTM C138	Every 100 cubic yards during production.

* Alternately, the project Technical Specifications provide for a procedure that may be used in lieu of the test method indicated.

TABLE 3.8-2

MAXIMUM ALLOWABLE OFFSET IN FINAL
WELDED JOINTS OF REACTOR
BUILDING LINER PLATE

Section Thickness (in.)	Direction of Joints in Circumferential Shells	
	Longitudinal	Circumferential
Up to 1/2 incl.	1/4 t	1/4 t
Over 1/2 to 3/4 incl.	1/8 in.	1/4 t
Over 3/4 to 1.5 incl.	1/8 in.	3/16 in.
Over 1.5	1/8 in.	1/8 t

"t" is the nominal thickness of the thinner section at the joint.

TABLE 3.8-3

STRESS LIMITS FOR STEEL PORTIONS OF CONCRETE CONTAINMENTS
DESIGNED IN ACCORDANCE WITH SUBSECTION NE OF THE ASME CODE

Section 3.8.2.3.11 Combination No.		Primary Stresses: Gen. Memb. P_m	Primary Stresses: Local Memb. P_L	Primary Stresses: Bend + Local Memb. $P_B + P_L$	Primary & Secondary Stresses	Peak Stresses	Buckling Note (3)
(1)		$.9S_y$	$1.25S_y$	$1.25S_y$	$3S_m$	Consider for fatigue analysis	125% of allow. given by NE-3133
(2) & (3)		S_m	$1.5S_m$	$1.5S_m$	$3S_m$	Consider for fatigue analysis	Allow. given by NE-3133
(4) & (5)		S_m	$1.5S_m$	$1.5S_m$	N/A	N/A	Allow. given by NE-3133
(6) & (7)	Not integral and continuous	S_m	$1.5S_m$	$1.5S_m$	N/A	N/A	Allow. given by NE-3133
	Integral and continuous	The greater of $1.2S_m$ or S_y	The greater of $1.8S_m$ or $1.5S_y$	The greater of $1.8S_m$ or $1.5S_y$	N/A	N/A	120% of allow. given by NE-3133
(8)	Not integral and continuous	The greater of $1.2S_m$ or S_y	The greater of $1.8S_m$ or $1.5S_y$	The greater of $1.8S_m$ or $1.5S_y$	N/A	N/A	120% of allow. given by NE-3133
	Integral and continuous	85% of stress intensity limits of Appendix F			N/A	N/A	85% of allow. given by F-1325 of App. F

NOTES: (1) Thermal stresses need not be considered in computing P_m, P_L, and P_B

(2) Thermal effects are considered in:

(a) Specifying stress intensity limits as a function of temperature.

(b) Analyzing effects of cyclic operation (NE-3222.4).

(3) If a detailed analysis considering ineleastic behavior is performed for checking instability (buckling), such an analysis should demonstrate that the applied stress is less than 50 percent of the critical buckling stress. Designs utilizing vertical stiffeners are permitted. The allowable axial compressive stress may be determined by considering the effects of circumferential stiffner spacing and the effects of water, if present.

TABLE 3.8-4

GENERAL DESIGN LIVE LOADS

Stairs and walkways	100 psf
Grating, floors, and platforms	100 psf (except in areas of heavier loads, which will govern)
Surcharge outside and adjacent to subsurface walls	250 psf vertical load or 8,000-pound wheel load converted to lateral equivalent load, whichever is governing, or railroad surcharge per AREA specification, where applicable
Railings	25 plf or 200 pounds applied in any direction at top of railing
Concentrated load on slabs (to be considered with dead load only)	5 kips to be so applied as to maximize moment or shear. This load is not carried to columns.
Concentrated load on beams and girders (in addition to all other loads)	5 kips to be so applied as to maximize moment or shear. This load is not carried to columns.
Ground floor	250 psf

TABLE 3.8-5

LOAD COMBINATIONS AND LOAD FACTORS
FOR CATEGORY I CONCRETE STRUCTURES

A. <u>Load Combinations For Service Load Conditions</u>

a. Working Stress Design Method

(1) $S = D + L$

(2) $S = D + L + E$

(3) $S = D + L + W$

1a) $1.3S = D + L + T + R$

(2a) $1.3S = D + L + T \circ + R \circ + E$

(3a) $1.3S = D + L + T \circ + R \circ + W$

Both cases of L having its full value or being completely absent are checked.

b. Strength Design Method

(1) $U = 1.4\ D + 1.7\ L$

(2) $U = 1.4\ D + 1.7\ L + 1.9\ E$

(3) $U = 1.4\ D + 1.7\ L + 1.7\ W$

(1b) $U = (0.75)\ (1.4\ D + 1.7\ L + 1.7\ T + 1.7\ R)$

(2b) $U = (0.75)\ (1.4\ D + 1.7\ L + 1.9\ E \circ + 1.7\ T \circ + 1.7\ R)$

(3b) $U = (0.75)\ (1.4\ D + 1.7\ L + 1.7\ W + 1.7\ T \circ + 1.7\ R \circ)$

Both cases of L having its full value or being completely absent are checked against the following combinations:

(2b') $U = 1.2\ D + 1.9\ E$

(3b') $U = 1.2\ D + 1.7\ W$

Where soil and/or hydrostatic pressures are present, in addition to all the above combinations where they have been included in L and D, respectively, the requirements of Sections 9.3.4 and 9.3.5 of ACI-318 are also satisfied.

TABLE 3.8-5 (Sheet 2)

B. Load Combinations For Factored Load Conditions

For extreme environmental, abnormal, abnormal/severe environmental and abnormal/extreme environmental conditions, respectively, the strength design method should be used, and the following load combinations are satisfied:

(4) $U = D + L + T_o + R_o + E'$

(5) $U = D + L + T_o + R_o + W_t$

(6) $U = D + L + T_a + R_a + 1.5\ P_a$

(7) $U = D + L + T_a + R_a + 1.25\ P_a + 1.0\ (Y_r + Y_j + Y_m) + 1.25\ E'_a$

(8) $U = D + L + T_a + R_a + 1.0\ P_a + 1.0\ (Y_r + Y_j + Y_m) + 1.0\ E'_a$

(9) $U = D + L + T_o + R_o + N$

In combinations (6), (7), and (8), the maximum values of P_a, T_a, R_a, Y_j, Y_r, and Y_m, including an appropriate dynamic load factor, are used unless a time-history analysis is performed to justify otherwise. Combinations (5), (7), and (8) are satisfied first without the tornado missile load in (5) and without Y_r, Y_j, and Y_m in (7) and (8). When considering these loads, however, local section strength capacities may be exceeded under the effect of these concentrated loads, provided there will be no loss of function of any safety-related system.

Both cases of L having its full value or being completely absent are checked.

TABLE 3.8-6

LOAD COMBINATIONS AND LOAD FACTORS
FOR
SEISMIC CATEGORY I CONCRETE STRUCTURES

Working Stress Design Method

(1) $S = D + L$
(2) $S = D + L + E$
(3) $S = D + L + W$
(1a) $1.3S = D + L + \underset{\circ}{T} + \underset{\circ}{R}$
(2a) $1.3S = D + L + \underset{\circ}{T} + \underset{\circ}{R} + E$
(3a) $1.3S = D + L + \underset{\circ}{T} + \underset{\circ}{R} + W$

Both cases of "L" having its full value or being completely absent should be checked.

Strength Design Method

(1) $U = 1.4D + 1.7L$
(2) $U = 1.4D + 1.7L + 1.9E$
(3) $U = 1.4D + 1.7L + 1.7W$
(1b) $U = 0.75\ (1.4D + 1.7L + 1.7\underset{\circ}{T} + 1.7\underset{\circ}{R})$
(2b) $U = 0.75\ (1.4D + 1.7L + 1.7\underset{\circ}{T} + 1.7\underset{\circ}{R} + 1.9E)$
(3b) $U = 0.75\ (1.4D + 1.7L + 1.7\underset{\circ}{T} + 1.7\underset{\circ}{R} + 1.7W)$

Both cases of "L" having its full value or being completely absent should be checked with the following combinations:

(2b') $U = 1.2D + 1.9E$
(3b') $U = 1.2D + 1.7W$

Where soil and/or hydrostatic pressures are present, in addition to all the above combinations where they have been included in L and D, respectively, the requirements of Section 9.3.4 and 9.3.5 of ACI 318-71 should also be satisfied.

For the following combinations, which represent extreme environmental conditions, the strength design method should be used, and the following load combinations should be satisfied:

(4) $U = D + L + \underset{\circ}{T} + \underset{\circ}{R} + E'$
(5) $U = D + L + \underset{\circ}{T} + \underset{\circ}{R} + W$
(6) $U = D + L + \underset{\circ}{T} + \underset{\circ}{R} + \underset{t}{N}$

TABLE 3.8-7

LOAD COMBINATIONS AND LOAD FACTORS

FOR CATEGORY I STEEL STRUCTURES

A. <u>Load Combinations for Service Load Conditions</u>

a. Working and Stress Design Method

(1) $S = D + L$

(2) $S = D + L + E$

(3) $S = D + L + W$

(1a) $1.5\ S = D + L + T_o + R_o$

(2a) $1.5\ S = D + L + T_o + R_o + E$

(3a) $1.5\ S = D + L + T_o + R_o + W$

Both cases of L having its full value or being completely absent are checked.

b. Plastic Design Method

(1) $Y + 1.7\ D + 1.7\ L$

(2) $Y = 1.7\ D + 1.7\ L + 1.7\ E$

(3) $Y = 1.7\ D + 1.7\ L + 1.7\ W$

(1b) $Y = 1.3\ (D + L + T_o + R_o)$

(2b) $Y = 1.3\ (D + L + E + T_o + R_o)$

(3) $Y = 1.3\ (D + L + W + T_o + R_o)$

Both cases of L having its full value or being completely absent are checked.

B. Load Combinations for Factored Load Conditions

a. Working Stress Design Method

(4) $1.6\ S = D + L + T_o + R_o + E'$

(5) $1.6\ S + D + L + T_o + R_o + W_t$

(6) $1.6\ S = D + L + T_a + R_a + P_a$

TABLE 3.8-7 (Sheet 2)

(7) $1.6S^* = D + L + T_a + R_a + P_a + 1.0 (Y_j + Y_r + Y_m) + E$

(8) $1.7s^* = D + L + T_a + R_a + P_a + 1.0 (Y_j + Y_r + Y_m) + E'$

(9) $1.6S = D + L + T_o + R_o + N$

*For these two combinations, (7) and (8), in computing the required section strength, S, the plastic section modulus of steel shapes is used.

b. Plastic Design Method

(4) $.90\ Y = D + L + T_o + R_o + E'$

(5) $.90\ Y = D + L + T_o + R_o + W_t$

(6) $.90\ Y = D + L + T_a + R_a + 1.5\ P_a$

(7) $.90\ Y = D + L + T_a + R_a + 1.25\ P_a + 1.0 (Y_j + Y_r + Y_m) + 1.25\ E_a$

(8) $.90\ Y = D + L + T_a + R_a + 1.0\ P_a + 1.0 (Y_j + Y_r + Y_m) + E'$

(9) $.90\ Y = D + L + T_o + R_o + N$

In combination B (a) and (b) above, thermal loads are neglected when it is shown that they are secondary and self-limiting in nature and where the material is ductile.

In combinations (6), (7) and (8), the maximum values of P_a, T_a, R_a, Y_j, Y_r and Y_m, including an appropriate dynamic load factor, are used unless a time-history analysis is performed to justify otherwise.

Combination (5), (7), and (8) are first satisfied without the tornado missile load in (5) and without Y_r, Y_j, and Y_m in (7) and (8). When considering these loads, however, local section strengths may be exceeded under the effect of these concentrated loads, provided there will be no loss of function of any safety-related system.

TABLE 3.8-8

LOAD COMBINATIONS AND LOAD FACTORS
FOR
SEISMIC CATEGORY I STEEL STRUCTURES

Elastic Working Stress Design Method

(1) $S = D + L$
(2) $S = D + L + E$
(3) $S = D + L + W$
(1a) $1.5\,S = D + L + T_o + R_o$
(2a) $1.5\,S = D + L + T_o + R_o + E$
(3a) $1.5\,S = D + L + T_o + R_o + W$

Both cases of "L" having its full value or being completely absent should be checked in the above combinations.

(4) $1.6\,S = D + L + T_o + R_o + E'$
(5) $1.6\,S = D + L + T_o + R_o + W_t$
(6) $1.6\,S = D + L + T_o + R_o + N$

Plastic Design Method

(1) $Y = 1.7\,D + 1.7\,L$
(2) $Y = 1.7\,D + 1.7\,L + 1.7\,E$
(3) $Y = 1.7\,D + 1.7\,L + 1.7\,W$
(1b) $Y = 1.3\,(D + L + T_o + R_o)$
(2b) $Y = 1.3\,(D + L + E + T_o + R_o)$
(3b) $Y = 1.3\,(D + L + W + T_o + R_o)$

Both cases of "L" having its full value or being completely absent should be checked in the above combinations.

(4) $.90Y = D + L + T_o + R_o + E'$
(5) $.90Y = D + L + T_o + R_o + W_t$
(6) $.90Y = D + L + T_o + R_o + N$

TABLE 3.8-9

ADDITIONAL LOAD COMBINATIONS FOR
SLIDING, OVERTURNING, AND FLOTATION

Loading Combination	Minimum Factor of Safety		
	Overturning	Sliding	Flotation
a. D + H + E	1.50	1.10	---
b D + H + W	1.50	1.10	---
c. D + H + E’	1.50	1.10	---
d. D + H + W	1.50	1.10	---
e. D + F’ t	---	---	1.25

Rev. 0

WOLF CREEK
UPDATED SAFETY ANALYSIS REPORT

FIGURE 3.8-1

PLAN AND ELEVATION OF REACTOR BUILDING

[redacted]

WOLF CREEK REV.22

UPDATED SAFETY ANALYSIS REPORT

FIGURE 3.8-2

REACTOR BUILDING GROUND FLOOR

PLAN - ELEV. 2000'-0" AND 2001'-4"

[redacted]

Rev. 30

WOLF CREEK
UPDATED SAFETY ANALYSIS REPORT

FIGURE 3.8-3

REACTOR BUILDING
INTERMEDIATE FLOOR
PLAN - ELEV. 2026'-0"

WOLF CREEK

[redacted]

REV.19

WOLF CREEK
UPDATED SAFETY ANALYSIS REPORT

FIGURE 3.8-4

REACTOR BUILDING OPERATING FLOOR PLAN - ELEV.2047'-6" AND 2051'-0"

[redacted]

Rev. 0

WOLF CREEK
UPDATED SAFETY ANALYSIS REPORT

FIGURE 3.8-5

REACTOR BUILDING PLAN - ELEV 2068' 0"

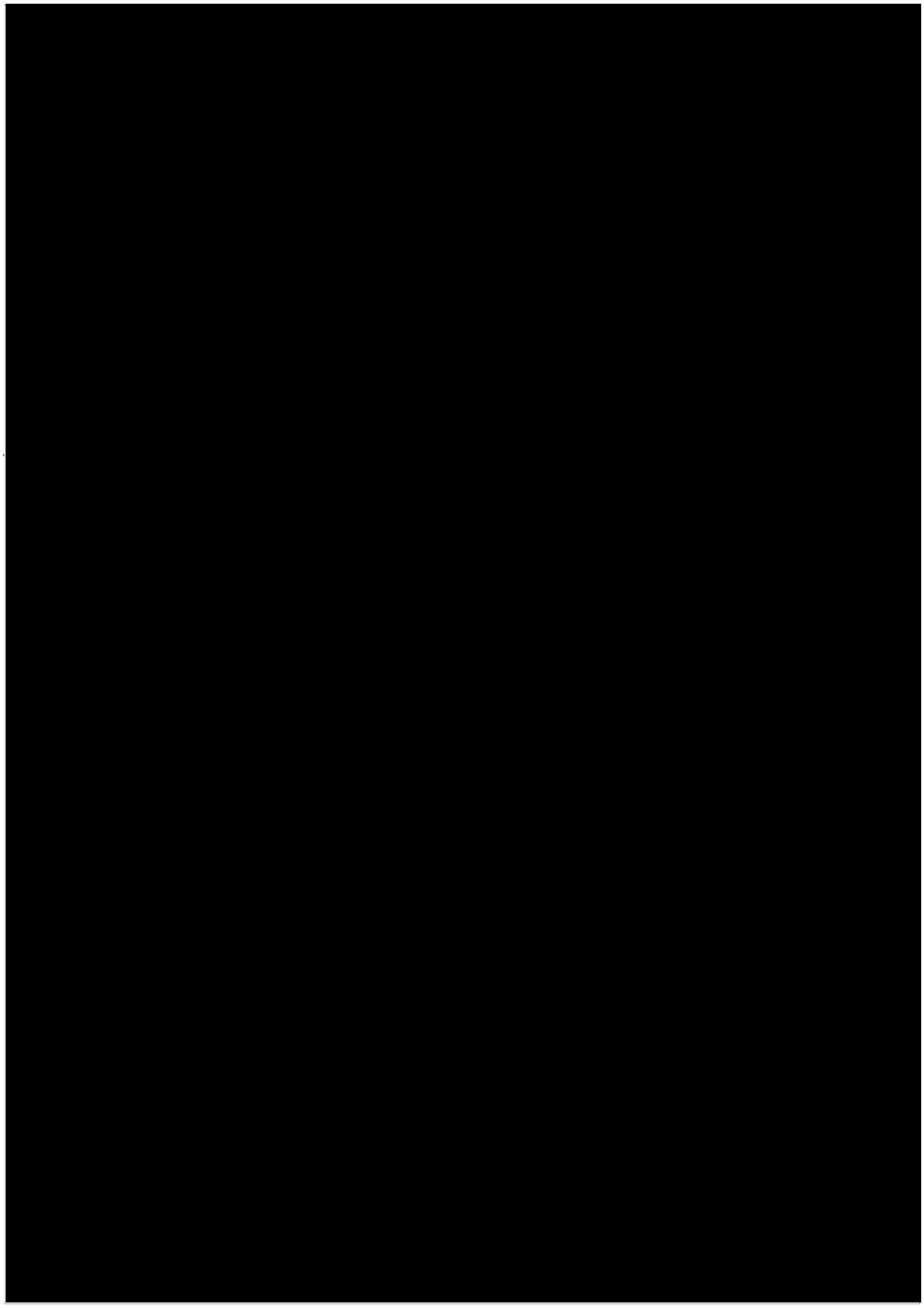

REV.30

WOLF CREEK
UPDATED SAFETY ANALYSIS REPORT

FIGURE 3.8-6

REACTOR BUILDING EAST-WEST
CROSS SECTION

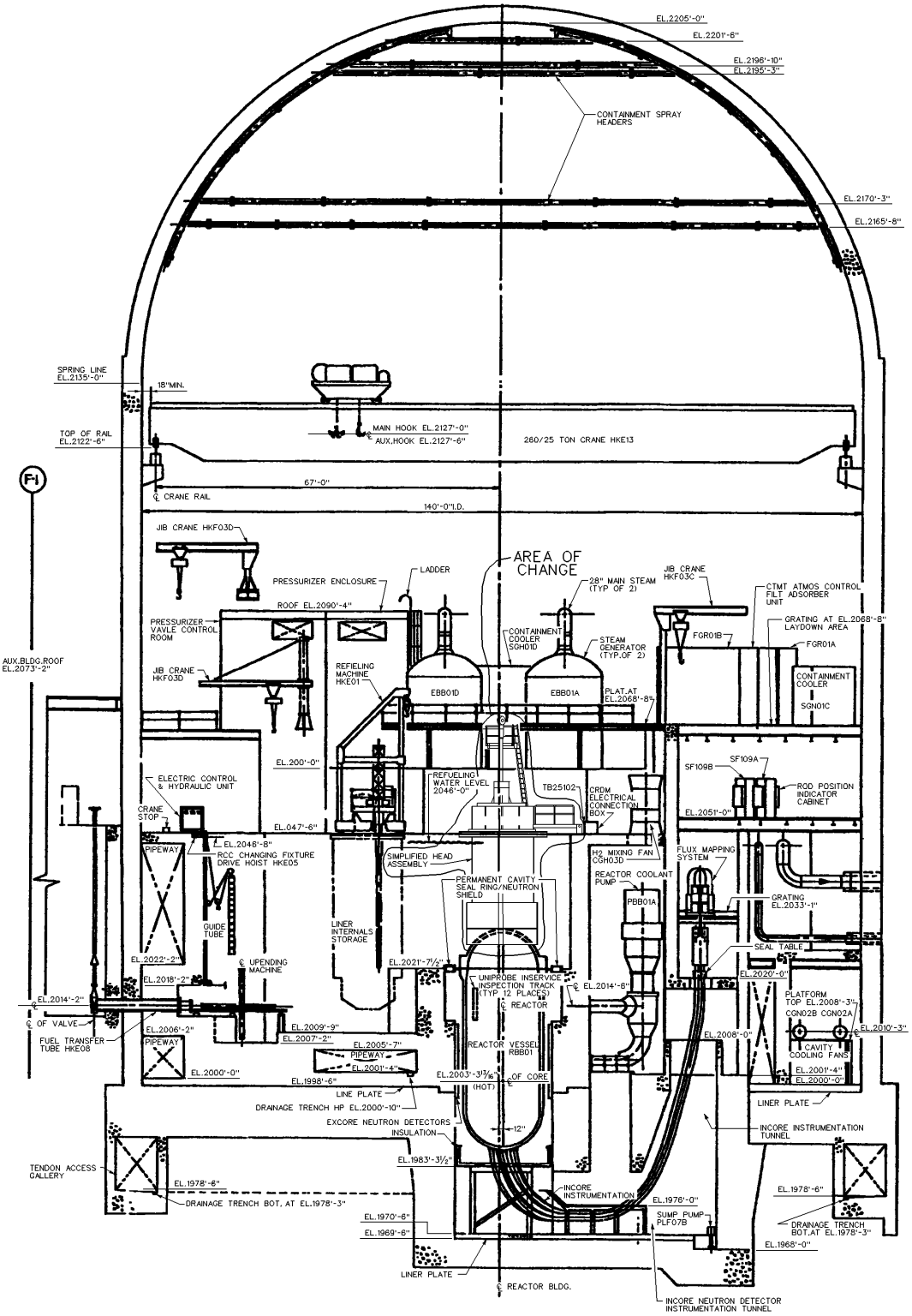

SECTION B
LOOKING WEST

REV.19

WOLF CREEK
UPDATED SAFETY ANALYSIS REPORT

FIGURE 3.8-7

REACTOR BUILDING NORTH - SOUTH CROSS SECTION

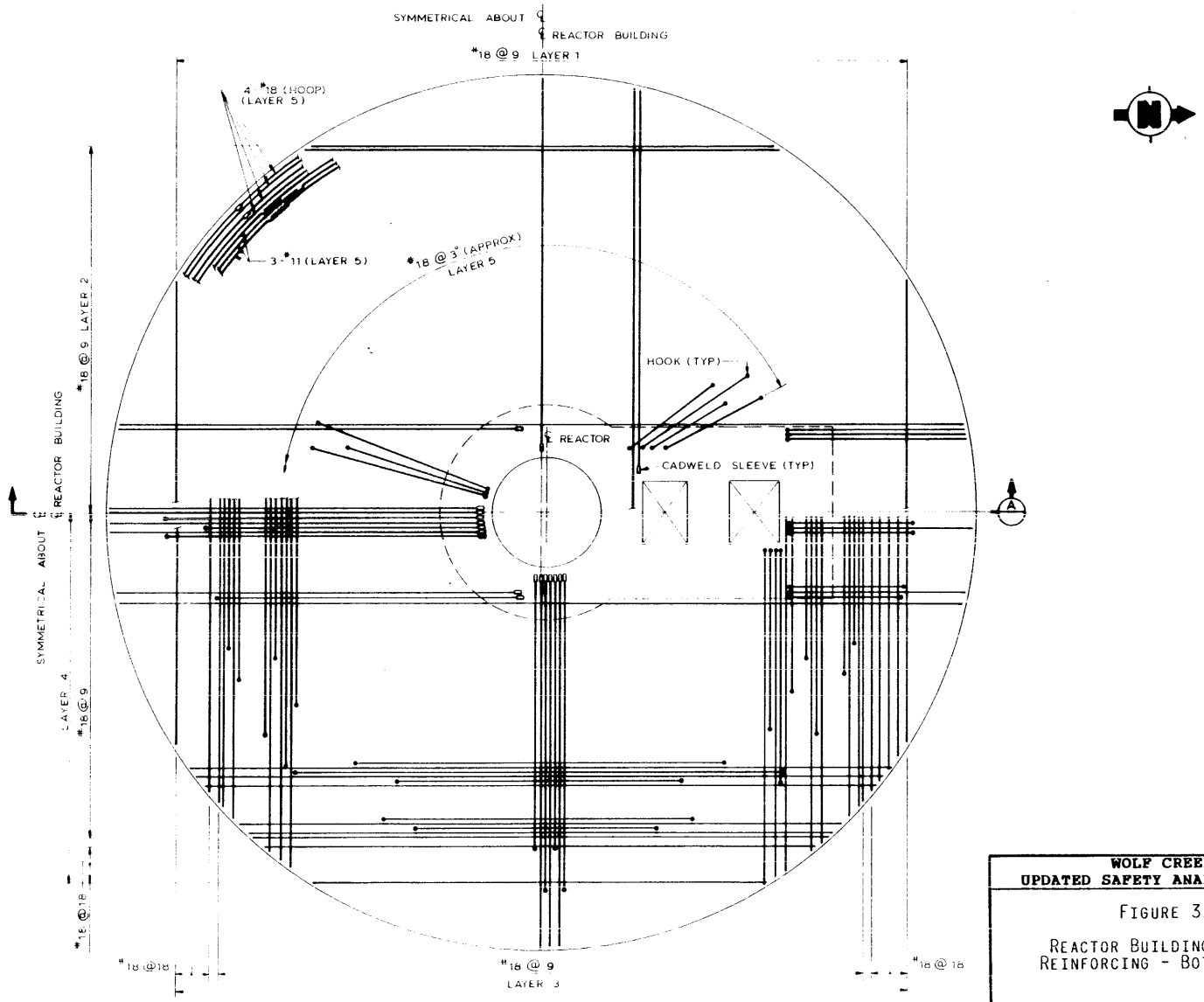

Rev. 0

WOLF CREEK
UPDATED SAFETY ANALYSIS REPORT

FIGURE 3.8-8

REACTOR BUILDING BASE MAT REINFORCING - BOTTOM LAYERS

WOLF CREEK

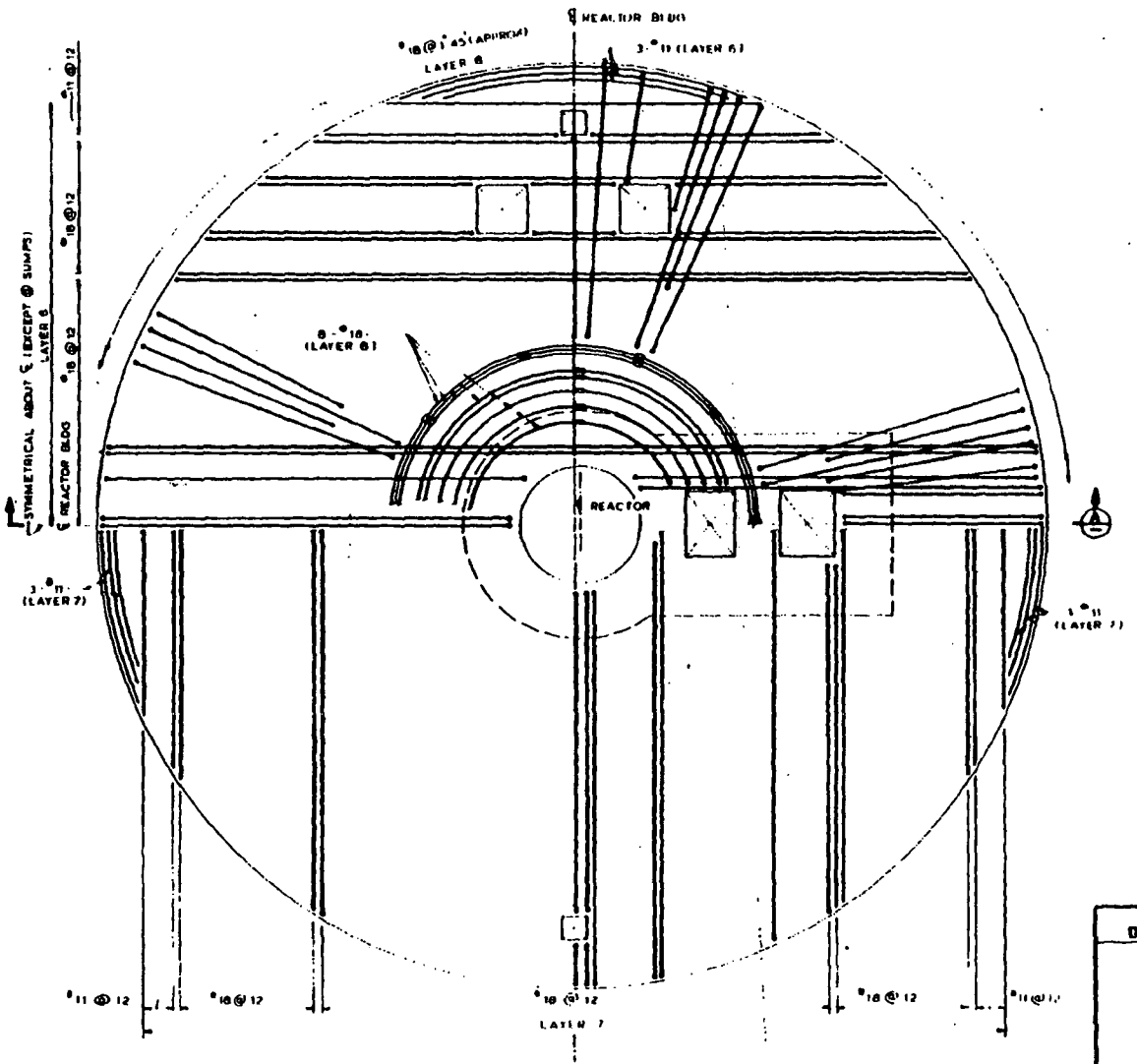

Rev. 0

WOLF CREEK
UPDATED SAFETY ANALYSIS REPORT

FIGURE 3.8-9

REACTOR BUILDING BASE MAT
REINFORCING - TOP LAYERS

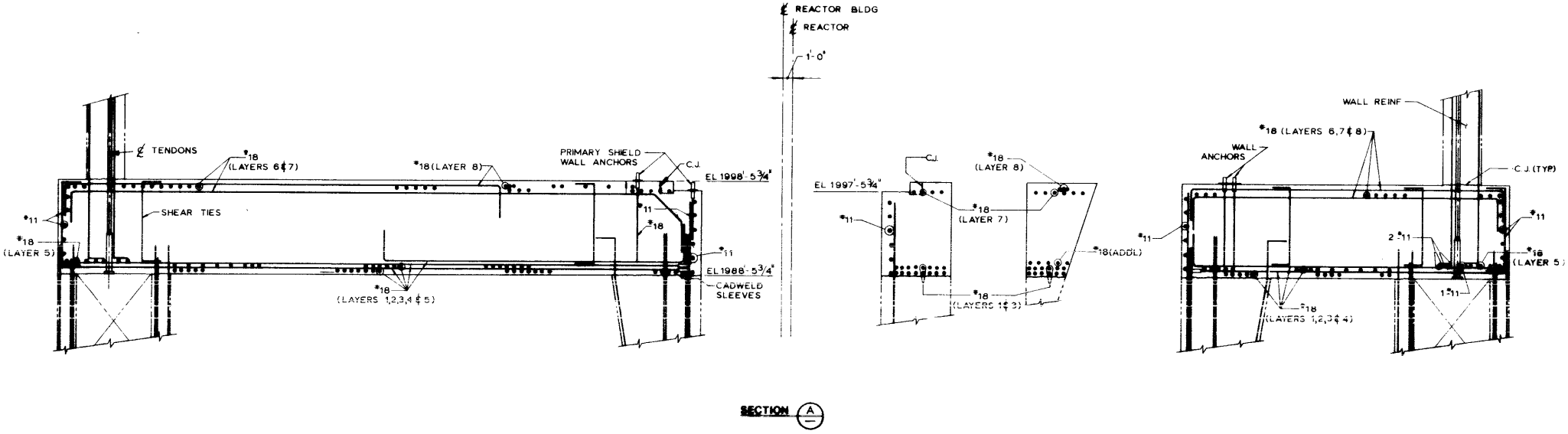

Rev. 0

WOLF CREEK
UPDATED SAFETY ANALYSIS REPORT

FIGURE 3.8-10

REACTOR BUILDING BASE MAT REINFORCING - CROSS SECTION

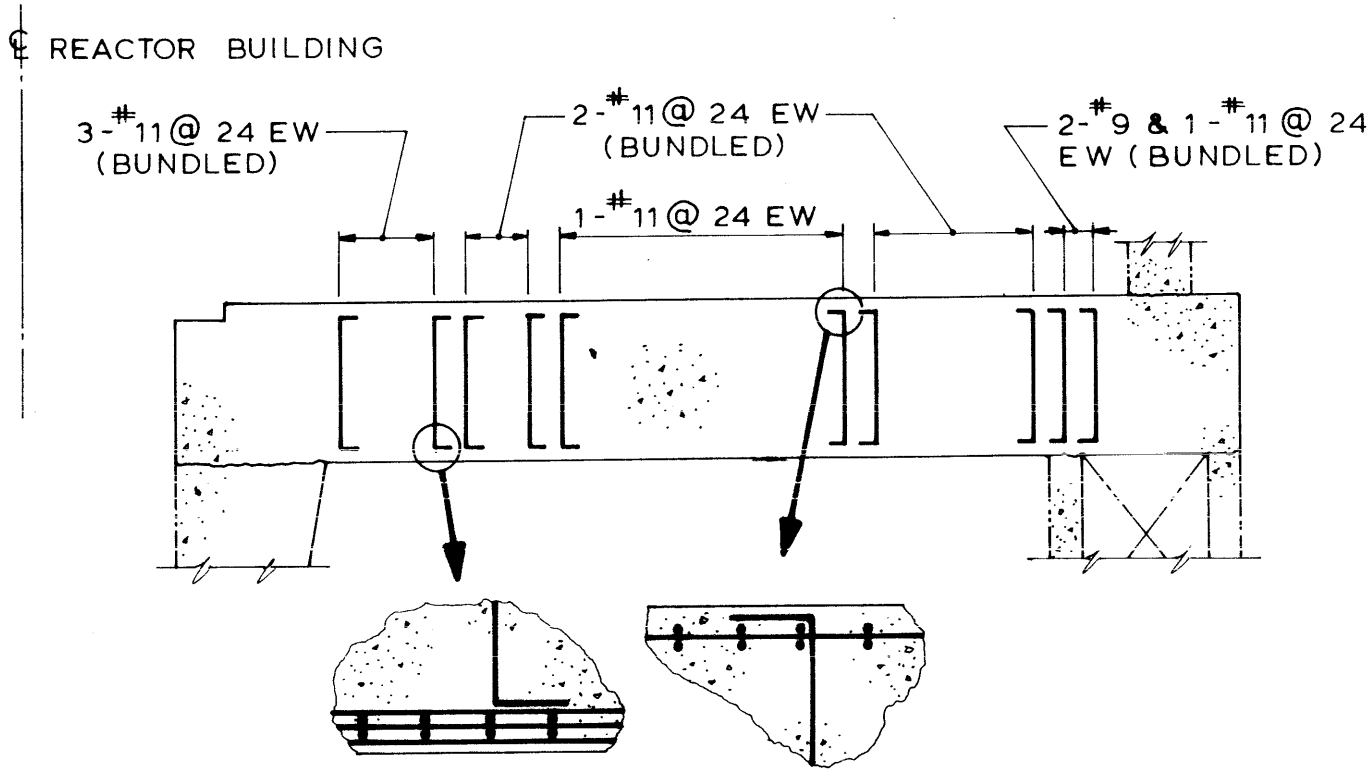

TYPICAL SECTION SHOWING SHEAR REINFORCING

Rev. 0

WOLF CREEK
UPDATED SAFETY ANALYSIS REPORT

FIGURE 3.8-11

REACTOR BUILDING BASE MAT REINFORCING - SHEAR TIE

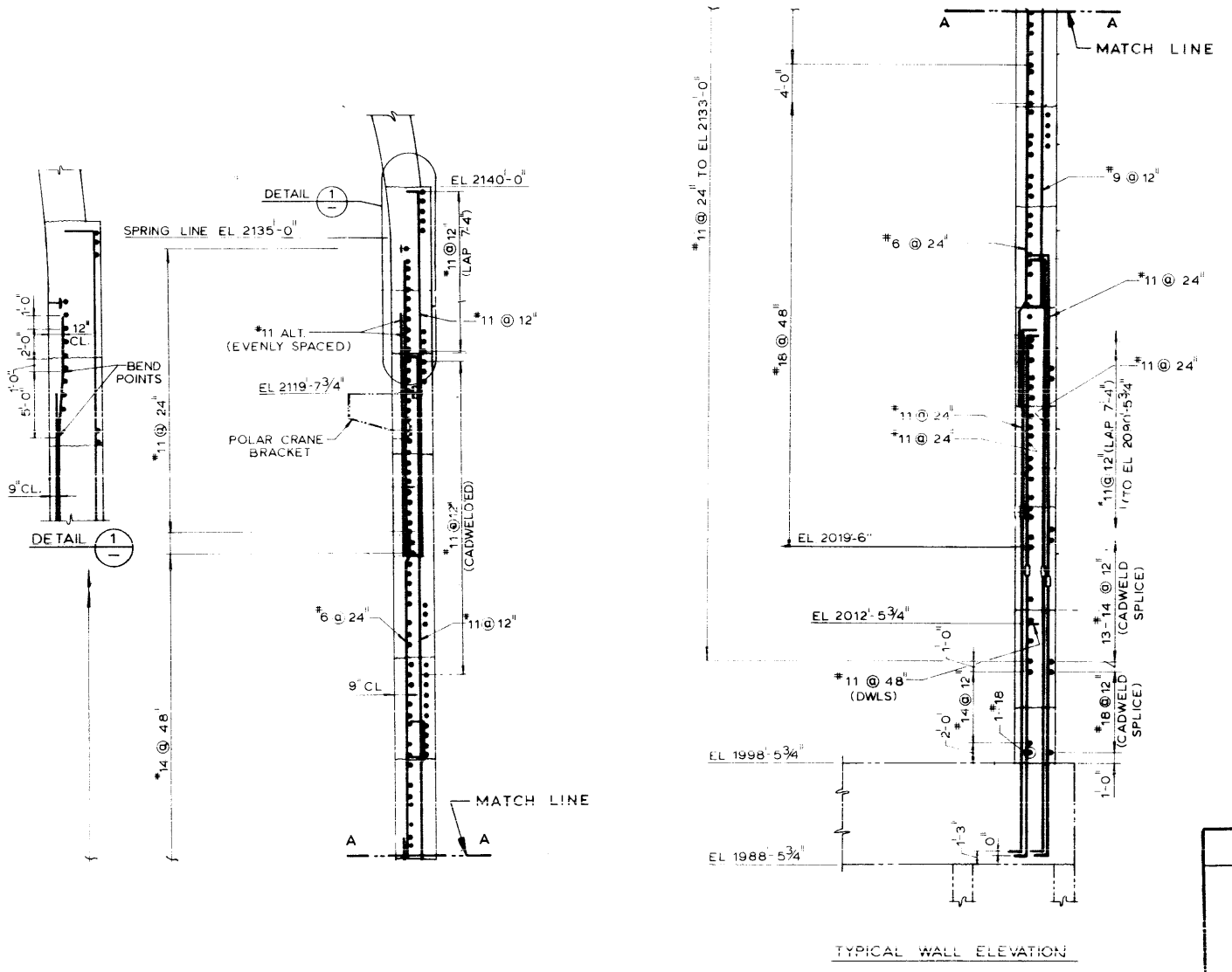

Rev. 0

WOLF CREEK
UPDATED SAFETY ANALYSIS REPORT

FIGURE 3.8-12

REACTOR BUILDING SHELL REINFORCING

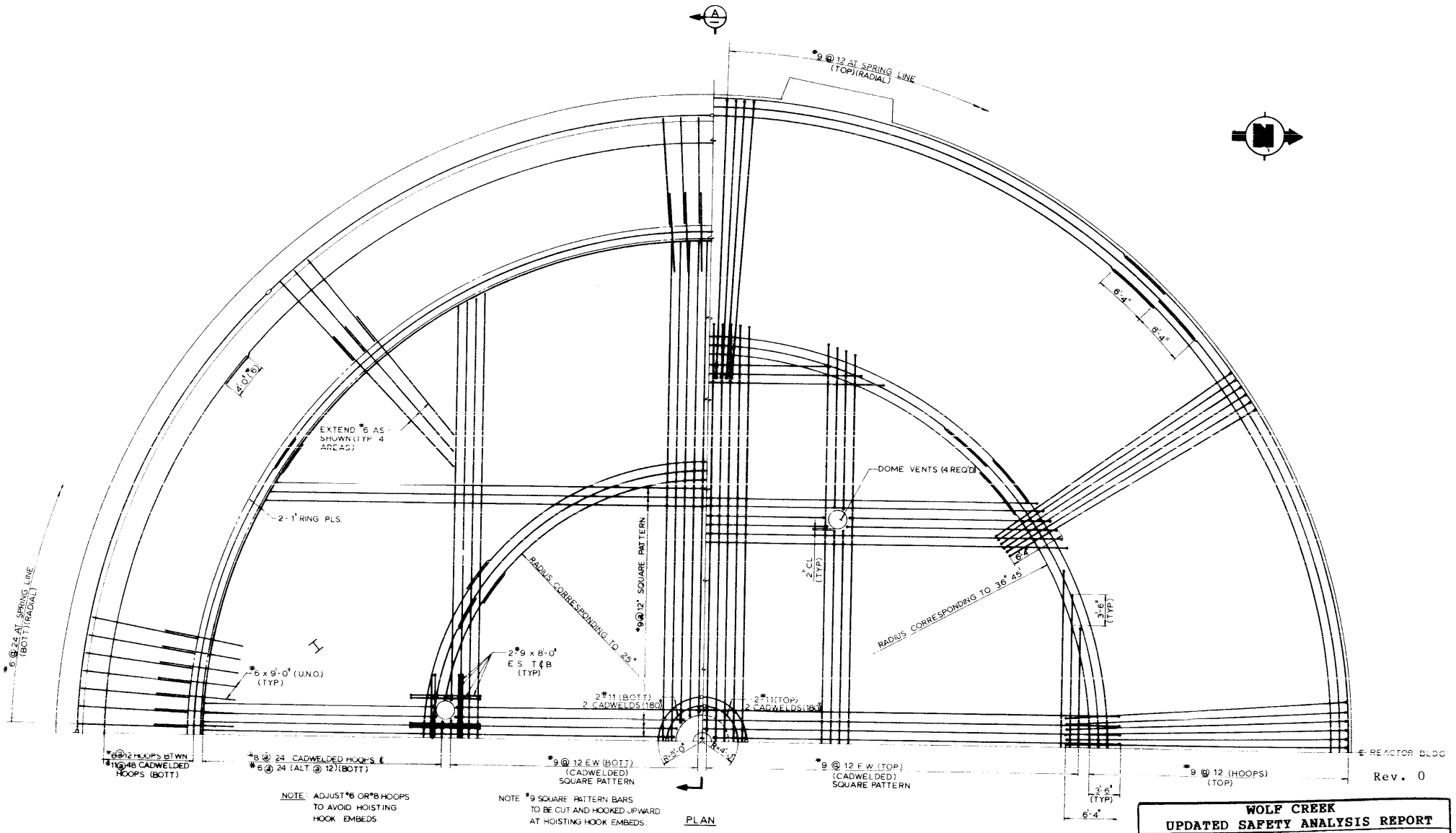

Rev. 0

WOLF CREEK
UPDATED SAFETY ANALYSIS REPORT

FIGURE 3.8-13

REACTOR BUILDING DOME REINFORCING PLAN

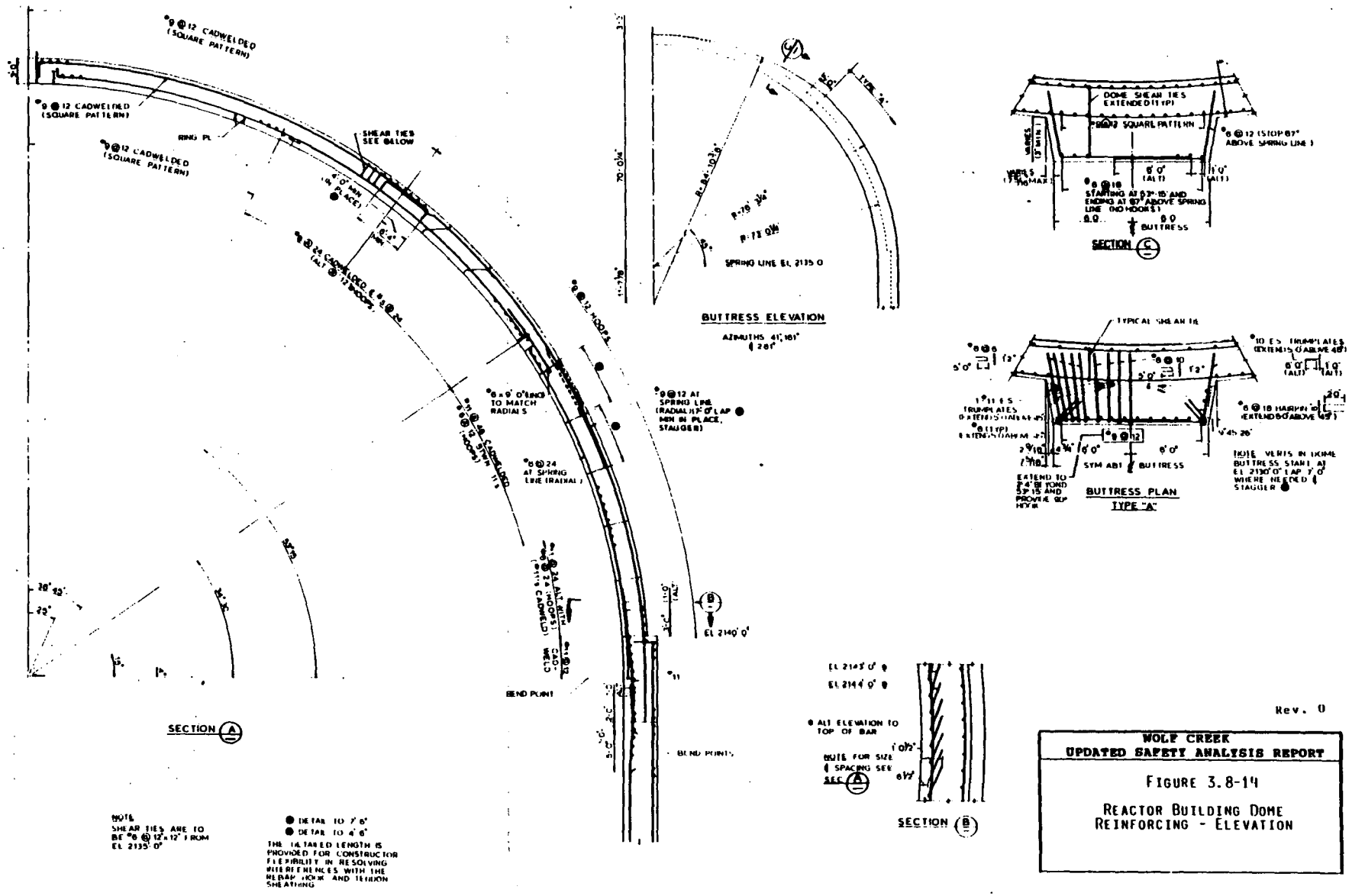

Rev. 0

WOLF CREEK
UPDATED SAFETY ANALYSIS REPORT

FIGURE 3.8-14

REACTOR BUILDING DOME REINFORCING - ELEVATION

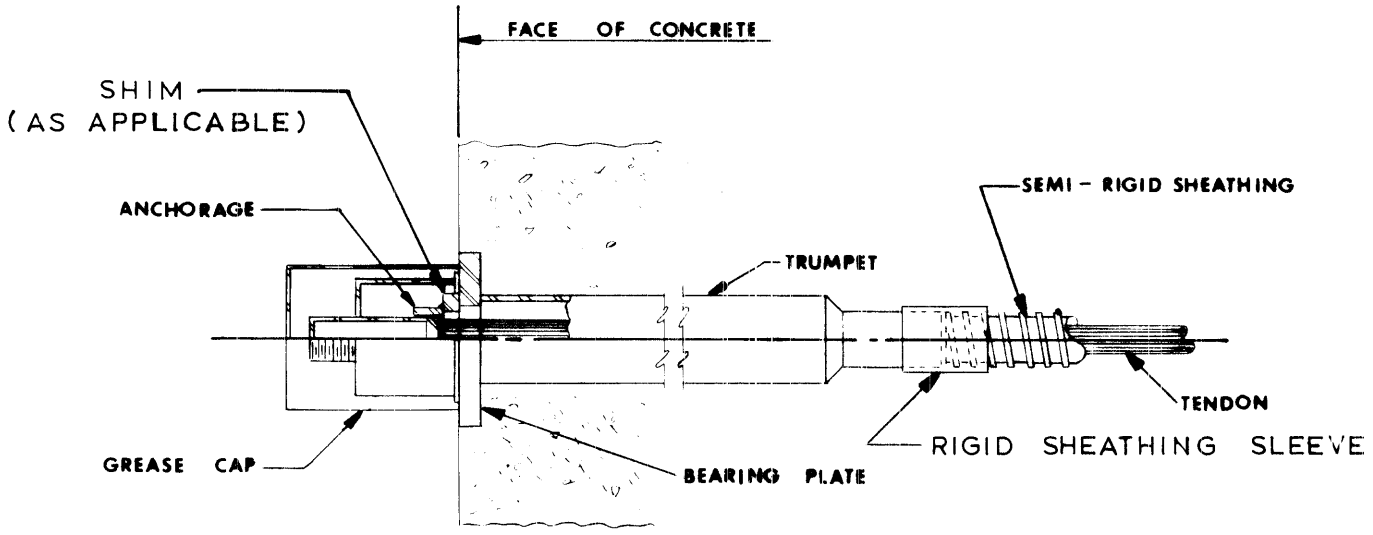

Rev. 0

WOLF CREEK
UPDATED SAFETY ANALYSIS REPORT

FIGURE 3.8-15

REACTOR BUILDING TENDON ANCHORAGE SYSTEM

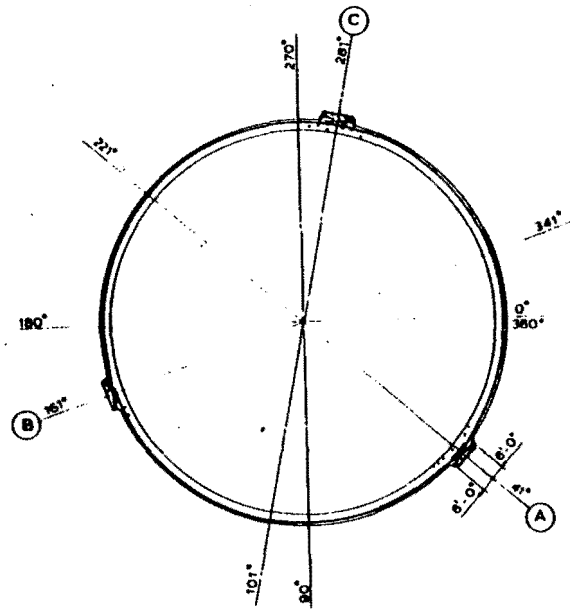

WALL PLAN
(HORIZONTALS)

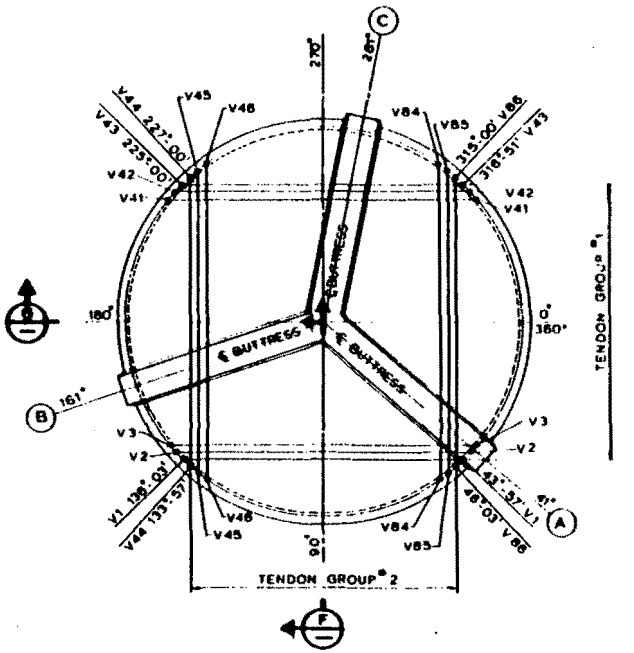

DOME PLAN
(VERTICALS)

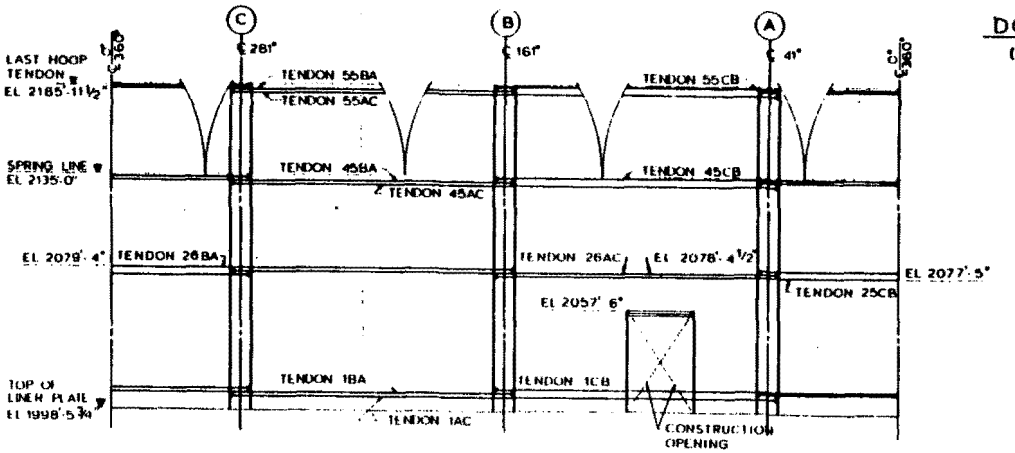

WALL ELEVATION
HORIZONTALS

Rev. 0

WOLF CREEK
UPDATED SAFETY ANALYSIS REPORT

FIGURE 3.8-16

REACTOR BUILDING TENDON AND BUTTRESS ARRANGEMENT

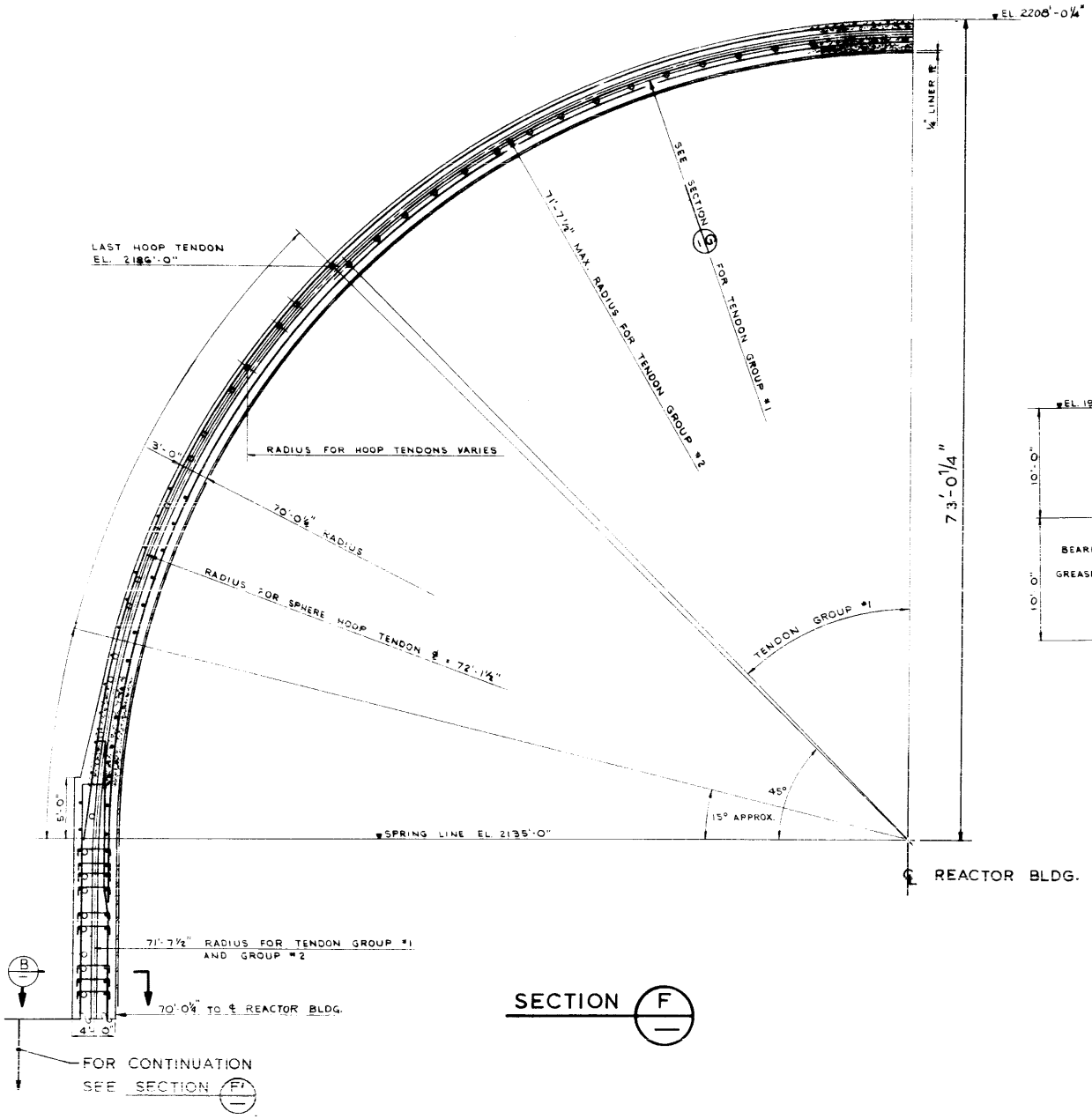

SECTION F

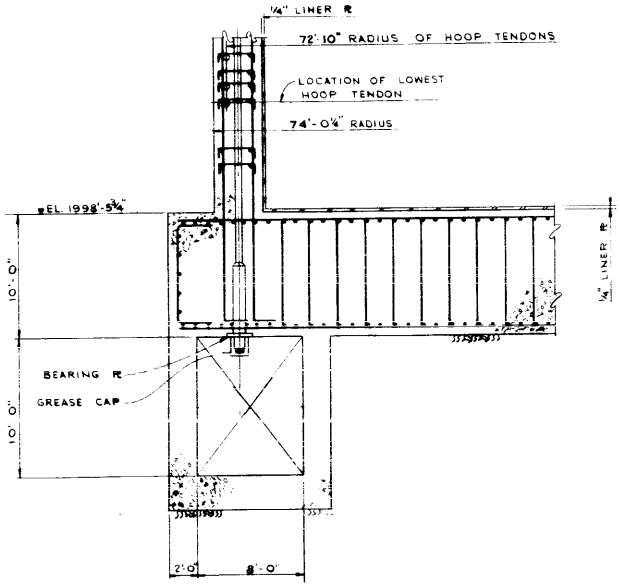

SECTION F'

Rev. 0

WOLF CREEK
UPDATED SAFETY ANALYSIS REPORT

FIGURE 3.8-17

REACTOR BUILDING
TENDONS - SECTIONS

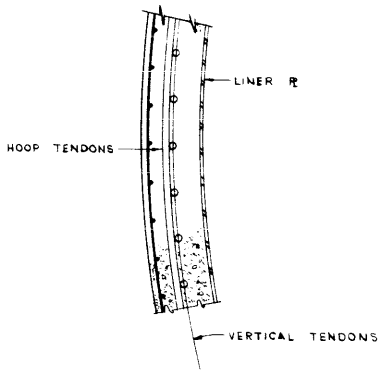

SECTION B/—

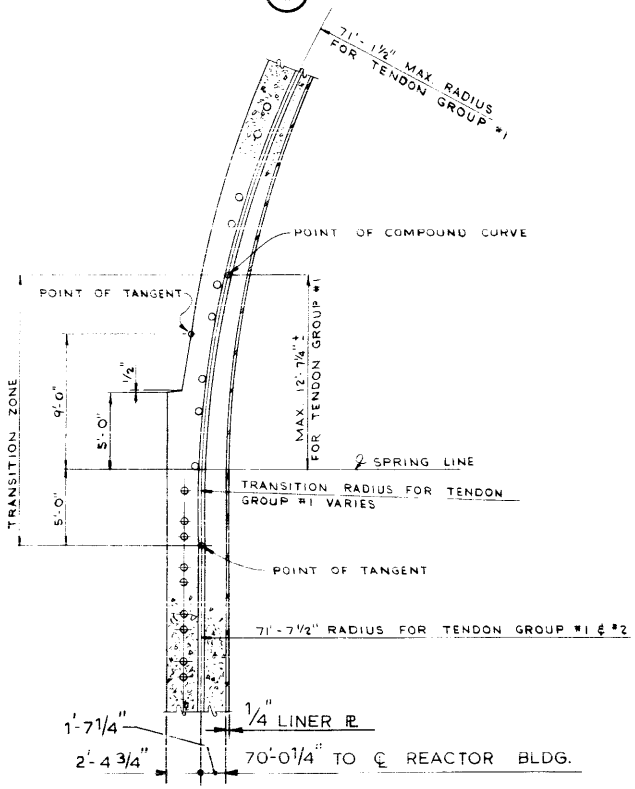

SECTION G/—

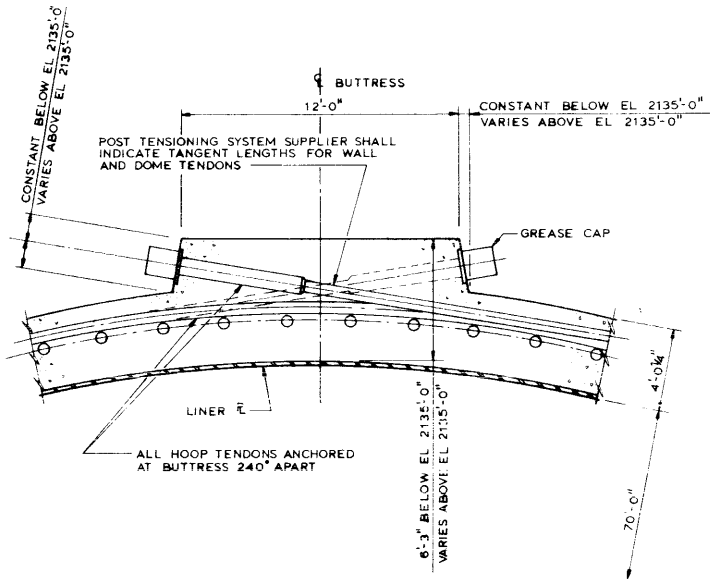

TYPICAL BUTTRESS DETAIL

Rev. 0

WOLF CREEK
UPDATED SAFETY ANALYSIS REPORT

FIGURE 3.8-18

REACTOR BUILDING TENDONS - ADDITIONAL SECTIONS

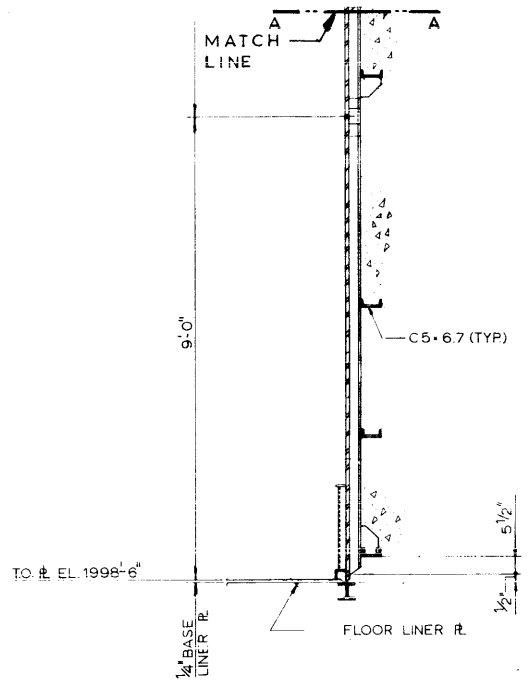

SECTION A

TYPICAL SECTION THRU WALL LINER PLATE

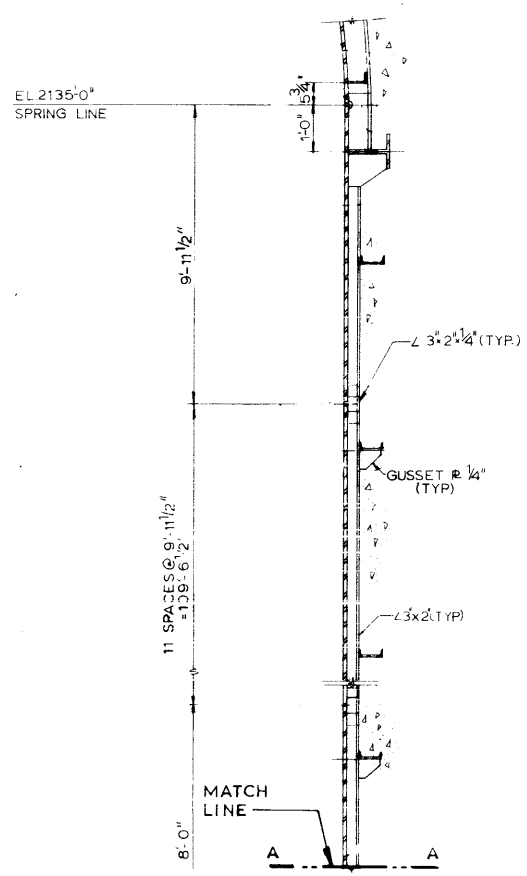

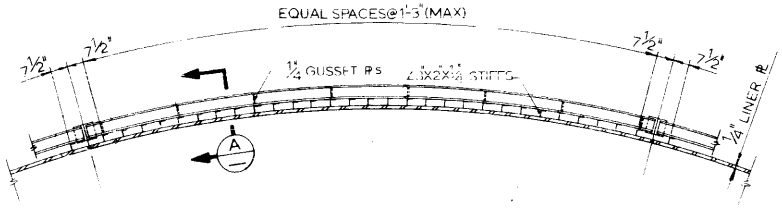

PLAN TYPICAL SEGMENT OF LINER PLATE

Rev. 0

WOLF CREEK
UPDATED SAFETY ANALYSIS REPORT

FIGURE 3.8-19

REACTOR BUILDING LINER PLATE - TYPICAL WALL SECTIONS

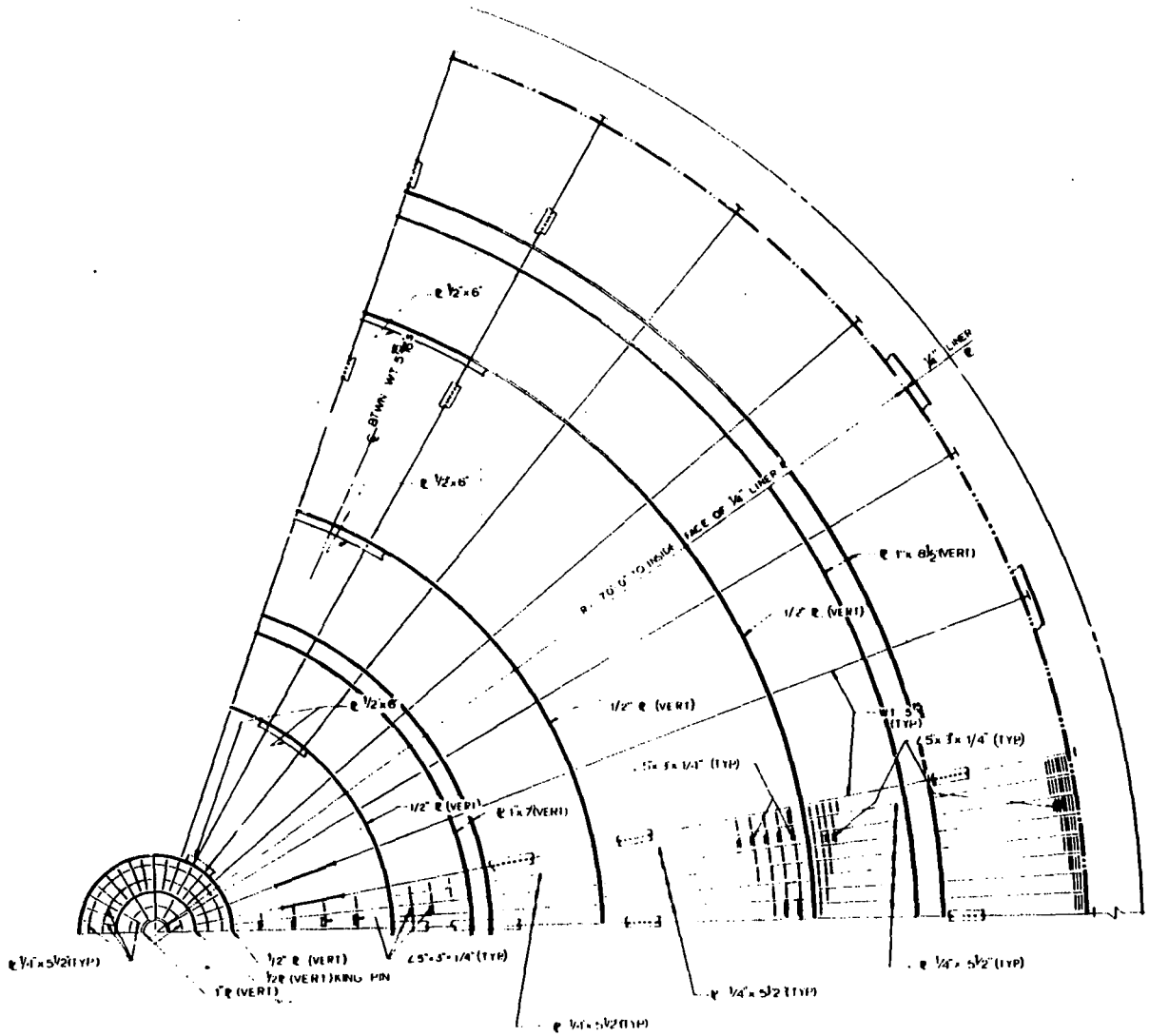

PLAN

Rev. 0

WOLF CREEK
UPDATED SAFETY ANALYSIS REPORT

FIGURE 3.8-20

REACTOR BUILDING LINER PLATE - DOME STIFFENER PLAN

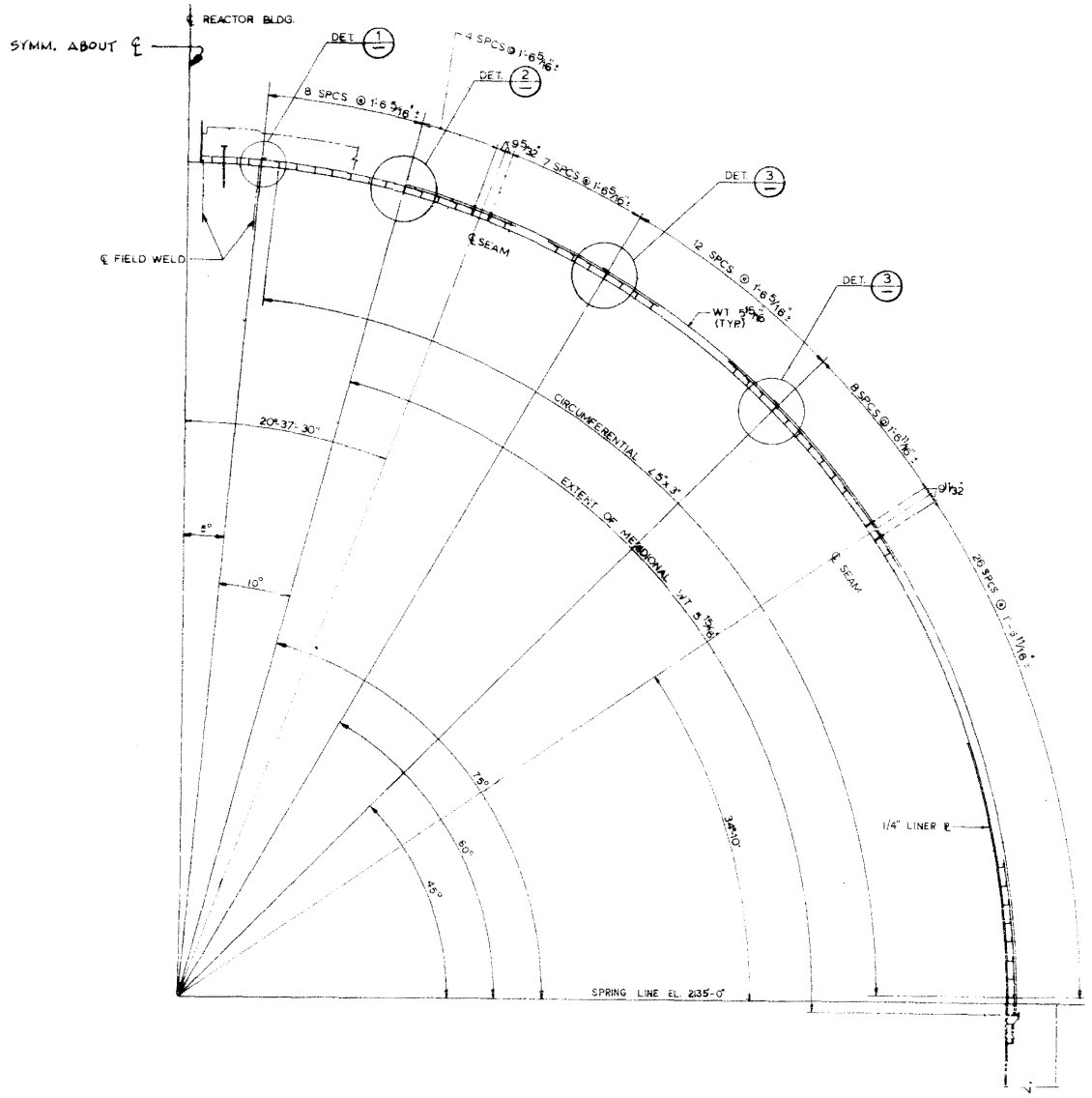

Rev. 0

WOLF CREEK
UPDATED SAFETY ANALYSIS REPORT

FIGURE 3.8-21

REACTOR BUILDING LINER PLATE - TYPICAL DOME SECTION

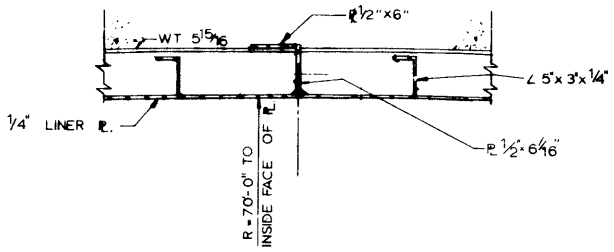

DETAIL 3

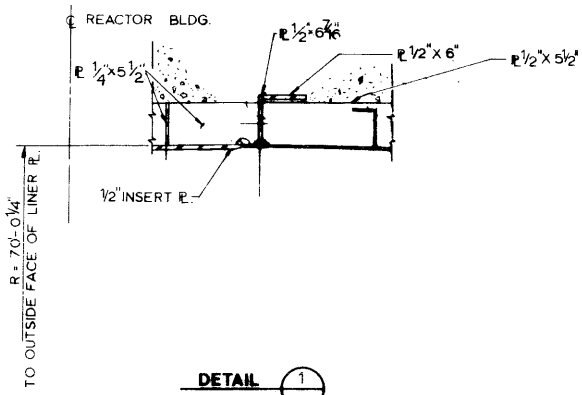

DETAIL 1

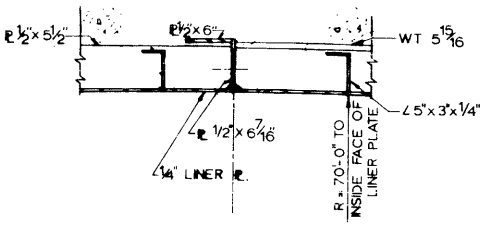

DETAIL 2

Rev. 0

WOLF CREEK
UPDATED SAFETY ANALYSIS REPORT

FIGURE 3.8-22

REACTOR BUILDING LINER PLATE - DOME DETAILS

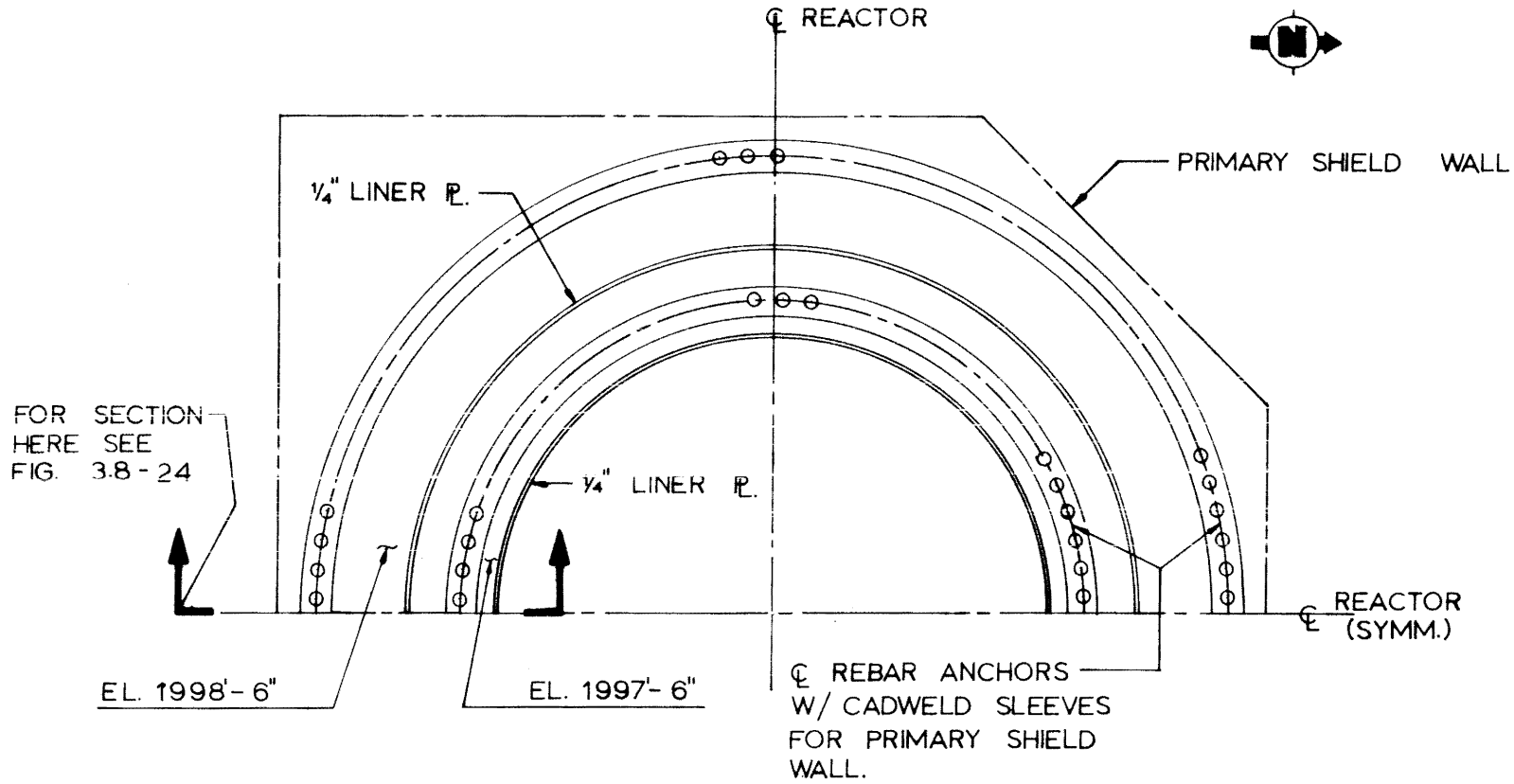

Rev. 0

WOLF CREEK
UPDATED SAFETY ANALYSIS REPORT

FIGURE 3.8-23

ANCHORAGE AT REACTOR CAVITY
PLAN VIEW

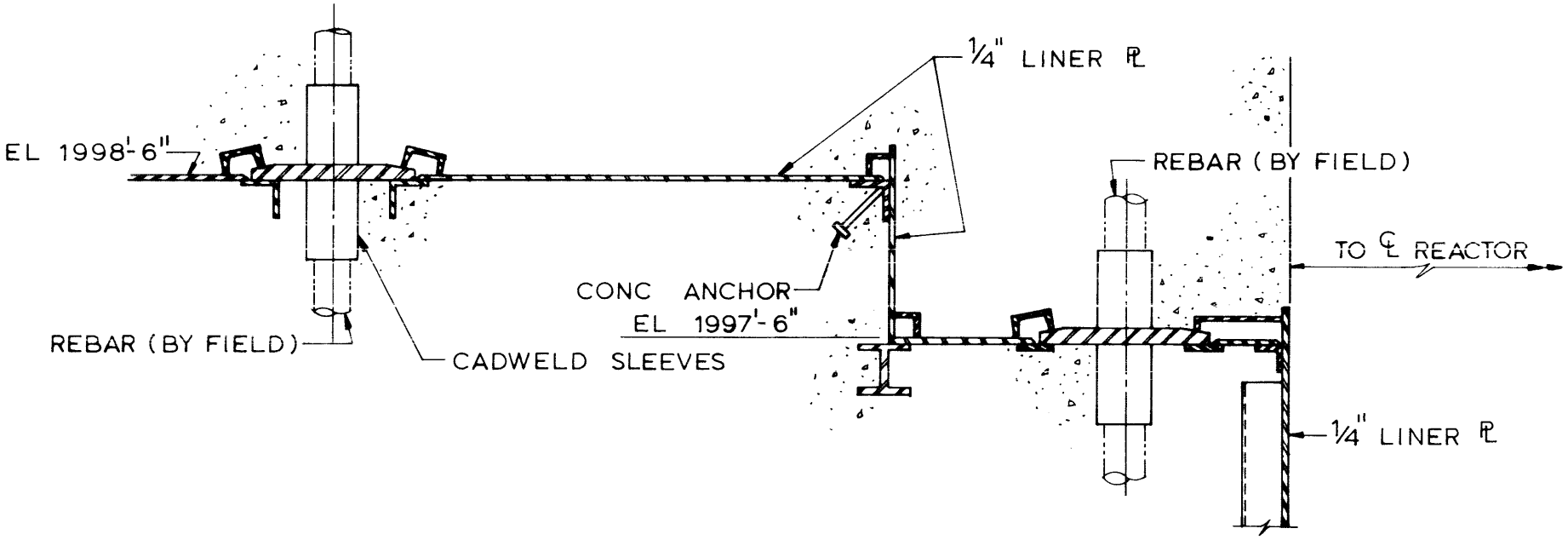

Rev. 0

WOLF CREEK
UPDATED SAFETY ANALYSIS REPORT

FIGURE 3.8-24

ANCHORAGE AT REACTOR CAVITY - TYPICAL SECTION

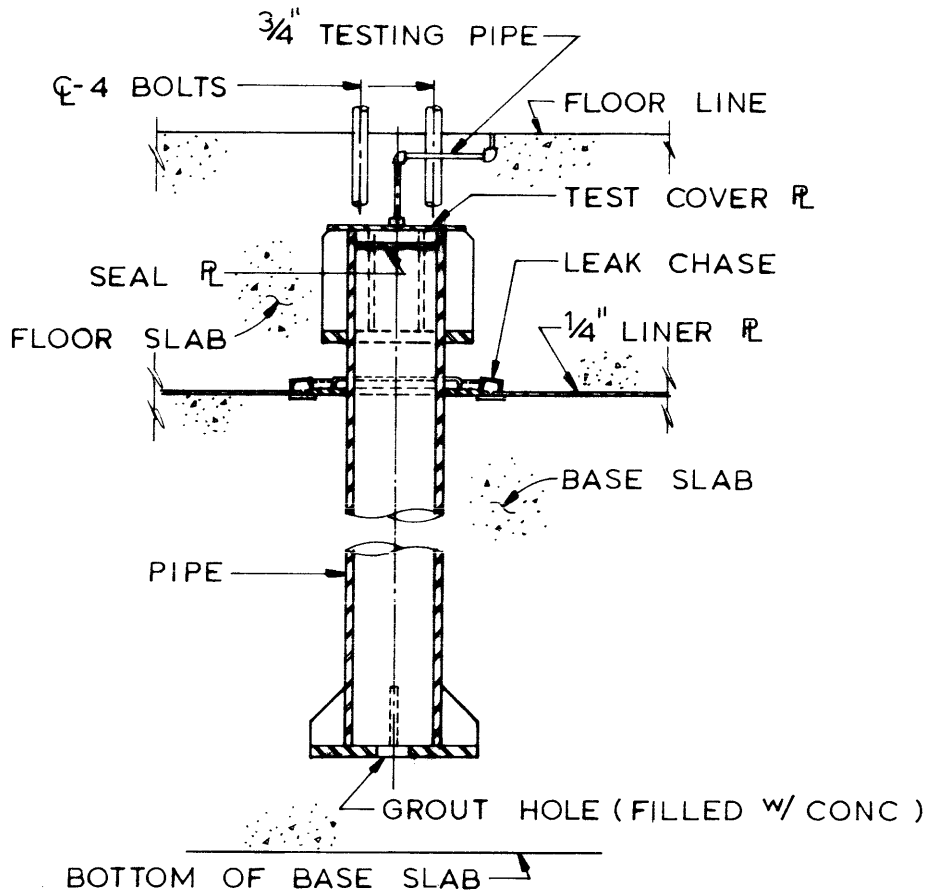

Rev. 0

WOLF CREEK
UPDATED SAFETY ANALYSIS REPORT

FIGURE 3.8-25

TYPICAL ANCHORAGE THROUGH BASE MAT FOR NSSS EQUIPMENT SUPPORTS

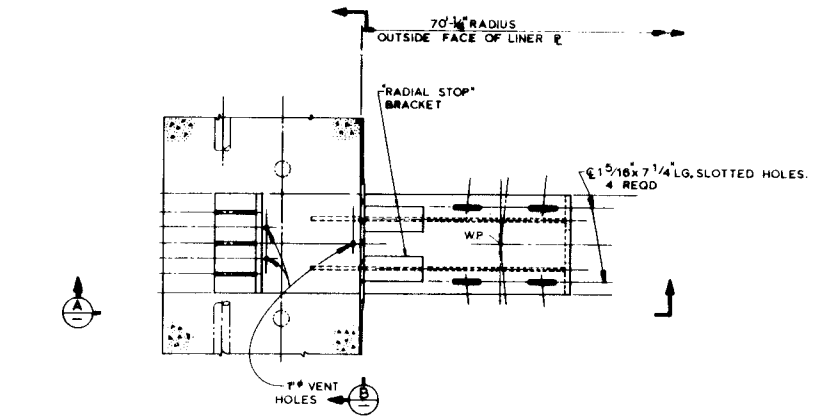

PLAN - "EXPANSION END" BRACKET (E)

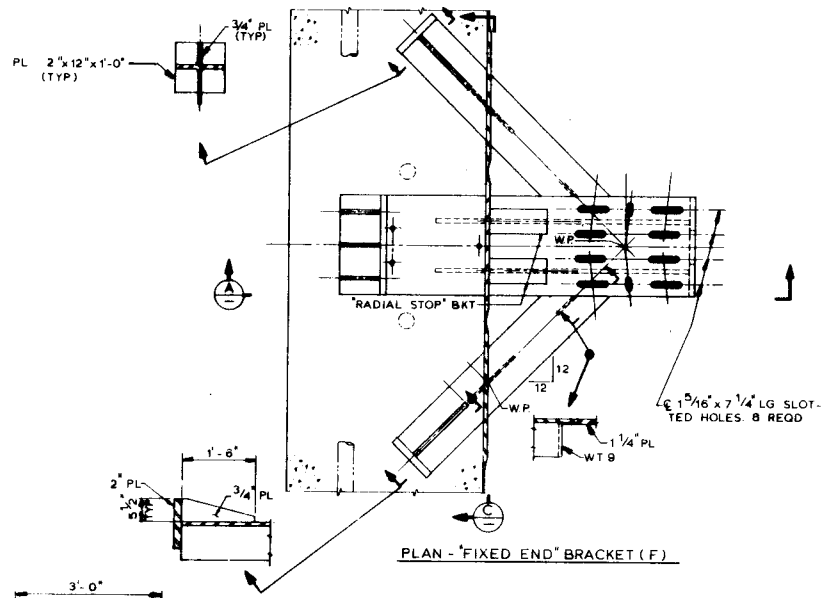

PLAN - "FIXED END" BRACKET (F)

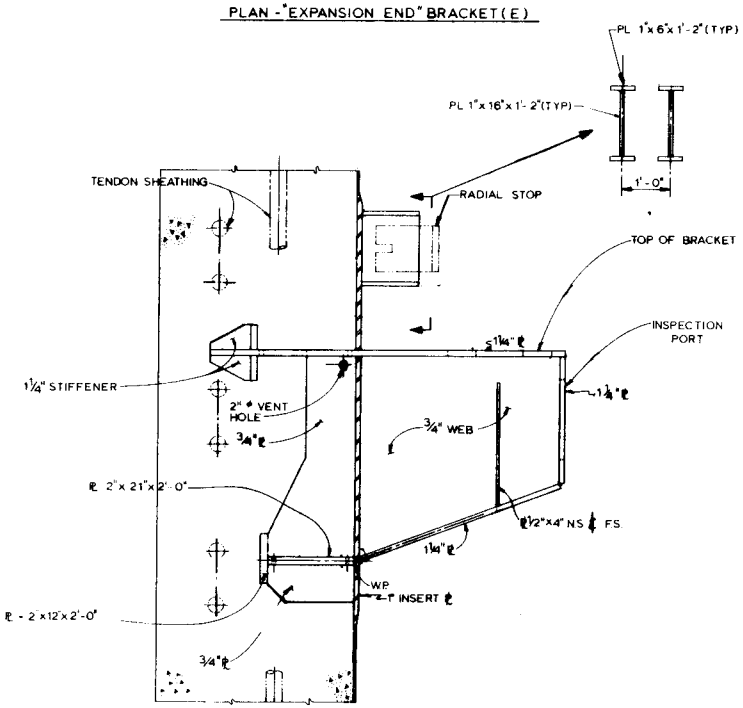

SECTION A

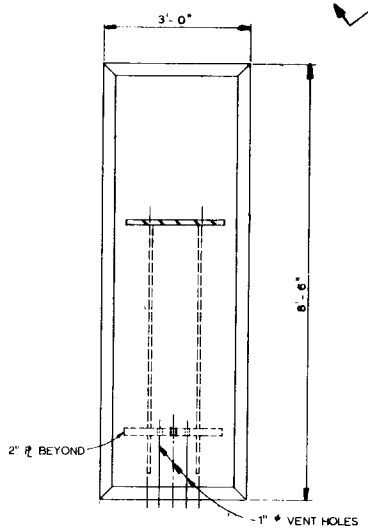

SECTION B

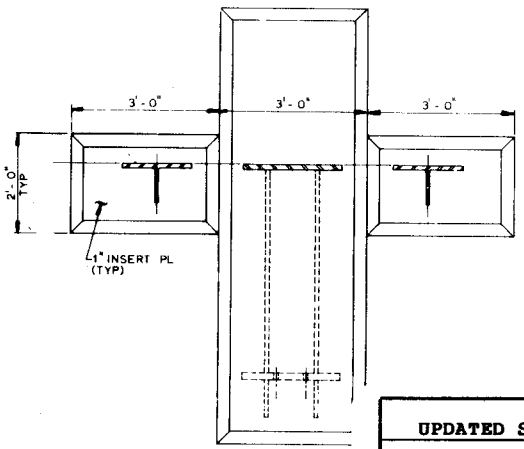

SECTION C

Rev. 0

WOLF CREEK
UPDATED SAFETY ANALYSIS REPORT

FIGURE 3.8-26

REACTOR BUILDING POLAR CRANE BRACKETS

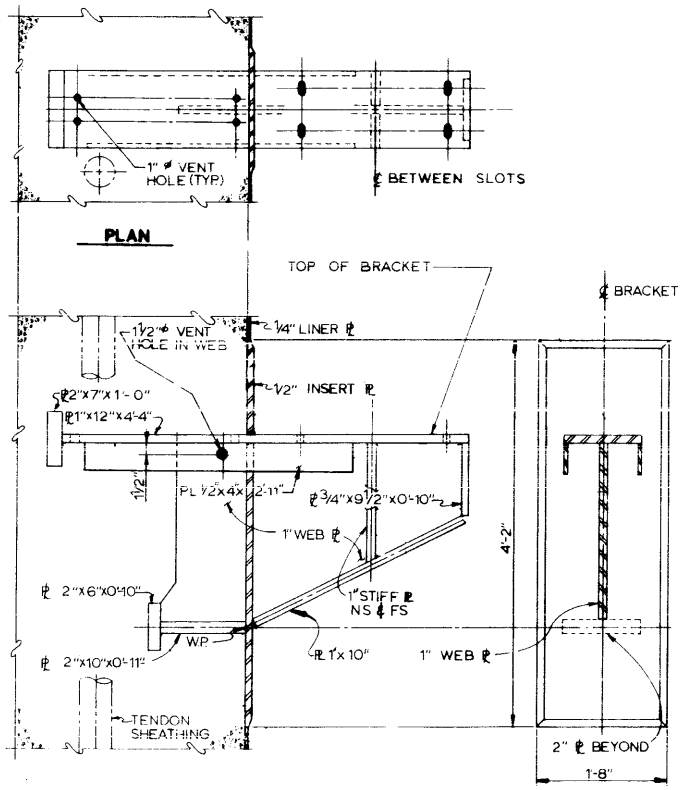

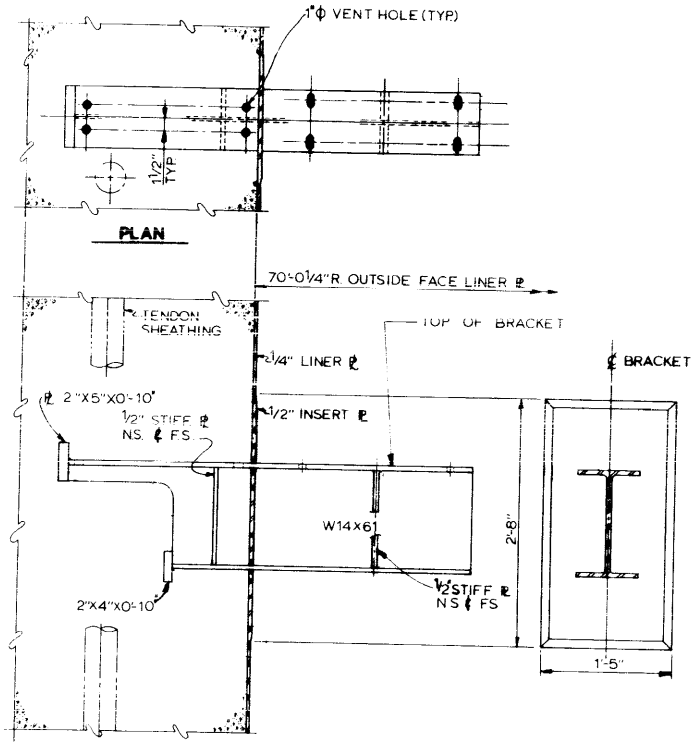

Rev. 0

WOLF CREEK
UPDATED SAFETY ANALYSIS REPORT

FIGURE 3.8-27

REACTOR BUILDING SHELL TYPICAL BEAM SUPPORT BRACKETS

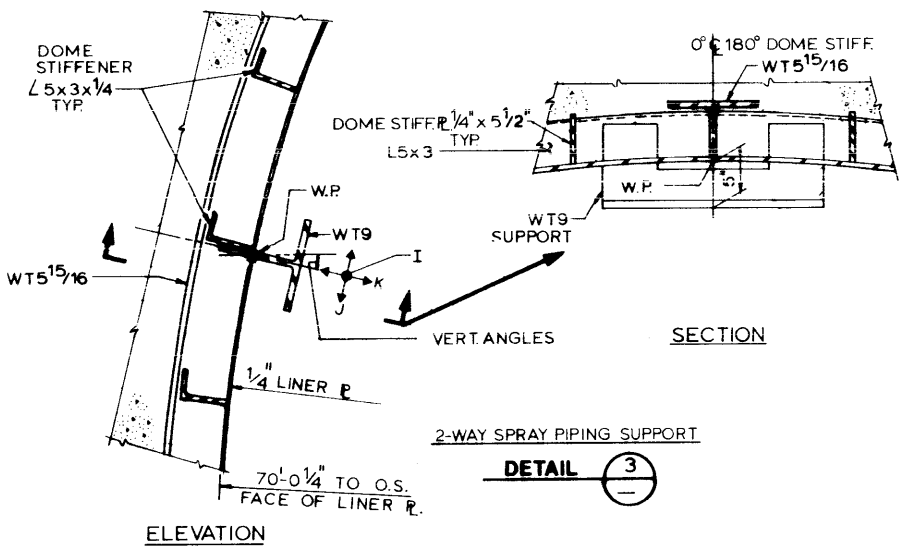

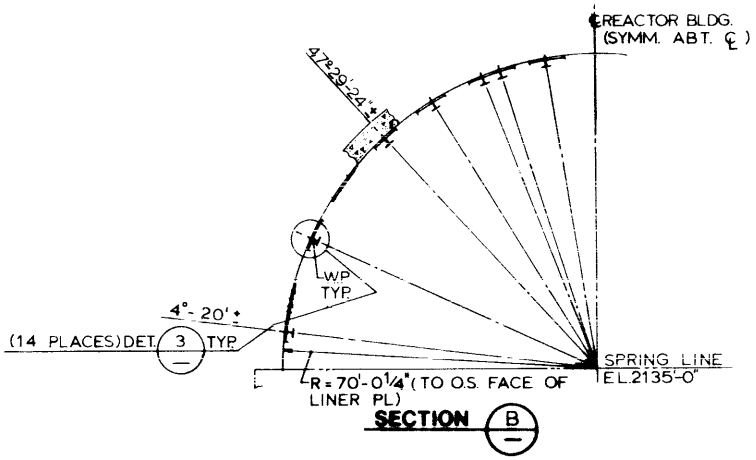

Rev. 0

WOLF CREEK
UPDATED SAFETY ANALYSIS REPORT

FIGURE 3.8-28

REACTOR BUILDING - TYPICAL PIPE SUPPORT BRACKETS IN DOME

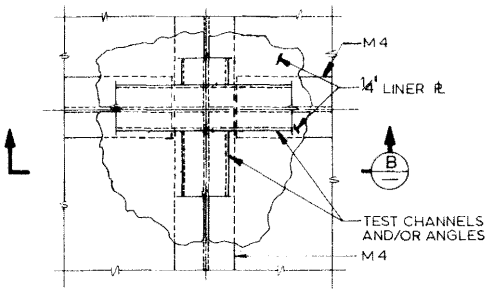

PLAN

TYP AT ALL TEST CHANNEL INTERSECTIONS

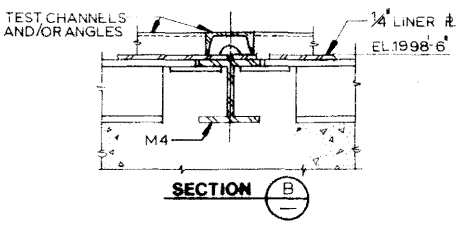

SECTION

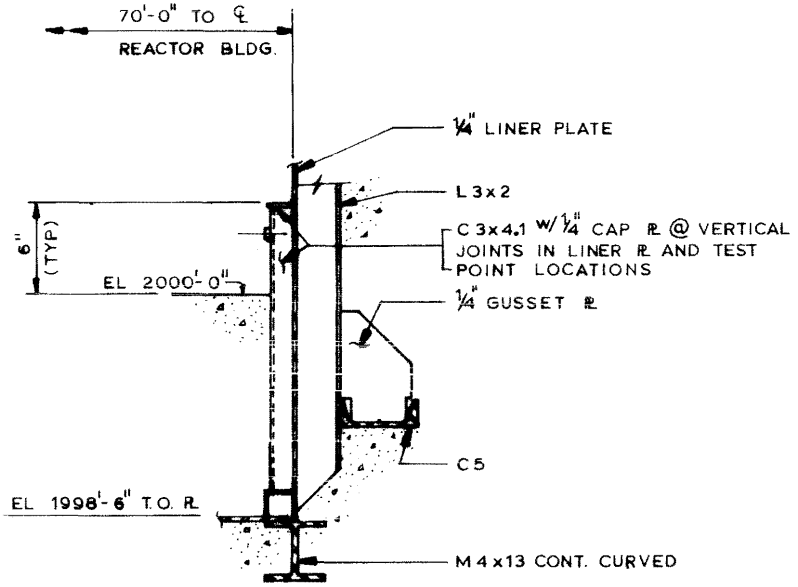

TYPICAL LEAK CHASE ADJACENT TO WALL

Rev. 0

WOLF CREEK
UPDATED SAFETY ANALYSIS REPORT

FIGURE 3.8-29

REACTOR BUILDING LINER PLATE LEAK CHASE - TYPICAL DATA

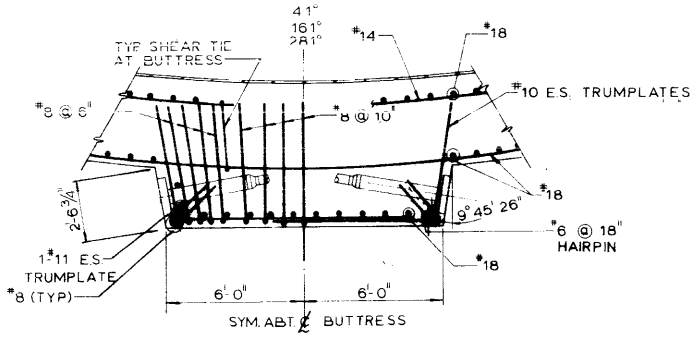

PLAN OF BUTTRESS @ SHELL WALL

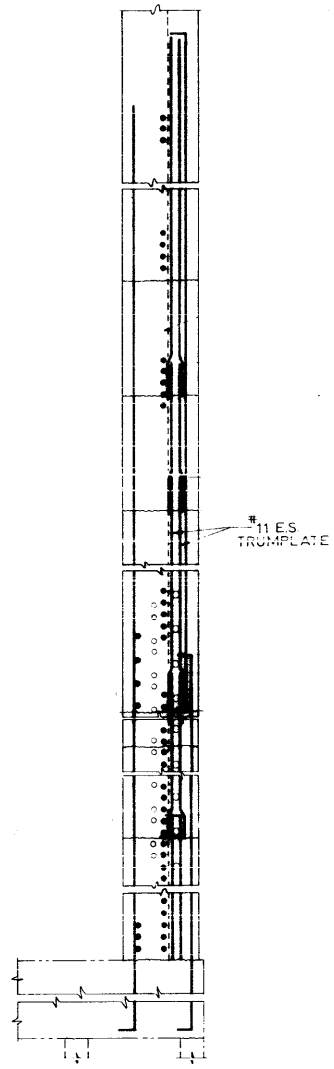

TYPICAL BUTTRESS ELEVATION

Rev. 0

WOLF CREEK
UPDATED SAFETY ANALYSIS REPORT

FIGURE 3.8-30

REACTOR BUILDING BUTTRESS DETAILS

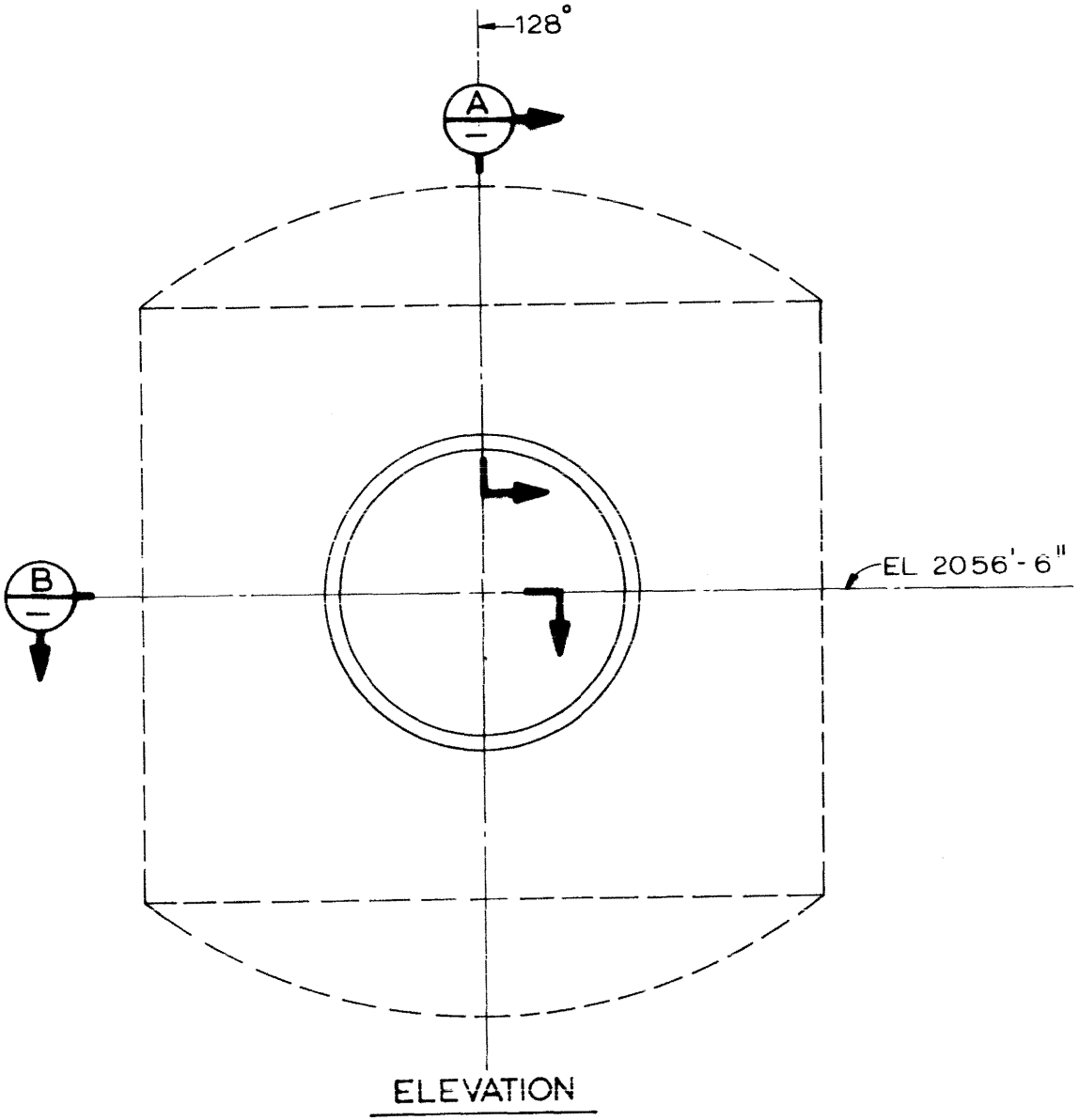

Rev. 0

WOLF CREEK
UPDATED SAFETY ANALYSIS REPORT

FIGURE 3.8-31

REACTOR BUILDING EQUIPMENT HATCH OPENING

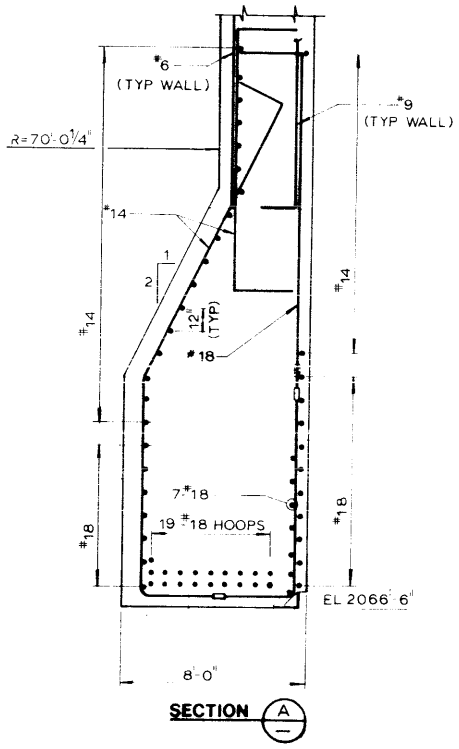

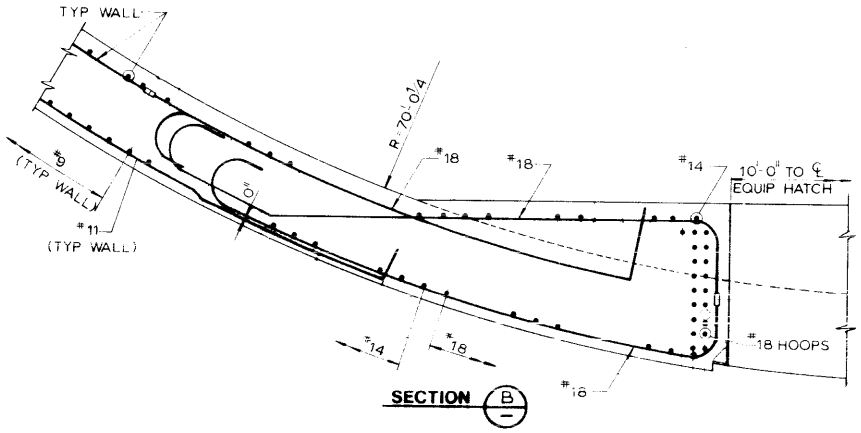

Rev. 0

WOLF CREEK
UPDATED SAFETY ANALYSIS REPORT

FIGURE 3.8-32

REACTOR BUILDING EQUIPMENT HATCH OPENING - TYPICAL SECTION

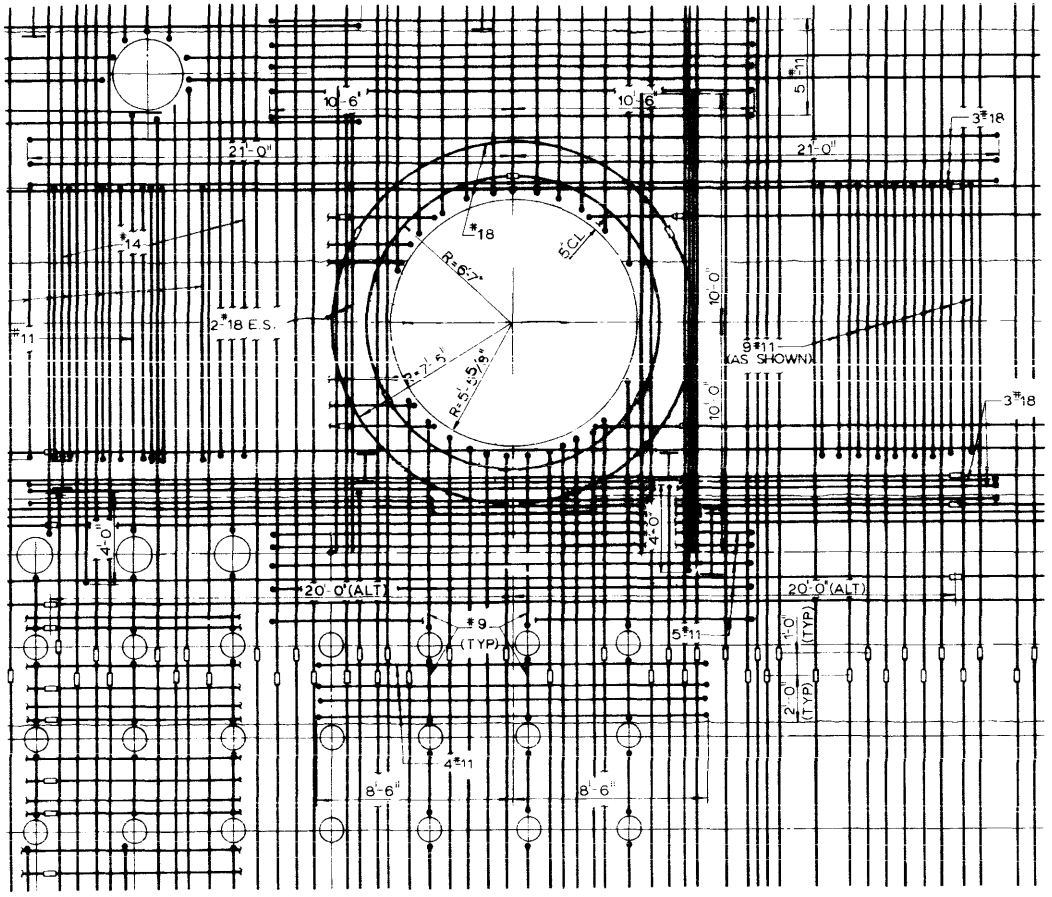

Rev. 0

WOLF CREEK
UPDATED SAFETY ANALYSIS REPORT

FIGURE 5.8-66

REACTOR BUILDING PERSONNEL HATCH OPENING - INSIDE FACE

SHEET 1

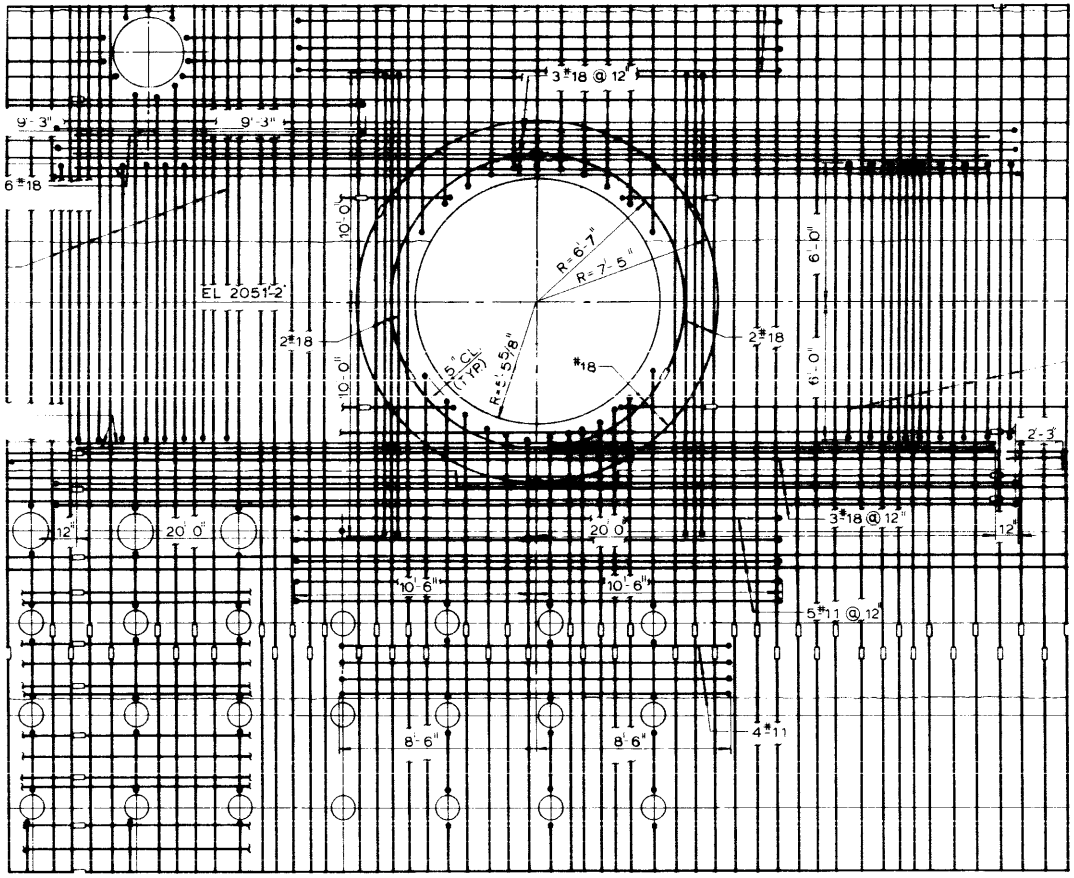

Rev. 0

WOLF CREEK
UPDATED SAFETY ANALYSIS REPORT

FIGURE 3.8-33

REACTOR BUILDING PERSONNEL HATCH OPENING - OUTSIDE FACE

SHEET 2

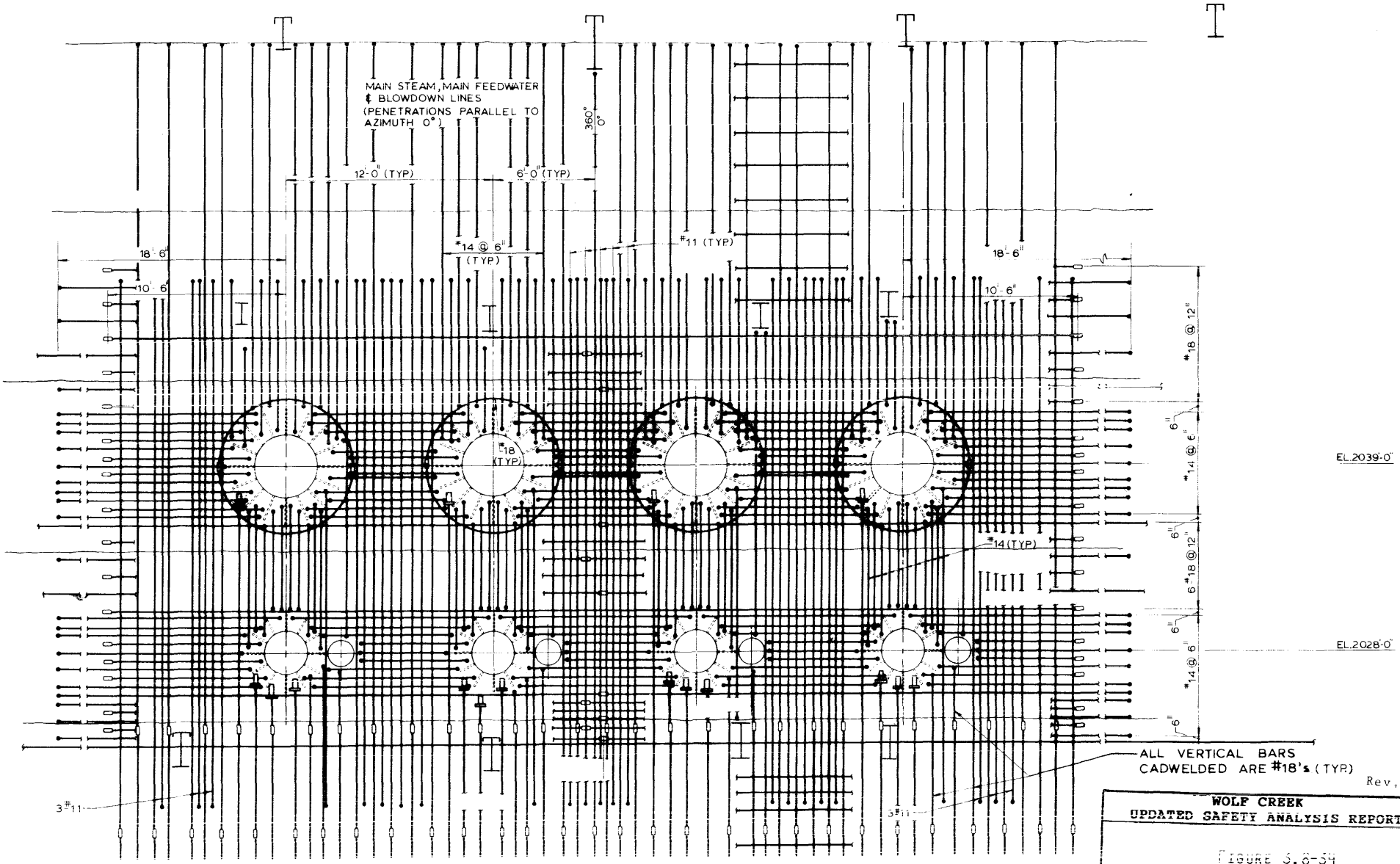

Rev. 0

WOLF CREEK
UPDATED SAFETY ANALYSIS REPORT

FIGURE 3.8-34

REACTOR BUILDING MAIN STEAM AND MAIN FEEDWATER OPENINGS - INSIDE FACE

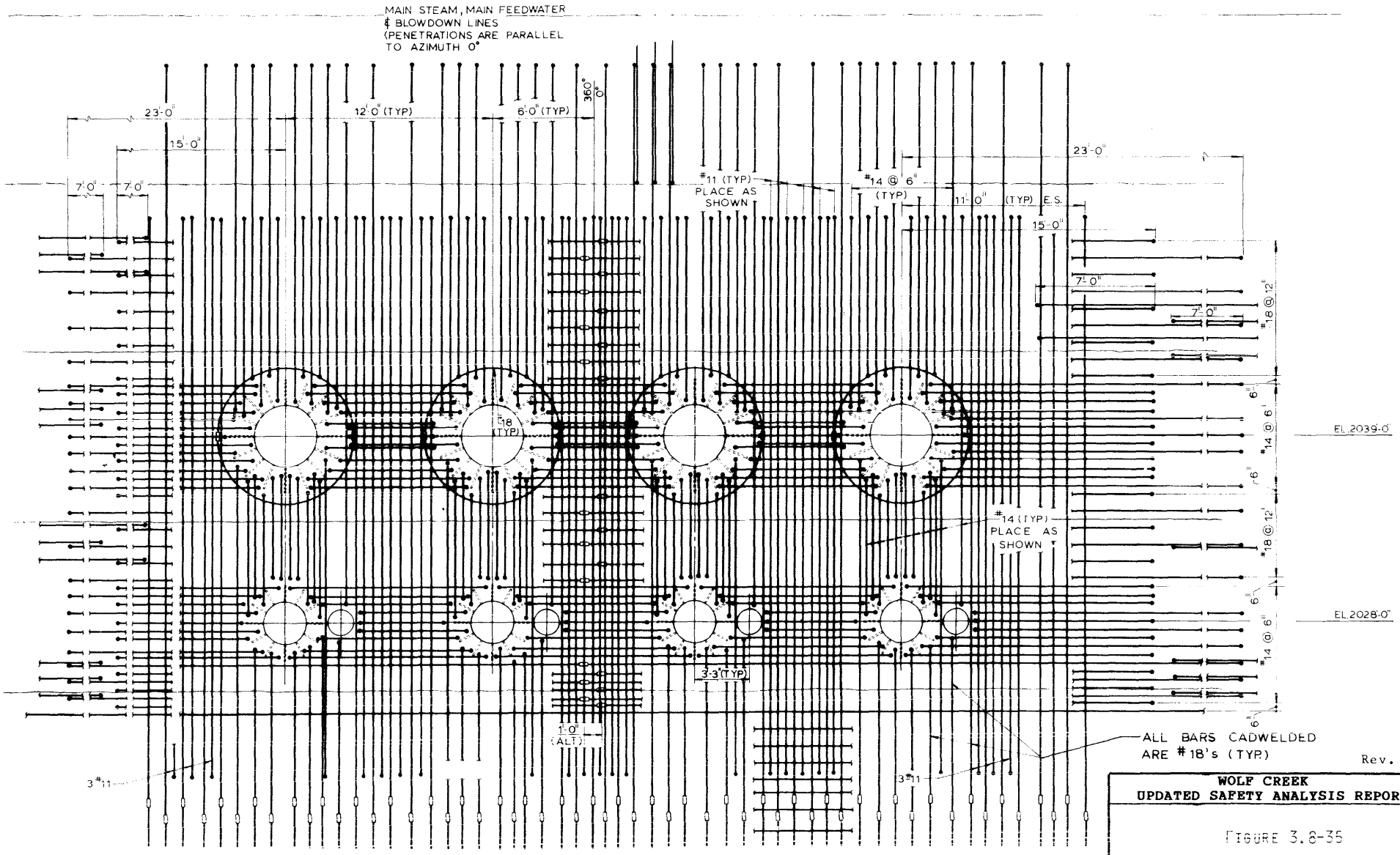

Rev. 0

WOLF CREEK
UPDATED SAFETY ANALYSIS REPORT

FIGURE 3.8-35

REACTOR BUILDING MAIN STEAM AND MAIN FEEDWATER OPENINGS - OUTSIDE FACE

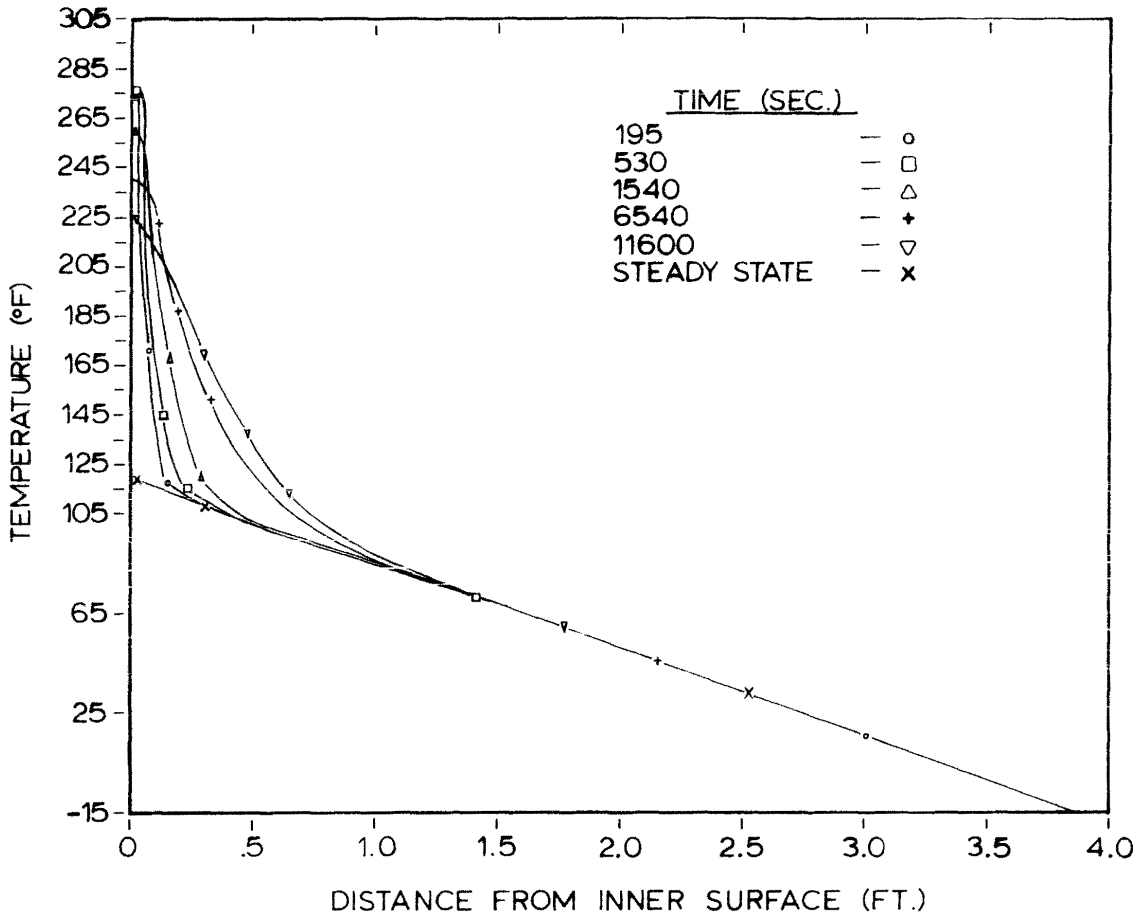

Rev. 0

WOLF CREEK
UPDATED SAFETY ANALYSIS REPORT

FIGURE 3.8-36

TEMPERATURE GRADIENTS THROUGH REACTOR BUILDING WALL FOR DBA (POSTULATED PRIMARY COOLANT LOOP BREAK)

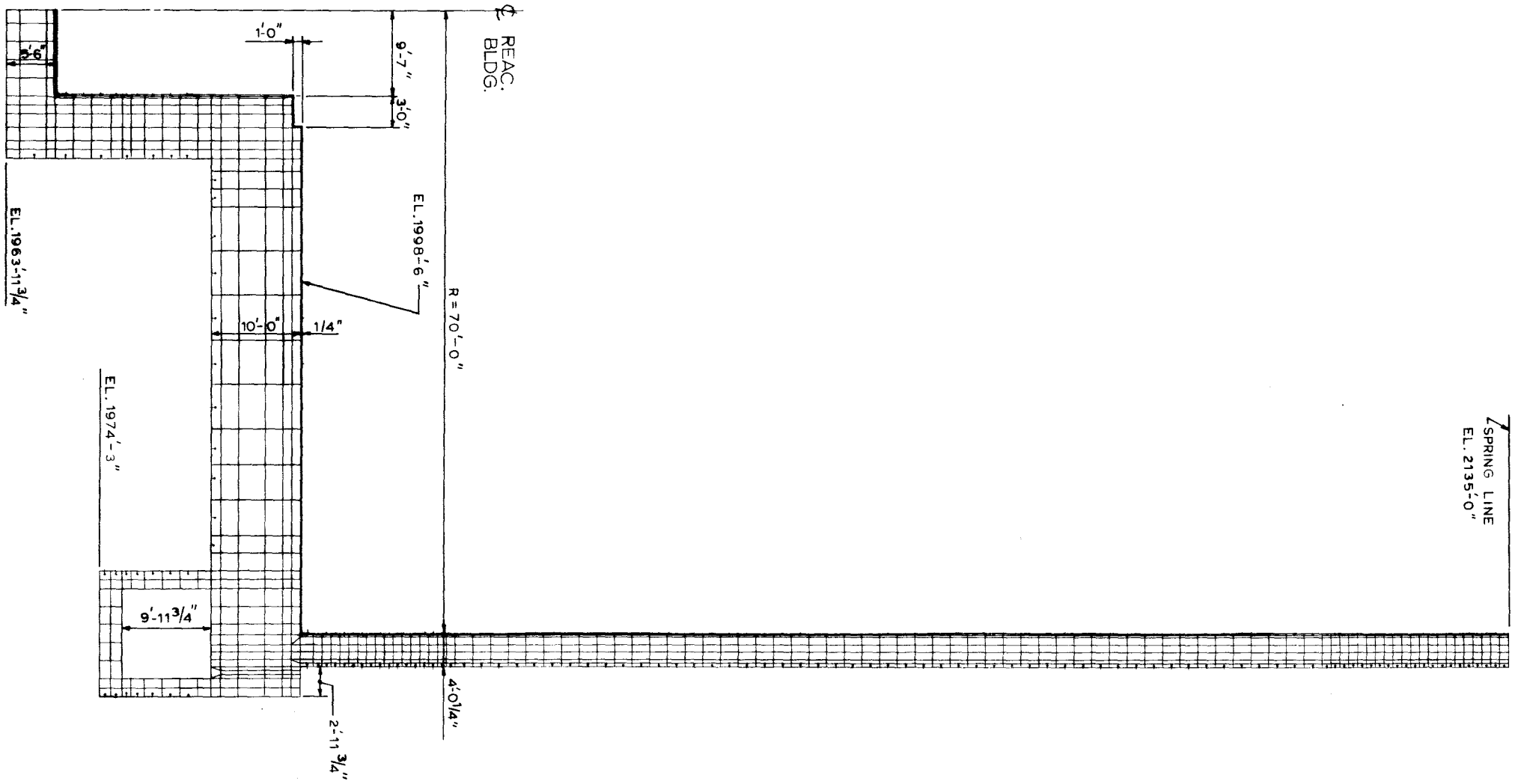

Rev. 0

WOLF CREEK
UPDATED SAFETY ANALYSIS REPORT

FIGURE 3.8-37

FINITE ELEMENT MODEL FOR AXISYMMETRIC LOADS - STR.

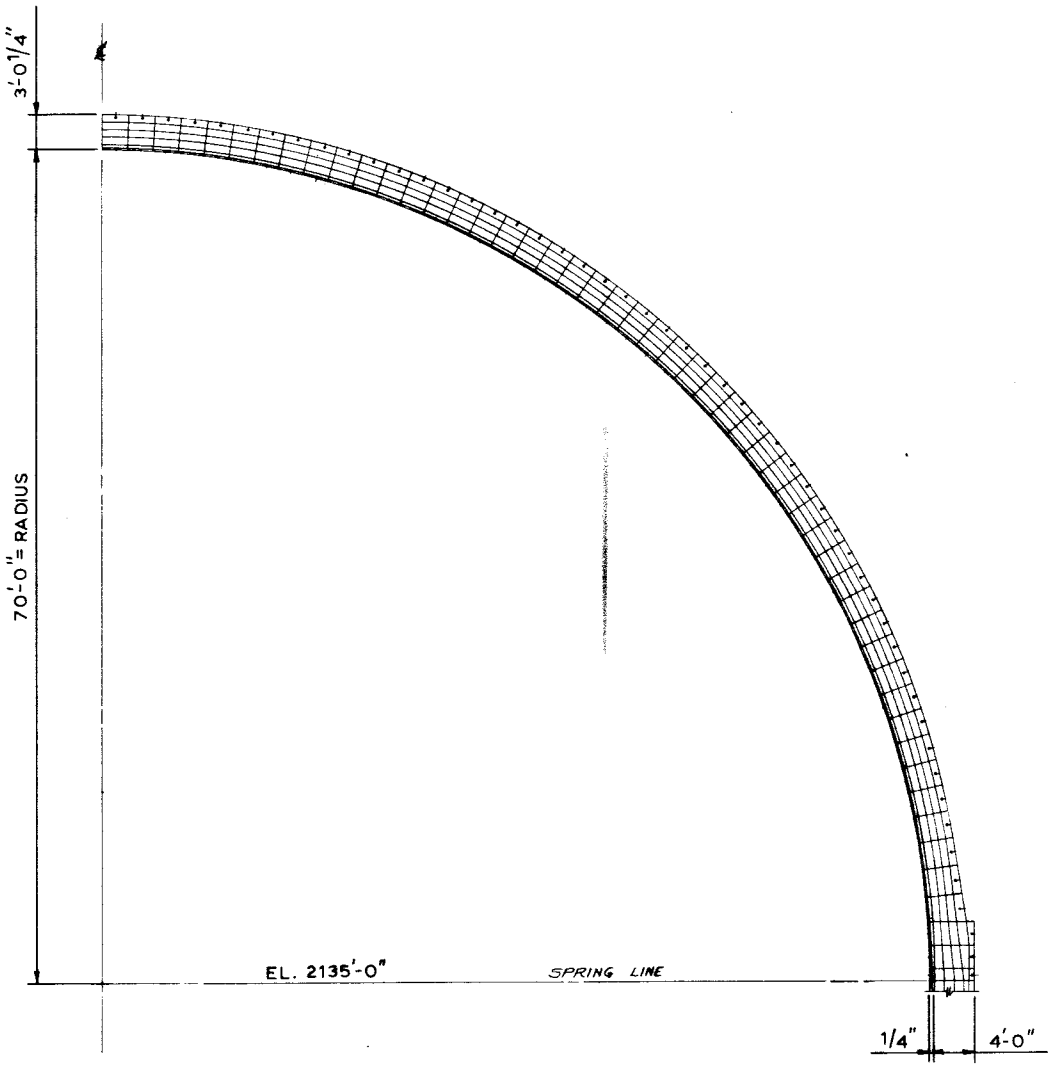

Rev. 0

WOLF CREEK
UPDATED SAFETY ANALYSIS REPORT

FIGURE 3.8-38

FINITE ELEMENT MODEL FOR AXISYMMETRIC LOADS - DOME

WOLF CREEK

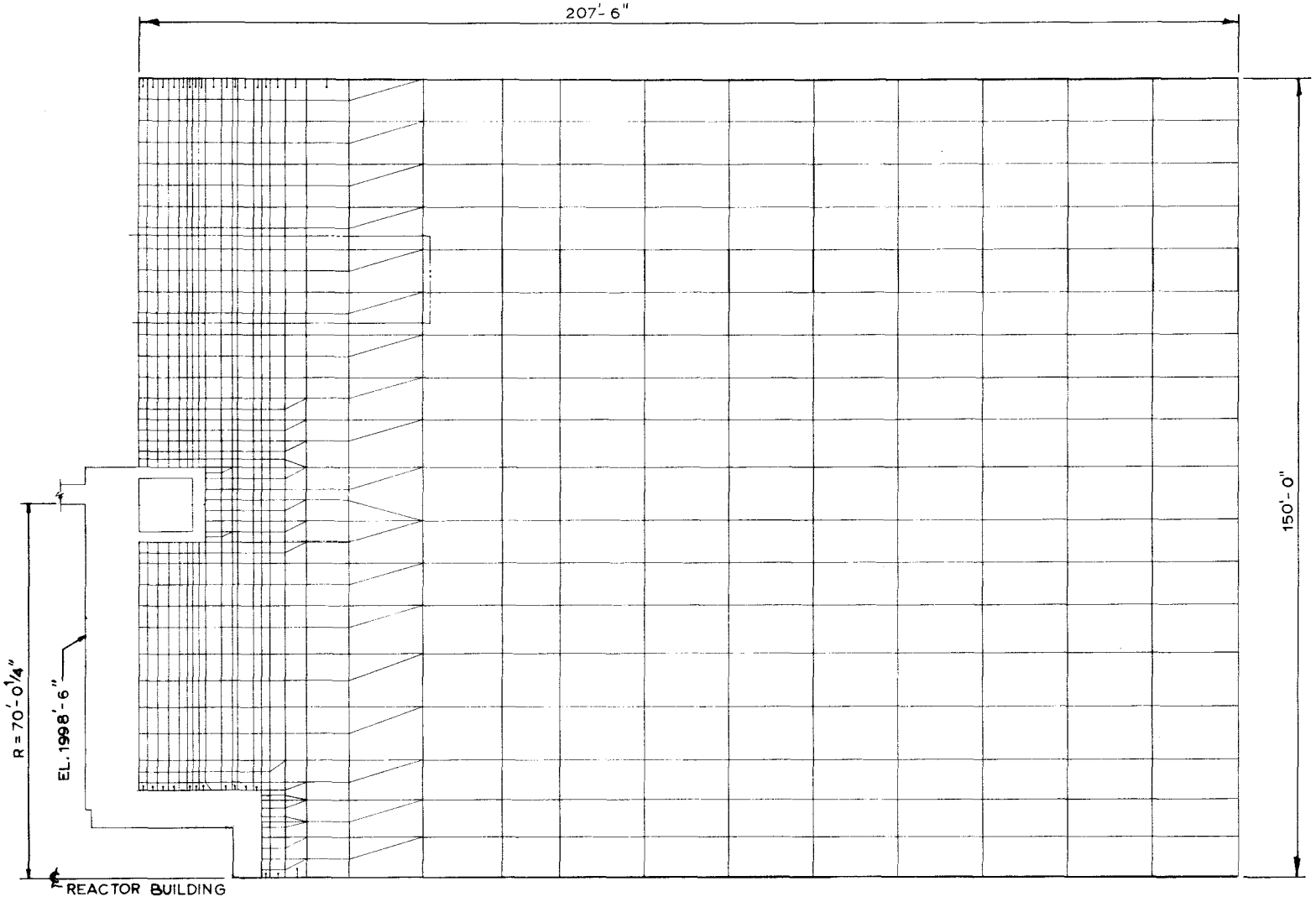

Rev. 0

WOLF CREEK
UPDATED SAFETY ANALYSIS REPORT

FIGURE 3.8-39

FINITE ELEMENT MODEL FOR AXISYMMETRIC LOADS - FOUNDA. MEDIUM

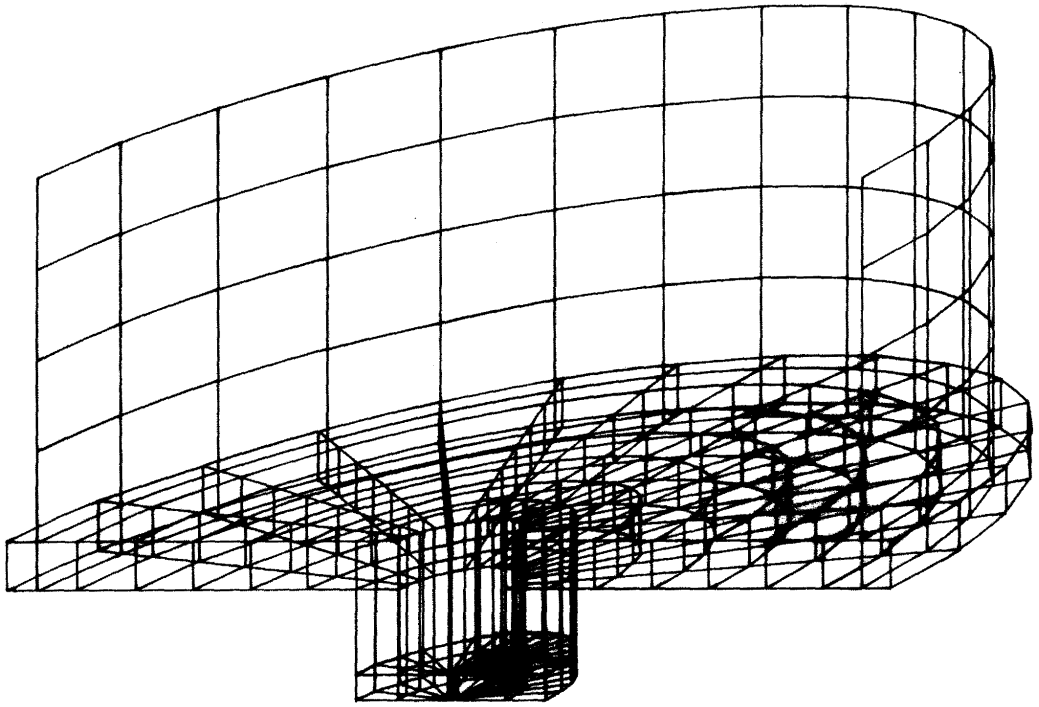

Rev. 0

WOLF CREEK
UPDATED SAFETY ANALYSIS REPORT

FIGURE 3.8-40

FINITE ELEMENT MODEL FOR NONAXISYMMETRIC LOADS

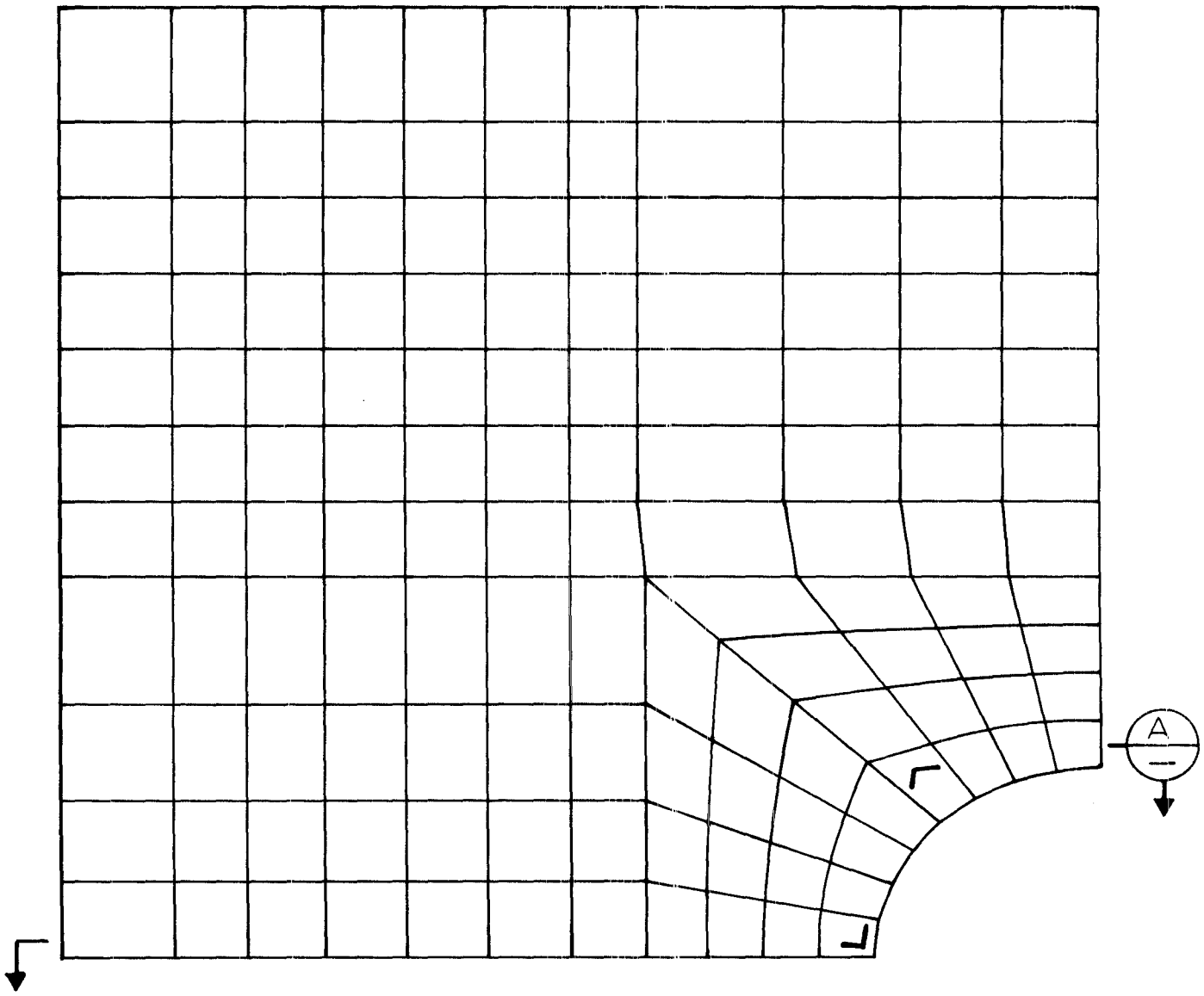

Rev. 0

WOLF CREEK
UPDATED SAFETY ANALYSIS REPORT

FIGURE 3.8-41

FINITE ELEMENT MODEL FOR
EQUIPMENT HATCH - ELEVATION

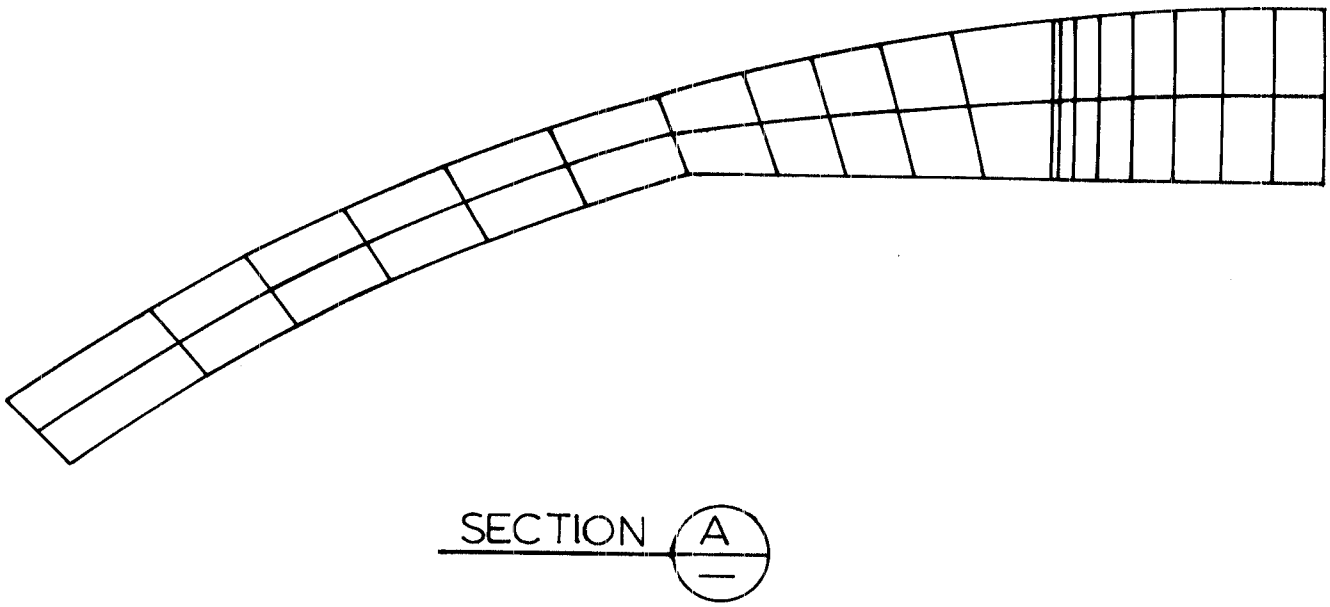

Rev. 0

WOLF CREEK
UPDATED SAFETY ANALYSIS REPORT

FIGURE 3.8-42

FINITE ELEMENT MODEL FOR EQUIPMENT HATCH - PLAN

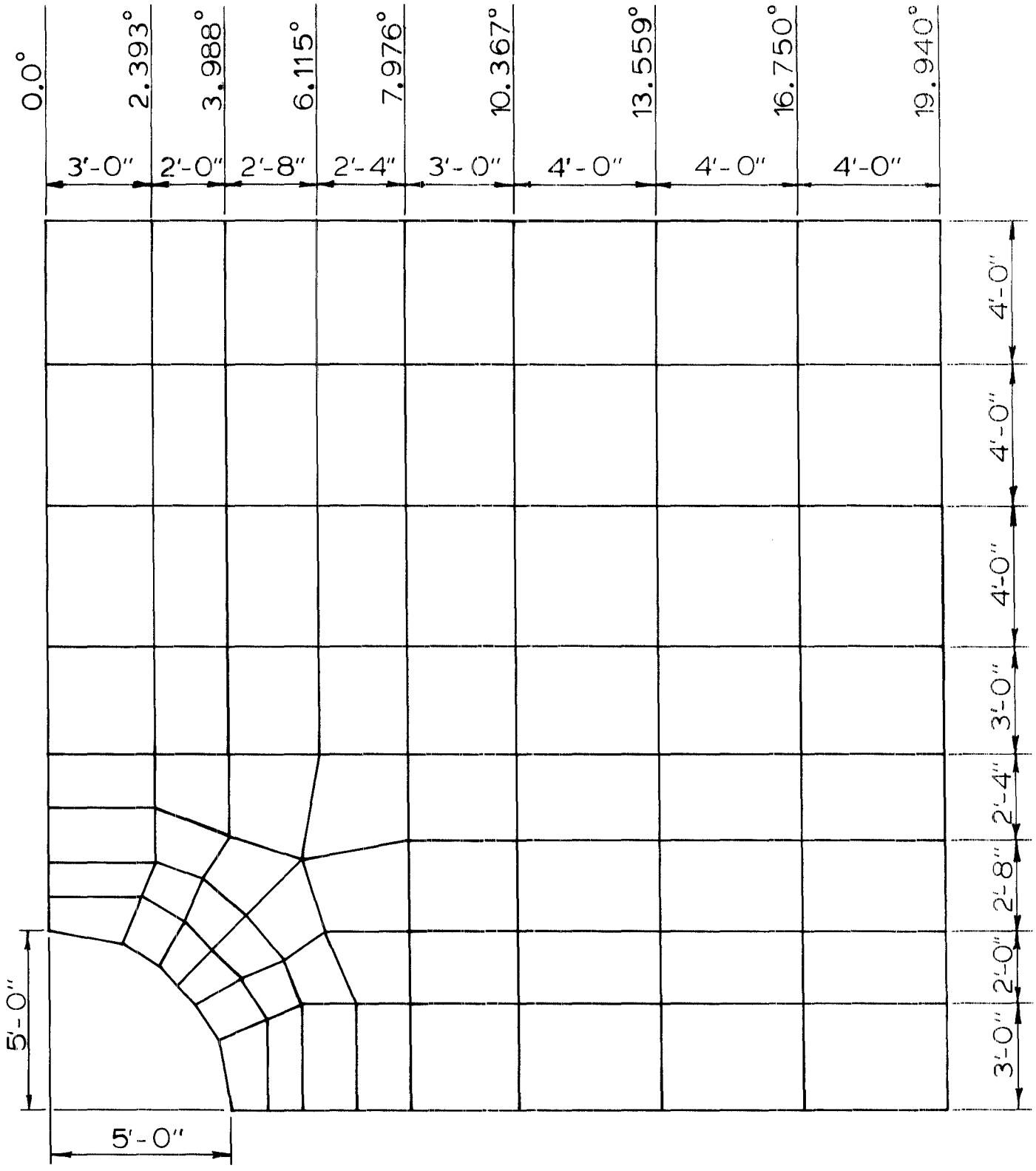

Rev. 0

WOLF CREEK
UPDATED SAFETY ANALYSIS REPORT

FIGURE 3.8-43

FINITE ELEMENT MODEL FOR PERSONNEL HATCH

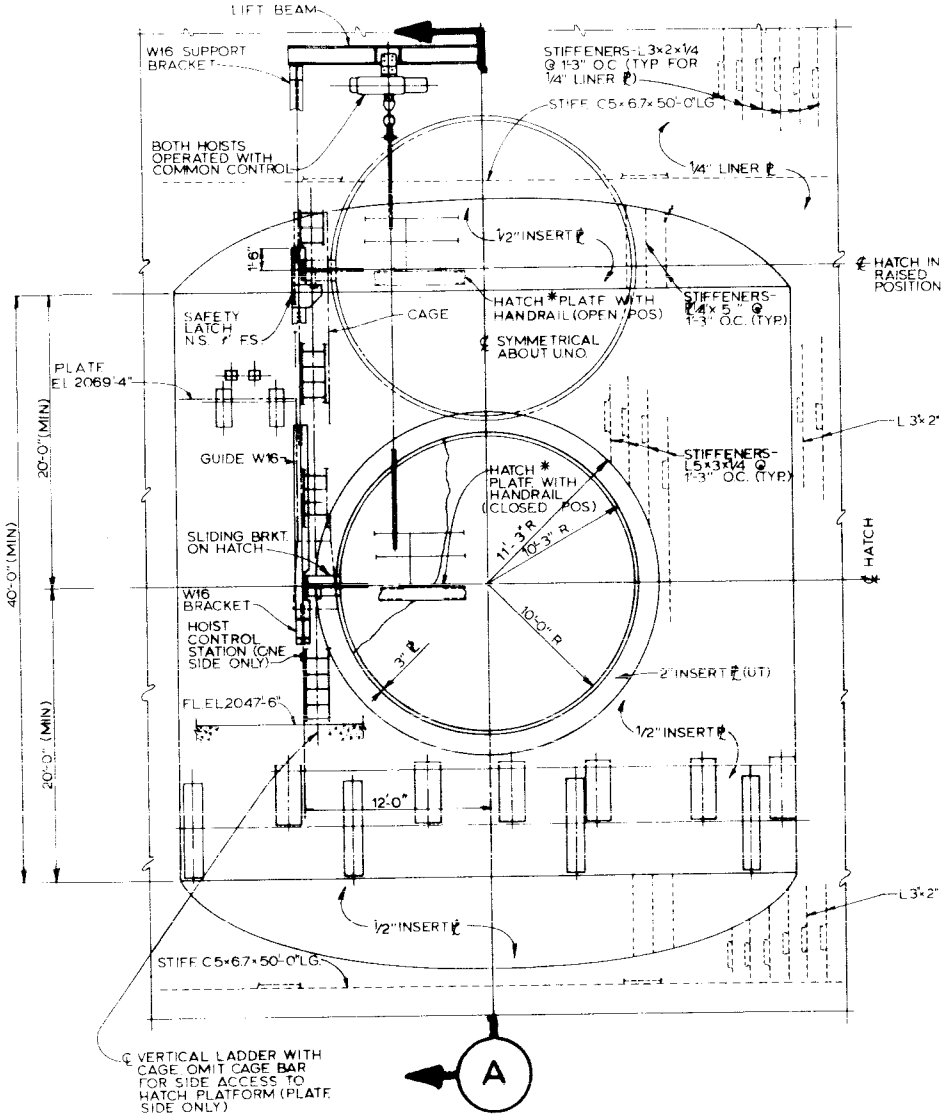

ELEVATION

(FROM INSIDE)

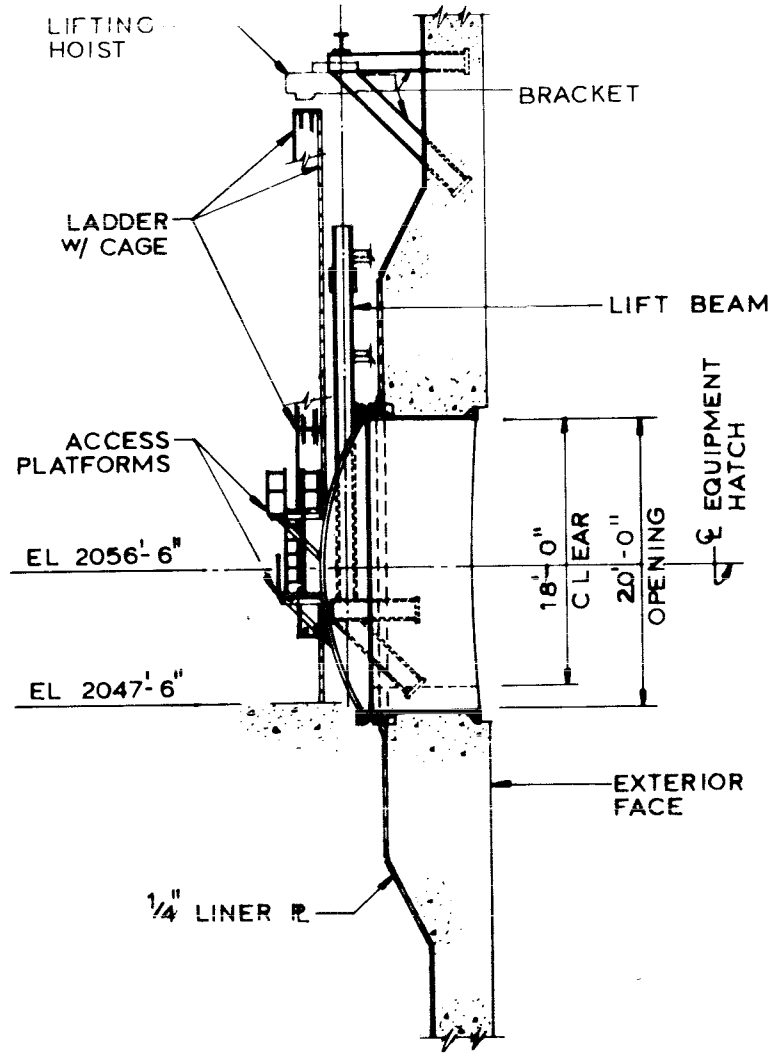

SECTION A

Rev. 0

WOLF CREEK UPDATED SAFETY ANALYSIS REPORT
FIGURE 3.8-44
REACTOR BUILDING EQUIPMENT HATCH

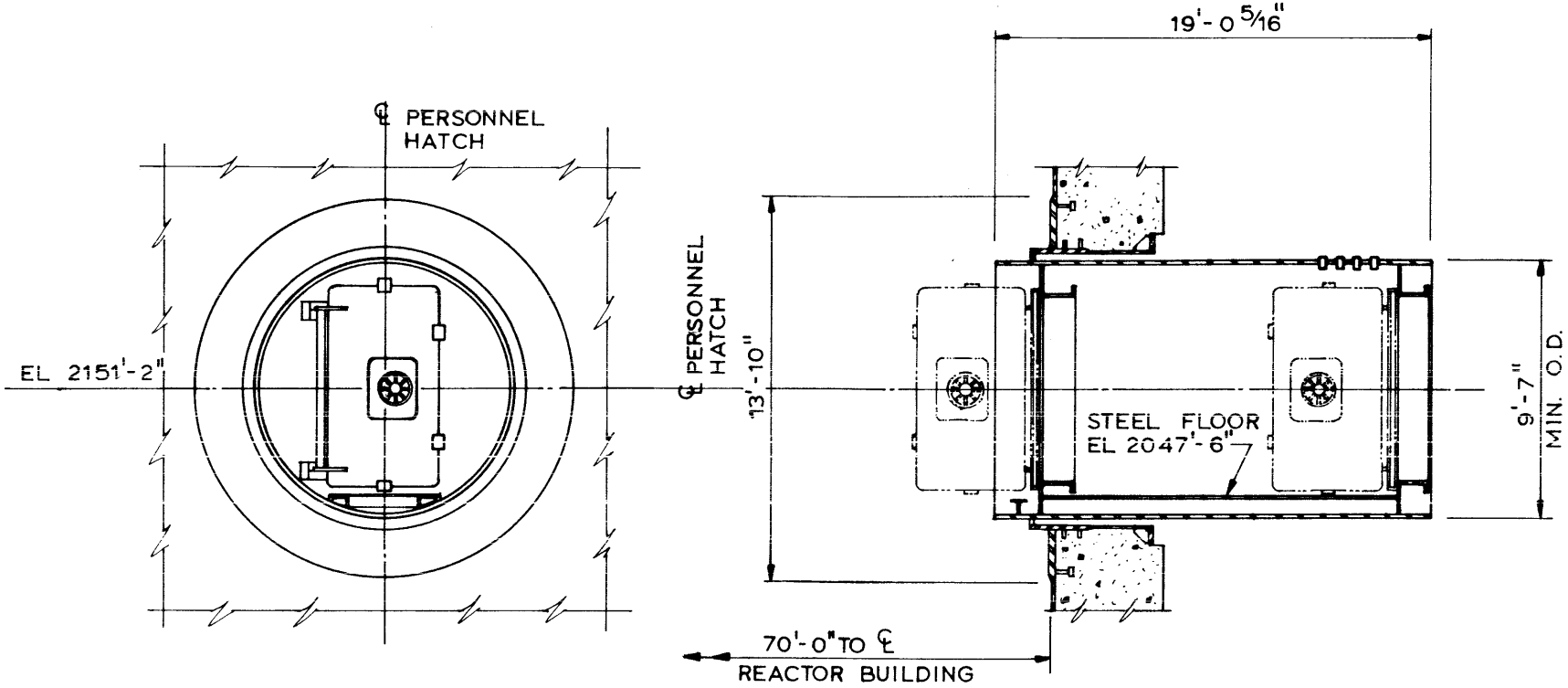

Rev. 0

WOLF CREEK
UPDATED SAFETY ANALYSIS REPORT

FIGURE 3.8-45

REACTOR BUILDING PERSONNEL HATCH

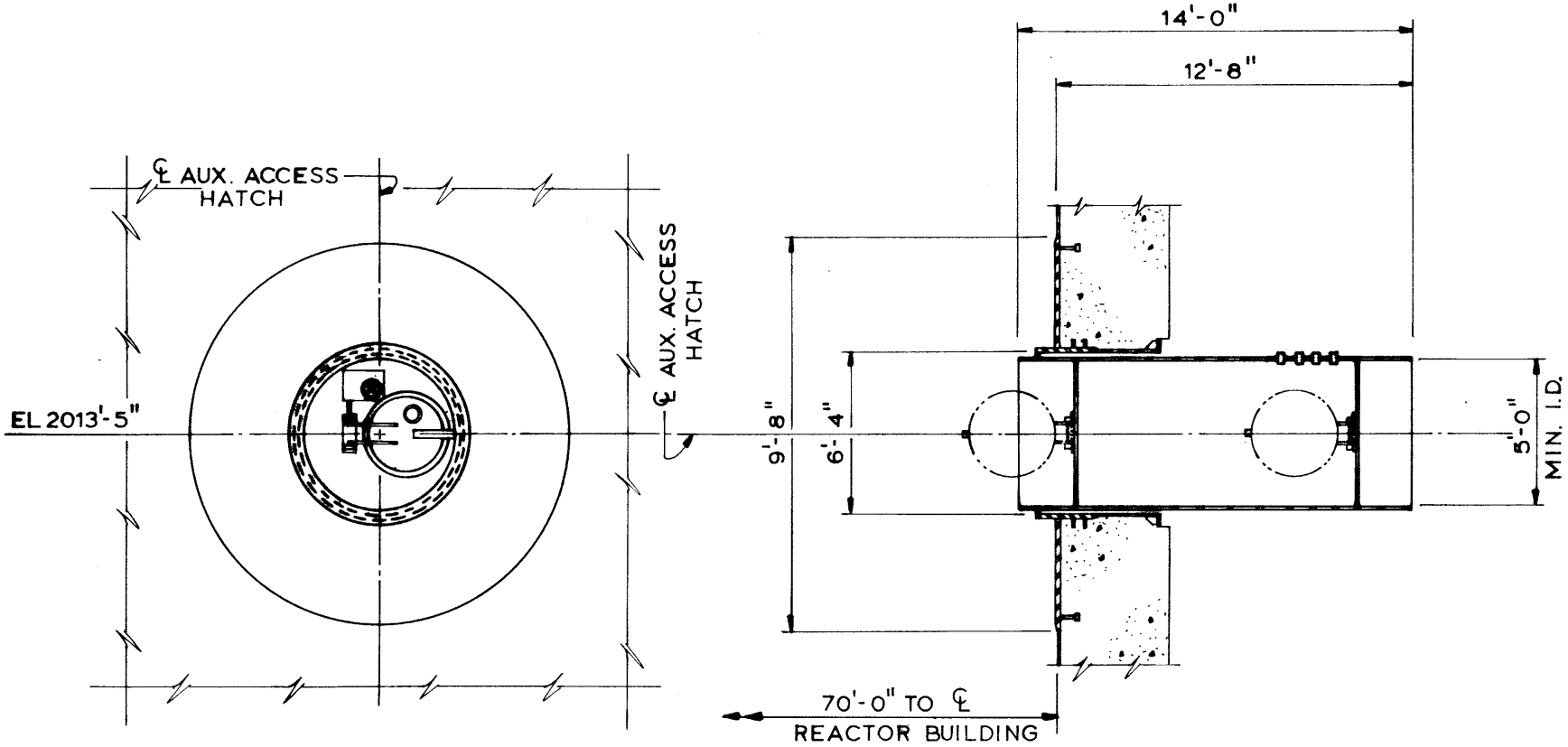

Rev. 0

WOLF CREEK
UPDATED SAFETY ANALYSIS REPORT

FIGURE 3.8-46

REACTOR BUILDING AUXILIARY ACCESS HATCH

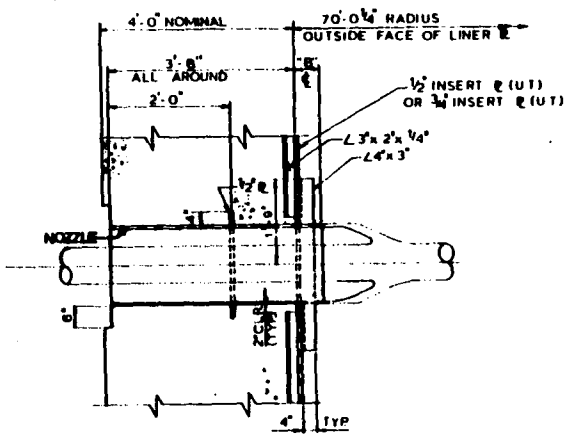

TYPICAL PIPE PENETRATION-TYPE 1
FLUED HEAD PENETRATION

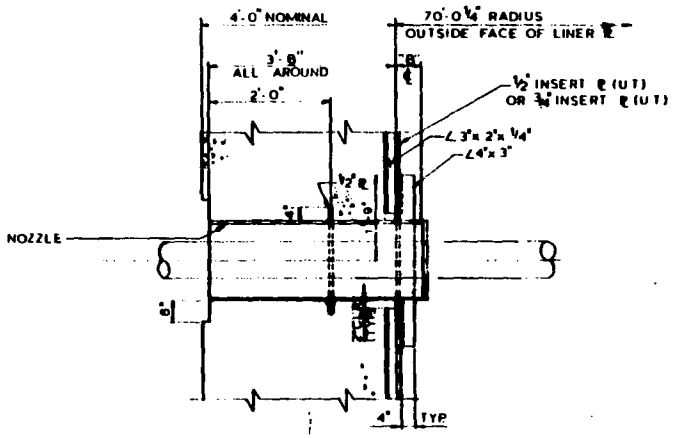

TYPICAL PIPE PENETRATION-TYPE 2
CLOSURE PLATE PENETRATION

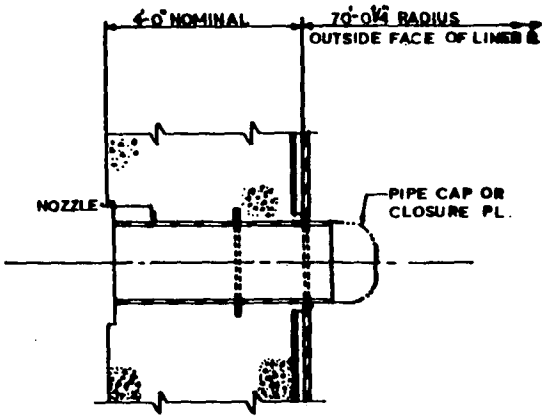

TYP PIPE PENETRATION-TYPE 3
PENETRATION SPARE BLANKING

Rev. 0

WOLF CREEK
UPDATED SAFETY ANALYSIS REPORT

FIGURE 3.8-47

REACTOR BUILDING TYPICAL PIPE PENETRATION

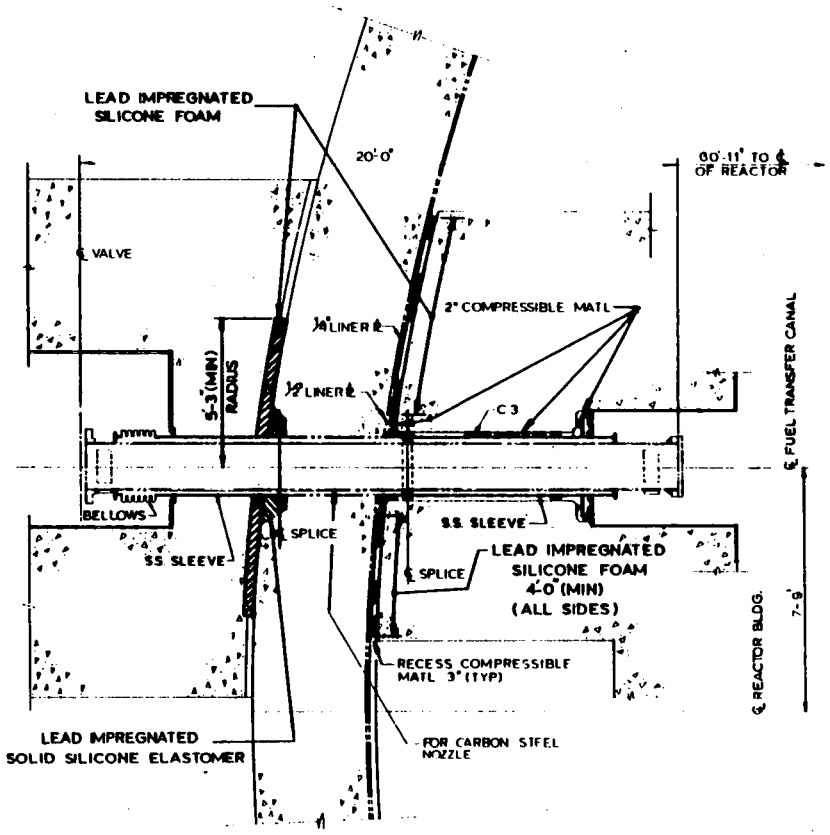

FUEL TRANSFER TUBE PLAN

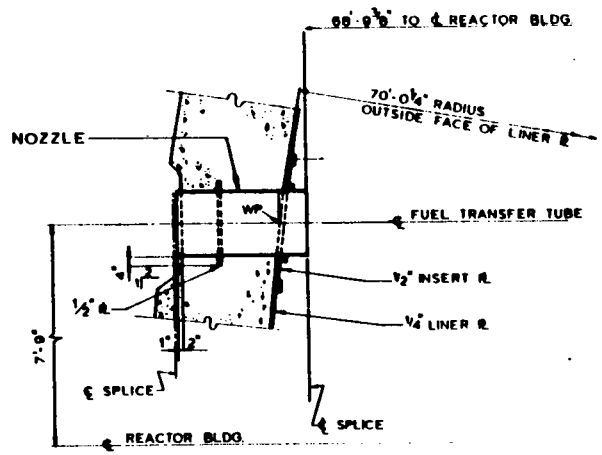

PLAN-NOZZLE FOR FUEL TRANSFER TUBE

Rev. 0

WOLF CREEK UPDATED SAFETY ANALYSIS REPORT
FIGURE 3.8-48
REACTOR BUILDING FUEL TRANSFER PENETRATION

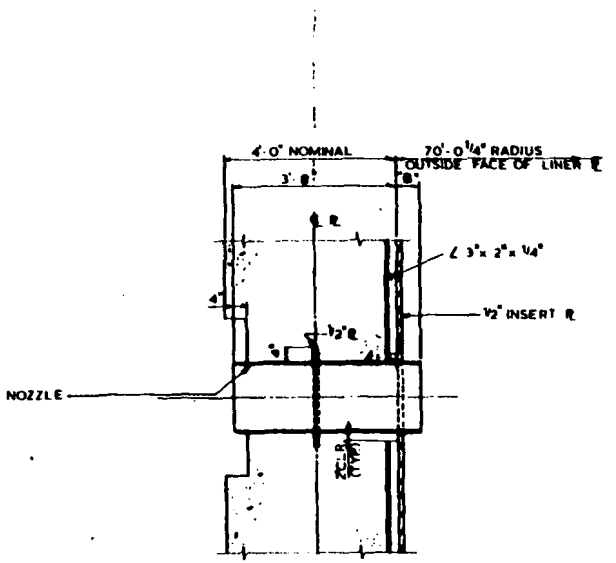

ELECTRICAL PENETRATION

Rev. 0

WOLF CREEK UPDATED SAFETY ANALYSIS REPORT
FIGURE 3.8-49 REACTOR BUILDING ELECTRICAL PENETRATION

WOLF CREEK

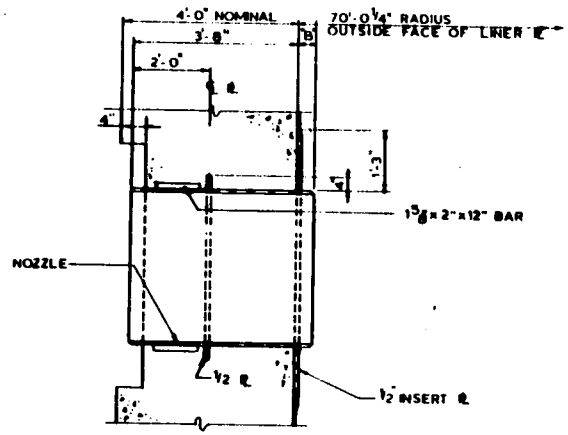

PURGE LINE

Rev. 0

WOLF CREEK UPDATED SAFETY ANALYSIS REPORT
FIGURE 3.8-50 REACTOR BUILDING PURGE LINE PENETRATIONS

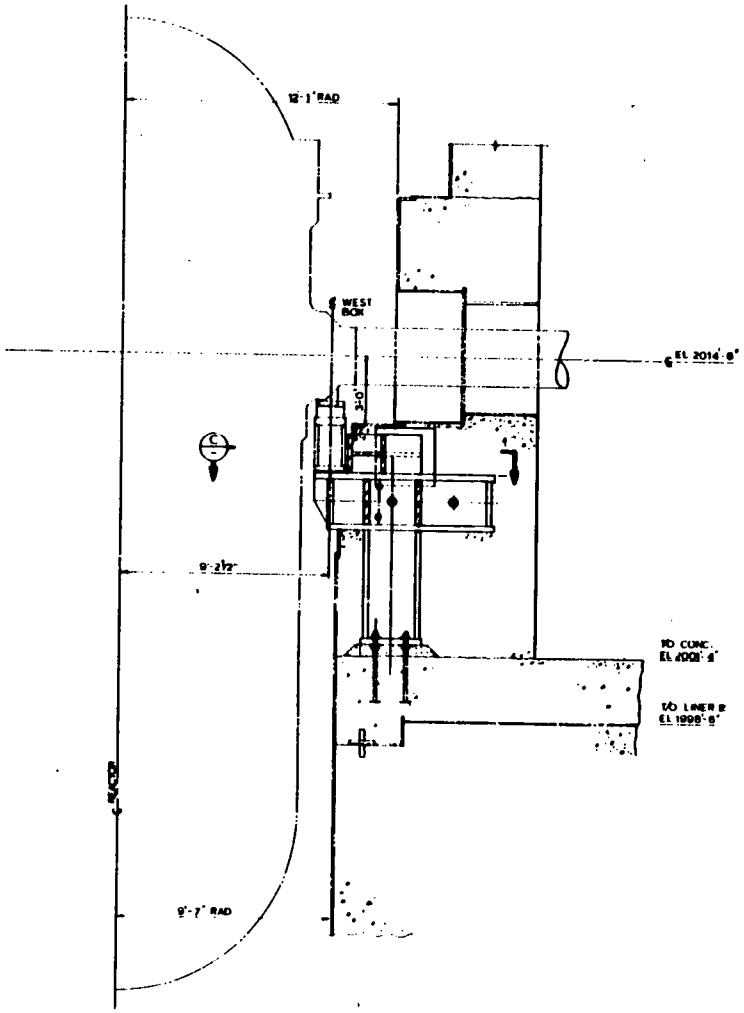

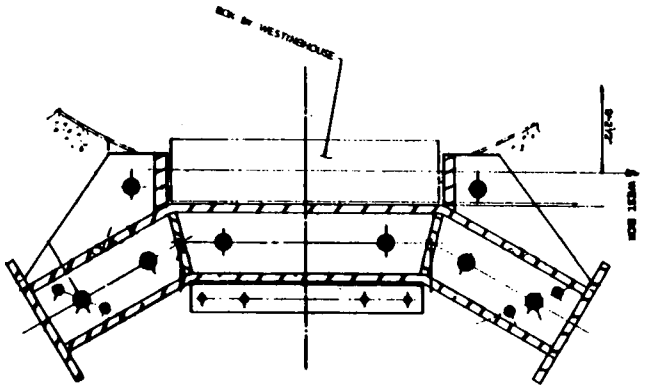

SECTION C

Rev. 0

WOLF CREEK UPDATED SAFETY ANALYSIS REPORT
FIGURE 3.8-51 REACTOR VESSEL SUPPORT SYSTEM - ELEVATION

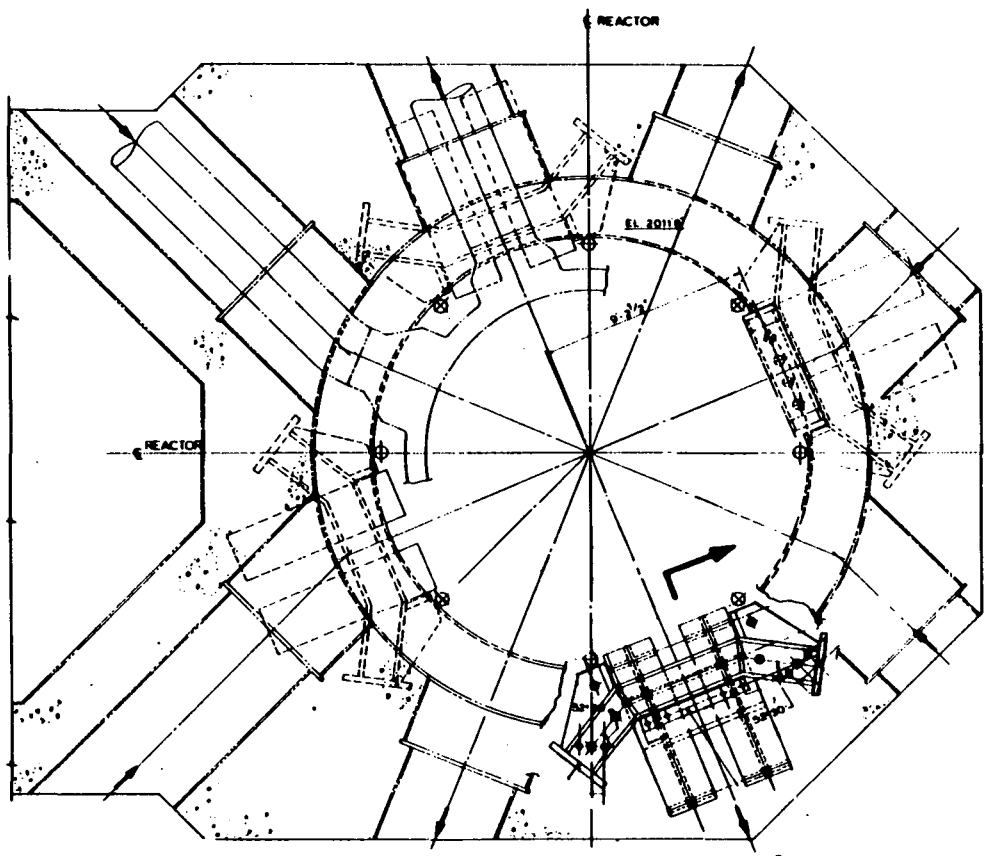

PLAN AT EL 2014'-6"

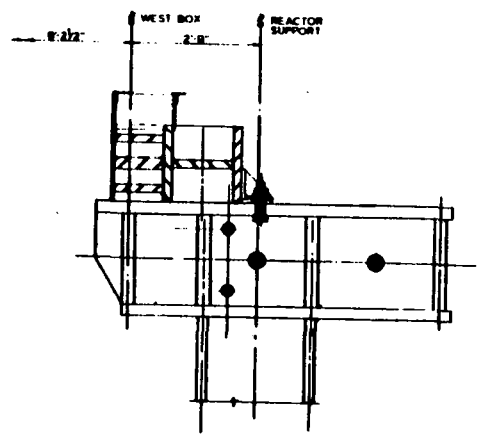

SECTION B

Rev. 0

WOLF CREEK UPDATED SAFETY ANALYSIS REPORT
FIGURE 3.8-52
REACTOR VESSEL SUPPORT SYSTEM - PLAN

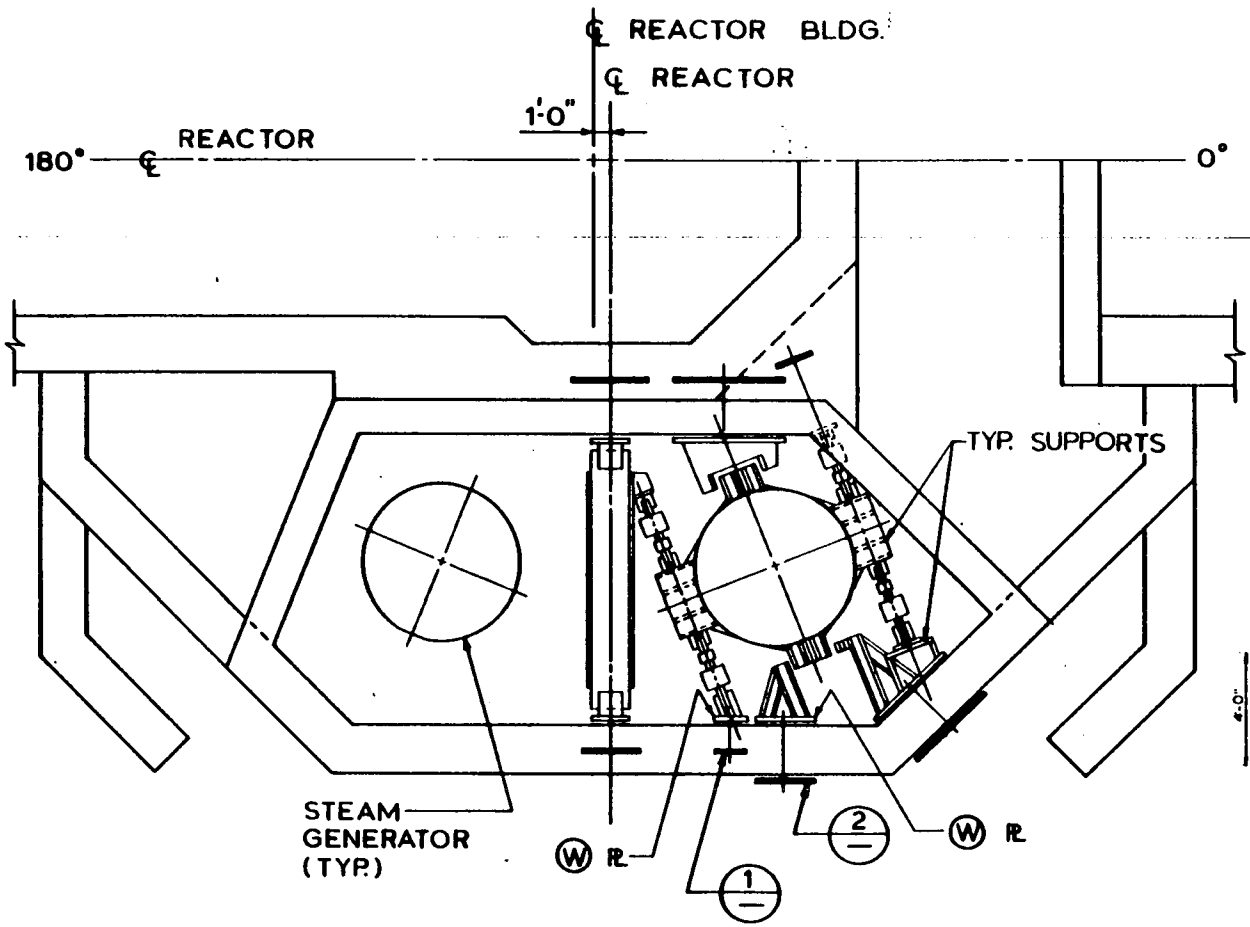

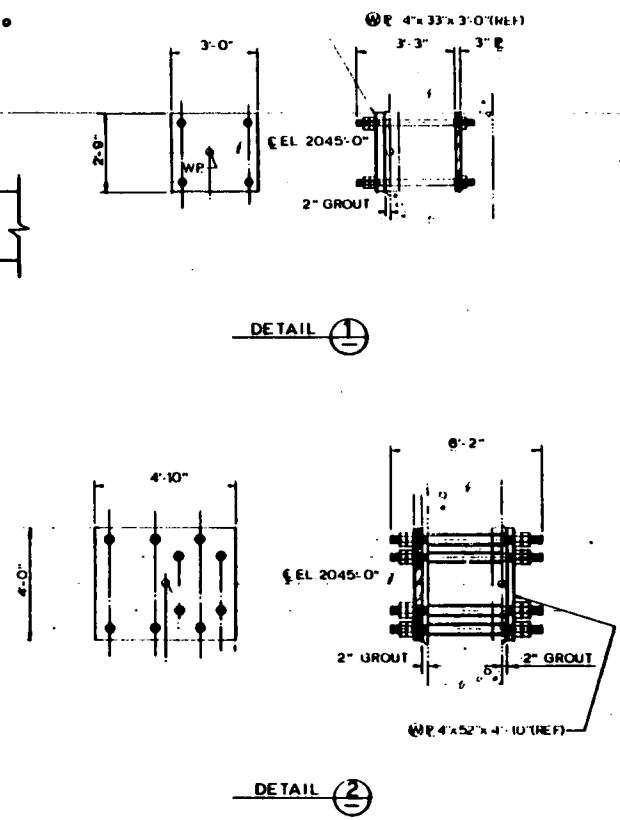

PLAN - STEAM GENERATOR
UPPER LATERAL SUPPORTS

Rev. 0

WOLF CREEK UPDATED SAFETY ANALYSIS REPORT
FIGURE 3.8-53
STEAM GENERATOR SUPPORT SYSTEM - UPPER SUPPORTS

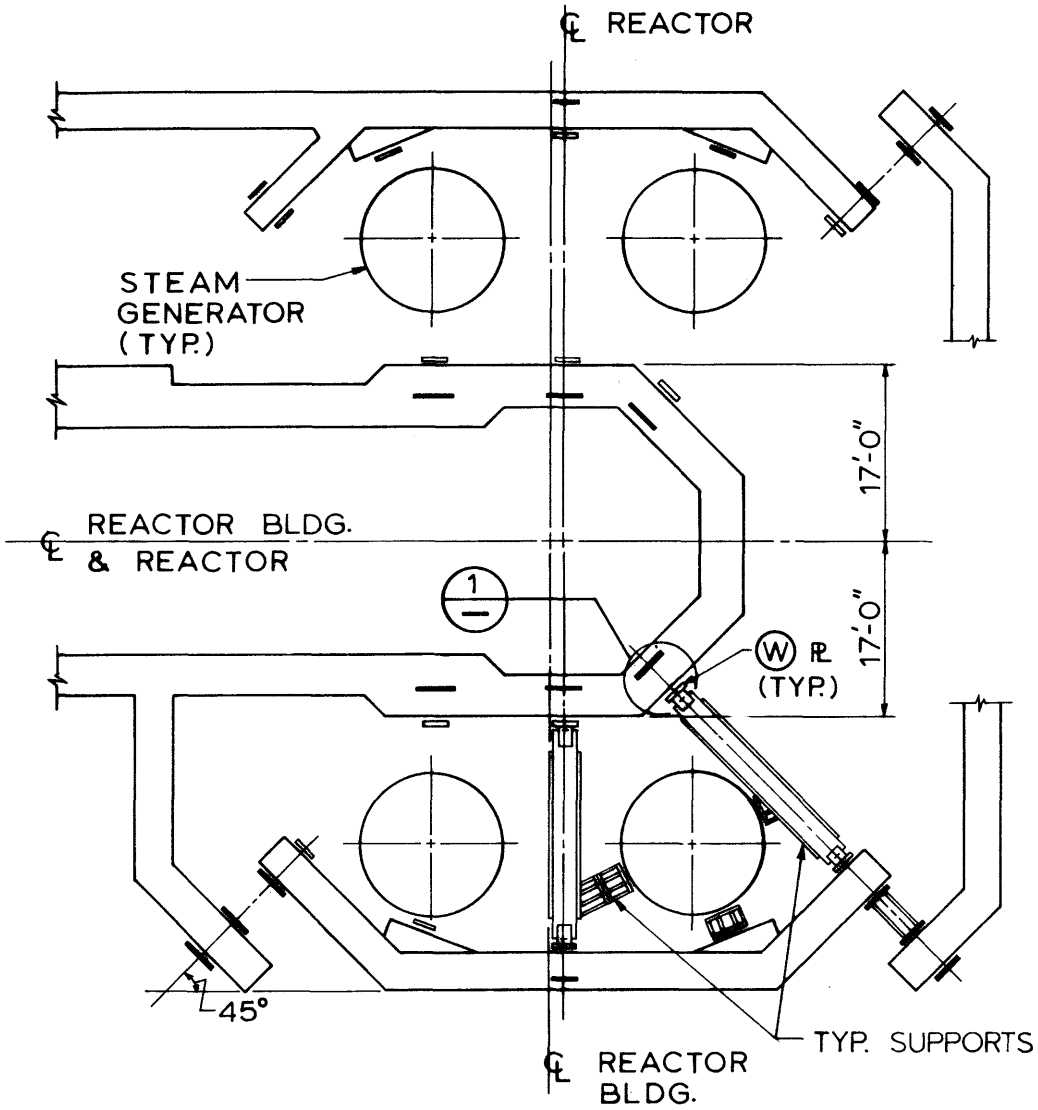

PLAN-STEAM GENERATOR LOWER LATERAL SUPPORTS

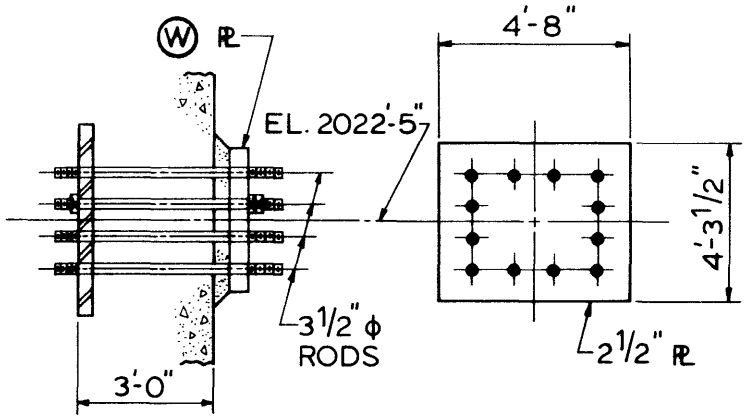

DETAIL 1

Rev. 0

WOLF CREEK
UPDATED SAFETY ANALYSIS REPORT

FIGURE 3.8-54

STEAM GENERATOR SUPPORT SYSTEM - LOWER SUPPORTS

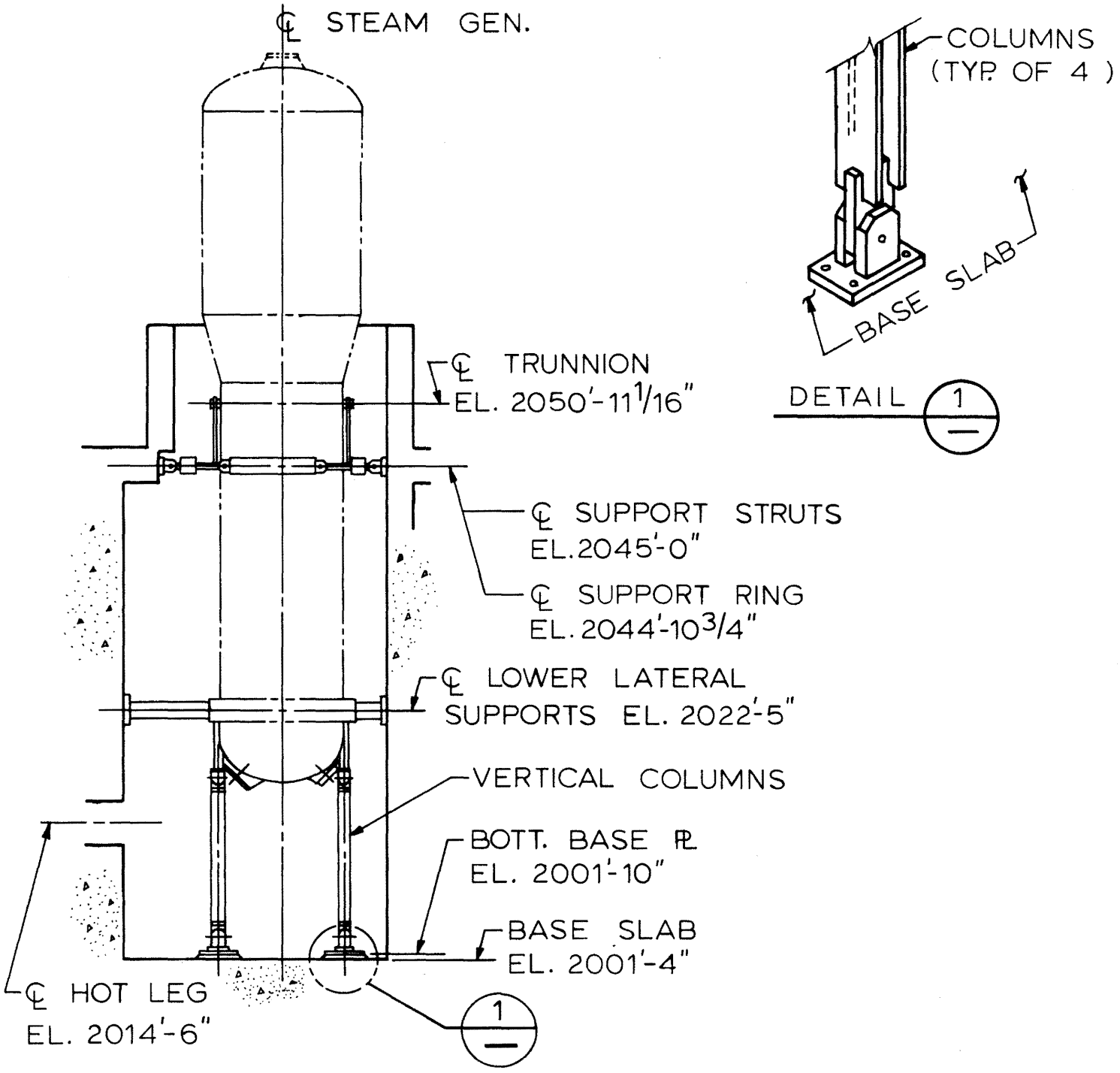

STEAM GENERATOR
ELEVATION VIEW

Rev. 0

WOLF CREEK
UPDATED SAFETY ANALYSIS REPORT

FIGURE 3.8-55

STEAM GENERATOR SUPPORT SYSTEM - ELEVATION

WOLF CREEK

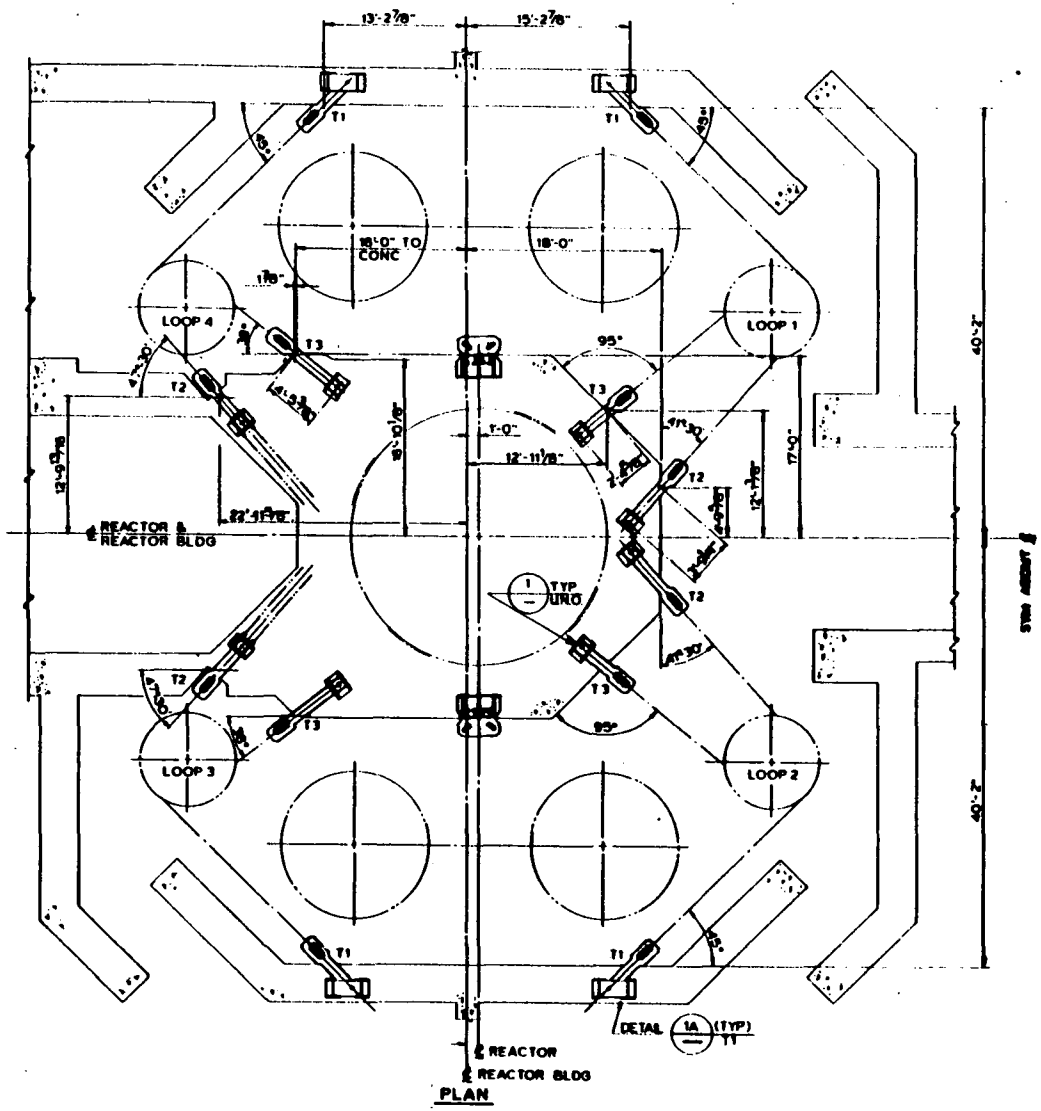

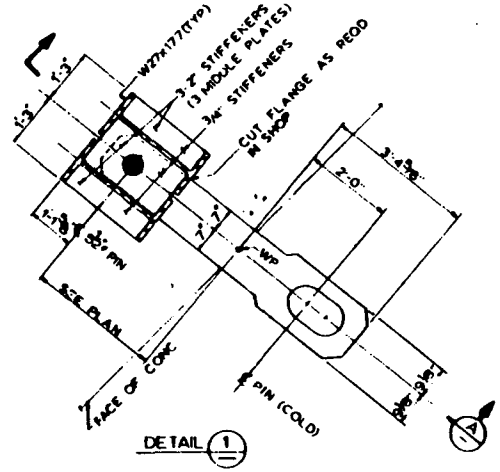

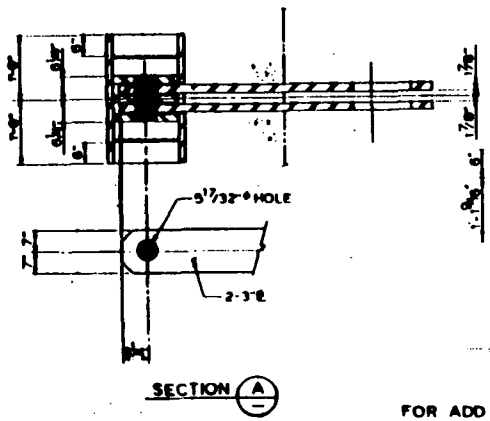

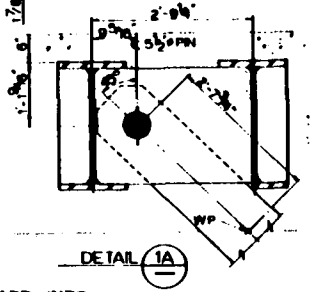

FOR ADD INFO SEE DET 1

Rev. 0

WOLF CREEK
UPDATED SAFETY ANALYSIS REPORT

FIGURE 3.8-56

REACTOR COOLANT PUMP LATERAL SUPPORT EMBEDS

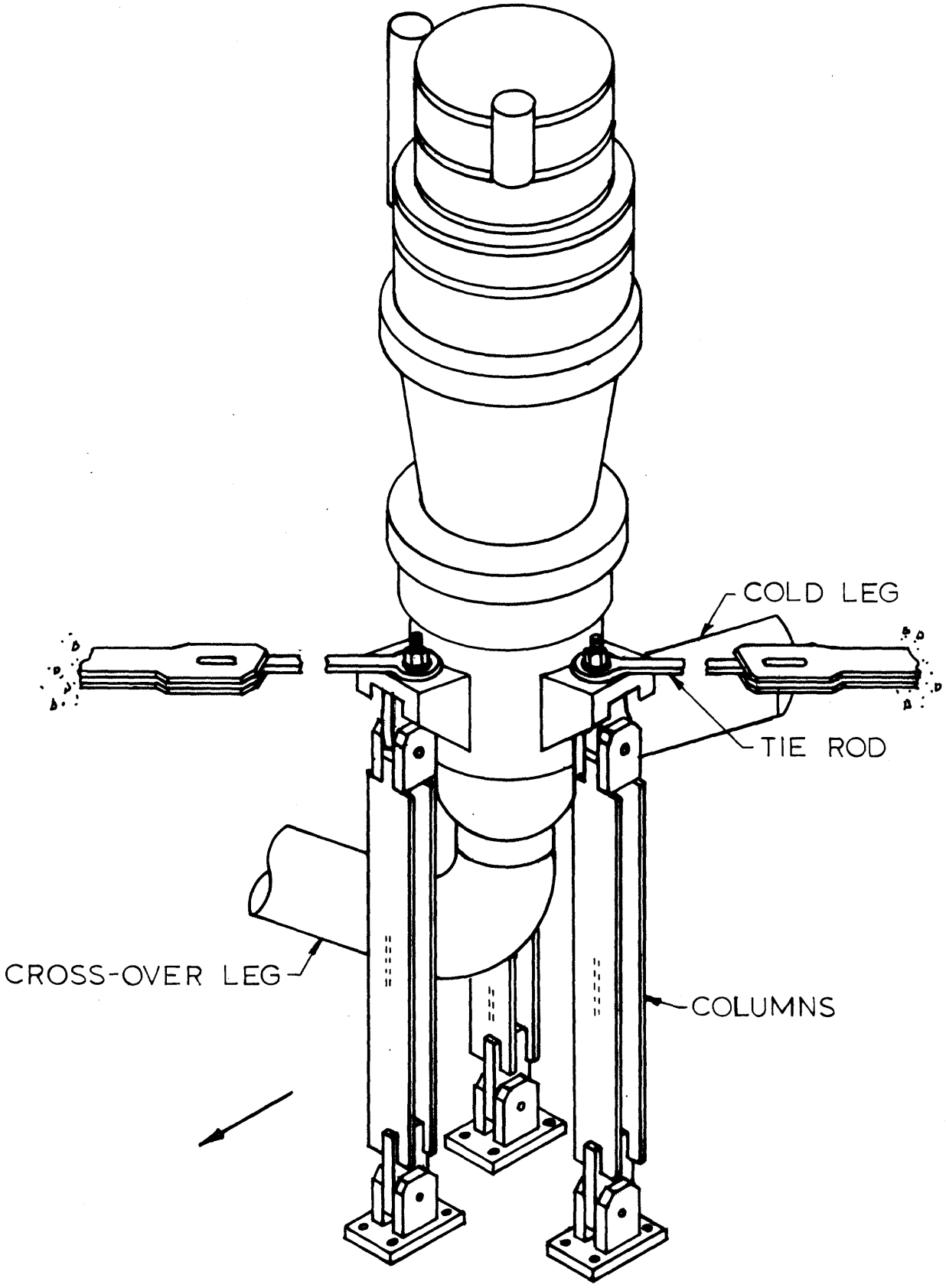

Rev. 0

WOLF CREEK
UPDATED SAFETY ANALYSIS REPORT

FIGURE 3.8-57

REACTOR COOLANT PUMP SUPPORT DETAILS

WOLF CREEK

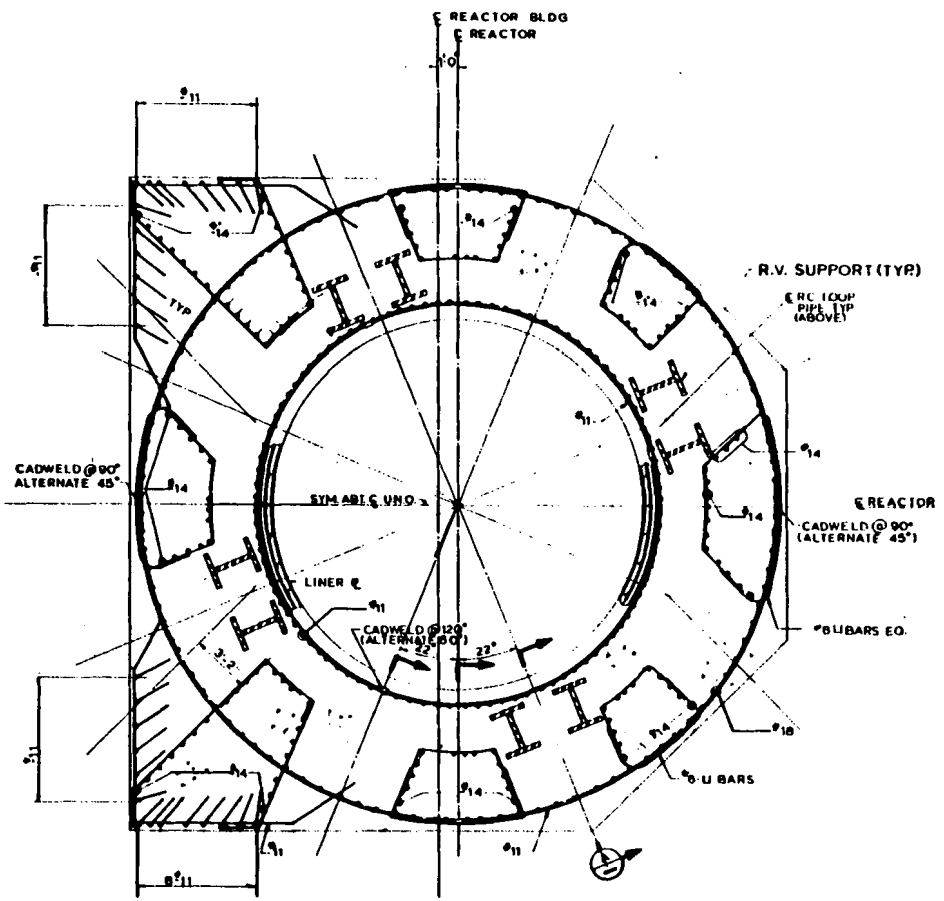

PLAN AT EL 2001'-4" TO EL 2005'-7"

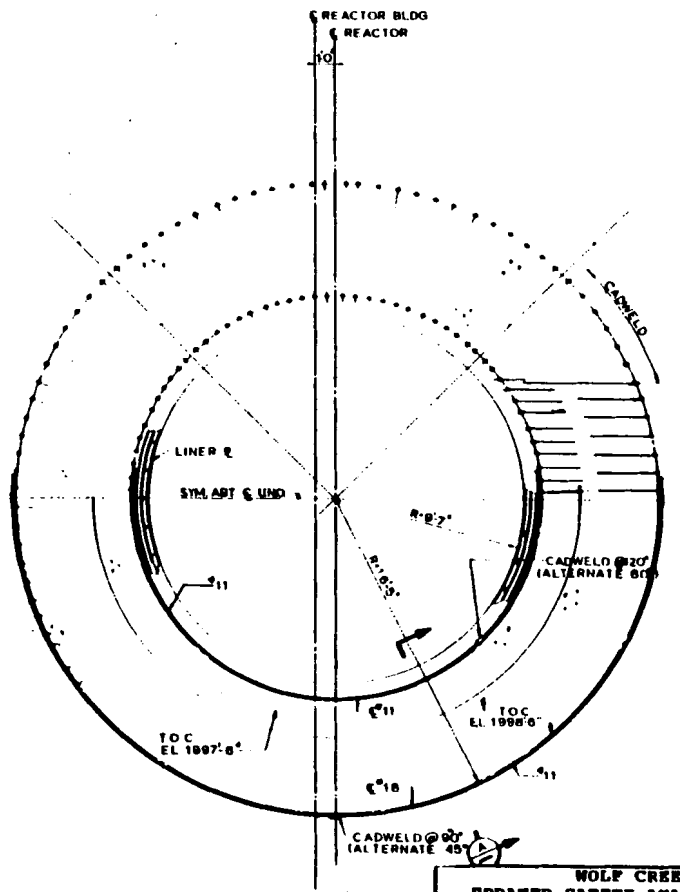

PLAN AT EL. 1997'-6" TO EL. 2001'-4"

Rev. 0

WOLF CREEK
UPDATED SAFETY ANALYSIS REPORT

FIGURE 3.8-58

REACTOR CAVITY PLAN - ELEVATION
1997'-6" TO 2005'-7"

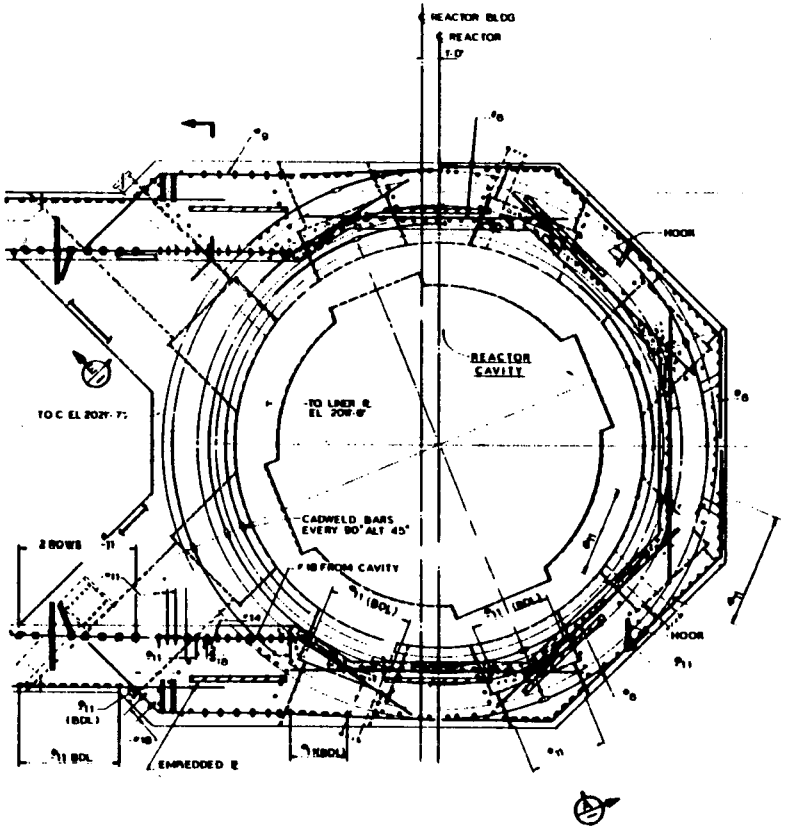

PLAN AT EL 2017'-5" TO EL 2021'-7"

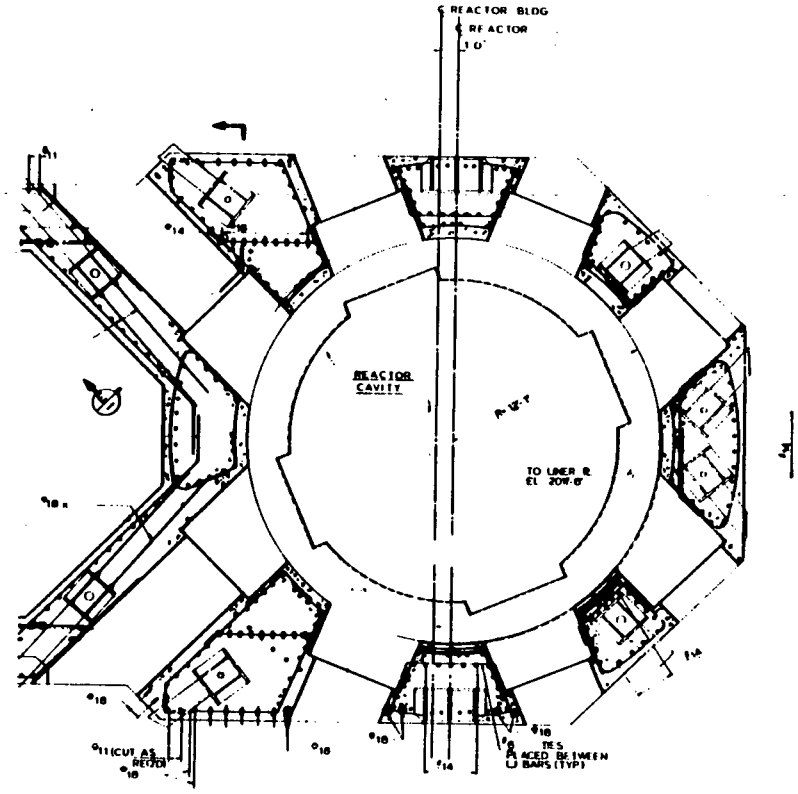

PLAN AT EL 2011'-6" TO EL 2017'-5"

Rev. 0

WOLF CREEK
UPDATED SAFETY ANALYSIS REPORT

FIGURE 3.8-59

REACTOR CAVITY PLAN - ELEVATION 2011'-6" TO 2021'-7"

WOLF CREEK

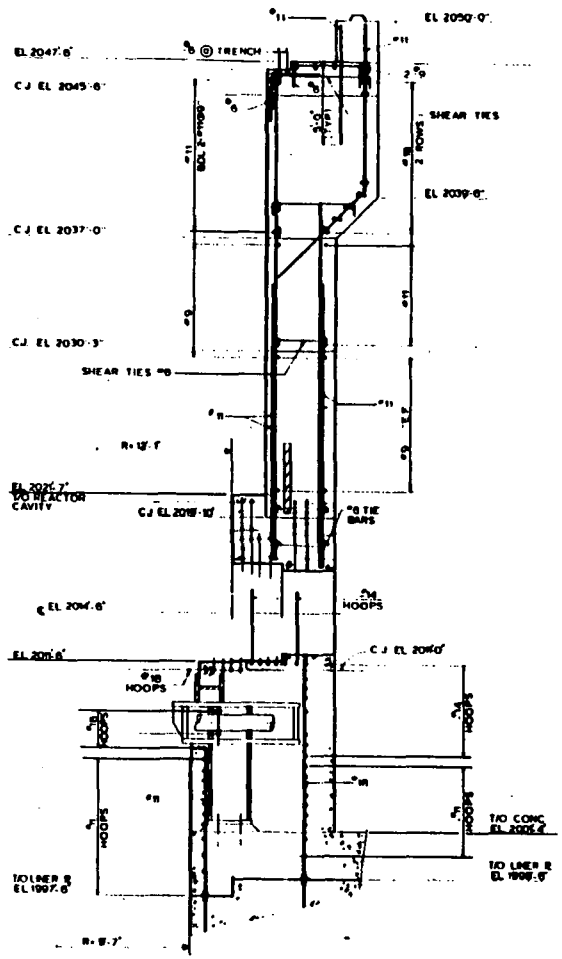

SECTION A

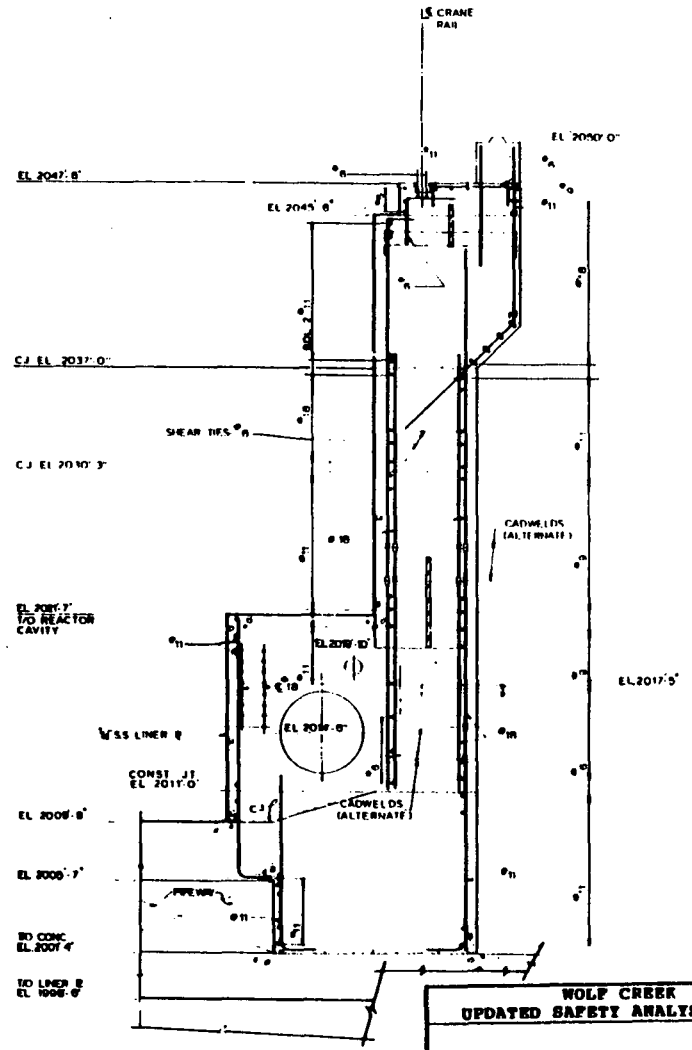

SECTION B

Rev. 0

WOLF CREEK
UPDATED SAFETY ANALYSIS REPORT

FIGURE 3.8-60

REACTOR CAVITY ELEVATIONS

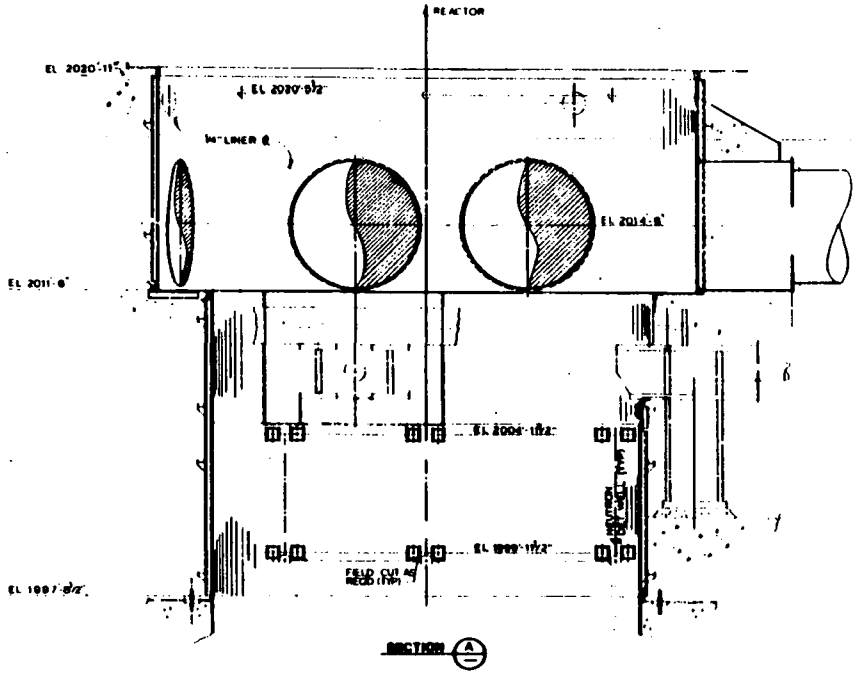

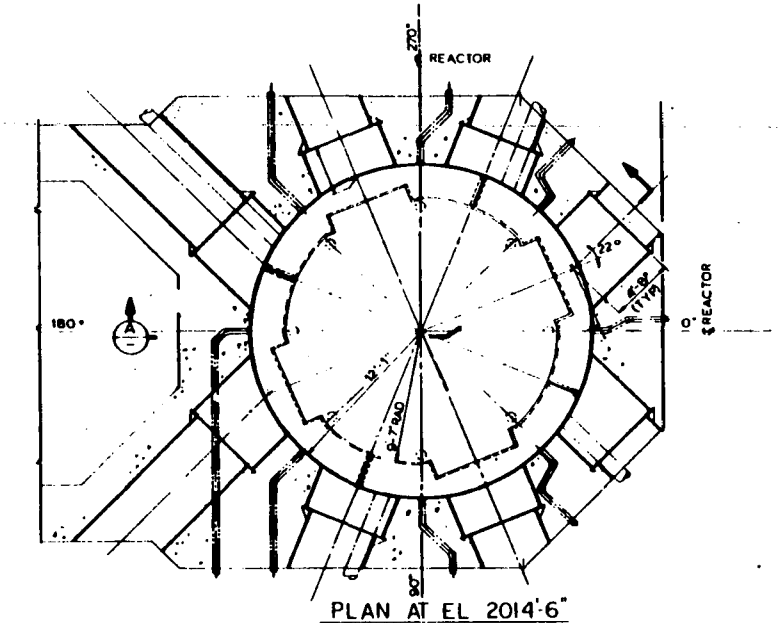

PLAN AT EL 2014'-6"

Rev. 0

WOLF CREEK UPDATED SAFETY ANALYSIS REPORT
FIGURE 3.8-61
REACTOR CAVITY NEAT LINE

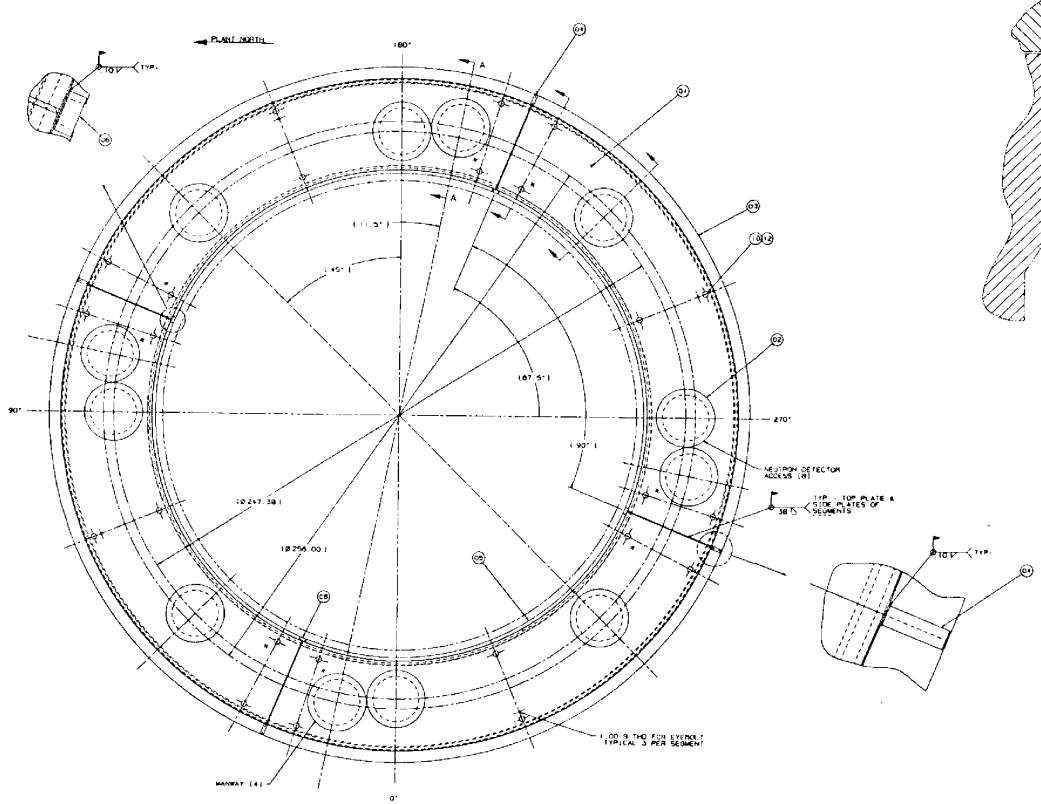

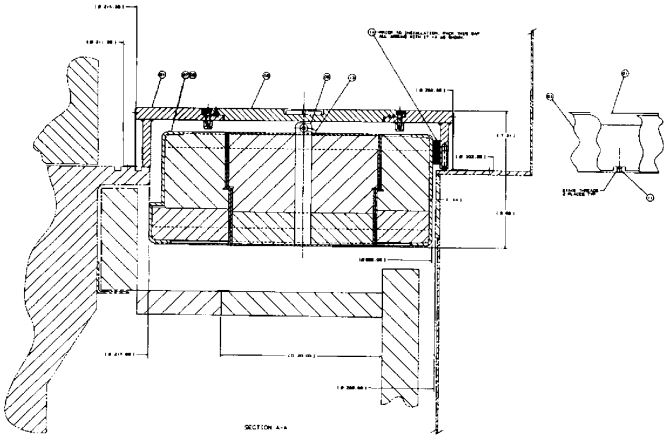

Rev. 6

WOLF CREEK
UPDATED SAFETY ANALYSIS REPORT

FIGURE 3.8-61A

REACTOR CAVITY SEAL RING
(NEUTRON SHIELD)

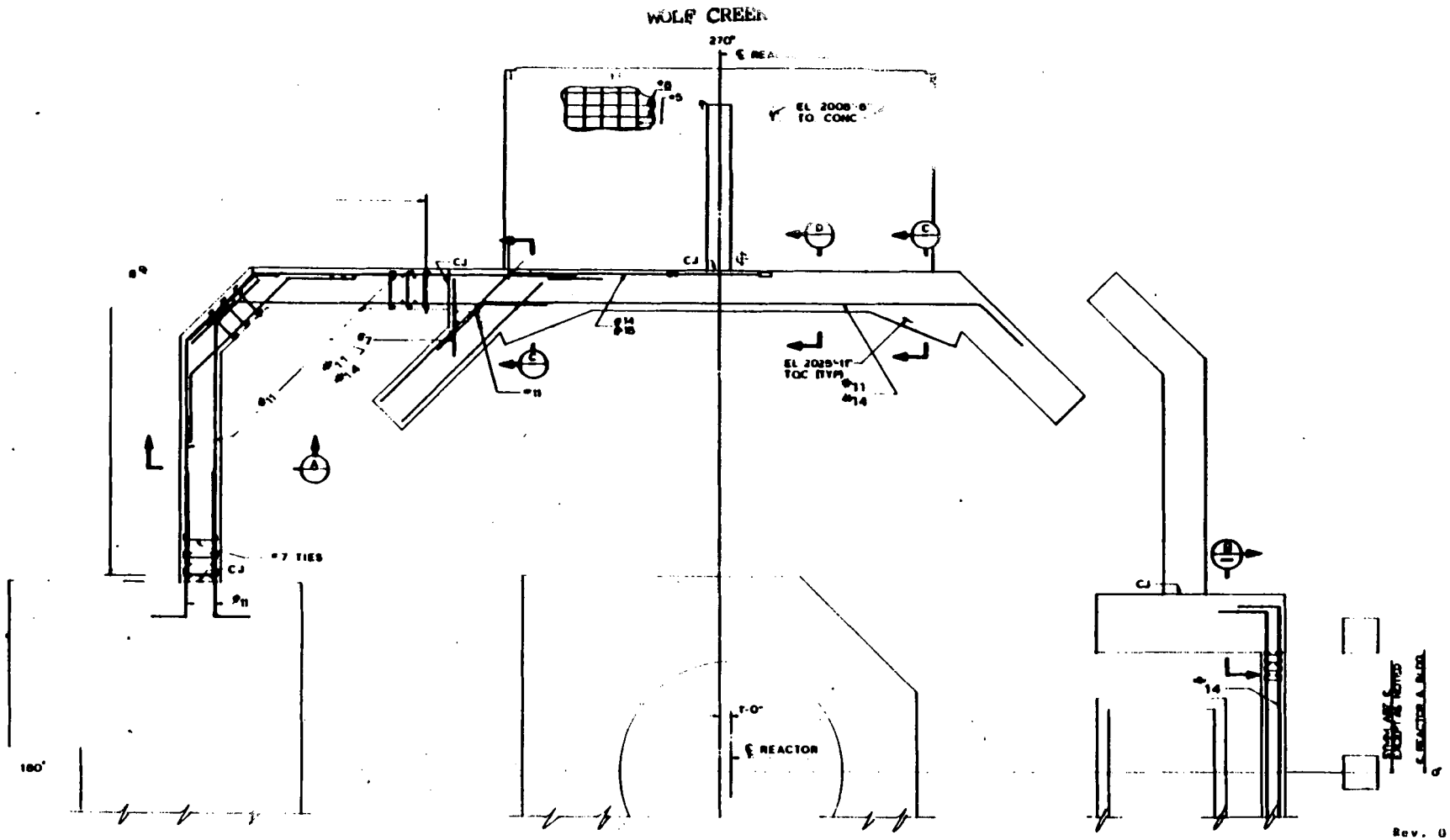

WOLF CREEK
UPDATED SAFETY ANALYSIS REPORT

FIGURE 3.8-62

SECONDARY SHIELD WALLS - ELEVATION 2000'-0" TO 2025'-0"

WOLF CREEK

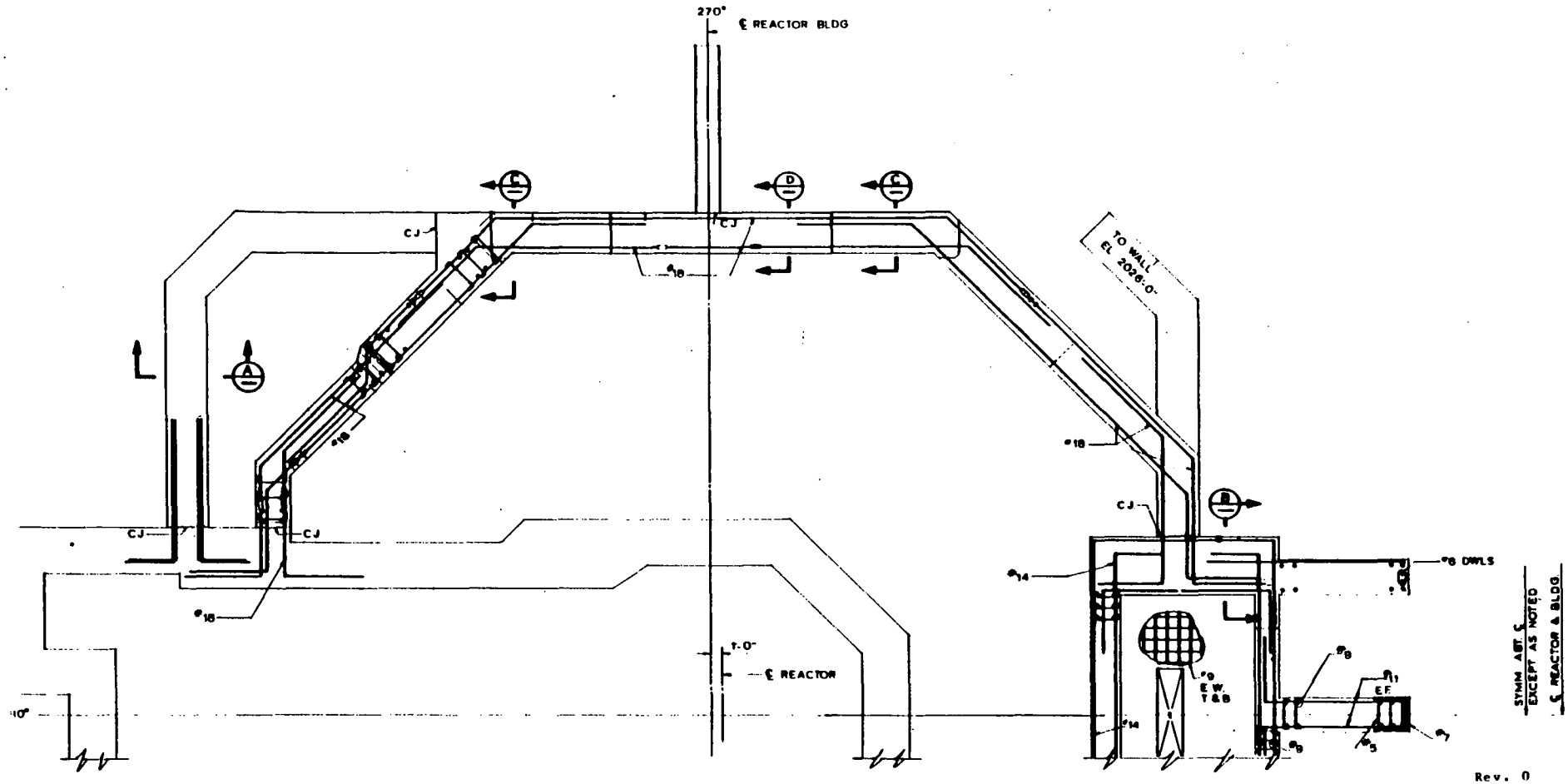

Rev. 0

WOLF CREEK
UPDATED SAFETY ANALYSIS REPORT

FIGURE 3.8-63

SECONDARY SHIELD WALLS - ELEVATION 2025'-0" TO 2047'-0"

WOLF CREEK

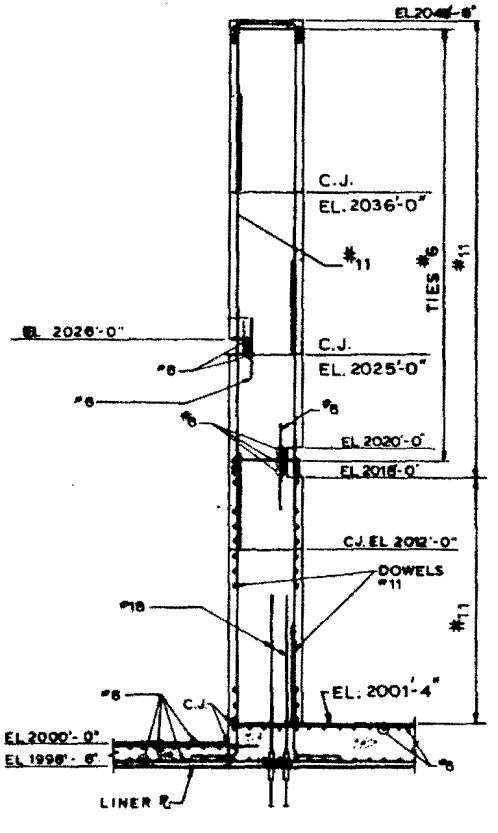

SECTION E

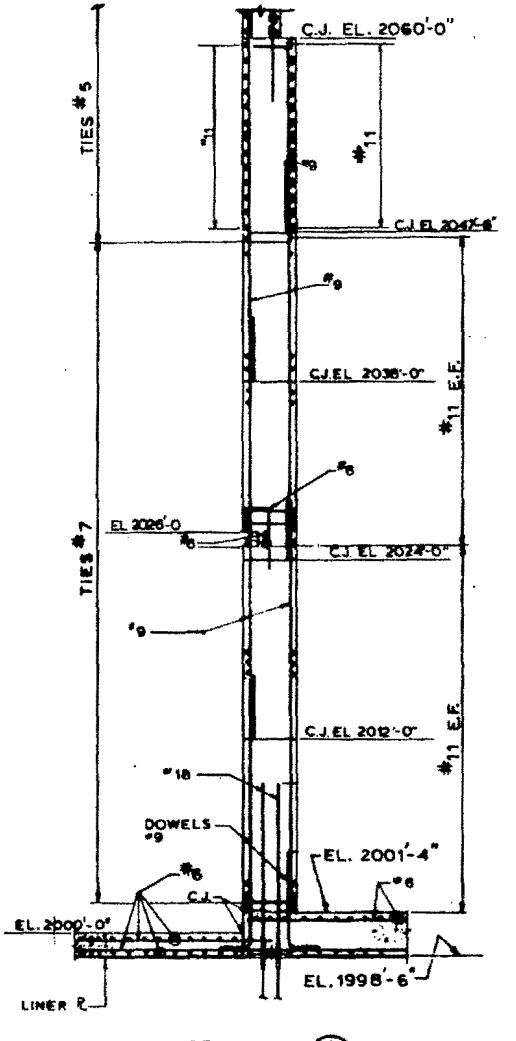

SECTION A

Rev. 0

WOLF CREEK
UPDATED SAFETY ANALYSIS REPORT

FIGURE 3.8-64

SECONDARY SHIELD WALLS - SECTIONS

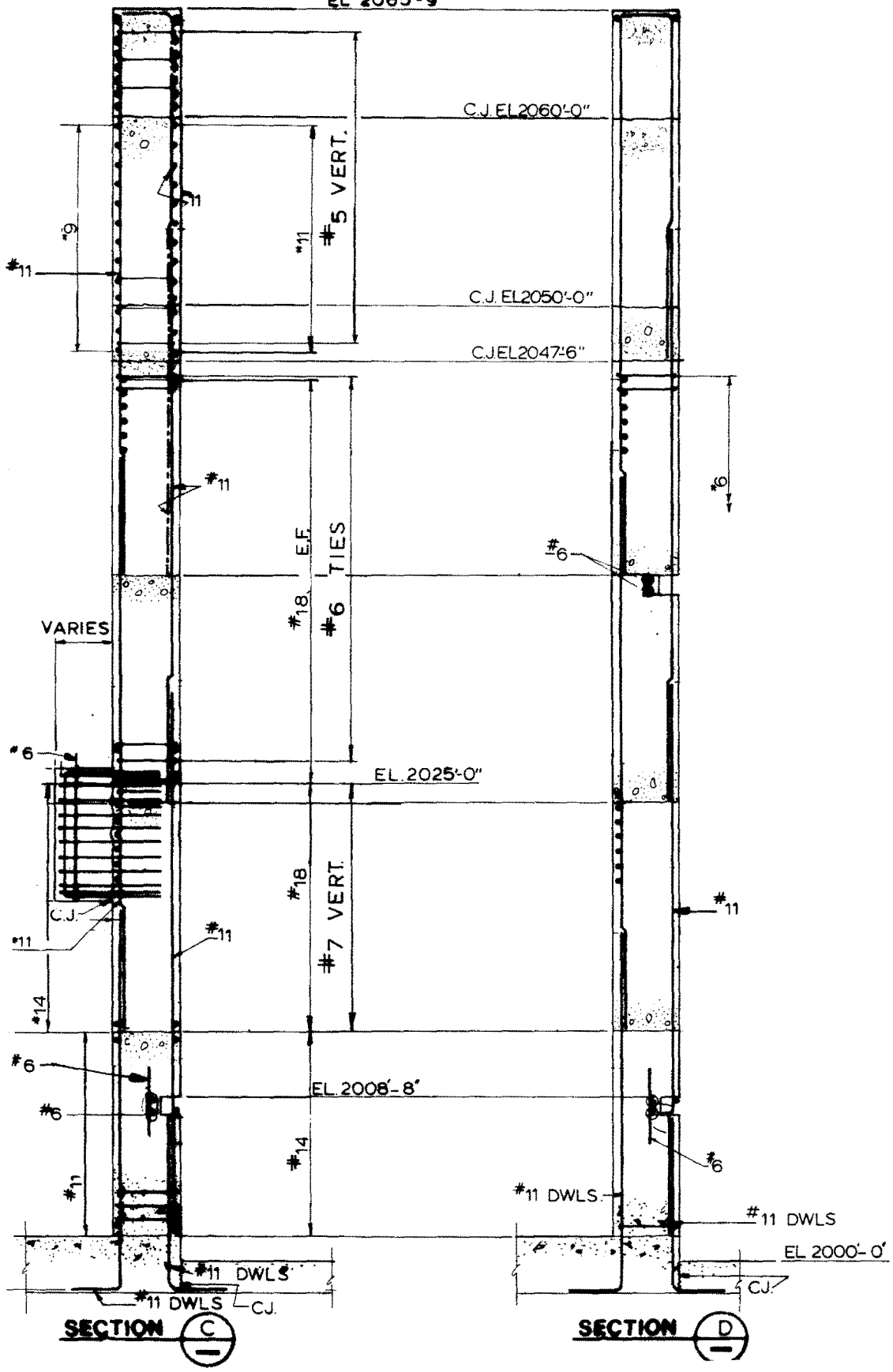

Rev. 0

WOLF CREEK
UPDATED SAFETY ANALYSIS REPORT

FIGURE 3.8-65

SECONDARY SHIELD WALLS - ADDITIONAL SECTIONS

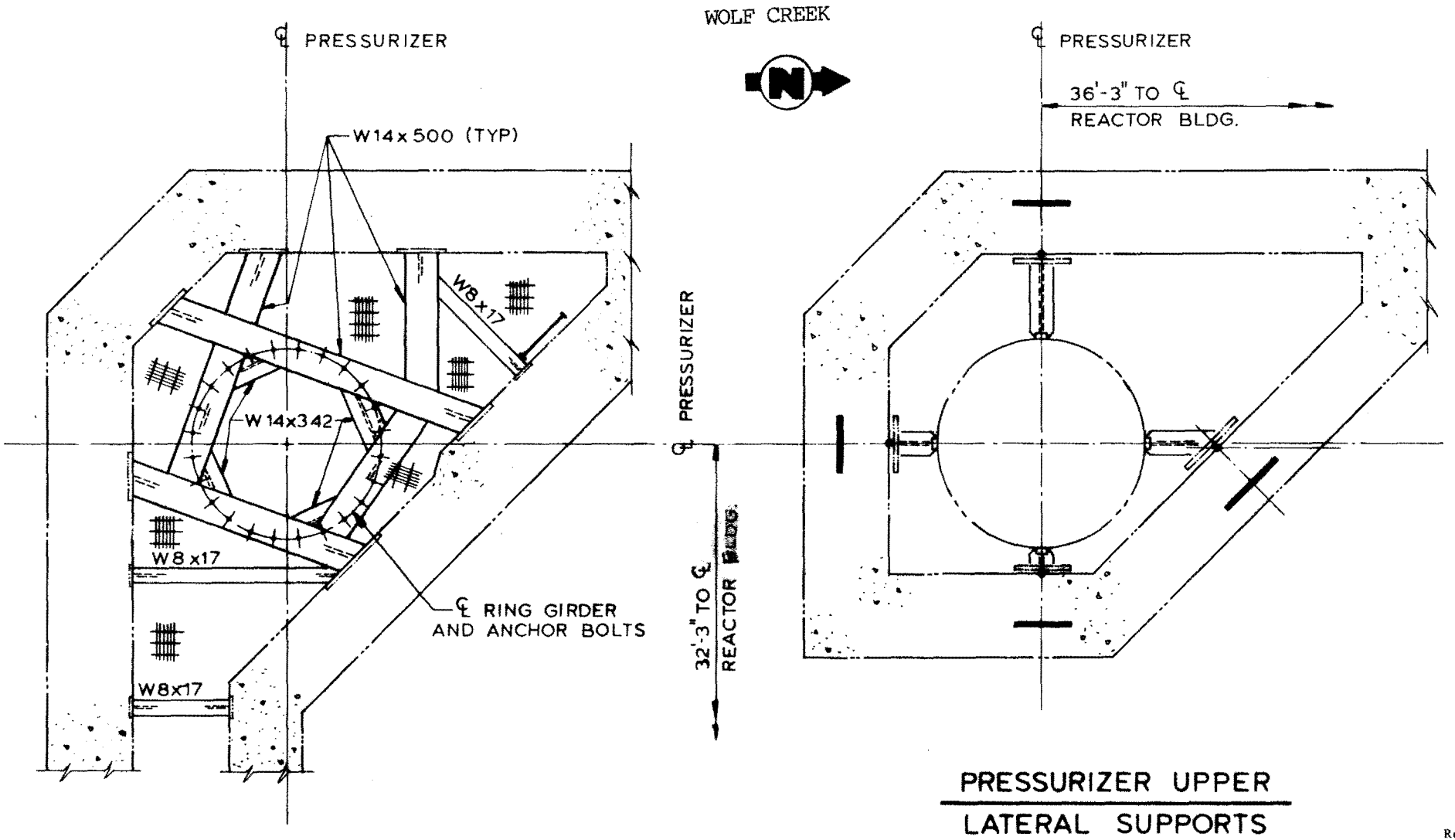

PRESSURIZER SUPPORT
AT EL 2029'-6"

PRESSURIZER UPPER
LATERAL SUPPORTS

Rev. 0

WOLF CREEK
UPDATED SAFETY ANALYSIS REPORT

FIGURE 3.8-66

PRESSURIZER SUPPORTS

WOLF CREEK

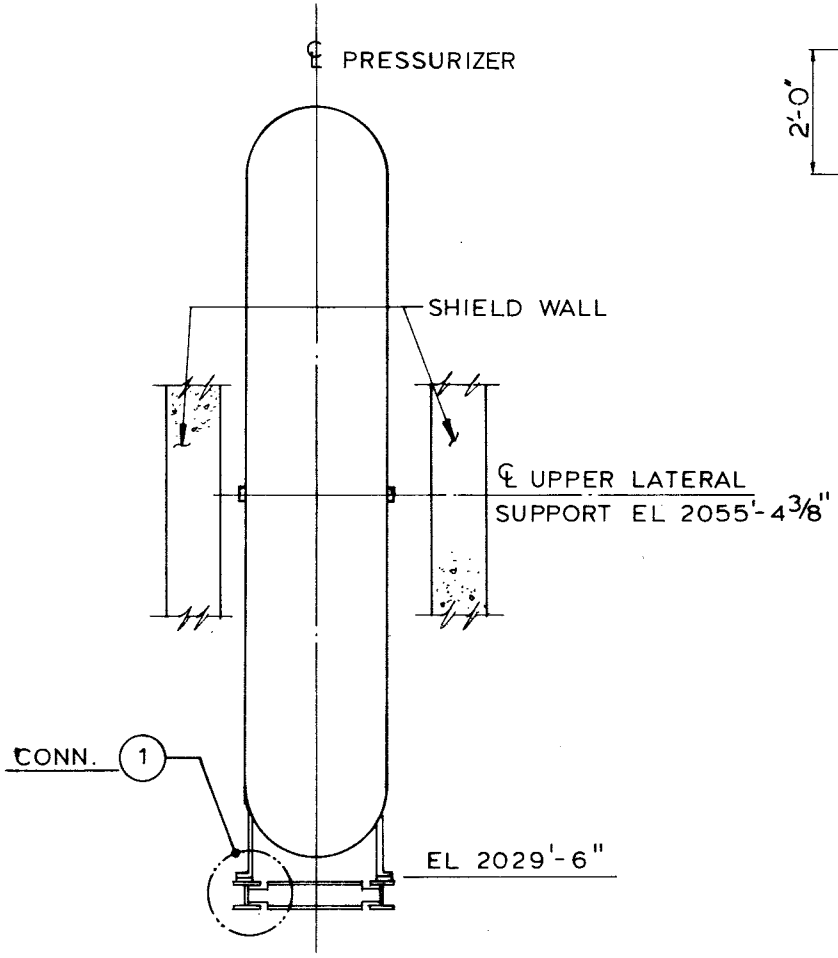

PRESSURIZER

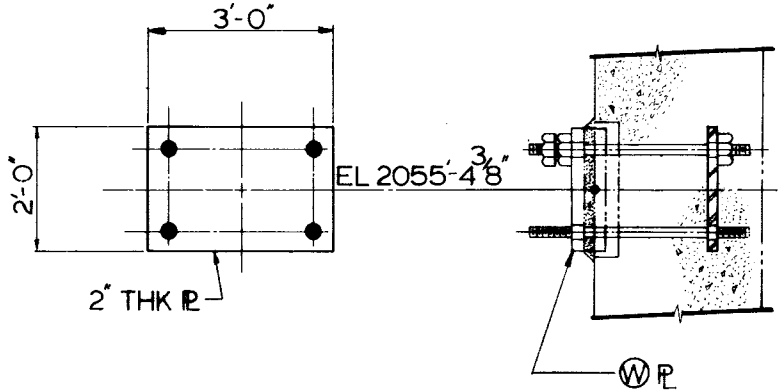

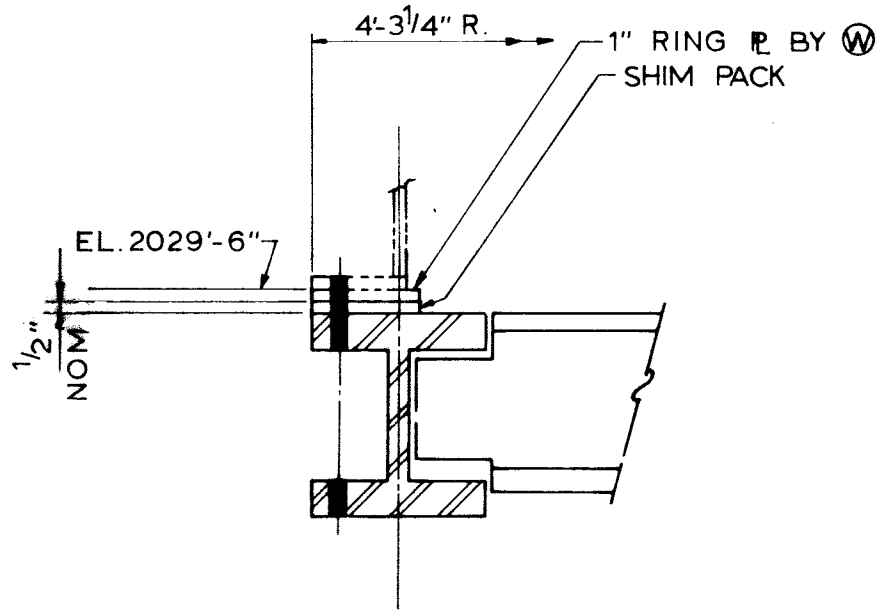

CONNECTION 1

SCALE: 1" = 1'-0"

Rev. 0

WOLF CREEK
UPDATED SAFETY ANALYSIS REPORT

FIGURE 3.8-67

PRESSURIZER SUPPORT DETAILS

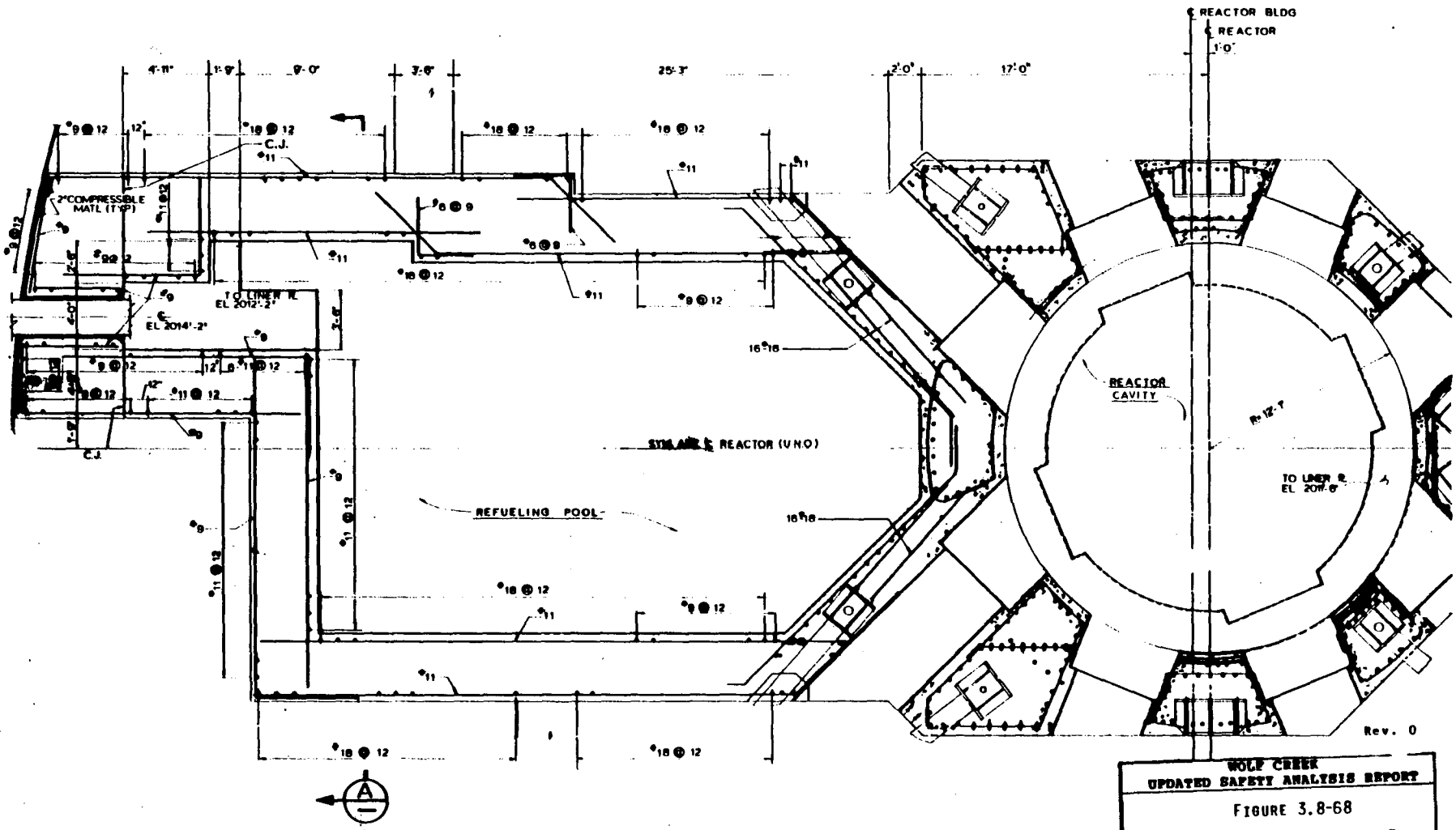

PLAN @ EL. 2011'-6" TO EL. 2017'-5"

WOLF CREEK
UPDATED SAFETY ANALYSIS REPORT

FIGURE 3.8-68

REFUELING CANAL - TYPICAL PLAN

WOLF CREEK

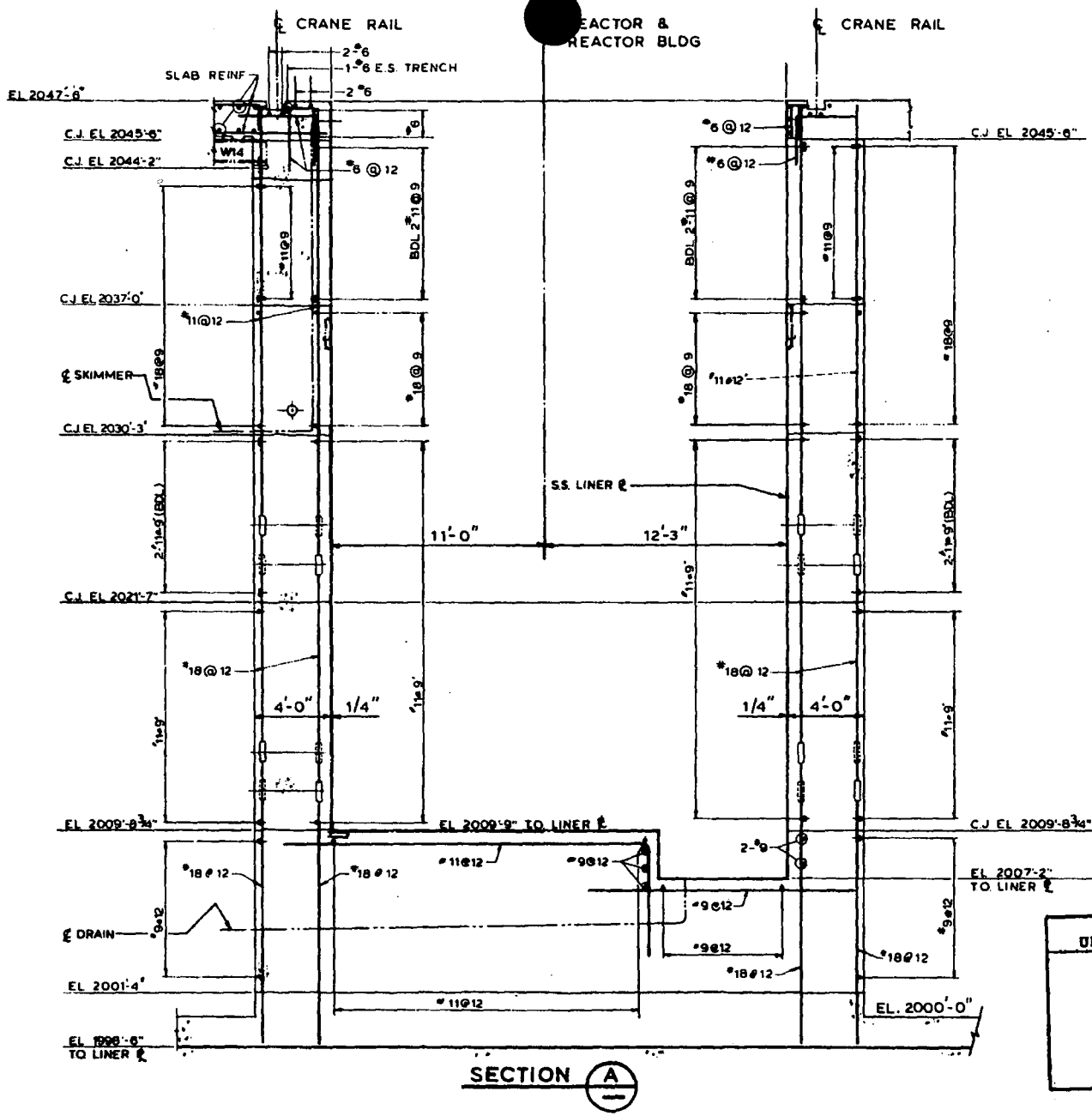

SECTION A

Rev. 0

WOLF CREEK UPDATED SAFETY ANALYSIS REPORT
FIGURE 3.8-69
REFUELING POOL TYPICAL CROSS SECTION

WOLF CREEK

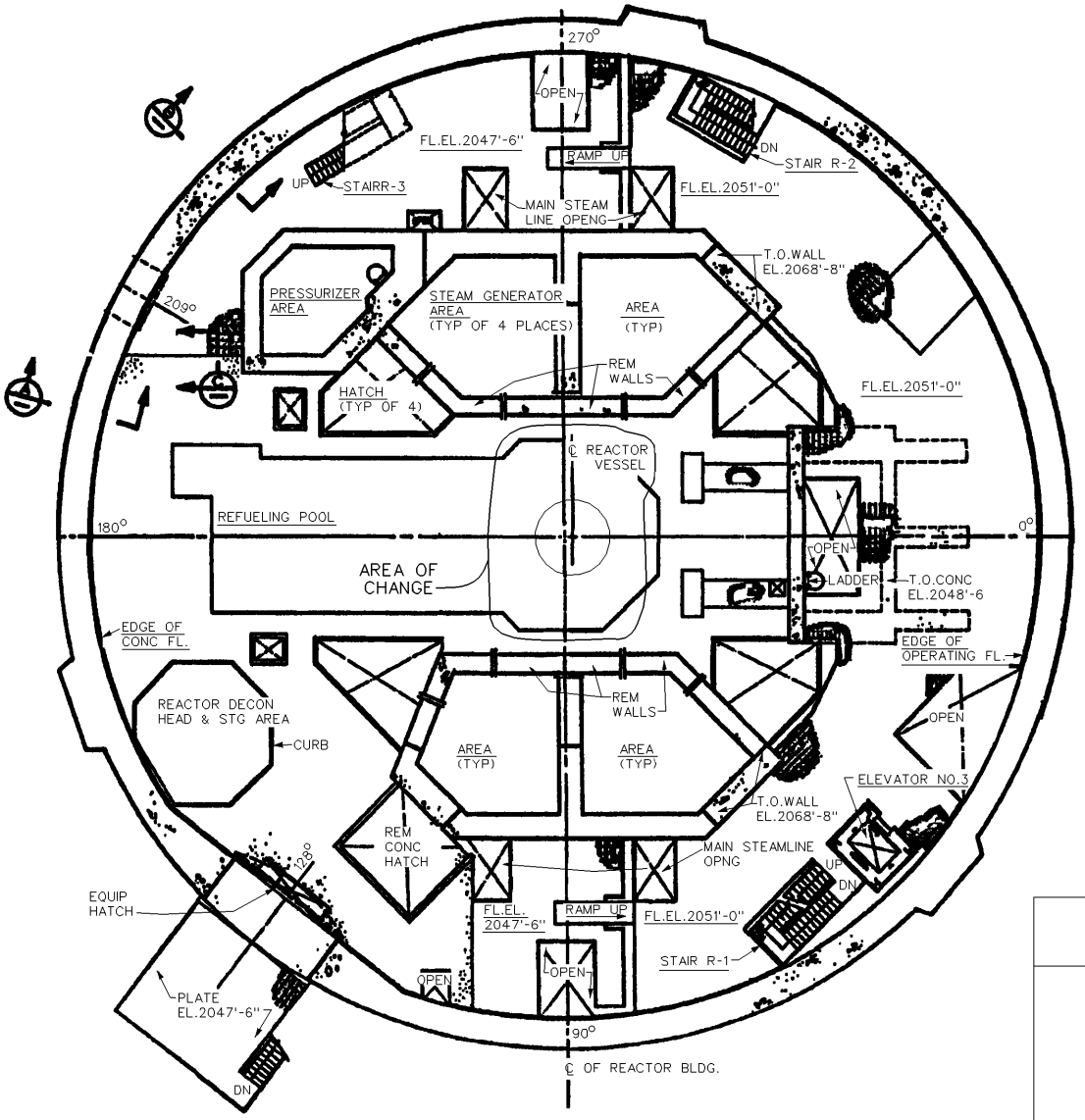

REV.19

WOLF CREEK
UPDATED SAFETY ANALYSIS REPORT

FIGURE 3.8-70

REACTOR BUILDING OPERATING FLOOR

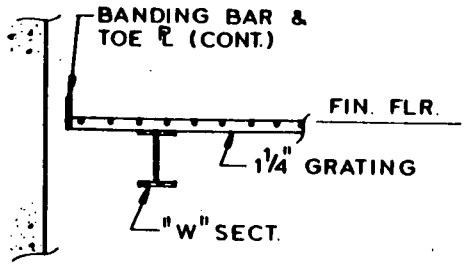

SECTION B

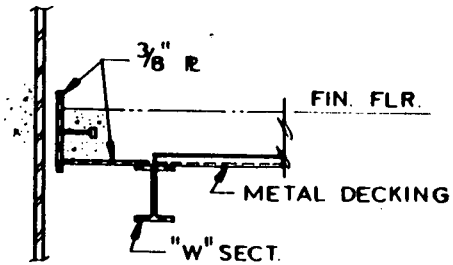

SECTION A

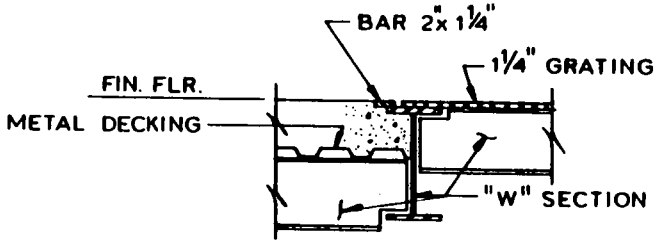

SECTION C

Rev. 0

WOLF CREEK
UPDATED SAFETY ANALYSIS REPORT

FIGURE 3.8-71

REACTOR BUILDING OPERATING FLOOR SUPPORTS AT SHELL

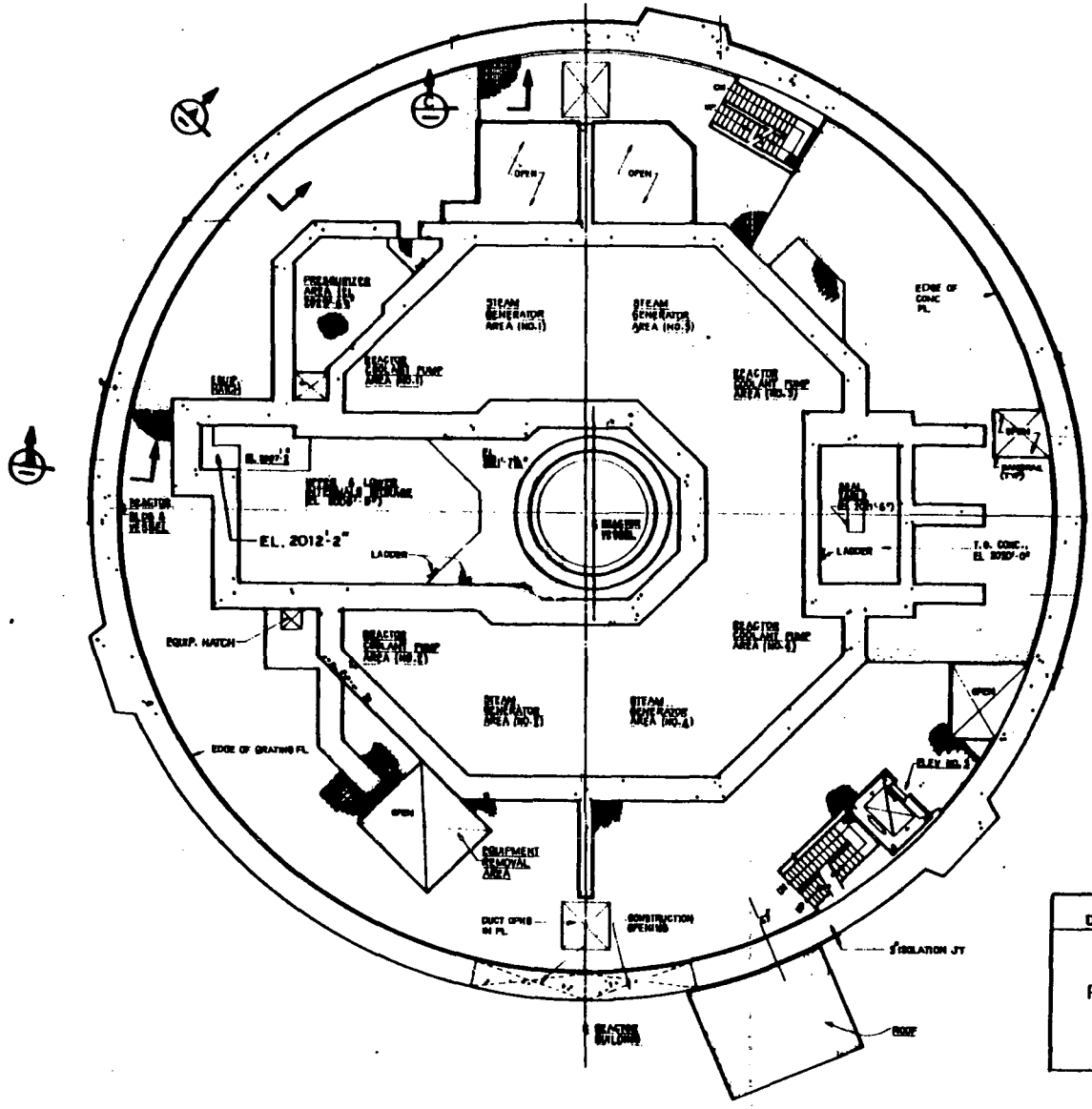

Rev. 0

WOLF CREEK
UPDATED SAFETY ANALYSIS REPORT

FIGURE 3.8-72

REACTOR BUILDING INTERMEDIATE FLOOR AT ELEVATION 2026'-0"

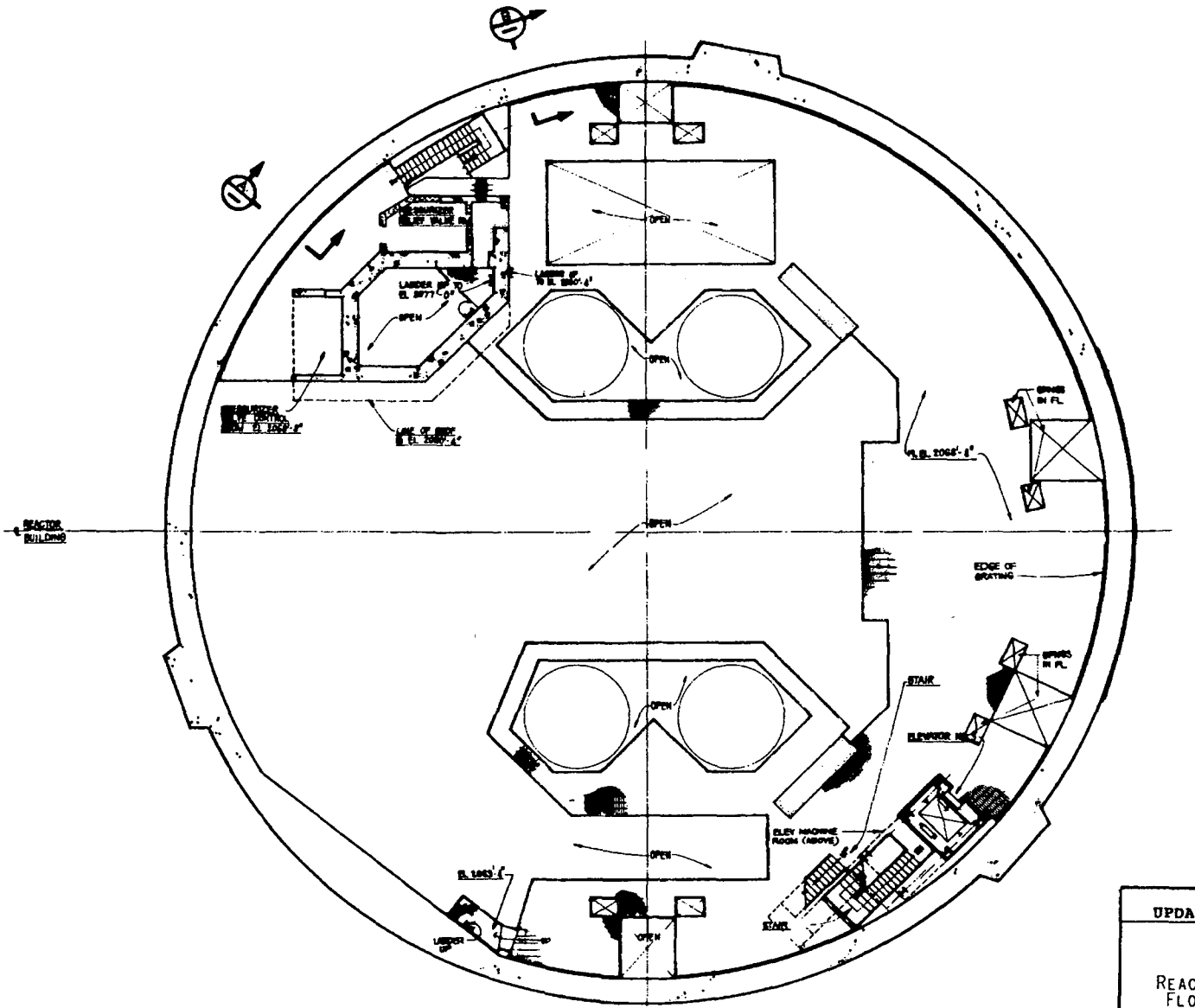

Rev. 0

WOLF CREEK
UPDATED SAFETY ANALYSIS REPORT

FIGURE 3.8-73

REACTOR BUILDING INTERMEDIATE FLOOR AT ELEVATION 2068'-6"

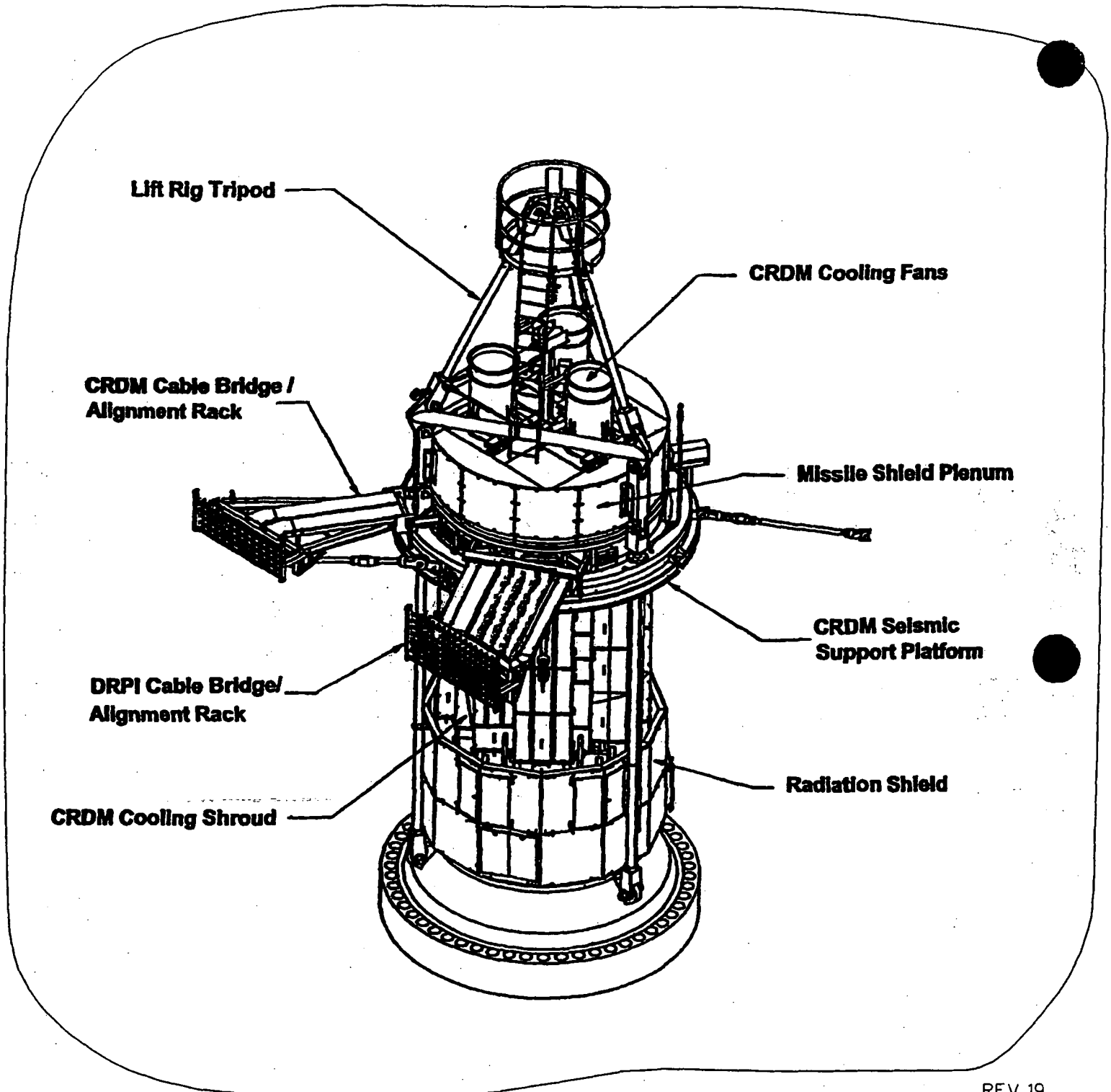

AREA OF CHANGE

REV.19

WOLF CREEK
UPDATED SAFETY ANALYSIS REPORT

FIGURE 3.8-74

SIMPLIFIED HEAD ASSEMBLY
WITH
REACTOR MISSILE SHIELD

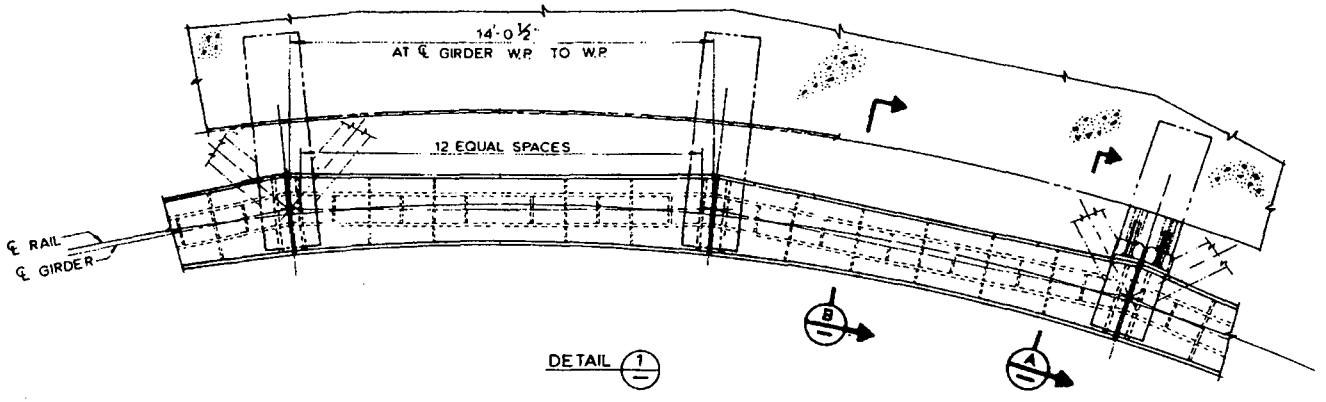

DETAIL 1

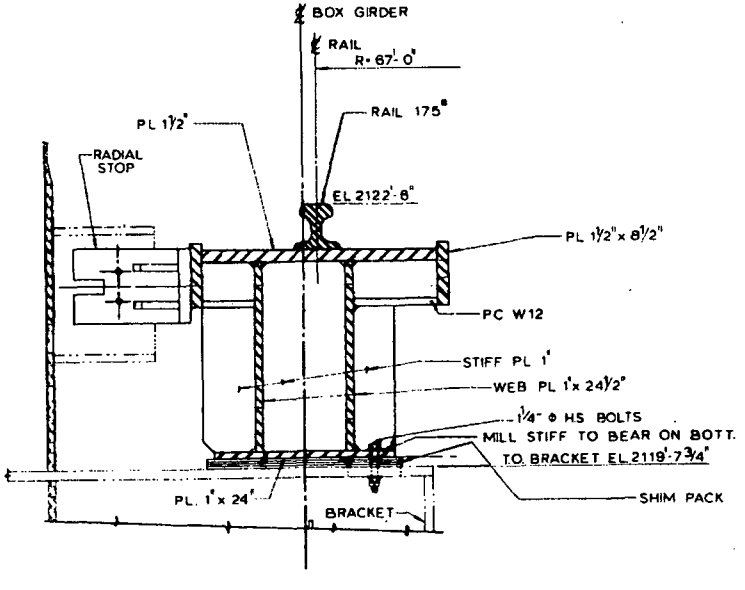

SECTION A

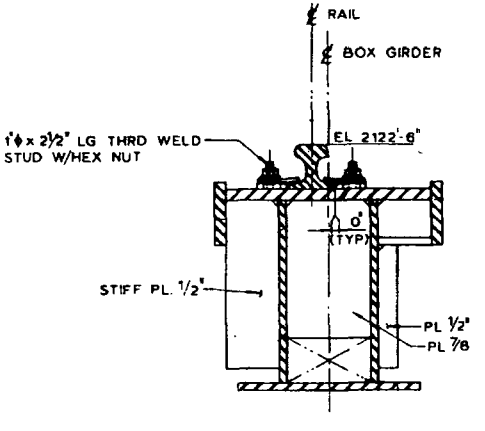

SECTION B

Rev. 0

WOLF CREEK UPDATED SAFETY ANALYSIS REPORT
FIGURE 3.8-75 REACTOR BUILDING POLAR CRANE SUPPORT SYSTEM

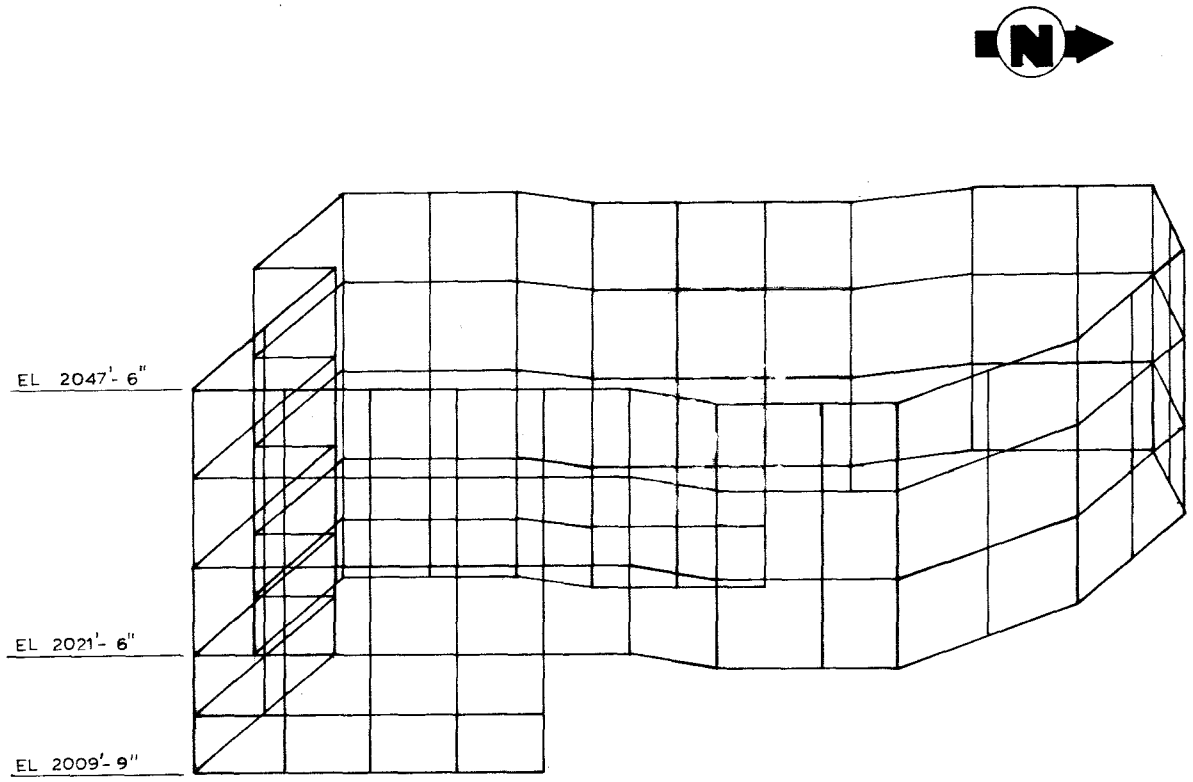

NOTE: BOUNDARY ELEMENTS ARE NOT SHOWN FOR CLARITY. MODEL IS "FIXED" ALONG ENTIRE BOTTOM EDGE. TOP EDGE IS "FREE", EXCEPT LATERAL RESTRAINT IS PROVIDED AT NORTHERN PORTION TO ACCOUNT FOR THE SEAL TABLE.

Rev. 0

WOLF CREEK
UPDATED SAFETY ANALYSIS REPORT

FIGURE 3.8-77

REFUELING POOL FINITE ELEMENT MODEL - ISOMETRIC

WOLF CREEK

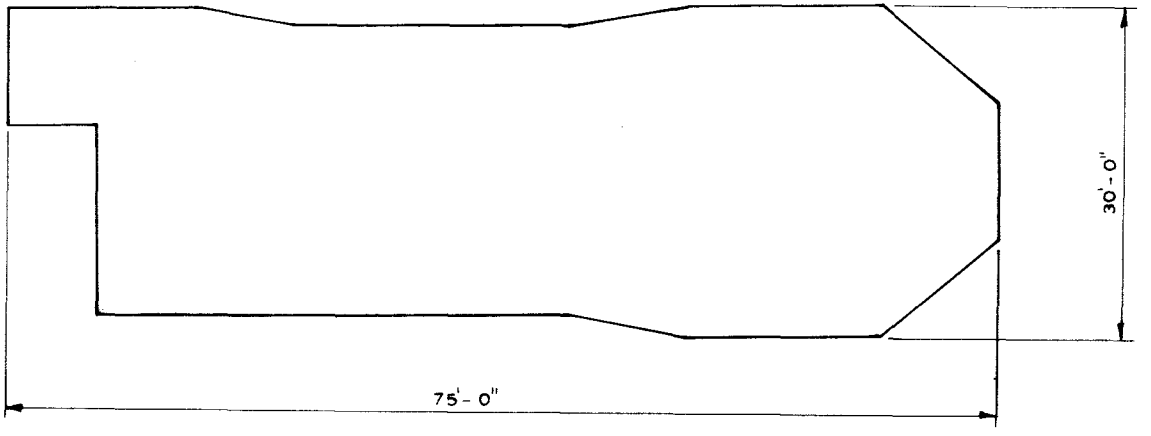

PLAN ELEV. 2047'-6"

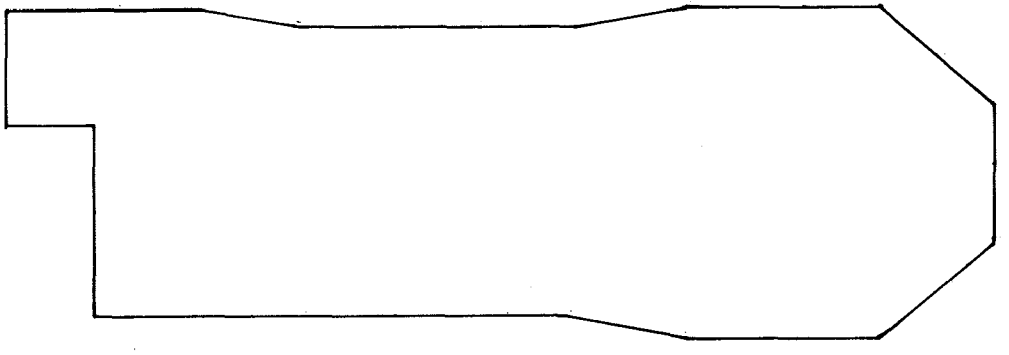

PLAN ELEV. 2021'-6"

Rev. 0

WOLF CREEK
UPDATED SAFETY ANALYSIS REPORT

FIGURE 3.8-78

REFUELING POOL FINITE ELEMENT MODEL - PLAN VIEWS

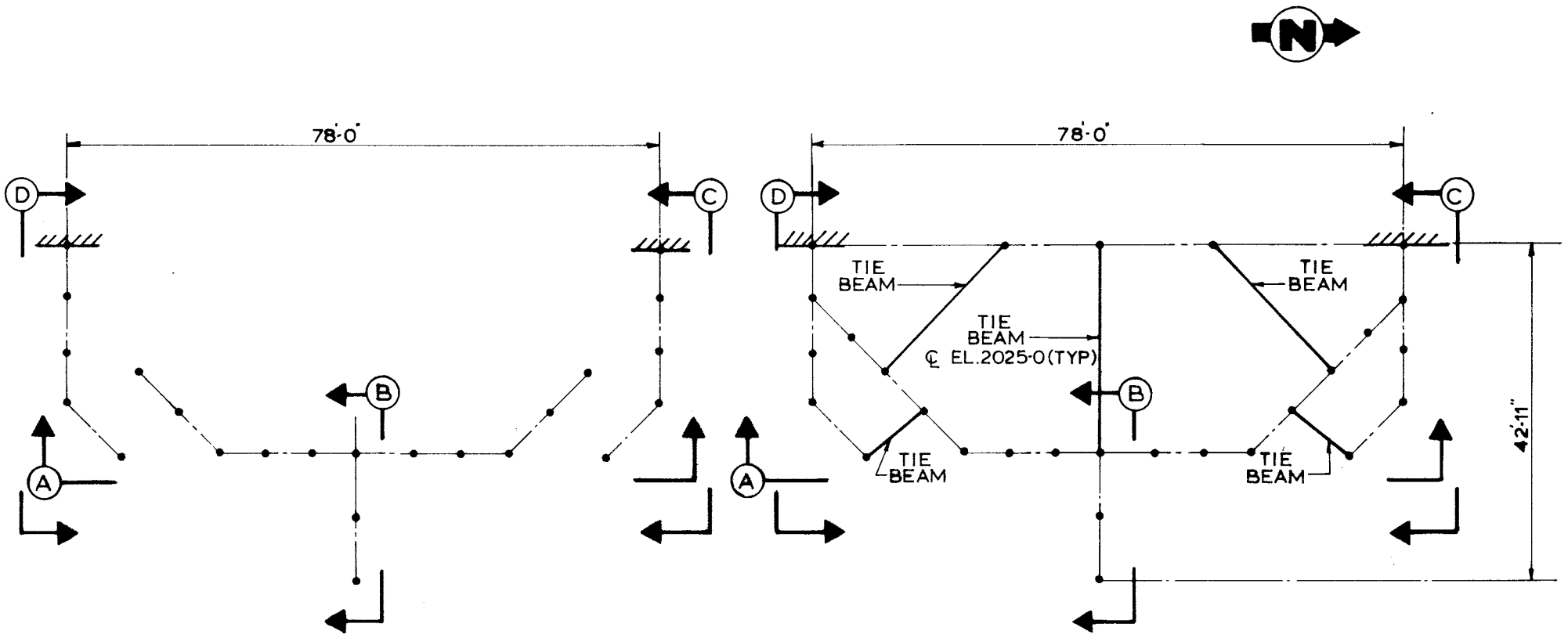

PLAN FROM EL.2000'-0" TO EL.2025'-0"

PLAN AT EL.2025'-0"

Rev. 0

WOLF CREEK
UPDATED SAFETY ANALYSIS REPORT

FIGURE 3.8-79

SECONDARY SHIELD WALL EAST SIDE FINITE ELEMENT MODEL - PLAN VIEWS

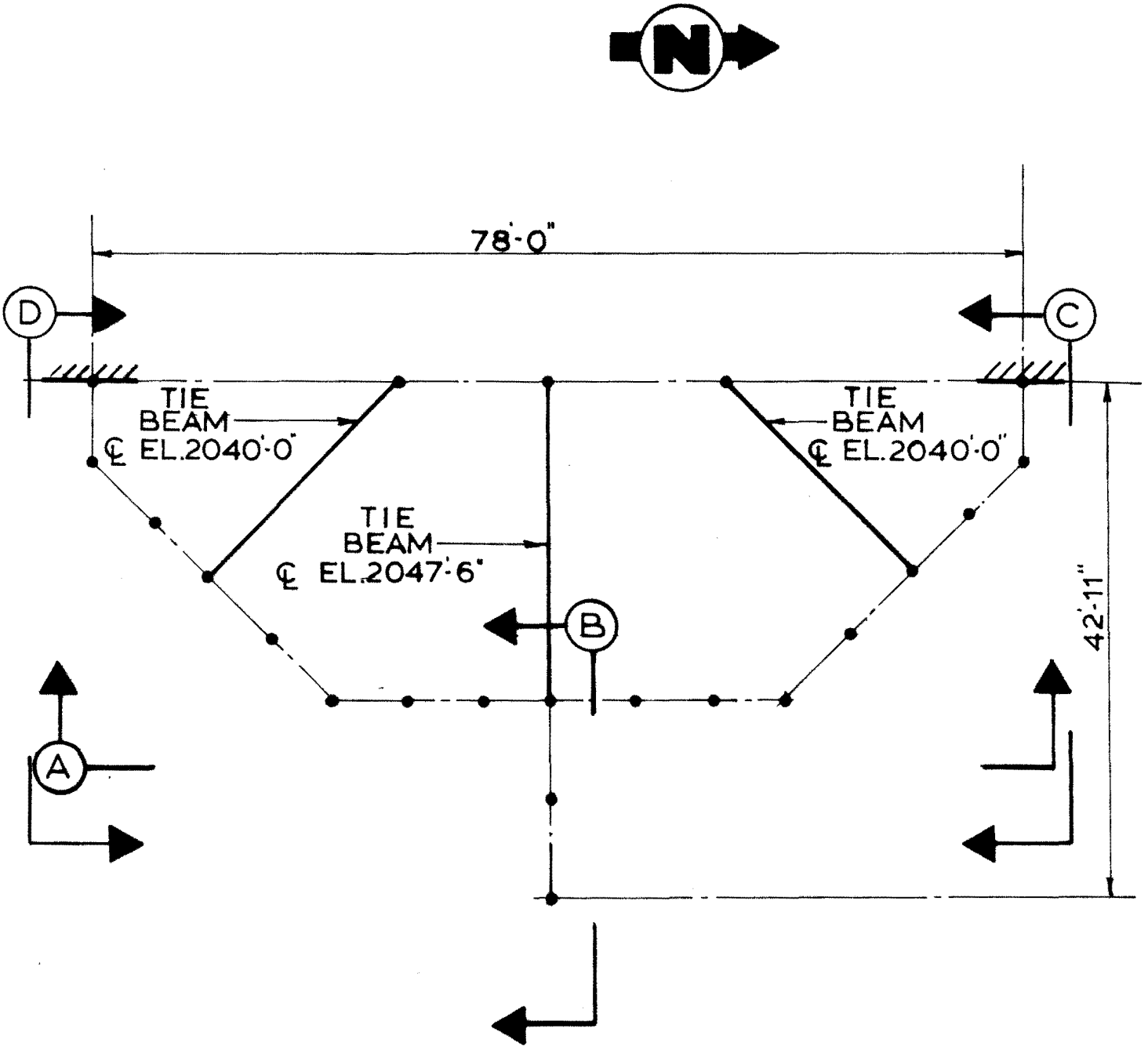

PLAN FROM EL.2025'-0"
TO EL.2047'-6"

Rev. 0

WOLF CREEK
UPDATED SAFETY ANALYSIS REPORT

FIGURE 3.8-80

REACTOR BUILDING SECONDARY SHIELD WALL FINITE ELEMENT MODEL - PLAN VIEW

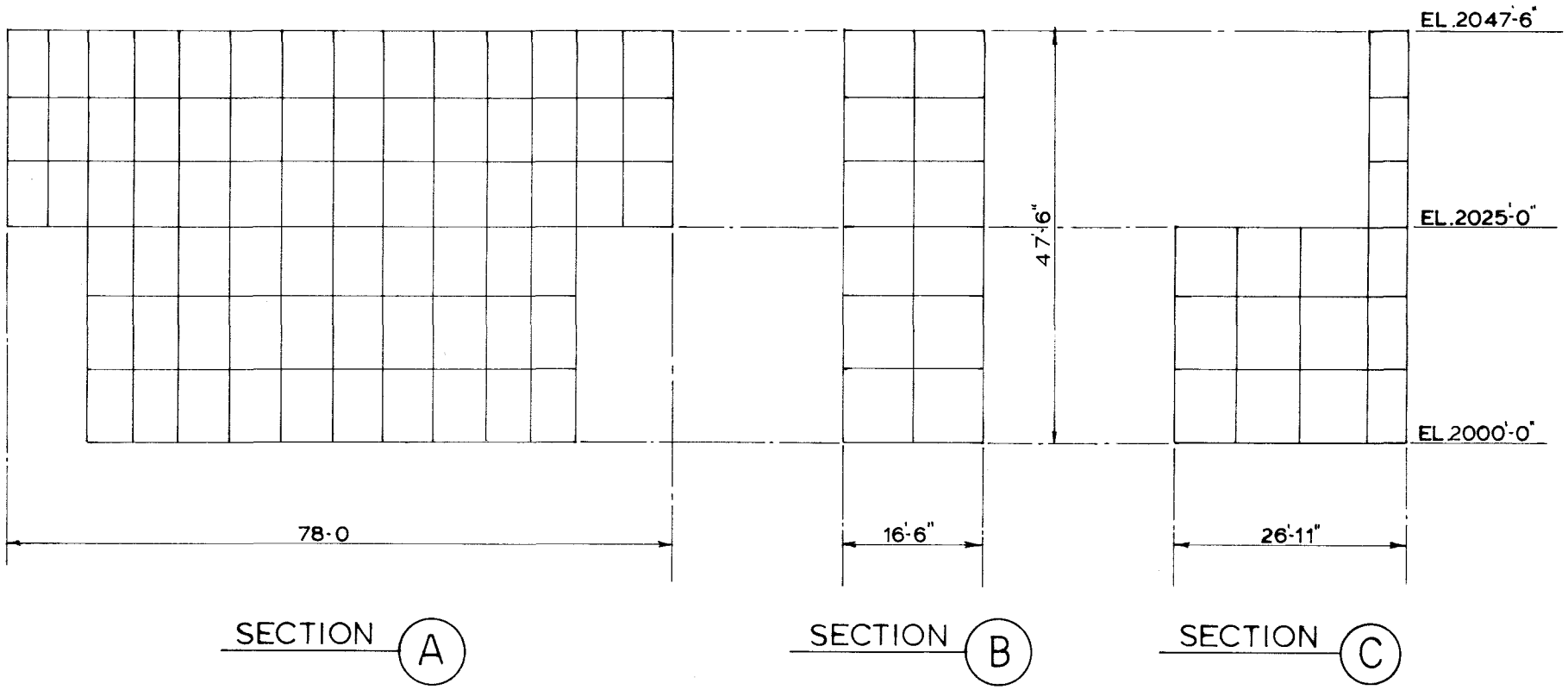

Rev. 0

WOLF CREEK
UPDATED SAFETY ANALYSIS REPORT

FIGURE 3.8-81

WALL FINITE ELEMENT MODEL - SECTIONS A, B AND C

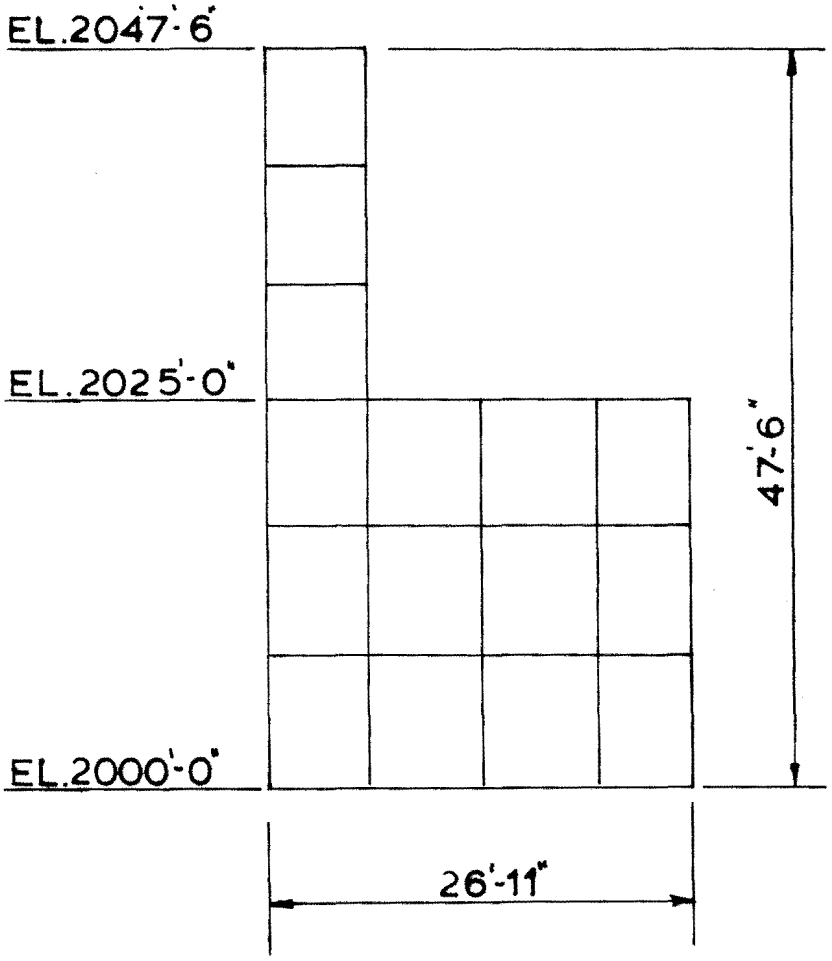

SECTION D

Rev. 0

WOLF CREEK
UPDATED SAFETY ANALYSIS REPORT

FIGURE 3.8-82

REACTOR BUILDING SECONDARY SHIELD WALL FINITE ELEMENT MODEL - SECTION D

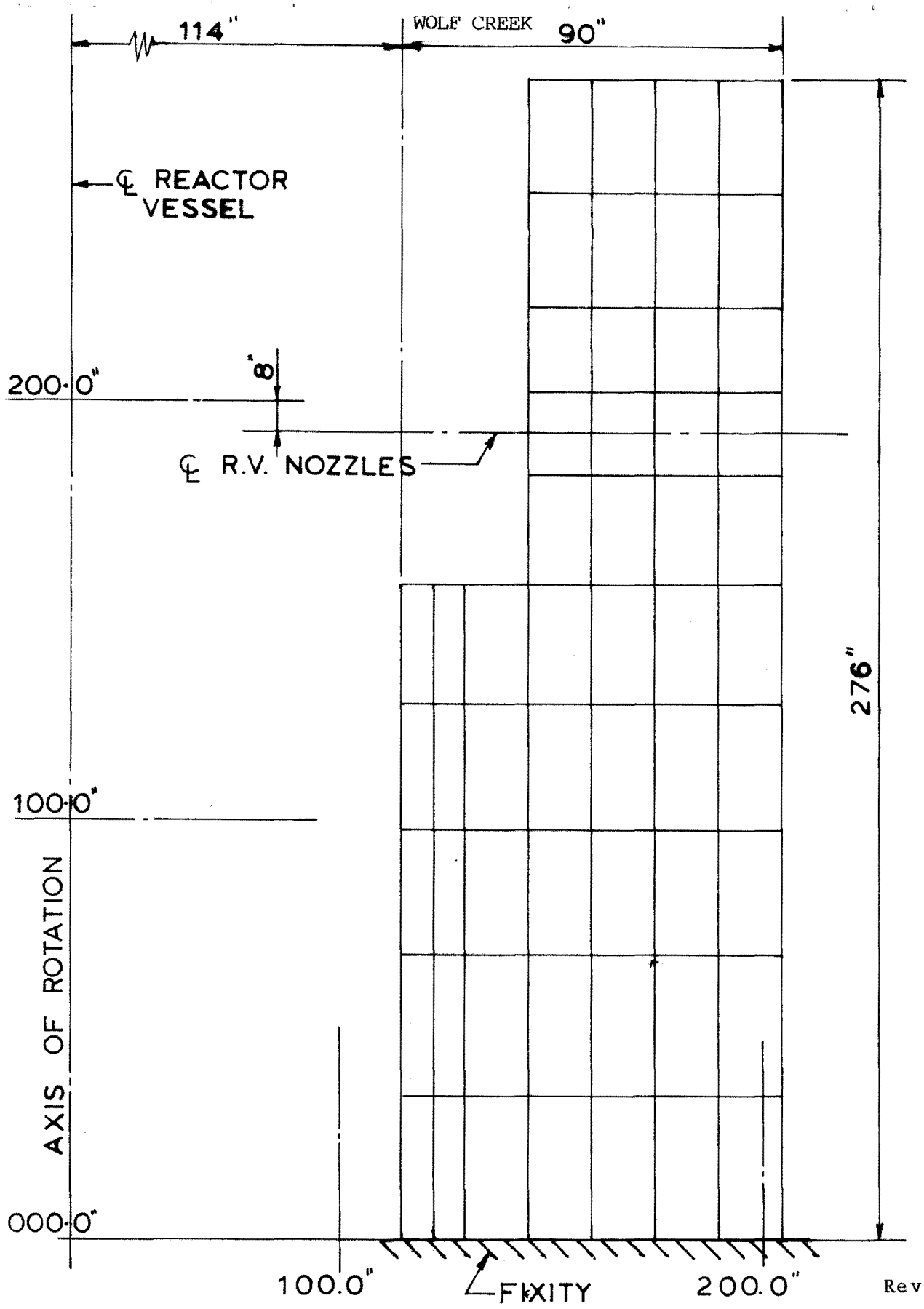

Rev. 0

ELEVATION
REACTOR CAVITY

WOLF CREEK
UPDATED SAFETY ANALYSIS REPORT

FIGURE 3.8-83

REACTOR CAVITY FINITE ELEMENT MODEL

WOLF CREEK

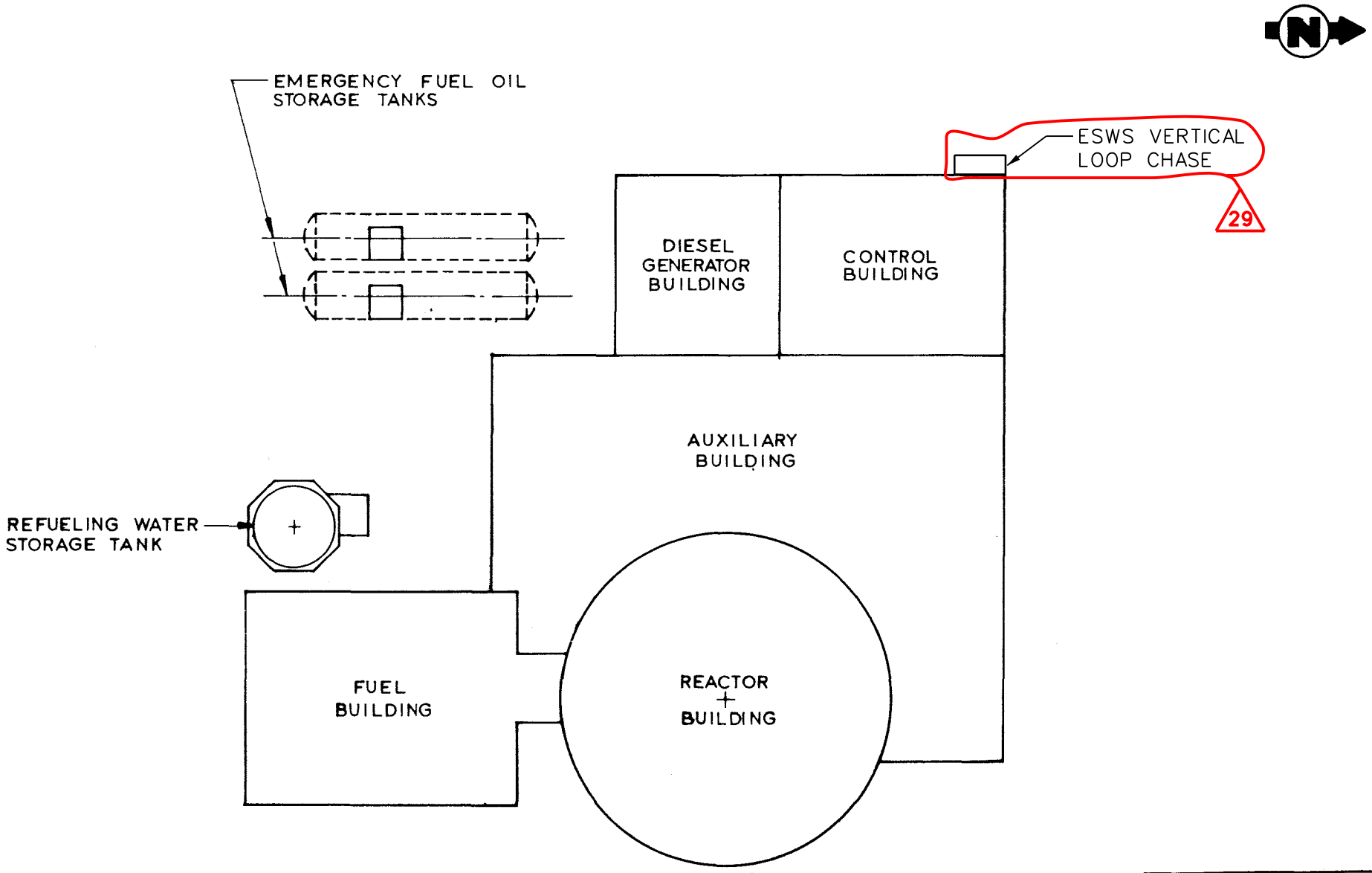

REV. 29

WOLF CREEK
UPDATED SAFETY ANALYSIS REPORT

FIGURE 3.8-84

GENERAL ARRANGEMENT OF STANDARD PLANT CATEGORY I STRUCTURES

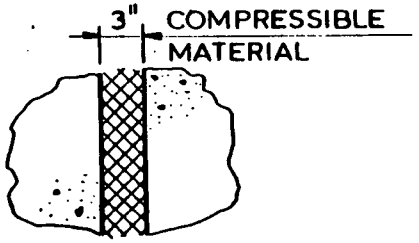

TYPICAL ISOLATION JOINT
BELOW GRADE

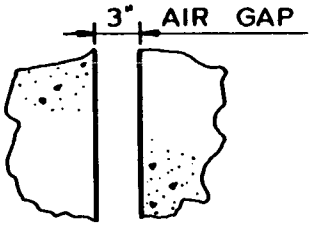

TYPICAL ISOLATION JOINT
ABOVE GRADE

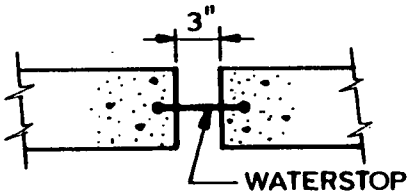

TYPICAL ISOLATION JOINT @ ROOF SLAB
AND EXTERIOR WALLS

Rev. 0

WOLF CREEK
UPDATED SAFETY ANALYSIS REPORT

FIGURE 3.8-85

TYPICAL ISOLATION JOINTS BETWEEN BUILDINGS

Rev. 0

WOLF CREEK
UPDATED SAFETY ANALYSIS REPORT

FIGURE 3.8-86

AUXILIARY BUILDING PLAN - ELEV. 1974'-0"

[redacted]

Rev. 0

WOLF CREEK
UPDATED SAFETY ANALYSIS REPORT

FIGURE 3.8-87

AUXILIARY BUILDING PLAN - ELEV.
1988'-0" AND 1989'-6"

[redacted]

Rev. 0

WOLF CREEK
UPDATED SAFETY ANALYSIS REPORT

FIGURE 3.8-88

AUXILIARY BUILDING PLAN - ELEV. 2000'-0"

[redacted]

REV. 4

WOLF CREEK
UPDATED SAFETY ANALYSIS REPORT

FIGURE 3.8-89

AUXILIARY BUILDING PLAN - ELEV. 2026'-0"

[redacted]

Rev. 0

WOLF CREEK
UPDATED SAFETY ANALYSIS REPORT

FIGURE 3.8-90

AUXILIARY BUILDING PLAN - ELEV. 2047'-6"

[redacted]

Rev. 0

WOLF CREEK
UPDATED SAFETY ANALYSIS REPORT

FIGURE 3.8-91

AUXILIARY BUILDING PLAN -
NORTH-SOUTH CROSS SECTION

[redacted]

REV. 4

WOLF CREEK
UPDATED SAFETY ANALYSIS REPORT

FIGURE 3.8-92

AUXILIARY BUILDING PLAN -
EAST-WEST CROSS SECTION

WOLF CREEK

[redacted]

Rev. 0

WOLF CREEK
UPDATED SAFETY ANALYSIS REPORT

FIGURE 3.8-93

AUXILIARY BUILDING PLAN -
EAST-WEST CROSS SECTION

WOLF CREEK

[redacted]

Rev. 14

WOLF CREEK
UPDATED SAFETY ANALYSIS REPORT

FIGURE 3.8-94
FUEL BUILDING PLAN -
ELEV. 2000'-0" (UN)

[redacted]

Rev. 14

WOLF CREEK
UPDATED SAFETY ANALYSIS REPORT

FIGURE 3.8-95
FUEL BUILDING PLAN -
ELEV. 2026'-0" (UN)

WOLF CREEK

[redacted]

REV. 12

WOLF CREEK
UPDATED SAFETY ANALYSIS REPORT

FIGURE 3.8-96

FUEL BUILDING PLAN
ELEVATION 2047'-6"

[redacted]

Rev. 0

WOLF CREEK
UPDATED SAFETY ANALYSIS REPORT

FIGURE 3.8-97

FUEL BUILDING - NORTH-SOUTH CROSS SECTION

WOLF CREEK

[redacted]

REV. 12

WOLF CREEK UPDATED SAFETY ANALYSIS REPORT
FIGURE 3.8-98 FUEL BUILDING EAST-WEST CROSS SECTION

[redacted]

REV. 29

WOLF CREEK
UPDATED SAFETY ANALYSIS REPORT

FIGURE 3.8-99

CONTROL BUILDING PLAN - ELEV.
1974'-0" AND 1984'-0"

WOLF CREEK

[redacted]

REV. 29

WOLF CREEK
UPDATED SAFETY ANALYSIS REPORT

FIGURE 3.8-100

CONTROL BUILDING PLAN - ELEV. 2000'-0" AND 2016'-0"

WOLF CREEK

[redacted]

REV. 29

WOLF CREEK
UPDATED SAFETY ANALYSIS REPORT

FIGURE 3.8-101

CONTROL BUILDING PLAN - ELEV. 2032'-0"

[redacted]

REV. 29

WOLF CREEK
UPDATED SAFETY ANALYSIS REPORT

FIGURE 3.8-102

CONTROL BUILDING PLAN - ELEV. 2047'-6" AND 2073'-6"

WOLF CREEK

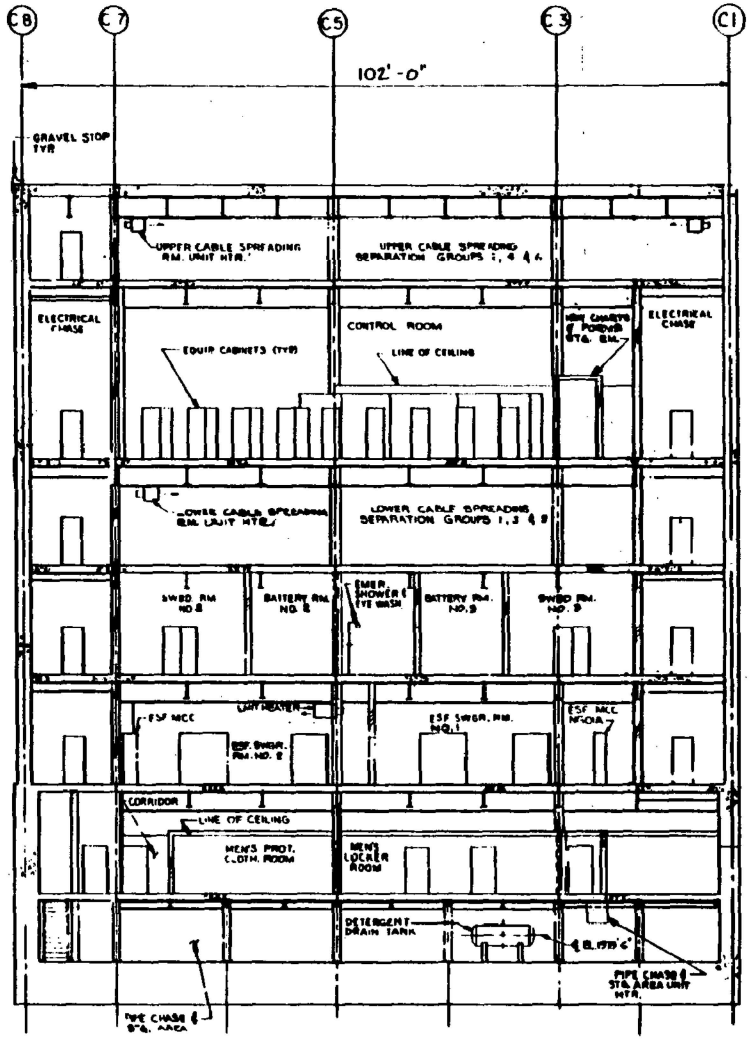

SECTION (A)

REV. 29

WOLF CREEK
UPDATED SAFETY ANALYSIS REPORT

FIGURE 3.8-103 SHT 1

CONTROL BUILDING - NORTH-SOUTH CROSS SECTION

29

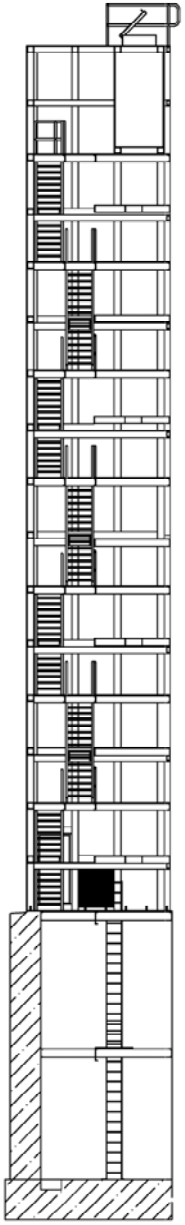

SECTION VIEW LOOKING NORTH

Wolf Creek
Updated Safety Analysis Report

Figure 3.8-103, SH 2

ESW Vertical Loop Chase
- North-South Cross Section

WOLF CREEK

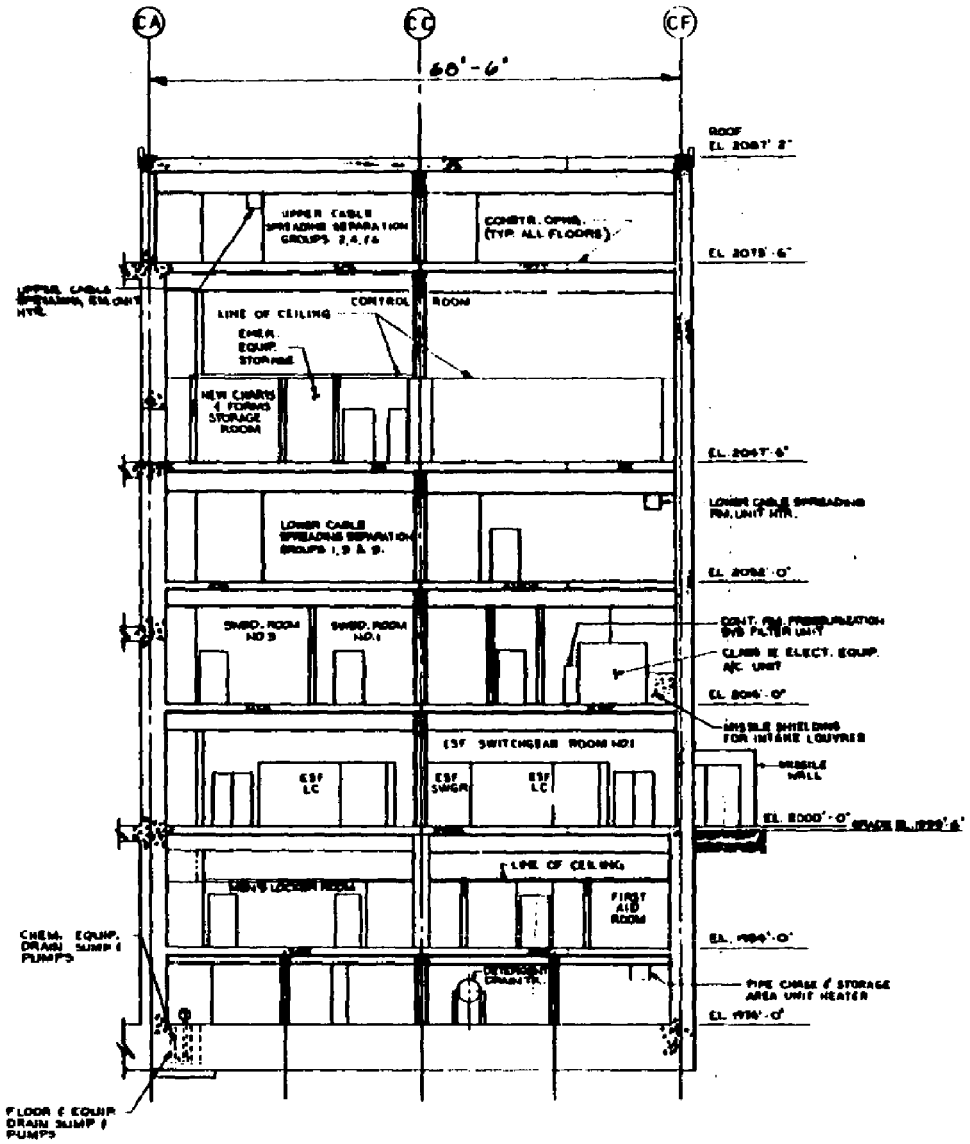

SECTION C

REV. 29

WOLF CREEK
UPDATED SAFETY ANALYSIS REPORT

FIGURE 3.8-104 SHT 1

CONTROL BUILDING - EAST-WEST CROSS SECTION

29

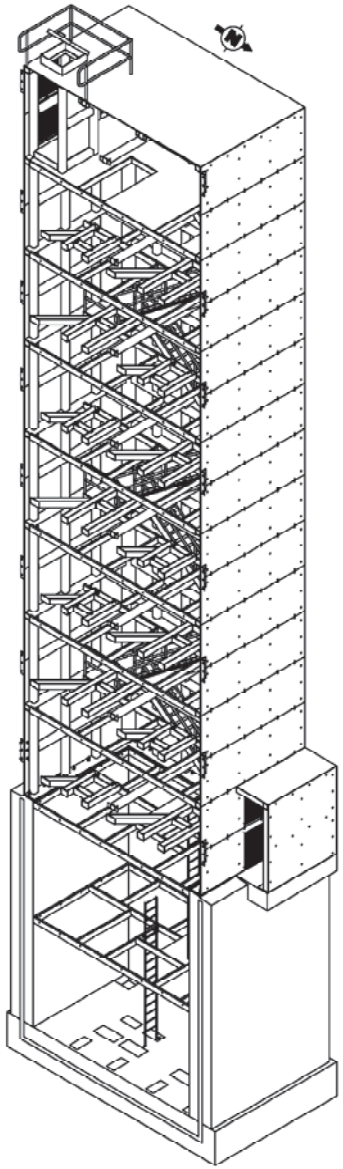

ISOMETRIC VIEW

REV.29

Wolf Creek Updated Safety Analysis Report
Figure 3.8-104, SH 2 ESW Vertical Loop Chase - Isometric Cross Section

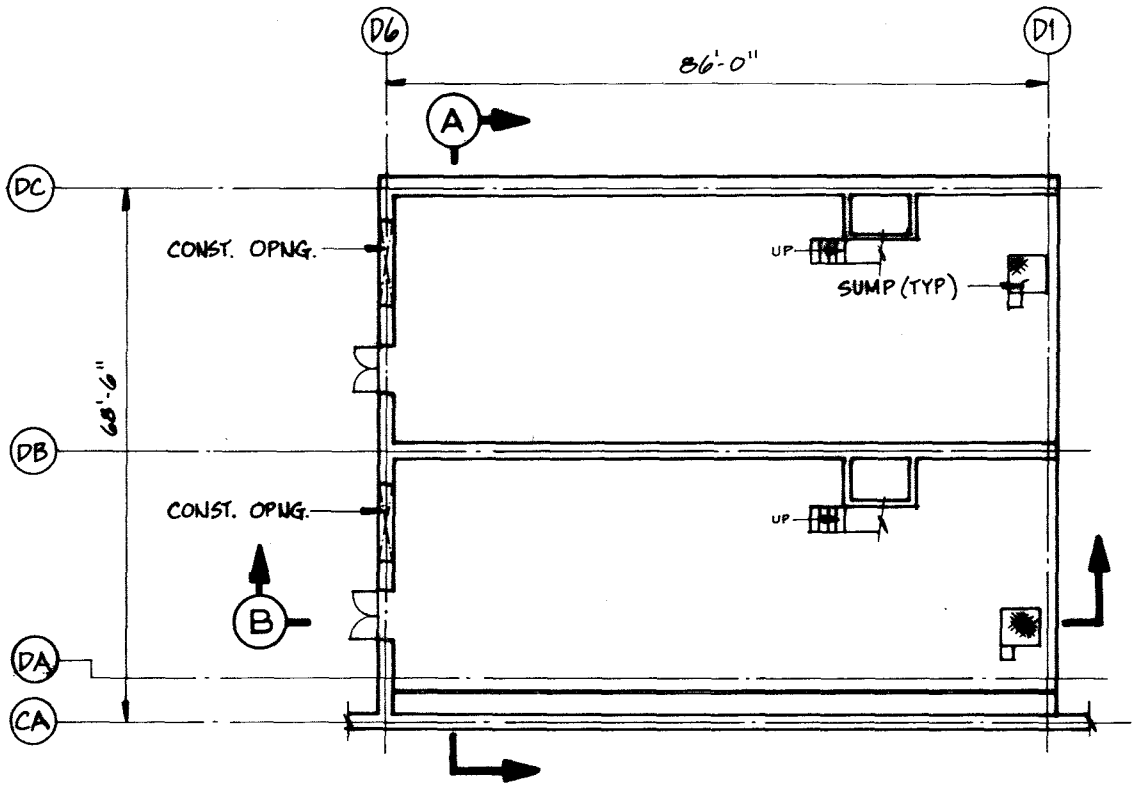

Rev. 0

WOLF CREEK UPDATED SAFETY ANALYSIS REPORT
FIGURE 3.8-105 DIESEL-GENERATOR BUILDING PLAN - ELEV. 2000'-0"

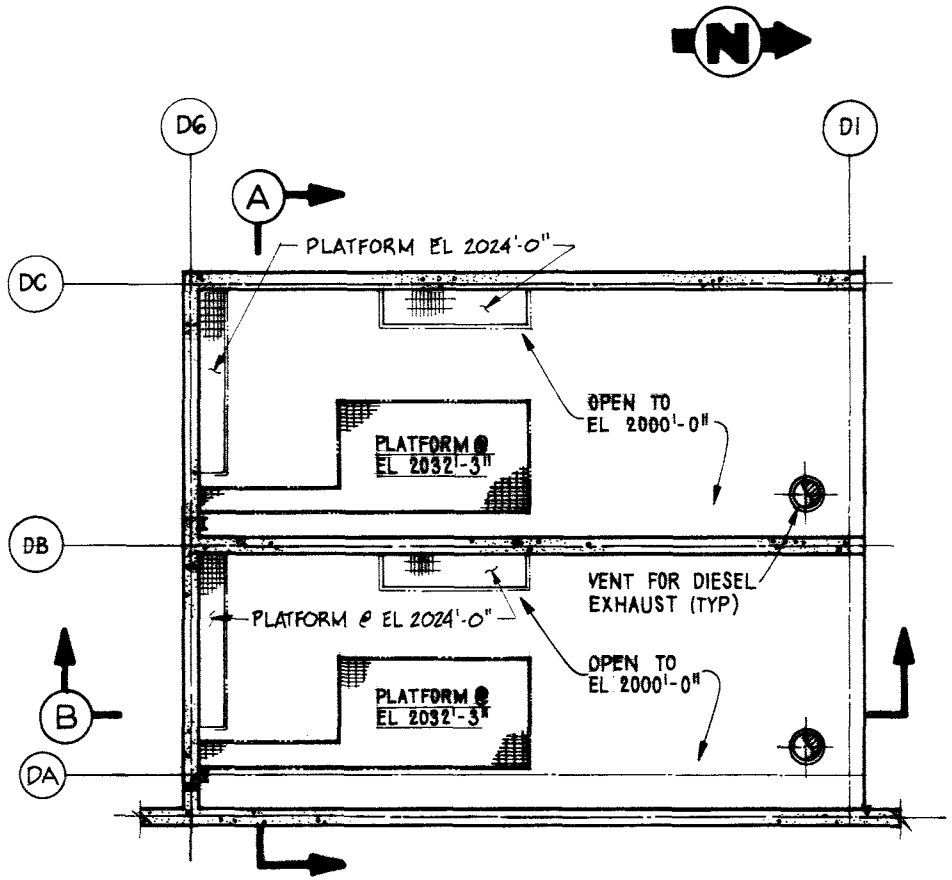

Rev. 0

WOLF CREEK
UPDATED SAFETY ANALYSIS REPORT

FIGURE 3.8-106

DIESEL-GENERATOR BUILDING PLAN - ELEV. 2024'-0" AND 2032'-0"

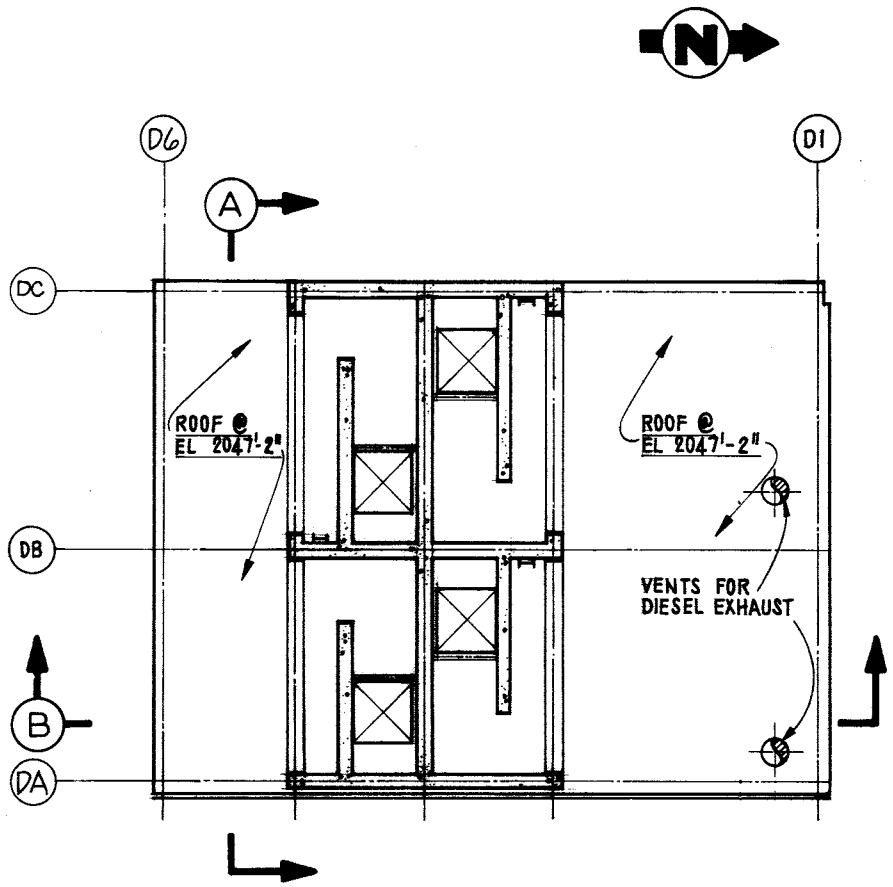

Rev. 0

WOLF CREEK UPDATED SAFETY ANALYSIS REPORT
FIGURE 3.8-107 DIESEL-GENERATOR BUILDING PLAN - ELEV. 2047'-2"

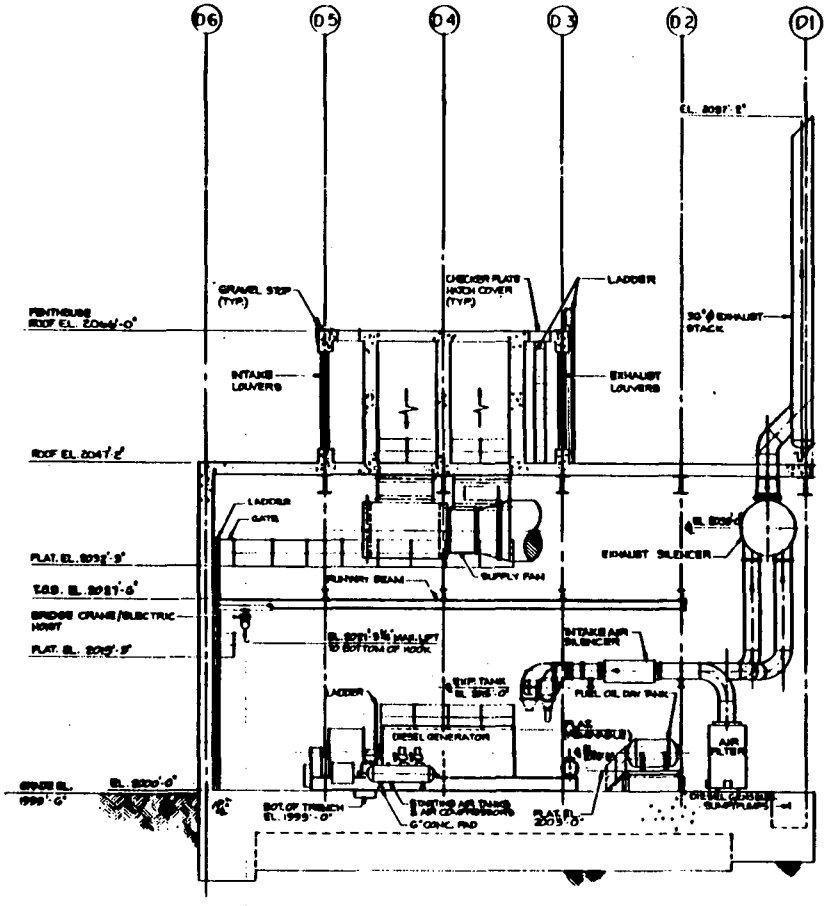

SECTION B

Rev. 0

WOLF CREEK UPDATED SAFETY ANALYSIS REPORT
FIGURE 3.8-108 DIESEL-GENERATOR BUILDING - EAST-WEST CROSS SECTION

WOLF CREEK

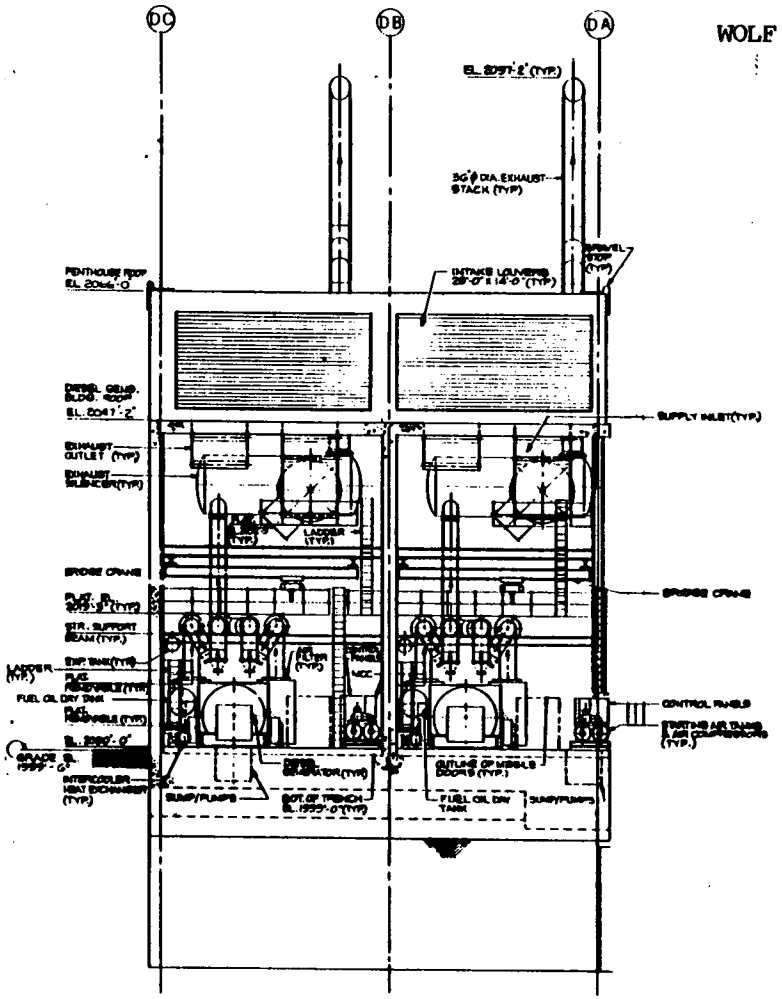

SECTION (A)

Rev. 0

WOLF CREEK UPDATED SAFETY ANALYSIS REPORT
FIGURE 3.8-109 DIESEL-GENERATOR BUILDING - NORTH-SOUTH CROSS SECTION

WOLF CREEK

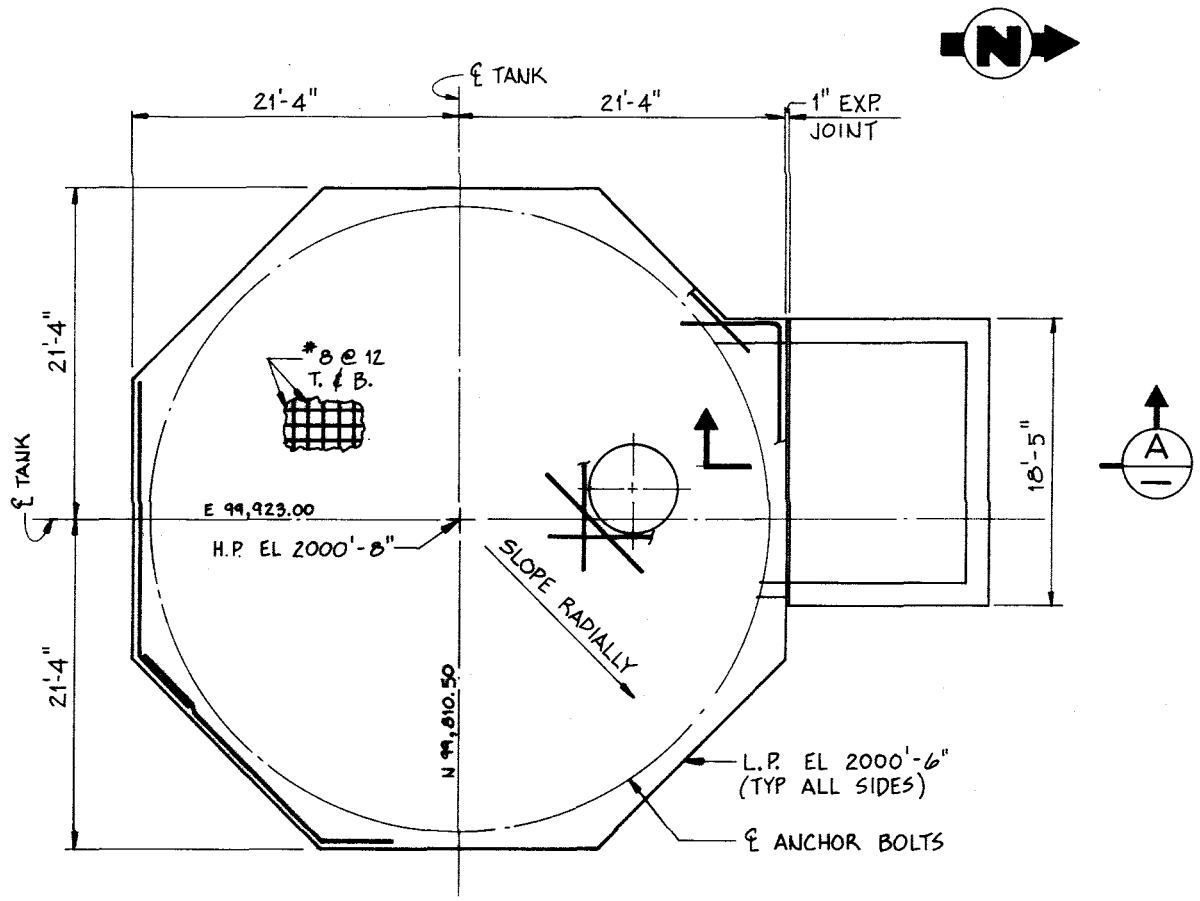

Rev. 0

WOLF CREEK UPDATED SAFETY ANALYSIS REPORT
FIGURE 3.8-110
REFUELING WATER STORAGE TANK AND VALVE HOUSE - FOUNDATION PLAN

WOLF CREEK

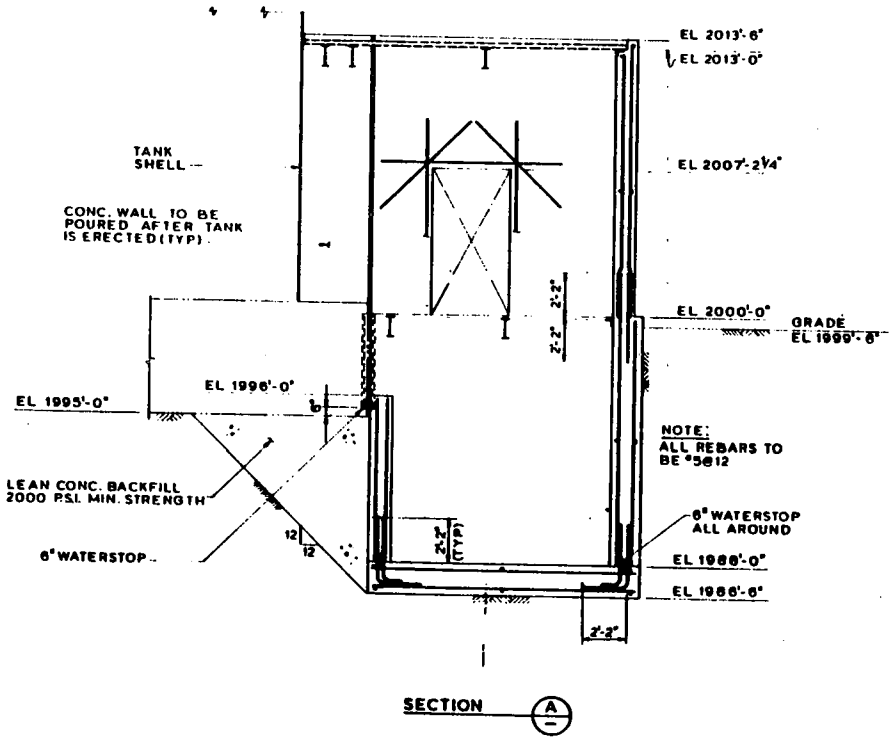

Rev. 0

WOLF CREEK
UPDATED SAFETY ANALYSIS REPORT

FIGURE 3.8-111

REFUELING WATER STORAGE VALVE HOUSE ELEVATION

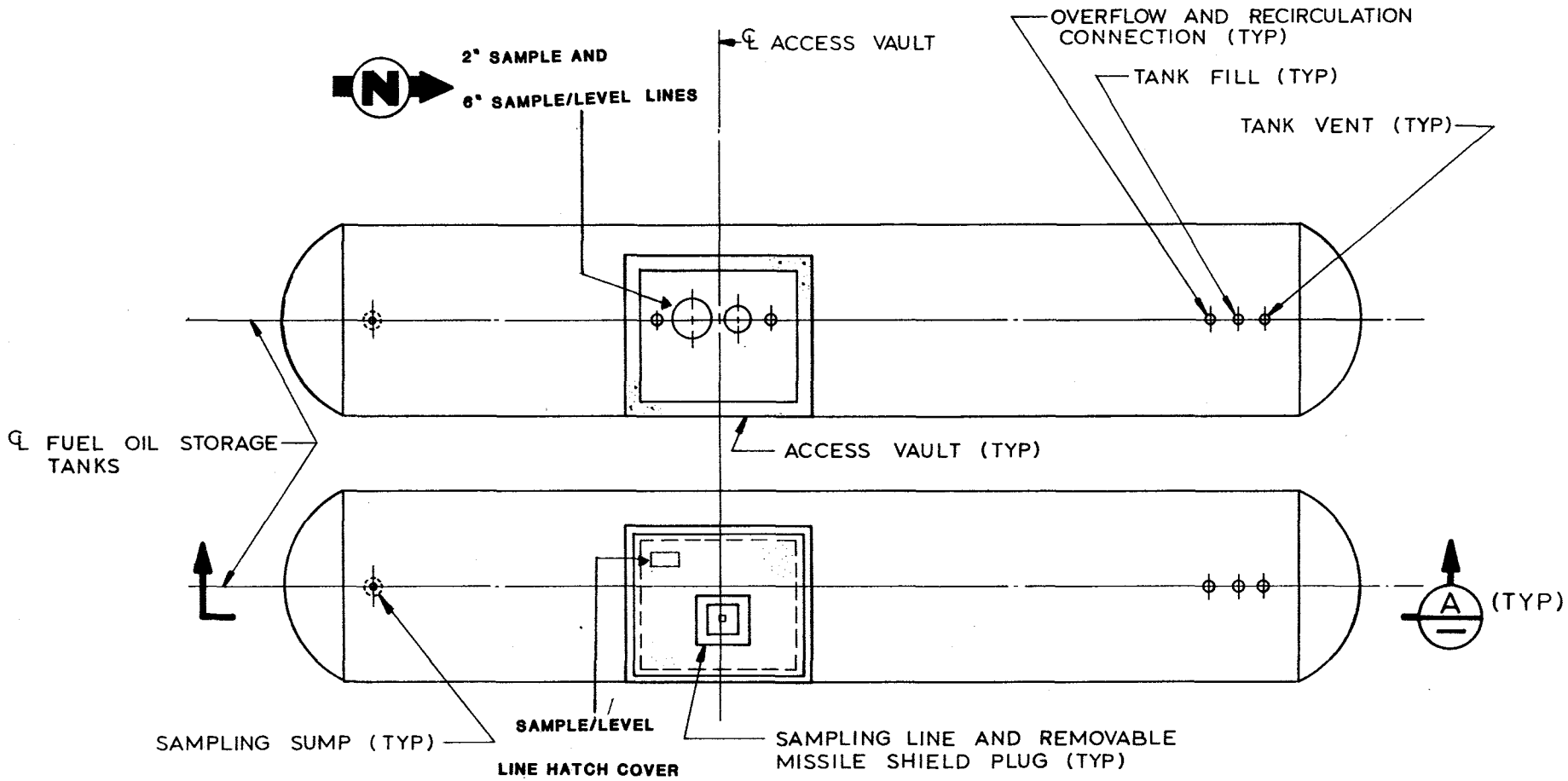

EMERGENCY FUEL OIL STORAGE TANKS

Rev. 0

WOLF CREEK
UPDATED SAFETY ANALYSIS REPORT

FIGURE 3.8-112

EMERGENCY OIL STORAGE TANKS AND ACCESS VAULT PLAN

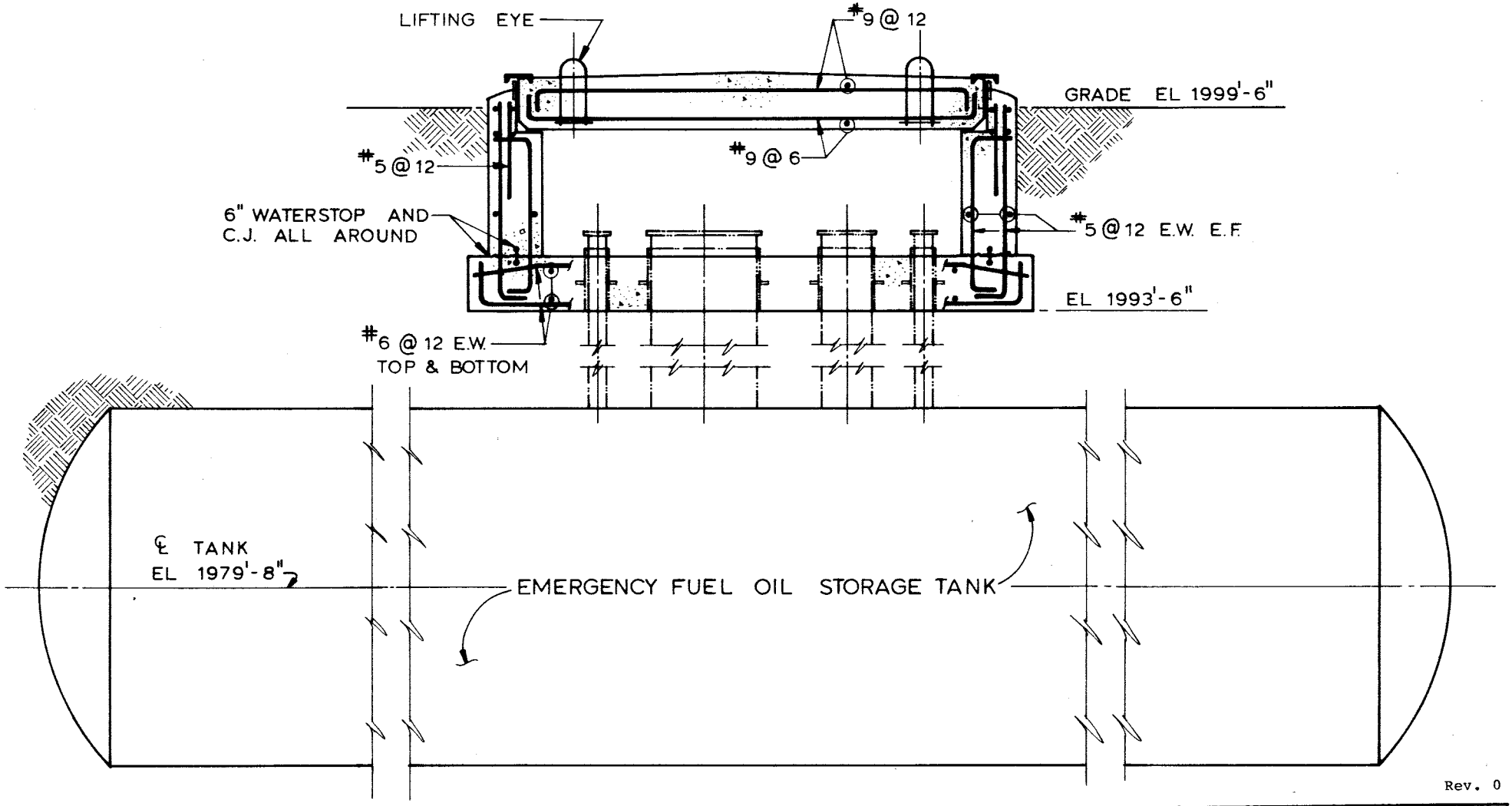

SECTION A

Rev. 0

WOLF CREEK UPDATED SAFETY ANALYSIS REPORT
FIGURE 3.8-113 EMERGENCY OIL STORAGE TANKS AND ACCESS VAULT

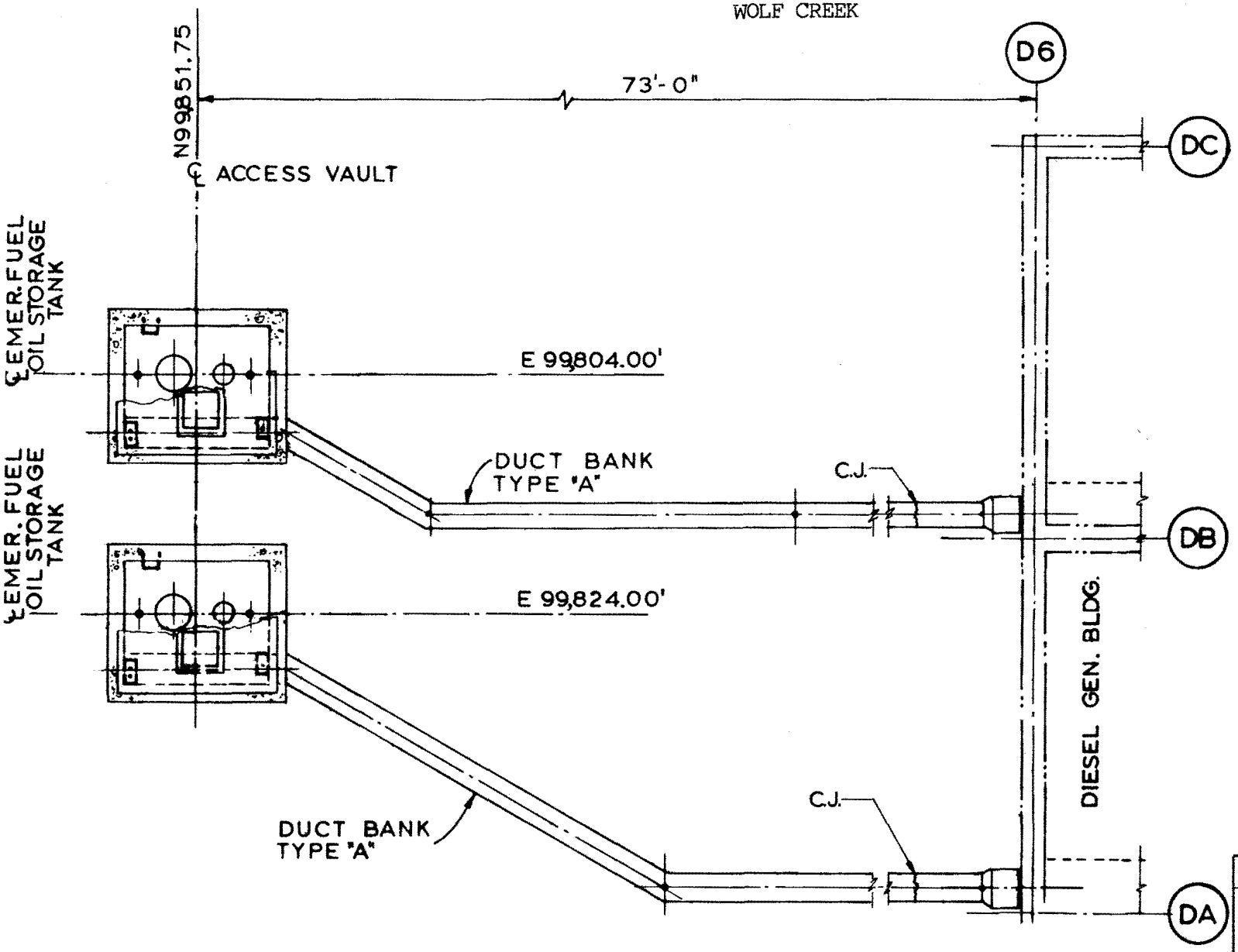

Rev. 0

WOLF CREEK
UPDATED SAFETY ANALYSIS REPORT

FIGURE 3.8-114

BURIED DUCT BANKS TO EMER. FUEL OIL STORAGE TANKS

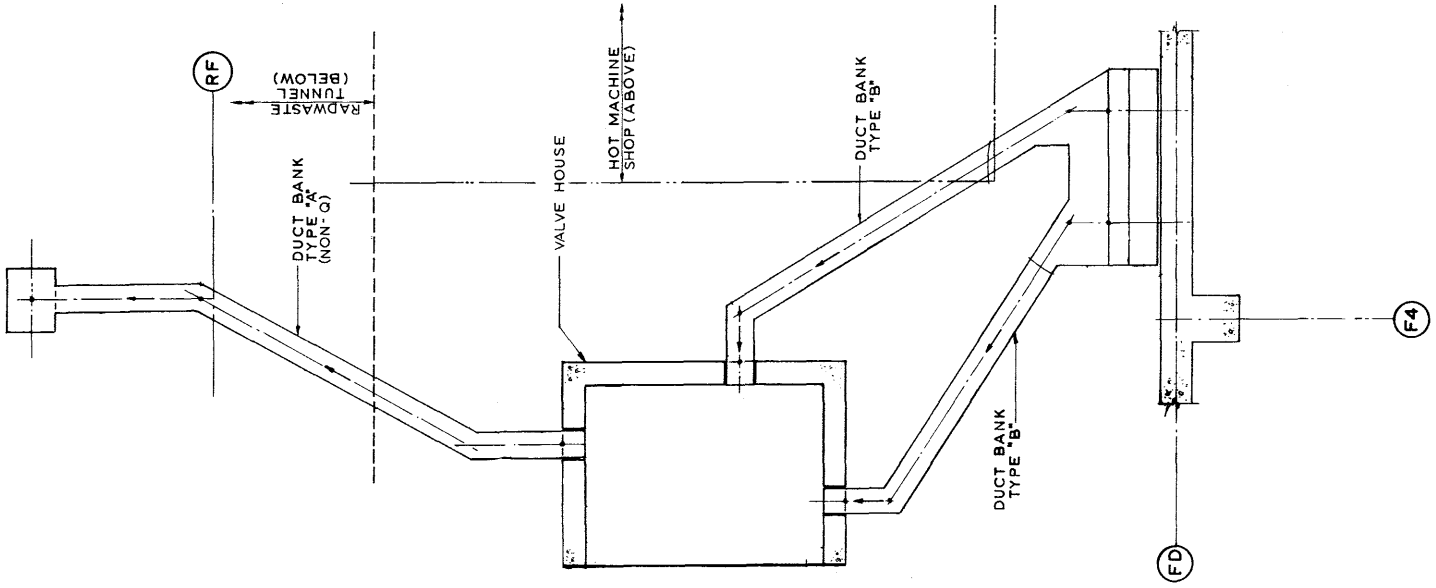

Rev. 0

WOLF CREEK
UPDATED SAFETY ANALYSIS REPORT

FIGURE 3.8-115

BURIED DUCT BANKS TO REFUELING STORAGE VALVE HOUSE

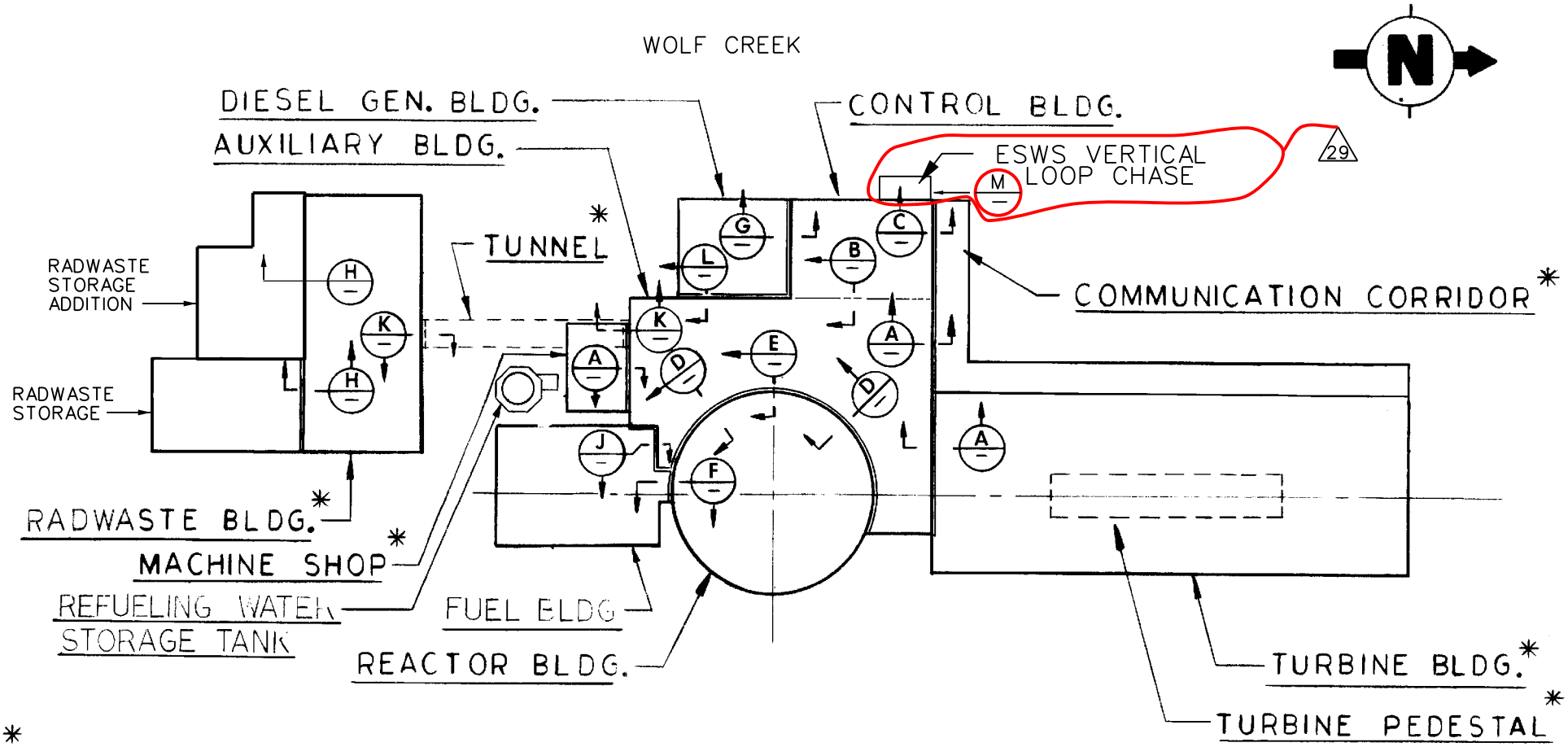

* NON-CATEGORY I STRUCTURES

PLAN

WOLF CREEK UPDATED SAFETY ANALYSIS REPORT	REV. 29
FIGURE 3.8-116	
ARRANGEMENT OF FOUNDATION - PLAN	

WOLF CREEK

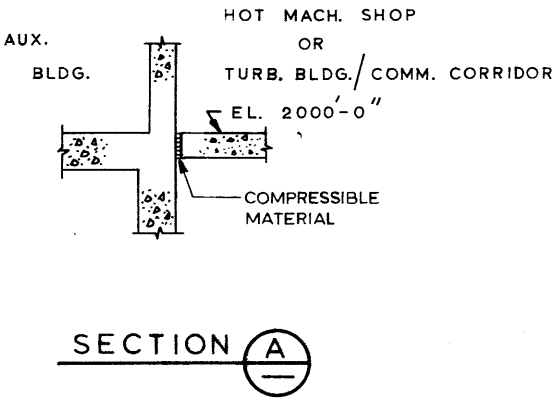

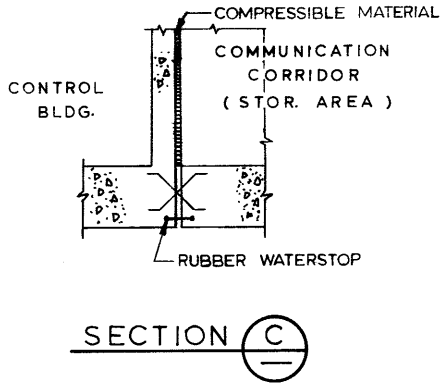

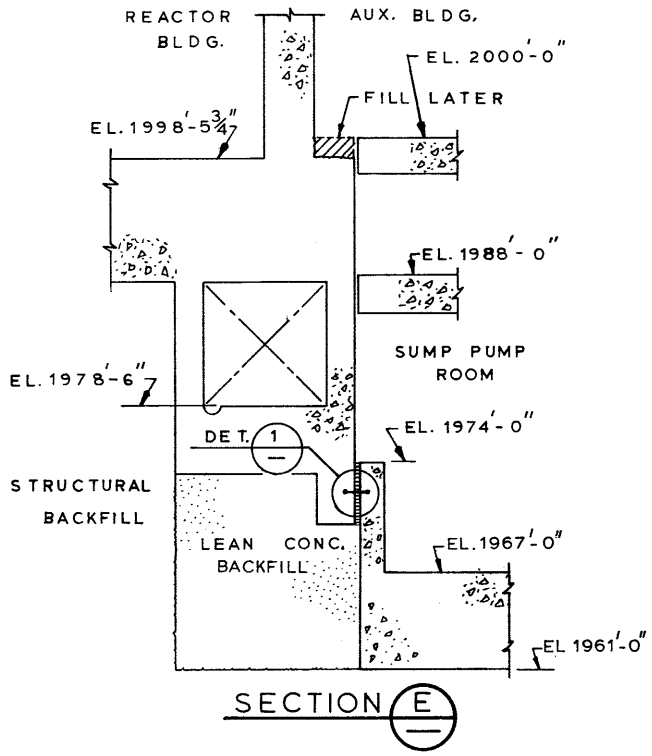

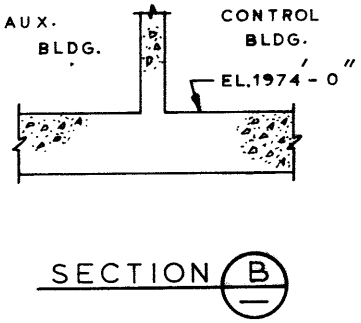

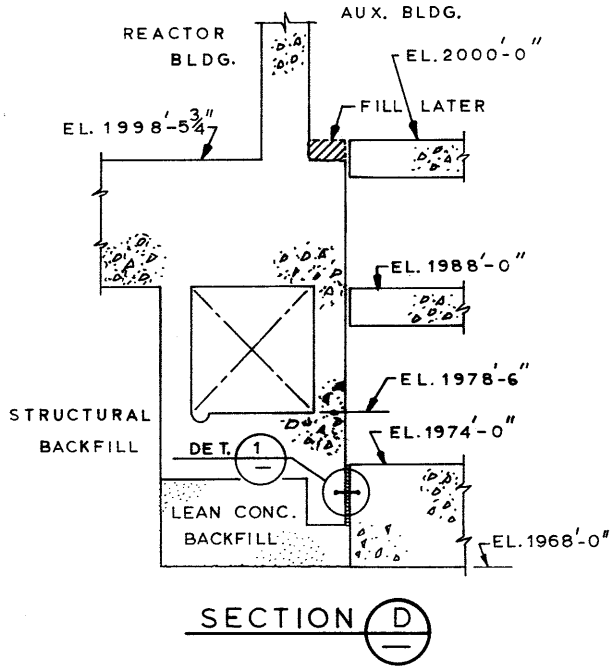

Rev. 0

WOLF CREEK
UPDATED SAFETY ANALYSIS REPORT

FIGURE 3.8-117

ARRANGEMENT OF FOUNDATION - DETAILS

WOLF CREEK

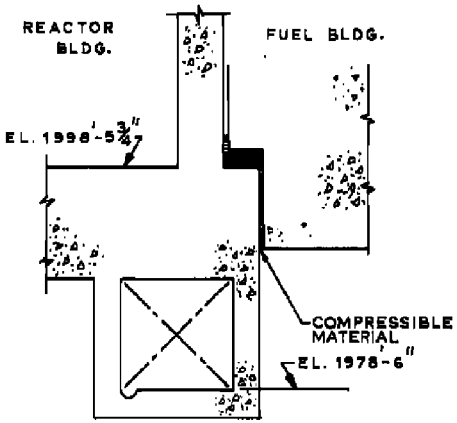

SECTION F

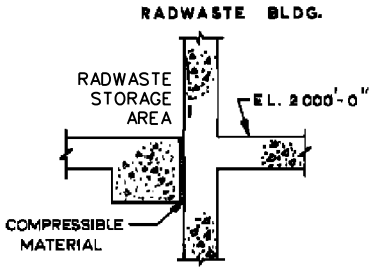

SECTION H

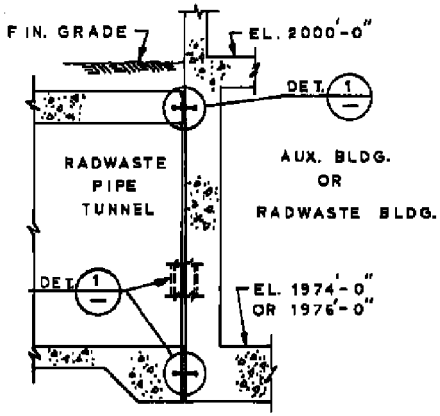

SECTION K

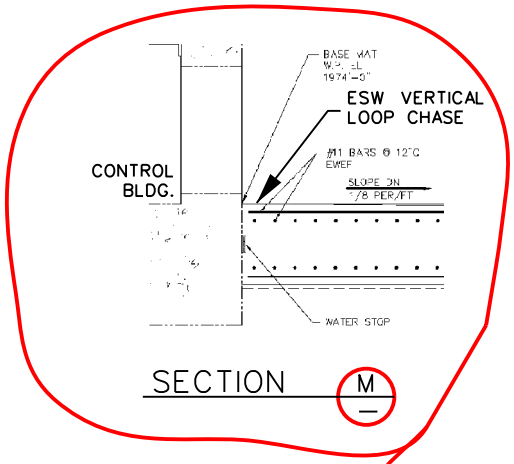

SECTION M

29

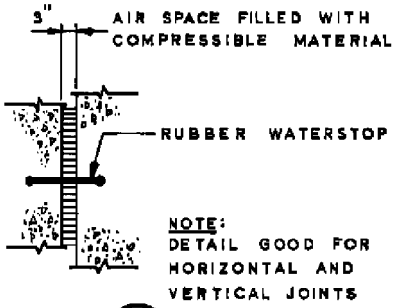

DETAIL 1

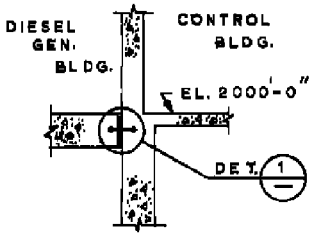

SECTION G

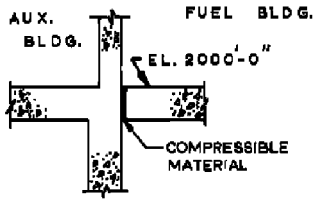

SECTION J

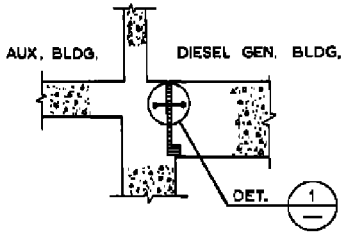

SECTION L

REV.29

WOLF CREEK
UPDATED SAFETY ANALYSIS REPORT

FIGURE 3.8-118

ARRANGEMENT OF FOUNDATION
ADDITIONAL DETAILS

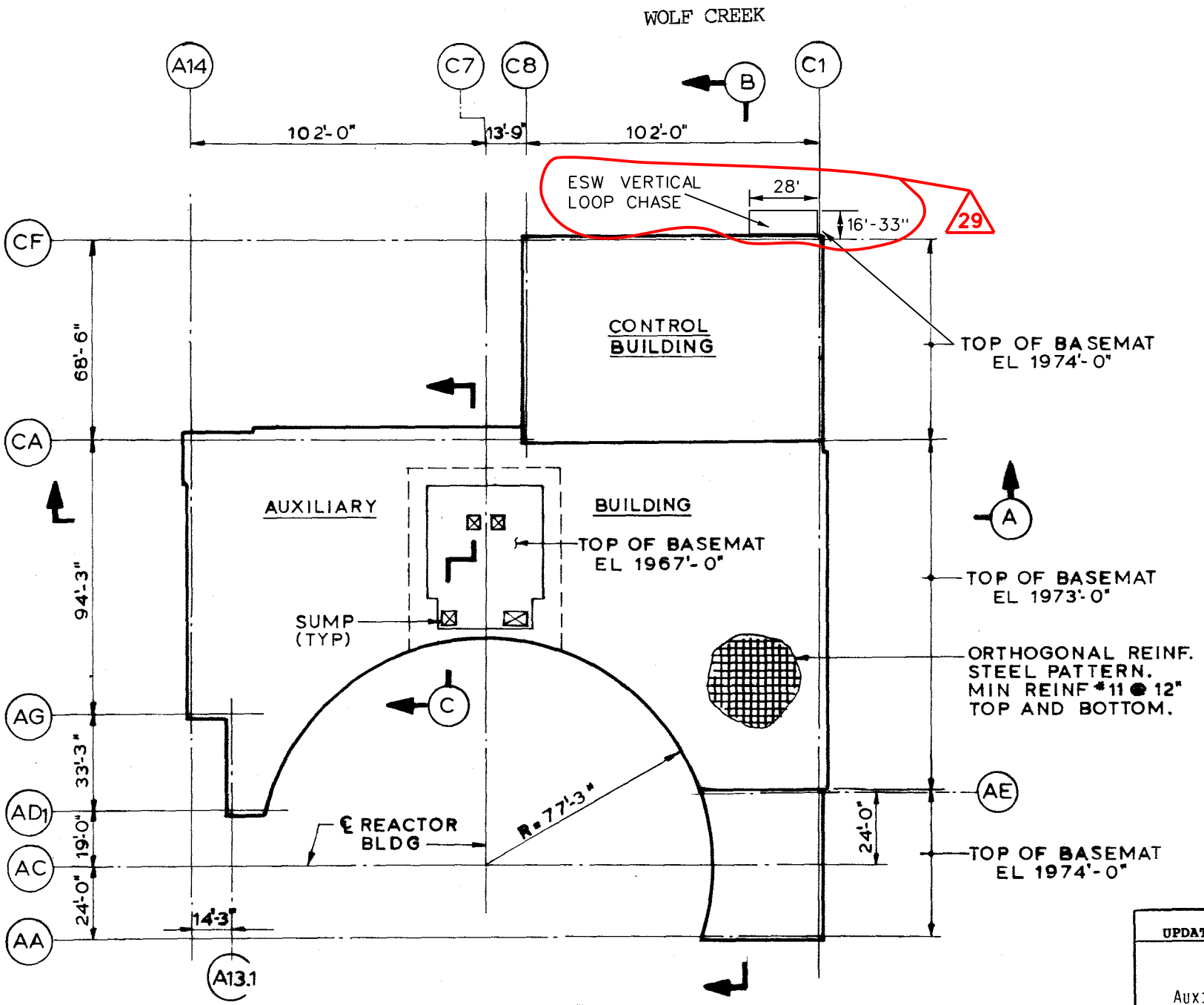

REV. 29

WOLF CREEK
UPDATED SAFETY ANALYSIS REPORT

FIGURE 3.8-119

AUXILIARY AND CONTROL BUILDING
FOUNDATION PLAN

WOLF CREEK

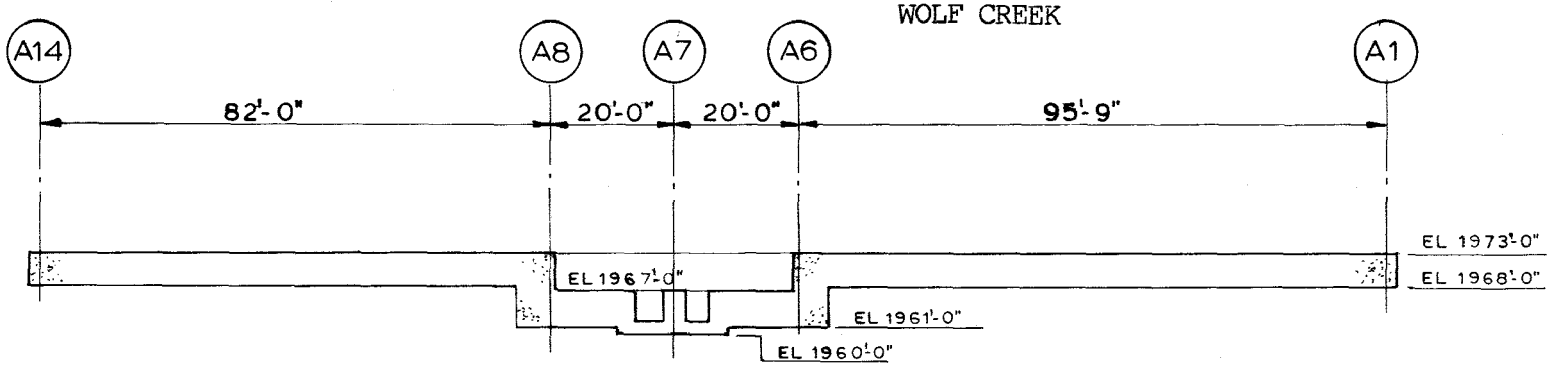

SECTION A

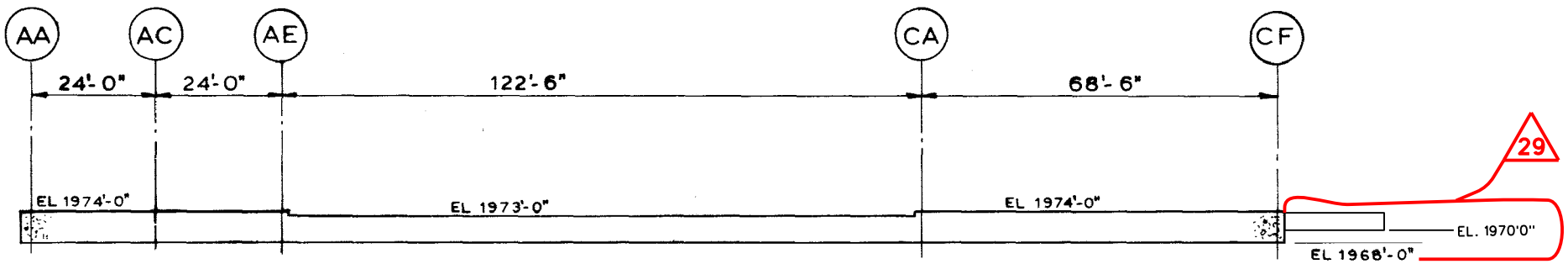

SECTION B

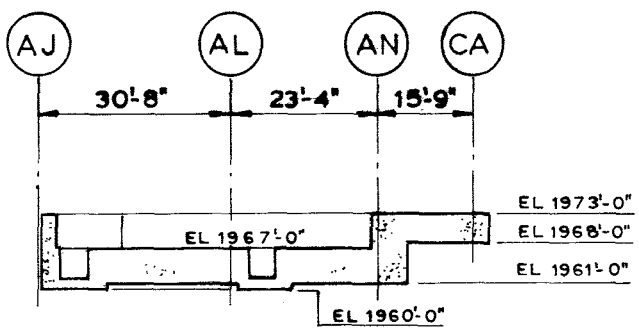

SECTION C

REV. 29

WOLF CREEK
UPDATED SAFETY ANALYSIS REPORT

FIGURE 3.8-120

AUXILIARY AND CONTROL BUILDING FOUNDATION SECTIONS

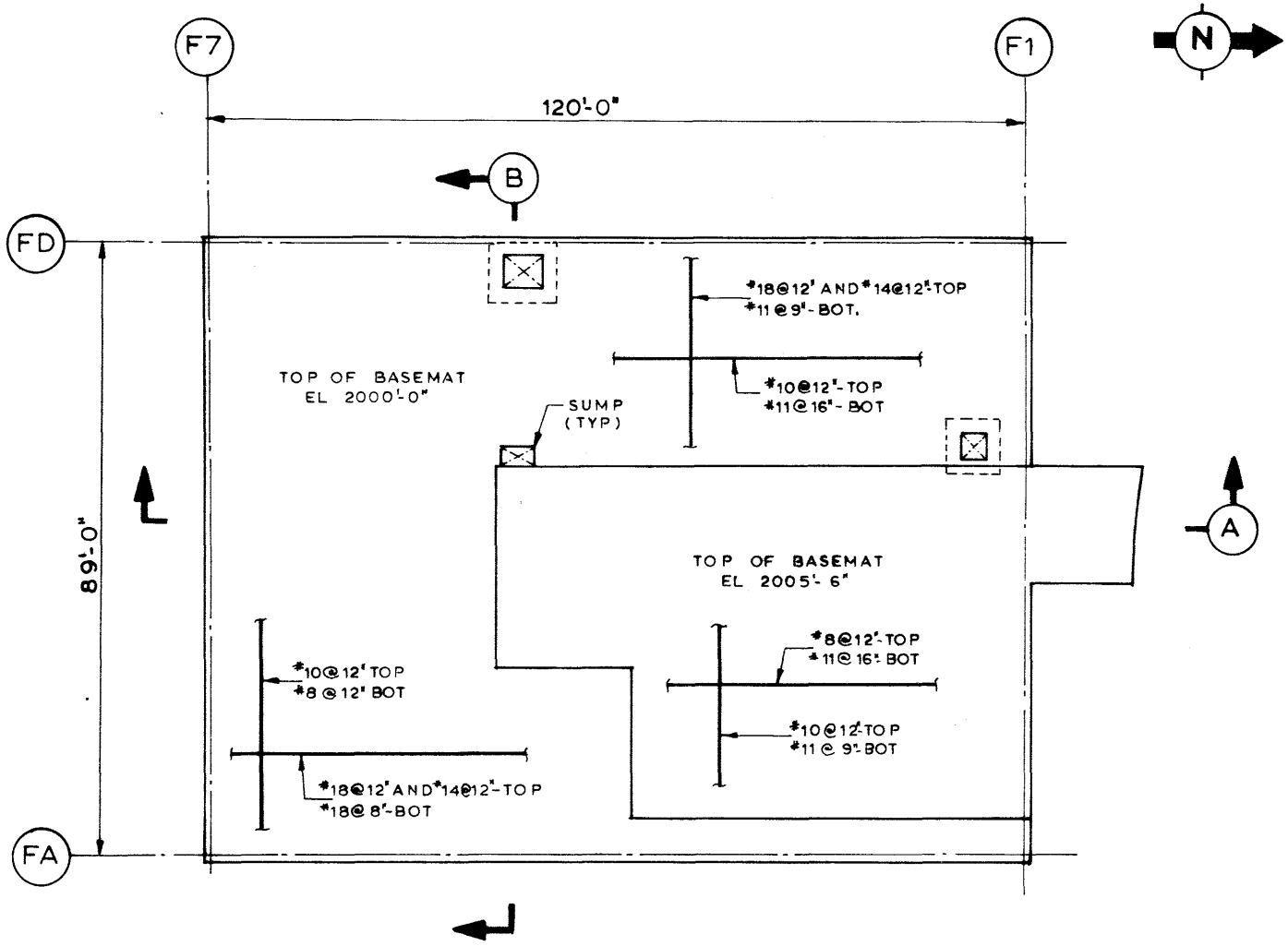

Rev. 0

WOLF CREEK UPDATED SAFETY ANALYSIS REPORT
FIGURE 3.8-121 FUEL BUILDING FOUNDATION PLAN

WOLF CREEK

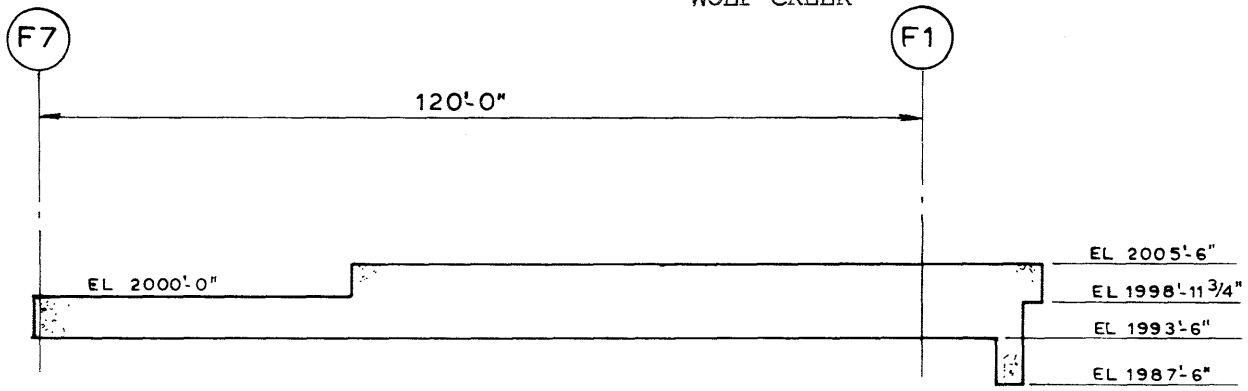

SECTION A

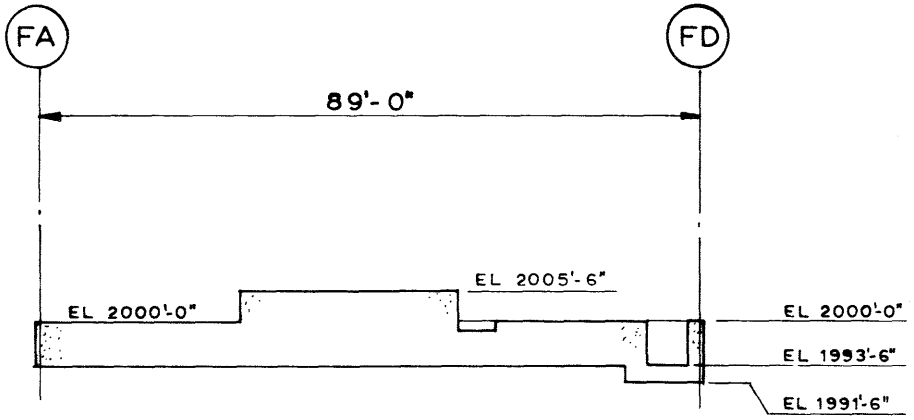

SECTION B

Rev. 0

WOLF CREEK UPDATED SAFETY ANALYSIS REPORT
FIGURE 3.8-122 FUEL BUILDING FOUNDATION SECTIONS

WOLF CREEK

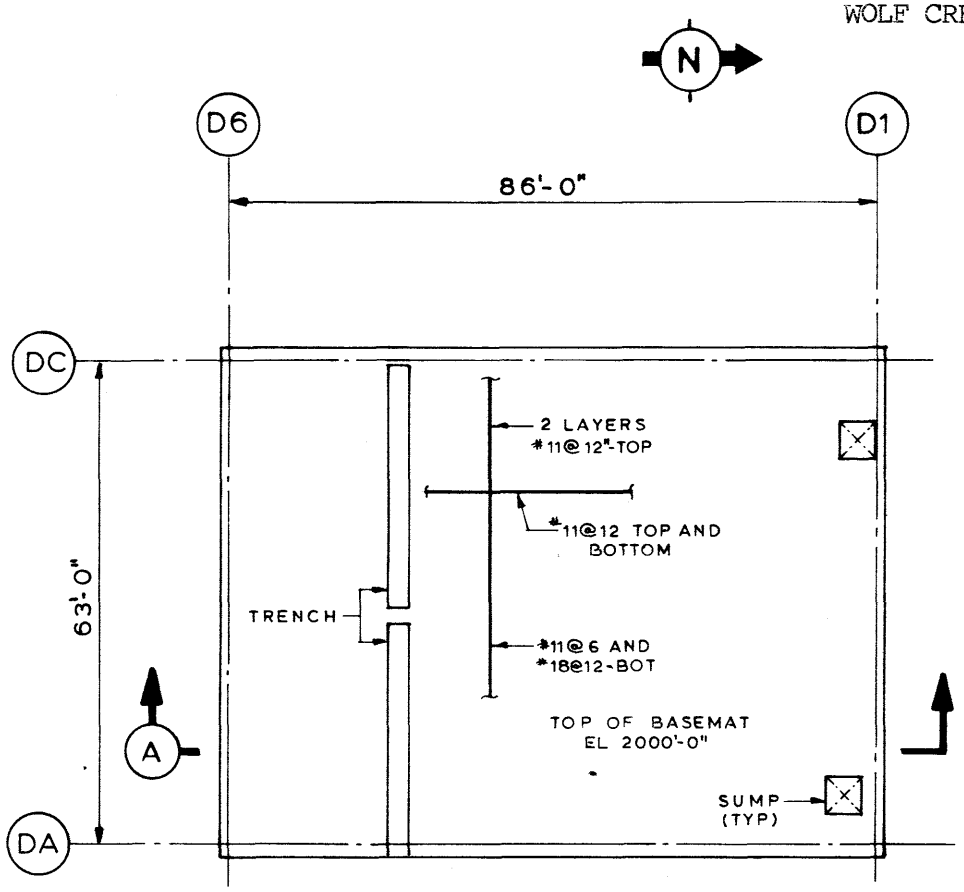

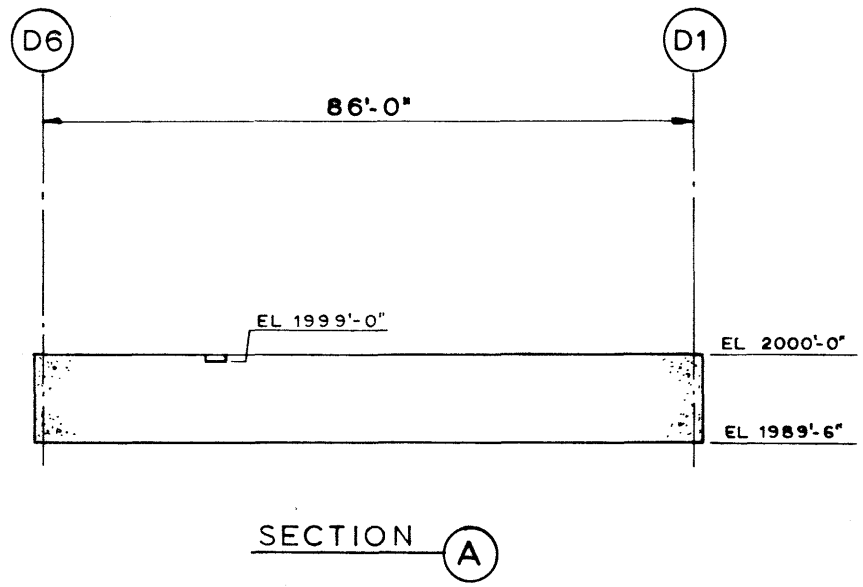

Rev. 0

WOLF CREEK UPDATED SAFETY ANALYSIS REPORT
FIGURE 3.8-123 DIESEL-GENERATOR BUILDING FOUNDATION PLAN

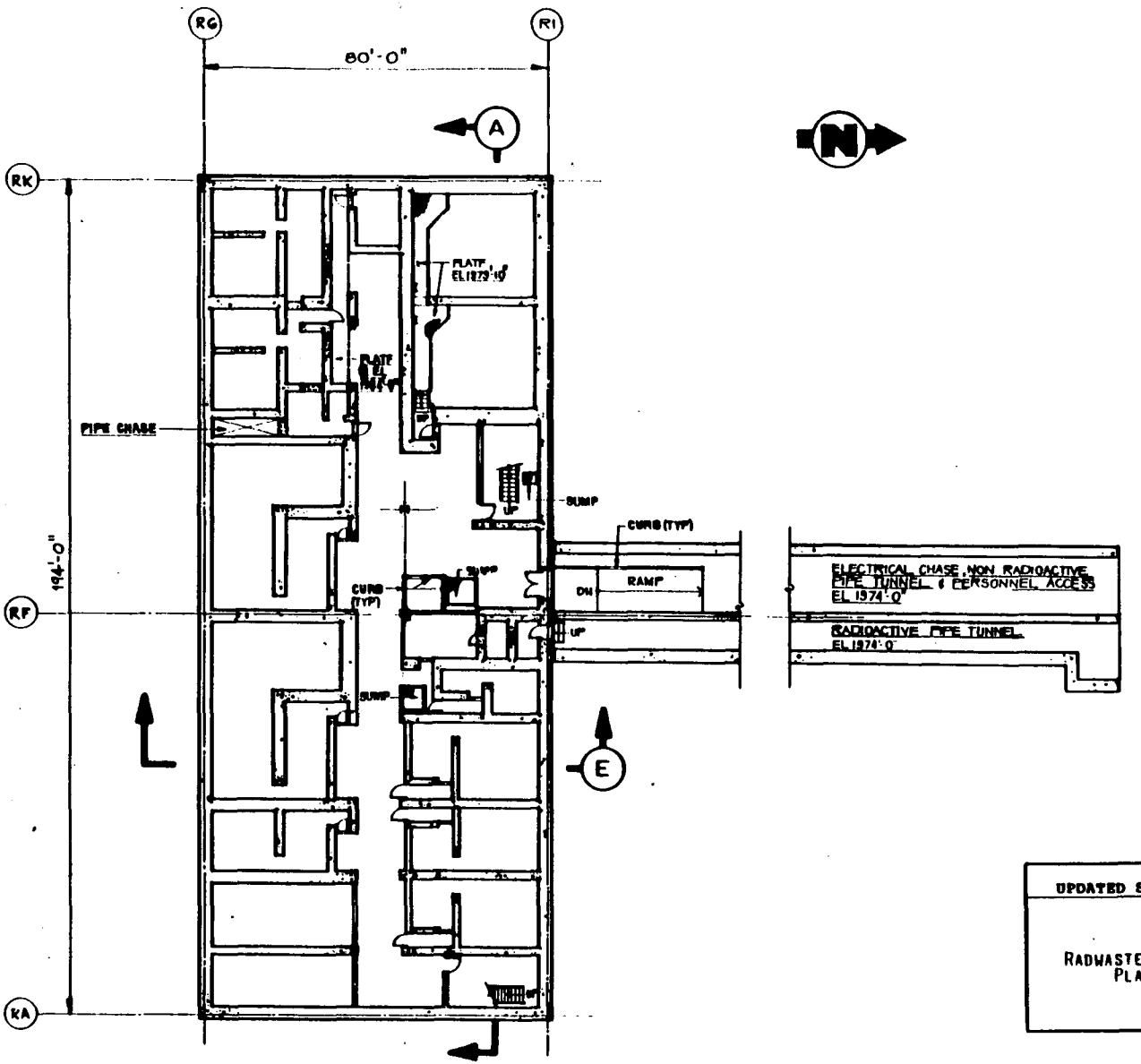

Rev. 0

WOLF CREEK UPDATED SAFETY ANALYSIS REPORT
FIGURE 3.8-124 RADWASTE BUILDING AND TUNNEL - PLAN EL. 1974'-0" AND EL. 1976'-0"

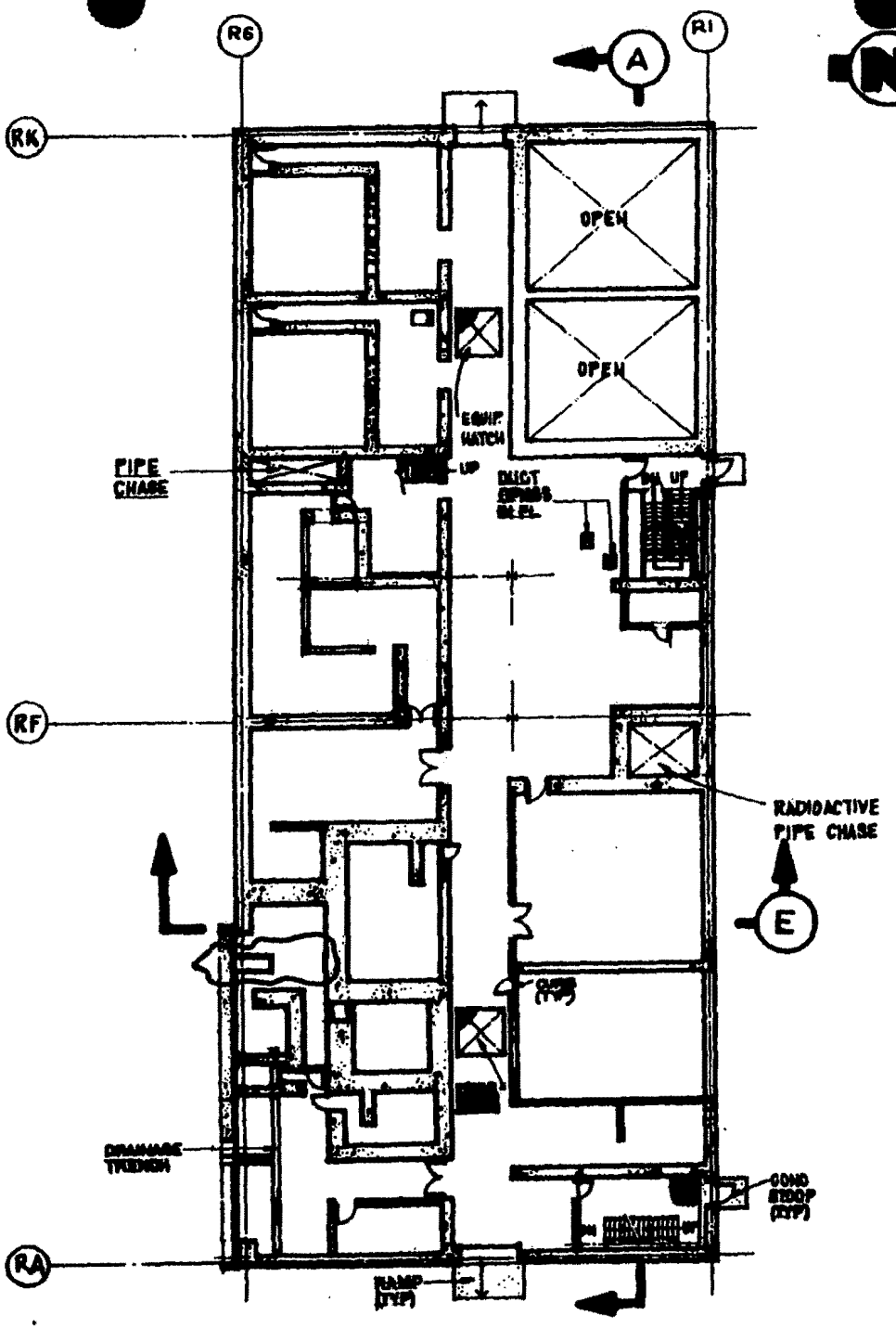

REV. 8

WOLF CREEK
UPDATED SAFETY ANALYSIS REPORT

FIGURE 3.8-125

RADWASTE BUILDING -PLAN
EL. 2000'-0"

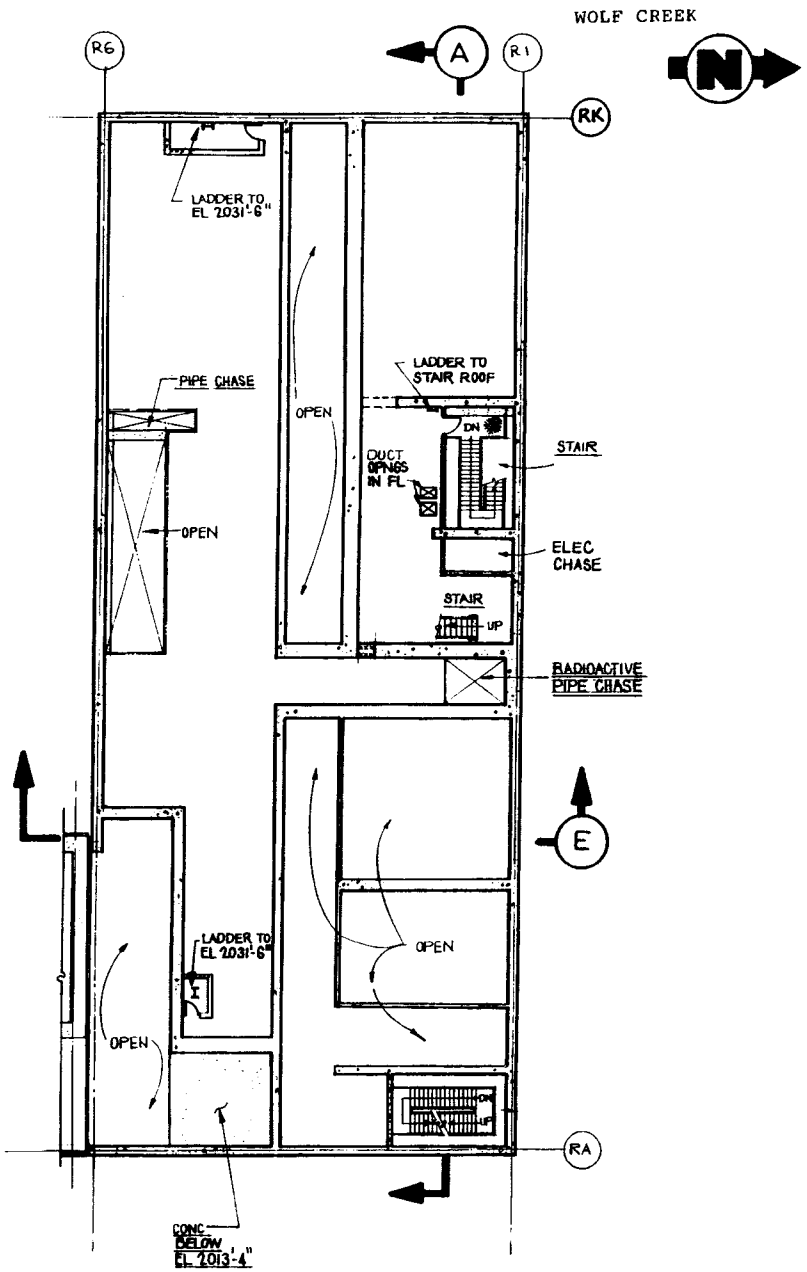

Rev. 14

WOLF CREEK
UPDATED SAFETY ANALYSIS REPORT

FIGURE 3.8-126
RADWASTE BUILDING - PLAN EL. 2022'-0"

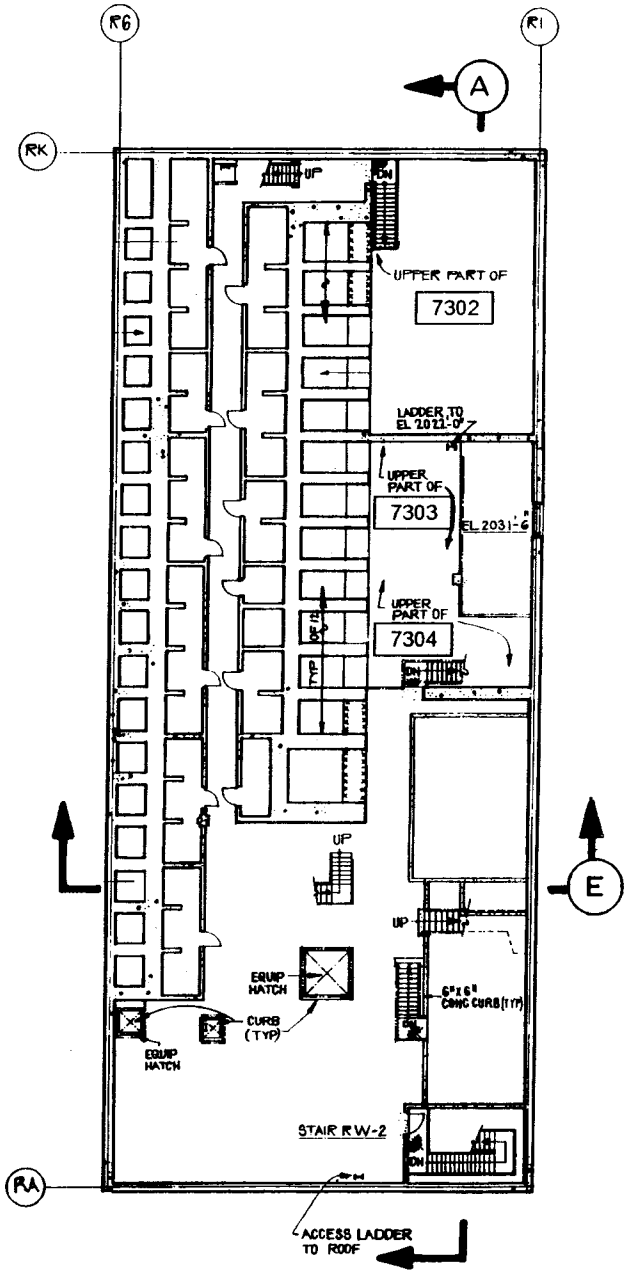

Rev. 14

WOLF CREEK
UPDATED SAFETY ANALYSIS REPORT

FIGURE 3.8-127
RADWASTE BUILDING - PLAN EL. 2031'-6"

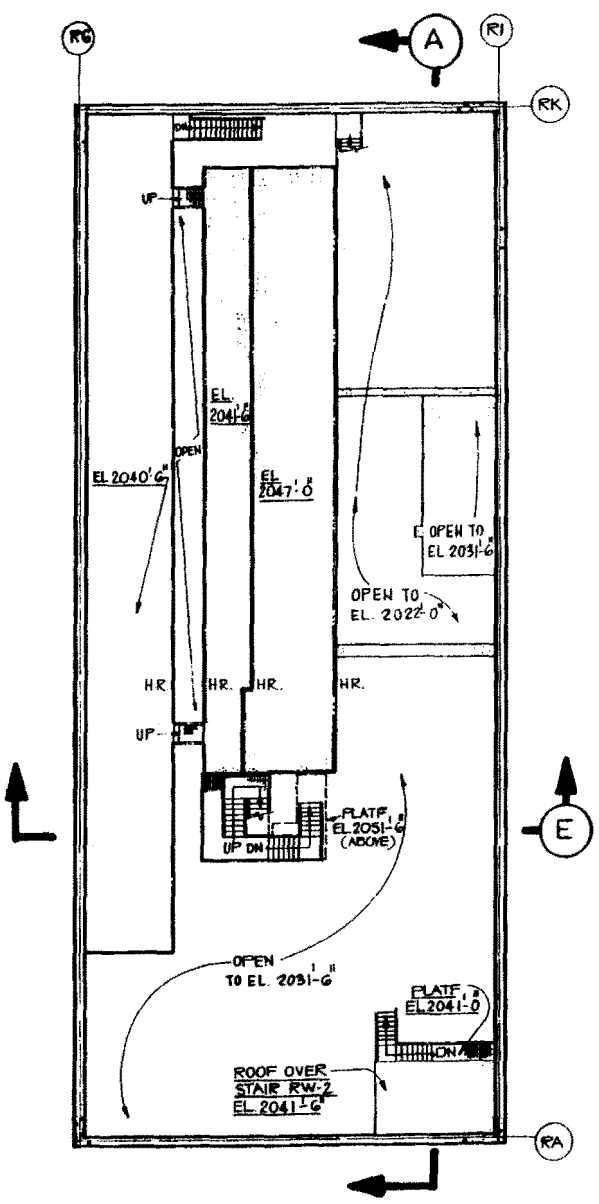

Rev. 14

WOLF CREEK
UPDATED SAFETY ANALYSIS REPORT

FIGURE 3.8-128
RADWASTE BUILDING - PLAN
EL. 2040'-6" AND EL. 2047'-0"

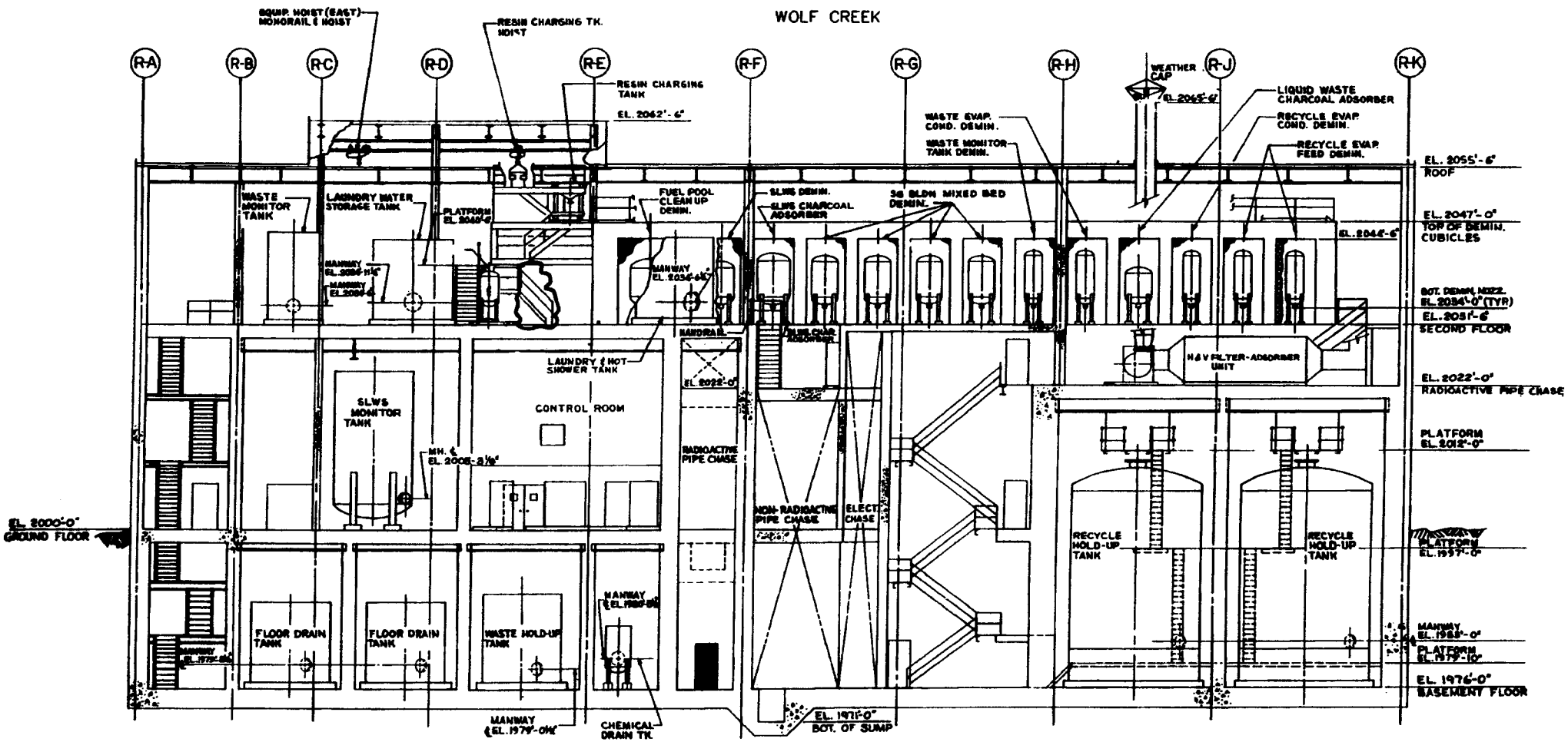

SECTION (A)

Rev. 14

WOLF CREEK
UPDATED SAFETY ANALYSIS REPORT

FIGURE 3.8-129
RADWASTE BUILDING - SECTION

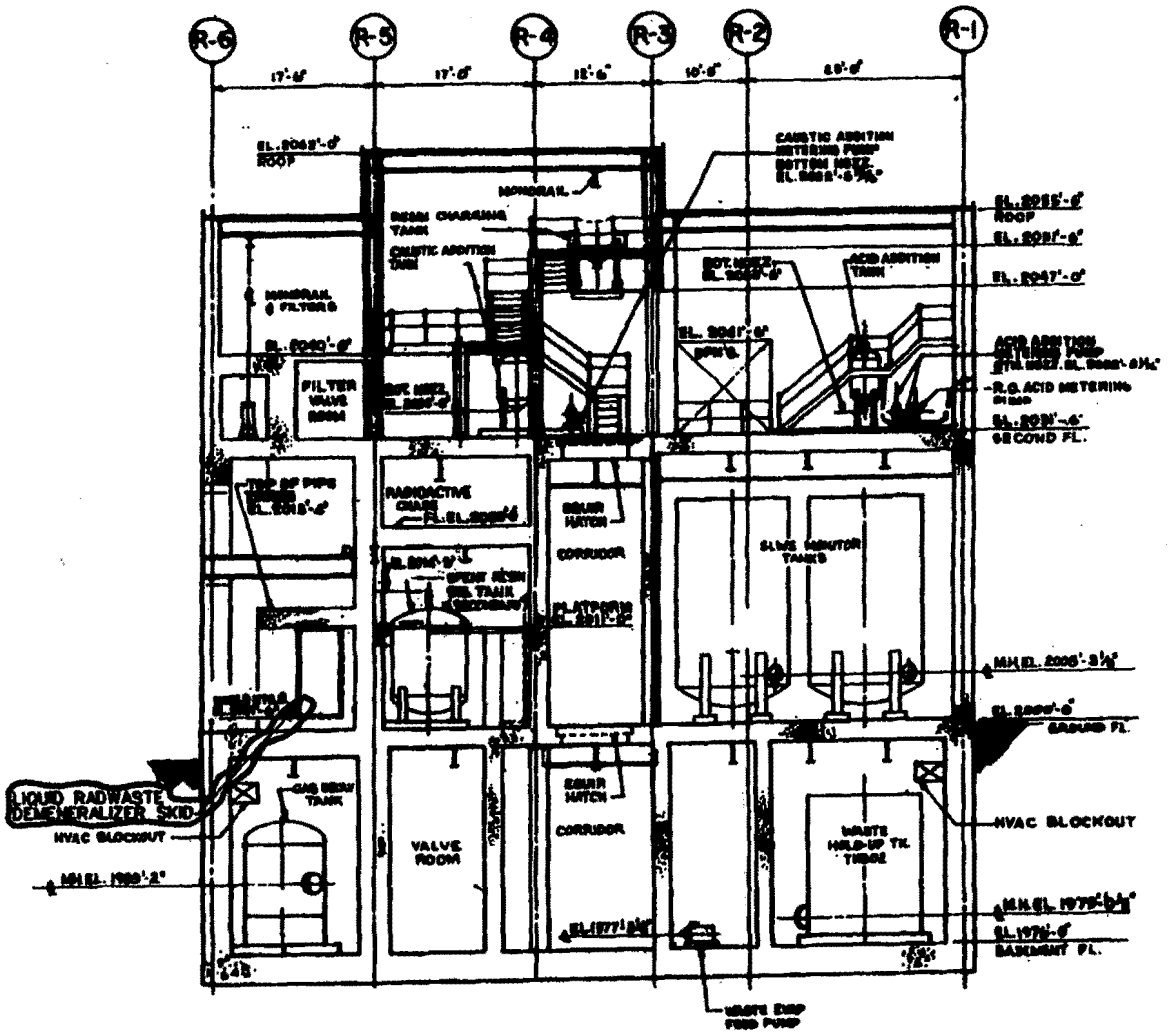

SECTION E

REV. 8

WOLF CREEK
UPDATED SAFETY ANALYSIS REPORT

FIGURE 3.8-130

RADWASTE BUILDING - SECTION

WOLF CREEK

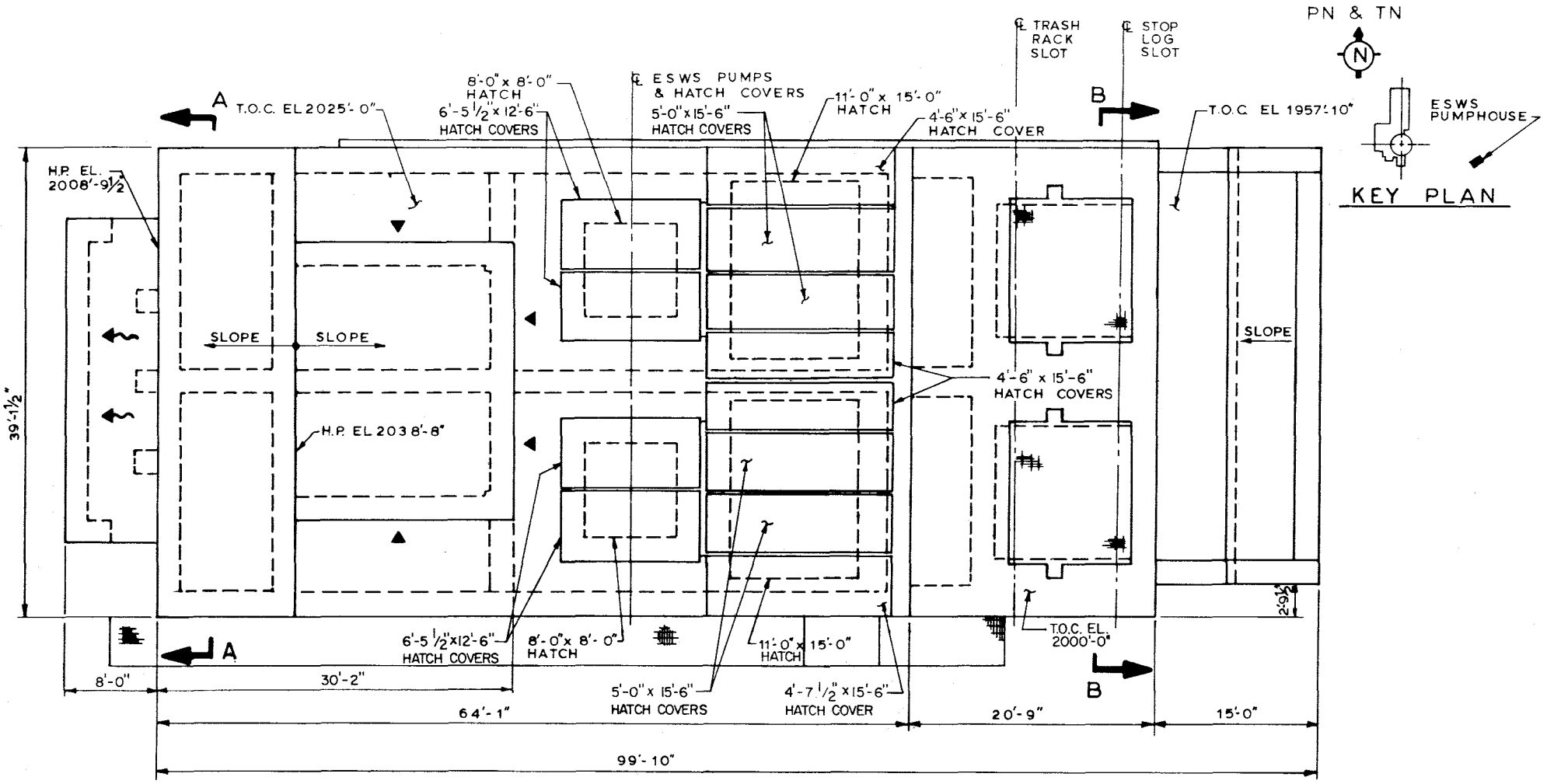

NOTE: ROOFS AND HATCHES AT EL 2038'-8", EL 2025'-0" AND EL 2008'-9 1/2" HAVE f'c = 5000 psi MINIMUM AT 90 DAYS. ALL OTHER CONCRETE IS f'c = 4000 psi MINIMUM AT 28 DAYS

▶ AIR INTAKE

⇝ AIR EXHAUST

PLAN VIEW - E.S.W.S. PUMPHOUSE

Rev. 0

WOLF CREEK
UPDATED SAFETY ANALYSIS REPORT

FIGURE 3.8-131

PLAN-ESWS PUMPHOUSE

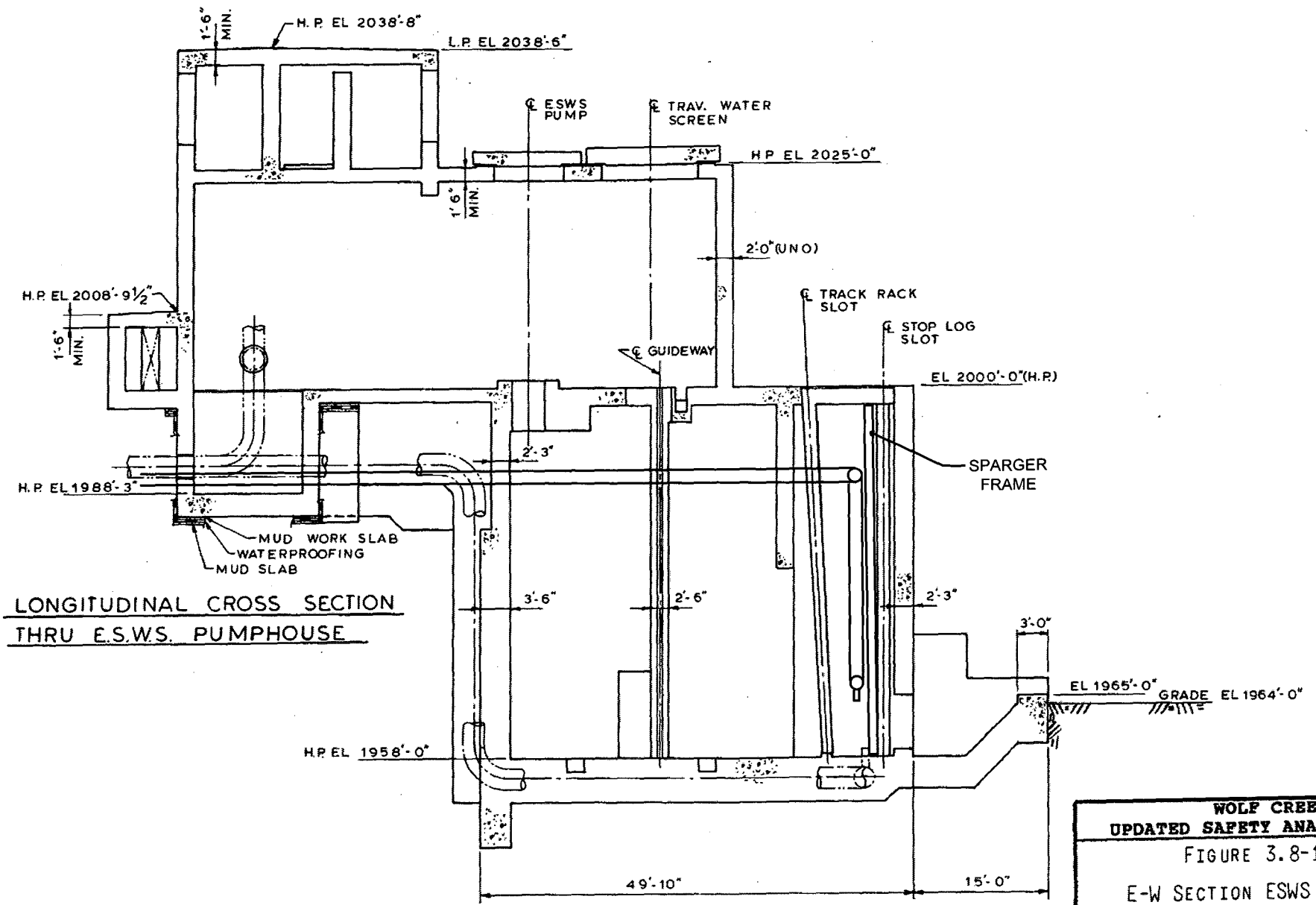

LONGITUDINAL CROSS SECTION THRU E.S.W.S. PUMPHOUSE

REV. 28

WOLF CREEK
UPDATED SAFETY ANALYSIS REPORT

FIGURE 3.8-132

E-W SECTION ESWS PUMPHOUSE

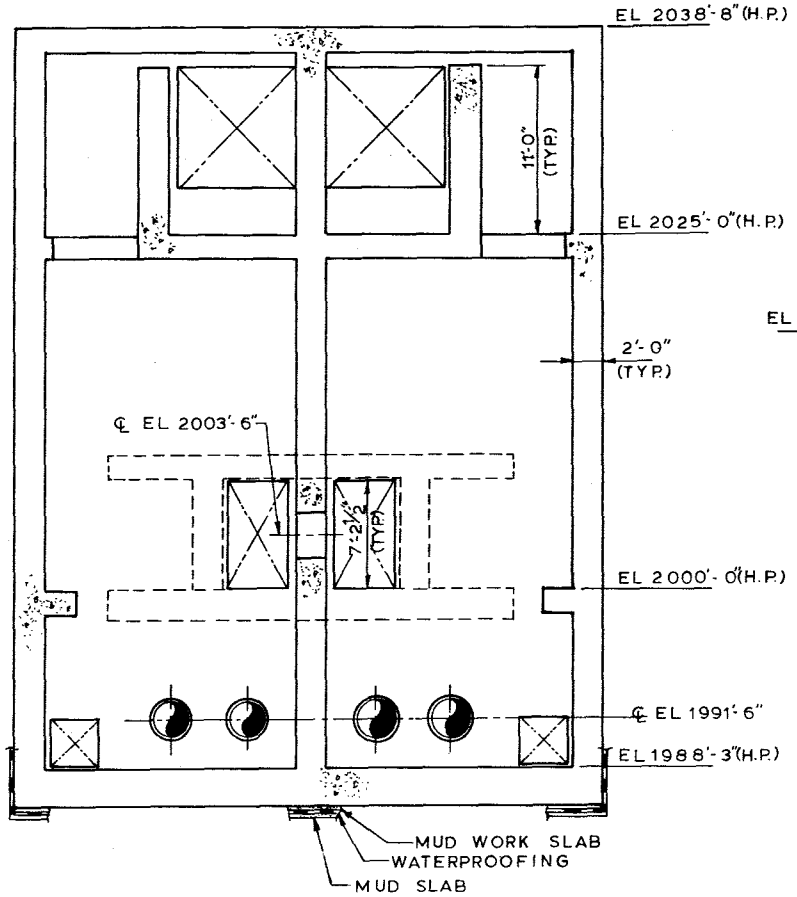

SECTION A-A

SEE FIG. 3.8-1

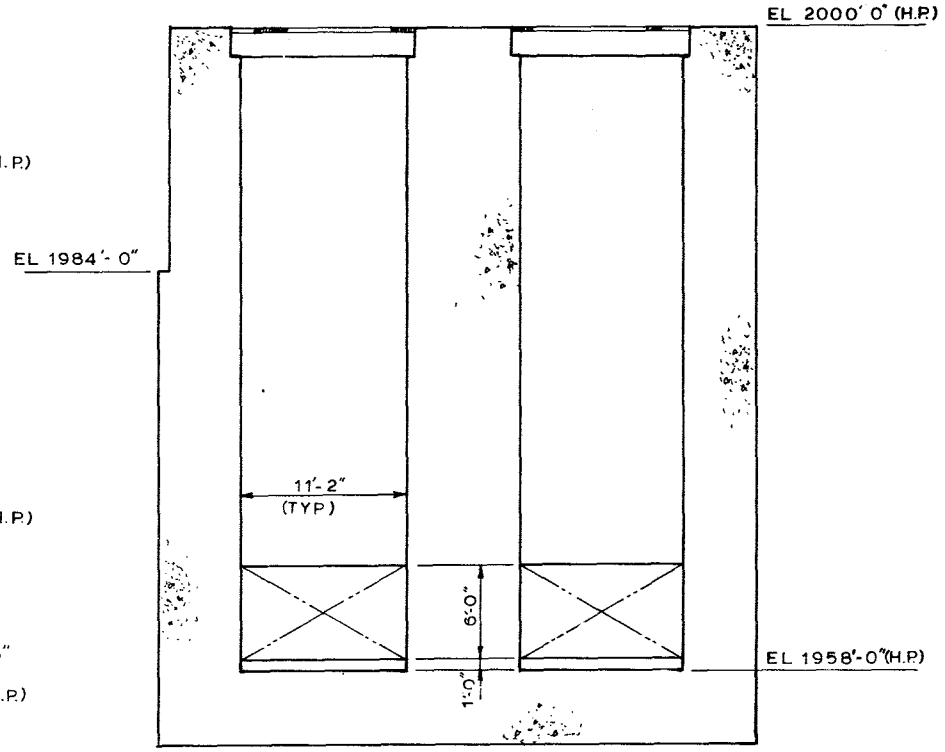

SECTION B-B

SEE FIG. 3.8-1

Rev. 0

WOLF CREEK
UPDATED SAFETY ANALYSIS REPORT

FIGURE 3.8-133

N-S SECTIONS ESWS PUMPHOUSE

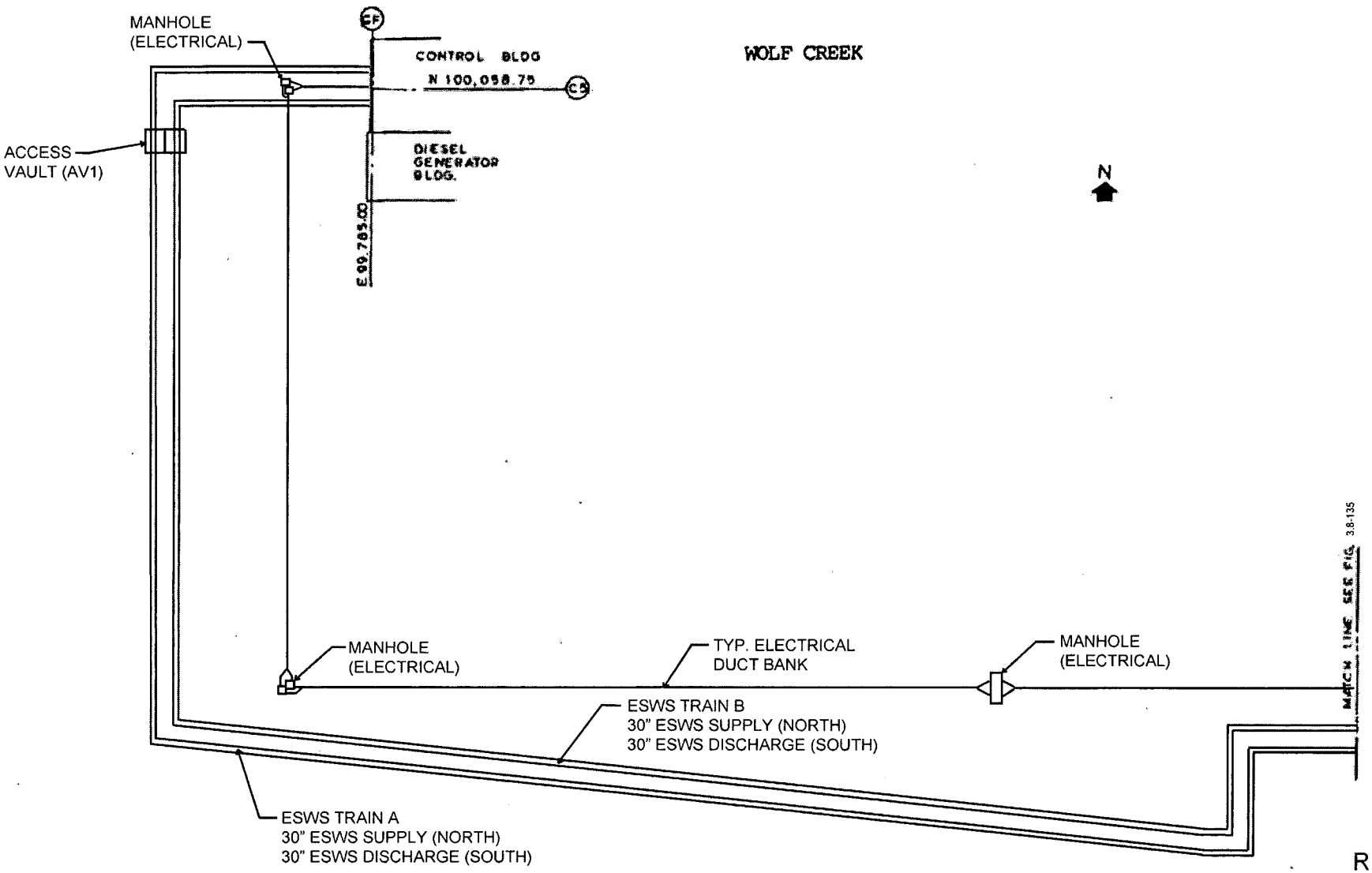

REV. 28

PLAN VIEW YARD PIPELINES
& ELEC DUCT BANKS

WOLF CREEK
UPDATED SAFETY ANALYSIS REPORT

FIGURE 3.8-134

PLAN-ESWS PIPES AND DUCT BANKS

WOLF CREEK

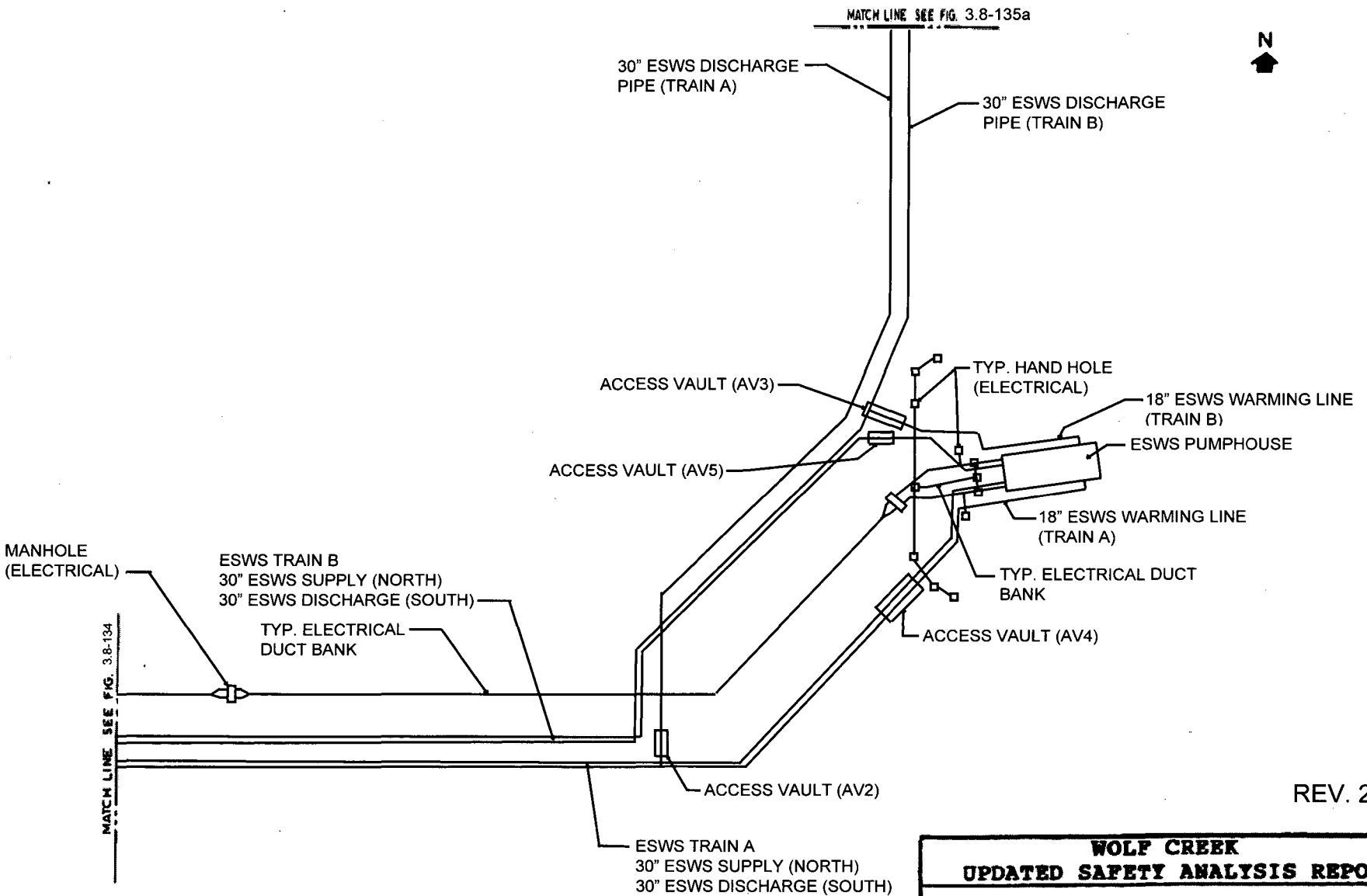

REV. 28

WOLF CREEK
UPDATED SAFETY ANALYSIS REPORT

FIGURE 3.8-135

PLAN-ESWS PIPES AND DUCT BANKS

PLAN VIEW YARD PIPELINES & ELEC. DUCT BANKS

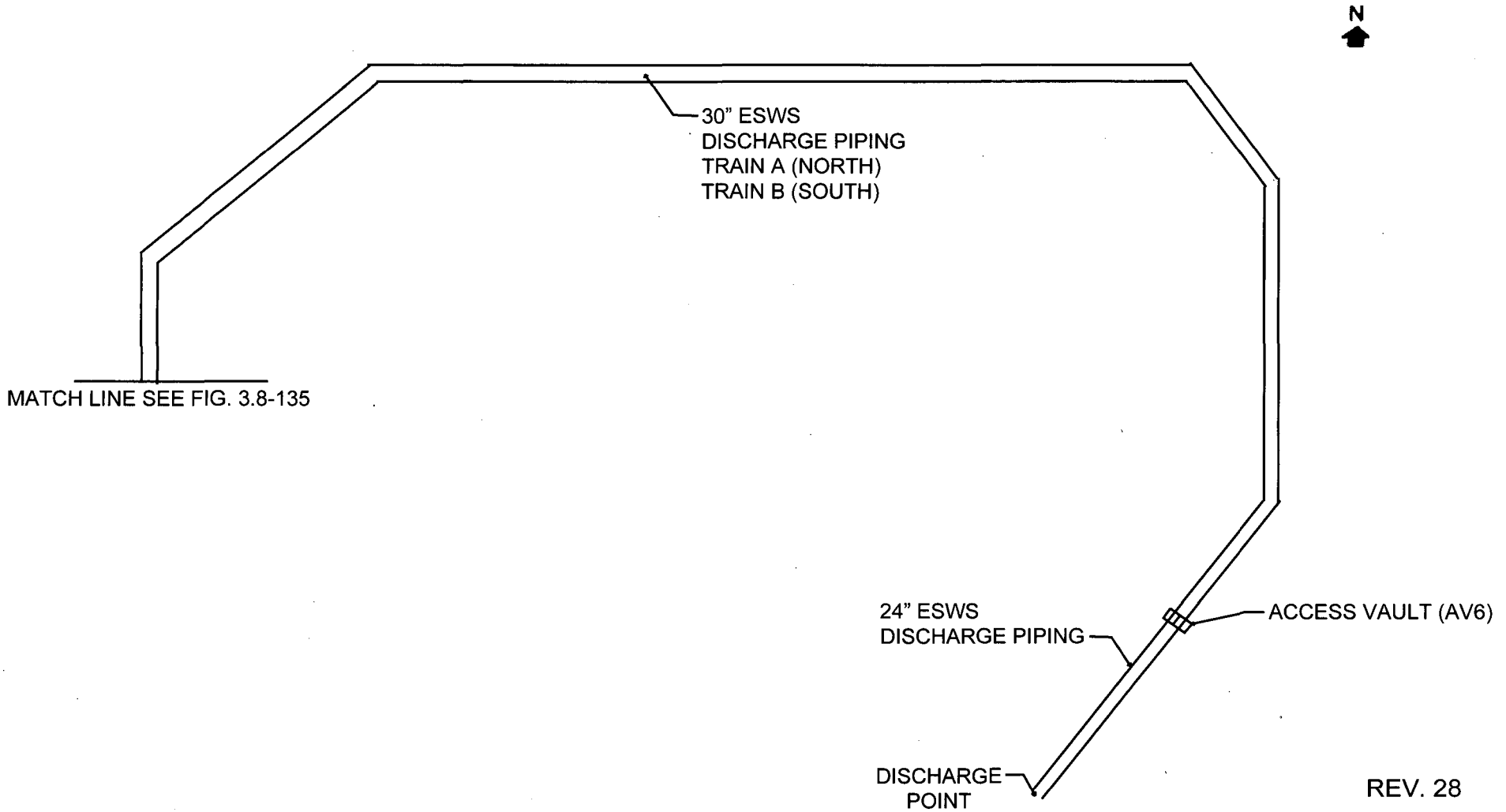

PLAN VIEW YARD PIPELINES
& ELEC. DUCT BANKS

REV. 28

WOLF CREEK
UPDATED SAFETY ANALYSIS REPORT

FIGURE 3.8-135a

PLAN-ESWS PIPES AND DUCT BANKS

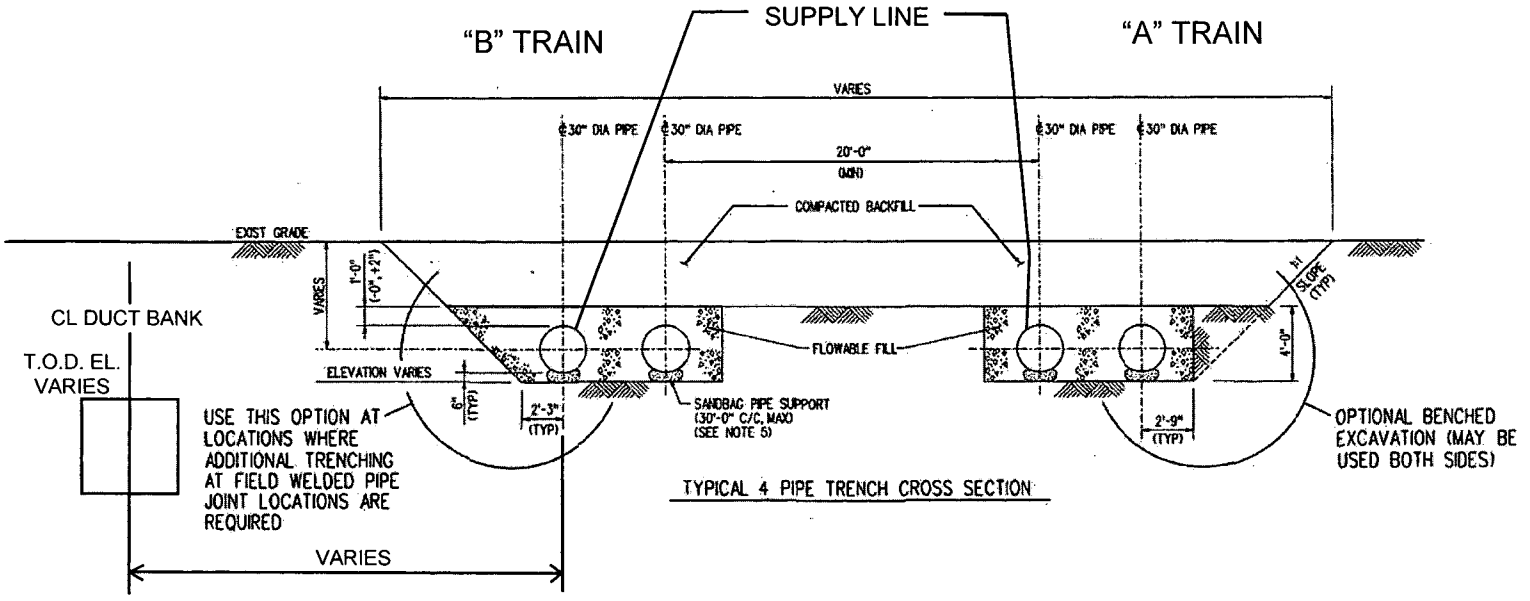

TYPICAL 4 PIPE TRENCH CROSS SECTION

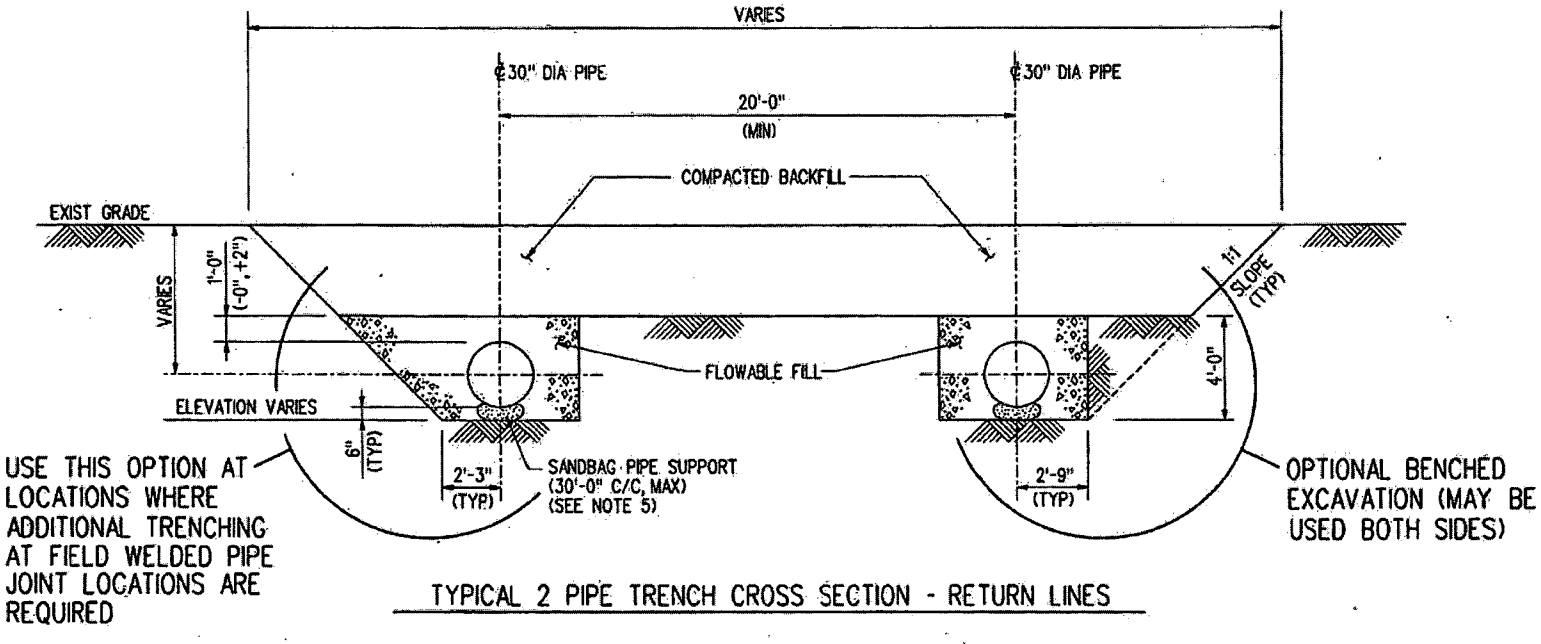

TYPICAL 2 PIPE TRENCH CROSS SECTION - RETURN LINES

REV. 28

WOLF CREEK
UPDATED SAFETY ANALYSIS REPORT

FIGURE 3.8-136

SECTION THROUGH ESWS PIPES AND DUCT BANKS

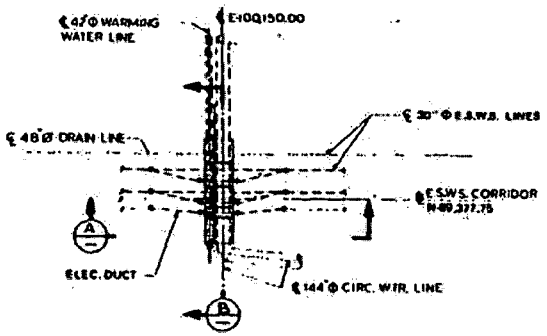

PLAN

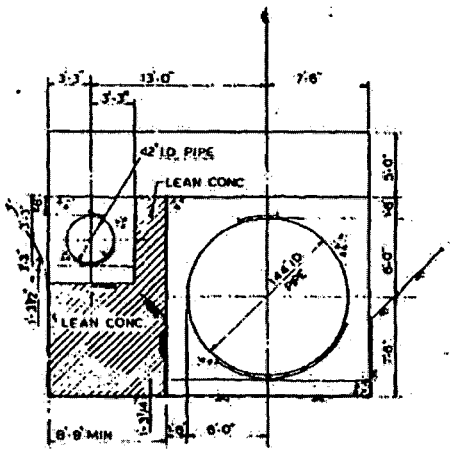

SECTION A

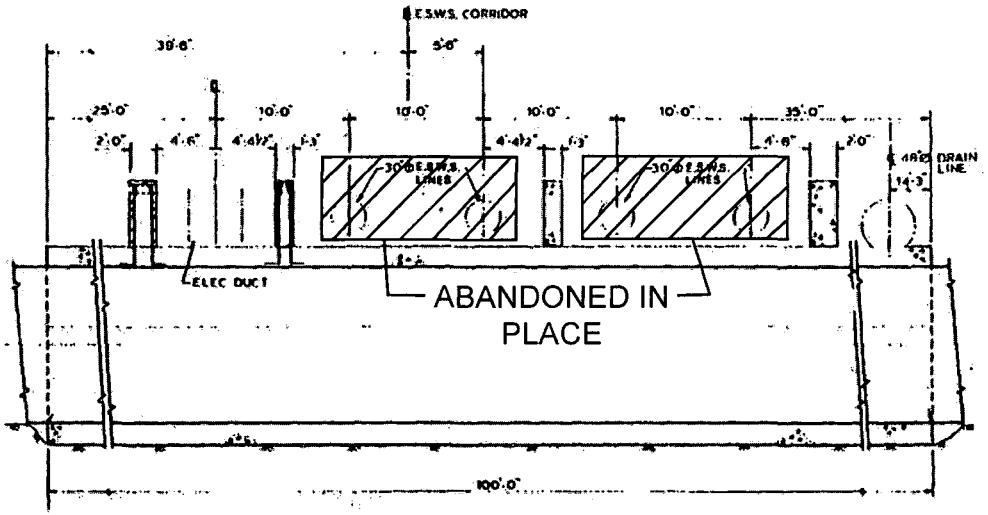

SECTION B

REV. 28

WOLF CREEK
UPDATED SAFETY ANALYSIS REPORT

FIGURE 3.8-137 SHEET 1 OF 2

PLAN AND SECTIONS OF PIPE INCASEMENTS

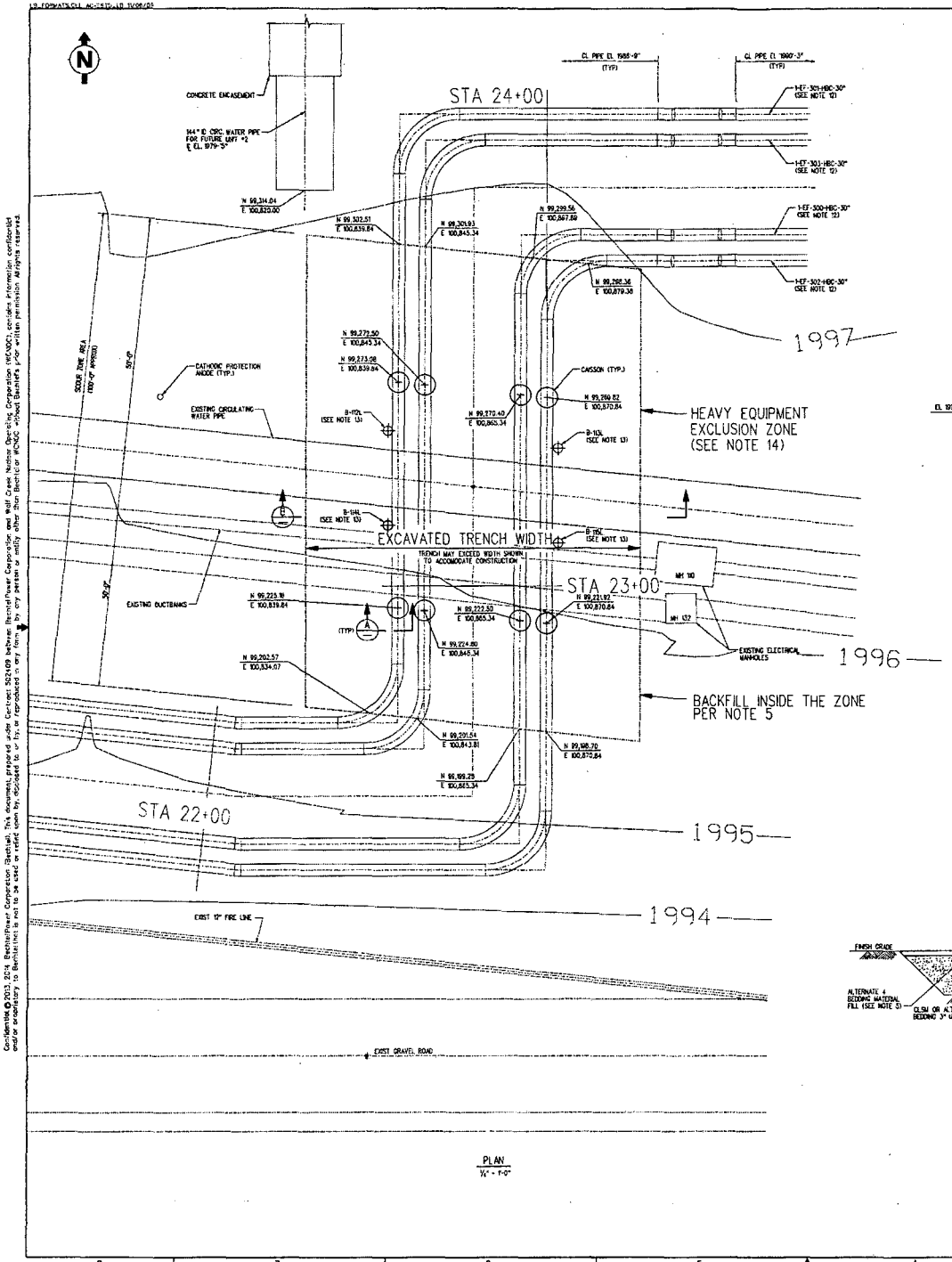

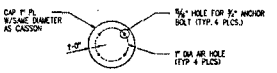

CAP PLATE DETAIL

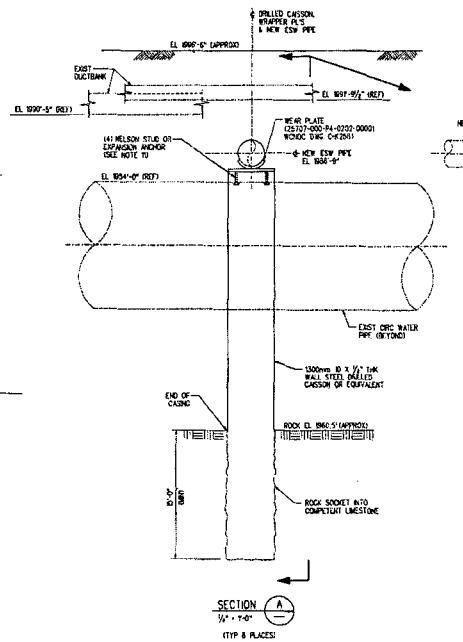

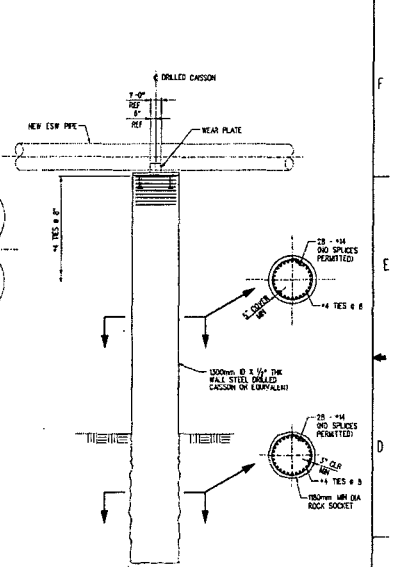

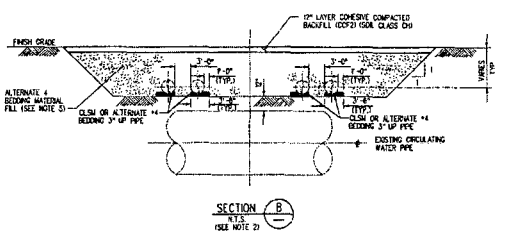

NOTES

1. FOR STRUCTURAL STEEL AND CONCRETE GENERAL NOTES SEE DWG C-0003. CONCRETE SHALL BE C-1, "STRUCTURAL CONCRETE - HIGH SLUMP" OR "FIBERME CONCRETE 72" FURNISHED PER WCNOC SPECIFICATION C-301 (2).
2. FOR EARTHWORK AND MATERIALS NOTES, SEE DRAWING CE-0000-00002.
3. DEWATERING SHALL BE ACCOMPLISHED IN A MANNER THAT WILL PREVENT LOSS OF FINES FROM THE FOUNDATION, WILL MAINTAIN STABILITY OF EXCAVATED SLOPES AND BOTTOMS OF TRENCHES, AND WILL RESULT IN ALL CONSTRUCTION OPERATIONS BEING PERFORMED IN THE DRY EXCEPT IN APPROVED SUMPS.
4. PROVIDE TEMPORARY SUPPORT FOR DUCTBANKS THAT WILL BE UNDERMINED BY THE PIPE TRENCH AND CASSON EXCAVATION.
5. PIPE TRENCH BACKFILL WITHIN THE LIMITS SHOWN SHALL BE ALTERNATE 4 MATERIAL WITH THE TOP 12" OF BACKFILL BEING COHESIVE COMPACTED BACKFILL (CCF2) (SOIL CLASS CH) PER WCNOC SPEC A-3553. PIPE BEDDING SHALL BE SAND OR CLSM AS SHOWN IN SECTION B.
6. WRAPPER PLATES TO BE OF SAME MATERIAL AND COATINGS AS PIPE.
7. CARBON STEEL CAP PLATE SHALL BE ASTM A516 GR. 70 & COATED WITH SAME SYSTEM AS PIPE.
8. TOP ELEVATION OF CAP PLATE SHALL BE WITHIN 1/4" OF PIPE WEAR PLATES AND BE LEVEL WITHIN +/- 0.5 DEGREES. NO SHIMS ARE ALLOWED BETWEEN PIPE AND CAP PLATE.
9. CONNECTION BETWEEN PIPE AND CAISSON IS A BEARING ONLY.
10. NO WELDING OR CUTTING OF REBAR IS PERMITTED WITHOUT PRIOR ENGINEERING APPROVAL.
11. HILTI KWIK BOLT 3, STAINLESS STEEL OR HOT-DIP GALVANIZED, 3/4" DIA. WITH 6 1/2" EMBEDMENT MAY BE USED IN LIEU OF NELSON STUD. ANCHORS SHALL BE INSTALLED PER WCNOC SPECIFICATION C-301A (2). CAP PLATE TO BE GROUTED WITH THE STAR FLUID 100 OR EQUIVALENT.
12. FOR LAYOUT OF PIPE SEE: 25707-000-P4-0202-00001 (W/NOC DWG C-K2561)
13. FOR SOIL BORING INFORMATION SEE SOIL REPORT: 25707-000-Y14-C105-00015.
14. NO EQUIPMENT EXCEEDING AN HS-20 TO BE ALLOWED IN THIS REGION.
15. FOR UTILITY LOCATION SEE WCNOC DWGS. C-0U5028, C-K203, AND M-73

WOLF CREEK
UPDATED SAFETY ANALYSIS REPORT

FIGURE 3.8-137 SHEET 2 OF 2
CIRC WATER LINE PROTECTION STRUCTURE

REV. 28

REFERENCE DRAWINGS

CE-0000-00001 (W/NOC NO. C-K277)	ESSENTIAL SERVICE WATER BURIED PIPE REPLACEMENT PROJECT - PLAN - NEW PIPE STATIONING
CE-0000-00004 (W/NOC NO. C-K338)	ESSENTIAL SERVICE WATER BURIED PIPE REPLACEMENT PROJECT - TRENCH EXCAVATION SHT 2
P4-0202-00001 (W/NOC NO. C-K256)	UNDERGROUND PIPING SOUTH YARD AREA ZONE 2

QUALITY CLASS: Q

PE STAMP

BECHTEL
DEDICATED TO SAFETY EXCELLENCE - ZERO ACCIDENTS
FREDERICK, MARYLAND

WOLF CREEK NUCLEAR OPERATING CORPORATION

ESSENTIAL SERVICE WATER
BURIED PIPE REPLACEMENT PROJECT
PLAN - CIRC WATER LINE PROTECTION STRUCTURE

JOB NO.	DRAWING NO.	REV.
25707-000	DB-0000-00008	4

ENGINEERING DRAWING: C-K287 | PART: - | SHT: 1

Confidential ©2013, 2014, Bechtel Power Corporation (Bechtel). This document, prepared under Contract 502409 between Bechtel Power Corporation and Wolf Creek Nuclear Operating Corporation (WCNOC), contains information confidential and/or proprietary to Bechtel that is not to be used or relied upon by, disclosed to, or if, or reproduced in any form, by any person or entity other than Bechtel or WCNOC without Bechtel's prior written permission. All rights reserved.

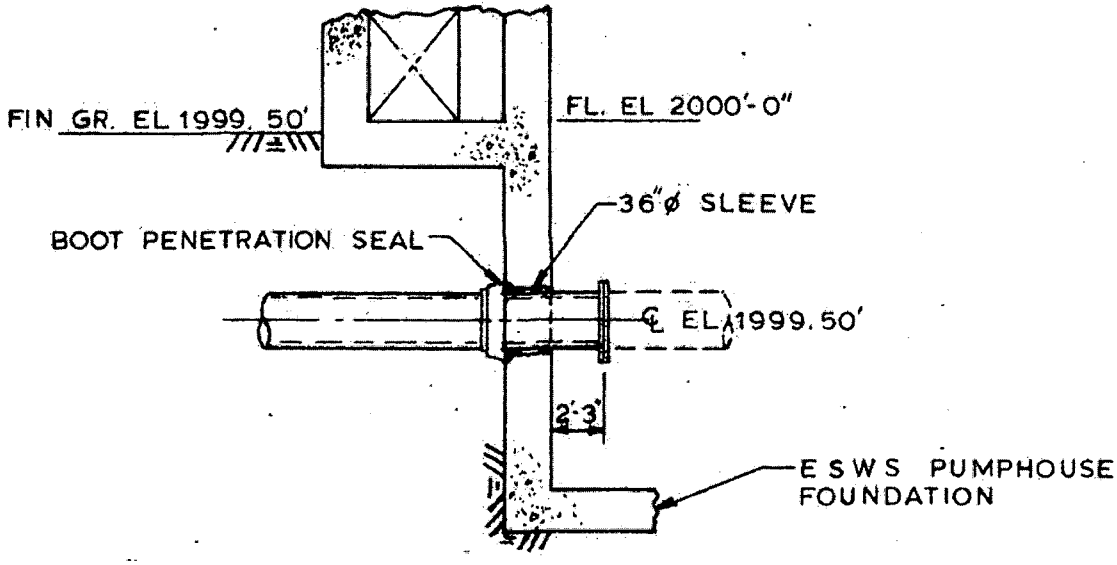

30" DIAMETER INTAKE PENETRATION
E.S.W.S PUMP HOUSE

Rev. 28

WOLF CREEK
UPDATED SAFETY ANALYSIS REPORT

FIGURE 3.8-138

30" DIAMETER PIPE
PENETRATION DETAILS

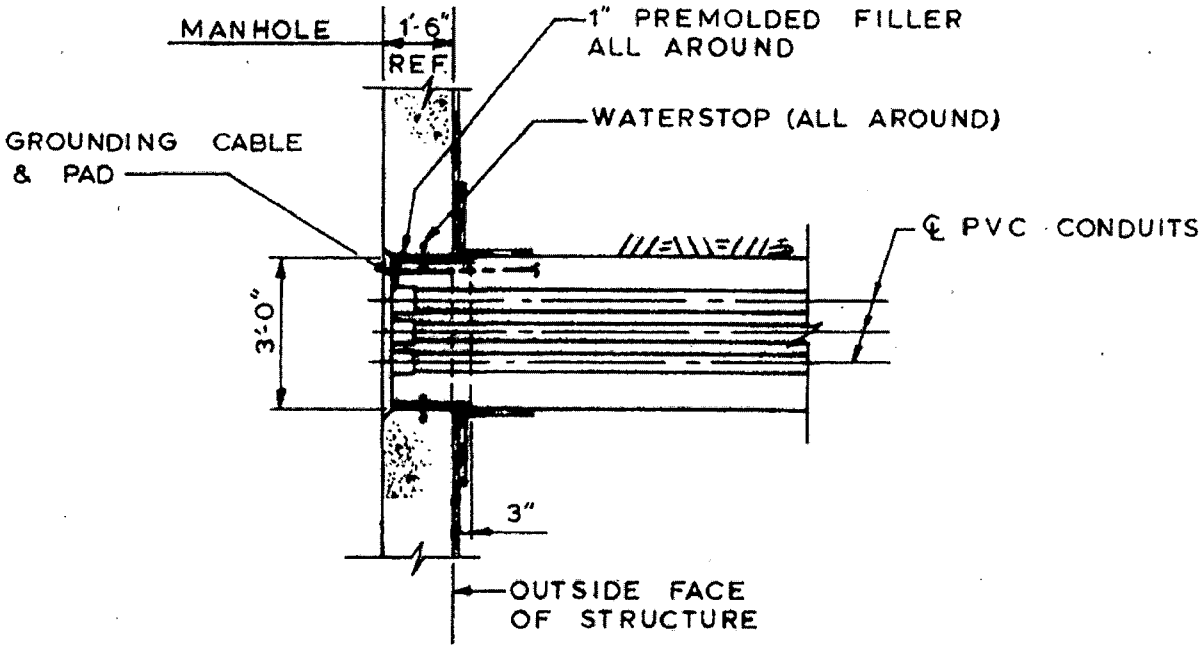

TYPICAL DUCT BANK ENTRANCE AT MANHOLE

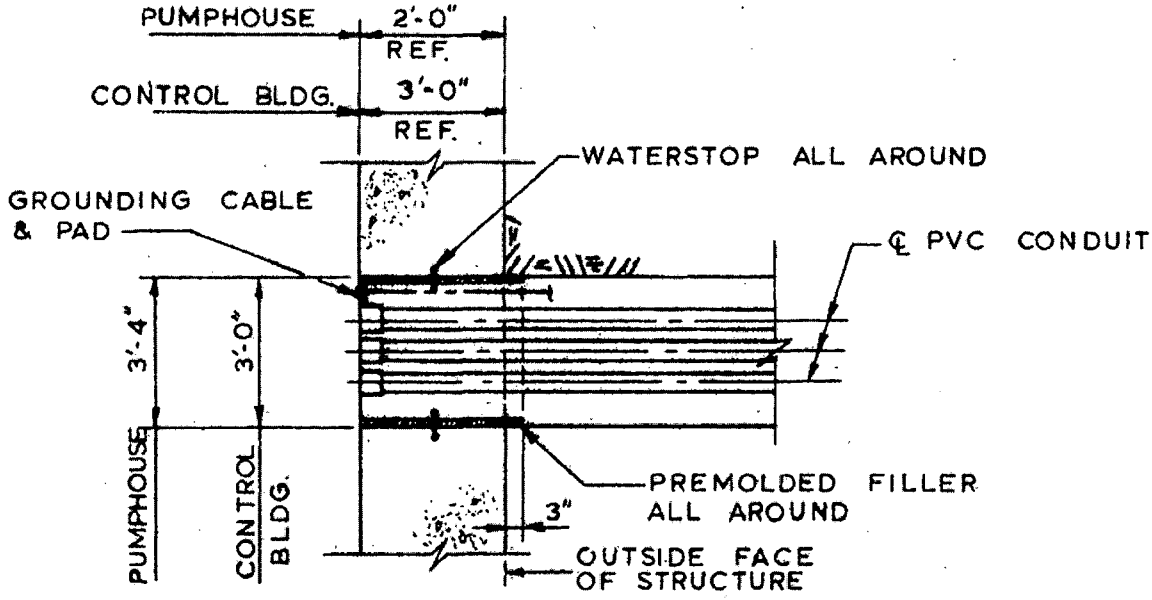

TYPICAL DUCT BANK ENTRANCE AT CONTROL BLDG. & PUMPHOUSE (AS NOTED)

WOLF CREEK UPDATED SAFETY ANALYSIS REPORT
FIGURE 3.8-139 DUCT BANK ENTRANCE DETAILS Rev. 28

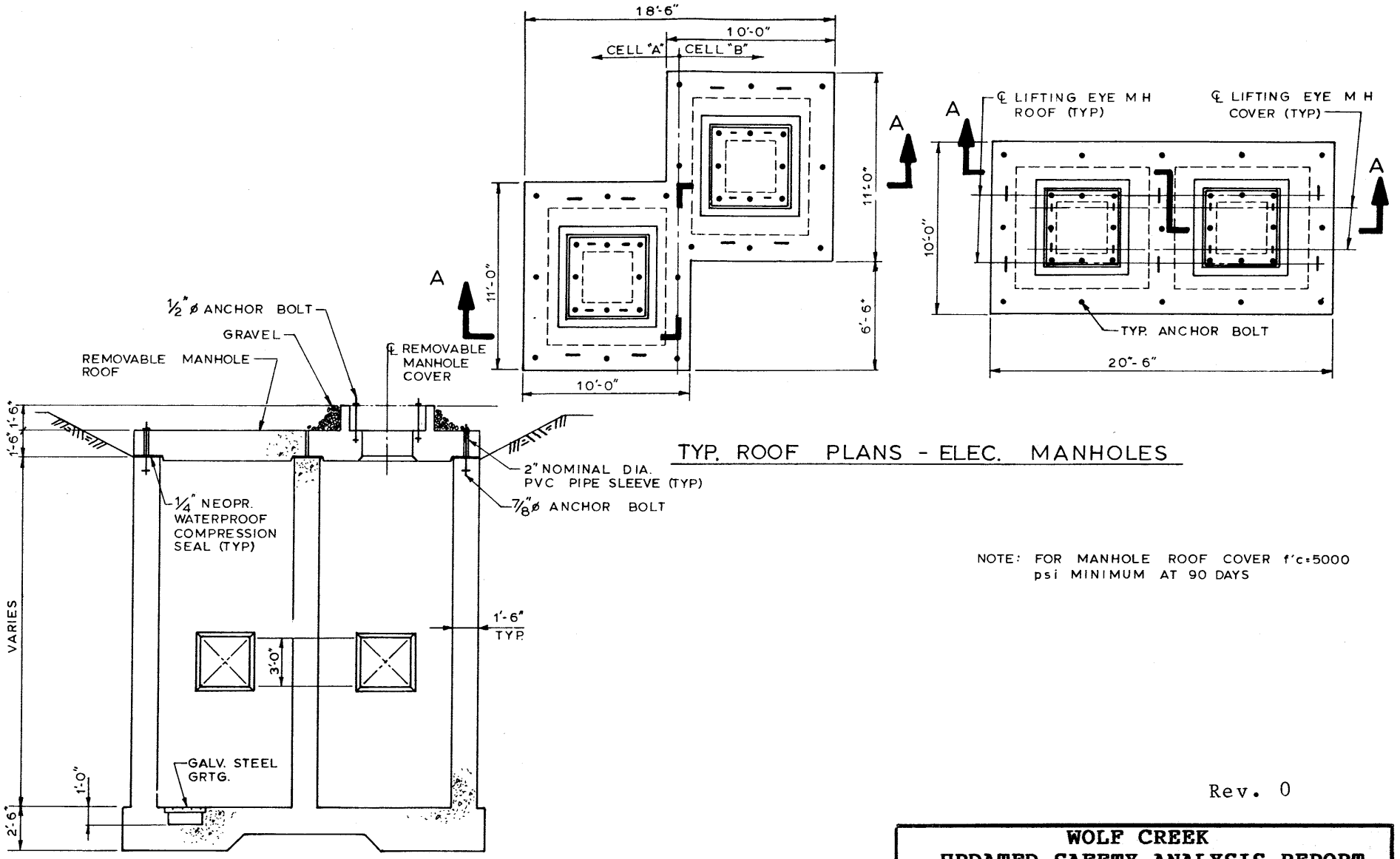

NOTE: FOR MANHOLE ROOF COVER f'c=5000 psi MINIMUM AT 90 DAYS

Rev. 0

WOLF CREEK
UPDATED SAFETY ANALYSIS REPORT

FIGURE 3.8-140

ELECTRICAL MANHOLES

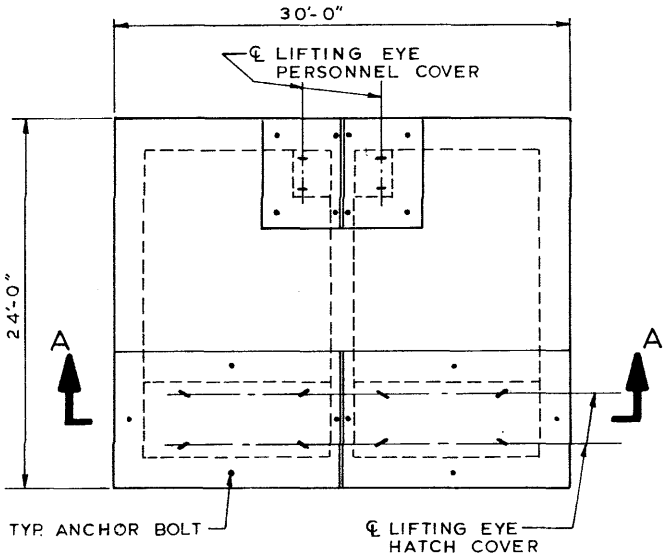

ROOF PLAN - VALVE HOUSE

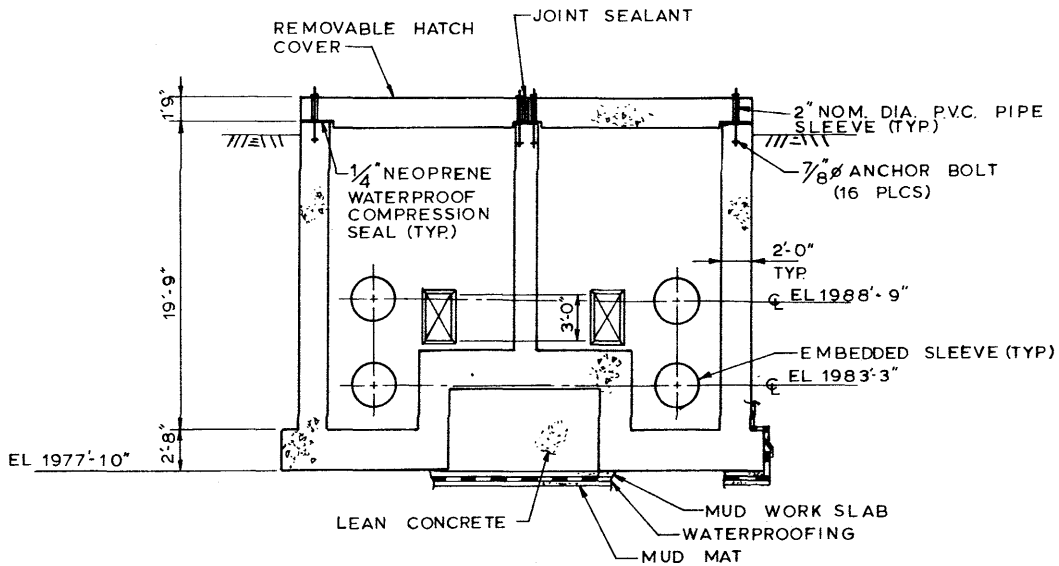

SECTION A-A

Rev. 0

WOLF CREEK
UPDATED SAFETY ANALYSIS REPORT

FIGURE 3.8-141

PLAN AND SECTION VALVE HOUSE

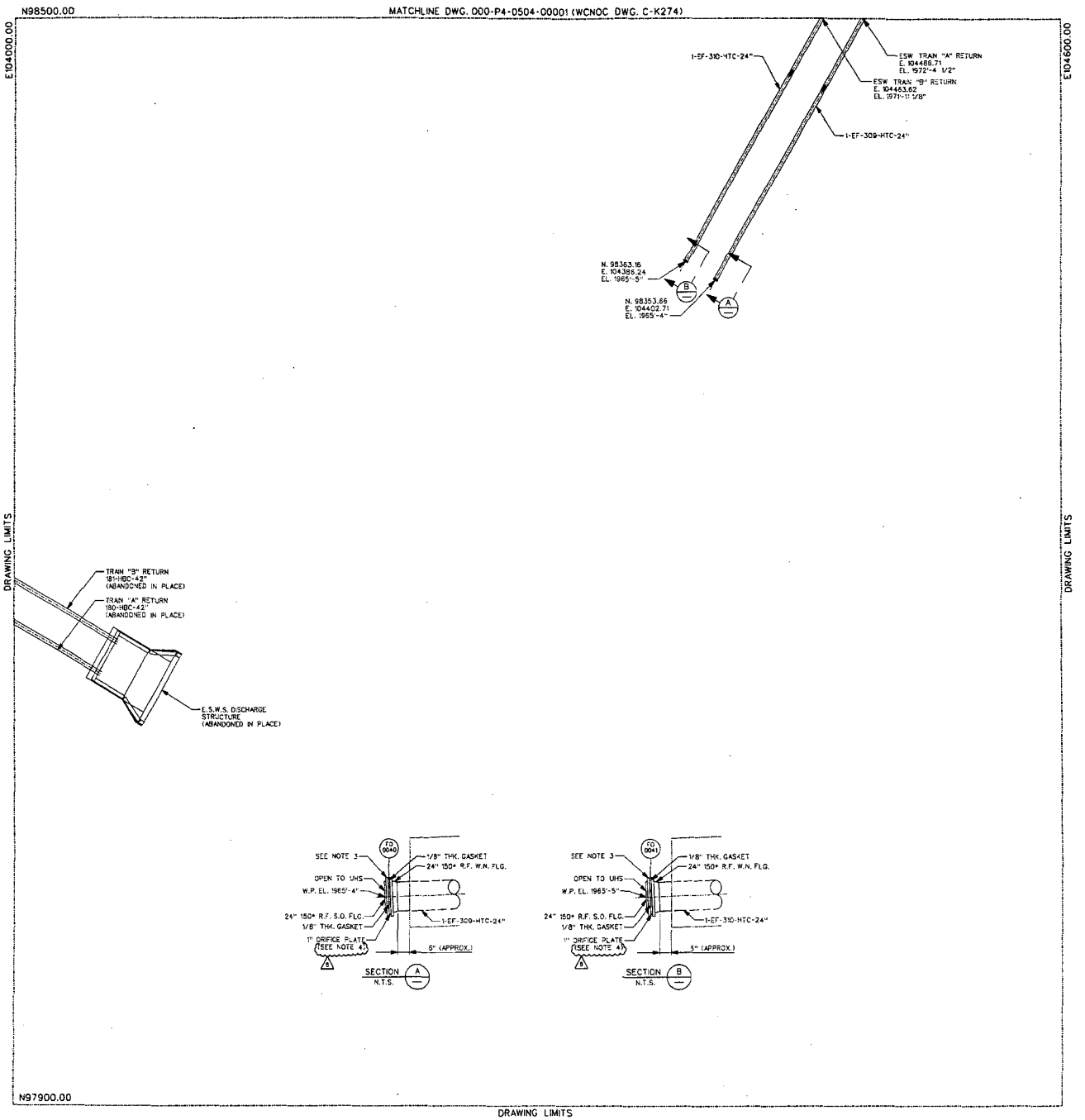

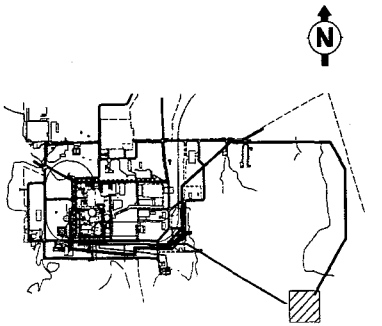

NOTES

1. FOR GENERAL NOTES SEE DRAWING P4-0101-00001 (WCNOC DWG. C-K251).
2. DELETED.
3. FOR THESE FLANGE LOCATIONS ONLY, THAT ARE IN LAKE WATER, USE STUD BOLTS TO ASME SA193 B8M, WITH HEAVY HEX NUTS TO ASME SA194 8B-8M.
4. THE FOLLOWING ORIFICE PLATES ARE CLASS 2 ITEMS: FO-0040 FO-0041 (A)

REFERENCE DRAWINGS

C-OU5010	UNDERGROUND UTILITIES
C-OU5017	UNDERGROUND UTILITIES
M6-WS-00001	P&ID ESSENTIAL SERVICE WATER SYSTEM (WCNOC DWG. M-12EF03)
M6-WS-00002	P&ID ESSENTIAL SERVICE WATER SYSTEM (WCNOC DWG. M-12EF04)
C-K202	E.S.W.S. YARD PIPELINES & ELECTRICAL DUCT BANKS PLANS, SECTIONS, & DETAILS SHT. 2

WOLF CREEK
UPDATED SAFETY ANALYSIS REPORT

FIGURE 3.8-142

PLAN AND SECTION
DISCHARGE POINT

REV. 28

This document has been prepared by Bechtel Power Corporation (Bechtel) exclusively for Wolf Creek Nuclear Operating Corporation (WCNOC), under Contract 502409 and is not to be relied upon by any person or entity other than WCNOC or used in conjunction with any other project.

NO.	DATE	REVISIONS	BY	CH	REV. APP.	IN	PROJ. ENGR.	APPR
(A)	5/15	REVISED AS NOTED AND REISSUED FOR CONSTRUCTION DCP 14,232	JJB	JJB	JJB	JJB	RMS	
(A)	3/14	REVISED TO INCORP FCR WCV-0000-00014 REISSUED FOR CONSTRUCTION DCP 14,231	FRB	CEJ	FRB	CEJ	DBB	
(A)	5/13	REVISED WCNOC REV. NO. AND REISSUED FOR CONSTRUCTION DCP 13,231	JE	RMS	NST	RMS	CEJ	
(A)	4/13	REMOVED GRAVITY RETAINING STRUCTURE AND REISSUED FOR CONSTRUCTION DCP NO. 14,231	JE	FRB	FRB FOR NST	FRB	RMS	
(A)	10/12	REVISED AS SHOWN REISSUED FOR CONSTRUCTION DCP NO. 14,231	JE	FRB	NST	FRB	CEJ	
(A)	8/12	REVISED AS SHOWN REISSUED FOR CONSTRUCTION DCP NO. 14,231	JMR	DH	NST	DH	CEJ	
(A)	7/12	ISSUED FOR CONSTRUCTION	JMR	FR	JH	-	RMS	

SCALE: 1" = 20' DATE: 18/NOV/E DESIGNED JMR DRAWN JMR

BECHTEL
DEDICATED TO SAFETY EXCELLENCE - ZERO ACCIDENTS
FREDERICK, MARYLAND

WOLF CREEK NUCLEAR OPERATING CORPORATION

UNDERGROUND PIPING
EAST UHS AREA
ZONE 5

JOB NO.	DRAWING NO.	REV.
25707-000	P4-0505-00001	8

WSNOC DRAWING NUMBER: C-K276 SHEET NO. 2

PE STAMP

REVISION B CHANGES ONLY

QUALITY CLASS Q

Confidential ©2011, 2014 Bechtel Power Corporation (Bechtel). This document, prepared under Contract 502409 between Bechtel Power Corporation and Wolf Creek Nuclear Operating Corporation (WCNOC), contains information confidential and/or proprietary to Bechtel that is not to be used or relied upon by, disclosed to or by, or reproduced in any form by any person or entity other than Bechtel or WCNOC, without Bechtel's prior written permission. All rights reserved.

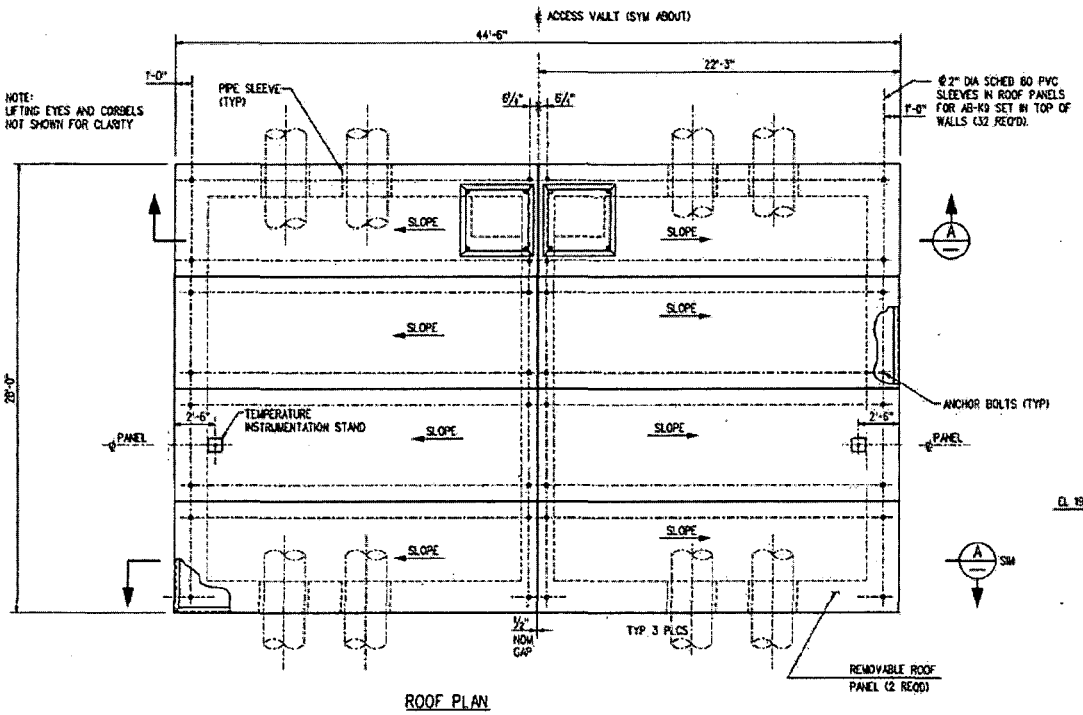

ROOF PLAN

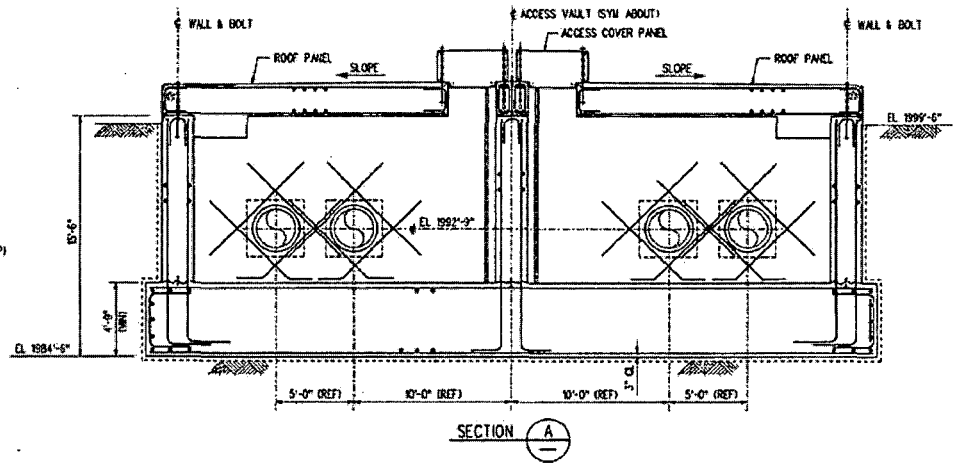

SECTION A

ACCESS VAULTS (AV1)

N.T.S.

WOLF CREEK
UPDATED SAFETY ANALYSIS REPORT

FIGURE 3.8-143 Rev. 28
PLAN AND SECTION
ESW ACCESS VAULTS
Sheet 1 of 5

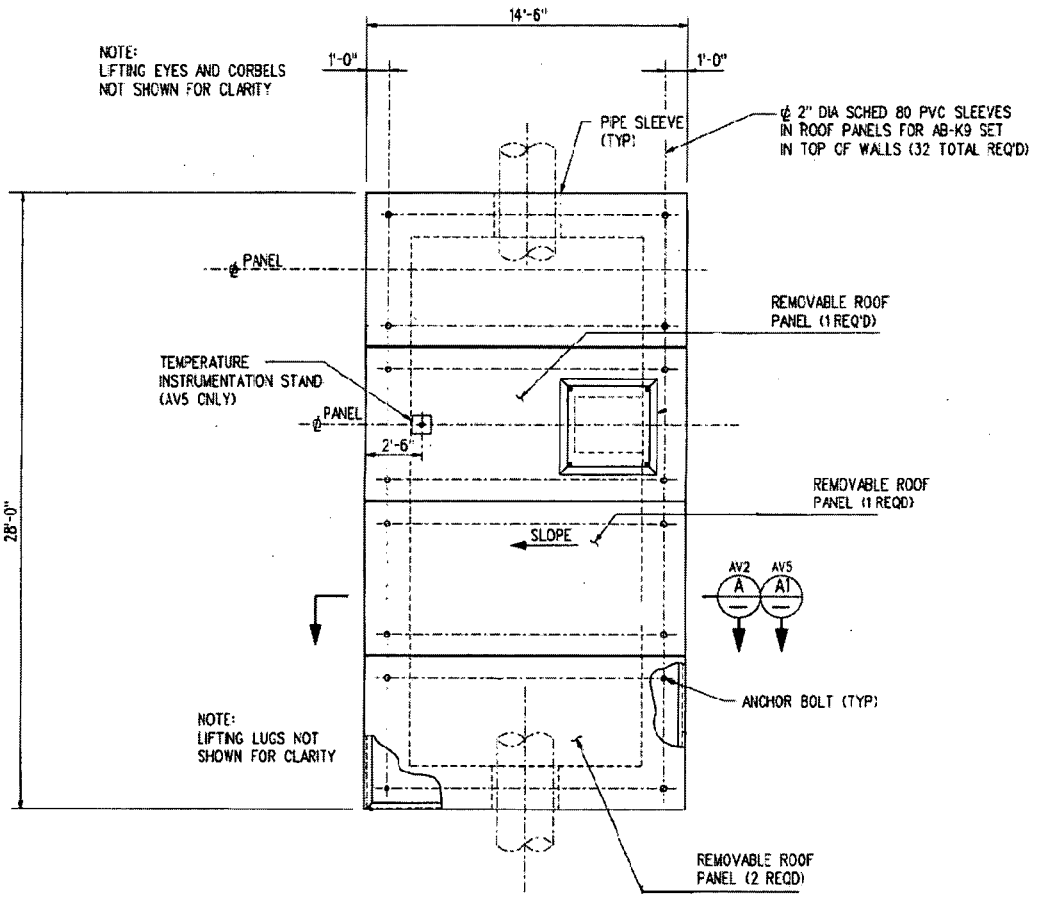

"AV2" - ROOF PLAN

"AV5" - ROOF PLAN

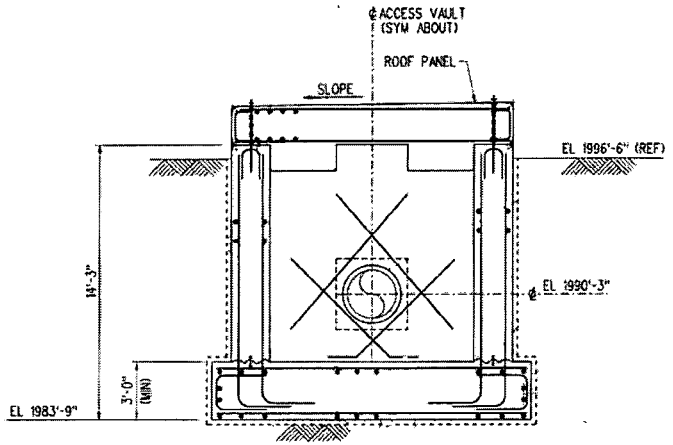

AV2

SECTION A

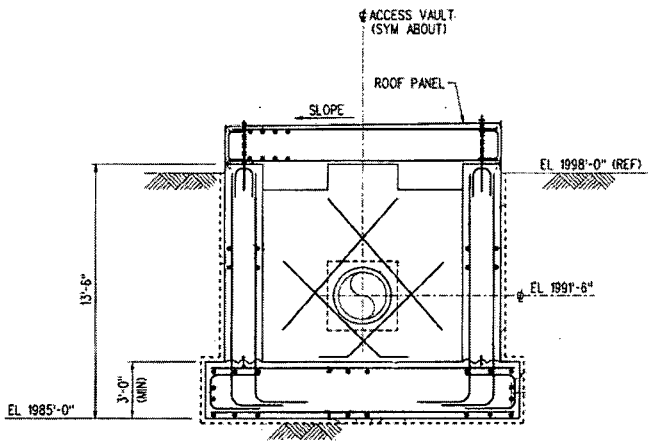

AV5

SECTION A1

ACCESS VAULTS (AV2/AV5)

N.T.S.

WOLF CREEK
UPDATED SAFETY ANALYSIS REPORT

FIGURE 3.8-143 Rev. 28
PLAN AND SECTION
ESW ACCESS VAULTS
Sheet 2 of 5

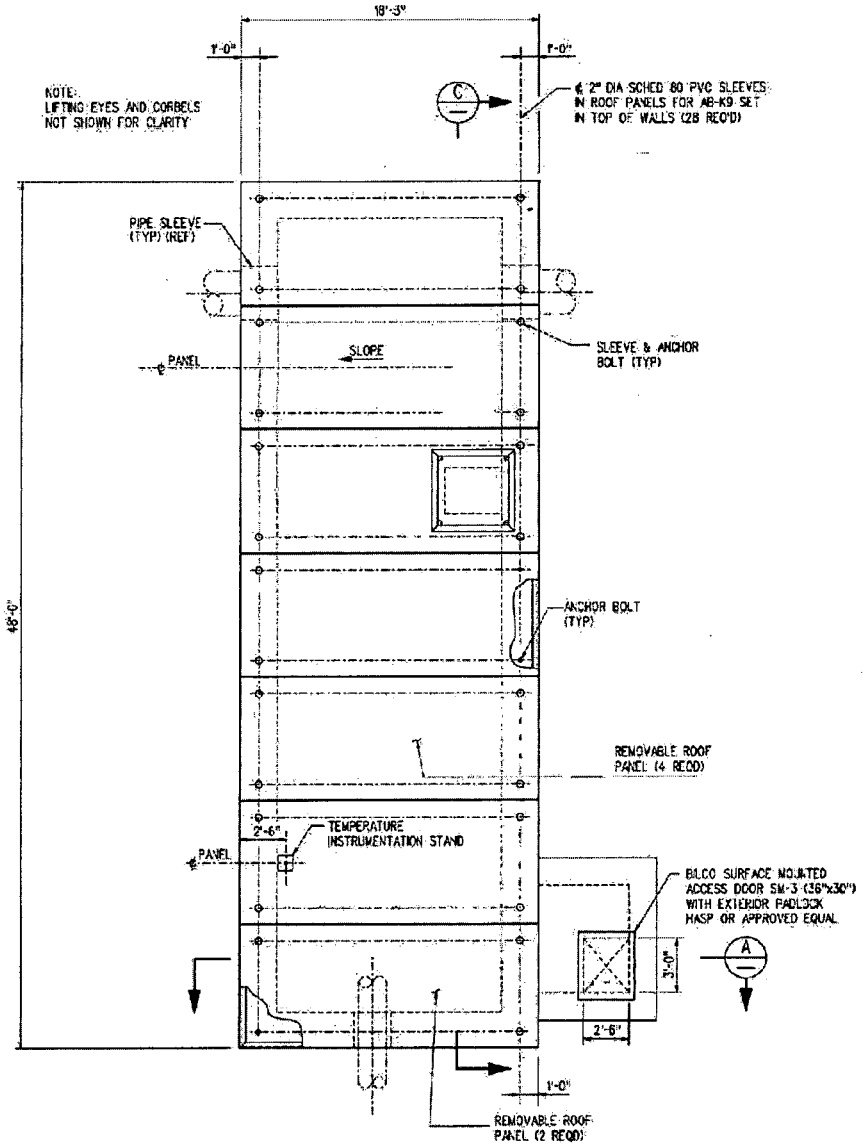

"AV3" - ROOF PLAN

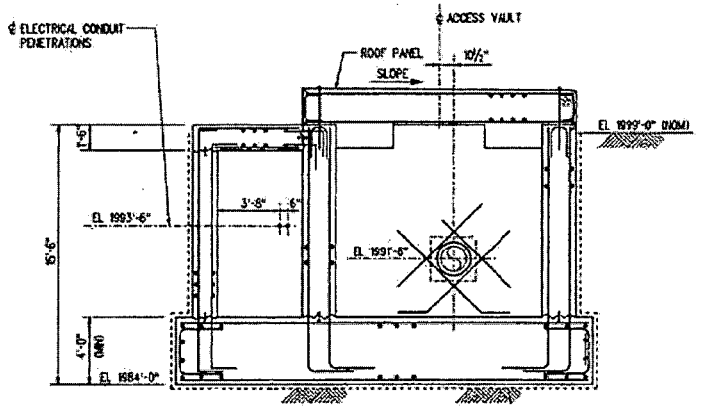

SECTION A

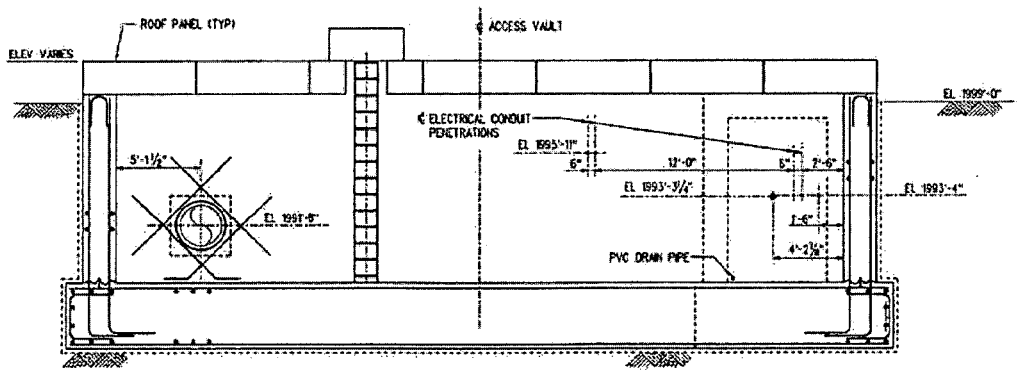

SECTION C

NOTE:
CORBELS NOT
SHOWN FOR CLARITY

ACCESS VAULTS (AV3)

N.T.S.

WOLF CREEK
UPDATED SAFETY ANALYSIS REPORT

FIGURE 3.8-143 Rev. 28
PLAN AND SECTION
ESW ACCESS VAULTS
Sheet 3 of 5

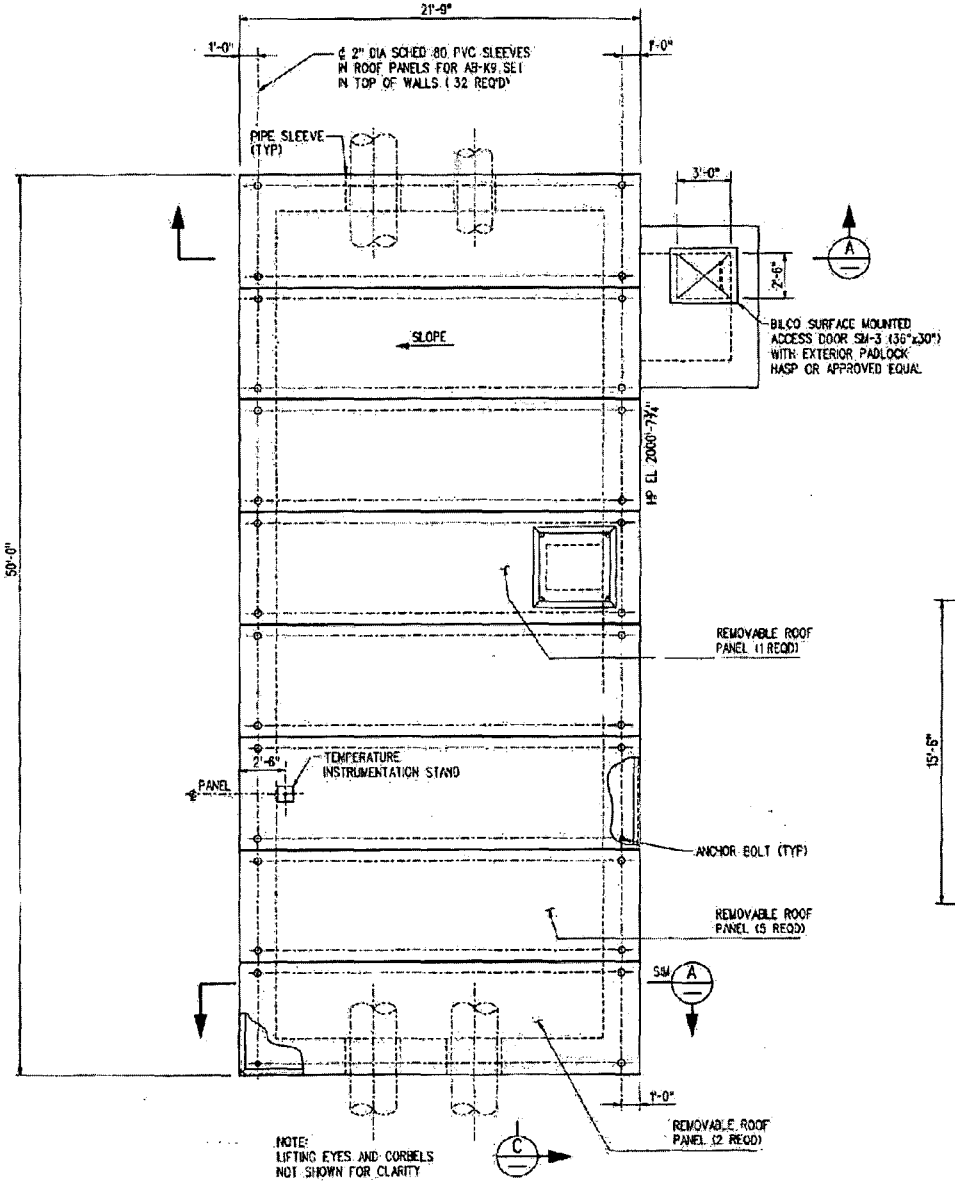

ROOF PLAN

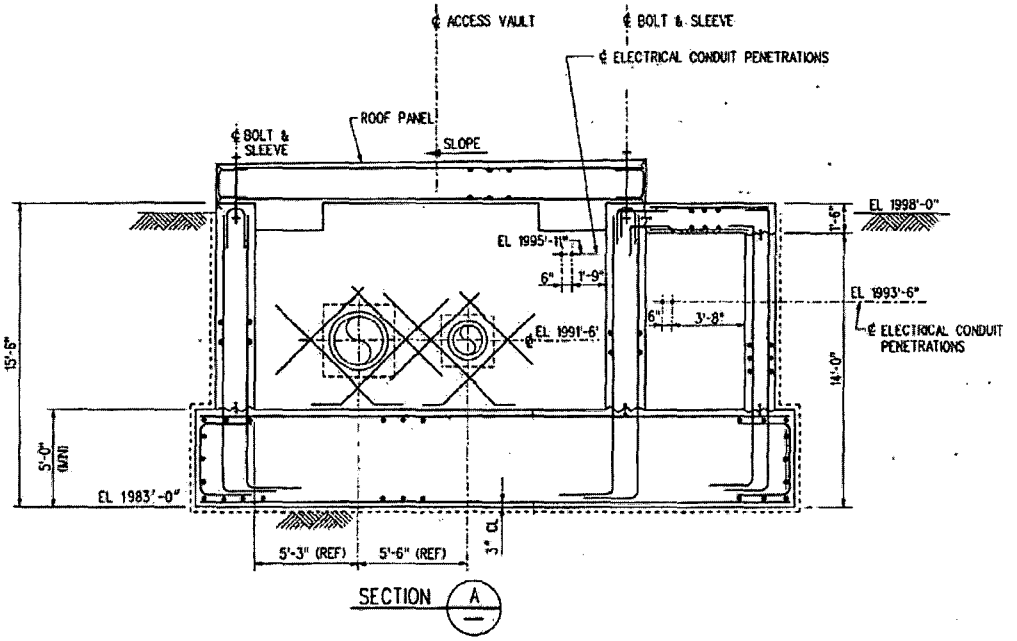

SECTION A

ACCESS VAULTS (AV4)

N.T.S.

WOLF CREEK
UPDATED SAFETY ANALYSIS REPORT

FIGURE 3.8-143 Rev. 28
PLAN AND SECTION
ESW ACCESS VAULTS
Sheet 4 of 5

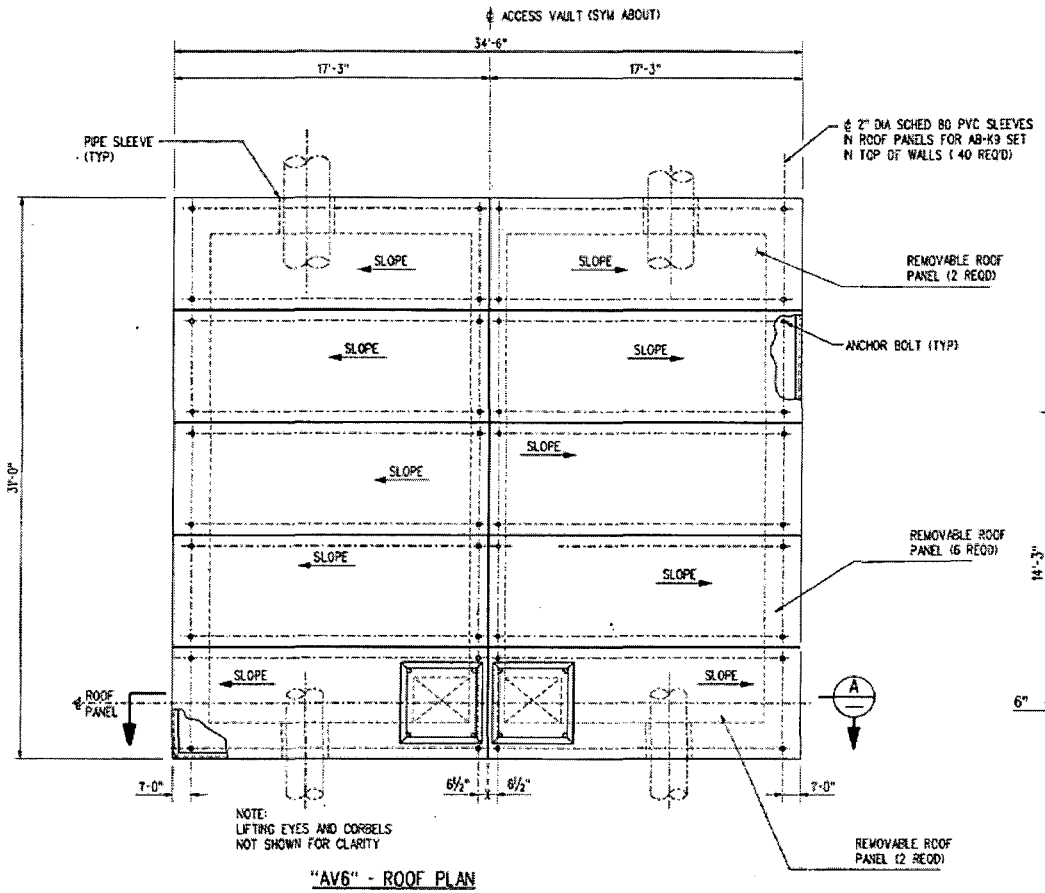

"AV6" - ROOF PLAN

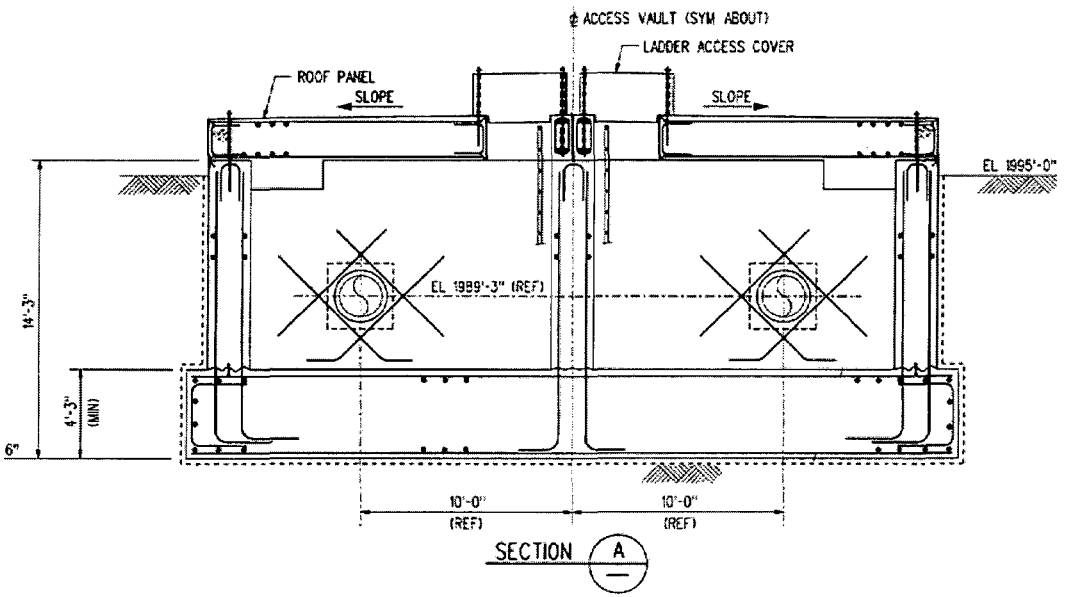

SECTION A

ACCESS VAULTS (AV6)

N.T.S.

WOLF CREEK
UPDATED SAFETY ANALYSIS REPORT

FIGURE 3.8-143 Rev. 28
PLAN AND SECTION
ESW ACCESS VAULTS
Sheet 5 of 5

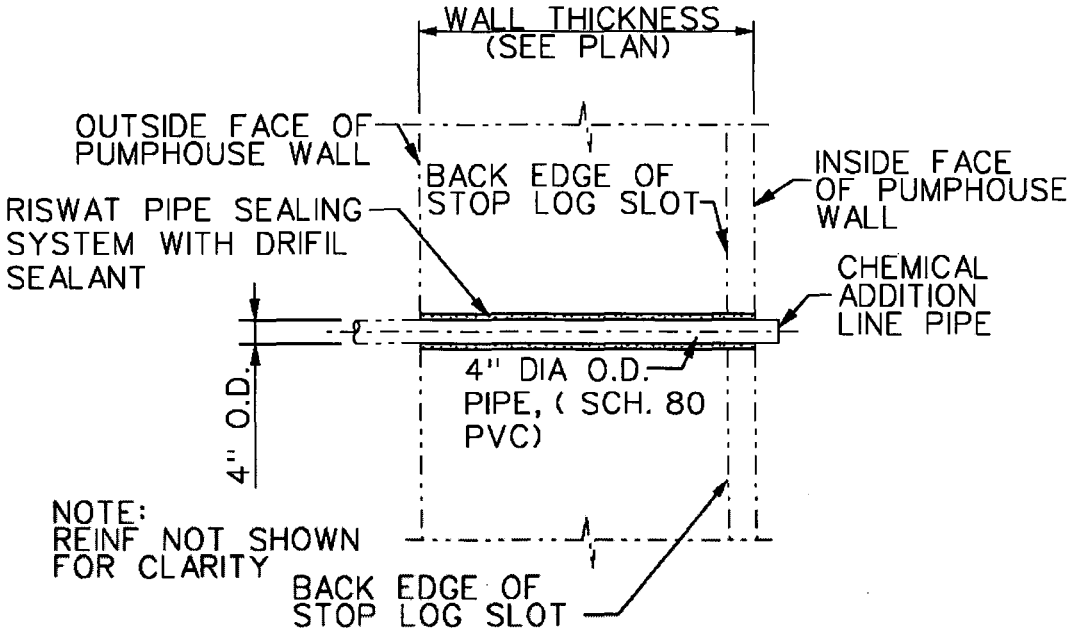

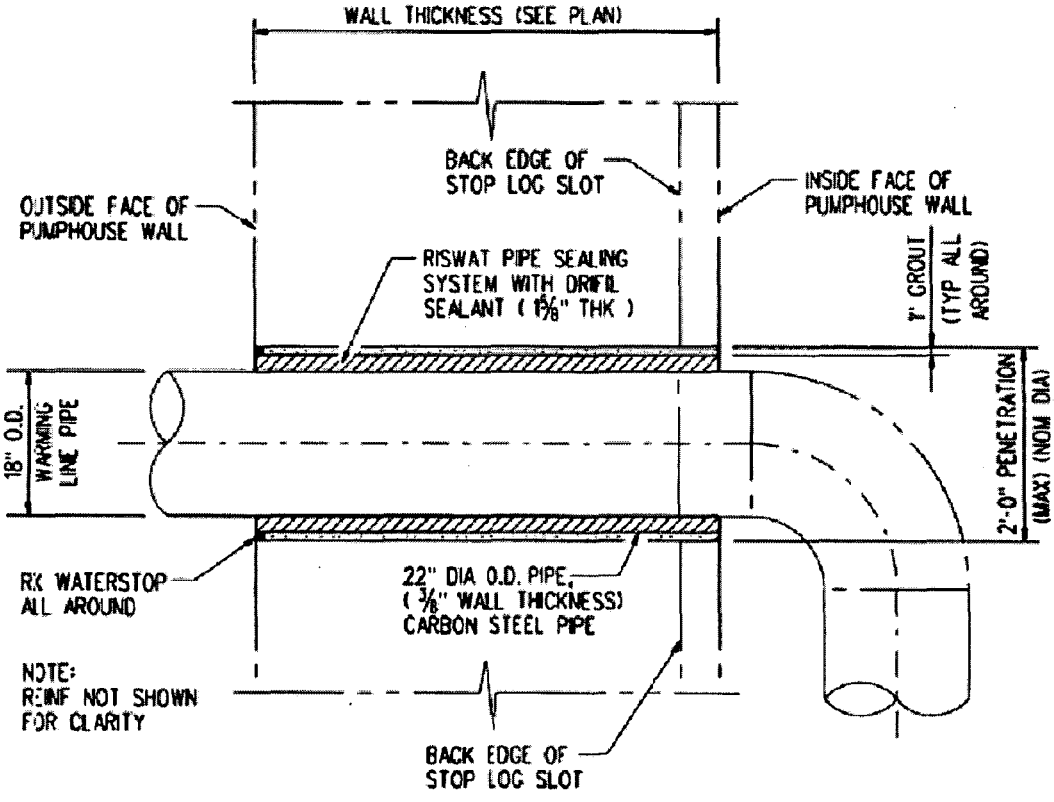

4" CHEMICAL LINE AND 18" WARMING LINE PENETRATION
E.S.W.S. PUMP HOUSE

Rev. 28

WOLF CREEK
UPDATED SAFETY ANALYSIS REPORT

FIGURE 3.8-144

4" AND 18" DIAMETER PIPE
PENETRATION DETAILS

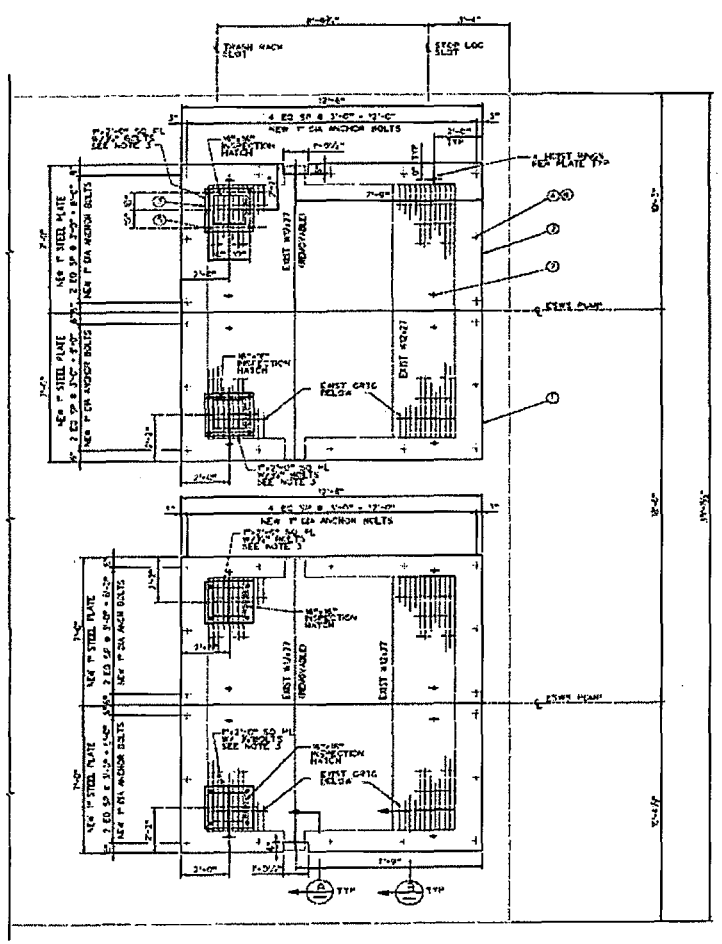

PARTIAL PLAN AT EL 2000'-0"

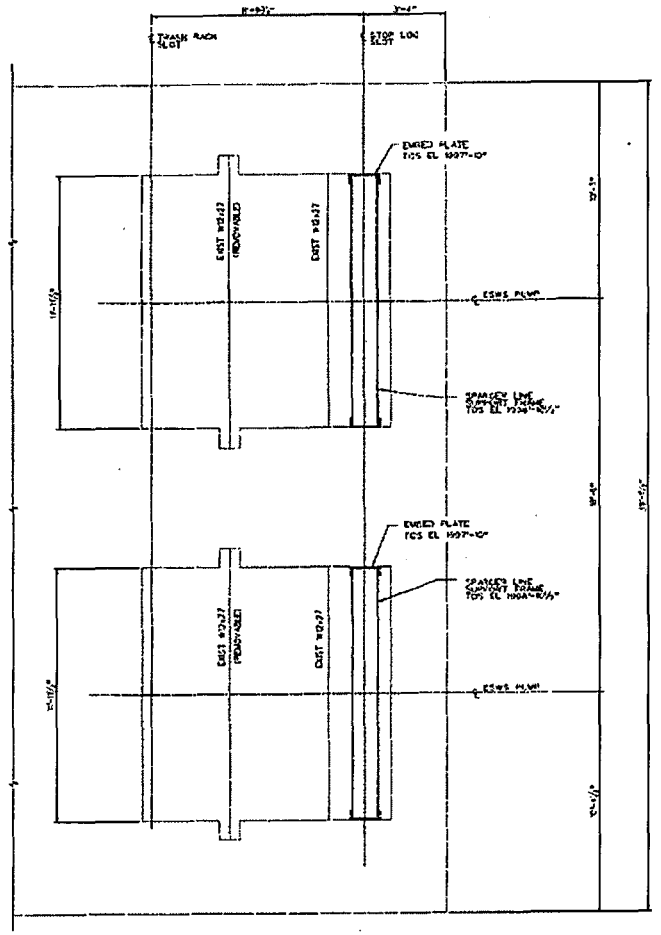

PARTIAL PLAN AT EL 1999'-0"

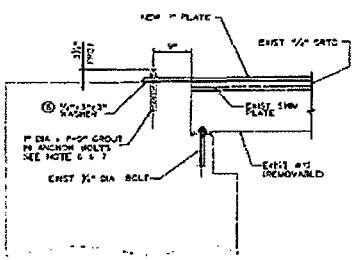

SECTION A

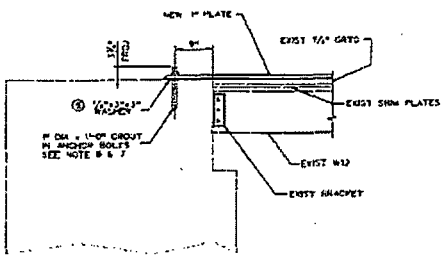

SECTION B

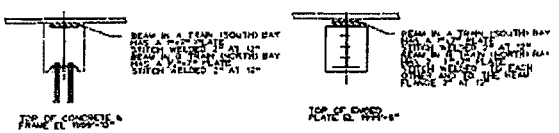

AS BUILT CONDITION OF W12x27 BEAMS

Rev. 28

WOLF CREEK
UPDATED SAFETY ANALYSIS REPORT

FIGURE 3.8-145

ESWS PUMP HOUSE
TORNADO MISSILE SHIELD

APPENDIX 3.8A

COMPUTER PROGRAMS USED FOR STRUCTURAL AND SEISMIC ANALYSES

3.8A.1	Computer Programs Used for Structural and Seismic Analyses by Bechtel Power Corporation
3.8A.1.1	Bechtel CE 201, Bechtel Structural Analysis Program - Post Processor (BSAP-POST)
3.8A.1.2	Bechtel CE 239, Hemispherical Dome Tendon Analysis (TENDON)
3.8A.1.3	Bechtel CE 309, Structural Engineering Systems Solver (STRESS)
3.8A.1.4	Bechtel CE 316, Finite Element Stress Analysis (FINEL)
3.8A.1.5	Bechtel CE 400, Concrete Column Design (PCACOL)
3.8A.1.6	Bechtel CE 639, Hemispherical Dome Tendon Analysis (STRESS)
3.8A.1.7	Bechtel CE 779, Structural Analysis Program (SAP)
3.8A.1.8	Bechtel CE 786, Ground Spectrum Raise
3.8A.1.9	Bechtel CE 798, Engineering Analysis System (ANSYS)
3.8A.1.10	Bechtel CE 800, Bechtel Structural Analysis Program (BSAP)
3.8A.1.11	Bechtel CE 801, Finite Element Stress Analysis (FINEL)
3.8A.1.12	Bechtel CE 802, Response Spectra Analysis (SPECTRA)
3.8A.1.13	Bechtel CE 803, Axisymmetric Shell and Solid Computer Program (ASHSD)
3.8A.1.14	Bechtel CE 901, The Structural Design Language (ICES STRUDL)

3.8A.1.15 Bechtel CE 915, A Computer Program for Earthquake Response Analysis of Horizontally Layered Sites (SHAKE)

3.8A.1.16 Bechtel CE 917, Modal Dynamic Analysis

3.8A.1.17 Bechtel CE 918, Response Spectrum Analysis

3.8A.1.18 Bechtel CE 920, Time-History Analysis of Structures

3.8A.1.19 Bechtel CE 921, Response Spectrum Calculations

3.8A.1.20 Bechtel CE 933, Fourier Analysis of Soils (FASS)

3.8A.1.21 Bechtel CE 935, Earthquake Acceleration Time-Histories

3.8A.1.22 Bechtel CE 970, Impedance Functions for a Rigid Circular Foundation on a Layered Viscoelastic Medium (LUCON)

3.8A.1.23 Computer Programs for Seismic Soil-Structure Interaction Analysis

3.8A.1.23.1 Bechtel CE 988 (FLUSH)

3.8A.1.23.2 FLUSH (Control Data Corp. Version)

3.8A.1.24 DISCOM, a FLUSH Postprocessor (Control Data Corp. Version)

3.8A.1.25 The Structural Design Language (ICES-STRUDL by McDonnell-Douglas Automation Version)

3.8A.1.26 Other Computer Programs Used in Structural Analysis

3.8A.2 Computer Programs Used for Structural Analyses by Suppliers

3.8A.2.1 INRYCO, Nuclear Force Computation (NUCFOR)

3.8A.2.2 CBI Program 7-81, Shells of Revolution

3.8A.2.3 CBI Program 1027, Stress Intensities at Loaded Attachments for Spheres or Cylinders with Round or Square Attachment

3.8A.2.4 CBI Program 1691

3.8A.1 COMPUTER PROGRAMS USED FOR STRUCTURAL AND SEISMIC ANALYSES BY BECHTEL POWER CORPORATION

Computer programs are continually updated under strict quality control procedures to enhance capabilities and to extend their applicability. As such, earlier versions of these programs, also verified, may have been used during earlier stages of the design effort.

3.8A.1.1 Bechtel CE 201 Bechtel Structural Analysis Program - Post Processor (BSAP-POST)

a. Description

BSAP-POST (CE 201) is a general-purpose, post-processor program for the BSAP (CE 800) finite-element analysis program. BSAP-POST can take the output from BSAP and display this data (graphically and/or on a line printer) or perform additional calculations. In addition, some of the capabilities of BSAP-POST can be used independently. For example, the concrete design module, OPTCON, can have design loads obtained from BSAP output or from punched cards.

BSAP-POST consists of a number of modules that can be used independently or sequentially to display or modify the contents of a data base under the control of an executive supervisor program. The data base consists of the contents of a file (TAPE 27) created by a BSAP analysis problem. The executive supervisor ensures that each module in BSAP-POST is compatible with every other module, and initiates the execution of each module when required by input data supplied by the user.

b. Validation

The BSAP-POST program has been prepared by Bechtel and has a complete set of documentation, including a users' manual, verification report, and theoretical manual. These documents are on file with Bechtel Data Processing.

c. Extent of Application

The program was used in the design of the reactor building and internals.

3.8A.1.2 Bechtel CE 239 Hemispherical Dome Tendon Analysis (TENDON)

a. Description

The dome tendon computer program calculates forces and pressures on a hemispherical dome of a prestressed, three-buttress concrete containment building, resulting from prestress by two orthogonal groups of vertical dome tendons and one group of horizontal hoop tendons. One group of vertical dome tendons is located in parallel, vertical planes normal to the x-axis*. The second group is located in vertical planes normal to the y-axis+. The third group is located in horizontal planes normal to the z-axis. Each of the vertical dome tendons (the first two groups) has equal areas and equal spacing measured along the springline**. The hoop dome tendons have equal areas, but the spacing may be either constant or may vary linearly with the latitude. The hoop tendons extend from the springline into the dome region up to 45 degrees latitude. Each hoop tendon is anchored at buttresses 240 degrees apart. Successive hoop tendons are anchored at alternate buttresses.

In the analysis, the dome is subdivided into a grid pattern specified by the user. The program calculates the total pressure due to tendon forces at each grid node in the radial direction, normal to the dome surface, and in the circumferential (hoop or azimuth) and meridional directions. Nodal forces in the hoop and meridional directions are calculated at each node point. The pressures and forces calculated by this program are intended for use as input to a finite element computer program to determine the stress distribution in the dome.

b. Validation

The TENDON program has a complete set of documentation, including a user's manual, verification report, and theoretical manual. These documents are on file with Bechtel Data Processing.

c. Extent of Application

The program was used as a verification of the program used in the design of the reactor building.

* Extending from 90 degrees to 180 degrees azimuth angle + and extends from zero to 90 degree azimuth.
** They are anchored at the base of the containment building.

3.8A.1.3 Bechtel CE 309, Structural Engineering Systems Solver (STRESS)

a. Description

STRESS is a programming system for the solution of structural engineering problems. The system is capable of executing the linear, elastic, and static analyses of 2- and 3-dimensional framed structures of the following types:

1. Plane truss
2. Plane frame
3. Plane grid
4. Space truss
5. Space frame

The programming system was originally developed at the Massachusetts Institute of Technology in 1964 and is now in the public domain.

b. Validation

The program has been verified by the ICES STRUDL II program. A sample problem of plane frame analysis was run, using the CE 309 program and the commercially available version (Version 2) of the ICES STRUDL II program. The results from these runs were found to be identical. Verification is on file with Bechtel Power Corporation.

c. Extent of Application

The program was used to perform structural analysis for steel structures.

d. Reference

Fenves, S. J., Logcher, R. D., and Mauch, S. P., Stress Reference Manual, M.I.T. Press, Cambridge, Mass., 1964.

3.8A.1.4 Bechtel CE 316, Finite Element Stress Analysis (FINEL)

a. Description

The program performs the static analyses of plane or axisymmetric structures, using the finite element method, in which a structure is idealized as an assemblage of finite elements. The finite elements are of either triangular or quadrilateral shape and connected at their

corners (nodal points). The applied loads may be concentrated, uniformly distributed, or inertial, or may be temperature distributions. At boundaries, displacements may be forced.

The program develops the force-displacement relationship (element stiffness matrix) for each individual element from its geometry and material properties. The element relationships are then assembled into an overall structure force-displacement relationship (structure stiffness matrix). Equilibrium equations are developed for each degree of freedom at each nodal point in terms of the structure force-displacement relationship, the unknown nodal point displacement, and the externally applied nodal point forces. Finally, these equations are solved simultaneously for the unknown nodal point displacements by a modified Gaussian elimination scheme. Once the nodal point displacements are known, element stresses are calculated.

b. Assumptions

The stress and the strain are assumed to be constant within each element.

c. Validation

The program has been verified for use by comparison to the most recent version of FINEL, CE 801. The results from these runs were found to be essentially the same. Verification is on file with Bechtel Power Corporation.

d. Extent of Application

The program was used to compute stresses in the reactor building base slab, wall, and dome.

3.8A.1.5 Bechtel CE 400, Concrete Column Design (PCACOL)

a. Description

The program designs reinforced concrete compression members to resist a given combination of loadings and investigates the adequacy of a given cross section to resist a similar set of loadings. Each loading case consists of an axial compressive load combined with uniaxial or biaxial bending. The method of solution is

based upon either ACI 318-71, Building Code Requirements for Reinforced Concrete, or AASHTO Standard Specifications for Highway Bridges.

b. Validation

The program was developed by the Portland Cement Association in 1974. The program is a recognized program and has had sufficient history of use to justify its applicability and validity without further demonstration. Program user's manual, verification report, and theoretical manual are on file with Bechtel Data Processing.

c. Extent of Application

The program was used to investigate reinforced concrete compression members in the fuel building.

3.8A.1.6 Bechtel CE 639 Hemispherical Dome Tendon Analysis (STRESS)

a. Description

The dome tendon computer program calculates forces and pressures on a hemispherical dome of a prestressed, concrete containment building, resulting from prestress by two orthogonal groups of vertical dome tendons and one group of horizontal hoop tendons. One group of vertical dome tendons is located in parallel, vertical planes normal to the x-axis*. The second group is located in vertical planes normal to the y-axis+. The third group is located in horizontal planes normal to the z-axis. Each of the vertical dome tendons (the first two groups) has equal areas and equal spacing measured along the springline**. The hoop dome tendons have equal areas, but the spacing may be either constant or may vary linearly with the latitude. The hoop tendons extend from the springline into the dome region up to 45 degrees latitude.

* Extending from 135 degrees to 225 degrees azimuth angle + and extends from 45 to 135 degree azimuth.
** They are anchored at the base of the containment building.

In the analysis, the dome is subdivided into a grid pattern specified by the user. The program calculates the total pressure due to tendon forces at each grid node in the radial direction, normal to the dome surface, and in the circumferential (hoop or azimuth) and meridional directions. Nodal forces in the hoop and meridional directions are calculated at each node point. The pressures and forces calculated by this program are intended for use as input to a finite element computer program to determine the stress distribution in the dome.

b. Validation

The STRESS program was verified by comparison to CE 239 (TENDON). Verification is on file with Bechtel Power Corporation.

c. Extent of Application

The program was used in the design of the reactor building.

3.8A.1.7 Bechtel CE 779, Structural Analysis Program (SAP)

a. Description

The program performs the static and dynamic analyses of linear, elastic, three-dimensional structures, using the finite element method. The finite element library contains truss and beam elements, plane and solid elements, plate and shell elements, axisymmetric (torus) elements, and special boundary (spring) elements.

Element stresses and displacements are solved for either applied loads or temperature distributions. Concentrated loads, pressures, or gravity loads may be applied. Temperature distributions are assigned as an appropriate uniform temperature change in each element. Prestressing may be simulated by using artificial temperature changes on rod elements.

Dynamic response routines are available for solving arbitrary dynamic loads or seismic excitations, using either modal superposition or direct integration. The program can also perform response spectrum and time-history analyses.

b. Validation

The solutions to test problems have been demonstrated to be essentially identical to the results obtained, using the BSAP program. Verification is on file with Bechtel Power Corporation.

c. Extent of Application

The program was used to perform structural analysis for concrete structures, such as the reactor cavity and secondary shield walls.

3.8A.1.8 Bechtel CE 786, Ground Spectrum Raise

a. Description

The program modifies a given ground, time-history accelerogram, such that its acceleration spectrum can be raised locally at any frequency by a desired amount. The principle is to superimpose to the original accelerogram a sinusoidal motion.

b. Validation

The program is verified by comparing the envelope of the modified accelerogram with an accepted ground response spectrum, such as that in NRC Regulatory Guide 1.60.

c. Extent of Application

The program was used to modify the Bechtel time-history accelerograms to comply with NRC Standard Review Plan Section 3.7.1.

3.8A.1.9 Bechtel CE 798, Engineering Analysis System (ANSYS)

a. Description

ANSYS is a large-scale, general purpose finite element computer program with applications to many classes of engineering problems. Structural analysis methods include static options for the solution of elastic, plastic, and nonlinear large and small deflection problems. Also, dynamic options are available to perform nonlinear transient, harmonic response and mode-frequency analysis. The finite element library is extensive and includes beam, spar, plate, shell, and nonlinear gap elements.

The matrix displacement method of finite element analysis is used in the formulation of the problem, and equations are solved by the wave front method.

b. Validation

The ANSYS program was licensed from Swanson Analysis Systems, Inc. (SASI), which has supplied a complete set of documentation including a user's manual, verification report, and theoretical manual. These documents are on file with Bechtel Data Processing.

c. Extent of Application

The program was used to perform a stress analysis of embedded base plates.

3.8A.1.10 Bechtel CE 800, Bechtel Structural Analysis Program (BSAP)

a. Description

The program performs the static and dynamic analyses of linear, elastic, three-dimensional structures, using the finite element method. The finite element library contains truss and beam elements, plane and solid elements, plate and shell elements, axisymmetric (torus) elements, and special boundary (spring) elements.

Element stresses and displacements are solved for either applied loads or temperature distributions. Concentrated loads, pressures, or gravity loads may be applied. Temperature distributions are assigned as an appropriate uniform temperature change in each element. Prestressing may be simulated by using artificial temperature changes on rod elements.

Dynamic response routines are available for solving arbitrary dynamic loads or seismic excitations, using modal superposition. The program can also perform response spectrum and time-history analyses.

b. Validation

The solutions to test problems have been demonstrated to be essentially identical to the results obtained, using the following recognized public-domain computer programs:

- o EASE - Elastic Analysis Corporation
- o STARDYN - Mechanics Research Incorporated
- o MARC/CDC - MARC Analysis Corporation
- o ICES/STRUDL - McDonnell-Douglas Automation
- o ASKA - Institut fur Statik and Dynamik, Stuttgart, Prof. A. J. Argyris

Agreement has also been established between BSAP program results and the results presented in the ASME Library of Benchmark Computer problems and solutions (Ref. 4) and in recognized technical journals. A complete set of documentation including a user's manual, verification report, and theoretical manual is on file with Bechtel Data Processing.

c. Extent of Application

The program was used to perform structural analysis for concrete structures and embedded plates.

d. References

1. Wilson, E. L., "SAP, A General Structural Analysis Program," University of California Structural Engineering Laboratory, Report No. UCSESM 70-20, September, 1970.

2. Wilson, E. L., "SOLID SAP - A Static Analysis Program for Three-Dimensional Solid Structures," University of California, Berkeley, Department of Civil Engineering, SESM Report No. 71-19, September, 1971.

3. Wilson, E. L., "SAP-IV-A Structural Analysis Program for Static and Dynamic Response of Linear Systems," University of California, Berkeley, EERC Report No. 73-11, June, 1973.

4. "Pressure Vessel and Piping - 1972 Computer Programs Verification," ASME Committee on Computer Technology, Pressure Vessel and Piping Division.

3.8A.1.11 Bechtel CE 801, Finite Element Stress Analysis (FINEL)

a. Description

The program performs the static analyses of plane or axisymmetric structures, using the finite element method, in which a structure is idealized as an assemblage of finite elements. The finite elements are of either triangular or quadrilateral shape and connected at their corners (nodal points). The applied loads may be concentrated, uniformly distributed, or inertial, or may be temperature distributions. At boundaries, displacements may be forced.

The program develops the force-displacement relationship (element stiffness matrix) for each individual element from its geometry and material properties. The element relationships are then assembled into an overall structure force-displacement relationship (structure stiffness matrix). Equilibrium equations are developed for each degree of freedom at each nodal point in terms of the structure force-displacement relationship, the unknown nodal point displacement, and the externally applied nodal point forces. Finally, these equations are solved simultaneously for the unknown nodal point displacements by a modified Gaussian elimination scheme. Once the nodal point displacements are known, element stresses are calculated.

b. Assumptions

The stress and the strain are assumed to be constant within each element.

c. Validation

The program has been verified by manual calculations. Document traceability is on file with Bechtel Data Processing.

d. Extent of Application

The program was used to compute stresses in the reactor building base slab, wall, and dome.

3.8A.1.12 Bechtel CE 802, Response Spectra Analysis (SPECTRA)

a. Description

The program computes the response spectra from an accel eration record digitized at equal time intervals. These spectra are plots of the maximum response of a simple oscillator over a range of values of its natural periods and dampings.

The numerical method for computing the spectral values is based on the exact analytical solution of the governing differential equation. It is assumed that the accelerogram varies linearly between the time-history points. The response spectra are constructed by monitoring of the maximum values of response parameters of each step of integration. The computed spectra are then widened to account for the effect of structural frequency variation.

b. Validation

The solutions of the program have been verified to be substantially identical with the closed formed analytical solutions of the three following test problems:

1. Undamped system with a triangular load pulse
2. Undamped system with a sinusoidal forcing function
3. Damped system with a sinusoidal forcing function

Program user's manual, verification report, and theoretical manual are on file with Bechtel Power Corporation.

Extent of Application

The program was used to develop floor response spectra curves for all seismic Category I structures.

3.8A.1.13 Bechtel CE 803, Axisymmetric Shell and Solid Computer Program (ASHSD)

a. Description

The program performs the static and dynamic analyses of linear, elastic, axisymmetric structures with axisymmetric or nonaxisymmetric loadings, utilizing the finite element technique. The program computes the element stresses and nodal displacements due to uniform, concentrated, or pressure loads, or temperature distributions,

either over the surface area or through the wall thickness. Prestress forces may be simulated by applying the forces as equivalent concentrated temperature gradients.

b. Validation

The solutions of the program for various loadings have been demonstrated to be essentially identical to the results obtained by manual calculations and to those obtained from accepted experimental tests of analytical results published in technical literature (Ref. 1 and 2). Program user's manual, verification report, and theoretical manual are on file with Bechtel Data Processing.

c. Extent of Application

The program was used to analyze the reactor cavity.

d. References

1. Ghosh, S., Wilson, E. L., "Dynamic Stress Analysis of Axisymmetric Structures under Arbitrary Loading," Report No. EERC 69-10, University of California, Berkeley, September 1969, pp 69-81.

2. "Topical Report on Dynamic Analysis of Reactor Vessel Internals under Loss-of-Coolant Accident Conditions with Application of Analysis to CE 800 Mwe Class Reactors," Combustion Engineering Report CENPD-42, Combustion Engineering, Inc., Nuclear Power Department, Combustion Division, Windsor, Conn. Appendix A.

3.8A.1.14 Bechtel CE 901, The Structural Design Language (ICES STRUDL)

a. Description

STRUDL is a structural analysis program with the capability to perform frame analysis and finite element analy sis. A wide variety of loads may be accommodated by the program. The program also is capable of performing dynamic analysis as well as static analysis. The STRUDL program performs both steel and concrete design and checks the applicable code in each case.

b. Assumptions

The program assumes a linear, elastic, static, small displacement analysis, member properties are required, and the program treats the joint displacements as unknowns.

c. Validation

Program user's manual, verification report, and theoretical manual are on file with Bechtel Data Processing.

d. Extent of Application

The program was used in the structural analysis of seismic cable tray and duct supports, miscellaneous frame structures, reactor cavity shielding platform, reactor vessel supports, and pressurizer compartment.

3.8A.1.15 Bechtel CE 915, A Computer Program for Earthquake Response Analysis of Horizontally Layered Sites (SHAKE)

a. Description

The program computes the responses in a system of homogeneous, viscoelastic layers of infinite horizontal extent subjected to vertically traveling shear waves. The nonlinearity of the shear modulus and damping is accounted for by the use of equivalent linear soil properties, using an iterative procedure to obtain values for modulus and damping compatible with the effective strains in each layer. The program handles systems with variation in both moduli and damping and takes into account the effect of the elastic base.

b. Validation

The program was developed as Report No. EERC 72-12 at the College of Engineering, University of California, Berkeley, California, by P. B. Schnabel, J. Lysmer, and H. B. Seed.

c. Extent of Application

The program was used to increase the time step of a Bechtel time-history accelerogram from 0.005 sec. to 0.01 sec.

3.8A.1.16 Bechtel CE 917, Modal Dynamic Analysis

a. Description

The program computes the reduced stiffness matrix from the basic geometry input for plane frame or truss models, or accepts the reduced stiffness matrix for any structure as input. It calculates mode shapes, frequencies, participation factors, and modal damping values for a lumped mass model.

Special Features:

1. Can accept either diagonal or full mass matrices.

2. Generates output tape for input to Bechtel CE 920 and Bechtel CE 933.

3. Can be used for horizontal or vertical earthquakes with minimal input changes.

b. Validation

Current version of program user's manual, verification report, and theoretical manual are on file with Bechtel Data Processing. Prior version verification is on file with Bechtel Power Corporation.

c. Extent of Application

The program was used to obtain the fixed-base mode shapes and natural frequencies of seismic Category I structures and cable tray supports.

3.8A.1.17 Bechtel CE 918, Response Spectrum Analysis

a. Description

This program is supplemental to the modal dynamic analysis program (Bechtel CE 917). It computes the modal response, of general plane frame or truss models. Response spectrum technique is used, and output is expressed in terms of displacements, accelerations, support reactions, member forces and moments, and spring forces.

b. Validation

Current version of program user's manual, verification report, and theoretical manual are on file with Bechtel Data Processing. Prior version verification is on file with Bechtel Power Corporation.

c. Extent of Application

The program was used to calculate fixed-base responses of structure acceleration, shear, moment, displacement, etc.

3.8A.1.18 Bechtel CE 920, Time-History Analysis of Structures

a. Description

The program performs the earthquake response time-history analysis of lumped mass models, using modal superposetion. Program input consists of frequencies, mode shapes, modal damping, and the base acceleration time-history.

b. Validation

Program user's manual, verification report and theoretical manual are on file with Bechtel Data Processing.

c. Extent of Application

The program was used to generate the time-histories for the radwaste building.

3.8A.1.19 Bechtel CE 921, Response Spectrum Calculations

a. Description

The program calculates response acceleration, velocity, and displacement spectra for a specified acceleration time-history. It can produce printed plots of the calculated response spectra.

b. Validation

Program user's manual, verification report, and theoretical manual are on file with Bechtel Data Processing.

c. Extent of Application

The program was used to generate acceleration, velocity, and displacement spectra at the radwaste building equipment locations and to print plots of these response spectra.

3.8A.1.20 Bechtel CE 933, Fourier Analysis of Soils (FASS)

a. Description

The program calculates the seismic time-history response of a soil-structure interaction system using (1) input from Bechtel CE 917, (2) the foundation impedance approach, and (3) the frequency domain analysis method. Both horizontal and vertical interaction analyses can be performed, using this program. Because the foundation impedances are frequency dependent, a rigorous seismic response analysis of the soil structure interaction system cannot directly apply the standard time domain analysis procedure, such as the modal superposition method or the direct integration method. Consequently, the program adopts the frequency domain analysis procedure and uses the Fourier transform method for the response calculation.

b. Validation

The program's user's manual, verification report, and theoretical manual are on file with Bechtel Data Processing.

c. Extent of Application

The program was used in computation of seismic deflections for seismic Category I structures.

3.8A.1.21 Bechtel CE 935, Earthquake Acceleration Time-Histories

a. Description

Refer to BC-TOP-4-A, Rev. 3.

b. Validation

Refer to BC-TOP-4-A, Rev. 3.

c. Extent of Application

The data file was used in seismic analysis of all seismic Category I structures.

3.8A.1.22 Bechtel CE 970, Impedance Functions for a Rigid Circular Foundation on a Layered Viscoelastic Medium (LUCON)

a. Description

LUCON is a program developed to evaluate the impedance functions for a rigid circular (or equivalent circular) foundation placed on a layered viscoelastic medium. The program computes the vertical, rocking, and horizontal impedance functions and their reciprocals, the compliance functions, for any given set of frequencies with site characteristics and the foundation geometry. The foundation medium may be layered or may be a uniform elastic half-space. The two types of material damping in the soil are constant hysteretic-type damping and Voigt-type damping. The type of damping must be the same for all layers, but the values of the damping constants may differ from layer to layer.

b. Validation

The solutions of the program for various loadings have been demonstrated to be essentially identical to analytical results published in technical literature (Ref. 1 through 5). Program user's manual, verification report, and theoretical manual are on file with Bechtel Data Processing.

c. Extent of Application

The program was used to compute the impedance functions for all seismic Category I structures for use in seismic deflection analyses of the structures.

d. References

1. Veletsos, A. S., and Verbic, B., "Vibration of Viscoelastic Foundations," Report No. 18, Dept. of Civil Engineering, Rice University, Houston, Texas, April 1973.

2. Shah, P. M., "On the Dynamic Response of Foundation System," Ph.D. Thesis, Rice University, Houston, Texas, 1968.

3. Veletsos, A. S., and Wei, Y. T., "Lateral and Rocking Vibration of Footings," Journal of the Soil Mechanics and Foundations Division, ASCE, Vol. 97, 1971.

4. Luco, J. E., and Westmann, R. A., "Dynamic Response of Circular Footings," Journal of the Engineering Mechanics Division, ASCE, Vol. 97, 1971.

5. Luco, J. E., "Impedance Functions for a Rigid Foundation on a Layered Medium," Nuclear Engineering and Design, 1974.

3.8A.1.23 Computer Programs for Seismic Soil-Structure Interaction Analysis

3.8A.1.23.1 Bechtel CE 988 (FLUSH)

a. Description

The program uses finite element techniques to analyze soil-structure interaction effects during earthquakes, especially for embedded structures. The program provides consideration of variations of ground motion with depth in the soil-structure response evaluations. Some of the special features of the program include:

1. Plain strain quadrilateral elements for modeling of soils and structures

2. Beam elements for modeling of structures

3. Multiple nonlinear soil properties for equivalent linear analysis

4. An approximate 3-dimensional ability, making it possible to perform meaningful structure-soil-structure interaction analyses

5. Generates output time-histories of acceleration and bending moments

6. Computation of maximum moments, shear forces, and axial forces in beam elements

7. Generates acceleration and velocity response spectra

b. Validation

The program was developed as Report No. EERC 75-30 at the College of Engineering, University of California, Berkeley, California, by J. Lysmer, T. Udaka, C. F. Tsai, and H. B. Seed.

c. Extent of Application

The program was used to seismically analyze all seismic Category I structures.

3.8A.1.23.2 FLUSH (Control Data Corp. Version)

a. Description

The description of the FLUSH program contained in Section 3.8A.1.23.1 applies to CDC's version of the program. Enhancements made by CDC to the original version of the program, which was developed at the University of California at Berkeley, have led to reduced execution costs and made the program more convenient to use.

b. Validation

Verification of CDC's version of FLUSH has been performed and appropriate documentation, as defined by Control Data Corp. policy, is maintained by CDC's Utilities Service Center.

c. Extent of Application

The program was used to seismically analyze seismic Category I structures.

3.8A.1.24 DISCOM, a FLUSH Postprocessor (Control Data Corp. Version)

a. Description

DISCOM postprocesses optional output files from the FLUSH program (Control Data Corp. version, see Section 3.8A.1.23.2) to provide relative displacements between points in a FLUSH model.

b. Validation

The program was developed by the Utilities Service Center of the Control Data Corp. Verification of the program was performed and appropriate documentation maintained by the Utilities Service Center under Control Data Corporate policy.

c. Extent of Application

The program was used to obtain the relative seismic displacements within and between seismic Category I structures.

3.8A.1.25 The Structural Design Language (ICES-STRUDL, McDonnell-Douglas Automation Version)

a. Description

The program performs structural analysis. Frame members can be used in conjunction with finite elements. Some special features include a built-in table for rolled steel wide flange shapes, a member selection procedure based upon the AISC Code, a reinforced concrete member design and checking capability, and a dynamic analysis capability.

b. Validation

The program has been verified, and document traceability is available at McDonnell-Douglas Automation.

c. Extent of Application

The program was used to perform structural analysis for the reactor building instrument tunnel and reactor cavity shielding platform.

3.8A.1.26 Other Computer Programs Used in Structural Analysis

In the course of structural design calculations, several programs of limited scope were developed to assist the designers in lengthy, repetitious calculations. The programs were validated by example problems or manual design checks. These validations are incorporated into the project design calculation books. These programs are not itemized here due to their simplicity and nature of use.

3.8A.2 COMPUTER PROGRAMS USED FOR STRUCTURAL ANALYSES BY SUPPLIERS

3.8A.2.1 INRYCO, Nuclear Force Computation (NUCFOR)

a. Description

The program computes post-tensioning force of tendons used in nuclear vessels and prepares the field stressing cards for individual tendons. Final effective forces along the tendon are computed at both ends and at points where the curve of the tendon changes. The program calculates the theoretical elongation at each stressing end. Only circular curve and straight lines are considered by the program. The program handles dome, hoop, and vertical tendons.

b. Validation

The program has been verified, and document traceability is available at INRYCO, Incorporated.

c. Extent of Application

The program was used to compute the post-tensioning force of tendons in the reactor building and to prepare the field stressing cards for individual tendons.

3.8A.2.2 CBI Program 7-81, Shells of Revolution

a. Description

The program calculates the stresses and displacements in thin-walled elastic shells of revolution when subjected to static edge, surface, and/or temperature loads with arbitrary distribution over the surface of the shell. The geometry of the shell must be symmetric, but the shape of the median is arbitrary. It is possible to include up to three branch shells with the main shell in a single model. In addition, the shell wall may consist of four layers of different orthotropic materials, and the thickness of each layer and the elastic properties of each layer may vary along the median.

b. Validation

The program has been verified, and document traceability is available at Chicago Bridge & Iron Company.

c. Extent of Application

The program was used for design of ASME Class MC portions of the reactor building.

d. Reference

Kalnins, A., "Analysis of Shells of Revolution Subjected to Symmetrical and Nonsymmetrical Loads," Journal of Applied Mechanics, 1964.

3.8A.2.3 CBI Program 1027, Stress Intensities at Loaded Attachments for Spheres or Cylinders with Round or Square Attachment

a. Description

The program calculates the stress intensities in a sphere or cylinder at a maximum of 12 points around an externally loaded round or square attachment. Stresses resulting from external loads are superimposed on an initial pressure stress situation. The program computes stresses at three levels of plate thicknesses: outside, inside, and centerline of plate. The program determines the following three components for each stress intensity:

1. σ_x = a normal stress parallel to the vessel's longitudinal axis

2. σ_ϕ = a normal stress in a circumferential direction

3. τ = a shear stress

The program has an option, whereby the penetration load will be considered reversible or nonreversible in a direction. Under the reversible option, only the data associated with the most severe loading situation is printed.

Most of the analysis and notation used in the program is taken directly from the "Welding Research Council (WRC) Bulletin #107" of December 1968, and the program contains extrapolations of the curves for cylinders in WRC 107 for γ up to 570.

b. Validation

The solutions to the program have been demonstrated to be substantially identical to the results obtained by manual calculations. Document traceability is available at Chicago Bridge & Iron Company.

c. Extent of Application

The program was used for design of ASME Class MC portions of the reactor building.

3.8A.2.4 CBI Program 1691

a. Description

The program analyzes two- or three-dimensional frames or trusses for member end forces, and moments, joint deflections, and rotations. An analysis can be made on structures with rigid, hinged, or free support conditions, rigid or hinged member end conditions, and any number of loading conditions. Included in the program is a provision to use rectangular or cylindrical coordinates to describe the structure and a plotting option for a geometry check. The program can combine several loading conditions and can analyze the structure for member deadloads when the unit weight of the material deadloads when the unit weight of the material has been input.

b. Validation

The program has been verified, and document traceability is available at Chicago Bridge & Iron Company.

c. Extent of Application

The program was used for design of ASME Class MC portions of the reactor building.

3.9(B) MECHANICAL SYSTEMS AND COMPONENTS

3.9(B).1 SPECIAL TOPICS FOR MECHANICAL COMPONENTS

3.9(B).1.1 Design Transients

Refer to Section 3.9(N).1.1 for a description of the operating conditions considered in the design of the RCS, RCS component supports, and reactor internals. Class 1 piping systems are designed and analyzed using design transients that are compatible with those described in Section 3.9(N).1.1.

Class 2 and 3 piping systems and components do not require thermal transient analysis. Class 2 and 3 piping systems and components are designed and analyzed for dynamic transients, as listed in Section 3.9(B).2.

3.9(B).1.2 Computer Programs Used in Analyses

For NSS systems, refer to Section 3.9(N).1.2.

3.9(B).1.2.1 Seismic Category I Items Other Than the NSSS

Table 3.9(B)-1 lists computer programs used in the balance-of-plant system components*. The verification of programs is as follows:

3 9(B).1.2.1.1 ME-632 Program

The ME-632 program is used to determine stresses and loads due to thermal expansion, deadweight, earthquake and transient force functions such as those created by fast relief valve opening and closing, pipe break, or fast activation of high-capacity pumps (water hammer effects).

The results obtained from pipe stress program ME-632 have been compared with a) ASME Benchmark problem results, b) Pipe Stress Program TPIPE, c) general purpose program ANSYS, and d) long-hand calculations. The comparison of the results are given in the verification report of the ME-632 program (Ref. 3).

A description of this computer code is included in Table 3.9(B)-1.

Appendix 3.9(B)A provides a verification report for the ME-632 program.

* (Ref 4 provides computer program used by Westinghouse under snubber reduction program).

3.9(B).1.2.1.2 ME-101, SUPERPIPE, and TPIPE Programs

The ME-101, SUPERPIPE, and TPIPE computer programs are used to determine stresses and loads due to restrained thermal expansion, deadweight, dynamic, seismic anchor movement, and earthquake in the following piping:

a. Seismic Category I ASME Section III Class 1, 2, and 3 piping 2 1/2 inches and larger.

b. Seismic Category I ASME Section III Class 1, 2, and 3 piping 2 inches and smaller that cannot be analyzed per M-18.

c. ANSI B31.1 Power Piping Included in High Energy Piping Systems.

A description of these programs is included in Table 3.9(B)-1.

Computer Code ME-632 is a predecessor of ME-101 (Ref. 1) and incorporates compliance with NRC Regulatory Guide 1.92. The purpose of the programs is basically identical. ME-101 results have been compared against the results from ME-632, and the results of the hand calculations (13 test problems in all) and the values agree within 2 percent. The verification report is on file at Bechtel. TPIPE was developed by PMB Systems Engineering San Francisco, Calif. for TVA. It has been verified using PIPSOL (EDS Nuclear, Inc.) and ME-632.

A synthesis of closely spaced modes is provided based on equation (4) of Regulatory Guide 1.92.

3.9(B).1.2.1.3 ANSYS Program

The ANSYS program is a general purpose computer program for the solution of several classes of engineering problems. It is used in the detailed analysis of the main steam and feedwater torsional restraints.
A description of this computer code is included in Table 3.9(B)-1.

The ANSYS has been developed and verified by Swanson Analysis Systems, Inc.

3.9(B).1.2.1.4 ME-602 Program

The ME-602 program performs the analysis of seismic Category I ASME Section IIIClass 2 and 3 piping 2 inches and smaller.

A description of this computer code is included in Table 3.9(B)-1.

ME-602 is based on the theory and equations of BP-TOP-1 (Ref. 2), a report on the seismic analysis of piping systems, written by the Bechtel Power Corporation, San Francisco, Calif. ME-602 programs the equations of BP-TOP-1.All NRC concerns relative to this approach to seismic analysis have been addressed and are noted in Appendices E and G of BP-TOP-1. Verification is presented in Appendix D of the report.

3.9(B).1.2.1.5 ME-210 Program

ME-210 computes the local stresses in cylindrical shells that result from external loadings. It is used in pipe support design to calculate the local stresses in piping produced by welded stanchions or lugs.

The program is based on Welding Research Council Bulletin 107, August 1965.The program has been verified based upon hand calculations.

3.9(B).1.2.1.6 CE901 ICES/STRUDL-II

The ICES/STRUDL-II code is used in the design of component supports. For ASME Section III Class 1 piping support design, the program is used to obtain stiffness properties of the support. The results of the analyses are incorporated into overall reactor vessel internal models which calculate the dynamic response due to seismic and LOCA conditions and yield dynamic stresses. In the design of ASME Section III Class 2 and 3 piping supports, models of certain indeterminate support designs are programmed in order to obtain support loads and stresses.

A description and validation of this program are included in Section 3.8A.1.14of Appendix 3.8A.

3.9(B).1.2.1.7 CE800 (BSAP), CE802 (SPECTRA), and CE786

These programs were used to determine the seismic response spectra of the NSSS for reactor coolant loop branch piping analysis, stresses, and displacements of the main feedwater and main steam system in the reactor building, and to determine seismic anchor movements of the NSSS for incorporation into the piping analysis.

A description and validation of these programs are included in Sections ,3.8A.1.8, 3.8A.1.10 and 3.8A.1.12 of Appendix 3.8A.

3.9(B).1.3 Experimental Stress Analysis

3.9(B).1.3.-1 NSS System

Refer to Section 3.9(N).1.3.

3.9(B).1.3.2 Seismic Category I Items Other Than the NSSS

Experimental stress analysis methods are not used in the design of Code or non-Code components for the faulted condition. For code components, the stresses will not exceed the limits of the ASME B and PV Code, Section III.

3.9(B).1.4 Considerations for the Evaluation of the Faulted Condition

A listing of all seismic Category I safety-related mechanical systems and components is included in Table 3.2-1.

3.9(B).1.4.1 Seismic Category I Items in the NSSS

Refer to Section 3.9(N).1.4.

3.9(B).1.4.2 Seismic Category I Items Other Than the NSSS

For statically applied loads, the stress allowables of Appendix F of ASME Section III are used for Code components. For non-Code components, allowables are based on tests or accepted standards consistent with those in the 1974edition of Appendix F of ASME III.

Dynamic loads for components loaded in the elastic range are calculated using dynamic load factors, time history analysis, or any other method that assumes elastic behavior of the component. A component is assumed to be in the elastic range if yielding across a section does not occur. The limits of the elastic range are defined in Paragraph F-1322 of Appendix F for Code components. Local yielding due to stress concentration is assumed not to affect the validity of the assumptions of elastic behavior. The stress allowables of Appendix F for elastically analyzed components are used for Code components. For non-Code components, allowables are based on test or accepted material standards consistent with those in Appendix F for linear elastically analyzed components.

In those cases where component stresses exceed yield, an elastic-inelastic time history analysis is performed, using the ANSYS computer program, described in3.9(B).1.2.1.3. This analysis is

based on a bilinear stress-strain curve of a particular material type and the maximum allowable strain limit is maintained at a very low percentage of the material breaking strain.

Analysis concerning the rupture of high-energy piping is addressed in Section 3.6.

3.9(B).2 DYNAMIC TESTING AND ANALYSIS

3.9(B).2.1 Piping Vibration, Thermal Expansion, and Dynamic Effects

A vibration operational test program to verify that the piping and piping restraints will withstand dynamic effects due to transients such as pump trips and valve trips and that piping vibrations are within acceptable levels is being performed.

Vibratory dynamic loadings can be placed in two categories: (1) transient induced vibrations and (2) steady state vibrations. The first is a dynamic system response to a transient, time dependent forcing function, such as fast valve closure, while the second is a constant vibration, usually flow induced.

a. Transient response

Dynamic events falling in this category are anticipated operational occurrences. The systems are operated in their normal mode (emergency mode for auxiliary feedwater turbine pump), and measurements are recorded on the systems during and following the event that causes the transient induced vibrations. The systems and the associated transients to be included in the preoperational test program to verify the piping system are:

1. Main steam

   (a) Main steam turbine stop valve trip*
   (b) Main steam atmospheric relief valves opening
   (c) Main steam condenser dump valves opening

2. Pressurizer power-operated relief valve piping

   (a) Relief valve operation

* Main steam turbine stop valve trip transient test to be performed during power ascension.

3. Auxiliary turbine system

(a) Auxiliary feedwater pump turbine stop valve trip

Selected snubbers on pressurizer power-operated relief valve piping subjected to transients are instrumented during preoperational testing to assure proper snubber operation.

All of the above are upset transients, and a time dependent dynamic analysis is performed on the system. The stresses thus obtained are combined with system stresses resulting from other operating conditions in accordance with the criteria provided in Table 3.9(B)-2.

b. Steady state vibration

System vibration resulting from flow disturbances falls into this category. Positive displacement pumps may cause such flow variation and vibrations and, as such, will be reviewed. Such systems will be checked, including the charging systems.

Since the exact nature of the flow disturbance is not known prior to pump operation, no analysis is performed. A visual steady state vibration inspection is made during system operation. Measurements are recorded where any one of the below listed conditions exist:

Frequency <10 Hz
For safety-related systems >0.125 inches
(peak-to-peak) =
For nonsafety-related systems >0.25 inches
(peak-to-peak) =

Safety-related systems, including associated instrumentation, and high energy systems,* except the reactor coolant loop and pressurizer surge line, were monitored for steady state vibration for all modes of system operation encountered during the pre-operational test program defined in USAR Chapter 14.0.

* High energy systems as defined in Regulatory Guide 1.68 are high energy piping systems inside Seismic Category I structures, and high energy portions of systems whose failure could reduce the functioning of any Seismic Category I plant feature to an unacceptable level.

The acceptance criterion is that the maximum measured amplitude shall not induce a stress in the piping system greater than one-half the endurance limit (which corresponds to 10^6 cycles), as defined in Section III of the ASME Boiler and Pressure Vessel Code, 1974.

When required, additional restraints are provided to reduce the stresses to below the acceptance criterion levels.

During the thermal expansion test, pipe deflections were recorded at selected locations. The system was also to be visually monitored for hanger and snubber performance and for piping interferences with structure or other piping. One complete thermal cycle, i.e., cold position to hot position to cold position, was to be monitored.

Selected portions of the following systems will be monitored during their normal mode of operation.

Main steam system
Main feedwater system
Letdown/charging system
Residual heat removal system
Containment spray system (1)
Emergency core cooling system
Auxiliary feedwater system
Auxiliary turbine system
Steam generator blowdown system

More specific information concerning the locations where visual inspection or measurements are to be taken are addressed in the applicable test procedures. Acceptable criteria for the thermal and dynamic tests are addressed in the applicable USAR Chapter 14 test abstracts.

Corrective action for a major deficiency identified as a result of the test program were reported to the NRC. Retesting was performed in accordance with administrative control identified in Chapter 14.

---

(1) Design characteristics of the containment spray system do not permit actual testing to monitor thermal expansion of the suction piping from the containment sumps, during the recirculation mode. Verification of this piping is attained by its similarity to the RHR suction lines from the RCS hot leg which will be monitored.

3.9(B).2.2 Seismic Qualification Testing of Safety-Related Mechanical Equipment

3.9(B).2.2.1 Safety-Related Equipment in the NSSS

Refer to Section 3.9(N).2.2.

3.9(B).2.2.2 Safety-Related Mechanical Equipment Other Than the NSSS

The criteria used to decide whether dynamic testing or analysis were used to qualify seismic Category I mechanical equipment are as follows:

a. Analysis without testing

1. Structural analysis without testing will be used if structural integrity alone can assure the design-intended function. Equipment which falls into this category includes:

   Piping
   Ductwork
   Tanks and vessels
   Heat exchangers
   Filters
   Inactive valves

   The seismic analysis of piping is described in Section 3.7(B).

2. Rotational analysis without testing is used to qualify rotating machinery items where it must be verified that deformations due to seismic loadings will not cause binding of the rotating element to the extent that the component cannot perform its design-intended function

   The seismic qualification of pumps is discussed more fully in Section 3.9(B).3.2.2.1. The procedure discussed therein applied, with some variations, to other items in this category.

b. Dynamic testing

   Dynamic testing is used for components which contain mechanisms which must change position or maintain position in order to perform their design-intended function and which, because of their complexity, do not

lend themselves to analysis. Such components include valve extended top works and similar appurtenances for other mechanical equipment.

c. Combinations of analysis with testing

A combination of analysis, static testing, and dynamic testing is typically used for seismic qualification of active valves.

The seismic qualification of active valves is discussed more fully in Section 3.9(B).3.2.2.2.

d. The acceptance criteria are as follows:

1 Tests, when used, demonstrate that the component is not prevented from performing its design-intended function during and after the test.

2 Analysis, when used for qualification of vessels, pumps; piping, or valves, verifies that stresses do not exceed the allowables specified in Tables 3.9(B)-5 through 3.9(B)-9 for the seismic conditions shown in Table 3.9(B)-2 and that deformations do not exceed those which will permit the component to perform its design-intended function.

3.9(B).2.3 Dynamic Response Analysis of Reactor Internals Under Operational Flow Transients and Steady State Conditions

Refer to Section 3.9(N).2.3.

3.9(B).2.4 Preoperational Flow Induced Vibration Testing of Reactor Internals

Refer to Section 3.9(N).2.4.

3.9(B).2.5 Dynamic System Analysis of the Reactor Internals Under Faulted Condition

Refer to Section 3.9(N).2.5.

3.9(B).2.6 Correlations of Reactor Internals Vibration Tests with the Analytical Results

Refer to Section 3.9(N).2.6.

3.9(B).3 ASME CODE CLASS 1, 2, AND 3 COMPONENTS, COMPONENTSUPPORTS, AND CORE SUPPORT STRUCTURES

3.9(B).3.1 Loading Combinations, Design Transients, andStress Limits

3.9(B).3.1.1 ASME Section III Class 2 and 3 Constructed Items Furnished with the NSSS

Refer to Section 3.9(N).3.1.

3.9(B).3.1.2 ASME Section III Constructed Items Not Furnished with the NSSS

The combinations of design loadings categorized with respect to plant operating conditions identified as Normal, Upset, Emergency, and Faulted which are specified for the design of ASME Code constructed items are presented in Table3.9(B)-2. The design stress limits of the ASME Code are selected to ensure the integrity of safety equipment. The ASME Code requirements are supplemented by additional requirements in Regulatory Guide 1.48. The corresponding stress limits for each category of plant operating condition which are specified for each type of ASME Code constructed item are presented in Tables 3.9(B)-5through 3.9(B)-9. The specified component operating condition is the same as the plant operating condition for each transient event, except where pump, system, or valve function must be assured during an emergency or faulted condition in which case appropriate stress limits are used to provide proof that functional capability has been maintained. The system or subsystem analysis used to establish or confirm loads specified for the design of components and supports was performed on an elastic basis. There are no deformation criteria associated with the design loading combinations, and plastic instability allowable limits given in ASME Section III are not used when dynamic analysis is performed. The limit analysis methods have the limits established by ASME Section III for the normal, upset, and emergency conditions. For these cases, the limits are sufficiently low to assure that the elastic system analysis is not invalidated. Stress limits for faulted loading conditions are discussed in Section 3.9(B).1.4. These faulted condition limits are established in such a manner that there is equivalence with the adopted elastic limits and consequently will not invalidate the elastic system analysis. Elastic stress analysis methods were also used in the design calculations to evaluate the effects of the loads on the components and supports.

Dynamic analysis, as described in Section 3.9(B).2 was performed to verify that the stresses are within the limits specified by the applicable code requirements.

The recommendations of Regulatory Guide 1.48 applicable to the design limitsand loading combinations for seismic Category I fluid system components are metas discussed in Table 3.9(B)-13.

3.9(B).3.2 Pump and Valve Operability Assurance

3.9(B).3.2.1 Active ASME Section III Class 1, 2, and 3 Pumpsand Valves Furnished with the NSSS

Refer to Section 3.9(N).3.2.

3.9(B).3.2.2 Active ASME Section III Class 2 and 3 Pumps and Class 1, 2, and 3 Valves Not Furnished With the NSSS

3.9(B).3.2.2.1 Pumps

Active pumps not furnished with the NSSS are identified in Table 3.9(B)-15.These pumps are subjected to stringent tests both prior to and after installation in the plant. The in-shop tests included (1) hydrostatic tests of pressure-retaining parts to 150 percent of the design pressure, and (2)performance tests which were conducted while the pump was operated with flow to determine total developed head, minimum and maximum head, net positive suction head (NPSH) requirements, and other pump/motor properties. Where appropriate, bearing temperatures and vibration levels were also monitored during these operating tests. Refer to Table 3.9(B)-15. After the pump was installed at the plant, it underwent startup tests and requires inservice inspection and operation.

In addition to these tests, the active pumps are qualified for operation during and after a faulted condition. That is, safety-related active pumps are qualified for operability during an SSE condition by assuring that (1) the pump will not be damaged during the seismic event and (2) the pump will continue operating despite the SSE loads.

The pump manufacturer is required to show by analysis, correlated by tests, prototype tests, or existing documented data, that the pump will perform its safety function when subjected to loads imposed by the maximum seismic accelerations and the maximum faulted nozzle loads. It is required that test or dynamic analysis be used to determine the lowest natural frequency of the pump. The pump, when having a natural frequency above 33 Hz, is considered essentially rigid. This frequency is considered sufficiently high to avoid problems with amplification between the component and structure for all seismic areas. A static shaft

deflection analysis of the rotor is performed with the conservative SSE accelerations of 3.0g horizontal and 2.0g vertical, acting simultaneously. The deflections determined from the static shaft analysis are compared to the allowable rotor clearances.

In order to avoid damage to the pumps during the faulted plant condition, the stresses caused by the combination of normal operating loads, SSE, and dynamic system loads are limited to the limits specified in Tables 3.9(B)-8 and 3.9(B)9. The maximum seismic nozzle loads are also considered in an analysis of the pump supports to assure that a system misalignment cannot occur.

If the lowest natural frequency is found to be below 33 Hertz, the equipment is considered flexible. If flexible, the equipment is analyzed using the response spectrum modal analysis technique. The frequencies and mode shapes are determined in the vertical and horizontal directions. The loads due to the excitation of each mode and the loads due to the accelerations in the three orthogonal directions are added, using the SRSS method. Coupling effects shall be included in the mathematical model. The stress limits stated in Tables 3.9(B)-8 and 3.9(B)-9 must be satisfied. Performance of these analyses, based upon conservative loads and restrictive stress limits, assures that the critical parts of the pump will not be damaged during the faulted condition and, therefore, that the reliability of the pump for post-faulted condition operation will not be impaired by the seismic events.

The second criterion necessary to assure operability is that the pump will function throughout the SSE. The pump/motor combination is designed to rotate at a constant speed under all conditions unless the rotor becomes completely seized, i.e., with no rotation.

The pump motor and all appurtenances vital to the operation of the pump are independently qualified for operation during the maximum seismic event in accordance with IEEE Standard 344-1975. If the testing option was chosen, sine-beat testing for the electrical equipment was justified by satisfying one or more of the following requirements to demonstrate that multifrequency response is negligible or the sine-beat input is of sufficient magnitude to conservatively account for this effect.

a. The equipment response is basically due to one mode.

b. The sine-beat response spectra envelop the floor response spectra in the region of significant response.

c. The floor response spectra consist of one dominant mode and have a narrow peak at this frequency.

The degree of coupling in the equipment, in general, determined if a single or multiaxis test was required. Multiaxis testing was required if there were considerable cross-coupling. If coupling was very light, then single axis testing was justified. Or, if the degree of coupling could be determined, then single axis testing was used with the input sufficiently increased to include the effect of coupling on the response of the equipment.

From this regimen, it is concluded that the safety-related pump/motor assemblies will not be damaged and will continue operating under SSE loadings and, therefore, will perform their intended functions. These requirements take into account the complex characteristics of the pump and are sufficient to demonstrate and assure the seismic operability of the active pumps.

The functional ability of active pumps after a faulted condition is assured, since only operating loads and steady-state nozzle loads exist. Since it is demonstrated that the pumps would not be damaged during the faulted condition, the post-faulted operating loads will be limited to the normal plant operating loads. This is assured by requiring that the imposed nozzle loads (steady state loads) for normal conditions and post-faulted conditions are limited by the magnitudes of the normal condition nozzle loads. The post-faulted ability of the pumps to function under these applied loads is proved during the normal operating plant conditions for active pumps.

3.9(B).3.2.2.2 Valves

The active valves are tabulated in Table 3.9(B)-16. Refer to the specifications identified on Table 3.10(B)-1, for the tests and analyses usedto ensure proper seismic qualification.

Safety-related active valves are designed in accordance with ASME Boiler and Pressure Vessel Code, Section III, and were subjected to a series of stringent tests prior to service and during the plant life. Prior to installation, the following tests were performed: shell hydrostatic test in accordance with ASME Section III requirements, backseat and main seat leakage tests, disc hydrostatic test, and functional tests which verified that the valve will open and close within the specified time limits. The operability qualification of power operators for the environmental conditions over the installed life is in accordance with IEEE 323 and IEEE 382. After installation, cold hydrostatic qualification tests, hot functional qualification tests, and required periodic inservice operations are performed to verify and assure the functional ability of the valve. These tests guarantee reliability of the valve for the design life of the plant.

For all active valves with extended top works, an analysis was also performed for static equivalent SSE loads applied at the center of gravity of the extended structure to demonstrate structural integrity. The stress limits allowed in the analyses demonstrate structural integrity and are equal to the limits recommended by the ASME for the particular ASME class of valve analyzed. These limits for each of the loading combinations given in Table 3.9(B)-2 are presented in Table 3.9(B)-6. Operating capabilities are demonstrated by one of the methods listed below.

Method A - Combination of Analysis, Static Load Test, and Dynamic Test

This method is permitted only when the valve assembly has a first natural frequency of vibration greater than 33 Hz.

a. An analysis or test is performed to show that the valve assembly has a first natural frequency of vibration greater than 33 Hz.

b. While in the shop and installed in a suitable test rig, the valve is subjected to a static equivalent seismic load applied at the center of gravity of the operator in the direction of the weakest axis of the yoke. The design pressure of the valve is applied to the valve during the static load tests.

   The valve is then operated with equivalent seismic static load applied. The valve must perform its safety-related function within the specified time limits.

   The static load for this test is the equivalent of 4.5g's horizontal and 4.5g's vertical. The plant piping is supported in such a manner that the power operator accelerations are maintained below test levels.

   Step (b) may be omitted if it can be proven through analysis that functional operability is satisfied with all applicable design loads present. To permit this analysis, the valve must be amenable to the analysis performed.

c. Prior to installation, power operators and other appurtenances are qualified in accordance with IEEE 344, Seismic Qualification Standards.

Method B - Dynamic Testing of Complete Valve Assembly

a. The valve unit is mounted on a test fixture in a manner which is representative of typical valve installations. The valve unit includes the operator and all appurtenances normally attached to the valve in service.

b. The valve is subjected to a dynamic test per IEEE 344. Details of this testing are contained in Table 3.10(B)-1.

c. The valve is pressurized to its design pressure and cycles during the dynamic test. The valve unit must perform its safety-related function within the specified time limits.

Following testing by method A or B, the valve unit is tested for seat leakage. The leakage rate must be less than the allowable leakage rate specified by the valve design specification.

The above testing program applies only to power-operated valves. The testing is conducted on a representative number of valves. Valves from each of the primary safety-related design types, e.g., motor-operated gate valve and air-operated globe valve, are tested. Valve sizes which cover the range of sizes in service are qualified by the tests, and the results are used to qualify all valves within the intermediate range of sizes. Stress analyses are used to support the interpolation.

Due to the particularly simple characteristics of check valves and other compact valves, they are not affected by seismic acceleration. Check valves have no extended structures that would distort the valve and cause a malfunction. Check valve discs are designed to allow sufficient clearance around the disc to prevent distortions due to nozzle or other imposed loads. They are qualified by a combination of the following tests and analysis:

a. Stress analysis of critical areas and parts for SSE loads in accordance with the ASME Code Case 1635-1

b. In-shop hydrostatic test

c. In-shop seat leakage test

d. Periodic valve exercise and inspection to assure the functional ability of the valve

Using the methods described, all the safety-related active valves in the systems are qualified for operability during a seismic event. These methods conservatively simulate the seismic event and assure that the active valves will perform their safety-related function when necessary.

3.9(B).3.3 Design and Installation Details for Mounting of Pressure Relief Devices

The design of pressure relieving devices can be generally grouped in two categories--open discharge and closed discharge.

3.9(B).3.3.1 Open Discharge

An open discharge is characterized by a relief or safety valve discharging to the atmosphere or to a vent stack open to the atmosphere.

The design of open discharge valve stations includes the following considerations:

a. Stresses in the valve header, the valve inlet piping, and local stresses in the header-to-valve inlet piping junction due to thermal effects, internal pressure, seismic loads, and thrust loads will be considered. These stresses are calculated in accordance with the applicable subsections of Section III of the ASME Code. These stresses are combined as shown in Table 3.9(B)-2, and compared to appropriate allowable stresses.

b. Thrust forces will include both pressure and momentum effects.

c. Where more than one safety or relief valve is installed on the same run pipe, valve spacing is as specified in ASME Code Case 1569.

d. Where more than one safety or relief valve is installed on the same run pipe, the sequence of valve openings which induce the maximum stresses is considered as required by Regulatory Guide 1.67.

e. The minimum moments to be used in stress calculations are those specified in ASME Code Case 1569.

f. The effects of the valve discharge on piping connected to the valve header are considered.

g. The reaction forces and moments used in stress calculations include the effects of a dynamic load factor (DLF) or are the maximum instantaneous values obtained from a dynamic time-history analysis. A dynamic load factor of 2.0, as required by Regulatory Guide 1.67, is used when a system is analyzed by static methods.

3.9(B).3.3.2 Closed Discharge

A closed discharge system is characterized by piping between the valve and a tank or some other terminal end. Under steady-state conditions, there are no net unbalanced forces. The initial transient response and resulting stresses were determined, using either a time-history computer solution or a conservative equivalent static solution. In calculating initial transient forces, pressure and momentum terms were included. If required, water slug effects were also included.

3.9(B).3.3.3 Operational Qualification for Active Safety-Relief Valves

Active safety-relief valves are subjected to the following shop tests, hydrostatic, seat leak tests, and a static loading equivalent to the SSE applied at the top of the bonnet and pressure at the valve inlet increased until the valve mechanism actuates. Periodic in situ valve inspection is performed to assure structural integrity of the pressure boundary. Functional testing is performed to verify the functional ability of the valves.

During a seismic event, it is anticipated that the seismic accelerations imposed upon the valve may cause it to open momentarily and discharge under system conditions which otherwise would not result in valve opening. This is of no real safety or other consequence.

3.9(B).3.4 Component Supports

3.9(B).3.4.1 Supports Furnished with the NSSS

Refer to Section 3.9(N).3.4.

3.9(B).3.4.2 Supports Not Furnished with the NSSS

The loadings, as specified in the Design Specifications, are taken into account in designing component supports for ASME Code constructed items. These loadings include but are not limited to the following.

a. Weight of the component and normal contents under operating and test conditions

b. Weight of the component support

c. Superimposed loads and reactions induced by the adjacent system components

d. Dynamic loads, including loads caused by earthquake vibration

e. Restrained thermal expansion

f. Anchor and support movement effects

The combinations of loadings categorized with respect to plant operating conditions identified as Normal, Upset, Emergency, and Faulted which are specified for the design of supports for ASME Code constructed items are presented in Table 3.9(B)-10. The stress limits which are specified for each plant operating condition are specified in Tables 3.9(B)-11 and 3.9(B)-12.

All ASME Section III, Class 2 and 3, supports are designed as welded attachments to embedded or surface-mounted plates. Bolting for plates is designed according to AISC allowables with increases allowed by the loading cases identified in Table 3.8-5. In no case do the tensile stresses in bolts exceed the yield stress of the bolting material at temperature.

3.9(B).3.4.2.1 Snubbers Used as Component Supports

The location and size of the snubbers are determined by stress analysis. The stress analysis uses the computer program mentioned in Section 3.9(B).1 and the loading combination given in Table 3.9(B)-10. The location and line of action of a snubber are selected., based on the necessity of limiting seismic stresses in the piping and nozzle loads on equipment. Snubbers are chosen in lieu of rigid supports where restricting thermal growth would induce excessive thermal stresses in the piping or nozzle loads or equipment. The snubbers are constructed to ASME B&PV Code, Section III, Subsection NF standards.

The design specification required consideration of the following:

a. The mechanical snubber is considered a Class 1 linear support. Design is in accordance with Subarticle NF-3200 of Section III.

b. A Certified Stress Report is furnished, showing the load capabilities of the snubber. Verification of the load carrying capability of the snubber is in accordance with NF-3132 of Section III.

c. The service loading of the snubber is equal to or less than the design strength established under listing b. above for the particular loading condition.

d. The frictional resistance due to normal thermal movement does not exceed 1 to 5 percent of the design, normal, and upset load rating of the snubber, as defined in NF-3231.1 or NF-3262.3, or 5 pounds, whichever is greater.

e. The peak-to-peak displacement across the unit, excluding end attachments, does not exceed 0.12 inch when subjected to cyclic loading in the frequency range of 3 to 33 Hertz.

f. The snubber is designed for normal operation within a temperature range of -20 to +300°F, and is capable of providing normal performance when exposed to an abnormal environmental temperature of 350°F for a period not longer than 12 hours.

g. All lubricants and other nonmetallic component parts are capable of withstanding the effects of an integrated neutron and gamma ray radiation dose of 3 x 109 rads without detriment to their physical properties.

h. Suppressor span is adjustable over a range of ±3-1/2 inches from the designed length without changing the operating position of the unit.

i. The design, procurement, manufacture, inspection, handling, testing, storage, and shipping of units and their component parts are performed in accordance with the Quality Program and the vendor's standard quality assurance procedures.

The design specification required that an installation manual was provided by the manufacturer to ensure correct installation, including dimensional detailed drawings giving materials of construction with installation and adjustment instruction. Visual confirmation and inspection are required in the field. Also, the hot and cold position of the snubbers were measured during the preoperational testing stage.

There are no formal provisions for accessibility for inspection, testing, and repair or replacement of snubbers. Snubbers are located in order to most efficiently minimize stresses in the components and piping. However, access will be provided for inspection, testing, repair, or replacement by removing obstructions, if necessary.

All non-NSSS snubbers are of the mechanical type. The fabricator of the mechanical non-NSSS snubbers is the Pacific Scientific Company. The function of the mechanical snubber is for shock arrest.

Two types of tests are performed on the snubber.

a. Production tests are made on every unit.

   1. Check unit to confirm acceleration level is less than specified maximum.

   2. Check unit to confirm that it operates freely over the total stroke.

   3. Measure and record the force required to initiate motion over the stroke in tension and compression.

   4. Measure and record lost motion of the snubber mechanism.

b. Qualification tests are performed on randomly selected production models. These tests are used to demonstrate the required load performance (load rating). These tests include dynamic load cycling, low temperature, high temperature, humidity, salt spray, sand, dust, life test, and faulted load test.

In the piping system seismic stress analysis, the mechanical snubbers are modeled as stops. Where necessary, the snubber spring rates are incorporated into the analysis. As only mechanical snubbers are used, there is no impact on the performance of the snubber by entrapped air or temperature on fluid properties.

The recommendations of Regulatory Guide 1.124 applicable to the service limits and loading combinations for Class I linear supports, are met, as discussed in Table 3.9(B)-14.

3.9(B).4 CONTROL ROD DRIVE SYSTEMS

Refer to Section 3.9(N).4.

3.9(B).5 REACTOR PRESSURE VESSEL INTERNALS

Refer to Section 3.9(N).5.

3.9(B).6 INSERVICE TESTING OF PUMPS AND VALVES

Inservice testing of ASME Code Class 1, Class 2, and Class 3 pumps and valves will be performed in accordance with ASME OM Code and applicable addenda, as required by 10 CFR 50, Section 50.55a(f), except where specific written relief has been granted by the NRC, by 10 CFR 50, Section 50.55 a.

In addition, a separate inservice inspection program document, addressing pumps and valves, which complies with 10 CFR 50.55a(f) and where applicable the 1976 "NRC Staff Guidance for Complying with Certain Provisions of 10 CFR 50.55a(g), Inservice Inspection Requirements," is submitted in accordance with the requirements of IWA-6000 of Section XI.

3.9(B).6.1 Inservice Testing of Pumps

The pump test program lists safety-related Class 1, 2, and 3 pumps that are provided with an emergency power source and are necessary to safely shut down the plant or mitigate the consequences of an accident. The pump test program is in accordance with Subsection ISTB of the ASME OM Code, and the 1977 "NRC Staff Guidance for Preparing Pump and Valve Testing Program Descriptions and Associated Relief Requests Pursuant to 10 CFR 50.55a(g)." The hydraulic and mechanical test parameters to be measured or observed are discussed and defined in a separate Inservice Inspection Report titled, "Inservice Testing Program for Pumps and Valves."

3.9(B).6.2 Inservice Testing of Valves

The valve test program lists safety-related (i.e., those valves necessary to safely shut down the plant or mitigate the consequences of an accident) Class 1, 2, and 3 valves subject to operational readiness testing and indicates the test parameters to be measured or observed. The test program conforms to the requirements of ASME OM Code, Subsection ISTC, and the 1977 "NRC Staff Guidance for Preparing Pump and Valve Testing Program Descriptions and Associated Relief Requests Pursuant to 10 CFR 50.55a(g)." Test parameters to be measured or observed are defined in a separate Inservice Inspection Report submitted to the NRC.

3.9(B).7 REFERENCES

1. "Program ME-101 and ME-632 Seismic Analysis of Piping Systems, Users Manual," Pacific International Computing Corp., March, 1971.

2. BP-TOP-1, Seismic Analysis of Piping Systems, Bechtel Power Corporation, San Francisco, California, Rev. 3, January, 1976.

3. "Seismic Analysis of Piping Systems Program ME-632 Verification Report," Version BlO, Bechtel Power Corporation.

4. "Seismic Analysis of Class 2 and 3 piping systems program PS + CAEPIPE (Pipestress and RSMERG), code version 3.4.08-e, used by Westinghouse, under snubber reduction program.

TABLE 3.9(B)-1

COMPUTER PROGRAMS USED IN ANALYSIS

Program Name	Purpose	Description	Classification
ME-101 ME-632	Used to calculate the stresses and loads in piping systems due to restrained thermal expansion, deadweight, seismic anchor movements, and earthquake	ME-101 and ME-632 analyze piping systems in compliance with ANSI and ASME piping codes. Using the stiffness method of finite element analysis, the displacements of the joints of a given structure are considered basic unknowns. The dynamic analysis by the modal synthesis method utilizes known maximum accelerations produced in a single degree of freedom model of certain frequency. Principal program assumptions are: a. It is a linearly elastic structure. b. Simultaneous displacement of all supports is described by a single time-dependent function. c. Lumped mass model satisfactorily replaces the structure. d. Modal synthesis is applicable. e. Rotational inertias of the masses have negligible effect.	Bechtel Power Corp. Proprietary

TABLE 3.9(B)-1 (Sheet 2)

Program Name	Purpose	Description	Classification
ANSYS	General static, thermal, and dynamic analysis for linear elastic and plastic	ANSYS is a general purpose program for solving a wide variety of engineering analysis problems more efficiently than most special purpose programs. ANSYS includes capabilities for transient heat transfer analyses, including conduction, convection, and radiation; structural analyses, including static elastic, plastic, creep, dynamic and dynamic plastic analyses, and large deflection and stability analyses; and one-dimensional fluid flow analyses. The output from the transient heat transfer analysis is in the form required for thermal analyses at selected time points in the transient with the same analytical model.	Public domain - Bechtel vendor.
ME-602	Used to calculate seismic spans, support reactions, and stresses for small-diameter piping	Performs a conservative seismic analysis by dividing piping systems into a series of spans limited by guides (two mutually perpendicular restraints normal to the pipe) at all concentrated masses (e.g., valves) at all extended masses and at maximum spacing on straight runs of piping. The length of span is determined by dynamic calculations based on a modified spectrum curve. The spectrum curve is modified for a particular building elevation so that the flexible side of the peak of the curve will remain constant at the peak spectral acceleration for decreasing frequencies.	Bechtel Power Corp. Proprietary.
ME-210	Computes local stresses in piping due to external loads	Incorporates the theory and equations of Welding Research Council Bulletin 107, August, 1965	Bechtel Power Corp. Proprietary.

WOLF CREEK

TABLE 3.9(B)-1 (Sheet 3)

Program Name	Purpose	Description	Classification
ICES/STRUDL	See Appendix 3.8A.		
CE-800 (BSAP)	See Appendix 3.8A.		
CE-802 (SPECTRA)	See Appendix 3.8A.		
CE-786	See Appendix 3.8A.		
TPIPE	Used to calculate the stresses and loads in piping systems due to earthquake	See ME-101 and ME-632	PMB Systems Engineering, Inc.

TABLE 3.9(B)-2

DESIGN LOADING COMBINATIONS FOR ASME CODE
CLASS 2 and 3 COMPONENTS

Condition	Design Loading Combinations (1,2)
Design	PD
Normal	PO + DW + NL
Upset	(a) PO + DW + OBE + NL (b) PO + DW + RVC + NL (c) PO + DW + FV + NL (d) PO + DW + OBE + RVO + NL (e) PO + DW + DU + NL
Emergency(3)	(a) PO + DW + DE + NL
Faulted (3)	(a) PO + DW + SSE + RVO + NL (b) PO + DW + SSE + NL (c) PO + DW + DF + NL

LEGEND:
- PD - Design pressure
- PO - Operating pressure
- DW - Piping deadweight
- OBE - Operating basis earthquake (inertia portion)
- SSE - Safe shutdown earthquake (inertia portion)
- FV - Fast valve closure
- RVC - Relief valve - closed system (transient)
- RVO - Relief valve - open system (sustained)
- DU - Other transient dynamic events associated with the upset plant condition
- DE - Dynamic events defined as emergency condition
- DF - Dynamic events associated with a LOCA during which or following which the piping system being evaluated must remain intact
- NL - Equipment nozzle loads

NOTES:

1. As required by the appropriate subsection, i.e., NC, ND, or NF, of ASME Section III Division 1, other loads, such as thermal transient, thermal gradients, and anchor point displacement portion of the OBE, may require additional consideration in addition to those primary stress-producing loads listed.

2. For components other than piping, appropriate nozzle loads associated with the particular plant operating conditions are also included.

3. If active valve function must be assured during emergency/ faulted conditions, this requirement is included in the design specification and the specified emergency/faulted condition for the plant is considered as the normal condition for the valve or the valve operability is demonstrated.

TABLES 3.9(B)-3 AND 3.9(B)-4 WERE DELETED

TABLE 3.9(B)-5

STRESS CRITERIA FOR ASME CODE CLASS 2
AND CLASS 3 VESSELS

Condition	Stress Limits
Design and normal	The vessel shall conform to the requirements of ASME Section VIII, Division 1.
Upset	$\sigma_m \leq 1.1S$
	$(\sigma_m$ or $\sigma_L) +$
	$\sigma_b \leq 1.65S$
Emergency	$\sigma_m \leq 1.5S$
	$(\sigma_m$ or $\sigma_L) +$
	$\sigma_b \leq 1.80S$
Faulted	$\sigma_m \leq 2.0S$
	$(\sigma_m$ or $\sigma_L) +$
	$\sigma_b \leq 2.4S$

LEGEND:

σ_m = General membrane stress. This stress is equal to the average stress across the solid section under consideration. Excludes discontinuities and concentrations. Produced only by mechanical loads.

σ_L = Local membrane stress. This stress is the same as m , except that it includes the effect of discontinuities.

σ_b = Bending stress. This stress is equal to the linear varying portion of the stress across the solid section under consideration. Excludes discontinuities and concentrations. Produced only by mechanical loads.

S = Allowable stress value given in Tables I-7.1, I-7.2, and I-7.3 of Appendix I of the ASME Section III Code. The allowable stress shall correspond to the highest metal temperature at the section under consideration during the condition under consideration.

The term "stress" in the above definitions means the maximum normal stress.

TABLE 3.9(B)-6

STRESS CRITERIA FOR ASME CODE CLASS 1, 2 AND 3 VALVES (Active and Inactive)

Condition	Stress Limits (1-5)	P_{max} (6)
Design and normal	Valve bodies shall conform to the requirements of ASME Section III, NC-3500 (or ND-3500)	
Upset	$\sigma_m < 1.1S$	1.1
	$(\sigma_m \text{ or } \sigma_L) + b < 1.65S$	
Emergency	$\sigma_m < 1.5S$	1.2
	$(\sigma_m \text{ or } \sigma_L) + b < 1.80S$	
Faulted[8]	$\sigma_m < 2.0S$	1.5
	$(\sigma_m \text{ or } \sigma_L) + \sigma_b < 2.4S$	

NOTES:

1. Valve nozzle (piping load) stress analysis is not required when both the following conditions are satisfied by calculation: (1) section modulus and area of every plane, normal to the flow, through the region of valve body crotch is at least 10 percent greater than those for the piping connected (or joined) to the valve body inlet and outlet nozzles; and, (2) code allowable stress, S, for valve body material is equal to or greater than the code allowable stress, S, of connected piping material. If the valve body material allowable stress is less than that of connected piping, the valve section modulus and area as calculated in (1) above shall be multiplied by the ratio of S pipe /S valve. If unable to comply with this requirement, the design by analysis procedure of NB-3545.2 is an acceptable alternate method.

2. Casting quality factor of 1.0 shall be used.

3. These stress limits are applicable to the pressure retaining boundary, and include the effects of loads transmitted by the extended structures, when applicable.

TABLE 3.9(B)-6 (Sheet 2)

4. Design requirements listed in this table are not applicable to valve discs, stems, seat rings, or other parts of valves which are contained within the confines of the body and bonnet, or otherwise not part of the pressure boundary.

5. These rules do not apply to Class 2 and 3 safety and relief valves. Safety relief valves will be designed in accordance with ASME Section III requirements.

6. The maximum pressure resulting from upset, emergency, or faulted conditions shall not exceed the tabulated factors listed under Pmax times the design pressure or the rated pressure at the applicable operating condition temperature. If the pressure rating limits are met at the operating conditions, the stress limits in this table are considered to be satisfied. For purposes of evaluating the stresses developed due to internal pressure caused by the concerns identified in NRC Generic Letter 96-06: Assurance of Equipment Operability and Containment Integrity During Design-Basis Accident Conditions, the conditions of ASME Code Case N-611 apply. That is, Pmax need not be met, provided the stress limits are met. This exception is for Class 2 and 3 valves only.

7. Definition of symbols used in this table are given in Table 3.9(B)-5.

8. For purposes of evaluating the stresses developed due to internal pressure caused by the thermal overpressurization concern identified in Generic Letter 96-06, the criteria of ASME Code Section III, Appendix F apply, as stated in section 3.9(B).1.4.2.

TABLE 3.9(B)-7

DESIGN CRITERIA FOR ASME CODE
CLASS 2 AND 3 PIPING

Condition	Stress Limits
Normal, upset, and emergency	The piping shall conform to the requirements of Section III, Paragraphs NC-3600 and ND-3600.
Faulted	The piping shall conform to the requirements of Section III, Paragraphs NC-3600 and ND-3600. The sum of stress due to internal pressure, live and dead loads, and those due to occasional loads identified in the Design Specification as acting during a faulted event will not exceed 2.4 times the allowable stress S_h *.

The allowable stress to be used for this condition is 3.0 S_h but not greater than 2.0 S_y, based on 1986 Edition of ASME Code.

For purposes of evaluating the stresses developed due to internal pressure caused by the thermal overpressurization concern identified in Generic Letter 96-06, the criteria of ASME Code Section III, Appendix F apply, as stated in section 3.9(B).1.4.2.

* Based on 1974 ASME Code.

TABLE 3.9(B)-8

STRESS CRITERIA FOR ASME CODE CLASS 2
AND CLASS 3 INACTIVE PUMPS

Condition	Stress Limits	P_{max} (1)
Design and normal	The pump shall conform to the requirements of ASME Section III, NC-3400 (or ND-3400)	
Upset	$\sigma_m < 1.1S$	1.1
	$(\sigma_m \text{ or } \sigma_L) + b < 1.65S$	
Emergency	$\sigma_m < 1.5S$	1.2
	$(\sigma_m \text{ or } \sigma_L) + b < 1.80S$	
Faulted	$\sigma_m < 2.0S$	1.5
	$(\sigma_m \text{ or } \sigma_L) + b < 2.4S$	

LEGEND:

σ_m = General membrane stress. This stress is equal to the average stress across the solid section under consideration. Excludes discontinuities and concentrations. Produced only by mechanical loads.

σ_L = Local membrane stress. This stress is the same as m , except that it includes the effect of discontinuities.

σ_b = Bending stress. This stress is equal to the linear varying portion of the stress across the solid section under consideration. Excludes discontinuities and concentrations. Produced only by mechanical loads.

S = Allowable stress value given in Tables I-7.1, I-7.2, and I-7.3 of Appendix I of the ASME Section III Code. The allowable stress shall correspond to the highest metal temperature at the section under consideration during the condition under consideration.

TABLE 3.9(B)-8 (Sheet 2)

The term "stress" in the above definitions means the maximum normal stress.

NOTE:

1. The maximum pressure shall not exceed the tabulated factors listed under "P_{max}" times the design pressure.

TABLE 3.9(B)-9

STRESS CRITERIA FOR ASME CODE
CLASS 2 AND CLASS 3 ACTIVE PUMPS

Condition	Design Criteria	P_{max} (1)
Normal	ASME Section III, Subsections NC-3400 and ND-3400	
Upset	$\sigma_m \leq 1.0S$	1.1
	$(\sigma_m \text{ or } \sigma_L) + \sigma b \leq 1.5S$	
Emergency	$\sigma_m \leq 1.1S$	1.2
	$(\sigma_m \text{ or } \sigma_L) + \sigma b \leq 1.65S$	
Faulted	$\sigma_m \leq 1.2S$	1.5
	$(\sigma_m \text{ or } \sigma_L) + \sigma b \leq 1.8S$	

LEGEND:

Definition of symbols used in this table are given in Table 3.9(B)-8.

NOTE:

1. See Note 1, Table 3.9(B)-8.

TABLE 3.9(B)-10

DESIGN LOADING COMBINATIONS FOR SUPPORTS FOR ASME CODE CLASS 1, 2, AND 3 COMPONENTS

Condition	Design Loading Combinations
Normal	DW + TH
Upset	(a) DW + OBE + SAM + TH
	(b) DW + RVC + TH
	(c) DW + FV + TH
	(d) DW + OBE + RVO + SAM + TH
	(e) DW + DU + TH
Emergency	(a) DW + DE + TH
Faulted	(a) DW + SSE + RVO + SAM + TH
	(b) DW + SSE + SAM + TH
	(c) DW + DF + TH

LEGEND:

TH = Thermal
DW = Piping deadweight
OBE = Operating basis earthquake (inertia portion)
SSE = Safe shutdown earthquake (inertia portion)
FV = Fast valve closure
RVC = Relief valve-closed system (transient)
RVO = Relief valve-open system (sustained)
DU = Other transient dynamic events associated with the upset plant condition
DE = Dynamic events defined as emergency condition
DF = Dynamic events defined as a faulted condition
SAM = Anchor displacement of OBE

TABLE 3.9(B)-11

ALLOWABLE STRESS LIMITS FOR CLASS I COMPONENT SUPPORTS

Support Type	Design	Normal	Conditions Upset	Emergency	Faulted
Plate and shell design by analysis	NF-3221	NF-3222	NF-3223	NF-3224	NF-3225
Linear type supports by analysis	NF-3231	NF-3231	NF-3231	NF-3231	NF-3231
Component standard supports design by analysis	NF-3240	NF-3240	NF-3240	NF-3240	NF-3240
Component supports design by load	NF-3260	NF-3260	NF-3260	NF-3260	NF-3260

NOTE:

Paragraph numbers refer to ASME Code, Section III 1974, Subsection NF, including Winter 1974.

TABLE 3.9(B)-12

ALLOWABLE STRESS LIMITS FOR CLASS 2 AND 3 COMPONENT SUPPORTS

Support Type	Design	Normal	Conditions Upset	Emergency	Faulted
Plate and shell design by analysis	NF-3321	NF-3321	NF-3321	$\sigma_1 \leq 1.2S$ $\sigma_1 + \sigma_2 \leq 1.8S$	$\sigma_1 \leq$ the lesser of $1.5S$ or $0.4S_u$ $\sigma_1 + \sigma_2 \leq$ the lesser of $2.25S$ or $0.6S_u$
Linear	NF-3231	NF-3231	NF-3231	NF-3231	NF-3231
Component standard supports design by analysis	NF-3221 or NF-3231	NF-3222 or NF-3231	NF-3223 or NF-3231	NF-3224 or NF-3231	NF-3225 or NF-3231
Component supports design by load rating	NF-3260	NF-3260	NF-3260	NF-3260	NF-3260

LEGEND:

σ_1 and σ_2 are defined in NF-3321.1

S_u = Minimum ultimate tensile strength of material, from Table I-12.1

S = Minimum yield strength of material, from Table I-2.1

NOTES:

Paragraph numbers refer to ASME Code, Section III 1974, Subsection NF, including Winter 1974 addendum.

TABLE 3.9 (B) - 13

RESPONSE TO REGULATORY GUIDE 1.48 FOR COMPONENTS NOT FURNISHED WITH THE NSSS

Regulatory Guide 1.48 Position	WCGS Position
Seismic Category I fluid system components should be designed to withstand the following loading combinations within the design limits specified.	
1. ASME Code[2] Class 1 vessels and piping:	N/A
a. The design limits specified in NB-3223 and NB-3654 of the ASME code for vessels and piping, respectively, should not be exceeded when the component is subjected to concurrent loadings associated with either the normal plant condition or the upset plant condition [3] and the vibratory motion of t50 r-percent of the Safe Shutdown Earthquake (SSE).	
b. The design limits specified in NB-3225 and NB-3655 of the ASME Code for vessels and piping, respectively, should not be exceeded when the component is subjected to loadings associated with the emergency plant condition.	N/A
c. The design limits specified in NB-3225 and NB-3656 of the ASME Code for vessels and piping, respectively, should not be exceeded when the component is subjected to concurrent loadings associated with the normal plant condition, the vibratory motion of the SSE, and the dynamic system loadings associated with the faulted plant condition.	N/A
2. Non-active ASME Code Class 1 pumps and valves[4] that are designed by analysis:	

TABLE 3.9 (B) - 13 (Sheet 2)

Regulatory Guide 1.48 Position	WCGS Position	
	Valves	Pumps
a. The design limits specified in NB-3223[5] of the ASME Code should not be exceeded when the component is subjected to concurrent loadings associated with either the normal plant condition or the upset plant condition and the vibratory motion of 50 percent of the SSE.	Complies.	N/A
b. The design limits specified in NB-3224 of the ASME code should not be exceeded when the component is subjected to loading associated with the emergency plant condition.	Complies.	N/A
c. The design limits specified in NB-3225 of the ASME Code should not be exceeded when the component is subjected to concurrent loadings associated with the normal plant condition, the vibratory motion of the SSE, and the dynamic system loadings associated with the faulted plant condition.	Complies.	N/A
3. Non-active ASME Code Class 1 valves that are designed by standard or alternative design rules:		
a. The primary-pressure rating P_r should not be exceeded by more than 10 percent when the component is subjected to concurrent loadings associated with either the normal plant condition or the upset plant condition and the vibratory motion of 50 percent of the SSE.	Complies.	
b. P_r should not be exceeded by more than 20 percent when the component is subjected to the loadings associated with the emergency plant condition.	Complies.	

TABLE 3.9 (B) - 13 (Sheet 3)

Regulatory Guide 1.48 Position	WCGS Position	
	Valves	Pumps
c. P_r should not be exceeded by more than 50 percent when the component is subjected to concurrent loadings associated with the normal plant condition, the vibratory motion of the SSE, and the dynamic system loadings associated with the faulted plant condition.	Complies.	
4. Active ASME Code Class 1 pumps and valve[4] that are designed by analysis:		
a. The design limits[6] specified in NB-3222[5, 7, 8] of the ASME Code should not be exceeded when the component is subjected to either (1) concurrent loadings associated with either the normal plant condition or the upset plant condition and the vibratory motion of 50 percent of the SSE, or (2) loadings associated with the emergency plant condition, or (3) concurrent loadings associated with the normal plant condition, the vibratory motion of the SSE, and the dynamic system loadings associated with the faulted plant condition.	Complies.	N/A
5. Active ASME Code Class 1 valves that are designed by standard or alternative design rules:	Complies with 5.a.(1) and or 5.a.(2). Deviates from 5.a.(3) in that P_rr should not be exceeded by more than 50 percent when the component is subjected to either concurrent loading associated with the normal plant conditions, the vibratory motion of the SSE, and the dynamic system loadings associated with the faulted plant conditon.	
a. The primary-pressure rating P_r[6] should not be exceeded when the component is subjected to either (1) concurrent loadings associated with either the normal plant condition or the upset plant condition and the vibratory motion of 50 percent of the SSE, or (2) loadings associated with the emergency plant condition, or (3) concurrent loadings associated with the normal plant condition, the vibratory motion of the SSE, and the dynamic system loadings associated with the faulted plant condition.		
6. ASME Code Class 2 and 3 vessels designed to Division 1 of Section VIII of the ASME Code:		

TABLE 3.9 (B) - 13 (Sheet 4)

Regulatory Guide 1.48 Position	WCGS Position	
	Valves	Pumps
a. The allowable stress value S[9] should not be exceeded by more than 10 percent when the component is subjected to either (1) concurrent loadings associated with either the normal plant condition or the upsent plant condition and the vibratory motion of 50 percent of the SSE, or (2) loadings associated with the emergency plant condition.	Complies.	
b. S should not be exceeded by more than 50 percent when the component is subjected to concurrent loadings associated with the normal plant condition, the vibratory motion of the SSE, and the dynamic system loadings associated with the faulted plant condition.	Complies.	
7. ASME Code Class 2 vessels designed to Division 2 of Section VIII of the ASME Code:		
a. The design limits specified in NB-3223 of the ASME Code should not be exceeded when the component is subjected to concurrent loadings associated with either the normal plant condition or the upset plant condition and the vibratory motion of 50 percent of the SSE.	Complies.	
b. The design limits specified in NB-3224 of the ASME Code should not be exceeded when the component is subjected to the loadings associated with the emergency plant condition.	Complies.	
c. The design limits specified in NB-3225 of the ASME Code should not be exceeded when the component is subjected to concurrent loadings associated with the normal plant condition, the vibratory motion of the SSE, and the dynamic system loadings associated with the faulted plant condition.	Complies	

TABLE 3.9 (B) - 13 (Sheet 5)

Regulatory Guide 1.48 Position	WCGS Position
8. ASME Code Class 2 and 3 piping:	
a. The design limits specified in NC-3611.1(b)(4)(c)(b)(1) of the ASME Code should not be exceeded when the component is subjected to either (1) concurrent loadings associated with either the normal plant condition and the vibratory motion of 50 percent of the SSE, or (2)[10] loadings associated with the emergency plant condition.	Complies.
b. The design limits specified in NC-3611.1(b)(4)(c)(b)(2) of the ASME Code should not be exceeded when the component is subjected to concurrent loadings associated with the normal plant condition, the vibratory motion of the SSE, and the dynamic system loadings associated with the faulted plant condition.	Complies.
9. Non-active ASME Code Class 2 and 3 pumps:	
a. The primary membrane stress should not be exceeded by more than 10 percent of the allowable stress value S, and the sum of the primary membrane and the primary bending stresses should not be exceeded by more than 65 percent of S when the component is subjected to either (1) concurrent loadings associated with either the normal plant condition or the upset plant condition and the vibratory motion of 50 percent of the SSE, or (2) loadings associated with the emergency plant condition.	Complies with 9.a.(1). Deviates from 9.a.(2) in that primary membrane stress should not be exceeded by more than 50 percent of the allowable stress value and the sum of the primary membrane and primary bending stresses should not be exceeded by more than 80 percent of S when subjected to emergency loads.
b. The primary membrane stress should not be exceeded by more than 20 percent of S, and the sum of the primary membrane and the primary bending stresses should not be exceeded by more than 80 percent of S when the component is subjected to concurrent loadings associated with the normal plant condition, the vibratory motion of the SSE, and the dynamic system loadings associated with the faulted plant condition.	The primary membrane should not be exceeded by more than 100 percent of S, and the sum of the primary membrane and primary bending stresses should not be exceeded by more than 140 percent of S when subjected to these loads.

TABLE 3.9 (B) - 13 (Sheet 6)

Regulatory Guide 1.48 Position	WCGS Position
10. Active ASME Code Class 2 and 3 pumps:	
a. The primary membrane stress[11] should not exceed the allowable stress value S, and the sum of the primary membrane and the primary bending stresses[11] should not be exceeded by more than 50 percent of S when the component is subjected to either (1) concurrent loadings associated with either the normal plant condition or the upset plant condition and the vibratory motion of 50 percent of the SSE, or (2) loadings associated with the emergency plant condition, or (3) concurrent loadings associated with the normal plant condition, the vibratory motion of the SSE, and the dynamic system loadings associated with the faulted plant condition.	Complies with 10.a.(1). Deviates from 10.a.(2) in that the primary membrane stress should not exceed the allowable stress value by more than 10 percent and the sum of the primary membrane and primary bending stresses should not be exceeded by more than 65 percent of S when subjected to emergency loads. Deviates from 10.a.(3) in that the primary membrane stress should not exceed the allowable stress value by more than 20 percent and the sum of the primary membrane and primary bending stresses should not be exceeded by more than 80 percent of S when subjected to faulted loads.
11. Non-active ASME Code Class 2 and 3 valves:	
a. The primary-pressure rating P_r should not be exceeded by more than 10 percent when the component is subjected to either (1) concurrent loadings associated with either the normal plant condition or the upset plant condition and the vibratory motion of 50 percent of the SSE, or (2) loadings associated with the emergency plant condition.	Complies with 11.a.(1). Deviates from 11.a.(2) in that P_r should not be exceeded by more than 20 percent when subjected to emergency loads.
b. P_r should not be exceeded by more than 20 percent when the component is subjected to concurrent loadings associated with the normal plant condition, the vibratory motion of the SSE, and the dynamic system loadings associated with the faulted plant condition.	Deviates in that P_r should not be exceeded by more than 50 percent when subjected to faulted loads.

TABLE 3.9 (B) - 13 (Sheet 7)

Regulatory Guide 1.48 Position	WCGS Position
12. Active ASME Code Class 2 and 3 valves:	
a. The primary-pressure rating P_r[11] should not be exceeded when the component is subjected to either (1) concurrent loadings associated with either the normal plant condition or the upset plant condition and the vibratory motion of 50 percent of the SSE, or (2) loadings associated with the emergency plant condition, or (3) concurrent loadings associated with the normal plant condition, the vibratory motion of the SSE, and the dynamic system loadings associated with the faulted plant condition.	Same response as for 5.a.

NOTES:

[1] Applies to all components (vessels, piping, pumps, and valves) that are relied upon to cope with the effects of specified plant conditions.

[2] Section III of the American Society of Mechanical Engineers Boiler and Pressure Vessel Code, including the 1972 Winter Addenda thereto.

[3] Identification of the specific transients or events to be considered under each plant condition will be addressed in a future regulatory guide.

[4] The requirements of the Case 1552 (Interpretations of ASME Boiler and Pressure Vessel Code) should be met for all sizes of Code Class 1 valves designed by analysis.

[5] The provisions of NB-3411 and NB-3413 may be applied for all sizes of Code Class I pumps designed by analysis.

[6] In addition to compliance with the design limits specified, assurance of operability under all design loading combinations should be provided by an appropriate combination of the following suggested measures:

a. In situ testing (e.g., preoperational testing after the component is installed in the plant).

TABLE 3.9 (B) - 13 (Sheet 8)

NOTES (Cont.):

b. Full-scale prototype testing.

c. Reduced-scale prototype testing.

d. Detailed stress and deformation analyses (includes experimental stress and deformation analyses).

In the performance of tests or analyses to demonstrate operability, the structural interaction of the entire assembly (e.g., valve-operator assembly and pump-motor assembly) should be considered. If superposition of test results for other than the combined loading condition is proposed, the applicability of such a procedure should be demonstrated. The design limits for nonactive pumps and valves designed by analysis may be used for the applicable loading combinations if assurance is provided by detailed stress and deformation analyses that operability is not impaired when designed to these limits. Similarly, the primary-pressure rating P_r for nonactive valves designed by standard or alternative design rules may be used for the applicable loading combinations if appropriate testing demonstrates that operability is not impaired when the valve is so rated.

[7] Secondary effects (stresses and deformations) should be evaluated for the loading combinations designated by regulatory positions 4.a.(2) and 4.a.(3). Local effects (peak stresses) need not be considered for these loading combinations.

[8] Table I-3.0, "Permanent Strain Limiting Factors," of Appendix I of the ASME Boiler and Pressure Vessel Code, Section III, may be used as an aid in determining the relationship between design stress and deformation (see note 2 to Table I-1.2 of Section III of the ASME Code).

[9] Division 1 of Section VIII of the ASME Boiler and Pressure Vessel Code does not provide rules for design by analysis. If a detailed analysis is performed, Division 1 vessels should meet, as a minimum, equations a and b below, which are applicable to regulatory positions 6.a. and 6.b., respectively.

a. $\sigma_M \leq 1.1S < \frac{\sigma_m + \sigma_b}{1.5}$

TABLE 3.9 (B) - 13 (Sheet 9)

NOTES (Cont.):

b. $\sigma_M \leq 1.5S < \frac{\sigma_M + \sigma_b}{1.5}$

where:

σ_M = primary membrane stress;

σ_b = primary bending stress;

S = allowable stress value as specified in Appendix I of Section III of the ASME Boiler and Pressure Vessel Code.

[10] For the loadings designated in regulatory position 8.a.(2), only equation 9 of NC-3651 need be met.

[11] In addition to compliance with the design limits specified, assurance of operability under all design loading combinations should be provided by any appropriate combination of the following suggested measures:

a. In situ testing (e.g., preoperational testing after the component is installed in the plant).

b. Full-scale prototype testing.

c. Reduced-scale prototype testing.

d. Detailed stress and deformation analyses (includes experimental stress and deformation analyses).

In the performance of tests or analyses to demonstrate operability, the structural interaction of the entire assembly (e.g., valve-operator and pump-motor assembly) should be considered. If superposition of test results for other than the combined loading condition is proposed, the applicability of such a procedure should be demonstrated. The design limits for nonactive pumps and valves may be used for the applicable loading combinations if appropriate analyses and/or testing confirms that operability is not impaired when designed to these limits.

TABLE 3.9(B)-14

RESPONSE TO REGULATORY GUIDE 1.124 FOR COMPONENTS NOT FURNISHED WITH THE NSSS

Regulatory Position	Response
ASME Code[2] Class 1 linear-type component supports excluding snubbers, which are not addressed herein, should be constructed to the rules of Subsection NF of Section III as supplemented by the following: [3]	
1. The Classification of component supports should, as a minimum, be the same as that of the supported components.	Complies.
2. Values of S_u at a temperature t should be estimated by one of three following methods on an interim basis until Section III includes such values:	
a. Method 1. This method applies to component support materials whose values of ultimate strength S u at temperature have been tabulated by their manufacturers in catalogs or other publications.	Complies.

$$Su = Sur \frac{S_u'}{S_{ur}'} \quad \text{but not greater than } S_{ur}$$

where

S_u = ultimate tensile strength at temperature t to be used to determine the service limits

S_{ur} = ultimate tensile strength at room temperature tabulated in Section III, Appendix I, or the latest accepted version1 of Code Case 1644

S_u' = ultimate tensile strength at temperature t tabulated by manufacturers in their catalogs or other publications

S_{ur}' = ultimate tensile strength at room temperature tabulated by manufacturers in the same publications.

TABLE 3.9(B)-14 (Sheet 2)

Regulatory Position	Response
b. Method 2. This method applies to component support materials whose values of ultimate tensile strength at temperature have not been tabulated by their manufacturers in any catalog or publication.	Complies.

$$S_u \quad S_{ur} \frac{S_y}{S_{yr}}$$

where

S_u = ultimate tensile strength at temperature t to be used to determine the service limits

S_{ur} = ultimate tensile strength at room temperature tabulated in Section III, Appendix I, or the latest accepted version1 of Code Case 1644

S_y = minimum yield strength at temperature t tabulated in Section III, Appendix I, or the latest accepted version1 of Code Case 1644

S_{yr} = minimum yield strength at room temperature, tabulated in Section III, Appendix I, or the latest accepted version1 of Code Case 1644.

c. Method 3. When the values of allowable stress or stress intensity at temperature for a material are listed in Section III, the ultimate tensile strength at temperature for that material may be approximated by the following expressions.	Complies.

S_u = 4S or

S_u = $3S_m$

where

S_u = ultimate tensile strength at temperature t to be used to determine the service limits

S = listed value of allowable stress at temperature t in Section III

TABLE 3.9(B)-14 (Sheet 3)

Regulatory Position	Response
S_m = listed value of allowable stress intensity at temperature t in Section III	
3. The Code levels A and B service limits for component supports designed by linear elastic analysis which are related to S_y, should meet the appropriate stress limits of Appendix XVII of Section III but should not exceed the limit specified when the value of 5/6 S_u is substituted for S_y. Examples are shown below in a and b.	Complies.
a. The tensile stress limit F_t for a net section as specified in XVII-2211(a) of Section III should be the smaller value of $0.6S_y$ or $0.5S_u$ at temperature. For net sections at pin-holes in eye-bars, pin-connected plates, or built-up structural members, F_t as specified in XVII-2211(b) should be the smaller value of $0.45S_y$ or $0.375S_u$ at temperature.	Complies.
b. The shear stress limit F_v for a gross section as specified in XVII-2212 of Section III should be the smaller value of $0.4S_y$ or $0.33S_u$ at temperature. Many limits and equations for compression strength specified in Sections XVII-2214, XVII-2224, XVII-2225, XVII-2240, and XVII-2260 have built-in constants based on Young's Modulus of 29,000 Ksi. For materials with Young's Modulus at working temperatures substantially different from 29,000 Ksi, these constants should be rederived with the appropriate Young's Modulus unless the conservatism of using these constants as specified can be demonstrated.	Complies.
4. Component supports designed by linear elastic analysis may increase their level A or B service limits according to the provisions of NF-3231.1(a), XVII-2110(a), and F-1370(a) of Section III. The increase of level A or B service limits provided by NF-3231.1(a) is for	Complies.

TABLE 3.9(B)-14 (Sheet 4)

Regulatory Position	Response
stress range. The increase of level A or B service limits provided by F-1370(a) for level D service limits should be the smaller factor of 2 or $1.167S_u/S_y$, if $S_u \geq 1.2S_y$ or 1.4 if $S_u \leq 1.2S_y$, where S_y and S_u are component-support material properties at temperature.	
However, all increases [i.e., those allowed by NF-3231.1(a), XVII-2110(a), and F-1370(a)] should always be limited by XVII-2110(b) of Section III. The critical buckling strengths defined by XVII-2110(b) of Section III should be calculated using material properties at temperature. This increase of level A or B service limits does not apply to limits for bolted connections. Any increase of limits for shear stresses above 1.5 times the Code level A service limits should be justified.	
If the increased service limit for stress range by NF-3231.1(a) is more than $2S_y$ or S_u, it should be limited to the smaller value of $2S_y$ or S_u unless it can be justified by a shake-down analysis.	
5. Component supports subjected to the combined loadings of system mechanical loadings associated with (1) either (a) the Code design condition or (b) the normal or upset plant conditions and (2) the vibratory motion of the OBE should be designed within the following limits: 4,5	
a. The stress limits of XVII-2000 of Section III and Regulatory Position 3 of this guide should not be exceeded for component supports designed by the linear elastic analysis method. These stress limits may be increased according to the provisions of NF-3231.1(a) of Section III and Regulatory Position 4 of this guide when effects resulting from constraints of free-end displacements are added to the loading combination.	Complies.

TABLE 3.9(B)-14 (Sheet 5)

Regulatory Position	Response
b. The normal condition load rating or the upset condition load rating of NF-3262.3 of Section III should not be exceeded for component supports designed by the load-rating method.	Complies.
c. The lower bound collapse load determined by XVlI-4200 adjusted according to the provision of XVII-4110(a) of Section III should not be exceeded for component supports designed by the limit analysis method.	N/A
d. The collapse load determined by II-1400 of Section III divided by 1.7 should not be exceeded for component supports designed by the experimental stress analysis method.	N/A
6. Component supports subjected to the system mechanical loadings associated with the emergency plant condition should be designed within the following design limits except when the normal function of the supported system is to prevent or mitigate the consequences of events associated with the emergency plant condition (at which time Regulatory Position 8 applies): [4,5]	
a. The stress limits of XVII-2000 of Section III and Regulatory Positions 3 and 4, increased according to the provisions of XVII-2110(a) of Section III and Regulatory Position 4 of this guide, should not be exceeded for component supports designed by the linear elastic analysis method.	
b. The emergency condition load rating of NF-3262.3 of Section III should not be exceeded for component supports designed by the load-rating method.	
c. The lower bound collapse load determined by XVII-4200 adjusted according to the provision of XVII-4110(a) of Section III should not be exceeded for component supports designed by the limit analysis method.	
d. The collapse load determined by II-1400 of Section III divided by 1.3 should not be exceeded for component supports designed by the experimental stress analysis method.	

TABLE 3.9(B)-14 (Sheet 6)

Regulatory Position	Response
7. Component supports subjected to the combined loadings of (1) the system mechanical loadings associated with the normal plant condition, (2) the vibratory motion of the SSE, and (3) the dynamic system loadings associated with the faulted plant condition should be designed within the following limits except when the normal function of the supported system is to prevent of mitigate the consequences of events associated with the faulted plant condition (at which time Regulatory Position 8 applies):	Complies.
a. The stress limits of XVII-2000 of Section III and Regulatory Position 3 of this guide, increased according to the provisions of F-1370(a) of Section III and Regulatory Position 4 of this guide, should not be exceeded for component suports designed by the linear elastic analysis method.	Complies.
b. The smaller value of T.L. x $2S/S_u$ or T.L. x $0.7S'/S_u$ should not be exceeded, where T.L., S, and S_u are defined according to NF-3262.1 of Section III, and S_u is the minimum ultimate tensil strength of the material at service temperature for component supports designed by the load-rating method.	N/A
c. The lower bound collapse load determined by XVII-4200 adjusted according to the provision of F-1370(b) of Section III should not be exceeded for component supports designed by the limit analysis method.	N/A
d. The collapse load determined by II-1400 adjusted according to the provision of F-1370(b) of Section III should not be exceeded for component supports designed by the experimental stress analysis method.	N/A
8. Component supports in systems whose normal function is to prevent or mitigate the consequences of events associated with an emergency or faulted plant condition should be designed within the limits described in Regulatory Position 5 or other justifiable limits provided by the Code. These limits should be defined by the Design Specification and stated in the PSAR, such that the function of the supported system will be maintained when they are subjected to the loading combinations described in Regulatory Positions 6 and 7.	Complies.

TABLE 3.9(B)-14 (Sheet 7)

Regulatory Position

NOTES:

[1]Regulatory Guide 1.85, "Code Case Acceptability--ASME Section III Materials," provides guidance for the acceptability of ASME Section III Code Cases and their revisions, including Code Case 1644. Supplementary provisions for the use of specific code cases and their revisions may also be provided and should be considered when applicable.

[2]American Society of Mechanical Engineers Boiler and Pressure Vessel Code, Section III, Division 1, 1974 Edition, including the 1976 Winter Addenda thereto.

[3]If the function of a component support is not required during a plant condition, the design limits of the support for that plant condition need not be satisfied, provided excessive deflection or failure of the support will not result in the less of function of any other safety-related system.

[4]Since component supports are deformation sensitive in the performance of their service requirements, satisfying these criteria does not ensure that their functional requirements will be fulfilled. Any deformation limits specified by the design specification may be controlling and should be satisfied.

[5]Since the design of component supports is an integral part of the design of the system and the design of the component, the designer must make sure that methods used for the analysis of the system, component, and component support are compatible (see Table F-1322.2-1 in Appendix F of Section III). Large deformations in the system or components should be considered in the design of component supports.

TABLE 3.9(B)-15
ACTIVE PUMPS NOT FURNISHED WITH THE NSSS

Pump	Item Number	System	ANS Safety Class	Normal Mode	Post-LOCA Mode	Basis
Turbine-Driven Auxiliary Feedwater Pump	PAL02	AFWS	3	Off	Off	Provide makeup to the intact S/Gs following an MSLB
Electric Motor-Driven Auxiliary Feedwater Pumps A and B	PAL01	AFWS	3	Off	Off	Provide makeup to the intact S/Gs following an MSLB
Component Cooling Water Pumps A, B, C, and D	PEG01	CCWS	3	On/Off	On/Off	Circulates cooled water to the reactor coolant pumps, RHR, and fuel storage pool cooling heat exchangers
Spent Fuel Pool Cooling Pumps A and B (See Note 3)	PEC01	FPCS	3	On/Off	On/Off	Circulates cooled water to the fuel storage pool
Containment Spray Pumps A and B	PEN01	CSS	2	Off	On/Off	Depressurization of the containment following a LOCA and MSLB
Essential Service Water Pumps A and B (see Note 2)	PEF01	ESWS	3	Off	On	Provide cooling water to ECCS auxiliaries such as component cooling water heat exchangers
Emergency Fuel Oil Transfer Pumps A and B (see Notes 1 and 2)	PJE01	EFOS	3	Off	On	Transfers fuel oil from the storage tank to the day tank

NOTES:
(1) Vibration measurements (shop and in-plant) were not obtained due to the fact that these pumps are immersed in the fuel oil in the emergency fuel oil storage tank.
(2) Bearing temperatures (shop and in-plant) were not measured due to the fact that these pumps are immersed in the pumped fluid.
(3) The fuel-pool cooling pumps are operated either continuously or intermittently during normal plant operation, thus ensuring their operability.

TABLE 3.9(B)-16

ACTIVE VALVES

VALVE LOCATOR NO.	SYSTEM	ACTUATED BY	SIZE (IN.)	TYPE/CLASS	NORMAL POSITION	BASIS
AB-HV-005	Main Steam	Air Cylinder	4.0	Globe/2	Closed	3, 4
AB-HV-006	Main Steam	Air Cylinder	4.0	Globe/2	Closed	3, 4
AB-HV-011	Main Steam	System Medium	28.0	Gate/2	Open	3
AB-HV-014	Main Steam	System Medium	28.0	Gate/2	Open	3
AB-HV-017	Main Steam	System Medium	28.0	Gate/2	Open	3
AB-HV-020	Main Steam	System Medium	28.0	Gate/2	Open	3
AB-HV-048	Main Steam	Air Cylinder	1.0	Globe/2	Open	3, 4
AB-HV-049	Main Steam	Air Cylinder	1.0	Globe/2	Open	3, 4
AB-LV-007	Main Steam	Air Cylinder	2.0	Globe/2	Closed	3
AB-LV-008	Main Steam	Air Cylinder	2.0	Globe/2	Closed	3
AB-LV-009	Main Steam	Air Cylinder	2.0	Globe/2	Closed	3
AB-LV-010	Main Steam	Air Cylinder	2.0	Globe/2	Closed	3
AB-PV-001	Main Steam	Air Cylinder	8.0	Globe/2	Closed	2, 3, 5
AB-PV-002	Main Steam	Air Cylinder	8.0	Globe/2	Closed	2, 3, 5
AB-PV-003	Main Steam	Air Cylinder	8.0	Globe/2	Closed	2, 3, 5
AB-PV-004	Main Steam	Air Cylinder	8.0	Globe/2	Closed	2, 3, 5

TABLE 3.9(B)-16 (Sheet 2)

VALVE LOCATOR NO.	SYSTEM	ACTUATED BY	SIZE (IN.)	TYPE/CLASS	NORMAL POSITION	BASIS
AB-V-045	Main Steam	Self-Actuated	6.0	Pressure Safety/2	Closed	3, 5
AB-V-046	Main Steam	Self-Actuated	6.0	Pressure Safety/2	Closed	3, 5
AB-V-047	Main Steam	Self-Actuated	6.0	Pressure Safety/2	Closed	3, 5
AB-V-048	Main Steam	Self-Actuated	6.0	Pressure Safety/2	Closed	3, 5
AB-V-049	Main Steam	Self-Actuated	6.0	Pressure Safety/2	Closed	3, 5
AB-V-055	Main Steam	Self-Actuated	6.0	Pressure Safety/2	Closed	3, 5
AB-V-056	Main Steam	Self-Actuated	6.0	Pressure Safety/2	Closed	3, 5
AB-V-057	Main Steam	Self-Actuated	6.0	Pressure Safety/2	Closed	3, 5
AB-V-058	Main Steam	Self-Actuated	6.0	Pressure Safety/2	Closed	3, 5
AB-V-059	Main Steam	Self-Actuated	6.0	Pressure Safety/2	Closed	3, 5
AB-V-065	Main Steam	Self-Actuated	6.0	Pressure Safety/2	Closed	3, 5
AB-V-066	Main Steam	Self-Actuated	6.0	Pressure Safety/2	Closed	3, 5

TABLE 3.9(B)-16 (Sheet 3)

VALVE LOCATOR NO.	SYSTEM	ACTUATED BY	SIZE (IN.)	TYPE/CLASS	NORMAL POSITION	BASIS
AB-V-067	Main Steam	Self-Actuated	6.0	Pressure Safety/2	Closed	3, 5
AB-V-068	Main Steam	Self-Actuated	6.0	Pressure Safety/2	Closed	3, 5
AB-V-069	Main Steam	Self-Actuated	6.0	Pressure Safety/2	Closed	3, 5
AB-V-075	Main Steam	Self-Actuated	6.0	Pressure Safety/2	Closed	3, 5
AB-V-076	Main Steam	Self-Actuated	6.0	Pressure Safety/2	Closed	3, 5
AB-V-077	Main Steam	Self-Actuated	6.0	Pressure Safety/2	Closed	3, 5
AB-V-078	Main Steam	Self-Actuated	6.0	Pressure Safety/2	Closed	3, 5
AB-V-079	Main Steam	Self-Actuated	6.0	Pressure Safety/2	Closed	3, 5
AE-FV-039	Feedwater	System Medium	14.0	Gate/2	Open	3
AE-FV-040	Feedwater	System Medium	14.0	Gate/2	Open	3
AE-FV-041	Feedwater	System Medium	14.0	Gate/2	Open	3
AE-FV-042	Feedwater	System Medium	14.0	Gate/2	Open	3
AE-V-120	Feedwater	□P	14.0	Check/2	NA	3
AE-V-121	Feedwater	□P	14.0	Check/2	NA	3

TABLE 3.9(B)-16 (Sheet 4)

VALVE LOCATOR NO.	SYSTEM	ACTUATED BY	SIZE (IN.)	TYPE/CLASS	NORMAL POSITION	BASIS
AE-V-122	Feedwater	□P	14.0	Check/2	NA	3
AE-V-123	Feedwater	□P	14.0	Check/2	NA	3
AE-V-124	Feedwater	□P	4.0	Check/2	NA	3
AE-V-125	Feedwater	□P	4.0	Check/2	NA	3
AE-V-126	Feedwater	□P	4.0	Check/2	NA	3
AE-V-127	Feedwater	□P	4.0	Check/2	NA	3
AL-HV-005	Auxiliary Feedwater	Electric Motor	4.0	Globe/2	Open	2
AL-HV-006	Auxiliary Feedwater	Air Cylinder	4.0	Globe/2	Open	2
AL-HV-007	Auxiliary Feedwater	Electric Motor	4.0	Globe/2	Open	2
AL-HV-008	Auxiliary Feedwater	Air Cylinder	4.0	Globe/2	Open	2
AL-HV-009	Auxiliary Feedwater	Electric Motor	4.0	Globe/2	Open	2
AL-HV-010	Auxiliary Feedwater	Air Cylinder	4.0	Globe/2	Open	2
AL-HV-011	Auxiliary Feedwater	Electric Motor	4.0	Globe/2	Open	2
AL-HV-012	Auxiliary Feedwater	Air Cylinder	4.0	Globe/2	Open	2

TABLE 3.9(B)-16 (Sheet 5)

VALVE LOCATOR NO.	SYSTEM	ACTUATED BY	SIZE (IN.)	TYPE/CLASS	NORMAL POSITION	BASIS
AL-HV-030	Auxiliary Feedwater	Motor	6.0	Butterfly/3	Closed	4
AL-HV-031	Auxiliary Feedwater	Electric Motor	6.0	Butterfly/3	Closed	4
AL-HV-032	Auxiliary Feedwater	Electric Motor	8.0	Butterfly/3	Closed	4
AL-HV-033	Auxiliary Feedwater	Electric Motor	8.0	Butterfly/3	Closed	4
AL-HV-034	Auxiliary Feedwater	Electric Motor	8.0	Gate/3	Open	6
AL-HV-035	Auxiliary Feedwater	Electric Motor	8.0	Gate/3	Open	6
AL-HV-036	Auxiliary Feedwater	Electric Motor	10.0	Gate/3	Open	6
AL-V-001	Auxiliary Feedwater	□P	10.0	Check/3	NA	6
AL-V-002	Auxiliary Feedwater	□P	8.0	Check/3	NA	6
AL-V-003	Auxiliary Feedwater	□P	8.0	Check/3	NA	6
AL-V-006	Auxiliary Feedwater	□P	6.0	Check/3	NA	4, 6
AL-V-009	Auxiliary Feedwater	□P	6.0	Check/3	NA	4, 6

TABLE 3.9(B)-16 (Sheet 6)

VALVE LOCATOR NO.	SYSTEM	ACTUATED BY	SIZE (IN.)	TYPE/CLASS	NORMAL POSITION	BASIS
AL-V-012	Auxiliary Feedwater	□P	8.0	Check/3	NA	4, 6
AL-V-015	Auxiliary Feedwater	□P	8.0	Check/3	NA	4, 6
AL-V-029	Auxiliary Feedwater	□P	2.0	Check/3	NA	4
AL-V-030	Auxiliary Feedwater	□P	6.0	Check/3	NA	4
AL-V-033	Auxiliary Feedwater	□P	4.0	Check/2	NA	4
AL-V-036	Auxiliary Feedwater	□P	4.0	Check/2	NA	4
AL-V-041	Auxiliary Feedwater	□P	2.0	Check/3	NA	4
AL-V-042	Auxiliary Feedwater	□P	6.0	Check/3	NA	4
AL-V-045	Auxiliary Feedwater	□P	4.0	Check/2	NA	4
AL-V-048	Auxiliary Feedwater	□P	4.0	Check/2	NA	4
AL-V-053	Auxiliary Feedwater	□P	3.0	Check/3	NA	4
AL-V-054	Auxiliary Feedwater	□P	8.0	Check/3	NA	4

TABLE 3.9(B)-16 (Sheet 7)

VALVE LOCATOR NO.	SYSTEM	ACTUATED BY	SIZE (IN.)	TYPE/CLASS	NORMAL POSITION	BASIS
AL-V-057	Auxiliary Feedwater	□P	4.0	Check/2	NA	4
AL-V-062	Auxiliary Feedwater	□P	4.0	Check/2	NA	4
AL-V-067	Auxiliary Feedwater	□P	4.0	Check/2	NA	4
AL-V-072	Auxiliary Feedwater	□P	4.0	Check/2	NA	4
AL-V-0161	Auxiliary Feedwater	P	10.0	Check/3	NA	6
AL-V-0167	Auxiliary Feedwater	P	4.0	Check/3	NA	6
BB-HV-013	Reactor Coolant	Electric Motor	3.0	Gate/3	Open	6
BB-HV-014	Reactor Coolant	Electric Motor	3.0	Gate/3	Open	6
BB-HV-015	Reactor Coolant	Electric Motor	3.0	Gate/3	Open	6
BB-HV-016	Reactor Coolant	Electric Motor	3.0	Gate/3	Open	6
BB-V-001	Reactor Coolant	□P	1.5	Check/1	NA	2, 7, 8
BB-V-020	Reactor Coolant	□P	1.5	Check/1	NA	2, 7, 8
BB-V-040	Reactor Coolant	□P	1.5	Check/1	NA	2, 7, 8
BB-V-059	Reactor Coolant	□P	1.5	Check/1	NA	2, 7, 8

TABLE 3.9(B)-16 (Sheet 8)

VALVE LOCATOR NO.	SYSTEM	ACTUATED BY	SIZE (IN.)	TYPE/CLASS	NORMAL POSITION	BASIS
BB-V-118	Reactor Coolant	ΔP	2.0	Check/2	NA	1, 2
BB-V-120	Reactor Coolant	ΔP	2.0	Check/1	NA	2, 8
BB-V-121	Reactor Coolant	ΔP	2.0	Check/1	NA	2, 8
BB-V-124	Reactor Coolant	Self-Actuated	0.8	Relief/3	Closed	5
BB-V-148	Reactor Coolant	ΔP	2.0	Check/2	NA	1, 2
BB-V-150	Reactor Coolant	ΔP	2.0	Check/1	NA	2, 8
BB-V-151	Reactor Coolant	ΔP	2.0	Check/1	NA	2, 8
BB-V-154	Reactor Coolant	Self-Actuated	0.8	Relief/3	Closed	5
BB-V-178	Reactor Coolant	ΔP	2.0	Check/2	NA	1, 2
BB-V-180	Reactor Coolant	ΔP	2.0	Check/1	NA	2, 8

TABLE 3.9(B)-16 (Sheet 9)

VALVE LOCATOR NO.	SYSTEM	ACTUATED BY	SIZE (IN.)	TYPE/CLASS	NORMAL POSITION	BASIS
BB-V-181	Reactor Coolant	ΔP	2.0	Check/1	NA	2, 8
BB-V-184	Reactor Coolant	Self-Actuated	0.8	Relief/3	Closed	5
BB-V-208	Reactor Coolant	ΔP	2.0	Check/2	NA	1, 2
BB-V-210	Reactor Coolant	ΔP	2.0	Check/1	NA	2, 8
BB-V-211	Reactor Coolant	ΔP	2.0	Check/1	NA	2, 8
BB-V-214	Reactor Coolant	Self-Actuated	0.8	Relief/3	Closed	5
BB-V-443	Reactor Coolant	ΔP	1.5	Check/3	NA	6
BB-V-444	Reactor Coolant	ΔP	1.5	Check/3	NA	6
BB-V-445	Reactor Coolant	ΔP	1.5	Check/3	NA	6
BB-V-446	Reactor Coolant	ΔP	1.5	Check/3	NA	6
BB-V-447	Reactor Coolant	ΔP	1.5	Check/3	NA	6

TABLE 3.9(B)-16 (Sheet 10)

VALVE LOCATOR NO.	SYSTEM	ACTUATED BY	SIZE (IN.)	TYPE/CLASS	NORMAL POSITION	BASIS
BB-V-448	Reactor Coolant	ΔP	1.5	Check/3	NA	6
BB-V-449	Reactor Coolant	ΔP	1.5	Check/3	NA	6
BB-V-450	Reactor Coolant	ΔP	1.5	Check/3	NA	6
BG-V-91	Chemical and Volume Control	ΔP	2.0	Check/2	NA	2, 7
BG-V-95	Chemical and Volume Control	ΔP	2.0	Check/2	NA	2, 7
BG-V-135	Chemical and Volume Control	ΔP	0.8	Check/2	NA	1
BG-V-147	Chemical and Volume Control	ΔP	3.0	Check/2	NA	4
BG-V-165	Chemical and Volume Control	ΔP	3.0	Check/2	NA	4
BG-V-174	Chemical and Volume Control	ΔP	2.0	Check/2	NA	4
BG-V-207	Chemical and Volume Control	Self-Actuated	0.8	Relief/3	Closed	5

TABLE 3.9(B)-16 (Sheet 11)

VALVE LOCATOR NO.	SYSTEM	ACTUATED BY	SIZE (IN.)	TYPE/CLASS	NORMAL POSITION	BASIS
BG-V-524	Chemical and Volume Control	Self-Actuated	0.8	Relief/3	Closed	5
BG-V-525	Chemical and Volume Control	Self-Actuated	0.8	Relief/3	Closed	5
BG-V-589	Chemical and Volume Control	ΔP	1.0	Check/2	NA	2, 7
BG-V-590	Chemical and Volume Control	ΔP	1.0	Check/2	NA	2, 7
BG-V-591	Chemical and Volume Control	ΔP	2.0	Check/2	NA	2
BM-HV-001	Steam Generator Blowdown	Air Cylinder	4.0	Globe/2	Open	3
BM-HV-002	Steam Generator Blowdown	Air Cylinder	4.0	Globe/2	Open	3
BM-HV-003	Steam Generator Blowdown	Air Cylinder	4.0	Globe/2	Open	3
BM-HV-004	Steam Generator Blowdown	Air Cylinder	4.0	Globe/2	Open	3
BM-HV-019	Steam Generator Blowdown	Solenoid	1.0	Globe/2	Closed	3
BM-HV-020	Steam Generator Blowdown	Solenoid	1.0	Globe/2	Closed	3
BM-HV-021	Steam Generator Blowdown	Solenoid	1.0	Globe/2	Closed	3
BM-HV-022	Steam Generator Blowdown	Solenoid	1.0	Globe/2	Closed	3
BM-HV-035	Steam Generator Blowdown	Solenoid	1.0	Globe/2	Open	3

TABLE 3.9(B)-16 (Sheet 12)

VALVE LOCATOR NO.	SYSTEM	ACTUATED BY	SIZE (IN.)	TYPE/CLASS	NORMAL POSITION	BASIS
BM-HV-036	Steam Generator Blowdown	Solenoid	1.0	Globe/2	Open	3
BM-HV-037	Steam Generator Blowdown	Solenoid	1.0	Globe/2	Open	3
BM-HV-038	Steam Generator Blowdown	Solenoid	1.0	Globe/2	Open	3
BM-HV-065	Steam Generator Blowdown	Solenoid	1.0	Globe/2	Open	3
BM-HV-066	Steam Generator Blowdown	Solenoid	1.0	Globe/2	Open	3
BM-HV-067	Steam Generator Blowdown	Solenoid	1.0	Globe/2	Open	3
BM-HV-068	Steam Generator Blowdown	Solenoid	1.0	Globe/2	Open	3
BN-HV-003	Borated Refueling Water Storage	Electric Motor	12.0	Gate/2	Open	6
BN-HV-004	Borated Refueling Water Storage	Electric Motor	12.0	Gate/2	Open	6

TABLE 3.9(B)-16 (Sheet 13)

VALVE LOCATOR NO.	SYSTEM	ACTUATED BY	SIZE (IN.)	TYPE/CLASS	NORMAL POSITION	BASIS
EC-HV-011	Fuel Pool Cooling and Cleanup	Electric Motor	12.0	Butterfly/3	Open	4
EC-HV-012	Fuel Pool Cooling and Cleanup	Electric Motor	12.0	Butterfly/3	Open	4
EC-V-004	Fuel Pool Cooling and Cleanup	□P	10.0	Check/3	NA	4
EC-V-013	Fuel Pool Cooling and Cleanup	□P	10.0	Check/3	NA	4
EC-V-996	Fuel Pool Cooling and Cleanup	□P	0.8	Relief/3	Closed	5
EC-V-997	Fuel Pool Cooling and Cleanup	□P	0.8	Relief/3	Closed	5
EC-V-998	Fuel Pool Cooling and Cleanup	□P	0.8	Relief/3	Closed	5
EC-V-999	Fuel Pool Cooling and Cleanup	□P	0.8	Relief/3	Closed	5
EF-HV-023	Essential Service Water	Electric Motor	30.0	Butterfly/3	Open	6

TABLE 3.9(B)-16 (Sheet 14)

VALVE LOCATOR NO.	SYSTEM	ACTUATED BY	SIZE (IN.)	TYPE/CLASS	NORMAL POSITION	BASIS
EF-HV-024	Essential Service Water	Electric Motor	30.0	Butterfly/3	Open	6
EF-HV-025	Essential Service Water	Electric Motor	30.0	Butterfly/3	Open	6
EF-HV-026	Essential Service Water	Electric Motor	30.0	Butterfly/3	Open	6
EF-HV-031	Essential Service Water	Electric Motor	14.0	Butterfly/2	Open	1
EF-HV-032	Essential Service Water	Electric Motor	14.0	Butterfly/2	Open	1
EF-HV-033	Essential Service Water	Electric Motor	14.0	Butterfly/2	Open	1
EF-HV-034	Essential Service Water	Electric Motor	14.0	Butterfly/2	Open	1
EF-HV-037	Essential Service Water	Electric Motor	30.0	Butterfly/3	Open	4
EF-HV-038	Essential Service Water	Electric Motor	30.0	Butterfly/3	Open	4

TABLE 3.9(B)-16 (Sheet 15)

VALVE LOCATOR NO.	SYSTEM	ACTUATED BY	SIZE (IN.)	TYPE/CLASS	NORMAL POSITION	BASIS
EF-HV-039	Essential Service Water	Electric Motor	30.0	Butterfly/3	Open	6
EF-HV-040	Essential Service Water	Electric Motor	30.0	Butterfly/3	Open	6
EF-HV-041	Essential Service Water	Electric Motor	30.0	Butterfly/3	Open	6
EF-HV-042	Essential Service Water	Electric Motor	30.0	Butterfly/3	Open	6
EF-HV-045	Essential Service Water	Electric Motor	14.0	Butterfly/2	Open	1, 4
EF-HV-046	Essential Service Water	Electric Motor	14.0	Butterfly/2	Open	1, 4
EF-HV-049	Essential Service Water	Electric Motor	14.0	Butterfly/2	Open	1, 4

TABLE 3.9(B)-16 (Sheet 16)

VALVE LOCATOR NO.	SYSTEM	ACTUATED BY	SIZE (IN.)	TYPE/CLASS	NORMAL POSITION	BASIS
EF-HV-050	Essential Service Water	Electric Motor	14.0	Butterfly/2	Open	1, 4
EF-HV-051	Essential Service Water	Electric Motor	24.0	Butterfly/3	Open	4
EF-HV-052	Essential Service Water	Electric Motor	24.0	Butterfly/3	Open	4
EF-HV-059	Essential Service Water	Electric Motor	24.0	Butterfly/3	Closed	4
EF-HV-060	Essential Service Water	Electric Motor	24.0	Butterfly/3	Closed	4
Deleted						
Deleted						
EF-HV-097	Essential Service Water	Electric Motor	3.0	Gate/3	Open	4
EF-HV-098	Essential Service Water	Electric Motor	3.0	Gate/3	Open	4

TABLE 3.9(B)-16 (Sheet 17)

VALVE LOCATOR NO.	SYSTEM	ACTUATED BY	SIZE (IN.)	TYPE/CLASS	NORMAL POSITION	BASIS
EF-PDV-019	Essential Service Water	Electric Motor	3.0	Gate/3	Closed	4
EF-PDV-020	Essential Service Water	Electric Motor	3.0	Gate/3	Closed	4
EF-V-001	Essential Service Water	ΔP	30.0	Check/3	NA	4
EF-V-004	Essential Service Water	ΔP	30.0	Check/3	NA	4
EF-V-046	Essential Service Water	ΔP	2.5	Check/3	NA	6
EF-V-076	Essential Service Water	ΔP	2.5	Check/3	NA	6
EF-HV-043	Essential Service Water	Air Cylinder	2.0	Globe/3	Open	6
EF-HV-044	Essential Service Water	Air Cylinder	2.0	Globe/3	Open	6
EG-HV-011	Component Cooling Water	Electric Motor	1.5	Globe/3	Closed	4
EF-V-470	Essential Service Water	ΔP	30.0	Check/3	NA	6
EF-V-471	Essential Service Water	ΔP	30.0	Check/3	NA	6
EF-V-476	Essential Service Water	ΔP	4.0	Vac. Relief/3	NA	6
EF-V-478	Essential Service Water	ΔP	4.0	Vac. Relief/3	NA	6
EF-V-482	Essential Service Water	ΔP	4.0	Vac. Relief/3	NA	6
EF-V-484	Essential Service Water	ΔP	4.0	Vac. Relief/3	NA	6

TABLE 3.9(B)-16 (Sheet 18)

VALVE LOCATOR NO.	SYSTEM	ACTUATED BY	SIZE (IN.)	TYPE/CLASS	NORMAL POSITION	BASIS
EG-HV-012	Component Cooling Water	Electric Motor	1.5	Globe/3	Closed	4
EG-HV-013	Component Cooling Water	Electric Motor	1.5	Globe/3	Closed	4
EG-HV-014	Component Cooling Water	Electric Motor	1.5	Globe/3	Closed	4
EG-HV-015	Component Cooling Water	Electric Motor	18.0	Butterfly/3	Open	4, 6
EG-HV-016	Component Cooling Water	Electric Motor	18.0	Butterfly/3	Open	4, 6
EG-HV-053	Component Cooling Water	Electric Motor	18.0	Butterfly/3	Open	4, 6
EG-HV-054	Component Cooling Water	Electric Motor	18.0	Butterfly/3	Open	4, 6
EG-HV-058	Component Cooling Water	Electric Motor	12.0	Gate/2	Open	1
EG-HV-059	Component Cooling Water	Electric Motor	12.0	Gate/2	Open	1

TABLE 3.9(B)-16 (Sheet 19)

VALVE LOCATOR NO.	SYSTEM	ACTUATED BY	SIZE (IN.)	TYPE/CLASS	NORMAL POSITION	BASIS
EG-HV-060	Component Cooling Water	Electric Motor	12.0	Gate/2	Open	1
EG-HV-061	Component Cooling Water	Electric Motor	4.0	Gate/2	Open	1
EG-HV-062	Component Cooling Water	Electric Motor	4.0	Gate/2	Open	1
EG-HV-069A	Component Cooling Water	Air Cylinder	14.0	Butterfly/3	Open	6
EG-HV-069B	Component Cooling Water	Air Cylinder	14.0	Butterfly/3	Open	6
EG-HV-070A	Component Cooling Water	Air Cylinder	14.0	Butterfly/3	Open	6
EG-HV-070B	Component Cooling Water	Air Cylinder	14.0	Butterfly/3	Open	6
EG-HV-071	Component Cooling Water	Electric Motor	12.0	Gate/3	Open	4
EG-HV-072	Component Cooling Water	Electric Motor	2.0	Globe/3	Open	6

TABLE 3.9(B)-16 (Sheet 20)

VALVE LOCATOR NO.	SYSTEM	ACTUATED BY	SIZE (IN.)	TYPE/CLASS	NORMAL POSITION	BASIS
EG-HV-073	Component Cooling Water	Electric Motor	2.0	Globe/3	Open	6
EG-HV-074	Component Cooling Water	Electric Motor	2.0	Globe/3	Open	6
EG-HV-075	Component Cooling Water	Electric Motor	2.0	Globe/3	Open	6
EG-HV-101	Component Cooling Water	Electric Motor	18.0	Butterfly/3	Open	4
EG-HV-102	Component Cooling Water	Electric Motor	18.0	Butterfly/3	Open	4
EG-HV-126	Component Cooling Water	Electric Motor	12.0	Gate/3	Closed	4
EG-HV-127	Component Cooling Water	Electric Motor	12.0	Gate/2	Closed	1, 4
EG-HV-130	Component Cooling Water	Electric Motor	12.0	Gate/2	Closed	1, 4
EG-HV-131	Component Cooling Water	Electric Motor	12.0	Gate/2	Closed	1, 4

TABLE 3.9(B)-16 (Sheet 21)

VALVE LOCATOR NO.	SYSTEM	ACTUATED BY	SIZE (IN.)	TYPE/CLASS	NORMAL POSITION	BASIS
EG-HV-132	Component Cooling Water	Electric Motor	4.0	Gate/2	Closed	1, 4
EG-HV-133	Component Cooling Water	Electric Motor	4.0	Gate/2	Closed	1, 4
EG-TV-029	Component Cooling Water	Air Cylinder	20.0	Butterfly/3	Throttled	4
EG-TV-030	Component Cooling Water	Air Cylinder	20.0	Butterfly/3	Throttled	4
EG-V-003	Component Cooling Water	□P	20.0	Check/3	NA	4
EG-V-007	Component Cooling Water	□P	20.0	Check/3	NA	4
EG-V-012	Component Cooling Water	□P	20.0	Check/3	NA	4
EG-V-016	Component Cooling Water	□P	20.0	Check/3	NA	4
EG-V-024	Component Cooling Water	Self-Actuated	1.0	Relief/3	Closed	5

TABLE 3.9(B)-16 (Sheet 22)

VALVE LOCATOR NO.	SYSTEM	ACTUATED BY	SIZE (IN.)	TYPE/CLASS	NORMAL POSITION	BASIS
EG-V-027	Component Cooling Water	Self-Actuated	1.0	Relief/3	Closed	5
EG-V-036	Component Cooling Water	□P	18.0	Check/3	NA	4, 6
EG-V-049	Component Cooling Water	Self-Actuated	1.0	Relief/3	Closed	5
EG-V-052	Component Cooling Water	Self-Actuated	1.0	Relief/3	Closed	5
EG-V-061	Component Cooling Water	□P	18.0	Check/3	NA	4, 6
EG-V-124	Component Cooling Water	□P	4.0	Check/3	NA	4, 6
EG-V-129	Component Cooling Water	□P	12.0	Check/3	NA	4, 6
EG-V-130	Component Cooling Water	□P	18.0	Check/3	NA	4, 6
EG-V-131	Component Cooling Water	□P	18.0	Check/3	NA	4, 6

TABLE 3.9(B)-16 (Sheet 23)

VALVE LOCATOR NO.	SYSTEM	ACTUATED BY	SIZE (IN.)	TYPE/CLASS	NORMAL POSITION	BASIS
EG-V-159	Component Cooling Water	Self-Actuated	2.0	Relief/3	Closed	5
EG-V-170	Component Cooling Water	Self-Actuated	2.0	Relief/3	Closed	5
EG-V-204	Component Cooling Water	□P	12.0	Check/2	NA	1
EG-V-305	Component Cooling Water	Self-Actuated	1.0	Vac.relief/3	Closed	5
EG-V-306	Component Cooling Water	Self-Actuated	1.0	Vac.relief/3	Closed	5
EJ-HV-23	Residual Heat Removal	Solenoid	1.0	Gate/2	Closed	1
EJ-HV-24	Residual Heat Removal	Solenoid	1.0	Gate/2	Closed	1
EJ-HV-25	Residual Heat Removal	Solenoid	1.0	Gate/2	Closed	1
EJ-HV-26	Residual Heat Removal	Solenoid	1.0	Gate/2	Closed	1

TABLE 3.9(B)-16 (Sheet 24)

VALVE LOCATOR NO.	SYSTEM	ACTUATED BY	SIZE (IN.)	TYPE/CLASS	NORMAL POSITION	BASIS
EJ-V-084	Residual Heat Removal	Self-Actuated	1.5	Relief/3	Closed	5
EJ-V-085	Residual Heat Removal	Self-Actuated	1.5	Relief/3	Closed	5
EJ-V-156	Residual Heat Removal	Self-Actuated	0.8	Relief/3	Closed	5
EJ-V-157	Residual Heat Removal	Self-Actuated	0.8	Relief/3	Closed	5
EM-V-001	High DPressure Coolant Injection	□P	2.0	Check/1	NA	1, 7, 8
EM-V-002	High Pressure Coolant Injection	□P	2.0	Check/1	NA	1, 7, 8
EM-V-003	High Pressure Coolant Injection	□P	2.0	Check/1	NA	1, 7, 8

TABLE 3.9(B)-16 (Sheet 25)

VALVE LOCATOR NO.	SYSTEM	ACTUATED BY	SIZE (IN.)	TYPE/CLASS	NORMAL POSITION	BASIS
EM-V-004	High Pressure Coolant Injection	□P	2.0	Check/1	NA	1, 7, 8
EM-V-005	High Pressure Coolant Injection	□P	1.5	Check/2	NA	7
EM-V-006	High Pressure Coolant Injection	□P	1.0	Check/2	NA	1
EM-V-007	High Pressure Coolant Injection	□P	1.5	Check/2	NA	7
EM-V-188	High Pressure Coolant Injection	Self-Actuated	0.8	Relief/3	Closed	5
EM-V-189	High Pressure Coolant Injection	Self-Actuated	0.8	Relief/3	Closed	5
EM-V-240	High Pressure Coolant Injection	□P	1.0	Check/2	NA	2, 7

TABLE 3.9(B)-16 (Sheet 26)

VALVE LOCATOR NO.	SYSTEM	ACTUATED BY	SIZE (IN.)	TYPE/CLASS	NORMAL POSITION	BASIS
EM-V-241	High Pressure Coolant Injection	DP	1.0	Check/2	NA	2, 7
EN-HV-001	Containment Spray	Electric Motor	12.0	Gate/2	Closed	1
EN-HV-006	Containment Spray	Electric Motor	10.0	Gate/2	Closed	1
EN-HV-007	Containment Spray	Electric Motor	12.0	Gate/2	Closed	1
EN-HV-012	Containment Spray	Electric Motor	10.0	Gate/2	Closed	1
EN-HV-015	Containment Spray	Electric Motor	3.0	Gate/2	Closed	4
EN-HV-016	Containment Spray	Electric Motor	3.0	Gate/2	Closed	4
EN-V-002	Containment Spray	□P	12.0	Check/2	NA	4
EN-V-003	Containment Spray	□P	12.0	Check/2	NA	4
EN-V-004	Containment Spray	□P	10.0	Check/2	NA	4
EN-V-008	Containment Spray	□P	12.0	Check/2	NA	4

TABLE 3.9(B)-16 (Sheet 27)

VALVE LOCATOR NO.	SYSTEM	ACTUATED BY	SIZE (IN.)	TYPE/CLASS	NORMAL POSITION	BASIS
EN-V-009	Containment Spray	□P	12.0	Check/2	NA	4
EN-V-010	Containment Spray	□P	10.0	Check/2	NA	4
EN-V-013	Containment Spray	□P	10.0	Check/2	NA	1
EN-V-017	Containment Spray	□P	10.0	Check/2	NA	1
EN-V-058	Containment Spray	Self-Actuated	1.0	Vacuum/ Relief/2	Closed	4
EN-V-099	Containment Spray	□P	3.0	Check/2	Closed	4
EN-V-101	Containment Spray	□P	3.0	Check/2	Closed	4
EN-V-106	Containment Spray	Self-Actuated	1.0	Vacuum/ Relief/2	Closed	4
EP-V-010	Accum. Safety Injection	□P	2.0	Check/1	NA	1, 7, 8
EP-V-020	Accum. Safety Injection	□P	2.0	Check/1	NA	1, 7, 8
EP-V-030	Accum. Safety Injection	□P	2.0	Check/1	NA	1, 7, 8
EP-V-040	Accum. Safety Injection	□P	2.0	Check/1	NA	1, 7, 8

TABLE 3.9(B)-16 (Sheet 28)

VALVE LOCATOR NO.	SYSTEM	ACTUATED BY	SIZE (IN.)	TYPE/CLASS	NORMAL POSITION	BASIS
EP-V-046	Accum. Safety Injection	ΔP	1.0	Check/2	NA	1
FC-FV-310	Auxiliary Turbines	Air Cylinder	1.0	Globe/3	Open	6
FC-FV-313	Auxiliary Turbines	Electric Motor	4.0	Globe	Open	4
FC-HV-312	Auxiliary Turbines	Electric Motor	4.0	Gate	Closed	4
FC-V-001	Auxiliary Turbines	ΔP	4.0	Check/2	NA	4, 6
FC-V-002	Auxiliary Turbines	ΔP	4.0	Check/2	NA	4, 6
FC-V-024	Auxiliary Turbines	ΔP	4.0	Check/2	NA	4, 6
FC-V-025	Auxiliary Turbines	ΔP	4.0	Check/2	NA	4, 6
GG-RV-027A	Fuel Building HVAC	Solenoid	1.0	Gate	Closed	4
GG-RV-027B	Fuel Building HVAC	Solenoid	1.0	Gate	Open	4
GG-RV-027C	Fuel Building HVAC	Solenoid	1.0	Gate	Closed	4

TABLE 3.9(B)-16 (Sheet 29)

VALVE LOCATOR NO.	SYSTEM	ACTUATED BY	SIZE (IN.)	TYPE/CLASS	NORMAL POSITION	BASIS
GG-RV-027D	Fuel Building HVAC	Solenoid	1.0	Gate	Open	4
GG-RV-028A	Fuel Building HVAC	Solenoid	1.0	Gate	Closed	4
GG-RV-028B	Fuel Building HVAC	Solenoid	1.0	Gate	Open	4
GG-RV-028C	Fuel Building HVAC	Solenoid	1.0	Gate	Closed	4
GG-RV-028D	Fuel Building HVAC	Solenoid	1.0	Gate	Open	4
GS-HV-003	Containment Hydrogen Control	Solenoid	1.0	Gate/2	Closed	1
GS-HV-004	Containment Hydrogen Control	Solenoid	1.0	Gate/2	Closed	1
GS-HV-005	Containment Hydrogen Control	Solenoid	1.0	Gate/2	Closed	1

TABLE 3.9(B)-16 (Sheet 30)

VALVE LOCATOR NO.	SYSTEM	ACTUATED BY	SIZE (IN.)	TYPE/CLASS	NORMAL POSITION	BASIS
GS-HV-008	Containment Hydrogen Control	Solenoid	1.0	Gate/2	Closed	1
GS-HV-009	Containment Hydrogen Control	Solenoid	1.0	Gate/2	Closed	1
GS-HV-012	Containment Hydrogen Control	Solenoid	1.0	Gate/2	Closed	1
GS-HV-013	Containment Hydrogen Control	Solenoid	1.0	Gate/2	Closed	1
GS-HV-014	Containment Hydrogen Control	Solenoid	1.0	Gate/2	Closed	1
GS-HV-017	Containment Hydrogen Control	Solenoid	1.0	Gate/2	Closed	1
GS-HV-018	Containment Hydrogen Control	Solenoid	1.0	Gate/2	Closed	1
GS-HV-020	Containment Hydrogen Control	Electric Motor	6.0	Butterfly/2	Closed	1
GS-HV-021	Containment Hydrogen Control	Electric Motor	6.0	Butterfly/2	Closed	1

TABLE 3.9(B)-16 (Sheet 31)

VALVE LOCATOR NO.	SYSTEM	ACTUATED BY	SIZE (IN.)	TYPE/CLASS	NORMAL POSITION	BASIS
GS-HV-031	Containment Hydrogen Control	Solenoid	1.0	Gate/2	Open	1
GS-HV-032	Containment Hydrogen Control	Solenoid	1.0	Gate/2	Open	1
GS-HV-033	Containment Hydrogen Control	Solenoid	1.0	Gate/2	Open	1
GS-HV-034	Containment Hydrogen Control	Solenoid	1.0	Gate/2	Open	1
GS-HV-036	Containment Hydrogen Control	Solenoid	1.0	Gate/2	Open	1
GS-HV-037	Containment Hydrogen Control	Solenoid	1.0	Gate/2	Open	1
GS-HV-038	Containment Hydrogen Control	Solenoid	1.0	Gate/2	Open	1
GS-HV-039	Containment Hydrogen Control	Solenoid	1.0	Gate/2	Open	1
GT-HZ-004	Containment Purge	Air Cylinder	18.0	Butterfly/2	Open	1

TABLE 3.9(B)-16 (Sheet 32)

VALVE LOCATOR NO.	SYSTEM	ACTUATED BY	SIZE (IN.)	TYPE/CLASS	NORMAL POSITION	BASIS
GT-HZ-005	Containment Purge	Air Cylinder	18.0	Butterfly/2	Open	1
GT-HZ-006	Containment Purge	Air Cylinder	36.0	Butterfly/2	Closed	1
GT-HZ-007	Containment Purge	Air Cylinder	36.0	Butterfly/2	Closed	1
GT-HZ-008	Containment Purge	Air Cylinder	36.0	Butterfly/2	Closed	1
GT-HZ-009	Containment Purge	Air Cylinder	36.0	Butterfly/2	Closed	1
GT-HZ-011	Containment Purge	Air Cylinder	18.0	Butterfly/2	Open	1
GT-HZ-012	Containment Purge	Air Cylinder	18.0	Butterfly/2	Open	1
HB-V-036	Liquid Radwaste	Self-Actuated	0.8	Relief/3	Closed	5
KA-FV-029	Compressed Air	Air Cylinder	2.0	Globe/2	Open	1
KA-HV-030	Compressed Air	Electric Motor	1.5	Gate/2	Closed	4
KA-PCV-101	Compressed Air	Self-Actuated	0.8	Gate/3	Closed	4
KA-PCV-102	Compressed Air	Self-Actuated	0.8	Gate/3	Closed	4

TABLE 3.9(B)-16 (Sheet 33)

VALVE LOCATOR NO.	SYSTEM	ACTUATED BY	SIZE (IN.)	TYPE/CLASS	NORMAL POSITION	BASIS
KA-PCV-103	Compressed Air	Self-Actuated	0.8	Gate/3	Closed	4
KA-PCV-200	Compressed Air	Self-Actuated	0.8	Gate/3	Closed	4
KA-V-039	Compressed Air	ΔP	4.0	Check/2	NA	1
KA-V-204	Compressed Air	ΔP	1.5	Check/2	NA	1
KA-V-703	Compressed Air	Self-Actuated	0.8	Relief/3	Closed	5
KA-V-704	Compressed Air	Self-Actuated	0.8	Relief/3	Closed	5
KA-V-705	Compressed Air	Self-Actuated	0.8	Relief/3	Closed	5
KA-V-706	Compressed Air	Self-Actuated	0.8	Relief/3	Closed	5
KA-V-710	Compressed Air	Self-Actuated	0.8	Relief/3	Closed	5
KA-V-711	Compressed Air	Self-Actuated	0.8	Relief/3	Closed	5
KA-V-712	Compressed Air	Self-Actuated	0.8	Relief/3	Closed	5
KA-V-713	Compressed Air	Self-Actuated	0.8	Relief/3	Closed	5
KC-HV-253	Fire Protection	Electric Motor	4.0	Gate/2	Closed	1
KC-V-478	Fire Protection	ΔP	4.0	Check/2	NA	1

TABLE 3.9(B)-16 (Sheet 34)

VALVE LOCATOR NO.	SYSTEM	ACTUATED BY	SIZE (IN.)	TYPE/CLASS	NORMAL POSITION	BASIS
KJ-PV-001A	Standby Diesel Generator	Solenoid	0.4	Globe/3	Closed	4
KJ-PV-001B	Standby Diesel Engine	Solenoid	0.4	Globe/3	Closed	4
KJ-PV-101A	Standby Diesel Engine	Solenoid	0.4	Globe/3	Closed	4
KJ-PV-101B	Standby Diesel Engine	Solenoid	0.4	Globe/3	Closed	4
KJ-TCV-34	Standby Diesel	Self-Actuated	5.0	3-Way/3	NA	4
KJ-TCV-56	Standby Diesel	Self-Actuated	6.0	3-Way/3	NA	4

TABLE 3.9(B)-16 (Sheet 35)

VALVE LOCATOR NO.	SYSTEM	ACTUATED BY	SIZE (IN.)	TYPE/CLASS	NORMAL POSITION	BASIS
KJ-TCV-60	Standby Diesel	Self-Actuated	6.0	3-Way/3	NA	4
KJ-TCV-61	Standby Diesel	Self-Actuated	0.8	3-Way/ Mfr. Std.	NA	4
KJ-TCV-134	Standby Diesel	Self-Actuated	5.0	3-Way/3	NA	4
KJ-TCV-156	Standby Diesel	Self-Actuated	6.0	3-Way/3	NA	4
KJ-TCV-160	Standby Diesel	Self-Actuated	6.0	3-Way/3	NA	4
KJ-TCV-161	Standby Diesel	Self-Actuated	0.8	3-Way/ Mfr. Std.	NA	4
LF-FV-095	Floor and Equipment Drains	Electric Motor	6.0	Gate/2	Open	1
LF-FV-096	Floor and Equipment Drains	Air Cylinder	6.0	Globe/2	Closed	1
LF-HV-105	Floor and Equipment Drains	Electric Motor	6.0	Gate/3	Open	6
LF-HV-106	Floor and Equipment Drains	Electric Motor	6.0	Gate/3	Open	6

TABLE 3.9(B)-16 (Sheet 36)

VALVE LOCATOR NO.	SYSTEM	ACTUATED BY	SIZE (IN.)	TYPE/CLASS	NORMAL POSITION	BASIS
SJ-HV-005	Nuclear Sampling	Solenoid	1.0	Globe/2	Open	1
SJ-HV-006	Nuclear Sampling	Solenoid	1.0	Globe/2	Open	1
SJ-HV-012	Nuclear Sampling	Solenoid	1.0	Globe/2	Closed	1
SJ-HV-013	Nuclear Sampling	Solenoid	1.0	Globe/2	Closed	1
SJ-HV-018	Nuclear Sampling	Solenoid	1.0	Globe/2	Closed	1
SJ-HV-019	Nuclear Sampling	Solenoid	1.0	Globe/2	Closed	1
SJ-HV-127	Nuclear Sampling	Solenoid	1.0	Globe/2	Closed	1
SJ-HV-128	Nuclear Sampling	Solenoid	1.0	Globe/2	Closed	1
SJ-HV-129	Nuclear Sampling	Solenoid	1.0	Globe/2	Closed	1
SJ-HV-130	Nuclear Sampling	Solenoid	1.0	Globe/2	Closed	1
SJ-HV-131	Nuclear Sampling	Solenoid	1.0	Globe/2	Closed	1

TABLE 3.9(B)-16 (Sheet 37)

VALVE LOCATOR NO.	SYSTEM	ACTUATED BY	SIZE (IN.)	TYPE/CLASS	NORMAL POSITION	BASIS
SJ-HV-132	Nuclear Sampling	Solenoid	1.0	Globe/2	Closed	1
SJ-V-111	Nuclear Sampling	□P	1.0	Check/2	NA	1
EF-HV-091	Essential Service Water	Electric Motor	3.0	Gate/3	Closed	4
EF-HV-092	Essential Service Water	Electric Motor	3.0	Gate/3	Closed	4

BASIS

1 Containment isolation
2 Safety grade cold shutdown operation
3 Secondary side pressure boundary isolation
4 System operation
5 Pressure/relief
6 System pressure boundary isolation
7 ECCS safeguards operation
8 RCPB isolation

APPENDIX 3.9(B)A

ME-632 VERIFICATION REPORT

The following is a comparison of the ME-632 program results with the results of the Engineering Data System computer program.

The two piping systems chosen for stress checks were:

a. The Core Spray Piping System - Monticello Nuclear Generating Plant Unit 1

b. Lines 48223-18-HE, 50056-10-HE, and 50057-10-HE - SMUD Rancho Seco Unit 1

These two test cases were chosen because independent piping stress analyses performed by Engineering Data Systems (EDS) under contract to Bechtel were available for comparison purposes. The EDS (PISOL 3) analysis of the core spray piping system consisted of both deadweight and thermal loading while the SMUD Rancho Seco piping system was an earthquake response spectrum analysis.

The ME-632 piping stress analyses were performed in the September 18-20, 1972 period on PICC's Honeywell 635 computer. A relocatable binary deck of the program is stored on tape No. 8312 and will be retained indefinitely for documentation purposes.

A comparison of the ME-632 and EDS analyses is shown in Table 3.9(B)A-1. Due to differing sign conventions, the reactions have opposite signs. The EDS program prints the effects of the support on the piping system while ME- 632 prints the effect of the piping system on the support. In some cases, the maximum values for the ME-632 analysis occurred at the middle of the bend. However, since the EDSprogram does not compute output quantities at the middle of a bend, these maximums are not shown in Table 1. The maximums shown in the table occurred at the same physical point on the piping system in both analyses.

In all cases, the maximum difference in output quantities was less than 5 percent, based upon the corresponding peak value for the particular load case.

It is, therefore, concluded that ME-632 correctly performs static and thermal analysis of piping systems, consistent with the assumptions of the elastic beam theory and applicable flexibility and stress intensification factors specified in ASME Section III.

TABLE 3.9(B)A-1

SUMMARY OF MAXIMUM DEFLECTIONS, STRESSES, AND REACTIONS
CORE SPRAY PIPING SYSTEM
MONTICELLO NUCLEAR GENERATING PLANT, UNIT 1

	Gravity		Thermal 1	
Max. deflections	ME632	EDS	ME632	EDS
X	-.0323	-.0327	- .236	- .244
Y inches	-.0714	-.0722	1.622	1.622
Z	-.0148	-.0151	- .625	-0.651
Max. stress				
σ_{eff} - psi	2133	2100	16099	15990
Max. reactions				
F_X	± 72	± 73	± 441	± 426
F_Y lb	- 2949	2956	± 2692	± 2650
F_Z	± 34	± 35	± 296	± 383
M_X	4110	4031	-31804	31584
M_Y lb-feet	- 933	945	- 5913	5950
M_Z	1110	1122	- 5929	5828

A comparison of maximum stresses, deflections, and reaction forces is shown in Table 3.9(B)A-2. Unless otherwise noted, the corresponding maximums occurred at identical locations. In all cases, the maximum difference between the two programs was less than 5 percent, based upon the peak deflection, stress, moment, or force for the particular load case.

The natural periods obtained from the two programs are shown in Table 3.9(B)A-3. Again there is excellent agreement.

It is, therefore, concluded that the ME-632 computer program correctly performs a dynamic analysis of piping systems consistent with the assumptions of the lumped mass, response spectrum approach for elastic systems and applicable stress intensification and flexibility factors per the ASME Section III Code.

TABLE 3.9(B)A-2

SUMMARY OF MAXIMUM DEFLECTIONS, STRESSES, AND REACTIONS
SMUD RANCHO SECO, UNIT 1 PIPING SYSTEM

	X + Y Earthquake		Z + Y Earthquake	
Max. deflections	ME-632	EDS	ME-632	EDS
X	0 0505	0496	.0080	.0117
Y inches	0.0086	.0084	.0033	.0036
Z	0.0040	.0054	.0460	.0437
Max. stress				
σ_{eff} psi	1396(1)	1377	1644	1564
Max. reactions				
F_X	871	881	892	963
F_Y kips	377	372	118	149
F_Z	664	663	3195	3128
M_X	272	268	119	122
M_Y kip-feet	269	349	1964	1919
M_Z	1668	1646	269	394

NOTE:

(1) The peak stress shown here occurred at the beginning of the bend defined by tangent intersection point 20. A higher stress occurred at the middle of this bend, but EDS output does not give stresses at the middle of the bends.

TABLE 3.9(B)A-3

COMPARISON OF NATURAL PERIODS
SMUD RANCHO SECO, UNIT 1 PIPING SYSTEM

Period-Seconds

	ME-632	EDS
1	.1077	.1060
2	.1035	.1030
3	.0658	.0656
4	.0561	.0569
5	.0532	.0552
6	.0509	.0524
7	.0502	.0509

The following stress analyses were performed, using the ME-632 piping stress analysis computer program:

a. Monticello Nuclear Power Plant
Core Spray Piping System
Unit 1 — Deadweight: Thermal with anchor movements

b. SMUD Rancho Seco, Unit 1
Lines 48223-18-HE, 50056-10-HE, and 50057-10-HE — Earthquake

The resulting forces, moments, deflections, and stresses were compared with independent analyses performed on the same piping systems, using the same loadings. A comparison of results showed that differences in the output quantities were less than 5 percent, based upon the corresponding maximum value.

Based upon these results, the ME-632 program may be used with confidence to analyze piping systems per the ASME Section III Nuclear Piping Code.

3.9(N) MECHANICAL SYSTEMS AND COMPONENTS

3.9(N).1 SPECIAL TOPICS FOR MECHANICAL COMPONENTS

3.9(N).1.1 Design Transients

The following five operating conditions, as defined in Section III of the ASME Code, are considered in the design of the reactor coolant system (RCS), RCS component supports, and reactor internals.

a. Normal conditions

   Any condition in the course of startup, operation in the design power range, hot standby and system shutdown, other than upset, emergency, faulted, or testing conditions.

b. Upset conditions (incidents of moderate frequency)

   Any deviations from normal conditions anticipated to occur often enough that design should include a capability to withstand the conditions without operational impairment. The upset conditions include those transients which result from any single operator error or control malfunction, transients caused by a fault in a system component requiring its isolation from the system, and transients due to loss of load or power. Upset conditions include any abnormal incidents not resulting in a forced outage and also forced outages for which the corrective action does not include any repair of mechanical damage. The estimated duration of an upset condition shall be included in the design specifications.

c. Emergency conditions (infrequent incidents)

   Those deviations from normal conditions which require shutdown for correction of the conditions or repair of damage in the system. The conditions have a low probability of occurrence but are included to provide assurance that no gross loss of structural integrity will result as a concomitant effect of any damage developed in the system. The total number of postulated occurrences over the plant design lifetime for such events shall not cause more than 25 stress cycles having an Sa value greater than that for 10^6 cycles from the applicable fatigue design curves of the ASME Code, Section III.

d. Faulted conditions (limiting faults)

Those combinations of conditions associated with extremely low probability, postulated events whose consequences are such that the integrity and operability of the nuclear energy system may be impaired to the extent that consideration of public health and safety are involved. Such considerations require compliance with safety criteria as may be specified by jurisdictional authorities.

e. Testing conditions

Testing conditions are those pressure overload tests including hydrostatic tests and pneumatic tests specified. Other types of tests shall be classified under normal conditions.

To provide the necessary high degree of integrity for the equipment in the RCS, the transient conditions selected for equipment fatigue evaluation are based upon a conservative estimate of the magnitude and frequency of the temperature and pressure transients resulting from various operating conditions in the plant. To a large extent, the specific transient operating conditions to be considered for equipment fatigue analyses are based upon engineering judgment and experience. The transients selected are representative of operating conditions which prudently should be considered to occur during plant operation and are sufficiently severe or frequent to be of possible significance to component cyclic behavior. The transients selected may be regarded as a conservative representation of transients which, used as a basis for component fatigue evaluation, provide confidence that the component is appropriate for its application over the design life of the plant.

The following design conditions are given in the equipment specifications for RCS components.

The design transients and the number of cycles of each that is normally used for fatigue evaluations are shown in Table 3.9(N)-1. In accordance with the ASME Code, Section III, emergency and faulted conditions are not included in fatigue evaluations.

Technical Specification 5.5.5 requires tracking the cyclic and transient occurrences to ensure that components are maintained within the design limits. Table 3.9(N)-13, Component Cyclic or Transient Limits, identifies the cyclic or transient limit encompassed in the program to meet Specification 5.5.5.

Normal Conditions

The following primary system transients are considered normal conditions:

a. Heatup and cooldown at 100°F per hour
b. Unit loading and unloading at 5 percent of full power per minute
c. Step load increase and decrease of 10 percent of full power
d. Large step load decrease with steam dump
e. Steady state fluctuations
   1. Initial
   2. Random
f. Feedwater cycling at hot shutdown
g. Loop out of service
h. Unit loading and unloading between 0 and 15 percent of full power
i. Boron concentration equalization
j. Reactor coolant pump startup and shutdown
k. Reduced temperature return to power
1. Refueling
m. Turbine roll test
n. Primary side leakage test
o. Secondary side leakage test
p. Feedwater heaters out of service

Heatup and Cooldown at 100°F per Hour

The design heatup and cooldown cases are conservatively represented by continuous operations performed at a uniform temperature rate of 100°F per hour. (These operations can take place at lower rates approaching the minimum of 0°F per hour. The expected normal rates are 50°F per hour.)

For these cases, the heatup occurs from ambient (assumed to be 120°F*) to the no-load temperature and pressure condition and the cooldown represents the reverse situation. In actual practice, the rate of temperature change of 100°F per hour will not be attained because of other limitations such as:

a. Material ductility considerations which establish maximum permissible temperature rates of change, as a function of plant pressure and temperature, which are below the design rate of 100°F per hour.

b. Slower initial heatup rates when using pump energy only.

*RCS temperature can be as low as 70°F if the system is depressurized.

c. Interruptions in the heatup and cooldown cycles due to such factors as drawing a pressurizer steam bubble, rod withdrawal, sampling, water chemistry, and gas adjustments.

The number of such complete heatup and cooldown operations is specified as 200 each, which corresponds to five such occurrences per year for the 40-year plant design life.

Unit Loading and Unloading at 5 Percent of Full Power per Minute

The unit loading and unloading cases are conservatively represented by a continuous and uniform ramp power change of 5 percent per minute between 15-percent load and full load. This load swing is the maximum possible consistent with operation under automatic reactor control. The reactor temperature will vary with load, as prescribed by the reactor control system. The number of loading and unloading operations is defined as 13,200. One loading operation per day yields 14,600 such operations during the 40-year design life of the plant. By assuming a 90 percent availability factor, this number is reduced to 13,200.

Step Load Increase and Decrease of 10 Percent of Full Power

The ±10 percent step change in load demand is a transient which is assumed to be a change in turbine control valve opening due to disturbances in the electrical network into which the plant output is tied. The reactor control system is designed to restore plant equilibrium without reactor trip following a ±10 percent step change in turbine load demand initiated from nuclear plant equilibrium conditions in the range between 15 percent and 100 percent full load, the power range for automatic reactor control. In effect, during load change conditions, the reactor control system attempts to match turbine and reactor outputs in such a manner that peak reactor coolant temperature is minimized and reactor coolant temperature is restored to its programmed setpoint at a sufficiently slow rate to prevent excessive pressurizer pressure decrease.

Following a step decrease in turbine load, the secondary side steam pressure and temperature initially increase since the decrease in nuclear power lags behind the step decrease in turbine load. During the same increment of time, the RCS average temperature and pressurizer pressure also initially increase. Because of the power mismatch between the turbine and reactor and the increase in reactor coolant temperature, the control system automatically inserts the control rods to reduce core power. With the load decrease, the reactor coolant temperature will ultimately be

reduced from its peak value to a value below its initial equilibrium value at the inception of the transient. The reactor coolant average temperature setpoint change is made as a function of turbine-generator load as determined by first stage turbine pressure measurement. The pressurizer pressure will also decrease from its peak pressure value and follow the reactor coolant decreasing temperature trend. At some point during the decreasing pressure transient, the saturated water in the pressurizer begins to flash which reduces the rate of pressure decrease. Subsequently, the pressurizer heaters come on to restore the plant pressure to its normal value.

Following a step increase in turbine load, the reverse situation occurs, i.e., the secondary side steam pressure and temperature initially decrease and the reactor coolant average temperature and pressure initially decrease. The control system automatically withdraws the control rods to increase core power. The decreasing pressure transient is reversed by actuation of the pressurizer heaters, and eventually the system pressure is restored to its normal value. The reactor coolant average temperature will be raised to a value above its initial equilibrium value at the beginning of the transient.

The number of each operation is specified at 2,000 times or 50 per year for the 40-year plant design life.

Large Step Load Decrease With Steam Dump

This transient applies to a step decrease in turbine load from full power, of such magnitude that the resultant rapid increase in reactor coolant average temperature and secondary side steam pressure and temperature will automatically initiate a secondary side steam dump that will prevent both reactor trip and lifting of steam generator safety valves. Thus, since WCGS is designed to accept a step decrease of 50 percent from full power the steam dump system provides the heat sink to accept 40 percent of the turbine load. The remaining 10 percent of the total step change is compensated for by the reactor control system (control rods). If a steam dump system was not provided to cope with this transient, there would be such a strong mismatch between what the turbine is asking for and what the reactor is delivering that a reactor trip and lifting of steam generator safety valves would occur.

The number of occurrences of this transient is specified at 200 times or five per year for the 40-year plant design life.

Steady State Fluctuations

The reactor coolant temperature and pressure at any point in the system vary around the nominal (steady state) values. For design purposes, two cases are considered:

a. Initial fluctuations

These are due to control rod cycling during the first 20 full power months of reactor operation. Temperature is assumed to vary by ±3°F and pressure by +25 psi, once during each 2-minute period. The total number of such occurrences considered is 1.5×10^5. These fluctuations are assumed to occur consecutively, and not simultaneously with the random fluctuations.

b. Random fluctuations

Temperature is assumed to vary by ±0.5 F and pressure by ±6 psi, once every 6 minutes. With a 6-minute period, the total number of occurrences during the plant design life does not exceed 3.0×10^6.

Feedwater Cycling at Hot Shutdown

These transients are assumed to occur when the plant is at no-load conditions, during which intermittent feeding of 32 F feedwater into the steam generators is assumed. Due to fluctuations arising from this mode of operation, the reactor coolant average temperature decreases to a lower value and then immediately begins to return to normal no-load temperature. This transient is assumed to occur 2,000 times over the life of the plant.

Loop Out of Service

The plant may be operated at a reduced power level with a single loop out of service for limited periods of time. This is accomplished by reducing power level and tripping a single reactor coolant pump.

It is assumed that this transient occurs twice per year or 80 times in the life of the plant. Conservatively, it is assumed that all 80 occurrences can occur in the same loop. In other words, it must be assumed that the whole RCS is subjected to 80 transients while each loop is also subjected to 80 inactive loop transients.

When an inactive loop is brought back into service, the power level is reduced to approximately 10 percent and the pump is started. It is assumed that an inactive loop is inadvertently started up at maximum allowable power level 10 times over the life of the plant. (This transient is covered under upset conditions.) Thus, the normal startup of an inactive loop is assumed to occur 70 times during the life of the plant.

Unit Loading and Unloading Between 0 and 15 Percent of Full Power

The unit loading and unloading cases between 0 and 15 percent power are represented by continuous and uniform ramp power changes, requiring 30 minutes for loading and 5 minutes for unloading. During loading, reactor coolant temperatures are increased from the no-load value to the normal load program temperatures at the 15-percent power level. The reverse temperature change occurs during unloading.

Prior to loading, it is assumed that the plant is at hot shutdown conditions, with 32°F feedwater cycling. During the 2-hour period following the beginning of loading, the feed-water temperature increases from 32°F to 300°F due to steam dump and turbine startup heat input to the feedwater. Subsequent to unloading, feedwater heating is terminated, steam dump is reduced to residual heat removal requirements, and feedwater temperature decays from 300°F to 32°F.

The number of these loading and unloading transients is assumed to be 500 each during the 40-year plant design life, which is equivalent to about one occurrence per month.

Boron Concentration Equalization

Following any large change in boron concentration in the RCS, spray is initiated in order to equalize concentration between the loops and the pressurizer. This can be done by manually operating the pressurizer backup heaters, thus causing a pressure increase, which will initiate spray at a compensated pressurizer pressure of approximately 2,275 psia. The proportional sprays return the pressure to 2,250 psia and maintain this pressure by matching the heat input from the backup heater until the concentration is equalized. For design purposes, it is assumed that this operation is performed once after each load change in the design load follow cycle. With two load changes per day and a 90-percent plant availability factor over the 40-year design life, the total number of occurrences is 26,400.

Reactor Coolant Pumps Startup and Shutdown

The reactor coolant pumps are started and stopped during routine operations such as RCS venting, plant heatup and cooldown, and in connection with recovery from certain transients such as loop out of service and loss of power. Other (undefined) circumstances may also require pump starting and stopping.

Of the spectrum of RCS pressure and temperature conditions under which these operations may occur, three conditions have been selected for defining transients:

a. Cold condition (70°F and 400 psig)
b. Pump restart condition (100°F and 400 psig)
c. Hot condition (557°F and 2235 psig)

For reactor coolant pump starting and stopping operations, it is assumed that variations in RCS primary side temperature and in pressurizer pressure and temperature are negligible and that the steam generator secondary side is completely unaffected. The only significant variables are the primary system flow and the pressure changes resulting from the pump operations.

Occurrences for the pump starting and stopping conditions are given in Table 3.9(N)-1.

Reduced Temperature Return to Power

The reduced temperature return to power operation is designed to improve the spinning reserve capabilities of the plant during load follow operations. The transient will normally begin at the ebb (50 percent) of a load follow cycle and will proceed at a rapid positive rate (typically 5 percent per minute) until the abilities of the control rods and the coolant temperature reduction (negative moderator coefficient) to supply reactivity are exhausted. At that point, further power increases are limited to approximately 1 percent per minute by the ability of the boron system to dilute the reactor coolant. The reduction in primary coolant temperature is limited by the protection system to about 20°F below the programmed value.

The reduced temperature return-to-power operation is not intended for daily use. It is designed to supply additional plant capabilities when required because of network fault or upset conditions. Hence this mode of operation is not expected to be used more than once a week in practice (2,000 times in 40 years).

Refueling

At the end of plant cooldown, the temperature of the fluid in the RCS is ≤140°F. At this time, the vessel head is removed and the refueling canal is filled. This is done by pumping water from the refueling water storage tank, which is located outside and conservatively assumed to be at 32°F, into the loops by means of the low head safety injection pumps. The refueling water flows directly into the reactor vessel via the accumulator connections and cold legs.

This operation is assumed to occur twice per year or 80 times over the life of the plant.

Turbine Roll Test

This transient is imposed upon the plant during the hot functional test period for turbine cycle checkout. Reactor coolant pump power will be used to heat the reactor coolant to operating temperature (no-load conditions), and the steam generated will be used to perform a turbine roll test. However, the plant cooldown during this test will exceed the 100°F per hour design rate.

The number of such test cycles is specified not to exceed 20, to be performed at the beginning of plant operating life prior to fuel loading. This transient occurs before plant startup, and the number of cycles is therefore independent of other operating transients. Included in the total number of such test cycles (not more than 20) is the full flow test for the turbine-driven auxiliary feedwater pump.

Primary Side Leakage Test

Subsequent to each time the primary system has been opened, a leakage test will be performed. During this test, the primary system pressure is assumed, for design purposes, to be raised to 2,500 psia, with the system temperature above the minimum temperature imposed by reactor vessel material ductility requirements, while the system is checked for leaks.

In actual practice, the primary system will be pressurized to the normal operating pressure, to prevent the pressurizer safety valves from lifting during the leak test.

During this leakage test, the secondary side of the steam generator must be pressurized so that the pressure differential across the tube sheet does not exceed 1,600 psi. This is accomplished with the steam, feedwater, and blowdown lines closed off. For design purposes, it is assumed that 200 cycles of this test will occur during the 40-year life of the plant.

Secondary Side Leakage Test

During the life of the plant, it may be necessary to check the secondary side of the steam generator (particularly, the manway closure) for leakage. For design purposes, it is assumed that the steam generator secondary side is pressurized to just below its design pressure, to prevent the safety valves from lifting. In order not to exceed a secondary side to primary side pressure differential of 670 psi, the primary side must also be pressurized. The primary system must be above the minimum temperature imposed by reactor vessel material ductility requirements. It is assumed that this test is performed 80 times during the 40-year life of the plant.

Feedwater Heaters Out of Service

These transients occur when one or more feedwater heaters are taken out of service. During the period of time that the heater(s) is out of service, it is desirable to maintain the plant at full rated thermal load. To accomplish this, first the steam flow is reduced to the amount that will maintain the plant at full rated thermal load when the heater(s) is taken out of service. It takes approximately 10 minutes for plant conditions to reach a new steady-state. Then the heater(s) is taken out of service.

Upset Conditions

The following primary system transients are considered upset conditions:

a. Loss of load (without immediate reactor trip)
b. Loss of power
c. Partial loss of flow
d. Reactor trip from full power
e. Inadvertent RCS depressurization
f. Inadvertent startup of an inactive loop
g. Control rod drop
h. Inadvertent safety injection actuation
i. Operating Basis Earthquake (OBE)
j. Excessive feedwater flow

Loss of Load (Without Immediate Reactor Trip)

This transient applies to a step decrease in turbine load from full power (turbine trip) without immediately initiating a reactor trip and represents the most severe pressure transient on the RCS under upset conditions. The reactor eventually trips as a consequence of a high pressurizer level trip initiated by the reactor

protection system. Since redundant means of tripping the reactor are provided as a part of the reactor protection system, transients of this nature are not expected, but are included to ensure a conservative design.

The number of occurrences of this transient is specified at 80 times or two times per year for the 40-year plant design life.

Loss of Power

This transient applies to a blackout situation involving the loss of outside electrical power to the station, assumed to be operating initially at 100-percent power, followed by reactor and turbine trips. Under these circumstances, the reactor coolant pumps are de-energized and, following coastdown of the reactor coolant pumps, natural circulation builds up in the system to some equilibrium value. This condition permits removal of core residual heat through the steam generators which at this time are receiving feedwater, assumed to be at 32°F, from the auxiliary feedwater system operating from diesel generator power. Steam is removed for reactor cooldown through atmospheric relief valves provided for this purpose.

The number of occurrences of this transient is specified at 40 times or one per year for the 40-year plant design life.

Partial Loss of Flow

This transient applies to a partial loss of flow from full power, in which a reactor coolant pump is tripped out of service as the result of a loss of power to that pump. The consequences of such an accident are a reactor and turbine trip, on low reactor coolant flow, followed by automatic opening of the steam dump system and flow reversal in the affected loop. The flow reversal causes reactor coolant at cold leg temperature to pass through the steam generator and be cooled still further. This cooler water then flows through the hot leg piping and enters the reactor vessel outlet nozzles. The net result of the flow reversal is a sizable reduction in the hot leg coolant temperature of the affected loop.

The number of occurrences of this transient is specified at 80 times or two times per year for the 40-year plant design life.

Reactor Trip from Full Power

A reactor trip from full power may occur from a variety of causes, resulting in temperature and pressure transients in the RCS and in the secondary side of the steam generator. This is a result of

continued heat transfer from the reactor coolant in the steam generator. The transient continues until the reactor coolant and steam generator secondary side temperatures are in equilibrium at zero power conditions. A continued supply of feedwater and controlled dumping of steam remove the core residual heat and prevent the steam generator safety valves from lifting. The reactor coolant temperature and pressure undergo a rapid decrease from full power values as the reactor protection system causes the control rods to move into the core.

Various moderator cooldown transients associated with reactor trips can occur as a result of excessive feed or steam dump after trip or large load increase. For design purposes, reactor trip is assumed to occur a total of 400 times or 10 times per year over the life of the plant. The various types of trips and the number of occurrences for each are as follows:

a. Reactor trip with no inadvertent cooldown - 230 occurrences.

b. Reactor trip with cooldown but no safety injection - 160 occurrences.

c. Reactor trip with cooldown actuating safety injection - 10 occurrences.

d. Reactor trip with no inadvertent cooldown overspeed.

   For design purposes, 20 occurrences of the reactor trip with no inadvertent cooldown (Case a - 230 occurrences total) are assumed to be accompanied by an emergency turbine overspeed. This situation could be caused by malfunction of the turbine control system following a large step load decrease with steam dump resulting in turbine speed increase past the turbine overspeed trip setpoint. It is assumed that the reactor trips and that the speed increases to 120 percent of nominal, with accompanying proportional increases in generator bus frequency, reactor coolant pump speed, and reactor coolant flow rate.

   Approximately 30 seconds after the reactor trip, the house load is transferred from the generator to the outside bus and a loss of outside power (blackout) occurs. This is assumed to be covered by the 40 occurrences of the loss of power transient.

Inadvertent RCS Depressurization

Several events can be postulated as occurring during normal plant operation which will cause rapid depressurization of the RCS. These include:

a. Actuation of a single pressurizer safety valve.

b. Inadvertent opening of one pressurizer power-operated relief valve due either to equipment malfunction or operator error.

c. Malfunction of a single pressurizer pressure controller, causing one power-operated relief valve and two pressurizer spray valves to open.

d. Inadvertent opening of one pressurizer spray valve, due either to equipment malfunction or operator error.

e. Inadvertent auxiliary spray.

Of these events, the pressurizer safety valve actuation causes the most severe transients, and is used as an "umbrella" case to conservatively represent the reactor coolant pressure and temperature variations arising from any of them.

When a pressurizer safety valve opens, and remains open, the system rapidly depressurizes, the reactor trips, and the Safety Injection System (SIS) is actuated. The passive accumulators of the SIS are actuated when RCS pressure decreases by approximately 1600 psi, about 5 minutes after the depressurization beings. The RCS reaches an equilibrium condition where the water release rate through the open pressurizer safety valve is equivalent to the safety injection flow. The Reactor Coolant System is also cooled down by the flow through the safety valve, and Safety Injection flow and auxiliary feedwater flow.

Eventually, the plant must be taken to a cold shutdown condition, as the operator can take no immediate action to stop the transient and bring the plant to hot standby if the safety valve remains open.

For design purposes, this transient is assumed to occur 20 times during the 40-year design life of the plant.

Inadvertent Startup of an Inactive Loop

This transient can occur when a loop is out of service. With the plant operating at maximum allowable power level, the reactor

coolant pump in the inactive loop is started as a result of operator error. Reactor trip occurs on high nuclear flux. This transient is assumed to occur 10 times during the life of the plant.

Control Rod Drop

This transient occurs if a bank of control rods drops to the fully inserted position due to a single component failure. The reactor is tripped on either low pressurizer pressure or negative flux rate, depending on the time in core life and magnitude of the reactivity insertion. It is assumed that this transient occurs 80 times over the life of the plant.

Inadvertent Safety Injection Actuation

A spurious safety injection signal results in an immediate reactor trip followed by actuation of the high head centrifugal charging pumps. These pumps deliver the contents of the boron injection tank to the RCS cold legs. The initial portion of this transient is similar to the reactor trip from full power with no cooldown. Controlled steam dump and feedwater flow after the trip removes core residual heat. Reactor coolant temperature and pressure decrease as the control rods move into the core.

Later in the transient, the injected water causes the RCS pressure to increase to the pressurizer power-operated relief valve setpoint and the primary and secondary temperatures to decrease gradually. The transient continues until the operator stops high head injection and aligns the charging system for normal operations. It is assumed that the plant is then returned to no-load conditions, with pressure and temperature changes controlled within normal limits.

For design purposes, this transient is assumed to occur 60 times over the 40-year design life of the plant.

Operating Basis Earthquake

The mechanical stresses resulting from the OBE are considered on a component basis. Fatigue analysis, where required by the codes, is performed by the supplier as part of the stress analysis report. The earthquake loads are a part of the mechanical loading conditions specified in the equipment specifications. The origin of their determination is separate and distinct from those transients resulting from fluid pressure and temperature. They are, however, considered in the design analysis.

The number of occurrences of this transient is specified in Table 3.9(N)-1.

Excessive Feedwater Flow

An excessive feedwater flow transient is conservatively defined as an umbrella case to cover occurrence of several events of the same general nature. The postulated transient results from inadvertent opening of a feedwater control valve while the plant is at the hot standby or no-load condition, with the feedwater, condensate, and heater drain systems in operation.

It is assumed that the stem of a feedwater control valve fails and the valve immediately reaches the full open position. In the steam generator directly affected by the malfunctioning valve ("failed loop"), the feedwater flow step increases from essentially zero flow to the value determined by the system resistance and the developed head of all operating feedwater pumps. Steam flow is assumed to remain at zero, and the temperature of the feedwater entering the steam generator is conservatively assumed to be 32°F. Feedwater flow is isolated on a reactor coolant low Tavg signal; a low pressurizer pressure signal actuates the safety injection system. Auxiliary feedwater flow, initiated by the safety injection signal, is assumed to continue with all pumps discharging into the affected steam generator. It is also assumed, for conservatism in the secondary side analysis, that auxiliary feedwater flows to the steam generators not affected by the malfunctioned valve, in the "unfailed loops." Plant conditions stabilize at the values reached in 600 seconds, at which time auxiliary feedwater flow is terminated. The plant is then either taken to cold shutdown, or returned to the no-load condition at a normal heatup rate with the auxiliary feedwater system under manual control.

For design purposes, this transient is assumed to occur 30 times during the life of the plant.

Emergency Conditions

The following primary system transients are considered emergency conditions:

a. Small LOCA
b. Small steam break
c. Complete loss of flow

Small Loss-of-Coolant Accident

For design transient purposes, the small LOCA is defined as a break equivalent to the severance of a 1-inch inside diameter branch connection. (Breaks smaller than 0.375-inch inside diameter can be handled by the normal makeup system and produce no

significant fluid systems transients.) Breaks which are much larger than 1 inch will cause accumulator injection soon after the accident and are regarded as faulted conditions. For design purposes, it is assumed that this transient occurs five times during the life of the plant. It should be assumed that the emergency core cooling system (ECCS) is actuated immediately after the break occurs and subsequently delivers water at a minimum temperature of 32°F to the RCS.

Small Steam Break

For design transient purposes, a small steam break is defined as a break equivalent in effect to a steam safety valve opening and remaining open. This transient is assumed to occur five times during the life of the plant. The following conservative assumptions are used in defining the transients:

a. The reactor is initially in a hot, zero power condition.

b. The small steam break results in immediate reactor trip and ECCS actuation.

c. A large shutdown margin, coupled with no feedback or decay heat, prevents heat generation during the transient.

d. The ECCS operates at a design capacity and repressurizes the RCS within a relatively short time.

Complete Loss of Flow

This accident involves a complete loss of flow from full power resulting from simultaneous loss of power to all reactor coolant pumps. The consequences of this incident are a reactor trip and turbine trip on undervoltage followed by automatic opening of the steam dump system. For design purposes, this transient is assumed to occur five times during the plant lifetime.

Faulted Conditions

The following primary system transients are considered faulted conditions. Each of the following accidents is evaluated for one occurrence:

a. Reactor coolant pipe break (large LOCA)
b. Large steam line break
c. Feedwater line break
d. Reactor coolant pump locked rotor

e. Control rod ejection
f. Steam generator tube rupture
g. Safe Shutdown Earthquake (SSE)

Reactor Coolant Pipe Break (Large LOCA)

Following rupture of a reactor coolant pipe resulting in a large loss of coolant, the primary system pressure decreases, causing the primary system temperature to decrease. Because of the rapid blowdown of coolant from the system and the comparatively large heat capacity of the metal sections of the components, it is likely that the metal will still be at or near the operating temperature by the end of blowdown. It is conservatively assumed that the safety injection system is actuated to introduce water at a minimum temperature of 32°F into the RCS. The safety injection signal will also result in reactor and turbine trips.

Large Steam Line Break

This transient is based on the complete severance of the largest steam line. The following conservative assumptions were made:

a. The reactor is initially in a hot, zero power condition.

b. The steam line break results in immediate reactor trip and safety injection actuation.

c. A large shutdown margin, coupled with no feedback or decay heat, prevents heat generation during the transient.

d. The safety injection system operates at design capacity and repressurizes the RCS within a relatively short time.

The above conditions result in the most severe temperature and pressure variations which the primary system will encounter during a steam line break accident.

Feedwater Line Break

This accident involves a double-ended rupture of the main feedwater piping while operating at full power, resulting in the rapid blowdown of one steam generator and the termination of main feedwater flow to the others. The blowdown is completed in approximately 27 seconds. Conditions were conservatively chosen to give the most severe primary side and secondary side transients. All auxiliary feedwater flow exits at the break.

Reactor Coolant Pump Locked Rotor

This accident is based on the instantaneous seizure of a reactor coolant pump with the plant operating at full power. The locked rotor can occur in any loop. Reactor trip occurs almost immediately, as the result of low coolant flow in the affected loop.

Control Rod Ejection

This accident is based on the single most reactive control rod being instantaneously ejected from the core. This reactivity insertion in a particular region of the core causes a severe pressure increase in the RCS, such that the pressurizer safety valves will lift, and also causes a more severe temperature transient in the loop associated with the affected region than in the other loops. For conservatism, the analysis is based on the reactivity insertion and does not include the mitigating effects (on the pressure transient) of coolant blowdown through the hole in the vessel head vacated by the ejected rod.

Steam Generator Tube Rupture

This accident postulates the double-ended rupture of a steam generator tube, resulting in a decrease in pressurizer level and reactor coolant pressure. Reactor trip will occur due to the resulting safety injection signal. In addition, safety injection actuation automatically isolates the feedwater lines, by tripping all feedwater pumps, closing the feedwater control valves, and closing the feedwater isolation valves; however, trip of the main feedwater pumps is not part of the primary success path for accident mitigation. When this accident occurs, some of the reactor coolant blows down into the affected steam generator, causing the shell side level to rise. The primary system pressure is reduced below the secondary safety valve setting. Subsequent recovery procedures call for isolation of the steam line leading from the affected steam generator. This accident will result in a transient which is no more severe than that associated with a reactor trip from full power. Therefore, it requires no special treatment insofar as fatigue evaluation is concerned, and no specific number of occurrences is postulated.

Safe Shutdown Earthquake

The mechanical dynamic or static equivalent loads due to the vibratory motion of the SSE are considered on a component basis.

Test Conditions

The following primary system transients under test conditions are discussed:

a. Primary side hydrostatic test
b. Secondary side hydrostatic test
c. Tube leakage test

Primary Side Hydrostatic Test

The pressure tests include both shop and field hydrostatic tests which occur as a result of component or system testing. This hydrostatic test is performed at a water temperature which is compatible with reactor vessel material ductility requirements and a test pressure of 3,107 psig (1.25 times design pressure). In this test, the RCS is pressurized to 3,107 psig coincident with a steam generator secondary side pressure of 0 psig. The RCS is designed for 10 cycles of these hydrostatic tests, which are performed prior to plant startup.

The provisions of ASME Code Case N-498-1 are used to perform a system leakage test in lieu of a 10-year hydrostatic test during Inspection Period 3 of each 10-year inspection interval.

Secondary Side Hydrostatic Test

The secondary side of the steam generator is pressurized to 1,481 psig with a minimum water temperature of 120°F coincident with the primary side at 0 psig.

For design purposes, it is assumed that the steam generator will experience 10 cycles of this test.

These tests may be performed either prior to plant startup, or subsequently following shutdown for major repairs or both.

Tube Leakage Test

During the life of the plant, it may be necessary to check the steam generator for tube leakage and tube-to-tube sheet leakage. This is done by visual inspection of the underside (channel head side) of the tube sheet for water leakage, with the secondary side pressurized. Tube leakage tests are performed during plant cold shutdowns.

For these tests, the secondary side of the steam generator is pressurized with water (maximum secondary side test pressure is 840 psig), initially at a relatively low pressure, and the primary

system remains depressurized. The underside of the tube sheet is examined visually for leaks. If any are observed, the secondary side is then depressurized and repairs made by tube plugging.

The total number of tube leakage test cycles is defined as 800 during the 40-year life of the plant. Following is a breakdown of the anticipated number of occurrences at each secondary side test pressure:

Test Pressure (psig)	Number of Occurrences
200	400
400	200
600	120
840	80

The vessel and water both must be about the same temperature and more than 120°F but less than 250°F.

3.9(N).1.2 Computer Programs Used in Analysis

The following computer programs have been used in dynamic and static analyses to determine mechanical loads, stresses, and deformations of seismic Category I components and equipment. These are described and verified in References 1 and 2, except for ANSYS and PIPESTRESS which are public domain computer codes.

a. WESTDYN-7 - static, dynamic, and fatigue analysis of redundant piping systems.

b. FIXFM - time history response of three-dimensional structures.

c. WESTDYN-2 - piping system stress analysis from time history displacement data.

d. STHRUST - hydraulic loads on loop components from blowdown information.

e. WESAN - reactor coolant loop equipment support structures analysis and evaluation.

f. WECAN - finite element structural analysis.

g. PS + CAEPIPE – static and dynamic piping structural and ASME Code Section III component Stress analysis.

h. PS CAT STR, version 4, ASME Section III Fatigue Analysis of class I components.

i. ANSYS – large, general purpose finite element program used for static, modal, response spectrum, time history, and plasticity analyses.

j. PIPESTRESS – linear elastic analysis of three-dimensional piping systems subject to a variety of loading conditions. The program has advanced static and dynamic analysis capabilities including multi-level response spectrum and time history analyses.

3.9(N).1.3 Experimental Stress Analysis

No experimental stress analysis methods have been used for Category I systems or components. However, Westinghouse made extensive use of measured results from prototype plants and various scale model tests, as discussed in Section 3.9(N).2.

3.9(N).1.4 Considerations for the Evaluation of the Faulted Condition

3.9(N).1.4.1 Loading Conditions

The structural stress analyses performed on the RCS considered the loadings specified in Table 3.9(N)-2. These loads result from thermal expansion, pressure, weight, OBE, SSE, and design basis LOCA, and plant operational thermal and pressure transients.

3.9(N).1.4.2 Analysis of the Reactor Coolant Loop and Supports

The loads used in the analysis of the reactor coolant loop piping are described in detail below.

Pressure

Pressure loading is identified as either membrane design pressure or general operating pressure, depending upon its application. The membrane design pressure is used in connection with the longitudinal pressure stress and minimum wall thickness calculations, in accordance with the ASME Code.

The term operating pressure is used in connection with determination of the system deflections and support forces. The steady state operating hydraulic forces based on the system initial pressure are applied as general operating pressure loads to the reactor coolant loop model at change in direction or flow area.

Weight

A deadweight analysis is performed to meet Code requirements by applying a 1.0g load downward on the complete piping system. The piping is assigned a distributed mass or weight as a function of its properties. This method provides a distributed loading to the piping system as a function of the weight of the pipe and contained fluid during normal operating conditions.

Seismic

The forcing functions for the reactor coolant loop seismic piping analyses are derived from dynamic response analyses of the containment building subjected to seismic ground motion. Input is in the form of time history motions applied at the basemat elevation.

For the OBE and SSE seismic analyses, 2- and 4-percent critical damping, respectively, are used in the reactor coolant loop supports system analysis.

Loss-of-Coolant Accident

Blowdown loads are developed in the reactor coolant loops as a result of transient flow and pressure fluctuations following a postulated pipe break at one of the auxiliary branch nozzles in the reactor coolant loops. Structural consideration of dynamic effects of postulated pipe breaks requires postulation of a finite number of break locations. Postulated pipe break locations are given in Section 3.6.

Time history dynamic analysis is performed for these postulated break cases. Hydraulic models are used to generate time-dependent hydraulic forcing functions used in the analysis of the reactor coolant loop for each break case. For a further description of the hydraulic forcing functions, refer to Section 3.6.

Transients

The Code requires satisfaction of certain requirements relative to operating transient conditions. Operating transients are tabulated in Section 3.9(N).1.1.

The vertical thermal growth of the reactor pressure vessel nozzle centerlines is considered in the thermal analysis to account for equipment nozzle displacement as an external movement.

The hot moduli of elasticity E, the coefficient of thermal expansion at the metal temperature α , the external movements transmitted to the piping due to vessel growth, and the temperature rise above the ambient temperature Δ T, define the required input data to perform the flexibility analysis for thermal expansion.

To provide the necessary high degree of integrity for the RCS, the transient conditions selected for fatigue evaluation are based on conservative estimates of the magnitude and anticipated frequency of occurrence of the temperature and pressure transients resulting from various plant operation conditions.

3.9(N).1.4.3 Reactor Coolant Loop Analytical Models and Methods

The analytical methods used in obtaining the solution consist of the transfer matrix method and stiffness matrix formulation for the static structural analysis, the non-linear time history modal superposition method for seismic dynamic analysis, and time history integration method for the LOCA dynamic analysis.

The integrated reactor coolant loop/supports system model was the basic system model used to compute loadings on components, component supports, and piping. The system model includes the stiffness and mass characteristics of the reactor coolant loop piping and components, the stiffness of supports, the stiffnesses of auxiliary line piping which affect the system, and the stiffness of piping restraints. The deflection solution of the entire system was obtained for the various loading cases from which the internal member forces and piping stresses were calculated.

Static

The reactor coolant loop/supports system model, constructed for the WESTDYN-7 computer program, is represented by an ordered set of data which numerically describe the physical system. Figure 3.9(N)-1 shows an isometric line schematic of this mathematical model. The steam generator and reactor coolant pump vertical and lateral support members are described in Section 5.4.14.

The spatial geometric description of the reactor coolant loop model is based upon the reactor coolant loop piping layout and equipment drawings. The node point coordinates and incremental lengths of the members are determined from these drawings.

Geometrical properties of the piping and elbows along with the modulus of elasticity E, the coefficient of thermal expansion α , the average temperature change from ambient temperature Δ T, and the weight per unit length were specified for each element. The primary equipment supports are represented by stiffness matrices which define restraint characteristics of the supports. Due to the symmetry of the static loadings, the reactor pressure vessel centerline was represented by a fixed boundary in the system mathematical model. The vertical thermal growth of the reactor vessel nozzle centerline is considered in the construction of the model.

The model is made up of a number of sections, each having an overall transfer relationship formed from its group of elements. The linear elastic properties of the section are used to define the stiffness matrix for the section. Using the transfer relationship for a section, the loads required to suppress all deflections at the ends of the section arising from the thermal and boundary forces for the section are obtained. These loads are incorporated into the overall load vector.

After all the sections have been defined in this matter, the overall stiffness matrix and associated load vector to suppress the deflection of all the network points is determined. By inverting the stiffness matrix, the flexibility matrix is determined. The flexibility matrix is multiplied by the negative of the load vector to determine the network point deflections due to the thermal and boundary force effects. Using the general transfer relationship, the deflections and internal forces are then determined at all node points in the system.

The static solutions for weight, thermal, and general pressure loading conditions are obtained by using the WESTDYN-7 computer program. The derivation of the hydraulic loads for the LOCA analysis of the loop is covered in Section 3.6.2.

Seismic

The model used in the static analysis is modified for the dynamic analysis by including the mass characteristics of the piping and equipment. All of the piping loops and a simplified representation of the containment building interior concrete are included in the system model. The effect of the equipment motion on the reactor coolant loop/supports system is obtained by modeling the mass and the stiffness characteristics of the equipment in the overall system model.

The steam generator is represented by four discrete masses. The lowest mass is located at the intersection of the centerlines of the inlet and outlet nozzles of the steam generator. The second

mass is located at the steam generator upper support elevation. The third mass is located at the top of the transition cone and the fourth mass at the steam outlet nozzle.

The reactor coolant pump is represented by a two discrete mass model. The lower mass is located at the intersection of the centerlines of the pump suction and discharge nozzles. The upper mass is located near the center of gravity of the motor.

The reactor vessel is represented by nine discrete masses. The masses are lumped at various locations along the length of the vessel and along the length of the representation of the core internals.

The component upper and lower lateral supports are essentially inactive during plant heatup, cooldown, and normal plant operating conditions. However, these restraints become active when the plant is at power and under the rapid motions of the reactor coolant loop components that occur from the dynamic loadings and are represented by stiffness matrices and/or individual tension or compression spring members in the dynamic model. The analyses are performed at the full power condition.

The time history analysis employs non-linear modal super-position techniques

From the mathematical description of the system, the overall stiffness matrix [K] is developed from the individual element stiffness matrices. After deleting the rows and columns representing rigid restraints, the stiffness matrix is revised to obtain a reduced stiffness matrix $[K_R]$ associated with mass degrees of freedom only. From the mass matrix and the reduced stiffness matrix, the natural frequencies and the normal modes are determined. The modal superposition method is then used to generate a time history solution for the response of the reactor coolant loop subjected to time history motions at the basemat.

Three time history motions are applied individually at the basemat elevations and the results are then combined using SRSS method.

Loss-of-Coolant Accident

The mathematical model used in the static analyses is modified for the loss-of-coolant accident analyses to represent the auxiliary branch nozzle breaks in the reactor coolant loop piping. The natural frequencies and eigenvectors are determined from this loop model.

The time-history hydraulic forces at the node points are combined to obtain the forces and moments acting at the corresponding structural lumped-mass node points.

The dynamic structural solutions for the full power LOCA (auxiliary branch nozzle) and steam line breaks are obtained by using a modified-predictor-corrector-integration technique and normal mode theory.

When elements of the system can be represented as single acting members (tension or compression members), they are considered as nonlinear elements, which are represented mathematically by the combination of a gap, a spring, and a viscous damper. The force in this nonlinear element is treated as an externally applied force in the overall normal mode solution. Multiple nonlinear elements can be applied at the same node, if necessary.

The time-history solution is performed using program WESTDYN. To properly simulate the release of the strain energy in the pipe, the internal forces, due to the initial steady state hydraulic forces, thermal forces, and weight forces, in the system at the postulated break location, are determined. The release of the strain energy is accounted for by applying the negative of these internal forces as a step function loading. The initial conditions are equal to zero because the solution is only for the transient problem (the dynamic response of the system from the static equilibrium position). The time history displacement solution of all dynamic degrees of freedom is obtained based on 4-percent critical damping.

The LOCA analysis of the reactor vessel includes all the forces acting on the vessel, including internal reactions, cavity pressure loads, and loop mechanical loads. The reactor vessel analysis is described in Section 3.9(N).1.4.6.

The time-history displacement response of the loop is used in computing support loads and in performing stress evaluation of the reactor coolant loop piping.

The support loads are computed by multiplying the support stiffness matrix and the displacement vector at the support point. The support loads are used in the evaluation of the supports.

The time-history displacements of the FIXFM subprogram are used as input to WESTDYN-2 to determine the internal forces, deflections, and stresses at each end of the piping elements. For this calculation, the displacements are treated as imposed deflections on the reactor coolant loop masses. The results of this solution are used in the piping stress evaluation.

Transients

Operating transients in a nuclear power plant cause thermal and/or pressure fluctuations in the reactor coolant fluid. The thermal transients cause time-varying temperature distributions across the pipe wall. These temperature distributions resulting in pipe wall stresses may be further subdivided in accordance with the Code into three parts--a uniform, a linear, and a nonlinear portion. The uniform portion results in general expansion loads. The linear portion causes a bending moment across the wall, and the nonlinear portion causes a skin stress.

The transients, as defined in Section 3.9(N).1.1, are used to define the fluctuations in plant parameters. A one-dimensional finite difference heat conduction program is used to solve the thermal transient problem. The pipe is represented by at least 50 elements through the thickness of the pipe. The convective heat transfer coefficient employed in this program represents the time-varying heat transfer due to free and forced convection. The outer surface is assumed to be adiabatic while the inner surface boundary experiences the temperature of the coolant fluid. Fluctuations in the temperature of the coolant fluid produce a temperature distribution through the pipe wall thickness which varies with time. An arbitrary temperature distribution across the wall is shown in Figure 3.9(N)-2.

The average through-wall temperature, TA, is calculated by integrating the temperature distribution across the wall. This integration is performed for all time steps so that TA is determined as a function of time.

$$T_A(t) = \frac{1}{H}\int_0^H T(X,t)\,dX$$

The range of temperature between the largest and smallest value of TA is used in the flexibility analysis to generate the moment loadings caused by the associated temperature changes.

The thermal moment about the mid-thickness of the wall caused by the temperature distribution through the wall is equal to

$$M = E\ a \int_0^H (X - \frac{H}{2})\ T(X,t)\,dX$$

The equivalent thermal moment produced by the linear thermal gradient as shown in Figure 3.9(N)-2 about the mid-wall thickness is equal to:

$$M_L = E\ a\frac{DT_1}{12}\ H^2$$

Equating M_L and M, the solution for T_1, as a function of time is:

$$DT_1(t) = \frac{12}{H^2}\int_0^H (X - \frac{H}{2})T(X,t)\,dX$$

The maximum nonlinear thermal gradient, T2, will occur on the inside surface and can be determined as the difference between the actual metal temperature on this surface and half of the average linear thermal gradient plus the average temperature.

$$DT_{21}(t) = |T(0,t) - T_A(t)| - |\frac{DT_1(t)}{2}|$$

Load Set Generation

A load set is defined as a set of pressure loads, moment loads, and through-wall thermal effects at a given location and time in each transient. The method of load set generation is based on Reference 3. The through-wall thermal effects are functions of time and can be subdivided into four parts:

a. Average temperature (T_A) is the average temperature through-wall of the pipe which contributes to general expansion loads.

b. Radial linear thermal gradient which contributes to the through-wall bending moment (ΔT_1).

c. Radial nonlinear thermal gradient (ΔT_2) which contributes to a peak stress associated with shearing of the surface.

d. Discontinuity temperature (T_A - T_B) represents the difference in average temperature at the cross-sections on each side of a discontinuity.

Each transient is described by at least two load sets, representing the maximum and minimum stress state during each transient. The construction of the load sets is accomplished by combining the following to yield the maximum (minimum) stress state during each transient.

a. ΔT_1

b. ΔT_2

c. $\alpha_A T_A - \alpha_B T_B$

d. Moment loads due to T_A

e. Pressure loads

This procedure produces at least twice as many load sets as transients for each point.

As a result of the normal mode spectral technique employed in the seismic analysis, the load components cannot be given signed values. Eight load sets are used to represent all possible sign permutations of the seismic moments at each point, thus ensuring the most conservative combination of seismic loads are used in the stress evaluation.

For all possible load set combinations, the primary-plus-secondary and peak stress intensities, fatigue reduction factors, and cumulative usage factors are calculated. The WESTDYN-7 program is used to perform this analysis in accordance with the ASME Code, Section III, Subsection NB-3650. Since it is impossible to predict the order of occurrence of the transients over a 40-year life, it is assumed that the transients can occur in any sequence. This is a very conservative assumption.

The combination of load sets yielding the highest alternating stress intensity range is used to calculate the incremental usage factor. The next most severe combination is then determined and the incremental usage factor calculated. This procedure is repeated until all combinations having allowable cycles $<10^6$ are formed. The total cumulative usage factor at a point is the summation of the incremental usage factors.

3.9(N).1.4.4 Primary Component Supports Models and Methods

The static and dynamic structural analyses employ the matrix method and normal mode theory for the solution of lumped-parameter, multimass structural models. The equipment support structure models are dual-purpose since they are required: 1) to quantitatively represent the elastic restraints which the supports impose upon the loop and 2) to evaluate the individual support member stresses due to the forces imposed upon the supports by the loop.

Models for the STRUDL computer program are constructed for the steam generator lower, steam generator upper lateral, reactor coolant pump lower, and pressurizer supports. The reactor vessel supports are modeled, using the WECAN computer program. Structure geometry, topology, and member properties are used in the modeling.

A description of the supports is found in Section 5.4.14. Detailed models are developed, using beam elements and plate elements, where applicable.

The respective computer programs are used with these models to obtain support stiffness matrices and member influence coefficients for the steam generator, reactor coolant pump, pressurizer, and reactor vessel supports. Unit force along and unit moment about each coordinate axis are applied to the models at the equipment vertical centerline joint. Stiffness analyses are performed for each unit load for each model.

Joint displacements for applied unit loads are formulated into flexibility matrices. These are inverted to obtain support stiffness matrices which were included in the reactor coolant loop model.

Loads acting on the supports obtained from the reactor coolant loop analysis, support structure member properties, and influence coefficients at each end of each member are input into the WESAN program.

For each support case used, the following is performed:

a. Combine the various types of support plane loads to obtain operating condition loads (normal, upset, emergency, or faulted).

b. Multiply member influence coefficients by operating condition loads to obtain all member internal forces and moments.

c. Solve appropriate stress or interaction equations for the specified operating condition. Maximum normal stress, shear stress, and combined load interaction equation values are printed as a ratio of maximum actual values divided by limiting values. ASME Code, Section III, Subsection NF stress and interaction equations are used with limits for the operating condition specified.

The reactor vessel support structure is analyzed for all loading conditions, using a finite element model. Vertical and horizontal forces delivered to the support structures from the reactor vessel shoe are applied to the structure, and element stresses and concrete forces obtained.

3.9(N).1.4.5 Analysis of Primary Components

Equipment which serves as part of the pressure boundary in the reactor coolant loop includes the steam generators, the reactor coolant pumps, the pressurizer, and the reactor vessel. This equipment is ANS Safety Class 1 and the pressure boundary meets the requirements of the ASME Code, Section III, Subsection NB. This equipment is evaluated for the loading combinations outlined in Table 3.9(N)-2. The equipment is analyzed for: 1) the normal loads of deadweight, pressure and thermal, 2) mechanical transients of Operating Basis Earthquake, Safe Shutdown Earthquake, and pipe ruptures, and 3) pressure and temperature transients outlined in Section 3.9(N).1.1.

The results of the reactor coolant loop analysis are used to determine the loads acting on the equipment nozzles and the support/component interface locations. These loads are supplied for all loading conditions on an "umbrella" load basis. That is, on the basis of previous plant analyses, a set of loads is determined which should be larger than those seen in any single plant analysis. The umbrella loads represent a conservative means of allowing detailed component analysis prior to the completion of the system analysis. Upon completion of the system analysis, conformance is demonstrated between the actual plant loads and the loads used in the analyses of the components. Any deviations where the actual load is larger than the umbrella load will be handled by individualized analysis.

For the Reactor Vessel Inlet nozzles (including the safe-ends) and the RSC cold leg (inlet) piping (at the safe-end to piping stainless steel weld), the site-specific loads (with a 10% increase) are shown in the Design Specification (M-706-00025). The Reactor Vessel Inlet nozzle loads are evaluated in the Design Stress Report (BB-S-018). The results of the analysis demonstrates that the Reactor Vessel inlet nozzles (including the safe-ends) and the RSC cold leg (inlet) piping meet the ASME Code requirements for design, normal, emergency, faulted and upset conditions.

Seismic analyses are performed individually for the reactor coolant pump, the pressurizer, and the steam generator. Detailed and complex dynamic models are used for the dynamic analyses. The response spectra corresponding to the building elevation at the highest component/building attachment elevation is used for the component analysis. Seismic analyses for the steam generator and pressurizer are performed using 2-percent damping for the OBE and 4-percent damping for the SSE. The analysis of the reactor coolant pump for determination of loads on the motor, main flange, and pump internals is performed, using the damping for bolted steel structures, that is, 4 percent for the OBE and 7 percent for the SSE (2 percent for OBE and 4 percent for SSE is used in the system analysis). This damping is applicable to the reactor coolant pump since the main flange, motor stand, and motor are all bolted assemblies (see Section 5.4). The reactor pressure vessel is qualified by static stress analysis based on loads that have been derived from dynamic analysis.

The pressure boundary portions of Class 1 valves in the RCS are designed and analyzed according to the requirements of NB-3500 of the ASME Code, Section III.

Valves in sample lines connected to the RCS are not considered to be ANS Safety Class 1 nor ASME Class 1. This is because the nozzles where the line connects to the primary system piping are orificed to a 3/8-inch hole. This hole restricts the flow such that loss through a severance of one of these lines can be made up by normal charging flow.

3.9(N).1.4.6 Reactor Vessel Support LOCA Loads

The LOCA analysis which is performed for the reactor vessel support loads includes nonaxisymmetric pressure distributions on the internals and on the vessel exterior walls.

A detailed dynamic model of the reactor vessel and internals is prepared which includes the stiffnesses of the reactor vessel support and the attached piping. Hydraulic forces are developed in the internals for the break at the reactor vessel nozzle; these forces are characterized by time-dependent forcing functions on the vessel and core barrel. In the derivation of these forcing functions, the fluid-structure (or hydroelastic) interaction in the downcomer region between the barrel and the vessel is taken into account. The break at the vessel nozzle also allows an asymmetric pressure distribution, and a subsequent force on the side of the vessel is calculated on a time-history basis for these asymmetric loads. As a result of the pipe break, loop mechanical loads are also applied to the vessel.

The loads from these three sources--the internals reactions, reactor cavity pressure loads, and the loop mechanical forces--are applied simultaneously in a nonlinear elastic dynamic time-history analysis on the model of the vessel, reactor vessel supports and internals. The results of this analysis are the dynamic loads on the reactor vessel supports and vessel time-history displacements. The maximum loads are combined with other applicable loads, such as seismic and deadweight, and applied statical|y to the vessel support structure. The maximum stresses in the support are calculated and compared to faulted condition stress allowables given in Section 3.9(N).1.4.7.

3.9(N).1.4.7 Stress Criteria for Class 1 Components and Component Supports

All Class 1 components and supports are designed and analyzed for the design, normal, upset, and emergency conditions to the rules and requirements of the ASME Code, Section III. The design analysis or test methods and associated stress or load allowable limits that will be used in evaluation of faulted conditions are those that are defined in Appendix F of the ASME Code with supplementary option outlined below:

a. The test method given in F-1370(d) is an acceptable method of qualifying components in lieu of satisfying the stress/load limits established for the component analysis.

The reactor vessel support pads are qualified using the test option. The reactor pressure vessel support pads are designed to restrain unidirectional horizontal motion, in addition to supporting the vessel. The design of the supports allows radial growth of the vessel but restrains the vessel from horizontal displacements, since tangential displacement of the vessel is prevented at each vessel nozzle.

To duplicate the loads that act on the pads during faulted conditions, the tests, which utilized a one-eighth linear scale model, were performed by applying a unidirectional static load to the nozzle pad. The load on the nozzle pad was reacted by a support shoe which was mounted to the test fixture.

The above modeling and application of load thus allows the maximum load capacity of the support pads to be accurately established. The test load, L_T, was then determined by multiplying the maximum collapse load by 64 (ratio of prototype area to model area) and including temperature effects in accordance with the rules of the ASME Code, Section III.

The loads on the reactor vessel support pads, as calculated in the system analysis for faulted conditions, are limited to the value of .80 L_T. The tests performed and the limits established for the test load method insure that the experimentally obtained value for L_T is accurate and that the support pad design is adequate for its intended function.

b. In the design of component supports, member compressive axial loads shall be limited to 0.67 times the critical buckling strength, per F-1370(c) of the ASME Code, Section III.

Loading combinations and allowable stresses for ASME Code, Section III, Class 1 components and supports are given in Tables 3.9(N)-2 and 3.9(N)-3.

The methods of load combination for each operating condition are as follows:

Design: Loads are combined by algebraic sum.

Normal, Upset: These loads are used in the fatigue evaluation in accordance with the methods prescribed in the ASME Code. Loadsets are defined for each transient, including the OBE, and are combined such that the maximum stress ranges are obtained without regard to the order in which the transients occur. (This is discussed in more detail in Section 3.9(N).1.4.3.)

Emergency: Loads are combined by algebraic sum.

Faulted: For primary equipment, primary equipment supports, and Class 1 branch lines, LOCA and SSE loads are combined using the square-root-of-the-sum-of-the-squares (SRSS) method on a load component basis (i.e., the LOCA F_x is combined with the SSE F_x by SRSS, the LOCA F_y is combined with the SSE F_y by SRSS, and

likewise for F_z, M_x, M_y, and M_z). The sustained loads, such as weight effects, are combined with the SRSS result by algebraic sum.

For reactor coolant loop piping, the deadweight moments were added to the LOCA moments prior to the SRSS combination of the LOCA and SSE loads.

3.9(N).2 DYNAMIC TESTING AND ANALYSIS

3.9(N).2.1 Preoperational Vibration and Dynamic Effects Testing on Piping

A preoperational piping vibration and dynamics effects testing program was conducted for the reactor coolant loop/supports systems during startup functional testing of WCGS. The purpose of these tests was to confirm that the systems have been adequately designed and supported for vibration as required by Section III of the ASME Code, Paragraph NB-3622.3.

The preoperational piping vibration and dynamic effects test program for the primary coolant loop system (this includes the hot legs, cold legs, crossover legs, reactor coolant pumps, and steam generators) was as follows:

a. The primary coolant loop system as defined above is instrumented with accelerometers to measure the dynamic response of the system during normal and transient operating conditions. In addition to normal steady-state operation, the test conditions included steady-state operation with various combinations of reactor coolant pumps in operation and transient conditions resulting from the starting and tripping of the reactor coolant pumps.

b. The test data was analyzed to determine the maximum alternating stress induced in the piping due to the measured vibration. This alternating stress was compared to acceptance criteria based on one-half the endurance limit at 10^6 cycles, defined in the ASME Code.

c. In the event that the measured vibration was found to be unacceptable based on the comparison with the acceptance criteria, appropriate corrective action would be implemented. This would have consisted of either:

    1. Further testing or analysis to demonstrate that the observed levels do not cause ASME stress and fatigue limits to be exceeded.

2. System modification to eliminate the unacceptable vibration with subsequent test verification.

It should be noted that the layout, size, etc., of the reactor coolant loop piping are very similar to those employed in Westinghouse plants now in operation. The operating experience that has been obtained from these plants indicates that the reactor coolant loop piping is adequately designed and supported to minimize vibration. In addition, vibration levels of the reactor coolant pump, which is the only mechanical component that could cause vibration of the reactor coolant loop piping, are held to acceptable limits.

Thus, excessive vibration of the reactor coolant loop piping should not be present. However, as added assurance that excessive vibration is not present, the reactor coolant loop system was subjected to the test program discussed above.

Visual inspections of the reactor coolant loop pressurizer surge line piping was performed prior to initial criticality to ensure that excessive vibration of the surge line does not exist.

3.9(N).2.2 Seismic Qualification Testing of Safety-Related Mechanical Equipment

The operability of Category I mechanical equipment must be demonstrated if the equipment is determined to be active, i.e., mechanical operation is relied on to perform a safety function. The operability of active Class 2 and 3 pumps, active Class 1, 2, or 3 valves, and their respective drives, operators, and vital auxiliary equipment is shown by satisfying the criteria given in Section 3.9(N).3.2. Other active mechanical equipment is shown operable by either testing, analysis, or a combination of testing and analysis. The operability programs implemented on the other active equipment are similar to the program described in Section 3.9(N).3.2 for pumps and valves. Testing procedures similar to the procedures outlined in Section 3.10(N) for electrical equipment are used to demonstrate operability if the component is mechanically or structurally complex such that its response cannot be adequately predicted analytically. Analysis may be used if the equipment is amenable to modeling and dynamic analysis.

Inactive seismic Category I equipment is shown to have structural integrity during all plant conditions in one of the following manners: 1) by analysis satisfying the stress criteria applicable to the particular piece of equipment or 2) by test showing that the equipment retains its structural integrity under the simulated test environment.

A list of seismic Category I equipment and the method of qualification used is provided in Table 3.2-1.

3.9(N).2.3 Dynamic Response Analysis of Reactor Internals Under Operational Flow Transients and Steady State Conditions

The vibration characteristics and behavior due to flow-induced excitation are very complex and not readily ascertained by analytical means alone. Reactor components are excited by the flowing coolant which causes oscillatory pressures on the surfaces. The integration of these pressures over the applied area should provide the forcing functions to be used in the dynamic analysis of the structures. In view of the complexity of the geometries and the random character of the pressure oscillations, a closed-form solution of the vibratory problem by integration of the differential equation of motion is not always practical and realistic. The determination of the forcing functions as a direct correlation of pressure oscillations cannot be practically performed independent of the dynamic characteristics of the structure. The main objective is to establish the characteristics of the forcing functions that essentially determine the response of the structures. By studying the dynamic properties of the structure from previous analytical and experimental work, the characteristics of the forcing function can be deduced. These studies indicate that the most important forcing functions are flow turbulence and pump-related excitation. The relevance of such excitations depends on many factors, such as type and location of component and flow conditions. The effects of these forcing functions have been studied from tests performed on models and prototype plants as well as component tests (Ref. 6, 7, 8, and 14).

The Indian Point No. 2 plant (Docket No. 50-247) has been established as the prototype for a four-loop plant internals verification program and was fully instrumented and tested during hot functional testing. In addition, the Trojan plant (Docket No. 50-344) instrumentation program and the Sequoyah No. 1 plant (Docket No. 50-327) instrumentation program provides prototype data applicable to WCGS (Ref. 6, 8, and 14).

WCGS is similar to Indian Point No. 2; the only significant difference is the modifications resulting from the use of 17 x 17 fuel, replacement of the annular thermal shield with neutron shielding pads, and the change to the UHI-style inverted top hat support structure configuration. These differences are addressed below.

a. 17 x 17 fuel

The only structural change in the internals resulting from the design change from the 15 x 15 to the 17 x 17 fuel assembly is the guide tube. The new 17 x 17 guide tubes are stronger and more rigid, hence they are less susceptible to flow-induced vibration. The fuel assembly itself is relatively unchanged in mass and spring rate, and thus no significant deviation of internals vibration is expected from the vibration with the 15 x 15 fuel assemblies.

b. Neutron shielding pads lower internals

The primary cause of core barrel excitation is flow turbulence, generated in the downcomer annulus (Ref. 8). The vibration levels to core barrel excitation for Trojan and WCGS, both having neutron shielding pads, are expected to be similar. The coolant inlet density of WCGS is slightly lower than Trojan, and the flow rate is slightly higher. Scale model tests show that the core barrel vibration varies as velocity is raised to a small power (Ref. 7). The difference in fluid density and flow rate results in approximately 4 percent higher core barrel vibration for WCGS than for Trojan. However, scale model test results (Ref. 7) and results from Trojan (Ref. 6) show that core barrel vibration of plants with neutron shielding pads is significantly less than that of plants with thermal shields. This information and the fact that low core barrel stresses and large safety margins were measured at Indian Point No. 2 (thermal shield configuration) lead to the conclusion that stresses less than or equal to those of Indian Point No. 2 will result on the WCGS internals.

c. UHI-style inverted top hat upper support configuration

The components of the upper internals are excited by turbulent forces due to axial-and cross-flows in the upper plenum and by pump-related excitations (Ref. 6 and 8). Sequoyah and WCGS have the same basic upper internals configuration; therefore, the general vibration behavior is not changed. The WCGS upper internals adequacy has been determined from data from instrumented plant tests at Sequoyah No. 1, scale model tests, and numerous operating plants. The results of testing at Sequoyah No. 1 (Ref. 14) showed that the components are excited by flow-induced and pump-related excitations. Analyses of the data indicate that the instrumented

components have adequate factors of safety, the random flow-induced responses are adequately predicted by scale models, and that the margins are higher with the core in place than during hot functional testing.

In addition, the WCGS upper internals configuration was tested in scale model tests, using the same modeling techniques as for the scale model tests of the UHI configuration. The responses of the WCGS upper internals have been calculated using the Sequoyah No. 1 and scale model information. The results show adequate factors of safety for all components.

The original test and analysis of the four-loop configuration was augmented by References 6, 7, 8, and 14 to cover the effects of successive hardware modifications.

3.9(N).2.4 Preoperational Flow-Induced Vibration Testing of Reactor Internals

Because the WCGS reactor internals design configuration is well characterized, as was discussed in Section 3.9(N).2.3, it was not considered necessary to conduct instrumented tests of the WCGS hardware. The recommendations of Regulatory Guide 1.20 are satisfied by conducting the confirmatory pre- and post-hot functional examination for integrity. This examination included in excess of 30 features illustrated in Figure 3.9(N)-3 with special emphasis on the following areas.

a. All major load-bearing elements of the reactor internals relied upon to retain the core structure in place.

b. The lateral, vertical, and torsional restraints provided within the vessel.

c. Those locking and bolting devices whose failure could adversely affect the structural integrity of the internals.

d. Those other locations on the reactor internal components which are similar to those which were examined on the prototype Indian Point No. 2, and on Trojan and Sequoyah No. 1.

e. The inside of the vessel was inspected before and after the hot functional test, with all the internals removed, to verify that no loose parts or foreign material are in evidence.

A particularly close inspection was made on the following items or areas, using a 5X or 10X magnifying glass, where applicable.

a. Lower internals

1. Upper barrel to flange girth weld.

2. Upper barrel to lower barrel girth weld.

3. Upper core plate aligning pin. Examine bearing surfaces for shadow marks, burnishing, buffing, or scoring. Inspect welds for integrity.

4. Irradiation specimen guide screw locking devices and dowel pins. Check for lockweld integrity.

5. Baffle assembly locking devices. Check for lockweld integrity.

6. Lower barrel to core support girth weld.

7. Neutron shielding pads screw locking devices and dowel pin lockwelds. Examine the interface surfaces for evidence of tightness. Check for lockweld integrity.

8. Radial support key welds.

9. Insert screw locking devices. Examine soundness of lockwelds.

10. Core support columns and instrumentation guide tubes. Check the joints for tightness and soundness of the locking devices.

11. Secondary core support assembly weld integrity.

12. Lower radial support keys and inserts. Examine bearing surfaces for shadow marks, burnishing, buffing, or scoring. Check the integrity of the lockwelds. These members supply the radial and torsional constraint of the internals at the bottom relative to the reactor vessel while permitting axial and radial growth between the two. Subsequent to the hot functional testing, the bearing surfaces of the key and keyway will show burnishing, buffing, or shadow marks which indicate pressure loading and

relative motion between these parts. Minor scoring of engaging surfaces is also possible and acceptable.

13. Gaps at baffle joint. Check gaps between baffle-to-baffle joints.

b. Upper internals

1. Thermocouple conduits, clamps, and couplings.

2. Guide tube, support column, and thermocouple assembly locking devices.

3. Support column and thermocouple conduit assembly clamp welds.

4. Upper core plate alignment inserts. Examine bearing surface for shadow marks, burnishing, buffing, or scoring. Check the locking devices for integrity of lockwelds.

5. Thermocouple conduit fitting locktab and clamp welds.

6. Guide tube enclosure and card welds.

Acceptance standards were the same as required in the shop by the original design drawings and specifications.

During the hot functional test, the internals were subjected to a total operating time at greater than normal full-flow conditions (four pumps operating) of at least 240 hours. This provides a cyclic loading of approximately 10^7 cycles on the main structural elements of the internals. In addition, there was some operating time with only one, two, and three pumps operating.

Pre- and post-hot functional inspection results serve to confirm that the internals were well behaved. When no signs of abnormal wear or harmful vibrations were detected and no apparent structural changes took place, the four-loop core support structures were considered to be structurally adequate and sound for operation.

3.9(N).2.5 Dynamic System Analysis of the Reactor Internals Under Faulted Conditions

Analysis of the reactor internals for blowdown loads resulting from a LOCA is based on the time-history response of the internals to simultaneously applied blowdown forcing functions. The forcing

functions are defined at points in the system where changes in cross-section of direction of flow occur such that differential loads are generated during the blowdown transient. The dynamic mechanical analysis can employ the displacement method, lumped parameters, and stiffness matrix formulations and assumes that all components behave in a linearly elastic manner.

In addition, because of the complexity of the system and the components, it is necessary to use finite element stress analysis codes to provide more detailed information at various points.

A blowdown digital computer program (Ref. 9) which was developed for the purpose of calculating local fluid pressure, flow, and density transients that occur in pressurized water reactor coolant systems during a LOCA was applied to the subcooled, transition, and saturated two-phase blowdown regimes. This is in contrast to programs such as WHAM (Ref. 10) which were applicable only to the subcooled region and which, due to their method of solution, could not be extended into the region in which large changes in the sonic velocities and fluid densities take place. This blowdown code is based on the method of characteristics wherein the resulting set of ordinary differential equations, obtained from the laws of conservation of mass, momentum, and energy, are solved numerically, using a fixed mesh in both space and time.

Although spatially one-dimensional conservation laws are employed, the code can be applied to describe three-dimensional system geometries by use of the equivalent piping networks. Such piping networks may contain any number of channels of various diameters, dead ends, branches (with up to six pipes connected to each branch), contractions, expansions, orifices, pumps, and free surfaces (such as in the pressurizer). System losses such as friction, contraction, expansion, etc. are considered.

The blowdown code evaluates the pressure and velocity transients for a maximum of 2,400 locations throughout the system. These pressure and velocity transients are stored as a permanent tape file and are made available to the program FORCE which utilizes a detailed geometric description in evaluating the loadings on the reactor internals.

Each reactor component for which FORCE calculations are required is designated as an element and assigned an element number. Forces acting upon each of the elements are calculated summing the effects of:

a. The pressure differential across the element.

b. Flow stagnation on and unrecovered orifice losses across the element.

c. Friction losses along the element.

Input to the code, in addition to the blowdown pressure and velocity transients, includes the effective area of each element on which the force acts due to the pressure differential across the element, a coefficient to account for flow stagnation and unrecovered orifice losses, and the total area of the element along which the shear forces act.

The mechanical analysis (Ref. 11) has been performed, using conservative assumptions. Some of the more significant assumptions are:

a. The mechanical and hydraulic analyses have considered the effect of hydroelasticity.

b. The reactor internals are represented by a multimass system connected with springs and dashpots simulating the elastic response and the viscous damping of the components. The modeling is conducted in such a way that uniform masses are lumped into easily identifiable discrete masses while elastic elements are represented by springs.

   The model described is considered to have a sufficient number of degrees of freedom to represent the most important modes of vibration in the vertical direction. This model is conservative in the sense that further mass-spring resolution of the system would lead to further attenuation of the shock effects obtained with the present model.

The pressure waves generated within the reactor are highly dependent on the location and nature of the postulated pipe failure. In general, the more rapid the severance of the pipe, the more severe the imposed loadings on the components. A one millisecond severance time is taken as the limiting case.

In the case of the hot leg break, the vertical hydraulic forces produce an initial upward lift of the core. A rarefaction wave propagates through the reactor hot leg nozzle into the interior of the upper core barrel. Since the wave has not reached the flow annulus on the outside of the barrel, the upper barrel is subjected to an impulsive compressive wave. Thus, dynamic instability (buckling) or large deflections of the upper core barrel, or

both, are possible during hot leg break which results in transverse loading on the upper core components as the fluid exits the hot leg nozzle.

In the case of the cold leg break, a rarefaction wave propagates along a reactor inlet pipe, arriving first at the core barrel at the inlet nozzle of the broken loop. The upper barrel is then subjected to a nonaxisymmetric expansion radial impulse which changes as the rarefaction wave propagates both around the barrel and down the outer flow annulus between vessel and barrel. After the cold leg break, the initial steady state hydraulic lift forces (upward) decrease rapidly (within a few milliseconds) and then increase in the downward direction. These cause the reactor core and lower support structure to move initially downward.

If a simultaneous seismic event with the intensity of the SSE is postulated with the LOCA, the imposed loading on the internals component may be additive in certain cases and, therefore, the combined loading must be considered. In general, however, the loading imposed by the earthquake is small compared to the blowdown loading.

The summary of the mechanical analysis follows:

Vertical Excitation Model for Blowdown

For the vertical excitation, the reactor internals are represented by a multimass system connected with springs and dashpots simulating the elastic response and the viscous damping of the components. Also incorporated in the multimass system is a representation of the motion of the fuel elements relative to the fuel assembly grids. The fuel elements in the fuel assemblies are kept in position by friction forces originating from the preloaded fuel assembly grid fingers. Coulomb-type friction is assumed in the event that sliding between the rods and the grid fingers occurs. In order to obtain an accurate simulation of the reactor internals response, the effects of internal damping, clearances between various internals, snubbing action caused by solid impact, Coulomb friction induced by fuel rod motion relative to the grids, and preloads in holddown springs have been incorporated in the analytical model. The modeling is conducted in such a way that uniform masses are lumped into easily identifiable discrete masses while elastic elements are represented by springs.

The appropriate dynamic differential equations for the multimass model describing the aforementioned phenomena are formulated and the results obtained using a digital computer program which computes the response of the multimass model when excited by a set of time-dependent forcing functions. The appropriate forcing

functions are applied simultaneously and independently to each of the masses in the system. The results from the program give the forces, displacements, and deflections as functions of time for all the reactor internals components (lumped masses). Reactor internals response to both hot and cold leg pipe ruptures were analyzed.

Transverse Excitation Model for Blowdown

Various reactor internal components are subjected to transverse excitation during blowdown. Specifically, the barrel, guide tubes, and upper support columns are analyzed to determine their response to this excitation.

Core Barrel - For the hydraulic analysis of the pressure transients during hot leg blowdown, the maximum pressure drop across the barrel is a uniform radial compressive impulse.

The barrel is then analyzed for dynamic buckling, using the following conservative assumptions:

a. The effect of the fluid environment is neglected.

b. The shell is treated as simply supported.

During cold leg blowdown, the upper barrel is subjected to a nonaxisymmetric expansion radial impulse which changes as the rarefaction wave propagates both around the barrel and down the outer flow annulus between vessel and barrel.

The analysis of transverse barrel response to cold leg blowdown is performed as follows:

a. The core barrel is analyzed as a shell with two variable sections to model the support flange and core barrel.

b. The barrel with the core and thermal shielding pads is analyzed as a beam elastically supported at the lower radial support and the dynamic response is obtained.

Guide Tubes - The guide tubes in closest proximity to the outlet nozzle of the ruptured loop are the most severely loaded during a blowdown. The transverse guide tube forces decrease with increasing distance from the ruptured nozzle location.

All of the guide tubes are designed to maintain the function of the control rods for a break size of 144 in.2 and smaller. No credit for the function of the control rods is assumed for break size areas above 144 in.2. However, the design of the guide tube

will permit control rod operation in all but four control rod positions, which is sufficient to maintain the core in a subcritical configuration, for break sizes up to a double-ended hot leg break. This double-ended hot leg break imposes the limiting lateral guide tube loading.

Upper Support Columns - Upper support columns located close to the broken nozzle during hot leg break will be subjected to transverse loads due to crossflow. The loads applied to the columns are computed with a method similar to the one used for the guide tubes, i.e., by taking into consideration the increase in flow across the column during the accident. The columns are studied as beams with variable sections, and the resulting stresses are obtained, using the reduced section modulus and appropriate stress risers for the various sections.

The effects of the gaps that could exist between vessel and barrel, between fuel assemblies, and between fuel assemblies and baffle plates are considered in the analysis. Linear analysis will not provide information about the impact forces generated when components impinge each other, but can, and is, applied prior to gap closure. Reference 11 provides further details of the blowdown method used in the analysis of the reactor internals.

The stresses due to the SSE (vertical and horizontal components) are combined with the blowdown stresses in order to obtain principal stresses and deflection.

All reactor internals components were found to be within acceptable stress and deflection limits for both hot leg and cold leg LOCAs occurring simultaneously with the SSE.

The results obtained from the linear analysis indicate that during blowdown, the relative displacement between the components will close the gaps and, consequently, the structures will impinge on each other, making the linear analysis unrealistic and forcing the application of non-linear methods to study the problem. Although linear analysis will not provide information about the impact forces generated when components impinge on each other, it can, and is, applied prior to gap closure. The effects of the gaps that could exist between vessel and barrel, between fuel assemblies, between fuel assemblies and baffle plates, and between the control rods and their guide paths were considered in the analysis. Both static and dynamic stress intensities are within acceptable limits. In addition, the cumulative fatigue usage factor is also within the allowable usage factor of unity.

The stresses due to the SSE (vertical and horizontal components) were combined with the blowdown stresses by the SRSS method in order to obtain the largest principal stress and deflection.

These results indicate that the maximum deflections and stress in the critical structures are below the established allowable limits. For the transverse excitation, it is shown that the upper barrel does not buckle during a hot leg break and that it has an allowable stress distribution during a cold leg break.

Even though control rod insertion is not required for plant shutdown, this analysis shows that most of the guide tubes will deform within the limits established experimentally to ensure control rod insertion. For the guide tubes deflected above the no-loss-of-function limit, it must be assumed that the rods will not drop. However, the core will still shut down due to the negative reactivity insertion in the form of core voiding. Shutdown will be aided by the great majority of rods that do drop. Seismic deflections of the guide tubes are generally negligible by comparison with the no loss of function limit.

3.9(N).2.6 Correlations of Reactor Internals Vibration Tests With the Analytical Results

As stated in Section 3.9(N).2.3, it was not considered necessary to conduct instrumented tests of the WCGS reactor vessel internals. Adequacy of these internals are verified by use of the Sequoyah and Trojan results, supported by scale model tests. References 7 and 8 describe predicted vibration behavior based on studies performed prior to the plant tests. These studies, which utilize analytical models, scale model test results, component tests, and results of previous plant tests, are used to characterize the forcing functions and establish component structural characteristics so that the flow-induced vibratory behavior and response levels for WCGS are estimated. These estimates were then compared to values deduced from plant test data obtained from the Sequoyah and Trojan internals vibration measurement programs.

3.9(N).3 ASME CODE CLASS 1, 2 AND 3 COMPONENTS, COMPONENT SUPPORTS AND CORE SUPPORT STRUCTURES

The ASME Code Class components are constructed in accordance with the ASME Code, Section III.

A detailed discussion of ASME Code Class 1 components is provided in Section 3.9(N).1. For core support structures, design loading conditions are discussed in Section 3.9(N).5.

In general, for reactor internals components and for core support structures the criteria for acceptability in regard to mechanical integrity analyses are that adequate core cooling and core shut-

down must be ensured. This implies that the deformation of the reactor internals must be sufficiently small so that the geometry remains substantially intact. Consequently, the limitations established on the internals are concerned principally with the maximum allowable deflections and stability of the parts in addition to a stress criterion to ensure integrity of the components.

For the LOCA plus the SSE condition, deflections of critical internal structures are limited. In a hypothesized downward vertical displacement of the internals, energy-absorbing devices limit the displacement after contacting the vessel bottom head, ensuring that the geometry of the core remains intact.

The following mechanical functional performance criteria apply:

a. Following the design basis accident, the functional criterion to be met for the reactor internals is that the plant shall be shut down and cooled in an orderly fashion so that fuel cladding temperature is kept within specified limits. This criterion implies that the deformation of critical components must be kept sufficiently small to allow core cooling.

b. For large breaks, the reduction in water density greatly reduces the reactivity of the core, thereby shutting down the core whether the rods are tripped or not. The subsequent refilling of the core by the ECCS uses borated water to maintain the core in a subcritical state. Therefore, the main requirement is to ensure the effectiveness of the ECCS. Insertion of the control rods, although not needed, gives further ensurance of the ability to shut the plant down and keep it in a safe shutdown condition.

c. The inward upper barrel deflections are controlled to ensure no contacting of the nearest rod cluster control guide tube. The outward upper barrel deflections are controlled in order to maintain an adequate annulus for the coolant between the vessel inner diameter and core barrel outer diameter.

d. The rod cluster control guide tube deflections are limited to ensure operability of the control rods.

e. To ensure no column loading of rod cluster control guide tubes, the upper core plate deflection is limited.

Method of analysis and testing for core support structures are discussed in Sections 3.9(N).2.3, 3.9(N).2.5, and 3.9(N).2.6. Stress limits and deformation criteria are given in Section 3.9(N).5.

3.9(N).3.1 Loading Combinations Design Transients, and Stress Limits (For ASME Code Class 2 and 3 Components)

Design pressure, temperature, and other loading conditions that provide the bases for the design of fluid systems Code Class 2 and 3 components are presented in the sections which describe the systems.

3.9(N).3.1.1 Design Loading Combinations

The design loading combinations for ASME Code Class 2 and 3 components and supports are given in Table 3.9(N)-4. The design loading combinations are categorized with respect to normal, upset, emergency, and faulted conditions. Stress limits for each of the loading combinations are component oriented and are presented in Tables 3.9(N)-5 and 3.9(N)-6 for tanks, Table 3.9(N)-7 for inactive* pumps, Table 3.9(N)-8 for active pumps, and Table 3.9(N)-9 for valves. Active** pumps and valves are discussed in Section 3.9(N).3.2. Design of component supports is discussed in Section 3.9(N).3.4.

3.9(N).3.1.2 Design Stress Limits

The design stress limits established for the components are sufficiently low to ensure that violation of the pressure retaining boundary will not occur. These limits, for each of the loading combinations, are component oriented and are presented in Tables 3.9(N)-5 through 3.9(N)-9.

---

* Inactive components are those whose operability are not relied upon to perform a safety function during the transients or events considered in the respective operating condition category.

** Active components are those whose operability is relied upon to perform a safety function (as well as reactor shutdown function) during the transients or events considered in the respective operating condition categories.

3.9(N).3.2 Pump and Valve Operability Assurance

3.9(N).3.2.1 Pump and Valve Operability Program

Mechanical equipment classified as safety-related must be capable of performing its function under postulated plant conditions. Equipment with faulted condition functional requirements includes active pumps and valves in fluid systems important to safety. Seismic analysis is presented in Section 3.7(N) and covers all safety-related mechanical equipment. A list of all active pumps supplied by Westinghouse is presented in Table 3.9(N)-10. Active valves supplied by Westinghouse are listed in Table 3.9(N)-11. (Although the Westinghouse nuclear steam supply system (NSSS) check valves are included in Table 3.9(N)-11, they are not considered to be active (powered) components in the Westinghouse design with respect to the Emergency Core Cooling System (ECCS) failure modes and effects analysis (FMEA) of active components or the single active failure analysis for ECCS components. The NSSS check valves are therefore not described or included as active components in Tables 6.3-5 and 6.3-6. Refer to Section 6.3.2.5.)

All active pumps are qualified for operability by first being subjected to rigid tests both prior to installation in the plant and after installation in the plant. The in-shop tests include: 1) hydrostatic tests of pressure-retaining parts to 150 percent of the design pressure, 2) seal leakage tests at the same pressure used in the hydrostatic tests, and 3) performance tests, while the pump is operated with flow, to determine total developed head, minimum and maximum head, net positive suction head requirements, and other pump/motor parameters. Also monitored during these operating tests are bearing temperatures and vibration levels. Bearing temperature limits are determined by the manufacturer based on the bearing material, clearances, oil type, and rotational speed. These limits are approved by Westinghouse. After the pump is installed in the plant, it undergoes the cold hydrostatic tests, hot functional tests, and the required periodic inservice inspection and operation. These tests demonstrate that the pump functions as required during all normal operating conditions of the plant.

In addition to these tests, the safety-related active pumps are qualified for operability during SSE conditions by ensuring that the pump will continue operating and not be damaged during the seismic event.

The pump manufacturer is required to show that the pump operates normally when subjected to the maximum seismic accelerations and maximum faulted nozzle loads. It is required that test or analysis be used to show that the lowest natural frequency of the pump is greater than 33 Hz. The pump, when having a natural frequency above 33 Hz, is considered rigid. This frequency is considered sufficiently high to avoid problems with amplification between the component and structure for all seismic areas. A static shaft deflection analysis of the rotor is performed with the conservative SSE accelerations of 2.1 g in two orthogonal horizontal directions and 2.1 g vertical acting simultaneously. The deflections determined from the static shaft analysis are

compared to the allowable rotor clearances. The nature of seismic disturbances dictates that the maximum contact (if it occurs) will be of short duration. In order to avoid damage during the faulted plant condition, the stresses caused by the combination of normal operating loads, SSE, and dynamic system loads are limited to the material elastic limit, as indicated in Table 3.9(N)-8. In addition, the pump casing stresses caused by the maximum seismic nozzle loads are limited to stresses outlined in Table 3.9(N)-8. The maximum seismic nozzle loads are also considered in an analysis of the pump supports to ensure that a system misalignment cannot occur.

Performing these analyses with the conservative loads stated and with the restrictive stress limits of Table 3.9(N)-8 as allowables, ensures that critical parts of the pump would not be damaged during the faulted condition and that, therefore, the reliability of the pump for post-faulted condition operation would not be impaired by the seismic event.

Where the natural frequency is found to be below 33 Hz, an analysis is performed to determine the amplified input accelerations necessary to perform the static analysis. The adjusted accelerations are determined, using the same conservatisms contained in the 2.1 g horizontal and 2.1 g vertical accelerations used for "rigid" structures. The static analysis is performed, using the adjusted accelerations; the stress limits stated in Table 3.9(N)-8 are still satisfied.

The second criterion necessary to ensure operability is that the pump continues to function throughout the SSE. The pump/motor combination is designed to rotate at a constant speed under all conditions unless the rotor becomes completely seized, i.e., with no rotation. Typically, the rotor can be seized 5 full seconds before a circuit breaker, shuts down the pump to prevent damage to the motor. However, the high rotary inertia in the operating pump rotor and the nature of the random, short duration loading characteristics of the seismic event prevent the rotor from losing its function. In actuality, the seismic loadings cause only a slight increase, if any, in the torque (i.e., motor current) necessary to drive the pump at the constant design speed. Therefore, the pump would not shut down during the SSE and would operate at the design speed despite the SSE loads.

To complete the seismic qualification procedures, the pump motor is independently qualified for operation during the maximum seismic event. The pump motor is qualified by meeting the requirements of IEEE Standard 344-1975 with the additional requirements and justifications outlined in Section 3.9(N).3.2.2. Any auxiliary equipment identified to be vital to the operation of

the pump or pump motor that is not qualified for operation, along with the pump analysis or motor qualification, is separately qualified for operation at the accelerations it experiences at its mounting.

The operability program above gives the required ensurance that the safety-related pump and motor assemblies will not be damaged and will continue operating and performing their intended functions under SSE loadings. Program requirements take into account the complex characteristics of the pump and its motor drive.

Since the pump is not damaged during the faulted condition, the functional ability of active pumps after the faulted condition is ensured since only normal operating loads and steady state nozzle loads exist. Since it is demonstrated that the pumps would not be damaged during the faulted condition, the post-faulted condition operating loads are identical to the normal plant operating loads. This is ensured by requiring that the imposed nozzle loads (steady state loads) for normal conditions and post-faulted conditions are limited by the magnitudes of the normal condition nozzle loads. The post-faulted condition ability of the pumps to function under these applied loads is proven during the normal operating plant conditions for active pumps.

Analysis was used to show that active pumps meet the operability criteria set forth herein. Testing was used in selected cases to determine natural frequencies of the equipment.

The safety-related valves are subjected to a series of stringent tests prior to service and during the plant life. Prior to installation, the following tests are performed: shell hydrostatic test to ASME Code, Section III requirements, backseat and main seat leakage tests, disc hydrostatic test, and operational tests to verify that the valve will open and close. Qualification of motor operators for environmental conditions is discussed in Section 3.11(N) and Appendix 3A, Regulatory Guide 1.73. Cold hydrostatic qualification tests, hot functional qualification tests, required periodic inservice inspections, and required periodic inservice operation are performed in-situ to verify and ensure the functional ability of the valve. These tests guarantee the reliability of the valve for the design life of the plant. The valves are constructed in accordance with the ASME Code, Section III. The maximum stress limits used for active Class 2 and 3 valves are shown in Table 3.9(N)-9. On active valves, an analysis of the extended structure is also performed for static equivalent seismic SSE loads applied at the center of gravity of the extended structure.

In addition to these tests and analyses, representative valves of each design type are tested for verification of operability during a simulated plant faulted condition event by demonstrating operational capabilities within the specified limits. The testing procedures are described below.

The valve is mounted in a manner that conservatively represents typical valve installations. The valve includes the operator, pilot solenoid valves, and limit switches when such are normally attached to the valve in service. The faulted condition nozzle loads are shown, by analysis, to not affect the operability of the valve. The operability of the valve during a faulted condition is demonstrated by satisfying the following criteria:

a. All the active valves are designed to have a first natural frequency which is greater than 33 Hz.

b. The actuator and yoke of the valve system is statically deflected an amount equal to the deflection caused by the faulted condition accelerations applied at the center of gravity of the operator alone in the direction of the weakest axis of the yoke. The design pressure of the valve is simultaneously applied to the valve during the static deflection tests.

c. The valve is cycled while in the deflected position. The time required to open or close the valve in the deflected position is compared to similar data taken in the undeflected condition to evaluate the significance of any change.

d. Motor operators, external limit switches, and pilot solenoid valves necessary for operation are qualified by IEEE Standard 344-1975 with the additional requirements and justifications as supplied in Section 3.9(N).3.2.2.

The accelerations that are used for the static valve qualification shall be equivalent, as justified by analysis, to 4.0 g acting in two orthogonal horizontal directions and 4.0 g vertical. The piping designer must maintain the operator accelerations to these levels, unless the valves have been qualified for higher acceleration levels.

If the natural frequency of the valve is less than 33 Hz, amplified accelerations are derived from the valve location response spectra and the valve dynamic characteristics. The adjusted accelerations are then used in the static analysis and the valve operability testing described above.

The above testing program applies to valves with extended structures. The testing is conducted on a representative number of valves. Valves from each of the primary safety-related design types are tested. Valve sizes that cover the range of sizes in service are qualified by the tests, and the results are used to qualify all valves within the intermediate range of sizes.

Valves that are safety-related but can be classified as not having an extended structure, such as check valves and safety valves, are considered separately.

The check valves are characteristically simple in design and their operation is not affected by seismic accelerations or the maximum applied nozzle loads. The check valve design is compact, and there are no extended structures or masses whose motion could cause distortions that could restrict operation of the valve. The nozzle loads due to maximum seismic excitation do not affect the functional ability of the valve since the valve disc is typically designed to be isolated from the body wall. The clearance supplied by the design around the disc prevents the disc from becoming bound or restricted due to any body distortions caused by nozzle loads. Therefore, the design of these valves is such that once the structural integrity of the valve is ensured using standard methods, the ability of the valve to operate is ensured by the design features.

For these reasons, the Westinghouse NSSS check valves are treated differently than other safety-related valves in the NSSS scope with respect to the above described testing program for valves with extended structures. (For these same reasons, and notwithstanding the fact that the NSSS check valves are subject to certain testing requirements described below, the NSSS check valves are not considered to be active (powered) components in Tables 6.3-5 and 6.3-6 with respect to the Emergency Core Cooling System (ECCS) failure modes and effects analysis (FMEA) or the single active failure analysis for ECCS components.)

Although considered separately with respect to the above valve operability program, the NSSS check valves are subject to the following: 1) in shop hydrostatic tests, 2) in shop seat leakage tests, and 3) periodic in-situ valve exercising and inspection to ensure the functional ability of the valves.

The pressurizer safety valves are qualified by the following procedures (these valves are also subjected to tests and analysis similar to check valves): stress and deformation analyses of critical items that may affect operability for faulted condition loads, in shop hydrostatic and seat leakage tests, and periodic in-situ valve inspection. In addition to these tests, a static load equivalent to that applied by the faulted condition is applied at the top of the bonnet, and the pressure is increased until the valve mechanism actuates. Successful actuation within the design requirements of the valve ensures its overpressurization safety capabilities during a seismic event.

Using these methods, all the safety-related valves in the systems are qualified for operability during a faulted event. These methods outlined above conservatively simulate the seismic event and ensure that the active valves perform their safety-related function when necessary.

3.9(N).3.2.2 Pump Motor and Valve Operator Qualification

Active pump motors and active valve motor operators (and limit switches and solenoid valves) are seismically qualified in accordance with IEEE Standard 344-1975. Where the testing option is chosen, sine-beat testing is justified. This justification is provided by satisfying one or more of the following requirements to demonstrate that multifrequency response is negligible or the sine-beat input is of sufficient magnitude to conservatively account for this effect.

a. The equipment response is basically due to one mode.

b. The sine-beat response spectra envelopes the floor response spectra in the region of significant response.

c. The floor response spectra consists of one dominant mode and has a peak at this frequency.

If the degree of coupling in the equipment is small, then single axis testing is justified. Multiaxis testing is required if there is considerable cross coupling; however, if the degree of coupling can be determined, then single axis testing can be used with the input sufficiently increased to include the effect of coupling on the response of the equipment.

Seismic qualification by analysis alone, or by a combination of analysis and testing, is used when justified. The analysis program is justified by: 1) demonstrating that equipment being qualified is amenable to analysis, and 2) that the analysis either correlates with test results or is performed using standard analysis techniques.

3.9(N).3.3 Design and Installation Details in Mounting of Pressure Relief Devices

Refer to Section 3.9(B).3.3.

3.9(N).3.4 Component Supports (ASME Code Class 2 and 3)

Refer to Section 3.9(N).1 for a discussion of ASME Code Class 1 component supports.

Class 2 and 3 component supports are designed and analyzed for design, normal, upset, and emergency conditions to the rules and requirements of Subsection NF of Section III of the ASME Code. The design analyses or test methods and associated stress or load allowable limits used in the evaluation of linear supports for faulted conditions are those defined in Appendix F of the ASME

Code. Plate and shell-type supports satisfy the faulted condition limits provided in Subsection NF, Paragraph 3321. Supplementary requirements are outlined below.

a. For linear type supports designed by analysis for ASME Code Class 2 and 3 components, the following applies. The increased design limit for stress range identified in NF-3231.1(a) is limited to the smaller of 2 S_y or S_u, unless otherwise justified by shakedown analysis.

b. Supports for active Class 2 and 3 pumps are designed so that stresses do not exceed S_y. Additionally, the requirements presented in Section 3.9(N).3.2 that include stress analysis and evaluation of pump/motor support alignment are met. Thus the operability of active pumps is not compromised by the supports during faulted conditions.

c. Active valves are, in general, supported only by the attached piping. Exterior supports on the valve are not used.

3.9(N).4 CONTROL ROD DRIVE SYSTEM (CRDS)

3.9(N).4.1 Descriptive Information of CRDS

Control Rod Drive Mechanism

Control rod drive mechanisms (CRDMs) are located on the dome of the reactor vessel. They are coupled to rod control clusters which have absorber material over the entire length of the control rods. The CRDM is shown in Figures 3.9(N)-4 and 3.9(N)-5.

The primary function of the CRDM is to insert or withdraw rod cluster control assemblies (RCCAs) within the core to control average core temperature and to shut down the reactor.

The CRDM is a magnetically operated jack. A magnetic jack is an arrangement of three electro-magnets which are energized in a controlled sequence by a power cycler to insert or withdraw rod cluster control assemblies in the reactor core in discrete steps. Rapid insertion of the rod cluster control assemblies occurs when electrical power is interrupted.

The CRDM consists of four separate subassemblies. They are the pressure vessel, coil stack assembly, latch assembly, and the drive rod assembly.

a. The pressure vessel includes a latch housing and a rod travel housing which are connected by a threaded, seal welded, maintenance joint which facilitates replacement of the latch assembly. The closure at the top of the rod travel housing is a threaded plug with a canopy seal weld for pressure integrity. This closure contains a threaded plug used for venting.

   The latch housing is the lower portion of the vessel and contains the latch assembly. The rod travel housing is the upper portion of the vessel and provides space for the drive rod during its upward movement as the control rods are withdrawn from the core.

b. The coil stack assembly includes the coil housings, electrical conduit and connector, and three operating coils: 1) the stationary gripper coil, 2) the movable gripper coil, and 3) the lift coil.

   The coil stack assembly is a separate unit which is installed on the drive mechanism by sliding it over the outside of the latch housing. It rests on the base of the latch housing without mechanical attachment. Energizing the operating coils causes movement of the pole pieces and latches in the latch assembly.

c. The latch assembly includes the guide tube, stationary pole pieces, movable pole pieces, and two sets of latches: 1) the movable gripper latches and 2) the stationary gripper latches.

   The latches engage grooves in the drive rod assembly. The movable gripper latches are moved up or down in 5/8-inch steps by the lift pole to raise or lower the drive rod. The stationary gripper latches hold the drive rod assembly while the movable gripper latches are repositioned for the next 5/8-inch step.

d. The drive rod assembly includes a flexible coupling, a drive rod, a disconnect button, a disconnect rod, and a locking button.

   The drive rod has 5/8-inch grooves which receive the latches during holding or moving of the drive rod. The flexible coupling is attached to the drive rod and provides the means for coupling to the rod cluster control assembly.

The disconnect button, disconnect rod, and locking button provide positive locking of the coupling to the rod cluster control assembly and permits remote disconnection of the drive rod.

The CRDM is a trip design. Tripping can occur during any part of the power cycler sequencing if electrical power to the coils is interrupted.

The CRDM is threaded and seal welded on an adapter on top of the reactor vessel and is coupled to the rod cluster control assembly directly below.

The mechanism is capable of raising or lowering a 360-pound load (which includes the drive rod weight) at a rate of 45 inches/minute. Withdrawal of the RCCA is accomplished by magnetic forces while insertion is by gravity.

The mechanism internals are designed to operate in 650°F reactor coolant. The pressure vessel is designed to contain reactor coolant at 650°F and 2,500 psia. The three operating coils are designed to operate at 392°F with forced air cooling required to maintain the coils below or at 392°F.

The CRDM shown schematically in Figure 3.9(N)-5 withdraws and inserts a RCCA as shaped electrical pulses are received by the operating coils. An ON or OFF sequence, repeated by silicon controlled rectifiers in the power programmer, causes either withdrawal or insertion of the control rod. Position of the control rod is measured by 42 discrete coils mounted on the position indicator assembly surrounding the rod travel housing. Each coil magnetically senses the entry and presence of the top of the ferromagnetic drive rod assembly as it moves through the coil center line.

During plant operation the stationary gripper coil of the drive mechanism holds the RCCA in a static position until a stepping sequence is initiated at which time the movable gripper coil and lift coil is energized sequentially.

Rod Cluster Control Assembly Withdrawal

The RCCA is withdrawn by repetition of the following sequence of events (refer to Figure 3.9(N)-5).

a. Movable gripper coil (B) - ON

The latch locking plunger raises and swings the movable gripper latches into the drive rod assembly groove. A

1/16-inch axial clearance exists between the latch teeth and the drive rod.

b. Stationary gripper coil (A) - OFF

The force of gravity, acting upon the drive rod assembly and attached control rod, causes the stationary gripper latches and plunger to move downward 1/16 inch until the load of the drive rod assembly and attached control rod is transferred to the movable gripper latches. The plunger continues to move downward and swings the stationary gripper latches out of the drive rod assembly groove.

c. Lift coil (C) - ON

The 5/8-inch gap between the movable gripper pole and the lift pole closes and the drive rod assembly raises one step length (5/8 inch).

d. Stationary gripper coil (A) - ON

The plunger raises and closes the gap below the stationary gripper pole. The three links, pinned to the plunger, swing and the stationary gripper latches into a drive rod assembly groove. The latches contact the drive rod assembly and lift it (and the attached control rod) 1/16 inch. The 1/16-inch vertical drive rod assembly movement transfers the drive rod assembly load from the movable gripper latches to the stationary gripper latches.

e. Movable gripper coil (B) - OFF

The latch locking plunger separates from the movable gripper pole under the force of a spring and gravity. Three links, pinned to the plunger, swing the three movable gripper latches out of the drive rod assembly groove.

f. Lift coil (C) - OFF

The gap between the movable gripper pole and lift pole opens. The movable gripper latches drop 5/8 inch to a position adjacent to a drive rod assembly groove.

g. Repeat Step a

The sequence described above (Items a through f) is termed as one step or one cycle. The rod cluster control

assembly moves 5/8 inch for each step or cycle. The sequence is repeated at a rate of up to 72 steps per minute and the drive rod assembly (which has a 5/8 inch groove pitch) is raised 72 grooves per minute. The RCCA is thus withdrawn at a rate up to 45 inches per minute.

Rod Cluster Control Assembly Insertion

The sequence for RCCA insertion is similar to that for control rod withdrawal, except that the timing of lift coil (C) ON and OFF is changed to permit the lowering of the control assembly.

a. Lift coil (C) - ON

The 5/8-inch gap between the movable gripper and lift pole closes. The movable gripper latches are raised to a position adjacent to a drive rod assembly groove.

b. Movable gripper coil (B) - ON

The latch locking plunger raises and swings the movable gripper latches into a drive rod assembly groove. A 1/16-inch axial clearance exists between the latch teeth and the drive rod assembly.

c. Stationary gripper coil (A) - OFF

The force of gravity, acting upon the drive rod assembly and attached RCCA, causes the stationary gripper latches and plunger to move downward 1/16 inch until the load of the drive rod assembly and attached RCCA is transferred to the movable gripper latches. The plunger continues to move downward and swings the stationary gripper latches out of the drive rod assembly groove.

d. Lift coil (C) - OFF

The force of gravity and spring force separates the movable gripper pole from the lift pole and the drive rod assembly and attached RCCA drop down 5/8 inch.

e. Stationary gripper (A) - ON

The plunger raises and closes the gap below the stationary gripper pole. The three links, pinned to the plunger, swing the three stationary gripper latches into a drive rod assembly groove. The latches contact the drive rod assembly and lift it (and the attached control rod) 1/16 inch. The 1/16-inch vertical drive rod

assembly movement transfers the drive rod assembly load from the movable gripper latches to the stationary gripper latches.

f. Movable gripper coil (B) - OFF

The latch locking plunger separates from the movable gripper pole under the force of a spring and gravity. Three links, pinned to the plunger, swing the three movable gripper latches out of the drive rod assembly groove.

g. Repeat Step a

The sequence is repeated, as for RCCA withdrawal, up to 72 times per minute which gives an insertion rate of 45 inches per minute.

Holding and Tripping of the Control Rods

During most of the plant operating time, the CRDMs hold the RCCAs withdrawn from the core in a static position. In the holding mode, only one coil, the stationary gripper coil (A), is energized on each mechanism. The drive rod assembly and attached RCCAs hang suspended from the three latches.

If power to the stationary gripper coil is cut off, the combined weight of the drive rod assembly and the RCCA plus the stationary gripper return spring are sufficient to move the latches out of the drive rod assembly groove. The control rod falls by gravity into the core. The trip occurs as the magnetic field, holding the stationary gripper plunger half against the stationary gripper pole, collapses and the stationary gripper plunger half is forced down by the weight stationary gripper return spring and weight acting upon the latches. After the RCCA is released by the mechanism, it falls freely until the control rods enter the dashpot section of the thimble tubes in the fuel assembly.

3.9(N).4.2 Applicable CRDS Design Specifications

For those components in the CRDS comprising portions of the reactor coolant pressure boundary, conformance with the General Design Criteria and 10 CFR 50, Section 50.55a is discussed in Sections 3.1 and 5.2. Conformance with Regulatory Guides pertaining are discussed in Sections 4.5 and 5.2.3.

Design Bases

Bases for temperature, stress on structural members, and material compatibility are imposed on the design of the reactivity control components.

Design Stresses

The CRDS is designed to withstand stresses originating from various operating conditions as summarized in Table 3.9(N)-1.

Allowable Stresses: For normal operating conditions Section III of the ASME Code is used. All pressure boundary components are analyzed as Class 1 components.

Dynamic Analysis: The cyclic stresses due to dynamic loads and deflections are combined with the stresses imposed by loads from component weights, hydraulic forces, and thermal gradients for the determination of the total stresses of the CRDS.

Control Rod Drive Mechanisms

The CRDM pressure housings are Class 1 components designed to meet the stress requirements for normal operating conditions of Section III of the ASME Code. Both static and alternating stress intensities are considered. The stresses originating from the required design transients are included in the analysis.

A dynamic seismic analysis is required on the CRDMs when a seismic disturbance has been postulated to confirm the ability of the pressure housing to meet ASME Code, Section III allowable stresses and to confirm its ability to trip when subjected to the seismic disturbance.

Control Rod Drive Mechanism Operational Requirements

The basic operational requirements for the CRDMs are:

a. 5/8-inch step

b. 147-inch travel

c. 360-pound maximum load

d. Step in or out at 45 inches/minute (72 steps/minute)

e. Electrical power interruption shall initiate release of drive rod assembly

f. Trip delay time of less than 150 milliseconds - Free fall of drive rod assembly shall begin less than 150 milliseconds after power interruption no matter what holding or stepping action is being executed with any load and coolant temperature of 100°F to 550°F.

g. 40-year design life with normal refurbishment

3.9(N).4.3 Design Loads, Stress Limits, and Allowable Deformations

3.9(N).4.3.1 Pressure Vessel

The pressure retaining components are analyzed for loads corresponding to normal, upset, emergency, and faulted conditions. The analysis performed depends on the mode of operation under consideration.

The scope of the analysis requires many different techniques and methods, both static and dynamic.

Some of the loads that are considered on each component where applicable are as follows:

a. Control rod trip (equivalent static load)
b. Differential pressure
c. Spring preloads
d. Coolant flow forces (static)
e. Temperature gradients
f. Differences in thermal expansion
    1. Due to temperature differences
    2. Due to expansion of different materials
g. Interference between components
h. Vibration (mechanically or hydraulically induced)
i. All operational transients listed in Table 3.9(N)-1
j. Pump overspeed
k. Seismic loads (OBE and SSE)
l. Blowdown forces (due to cold and hot leg branch nozzle break)

The main objective of the analysis is to satisfy allowable stress limits, to ensure an adequate design margin, and to establish deformation limits which are concerned primarily with the functioning of the components. The stress limits are established not only to ensure that peak stresses will not reach unacceptable values, but also limit the amplitude of the oscillatory stress component in consideration of fatigue characteristics of the materials. Standard methods of strength of materials are used to establish the stresses and deflections of these components. The

dynamic behavior of the reactivity control components has been studied, using experimental test data and experience from operating reactors.

3.9(N).4.3.2 Drive Rod Assembly

All postulated failures of the drive rod assemblies either by fracture or uncoupling lead to a reduction in reactivity. If the drive rod assembly fractures at any elevation, that portion remaining coupled falls with and is guided by the RCCA. This always results in reactivity decrease.

3.9(N).4.3.3 Latch Assembly and Coil Stack Assembly

Results of Dimensional and Tolerance Analysis

With respect to the CRDM system as a whole, critical clearances are present in the following areas:

a. Latch assembly - thermal clearances

b. Latch arm - drive rod clearances

c. Coil stack assembly - thermal clearances

d. Coil fit in coil housing

The following discussion defines clearances that are designed to provide reliable operation in the CRDM in these four critical areas. These clearances have been proven by life tests and actual field performance at operating plants.

Latch Assembly - Thermal Clearances

The magnetic jack has several clearances where parts made of Type 410 stainless steel fit over parts made from Type 304 stainless steel. Differential thermal expansion is therefore important. Minimum clearances of these parts at 68°F is 0.011 inch. At the maximum design temperature of 650°F, minimum clearance is 0.0045 inch and at the maximum expected operating temperatures of 550°F is 0.0057 inch.

Latch Arm - Drive Rod Clearances

The CRDM incorporates a load transfer action. The movable or stationary gripper latch are not under load during engagement, as previously explained, due to load transfer action.

Figure 3.9(N)-6 shows latch clearance variation with the drive rod as a result of minimum and maximum temperatures. Figure 3.9(N)-7 shows clearance variations over the design temperature range.

Coil Stack Assembly - Thermal Clearances

The assembly clearances of the coil stack assembly over the latch housing was selected so that the assembly could be removed under all anticipated conditions of thermal expansion.

At 70°F, the inside diameter of the coil stack is 7.308/7.298 inches. The outside diameter of the latch housing is 7.260/7.270 inches.

Thermal expansion of the mechanism due to operating temperature of the CRDM results in minimum inside diameter of the coil stack being 7.310 inches at 222°F and the maximum latch housing diameter being 7.302 inches at 532°F.

Under the extreme tolerance conditions listed above, it is necessary to allow time for a 70°F coil housing to heat during a replacement operation.

Four coil stack assemblies were removed from four hot CRDM mounted on 11.035-inch centers on a 550°F test loop, allowed to cool, and then placed without incident as a test to prove the preceding.

Coil Fit in Core Housing

CRDM and coil housing clearances are selected so that coil heat up results in a close to tight fit. This is done to facilitate thermal transfer and coil cooling in a hot CRDM.

3.9(N).4.4 CRDS Performance Assurance Program

The ability of the pressure housing components to perform throughout the design lifetime as defined in the equipment specification is confirmed by the stress analysis report required by the ASME Code, Section III.

Internal components subjected to wear will withstand a minimum of 3,000,000 steps without refurbishment as confirmed by life tests (Ref. 12). Latch assembly inspection is recommended after 2.5×10^6 steps have been accumulated on a single CRDM.

To confirm the mechanical adequacy of the fuel assembly, the CRDM, and RCCA, functional test programs have been conducted on a full-scale 12-foot control rod. The 12-foot prototype assembly was tested under simulated conditions of reactor temperature, pressure

and flow for approximately 1,000 hours. The prototype mechanism accumulated about 3,000,000 steps and 600 trips. At the end of the test, the CRDM was still operating satisfactorily. A correlation was developed to predict the amplitude of flow-excited vibration of individual fuel rods and fuel assemblies. Inspection of the drive-line components did not reveal significant fretting.

These tests include verification that the trip time achieved by the CRDMs meet the design requirement of 2.7 seconds from start of RCCA motion to dashpot entry. This trip time requirement was confirmed for each CRDM prior to initial reactor operation and at periodic intervals after initial reactor operation, as required by the Technical Specifications.

There are no significant differences between the prototype CRDMs and the production units. Design materials, tolerances, and fabrication techniques are the same.

These tests have been reported in Reference 12.

It is expected that all control rod drive mechanisms will meet specified operating requirements for the duration of plant life with normal refurbishment. However, a Technical Specification pertaining to an inoperable rod cluster control assembly has been set. Latch assembly inspection is recommended after 2.5×10^6 steps have been accumulated on a single control rod drive mechanism.

If one or more rod cluster control assemblies can not be moved by its mechanism(s), but is operable (i.e., the rod(s) is trippable and meets rod drop time requirements) and is within alignment limits, then the inability to move the rod(s) may be tolerated. Should the affected rod(s) not be operable or not within alignment limits, then unacceptable shutdown margin or core power distribution may result and the required actions are specified in the Technical Specifications.

In order to demonstrate proper operation of the control rod drive mechanism and to ensure acceptable core power distributions during RCCA partial-movement, checks are performed on the RCCA (refer to the Technical Specifications). In addition, periodic drop tests of the rod cluster control assemblies are performed at each refueling shutdown to demonstrate continued ability to meet trip time requirements, to ensure core subcriticality after reactor trip, and to limit potential reactivity insertions from a hypothetical rod cluster control assembly ejection. During these tests, the acceptable drop time of each assembly is ≤ 2.7 seconds, from the beginning of motion to dashpot entry with $T_{avg} \geq 500°F$ and all reactor coolant pumps operating.

Actual experience in operating Westinghouse plants indicates excellent performance of control rod drive mechanisms.

All units were production tested prior to shipment to confirm ability of the control rod drive mechanism to meet design specification-operation requirements.

Each production control rod drive mechanism underwent a production test as listed below:

Test	Acceptance Criteria
Cold (ambient) hydrostatic	ASME Code, Section III
Confirm step length and load transfer (stationary gripper to movable gripper or movable gripper to stationary gripper)	Step Length 5/8 + 0.015 inch axial movement Load Transfer 0.047 inch nominal axial movement
Cold (ambient) performance test at design load - 5 full travel excursions	Operating Speed 45 inches/minute Trip Delay Free fall of drive rod to begin within 150 milliseconds

3.9(N).5 REACTOR PRESSURE VESSEL INTERNALS

3.9(N).5.1 Design Arrangements

The WCGS reactor vessel internals are described as follows:

The components of the reactor internals are divided into three parts consisting of the lower core support structure (including the entire core barrel and neutron shield pad assembly), the upper core support structure, and the incore instrumentation support structure. The reactor internals support the core, maintain fuel alignment, limit fuel assembly movement, maintain alignment between fuel assemblies and CRDMs, direct coolant flow past the fuel elements, direct coolant flow to the pressure vessel head, provide gamma and neutron shielding, and provides guides for the incore instrumentation. The coolant flows from the vessel inlet nozzles down the annulus between the core barrel and the vessel wall and then into a plenum at the bottom of the vessel. It then reverses and flows up through the core support and through the

lower core plate. The lower core plate is sized to provide the desired inlet flow distribution to the core. After passing through the core, the coolant enters the region of the upper support structure and then flows radially to the core barrel outlet nozzles and directly through the vessel outlet nozzles. A small portion of the coolant flows between the baffle plates and the core barrel to provide additional cooling of the barrel. Similarly, a small amount of the entering flow is directed into the vessel head plenum and exits through the vessel outlet nozzles.

Lower Core Support Structure

The major containment and support member of the reactor internals is the lower core support structure, shown in Figure 3.9(N)-8. This support structure assembly consists of the core barrel, the core baffle, the lower core plate and support columns, the neutron shield pads, and the core support which is welded to the core barrel. All the major material for this structure is Type 304 stainless steel. The lower core support structure is supported at its upper flange from a ledge in the reactor vessel head flange, and its lower end is restrained in its transverse movement by a radial support system attached to the vessel wall. Within the core barrel are an axial baffle and a lower core plate, both of which are attached to the core barrel wall and form the enclosure periphery of the assembled core. The lower core support structure and principally the core barrel serve to provide passageways and control for the coolant flow. The lower core plate is positioned at the bottom level of the core below the baffle plates and provides support and orientation for the fuel assemblies.

The lower core plate is a member through which the necessary flow distribution holes for each fuel assembly are machined. Fuel assembly locating pins (two for each assembly) are also inserted into this plate. Columns are placed between this plate and the core support of the core barrel in order to provide stiffness and to transmit the core load to the core support. Adequate coolant distribution is obtained through the use of the lower core plate and core support.

The neutron shield pad assembly consists of four pads that are bolted and pinned to the outside of the core barrel. These pads are constructed of Type 304 stainless steel and are approximately 48 inches wide by 148 inches long by 2.8 inches thick. The pads are located azimuthally to provide the required degree of vessel protection. Specimen guides in which material surveillance samples can be inserted and irradiated during reactor operation are attached to the pads. The samples are held in the guide by a

preloaded spring device at the top and bottom to prevent sample movement. Additional details of the neutron shield pads and irradiation specimen holders are given in Reference 13.

Vertically downward loads from weight, fuel assembly preload, control rod dynamic loading, hydraulic loads, and earthquake acceleration are carried by the lower core plate partially into the lower core plate support flange on the core barrel shell and partially through the lower support columns to the core support and thence through the core barrel shell to the core barrel flange supported by the vessel head flange. Transverse loads from earthquake acceleration, coolant cross flow, and vibration are carried by the core barrel shell and distributed between the lower radial support to the vessel wall and to the vessel flange. Transverse loads of the fuel assemblies are transmitted to the core barrel shell by direct connection of the lower core plate to the barrel wall and by upper core plate alignment pins which are welded into the core barrel.

The main radial support system of the lower end of the core barrel is accomplished by "key" and "keyway" joints to the reactor vessel wall. At equally spaced points around the circumference, an inconel clevis block is welded to the vessel inner diameter. Another inconel insert block is bolted to each of these blocks and has a "keyway" geometry. Opposite each of these is a "key" which is attached to the internals. At assembly, as the internals are lowered into the vessel, the keys engage the keyways in the axial direction. With this design, the internals are provided with a support at the furthest extremity, and may be viewed as a beam fixed at the top and simply supported at the bottom.

Radial and axial expansions of the core barrel are accommodated but transverse movement of the core barrel is restricted by this design. With this system, cyclic stresses in the internal structures are within ASME Code, Section III, limits. In the event of an abnormal downward vertical displacement of the internals following a hypothetical failure, energy-absorbing devices limit the displacement after contacting the vessel bottom head. The load is then transferred through the energy-absorbing devices of the internals to the vessel.

The energy absorbers, cylindrical in shape, are contoured on their bottom surface to the reactor vessel bottom head geometry. Assuming a downward vertical displacement, the potential energy of the system is absorbed mostly by the strain energy of the energy absorbing devices.

Upper Core Support Assembly

The WCGS upper core support assembly, shown in Figures 3.9(N)-9 and 3.9(N)-10, consists of the top support plate assembly and the upper core plate between which are contained support columns and guide tube assemblies. The support columns establish the spacing between the top support plate assembly and the upper core plate and are fastened at top and bottom to these plates. The support columns transmit the mechanical loadings between the two plates and serve the supplementary function of supporting thermocouple guide tubes. The guide tube assemblies sheath and guide the control rod drive shafts and control rods. They are fastened to the top support plate and are restrained by pins in the upper core plate for proper orientation and support. Additional guidance for the control rod drive shafts is provided by the upper guide tube which is attached to the upper support plate and guide tube.

The upper core support assembly is positioned in its proper orientation with respect to the lower support structure by flat-sidedpins pressed into the core barrel which, in turn, engage in slots in the upper core plate. At an elevation in the core barrel where the upper core plate is positioned, the flat-sided pins are located at angular positions of 90 degrees from each other. Four slots are milled into the core plate at the same positions. As the upper support structure is lowered into the main internals, the slots in the plate engage the flat-sided pins in the axial direction. Lateral displacement of the plate and of the upper support assembly is restricted by this design. Fuel assembly locating pins protrude from the bottom of the upper core plate and engage the fuel assemblies as the upper assembly is lowered into place. Proper alignment of the lower core support structure, the upper core support assembly, the fuel assemblies, and control rods are thereby ensured by this system of locating pins and guidance arrangement. The upper core support assembly is restrained from any axial movements by a large circumferential spring which rests between the upper barrel flange and the upper core support assembly and is compressed by the reactor vessel head flange.

Vertical loads from weight, earthquake acceleration, hydraulic loads, and fuel assembly preload are transmitted through the upper core plate via the support columns to the top support plate assembly and then the reactor vessel head. Transverse loads from coolant cross flow, earthquake acceleration, and possible vibrations are distributed by the support columns to the top support plate and upper core plate. The top support plate is particularly stiff to minimize deflection.

Incore Instrumentation Support Structures

The incore instrumentation support structures consist of an upper system to convey and support thermocouples penetrating the vessel through the head and a lower system to convey and support flux thimbles penetrating the vessel through the bottom (Figure 7.7-9 shows the basic flux-mapping system).

The upper system utilizes the reactor vessel head penetrations. Instrumentation port columns are slip-connected to inline columns that are in turn fastened to the upper support plate. These port columns protrude through the head penetrations. The thermocouples are carried through these port columns and the upper support plate at positions above their readout locations. The thermocouple conduits are supported from the columns of the upper core support system. The thermocouple conduits are sealed stainless steel tubes.

In addition to the upper incore instrumentation, there are reactor vessel bottom port columns which carry the retractable, cold worked stainless steel flux thimbles that are pushed upward into the reactor core. Conduits extend from the bottom of the reactor vessel down through the concrete shield area and up to a thimble seal line. The minimum bend radii are about 144 inches, and the trailing ends of the thimbles (at the seal line) are extracted approximately 15 feet during refueling of the reactor in order to avoid interference within the core. The thimbles are closed at the leading ends and serve as the pressure barrier between the reactor pressurizer water and the containment atmosphere.

Mechanical seals between the retractable thimbles and conduits are provided at the seal line. During normal operation, the retractable thimbles are stationary and move only during refueling or for maintenance, at which time a space of approximately 15 feet above the seal line is cleared for the retraction operation.

The incore instrumentation support structure is designed for adequate support of instrumentation during reactor operation and is rugged enough to resist damage or distortion under the conditions imposed by handling during the refueling sequence. These are the only conditions which affect the incore instrumentation support structure.

3.9(N).5.2 Design Loading Conditions

Normal and Upset Conditions

The normal and upset loading conditions that provide the basis for the design of the reactor internals are:

a. Fuel and reactor internals weight
b. Fuel and core component spring forces, including spring preloading forces
c. Differential pressure and coolant flow forces
d. Temperature gradients
e. Vibratory loads including OBE seismic loads
f. Normal and upset operational thermal transients listed in Table 3.9(N)-1
g. Control rod trip (equivalent static load)
h. Loads due to loop(s) out of service
i. Loss of load/pump overspeed

Emergency Conditions

The emergency loading conditions that provide the basis for the design of the reactor internals are:

a. Small LOCA

b. Small steam break

c. Complete loss of flow

Faulted Conditions

The faulted loading conditions that provide the basis for the design of the reactor internals are:

a. Large LOCA (branch nozzle breaks)

b. SSE

3.9(N).5.3 Design Loading Categories

The combination of design loadings fit into either the normal, upset, emergency, or faulted conditions as defined in the ASME Code, Section III, as indicated by Figures NG-3221.1, NG-3224.1, and by Appendix F, "Rules for Evaluating Faulted Conditions."

Loads and deflections imposed on components due to shock and vibration are determined analytically and experimentally in both scaled models and operating reactors. The cyclic stresses due to these dynamic loads and deflections are combined with the stresses imposed by loads from component weights, hydraulic forces, and thermal gradients for the determination of the total stresses of internals.

The reactor internals are designed to withstand stresses originating from various operating conditions, including thermal shock of the ECCS following a LOCA, as summarized in Table 3.9(N)-1.

The scope of the stress analysis problem is very large, requiring many different techniques and methods, both static and dynamic. The analysis performed depends on the mode of operation under consideration.

Allowable Deflections

For normal operating conditions, downward vertical deflection of the lower core support plate is negligible.

For LOCA plus the SSE condition, the deflection criteria of critical internal structures are the limiting values given in Table 3.9(N)-12. The corresponding no-loss-of-function limits are included in Table 3.9(N)-12 for comparison purposes with the allowed criteria.

The criteria for the core drop accident is based upon analyses which have to determine the total downward displacement of the internal structures following a hypothesized core drop resulting from loss of the normal core barrel supports. The initial clearance between the secondary core support structures and the reactor vessel lower head in the hot condition is approximately 1/2 inch. An additional displacement of approximately 3/4 inch would occur due to strain of the energy absorbing devices of the secondary core support; thus the total drop distance is about 1-1/4 inches, which is insufficient to permit the tips of the RCCA to come out of the guide thimble in the fuel assemblies.

Specifically, the secondary core support is a device which will never be used, except during a hypothetical accident involving the core support (core barrel, barrel flange, etc.). There are four supports in each reactor. This structure limits the fall of the core and absorbs much of the energy of the fall which otherwise would be imparted to the vessel. The energy of the fall is calculated, assuming a complete and instantaneous failure of the primary core support, and is absorbed during the plastic deformation of the controlled volume of stainless steel, loaded in tension. The maximum deformation of this austenitic stainless piece is limited to approximately 15 percent, after which a positive stop is provided to ensure support.

3.9(N).5.4 Design Bases

The design bases for the mechanical design of the WCGS reactor vessel internals components are as follows:

a. The reactor internals in conjunction with the fuel assemblies directs reactor coolant through the core to achieve acceptable flow distribution and to restrict bypass flow so that the heat transfer performance requirements are met for all modes of operation. In addition, required cooling for the pressure vessel head is provided so that the temperature differences between the vessel flange and head do not result in leakage from the flange during reactor operation.

b. In addition to neutron shielding provided by the reactor coolant, a separate neutron pad assembly is provided to limit the exposure of the pressure vessel in order to maintain the required ductility of the material for all modes of operation.

c. Provisions are made for installing incore instrumentation useful for the plant operation and vessel material test specimens required for a pressure vessel irradiation surveillance program.

d. The core internals are designed to withstand mechanical loads arising from the OBE, SSE, and pipe ruptures and meet the requirements of Item e below.

e. The reactor has mechanical provisions which are sufficient to adequately support the core and internals and to assure that the core is intact with acceptable heat transfer geometry following transients arising from abnormal operating conditions.

f. Following the design basis accident, the plant is capable of being shutdown and cooled in an orderly fashion so that fuel cladding temperature is kept within specified limits. This implies that the deformation of certain critical reactor internals must be kept sufficiently small to allow core cooling.

The functional limitations for the core structures during the design basis accident are shown in Table 3.9(N)-12. To ensure no column loading of rod cluster control guide tubes, the upper core plate deflection is limited to not exceed the value shown in Table 3.9(N)-12.

Details of the dynamic analyses, input forcing functions, and response loadings are presented in Section 3.9(N).2.

The basis for the design stress and deflection criteria is identified below:

Allowable Stresses

For normal operating conditions, Section III of the ASME Nuclear Power Plant Components Code is used as a basis for evaluating the acceptability of calculated stresses. Both static and alternating stress intensities are considered.

It should be noted that the allowable stresses in Section III of the ASME Code are based on unirradiated material properties. In view of the fact that irradiation increases the strength of the Type 304 stainless steel used for the internals, although decreasing its elongation, it is considered that use of the allowable stresses in Section III is appropriate and conservative for irradiated internal structures.

The allowable stress limits during the DBA used for the SNUPPS reactor internals is based on the 1974 Edition of the ASME Code for Core Support Structures, Subsection NG, and the Criteria for Faulted Conditions.

Internal structures are analyzed to meet the intent of the ASME Code in accordance with Subsection NG, paragraph NG-3311(c). Stresses in the core support structure induced by interactions with internal structures are analyzed and shown to be in conformance with core support code limits. Design and construction for core support structures meet Subsection NG in full.

3.9(N).6 INSERVICE TESTING OF PUMPS AND VALVES

Refer to Section 3.9(B).6.

3.9(N).7 REFERENCES

1. "Documentation of Selected Westinghouse Structural Analysis Computer Codes," WCAP-8252, Revision 1, May, 1977.

2. "Benchmark Problem Solutions Employed for Verification of the WECAN Computer Program," WCAP-8929, April, 1977.

3. Sample Analysis of a Class 1 Nuclear Piping System:" prepared by ASME Working Group on Piping, ASME Publication, 1972.

4. Witt, F. J., Bamford, W. H. and Esselman, T. C., "Integrity of the Primary Piping Systems of Westinghouse Nuclear Power Plants During Postulated Seismic Events," WCAP-9283, March, 1978.

5. Bogard, W. T. and Esselman, T. C., "Combination of Safe Shutdown Earthquake and Loss-of-Coolant Accident Responses for Faulted Condition Evaluation of Nuclear Power Plants," WCAP-9279, March, 1978.

6. Bloyd, C. N., Ciaramitaro, W. and Singleton, N. R., "Verification of Neutron Pad and 17 x 17 Guide Tube Designs by Preoperational Tests on the Trojan l Power Plant," WCAP-8766 (Proprietary) and WCAP-8780, (Non-Proprietary), May, 1976.

7. Lee, H., "Prediction of the Flow-Induced Vibration of Reactor Internals by Scale Model Tests," WCAP-8303-P-A (Proprietary) and WCAP-8317-A (Non-Proprietary), July, 1975.

8. Bloyd, C. N. and Singleton, N. R., "UHI Plant Internals Vibration Measurement Program and Pre and Post Hot Functional Examinations, "WCAP-8516-P (Proprietary) and WCAP-8517 (Non-Proprietary), March, 1975.

9. Takeuchi, K., et al., "MULTIFLEX - A FORTRAN-IV Computer Program for Analyzing Thermal-Hydraulic-Structure System Dynamics," WCAP-8708-P-A, Volumes I and II (Proprietary) and WCAP-8709-A, Volumes I and II (Non-Proprietary), September, 1977.

10. Fabic, S., "Computer Program WHAM for Calculation of Pressure, Velocity and Force Transients in Liquid Filled Piping Networks," Kaiser Engineers Report No. 67-49-R, November, 1967.

11. Bohm, G. J. and LaFaille, J. P., "Reactor Internals Response Under a Blowdown Accident," First Intl. Conf. on Structural Mechanics in Reactor Technology, Berlin, September 20-24, 1971.

12. Cooper, F. W. Jr., "17 x 17 Driveline Components Tests Phase IB, II, III D-Loop Drop and Deflection," WCAP-8446 (Proprietary) and WCAP-8449 (Non-Proprietary), December, 1974.

13. Kraus, S., "Neutron Shielding Pads," WCAP-7870, June, 1972.

14. Altman, D. A., et. al., "Verification of Upper Head Injection Reactor Vessel Internals by Preoperational Tests on the Sequoyah 1 Power Plant," WCAP-9944 (Proprietary) and WCAP-9945 (Non-Proprietary), July 1981.

TABLE 3.9(N)-1

SUMMARY OF REACTOR COOLANT SYSTEM DESIGN TRANSIENTS

Normal Conditions	Occurrences
1. Heatup and cooldown at 100°F in any 1-hr period (pressurizer cooldown 200°F in any 1-hr period	200 (each)
2. Unit loading and unloading at 5 percent of full power per minute	13,200 (each)
3. Step load increase and decrease of 10 percent of full power	2,000 (each)
4. Large step load decrease with steam dump	200
5. Steady state fluctuations	
a. Initial fluctuations	1.5×10^5
b. Random fluctuations	3.0×10^6
6. Feedwater cycling at hot shutdown	2,000
7. Loop out of service	
a. Normal loop shutdown	80
b. Normal loop startup	70
8. Unit loading and unloading between 0 and 15 percent of full power	500 (each)
9. Boron concentration equalization	26,400
10. Reactor coolant pump startup and shutdown	
a. Cold condition	
(1) RCS venting	800
(2) RCS heatup, cooldown	200
b. Pump restart condition	
(1) Hot functionals, reactor coolant pump stops, starts	500
c. Hot condition	
(1) Transients and miscellaneous	1,250
11. Reduced temperature return to power	2,000
12. Refueling	80

TABLE 3.9(N)-1 (Sheet 2)

13.	Turbine roll test	20
14.	Primary side leakage test	200
15.	Secondary side leakage test	80
16.	Feedwater heaters out of service	120
Upset Conditions		Occurrences
1.	Loss of load (without immediate reactor trip)	80
2.	Loss of power (blackout with natural circulation in the RCS)	40
3.	Partial loss of flow (loss of one pump)	80
4.	Reactor trip from full power	
	a. Without cooldown	230
	b. With cooldown, without safety injection	160
	c. With cooldown and safety injection	10
	d. With no inadvertent cooldown - emergency overspeed	20
5.	Inadvertent RCS depressurization	20
6.	Inadvertent startup of an inactive loop	10
7.	Control rod drop	80
8.	Inadvertent safety injection actuation	60
9.	Operating Basis Earthquake (20 earthquakes of 10 cycles each)	200
Emergency Conditions*		Occurrences
1.	Small loss-of-coolant accident	5
2.	Small steam break	5
3.	Complete loss of flow	5

TABLE 3.9(N)-1 (Sheet 3)

Faulted Conditions*	Occurrences
1. Reactor coolant pipe branch nozzle break (large loss-of-coolant accident)	1
2. Large steam line break	1
3. Feedwater line break	1
4. Reactor coolant pump locked rotor	1
5. Control rod ejection	1
6. Steam generator tube rupture	(included under upset conditions, reactor trip from full power with safety injection)
7. Safe Shutdown Earthquake	1

Test Conditions	Occurrences
1. Primary side hydrostatic test	10
2. Secondary side hydrostatic test	10
3. Tube leakage test	800

*In accordance with the ASME Nuclear Power Plant Components Code, emergency and faulted conditions are not included in fatigue evaluation.

TABLE 3.9(N)-2

LOADING COMBINATIONS FOR ASME CLASS 1
COMPONENTS AND SUPPORTS (EXCLUDING PIPE SUPPORTS)

Condition Classification	Loading Combination
Design	Design pressure, design temperature, deadweight, Operating Basis Earthquake
Normal	Normal condition transients, deadweight
Upset	Upset condition transients, deadweight, Operating Basis Earthquake
Emergency	Emergency condition transients, deadweight
Faulted	Faulted condition transients, deadweight, Safe Shutdown Earthquake or Safe Shutdown Earthquake and Pipe Rupture Loads

TABLE 3.9(N)-3
ALLOWABLE STRESSES FOR ASME CODE, SECTION III, CLASS 1 COMPONENTS (a)(c)

Operating Condition Classification	Vessels/Tanks	Piping	Pumps	Valves	Component Supports(d)
Normal	NB-3222 (Level A)	NB-3653 (Level A)	NB-3222 (Level A)	NB-3525 (Level A)	NF-3222 NF-3231.1(a) (Level A)
Upset	NB-3223 (Level B)	NB-3654 (Level B)	NB-3223 (Level B)	NB-3525 (Level B)	NF-3223 NF-3231.1(a) (Level B)
Emergency	NB-3224 (Level C)	NB-3655 (Level C)	NB-3224 (Level C)	NB-3526 (Level C)	NF-3224 NF-3231.1(b) (Level C)
Faulted	NB-3225 (Level D)	NB-3656 (Level D)	NB-3225 (Level D)	(b)	NF-3225 NF-3231.1(c) (Level D)

(a) A test of the components may be performed in lieu of analysis.
(b) CLASS 1 VALVE FAULTED CONDITION CRITERIA

Active	Inactive
a) Calculate P_m from para. NB3545.1 with Internal Pressure PS = 1.25PS	a) Calculate P_m from para. NB3545.1 with Internal Pressure P_S = 1.50 P_S
$P_m \geq 1.5S_m$	$P_m \geq 2.4S_m$ or 0.7 S_u
b) Calculate S_n from para. NB3545.2 with C_p = 1.5	b) Calculate S_n from para. NB3545.2 with Cp = 1.5
P_s = 1.25P	P_s = 1.50P_s Qt^2 = 0 Qt^2 = 0
P_{ed} = 1.3X value of P_{ed} from equations of 3545.2(b) (1)	P_{ed} = 1.3X value of P from equations of NB3545.2(b) (1)
$S_n \leq 3S_m$	$S_n \leq 3S_m$

P_s, P_e, P_m, P_b, Q_t, C_p, S_n & S_m, as defined by Section III of the ASME Code
(c) Limits identified refer to subsections of the ASME Code, Section III.
(d) Also see Appendix 3A, Regulatory Guides 1.124 and 1.130.

TABLE 3.9(N)-4

DESIGN LOADING COMBINATIONS FOR ASME CODE CLASS 2 AND 3 COMPONENTS AND SUPPORTS (a) (EXCLUDING PIPE SUPPORTS)

Loading Combination (b,c)	Design/Service Level Requirements
1. Design pressure, design temperature, deadweight	Design
2. Normal condition pressure, normal condition metal temperature, deadweight, nozzle loads	Service Level A
3. Upset condition pressure, upset condition metal temperature, deadweight, nozzle loads, Operating Basis Earthquake	Service Level B
4. Emergency condition pressure, emergency condition metal temperature, deadweight, nozzle loads	Service Level C
5. Faulted condition pressure, faulted condition metal temperature, deadweight, nozzle loads, Safe Shutdown Earthquake	Service Level D

NOTES:

(a) The responses for each loading combination are combined using the absolute sum method. On a case-by-case basis, algebraic summation may be used when signs are known for final design evaluations.

(b) Temperature is used to determine allowable stress only.

(c) Nozzle loads, pressures, and temperatures are those associated with the respective plant operating conditions (i.e., normal, upset, emergency, and faulted), as noted for the component under consideration.

TABLE 3.9(N)-5

STRESS CRITERIA FOR SAFETY-RELATED ASME CLASS 2*
AND CLASS 3 VESSELS

Design/Service Level	Stress Limits**
Design and Service Level A	$\delta m \leq 1.0S$ (δm or δL) + $\delta b \leq 1.5S$
Service Level B	$\delta m \leq 1.1S$ (δm or δL) + $\delta b \leq 1.65S$
Service Level C	$\delta m \leq 1.5S$ (δm or δL) + $\delta b \leq 1.80S$
Service Level D	$\delta m \leq 2.0S$ (δm or δL) + $\delta b \leq 2.4S$

*Applies for vessels designed in accordance with the ASME Code, Section III, NC-3300.

**Stress limits are taken from ASME III, Subsections NC and ND, or, for vessels procured prior to the incorporation of these limits into ASME III, from Code Case 1607.

TABLE 3.9(N)-6

STRESS CRITERIA FOR SAFETY-RELATED CLASS 2 VESSELS*

Design/Service Level	Stress Limits**
Design and Service Level A	$P_m \leq 1.0S_m$
	$P_L \leq 1.5S_m$
	$(P_m \text{ or } P_L) + P_b \leq 1.5S_m$
Service Level B	$P_m \leq 1.1S_m$
	$P_L \leq 1.65S_m$
	$(P_m \text{ or } P_L) + P_b \leq 1.65S_m$
Service Level C	$P_m \leq 1.2S_m$
	$P_L \leq 1.8S_m$
	$(P_m \text{ or } P_L) + P_b \leq 1.8S_m$
Service Level D	$P_m \leq 2.0S_m$
	$P_L \leq 3.0S_m$
	$(P_m \text{ or } P_L) + P_b \leq 3.0S_m$

*Applies for vessels designed in accordance with the ASME Code, Section III, NC-3200

**Stress limits are from ASME III, Subsection NC.

TABLE 3.9(N)-7

STRESS CRITERIA FOR ASME CODE CLASS 2 AND CLASS 3
INACTIVE PUMPS AND PUMP SUPPORTS

Design/Service Level	Stress Limits*
Design and Service Level A	$\sigma_m \leq 1.0S$ (σ_m or σL) + $\sigma_b \leq 1.5S$
Service Level B	$\sigma_m \leq 1.1S$ (σ_m or σL) + $\sigma_b \leq 1.65S$
Service Level C	$\sigma_m \leq 1.5S$ (σ_m or σL) + $\sigma_b \leq 1.80S$
Service Level D	$\sigma_m \leq 2.0S$ (σ_m or σL) + $\sigma_b \leq 2.4S$

*Stress limits are taken from ASME III, Subsections NC and ND, or, for pumps procured prior to the incorporation of these limits into ASME III, from Code Case 1636.

TABLE 3.9(N)-8

DESIGN CRITERIA FOR ACTIVE PUMPS AND PUMP SUPPORTS

Design/Service Level	Design Criteria*
Design, Service Level A and Service Level B	$\sigma_m \leq 1.0S$ (σ_m or σ_L) + $\sigma_b \leq 1.5S$
Service Level C	$\sigma_m \leq 1.1S$ (σ_m or σ_L) + $\sigma_b \leq 1.65S$
Service Level D	$\sigma_m \leq 1.2S$ (σ_m or σ_L) + $\sigma_b \leq 1.8S$

*The stress limits specified for active pumps are more restrictive than the ASME III limits to provide assurance that operability will not be impaired for any operating condition.

TABLE 3.9(N)-9

STRESS CRITERIA FOR SAFETY-RELATED ASME CODE CLASS 2 AND CLASS 3 VALVES

Design/Service Level	Stress Limits (a,b,c,d, and f)	P_{max} (e)
Design and Service Level A	Valve bodies shall conform to ASME Code, Section III	1.0
Service Level B	$\sigma_m \leq 1.1S$ $(\sigma_m$ or $\sigma_L) + \sigma_b \leq 1.65S$	1.1
Service Level C	$\sigma_m \leq 1.5S$ $(\sigma_m$ or $\sigma_L) + \sigma_b \leq 1.80S$	1.2
Service Level D	$\sigma_m \leq 2.0S$ $(\sigma_m$ or $\sigma_L) + \sigma_b \leq 2.4S$	1.5

NOTES:

(a) Valve nozzle (piping load) stress analysis is not required when both of the following conditions are satisfied: 1) the section modulus and area of every plane, normal to the flow, through the region defined as the valve body crotch are at least 110 percent of those for the piping connected (or joined) to the valve body inlet and outlet nozzles; and 2) code allowable stress, S, for valve body material is equal to or greater than the code allowable stress, S, or connected piping material. If the valve body material allowable stress is less than that of the connected piping, the required acceptance criteria ratio shall be 110 percent multiplied by the ratio of the pipe allowable stress to the valve allowable stress. If unable to comply with this requirement, an analysis in accordance with the design procedure for Class 1 valves is an acceptable alternate method.

(b) Casting quality factor of 1.0 shall be used.

(c) These stress limits are applicable to the pressure retaining boundary, and include the effects of loads transmitted by the extended structures, when applicable.

TABLE 3.9(N)-9 (Sheet 2)

(d) Design requirements listed in this table are not applicable to valve discs, stems, seat rings, or other parts of valves which are contained within the confines of the body and bonnet, or otherwise not part of the pressure boundary.

(e) The maximum pressure resulting from upset, emergency, or faulted conditions shall not exceed the tabulated factors listed under P_{max} times the design pressure. If these pressure limits are met, the stress limits in this table are considered to be satisfied.

(f) Stress limits are taken from ASME III, Subsections NC and ND, or, for valves procured prior to the incorporation of these limits into ASME III, from Code Case 1635.

TABLE 3.9(N)-10

ACTIVE PUMPS

Pump	Item Number	System	ANS Safety Class	Normal Mode	Post-LOCA Mode	Basis
Centrifugal charging pumps 1 and 2	APCH	CVCS	2	On/Off	On	ECCS safeguards operation and safety grade cold shutdown
Boric acid transfer pumps 1 and 2	APBA	CVCS	2	On/Off	Off	Boration and cold shut-down if RWST is rendered unavailable
Residual heat removal pumps 1 and 2	APRH	RHRS	2	Off	On	ECCS safeguards operation and safety grade cold shutdown
Safety injection pumps 1 and 2	APSI	SIS	2	Off	On	ECCS safeguards operation

TABLE 3.9(N)-11

ACTIVE VALVES

Valve Location Number	System	Actuated by	Size(in.)	Type/ANS Safety Class	Normal Position	Basis
BB-HV-8000A/B	Reactor Coolant	Motor	3	Gate/1	Open	2, 6
BB-HV-8001A/B	Reactor Coolant	Solenoid	1	Globe/2	Closed	2
BB-HV-8002A/B	Reactor Coolant	Solenoid	1	Globe/2	Closed	2
BB-V-8010A/B/C	Reactor Coolant	Self-actuated	6	Relief/1	Closed	5
BB-HV-8026	Reactor Coolant	Air	1	Diaphragm/2	Closed	1
BB-HV-8027	Reactor Coolant	Air	1	Diaphragm/2	Closed	1
BB-8038A/B	Reactor Coolant	P	3	Check/3	N/A	2, 7
BL-V-8046	Reactor Makeup	P	3	Check/2	N/A	1, 7
BL-HV-8047	Reactor Makeup	Air	3	Diaphragm/2	Open	1
BB-PCV-455A	Reactor Coolant	Solenoid	3	Globe/1	Closed	2, 6
BB-PCV-456A	Reactor Coolant	Solenoid	3	Globe/1	Closed	2, 6
BG-HV-8100	Chemical Volume Control	Motor	2	Globe/2	Open	1
BG-HV-8104	Chemical Volume Control	Motor	2	Globe/2	Closed	4
BG-HV-8105	Chemical Volume Control	Motor	3	Gate/2	Open	1, 2, 3

TABLE 3.9(N)-11 (Sheet 2)

Valve Location Number	System	Actuated by	Size(in.)	Type/ANS Safety Class	Normal Position	Basis
BG-HV-8106	Chemical Volume Control	Motor	3	Gate/2	Open	2, 3
BG-HV-8110	Chemical Volume Control	Motor	2	Globe/2	Open	2, 3
BG-HV-8111	Chemical Volume Control	Motor	2	Globe/2	Open	2, 3
BG-HV-8112	Chemical Volume Control	Motor	2	Globe/2	Open	1
BG-HV-8152	Chemical Volume Control	Air	3	Globe/2	Open	1
BG-HV-8153A/B	Chemical Volume Control	Solenoid	1	Globe/1	Closed	2, 6
BG-HV-8154A/B	Chemical Volume Control	Solenoid	1	Globe/1	Closed	2, 6
BB-HV-8157A/B	Reactor Coolant	Motor	1	Globe/2	Closed	2
BG-HV-8160	Chemical Volume Control	Air	3	Globe/2	Open	1
BB-HV-8351A/B/C/D	Reactor Coolant	Motor	2	Globe/2	Open	1
BG-HV-8357A/B	Chemical Volume Control	Motor	1	Globe/2	Closed	2
BB-V-8378A/B	Reactor Coolant	ΔP	3	Check/1	N/A	6, 7

TABLE 3.9(N)-11 (Sheet 3)

Valve Location Number	System	Actuated by	Size(in.)	Type/ANS Safety Class	Normal Position	Basis
BG-V-8381	Chemical Volume Control	ΔP	3	Check/2	N/A	1, 7
BG-V-8481A/B	Chemical Volume Control	ΔP	4	Check/2	N/A	2, 3, 7
BG-V-8497	Chemical Volume Control	ΔP	3	Check/2	N/A	3, 7
BG-V-8546A/B	Chemical Volume Control	ΔP	8	Check/2	N/A	2, 3, 7
BG-LCV-112B/C	Chemical Volume Control	Motor	4	Gate/2	Open	2, 3
BN-LCV-112D/E	Borated Refueling Water Storage	Motor	8	Gate/2	Closed	2, 3
EJ-HV-8701A/B	Residual Heat Removal	Motor	12	Gate/1	Closed	1, 2, 6
BB-V-8702A/B	Reactor Coolant	Motor	12	Gate/1	Closed	1, 2, 6
EJ-V-8708A/B	Residual Heat Removal	Self-Actuated	3	Relief/2	Closed	2, 5
EJ-HV-8716A/B	Residual Heat Removal	Motor	10	Gate/2	Open	2, 3
EJ-V-8730A/B	Residual Heat Removal	ΔP	10	Check/2	N/A	2, 3, 7

Valve Location Number	System	Actuated by	Size(in.)	Type/ANS Safety Class	Normal Position	Basis
EJ-FCV-610	Residual Heat Removal	Motor	3	Gate/2	Open	2, 3
EJ-FCV-611	Residual Heat Removal	Motor	3	Gate/2	Open	2, 3
BN-HV-8800A/B	Borated Refueling Water Storage	Air	3	Globe/2	Closed	3
EM-HV-8801A/B	High Pressure Coolant Injection	Motor	4	Gate/2	Closed	1, 2, 3
EM-HV-8802A/B	High Pressure Coolant Injection	Motor	4	Gate/2	Closed	1, 3
EM-HV-8803A/B	High Pressure Coolant Injection	Motor	4	Gate/2	Closed	2, 3
EJ-HV-8804A/B	Residual Heat Removal	Motor	8	Gate/2	Closed	3
BN-HV-8806A/B	Borated Refueling Water Storage	Motor	8	Gate/2	Open	3
EM-HV-8807A/B	High Pressure Coolant Injection	Motor	6	Gate/2	Closed	3
EM-HV-8808A/B/C/D	Accumulator Safety Injection	Motor	10	Gate/2	Open	2, 3

TABLE 3.9(N)-11 (Sheet 5)

Valve Location Number	System	Actuated by	Size(in.)	Type/ANS Safety Class	Normal Position	Basis
EJ-HV-8809A/B	Residual Heat Removal	Motor	10	Gate/2	Open	1, 2, 3
EJ-HV-8811A/B	Residual Heat Removal	Motor	14	Gate/2	Closed	1, 3
BN-HV-8812A/B	Borated Refueling Water Storage	Motor	14	Gate/2	Open	2, 3
BN-HV-8813	Borated Refueling Water Storage	Motor	2	Globe/2	Open	3
EM-HV-8814A/B	High Pressure Coolant Injection	Motor	1-1/2	Globe/2	Open	3
EM-8815	High Pressure Coolant Injection	ΔP	3	Check/1	N/A	1,2,3,6,7
EP-8818A/B/C/D	Accumulator Safety Injection	ΔP	6	Check/1	N/A	1,3,6,7
EM-HV-8821A/B	High Pressure Coolant Injection	Motor	4	Gate/2	Open	3
EM-HV-8823	High Pressure Coolant Injection	Air	3/4	Globe/2	Closed	1

TABLE 3.9(N)-11 (Sheet 6)

Valve Location Number	System	Actuated by	Size(in.)	Type/ANS Safety Class	Normal Position	Basis
EM-HV-8824	High Pressure Coolant Injection	Air	3/4	Globe/2	Closed	1
EJ-HV-8825	Residual Heat Removal	Air	3/4	Globe/2	Closed	1
EM-HV-8835	High Pressure Coolant Injection	Motor	4	Gate/2	Open	1, 3
EJ-HV-8840	Residual Heat Removal	Motor	10	Gate/2	Closed	1, 3
EJ-8841A/B	Residual Heat Removal	ΔP	6	Check/1	N/A	1,3,6, 7
EM-HV-8843	High Pressure Coolant Injection	Air	3/4	Globe/2	Closed	1
EP-V-8855A/B/C/D	Accumu-lator Safety Injection	Self-Actuated	1	Relief/2	Closed	5

TABLE 3.9(N)-11 (Sheet 7)

Valve Location Number	System	Actuated by	Size(in.)	Type/ANS Safety Class	Normal Position	Basis
EM-HV-8871	High Pressure Coolant Ejection	Air	3/4	Globe/2	Closed	1
EP-HV-8880	Accumulator Safety Injection	Air	1	Globe/2	Closed	1
EM-HV-8881	High Pressure Coolant Ejection	Air	3/4	Globe/2	Closed	1
EM-HV-8888	High Pressure Coolant Injection	Air	1	Globe/2	Closed	1
EJ-HCV-8890A/B	Residual Heat Removal	Air	3/4	Globe/2	Closed	1
EM-V-8922A/B	High Pressure Coolant Injection	ΔP	4	Check/2	N/A	3, 7
EM-HV-8923A/B	High Pressure Coolant Injection	Motor	6	Gate/2	Open	3
EM-V-8926A/B	High Pressure Coolant Injection	ΔP	8	Check/2	N/A	3, 7
BB-V-8948A/B/C/D	Reactor Coolant	ΔP	10	Check/1	N/A	3, 6, 7
BG-V-8440	Chemical Volume Control	ΔP	4	Check/2	N/A	2, 3, 7

TABLE 3.9(N)-11 (Sheet 8)

Valve Location Number	System	Actuated by	Size(in.)	Type/ANS Safety Class	Normal Position	Basis
BB-V-8949A/B/C/D	Reactor Coolant	ΔP	6	Check/1	N/A	3, 6, 7
EP-HV-8950A/B/C/D/E/F	Accumulator Safety Injection	Solenoid	1	Globe/2	Closed	2
EP-V-8956A/B/C/D	Accumulator Safety Injection	ΔP	10	Check/1	N/A	3, 6, 7
EJ-V-8958A/B	Residual Heat Removal	ΔP	14	Check/2	N/A	3, 7
EM-HV-8964	High Pressure Coolant Injection	Air	3/4	Globe/2	Closed	1
EM-V-006	High Pressure Coolant Injection	ΔP	1	Check/2	N/A	1, 7
EJ-V-8969A/B	Residual Heat Removal	ΔP	8	Check/2	N/A	3, 7
HB-HV-7126	Liquid Radwaste	Air	3/4	Diaphragm/2	Open	1
HB-HV-7136	Liquid Radwaste	Air	3	Diaphragm/2	Open	1
HB-HV-7150	Liquid Radwaste	Air	3/4	Diaphragm/2	Open	1
HB-HV-7176	Liquid Radwaste	Air	3	Diaphragm/2	Open	1

BASIS

1 Containment isolation

2 Safety grade cold shutdown operation

BASIS (Continued)

3 ECCS safeguards operation

4 Active component in the path from the boric acid tanks. The boric acid transfer pumps are Class 1E pumps powered from Class 1E sources; however, the pump controls are non-Class 1E.

5 Pressure/relief

6 RCPB isolation

7. The definition of an active component for the purpose of supporting the pump and valve operability program includes NSSS check valves. These check valves, although not powered components, meet the definition of having mechanical motion and are therefore included in Table 3.9(N)-11. However, NSSS check valves are not considered to be active (powered) components in the Westinghouse design with respect to the Emergency Core Cooling System (ECCS) Failure Modes and Effects Analysis (FMEA) of active components or the single active failure analysis for ECCS components. Refer to Section 6.3.2.5.

TABLE 3.9(N)-12

MAXIMUM DEFLECTIONS ALLOWED FOR REACTOR INTERNAL SUPPORT STRUCTURES

Component	Allowable Deflections (in.)	No-Loss-of Function Deflections (in.)
Upper Barrel		
Radial inward	4.1	8.2
Radial outward	1.0	1.0
Upper Package	0.10	0.15
Rod Cluster Guide Tubes	1.00	1.75

TABLE 3.9(N)-12 (sheet 2)

POSTULATED BREAK LOCATIONS FOR LOCA
ANALYSIS OF THE PRIMARY COOLANT LOOP

Location of Postulated Rupture	Identification	Type
1. Reactor vessel inlet nozzle*	RPVINLET	Guillotine
2. Reactor vessel outlet nozzle*	RPVOUTLET	Guillotine
3. Steam generator inlet nozzle*	HLSGIN	Guillotine
4. Steam generator outlet nozzle*	XLSGON	Guillotine
5. Reactor coolant pump inlet nozzle*	XLPS	Guillotine
6. Reactor coolant pump outlet nozzle*	RCP DISCHARGE	Guillotine
7. 50° elbow on the intrados*	HLSGIN (SPLIT)	Longitudinal
8. Loop closure weld in crossover leg*	XLHR (CLOSURE WELD)	Guillotine
9. Residual heat removal line/ Primary coolant loop connection	RHR LINE	Guillotine (viewed from the RHR line)
10. Accumulator line/Primary coolant loop (ACC) connection	SIS LINE	Guillotine (viewed from the ACC line)
11. Pressurizer surge (PS) line/Primary coolant loop connection	SURGE LINE	Guillotine (viewed from the PS line)

* Postulated break locations eliminated by applying Leak Before Break (LBB) methodology.

TABLE 3.9 (N) - 13

COMPONENT CYCLIC OR TRANSIENT LIMITS

COMPONENT	CYCLIC OR TRANSIENT LIMIT	DESIGN CYCLE OR TRANSIENT
Reactor Coolant System	200 heatup cycles at ≤ 100°F/h and 200 cooldown cycles at ≤ 100°F/h.	Heatup cycle - T_{avg} from ≤ 200°F to ≥ 550°F. Cooldown cycle - T_{avg} from ≥ 550°F to ≤ 200°F.
	200 pressurizer cooldown cycles at ≤ 200°F/h	Pressurizer cooldown cycle temperatures from ≥ 650°F to ≤ 200°F.
	80 loss of load cycles, without immediate Turbine or Reactor trip.	≥ 15% of rated thermal power to 0% of rated thermal power.
	40 cycles of loss-of-offsite A.C. electrical power.	Loss-of-offsite A.C. electrical ESF Electrical system.
	80 cycles of loss of flow in one reactor coolant loop.	Loss of only one reactor coolant pump.
	400 Reactor trip cycles.	100% to 0% of rated thermal power.
	10 auxiliary spray actuation cycles.	Spray water temperature differential > 320°F.
	50 leak tests.	Pressurized to ≥ 2485 psig.
	5 hydrostatic pressure tests.	Pressurized to ≥ 3106 psig.
Secondary Coolant System	1 large steam line break.	Break in a > 6-inch steam line.
	5 hydrostatic pressure tests.	Pressurized to ≥ 1350 psig.

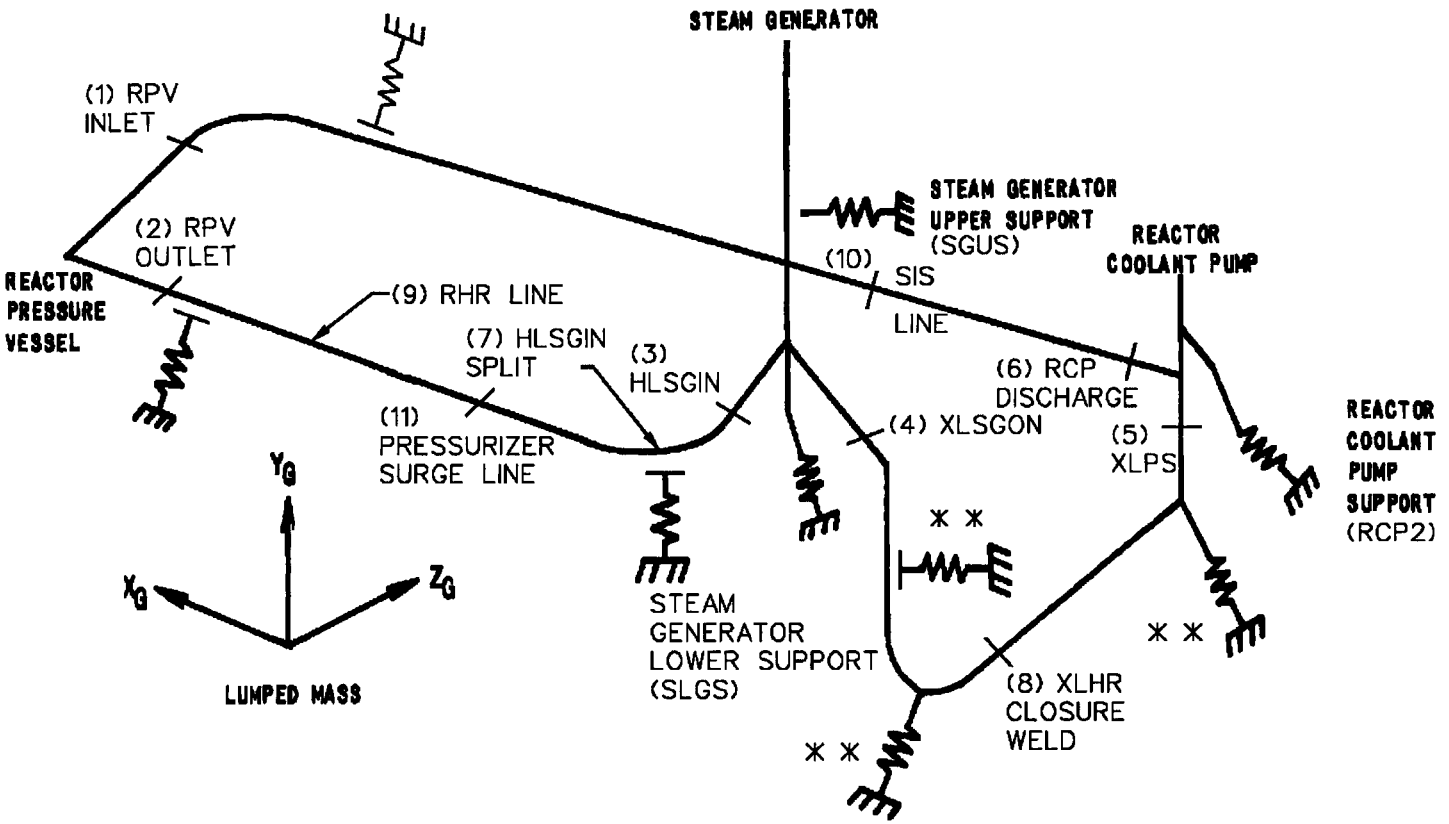

NOTES:

1. BREAK LOCATIONS 1 THROUGH 8 ARE ELIMINATED BY APPLYING LBB METHODOLOGY.
2. PIPE WHIP RESTRAINTS MARKED WITH ** ARE ELIMINATED FOR WOLF CREEK.

LOCATIONS OF POSTULATED LOSS-OF-COOLANT ACCIDENT

WOLF CREEK
UPDATED SAFETY ANALYSIS REPORT

FIGURE 3 9(N)-1, REV. 13

REACTOR COOLANT LOOP SUPPORTS SYSTEM DYNAMIC STRUCTURAL MODEL

WOLF CREEK

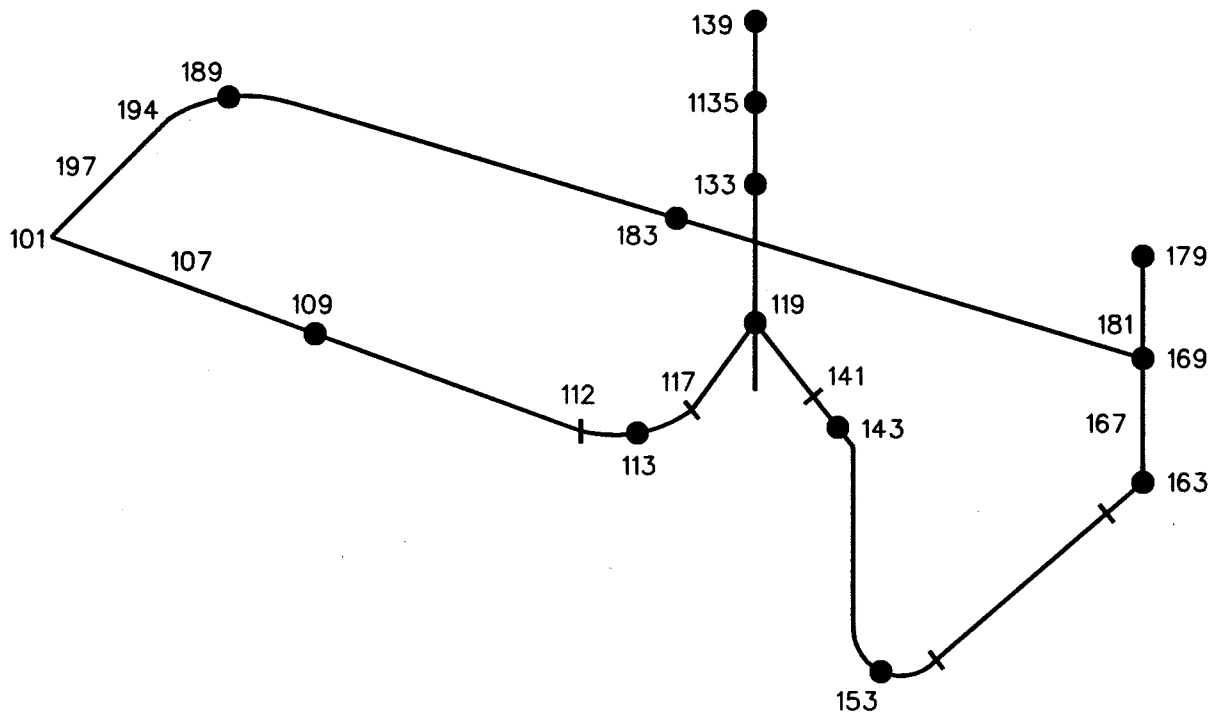

Rev. 13

WOLF CREEK
UPDATED SAFETY ANALYSIS REPORT

FIGURE 3.9(N)-1

REACTOR COOLANT PIPING MODEL FOR LOOP 1 (TYPICAL)

(SHEET 2)

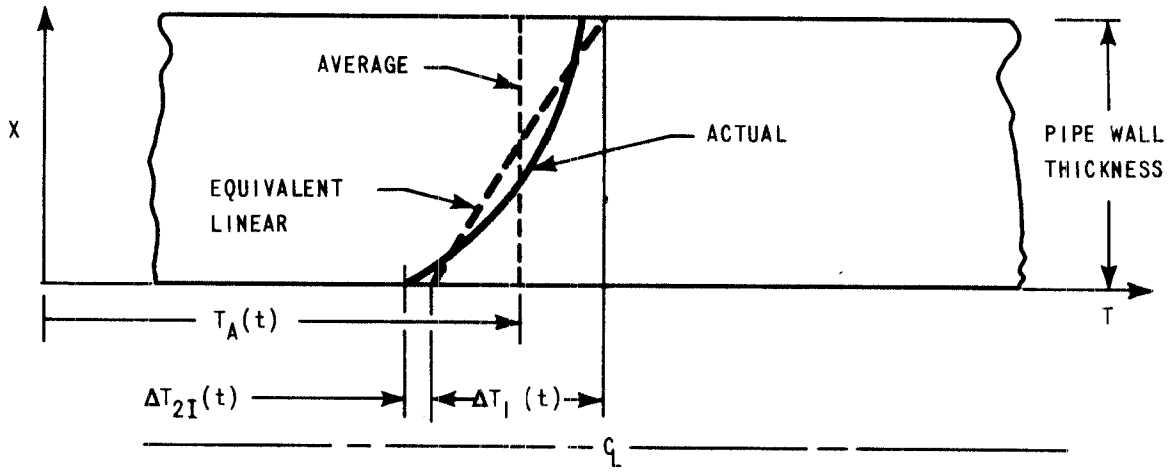

Rev. 0

WOLF CREEK
UPDATED SAFETY ANALYSIS REPORT

FIGURE 3.9(N)-2

THROUGH-WALL THERMAL GRADIENTS

WOLF CREEK

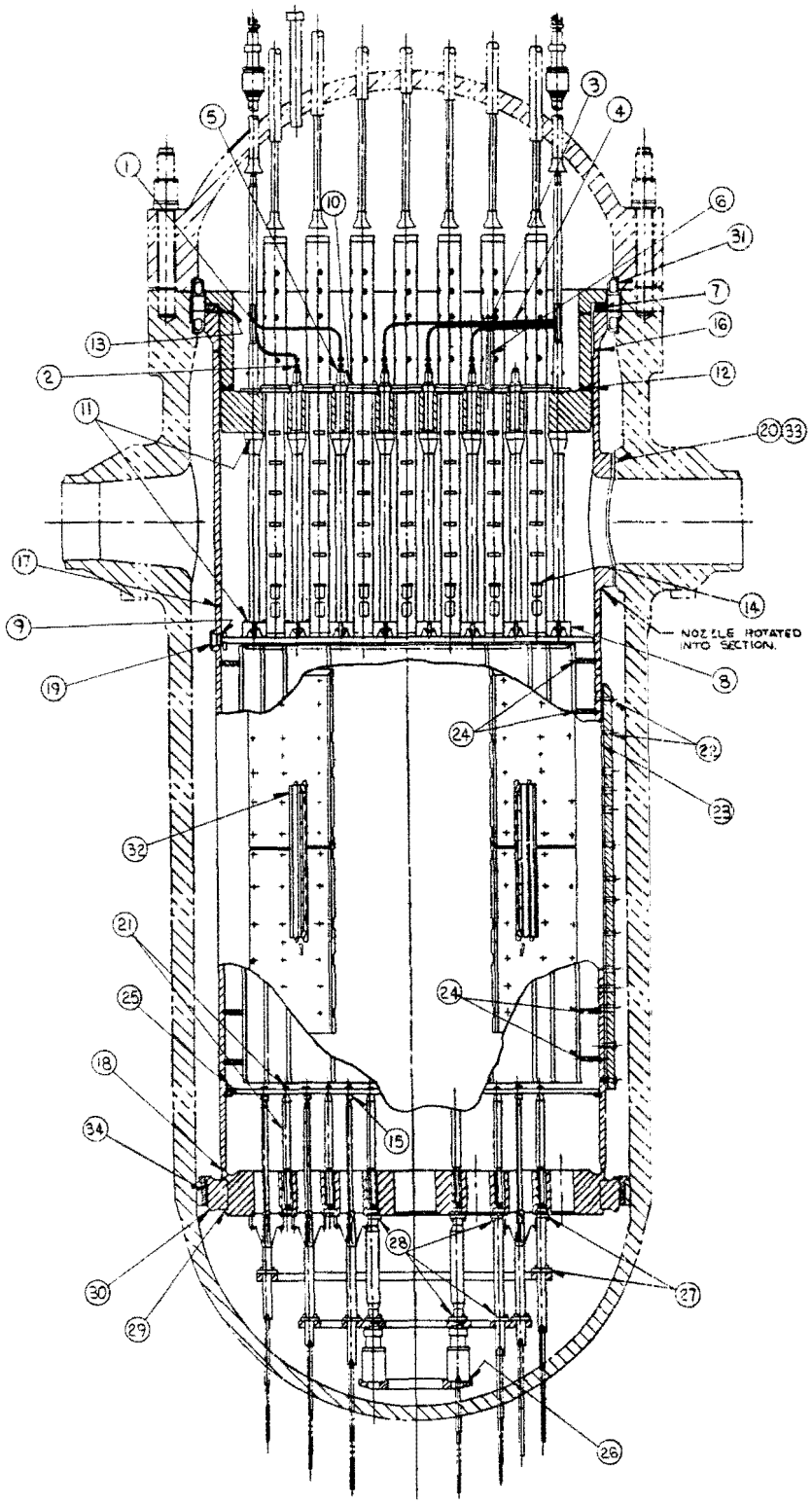

SEE NOTES	STEP	FEATURES TO BE EXAMINED
1	1	THERMOCOUPLE CONDUIT CLAMPS INSIDE THE THERMOCOUPLE COLUMN
1,5	2	CONDUIT SWAGELOK FITTINGS, THEIR BANDINGS, AND THE TAB TYPE LOCKS
1	3	CLAMP ARRANGEMENTS AT THE MOUNTING BRACKET LOCATIONS
1	4	CONDUIT CLAMP WELDS
1	5	UPPER SUPPORT COLUMN NUT TO EXTENSION WELDS
1	6	ACCESSIBLE CONDUIT SUPPORT BRACKET WELDS
6	7	HOLD DOWN SPRING INTERFACE SURFACE CONDITION
1	8	ACCESSIBLE WELDS ON SUPPORT COLUMN LOWER NOZZLES
3,6	9	UPPER CORE PLATE INSERTS
2	10	THERMOCOUPLE COLUMN AND GUIDE TUBE SCREW LOCKING DEVICES
2	11	ACCESSIBLE SUPPORT COLUMN, AND CORE PLATE INSERT SCREW LOCKING DEVICES
1	12	UPPER SUPPORT SKIRT TO PLATE GIRTH WELD
1	13	UPPER SUPPORT SKIRT TO FLANGE GIRTH WELD.
1	14	ACCESSIBLE GUIDE TUBE WELDS.
8	15	ACCESSIBLE (2) INSTRUMENTATION GUIDE COLUMN LOCKING COLLAR BEARING THE MANWAY
1	16	UPPER BARREL TO FLANGE GIRTH WELD.
1	17	UPPER BARREL TO LOWER BARREL GIRTH WELD
1	18	LOWER BARREL TO CORE SUPPORT GIRTH WELD.
1,4	19	UPPER CORE PLATE ALIGNING PIN WELDS AND BEARING SURFACES
8	20	OUTLET NOZZLE INTERFACE SURFACE CONDITION.
1,2 & 7	21	CORE SUPPORT COLUMNS AND THEIR SCREW LOCKING DEVICES.
1,2	22	NEUTRON SHIELD PANEL SCREW LOCKING DEVICES.
7	23	INTERFACE SURFACES AT THE SPACER PADS ALONG THE TOP AND BOTTOM ENDS OF THE NEUTRON PANELS
1	24	BAFFLE ASSEMBLY SCREW LOCKING ARRANGEMENTS AT THE TWO TOP AND THE TWO BOTTOM FORMER ELEVATIONS
2	25	LOWER CORE PLATE TO CORE BARREL SCREW LOCKING DEVICES ACCESSIBLE AT THE 0°, 90°, 180°, AND 270° AXES
1	26	SECONDARY CORE SUPPORT HOUSING TO BASE PLATE WELD.
1,2, 7	27	LOCKING DEVICES AND CONTACT OF THE BOTTOM INSTRUMENTATION GUIDE COLUMNS WHERE ATTACHED TO THE CORE SUPPORT AND TIE PLATES
1,2	28	LOCKING DEVICES OF THE SECONDARY CORE SUPPORT COLUMNS WHERE ATTACHED TO THE CORE SUPPORT AND TIE PLATE
1	29	RADIAL SUPPORT KEY WELDS
1,4	30	RADIAL SUPPORT KEY LOCKING ARRANGEMENTS AND BEARING SURFACES
1,4	31	HEAD AND VESSEL ALIGNING PINS SCREW LOCKING DEVICES AND BEARING SURFACES.
1,2	32	IRRADIATION SPECIMEN GUIDE SCREW LOCKING DEVICES AND DOWEL PINS
8	33	VESSEL NOZZLE INTERFACE SURFACE CONDITION
1,3 4	34	VESSEL CLEVIS LOCKING ARRANGEMENTS AND BEARING SURFACES

NOTES:

1. VISUALLY EXAMINE WELDS USING 5-10X MAGNIFICATION. NO CRACKS ALLOWED.
2. VERIFY THAT LOCKING DEVICES ARE CRIMPED AND UNDAMAGED.
3. VERIFY THAT INSERTS ARE SEATED (.0015 (0.038) FEELER MUST NOT PASS THRU INTERFACE)
4. VISUALLY EXAMINE FACES FOR DAMAGE USING 5-10X MAGNIFICATION
5. VERIFY THAT FITTINGS ARE TIGHT.
6. VISUALLY EXAMINE INTERFACE SURFACES FOR ANY EVIDENCE OF DAMAGE.
7. VERIFY SEATING USING A .0015 (0.038) FEELER GAGE. FEELER MUST NOT PASS THRU 90°
8. VERIFY THAT LOCKING COLLARS ARE TIGHT. NO MOVEMENT ALLOWED

Rev. 0

WOLF CREEK
UPDATED SAFETY ANALYSIS REPORT

FIGURE 3.9(N)-3

VIBRATION CHECKOUT FUNCTIONAL TEST INSPECTION POINTS

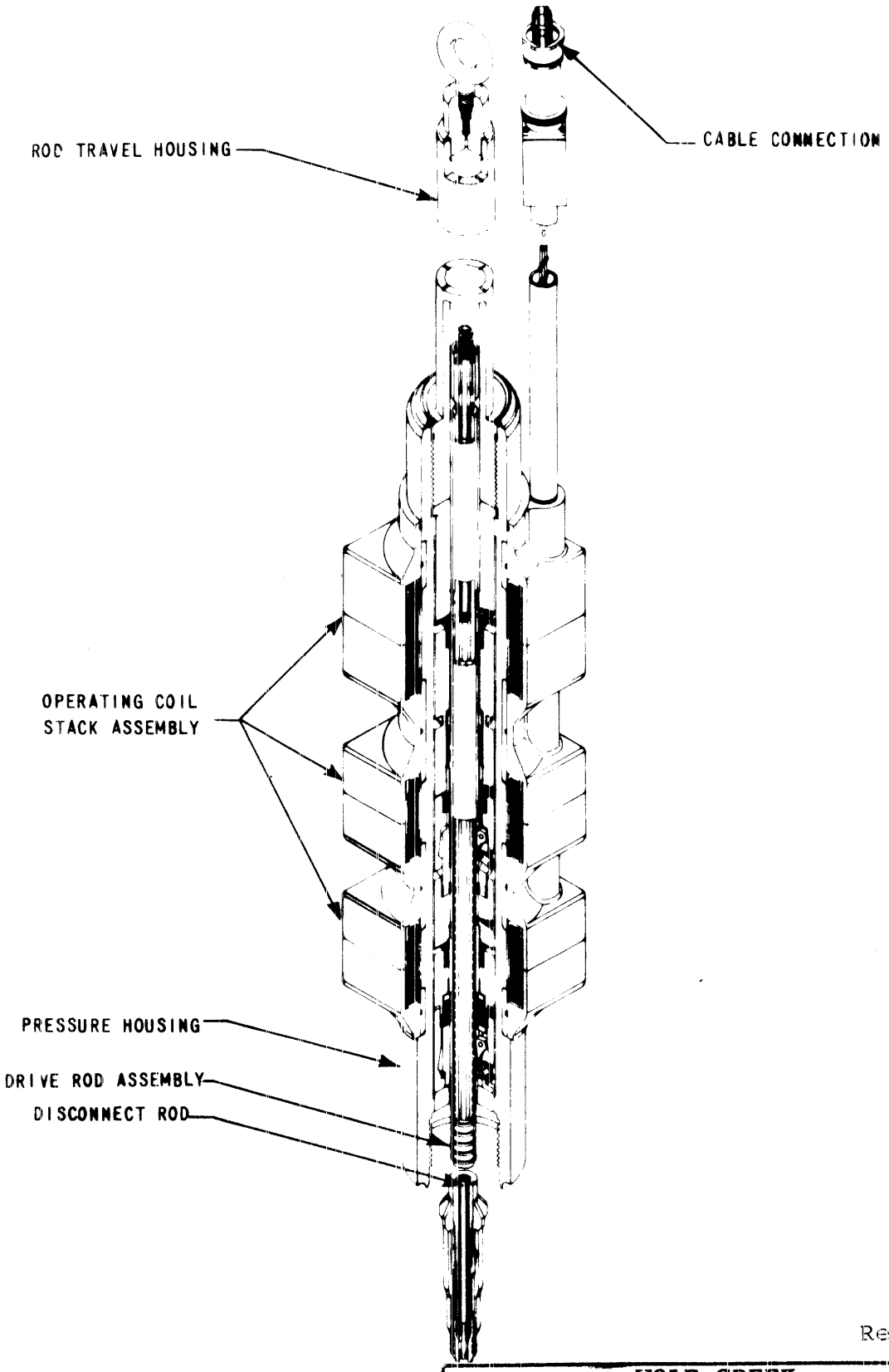

Rev. 0

WOLF CREEK
UPDATED SAFETY ANALYSIS REPORT

FIGURE 3.9(N)-4

FULL-LENGTH CONTROL ROD DRIVE MECHANISM

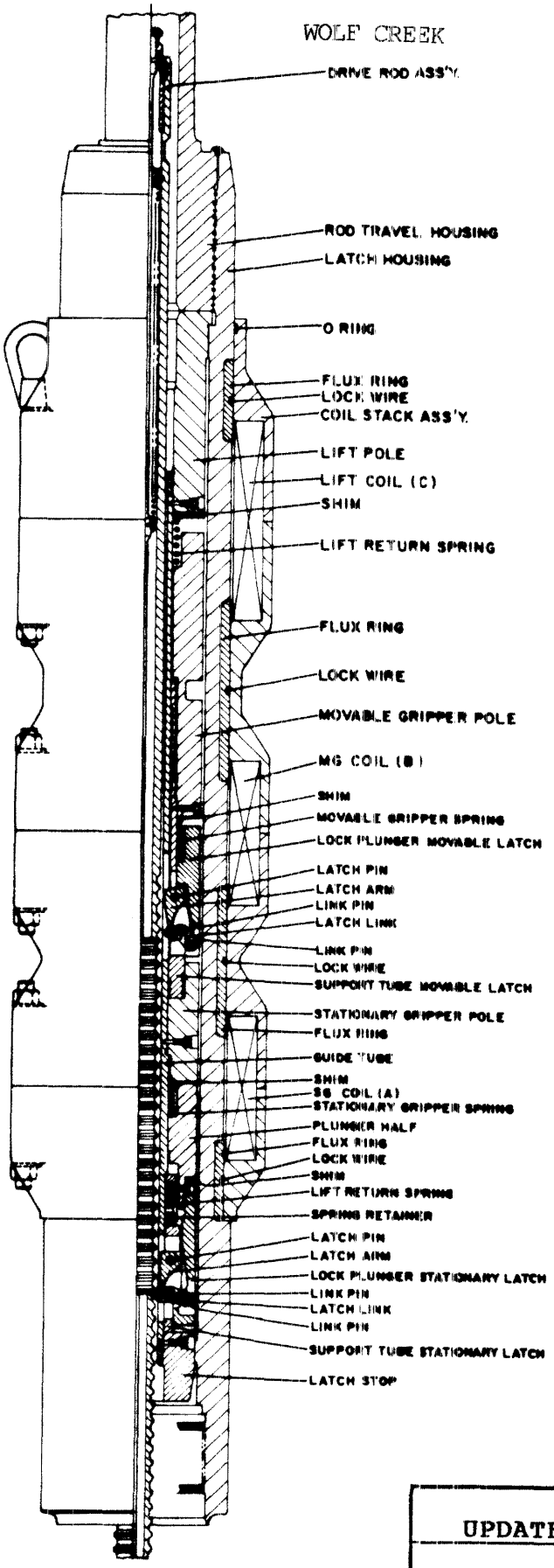

Rev. 0

WOLF CREEK
UPDATED SAFETY ANALYSIS REPORT

FIGURE 3.9(N)-5

FULL-LENGTH CONTROL ROD DRIVE MECHANISM SCHEMATIC

BEFORE LOAD TRANSFER

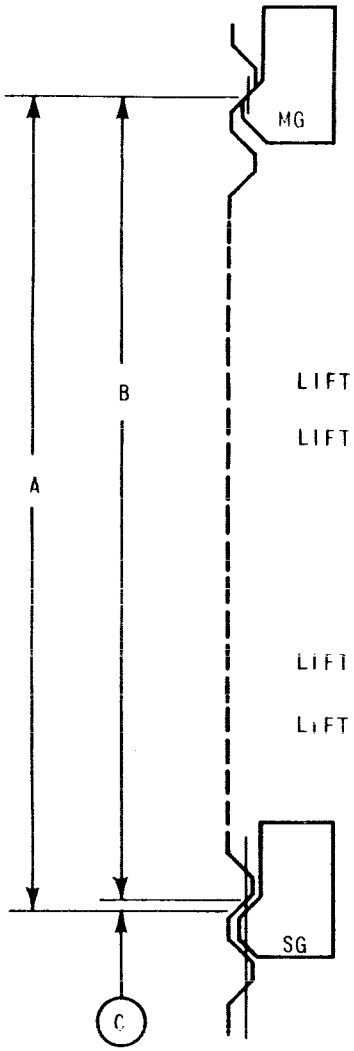

AT 70°	A	B	C
LIFT COIL OFF	15.640	15.625	0.015
LIFT COIL ON	16.265	16.250	0.015

AT 650°	A	B	C
LIFT COIL OFF	15.725	15.679	0.046
LIFT COIL ON	16.375	16.387	0.068

AFTER LOAD TRANSFER

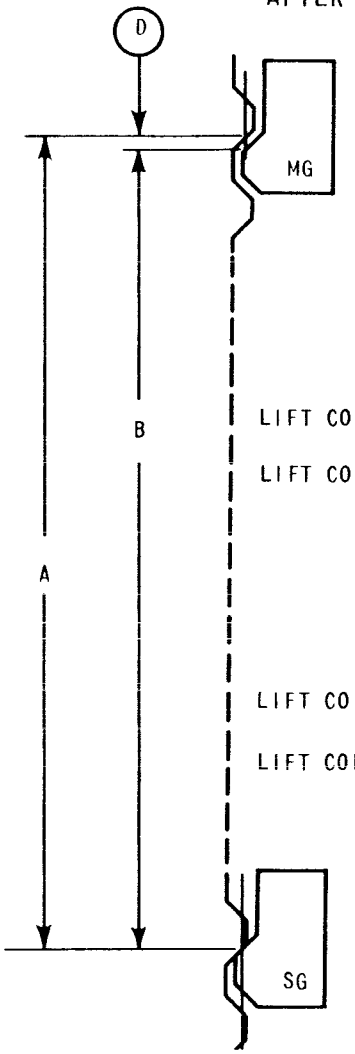

AT 70°	A	B	D
LIFT COIL OFF	15.625	15.578	0.047
LIFT COIL ON	16.258	16.203	0.047

AT 650°	A	B	D
LIFT COIL OFF	15.679	15.641	0.038
LIFT COIL ON	16.387	16.291	0.016

Rev. 0

WOLF CREEK
UPDATED SAFETY ANALYSIS REPORT

FIGURE 3.9(N)-6

NOMINAL LATCH CLEARANCE AT MINIMUM AND MAXIMUM TEMPERATURE

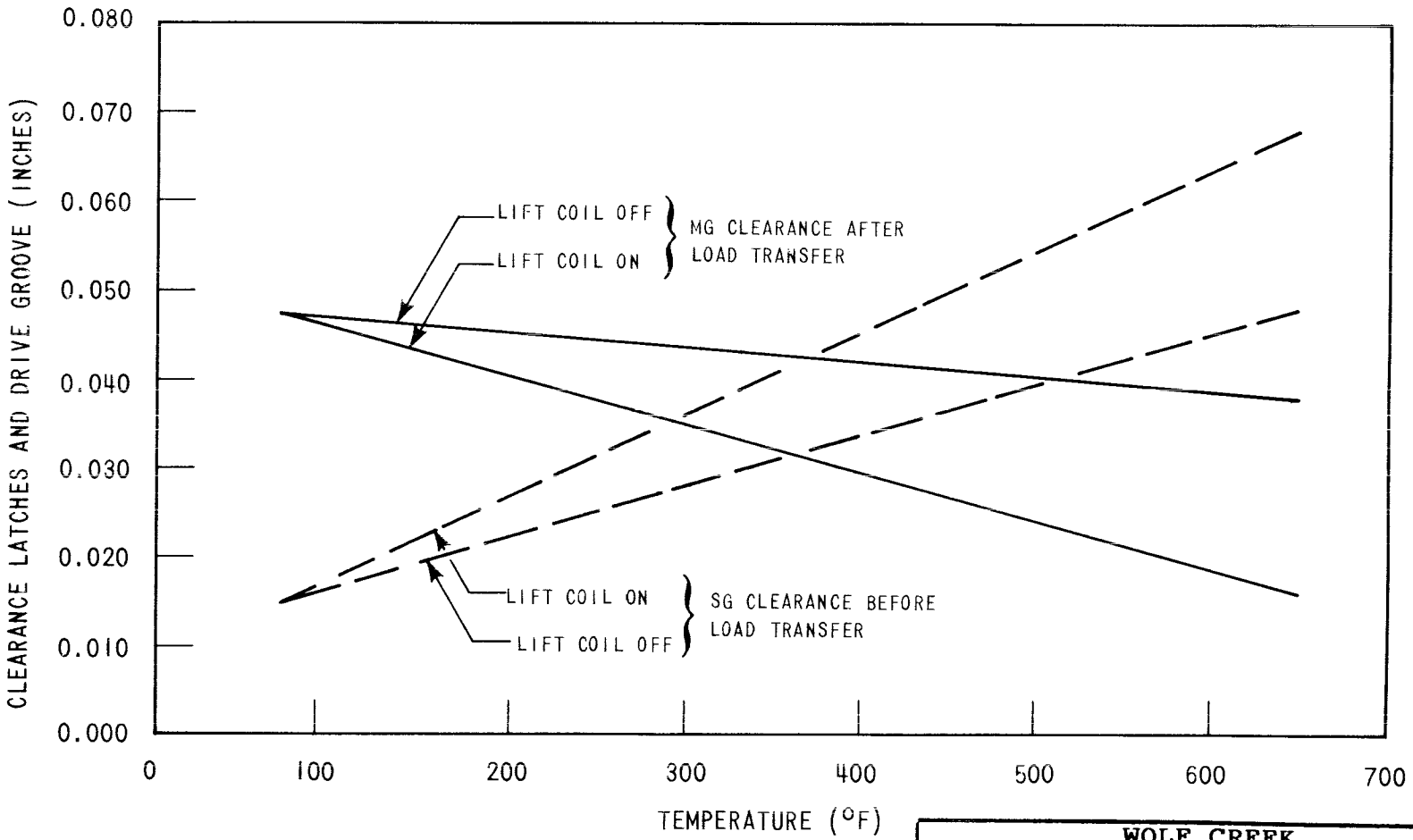

Rev. 0

WOLF CREEK
UPDATED SAFETY ANALYSIS REPORT

FIGURE 3.9(N)-7

CONTROL ROD DRIVE MECHANISM LATCH CLEARANCE THERMAL EFFECT

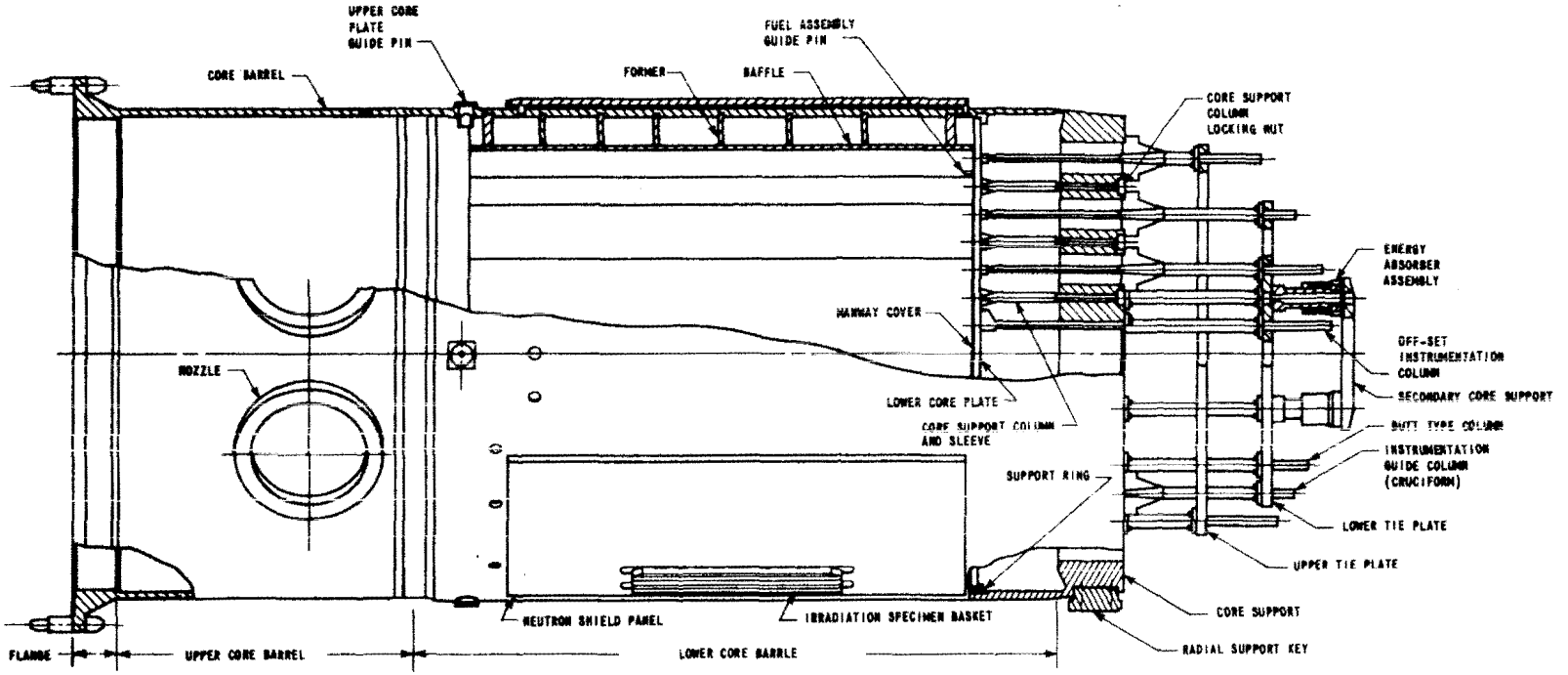

Rev. 0

WOLF CREEK
UPDATED SAFETY ANALYSIS REPORT

FIGURE 3.9(N)-8

LOWER CORE SUPPORT ASSEMBLY (CORE BARREL ASSEMBLY)

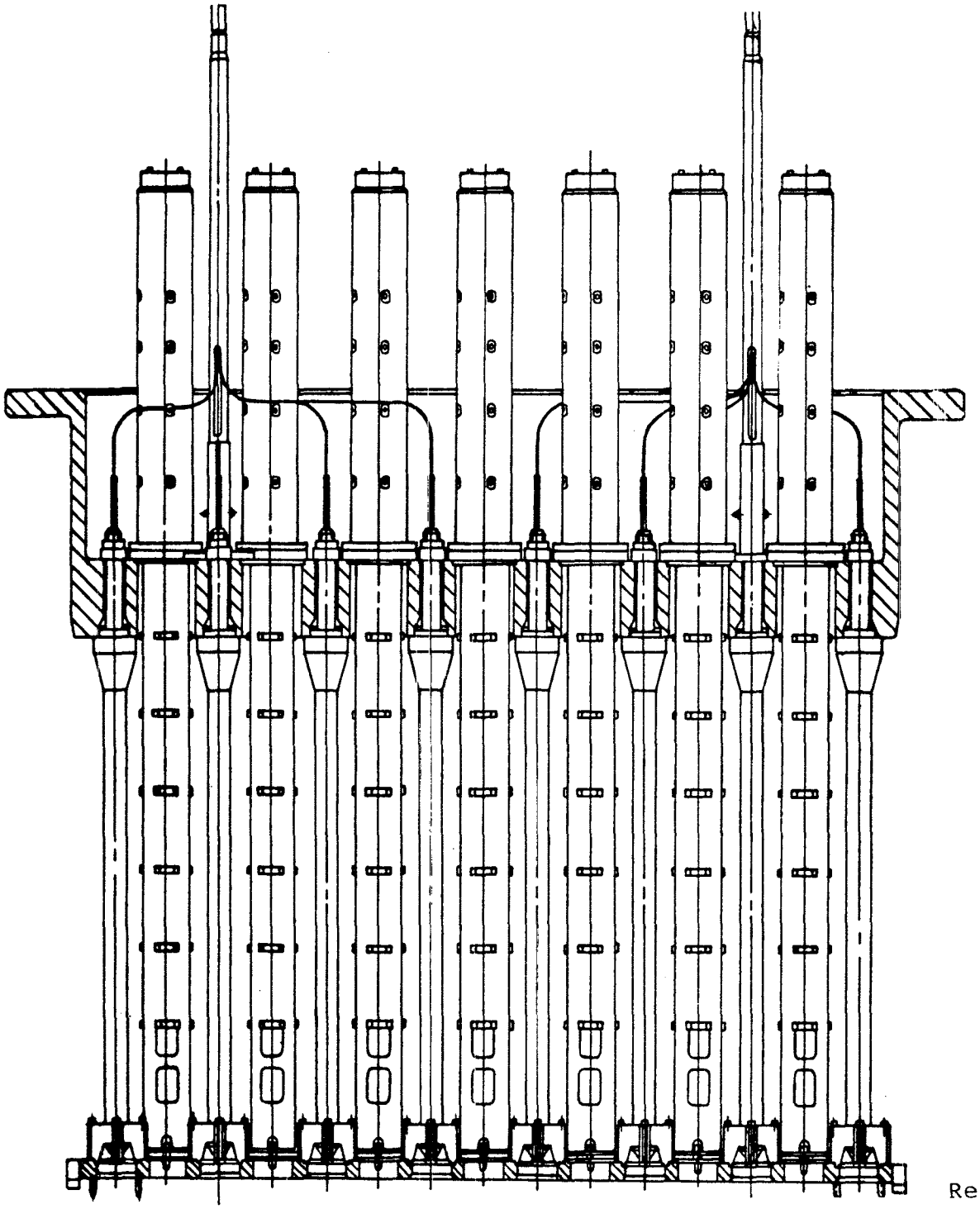

Rev. 0

WOLF CREEK
UPDATED SAFETY ANALYSIS REPORT

FIGURE 3.9(N)-9

UPPER CORE SUPPORT STRUCTURE

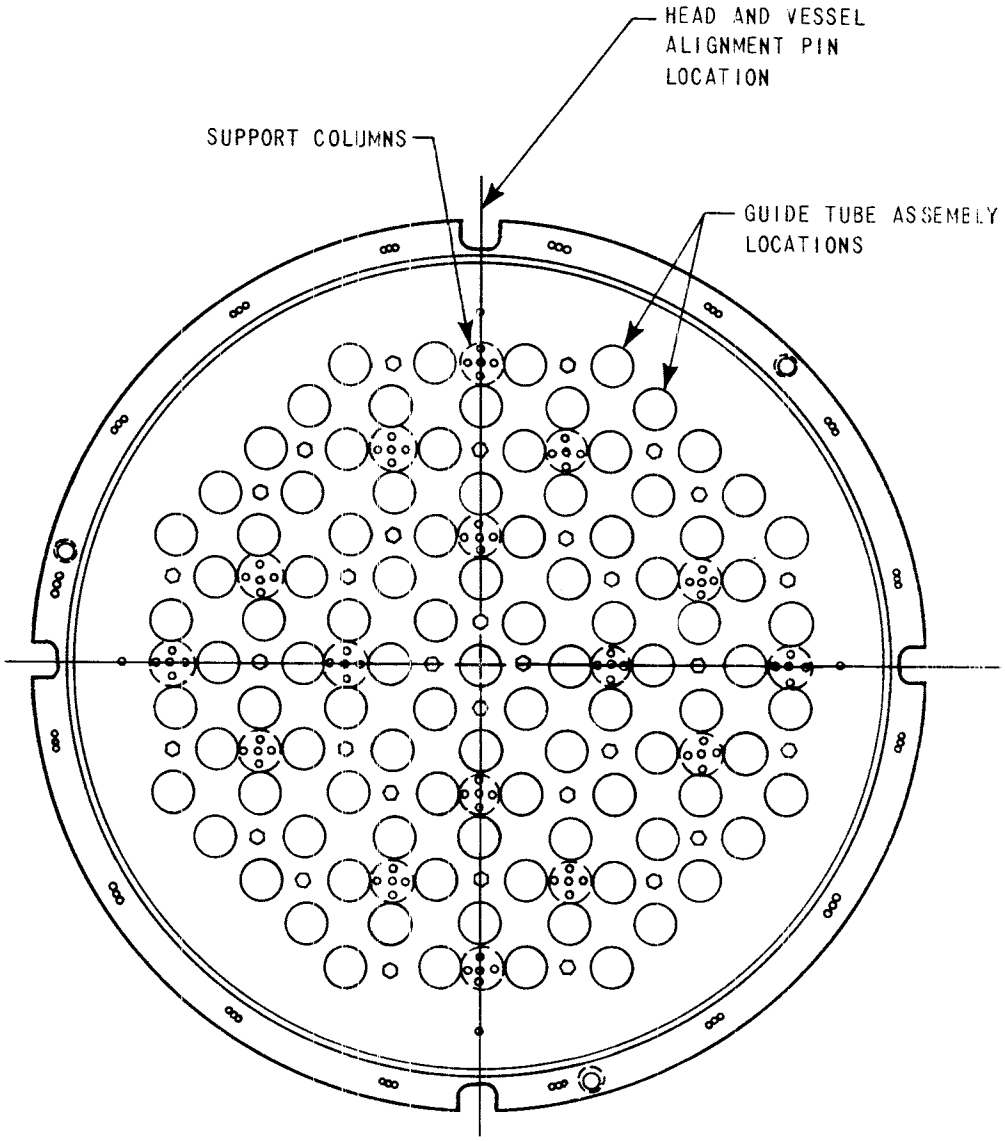

Rev. C

WOLF CREEK
UPDATED SAFETY ANALYSIS REPORT

FIGURE 3.9(N)-10

PLAN VIEW OF UPPER CORE SUPPORT STRUCTURE

3.10(B) SEISMIC QUALIFICATION OF CATEGORY I INSTRUMENTATION AND ELECTRICAL EQUIPMENT

Refer to Table 3.10(B)-1 for a listing of non-NSSS seismic Category I instrumentation and electrical equipment requiring seismic qualifications.

3.10(B).1 SEISMIC QUALIFICATION CRITERIA

The seismic Category I instrumentation and electrical equipment are qualified to withstand the effects of the safe shutdown earthquake (SSE) and remain functional during normal and accident conditions.

The seismic Category I instrumentation and electrical equipment is divided into three further classifications--equipment which is designed to maintain its functional capability during and after an SSE, equipment which is designed to maintain its functional capability after, but not during an SSE, and equipment which, although not required to function actively, is designed to maintain the pressure boundary integrity of the system, of which it is a part, during and after an SSE.

The performance requirements of the seismic Category I electrical items and their respective supports are structural as well as functional. Where applicable, the structural requirements are in accordance with AISC, "Specification for the Design, Fabrication, and Erection of Structural Steel for Buildings," adopted February 12, 1969, AISI, "Specification for the Design of Cold-Formed Steel Structural Members", 1968 Edition, or similar codes applicable for other construction materials (refer to Section 3.8.4). Field welding of supports is in accordance with AWS D1.1, "Structural Welding Code," except for paragraphs 2.7.1.5 and 2.7.1.1 in AWS D1.1-75, paragraphs 2.7.1.1 and 2.7.1.4 in AWS D1.1-90, or paragraphs 2.3.2.4 and 5.14 in AWS D1.1-2004 where adequate weld is provided for the structural requirements and as noted in USAR Section 3.8.3.6.3.3.

The structural requirements for instrumentation equipment and systems which are required to maintain pressure boundary integrity are in accordance with ASME Section III, 1977.

In addition to the above, the standby power system and seismic Category I instrumentation and electrical equipment associated with engineered safety features are qualified to withstand seismic disturbances of the intensity of the SSE during post-accident operation.

The engineered safety features actuation system is designed with the capability to initiate protective actions during the SSE.

3.10(B).2 METHODS AND PROCEDURES FOR QUALIFYING ELECTRICAL EQUIPMENT AND INSTRUMENTATION

Qualification and documentation procedures used for seismic Category I equipment and/or systems within Bechtel's scope of supply meet the provisions of IEEE 344 -1975 and Regulatory Guide 1.100.

3.10(B).2.1 Analysis

Analysis without testing is acceptable when it can be demonstrated that the analytical technique ensures the design-intended function. The procedures described in IEEE 344, Paragraph 5.0, are followed.

3.10(B).2.2 Testing

Seismic tests are performed by subjecting equipment to vibratory motion which simulates the required response spectrum (RRS) at the equipment mounting. A combination or one of the following techniques, as defined in IEEE 344, is applicable.

1. Fragility testing
2. Proof testing
3. Device testing
4. Assembly testing

3.10(B).2.3 Combined Analysis and Testing

Equipment that cannot be qualified from a practical standpoint by analysis or testing because of its size and/or complexity is qualified by combined analysis and testing. The procedures described in IEEE 344, Paragraph 7.0, are followed.

3.10(B).2.4 Generic Qualification

In addition to the foregoing methods for qualification of Class IE equipment, generic programs are used which qualify electrical or instrument equipment by testing and/or analyzing representative types which are similar with respect to type, load level, and size.

3.10(B).3 METHODS AND PROCEDURES OF ANALYSIS OR TESTING OF SUPPORTS OF ELECTRICAL EQUIPMENT

3.10(B).3.1 Analysis

The analysis method and much of the design criteria pertaining to Electrical raceway systems was verified by the "Cable Tray and Conduit Raceway Test Program," as noted in Section 1.5.3.2. During that program, some 2,000 dynamic tests were performed on several hundred varied cable tray and conduit support systems. The effects of numerous parameters which could possibly influence system dynamics were investigated. Also, several different types of tray, conduit, and supports from various manufacturers were tested. As a result of this extensive test program and related activities, a conservative design basis for Class IE cable tray and conduit systems has been developed.

The following bases were used in the seismic design and analysis of Class IE electrical raceways:

a. All electrical raceway supports are designed by dynamic analysis, using the response spectrum method or the equivalent static load method described in Section 3.7(B).2.7.1.

b. Analysis and seismic restraint measures for raceways are based on combined limiting values for static load, span length, and computed seismic response.

c. Maximum allowable stresses during the SSE for all components are limited to 90 percent of maximum yield.

d. An analysis was performed for the angle fittings used at the connections of strut hangers to overhead supports, or at interhanger locations. A cumulative usage factor was calculated and compared to a fatigue curve. The usage factor was developed based upon the IEEE Standard 344-1975, which states that the maximum number of OBE and SSE events plausible during the power plant's lifetime is five and one, respectively. A factor of safety of 1.5 was applied against the number of fatigue cycles to failure in order to establish an allowable number of design fatigue cycles.

e. An analysis was performed to satisfy the requirements of the SSE and OBE load criteria. Stress levels were analyzed for the SSE load cases, and fatigue resistance was analyzed for critical raceway components under the OBE. The test program results demonstrated that the

repetition of many earthquakes up to an equivalent SSE ground motion of 2/3g will not result in a loss of function in the support system or electrical circuitry. In addition, the design procedure considers low cycle fatigue phenomena for connections.

Seismic Analysis of Cable Trays is discussed in Section 3.7(B).3.16.

3.10(B).4 METHODS AND PROCEDURES OF ANALYSIS OR TESTING OF INSTRUMENTATION PANELS, MOUNTING STRUCTURES FOR FIELD MOUNTED INSTRUMENTS, AND SUPPORTS FOR INSTRU-MENT TUBING

3.10(B).4.1 Instrumentation Panels

Table 3.10(B)-1 lists the instrumentation panels required to be qualified as Seismic Category I. The methods used to qualify the panels are discussed in the seismic procedures and final test reports maintained in the subject equipment specification files.

3.10(B).4.2 Mounting Structures for Field Mounted Instruments

Mounting structures comply with the following:

a. The mounting structure for Category I instruments has a fundamental frequency of 33 Hz or greater.

b. The stress level in the mounting structure does not exceed the material allowable stress when subjected to the maximum acceleration level of the mounting location. The weight of the instrument and instrument accessories is included.

Material allowable stress is determined from ASME Section III, Subsection NF or Code Case 1644-6.

3.10(B).4.3 Supports for Instrument Tubing

The Category I instrument tubing systems are supported so that the allowable stresses permitted by ASME Section III are not exceeded when the tubing is subjected to the loads specified in Section 3.9(B).3 for Class 2 and 3 piping.

3.10(B).5 OPERATING LICENSE REVIEW

Results of tests and analyses to demonstrate adequate seismic qualification and implementation for equipment specifications listed in Table 3.10(B)-1 are contained in the seismic procedures and final test reports maintained in the subject equipment specification files.

TABLE 3.10(B)-1

SEISMIC CATEGORY I INSTRUMENTATION AND ELECTRICAL EQUIPMENT IN THE BALANCE-OF-PLANT SCOPE OF SUPPLY

Equipment	Specification
Metal Clad Switchgear	E-009
Large Induction Motors	E-012
Load Center Unit Substations	E-017/E-017A
Motor Control Centers	E-018
Direct Current Distribution Panels	E-020
Local Control Stations	E-028
Control Switches	E-028A
Local Control Stations	E-028B
Electrical Penetration Assemblies	E-035
Electrical Penetration Modules	E-035B
Batteries and Battery Racks	E-050/E-050A
Battery Chargers	E-051/051A
AC Distribution Panels	E-053
Dry Type ESF Transformers	E-075
Regulating Transformers	E-077
Load Shedder and Emergency Load Sequencer	E-092
Auxiliary Relay Racks	E-093
Status Indicating Systems	E-094
Engineered Safety Features Actuation System	J-104
Main Steam and Feedwater Isolation Actuation System	J-105
Major Electronic Instrumentation and Control Package	J-110
Main Control Board	J-200
Auxiliary Control Panels	J-201
Pressure and Differential Pressure Transmitters	J-301
Hydrogen Monitoring System	J-359
Radiation Monitors	J-361
Post-Accident Radiation Monitors	J-361A
Neutron Flux Monitoring System	J-364
Probe Type Level Instrumentation	J-481
RTDs	J-558B
Control Valves	J-601A
Atmospheric Relief Valves	J-601B
Solenoid Valves and Electrical Conductor Seal Assemblies	J-603A
Butterfly Valves	J-605A

TABLE 3.10(B)-1 (Continued)

Equipment	Specification
Diesel Generators	M-018
ESW Traveling Screens	M-020
Auxiliary Feedwater Pump Turbine	M-021
Fuel Pool Cooling Pump Motors	M-084
Emergency Fuel Oil Transfer Pump Motors	M-087
Containment Spray Pump Motors	M-088
Essential Service Water Pumps	M-089
ESW Self Cleaning Strainer Motors	M-154
Gate and Globe Valves	M-221
Motor Operated Gate and Globe Valves	M-223A
Motor Operated Gate and Globe Valves	M-223C
Motor Operated Gate and Globe Valves	M-224B
Motor Operated Gate and Globe Valves	M-225
Motor Operated Gate and Globe Valves	M-231B
Motor Operated Gate and Globe Valves	M-231C
Motor Operated Butterfly Valves	M-235, M-261
Motor Operated Butterfly Valves	M-236
Motor Operated Butterfly Valves	M-237
Room Coolers	M-612
Safety-Related Fans	M-619.2
Hydrogen Mixing Fans	M-619.3
Containment Cooler Motors	M-620
Air Cleaning Devices	M-621
Packaged A/C Units	M-622.1, M-622.1A
HVAC Dampers	M-627A
Main Steam Isolation Valves	M-628
Main Feedwater Isolation Valves	M-630

3.10(N) SEISMIC QUALIFICATION OF SEISMIC CATEGORY I INSTRUMENTATION AND ELECTRICAL EQUIPMENT

This section presents information to demonstrate that instrumentation and electrical equipment classified as Seismic Category I are capable of performing designated safety-related functions in the event of an earthquake. The information presented includes identification of the Category I instrumentation and electrical equipment that are within the scope of the Westinghouse nuclear steam supply system (NSSS), the qualification criteria employed for each item of equipment, the designated safety-related functional requirements, the definition of the applicable seismic environment, and documentation of the qualification process employed to demonstrate the required seismic capability.

3.10(N).1 SEISMIC QUALIFICATION CRITERIA

3.10(N).1.1 Qualification Standards

NRC recommendations concerning the methods to be employed for seismic qualification of electrical equipment are contained in Regulatory Guide 1.100, which endorses IEEE 344-1975. The qualification of NSSS-supplied equipment meets this standard, as modified by Regulatory Guide 1.100, by either type test, analysis, or an appropriate combination of these methods. Westinghouse-supplied equipment is qualified by employing the methodology described in Reference 1.

According to Regulatory Guide 1.100, the seismic qualification of equipment must be performed in conjuction with the requirements of Regulatory Guide 1.89, which addresses the environmental qualification of equipment located in harsh environment areas, as specified in the Institute of Electrical and Electronics (IEEE) Standard 323-1974. WCGS has committed to meet IEEE Standard 323-1974. Required seismic tests conform to the procedures specified in IEEE Standard 344-1975 which account for multiaxis and multifrequency effects of seismic excitation and fatigue effects caused by a number of OBE events. This commitment was satisfied by implementation of the final NRC-approved version of Reference 1. Reference 2 presents the Westinghouse testing procedures used to qualify equipment by type testing. Seismic qualification testing of this equipment to IEEE Standard 344-1971 is documented in References 3 through 8. Reference 9 presents the theory and practice, as well as justification, for the use of single axis sine beat test inputs used in the seismic qualification of electrical equipment. In addition, it is noted that Westinghouse has conducted a seismic qualification "Demonstration Test Program" (Ref. 10) to confirm equipment operability during a seismic event.

For the seismic qualification of Westinghouse electrical equipment outside of the containment, the above-noted demonstration test program, in conjunction with the justification for the use of single axis sine beat tests (presented in Ref. 4) and the original tests (documented in Ref. 3 through 8 and 13), meets the requirements of IEEE Standard 344-1975.

Thus, since the "Demonstration Test Program" was successfully completed, the equipment's operability has been demonstrated to meet the requirements of IEEE Standard 344-1975.

The acceptability criteria for the SSE notes that there may be permanent deformation of the equipment provided that the capability to perform its function is maintained.

3.10(N).1.2 Performance Requirements for Seismic Qualification

Reference 11 contains an equipment qualification data package (EQDP) for every item of instrumentation and electrical equipment classified as Seismic Category I within the Westinghouse NSSS scope of supply. Table 3.10(N)-1 identifies the Category I equipment supplied by Westinghouse for this application and references the applicable EQDP contained in Supplement 1 to Reference 1. Each EQDP in Supplement 1 contains a section entitled "Performance Specifications." This specification establishes the safety-related functional requirements of the equipment to be demonstrated during and after a seismic event. The required response spectrum (RRS) employed by Westinghouse for generic seismic qualification is also identified in the specification, as applicable.

3.10(N).1.3 Acceptance Criteria

Seismic qualification must demonstrate that Category I instrumentation and electrical equipment are capable of performing designated safety-related functions during and after an earthquake of magnitude up to and including the Operating Basis Earthquake (OBE) and Safe Shutdown Earthquake (SSE) without the initiation of undesired spurious actuation which might result in consequences adverse to safety. The qualification must also demonstrate the structural integrity of mechanical supports and structures at the OBE level. Some permanent mechanical deformation of supports and structures is acceptable at the SSE level providing that the ability to perform the designated safety-related functions is not impaired.

3.10(N).2 METHODS AND PROCEDURES FOR QUALIFYING ELECTRICAL EQUIPMENT AND INSTRUMENTATION

In accordance with IEEE 344-1975, seismic qualification of safety-related electrical equipment is demonstrated by either type testing, analysis, or a combination of these methods. The choice of qualification method employed by Westinghouse for a particular item of equipment is based upon many factors including practicality, complexity of equipment, availability of previous seismic qualification to earlier standards, etc. The qualification method employed for a particular item of equipment is identified in the individual Equipment Qualification Data Packages (EQDPs) of Reference 11.

3.10(N).2.1 Seismic Qualification by Type Test

From 1969 to mid-1974 Westinghouse seismic test procedures employed single axis sine beat inputs in accordance with IEEE 344-71 to seismically qualify equipment. The input form selected by Westinghouse was chosen following an investigation of building responses to seismic events as reported in Reference 2. In addition, Westinghouse has conducted seismic retesting of certain items of equipment as part of the Demonstration Test Program (Reference 10). This retesting was performed at the request of the NRC staff on selected items of equipment employing multi-frequency, multi-axis test inputs (Reference 12) to demonstrate the conservatism of the original sine-beat test method with respect to the modified methods of testing for complex equipment recommended by IEEE 344-1975.

The original single axis sine beat testing and the additional retesting completed under the Demonstration Test Program has been the subject of generic review by the staff. For equipment which has been previously qualified by the single axis sine beat method and included in the NRC seismic audit and, where required by the staff, the Demonstration Test Program (Reference 10), no additional qualification testing is required to demonstrate acceptability to IEEE 344-1975 provided that:

a. The Westinghouse aging evaluation program for aging effects on complex electronic equipment located outside containment demonstrates there are no deleterious aging phenomena. In the event that the aging evaluation program identifies materials that are marginal, either the materials will be replaced or the projected qualified life will be adjusted.

b. Any changes made to the equipment due to a. above or due to design modifications do not significantly affect the seismic characteristics of the equipment.

c. The previously employed test inputs can be shown to be conservative with respect to applicable plant-specific response spectra.

This equipment is identified in Reference 1, Table 7.1 and the test results in the applicable EQDPs of Reference 11.

For equipment tests after July 1974 (i.e., new designs or equipment not previously qualified or previously qualified that does not meet a., b., and c. above), seismic qualification by test was performed in accordance with IEEE 344-1975. Where testing was utilized, multi-frequency multi-axis inputs were developed by the general procedures outlined in Reference 14. The test results contained in the individual EQDPs of Reference 11 demonstrate that the measured test response spectrum envelops the applicable required response spectrum (RRS) defined for generic testing as specified in Section 1 of the EQDP (Reference 11). Qualification for plant use was established by verification that the generic RRS specified by Westinghouse envelops the WCGS response spectra. Alternative test methods, such as single frequency, single axis inputs, were used in selected cases as permitted by IEEE 344-1975 and Regulatory Guide 1.100.

3.10(N).2.2 Seismic Qualification by Analysis

Employing motors as an example, the structural integrity of safety-related motors is demonstrated by a static seismic analysis, in accordance with IEEE 344-1975, with justification. Should analysis fail to show the resonant frequencies to be significantly greater than 33 Hz, a test is performed to establish the motor resonant frequency. Motor operability during a seismic event is demonstrated by calculating critical deflections, loads and stresses under various combinations of seismic, and gravitational and operational loads. The worst case (maximum) values calculated are tabulated against the allowable values. On combining these stresses, the most unfavorable possibilities are considered in 1) maximum rotor deflection, 2) maximum shaft stresses, 3) maximum bearing load and shaft slope at the bearings, 4) maximum stresses in the stator core welds, 5) maximum stresses in the stator core to frame welds, 6) maximum stresses in the motor mounting bolts and, 7) maximum stresses in the motor feet.

The analytical models employed and the results of the analysis are described in Section 4 of the applicable EQDPs (Reference 11).

3.10(N).3 METHODS AND PROCEDURES FOR QUALIFYING SUPPORTS OF ELECTRICAL EQUIPMENT AND INSTRUMENTATION

Where supports for the electrical equipment and instrumentation are within the Westinghouse NSSS scope of supply, the seismic qualification tests and/or analysis are conducted including the supplied supports. The EQDPs contained in Reference 11 identify the equipment mounting employed for qualification purposes and establish interface requirements for the equipment to ensure subsequent WCGS installation does not prejudice the generic qualification established by Westinghouse.

3.10(N).4 OPERATING LICENSE REVIEW

The results of tests and analyses that ensure that the criteria established in Section 3.10(N).1 have been satisfied employing the qualification methods described in Section 3.10(N).2 and 3.10(N).3 are included in the individual EQDPs contained in Reference 11.

3.10(N).5 REFERENCES

1. Butterworth, G. and Miller, R. B., "Methodology for Qualifying Westinghouse WRD Supplied NSSS Safety-Related Electrical Equipment," WCAP-8587, Revision 6A, November, 1983.

2. Morrone, A., "Seismic Vibration Testing with Sine Beats," WCAP-7558, October, 1971.

3. Vogeding, E. L., "Seismic Testing of Electrical and Control Equipment," WCAP-7397-L (Proprietary) January, 1970 and WCAP-7817 (Non-Proprietary), December, 1971.

4. Vogeding, E. L., "Seismic Testing of Electrical and Control Equipment (WCID Process Control Equipment)," WCAP-7397-L, Supplement l (Proprietary) January, 1971 and WCAP-7871, Supplement 1 (Non-Proprietary), December, 1971.

5. Potochnik, L. M., "Seismic Testing of Electric and Control Equipment (Low Seismic Plants)," WCAP-7817, Supplement 2, December, 1971.

6. Vogeding, E. L., "Seismic Testing of Electric and Control Equipment (Westinghouse Solid State Protection System) (Low Seismic Plants)," WCAP-7817, Supplement 3, December, 1971.

7. Reid, J. B., "Seismic Testing of Electrical and Control Equipment (WCID NUCANA 7300 Series) (Low Seismic Plants)," WCAP-7817, Supplement 4, November, 1972.

8. Vogeding, E. L., "Seismic Testing of Electrical and Control Equipment (Instrument Bus Distribution Panel) (Low Seismic-Plants)," WCAP-7817, Supplement 5, March, 1974.

9. Fischer, E. G. and Jarecki, S. J., "Qualification of Westinghouse Seismic Testing Procedure for Electrical Equipment Tested Prior to May 1974," WCAP-8373, August, 1974.

10. Letter NS-CE-692, dated July 10, 1975, C. Eicheldinger (Westinghouse) to D. B. Vassallo (NRC).

11. EQDP "Equipment Qualification Data Packages," Supplement 1 to WCAP-8587.

12. Jarecki, S. J., "General Method of Developing Multi-Frequency Biaxial Test Inputs for Bistables," WCAP-8624 (Proprietary).

13. Figenbaum, E. K. and Vogeding, E. L., "Seismic Testing of Electrical and Control Equipment (Type DB Reactor Trip Switchgear)," WCAP-7817; Supplement 6, August, 1974.

14. Kelly, R. E. and McInerey, J. J., "Methodology for the Seismic Qualification of Westinghouse WRD Supplied Equipment," WCAP-9714-PA (Proprietary), WCAP-9750-A (Non-Proprietary).

15. Parello J., Drexler, J. E., and Walker, L. I., "Seismic Confirmation of Westinghouse NSSS Class 1E Electrical Equipment for SNUPPS Project," WCAP-10424, October 1983.

TABLE 3.10(N)-1

SEISMIC CATEGORY I INSTRUMENTATION AND ELECTRICAL EQUIPMENT IN WESTINGHOUSE NSSS SCOPE OF SUPPLY

Equipment	EQDP
Pressure Transmitters	ESE-1A,1B,1C,ESE 2A and 2B
Differential Pressure Transmitters	ESE-3A,3C,ESE,4A and 4D
Resistance Temperature Detectors (Well-Mounted)(Wide Range)	ESE-6
*Resistance Temperature Detectors (Well-Mounted)(Narrow Range)	J-564
Resistance Temperature Detectors (Strap-On)	ESE-42A
Solid State Protection System and Safeguards Test Cabinets (2 Train)	ESE-16
Nuclear Instrumentation System Cabinets	ESE-10
Deleted	
Reactor Trip Switchgear	ESE-20
Excore Neutron Detectors (Power Range)	ESE-8A
7300 Process Protection System Cabinets	ESE-13A,B,C,D
Remote Digital Display and Printer	ESE-46A, B
High Volume Pressure Sensors	ESE-48A
Core Cooling Monitor Microprocessor	ESE-51
Incore Thermocouples, Connectors and Splice	ESE-43A, 43B, 43E and 43G
Incore Thermocouple Reference Junction Box	ESE-44A
Hydraulic Isolators	ESE-49A

*NSSS NR-RTD Supplied by ABB-Combustion Engineering

TABLE 3.10(N)-1 (Sheet 2)

Equipment	EQDP
Pressure Sensors	ESE-21
Differential Pressure Indicating Switches Group B	ESE-40A
FLUX Doubling Equipment	ESE-47A, B, C
Indicators (Post-Accident Monitoring)	ESE-14
Safety-Related Valve Electric Motor Operators	HE-1 and 4
Safety-Related Solenoid Valves	HE-2/5
Safety-Related Externally Mounted Limit Switches	HE-3/6
Pressurizer Safety Valve Position Switches	HE-7
Electrical Connectors for Solenoid Valves and Limit Switches	HE-8
PORV Solenoid-Operated Pilot Valves and Position Indicators	HE-9
Head Vent System	HE-lOA, B, C
Hydrogen Recombiners	SP-1
Large Pump Motors	AE-2
Canned Pump Motors	AE-3
Operator Interface Modules	ESE-12A
DS-416 STA and Auto Shunt Trip Panel	ESE-62A

3.11(B) ENVIRONMENTAL DESIGN OF MECHANICAL AND ELECTRICAL EQUIPMENT

This section provides information on the environmental conditions and design bases for which the mechanical, instrumentation, and electrical portions of the engineered safety features, the reactor protection systems, and other safety-related systems are designed to ensure acceptable performance during normal and design basis accident (DBA) environmental conditions. This section includes that information related to balance of plant (BOP) systems, whereas Section 3.11(N) includes that information related to the NSS system.

Tables 3.11(B)-1 and 3.11(B)-2 provide the normal and DBA environmental conditions for all primary mechanical and electrical equipment within the plant, including BOP and NSSS scope of supply. Table 7.4-5 provides a listing of safety-related systems required for a post-accident safe shutdown of the plant.

A review of equipment environmental qualification programs against NUREG-0588 positions was performed. The scope of the review was limited to plant areas exposed to harsh environments following a loss of coolant accident (LOCA), a main steam line break (MSLB), or a high energy line break (HELB). Table 3.11(B)-7 lists the equipment specifications reviewed under the NUREG-0588 program.

The Wolf Creek design is based on utilizing only Class 1E powered electrical equipment to meet the criteria specified under Safety-Related System Listing in Section 3.11(B).1.1. Table 3.11(B)-3 includes all safety-related electrical equipment regardless of the accident that required the equipment to be categorized as Class 1E. No Class 1E equipment is excluded from the list due to location or any other reason. Section 7.1.1, Identification of Safety-Related Systems, identifies the criteria for the selection of instrumentation and controls (I&C) equipment as being safety-related.

Plant hazards, seismic/nonseismic interaction, control room fire hazards analysis, and other integrated design reviews have been conducted to ensure the validity of this design concept. Appendix 3B discusses the Wolf Creek hazards review program. Additionally, Section 3.11(B).7 discusses a review of the safety-related and nonsafety-related control system interfaces. Accordingly, there is no nonsafety-related equipment needed to support, or whose failure could prevent, a safety function of the safety-related equipment.

Appendix 7A identifies the Operating Agent's position on Regulatory Guide 1.97. A categorized list of equipment is included in Appendix 7A. All Regulatory Guide 1.97 Category I instruments are included in Table 3.11(B)-3. Additionally, all Category 2 electrical components powered by a Class 1E power source (as shown in Appendix 7A) are also included in Table 3.11(B)-3.

Section 3.7(B) describes the seismic design bases for the plant. Sections 3.9(B) and 3.10(B) describe the seismic qualification programs for seismic Category I instrumentation, mechanical, and electrical equipment.

Environmental design criteria for the facilities conform to 10 CFR 50, Appendix A, General Design Criteria 1, 2, 4, 23, and 50, as discussed in Section 3.1

Table 3.11(B)-1, Plant Environmental Normal Conditions; Table 3.11(B)-2, Environmental Qualification Parameters for SNUPPS NUREG-0588 (LOCA, MSLB and HELB); Table 3.11(B)-3, Identification of Safety-Related Equipment and Components: Equipment Qualification; Table 3.11(B)-4, Containment Worst Case Radiation Levels (MRADs); Table3.11(B)-5, Containment Spray Requirements; Table 3.11(B)-8, Exemptions from NUREG-0588 Qualification; Table 3.11(B)-10, Equipment Added for NUREG-0737; Figures 3.11(B)-1 through 3.11(B)-49, were removed from the USAR at Revision 28. The listed Tables and Figures are considered incorporated by reference. EQSD-I, EQ Summary Document Section I Program Description, and EQSD-II, EQ Master List Section II, supercedes the information provided by listed Tables and Figures. The contents of EQSD-I and EQSD-II are controlled by WCGS procedures.

3.11(B).1 EQUIPMENT IDENTIFICATION AND ENVIRONMENTAL CONDITIONS

3.11(B).1.1 Equipment and System Lists

Table 7.4-6 identifies the safety-related equipment and components required to mitigate the consequences of a DBA and to ensure the safe shutdown of the plant following a design basis accident. Table 3.11(B)-3 gives the room number in which the equipment is located and the equipment category as defined in NUREG-0588, Appendix E. Refer to Figure 12.3-2 for room locations.

3.11(B).1.1.1 Equipment List Development

To develop the safety-related equipment list in Table 3.11(B)-3, for the NUREG-0588 review, the Project Q-List and FSAR were used to identify systems and major components. This information was used to enter design documents for a more detailed equipment listing. Examples of design documents utilized include piping and instrument drawings, the instrument index, the "Q" instrument list, equipment listings, equipment specifications, and the Westinghouse Project Information Package. To ensure completeness, several measures were taken. The list was prepared and independently checked. The list was then compared to other master equipment listings, valve logs, and a special sort of the project electrical circuit schedule. This sort of the circuit schedule provided a listing of all pieces of equipment to which Class 1E cables were connected. When the list was completed, the Operating Agent checked the list by verifying its completeness for various systems.

Upon completing the list, the location of each piece of equipment, by room number, was then identified. Once the list was developed and equipment location identified, each piece of equipment was

categorized according to NUREG-0588, Appendix E, for each of three accident groups. The accident groupings were LOCA, MSLB/MFLB inside containment and steam/feedwater tunnel, and HELB outside containment (except MSLB and MFLB). The equipment located in a harsh environment, for any of the three accident groups, was reviewed under the NUREG-0588 program.

Equipment required as a result of NUREG-0737 was incorporated into the design by the time Table 3.11(B)-3 was being developed. Accordingly, new equipment added to the design was included in the equipment list and reviewed to the same criteria as all other safety-related equipment. USAR Section 18.0 identifies the Wolf Creek design relative to the NUREG requirements.

Table 3.11(B)-10 provides a listing of equipment added as a result of NUREG-0737. It should be noted that for every piece of equipment identified in Table 3.11(B)-10, there is other support equipment that is purchased in bulk quantities that cannot be clearly identified as supporting the NUREG-0737 requirements (e.g., cable, terminal boxes, connectors, hangers, instrument isolation valves, etc.). This generic type equipment is included in the qualification review program. For further information about each of the devices listed in Table 3.11(B)-10, refer to the equipment listing in Table 3.11(B)-3.

3.11(B).1.1.2 Safety-Related System Listing

Safety-related systems are those plant systems necessary to ensure:

a. The integrity of the reactor coolant pressure boundary.

b. The capability to shut down the reactor and maintain it in a safely shutdown condition.

c. The capability to prevent or mitigate the consequences of accidents which could result in offsite exposures comparable to the guidelines of 10 CFR 100.

Systems that perform these type functions are those systems required to achieve or support emergency reactor shutdown, containment isolation, reactor core cooling, containment heat removal, core residual heat removal, and prevention of significant release of radioactive material to the environment. A listing of the systems that perform or support these functions is provided in Table 3.11(B)-9. The listing identifies the function that the system performs (or supports) and includes all systems that receive Class 1E power. Systems are listed even if only a portion of the system provides a safety-related function. Multiple

entries indicate that the system provides multiple safety functions. No systems have been deleted due to their location (e.g., in a mild environment).

System PN identified in Table 3.11(B)-9 is listed only because a portion of the system provides electrical isolation. This system does not have any other Class 1E function. Note 1 of Table 3.11(B)-9 clearly identifies this fact.

In response to an NRC question, a comparison was made between Table 3.11(B)-9 and Table 3.2-1. Section 3.2 clearly identifies that Table 3.2-1 contains more than just safety-related systems. Comparing Table 3.2-1 to Table 3.11(B)-9 is inappropriate since the two listings were developed to different criteria and for different purposes. To reiterate, all safety-related systems with components receiving Class 1E power are included in Table 3.11(B)-9.

Class 1E powered I&C devices are included in the system that they serve (e.g., EG-FT-0108 is a flow transmitter in the component cooling water system [EG]). The I&C devices can be divided into two categories, NSSS and BOP supplied. Each type can be identified in Table 3.11(B)-3. The BOP supplied devices that were purchased by the Bechtel I&C Group have a specification number that begins with the letter J (e.g., J-301 for EG-FT-0108). The NSSS-supplied devices are identified by the respective Westinghouse EQDP number (e.g., ESE-4). (BOP or NSSS supplied devices by WCNOC use the Bechtel Format).

3.11(B).1.2 Plant Environments

3.11(B).1.2.1 Normal Environments

Pressure, Temperature, Humidity, and Radiation

Normal operating environmental conditions are defined as conditions existing during routine plant operations. These environmental conditions, as listed Table 3.11(B)-1, represent the normal environmental qualification conditions expected during routine plant operations.

Dust

In the NUREG-0588 review, dust was considered and was determined to be an insignificant factor in equipment qualification because outside air sources and ventilation units are typically equipped with filters which remove airborne dust. Also concrete coating, plant housekeeping, dust seals, and equipment maintenance requirements provide assurance that dust will not degrade equipment performance.

3.11(B).1.2.2 Accident Environments - Inside Containment

Accident environmental conditions are defined as those deviating from the normal operating environmental conditions. These conditions are specified in Table 3.11(B)-2.

In the NUREG-0588 review, WCGS LOCA/HELB/MSLB pressure, temperature, humidity, radiation, chemical spray, and submergence environmental conditions were evaluated. Where required, plant-unique environmental conditions were developed using the Category I criteria of NUREG-0588. The development of these conditions is described below. The post-accident parameters used in the equipment review are provided in summary form in Table 3.11(B)-2 and as used in the review, in Figure 3.11(B)-1 through 48 of the USAR and Figures 50 through 89 of Appendix D of Reference 5.

Radiation

Using the guidance of NUREG-0588, post-LOCA radiation environments were determined in all areas of the containment. The fission product release data used in this analysis were obtained from Westinghouse. The isotopic inventory provided by Westinghouse was for an equilibrium cycle WCGS core. The data were calculated at the end of cycle life and, therefore, represent maximums suitable for post-accident evaluations. The current analysis bounds changes associated with Power Rerate 3565 MWth and the change from 12 to 18 month fuel cycle.

The accident scenario assumed that a LOCA event occurred causing core damage. The entire source of 100 percent noble gas inventory, 50 percent of the core halogen inventory, 50 percent of the cesium, and 1 percent of the other solids was released to the containment. This release was conservatively assumed to occur at time zero. For the liquid source, 50 percent of the halogens, 50 percent of the cesium, and 1 percent of the remaining fission product solids were assumed to go directly to the sump and were diluted by the volume of the refueling water storage tank (RWST) and the liquid volume of the reactor coolant system. For the airborne source, 100 percent of the noble gases and 50 percent of core halogens were assumed to be released to the free volume of the containment. The simultaneous release of 50 percent of the halogens to the atmosphere and to the sump introduced additional conservatism.

Credit was taken for mechanistic removal of the airborne iodine via containment spray and plateout. The spray removal lambdas for elemental and particulate iodine were taken from Section 6.5. The plate-out removal lambda was determined using methodology outlined in NUREG/CR-0009. The surface area available for plateout was assumed to be equivalent to the heat sink area used in the containment pressure analysis given in Table 6.2.1.-4. In

addition, it was assumed that post accident containment atmospheric conditions would provide at least 85,000 cfm of mixing between the sprayed (86 percent) and unsprayed (14 percent) regions of the containment. These removal processes were assumed to persist until the elemental and particulate iodine in the sprayed region were reduced by factors of 200 and 10,000, respectively.

To determine the gamma dose rate inside the containment, the multigroup, three-dimensional, point kernal code QAD-CG was used to take credit for all major internal structures. The containment was divided into regions, and the maximum dose rate within each region as a function of time was determined. These dose rates were assumed to apply to all equipment within that region. Each dose rate was numerically integrated to obtain the 180-day integrated dose for each region. The beta dose rate as a function of time was obtained assuming a semi-infinite cloud model. These dose rate values were also numerically integrated to obtain the 180-day beta doses for each region. The gamma plate-out was modeled using a cylinder with a height and radius equal to that of the containment. The dose rate was obtained at the center of the cylinder without taking credit for air attenuation. Beta dose rate contributions due to plate-out were obtained assuming a contact dose rate.

The resulting containment integrated dose curves are provided in Reference 5, Appendix D, Figures 50 through 86.

Although WCGS is designed and has satisfactorily completed a review to a 1 percent cesium post-accident source term, the radiation levels obtained using a 50 percent cesium source term were utilized during the NUREG-0588 review. Due to the extreme conservatism in the equipment specifications, most components were qualified to this radiation level. For the isolated cases where the 50 percent cesium source term radiation proved too severe, the equipment was evaluated against a 1 percent cesium source term.

Pressure, Temperature and Humidity

Two sets of WCGS unique containment pressure-temperature profiles have been used at WCGS. The first set, which had mass-energy release data based on a generic Westinghouse PWR, was used for the initial NUREG-0588 review and was valid from the beginning of operation through fuel cycle 5. The second set, which is based on a more precise WCGS containment model plus degraded containment cooling capacity, is valid from the beginning of cycle 6 to the present. Temperature and pressure conditions were evaluated for both LOCA and MSLB accidents. Current containment temperature and pressure profiles are provided in Figures 3.11(B)-1 through -6. The maximum containment temperatures are 306.1°F and 386.5°F for a LOCA and MSLB, respectively. The maximum containment pressure utilized for both accidents is 63 psia.

For the initial NUREG-0588 evaluation of equipment located inside containment, pressure-temperature enveloping profiles were generated for a spectrum of MSLBs and LOCAs. For LOCAs, full and partial double-ended breaks and split breaks in the pump suction line were evaluated. Full double-ended hot and cold leg breaks were also analyzed. For MSLBs, a spectrum of break sizes (split and double-ended) at various power levels with minimum entrainment were evaluated. For these evaluations, loss of offsite power and a worst single failure were assumed. Pressure and temperature mitigation from the operation of safety-related containment spray, air coolers and heat transfer to structure were considered.

The current evaluation used the worst case LOCA (a double ended guillotine break of the RCP suction line), plus a large spectrum (16 cases) of MSLB accidents to generate the LOCA, MSLB and combined pressure-temperature profiles.

All methods applied in the determination of environments are in accordance with Sections 1.1 and 1.2 of NUREG-0588, Revision 1 for Category I plants. The original evaluation of mass and energy release rates is as described in Westinghouse Topical Reports WCAP-8312A, Revision 2, and WCAP-8822. The original containment environmental response was as described in Bechtel Power Corporation topical report BN-TOP-3, Revision 4. The current mass and energy release values were determined using the LOFTRAN computer program. LOCA and MSLB environments were then determined using the CONTEMPT-LT/28 computer code.

For MSLB environments, credit was sometimes taken for specific equipment surface temperature response. Once again, two methodologies have been used to determine this response. The original method is described in Bechtel topical report BN-TOP-3, Revision 4, Section 3.4. The Bechtel standard computer program COPATTA (NE100) was used to model the containment. Westinghouse supplied blowdown data, the performance of the various engineered safety features, and heat sink data were input to the program and the resulting containment pressure and as well as the heat sink temperatures were calculated. The equipment of interest was modeled as a heat sink in the WCGS containment model and its temperature was calculated as part of the COPATTA calculation. The heat transfer methods used to model the equipment heat sinks were taken from NUREG-0588, Revision 1, Appendix B. The heat transfer rate equations and the convective and condensing heat transfer coefficients used in the COPATTA analysis of equipment surface temperature were taken directly from NUREG-0588, Appendix B. An example of the heat transfer model of a typical motor operated valve is shown in Figure 3.11(b)-49. The current method uses the identical equipment models as the original method, but uses the computer program HEATING 6 to perform the surface temperature calculations. The calculations were performed in two phases. The first phase used the same inputs and assumptions as

the original calculation. Comparison of the outputs of this calculation to those outputs obtained previously provided verification of the HEATING 6 code. The second phase also used the HEATING 6 code, but used inputs obtained from the CONTEMPT-LT/28 code which had assumed degraded containment coolers. The results of this second phase are the surface temperatures shown in Figures 3.11(B)-7 and -7A.

A typical selection of representative equipment and components designed to accomplish protective actions in response to a design basis event and thus requiring environmental qualification includes motor-operated valves, containment penetrations, electronic differential pressure transmitters, and cables.

To conduct a transient temperature analysis with the COPATTA code, equipment modeling was required. The technique adopted, as outlined below, was primarily based on equipment size (heat transfer area) and material properties (thermal conductivity):

a. Motor-operated valves were modeled as a slab. The air gap was reduced to maximize heat transfer to the inside and the wall thickness utilized was smaller (conservative) than any WCGS motor-operated valves.

b. Containment penetrations were modeled as a slab, with a steel cover, air gap, and cable consisting of insulation and a copper core. Again, the air gap was reduced to maximize heat transfer to the inside.

c. Electronic differential pressure transmitters were modeled as a slab consisting of a cast aluminum cover and an air gap to a copper wire.

d. Power, control, and instrument cables were modeled as a cylinder consisting of jacketing, insulation, and a copper core in the most conservative configuration relative to the cable installed at WCGS.

Further information regarding the determination of mass and energy releases and the containment environmental response is provided in detail in Section 6.2.

Containment Spray

The WCGS design utilizes two redundant trains to supply containment spray for temperature and pressure reduction and fission product removal from the containment atmosphere. Table 3.11(B)-5 identifies the containment spray requirements. The NRC Standard Review Plan indicates that single failures should be evaluated to determine the worst case chemical concentrations. The worst case concentrations, resulting from a single failure, are pH = 4.0 and pH = 11.0 as discussed in Section 6.5.2.3.

A caustic spray with an upper limit of pH = 11.0 is used in the review; however, it is recognized that this event will only occur for a short period. A maximum boron concentration of 2500 ppm is utilized.

3.11(B).1.2.3 Accident Environments - Outside Containment

Radiation

Using the guidance of NUREG-0588 and NUREG-0737, post-LOCA dose rates and doses were determined in those areas of the auxiliary building where safety-related equipment qualification would be reviewed. The fission product release data used in this analysis were the same as discussed in Section 6.2.1. The analysis for the auxiliary building yielded a conservative upper bound estimate for the doses to all safety-related electrical equipment as required by NUREG-0588. The current analysis bounds changes associated with Power Rerate 3565 MWth and the change from 12 to 18 month fuel cycle.

For those systems containing pressurized reactor coolant, 100 percent of the noble gases, 50 percent of the iodines, 50 percent of the cesium, and 1 percent of the other particulates were assumed to be present with a dilution volume equal to the reactor coolant system liquid volume. Systems containing recirculating liquid were assumed to have 50 percent of the halogens, 50 percent of the cesium, and 1 percent of the other particulates diluted by the RWST liquid volume and the liquid volume of the reactor coolant system. The contained airborne sources were assumed to have 100 percent of the noble gases and 25 percent of the iodines. The dilution volume for the contained airborne source was the entire volume of the containment.

The resulting accident total integrated doses for the rooms with safety-related electrical equipment in the auxiliary building are provided in Table 3.11(B)-2. The values provided are the doses that result from both radiation penetrating the containment and radiation from recirculating sump fluids. The values provided are the worst case for the identified room. When the worst case values exceed the qualified dose, additional analysis has been performed to provide total integrated doses for specific equipment. This was accomplished by performing a location-specific calculation of the dose to the component to more accurately define the actual environment in which the component would be expected to operate following an accident. This approach often provided a substantially lower dose than the worst case dose if the component of interest was not extremely close to a major cluster of pipes (the worst case dose point always is). The location-specific dose calculations used the following techniques to reduce the dose:

a. Direct doses from contained sources were calculated for each dose point.

b. Geometry reduction factors were used for reducing doses from penetration/duct streaming.

c. Finite cloud beta dose was calculated for small enclosures.

To determine the location-specific gamma dose from contained sources, major piping and components were modeled accounting for the geometry of each case and any intervening shielding structures. The dose rate from these sources was calculated using a point kernel computer code that utilizes the semi-empirical methods developed by T. Rockwell (Reference 6) for calculating the direct gamma dose from a homogeneous cylindrical volumetric source through slab shields. Individual buildup factors for source materials and shield materials were taken from the work of Capo (Reference 7). Broder's method (Reference 8) was used in the code to accommodate multilayer shield buildup. The dose rates determined using this code were then numerically integrated to determine the 6-month integrated dose.

The second major technique used was to reduce the penetration streaming component of the dose. The basic radiation source in this case is the post-accident containment airborne source (noble gases and halogens) assumed to be distributed uniformly within the containment free volume. The effective source is the radiation that shines or streams through the containment penetrations. This component had been incorporated into the worst case doses in a conservative manner. As an example, the streaming dose contribution stated for the electrical penetration room is the sum of the dose at each of the penetration exits. This is conservative for two reasons:

a. No one point in space will receive the entire sum of the exit doses from all the penetrations.

b. Very little equipment is located at the containment wall directly in front of the penetration exit.

The dose at the penetration exit had been calculated by first determining the dose rate just inside the containment wall at the proper elevation and azimuth. This was accomplished by using the multigroup, three-dimensional point kernel computer code QAD-CG (Reference 9). Knowing this, the dose rate at the penetration exit is determined by calculating an annular reduction factor for the penetration. This annular reduction factor is strictly a function of geometry--dependent on the penetration length, radius, and configuration (circular or annular). The annular reduction factor was calculated using the "ray-analysis" technique. A computer code was written to assess this reduction by numerically solving the integral equation documented in Reference 10. The product of the dose rate just inside the containment wall and the annular reduction factor yields the dose rate at the outer surface

of the containment on the centerline of the penetration. The dose rate calculated at the penetration exit was then numerically integrated to obtain the 6-month integrated dose.

The dose contribution at a specific location was further determined by assessing the geometrical attenuation incurred going from the actual location of each penetration to the dose point of interest. This geometrical attenuation, or more properly solid angle attenuation, factor is determined using the work by J. H. Hubbell, et al (Reference 19) to describe the detector response to a finite plane circular source. This geometrical reduction factor is rigorously the fraction of the solid angle subtended at a point in space. A computer code was developed to evaluate the solid angle by numerically evaluating the elliptic integrals. This was accomplished using the work by A. V. Masket (Reference 12). The geometrical reduction factor was evaluated assuming the angular distribution of the source emerging from the penetration is cosine shaped.

The third dose reduction method used was for beta radiation rather than gamma. The calculated airborne beta dose is based on a semi-infinite cloud model using the methodology discussed in Section 3.11(B).1.2.2 under Radiation. For small volumes such as NEMA enclosures (electrical boxes), the semi-infinite cloud model is very conservative. To be more rigorous a finite cloud correction was applied to the semi-infinite cloud dose. The technique developed to perform this correction is based on empirical relationships developed by R. Loevinger (Reference 13). This correction is based on the geometry of the enclosure (size and shape) and the end-point energy of the contributing beta particles. Because of this dependence, the finite cloud correction factor had to be evaluated for each individual beta for each of the isotopes considered for each enclosure size.

It was conservatively assumed in the analyses that the airborne activity concentration in the enclosures was identical to the containment atmosphere concentration.

No credit was taken for the actual time delay it would take the atmosphere of the box to reach equilibrium with the containment atmosphere. Since this correction was applied to the dose, an integral quantity, the dynamics of the source, i.e., decay, containment spray, and plateout removal of the iodine, and mixing caused by the containment mixing fans have already been accounted for in the semi-infinite cloud calculation.

The equipment specific analyses still provide conservative results.

Pressure, Temperature and Humidity

In the NUREG-0588 review, the equipment qualification temperature and pressure environments for postulated MSLBs and HELBs outside the containment were determined based on a conservative model as summarized below:

a. Room pressure and temperature profiles were generated to determine the worst local environments.

b. No credit was taken for cooling by non-Class 1E HVAC.

c. The only mechanism considered for temperature dissipation was a conservative model of heat transfer to passive heat sinks.

d. Conservative break isolation times were used.

These items are discussed below in greater detail.

Room pressure and temperature profiles were generated to determine the worst local environments. Maximum humidity values were also established for the analyzed pressure/temperature profile cases using the assumptions which maximize the pressure/temperature conditions. Environments were determined based on compartmental analyses and, hence, environments for rooms downstream of a break volume were also determined (i.e., the adjoining rooms were analyzed to determine the effects of breaks). Rooms or volumes selected as compartments were sufficiently defined such that the calculated compartment average temperature appropriately describes the local temperature. Venting out of the compartment was conservatively modeled so that pressurization was adequately determined. Superheat was modeled in calculation of the compartment temperatures.

No cooling credit was taken for non-Class 1E HVAC for breaks outside of the containment. Operation of these systems would reduce the severity of the temperature and pressure qualification environments. The HVAC system exhaust ducting was used as a transfer mechanism of the break energy.

The modeled mechanism for heat removal was heat transfer to passive heat sinks. Passive heat sinks were conservatively calculated for each qualification environment. Treatment of passive heat sinks is described in Bechtel Topical BN-TOP-3, Revision 4. The lower bounding Uchida condensing heat transfer correlation was modeled for condensing heat transfer. Predicted temperatures using this correlation are significantly higher than experimentally measured temperatures.

Credit was taken for action of automatic break isolation. For breaks which did not have automatic isolation systems, a 1/2-hour manual isolation time was used.

Methods described in Bechtel Topical BN-TOP-4, Revision 1, and presented in Section 3.6 were used to determine local pressures and temperatures. Report BN-TOP-4 has been reviewed and approved by the NRC for use in subcompartment pressure and temperature analysis. Section 3.6 provides a detailed description of the methodology utilized in identifying, analyzing, and evaluating high energy line breaks and moderate energy cracks. Table 3.11(B)-2 and Figures 8 through 48 identify the auxiliary building temperature, pressure, and humidity conditions.

The auxiliary building pressure and temperature environments were developed for an MSLB in the main steam/main feed tunnel and for HELBs (Auxiliary Steam System and CVCS) in the rest of the building. The MSLB in room 1331, Turbine Driven Auxiliary Feedwater Pump Room, was not included in this evaluation because none of the equipment located in that room is required to function following the break. Accordingly, none of the equipment is qualified for the accident environment. Failure of the equipment in the room will not cause a safety concern or mislead operators.

The temperature of many of the rooms does not reach the saturation temperature at the calculated pressure because of the presence of large quantities of air. The saturation condition is always in reference to the steam partial pressure. Unless the room has all of its air purged out, the total pressure of the room has a large component due to the partial pressure of air. The room could very well be saturated at the steam partial pressure, but since the steam partial pressure is small compared to the room total pressure, the saturation temperature is very low. Thus, a room with a total pressure of 14.7 psia will not have a temperature of 212 F or greater unless all the air has been purged out of the room.

The auxiliary building, except for the main steam tunnel area, does not have dedicated blowout panels for venting steam to the outside atmosphere following a HELB. The normal HVAC exhaust ducts were utilized as an exhaust path in the pressure-temperature model. Fire damper closure at the specified set point was also included in the model. Even though no makeup air was assumed to enter the auxiliary building, the results of the various calculations indicate that a significant portion of the original air remains inside the building.

Flooding

The effects of flooding were considered in the NUREG-0588 review. The flood levels are identified in Table 3.6-6. The identified flood levels for the auxiliary building were not developed solely for the purpose of the NUREG-0588 review. As a result, some flood levels are generated by breaks that are not assumed to happen concurrent with an MSLB or LOCA. However, each piece of equipment that was identified as being submerged was evaluated individually to determine if submerged operation for the particular accident was required for plant safety.

3.11(B).1.3 Voltage and Frequency

The normal (and post-accident) voltage and frequency limits for Class 1E equipment are:

NOMINAL SYSTEM RATED VOLTAGE	ACCEPTABLE OPERATING RANGE
4.16/4.0 kv	3600 - 4400V
480/460 V	414-506V
125/-V dc	90 V - 140 V
120/115 V ac	108 V - 132 V
Frequency: 60 Hz	57 - 61.2 Hz

The voltage variations for the ac system are either operational variations which are to be expected from the offsite power sources or variations from the diesel generator upon loss of offsite power. The variations have been accounted for in the qualification of safety-related equipment.

The dc voltages at the battery can vary between 105 and 140 volts. This range was established by determining the minimum discharged voltage of the station batteries (105 V dc) and the maximum output voltage of the battery chargers (140 V dc). Due to cable voltage drop, the minimum voltage at each device may be a minimum of 90 volts. Since fully discharged battery output at the component and maximum battery charger output are the two bounding conditions for the dc system, the established voltage range is the maximum dc variation to be experienced by safety-related equipment.

Transient conditions are not included in the above described parameters. Where transient conditions apply (e.g., LOCA sequencing of large loads) these criteria are addressed in the design specifications. These transients are discussed in Section 8.3; however, they are considered outside the scope of the NUREG-0588 review.

The specified frequency band is 60 Hz plus 2 percent or minus 5 percent. This band is compatible with the design of the components which are powered by the diesel generator. Since the diesel generator frequencies are controlled and the offsite power grid has small, even frequency fluctuations, the safety-related equipment will not experience any higher frequency excursions.

3.11(B).1.4 Environmental Design Criteria

Compatibility of equipment with the specified environmental conditions is provided to fulfill the following design criteria:

a. For normal operation, systems and components required to mitigate the consequences of a DBA or to provide for hot or cold shutdown from the control room are designed to remain functional after exposure to the environmental conditions in Table 3.11(B)-1.

   Where possible, all safety-related systems and components are designed to withstand the maximum expected 40-year integrated radiation dose at their respective locations within the plant. Wolf Creek's operating license was renewed on 11/20/08 for an additional 20 years. If it cannot be assured that equipment is designed for the 60-year dose, a replacement program for that equipment is established. The replacement program ensures operational integrity of the equipment throughout the life of the plant.

b. In addition to the normal operation environmental requirements given in a. above, systems and components required to mitigate the consequences of a DBA or to provide for hot or cold shutdown of the reactor are designed to remain functional after exposure to the following environmental conditions. Qualification time is based on the operating duration following a DBA and any potential consequences of component failure after its function has been completed.

   1. Such components inside the containment are designed for the temperature, pressure, submergence, humidity, and chemical spray environment inside the containment after a design basis LOCA or main steam line break accident.

2. Such components inside the containment which are required after a LOCA are designed for the post-LOCA radiation dose to which the equipment is exposed.

3. Such components outside the containment which are required to mitigate the consequences of a design basis LOCA are designed for the expected integrated accident radiation dose at the equipment location.

4. Such components outside the containment are designed for the temperature, pressure, submergence, and humidity environmental conditions summarized in Table 3.11(B)-2 and Table 3.6-6. These conditions consider high energy line breaks outside of the containment where such breaks affect systems or equipment necessary to mitigate the consequences of the break or are required for safe shutdown of the plant following that break.

The engineered safety features and other safety-related equipment which must remain operable during and after a DBA are further discussed in the following USAR chapters:

a. Mechanical equipment in Chapters 6.0, 9.0, and 10.0.

b. Class 1E electrical equipment in Chapter 8.0.

c. Instrumentation and controls in Chapter 7.0.

The quality assurance program for this equipment is outlined in Chapter 17.0 of the USAR.

3.11(B).2 QUALIFICATION TESTS AND ANALYSES

Qualification is generally based on environmental testing. Qualification consists of a simulation of actual physical conditions on an actual component or prototype, analyses, or a combination of tests and analyses, as applicable. The testing period is sufficient to ensure the capability to function during and for the required interval after a DBA. For example, the containment coolers were qualified to operate for 6 months in a post-LOCA environment, which is 179.5 days greater than the expected service requirement following a LOCA. Qualification tests were performed by recognized testing agencies which use recognized standards, as applicable.

Seismic qualification is discussed in Sections 3.10(B) and 3.10(N). Additionally, assurance that damaging vibration effects

do not occur in service was provided by the preoperational tests and inspections as well as by the periodic online testing performed in accordance with Technical Specifications.

3.11(B).2.1 Equipment Inside Containment

The equipment listed in Table 3.11(B)-3 is designed for 40 years of operation in the environment that exists at the equipment location during normal operation. Wolf Creek's operating license was renewed on 11/20/08 for an additional 20 years. In cases where a 60-year life under such conditions is not within the state-of-the-art, a replacement program is established to ensure continuous, reliable operation. Furthermore, the equipment is designed to remain functional in the environment that exists at the equipment location at the time it is required to perform after a design basis loss-of-coolant or main steam line break accident.

Other IEEE standards and qualification criteria were used in conjunction with IEEE 323-74 to qualify certain equipment. These are discussed below:

a. Continuous-duty motors used inside the containment are type tested under simulated LOCA conditions. IEEE 334-1974, "Standard for Type Tests of Continuous Duty Class 1E Motors for Nuclear Power Generating Stations," is used consistent with the NRC's position as described in NUREG-0588. Insofar as practicable, auxiliary equipment Which is part of the installed motor assembly is likewise qualified in accordance with IEEE 334, under simulated design basis event conditions.

b. Motor-operated valves used inside the containment are type tested in accordance with IEEE 382-1972 (ANSI N41.6), "Trial-Use Guide for Type Test of Class I Electric Valve Operators for Nuclear Power Generating Stations."

c. Type tests for each type of cable to assure acceptability for use in the containment post-accident environment are performed in accordance with IEEE 383-1974, "Standard for Type Test of Class 1E Electric Cables, Field Splices, and Connections for Nuclear Power Generating Stations."

d. Electrical containment penetrations are tested in accordance with IEEE 317-1976, "Electric Penetration Assemblies in Containment Structures for Nuclear Power Generating Stations."

e. Pressure boundary components inside the containment are designed for the temperature, pressure, and humidity environments in accordance with the applicable code to which the component is constructed. Appropriate pressure boundary components are included in the mechanical equipment qualification program discussed in 3.11(B).6; qualification testing is not necessary for such components.

f. A total (normal plus accident) integrated dose of less than 10^4 rads will not hamper the strength or properties of most materials used (Ref. 2). Hence, further environmental qualification analyses and tests for such components which will be exposed to less than 10^4 rads are not necessary. For higher integrated doses, components are qualified either by qualification testing or by evaluating the materials used for the dose involved, using reliable accumulated data on radiation effects, as contained in References 2 and 4. The effects of accident doses greater than 10^3 rads were evaluated, as appropriate (e.g., for solid-state devices).

g. Pressure boundary and structural components inside the containment are qualified for chemical spray by using components of known compatibility with the H3BO3-NaOH containment spray solution. Aluminum and zinc are not used as pressure boundary or structural materials. Cupronickel is used as a pressure boundary material only in the containment fan cooler coils, and its corrosion rate in the spray solution is acceptably low (Ref. 3). Gaskets, when used in piping systems, are flexitallic or equivalent with metal windings and filler material compatible with the spray solution. Gasket materials on the fuel transfer tube and on containment equipment and personnel hatches are selected to be compatible with the spray solution. Other pressure boundary and structural materials used are stainless and carbon steel and concrete, which do not suffer significant degradation in the spray environment (Ref. 3).

Equipment environmental qualification tests and analyses are responsive to Regulatory Guides 1.30, 1.40, 1.63, 1.73, 1.89, and 1.131, as described in Appendix 3A.

The Operating Agent reported on the matters addressed in IE Information Notice 79-22 to the NRC in two letters (SLNRC 79-15 dated September 28, 1979 and SLNRC 80-6 dated February 5, 1980). These reports were submitted to NRC Inspection and Enforcement pursuant to 10 CFR 50.55(e). The resolution and/or current status is provided below.

Westinghouse identified four control systems for generic consideration of nonsafety grade/safety grade interface interactions.

a. Steam generator atmospheric relief valve control system - A piping failure in the vicinity of the steam generator relief valves could be assumed to cause the valves to stick open. The combination of the pipe failure, an assumed single failure, and the stuck open valve(s) may result in inadequate auxiliary feedwater flow.

   The WCGS main steam atmospheric relief valves and the associated pressure transmitters have been procured as Class 1E devices which are environmentally qualified for the effects of high energy line breaks. Therefore, this scenario does not present a safety problem for the WCGS design.

b. Pressurizer power-operated relief valves control system - A failure of secondary system piping inside the containment is assumed to cause pressurizer power-operated relief valves (PORV) to open. The resultant secondary break coincident with PORV opening may have more severe consequences than those accidents previously analyzed.

   The WCGS pressurizer PORV and associated pressure transmitters meet Class 1E requirements and are qualified to the postulated accident environments inside the containment. Therefore, this scenario does not present a safety problem for the WCGS design.

c. Main feedwater control system - A small feedwater line break could affect normal feedwater flow control, causing low steam generator levels prior to protective actions for the break.

   The WCGS feedwater line break accident has been reanalyzed, assuming the control and protection grade system interaction. The analysis shows that this scenario can be accommodated without violating design conditions and acceptance criteria. A summary of the analysis may be found in Section 15.2.8. The summary includes an identification of the analysis assumptions that are different from those used in Westinghouse Topical Report WCAP-9230.

d. Automatic rod control system - An intermediate size high energy line break is assumed to affect the rod control system, such that the initial conditions previously assumed for the break may not be valid.

During the NRC review of the WCGS design, the commitment was made to perform an evaluation of the effects of a steam line break in the vicinity of the main turbine impulse pressure transmitters. A steam line rupture outside the containment is assumed to cause an adverse environment for the turbine impulse pressure transmitters, causing the control rods to begin withdrawal prior to receipt of a reactor trip signal. This evaluation was submitted to the NRC by SLNRC 83-005 dated February 2, 1983 and revised by SLNRC 83-0054 dated October 27, 1983. The evaluation concluded that the consequences of the postulated event are bounded by previous accident analyses described in the USAR.

The results of this evaluation were used in the review of the effects of postulated high energy line breaks on the power range ex-core detectors and associated in-containment equipment. Based on the review, it was determined that:

1) The steamline rupture is the limiting event to be considered with respect to a consequential control rod withdrawal, and

2) The results of the above mentioned evaluation of the steamline break outside containment apply to the postulated inside containment steamline break with coincident control rod withdrawal.

As noted above, the consequences of the postulated event are bounded by previous accident analyses. As a result of this review, it is concluded that the power range ex-core detectors and associated equipment are not required to be qualified for postulated high energy line break environments inside containment. For additional evaluation of control grade system failures, refer to Section 7.7.2.1.

3.11(B).2.2 Auxiliary and Fuel Building Equipment

Safety-related equipment located in the auxiliary and fuel buildings are normally exposed to ambient temperatures up to 104°F during the summer and down to 60°F during the winter months (except as identified in Table 3.11(B)-1). Normal operating radiation environments are provided in Table 3.11(B)-1.

The design environmental conditions for DBAs, including cumulative radiation exposure, are given in Table 3.11(B)-2.

The temperature for the auxiliary building is maintained by Class 1E and non-Class 1E ventilation systems. On a loss of offsite power, some of the normal ventilation systems are lost. However, with the exception of the RHR heat exchanger rooms, the turbine driven auxiliary feedwater pump (TDAFWP) room, pipe chase rooms 1206-1207 and the main steam/main feedwater isolation valve (MS/MFIV) rooms, the ambient temperature of the auxiliary building rooms and corridors will not exceed 120°F. This is primarily due to the lack of heat sources in these areas without power available. As a result, a temperature of 120°F for these areas is considered the "anticipated abnormal" condition. The temperatures of the RHR heat exchanger rooms, TDAFWP room, pipe chase rooms and MS/MFIV rooms rise to the values specified in Table 3.11(B)-1. The duration of a loss of offsite power event is considered short and, accordingly, the temperatures generated by the condition were not utilized in aging calculations in the NUREG-0588 review.

In the event of a fuel-handling accident, equipment in the fuel building, such as the ventilation system, would not be exposed to radiation levels higher than 1×10^3 rads. These levels are well below the damage threshold of the ventilation equipment.

All safety-related equipment is designed to withstand the previously stated environmental conditions as required to perform its safety function. Qualification documentation based on equipment type testing and/or analyses demonstrate that this equipment operates satisfactorily under the specified environmental conditions as required to perform its safety function.

3.11(B).2.3 Control Building Equipment

3.11(B).2.3.1 Control Room

Normally, the temperature and humidity in the control room are maintained between 65 and 84°F and 20 to 70 percent, respectively. In the event of a failure of the control building normal heating, ventilating, and air-conditioning system, the control room air-conditioning system provides the cooling, filtration, and ventilation required to maintain habitability of the control room and the integrity of the control room equipment.

The safety-related control room equipment supplied by Westinghouse is qualified to operate in an environment up to 120°F with no degradation in performance. The remainder of the safety-related (i.e., safety-related protection, not control systems) equipment in the control room is qualified to operate in an environment up

to 104°F with no degradation of performance. The margin between the maximum temperature which will be experienced in the control room and the qualification limit assures that degradation of performance will not occur.

All safety-related equipment in the control room is designed to operate satisfactorily under these environmental conditions. Documentation of tests verify that this equipment operates satisfactorily under these environmental conditions.

3.11(B).2.3.2 Class 1E Electrical Equipment Rooms

The air-conditioning systems installed for these areas are designed to maintain the room temperature at or below 90°F under all operating conditions when the outdoor air is at summer design conditions.

All safety-related equipment in the Class 1E electrical equipment rooms is designed to sustain the specified environment conditions. Documentation of tests and/or analyses confirm that this equipment operates satisfactorily under the specified environmental conditions.

3.11(B).2.4 Essential Service Water Pump House

The area inside the pump house is weather protected. It is normally heated to maintain a temperature ≥ 50°F to protect against freezing during winter, and is limited to a maximum temperature of 122°F during summer. Documentation verifies that the safety-related equipment operates satisfactorily over this temperature range.

3.11(B).2.5 Equipment Located Outside of Buildings

The design summer outside air conditions used for ventilation is 97°F db and 79°F wb. This is based on applicable area weather data. These temperatures are equaled or exceeded only 2-1/2 percent of the time during the summer months (June through September).

The design winter outside air conditions used for ventilation are a temperature of 7°F and a wind velocity of 15 mph. The wind velocity is based on the weather data from the WCGS site, which represents the highest mean wind velocity. The temperature extreme is equaled or exceeded only 2 1/2 percent of the time during the winter months (Dec thru Feb).

Engineered safety features systems, components, and structures which are exposed to the outside environment will be capable of sustaining the WCGS Design Envelope extreme temperature conditions, precipitation, and other weather variations, including icing, without a loss of function.

3.11(B).3 QUALIFICATION TEST RESULTS

The summaries and results of the qualification tests for electrical equipment and components in the harsh environment areas listed in Table 3.11(B)-3 are maintained in an auditable form.

3.11(B).4 LOSS OF VENTILATION

The following category I cooling and/or ventilation and/or filtration systems, described in Section 9.4, are powered from the preferred and the standby Class 1E electrical power supplies:

a. Control room

b. Class 1E battery rooms

c. Class 1E switchgear rooms

d. High head safety injection pump rooms

e. Residual heat removal pump rooms

f. Containment spray pump rooms

g. Centrifugal charging pump rooms

h. Component cooling water pump rooms

i. Essential service water pump house

j. Diesel generator building

k. Motor-driven auxiliary feedwater pump rooms

1. Containment

m. Fuel storage pool pump rooms

n. Electrical penetration rooms

Room temperature surveillance capability for rooms which house safety-related equipment is available to the control room operators from a plant computer point or a local temperature indicator/thermometer. Rooms with computer inputs have temperature sensors within the rooms which provide high room temperature alarms via the computer.

As discussed in Section 3.11(B).2.3, the control room A/C system is designed to maintain the control room temperature during all modes of plant operation. Redundant, seismic Category I A/C systems are provided so that a single failure cannot impair the ability of the system to cool the control room; therefore, it is not considered a credible event to lose all control room cooling. In any event, appropriate action would be taken in accordance with the WCGS Technical Specifications should the design temperature in the control room be exceeded.

The other seismic Category 1 cooling and/or ventilation systems are also designed so that the single failure of an active component after a DBA cannot impair the ability of the systems cooled by the cooling/ventilation systems to fulfill their safety functions. Should a train in a seismic Category I ventilation system become inoperative during normal operation, sufficient ventilation equipment will still be available to mitigate the consequences of a DBA.

Safety-related and reactor protection system instrumentation and cables located outside the containment and not cooled by a seismic Category I ventilation system are designed for continued operation in the event of the failure of the normal ventilation system concurrent with a loss of the preferred electrical power source.

3.11(B).5 NUREG-0588 PROGRAM REQUIREMENTS

3.11(B).5.1 Display Instrumentation

WCGS safety-related display instrumentation is listed on Table 7.5-1. Safety-related instrument sensors located in harsh environments were included in the NUREG-0588 review. Instrument sensors and readout devices not in harsh environments were excluded from the NUREG-0588 review, but are included in Table 3.11(B)-3.

The Operating Agent responded to Regulatory Guide 1.97 "Instrumentation for Light-Water-Cooled Nuclear Power Plants To Assess Plant and Environs Conditions During and Following an Accident." The response has been included in Appendix 7A. All powerblock Category 1 instruments are included in the NUREG-0588 program.

3.11(B).5.2 Equipment Operability

For the NUREG-0588 review, a post-DBA maximum operability of 6 months (180 days) was utilized. Equipment was evaluated against this period for operability unless a shorter operability duration was identified as a design basis. This value was selected as a

conservative bounding time for termination of accident effects within the containment. The containment pressure-temperature analysis, as reflected in Figures 3.11(B)-3 and 6, indicates that containment conditions return to normal or below normal operating conditions within 30 days. It should also be noted that Regulatory Guide 1.4, provides criteria for evaluating the offsite radiological consequences of a LOCA event for a maximum of 30 days following the accident.

Margins of 1 hour or more for equipment with required operability times of less than 10 hours have generally been used for the WCGS equipment qualification review. However, margins of less than 1 hour have been used when adequate technical justification could be provided.

The Operating Agent concurs with the AIF position on the 1-hour time margin, as stated in a letter to Mr. Harold Denton dated January 4, 1982, in that an arbitrary time margin of 1 hour appears inappropriate and should not be required when adequate technical justification for a shorter period exists.

3.11(B).5.3 Margins

The discussions in Section 3.11(B).1 show that post-accident environmental parameters were conservatively and uniquely determined using plant-specific data. Hence, the guideline generic techniques discussed in NUREG-0588 are not applicable.

The values for margin identified in Section 6.3.1.5 of IEEE 323-1974 were used as acceptance criteria during the NUREG-0588 review. The only regular exception to the IEEE 323-1974 margins was for radiation. As identified in Item 1.4 of NUREG-0588, additional margin need not be added to the radiation parameters if the methods identified in Appendix D of NUREG-0588 are utilized. The methods used to determine the WCGS radiation parameters are consistent with the Appendix D methodology. Hence, the radiation margins required by Section 6.3.1.5 of IEEE 323-1974 were not necessary.

3.11(B).5.4 Aging

During the NUREG-0588 review, two general observations were made concerning equipment aging:

1. Some IEEE 323-1974 equipment underwent accelerated thermal aging based on the Arrhenius method. This approach was considered acceptable.

2. Some IEEE 323-1974 equipment underwent accelerated thermal aging based on the 10°C rule. The review of this approach consisted of a check for vendor comparison to the Arrhenius method or performance of a confirmatory calculation.

3.11(B).5.5 Exemption From Qualification

The equipment identified in Table 3.11(B)-3, is provided with a category for each of three accidents as described in Appendix E of NUREG-0588.

Equipment was reviewed on a specification basis. If all of the equipment associated with a given specification was located in a mild environment (Category D) for all three accidents, then the package was classified as mild and processed as identified in Section 3.11(B).5.7. It should be noted that since the equipment was reviewed by specification some equipment located in mild environments (but part of a specification with equipment located in a harsh environment) was reviewed to the harsh environment criteria. However, the qualification contingencies identified in the harsh environment review are not applicable to Category D equipment.

As defined in NUREG-0588, Category C equipment need not be qualified for any accident environment. Category C equipment need only be qualified to its non-accident environment. Therefore, qualification contingencies identified in the harsh environment review are not applicable to Category C equipment. This equipment can be treated in the same way as mild environment equipment, as discussed in Section 3.11(B).5.7.

If the only components in a harsh environment for a given package were Category C, the entire specification was then treated as a mild package and processed as identified in Section 3.11(B).5.7. The justification for the C categorization for these pieces of equipment is provided in an auditable form in the equipment files and is summarized in Table 3.11(B)-8.

Equipment that performs its function before its exposure to the harsh environment may also be exempted. This exemption is only utilized if the adequacy of the associated time margin is justified. Before exempting this category of equipment, a review was performed to verify that subsequent failure of the equipment as a result of the harsh environment does not degrade other safety functions. If specific equipment was deleted for the above reason, it was identified in the individual qualification package. If an entire specification was deleted as a result of the above, the specification is listed in Table 3.11(B)-8.

3.11(B).5.6 Maintenance and Surveillance Activities

The WCGS Maintenance Program provides for control, testing, failure evaluation, trending, and programmed replacement of environmentally qualified safety-related electrical equipment.

The utility procurement and material control program provides for the controlled procurement of Class 1E parts and components to ensure that appropriate qualification and technical requirements are identified and reviewed by engineering and Procurement Quality organizations. Qualification of suppliers is assured through independent QA audits performed to verify that part or component procurement requirements are met and documented. The program assumes controlled storage, handling, and issuing of parts or components and identification of shelf life and maintenance requirements while the parts or components are in storage.

Inspection, testing, and replacement requirements identified as a result of the qualification review are incorporated in the preventive maintenance and calibration procedures. Vendor technical manual recommendations are reviewed; and if additional testing, inspection, or replacement recommendations are identified, they are incorporated as appropriate.

Results of these tests, inspections, or replacement activities are routed for engineering review when they do not conform to defined acceptance criteria. As new requirements are identified through the engineering evaluation, procurement, equipment operational history, or changes to regulatory requirements, they are factored into the program.

Maintenance performed as a result of part or component failure will be reviewed by maintenance groups and engineering to categorize the cause of failure. Failures which occur as a result of environmental application, including aging, will be evaluated to determine what, if any, preventive maintenance action may be taken to protect from further failures. Examples of the evaluation methods to be used are:

- An onsite program of review to categorize cause of failures and establish a data base for trending purposes.

- Participation in industry-wide data gathering programs such as NPRDS for purposes of identifying generic or common mode failures.

- Utilization of the LER program to provide additional information relating to reoccurring failures throughout the industry.

Results of those evaluations are factored into the preventive maintenance program. Equipment upgrade requirements resulting from these evaluations are factored into procurement documents through the design change process.

In addition to maintenance/surveillance requirements which apply to a specific type of equipment, various programmatic commitments affecting maintenance and surveillance have been made to the NRC by the Operating Agent. These include plant Technical Specification requirements, maintenance and surveillance program activities as outlined in Section 13.5.2.2.1, and in-service inspection and testing requirements.

Maintenance and surveillance program activities are discussed in Section 8.7 of the EQ submittal. The maintenance and surveillance programs provide assurance that equipment is capable of performing its safety functions throughout the life of the plant and that equipment failure, including that resulting from environmental conditions, is evaluated to establish cause. The preventive maintenance schedule is refined and changed as experience with particular equipment is gained.

The in-service testing program for pumps and valves is discussed in Sections 3.9 (B) and 3.9 (N). This program requires the periodic operability testing of safety-related valves including motor-operated valves.

Maintenance personnel receive training to assure their awareness of specific requirements relating to inspection, cleaning, testing, and replacement of Class 1E environmentally qualified equipment. Training includes requirements for verifying equivalency of replacement parts or components through part number comparison and physical comparison. These requirements ensure that replacement parts and components are installed in the correct physical configuration in the system or parent component, and that appropriate supervisory and engineering personnel are notified where initial investigation shows the cause of failure to be environmentally induced or where inspection or test results are not within acceptance limits.

It should be noted that the maintenance and surveillance activities identified in this section apply to all Class 1E equipment (i.e., equipment in a harsh or mild environment).

Some specific examples of maintenance/surveillance requirements for the equipment are provided in Table 3.11(B)-11.

3.11(B).5.7 Equipment Located In Mild Environments

Each room of the auxiliary building was evaluated to determine if it had a mild environment for each of the three accidents.

An environment was considered mild if, it did not exceed its anticipated abnormal condition, or, if as a result of the accident, the room environment remained below all of the following parameters:

Temperature	≤ 110 F
Pressure	≤ 16.1 psia
Radiation	≤ 10^3 rads
	10^3 to 10^4 rads - with analysis
Humidity	≤ 90%

Equipment located in mild environments (as defined above) were not included in the NUREG-0588 review program.

The qualified lives established during the NUREG-0588 review program for equipment located in a harsh environment are not applicable to equipment located in a mild environment.

3.11(B).5.8 Synergistic Effects

Present synergistic effect information is minimal and not conclusive. The WCGS equipment qualification effort did consider synergisms as identified below.

a. If the vendor identified a synergistic effect, it was evaluated.

b. If the reviewer was aware of a synergistic effect, it was evaluated. As additional synergistic effect data became available it was evaluated and factored into the program.

c. If neither a. nor b. existed, then no further actions were taken to determine if any synergistic effects were known (e.g., a literature search).

It should be noted that NUREG/CR-2157, Occurrence and Implications of Radiation Dose - Rate Effects for Material Aging Studies, and NUREG/CR-2156, Radiation - Thermal Degradation of PE and PVC: Mechanism of Synergism and Dose Rate Effects, were considered along with other information on synergisms. It was concluded that NUREG/CR-2157 was applicable to the WCGS cable, but considering

the margins applied to the WCGS cable relative to radiation (typically >200 percent) that the margin compensated for potential synergistic effects of radiation application rate. Also, NUREG/CR-0276 indicates that, for PE and cross-linked polyolefin, dose rate effects are negligible. NUREG/CR-2156 addresses PE and PVC cable. WCGS PE cable is cross-linked and, accordingly, the relevance of the study is questionable. However, this synergistic effect was evaluated. The WCGS cable was tested in accordance with IEEE 383-74, in that the thermal pre-aging was performed prior to the radiation dose application. The DBA test was then performed. This sequence is consistent with the actual events that will occur during the plant life (assuming a LOCA at the end of life). The thermal aging independent of radiation is consistent with the actual plant condition due to the low radiation exposure that the cable receives. Prior to the elevated temperatures of the DBA the radiation dose is applied. This sequence is consistent with the Sandia report which states, "The joint effect of gamma radiation and elevated temperature was also found to occur when the two environments were applied in a sequential fashion, but only when the experiments were performed in the order: radiation at room temperature followed by elevated temperature." It should also be noted that the radiation applied is >200% of that required to simulate the accident conditions. This sequence and margin indicate that the synergistic concerns are adequately addressed. Additionally, the Sandia report uses percent elongation as the criterion to failure. This criterion appears to be inappropriate relative to actual plant requirements. The cable is securely placed in cable trays or conduit. The real concern is the insulating capability. This is not addressed by the report. The WCGS cable was typically meggered through the test sequence and at the end of the test the cable was wound around a mandrel, submerged in water, and a voltage withstand test was performed. This method of test evaluation is more severe and relevant than the Sandia evaluation method (i.e., percent elongation).

Additionally, as Section 3.11(B).5.6 indicates, maintenance performed as a result of component failure is reviewed by maintenance and engineering to categorize the cause of failure. This program provides early indication of premature deterioration which could be the result of unexpected synergistic effects.

In addition to the failure evaluation program, the surveillance and maintenance program for the safety-related motors includes a provision for the megger of insulation in accordance with manufacturer's recommendations, typically every 18 to 24 months. This testing is planned to be performed for the motors from the associated motor control center or switchgear. Thus, the cables and electrical penetration assemblies will be meggered with the

motor windings. This surveillance is capable of detecting insulation degradation and the location of degradation can be traced to determine which component is at fault. WCGS has established a periodic inspection program to monitor in-service aging of electrical cable insulation on selected cables inside containment.

It is also the intent of the Operating Agent to stay abreast of information on synergistic effects as it becomes available. The Operating Agent is a member of EPRI and receives information from this source as well as other industry sources and the NRC.

3.11(B).6 MECHANICAL EQUIPMENT QUALIFICATION

The mechanical equipment has been eliminated from the EQ program. The remaining information is historical describing the development of the EQ program for mechanical equipment.

The mechanic equipment qualification effort began at the start of the plant engineering effort. The seismic and environmental requirements for the various safety-related mechanical components were identified in each purchase specification. Each vendor was requested to supply equipment that could withstand the specified environments. The vendor submittals were reviewed to ensure conformance.

To provide additional verification of mechanical equipment qualification an additional review program was implemented.

The WCGS program for the review of environmental qualification of safety-related mechanical equipment involved a four-step process:

1. Identification of all safety-related mechanical equipment.

2. Categorization of equipment in accordance with NUREG-0588, Appendix E, based on equipment location and function.

3. Verification of qualification for active mechanical equipment in harsh environment areas.

4. Identification of aging concerns and establishment of replacement intervals as required.

The next step in the review process was the verification of mechanical equipment environmental qualification for the subset of active mechanical equipment located in harsh environment areas.

This step involved a review to determine if the equipment had been previously qualified because, in some cases, mechanical equipment was aged and tested together with associated electrical equipment for IEEE 323-1974. If the equipment had not been qualified by test or analysis under a previous qualification program, then a detailed review of the equipment was performed to identify components which could be adversely affected by post-accident environmental conditions or could be subject to significant aging mechanisms. The review concentrated on the components that are subject to deterioration in these environmental conditions (normal and/or post-accident) because they are "soft," nonmetallic components such as seals, gaskets, diaphragms, packing, etc. Identified components which could adversely affect the safety function of the equipment were then evaluated on the basis of material performance data or failure modes and effects analysis to verify that the equipment is qualified for its intended use.

As part of the qualification review, replacement intervals were identified either on the basis of aging performed during an IEEE 323-1974 qualification program or on the basis of published material aging data. It should be noted that, because all harsh environment WCGS Class 1E equipment has been reviewed under the NUREG-0588 program, and all harsh environment safety-related mechanical equipment has been evaluated under the program described above, concerns regarding the effect of aging on seismic performance of all safety-related equipment located in harsh environment areas have been adequately addressed for WCGS.

3.11(B).7 CONTROL SYSTEMS QUALIFICATION (IE INFORMATION NOTICE 79-22)

Wolf Creek reported on the matters addressed in IE Information Notice 79-22 to the NRC in References 14 and 15. These reports were submitted to NRC Inspection and Enforcement pursuant to 10 CFR 50.55(e). The latter report stated that final resolution would be provided in revisions to the Wolf Creek FSAR. The resolution and/or current status is provided below.

Westinghouse identified four control systems for generic consideration of nonsafety grade/safety grade interface interactions.

a. Steam generator atmospheric relief valve control system - A piping failure in the vicinity of the steam generator relief valves could be assumed to cause the valves to stick open. The combination of the pipe failure, an assumed single failure, and the stuck open valve(s) may result in inadequate auxiliary feedwater flow.

The Wolf Creek main steam atmospheric relief valves and the associated pressure transmitters have been procured as Class 1E devices which are environmentally qualified for the effects of high energy line breaks. Therefore, this scenario does not present a safety problem for the Wolf Creek design.

b. Pressurizer power-operated relief valves control system - A failure of secondary system piping inside the containment is assumed to cause pressurizer power-operated relief valves (PORV) to open. The resultant secondary break coincident with PORV opening may have more severe consequences than those accidents previously analyzed.

   The Wolf Creek pressurizer PORV and associated pressure transmitters meet Class 1E requirements and are qualified to the postulated accident environments inside the containment. Therefore, this scenario does not present a safety problem for the Wolf Creek design.

c. Main feedwater control system - A small feedwater line break could affect normal feedwater flow control, causing low steam generator levels prior to protective actions for the break.

   The Wolf Creek feedwater line break accident has been reanalyzed, assuming the control and protection grade system interaction. The analysis shows that this scenario can be accommodated without violating design conditions and acceptance criteria. A summary of the analysis may be found in Section 15.2.8. The summary includes an identification of the analysis assumptions that are different from those used in Reference 18.

d. Automatic rod control system - An intermediate size high energy line break is assumed to affect the rod control system, such that the initial conditions previously assumed for the break may not be valid.

   During the NRC review of the Wolf Creek design, the commitment was made to perform a Wolf Creek specific evaluation of the effects of a steam line break in the vicinity of the main turbine impulse pressure transmitters. A steam line rupture outside the containment is assumed to cause an adverse environment for the turbine impulse pressure transmitters, causing the control rods to begin withdrawal prior to receipt of a reactor trip signal. This evaluation was

submitted to the NRC by Reference 16 and revised by Reference 17. The evaluation concluded that the consequences of the postulated event are bounded by previous accident analyses described in the Wolf Creek USAR. The results of this evaluation were used in the review of the effects of postulated high energy line breaks on the power range ex-core detectors and associated in-containment equipment. Based on the review, it was determined that:

1) the steamline rupture is the limiting event to be considered with respect to a consequential control rod withdrawal, and

2) the results of the above mentioned evaluation of the steamline break outside containment apply to the postulated inside containment steamline break with coincident control rod withdrawal.

As previous accident analyses described in the Wolf Creek USAR. As a result of this review, it is concluded that the power range ex-core detectors and associated equipment are not required to be qualified for postulated high energy line break environments inside containment.

The Wolf Creek steamline break at power coincident with rod withdrawal has been analyzed in order to demonstrate compliance with IE-79-22, "Control and Protection Interaction". This notice identified a potential unreviewed safety question concerning non-safety grade equipment, such as the automatic rod control system, being subject to an adverse environment from high energy line breaks inside or outside containment.

The postulated accident scenario includes the failure of the control rod system as the result of the environment created by a steamline rupture. The analysis assumes the control rod withdrawal occurs at the initiation of the transient. The steamline break causes increased heat removal and a subsequent decrease in primary pressure concurrent with an increase in reactor power and heat flux due to the rod withdrawal. Protection to mitigate the consequences of this event is available from the OPDT reactor trip signal or the safety injection signal reactor trip signal (low steamline pressure). The power and heat flux increases result in a reactor trip on the OPDT signal. The reactor trip stops the positive reactivity from the withdrawing RCCAs, and the insertion of the control rods provides negative reactivity. After reactor trip, RCS conditions are similar to those of the post-reactor trip portion of a steamline break event, without coincidental rod withdrawal from full power.

The key analysis result is minimum DNBR. In terms of minimum DNBR, the most limiting part of the transient occurs immediately before reactor trip. Therefore, the increase in the MSIV/MFIV stroke time would not perceptibly affect the calculated limiting DNBR as the actuations of steamline isolation and feedline isolation occur after the limiting DNBR is reaced during rod motion from the reactor trip.

For additional evaluation of control grade system failures, refer to Section 7.7.2.

3.11(B).8 REFERENCES

1. DiNunno, J. J., Baker, R. E., Anerson, F. D., and Waterfield, R. L., "Calculation of Distance Factors for Power and Test Reactor Sites," Technical Information Document 14844, Division of Licensing and Regulation, AEC, Washington, D.C., 1962.

2. Kircher, J. F. and Bowman, R. E., Effects of Radiation on Materials and Components, Van Nostrand Reinhold, New York, 1964.

3. Griess, J. C. and Bacarella, A. L., "Design Considerations of Reactor Containment Spray Systems-Part III, The Corrosion of Materials in Spray Solutions," ORNL-TM-2412, Part III, Oak Ridge National Laboratory, Oak Ridge, Tennessee, December, 1969.

4. EPRI Report NP-2129, "Radiation Effects on Organic Materials in Nuclear Plants," November 1981.

5. SLNRC 83-0015, "Report of Independent Review of Environmental Qualification Programs to NUREG-0588," March 10, 1983 and revisions per SLNRC 83-0030, May 27, 1983 SLNRC 84-0013, February 1, 1984 and SLNRC 86-02, January 17, 1986.

6. T. Rockwell, Reactor Shielding Design Manual, D. Van Nostrand Co., New York (1956).

7. M. A. Capo, Polynominal Approximation of Gamma Ray Buildup Factors for a Point Isotropic Source, APEX 510.

8. R. G. Jaeger, et al, Engineering Compendium on Radiation Shielding, Shielding Fundamentals and Methods, I (1968).

9. QAD-CG, A Combinatorial Geometry Version of QAD-P5A (Bechtel Code).

10. J. Nilsson and R. Sandlin, "Straight Ducts" Engineering Compendium on Radiation Shielding, Shielding Fundamentals and Methods, I (1968).

11. J. H. Hubbell, R. L. Bach, and R. J. Herbold, "Radiation Field from a Circular Disc Source," Journal of Research of the National Bureau of Standards--C Engineering and Instrumentation Vol. 65C, No. 4, October-December 1961.

12. A. V. Masket, "Solid Angle Contour Integrals, Series and Tables," Review of Scientific Instruments, Vol. 28, No. 3, 191-197, March 1957.

13. R. Loevinger, "Discrete Radioisotope Sources," Radiation Dosimetry, Academic Press.

14. SLNRC 79-15 "Qualification of Control Systems," September 28, 1979.

15. SLNRC 80-6, "Qualification of Control Systems," February 5, 1980.

16. SLNRC 83-005, "Qualification of Control Systems," February 2, 1983.

17. SLNRC 83-054, "Instrumentation and Control Systems Branch Review," October 27, 1983.

18. WCAP-9230, Rev. 0, "Report on the Consequences of a Postulated Main Feedline Rupture, Proprietary."

19. Calculation XX-F-014, Rev. 0, "Wolf Creek Power Rerate-Radiation Source Term Review," September 30, 1992.

TABLE 3.11(B)-1

PLANT ENVIRONMENTAL NORMAL CONDITIONS

The contents of Table 3.11(B)-1 has been superceded by EQSD - I, Attachment A and B.

TABLE 3.11(B)-2

The contents of Table 3.11(B)-2 has been superceded by EQSD - I, Attachment A and B.

TABLE 3.11(B)-3

The contents of Table 3.11(B)-3 has been superceded by EQSD - I, Attachment A and B; and EQSD - II, Tables 1 and 2.

TABLE 3.11(B)-4

The contents of Table 3.11 (B)-4 has been superceded by EQSD - I, Attachment A.

TABLE 3.11(B)-5

The contents of Table 3.11(B)-5 has been superceded by EQSD - I, Attachment A.

TABLE 3.11(B) - 6

This Table has been deleted

TABLE 3.11(B)-7

SPECIFICATIONS REVIEWED UNDER THE NUREG-0588 PROGRAM

SPECIFICATION	DESCRIPTION
E01013-1	Termination Material (stub conn. kits)
E01013-2	Termination Material (ht. shrink fld spl.)
E01013-3	Termination Material (motor conn. kits)
E01013-4	Termination Material (end sealing kits)
E009	Switchgear Potential Transformer Cubicles (1)
E018	Motor Control Centers (2)
E028	Local Control Stations/Terminal Boxes
E028A	Switches (2)
E029	5 kV Power Cable
E035	Electrical Penetrations
E035B	Electrical Penetration Modules
E057	600 V Control Cable
E057A	600 V Control Cable
E057B	600 V Control Cable
E057C	600V Fire-Resistive Cable
E058	600 V Power Cable
E060-1	Triaxial and Coaxial Cable
E060-2	Triaxial Cable Assembly (nuclear detectors) (1)
E061	Thermocouple Cable
E062	600 V Instrumentation Cable
E062A	600 V Instrumentation Cable
E093	Auxiliary Relay Racks
J301-1	Pressure Transmitters (IC)
J301-2	Pressure Transmitters (OC)

TABLE 3.11(B)-7 (Sheet 2)

SPECIFICATION	DESCRIPTION
J301-3	Pressure Transmitters Conduit Seals
J301-4	Pressure Transmitters - "R" Electronics
J359	Hydrogen Monitoring System
J361A-1	Radiation Monitors
J361A-2	Radiation Monitor Cable
J364	Neutron Flux Monitoring System
J481	Level Transmitters
J558B	RTDs
J564	RTDs RC NSSS MR
J601A	Control Valves
J601B	Atmospheric Relief Valves
J603A-1	Solenoid Valves
J603A-2	Solenoid Valve Connector
J605A	Butterfly Valves (2)
M021	Turbine Driven Auxiliary Feedwater Pump (1)
M088	Containment Spray Pumps
M221	Valve Limit Switch (1)
M223A-1	Motor-Operated Gate and Globe Valves (IC) (3)
M223A-2	Motor-Operated Gate and Globe Valves (OC) (3)
M223C	Motor-Operated Gate and Globe Valves (3)
M224B	Motor-Operated Gate and Globe Valves (3)
M225-1	Motor-Operated Gate and Glove Valves (IC) (3)
M225-2	Motor-Operated Gate and Globe Valves (OC) (3)
M231C	Motor-Operated Gate and Glove Valves (3)

TABLE 3.11(B)-7 (Sheet 3)

SPECIFICATION	DESCRIPTION
M236	Motor-Operated Butterfly Valves (1)
M237-1	Butterfly Valves (Limitorque) (OC) (3)
M237-2	Butterfly Valves (Limitorque) (IC) (3)
M237-3	Butterfly Valves (Bettis)
M612	Room Coolers
M619.3	Hydrogen Mixing Fans
M620	Containment Cooling Fans
M627A	Dampers
M628	Steam Isolation Valves
M630	Feedwater Isolation Valves
W(AE2)	Large Pump Motors
W(AE3)	Canned Safety-Related Pump Motors (1)
W(ESE-01A)-1	Pressure Transmitters (A) (Barton IC)
W(ESE-01A)-2	Pressure Transmitters (A) (Barton-OC)
W(ESE-01B)	Pressure Transmitters (A) (Veritrak)
W(ESE-01C)-1	Pressure Transmitters (A) (Tobar-IC)
W(ESE-01C)-2	Pressure Transmitters (A) (Tobar-OC)
W(ESE-03A)	D.P. Transmitters (A) (Barton)
W(ESE-03C)	D.P. Transmitters (A) (Tobar)
W(ESE-04A)	D.P. Transmitters (B) (Barton)
W(ESE-04D)	D.P. Transmitters (B) (Rousemount)
W(ESE-06)	RTDs
W(ESE-08)	Excore Neutron Detectors (power range) (1)

TABLE 3.11(B)-7 (Sheet 4)

SPECIFICATION	DESCRIPTION
W(ESE-40A)	Differential Pressure Indicating Switch (B)(1)(2)(4)
W(ESE-42A)	RVLIS - RTDs
W(ESE-43A)	CCMS - IC Thermocouple Connectors
W(ESE-43B)	CCMS - IC Thermocouple Connectors
W(ESE-43E)	CCMS - IC Thermocouple Connector Splices
W(ESE-43G)	CCMS - Reference Junction Box Splices
W(ESE-44A)	CCMS - Reference Junction Box
W(ESE-47)	FLUX Doubling Equipment (1)
W(ESE-49A)	Differential Pressure Indicating Switch (A)
W(HE-01)	Motor-Operated Valves (A)
W(HE-02)	Solenoid Operated Valves (A)
W(HE-03)	Limit Switches (A)
W(HE-04)	Motor-Operated Valves (B)
W(HE-05)	Solenoid-Operated Valves (B)
W(HE-06)	Limit Switches (B)
W(HE-07)	Safety Valve Lift Indicating Switch Assembly
W(HE-08)	Conax Connectors
W(HE-09)	Power-Operated Relief Valves
W(HE-10A)	Head Vent System - Isolation Valves
W(SP-1)	Hydrogen Recombiner

Note:

(1) Exempted from qualification. See Table 3.11(B)-8.
(2) EJFIS0610 is exempted from qualification. Analysis has demonstrated that EJFIS0610 is located in a mild environment.
(3) Qualification addressed by EQWP - BOP Limitorque.
(4) Qualification for EJFIS0611 is addressed by EQWP-ESE-40A.

TABLE 3.11(B)-8

The contents of Table 3.11(B)-8 has been superceded by EQSD - I, Attachment C.

TABLE 3.11(B)-9

SAFETY-RELATED SYSTEM LISTING

SYSTEM DESIGNATOR	SYSTEM TITLE	EMERG. REACT. SHTDWN.	CONTAINMENT ISOL.	CORE COOLING	CONTAINMENT HT REM.	CORE RESID. HT REM.	PREV. OF RAD RELEASE
AB	Main Steam System		X			X	X
AC	Main Turbine System					X	X
AE	Main Feedwater System		X			X	X
AL	Auxiliary Feedwater System					X	X
BB	Reactor Coolant System	X	X	X		X	X
BC	Chemical volume and Control System	X	X	X			X
BL	Reactor Makeup Water System		X				
BM	Steam Generator Blowdown System		X			X	X
BN	Refueling Water Storaqe System	X		X	X	X	X
EC	Fuel Pool Cooling and Cleanup Sy6tem						X
EF	Essential Service Water System	X	X	X	X	X	X
EG	Component Cooling Water System	X	X	X	X	X	X
EJ	Residual Heat Removal System		X	X		X	X
EM	Safety Injection	X	X	X			X
EN	Contanment Spray		X		X		X
EP	Accumulator Safety Injection System	X	X	X			X
FC	Auxiliary Turblne System					X	X
GD	Essential Service Pump House HVAC	X		X	X	X	X
GE	Turbine Building HVAC						X
GF	Miscellaneous Building HVAC					X	X
GG	Fuel Building HVAC						X

TABLE 3.11(B)-9 (Sheet 2)

SYSTEM DESIGNATOR	SYSlEM TITLE	EMERG. REACT. SHTDWN.	CONTAINMENT ISOL.	CORE COOLING	CONTAINMENT HT REM.	CORE RESID. HT REM.	PREV. OF RAD RELEASE
GK	Control Building HVAC	X		X	X	X	X
GL	Auxiliary Building HVAC	X		X	X	X	X
GM	Diesel Generator Building HVAC	X	X	X	X	X	X
GN	Containment Cooling System	X			X		X
GS	Containment/Hydrogen Monitoring System		X				X
GT	Containment Purge System		X				X
HB	Liquid Radwaste System		X				X
JE	Emergency Fuel Oil System			X	X	X	X
KA	Service Air System		X				X
KC	Fire Protection System		X				X
KJ	Diesel Cenerator System	X	X	X	X	X	X
LE	Oily Waste System						X
LF	Floor and Equipment Drain System		X				X
NB	4.16 kV Electrical System	X	X	X	X	X	X
NE	Emergency Cenerating System	X	X	X	X	X	X
NF	Load Sequencing and Shedding System	X	X	X	X	X	X
NC	480 V AC Electrical System	X	X	X	X	X	X
NK	125 V DC Electrical System	X	X	X	X	X	X
NN	Vital AC Instrument Power System	X	X	X	X	X	X
PA	13.8 kV Electrical System	X					
PN	Non-Vital Instrument AC System(1)						

Note:

(1) Provide electrical isolation function only.

TABLE 3.11(B)-9 (SHEET 3)

SYSTEM DESIGNATOR	SYSTEM TITLE	EMERG. REACT. SHTDWN.	CONTAINMENT COOLING	CONTAINMENT CORE REM.	CORE RESID. HT. REM.	PREV. OF HT. RELEASE	RAD	
RL	Main Control Board System	X	X	X	X		X	X
RP	Miscellaneous Panels	X	X	X	X		X	X
SA	Essential Safety Features Actuation System	X	X	X	X		X	X
SB	Reactor Protection System	X	X	X	X		X	X
SE	Excore Neutron Monitoring System	X	X	X				X
SJ	Primary Sampling System		X					X
SP	Process Radiation Monitoring System		X					X
SS	(ATWS) Mitigation System(1) Activation Circuitry							

NOTE:

(1) Provide electrical isolation function only

TABLE 3.11(B)-10

The contents of Table 3.11(B)-10 has been superceded by EQSD - II, Table 1 and 2.

TABLE 3.11(B)-11

TYPICAL EXAMPLES OF MAINTENANCE/SURVEILLANCE REQUIREMENTS

	ITEM	EQ REVIEW	TECHNICAL SPECIFICATIONS	MAINTENANCE/SURVEILLANCE ACTIVITIES	ISI PROGRAM
a.	Cables located inside containment.	No requirements identified.	No requirements identified.	No requirements identified.	Not applicable.
b.	Limitorque valves opertors	Periodic test of motor IR and wire insulation are performed. Lubricant inspection (and if necessary, replacement) is performed at 18 month intervals.	Periodic actuation tests are required for automatic valves (including motor-operated valves) required for emergency boration, emergency core cooling and containment isolation.	Operators should be operated periodically not less than twice yearly.	A full stroke test is required periodically on active motor operated valves. Valves that can be stroked during normal plant operation are stroked once every 3 months. Others are stroked when plant conditions permit.
c.	Amphenol Electric Penetrations	No requirements identified.	Periodic containment integrated leak rate tests are performed.	No requirements identified.	Not applicable.
d.	Motor control center relays and breakers	The action plan for MCCs requires identification of component replacement intervals.	Periodic functional tests and inspections of MCC breakers which supply power through containment electrical penetrations (item c above) are performed. Also motor-operated valve functional tests, as discused in b above, functionally test the associated MCC relays and breakers.	Maintenance personnel perform periodic inspections of MCCs and, at each refueling outage, perform maintenance including operation of all devices, replacement of worn contacts, breaker-trip settings and evidence of heat or mechanical damage.	Valve stroking of motor-operated valves, as discussed in b above, also tests the MCC relays and breakers associated with those valves.
e.	Barton Pressure Transmitter.	The cover 0-ring must be replaced each time the cover is removed. Transmitters inside containment must be replaced every 6 years. Transmitters outside containment, every 10 years.	Periodic channel checks and channel calibration apply to most transmitters because of their use in the reactor protection and engineered safety features actuation system.	Transmitters do not require a routine preventive maintenance program other than periodic calibration.	Not applicable.

3.11(B) Figures

The contents of Table 3.11(B) Figures has been superceded by EQSD - I, Attachment A.

3.11(N) ENVIRONMENTAL DESIGN OF MECHANICAL AND ELECTRICAL EQUIPMENT

The mechanical and electrical portions of the engineered safety features and the reactor protection system are designed to ensure acceptable performance in all environments anticipated under normal, test, and design basis accident conditions. This section presents information on the design basis and qualification verifications for mechanical and electrical equipment in the engineered safety features and the reactor protection system that are within the scope of the Westinghouse nuclear steam supply system (NSSS). Section 3.7(N) presents the seismic design requirements, and Section 3.10(N) presents the seismic qualification of electrical equipment.

3.11(N).1 EQUIPMENT IDENTIFICATION AND ENVIRONMENTAL CONDITIONS

Refer to Section 3.11(B).1.

3.11(N).2 QUALIFICATION TESTS AND ANALYSES

For Westinghouse NSSS Class IE equipment, Westinghouse will meet the Institute of Electrical and Electronics Engineers (IEEE) Standard 323-1974, "Standard for Qualifying Class IE Equipment for Nuclear Power Generating Stations," including IEEE 323a-1975, the Nuclear Power Engineering Committee (NPEC) Position Statement of July 24, 1975, by an appropriate combination of any or all of the following: type testing, operating experience, qualification by analysis, and ongoing qualification.

Reference 1 provides the general qualification methods Westinghouse uses in meeting the requirements of IEEE Standard 323-1974. The NRC Safety Evaluation Report dated November 10, 1983 states that the Westinghouse EQ methodologies (and specific Westinghouse qualification reports), "comply with the NRC environmental requirements as codified by 10CFR50 Section 50.49 and its subordinate Regulatory Guides, NUREGs and IEEE standards." Note the Regulatory Guide 1.89, Revision 1 is a subordinate document of 10CFR50.49. Reference 2 provides additional information concerning performance specifications and requirements and test plans for each safety-related equipment type. Table 3.11(B)-3 provides the equipment qualification data package reference for each piece of Westinghouse-supplied, safety-related equipment.

In the overall Class IE Westinghouse equipment qualification program, generic environmental conditions (e.g., temperature, pressure, humidity, chemistry, and radiation) were established for the various pieces of Westinghouse-supplied Class IE equipment. These conditions vary according to the location of the equipment. The environmental conditions for which the equipment is qualified are reported in the specific equipment qualification data package.

The requirements of GDC-1, 4, 23, and 50 are addressed in Section 3.1. Specific information concerning GDC-1 and 4 is reported in the applicable equipment qualification data packages (Ref. 2). Specific information concerning GDC-23 may be found in Section 7.2.2.2, and information regarding GDC-50 is provided in Section 6.2.

Information concerning how Appendix B of 10 CFR 50 is met is located in Chapter 17. Regulatory Guides 1.30, 1.40, 1.73, and 1.89 are addressed in Appendix 3A.

3.11(N).3 QUALIFICATION TEST RESULTS

Table 3.11(B)-3 provides a cross-reference to the qualification results for each piece of Westinghouse-supplied equipment.

The results of qualification tests are reported in Reference 2. As the qualification program progresses, the qualification data package in Reference 2 will be updated accordingly.

3.11(N).4 LOSS OF VENTILATION

Refer to Section 3.11(B).4.

3.11(N).5 ESTIMATED CHEMICAL AND RADIATION ENVIRONMENT

Tables 3.11(B)-1 and 3.11(B)-2, Sections 3.11(B).5 and 6.1 provide the design source term for the chemical and radiation environment for normal operation and design accident environments respectively. Source terms and chemical environments for which the NSSS scope equipment is qualified are provided in the appropriate equipment qualification data package (Ref. 2).

3.11(N).6 REFERENCES

1. Butterworth, G., and Miller, R. B., "Methodology For Qualifying Westinghouse WRD-Supplied NSSS Safety-Related Electrical Equipment," WCAP-8587, Revision 6A, November 1983.

2. "Equipment Qualification Data Packages," WCAP-8587, Revision 1, Supplement 1, November 1978.

3.12 COMPUTER PROGRAMS FOR STRUCTURAL ANALYSIS AND DESIGN

The computer programs referred to by their acronyms in Sections 2.5 and 3.7 are described herein. All programs are verified, within the stated assumptions and limitations, for correctness of theory used and validity of results obtained for a variety of typical problems. Results are checked against known solutions, solutions obtained from other programs or hand calculations. Examples of validation problems are included with the program descriptions. Whenever applicable, internal checks such as equilibrium and orthogonality checks are included as an aid in checking the validity of the results obtained from the computer program for each problem analyzed.

3.12.1 ISBILD

ISBILD (Analysis of Stresses and Movements in Embankments) is a finite-element program developed to analyze static strains, stresses, and displacements in an embankment-foundation system. It uses the latest finite element analysis techniques. The program takes into account the incremental loading to simulate the successive construction stages of an embankment. It employs nonlinear, hyperbolic and stress-dependent stress-strain behavior on the primary loading and stress-dependent stress-strain behavior on unloading and reloading.

The program is an improved version of the computer program EMBANK, developed by Kulhawy, Duncan, and Seed in 1969 (Reference 7). It was originally written by Ozawa and Duncan (Reference 11) of the University of California, Berkeley. Isoparametric elements with incompatible displacement modes (Reference 14) and a more accurate procedure for assigning the initial stresses are used in the ISBILD program. It also incorporates more efficient computational techniques, including a new method of defining the boundary conditions and a new equation solver developed by Wilson in 1971 (Reference 13). ISBILD can be used to calculate stresses and movements due to gravitational or applied loads in a homogenous or zoned embankment and on a rigid or stratified soil foundation. It can also be used on a natural or cut slope by applying the gravity turn-on method provided in the program. The program works on two-dimensional problems assuming plane strain and isotropic conditions.

ISBILD was acquired by Sargent & Lundy (S&L) from the University of California at Berkeley and converted for use on inhouse UNIVAC 1100 series hardware. It was modified to include capability to treat linear soil properties, to compute horizontal body forces, and to calculate the movements in an embankment due to water loading.

To validate S&L's UNIVAC 1100 version of the program, problems provided by the original authors were used as well as problems taken from published literature. Two of these problems are presented below.

In the first problem, the measured movements of the Otter Brook Dam (Reference 8) are compared with the results of ISBILD. Figure 3.12-1 shows a comparison of the results for the horizontal displacement of the upstream face and for the displacement of the bridge pier. As shown, the calculated results by using the ISBILD program compare favorably with the field measurements.

In the second problem, a homogenous dam resting on impermeable base with a full pool is analyzed (see Figure 3.12-2). Deflection distributions with depth are plotted for the centerline and the upstream and downstream faces (Figure 3.12-3). Solutions from ISBILD agree closely with those obtained by Carter et al (Reference 4).

3.12.2 QUAD4

QUAD4 is a finite-element program which evaluates the seismic response of soil structures using a different damping ratio for each individual element. The base motion can be applied simultaneously in two orthogonal directions. The procedure also allows incorporation of strain-dependent stiffness and damping values for each element.

The program was written for elements in plane strain. Triangular and quadrilateral elements can be used in representing the continuum. The solution proceeds by assigning modulus and damping values to each element. Because these values are strain-dependent, an iteration procedure is adopted. Thus, at the outset, values of shear moduli and damping are estimated and the analysis is performed. Using the computed values of average strain developed in each element, new values of modulus and damping are determined from appropriate data relating these values to strain. Proceeding in this way, a solution is obtained for each element incorporating modulus and damping values compatible with the average strain developed.

The program output includes strain-compatible soil properties, response spectra at specified nodes, probable maximum nodal accelerations, and probable maximum direct stresses, shear stresses, and shear strains for all elements. The shear stress time history can also be obtained for specified elements.

QUAD4 was originally developed by I. M. Idriss, J. Lysmer, R. Hwang, and H. B. Seed of the University of California, Berkeley (Reference 6). It was modified and is now maintained by S&L. The program is currently processed at S&L on UNIVAC 1100 series hardware. It has been operational since November 1973.

To validate S&L's version of QUAD4, a sample problem was taken from the original program documentation (Reference 6).

A 100-foot layer of dense sand, shown in Figure 3.12-4, has been analyzed. The properties of the sand were considered to be as follows:

Total unit weight = 125 lb/ft^3

$(K_2)MAX = 65$

$K_O = 0.5$

The parameter $(K_2)_{MAX}$ relates the maximum shear modulus, G_{MAX}, and effective mean pressure at any depth, y, below the surface as follows:

$$G_{MAX}' = 1000(K_2)_{MAX}s_M,^{1/2}$$

where:

$$s_m' = \backslash f((1 + 2K_O),d)\ s_v'$$
$$3 \qquad v'$$

K_O = coefficient of lateral pressure at rest, and

s_v' = effective vertical pressure at depth y.

Damping values and variations of modulus values with strain were based on data given in Reference 6.

The response of the sand layer was evaluated using the time history of accelerations recorded at Taft, California, during the 1952 Kern County, California, earthquake as base excitation. The ordinates of this time history were adjusted to provide a maximum acceleration of 0.15g.

The sand layer has been represented by a finite-element mesh consisting of 20 elements and 42 nodal points (Figure 3.12-4). To simulate a semi-infinite system, nodal points l through 40 have been fixed in the vertical direction and, therefore, are only permitted to move in the horizontal direction. Nodal points 41

and 42 are fixed to the base. Comparison of results obtained from this validation run and the published results are shown in Figures 3.12-5 through 3.12-7. The values of damping and modulus, compatible with the strain level computed in each element, are presented in Figure 3.12-5. The variations of maximum shear stresses and the maximum accelerations with depth are shown in Figure 3.12-6. The acceleration spectrum for the computed surface motions is shown in Figure 3.12-7. As illustrated by these figures, the comparisons are favorable.

3.12.3 RSG

RSG (Response Spectrum Generator) generates dynamic response spectra (displacement, velocity and acceleration) for single-degree-of-freedom elastic systems, with various dampings, subjected to a prescribed time-dependent acceleration. The program may also be used to obtain a response-spectrum-consistent acceleration time history in which the response spectrum of the generated acceleration time history closely envelopes the given spectrum. The differential equation of motion is solved by Newmark's -method of numerical integration (Reference 10).

The program has the capability to apply a baseline correction in an earthquake acceleration time history as well as to obtain and to plot the Fourier transform of the given acceleration time history. Options are available to obtain plots of the given acceleration time history, the generated response spectra, and their envelopes. In addition the response spectra can be combined using the probability method or the square-root-of-the-sum-of-the-squares (SRSS); and absolute sum methods. An interpolation option to obtain an acceleration time history at equal intervals or at a smaller time interval is available. The program with all its options and capabilities can also be used as a postprocessor for other programs.

Depending upon the option, the program output includes the response spectrum, the Fourier transform of a given acceleration time history, or the response-spectrum-consistent acceleration time history.

To illustrate the validity of the program, three sample problems are presented. In the first problem, response spectra of the El Centro, California north-south earthquake record (53-76 seconds duration) are generated using RSG for 0, 2, 5, 10 and 20 percent damping ratios. A time history plot of the earthquake record as determined by RSG and as published by the California Institute of Technology (Reference 3) is shown in Figure 3.12-8. A comparison of response spectrum values obtained from RSG with the response

spectrum values published in Brady et al. (Reference 2) is shown in Table 3.12-1. Comparisons of response spectra plots at varying dampings are shown in Figure 3.12-9. As shown by the comparison, RSG generates the correct response spectra.

The second validation example is a Fourier transform plot of a given 5-Hertz sine wave time history from RSG. The Fourier transform plot shown in Figure 3.12-10 shows a peak only at 5 Hertz.

For the third validation problem, a spectrum-consistent time history was generated. A comparison of the desired response spectrum and the response spectrum of the compatible time history is shown in Figure 3.12-11. As seen from this figure, a good match is obtained.

3.12.4 SEEPAGE

SEEPAGE (Two-Dimensional Steady-State Seepage Analysis Program) is a finite-element program developed for analyzing various types of two-dimensional steady seepage flows through nonhomogeneous anisotropic porous media such as flow through an earth dike; flow into wells; and seepage losses through the beds of canals, lakes, etc.

The program is capable of computing the pressure, potential function, stream function values, velocities in two directions on a vertical plane, and discharge values through vertical section lines in the flow domain. It can also determine the position of the free surface line and plot the flow net.

Input for this program consists of the geometry of the flow domain, directional permeability coefficients, and available pressure heads on the boundaries. Output consists of nodal point pressures, potential values, stream function values, velocities in two directions in every element, and discharge through specified sections. For seepage problems involving free surface, additional input is required, including the initial trial free surface, number of iterations for free surface, free surface correction factor, and error tolerance.

SEEPAGE was originally developed by Robert L. Taylor of the University of California at Berkeley (Reference 12). It has been extensively modified by S&L since 1972. It is now maintained at S&L on UNIVAC 1100 series hardware.

To validate SEEPAGE, a problem considering groundwater flowing into a well was analyzed by SEEPAGE and compared with hand calculations. The hand calculations are based on the well formula for steady radial flow in an unconfined aquifer given in Chow (Reference 5). Figure 3.12-12 shows the finite element mesh

configuration and permeability coefficients. The discharge obtained from SEEPAGE is 0.6791 cfs. That from the hand calculations is 0.6567 cfs.

3.12.5 SLOPE

SLOPE (Slope Stability Analysis) utilizes the theory of equilibrium of forces to determine the factor of safety against sliding of any embankment or slope. It contains the Bishop, Fellenius, and Morgenstern-Price methods of two dimensional stability analysis. In the Bishop and Fellenius methods, the factor of safety against failure is estimated along a circular surface of failure, whereas any arbitrary failure surface may be chosen for the Morgenstern-Price method.

The input includes the slope geometry, soil profile, soil properties (density, cohesion, and the friction angle) and the piezometric surface(s). The program also has the capability to introduce an earthquake loading assumed as a horizontal gravitational force. Once the problem is input, several execution commands can be used to determine the factor of safety by the various methods. Also, different stages such as end-of-construction, full-lake and sudden-drawdown, can be considered in a single run.

The output includes factors of safety for each trial surface and a printer plot of the slope cross section having slope profile, soil profile, water table conditions, and failure surface for the minimum factor of safety.

SLOPE was developed and put under Integrated Civil Engineering Systems (ICES) by William A. Bailey at the Massachusetts Institute of Technology. It has been in the public domain since 1967. S&L currently uses the SLOPE version maintained by the McDonnell Douglas Automation Company on IBM 370 Series hardware (Reference 9).

3.12.6 BISHOP

BISHOP (Slope Stability Analysis) uses the Simplified Bishop Method to perform slope stability analysis. The factor of safety is defined in terms of moments about the center of the failure arc. The resultant of all forces on the sides of any slice is assumed to act horizontally. The pseudostatic approach is used to simulate the effect of an earthquake loading on the stability of slopes. The static equivalent earthquake force for each slice is applied horizontally through the center of the base of that slice.

Input to the program consists of slope geometry, soil characteristics, groundwater level, centers and radii of trial circles, and the number of slices to be used in the analysis. Either SI or U.S. customary units can be used.

Output from the program includes an echo print of the input data and the factor of safety for each trial circle. A plot of slope geometry and trial circles can also be produced.

BISHOP was originally developed by J. E. Bowles of Bradley University (Reference 1). It was modified by Sargent & Lundy in 1974, and the POL (Problem Oriented Language) was added in 1976. The program is now maintained on UNIVAC 1100 series hardware operating under EXEC8.

A typical slope cross section was used for validation. The BISHOP results were compared with results from the ICES-SLOPE program (Reference 9). The slope geometry of the problem and the soil properties used in the slope stability analyses are shown in Figure 3.12-13. The resulting factors of safety for three loading conditions obtained from BISHOP and from ICES-SLOPE are shown in Table 3.12-2. The results correlate well.

3.12.7 REFERENCES

1. Bowles, J. E., 1974, Analytical and Computer Methods in Foundation Engineering, McGraw-Hill Book Company, New York, pp. 465 and 467.

2. Brady, A. G. et al., 1972, "Analysis of Strong Motion Earthquake Accelerograms, Volume III, Response Spectra, Part A, Accelerograms IIA001 through IIA020," Prepared for the National Science Foundation.

3. California Institute of Technology Earthquake Engineering Research Laboratory, 1971, Strong Motion Earthquake Accelerograms, Digitized and Plotted Data, Vol. II Corrected Accelerograms and Integrated Ground Velocity and Displacement Curves, Part A-Accelerograms IIAOUI through IIA20, EERL 71-50, Pasadena, California.

4. Carter, J. P., Poulos, H. G., and Booker, J. R., 1974, "Effect of Seepage on Embankment Deformations Due to Water Loading," PB-242 450, National Technical Information Service, U.S. Department of Commerce.

5. Chow, V. T., 1964, Handbook of Applied Hydrology, McGraw Hill Book Company, New York.

6. Idriss, I. M. et al., 1973, "QUAD4 A Computer Program for Evaluating the Seismic Response of Soil Structures by Variable Damping Finite Element Procedures," Report No. EERC73-16, Earthquake Engr. Research Center, University of California, Berkeley, California, July.

7. Kulhawy, F. H., Duncan, J. M., and Seed, H. B., 1969, "Finite Element Analysis of Stresses and Movements in Embankment During Construction," Geotechnical Engineering Research Report No. TE-69-4, Department of Civil Engineering, University of California, Berkeley.

8. Linell, K. A., and Shea, H. F., 1960, "Strength and Deformation Characteristics of Various Glacial Tills in New England," Proceedings, Research Conference on Shear Strength of Cohesive Soils, ASCE, Boulder, Colorado, pp. 275-314.

9. McDonnell Douglas Automation Co., 1974, "ICES SLOPE - Slope Stability Analysis System."

10. Newmark, N. M., and Rosenblueth, E., 1971, Fundamentals of Earthquake Engineering, Prentice-Hall, Inc., Englewood Cliffs, N. J., p. 15.

11. Ozawa, Y., and Duncan, J. M., 1973, ISBILD, A Computer Program for Analysis of Static Stresses and Movements in Embankments," Geotechnical Engineering Research Report No. TE-73-4, Department of Civil Engineering, University of California, Berkeley.

12. Taylor, R. L., and Brown, C. B., 1967, "Darcy's Flow Solution with a Free Surface," Journal of the Hydraulics Division, ASCE, Vol. 93, No. HY2, pp. 25-33.

13. Wilson, E. L., 1971, "Solid SAP, A Static Analysis Program for Three-Dimensional Solid Structure," SESM Report 71-19, Structural Engineering Laboratory, University of California, Berkeley.

14. Zienkiewics, O. C. et al., 1969, "Isoparametric and Associated Element Families for Two- and Three-Dimensional Analysis," Chapter 13 in "Finite Element Methods in Stress Analysis," Edited by I. Holand and K. Bell, Technical University of Norway, Tapir Press, Norway, Trondheim.

TABLE 3.12-1

COMPARISON OF RESPONSE SPECTRA VALUES FROM RSG

AND BRADY ET AL. (1972)

NO.	PERIODS (sec)	0% DAMPING		2% DAMPING		5% DAMPING		10% DAMPING		20% DAMPING	
		RSG	BRADY	RSG	BRADY	RSG	BRADY	RSG	BRADY	RSG	BRADY
1	0.042	0.783	0.765	0.409	0.421	0.367	0.374	0.349	0.360	0.348	0.350
2	0.046	0.990	1.050	0.430	0.427	0.388	0.384	0.371	0.371	0.348	0.358
3	0.050	1.015	0.951	0.540	0.571	0.461	0.467	0.404	0.407	0.359	0.369
4	0.055	1.044	1.140	0.585	0.557	0.428	0.416	0.403	0.406	0.365	0.382
5	0.070	0.963	0.803	0.471	0.493	0.439	0.446	0.424	0.424	0.383	0.398
6	0.080	1.333	1.320	0.708	0.712	0.582	0.579	0.482	0.488	0.390	0.407
7	0.085	1.070	1.070	0.682	0.668	0.591	0.591	0.486	0.490	0.395	0.408
8	0.100	1.755	2.070	0.815	0.805	0.567	0.567	0.480	0.480	0.409	0.419
9	0.130	1.990	1.990	1.040	1.030	0.773	0.772	0.535	0.541	0.429	0.445
10	0.150	1.977	1.920	0.847	0.837	0.578	0.579	0.497	0.504	0.435	0.454
11	0.180	1.309	1.490	0.887	0.890	0.726	0.727	0.587	0.597	0.452	0.474
12	0.200	1.609	1.580	0.916	0.914	0.650	0.644	0.531	0.542	0.444	0.463
13	0.220	2.415	2.500	0.731	0.728	0.683	0.667	0.580	0.576	0.442	0.471
14	0.260	1.538	1.600	1.177	1.150	0.903	0.902	0.639	0.653	0.443	0.469
15	0.280	1.309	1.310	0.878	0.882	0.755	0.746	0.567	0.578	0.430	0.463
16	0.320	1.820	1.820	1.067	1.070	0.699	0.703	0.519	0.527	0.402	0.432
17	0.360	1.212	1.210	0.877	0.877	0.657	0.655	0.504	0.511	0.379	0.408
18	0.380	1.717	1.720	0.978	0.972	0.673	0.678	0.493	0.503	0.390	0.403
19	0.400	1.964	1.990	0.824	0.827	0.614	0.615	0.473	0.481	0.409	0.418
20	0.440	1.591	1.580	0.969	0.966	0.728	0.731	0.553	0.558	0.463	0.478
21	0.480	1.405	1.410	0.996	0.996	0.794	0.797	0.644	0.651	0.514	0.537
22	0.500	1.179	1.170	1.018	1.020	0.830	0.836	0.691	0.699	0.533	0.559
23	0.550	1.988	1.990	1.266	1.260	0.910	0.917	0.745	0.759	0.545	0.588
24	0.600	1.252	1.250	0.970	0.971	0.854	0.859	0.706	0.722	0.516	0.570
25	0.700	1.846	1.840	0.898	0.900	0.619	0.622	0.534	0.546	0.408	0.459
26	0.800	1.089	1.080	0.671	0.670	0.547	0.549	0.436	0.444	0.307	0.347
27	0.900	1.176	1.170	0.754	0.755	0.536	0.539	0.385	0.393	0.267	0.289
28	1.000	0.829	0.830	0.676	0.677	0.515	0.518	0.350	0.359	0.231	0.249
29	1.200	0.818	0.818	0.440	0.441	0.330	0.331	0.236	0.241	0.173	0.186
30	1.400	0.420	0.420	0.237	0.237	0.181	0.181	0.170	0.173	0.130	0.138
31	1.600	0.327	0.327	0.242	0.243	0.194	0.195	0.159	0.162	0.124	0.136
32	1.800	0.490	0.503	0.230	0.230	0.178	0.179	0.146	0.149	0.122	0.136
33	2.000	0.353	0.353	0.226	0.226	0.178	0.178	0.148	0.152	0.120	0.135

*Response spectrum values in (g) units.

TABLE 3.12-2

RESULTS OF PROBLEM SOLVED WITH BISHOP AND ICES-SLOPE (BISHOP)

	SLIP CIRCLE DETAILS (ft)			FACTOR OF SAFETY	
	CENTER		RADIUS	BISHOP	ICES-SLOPE
	x	Y	R		
End of construction	175	1125	75	1.67	1.67
Steady-state seepage with .1g	160	1145	95	1.98	2.02
Rapid drawdown	175	1140	90	2.53	2.51

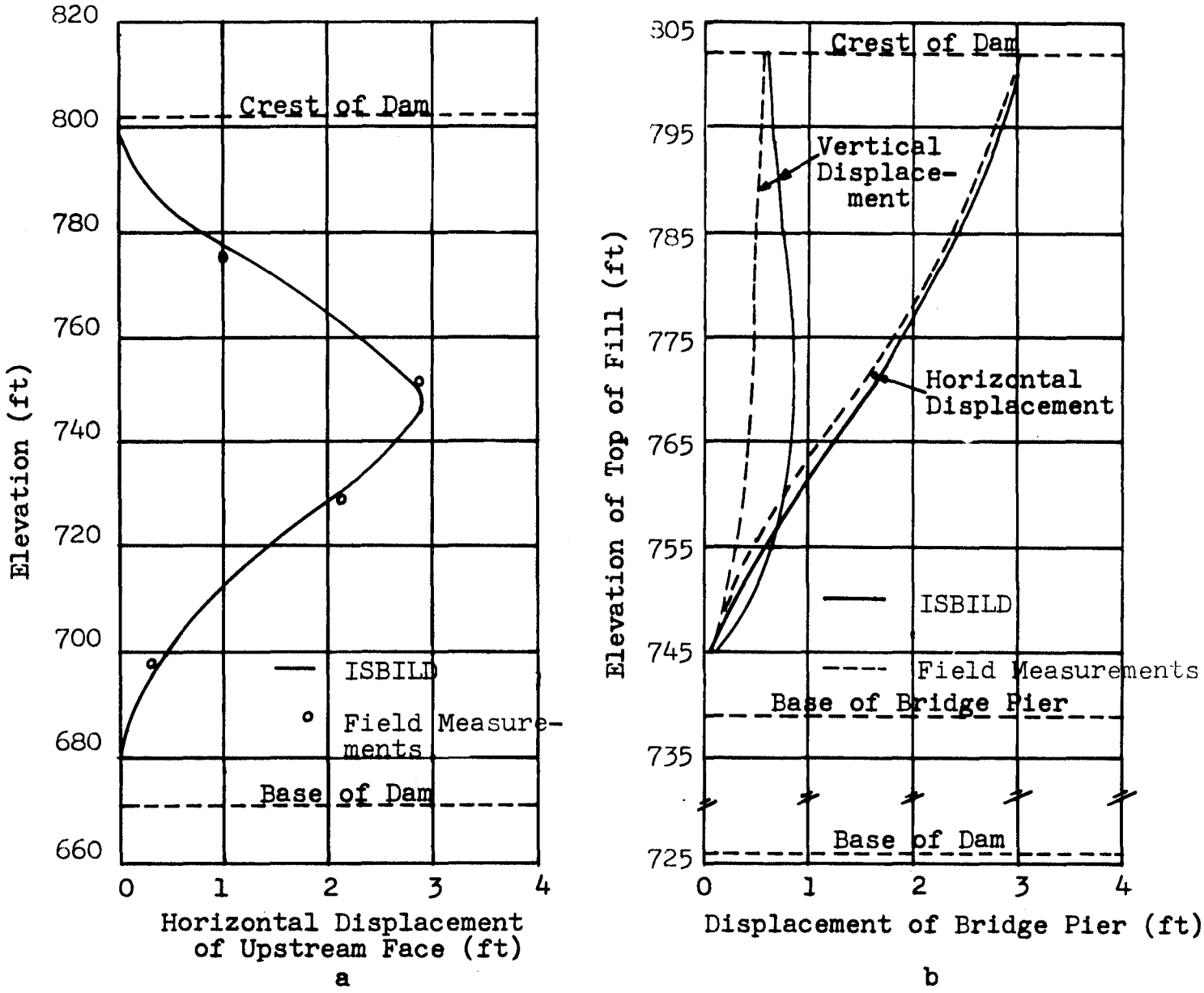

Rev. 0

WOLF CREEK
UPDATED SAFETY ANALYSIS REPORT

FIGURE 3.12-1

DISPLACEMENTS IN OTTER BROOK DAM
COMPARED WITH ISBILD RESULTS

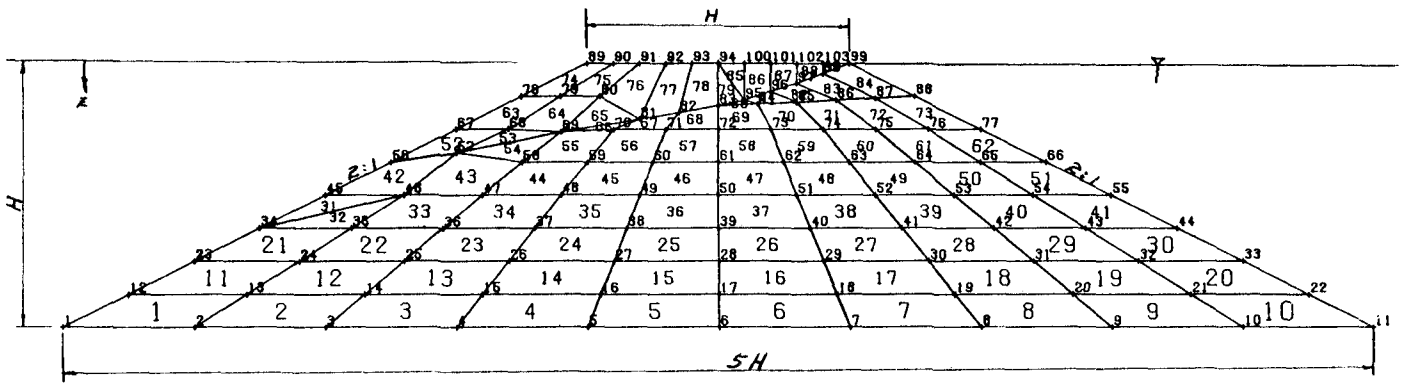

Rev. 0

WOLF CREEK
UPDATED SAFETY ANALYSIS REPORT

FIGURE 3.12-2

SETTLEMENT ANALYSIS BY ISBILD FOR HOMOGENEOUS DAM DUE TO WATER LOADING

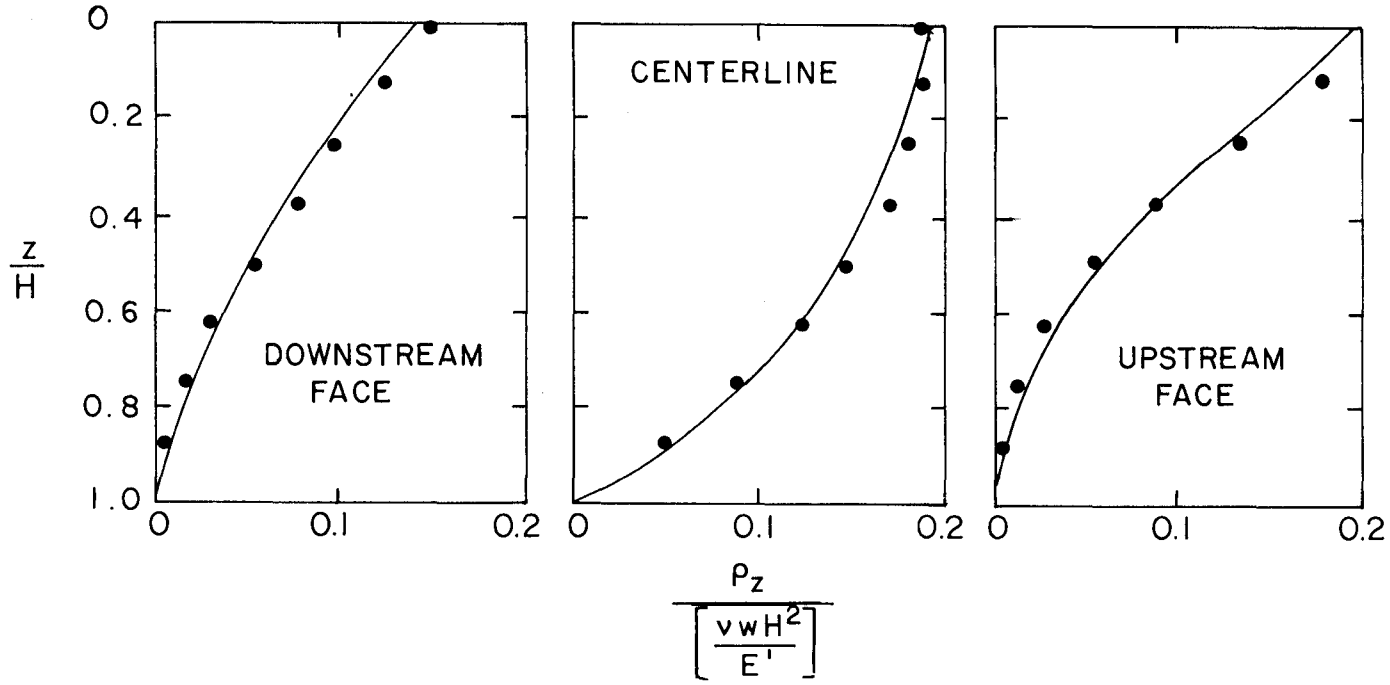

a) Vertical Movement (positive upwards)

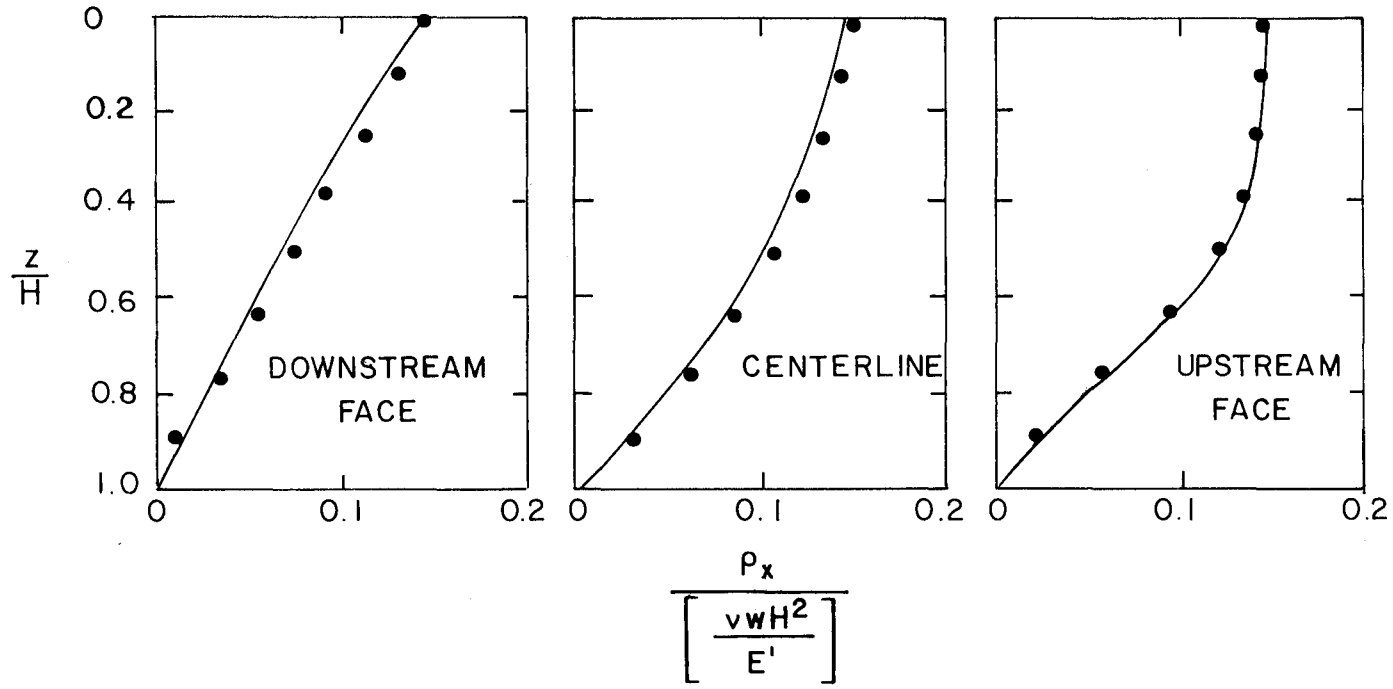

b) Horizontal Movement (positive downstream)

ν = 0.4

——— Carter, et al.

● ISBILD

WOLF CREEK
UPDATED SAFETY ANALYSIS REPORT

FIGURE 3.12-3

COMPARISON OF WATER LOAD EFFECTS ON MOVEMENT (ISBILD VS. CARTER, ET. AL.)

Rev. 0

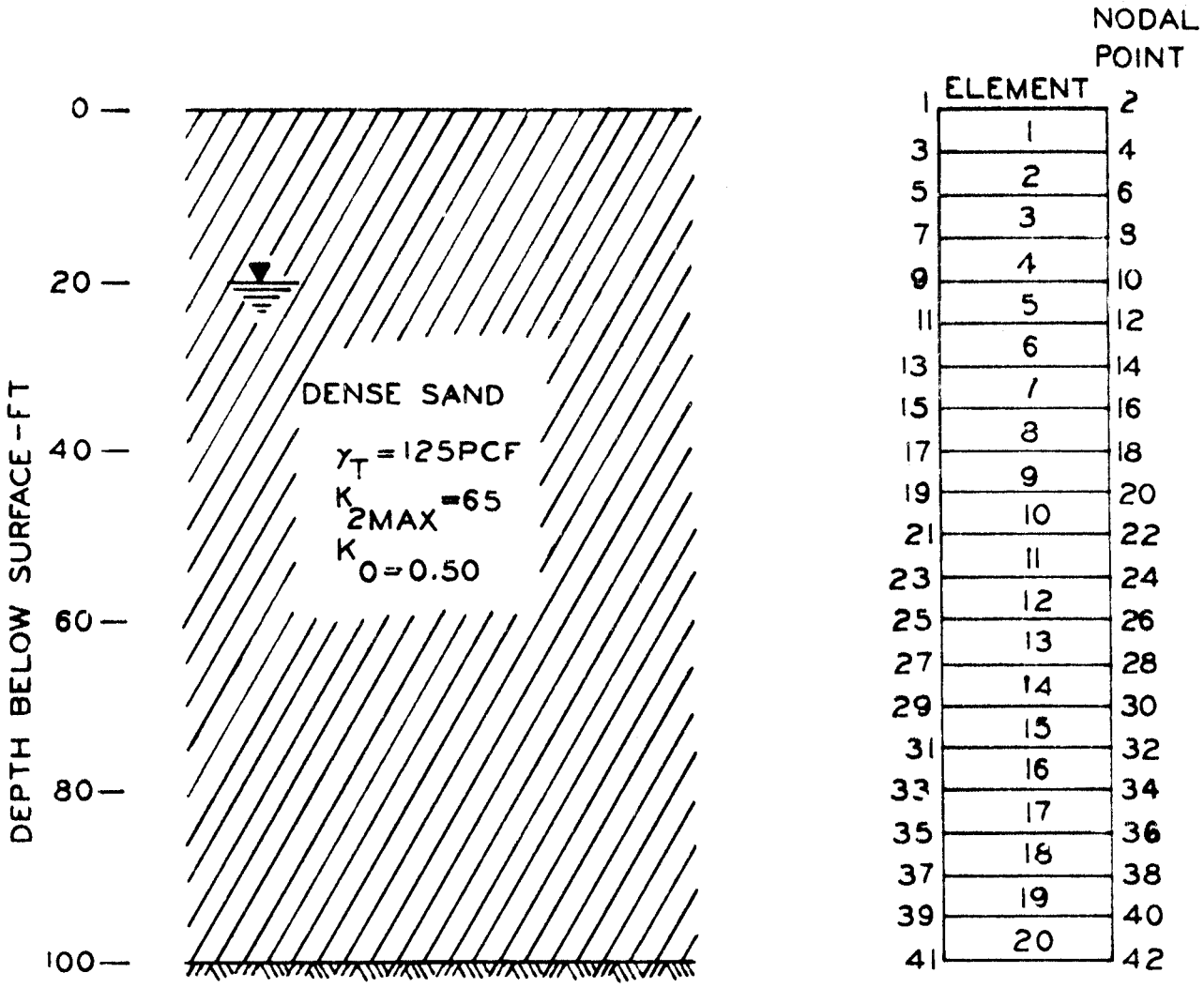

Rev. 0

WOLF CREEK
UPDATED SAFETY ANALYSIS REPORT

FIGURE 3.12-4

SOIL PROFILE AND FINITE ELEMENT REPRESENTATION USED FOR QUAD 4 SAMPLE PROBLEM

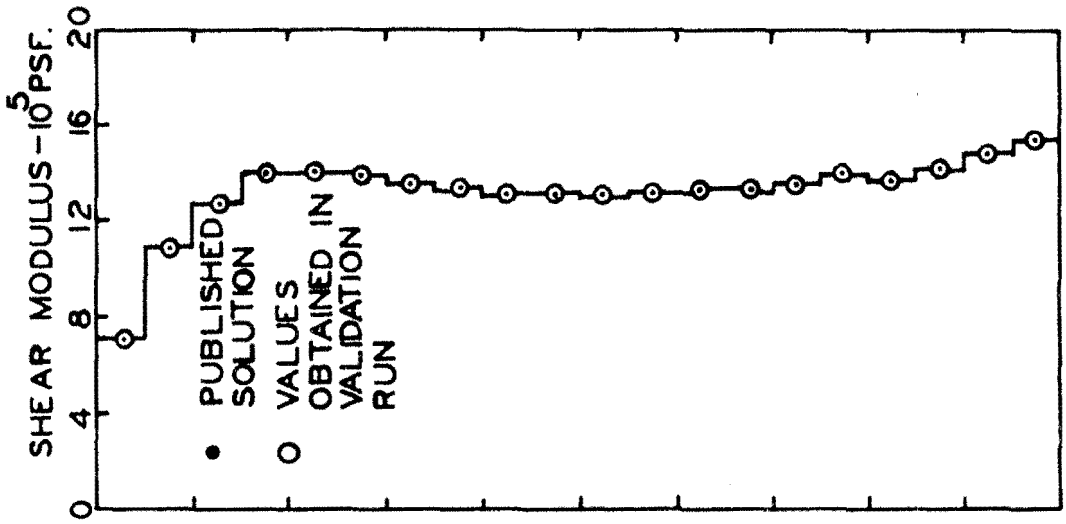

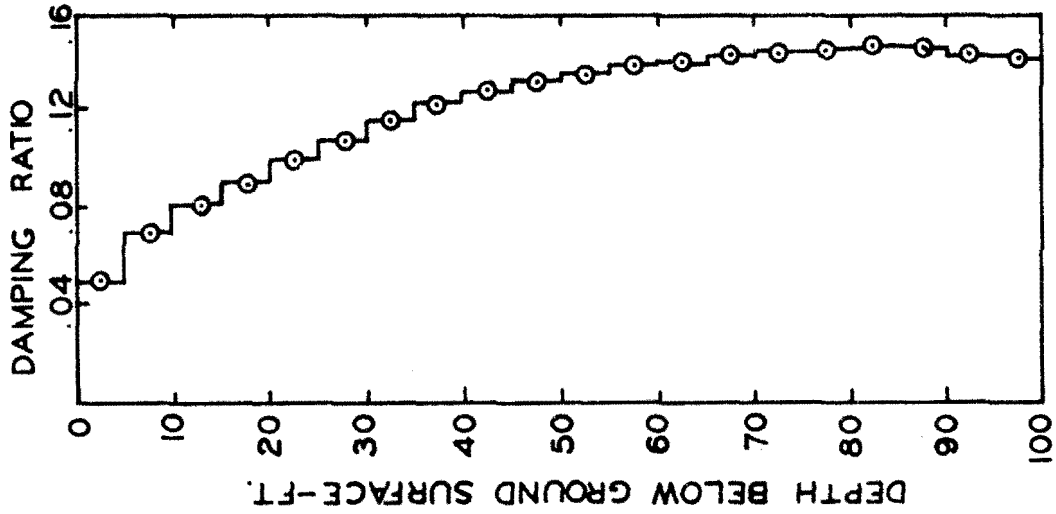

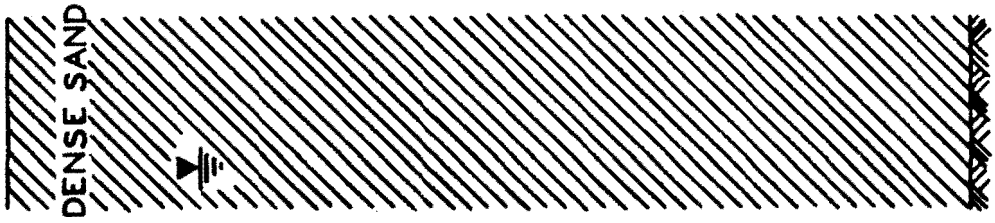

Rev. 0

WOLF CREEK
UPDATED SAFETY ANALYSIS REPORT

FIGURE 3.12-5

STRAIN-COMPATIBLE DAMPING AND MODULUS VALUES USED IN ANALYSIS BY QUAD 4

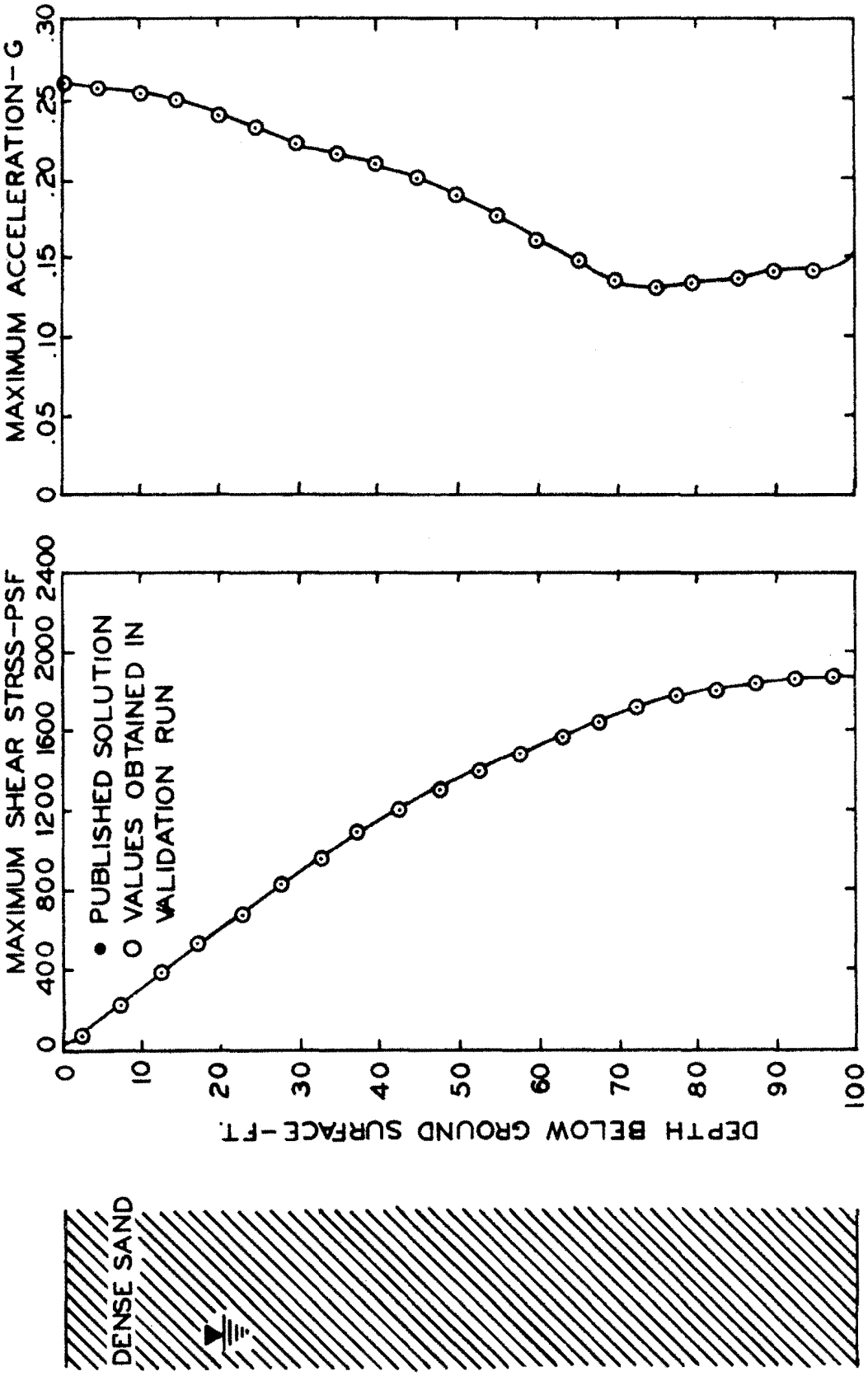

Rev. 0

WOLF CREEK
UPDATED SAFETY ANALYSIS REPORT

FIGURE 3.12-6

DISTRIBUTION OF MAXIMUM SHEAR STRESSES AND ACCELERATIONS

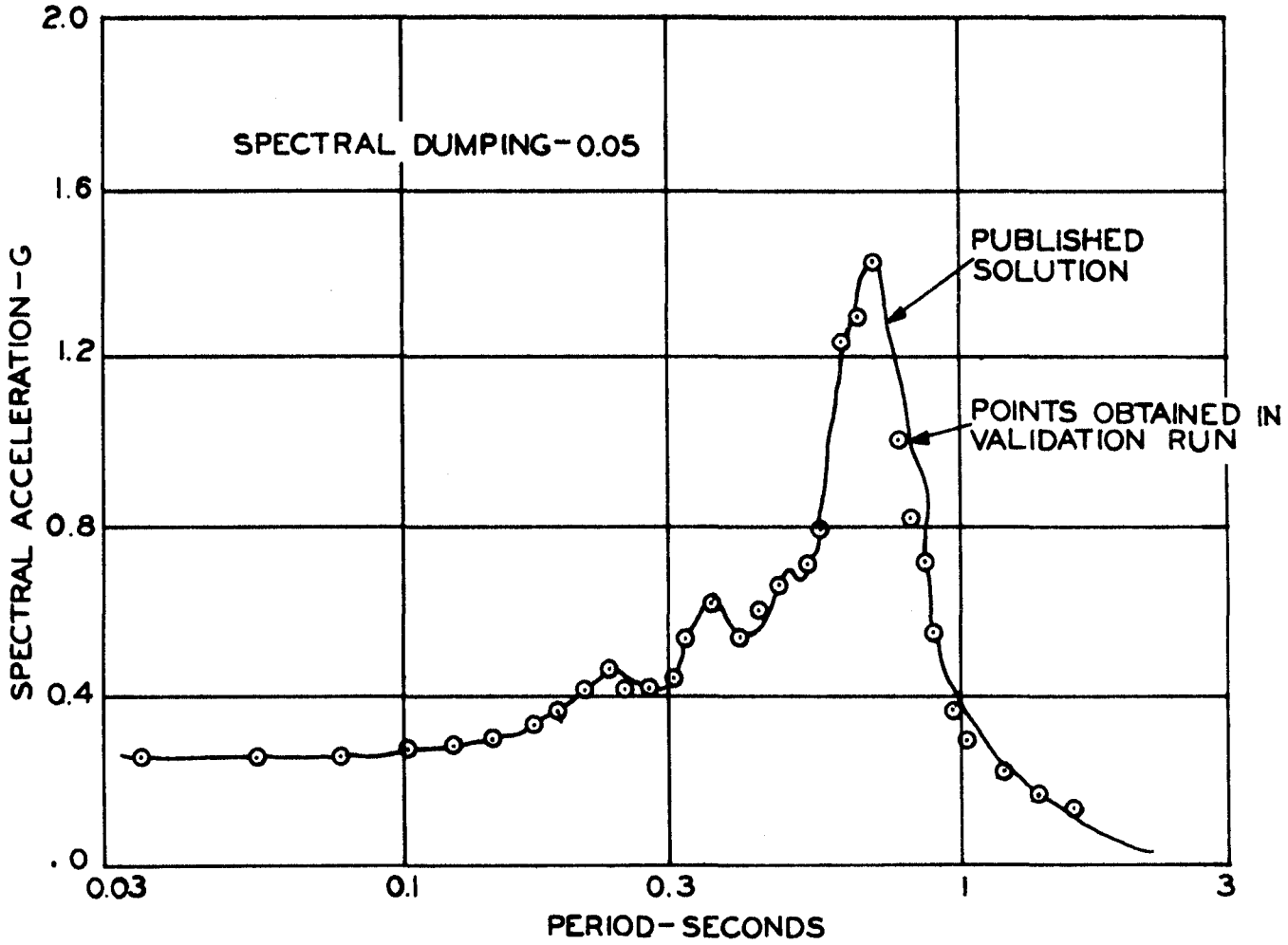

Rev. 0

WOLF CREEK
UPDATED SAFETY ANALYSIS REPORT

FIGURE 3.12-7

ACCELERATIONS SPECTRA FOR COMPUTED SURFACE MOTIONS

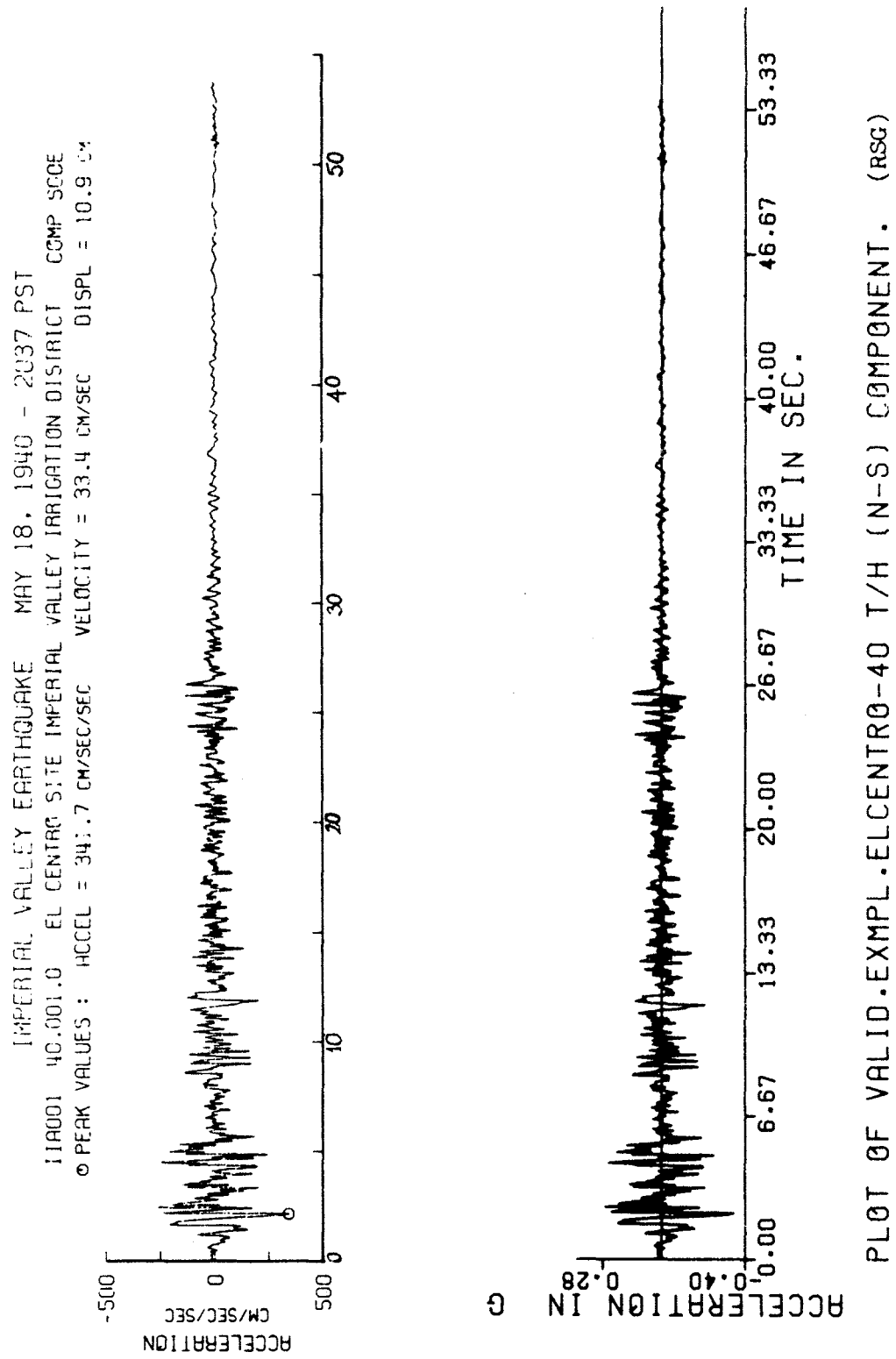

Rev. 0

WOLF CREEK
UPDATED SAFETY ANALYSIS REPORT

FIGURE 3.12-8

COMPARISON OF ACCELERATED TIME HISTORY PLOT OF THE EL CENTRO N-S EARTHQUAKE RECORD FROM RSG AND AS PUBLISHED BY CALIFORNIA INSTITUTE OF TECHNOLOGY

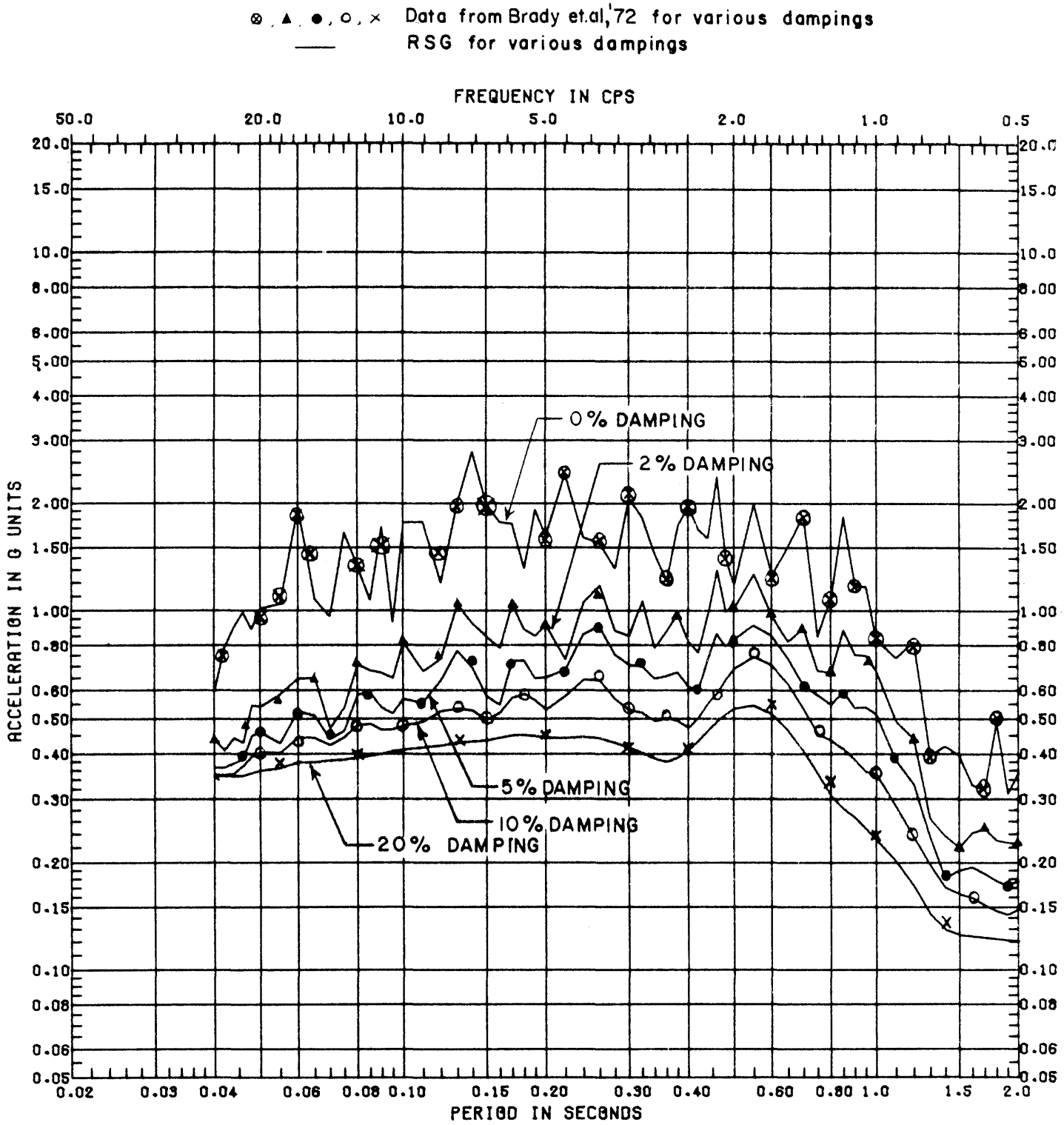

Rev. 0

WOLF CREEK
UPDATED SAFETY ANALYSIS REPORT

FIGURE 3.12-9

COMPARISON OF RESPONSE SPECTRA PWTS AT VARIOUS DAMPING FROM RSG AND AS PUBLISHED IN BRADY (1972)

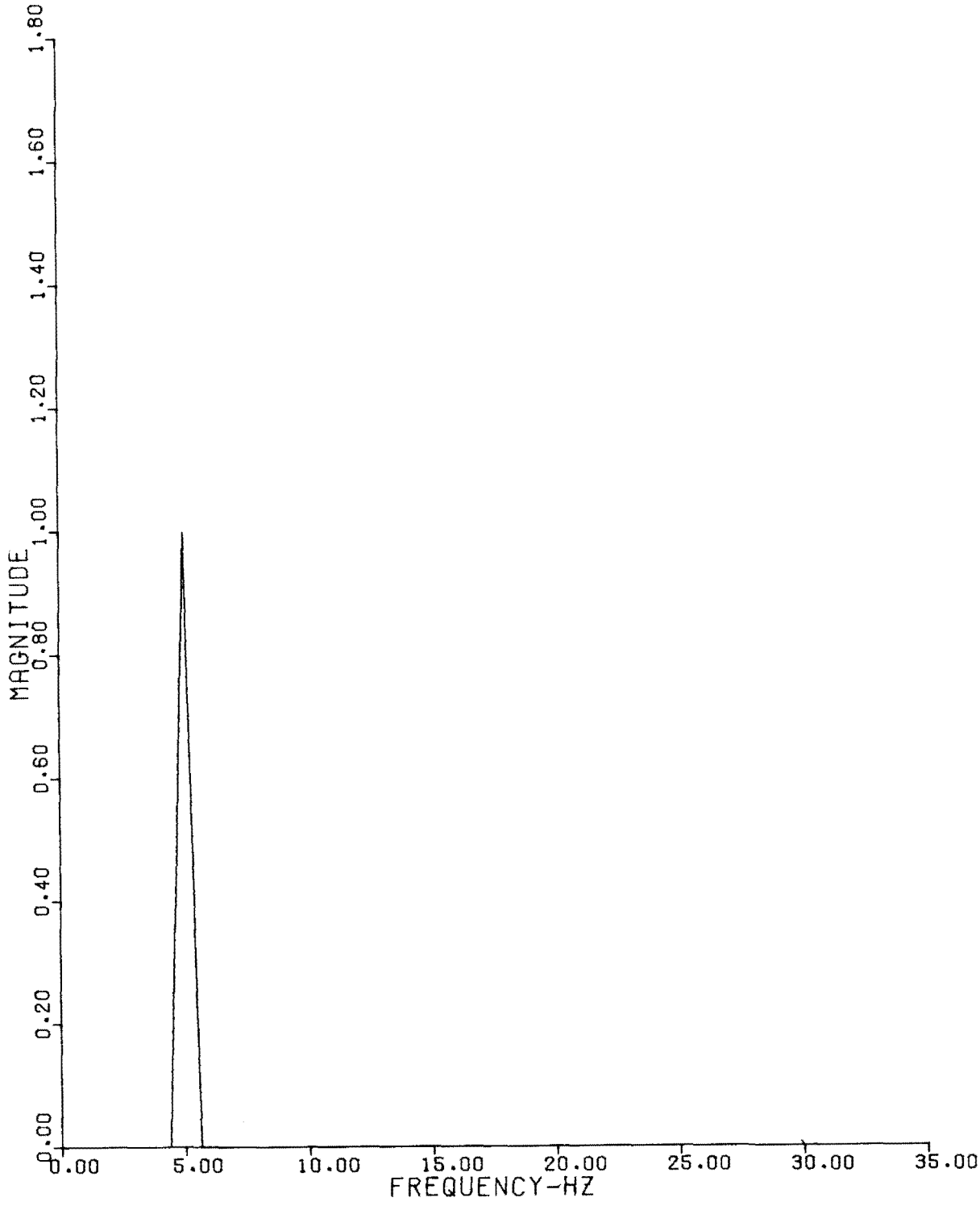

Rev. 0

WOLF CREEK
UPDATED SAFETY ANALYSIS REPORT

FIGURE 3.12-10

FOURIER TRANSFORM PLOT FROM RSG
FOR A 5 CYCLE/SEC SINE WAVE
TIME HISTORY

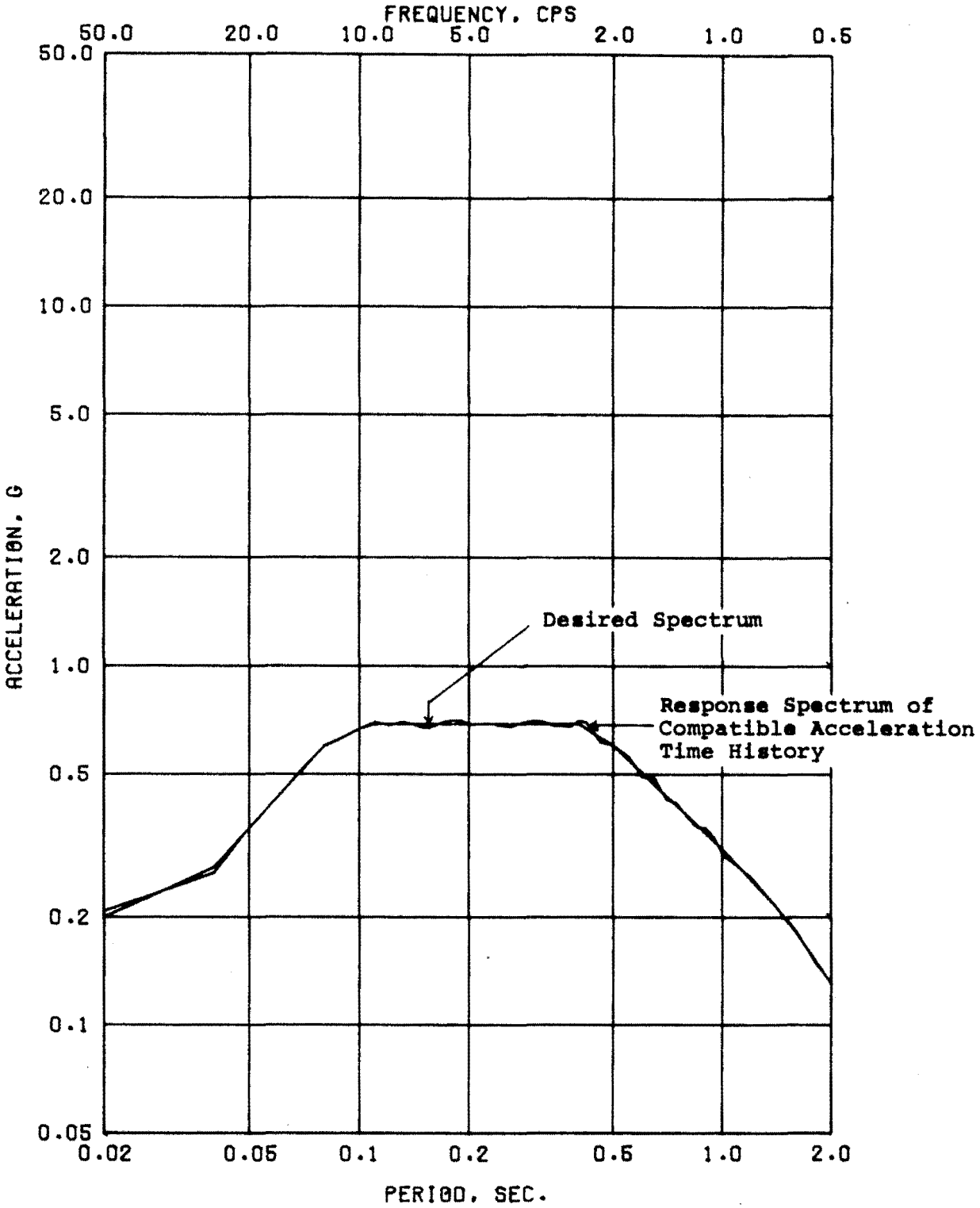

SPECTRUM CONSISTENT TIME HIST.GENERATION- NSIG=2

WOLF CREEK
UPDATED SAFETY ANALYSIS REPORT

FIGURE 3.12-11

COMPARISON OF DESIRED RESPONSE SPECTRUM AND RESPONSE SPECTRUM OF COMPATIBLE ACCELERATION TIME HISTORY (DAMPING - 0.02) FROM RSG

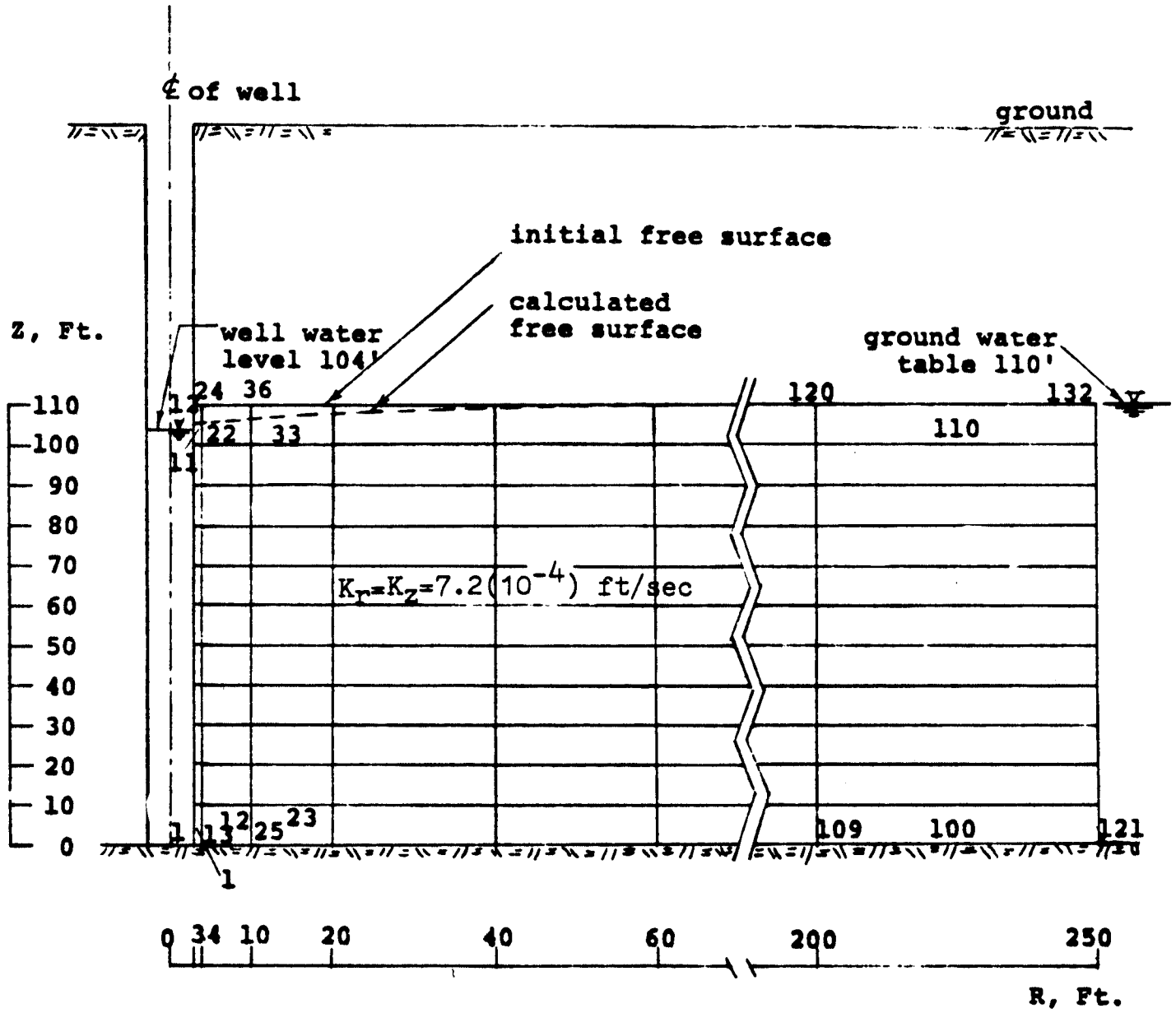

Rev. 0

WOLF CREEK UPDATED SAFETY ANALYSIS REPORT
FIGURE 3.12-12 FINITE ELEMENT MESH FOR AXISYMETRIC FLOW PROBLEM FOR SEEPAGE

End of Construction

SOIL	DENSITY	COHESION	PHI
1	110pcf	295psf	0
2	150	1000	0
3	150	1000	0
4	150	1000	0

Steady State and Rapid Drawdown

SOIL	DENSITY	COHESION	PHI
1	118pcf	265psf	20
2	150	1000	0
3	150	1000	0
4	150	1000	0
5	62.4	0	0

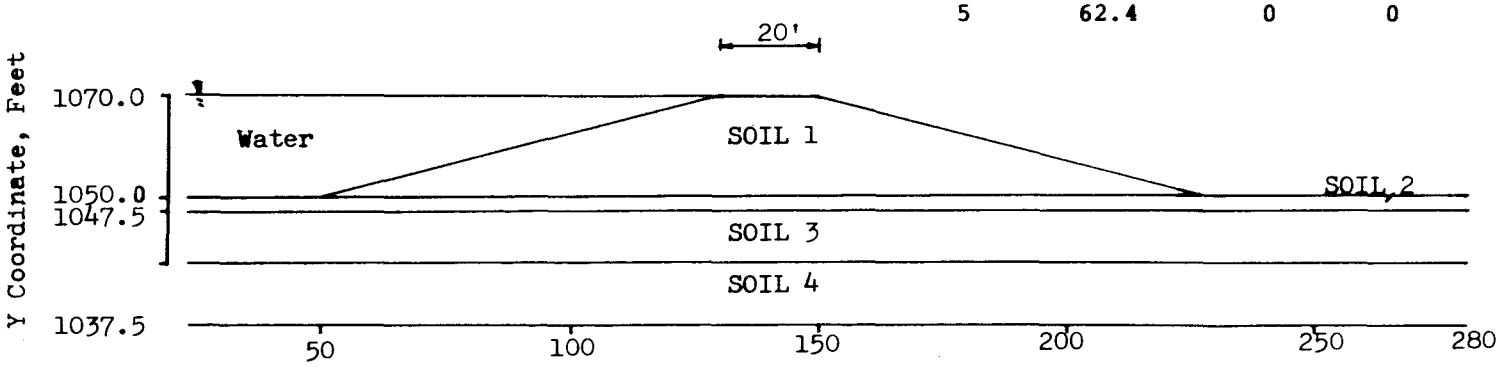

WOLF CREEK
UPDATED SAFETY ANALYSIS REPORT

FIGURE 3.12-13

CRITICAL SLOPE OF ULTIMATE HEAT SINK FOR BISHOP VALIDATION PROBLEM

APPENDIX 3A
CONFORMANCE TO NRC REGULATORY GUIDES

This appendix briefly discusses the extent to which WCGS conforms to NRC published regulatory guides, Division 1. Exceptions to the guides are identified, and justification is presented or referenced. In the discussion of each guide, the sections or tables of the USAR, where more detailed information is presented, are referenced. Certain referenced tables may provide a position-by-position comparison to each regulatory position of section C of the regulatory guides.

REGULATORY GUIDE 1.1 REVISION 0 DATED 11/2/70

Net Positive Suction Head for Emergency Core Cooling and Containment Heat Removal System Pumps (Safety Guide 1)

DISCUSSION:

The recommendations of this regulatory guide are met as described in Section 6.2.2.1.3, Safety Evaluation Eleven for the containment heat removal system pumps and Section 6.3.2.2 for the ECCS pumps.

REGULATORY GUIDE 1.2 REVISION 0 DATED 11/2/70

Thermal Shock to Reactor Pressure Vessels (Safety Guide 2)

DISCUSSION:

All recommendations of this regulatory guide have been followed. Regulatory Position C.1 is followed by Westinghouse's own analytical and experimental programs as well as by participation in the Heavy Section Steel Technology (HSST) program at Oak Ridge National Laboratory.

Analytical techniques have been developed by Westinghouse to perform fracture evaluations of reactor vessels under thermal shock loadings.

Under the HSST program, a number of 6-inch-thick, 39-inch-outside-diameter steel pressure vessels containing carefully prepared and sharpened surface cracks are being tested. Test conditions include both hydraulic internal pressure loadings and thermal shock loadings. The objective of this program is to validate analytical fracture mechanics techniques and demonstrate quantitatively the margin of safety inherent in reactor pressure vessels.

A number of vessels have been tested under hydraulic pressure loadings, and results have confirmed the validity of fracture analysis techniques. The results and implications of the hydraulic pressure tests are summarized in Oak Ridge National Laboratory report ORNL-TM-5090.

Four thermal shock experiments have been completed and are being evaluated. For representative conditions, flaws are shown to initiate and arrest in a predictable manner.

Westinghouse is continuing to obtain fracture toughness data for reactor pressure vessel steels through internally funded programs as well as HSST-sponsored work.

Fracture toughness testing of irradiated compact tension fracture toughness specimens has been completed. The complete post-irradiation data on 0.394-, 2-, and 4-inch-thick specimens are available from the HSST program. Both static and dynamic post-irradiation fracture toughness data have been obtained. Evaluation of the data obtained to date on material irradiated to fluences between 2.2 and 4.5 x 10^{19}n/cm^2 indicates that the reference toughness curve, as contained in the American Society of Mechanical Engineers (ASME) Code, Section III, remains a conservative lower bound for toughness values for pressure vessel steels.

Details of progress and results obtained in the HSST program are available in the HSST program progress reports issued by Oak Ridge National Laboratory.

Regulatory Position C.2 is followed, inasmuch as no significant changes have been made in approved core or reactor designs.

Regulatory Position C.3 is followed, since the vessel design does not preclude the use of an engineering solution to assure adequate recovery of the fracture toughness properties of the vessel material. If additional margin is needed, the reactor vessel can be annealed at any point in its service life. This solution is already feasible, in principle, and could be performed with the vessel in place.

REGULATORY GUIDE 1.3 REVISION 2 DATED 6/74

Assumptions Used for Evaluating the Potential Radiological Consequences of a Loss-of-Coolant Accident for Boiling Water Reactors

DISCUSSION:

The recommendations of this regulatory guide are not applicable to a PWR.

REGULATORY GUIDE 1.4 REVISION 2 DATED 6/74

Assumptions Used for Evaluating the Potential Radiological Consequences of a Loss-of-Coolant Accident for Pressurized Water Reactors

DISCUSSION:

The recommendations of this regulatory guide are met as described in Table 15.6-7.

REGULATORY GUIDE 1.5 REVISION 0 DATED 3/71

Assumptions Used for Evaluating the Potential Radiological Consequences of a Steam Line Break Accident for Boiling Water Reactors (Safety Guide 5)

DISCUSSION:

The recommendations of this regulatory guide are not applicable to a PWR.

REGULATORY GUIDE 1.6 REVISION 0 DATED 3/71

Independence Between Redundant Standby (Onsite) Power Sources and Between Their Distribution Systems (Safety Guide 6)

DISCUSSION:

The recommendations of this regulatory guide are met. Refer to Section 8.1.4.3.

REGULATORY GUIDE 1.7 REVISION 2 DATED 11/78

Control of Combustible Gas Concentrations in Containment Following a Loss-of-Coolant Accident

DISCUSSION:

The recommendations of this regulatory guide are met as described in Table 6.2.5-6.

10 CFR 50.44 was revised in 2003 and Revision 3 to Regulatory Guide 1.7 was issued in May 2003. The revised 10 CFR 50.44 no longer defines a design-basis LOCA hydrogen release, and eliminates the requirements for hydrogen control systems to mitigate such a release. License Amendment No. 157 was issued by the NRC on January 31, 2005 and deleted the Technical Specification requirements for the hydrogen recombiners and relocated the requirements for the hydrogen monitors.

REGULATORY GUIDE 1.8 DRAFT REVISION 2 DATED 2/79

Personnel Selection and Training

DISCUSSION:

Refer to Sections 12.1, 12.5, 13.1, 13.2, 14.2, and 18.1 for a discussion of the qualifications of personnel responsible for plant operation and support.

A Superintendent Chemistry/Radiation Protection shall meet or exceed the qualifications of Regulatory Guide 1.8, September 1975, for a Radiation Protection Manager as specified in Technical Specification 5.3.1.2.

The education and experience requirements for operator license applicants shall be in accordance with the guidance in Guidelines for Initial Training and Qualification of Licensed Operators, INPO ACAD 00-003, Revision 1, approved by the NRC as documented in Amendment No. 159 of the Facility Operating License. The station is currently using INPO ACAD 10-001.

The education and experience requirements for the function of journeyman level chemistry technician are implemented by satisfying either the requirements of paragraph 4.5.2 or paragraph 4.4.3 of ANSI/ANS-3.1-1978.

REGULATORY GUIDE 1.9 REVISION 3 DATED 7/93

Selection, Design, Qualification and Testing of Emergency Diesel Generator Units Used as Class 1E Onsite Electrical Power Systems at Nuclear Power Plants

DISCUSSION:

With respect to the original selection, design and qualification of emergency diesel generators (per Revision 1 of the regulatory guide), the recommendations of this regulatory guide were met. Regulatory Position C.1.4 of Regulatory Guide 1.9, Revision 3, is met through approved changes to the Technical Specifications. With regard to periodic, in-service testing of the diesel generators per Revision 3 of this regulatory guide, testing is performed in accordance with the Technical Specifications. The testing requirements in the Technical Specifications are based on Regulatory Guide 1.9, Revision 3. Differences between the test requirements of the Technical Specifications and the recommendations of this regulatory guide are due to the Standard Technical Specifications and/or approved changes to the Technical Specifications.

The following exception applies to Regulatory Guide 1.9, Revision 3, Regulatory Position C.1.3:

> The predicted loads for short-time operation are less than the diesel generator short-time load rating and the predicted loads for continuous operation are less than the diesel generator continuous load rating.

REGULATORY GUIDE 1.10 REVISION 1 DATED 1/73

Mechanical (Cadweld) Splices in Reinforcing Bars of Category I Concrete Structures

DISCUSSION:

The recommendations of this regulatory guide are met. The temperature at which visual inspection may proceed is taken as the temperature for which the splice has cooled sufficiently so that inspection operations are not hampered.

REGULATORY GUIDE 1.11 REVISION 0 DATED 3/71

Instrument Lines Penetrating Primary Reactor Containment (Safety Guide 11)

DISCUSSION:

The only instrument lines that penetrate the containment are the containment pressure sensing lines and the reactor vessel level (RVLIS) sensing lines. The normal containment pressure sensing lines are part of the protection system and meet the recommendations of Regulatory Position C.1, as described in Section 7.3.8.1.1. The wide range containment pressure instrumentation and the reactor vessel level instrumentation are required by NUREG-0737 and described in Appendix 7A, 18.2.12, 18.2.13 and Figure 6.2.4-1. All of these instrument lines are closed both inside and outside containment, which is consistent with SRP 6.2.4.

REGULATORY GUIDE 1.12 REVISION 2 DATED 3/97

Instrumentation for Earthquakes

DISCUSSION:

The recommendations of this regulatory guide are met with the exceptions noted in Section 3.7(B).4, Seismic Instrumentation Program.

REGULATORY GUIDE 1.13 REVISION 1 DATED 12/75

Spent Fuel Storage Facility Design Basis

DISCUSSION:

The recommendations of this regulatory guide are met as described in Table 9.1-3.

REGULATORY GUIDE 1.14 REVISION 1 DATED 8/75

Reactor Coolant Pump Flywheel Integrity

DISCUSSION:

The Westinghouse design follows the recommendations of Regulatory Guide 1.14, Revision 1, except for the following:

a. Postspin inspection

Westinghouse has shown in WCAP-8163, September 1973, "Reactor Coolant Pump Integrity in LOCA," that the flywheel would not fail at 290 percent of normal speed, for a flywheel flaw of 1.15 inches or less in length. Results for a double-ended guillotine break at the pump discharge, with full separation of pipe ends assumed, show the maximum overspeed to be less than 110 percent of normal speed. The maximum overspeed was calculated in WCAP-8163 to be about 280 percent of normal speed for the same postulated break and an assumed instantaneous loss of power to the reactor coolant pump. In comparison with the overspeed presented above, the flywheel is tested at 125 percent of normal speed. The flywheel could withstand a speed up to 2.3 times greater than the flywheel spin test speed of 125 percent, provided that no flaws greater than 1.15 inches are present. If the maximum speed were 125 percent of

normal speed or less, the critical flaw size for failure would exceed 6 inches in length. Nondestructive tests and critical dimension examinations are all performed before the spin tests. The inspection methods employed (described in WCAP-8163) provide assurance that flaws significantly smaller than the critical flaw size of 1.15 inches for 290 percent of normal speed would be detected. Flaws in the flywheel are recorded in the prespin inspection program. Flaw growth attributable to the spin test (i.e., from a single reversal of stress, up to speed and back), under the most adverse conditions, is about three orders of magnitude smaller than that which nondestructive inspection techniques are capable of detecting. For these reasons, Westinghouse performs no postspin inspections and concludes that prespin test inspections are adequate.

b. Interference fit stresses and excessive deformation

Much of Revision 1 to Regulatory Guide 1.14 deals with stresses in the flywheel resulting from the interference fit between the flywheel and the shaft. Because the WCGS design has a light interference fit between the flywheel and the shaft, at zero speed, the hoop stresses and radial stresses at the flywheel bore are negligible. Centering of the flywheel relative to the shaft is accomplished by means of keys and/or centering devices attached to the shaft, and, at normal speed, the flywheel is not in contact with the shaft in the sense intended by Revision 1. Hence, the definition of "Excessive Deformation," as defined in Revision 1 of Regulatory Guide 1.14, is not applicable to the WCGS design, since the enlargement of the bore and subsequent partial separation of the flywheel from the shaft do not cause unbalance of the flywheel. Extensive Westinghouse experience with reactor coolant pump flywheels installed in this fashion has verified the adequacy of the design.

The combined primary stress levels, as defined in Revision 0 of Safety Guide 14 (Regulatory Positions C.2.a and C.2.c), are both conservative and proven and, therefore, no changes to these stress levels are considered to be necessary. Westinghouse designs to these stress limits and thus does not have permanent distortion of the flywheel bore at normal or spin test conditions.

c. Discussion B, cross-rolling ratio of 1 to 3

Specification of a cross-rolling ratio is considered to be unnecessary, since past evaluations have shown that ASME SA-533, Grade B, Class 1 materials produced without this requirement have suitable toughness for typical flywheel applications. Proper material selection and

specification of minimum material properties in the transverse direction adequately ensure flywheel integrity. An attempt to gain isotropy in the flywheel material by means of cross rolling is unnecessary since adequate margins of safety are provided by both flywheel material selection (ASME SA-533, Grade B, Class 1) and by specifying minimum yield and tensile levels and toughness test values taken in the direction perpendicular to the maximum working direction of the material.

d. Regulatory Position C.1.a, relative to vacuum-melting and degassing process or the electroslag process

The requirements for vacuum-melting and the degassing process or the electroslag process are not essential in meeting the balance of the regulatory position nor do they, in themselves, ensure compliance with the overall regulatory position. The initial Safety Guide 14 (10/27/71) stated that the "flywheel material should be produced by a process that minimized flaws in the material and improves its fracture toughness properties." This is accomplished by using ASME SA-533 material, including vacuum treatment.

e. Regulatory Position C.2.b

The WCGS pumps are designed to the following criteria: "Design speed is 125 percent of normal speed, which is greater than the speed which is anticipated during a turbine generator overspeed."

f. Regulatory Position C.4.b

In lieu of Position C.4.b(1) and C.4.b(2), the NRC granted WCNOC permission to conduct a qualified in-place UT examination over the volume from the inner bore of the flywheel to the circle of one-half the outer radius or conduct a surface examination (MT and/or PT) of exposed surfaces of the removed flywheels at an interval not to exceed 20 years. The NRC also granted WCNOC permission to delay the volumetric examination and surface examination of the Reactor Coolant pump “D” motor flywheel for the First 10-year Inservice Inspection Interval one cycle to coincide with the Fall 1997 refueling outage.

REGULATORY GUIDE 1.15 REVISION 1 DATED 12/72

Testing of Reinforcing Bars for Category I Concrete Structures

DISCUSSION:

The recommendations of this regulatory guide are met. Revisions of ASTM A615 and A370 current with industry practice are utilized following appropriate engineering review.

REGULATORY GUIDE 1.16 REVISION 4 DATED 8/75

Reporting of Operating Information--Appendix A Technical Specifications

DISCUSSION:

Amendment No. 158 deleted the requirements for the monthly operating report from Technical Specifications. Routine reports of operating statistics and shutdown experience is provided to the NRC via an industry database on a quarterly basis. The operating and shutdown information meets the guidance of Generic Letter 97-02.

Report requirements are specified in the Technical Specifications.

REGULATORY GUIDE 1.17 REVISION 1 DATED 6/73

Protection of Nuclear Power Plants Against Industrial Sabotage

DISCUSSION:

Refer to the WCGS Security Plans.

REGULATORY GUIDE 1.18 REVISION 1 DATED 12/72

Structural Acceptance Test for Concrete Primary Reactor Containments

DISCUSSION:

This guide was complied with insofar as practicable. The following exceptions were considered to be within the intent of this Regulatory Guide:

a. Paragraph C.1: A continuous increase in containment pressure, rather than incremental pressure increases, is considered acceptable, provided that data observations are made rapidly at each pressure datum. Rapidly is defined as requiring a time interval for the data point sample sufficiently short so that the change in pressure during the observation would cause a change in structural response of less than 5 percent of the total anticipated change. For example, assume a total expected strain of 200 microstrain (microinches per inch). The period of a data observation, therefore, would be required to be equal to or less than the time during which pressurization would create a 10 microstrain change.

b. Paragraph C.1: It is intended that a hold period for at least 1 hour be provided at maximum test pressure or for such time as is necessary for recording crack patterns.

c. Paragraph C.2: It is intended that the number and distribution of measuring points for monitoring radial deflection be selected so that the as-built condition can be considered in the assessment of roundup, buttress-shell interaction, and general shell response. Measurements are made at points similar to those shown

in Section 9.0 of BC-TOP-5-A. However, to obtain the most significant data, the measuring point locations may be changed to those where the as-built containment is at the limit of tolerance, if such points exist. Accordingly, an arbitrary selection of measurement points is not intended.

d. Paragraph C.3: Measurement of tangential deflections is not planned.

e. Paragraph C.5 is not applied for non-prototype containments.

f. Paragraph C.6: Shear strain measurements under end anchor bearing plates are not planned at the present state of the art. Experimental evidence contained in BC-TOP-7 and BC-TOP-8 is submitted in lieu of measurement of the vertical and horizontal strains under a vertical tendon end anchor bearing plate. For measurements of vertical and horizontal strains under vertical tendon end anchor bearing plates, this experimental evidence indicates that a gage location within approximately one quarter of the bearing plate width from the exposed face of the bearing plate must be used.

g. Paragraph C.9: It is intended to schedule structural integrity testing for periods when extremely inclement weather is not forecast. Should, despite the forecast, snow, heavy rain, or strong wind occur during the test, the test results will be considered valid unless there is evidence to indicate otherwise.

h. Paragraph C.10: Should, due to an unexpected condition, the test pressure drop to or below the next pressure level, it is intended to continue the test, without a restart at atmospheric pressure, unless the structural response deviates significantly from that expected.

i. Appendix A of the Regulatory Guide: The reactor building has no prototypal features; therefore, this appendix is not applicable.

REGULATORY GUIDE 1.19 REVISION 1 DATED 8/72

Nondestructive Examination of Primary Containment Liner Welds (Safety Guide 19)

DISCUSSION:

Nondestructive examination of primary containment liner welds is conducted in accordance with the procedures described in Regulatory Guide 1.19 except for the following minor deviations and clarifications:

a. Paragraph C.1.a: The requirements of Article 3 of Section V of the ASME Code apply to containment liner seam weld examinations.

b. Paragraph C.1.b: Where radiography is not feasible, the full length of the liner seam weld shall be examined by either the magnetic particle or liquid penetrant method.

c. Paragraph C.1.c: The bubble formation properties of the test solution are checked with a sample leak for each batch of solution used.

d. Paragraph C.1.d: At locations on the liner plate where a leak chase channel system is required, the welds attaching the channels to the liner plate shall be halogen leak tested in accordance with Article T-1040 or T-1050 of Section V of the ASME Code.

e. Paragraph C.2.a: All nondestructive examination methods and techniques for the penetrations, airlocks, and access openings are in accordance with Section V of the ASME Boiler and Pressure Vessel Code, except for radiography which is in accordance with Appendix X of ASME Section III. This position conforms with ASME Section III, Winter 1973 Addenda. Acceptance standards are specified in NE-5300 of ASME Section III, Division I.

f. Paragraph C.4: Personnel performing nondestructive examination are qualified in accordance with SNT-TC-1A for the technique and methods used. Nondestructive examinations not covered by SNT-TC-1A shall conform with the requirements of ANSI N45.2.6, Qualification of Inspection, Examination and Testing Personnel for the Construction Phase of Nuclear Power Plants.

g. Paragraph C.7: Acceptance standards for radiography, magnetic particle, or liquid penetrant examinations are in accordance with ASME Section III, Subsection NE-5300.

h. Paragraph C.9: The techniques for identification of radiographic examinations of welds are in accordance

with Paragraph UW-51, Section VIII of the ASME Code, using film in accordance with ASTM E-94, Type 1 or 2. Fluorescent screens are not used.

REGULATORY GUIDE 1.20 REVISION 2 DATED 5/76

Comprehensive Vibration Assessment Program for Reactor Internals During Preoperational and Initial Startup Testing

DISCUSSION:

The recommendations of this regulatory guide are met as described in Section 3.9(N).2.4.

REGULATORY GUIDE 1.21 REVISION 1 DATED 6/74

Measuring, Evaluating, and Reporting Radioactivity in Solid Wastes and Releases of Radioactive Materials in Liquid and Gaseous Effluents from Light-Water-Cooled Nuclear Power Plants

DISCUSSION:

The recommendations of this regulatory guide are met. Refer to Section 11.5, the Offsite Dose Calculation Manual (ODCM), the Process Control Program (PCP) and the Technical Specifications.

REGULATORY GUIDE 1.22 REVISION 0 DATED 2/72

Periodic Testing of Protection System Actuation Functions (Safety Guide 22)

DISCUSSION:

The recommendations of this regulatory guide are met as described in Section 7.1.2.5 and Table 7.1-3.

REGULATORY GUIDE 1.23 REVISION 0 DATED 2/72

Onsite Meteorological Programs (Safety Guide 23)

DISCUSSION:

Refer to Section 2.3.

REGULATORY GUIDE 1.24 REVISION 0 DATED 3/72

Assumptions Used for Evaluating the Potential Radiological Consequences of a Pressurized Water Reactor Radioactive Gas Storage Tank Failure (Safety Guide 24)

The recommendations of this regulatory guide are met as described in Table 15.7-1.

REGULATORY GUIDE 1.25 REVISION 0 DATED 3/72

Assumptions Used for Evaluating the Potential Radiological Consequences of a Fuel Handling Accident in the Fuel Handling and Storage Facility for Boiling and Pressurized Water Reactors (Safety Guide 25)

DISCUSSION:

The recommendations of this regulatory guide are met as described in Table 15.7-2.

REGULATORY GUIDE 1.26 REVISION 3 DATED 2/76

Quality Group Classifications and Standards for Water-, Steam-, and Radioactive-Waste-Containing Components of Nuclear Power Plants

DISCUSSION:

The recommendations of this regulatory guide are met as described in Table 3.2-4. As described in Section 3.2, Westinghouse utilizes the safety classes as defined in ANSI N18.2a-1975. Except for the deviation described in section 3.2.3.

REGULATORY GUIDE 1.27 REVISION 2 DATED 1/76

Ultimate Heat Sink for Nuclear Power Plants

DISCUSSION:

The recommendations of this regulatory guide are met as described in Table 9.2-21 and Section 9.2.5.

REGULATORY GUIDE 1.28 REVISION 2 DATED 2/79

Quality Assurance Program Requirements (Design and Construction)

DISCUSSION:

Refer to the SNUPPS Quality Assurance Programs for Design and Construction. This regulatory guide is not applicable to the operating phase.

REGULATORY GUIDE 1.29 REVISION 3 DATED 9/78

Seismic Design Classification

DISCUSSION:

The recommendations of this regulatory guide are met as described in Table 3.2-3. As described in Section 3.2, Westinghouse utilizes safety classes as defined in ANSI N18.2a-1975, except for the deviation described in section 3.2.3.

REGULATORY GUIDE 1.30 REVISION 0 DATED 8/72

Quality Assurance Requirements for the Installation, Inspection, and Testing of Instrumentation and Electric Equipment (Safety Guide 30)

DISCUSSION:

The Operating Agent concurs with major vendor's instruction manuals but does not necessarily apply a signature of approval (ANSI N45.2.4, Section 3(2)).

The Operating Agent uniquely identifies each safety-related item of process control instrumentation. This identification provides traceability to calibration data. These actions are the Operating Agents alternative to the tagging or labeling of items to indicate the calibration date and the identity of the persons who performed the calibration (ANSI N45.2.4, Section 6.2.1).

At WCGS, the adequacy of protective measures for items in storage is verified by warehouse, Quality Control and Quality Assurance personnel on an audit/surveillance basis (ANSI N45.2.4, Section 3(3)).

The WCGS warehouse personnel are responsible for tracking and implementation of the warehouse storage/maintenance program. Additionally, warehouse personnel perform regular inspections of storage areas for cleanliness and orderliness.

The Operating Agent Quality Control personnel perform inspections of maintenance activities as prescribed in approved procedures. Additionally, Quality Control personnel perform periodic surveillance inspections of storage areas for compliance to applicable requirements.

The Operating Agent Quality Assurance personnel perform periodic audits and surveillance of warehouse storage/maintenance activities to assure compliance to applicable requirements.

REGULATORY GUIDE 1.31 REVISION 3 DATED 4/78

Control of Ferrite Content in Stainless Steel Weld Metal

DISCUSSION:

The recommendations of this regulatory guide are met as described in Table 6.1-9.

REGULATORY GUIDE 1.32 REVISION 2 DATED 2/77

Criteria for Safety-Related Electric Power Systems for Nuclear Power Plants

DISCUSSION:

The recommendations of this regulatory guide are met. However, the requirements described in this regulatory guide and IEEE Standard 308-1974 pertaining to the maintenance, testing and replacement of lead acid storage batteries will be taken from IEEE Standard 450-1995 instead of IEEE Standard 450-1975. Refer to Sections 8.1.4.3 and 8.3.2.2.1.

REGULATORY GUIDE 1.33 REVISION 2 DATED 2/78

Quality Assurance Program Requirements (Operation)

DISCUSSION:

The recommendations of this guide and the ANSI Standards listed in the Quality Program Manual are met except where specific alternatives are indicated. The provision to automatically incorporate the latest issued ANSI standards as set out in the last paragraph of ANSI N18.7 is not adopted. Also, footnote #2 to Section 4.5 is updated to the issued standard as follows:

> [2] "Requirements for Auditing of Quality Assurance Programs for Nuclear Power Plants," issued American National Standard N45.2.12-1977.

ANSI N18.7-1976, which is endorsed by Regulatory Guide 1.33, requires a biennial review of safety-related procedures. Section 5.2.15 of ANSI N18.7-1976 requires in part that plant procedures be reviewed no less frequently than every two years. Wolf Creek Nuclear Operating Corporation (WCNOC) has determined that programmatic controls exist which are equivalent to or are more effective in meeting the intent of the standard than the static, fixed biennial review process. The alternative method implements a performance-based process for assuring procedural adequacy by initiating procedure reviews, changes or revisions based on a new or revised source material. The revision controls do not consider age as a requirement for procedure reviews. WCNOC utilizes alternative programmatic controls to ensure procedures are accurate.

The controls already in place to accomplish the alternative commitment include: the design change process; the Industry Technical Information Program; the procedure feedback process; the corrective action program; the Quality Assurance program; and the self assessment program. Procedures which are not used or revised within two years are reviewed biennially or reviewed before use. Procedures are in place which require a review of all applicable plant procedures following an unusual incident, such as an accident, an unexpected transient, significant operator error, or equipment malfunction. These programs collectively provide procedure reviews equivalent to or exceeding the requirements of ANSI N18.7-1976, Section 5.2.15.

The Quality Assurance program is structured such that a random sampling of procedures is audited every two years to determine the effectiveness of plant procedures. Procedure effectiveness, as well as procedure usage, is evaluated during the performance of all scheduled audits and surveillances. The Quality Assurance review will ensure that the procedure review program and the Qualified Reviewer process continues to be effectively implemented.

The alternative program to ANSI N18.7-1976, Section 5.2.15, does not apply to Emergency Procedures (EMGs), Alarm Response (ALRs), Off-Normal (OFNs), Severe Accident Management Guidelines (SAMGs), and Emergency Plan Implementing Procedures (EPPs). These procedures will continue to be reviewed every two years.

ANSI N18.7 – 1976, Section 4.3.4 contains language associated to 10 CFR 50.59 that was revised or eliminated when the rule was revised in October 1999. Independent review of activities performed to satisfy 10 CFR 50.59 will be as described in the Quality Program Manual.

The Plant Safety Review Committee (PSRC) and Quality perform the independent reviews described in sections 4.3.4, 4.5, and 5.2.11 of ANSI N18.7-1976.

REGULATORY GUIDE 1.34 REVISION 0 DATED 12/72

Control of Electroslag Weld Properties

DISCUSSION:

Electroslag welding is not used for items within the Bechtel scope of supply.

Where electroslag welding is used in fabricating nuclear plant components, the Westinghouse procurement practice requires vendors to follow the recommendations of Regulatory Guide 1.34.

REGULATORY GUIDE 1.35 DRAFT REVISION 3 DATED 4/79

Inservice Inspection of Ungrouted Tendons in Prestressed Concrete Containment Structures

DISCUSSION:

License Amendment No. 152 revised Technical Specification 5.5.6, "Containment Tendon Surveillance Program," to require the program to be in accordance with the requirements of 10 CFR 50.55a(g)(4) for components classified as Code Class CC in lieu of Draft Revision 3 of Regulatory Guide 1.35.

The surveillance tendons are designated as part of the inservice inspection program which conforms with Subsection IWE and IWL of Section XI, Division I of the ASME Boiler and Pressure Vessel Code as limited and modified by 10 CFR 50.55a.

REGULATORY GUIDE 1.36 REVISION 0 DATED 2/73

Nonmetallic Thermal Insulation for Austenitic Stainless Steel

DISCUSSION:

The recommendations of this regulatory guide are met as described in Table 6.1-6.

REGULATORY GUIDE 1.37 REVISION 0 DATED 3/73

Quality Assurance Requirements for Cleaning of Fluid Systems and Associated Components of Water-Cooled Nuclear Power Plants

DISCUSSION:

The Operating Agent complies with the recommendations of this regulatory guide.

REGULATORY GUIDE 1.38 REVISION 2 DATED 5/77

Quality Assurance Requirements for Packaging, Shipping, Receiving, Storage, and Handling of Items for Water-Cooled Nuclear Power Plants

DISCUSSION:

The Operating agent recognizes either the 1972 or 1978 edition of ANSI N45.2.2 when used in conjunction with Regulatory Guide 1.38. The Operating agent may also choose to recognize ASME NQA-1-1997, Part II, Subparts 2.2 & 2.15 for packaging, shipping, and handling requirements imposed upon vendors.

The Operating agent recognizes either the 1972 or 1978 edition of ANSI N45.2.2 when used in conjunction with Regulatory Guide 1.38.

The Operating Agent takes exception to the qualification requirements prescribed by ANSI N45.2.6 (Section 2.4, ANSI N45.2.2 1972 or 1978) and provides an alternate under Regulatory Guide 1.58.

The Operating Agent takes exception to certain housekeeping requirements prescribed by ANSI N45.2.3 (Section 2.6, ANSI N45.2.2 1972 or 1978) and provides a clarification under Regulatory Guide 1.39.

The Operating Agent will maintain written records of personnel access to the storeroom for entry when store's personnel are not on duty. At other times admittance is controlled by stores personnel (Section 6.6, ANSI N45.2.2 1972 or 1978).

The Operating Agent takes exception to ANSI N45.2.2 1972 or 1978 Appendix A3.9 which specifies the size and location of container markings. The Operating Agent considers containers adequately marked if the information required is displayed on one location with letters and numbers large enough to be easily read.

REGULATORY GUIDE 1.39 REVISION 2 DATED 9/77

Housekeeping Requirements for Water-Cooled Nuclear Power Plants

DISCUSSION:

The Operating Agent takes exception to the provisions of ANSI N45.2.3 Section 2.1 which requires the establishment of cleanliness zones numbered I through V. As an alternate, Operating Agent procedures require general housekeeping practices to be maintained at the station during normal operations. During maintenance periods, cleanliness areas are established and controlled by procedure or forms which establish cleanliness requirements consistent with the nature of the work, degree of cleanliness required, radiation control requirements, security considerations, fire protection, personnel safety and other factors.

"General housekeeping practices" include all activities related to control of cleanliness of facilities, cleanliness of material and equipment , fire prevention and fire protection including disposal of combustible materials and debris, control of access and protection of equipment which is not otherwise provided for.

REGULATORY GUIDE 1.40 REVISION 0 DATED 3/73

Qualification Tests of Continuous-Duty Motors Installed Inside the Containment of Water-Cooled Nuclear Power Plants

DISCUSSION:

The recommendations of this regulatory guide are met. Refer to Section 3.11(B).

Continuous duty motors used inside the containment are type tested under simulated LOCA conditions. IEEE 334-1974, "Standard for Type Tests of Continuous Duty Class 1E Motors for Nuclear Power Generating Stations," is used consistent with the guidance in NUREG-0588.

REGULATORY GUIDE 1.41 REVISION 0 DATED 3/73

Preoperational Testing of Redundant Onsite Electric Power Systems to Verify Proper Load Group Assignments

DISCUSSION:

The recommendations of this regulatory guide are met. Refer to Sections 8.1.4.3 and 8.3.2.2.1.

REGULATORY GUIDE 1.42 REVISION NA DATED NA

DISCUSSION:

This regulatory guide has been withdrawn by the NRC.

REGULATORY GUIDE 1.43 REVISION 0 DATED 5/73

Control of Stainless Steel Weld Cladding of Low-Alloy Steel Components

DISCUSSION:

Westinghouse practices achieve the same purpose as Regulatory Guide 1.43 by requiring qualification of any "high heat input" processes, such as the submerged-arc wide-strip welding process and the submerged-arc 6-wire process used on ASME SA-508, Class 2, material, with a performance test as described in Regulatory Position C.2 of the guide. No qualifications are required by the regulatory guide for ASME SA-533 material and equivalent chemistry for forging grade ASME SA-508, Class 3, material.

The fabricator monitors and records the weld parameters to verify agreement with the parameters established by the procedure qualification as stated in Regulatory Position C.3.

Stainless steel weld cladding of low-alloy steel components is not employed on components outside the NSSS.

REGULATORY GUIDE 1.44 REVISION 0 DATED 5/73

Control of the Use of Sensitized Stainless Steel

DISCUSSION:

The recommendations of this regulatory guide are met as described in Table 6.1-4.

REGULATORY GUIDE 1.45 REVISION 0 DATED 5/73

Reactor Coolant Pressure Boundary Leakage Detection Systems

DISCUSSION:

The recommendations of this regulatory guide are met as described in Table 5.2-6.

REGULATORY GUIDE 1.46 REVISION 0 DATED 5/73

Protection Against Pipe Whip Inside Containment

DISCUSSION:

The recommendations of this regulatory guide are met as described in Table 3.6-2 for the balance of plant and Section 3.6.1 for the NSSS.

REGULATORY GUIDE 1.47 REVISION 0 DATED 5/73

Bypassed and Inoperable Status Indication for Nuclear Power Plant Safety Systems

DISCUSSION:

The recommendations of this regulatory guide are met as described in Table 7.5-3. In addition, the bypassed and inoperable indicating system meets Branch Technical Position ICSB 21 titled Guidance for Application of Regulatory Guide 1.47.

REGULATORY GUIDE 1.48 REVISION 0 DATED 5/73

Design Limits and Loading Combinations for Seismic Category I Fluid System Components

DISCUSSION:

Westinghouse-supplied components are designed using the stress limits and loading combinations presented in Sections 3.9(N).1 and 5.2 for Code Class 1 components and in Section 3.9(N).3 for Code Class 2 and 3 components. The conservatism in these limits and the associated ASME design requirements preclude any component structural failure.

The operability of active Code Class 1, 2, and 3 valves and active Code Class 2 and 3 pumps (there are no active Class 1 pumps) are verified by methods detailed in Sections 3.9(N).1 and 5.2 for Code Class 1 components and in Section 3.9(N).3 for Code Class 2 and 3 components.

The use of the foregoing methods provides an acceptable alternate method to meeting the guidance of this regulatory guide.

For seismic Category I fluid system components not furnished with the NSSS, the recommendations of this regulatory guide are met as discussed in Section 3.9(B).3.1 and Table 3.9(B)-13.

REGULATORY GUIDE 1.49 REVISION 1 DATED 12/73

Power Levels of Nuclear Power Plants

DISCUSSION:

The recommendations of this regulatory guide are met, since the reactor core thermal power level is 3,565 MWt, compared with the limits of 3,800 MWt of this regulatory guide.

REGULATORY GUIDE 1.50 REVISION 0 DATED 5/73

Control of Preheat Temperature for Welding of Low-Alloy Steel

DISCUSSION:

The recommendations of this regulatory guide are met as described in Table 6.1-7.

REGULATORY GUIDE 1.51 REVISION NA DATED NA

DISCUSSION:

This regulatory guide has been withdrawn by the NRC.

REGULATORY GUIDE 1.52 REVISION 2 DATED 3/78

Design, Testing, and Maintenance Criteria for Post Accident Engineered-Safety-Feature Atmosphere Cleanup System Air Filtration and Adsorption Units of Light-Water-Cooled Nuclear Power Plants

DISCUSSION:

The recommendations of this regulatory guide are met as described in Table 9.4-2.

Operation of each ESF atmosphere cleanup train referenced in Table 9.4-2 paragraph 4.d is in accordance with Regulatory Guide 1.52, Revision 3, dated June 2001 (Refer to operating license Amendment No. 208).

Activated charcoal is furnished in accordance with ANSI N509-1980.

REGULATORY GUIDE 1.53 REVISION 0 DATED 6/73

Application of the Single-Failure Criterion to Nuclear Power Plant Protection Systems

DISCUSSION:

The recommendations of this regulatory guide are met as described in Table 7.1-4 for the portions of plant protection systems provided with the balance of plant. The Westinghouse-furnished systems meet the recommendations of this regulatory guide as described in Section 7.1.2.6.1.

REGULATORY GUIDE 1.54 REVISION 0 DATED 6/73

Quality Assurance Requirements for Protective Coatings Applied to Water-Cooled Nuclear Power Plants

DISCUSSION:

The recommendations of this regulatory guide are met as described in Table 6.1-2 for protective coatings on components located inside containment.

REGULATORY GUIDE 1.55 REVISION 0 DATED 6/73

Concrete Placement in Category I Structures

DISCUSSION:

The recommendations of this regulatory guide are met, except as described below.

BC-TOP-5-A was used as a design code in lieu of ACI/ASME Proposed Standard-Code for Concrete Reactor Vessels and Containments. ANSI N45.2.5-1974 (Rev. 1), Supplementary Q.A. Requirements for Installation, Inspection, and Testing of Structural Concrete and Structural Steel During the Construction Phase of Nuclear Power Plants, is used in lieu of ANSI N45.2.5-1972 (proposed).

Creep tests were normally performed on prestressed structures only. Loss of prestress through creep is not applicable to nonprestressed structures.

Regulatory Position 2 of the regulatory guide lists the responsibilities of the "Designer." Under the designer's role are listed the responsibilities for checking the design and shop drawings for placement of reinforcing bars, location of embedded items, as well as locations of construction joints.

On the project, Bechtel engineering had the responsibility to check the design and shop drawings and locate the construction joints. Changes to design drawings by the "Constructor" required the "Engineer's" approval.

REGULATORY GUIDE 1.56 REVISION 1 DATED 7/78

Maintenance of Water Purity in Boiling Water Reactors

DISCUSSION:

The recommendations of this regulatory guide are not applicable to a PWR.

REGULATORY GUIDE 1.57 REVISION 0 DATED 6/73

Design Limits and Loading Combinations for Metal Primary Reactor Containment System Components

DISCUSSION:

The recommendations of this regulatory guide are met to the extent that they apply to ASME Code Class MC Mechanical and Electrical Penetration Assemblies described in Section 3.8.2.5.

REGULATORY GUIDE 1.58 REVISION 1 DATED 9/80

Qualification of Nuclear Power Plant Inspection, Examination, and Testing Personnel

DISCUSSION:

Personnel (internal and external to the Operating Agent) performing inspections, examinations, and other tests as a basis for product acceptance are qualified in accordance with ANSI N45.2.6 as described in this section. Incidental inspections or examinations performed during the course of an audit or surveillance activity do not require certification to ANSI N45.2.6.

Permanent plant staff personnel performing testing activities of a nature consistent with their operational responsibilities (i.e., operators, chemists, I&C technicians, HP technicians) are qualified to ANSI/ANS 3.1 rather than ANSI N45.2.6.

The Operating Agent's alternative to qualifying personnel to levels of capabilities outlined in Section 3 of ANSI N45.2.6 is to qualify them to levels of capability as defined in procedures.

There is at least one level for each type of inspector but no more than three levels. The assignment of inspection and test personnel is consistent with the certification of an individual. SNT-TC-1A (1980) is used to qualify and certify NDE personnel.

The education and experience requirements specified in ANSI N45.2.6 for the various levels of qualification are generally followed. Other factors, however, may be used in determining the capability of an individual to perform a task may include a documented written or oral test and one or both of the following:

a. Documented evaluation of work performance.
b. Completion of training relative to the task(s) performed.

The determination to use the above mentioned alternative is made by the individual responsible for performing the certification.

REGULATORY GUIDE 1.59 REVISION 2 DATED 8/77

Design Basis Floods for Nuclear Power Plants

DISCUSSION:

The design-basis flood level for WCGS was determined using Revision 1 of this regulatory guide. The effects of incorporating Revision 2 of the regulatory guide were evaluated and give only a slightly larger wave runup which does not affect any safety-related facility.

The recommendations of this regulatory guide are met for the design of safety-related structures, systems and components.

REGULATORY GUIDE 1.60 REVISION 1 DATED 12/73

Design Response Spectra for Seismic Design of Nuclear Power Plants

DISCUSSION:

The recommendations of this regulatory guide are used for the non-NSSS design as the basis for the ground design response spectra. Refer to Section 3.7(B).1.1. Westinghouse utilizes the design response spectra of this regulatory guide in conjunction with the damping values approved by the NRC in WCAP-7921-AR, dated May 1974.

REGULATORY GUIDE 1.61 REVISION 0 DATED 10/73

Damping Values for Seismic Design of Nuclear Power Plants

DISCUSSION:

The recommendations of this regulatory guide are met as described in Section 3.7(B).1.3 for those items not supplied by Westinghouse, with the following exceptions. Supports for Class lE cable tray are designed for the SSE considering up to 20-percent damping. Likewise, Class lE conduit supports are designed for the SSE based on 7-percent damping. For piping systems, the damping values provided in ASME Code Case N-411 may be utilized as an alternative. See Table 3.7(B)-1 for further clarification.

In accordance with Regulatory Position C.2, these damping values were established as the result of a test program. Further discussion is included in Section 3.10(B).3.

The Westinghouse-supplied equipment satisfies the damping values suggested by the regulatory guide with the exception of the damping value (3 percent critical) for the faulted condition of large piping systems. Higher damping values, when justified by documented data, are allowed by Regulatory Position C.2. A conservative value of 4 percent critical has therefore been justified by testing for the Westinghouse reactor coolant loop configuration in WCAP-7921-AR and has been approved by the NRC. For piping systems, the damping values provided in ASME Code Case N-411 may be utilized as an alternative. See Section 3.7(N).1.3 for further discussion.

REGULATORY GUIDE 1.61 REVISION 1 DATED 03/07

A 4% damping value is recommended by Regulatory Guide 1.61 Rev. 0 for welded structures qualified for SSE. The ESW Vertical Loop Chase structure uses a 3% damping value. This is acceptable because 3% damping floor response spectra are conservative as compared to 4%.

REGULATORY GUIDE 1.62 REVISION 0 DATED 10/73

Manual Initiation of Protective Actions

DISCUSSION:

The recommendations of this regulatory guide are met as described in Table 7.1-5 for those safety-related systems provided with the balance of plant. The Westinghouse-furnished systems meet the recommendations of this regulatory guide as described in Section 7.3.8.2.

REGULATORY GUIDE 1.63 REVISION 2 DATED 7/78

Electric Penetration Assemblies in Containment Structures for Light-Water-Cooled Nuclear Power Plants

DISCUSSION:

The recommendations of this regulatory guide are met as described in Section 8.1.4.3.

REGULATORY GUIDE 1.64 REVISION 2 DATED 6/76

Quality Assurance Requirements for the Design of Nuclear Power Plants

DISCUSSION:

The Operating Agent complies with the recommendations of this regulatory guide with the following exception to Section C.2.: Design verification, as stated in Section 17.2.3.6, is performed by qualified verifiers who are not directly responsible for the design or the design change. In unusual cases, the designer's supervisor may perform the verification if: he is the only technically qualified individual, the need for him to perform the review is approved and documented in advance by the supervisor's management, and Quality Assurance audits monitor the frequency of the supervisor's review to guard against abuse.

REGULATORY GUIDE 1.65 REVISION 0 DATED 10/73

Materials and Inspections for Reactor Vessel Closure Studs

DISCUSSION:

Westinghouse follows the recommendations of this regulatory guide, with the following exceptions:

a. The use of modified SA-540, Grade B-24, as specified in the ASME Code (Code Case 1605) is permitted by Westinghouse, but is not listed in this regulatory guide.

b. A maximum ultimate tensile strength of 170,000 psi is not specified by Westinghouse, as recommended by this regulatory guide.

Exception a. above is not an issue since Code Case 1605 has been found acceptable to the NRC for application in the construction of components for water-cooled nuclear power plants within the limitations discussed in Regulatory Guide 1.85. The use of Code Case 1605 for reactor vessel closure stud materials is not precluded by this regulatory guide.

Exception b. is not considered by Westinghouse to be a safety issue for the following reasons:

The ASME Code requirement for toughness for reactor vessel bolting has precluded the regulatory guide's additional recommendation for tensile strength limitation, since to obtain the required toughness levels the tensile levels are reduced.

Westinghouse has specified both 45 ft-lb and 25 mils lateral expansion for control of fracture toughness determined by Charpy-V testing, required by the ASME Code, Section III, Summer 1973 Addenda and 10 CFR 50, Appendix G (Paragraph IV.A.4). These toughness requirements ensure optimization of the studbolt

material tempering operation with the accompanying reduction of the tensile strength level when compared with previous ASME Code requirements.

Prior to 1972, the ASME Code required a 35 ft-lb toughness level which provided maximum tensile strength levels ranging from approximately 155 to 178 kpsi (Westinghouse review of limited data - 25 heats).

After publication of the Summer 1973 Addenda to the ASME Code and 10 CFR 50, Appendix G, wherein the toughness requirements were modified to 45 ft-lb with 25 mils lateral expansion, all bolt material data reviewed on Westinghouse plants showed tensile strengths of less than 170 kpsi.

The specification of both impact and maximum tensile strength as stated in the regulatory guide results in unnecessary hardship in procurement of material without any additional improvement in quality.

The closure-stud bolting material is procured to a minimum yield strength of 130,000 psi and a minimum tensile strength of 145,000 psi. This strength level is compatible with the fracture toughness requirements of 10 CFR 50, Appendix G (Paragraph I.C), although higher-strength-level bolting materials are permitted by the ASME Code.

The primary concern of the regulatory position concerning a maximum tensile strength is to minimize the susceptibility of the bolting material to stress corrosion cracking.

Stress corrosion has not been observed in reactor vessel closure-stud bolting manufactured from material of this strength level. Accelerated stress corrosion test data do exist for materials of 170,000 psi minimum yield strength exposed to marine water environments stressed to 75 percent of the yield strength (given in Ref. 2 of the regulatory guide). These data are not considered applicable to Westinghouse reactor vessel closure-stud bolting because of the specified yield strength differences and a less severe environment; this has been demonstrated by years of satisfactory service experience.

Additional protection against the possibility of incurring corrosion effects is ensured by:

a. Decrease in level of tensile strength compatible with the requirement of fracture toughness as described above.

b. Design of the reactor vessel studs, nuts, and washers, allowing them to be completely removed during each refueling, permitting visual and/or nondestructive inspection in parallel with refueling operations to assess protection against corrosion, as part of the inservice inspection described in Section 5.2.4.

c. Design of the reactor vessel studs, nuts, and washers, providing protection against corrosion by allowing them to be completely removed during each refueling and placed in storage racks as required by refueling procedures. The stud holes in the reactor vessel flange are sealed with special plugs prior to flooding the reactor cavity. In the event a stud becomes stuck and cannot be removed from the reactor vessel flange, it is covered with a protective cover. Thus, the bolting materials and stud holes are not expected to be exposed to the borated refueling cavity water.

WCNOC also takes the following exception to the recommendations of this regulatory guide. The inservice inspection is performed in accordance with Code Case N-652 and does not follow the guidance of this Regulatory Guide. This is not an issue since the NRC has approved the use of Code Case N-652 in Regulatory Guide 1.147, rev. 14.

REGULATORY GUIDE 1.66 REVISION NA DATED NA

DISCUSSION:

This regulatory guide has been withdrawn by the NRC.

REGULATORY GUIDE 1.67 REVISION 0 DATED 10/73

Installation of Overpressure Protection Devices

DISCUSSION:

The recommendations of this regulatory guide are met as described in Section 3.9(B).3.3.

REGULATORY GUIDE 1.68 REVISION 2 DATED 8/78

Initial Test Programs for Water-Cooled Nuclear Power Plants

DISCUSSION:

The Initial Test Program is discussed in Chapter 14.0. The response to position Appendix A, Item 1.C is described in the response to Regulatory Guide 1.118 and position Appendix A, Item 1.e concerning thermal expansion and restraint testing is described in Sections 3.9(B).2.1 and 14.2.

Appendix A, item 5e: A prototype test was performed at Callaway for the RCCA or Bank Worth measurement at power test at 50 percent power. Section 14.2.12.3.24 provides additional information.

Appendix A, item 5.h.h: A test was not performed to demonstrate that the dynamic response of the plant to the design load swings for the facility, including step and ramp changes, is in accordance with design at 50-percent power. Design step load changes of 10 percent of full power were performed at approximately 30-, 75-, and 100-percent power. Large load reductions of 50 percent of full power were performed at approximately 75- and 100- percent power. It was not practicable to perform a 50 percent load reduction at 50-percent power, as this would require tripping the turbine which is a different transient and is bounded by the plant trip at 100-percent power test. Performance of the 10 percent step load change at 50-percent power would not add significantly to the body of information obtained at the other power levels. Design ramp changes are not performed, as such a test would only have verified operational limitations and not safety limitations.

Appendix A, item 5.i.i: A test to demonstrate that the dynamic response of the plant is in accordance with design for limiting reactor coolant pump trips at 100-percent power was not performed. A reactor coolant system flow coastdown test was conducted during startup testing at hot zero power conditions. Analyses showed that this test resulted in no significant difference in reactor coolant pump coastdown, compared to coastdown at 100-percent power. The coastdown at hot zero power conditions would be, if anything, slightly faster since the decrease in kinetic energy is greater than the decrease in horsepower. No other deliberate reactor coolant pump trips were performed. Other testing adequately demonstrated that the plant functions in accordance with design; for example, reactor protection system response time testing demonstrated that the reactor trip resulting from a loss of flow would occur within the time specified in the analysis, and channel calibration sets up the instrumentation to ensure that trip set points are as specified in the technical specifications. The dynamic response of the plant to design transients was demonstrated by load rejection testing and the plant trip from 100-percent power. The required test would not have provided additional data.

Appendix A, item 5.j.j: A test to demonstrate that the dynamic response of the plant is in accordance with the design for a loss of turbine generator coincident with a loss of offsite power, while operating in the 10-20 percent power range, was not performed. The capabilities of the onsite power systems and the dynamic response of the plant were adequately verified during other phases of the testing program. The required test would not provide additional data.

Appendix A, item 5.k.k: For WCGS, the most severe case of feedwater temperature reduction is the loss of heater drain pumps. Therefore, the dynamic response of the plant to a loss of heater drain pump test was performed in lieu of loss of or bypassing of the feedwater heaters. Since the transient associated with the loss of heater drain pumps is more severe at 90-percent power than at 50-percent power, the test was performed only at 90 percent power.

Appendix A, item 5.m.m: A test to demonstrate that the dynamic response of the plant is in accordance with design for the case of automatic closure of all main steam line isolation valves at 100-percent power was not performed as the results obtained would be very similar to the plant trip test performed at 100-percent power, except that the main steam safety valves do not lift during the plant trip from 100-percent power test. The main steam safety valves were preoperationally tested prior to hot functional testing. The main steam line isolation valves were tested by the vendor at full p and were also tested during the preoperational test program.

REGULATORY GUIDE 1.68.1 REVISION 1 DATED 1/77

Preoperational and Initial Startup Testing of Feedwater and Condensate Systems for Boiling Water Reactor Power Plants DISCUSSION:

The recommendations of this regulatory guide are not applicable to a PWR.

REGULATORY GUIDE 1.68.2 REVISION 1 DATED 7/78

Initial Startup Test Program to Demonstrate Remote Shutdown Capability for Water-Cooled Nuclear Power Plants

DISCUSSION:

The recommendations of this regulatory guide are met; however, since the power block of each SNUPPS unit (WCGS and Callaway) is identical, the test program to demonstrate the remote shutdown capability was performed only at Callaway.

REGULATORY GUIDE 1.68.3 REVISION 2 DATED 4/82

Preoperational Testing of Instrument and Control Air Systems

DISCUSSION:

This Regulatory Guide only applies to CKA01A and the instrument air dryers. See Regulatory Guide 1.80 for CKA01B, C. The same discussion applies to this Regulatory Guide as for Regulatory Guide 1.80.

REGULATORY GUIDE 1.69 REVISION 0 DATED 12/73

Concrete Radiation Shields for Nuclear Power Plants

DISCUSSION:

The requirements of the regulatory guide as they apply to the construction of shielding structures are met, with the following clarification:

a. Accident condition analysis procedures and load combinations (Reference ANSI N101.6, Section 4.3.5) are in accordance with Section 3.8.

b. Condition of aggregate: (Reference ANSI N101.6, Section 5.1.6) When aggregates contain montmorillonite clays, top soil and claystone, fine aggregate shall have a minimum sand equivalent of 75 when tested in accordance with Test Method Calif. No. 217, and coarse aggregate shall have a minimum cleanness value of 75 when tested in accordance with Test Method No. 227, as specified in the California Division of Highways Test Methods. In addition, the aggregate must pass ASTM Test C-117 (Material finer than 200 Sieve) which provides a measure of cleanness.

c. Recommendations for forms: (Reference ANSI N101.6, Section 4.7, 6.0, 8.16) Forms are made of wood, metal, structural hardwood, or other suitable material that will produce the required surface finish. Forms are constructed in accordance with ACI 347, Recommended Practice for Concrete Framework, and are made to conform to the shape, form, line, and grade to prevent deformation under load, and are designed to be readily removable. Lumber to be reused is thoroughly cleaned before reuse. Form-release agents are compatible with protective coatings that will be subsequently used.

d. Tendons and anchors for prestressed concrete (Reference ANSI N101.6, Section 6.3.1) are in accordance with BC-TOP-5-A.

e. Aggregate samples are submitted for testing prior to acceptance for job use. However, no requirement exists to retain these samples for permanent job records. (Reference ANSI N101.6, Section 8.1.8)

f. Mixing time of concrete (Reference ANSI N101.6, Section 8.2.2) is in accordance with ASTM C-94:

"Where mixer performance tests have been made on given concrete mixtures in accordance with the testing program set forth in the following paragraphs and the mixers have been charged to their rated capacity, the acceptable mixing time may be reduced for those particular circumstance to a point at which satisfactory mixing, defined in 10.3.3, shall have been accomplished. When the mixing time is so reduced, the maximum time of mixing shall not exceed this reduced time by more than 60 seconds for air entrained concrete."

Additional details in regard to concrete mixing are included in Section 3.8.1.6.1.2.

g. Specific requirements for pressurized grouting (Reference ANSI N101.6, Section 8.6.2) are determined on a case-by-case basis. The resulting procedure must assume that all fillings are bonded tightly to the surface of the concrete and be sound and free from shrinkage, cracks, and hollow-sounding areas.

h. Curing of ordinary concrete (Reference ANSI N101.6, Section 8.7.2) is by one or a combination of the methods described in ACI 308, Recommended Practice for Curing Concrete, and occurs for a minimum of 7 days. Concrete is protected from freezing by adequate covering and heating or by insulated forms and covering. The concrete members are completely enclosed during cold weather in accordance with Chapter 1 of ACI 306, Recommended Practice for Cold Weather Concreting, but in no case are exposed to a temperature lower than 35°F.

i. Acceptance of concrete compressive strength (Reference ANSI N101.6, Section 11.4.1) is in accordance with ACI 318, Building Code Requirements for Reinforced Concrete, Chapter 4.3.

j. Instead of tests on the completed shield (Reference ANSI N101.6, Section 11.5) routine surveys in accordance with the ALARA program (Chapter 12.0) are used to establish that the general area radiation levels are within the limits of specified radiation zones. An exhaust system of sufficient capacity to maintain a negative pressure is also provided to prevent uncontrolled release of airborne radioactive material.

k. As an alternate to CRD C-119, Method of Test for Flat and Elongated Particles in Coarse Aggregate (Reference ANSI N101.6, Table 2), a method which identifies all particles having a maximum dimension in excess of four times the minimum dimension from a 5-pound sample may be used.

REGULATORY GUIDE 1.70 REVISION 3 DATED 11/78

Standard Format and Content of Safety Analysis Reports for Nuclear Power Plants

DISCUSSION:

The Wolf Creek USAR is written to the format of Revision 2 of this regulatory guide; however, for the most part, the information requested by Revision 3 was originally incorporated. In some cases, such as Section 13.2, the format of the Standard Review Plan was used to modify the Regulatory Guide 1.70 format in order to more clearly present the information requested. In other cases, the level of detail delineated in this regulatory guide was not provided for operating license approval, and therefore, is not reflected in the USAR.

Refer to discussion on Regulatory Guide 1.181, Revision 0.

REGULATORY GUIDE 1.71 REVISION 0 DATED 12/73

Welder Qualification for Areas of Limited Accessiblity

DISCUSSION:

The recommendations of this regulatory guide are met as described in Table 6.1-8.

REGULATORY GUIDE 1.72 REVISION 2 DATED 11/78

Spray Pond Piping Made from Fiberglass-Reinforced Thermosetting Resin

DISCUSSION:

The recommendations of this regulatory guide are not applicable to WCGS.

REGULATORY GUIDE 1.73 REVISION 0 DATED 1/74

Qualification Tests of Electric Valve Operators Installed Inside the Containment of Nuclear Power Plants

DISCUSSION:

For the Westinghouse-supplied, safety-related, motor-operated valves located inside the containment, environmental qualification is discussed in Section 3.11(N). Auxiliary safety-related equipment (e.g.,.stem-mounted limit switches) is qualified separately. The conditions to which the equipment must be qualified (temperature, pressure, radiation, and chemistry) are those specified in Section 3.11(B).

The balance-of-plant implementation of this regulatory guide is discussed in Section 3.11(B).2.1.

REGULATORY GUIDE 1.74 REVISION 0 DATED 2/74

Quality Assurance Terms and Definitions

DISCUSSION:

The Operating Agent considers computer printouts, standard forms, etc., to be acceptable formats for Certificates of Conformance/Certificates of Compliance when signed by an appropriate individual or when transmitted by a separate document which has been signed by an appropriate individual.

REGULATORY GUIDE 1.75 REVISION 2 DATED 9/78

Physical Independence of Electric Systems

DISCUSSION:

Westinghouse-furnished systems meet the recommendations of this regulatory guide in accordance with the comments of Section 7.1.2.2.1.

The balance of plant meets the recommendations of this regulatory guide. Refer to Section 8.1.4.3.

REGULATORY GUIDE 1.76 REVISION 0 DATED 4/74

Design Basis Tornado for Nuclear Power Plants

DISCUSSION:

The recommendations of this regulatory guide are met. Refer to Section 3.3.2.

REGULATORY GUIDE 1.77 REVISION 0 DATED 5/74

Assumptions Used for Evaluating a Control Rod Ejection Accident for Pressurized Water Reactors

DISCUSSION:

Westinghouse methods and criteria are documented in WCAP-7588, Revision lA, which has been reviewed and accepted by the NRC.

The results of the Westinghouse analyses show agreement with Regulatory Positions C.1 and C.3. In addition, Westinghouse utilizes the assumptions given in Appendices A and B of the Regulatory Guide. However, Westinghouse takes exception to Regulatory Position C.2 which implies that the rod ejection accident should be considered as an emergency condition. Westinghouse considers this a faulted condition as stated in ANSI N18.2. Faulted condition stress limits are applied for this accident.

REGULATORY GUIDE 1.78 REVISION 0 DATED 6/74

Assumptions for Evaluating the Habitability of a Nuclear Power Plant Control Room During a Postulated Hazardous Chemical Release

DISCUSSION:

The recommendations of this regulatory guide are met as described in Table 6.4-1.

REGULATORY GUIDE 1.78 REVISION 1 DATED 12/01

Position 3.1, Table 1, is used for toxicity limits of hazardous chemicals for the hazardous material commodity flow study.

REGULATORY GUIDE 1.79 REVISION 1 DATED 9/75

Preoperational Testing of Emergency Core Cooling Systems for Pressurized Water Reactors

DISCUSSION:

The preoperational testing procedures complied with the positions in the guide with the following exceptions and clarifications:

C.1.b(2) Low-Pressure Safety Injection (LPSI) Recirculation Test (Cold Conditions)

The objective of this test was to demonstrate the capability to realign the valves and injection pumps to recirculate coolant from the containment floor or sump into the reactor coolant system. The testing verified that the available net positive suction head is greater than that required at accident temperatures, as discussed in Regulatory Guide 1.1. The testing included taking suction from the sump to verify (1) vortex control and (2) acceptable pressure drops across screening and suction lines and valves.

The test program met the objective of this section, with the following clarifications.

a. The ability to realign system valves were verified in preoperation test S-03EJ01, Residual Heat Removal System Cold Preoperational Test.

b. Verification of vortex control and acceptable pressure drops across the screening was determined by hydraulic model testing. A geometric replica of the 90° sector of the reactor containment floor centered on the two sumps was built to a scale of about 1:2.9. Testing included a variety of approach flow conditions, screen blockages, water levels, and pump operation combinations. The testing was conducted by Alden Research Laboratory, which has previously demonstrated the validity of such testing. Verification of pressure drops across suction lines and valves was accomplished using standard engineering calculations.

C.1.c(1) Core Flooding Flow Test (Cold Conditions)

The test program met the intent of Regulatory Guide 1.79 by demonstrating proper system actuation and by verifying that the flow rate was as expected for the test conditions. To perform this test, the accumulators were filled to their normal level and pressurized, then discharged one at a time into an open reactor vessel by opening the motor-operated isolation valve. The discharge flow rate was calculated from measurements of the changes in accumulator water level as a function of time. Accumulator pressure and level are continuously recorded throughout the test. In the analysis of the data from this test, the accumulator valve opening time and valve characteristics were accounted for, ensuring that the valve operation did not influence the final results. This test was also conducted at similar plants

with acceptable results, demonstrating that the test program accurately provided verification of proper system actuation and required flow rates.

REGULATORY GUIDE 1.80 REVISION 0 DATED 6/74

Preoperational Testing of Instrument Air Systems

DISCUSSION:

The instrument air system has no safety design bases, as discussed in Section 9.3.1. Safety-related valves which are designed to fail-safe on a loss-of-instrument air will be tested as part of the acceptance testing of the system which they serve. The safety-related air accumulators were tested in accordance with Section 14.2.12.1.90.

This Regulatory Guide only applies to CKA01B, C. See Regulatory Guide 1.68.3 for CK01A and the instrument air dryers.

REGULATORY GUIDE 1.81 REVISION 1 DATED 1/75

Shared Emergency and Shutdown Electric Systems for Multi-Unit Nuclear Power Plants

DISCUSSION:

The recommendations of this regulatory guide are met. Refer to Section 8.1.4.3.

REGULATORY GUIDE 1.82 REVISION 0 DATED 6/74

Sumps for Emergency Core Cooling and Containment Spray Systems

DISCUSSION:

The recommendations of this regulatory guide are met as described in Table 6.2.2-1.

REGULATORY GUIDE 1.83 REVISION 1 DATED 7/75

Inservice Inspection of Pressurized Water Reactor Steam Generator Tubes

DISCUSSION:

The steam generators are designed to permit access to tubes for inspection and/or repair or plugging (if necessary). The inservice inspection program is discussed in Section 5.4.2.4 and in the Technical Specifications.

In November 2009, the NRC withdrew RG 1.83 because it no longer describes the preferred approach. The Steam Generator Program is described in Technical Specification 5.5.9. Steam Generator Program is consistent with the guidence in NEI 97-06, Steam Generator Program Guidelines.

REGULATORY GUIDE 1.84 CURRENT REVISION INCORPORATED BY REFERENCE IN 10CFR50.55a

Design, Fabrication, and Materials code Case Acceptability, ASME Section III

DISCUSSION:

Prior to June 2003, Regulatory Guide 1.84 was titled "Design and Fabrication Code Case Acceptability, ASME Section III, Division 1," and it listed only the Section III Code Cases oriented to design and fabrication that had been determined by the NRC to be acceptable alternatives to applicable parts of Section III. Companion Regulatory Guide 1.85, "Materials Code Case Acceptability, ASME Section III, Division 1," listed the Section III Code Cases oriented to materials and testing that had been determined by the NRC to be acceptable alternatives to applicable parts of Section III. Beginning in June 2003, all Section III Code Cases that have been approved for use by the NRC are listed in Regulatory Guide 1.84, including those Regulatory Guide 1.84 and 1.85 previously approved Cases that were subsequently annulled or superceded by ASME actions.

When a Regulatory Guide 1.84 approved Code Case is initially applied by the Operating Agent, its use will be reviewed for acceptability and conformance with 10 CFR 50.55a(b)(4) and to Regulatory Guide 1.84 and documented by change to the appropriate Design Specification. When later revisions to Regulatory Guide 1.84 are issued and incorporated by reference in 10 CFR 50.55a(b)(4), the latest revision in effect at the time a Code Case is desired to be initially applied will be utilized by the Operating Agent in determining the NRC approved Code Cases and implementing instructions. Continued use of previously applied Regulatory Guide 1.84 and 1.85 Code Cases is in accordance with the requirements of 10 CFR 50.55a(b)(4).

Any Section III Code Case not approved in Regulatory Guide 1.84 will have specific approval from the NRC prior to implementation. Regulatory Guide 1.193, "ASME Code Cases Not Approved for Use," lists Code Cases that the NRC has determined to be unacceptable for use on a generic basis, including a brief basis for such determination.

REGULATORY GUIDE 1.85 REVISION 31 DATED 5/1999

Materials Code Case Acceptability-ASME Section III Division 1

DISCUSSION:

Prior to June 2003, Regulatory Guide 1.85 identified ASME Section III materials Code Cases that had been determined by the NRC to be acceptable alternatives to applicable parts of Section III. Beginning in June 2003, all Section III Code Cases that have been approved by the NRC for application by licensees are listed in Regulatory Guide 1.84. Refer to the discussion of Regulatory Guide 1.84 for the continued use of materials Code Cases applied prior to June 2003.

REGULATORY GUIDE 1.86 REVISION 0 DATED 6/74

Termination of Operating Licenses for Nuclear Reactors

DISCUSSION:

This regulatory guide is not applicable to WCGS at this time.

REGULATORY GUIDE 1.87 REVISION 1 DATED 6/75

Guidance for Construction of Class 1 Components in Elevated-Temperature Reactors (Supplement to ASME Section III Code Cases 1592, 1593, 1594, 1595, and 1596)

DISCUSSION:

The recommendations of this regulatory guide are not applicable to WCGS.

REGULATORY GUIDE 1.88 REVISION 2 DATED 10/76

Collection, Storage, and Maintenance of Nuclear Power Plant Quality Assurance Records

DISCUSSION:

The recommendations of Regulatory Guide 1.88 are met with the following interpretations and exceptions:

a. Section 2 of ANSI N45.2.9 establishes requirements for records required by codes, standards, specifications, or regulatory requirements. The WCGS implements this requirement by specifying what is a QA record, based upon the following criteria:

   1. Those documents which would be of significant value in demonstrating capability for safe operation.

   2. Those documents which would be of significant value in maintaining, reworking, repairing, replacing, or modifying the item.

   3. Those documents which would be of significant value in determining the cause of an accident or malfunction of an item.

   4. Those documents which provide baseline data for inservice inspection.

   5. Those documents which show evidence that safety-related activities were performed in accordance with applicable requirements.

b. Receipt of individual records will be acknowledged only when requested by the forwarding organization at the time of final transfer.

c. ANSI N 45.2.9-1974 states that a records storage facility's structure, doors, frames and hardware should be Class A Fire Rated, with a recommended four-hour minimum rating. The record storage facilities at WCGS have a two hour minimum rating.

The Westinghouse position for all of WRD, except the NFD on Regulatory Guide 1.88, is presented in WCAP-8370, "WRD Quality Assurance Plan." For activities which occurred during the period from January 1, 1975 to September 30, 1977, the position is presented in WCAP-8370, Revision 7A. For activities which occurred from October 1, 1977 to October 31, 1979, the position is

presented in WCAP-8370, Revision 8A. For activities which occur after October 31, 1979, the position is presented in WCAP-8370, Revision 9A. The Nuclear Fuel Division position on this regulatory guide is presented in Revision 4A of WCAP-7800, "NFD Quality Assurance Program Plan."

Where the duplicate storage of microfilm is employed, the storage environment is uniquely controlled but is the prevailing Operating Agent building temperature and humidity.

Magnetic disks are used for record purposes in accordance with the quality controls prescribed in NRC Regulatory Issue Summary 2000-18, Guidance on Managing Quality Assurance Records in Electronic Media.

REGULATORY GUIDE 1.89 REVISION 1 DATED 6/84

Qualification of Class IE Equipment for Nuclear Power Plants

DISCUSSION:

For Westinghouse nuclear steam supply system Class IE equipment, Westinghouse meets IEEE Standard 323-1974 (including the IEEE Standard 323a-1975 position statement of July 24, 1975) and this regulatory guide by an appropriate combination of any or all of the following: type testing, operating experience, and qualification by analysis. This commitment is satisfied by implementation of the final NRC-approved version of WCAP-8587, Revision 6A, as discussed in Section 3.11(N).

The recommendations of this regulatory guide are met for the balance-of-plant systems and components. However, as supported by the statement of consideration for 10 CFR 50.49 (Federal Register, Volume 48, P2731, January 21, 1983), the recommendations of this regulatory guide need not be applied for Class lE NSSS and BOP equipment located in a mild environment.

REGULATORY GUIDE 1.90 REVISION 1 DATED 8/77

Inservice Inspection of Prestressed Concrete Containment Structures with Grouted Tendons

DISCUSSION:

The recommendations of this regulatory guide are not applicable to WCGS, since the containment design does not utilize grouted tendons.

REGULATORY GUIDE 1.91 REVISION 1 DATED 2/78

Evaluations of Explosions Postulated to Occur on Transportation Routes Near Nuclear Power Plants

DISCUSSION:

Wolf Creek design conforms to the requirements of the regulatory guide.

Using this regulatory guide, there are no nearby railways, highways, or navigable waterways, consequently, there is no design-basis explosion. Refer to Section 2.2.3.

REGULATORY GUIDE 1.92 REVISION 1 DATED 2/76

Combining Modal Responses and Spatial Components in Seismic Response Analysis

DISCUSSION:

The recommendations of this regulatory guide are met. Refer to Sections 3.7(B).2.6, 3.7(B).2.7, 3.7(B).3.6, 3.7(B).3.7, 3.7(N).2.6, 3.7(N).2.7, 3.7(N).3.6, and 3.7(N).3.7.

REGULATORY GUIDE 1.92 REVISION 2 DATED 07/06

The analysis of the ESW Vertical Loop Chase structure and its attachment to the west face of the Control Building uses the recommendations from Regulatory Guide 1.92 Revision 2 for Seismic Response Analysis. Regulatory Guide 1.92 Revision 2 is also used to perform II/I analyses of some masonry walls.

REGULATORY GUIDE 1.93 REVISION 0 DATED 12/74

Availability of Electric Power Sources

DISCUSSION:

The recommendations of this regulatory guide are met as described in the Technical Specifications that were issued with the Operating License and subsequent amendments thereto.

REGULATORY GUIDE 1.94 REVISION 1 DATED 4/76

Quality Assurance Requirements for Installation, Inspection, and Testing of Structural Concrete and Structural Steel During the Construction Phase of Nuclear Power Plants

DISCUSSION:

The recommendations of this regulatory guide are met for structural concrete, structural steel, and other plant components as indicated by the applicable design documents with the following exceptions:

a. Bolts for friction type connections may be tightened using direct tension indicators in accordance with the AISC Specification for Structural Joints Using ASTM A 325 or A 490 bolts, approved May 8, 1974.

b. Section 5.4(1) of ANSI N45.2.5 does not apply. The requirement for the acceptance of tightened bolt assemblies is: "The length of the bolts shall be such that the point of the bolt will be flush with or outside of the face of the nut when completely installed."

REGULATORY GUIDE 1.95 REVISION 1 DATED 1/77

Protection of Nuclear Power Plant Control Room Operators Against an Accidental Chlorine Release

DISCUSSION:

The recommendations of this regulatory guide are met as described in Table 6.4-2.

REGULATORY GUIDE 1.96 REVISION 1 DATED 6/76

Design of Main Steam Isolation Valve Leakage Control Systems for Boiling Water Reactor Nuclear Power Plants

DISCUSSION:

The recommendations of this regulatory guide are not applicable to a PWR.

REGULATORY GUIDE 1.97 REVISION 2 DATED 12/80

Instrumentation for Light-Water-Cooled Nuclear Power Plants to Assess Plant Conditions During and Following an Accident

DISCUSSION:

The recommendations of this regulatory guide are discussed in Appendix 7A.

REGULATORY GUIDE 1.98 REVISION 0 DATED 3/76

Assumptions Used for Evaluating the Potential Radiological Consequences of a Radioactive Offgas System Failure in a Boiling Water Reactor

DISCUSSION:

The recommendations of this regulatory guide are not applicable to a PWR.

REGULATORY GUIDE 1.99 REVISION 2 DATED 5/88

Radiation Damage to Reactor Vessel Materials.

DISCUSSION:

Wolf Creek Generating Station (WCGS) will comply with the regulatory requirements and position (Generic Letter 88-11) delineated in Regulatory Guide 1.99 Revision 2 in updating plant operating limits and procedures.

REGULATORY GUIDE 1.100 REVISION 1 DATED 8/77

Seismic Qualification of Electric Equipment for Nuclear Power Plants

DISCUSSION:

The Westinghouse program for seismic qualification of safety-related electric equipment is discussed in Section 3.10(N). The balance-of-plant implementation of this regulatory guide is discussed in Section 3.10(B).

REGULATORY GUIDE 1.101 REVISION 1 DATED 3/77

Emergency Planning for Nuclear Power Plants

DISCUSSION:

The Radiological Emergency Response Plan has been developed and follows the general guidelines of Regulatory Guide 1.101. The WCGS Fire Protection Program outlines the measures to be implemented to ensure the proper organization, training and equipping of the fire brigade. The Fire Protection Program is based on the guidance of RG 1.101, Rev 1.

REGULATORY GUIDE 1.101 REVISION 2 DATED 10/81

Emergency Planning and Preparedness for Nuclear Power Reactors

DISCUSSION:

The Radiological Emergency Response Plan (RERP) has been developed and follows the general guidelines of Regulatory Guide 1.101. The RERP is based on the guidance of RG 1.101, Rev 2. See Section 13.3 for further discussion.

REGULATORY GUIDE 1.102 REVISION 1 DATED 9/76

Flood Protection for Nuclear Power Plants

DISCUSSION:

In regard to Position C.3, the roofs of the WCGS seismic Category I structures have no parapets or any other similar features that would induce loading in excess of the design basis in the event that the roof drains could not discharge the maximum precipitation intensities of the PMP.

WCGS is above the PMF levels as discussed in Sections 2.4.10 and 3.4.

REGULATORY GUIDE 1.103 REVISION 1 DATED 10/76

Post-Tensioned Prestressing Systems for Concrete Reactor Vessels and Containments

DISCUSSION:

The recommendations of this regulatory guide are met. The post-tensioned prestressing system described in Section 3.8.1 has been reviewed and approved by the NRC in previous plant applications.

REGULATORY GUIDE 1.104 REVISION 0 DATED 2/76

Overhead Crane Handling Systems for Nuclear Power Plants

DISCUSSION:

This regulatory guide has been withdrawn by the NRC.

REGULATORY GUIDE 1.105 REVISION 1 DATED 11/76

Instrument Setpoints

DISCUSSION:

For instrumentation not provided with the NSSS, the recommendations of this regulatory guide are met as described in Table 7.1-6.

For the instrumentation provided with the NSSS, the recommendations of this regulatory guide are met as described below.

Westinghouse setpoint studies provide an allowance from the nominal trip setpoint to the technical specification allowable value to account for drift when measured at the rack during periodic testing, rack calibration accuracy, and rack comparator setting accuracy. The allowances between the technical specification allowable value and the safety analysis limit include the following items: a) the inaccuracy of the instrument, b) process measurement accuracy, c) uncertainties in the calibration, d) the potential transient overshoot determined in the accident analyses (this may include compensation for the dynamic effect), and e) environmental effects on equipment accuracy caused by postulated or limiting postulated events (only for those systems required to mitigate consequences of an accident). Westinghouse designers choose setpoints, such that the accuracy of the instrument is adequate to meet the assumptions of the safety analysis.

The range of instruments is chosen, based on the span necessary for the instrument's function. Narrow range instruments are used where necessary. Instruments are selected, based on expected environmental and accident conditions. The need for qualification testing is evaluated and justified on a case basis.

Administrative procedures coupled with the present cabinet alarms and/or locks provide sufficient control over the setpoint adjustment mechanism, so that no integral setpoint securing device is required. Integral setpoint locking devices are not supplied.

The assumptions used in selecting the setpoint values in Regulatory Position C.1, and the minimum margin with respect to the safety analysis limit and calibration uncertainty are documented by Westinghouse. Drift rates and their relationship to testing intervals are not documented by Westinghouse.

REGULATORY GUIDE 1.106 REVISION 1 DATED 3/77

Thermal Overload Protection for Electric Motors on Motor-Operated Valves

DISCUSSION:

The recommendations of this regulatory guide are met. Refer to Section 8.3.1.1.2.e.

REGULATORY GUIDE 1.107 REVISION 1 DATED 2/77

Qualifications for Cement Grouting for Prestressing Tendons in Containment Structures

DISCUSSION:

The recommendations of this regulatory guide are not applicable to WCGS, since a prestressing system using ungrouted tendons is used.

REGULATORY GUIDE 1.108 REVISION 1 DATED 8/77

Periodic Testing of Diesel Generator Units Used As Onsite Electric Power Systems at Nuclear Power Plants

DISCUSSION:

The recommendations of this regulatory guide were met with regard to the periodic testing of standby diesel generators at WCGS following initial licensing of the facility. However, since the adoption of the Improved Technical Specifications at WCGS per Amendment No. 123, periodic testing of the standby diesel generators has been based on the requirements and/or recommendations of Revision 3 of Regulatory Guide 1.9, Improved Standard Technical Specifications, and approved changed to the plant Technical Specifications in lieu of Regulatory Guide 1.108. Further, Regulatory Guide 1.108 was withdrawn by the NRC in 1993 (58 FR 41813, 8/5/93) in light of the guidance provided in Regulatory Guide 1.9, Revision 3, which largely incorporated and superseded the guidance of Regulatory Guide 1.108. Refer to Section 8.1.4.3 and plant Technical Specifications.

REGULATORY GUIDE 1.109 REVISION 1 DATED 10/77

Calculation of Annual Doses to Man from Routine Releases of Reactor Effluents for the Purpose of Evaluating Compliance with 10 CFR Part 50, Appendix I.

DISCUSSION:

The recommendations of this regulatory guide are met as described in Section 11.2.

REGULATORY GUIDE 1.110 REVISION 0 DATED 3/76

Cost-Benefit Analysis for Radwaste Systems for Light-Water-Cooled Nuclear Power Reactors

DISCUSSION:

During the construction permit stage, the radwaste systems and equipment were demonstrated to have satisfied the Guides on Design Objectives (RM-50-2), hence no cost-benefit analysis is required.

REGULATORY GUIDE 1.111 REVISION 1 DATED 7/77

Methods for Estimating Atmospheric Transport and Dispersion of Gaseous Effluents in Routine Releases from Light-Water-Cooled Reactors

DISCUSSION:

The recommendations of this regulatory guide are met as described in Section 2.3.

REGULATORY GUIDE 1.112 REVISION 0-R DATED 5/77

Calculation of Releases of Radioactive Materials in Gaseous and Liquid Effluents from Light-Water-Cooled Power Reactors

DISCUSSION:

The recommendations of this regulatory guide are met as described in Table 11.1-3.

REGULATORY GUIDE 1.113 REVISION 1 DATED 4/77

Estimating Aquatic Dispersion of Effluents from Accidental and Routine Reactor Releases for the Purpose of Implementing Appendix I

DISCUSSION:

The recommendations of this regulatory guide are met as described in Section 11.2.

REGULATORY GUIDE 1.114 REVISION 1 DATED 11/76

Guidance on Being Operator at the Controls of a Nuclear Power Plant

DISCUSSION:

The recommendations of this regulatory guide are met. Refer to Section 13.1.

REGULATORY GUIDE 1.115 REVISION 1 DATED 7/77

Protection Against Low-Trajectory Turbine Missiles

DISCUSSION:

The recommendations of this regulatory guide are met. Refer to Section 3.5.

REGULATORY GUIDE 1.116 REVISION 0-R DATED 5/77

Quality Assurance Requirements for Installation, Inspection, and Testing of Mechanical Equipment and Systems

DISCUSSION:

The Operating Agent complies with the recommendations of this regulatory guide with the clarification that at WCGS the adequacy of protective measures for items in storage is verified by Warehouse, Quality Control and Quality Assurance personnel on an audit/surveillance basis (ANSI N45.2.8, Section 3.4.1).

WCGS warehouse personnel are responsible for tracking and implementation of the warehouse storage/maintenance program. Additionally, warehouse personnel perform regular inspections of storage areas for cleanliness and orderliness.

The Operating Agent Quality Control personnel perform inspections of maintenance activities as prescribed in approved procedures. Additionally, Quality Control personnel perform periodic surveillance inspections of storage areas for compliance to applicable requirements.

The Operating Agent Quality Assurance personnel perform periodic audits and surveillances of warehouse storage/maintenance activities to assure compliance to applicable requirements.

REGULATORY GUIDE 1.117 REVISION 1 DATED 4/78

Tornado Design Classification

DISCUSSION:

The recommendations of this regulatory guide are met. Refer to Section 3.3.

REGULATORY GUIDE 1.118 REVISION 2 DATED 6/78

Periodic Testing of Electric Power and Protection Systems

DISCUSSION:

For the systems not provided with the NSSS, the recommendations of this regulatory guide are met as described in Table 7.1-7.

For systems provided with the NSSS, Westinghouse follows the recommendations of the regulatory guide with the following exceptions:

Westinghouse defines "Protective Action Systems" to mean the electric instrumentation and controls portions of those protection systems and equipment actuated and controlled by the protection system.

Equipment performing control functions, but actuated from protection system sensors, is not part of the safety system and will not be tested for time response.

Status, annunciating, display, and monitoring functions, except those related to the post-accident monitoring system (PAMS), are considered by Westinghouse to be control functions. Reasonability checks, i.e., comparison between or among similar such display functions, will be made.

Response time testing for control functions operated from system sensors are not performed. Moreover, NIS detectors are not tested for time response, since their worst case response time is not a significant fraction of the total overall system response (i.e., less than 5 percent). Despite the fact that this exemption is no longer permitted by IEEE-338 (1977 version), Westinghouse believes that it is valid.

Refer to Section 7.1.2.6.2 for additional discussions on response time testing of protection sensors.

REGULATORY GUIDE 1.119 REVISION NA DATED NA

Surveillance Programs for New Fuel Assembly Designs

DISCUSSION:

This regulatory guide has been withdrawn by the NRC.

REGULATORY GUIDE 1.120 REVISION 1 DATED 11/77

Fire Protection Guidelines for Nuclear Power Plants

DISCUSSION:

The recommendations of this regulatory guide are discussed in Section 9.5.1.

REGULATORY GUIDE 1.121 REVISION 0 DATED 8/76

Bases for Plugging Degraded PWR Steam Generator Tubes

DISCUSSION:

Position C.1: The term "unacceptable defects" is interpreted to apply to those imperfections resulting from service-induced mechanical or chemical degradation of the tube walls which have penetrated to a depth in excess of the plugging limit.

Positions C.2.a(2) and C.2.a(4): The major exception is the margin of three against tube failure for normal operation. Westinghouse defines tube failure as plastic deformation of a crack to the extent that the sides of the crack open to a nonparallel, elliptical configuration. The tubing can sustain added internal pressure beyond those values before reaching a condition of gross failure. We have interpreted this to apply as an operating limit for the plant and consider that it introduces a conflict to the established conditions for plant operation, as identified in the plant technical specifications. A factor of three is quite often used in ASME Code design guidelines. These Code practices apply to the design of hardware and to the analyses done on these designs. Conditions which occur during operation of the equipment and which may affect the equipment so that design values no longer apply are not directly addressed by the initial Code requirements. That is one reason that plant Technical Specifications have been generated -- to establish safe limits of operation for power station equipment. The ASME Code is not applicable to the operational criteria of steam generator tubing. Our tubing design and tubing in the design condition has margins in excess of three. In summary, we satisfy the margin of three if it were used in a Code sense as a new equipment design. Moreover, we do not believe that this margin should be utilized as a limiting condition for normal operation.

Position C.2.b: In cases where sufficient inspection data exist to establish a degradation allowance, the rate used will be an average time-rate determined from the mean of the test data.

Positions C.3.d(1) and C.3.d(3): The combined effect of these requirements would be to establish a maximum permissible primary-to-secondary leak rate which may be below the threshold of detection with current methods of measurement. Westinghouse has determined the maximum acceptable length of a through-wall-crack, based on secondary pipe break accident loadings which are typically twice the magnitude of normal operating pressure loads. A leak rate associated with the crack size determined on the basis of accident loadings will be used.

Position C.3.e(6): Computer code names and references are supplied rather than the actual codes.

Position C.3.f: A minimum acceptable tube wall thickness (plugging limit), based on structural requirements and consideration of loadings, measurement accuracy, and, where applicable, a degradation allowance, has been established as discussed in this position and in accordance with the general intent of this guide. The analysis used to determine this value

is presented in WCAP 10043, "Steam Generator Tube Plugging Analysis for the Westinghouse Standardized Nuclear Unit Power Plant System (SNUPPS)." Analyses to determine the maximum acceptable number of tube failures during a postulated condition are normally done to entirely different bases and criteria and are not within the scope of this guide.

Where requirements for minimum wall are markedly different for different areas of the tube bundle, e.g., U-bend area versus straight length in Westinghouse designs, two plugging limits may be established to address the varying requirements in a manner which will not require unnecessary plugging of tubes.

REGULATORY GUIDE 1.122 REVISION 1 DATED 2/78

Development of Floor Design Response Spectra for Seismic Design of Floor-Supported Equipment or Components

DISCUSSION:

Regulatory Guide 1.122 states that peaks in floor response spectra associated with structural frequencies should be broadened. The amount of broadening required is equal to ±15 percent of the peak frequencies, unless a smaller amount (greater than or equal to ±10 percent is justified. The floor response spectra generated for the WCGS were broadened ±10 percent of all frequencies. Paragraph 11.2.b of Section 3.7.1 of the Standard Review Plan permits broadening by only ±10 percent as long as the time history analyses, from which the spectra are generated, explicitly account for the effect of soil property variation.

Since this project, by its multiple site criteria (three or four site enveloping), has accounted for variation in soil properties in its analysis, use of floor response spectra broadened by ±10 percent is acceptable.

REGULATORY GUIDE 1.123 REVISION 1 DATED 7/77

Quality Assurance Requirements for Control of Procurement of Items and Services for Nuclear Power Plants

DISCUSSION:

The Operating Agent complies with the recommendations of this regulatory guide.

REGULATORY GUIDE 1.124 REVISION 1 DATED 1/78

Service Limits and Loading Combinations for Class 1 Linear-Type Component Supports

DISCUSSION:

According to the NRC implementation guidance for this regulatory guide, it is not applicable to WCGS. However, the following discussion is provided for information purposes.

For ASME Section III components not supplied with the NSSS, the recommendations of this regulatory guide are met as discussed in Table 3.9(B)-14.

The Westinghouse position with respect to this regulatory guide is as follows.

a. The Regulatory Guide states in Paragraph B.1(b): "Allowable service limits for bolted connections are derived from tensile and shear stress limits and their nonlinear interaction; they also change with the size of the bolt. For this reason, the increases permitted by NF-3231.1, XVII-2110(a), and F-1370(a) of Section III are not directly applicable to allowable shear stresses and allowable stresses for bolts and bolted connections," and in Paragraph C.4: "This increase of level A or B service limits does not apply to limits for bolted connections."

   As noted above, the increase in bolt allowable stress under emergency and faulted conditions is not permitted. Westinghouse believes that the present ASME Code rules are adequate for bolted connections. This position is based on the following:

   It is recognized after extensive experimental work by several researchers that the interaction curve between the shear and tension stress in bolts is more closely represented by an ellipse and not a line. This has been clearly recognized by the ASME. Code Case 1644-6 specifies stress limits for bolts and represents this tension/shear relationship as a nonlinear interaction equation (incorporated into ASME III, Appendix XVII via the Winter 77 Addenda) and has a built-in safety factor that ranges between 2 and 3 (depending on whether the bolt load is predominantly tension or shear) based on the actual strength of the bolt as determined by test

(Ref: "Guide to Design Criteria of Bolted and Riveted Joints," Fisher and Struik, copyright 1974, John Wiley and Sons, Page 54).

Study of three interaction curves of allowable tension and shear stress based on the ASME Code (emergency condition allowables per XVII-2110 and faulted condition allowables per F-1370) and the ultimate tensile and shear strength of bolts (obtained from experimental work published by E. Chesson, Jr., N. L. Faustino, and W. H. Munse, "High Strength Bolts Subjected To Tension and Shear," Journal of the Structural Division, Proceedings of the American Society of Civil Engineers, October 1965, Pages 155-180) indicates that there is adequate safety margin between the emergency and faulted condition allowables and failure of the bolts.

During their tests to determine the strength and behavior characteristics of single high strength bolts subjected to various combinations of tension and shear (T-S), Chesson, et. al. used a total of 115 bolts to ASTM Specifications A 325-61T and A 354-Grade BC. The A 325-61T, which is a medium carbon steel, had a yield point of 77,000 psi to 88,000 psi and ultimate strength of 105,000 psi to 120,000 psi, depending upon the bolt diameter. The A 354-Grade BC, which is a heat treated carbon steel, had a yield point of 99,000 psig to 109,000 psi and ultimate strength from 115,000 psi to 125,000 psi, again depending upon the bolt diameter.

Figure 3A-1 shows the interaction curves for T-S loads on SA-325 bolts. Curve (1) represents the interaction relation (ellipse) permitted by Code Case 1644 (ASME III, Appendix XVII Winter 77 Addenda) for service levels A, B, and design condition. Curve (2) represents the interaction curve which considers the Code Case 1644 allowables and the increase permitted by XVII-2110(a) for service level C. Curve (3) represents the interaction curve which considers the Code Case 1644 allowables and the increase permitted by F-1370(a) for service level D. Curve (3) is the upper limit of the allowable stresses.

The design stress limits represented by Curves 1, 2, and 3 for A 325 bolts are then compared against the ultimate strength of the bolts represented by Curve 4, which is based on Chesson's test results. The area between Curve 3 and Curve 4 is the safety margin between the maximum bolt stress under service level D and minimum ultimate strength of the bolt.

Factor of safety against failure for A 325 bolts for various T-S ratios is shown in Figure 3A-2. The safety factor varies between a minimum of 1.36 and a maximum of 2.29, depending upon the value of T-S ratio. This is based upon the ultimate strength of the bolts from Chesson's test and the allowables obtained from Code Case 1644 and the increase permitted by F-1370(a) for service level D. Figure 3A-2 demonstrates that there exists an adequate factor of safety for the complete range of T-S loadings.

From this study it is observed that:

(1) For the emergency condition, the safety factor (ratio of ultimate strength to allowable stress) varies between a minimum of 1.63 and a maximum of 2.73, depending upon the actual tensile stress/shear stress (T/S) ratio on the bolt.

(2) For the faulted condition, the safety factor varies between a minimum of 1.36 to a maximum of 2.29, again depending upon actual T/S ratio on the bolt.

It is thus reasonable to allow an increase in these limits for the emergency and faulted conditions.

The Westinghouse design of component supports restricts the use of bolting material to the following applications:

(1) Westinghouse design uses bolting predominantly in tension. Oversized holes are generally provided, and a mechanism other than the bolts is provided to take any shear loads. Shear or shear and tension interaction occur only in isolated locations.

(2) Westinghouse bolts are limited to the following materials: A490, SA-354, SA-325, SA-540.

(3) The diameters used range between 1/2 inches and 3 inches.

For the emergency condition, Westinghouse will use allowable bolt stresses specified in Code Case 1644, as increased according to the provisions of XVII-2110(a).

For the faulted condition, tensile loads in the bolts shall be limited to 0.7 Su, but not to exceed in any case 0.9 Sy. The allowables are taken at temperature. In those few cases where bolts are used in shear or tension and shear, ASME Code Appendix XVII - 2460 Requirements will apply with an increase factor that is defined in Regulatory Guide 1.124 or in Appendix F-1370, whichever is more restrictive. This provides an adequate margin of safety for the Westinghouse design.

b. In Paragraphs B.5 and C.8 of the Regulatory Guide, Westinghouse takes exception to the requirement that systems whose safety-related function occurs during emergency or faulted plant conditions, must meet level B limits. The reduction of allowable stresses to no greater than level B limits (which in reality are design limits since design, level A, and level B limits are the same for linear supports) for support structures in those systems with safety-related functions occurring during emergency or faulted plant conditions is overly conservative. The primary concern is that the system remains capable of performing its safety function. For active components, this is accomplished through the operability program, as discussed in Section 3.9(N).3.2.

c. Paragraph C.6(a) of the Regulatory Guide appears confusing as to what stress limits may be increased for the emergency condition. Westinghouse will interpret this paragraph as follows: "The stress limits of XVII-2000 of Section III and Regulatory Position 3, increased according to the provisions of XVII-2110(a) of Section III and Regulatory Position 4, should not be exceeded for component supports designed by the linear elastic analysis method."

d. The method described in Paragraph C.7(b) of the Regulatory Guide is overly conservative and inconsistent with the stress limits presented in Appendix F. Westinghouse will use the provisions of F-1370(d) to determine service level D allowable loads for supports designed by the load rating method.

REGULATORY GUIDE 1.125 REVISION 1 DATED 10/78

Physical Models for Design and Operation of Hydraulic Structures and Systems for Nuclear Power Plants

DISCUSSION:

No physical models were used in the analysis of safety-related structures at WCGS.

REGULATORY GUIDE 1.126 REVISION 1 DATED 3/78

An Acceptable Model and Related Statistical Methods for the Analysis of Fuel Densification

DISCUSSION:

WCGS uses the Westinghouse PAD 3.4 code for fuel performance analysis. The fuel performance models in PAD 3.4 are described in "Improved Fuel Performance Models for Westinghouse Fuel Rod Design and Safety Evaluations," WCAP-10851-P-A (Proprietary), August 1988. This methodology was approved by the Nuclear Regulatory Commission in the Safety Evaluation Report on Westinghouse Topical Report WCAP-10851, "Improved Fuel Performance Models for Westinghouse Fuel Rod Design and Safety Evaluations," dated May 9, 1988. PAD 3.4 incorporates a revised fuel solid swelling and densification model. This model remains relatively unchanged from previous models at low burnups, but predicts a lower volume change in the fuel at higher burnups. The Safety Evaluation Report states "the PAD 3.4 fuel swelling and densification model provides a reasonably good prediction within the range of intended use and thus is acceptable for use in safety analyses."

REGULATORY GUIDE 1.127 REVISION 1 DATED 3/78

Inspection of Water-Control Structures Associated with Nuclear Power Plants

DISCUSSION:

The recommendations of this regulatory guide are met. Refer to Section 2.5.

REGULATORY GUIDE 1.128 REVISION 1 DATED 10/78

Installation Design and Installation of Large Lead Storage Batteries for Nuclear Power Plants

DISCUSSION:

The recommendations of this regulatory guide are met. Refer to Section 8.3.2.2.1.

REGULATORY GUIDE 1.129 REVISION 1 DATED 2/78

Maintenance, Testing, and Replacement of Large Lead Storage Batteries for Nuclear Power Plants

DISCUSSION:

This regulatory guide endorses IEEE Standard 450-1975. Amendment No. 123 to the Operating License approved the conversion to the improved Standard Technical Specification. The Bases for Technical Specification 3.8.4 endorsed IEEE Standard 450-1995. The guidance of the 1995 version will be followed. Refer to Section 8.3.2.2.1.

REGULATORY GUIDE 1.130 REVISION 1 DATED 10/78

Service Limits and Loading Combinations for Class 1 Plate-and-Shell-Type Component Supports

DISCUSSION:

According to the NRC implementation guidance for this regulatory guide, it is not applicable to WCGS. However, the following discussion is provided for information purposes.

For ASME Section III components not furnished with the NSSS, the Class 1 supports are of the linear type and not the plate and shell type. Therefore, this regulatory guide does not apply.

The Westinghouse position with respect to this regulatory guide is as follows.

a. Paragraph B.1 states that increases are not allowed for bolted connections for emergency and faulted conditions. The Westinghouse position is that it is reasonable to allow an increase in the limits for bolted connections for these conditions. Further justification concerning this position can be found in Item 1 of the discussion on Regulatory Guide 1.124.

b. The method described in Paragraph C.7(b) of the Regulatory Guide is overly conservative and inconsistent with the stress limits presented in Appendix F. Westinghouse will use the provisions of F-1370(d) to determine service level D allowable loads for supports designed by the load rating method.

REGULATORY GUIDE 1.131 REVISION 0 DATED 8/77

Qualification Tests of Electric Cables, Field Splices, and Connections for Light-Water-Cooled Nuclear Power Plants

DISCUSSION:

The recommendations of this regulatory guide are met with the exceptions noted in Section 8.1.4.3.

Stainless steel clad fire-resistive cables are type tested to ensure qualification for use in safety-related circuits. Due to the materials and construction of the fire-resistive cables, the guidance in Regulatory Guide 1.131 is not applicable to these cables.

REGULATORY GUIDE 1.132 REVISION 1 DATED 3/79

Site Investigations for Foundations of Nuclear Power Plants

DISCUSSION:

The intent of this regulatory guide is met. The only exception to the recommendation of the guide is the use of the Dames & Moore Sampler for overburden soils. No seismic Category I structures are founded in overburden soils. Refer to Section 2.5.

REGULATORY GUIDE 1.133 REVISION 1 DATED 5/81

Loose-Part Detection Program for the Primary System of Light-Water-Cooled Reactors

DISCUSSION:

The recommendations of this regulatory guide are met, with the exception of Regulatory Position 5, Technical Specification for the Loose Part Detection System. This technical specification was relocated to the USAR, in accordance with the improvements endorsed in the Nuclear Regulatory Commission's Final Policy Statement on Technical Specification Improvements for Nuclear Power Reactors, 58 FR 39132, July 22, 1993. This specification has since been relocated to the Technical Requirements Manual (TRM). In addition, the relocated specification (TR 3.3.13) does not provide the location of the sensors (Regulatory Position 5.1), and the requirement to submit a Special Report to the NRC (Regulatory Position 5.b) has been deleted. Refer to Sections 4.4.6.4 of the USAR, and TR 3.3.13 of the TRM.

REGULATORY GUIDE 1.134 REVISION 2 DATED 4/87

Medical Evaluation of Nuclear Power Plant Personnel Requiring Operator Licenses

DISCUSSION:

The recommendations of this regulatory guide are met and are administratively controlled.

REGULATORY GUIDE 1.135 REVISION 0 DATED 9/77

Normal Water Level and Discharge at Nuclear Power Plants

DISCUSSION:

The recommendations of this regulatory guide are met. Refer to Section 2.4.

REGULATORY GUIDE 1.136 REVISION 1 DATED 10/78

Material for Concrete Containments

DISCUSSION:

The recommendations of Section 3.8.1.6 are used in lieu of the recommendations of this regulatory guide, which generally endorses ACI Standard 359-74.

REGULATORY GUIDE 1.137 REVISION 0 DATED 1/78

Fuel-Oil Systems for Standby Diesel Generators

DISCUSSION:

The recommendations of this regulatory guide are met as described in Table 9.5.4-3.

REGULATORY GUIDE 1.138 REVISION 0 DATED 4/78

Laboratory Investigations of Soils for Engineering Analysis and Design of Nuclear Power Plants

DISCUSSION:

The recommendations of this regulatory guide are met as discussed in Section 2.5.

REGULATORY GUIDE 1.139 REVISION 1, Draft 2 DATED 2/80

Guidance for Residual Heat Removal

DISCUSSION:

The recommendations of this regulatory guide are met as described in Section 7.4.

REGULATORY GUIDE 1.140 REVISION 0 DATED 3/78

Design, Testing, and Maintenance Criteria for Normal Ventilation Exhaust System Air Filtration and Adsorption Units of Light-Water-Cooled Nuclear Power Plants

DISCUSSION:

The recommendations of this regulatory guide are met as described in Table 9.4-3.

Activated charcoal is furnished in accordance with ANSI N509-1980.

REGULATORY GUIDE 1.141 REVISION 0 DATED 4/78

Containment Isolation Provisions for Fluid Systems

DISCUSSION:

The recommendations of this regulatory guide are met as described in Table 6.2.4-2.

REGULATORY GUIDE 1.142 REVISION 0 DATED 4/78

Safety-Related Concrete Structures for Nuclear Power Plants (Other Than Reactor Vessels and Containments)

DISCUSSION:

The recommendations of this regulatory guide, which generally endorses ACI-349-76, have not been applied to the design of safety-related concrete structures of the power block. The procedures and requirements described in ACI 318-71, Building Code Requirements for Reinforced Concrete, along with the exceptions, clarifications, and additions described in Sections 3.8.3, 3.8.4, and 3.8.5, have been used instead.

REGULATORY GUIDE 1.143 REVISION 0 DATED 7/78

Design Guidance for Radioactive Waste Management Systems, Structures, and Components Installed in Light-Water-Cooled Nuclear Power Plants

DISCUSSION:

The recommendations of this regulatory guide are met as described in Table 3.2-5.

REGULATORY GUIDE 1.144 REVISION 1 DATED 9/80

Auditing of Quality Assurance Programs for Nuclear Power Plants

DISCUSSION:

The recommendations of this regulatory guide are met, the following is provided as clarification:

Section 4.5.1 of ANSI N45.2.12-1977 states in part, "In the event that corrective action cannot be completed within thirty days, the audited organization's response shall include a scheduled date for the corrective action." WCNOC satisfies this requirement by using the following process:

Audit findings are documented using the WCNOC corrective action process (PIRs). As part of the WCNOC corrective action process PIRs are assigned a scheduled completion date for non-significant or a date for completion of the root cause and planned corrective action for significant PIRs prior to the responsible organization receiving it. This tracking system tracks the status of the finding through to closure.

REGULATORY GUIDE 1.145 REVISION 0 DATED 8/79

Atmospheric Dispersion Models for Potential Accident Consequence Assessments at Nuclear Power Plants

DISCUSSION:

The recommendations of this regulatory guide are met as discussed in Section 2.3.

REGULATORY GUIDE 1.146 REVISION - DATED 8/80

Qualification of Quality Assurance Program Audit Personnel for Nuclear Power-Plants.

DISCUSSION:

The recommendations of this regulatory guide are met, the following is provided as clarification:

ANSI N45.2.23 Section 2.3.4 states in part "The prospective Lead Auditor shall have participated in a minimum of five (5) quality assurance audits within a period of time not to exceed three (3) years prior to the date of qualification, one audit of which shall be a nuclear quality assurance audit within the year prior to his certification."

Wolf Creek will ensure that prospective Lead Auditors demonstrate their ability to effectively implement the audit process and effectively lead an audit team. This process is described in written procedures, which provide for evaluation and documentation of the results of this demonstration. A prospective Lead Auditor shall have participated in at least one nuclear quality assurance audit within the year preceding the individual's date of qualification. Upon successful demonstration of the ability to effectively implement the audit process and effectively lead audits, and having met the other provision of Section 2.3 of ANSI/ASME N45.2.23-1978, the individual may be certified as being a Lead Auditor.

REGULATORY GUIDE 1.147 CURRENT REVISION INCORPORATED BY REFERENCE IN 10CFR50.55a

Inservice Inspection Code Case Acceptability, ASME Section _XI, Div. 1

DISCUSSION:

Regulatory Guide 1.147 lists those ASME Section XI Code Cases that are acceptable to the NRC staff for implementation in the inservice inspection of nuclear power plants. The Operating Agent, in letter WM 87-0140 dated June 2, 1987, requested NRC approval of the use of code cases listed in Regulatory Guide 1.147 at WCGS. In that letter, the Operating Agent stated that the code cases actually used would be identified in the Section XI program and properly reviewed to ensure an acceptable level of quality and safety. On August 17, 1987, the NRC approved the request to use Regulatory Guide 1.147 Code Cases as long as a revision of the Inservice Inspection Program is made whenever a code case is implemented. Additionally, beginning June 2003, Regulatory Guide 1.192 lists NRC approved OM Code Cases that may be applied for inservice testing.

The Inservice Inspection Program at WCGS consists of subtier programs covering inservice inspection and examination, inservice testing of pumps and valves, and repair/replacement of Section XI components. When a Regulatory Guide 1.147 or 1.192 approved Code Case is initially applied, its use will be reviewed for acceptability and for conformance to 10 CFR 50.55a(b)(5) or (6) and Regulatory Guide 1.147 or 1.192 and specifically identified by revision to the appropriate subtier program document. When later revisions to Regulatory Guide 1.147 or 1.192 are issued by the NRC and incorporated by reference in 10 CFR 50.55a(b)(5) or (6), the latest revision in effect at the time a code case is desired to be initially applied will be utilized by the Operating Agent in determining the NRC approved Code Cases and implementation instructions.

Continued use of previously applied Code Cases is in accordance with the requirements of 10 CFR 50.55a(b)(5) or (6). Any Section XI or OM Code Case not approved in Regulatory Guide 1.147 or 1.192 will have specific approval from the NRC prior to implementation and incorporation into the appropriate subtier program document. Regulatory Guide 1.193, "ASME Code Cases Not Approved for use," lists Code Cases that the NRC has determined to be unacceptable for use on a generic basis, including a brief basis for such determination.

REGULATORY GUIDE 1.149 REVISION 4 DATED 4/11

Nuclear Power Plant Simulation Facilities for Use in Operator License Examinations

DISCUSSION:

The WCGS simulator was certified in accordance with 10 CFR 55.45 in January 1989. Training maintains the simulation facility in accordance with the provisions of 10 CFR 55.

REGULATORY GUIDE 1.150 REVISION 1 DATED 2/83

Ultrasonic Testing of Reactor Vessel Welds During Preservice and Inservice Examinations

DISCUSSION:

The recommendations of this regulatory guide are met as described in Section 5.2.4.

REGULATORY GUIDE 1.155 REVISION 0 DATED 8/88

Station Blackout

DISCUSSION:

The recommendations of this regulatory guide are met as described in Appendix 8.3A.

REGULATORY GUIDE 1.160 REVISION 3 DATED 5/12

Monitoring the Effectiveness of Maintenance at Nuclear Power Plants

DISCUSSION:

The recommendations of this regulatory guide are met. The Emergency Diesel Generator Reliability Program is consistent with the provisions of 10 CFR 50.65 and the guidance of Regulatory Guide 1.160. Reference letter ET 95-0099, dated September 15, 1995.

REGULATORY GUIDE 1.163 REVISION 0 DATED 9/95

Performance-Based Containment Leak-Test Program

As modified by the following exceptions:

1. The visual examination of containment concrete surfaces intended to fulfill the requirements of 10 CFR 50, Appendix J, Option B testing, will be performed in accordance with the requirements and frequency specified by ASME Section XI code Subsection IWL, except where relief has been authorized by the NRC.

2. The visual examination of the steel liner plate inside containment intended to fulfill the requirement of 10 CFR 50, Appendix J, Option B testing, will be performed in accordance with the requirements and frequency specified by ASME Section XI code, Subsection IWE, except where relief has been authorized by the NRC.

DISCUSSION:

The recommendations of this regulatory guide are met as described in Section 6.2.6.

REGULATORY GUIDE 1.166 REVISION 0 DATED 3/97

Pre-Earthquake Planning and Immediate Nuclear Power Plant Operator Postearthquate Actions

The recommendations of this regulatory guidance are met, except for the following:

1. WCGS is not subject to the requirements of Appendix S to 10 CFR Part 50. WCGS will continue to use appendix A to 10 CFR Part 100.

REGULATORY GUIDE 1.167 REVISION 0 DATED 3/97

Restart of a Nuclear Power Plant Shut Down by a Seismic Event

DISCUSSION:

The recommendations of this Regulatory Guide are met.

REGULATORY GUIDE 1.181 REVISION 0 DATED 9/99

Content of the Updated Final Safety Analysis Report in Accordance With 10 CFR 50.71(e)

DISCUSSION:

NEI 98-03, Revision 1, "Guidelines for Updating FSARs," was endorsed by this regulatory guide without exception. NEI 98-03, Revision 1, provides guidance for updating the USAR consistent with 10 CFR 50.71(e), and provides for making voluntary modifications to the USAR (i.e., removal, reformatting, and simplification of information, as appropriate) to improve focus, clarity and maintainability.

WCNOC currently utilizes NEI 98-03 as guidance for determining what information in the USAR is to be updated, to what level of detail the update needs to reflect, and what type of information may be removed from the USAR.

(Refer to discussion on Regulatory Guide 1.70, Revision 3, for background information.)

REGULATORY GUIDE 1.187 REVISION 0 DATED 11/00

Guidance for Implementation of 10 CFR 50.59, Changes, Tests, and Experiments

DISCUSSION:

NEI 96-07, Revision 1, "Guidelines for 10 CFR 50.59 Implementation," was endorsed by this regulatory guide without exception. NEI 96-07 provides guidance and examples to aid in the application of the revised regulation to plant activities. WCNOC currently uses NEI 96-07 as a basis for the procedures, forms and guidance for implementation of the regulation. However, WCNOC has taken some minor exceptions to the guidance.

First, WCNOC reports on an annual basis evaluations performed and approved by the PSRC within a calendar year regardless of implementation status. This method of reporting is conservative in approach and has been the established format since licensing.

Second, WCNOC has broadened the use of administrative changes to consider the activity rather than the type of document containing the activity. In essence then, Operating procedures may screen out of 50.59 if the change is administrative.

Finally, WCNOC's commitment to Generic Letter 83-11, Supplement 1 are limited therefore, WCNOC will not utilize that allowance to the extent described in NEI 96-07.

REGULATORY GUIDE 1.192 CURRENT REVISION INCORPORATED BY REFERENCE IN 10CFR50.55a

Operation and Maintenance Code Case Acceptability, ASME OM Code

DISCUSSION:

Refer to the discussion on Regulatory Guide 1.147 for ASME OM Code Cases for use in the second interval of the inservice testing program.

REGULATORY GUIDE 1.196 REVISION 0 DATED 5/03

Control Room Habitability at Light - Water Nuclear Power Plants

DISCUSSION:

The Control Room Habitability Program in Technical Specification 5.5.18 is consistent with the guidance of TSTF-448, Revision 3, which incorporates the specific aspects of Regulatory Guide 1.196.

The recommendations of this regulatory guide are met for configuration control and preventive maintenance of the control room envelope (CRE) boundary.

REGULATORY GUIDE 1.197 REVISION 0 DATED 5/03

Demonstrating Control Room Envelope Integrity at Nuclear Power Reactors

DISCUSSION:

The Control Room Envelope Habitability Program in Technical Specification 5.5.18 is consistent with the guidance of TSTF-448, Revision 3, which incorportes specific aspects of Regulatory Guide 1.197. An exception to Section C.1 and C.2 is taken in that the Tracer Gas Test based on the Brookhaven National Laboratory Atmospheric Tracer Depletion (ATD) Method is used to determine the unfiltered air inleakage past the control room envelope and control building envelope boundaries.

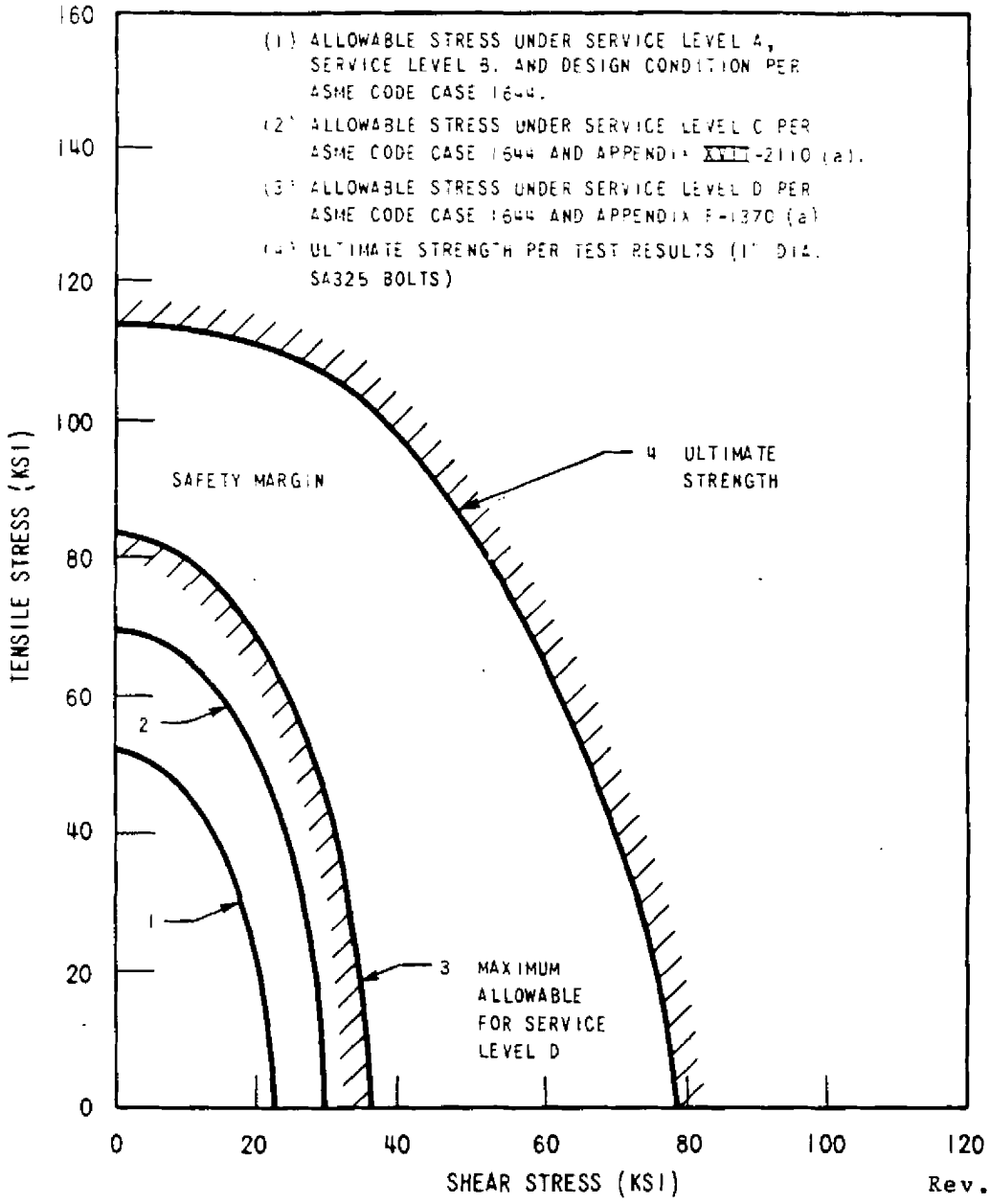

Rev. 0

WOLF CREEK
UPDATED SAFETY ANALYSIS REPORT

FIGURE 3A-1

COMPARISON OF TENSILE STRESS FOR BOLTS

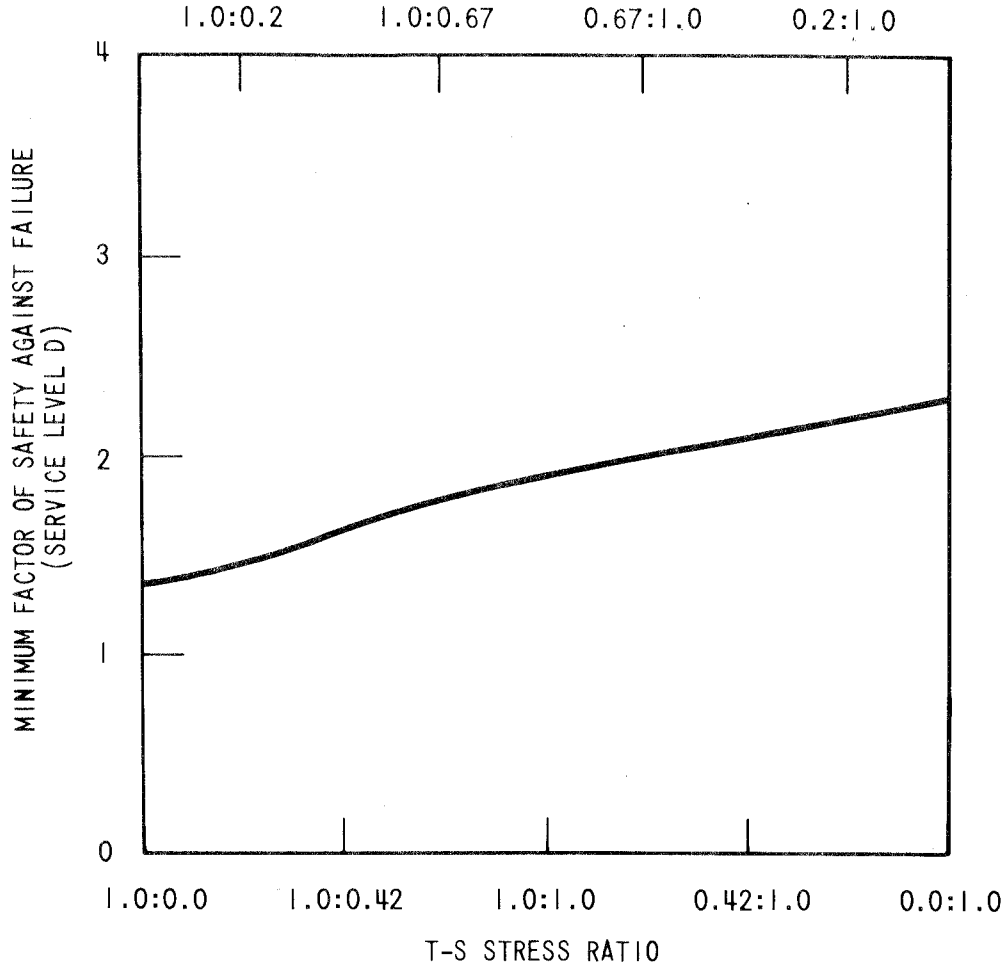

Rev. 0

WOLF CREEK
UPDATED SAFETY ANALYSIS REPORT

FIGURE 3A-2

FACTOR OF SAFETY AGAINST FAILURE UNDER SERVICE LEVEL D AS A FUNCTION OF T-S RATIO

APPENDIX 3B

HAZARDS ANALYSIS

3B.1 INTRODUCTION

The WCGS powerblock has been designed to provide protection for safety-related equipment from hazards and events which could reasonably be expected to occur. This protection is provided to ensure that recovery from the event is possible, to ensure the integrity of the reactor coolant pressure boundary, to minimize the release of radioactivity, and to enable the plant to be placed in a safe condition.

This appendix provides the results of integrated hazards analyses for selected areas of the plant to demonstrate the type of analyses conducted for each safety-related area of the plant to ensure that WCGS can withstand the postulated events. Analyses are also provided for the effects of a pipe rupture in the main steam line compartment, the effects of pipe ruptures in the auxiliary feedwater pump rooms, and the effects of a circulating water pipe expansion joint rupture.

Table 3B-1 provides the details of a typical integrated hazards analysis using the 1974 elevation of the auxiliary building as an example. Since this table is intended only to show a typical hazards analysis, it will not be updated to reflect the as-built plant.

The items considered in the evaluation of each plant area include wind and tornadoes, floods, missiles, pipe breaks, fires, and seismic events. (Refer to Sections 3.3 through 3.7, 9.5.1 and Appendix 9.5B.) Even though each area of the plant and each system is designed individually to properly consider the above events, an integrated analysis of rooms, systems, and events is performed to ensure that the above objectives are realized for each postulated event.

The hazards analyses are conducted on a room by room basis. All components within the room are reviewed for the effects of earthquake-induced failures, effects of high and moderate energy piping breaks (flooding, sprays, and jet impingement), and the effects of missiles.

The effects of the high energy breaks on equipment are reported in Section 3.6.2.5. Fire protection and the effects of fires in the various fire areas are discussed in Section 9.5.1 and Appendix 9.5B.

3B.2 ANALYSIS ASSUMPTIONS

In the analysis of an event or hazard, it is assumed that the plant will be operated in accordance with the requirements of the Technical Specifications. Should the event result in a turbine or reactor trip, the plant will be placed in a hot standby condition. If required by a Limiting Condition of Operation or if recovery from the event will cause the plant to be shut down for an extended period of time, the plant will be taken to a cold shutdown condition. Normal plant and post-accident safe shutdown are discussed in Section 7.4. Post-fire safe shutdown is discussed in Appendix 9.5B.

During the hot standby condition, an adequate heat sink is provided to remove reactor core residual heat. Boration capability is provided to compensate for xenon decay and to maintain the required core shutdown margin. Boration is required within 25 hours after reactor shutdown to maintain the reactor in a hot standby condition.

Redundancy or diversity of systems and components is provided to enable continued operation at hot standby or to cool the reactor to a cold shutdown condition. If required, it is assumed that temporary repairs can be made to circumvent damages resulting from the hazard. Loss of offsite power is not assumed, unless a trip of the turbine generator system or the reactor protection system is a direct consequence of the hazard. All available systems, including nonsafety-related systems and those systems requiring operator action, may be employed to mitigate the consequences of the hazard.

In determining the availability of the systems required to mitigate the consequences of a hazard and those required to place the reactor in a safe condition, the direct consequences of the hazard are considered. The feasibility of carrying out operator actions are based on ample time and adequate access to the controls, motor control center, switchgear, etc., associated with the component required to accomplish the proposed action.

When the postulated hazard occurs in and results in damage to one of two or more redundant or diverse trains, single failures of components in other trains (and associated supporting trains) are not assumed. The postulated hazard is precluded, by design, from affecting the opposite train or from resulting in a design basis accident. For the situation in which a hazard affects a safety-related component, the event and subsequent activities are governed by Technical Specification requirements in effect when that component is not functional.

3B.2.1 EARTHQUAKE ANALYSIS ASSUMPTIONS

When evaluating the effects of any earthquake, no other major hazard or event is assumed, and no seismic Category I equipment is assumed to fail as a result of the earthquake. Certain nonseismic Category I components are designed and constructed to ensure that their failure could not reduce the functioning of a safe shutdown component to an unacceptable safety level. This criterion meets the intent of Regulatory Guide 1.29, Position C.2. Evaluation of component failure includes drop impact forces and secondary effects, such as spray and flooding from piping failure.

Loss of offsite power is assumed following an SSE. An earthquake, as a single event, will affect the entire plant; hence, all the rooms dedicated to items associated with either safety-related trains are considered in total.

3B.2.2 PIPE BREAK ANALYSIS ASSUMPTIONS

All high and moderate energy lines whose failure could reduce the functioning of a safe shutdown component to an unacceptable safety level are evaluated for pipe breaks or cracks. Thrust forces, jet impingement forces, and environmental effects are considered. Section 3.6 provides a description of the location and types of breaks and the forcing functions that are considered for analyzing pipe breaks.

Evaluation of environmental effects of moderate energy pipe cracks has been made based on the characteristics of the flow from the postulated cracks. The locations of the cracks are discussed in Section 3.6.2.1. The evaluations include the effects of spraying or wetting safe shutdown equipment and the effect of flooding from the worst-case pipe crack in each room or general area. Flooding volumes are based on assuming automatic isolation or operator termination of flow to the pipe failure within a reasonable period after indication of the hazard. An interval of 30 minutes plus operator travel time to any station outside of the main control room is assumed.

3B.2.3 MISSILES ANALYSIS ASSUMPTIONS

There are two general sources of postulated internally-generated missiles outside the containment:

a. Rotating component failure

b. Pressurized component failure

Section 3.5 provides a description of the design bases for the selection of missiles. Table 3B-6 provides a listing of major missiles generated within the plant.

Analysis of impact from missiles that could be generated by rotating equipment or by the severance of a circumferential weld, causing the ejection of an unrestrained pipe section or dead end flange, is done for all rotating equipment and high-energy piping.

3B.2.4 FLOODING ANALYSIS ASSUMPTIONS

In the event of a pipe failure, sufficient flooding might result and jeopardize the function of safety-related equipment required to mitigate the consequences of the pipe break or to maintain the plant in a safe shutdown condition.

Flooding rates are based on the worst-case pipe failure in each safety-related room. The level of the flood water is based on automatic isolation or operator action after a reasonable delay time following indication of flow from the breaks or crack. The delay time is 30 minutes plus any time required for the operator to travel to a location outside of the control room.

Since the WCGS site is dry (PMF below site grade), flood water evaluations are not required. Section 3.4 demonstrates that ground water infiltration is not credible and need not be addressed in the analyses of the safety-related rooms. Roof drain failures due to seismic events and their failure as moderate energy pipe failures are postulated where required.

The equipment and floor drainage system is discussed in Section 9.3.3. All water released because of pipe breaks in the auxiliary building drains to the corridor at elevation 1974. Refer to Section 9.3.3.2.1.1 for a discussion of this design.

3B.3 PROTECTION MECHANISMS

The plant layout arrangement is based on maximizing the physical separation of redundant or diverse safety-related components and systems from each other and from nonsafety-related items. Therefore, in the event an accident occurs within the plant, there is minimal effect on other systems or components which are required for safe shutdown of the plant or to mitigate the consequence of the hazard.

Since it is not always feasible to provide separation in every hazard situation, other protection features are employed. These protection features include the following:

a. Structural enclosures

b. Structural barriers

c. Pipe whip restraints

d. Seismic restraints

e. Seismically designed components

f. Low stress levels

3B.4 HAZARDS EVALUATIONS

As stated above, Table 3B-1 provides a hazards evaluation of El. 1974 of the auxiliary building. Each room on that elevation is shown on Figure 3B-1 and has been reviewed to ensure that the integrated design of the plant acceptably addressed all postulated hazards. Since the evaluations for all safety-related areas are documented and available for audit, they are not provided in the USAR.

Specific evaluations of certain areas of the plant have been of licensing concern in the past. These evaluations are provided in the following paragraphs.

3B.4.1 AUXILIARY FEEDWATER PUMP ROOMS

There are three separate auxiliary feedwater pump rooms, each housing one pump. Each of two motor-driven pumps is sized to deliver the feedwater flow required for decay heat removal. The single turbine-driven pump supplies twice the capacity of a motor-driven pump and is sufficient to remove decay heat and, additionally, to cool down the reactor at 50 F/hr. The turbine-driven pump provides system diversity to both motor-driven pumps.

The effects of moderate energy cracks in the motor driven auxiliary feedwater pump rooms and of high energy line breaks in the turbine steam supply line in the turbine driven auxiliary feedwater pump room have been evaluated. There are no pipes classified as high energy in the motor driven auxiliary feedwater pump rooms. The effects include room pressurization (turbine driven pump room only), flooding, and operability of the auxiliary feedwater system.

The results of the pressurization analysis for the turbine-driven auxiliary feedwater pump room indicate that adequate vent area is provided to limit the room pressure to its design value of 3 psig.

Analysis of auxiliary feedwater piping failures shows that loss of a redundant train does not prevent decay heat removal. The capability to provide adequate feedwater flow to remove decay heat is assured by operation of either:

a. One of two motor-driven pumps or

b. The turbine-driven pump.

Similarly, flooding caused by piping failures will not cause a loss of function of auxiliary feedwater because separation is provided between all three auxiliary feedwater pump rooms.

Watertight doors between these rooms prevent propagation of flooding and ensure that full capacity of the auxiliary feedwater system is maintained.

Analysis of the other hazards shows that adequate redundancy and separation are provided to ensure the operability of at least one train of the auxiliary feedwater system.

3B.4.2 MAIN STEAM/MAIN FEEDWATER ISOLATION VALVE COMPARTMENT

The main steam/main feedwater isolation valve compartment is located in the northeast portion of the auxiliary building between the reactor building and the turbine building. Figure 3B-2 provides plan and elevation views of this area. The main steam, main feedwater, and steam generator blowdown piping in this area consist of straight piping runs approximately 40-feet long, extending from the containment penetrations to torsional restraints mounted in the auxiliary building wall through which these lines enter the turbine building. The main steam line isolation valves, main steam safety valves, atmospheric relief valves, main feedwater isolation valves, and steam generator blowdown isolation valves are in this compartment. Also in the compartment are various pressure transmitters and branch piping lines of the chemical addition system, steam supply to the turbine-driven auxiliary feedwater pump, bypass loops of the main steam isolation valves, pressure instrumentation, and drains.

3B.4.2.1 Break Size and Location

All of the piping in this compartment is designed to the criteria stated in Section 3.6.2.1 for those portions of the piping passing through the primary containment and extending to the first pipe whip restraint past the first outside isolation valve. In accordance with these criteria, no specific pipe breaks are postulated in the main steam/main feedwater isolation valve compartment.

However, to provide an additional level of assurance of operability of safety-related equipment in this compartment, the building structure and safety-related equipment are evaluated for the environmental conditions (pressure, temperature, and flooding) that would result from a break, equal in area to one cross-sectional pipe area, of either a main steam line or main feedwater line or from a spectrum of main steam line breaks.

Pressurization of the main steam/main feedwater isolation valve compartment due to such a rupture is limited by providing adequate venting of the compartment and designing the compartment to withstand the maximum resultant pressure. Venting is accomplished by including adequate passageways between compartments, designing doorways to provide a path of least resistance to adjacent compartments, or other acceptable venting schemes. Engineered safety features required to bring the reactor to safe shutdown, which are located within these compartments, have been evaluated for the associated temperature, pressure, and humidity conditions.

The following cases are analyzed to determine the worst environmental conditions for the main steam/main feedwater isolation valves compartment.

Case 1a: Blowdown from a main steam line break equivalent to the flow area of a single ended rupture (3.41 ft2). This case results in the maximum compartment pressure.

Case 1b: Blow down from a spectrum of main steam line breaks of 0.5 ft^2, 0.7 ft^2, and 1.0 ft^2, and 4.6 ft^2 in area, with backflow. These cases consider superheated steam and result in the maximum compartment temperature.

Case 2: Blowdown from a main feedwater line break equivalent to the flow area of a single ended rupture (0.86 ft2). This case results in the maximum valve compartment flood level.

3B.4.2.2 Method of Analysis

The Case 1a analysis was performed using the PCFLUD computer code, which is described in Reference 9. The Case 1b analysis was performed with the GOTHIC Version 7.2(a) computer code (Reference 13). For Case 1b, revaporization of condensate which forms on heat sinks was modeled. Per the guidance of Reference 5, when the room environment was superheated, a maximum of 8 percent of the condensate was assumed to remain in the vapor state. Case 2 analysis was performed using the fluid flow equations identified in Reference 1 for cold water flow.

3B.4.2.3 Mass and Energy Release

The mass and energy release data for Cases 1a and 1b and the mass release for Case 2 are provided in Tables 3B-3 and 3B-4. The mass and energy release for Case 1a was utilized to calculate compartment pressurization using the PCFLUD computer code. Subsequent release data was calculated, but a reanalysis of compartment pressurization was not performed because peak energy releases are not greatly affected.

Case 1a mass and energy release data were developed, using the mass release rate of a 3.41 ft2 steam line break which restricts to a 2.8 ft2 break after depressurization of the steam line. Each steam generator is provided a 1.4 ft2 flow restrictor and a 1.4 ft2 restriction provided by the 18-inch diameter connection between the main steam header and a main steam line. Release data assumes frothing of the steam generators causing lower quality steam to be released from the break. Note that the steam generator pressure of 1,106 psia used in the analysis is based on the no-load condition and requires that the four main turbine control valves be closed; therefore, back flow from the high pressure turbine is not possible. Postulated breaks at other steam generator pressures would result in less severe transients.

The method, model, and blowdown data used for Case 1a maximizes compartment pressure but not temperature. Therefore, Case 1b was performed to determine maximum compartment temperature. It should be noted that the original Case 1b was based on the blowdown data reflected in the generic analysis documented in WCAP-10961 (Reference 4) for the Westinghouse Owners' Group (WOG)-High-Energy Line Break/Superheated Blowdowns Outside Containment subgroup. This generic analysis was performed in response to the NRC Information Notice No. 84-90 (Reference 10), which raised concerns over the effect of superheated steam releases on the environment qualification (EQ) of equipment located outside containment. The analysis supporting the topical report used conservative inputs, so as to provide a limiting analysis for all plants falling within the defined category for the generic analysis. Wolf Creek falls into Category 1, representing the WCGS 4-loop designs with a power level of 3425 MWt or greater configuration.

Several non-conservative input assumptions have been identified with respect to the Category 1 safety analysis for the Wolf Creek steamline break mass and energy releases outside containment (Reference 11). To evaluate the impact of these non-conservative input assumptions on the compartment temperature response, the mass and energy releases have been re-calculated based on plant-specific information for Wolf Creek, using the same methodology as the generic analysis. In addition, the re-analysis also incorporates recently identified issues such as reduced initial steam generator mass inventory due to SG water level uncertainly, longer closure time for MSIVs due to actuator/valve replacement, and a larger moderator density coefficient to support optimized reload designs in the future. The re-calculated mass and energy releases are then used as input to an associated compartment temperature response analysis, which provides the basis for confirming the environmental qualification of equipment located outside containment (i.e., in the main steam tunnel).

Consistent with the original licensing-basis analysis, assumptions are made that minimize the time to achieve steam generator tube uncovery, which maximizes the superheated release duration. The two most important factors that impact the results of the superheated steam releases following a steamline break outside containment are the RCS temperatures and the time of superheat initiation. RCS temperatures, and thus the superheated steam temperatures, are impacted by the initial power level, reactor coolant pump heat, feedwater enthalpy, auxiliary feedwater flows and enthalpy, reactivity feedback assumptions, and shutdown margin. The timing of the onset of superheated steam generation is primarily a function of break size, initial power level, initial steam generator mass, and the feedwater flow transient.

The system transient that provides the break flows and enthalpies of the steam release through the steamline break outside containment is analyzed with the LOFTRAN (Reference 12) code. Blowdown mass and energy releases determined using LOFTRAN include the effects of core power generation, main and auxiliary feedwater additions, engineered safeguards systems, reactor coolant system thick metal heat storage, and reverse steam generator heat transfer.

The licensing-basis cases of the MSLB outside containment have been analyzed at 102% power for break sizes of 4.6, 1.0, 0.7, and 0.5 ft^2. The time sequence of events for these cases is presented in Table 3B-2a. Tabulated data of mass and energy release rates are provided in Table 3B-3.

Case 2 mass release rates are based upon the condensate and feedwater systems' responses to the postulated one area break of a feedwater line while operating at 100-percent power. The most limiting single failure, a main feedwater control valve failure to the full open position, is assumed concurrent with the break which is postulated to occur between the control valve and outside isolation valve. This single failure maximizes the mass release rate prior to automatic isolation of the secondary side of all steam generators on low-low level in the generator fed by the broken line, and it prevents the isolation of the break. Flow from the condensate pumps is assumed to exit the break until the condenser's low-low level switch is activated and the condensate pumps are tripped.

When the break occurs, the feedwater header pressure upstream of the lines branching to each steam generator will drop to 1005 psia (from 1,087 psia) with a total feedwater flow increasing to 44,476 gpm (from 35,670 gpm). Of this total flow, 32,149 gpm exits the break, and 12,327 gpm feeds the other steam generators. No reverse flow from the affected steam generator through the break occurs since the isolation (check) valve in the feedwater line closes.

At 1.5 minutes, the low-low steam generator level signal is received which isolates the secondary side of all steam generators. With the isolation of the main steam lines, the loss of steam pressure to the main feed pumps and then loss of main feed pumps occur. From 1.5 through 8.7 minutes following the break, the condensate pumps continue to feed the break at a rate of 22,000 gpm until the condenser inventory of 159,000 gallons is exhausted. At 8.7 minutes, the condensate pumps trip on low-low condenser level.

The above flow rates are based on the system's piping resistance characteristics for water flow and the head-flow curves for the condensate and feed pumps. All fluid discharged from the break is assumed to remain as water to maximize the water which has to be drained from the area.

The flood level is limited by a floor drain system which discharges into the turbine building. Each of the two areas containing the main steam and main feedwater pipes is provided with one floor drain opening which is located under a grating platform in the north end of the room. There are twenty-two 8”x4” sleeves in the dividing wall between the two main steam line compartments. Penetrations through the tunnel floor are waterproof.

Several floor drains in the steam tunnel floor at El. 2026' are interconnected with other drain lines serving rooms at El. 2000' and 1988', and all discharge into the sump located at El. 1974', which is the basement level of the auxiliary building. Any water drainage to this elevation will not affect any safety-related equipment required for mitigation of the break due to the 7-foot design flood depth of the auxiliary building basement.

The back flow of steam through the interconnecting drain lines has not been modeled into the pressure/temperature analysis of the steam tunnel due to the minimal flows expected and the commitment to qualify only the safety-related components in the steam tunnel for the effects of the nonmechanistic breaks in the steam tunnel. However, an evaluation of the rooms at the lower elevations indicates that steam escape is not likely to affect safety-related equipment due to the small driving force (steam tunnel pressure) and because fire dampers in the ventilation ducts close when the room temperature exceeds that normally anticipated. When the dampers close, the driving force equalizes and passive heat sinks take effect to reduce room temperature.

3B.4.2.4 Compartment Volumes and Vent Areas

For Cases 1a and 1b, flow schematics showing the subcompartment volumes and vent areas used in the nodalization model are provided in Figure 3B-4, sheet 1 and 2. For Case 1a the main steam/main feedwater isolation valve compartment is divided into ten subcompartments, based on the physical structures which exist in this area. For Case 1b the compartment is divided into two subcompartments, the east and west bays. Table 3B-5 identifies the volumes, vent paths, vent area and flow coefficients for Case 1a. Table 3B-5a provides a summary of the compartment volume, flow path and heat sink data for the main steam tunnel GOTHIC model for Case 1b. The GOTHIC model schematic is presented in Figure 3B-4, Sheet 2.

Case 1a

Compartment 1, the one in which the break is assumed to occur, is bounded below by a concrete floor at El. 2026'-0", above by grating at El. 2042'-0" and 2037'-7 1/4", and on the sides by structural walls.

Compartment 1 houses two main steam lines, two main feedwater lines, and two steam generator blowdown lines, and is located on the west side of the structural dividing wall in the middle of the valve compartment. Compartment 2 has the same boundaries as Compartment 1, except that it is located on the east side of the dividing wall. Compartments 1 and 2 are connected by a 3'-4" x 7' opening.

Compartments 3 and 4 house the torsional restraints for the piping from Compartments 2 and 1, respectively. Thirty-inch diameter crawlways provide access between Compartments 2 and 3 and between 3 and 4.

Compartments 5 and 6 include the volume between the grating above Compartments 1 and 2, and the roof at elevation 2088′-0″. A 23′ x 27′ opening exists between Compartments 5 and 6.

Compartments 7 and 8 extend from elevation 2088′-0″ to the roof deck enclosures. Compartments 9 and 10 include the volumes under the roof deck enclosures and vent to the outside atmosphere through metal blowout panels.

Case 1b

The compartment model for the main steam tunnel is comprised of two lumped parameters nodes representing the west and east compartments. The third and fourth nodes represent the environment and containment. Flow boundary condition 1F is used to represent the source of mass and energy from the break. The east and west steam tunnel compartments are connected by a flow path that models the clear areas through column AC between the compartments. Venting from each compartment to the environment is modeled with flow paths 3 and 4, respectively. Pressure boundary condition 2P is employed to maintain the environment node closely to atmospheric conditions through the transient. Each node includes a heat loading from the intact steam lines. The break is assumed to occur in the west compartment. The diffusion layer model (DLM) is used for all of the internal heat sinks in the main steam tunnel to calculate the condensation mass transfer between the heat sinks and the atmosphere.

3B.4.2.5 Initial Conditions

Table 3B-2 provides the initial conditions for both Cases 1a, 1b and 2 analyses.

3B.4.2.6 Results

A plot of the time-history of compartment pressure (Case 1a) is given in Figure 3B-5. Two pressure peaks occur as a result of a main steam line break. The first occurs at the time of break and the second occurs as a result of decreasing steam quality, thus increasing steam mass.

The Case 1b temperature analysis for the main steam tunnel (MST) has been performed with the GOTHIC version 7.2(a) code (Reference 13). GOTHIC is a multi-node containment code developed by Numerical Applications, Inc. (NAI). The results of the MST temperature analysis were submitted to the NRC for review and approval as part of the License Amendment package for the MSIV/MFIV Replacement Project. This analysis has been reviewed and approved by the NRC in NRC Safety Evaluation (Reference 14).

For the break sizes considered in the analysis, the compartments mix and heat up together during the initial blowdown from the steam line. The compartment gas temperatures increase even more rapidly as the steam generator tubes uncover and the break flow becomes superheated. As steam generator inventory depletes, the break flow rate decreases, and the compartments become less pressurized. The large density difference between the hot compartment gases and the ambient air begins to overcome the momentum of the break and natural circulation of ambient air into the steam tunnel begins. The break flow exits the steam tunnel through the vent in the west compartment, and the natural circulation draws air into the steam tunnel through the vent in the east compartment. Cool air enters the break compartment from the east compartment through the clear areas in column AC.

The addition of ambient air into the steam tunnel rapidly cools down the system, and the gas temperatures decrease and stabilize between the initial compartment temperature and the ambient temperature.

The peak temperatures and pressures that were predicted in each compartment for four transients are presented in the table below.

Break Size (ft^2)	Peak Temperature (Deg F)		Peak Pressure (psia)	
	West Compartment	East Compartment	West Compartment	East Compartment
0.5	413.7	361.9	14.738	14.734
0.7	426.0	376.0	14.759	14.754
1.0	434.9	384.5	14.796	14.788
4.6	436.0	375.2	15.497	15.437

Figures 3B-6a through 3B-6d show plots of the temperature response of each break case in each region. The peak compartment temperature was calculated to be 436°F, occurring in the west compartment approximately 84 seconds after event initiation.

The calculated pressure values are well below the qualification requirements used for safety-related equipment in the steam tunnel. However, the calculated temperature values exceed the qualification requirements previously used for equipment in these rooms. Therefore, the surface temperature response of the equipment was evaluated to demonstrate the proper operation of equipment before it was calculated to be heated above its qualified temperature by the superheated steam. Failure modes and effects analyses were also employed, when required, to evaluate certain electrical circuits and determine equipment performance.

The surface temperature response was calculated for various representative pieces of equipment and components which may be required following an MSLB in the steam tunnel. The most severe room conditions (those for the break compartment) and flow characteristics were used in the calculation of the time dependent equipment surface temperatures.

The equipment surface temperatures were evaluated through the use of conservative, yet reasonable, heat transfer coefficients based on the existing NUREG-0588 guidelines. At any given time, the greater of four times the Uchida condensing heat transfer rate (based on the compartment air to steam mass ratio) or the convective heat transfer rate was used to evaluate the transient surface temperature response of the selected equipment. The Hilpert correlation, for flow past an object in a fluid stream, with consideration for system turbulence, was used to calculate the convective heat transfer coefficient. In the evaluation of the heat transfer coefficient for a component, the characteristic velocity was taken as the time dependent average velocity of the flow between the east and west rooms of the steam tunnel. The film properties used in the evaluation of the Hilpert equation were based on the state of the air and steam in the stream.

As only the outside casing of equipment was modeled, the lumped-capacity method was used to calculate the surface temperature response of the equipment. This approach is justified by the thinness and the high thermal conductivity of the modeled external casings. For the Main Steam Isolation Valve and Main Feedwater Isolation Valve terminal blocks located in terminal boxes on the valve actuators and the solenoid valves mounted on the actuators, more detailed, two-dimensional thermal lag analyses were performed to determine equipment temperatures.

The surface temperature analysis showed that, with certain exceptions, the equipment surface temperature did not exceed the qualified temperature limits prior to the time when an steam line isolation signal (SLIS) or feedwater isolation signal (FWIS) was initiated. Surface temperature values at the time of SLIS and FWIS are provided in Table 3.4 of Reference 7. The exception are the main steam pressure transmitter instrument cable, main steam isolation valve (MSIV), main feedwater isolation valve (MFIV) control cable, and air-operated valve control cable. A failure modes and effects analysis showed that failure of these cables will not affect the ability to safely shut down the plant following a main steam line break as the affected equipment either fails safe or alternative capability is provided. Further analysis showed that the failure of equipment subsequent to its actuation will not result in equipment repositioning or in misleading the plant operators. Detailed discussion of the evaluation of the equipment performance in the calculated room environments is provided in Reference 7.

The effect of superheated steam temperatures on the tunnel structures was considered during the evaluation of steam line break in the steam tunnel. It was concluded that the higher temperatures resulting from superheated blowdown will have no detrimental effects on the steam tunnel structural steel and reinforced concrete due to the relatively short during of these events.

As can be seen from Figure 3B-6a through 3B-6d, the calculated peak compartment temperature is 436°F, occurring in the west compartment approximately 84 seconds after event initiation. A comparison of these temperature profiles to what was used for the environmental qualification of the equipment installed in the main steam tunnel reveals that the existing temperature envelope remains bounding. Note: The original analysis of record showed the calculated peak compartment temperature was 469°F. Therefore, it is concluded that the existing justification of the EQ of the equipment remains valid.

3B.4.2.7 Design Provisions

Table 3B-2 provides the design values of compartment pressure and temperature. Although the design temperature of 324°F is exceeded by the peak compartment temperatures of Case 1b, the analysis of equipment surface temperature response showed that equipment that must function to bring the plant to a safe shutdown condition following a steam line break in the main steam/main feedwater isolation valve compartment will perform their design functions in the environmental conditions following a steam line break including superheated steam effects. Reference 8 provides the NRC safety evaluation of the Case 1b analysis.

The floor drain system is designed so that the feedwater isolation valve actuator is above the design floodwater level. All safety-related instrumentation, such as steam line pressure transmitters, are located above the design floodwater level. All other safety-related valves are located so that this water level does not affect their respective safety-related functions.

3B.4.3 TURBINE BUILDING FLOODING EVALUATION

3B.4.3.1 Introduction

An analysis was performed on the circulating water system, which postulated a complete rupture of a single expansion joint. It was assumed that the flow into the condenser pit consists of the water which will drain from both the upstream and downstream side of the break. For conservatism, it was assumed that the condenser circulating water isolation valves do not fully close, sump volumes in the condenser pit were neglected, and the sump pumps were not operable. Based on these assumptions, the analysis indicated that for WCGS the volume of water which will drain to the condenser pit does not exceed the volume of the pit, and, therefore, no flooding of the turbine building floor will occur. The WCGS powerblock design eliminates the flooding potential by providing physical barriers to prevent circulating water from entering the safety-related areas.

The condenser pit and ground floor of the turbine building are shown in Figures 1.2-29 and 1.2-30.

The turbine building is designed as a nonseismic Category I structure. The exterior walls are concrete block to 3 feet above grade and sheet metal siding above this level. There are several access points to the outside at ground level, as follows: two stairwells on the east side; two stairwells on the west side; and roll-up doors with adjacent personnel doors in the southeast and the northeast corners of the building. These openings may be used by the operators to discharge floodwater should it overflow the condenser pit onto the 2,000-foot floor elevation.

The condenser pit is an area within the turbine building, below grade, which houses the main condensers and turbine auxiliary equipment. It is a large rectangular area 152 feet by 136 feet with a smaller northern extension of 62 feet by 48 feet. The pit is 17 feet deep, extending from El. 1983 to 2000, encompassing a net free volume of 310,000 ft^3 (equivalent to 2.4 million gallons of floodwater). The equivalent water volume per foot of depth is 142,000 gal/ft.

There are four sumps located in the condenser pit of approximately 1,500-gallon capacity each. These sumps have remote level alarms in the control room which can provide an early indication of a flooding situation.

Level switches are incorporated in the condenser pit to stop the “A” and “C” circulating water pumps. In addition, the respective circulating water pump discharge valve will automatically close to approximately 25% open. In all cases, one circulating water pump will remain in operation and must be manually secured upon receiving a condenser pit high level alarm. The level switch is set to initiate a circulating pump stop at a level of five feet above the bottom of the condenser pit.

The flooding analysis evaluates the potential for floodwater to affect safety-related equipment in the auxiliary and control buildings. The areas which contain this equipment are separated from the turbine building by concrete walls with penetrations which may be potential flood paths. Stairway T-1 at the south end of the turbine building at El. 2000 provides a direct path down to the auxiliary building at El. 1974. Floodwater also could enter the control building through the communications corridor via a series of two doors at El. 2000. This latter route also represents an indirect path to the auxiliary building basement via a stairwell to El. 1984 in the control building and down a second stairwell to Room 1101. Another indirect path to the auxiliary

building basement is provided by door 33044 at El. 2000 into Room 1301. As discussed in Section 3B.4.3.3 all of these potential paths utilize curbs to preclude water from entering the safety-related areas.

3B.4.3.2 CWS Rupture Analysis

The analysis postulates a double-ended rupture which could result in a flow rate as great as 530,000 gpm. The corresponding rate at which the condenser pit is filled is about 5 feet per minute. After 1 minute, the level switch will actuate to stop the "A" and "C" circulating water pumps. In addition, the respective circulating water pump discharge valve will close to approximately 25% open. In all cases, one circulating water pump will remain in operation and must be manually secured upon receiving a condenser pit high level alarm. Indication of the rupture is provided in the control room by the four sump level alarms, the high pit level alarm, turbine trip along with main feedwater and condensate pump trips, and CWS pump isolation valve indications.

Because the isolation valves are assumed not to close completely, the flow rate through the break is not completely terminated. It is assumed that flow into the condenser pit continues at the 10 percent of full break flow rate. Therefore, the condenser pit water level continues to rise at 0.3 feet per minute. The operator then has 39 minutes to terminate flow and isolate the break before circulating water overflows the condenser pit onto the floor at El. 2000.

If the circulating water pumps do not stop and the isolation valves remain fully open, precautions are taken to ensure that water will not flow from the turbine building to the safety-related equipment in the auxiliary and control building through the use of installed curbs. Operator action is required to open the turbine building doors to the outside and to provide escape paths for the overflow.

3B.4.3.3 CWS Rupture Evaluation

Advance warning of an impending flooding situation in the turbine building resulting from CWS expansion joint failure is provided by sump level alarms. At least 1 minute later, a condenser pit high level alarm is received. Concurrently, two CW pumps are automatically tripped, and one pump is manually secured, terminating the flow prior to the water level reaching the top of the condenser pit.

If it cannot be verified that the flow has been terminated, backup action may be taken by the operators to secure the CWS or to provide flow paths through access routes to the outside. The curbs along the west side of the condenser pit and around the T-1 stairwell are provided to prevent water from spilling over into the safety-related spaces.

3B.4.4 EVALUATION OF RCS LOOP BRANCH LINE BREAKS

The evaluation of effects on safety-related equipment resulting from branch line breaks in the reactor coolant system is presented in Table 3B-7. The evaluation shows that breaks in the RCS will not compromise the capability to safely shutdown the plant.

3B.5 REFERENCES

1. Design for Pipe Break Effects, BN-TOP-2, Revision 2, Bechtel Corporation, San Francisco, California, June 1974.

2. Subcompartment Pressure and Temperature Transient Analysis, BN-TOP-4, Revision 1, Bechtel Corporation, San Francisco, California, July 1976.

3. Deleted

4. WCAP-10961, Revision 1, "Steamline Break Mass/Energy Release of Equipment Environmental Qualification Outside Containment," October 1985.

5. NUREG-0588, Revision 1, "Interim Staff Position on Environmental Qualification of Safety-Related Electrical Equipment," July 1981.

6. WCAP-8822-P-SI (Proprietary), "Mass and Energy Release Following a Steam Line Rupture," February 1985.

7. Letter SLNRC 86-06, N. A. Petrick (SNUPPS) to H. R. Denton (NRC), dated April 4, 1986: Main Steam Line Break Superheat Effects on Equipment Qualification.

8. NRC letter dated February 25, 1988, P. W. O'Conner (NRC) to B. D. Withers: Main Steam Line Break (MSLB) outside Containment with Superheated Steam Release.

9. Bechtel power Corporation, PCFLUD, Users Manual (MAP-120), Revision 2, (Bechtel Standard Computer Program), July 1993.

10. IE Information Notice 84-90: “Main Steam Line Break Effect on Environmental Qualification of Equipment,” December 7, 1984.

11. Westinghouse Letter SAP 97-116, “Steamline Break Mass and Energy Releases Outside CTMT for Wolf Creek Based on a Revised Shutdown Margin and Auxiliary Feedwater,” May 29, 1997.

12. Burnett, T.W.T., et al., “LOFTRAN Code Description,” WCAP-7907-P-A (Proprietary) and WCAP-7907-A (Nonproprietary),” April 1984.

13. NAI 8907-02, Revision 17, "GOTHIC Containment Analysis Package User Manual," Version 7.2a(QA), January 2006.

14. NRC Safety Evaluation related to Amendment No. 176 for the replacement of main steam and main feedwater isolation valves, March 2008.

15. Calculation DA-26, Rev. 1, Flooding of the Condenser Pit due to Failure of Circulating Water System Expansion Joint.

TABLE 3B-1

HAZARDS ANALYSIS OF AUXILIARY BUILDING - ELEVATION 1974'0"

Room Number 1101 Title General Floor Area #1

Design Approach
- _ Only safety-related equipment (SRE) is in the room.
- _ Only nonsafety-related equipment (NSRE) is in the room.
- X Minimize SRE in the room and segregate from NSRE. Minimize NSRE in the room and segregate from SRE.
- _ Other, see remarks.

Flooding Analysis
- _ Flooding from sources within the room will affect only equipment within the same train/subsystem; therefore, post-accident safe shutdown is not compromised.
- _ Flooding from sources external to the room is not credible even with a single active failure.
- X Other, see remarks.

Seismic Design Analysis
- _ Only SRE is in the room; therefore, there are no seismically induced failures.
- _ The NSRE in the room is seismically restrained, therefore, no seismically induced failures are postulated.
- _ The NSRE, which is postulated to fail as a result of an SSE, does not impact SRE.
- X The NSRE, which is postulated to fail as a result of an SSE and impact SRE, does not adversely affect the SRE.
- _ Other, see remarks

Missile Analysis
- X No credible missile sources exist in the room.
- _ Missiles from rotating components generated within the room contain insufficient energy to escape their equipment housing(s).
- X External missiles cannot enter the room due to missile protection.
- _ Other, see remarks.

Pipe Break Analysis
- _ There are no high-energy lines in the room.
- X The high-energy line breaks have been evaluated and do not adversely affect SRE. The effects of the breaks are discussed in Table 3.6-4, Sheet 1 with break locations shown in Figure 3.6-1.
- X Moderate energy cracks within the room do not adversely affect SRE in the room.
- _ Other, see remarks.

Remarks:

See the reverse side for a listing of items located in the room.

1) Flooding from any source does not adversely affect SRE because all SRE is located above the maximum design flood depth of 7 feet (El. 1981).

WOLF CREEK

TABLE 3B-1 (Sheet 1A)

Listing of items in room 1101

Item No. (1)	Description	Equipment Designation	Reqd for SSD (2)	Seis-mic Cat. (3)	Discussion
S1	Pipe	EF-129-HBC-24"	X	Y	
S2	Conduit(4)	4U1A3A,B,C	X	Y	
	J-box	4UJ001	X	Y	
S3	Pipes	EG-036-HBC-3"	X	Y	
		EG-047-HBC-3"	X	Y	
S4	Pipes	EF-128-HBC-18"	X	Y	
		EF-150-HBC-18"	X	Y	
S5	Pipe	EF-031-HBC-18"	X	Y	
S6	Conduit power & control to Valve HV-8111	4J1A3D	X	Y	Redundant valve HV-8110 available and manual override as backup
S7	Conduit	1UF2A,B,C	X	Y	
	J-box	1UJ001	X	Y	
S8	Pipes	EF-137-HBC-24"	X	Y	
		EF-138-HBC-30"	X	Y	
S9	Conduit	4U1014, 1015	X	Y	
S10	Conduit	1U1J3A,B,C	X	Y	
	J-box	1UJ002	X	Y	
S11	Pipes	EF-76-HBC-24"	X	Y	
		EF-80-HBC-24"	X	Y	
		EF-20-HBC-30"	X	Y	
		EF-81-HBC-30"	X	Y	
S12	Pipes	EF-73-HBC-16"	X	Y	
		EF-35-HBC-18"	X	Y	
S13	Conduit	4J1031		Y	BAT level indication;
		4J1A2B		Y	not required for SSD
S14	Pipe and valves	LF-132-HCC-6"		Y	No LOCA assumed;
		HV105 & 106		Y	isolation not required
N1	Racked trays	5U4C, 5U5L,		S	
		5J1V		S	
N2	Pipes	GB-062-HBD-1"		N	Does not adversely
		GB-063-HBD-1"		S	affect SRE
N3	Racked pipes (13) at El. 1985'			S	
N4	Pipe	FB-032-HBD-8"		S	
N5	Racked trays	6U1C,6U3K, 6U5M		S	
		6J1B, 6J1C		S	
N6	Racked trays	5U1C,5U5K,5J1C		S	
N7	Pipe	KA-218-JBD-6"		S	
N8	Pipes	LF-185-HCD-4"		S	
		LF-174-HCD-4"		S	
		LF10-HCD-6"		S	
		LF-255-HCD-4"		S	
N9	Pipes	KD-3",KD-1 1/2"		N	Does not adversely affect SRE
N10	Pipe	KA-029-JBD-1"		S	
N11	Conduit	5U1C1E		S	
		5U1C1J		S	
		5U1C1G		S	
N12	Pipes	LF-797-HCD-2 1/2"		N	Does no adversely affect SRE
		LD-027-HCD-3"		N	affect SRE
		LD-042-HCD-2"		N	Does not adversely affect SRE
N13	Pipe	KD-2"		N	Does not adversely affect SRE
N14	Conduit	6U5M2D		S	
N15	Pipe	LB-021-YNG-12"		S	
N16	Pipe	HB-227-HBD-2"		N	Does not adversly affect SRE
N17	Pipe	HB-050-HCD-3"		S	

• TABLE 3B-1 (Sheet 2)

Room Number 1102 Title Chiller and Surge Tank Area

Design Approach
_ Only safety-related equipment (SRE) is in the room.
_ Only nonsafety-related equipment (NSRE) is in the oom.
_ Minimize SRE in the room and segregate from NSRE. Minimize NSRE in the room and segregate from SRE.
X Other, see remarks.

Flooding Analysis
_ Flooding from sources within the room will affect only equipment within the same train/subsystem; therefore, post-accident safe shutdown is not compromised.
_ Flooding from sources external to the room is not
_ credible even with a single active failure.
X Other, see remarks.

Seismic Design Analysis
_ Only SRE is in the room; therefore, there are no seismically induced failures.
_ The NSRE in the room is seismically restrained, therefore, no seismically induced failures are postulated.
_ The NSRE, which is postulated to fail as a result of an SSE, does not impact SRE.
_ The NSRE, which is postulated to fail as a result of an SSE and impact SRE, does not adversely affect the SRE.
X Other, see remarks.

Missile Analysis
_ No credible missile sources exist in the room.
_ Missiles from rotating components generated within the room contain insufficient energy to escape their equipment housing(s).
_ External missiles cannot enter the room due to missile protection.
X Other, see remarks.

Pipe Break Analysis
_ There are no high-energy lines in the room.
_ The high-energy line breaks have been evaluated and do not adversely affect SRE. The effects of the breaks are discussed in Table 3.6-4, Sheet 2 with break locations shown in Figure 3.6-1.
_ Moderate energy cracks within the room do not adversely affect SRE in the room.
X Other, see remarks.

Remarks:

1) The only safety-related equipment in this area are two HVAC ducts; each has a tornado damper and two isolation dampers which close on an SIS. No LOCA is assumed concurrent with an SSE, thus these ducts are not required.

2) Postulated hazards have no effect on SSD.

TABLE 3B-1 (Sheet 3)

Room Number 1103 Title Letdown Chiller Heat Exchanger Room

Design Approach

_ Only safety-related equipment (SRE) is in the room.
X Only nonsafety-related equipment (NSRE) is in the. room.
_ Minimize SRE in the room and segregate from NSRE.
_ Minimize NSRE in the room and segregate from SRE.
_ Other, see remarks.

Remarks:

1) There is no safety-related equipment in the room

2) Postulated hazards have no effect on SSD.

Flooding Analysis

_ Flooding from sources within the room will affect only equipment within the same train/subsystem;

therefore, post-accident safe shutdown is not compromised.
_ Flooding from sources external to the room is not credible even with a single active failure.
X Other, see remarks.

Seismic Design Analysis

_ Only SRE is in the room; therefore, there are no seismically induced failures.
_ The NSRE in the room is seismically restrained, therefore, no seismically induced failures are postulated.
_ The NSRE, which is postulated to fail as a result of an SSE, does not impact SRE.
_ The NSRE, which is postulated to fail as a result of an SSE and impact SRE, does not adversely affect the SRE.
X Other, see remarks.

Missile Analysis

_ No credible missile sources exist in the room.
_ Missiles from rotating components generated within the room contain insufficient energy to escape their equipment housing(s).
_ External missiles cannot enter the room due to missile protection.
X Other, see remarks.

Pipe Break Analysis

X There are no high-energy lines in the room.
_ The high-energy line breaks have been evaluated and do not adversely affect SRE. The effects of the breaks are discussed in Table 3.6-4, with break locations shown in Figure 3.6-1.
_ Moderate energy cracks within the room do not adversely affect SRE in the room.
X Other, see remarks.

TABLE 3B-1 (Sheet 4)

Room Number 1104 Title Letdown Reheat Heat Exchanger Room

Design Approach

_ Only safety-related equipment (SRE) is in the room.
_ Only nonsafety-related equipment (NSRE) is in the room.
_ Minimize SRE in the room and segregate from NSRE.
X Minimize NSRE in the room and segregate from SRE.
_ Other, see remarks.

Flooding Analysis

_ Flooding from sources within the room will affect only equipment within the same train/subsystem; therefore, post-accident safe shutdown is not compromised.
_ Flooding from sources external to the room is not credible even with a single active failure.
X Other, see remarks.

Seismic Design Analysis

_ Only SRE is in the room; therefore, there are no seismically induced failures.
_ The NSRE in the room is seismically restrained, therefore, no seismically induced failures are postulated.
_ The NSRE, which is postulated to fail as a result of an SSE, does not impact SRE.
_ The NSRE, which is postulated to fail as a result of an SSE and impact SRE, does not adversely affect the SRE.
X Other, see remarks.

Missile Analysis

_ No credible missile sources exist in the room.
_ Missiles from rotating components generated within the room contain insufficient energy to escape their equipment housing(s).
_ External missiles cannot enter the room due to missile protection.
X Other, see remarks.

Pipe Break Analysis

_ There are no high-energy lines in the room.
_ The high-energy line breaks have been evaluated and do not adversely affect SRE. The effects of the breaks are discussed in Table 3.6-4, Sheet 3 with break locations shown in Figure 3.6-1.
_ Moderate energy cracks within the room do not adversely affect SRE in the room.
X Other, see remarks

Remarks:

See the reverse side for a listing of items located in the room.

1) The only safety-related equipment in the room is piping and the heat exchanger associated with the letdown flowpath, which is not required for SSD.

2) Postulated hazards have no effect on SSD.

WOLF CREEK

TABLE 3B-1 (Sheet 4A)

Listing of items in room 1104

Item No. (1)	Description	Equipment Designation	Reqd for SSD (2)	Seis-mic Cat. (3)	Discussion	Item No. (1)	Description	Equipment Designation	Reqd for SSD (2)	Seis-mic Cat. (3)	Discussion
S1	Pipes	BG-028-ECB-3"		Y	Letdown path not						
		BG-029-ECB-3"		Y	required for SSD						
S2	Heat exchanger	EBG05		Y							
N1	Monorail	HKF26		Y							
N2	Pipe	BG-063-GCD-3"		N							
N3	Pipe	BG-060-GCD-3"		N							
N4	Pipes	LF-113-HCD-4"		N							
		LG-065-HCD-6"		N							

TABLE 3B-1 (Sheet 5)

Room Number 1105 Title Auxiliary Heat Exchanger Valve Compartment

Design Approach
_ Only safety-related equipment (SRE) is in the room.
_ Only nonsafety-related equipment (NSRE) is in the room.
_ Minimize SRE in the room and segregate from NSRE.
X Minimize NSRE in the room and segregate from SRE.
_ Other, see remarks.

Flooding Analysis
_ Flooding from sources within the room will affect only equipment within the same train/subsystem;

therefore, post-accident safe shutdown is not compromised.
Flooding from sources external to the room is not credible even with a single active failure.
X Other, see remarks.

Seismic Design Analysis
_ Only SRE is in the room; therefore, there are no seismically induced failures.
_ The NSRE in the room is seismically restrained, therefore, no seismically induced failures are postulated.
_ The NSRE, which is postulated to fail as a result of an SSE, does not impact SRE.
_ The NSRE, which is postulated to fail as a result of an SSE and impact SRE, does not adversely affect the SRE.
X Other, see remarks.

Missile Analysis
_ No credible missile sources exist in the room.
_ Missiles from rotating components generated within the room contain insufficient energy to escape their equipment housing(s).
_ External missiles cannot enter the room due to missile protection.
X Other, see remarks.

Pipe Break Analysis
_ There are no high-energy lines in the room.
_ The high-energy line breaks have been evaluated and do not adversely affect SRE. The effects of the breaks are discussed in Table 3.6-4, Sheet 4 with break locations shown in Figure 3.6-1.
_ Moderate energy cracks within the room do not adversely affect SRE in the room.
X Other, see remarks.

Remarks:

See the reverse side for a listing of items located in the room.

1) The only safety-related equipment in the room is associated with the letdown flowpath, which is not required for SSD.

2) Postulated hazards have no effect on SSD.

WOLF CREEK

TABLE 3B-1 (Sheet 5A)

Listing of items in room 1105

Item No. (1)	Description	Equipment Designation	Reqd for SSD (2)	Seis-mic Cat. (3)	Discussion	Item No. (1)	Description	Equipment Designation	Reqd for SSD (2)	Seis-mic Cat. (3)	Discussion
S1	Pipes	BG-028-ECB-3"		Y	Letdown flowpath						
		BG-029-ECB-3"		Y	not requried for SSE						
S2	Pipe	BG-017-GCB-3"		Y							
S3	Pipe	BG-062-HCB-1"		Y							
	Relief valve	BG V-7006		Y							
N1	All NSRE			N							

TABLE 3B-1 (Sheet 6)

Room Number 1106 Title Moderating Heat Exchanger Room

Design Approach

_ Only safety-related equipment (SRE) is in the room.
X Only nonsafety-related equipment (NSRE) is in the room.
_ Minimize SRE in the room and segregate from NSRE. D.
_ Minimize NSRE in the room and segregate from SRE.
_ Other, see remarks.

Flooding Analysis

_ Flooding from sources within the room will affect only equipment within the same train/subsystem; therefore, post-accident safe shutdown is not compromised.
_ Flooding from sources external to the room is not credible even with a single active failure.
X Other, see remarks.

Seismic Design Analysis

_ Only SRE is in the room; therefore, there are no seismically induced failures.
_ The NSRE in the room is seismically restrained, therefore, no seismically induced failures are postulated.
_ The NSRE, which is postulated to fail as a result of an SSE, does not impact SRE.
The NSRE, which is postulated to fail as a result of an SSE and impact SRE, does not adversely affect the SRE.
X Other, see remarks.

Missile Analysis

_ No credible missile sources exist in the room.
_ Missiles from rotating components generated within the room contain insufficient energy to escape their equipment housing(s).
_ External missiles cannot enter the room due to
_ missile protection.
X Other, see remarks.

Pipe Break Analysis

X There are no high-energy lines in the room.
_ The high-energy line breaks have been evaluated and do not adversely affect SRE. The effects of the breaks are discussed in Table 3.6-4, with break locations shown in Figure 3.6-1.
_ Moderate energy cracks within the room do not adversely affect SRE in the room.
X Other, see remarks.

Remarks:

1) There is no safety-related equipment in the room.

2) Postulated hazards have no effect on SS.

TABLE 3B-1 (Sheet 7)

Room Number 1107 Title Centrifugal Charging Pump Room B

Design Approach

_ Only safety-related equipment (SRE) is in the room.
_ Only nonsafety-related equipment (NSRE) is in the room.
_ Minimize SRE in the room and segregate from NSRE.
X Minimize NSRE in the room and segregate from SRE.
_ Other, see remarks.

Flooding Analysis

X Flooding from sources within the room will affect only equipment within the same train/subsystem;

therefore, post-accident safe shutdown is not compromised.
X Flooding from sources external to the room is not credible even with a single active failure.
_ Other, see remarks.

Seismic Design Analysis

_ Only SRE is in the room; therefore, there are no seismically induced failures.
X The NSRE in the room is seismically restrained, therefore, no seismically induced failures are postulated.
_ The NSRE, which is postulated to fail as a result of an SSE, does not impact SRE.
_ The NSRE, which is postulated to fail as a result of an SSE and impact SRE, does not adversely affect the SRE.
_ Other, see remarks.

Missile Analysis

_ No credible missile sources exist in the room.
X Missiles from rotating components generated within the room contain insufficient energy to escape their equipment housing(s).
X External missiles cannot enter the room due to missile protection.
_ Other, see remarks.

Pipe Break Analysis

_ There are no high-energy lines in the room.
X The high-energy line breaks have been evaluated and do not adversely affect SRE. The effects of the breaks are discussed in Table 3.6-4, Sheet 5 with break locations shown in Figure 3.6-1.
X Moderate energy cracks within the room do not adversely affect SRE in the room.
_ Other, see remarks.

Remarks:

See the reverse side for a listing of items located in the room.

WOLF CREEK

TABLE 3B-1 (Sheet 7A)

Listing of items in room 1107

Item No. (1)	Description	Equipment Designation	Reqd for SSD (2)	Seis-mic Cat. (3)	Discussion
S1	Conduit	4U3F1H	X	Y	
		4U3F1J	X	Y	
S2	Conduit	4U3F5F	X	Y	
		4U1010,1011	X	Y	
S3	Switch	GL-HIS-26	X	Y	
S4	Conduit tray	4B2E1P	X	Y	
		4B2E	X	Y	
S5	Pipes	BN-08-HCB-8"	X	Y	
		BG-146-HCB-8"	X	Y	
		BG-151-HCB-6"	X	Y	
S6	Pipes	EG-036-HBC-3"	X	Y	
		EG-038-HBC-3"	X	Y	
		BG-277-HBC-2 1/2"	X	Y	
		BG-278-HBC-2"	X	Y	
S7	Pipes	BG-152-BCB-4"	X	Y	
		BG-157-BCB-4"	X	Y	
S8	Pipe	BG-155-BCB-2"	X	Y	
S9	Pipe	BG-153-BCB-2"	X	Y	
S10	Instrument	BG-PI-188	X	Y	
S11	Instrument	BG-PI-119	X	Y	For pressure boundary only
S12	Pipes	EF-094-HBC-4"	X	Y	
		EF-095-HBC-4"	X	Y	
		GL-112-HBC-4"	X	Y	
		GL-114-HBC-4"	X	Y	
S13	Valves	LCV-112E	X	Y	
		V-8546B	X	Y	
S14	Valves	V-8481B	X	Y	
		V-095	X	Y	
S15	Pipes	BG-037-GCB-3"		Y	
		BG-196-HCB-2"		Y	
		BG-163-BCB-2"		Y	
S16	Centrifugal charging pump	PBG05B	X	Y	
S17	Room cooler	SGL12B	X	Y	
N1	Pipe	LF-042-HCD-4"		S	
N2	(Deleted)				
N3	Conduit switch	6U1C1M		S	
		GL-TSH-43		S	
N4	Monorail	HKF19B		Y	
N5	Tubing from pipe in Rm. 1105	FE-BG-365		N	Does not adversely affect SRE
N6	Relief valve pipe	HE-041-HCD-1"		S	

TABLE 3B-1 (Sheet 8)

Room Number 1108 Title Safety Injection Pump Room B

Design Approach

_ Only safety-related equipment (SRE) is in the room.
_ Only nonsafety-related equipment (NSRE) is in the room.
_ Minimize SRE in the room and segregate from NSRE.
X Minimize NSRE in the room and segregate from SRE.
_ Other, see remarks.

Flooding Analysis

X Flooding from sources within the room will affect only equipment within the same train/subsystem; therefore, post-accident safe shutdown is not compromised.
X Flooding from sources external to the room is not credible even with a single active failure.
_ Other, see remarks.

Seismic Design Analysis

_ Only SRE is in the room; therefore, there are no seismically induced failures.
X The NSRE in the room is seismically restrained, therefore, no seismically induced failures are postulated.
_ The NSRE, which is postulated to fail as a result of an SSE, does not impact SRE.
_ The NSRE, which is postulated to fail as a result of an SSE and impact SRE, does not adversely affect the SRE.
_ Other, see remarks.

Missile Analysis

x No credible missile sources exist in the room.
_ Missiles from rotating components generated within the room contain insufficient energy to escape their equipment housing(s).
X External missiles cannot enter the room due to missile protection.
_ Other, see remarks

Pipe Break Analysis

X There are no high-energy lines in the room.
_ The high-energy line breaks have been evaluated and do not adversely affect SRE. The effects of the breaks are discussed in Table 3.6-4, with break locations shown in Figure 3.6-1.
X Moderate energy cracks within the room do not adversely affect SRE in the room.
_ Other, see remarks.

Remarks:

See reverse side for a listing of items located in the room

WOLF CREEK

TABLE 3B-1 (Sheet 8A)

Listing of items in room 11081

Item No. (1)	Description	Equipment Designation	Reqd for SSD (2)	Seis-mic Cat. (3)	Discussion
S1	Tray	4U3F	X	Y	
S2	Conduit	4U3F1K,1L,1M	X	Y	
		1N,1P,1Q,1T,1V	X	Y	
		4U3F5E	X	Y	
S3	Conduit	4U3F1D,1E,1F,1G	-	Y	
		4U3F1X,1Y	-	Y	
		4U3F5G	-	Y	
S4	Conduit	4U1006,07	-	Y	
		4U3F5D		Y	
S5	Switch	GL-HIS-27		Y	
S6	Conduit	4U3F1B,1C		Y	
		1H,1J		Y	
		4U3F5F		Y	
S7	Conduit	4U3F1R,1S		Y	
		4U3F1V,1W		Y	
S8	Conduit tray	4B2D1N		Y	
		4B2D		Y	
S9	(Deleted)				
S10	Instruments	EM-FT-922		Y	For pressure
		EM-PT-923		Y	boundary only
S11	Instruments	EM-PI-978		Y	For pressure
					boundary only
S12	Pipe	EG-044-HBC-1"	X	Y	
		EG-045-HBC-1"	X	Y	
S13	Pipe	EF-090-HBC-4"		Y	
		EF-091-HBC-4"		Y	
		EF-108-HBC-3"		Y	
		EF-110-HBC-3"		Y	
S14	Pipe	BG-401-HBC-6"	X	Y	
		EM-22-HBC-6"	X	Y	
		EM-23-HBC-6"	X	Y	
S15	Pipe	EM-47-CCB-4"		Y	
		EM-14-CCB-4"		Y	
		EM-44-CCB-1 1/2"		Y	
S16	Pipe	BN-09-HCB-8"		Y	
		EM-003-HCB-8"		Y	
		EM-004-HCB-8"		Y	
S17	Pipe	EJ-058-ECB-8"	X	Y	
S18	Pipe	EM-045-CCB-3"		Y	
S19	Safety inj. pump	PEM01B		Y	
S20	Room cooler	SGL09B		Y	

Item No. (1)	Description	Equipment Designation	Reqd for SSD (2)	Seis-mic Cat. (3)	Discussion
S21	Valves	HV-8924,8807B	X	Y	
S22	Valves	HV-8821B,8922B		Y	
S23	Valve	HV-8813		Y	
S24	Valves	HV-8804B,8806B	X	Y	
		HV-8923B	X	Y	
S25	Valves	HV-8926B,8969B	X	Y	
S26	Pipe	EJ-40-ECB-10"	X	Y	
S27	Pipe	EG-039-HBC-2"	X	Y	
		EG-040-HBC-2"	X	Y	
		EG-041-HBC-2"	X	Y	
		EM-032-HCC-2"	X	Y	
		EM-034-HCC-2"	X	Y	
N1	Conduit	6J1008,09,10,20		S	
		6U1021		S	
N2	Pipe	HE-042-HCD-1"		S	Structural
		HE-043-HCD-1"		S	only
N3	Pipe	BN-01-HCD-3"		S	Structural
					only
N4	Pipe	BN-02-HCD-4"			See Room 1110,
					Item N2
N5	Monorail	HKF16B		Y	
N6	Instrument	BN-FI-968		S	Structural
					only

TABLE 3B-1 (Sheet 9)

Room Number 1109 Title Residual Heat Removal Pump Room B

Design Approach

_ Only safety-related equipment (SRE) is in the room.
_ Only nonsafety-related equipment (NSRE) is in the room.
_ Minimize SRE in the room and segregate from NSRE.
X Minimize NSRE in the room and segregate from SRE.
_ Other, see remarks.

Flooding Analysis

X Flooding from sources within the room will affect only equipment within the same train/subsystem;

therefore, post-accident safe shutdown is not compromised.
X Flooding from sources external to the room is not credible even with a single active failure.
_ Other, see remarks.

Seismic Design Analysis

_ Only SRE is in the room; therefore, there are no seismically induced failures.
X The NSRE in the room is seismically restrained, therefore, no seismically induced failures are postulated.
_ The NSRE, which is postulated to fail as a result of an SSE, does not impact SRE.
_ The NSRE, which is postulated to fail as a result of an SSE and impact SRE, does not adversely affect the SRE.
_ Other, see remarks.

Missile Analysis

_ No credible missile sources exist in the room.
X Missiles from rotating components generated within the room contain insufficient energy to escape their equipment housing(s).
X External missiles cannot enter the room due to missile protection.
_ Other, see remarks.

Pipe Break Analysis

X There are no high-energy lines in the room.
_ The high-energy line breaks have been evaluated and do not adversely affect SRE. The effects of the breaks are discussed in Table 3.6-4, with break locations shown in Figure 3.6-1.
X Moderate energy cracks within the room do not adversely affect SRE in the room.
_ Other, see remarks.

Remarks:

See reverse side for a listing of items located in the room.

WOLF CREEK

TABLE 3B-1 (Sheet 9A)

Listing of items in room 1109

Item No. (1)	Description	Equipment Designation	Reqd for SSD (2)	Seis-mic Cat. (3)	Discussion	Item No. (1)	Description	Equipment Designation	Reqd for SSD (2)	Seis-mic Cat. (3)	Discussion
S1	Conduit tray	4B2C1M	X	Y							
		4B2C	X	Y							
S2	Conduit	1U1050,51,52	X	Y							
S3	Conduit	4U3F1M,1N	X	Y							
S4	Conduit	4U3F1P,1Q	X	Y							
S5	Conduit	4U1008,38,39	X	Y							
		4U3F5E	X	Y							
S6	Switch	GL-HIS-28	X	Y							
S7	Instrument	EJ-PT-615	X	Y							
S8	Pipe	EJ-27-ECB-3"	X	Y							
S9	Pipes	BN-12-HCB-14"	X	Y							
		EJ-10-HCB-14"	X	Y							
		EJ-11-HCB-14"	X	Y							
S10	Pipe	EJ-016-ECB-10"	X	Y							
S11	Pipes	EF-085-HBC-4"	X	Y							
		EF-086-HBC-4"	X	Y							
S12	Pipes	EG-52-HBC-1"	X	Y							
		EG-53-HBC-1"	X	Y							
S13	Valves	EJ-HV-8812B	X	Y							
		EJ-HV-8958B	X	Y							
		EJ-FCV-611	X	Y							
S14	Valve	EJ-8724B	X	Y							
S15	RHR pump	PEJ01B	X	Y							
S16	Room cooler	SGL10B	X	Y							
N1	Conduit switch	6U1C1J		S							
		GL-TSH-48		S							
N2	Conduit	6U1C1E		S							
		5U1C1G		S							
N3	Pipes	LF-118-HCD-4"		S							
		LF-119-HCD-4"		S							
		LD-441-HCD-4"		S							
N4	(Deleted)										
N5	Pipe	LF-364-HCD-2 1/2"		S							
N6	Sump pumps	PLF01C		N	Rotating part,						
		PLF01D		N	totally contained						
N7	Sump duct			S							
N8	Monorail	HKF17B		Y							

TABLE 3B-1 (Sheet 10)

Room Number 1110 Title Containment Spray Pump Room B

Design Approach

_ Only safety-related equipment (SRE) is in the room.
_ Only nonsafety-related equipment (NSRE) is in the room.
_ Minimize SRE in the room and segregate from NSRE.
X Minimize NSRE in the room and segregate from SRE.
_ Other, see remarks.

Flooding Analysis

X Flooding from sources within the room will affect only equipment within the same train/subsystem; therefore, post-accident safe shutdown is not compromised.
X Flooding from sources external to the room is not credible even with a single active failure.
_ Other, see remarks.

Seismic Design Analysis

_ Only SRE is in the room; therefore, there are no seismically induced failures.
X The NSRE in the room is seismically restrained, therefore, no seismically induced failures are postulated.
_ The NSRE, which is postulated to fail as a result of an SSE, does not impact SRE.
_ The NSRE, which is postulated to fail as a result of an SSE and impact SRE, does not adversely affect the SRE.
_ Other, see remarks.

Missile Analysis

X No credible missile sources exist in the room.
_ Missiles from rotating components generated within the room contain insufficient energy to escape their equipment housing(s).
X External missiles cannot enter the room due to missile protection.
_ Other, see remarks.

Pipe Break Analysis

X There are no high-energy lines in the room.
_ The high-energy line breaks have been evaluated and do not adversely affect SRE. The effects of the breaks are discussed in Table 3.6-4, with break locations shown in Figure 3.6-1.
X Moderate energy cracks within the room do not adversely affect SRE in the room.
_ Other, see remarks.

Remarks:

See reverse side for a listing of items located in the room.

TABLE 3B-1 (Sheet 10A)

Listing of items in room 1110

Item No. (1)	Description	Equipment Designation	Reqd for SSD (2)	Seis-mic Cat. (3)	Discussion
S1	Conduit	4U1012,13		Y	
		4U3F5G		Y	
S2	Conduit	4U3F1D,1E		Y	
S3	Conduit	1U1052	X	Y	
S4	Conduit tray	4B2B1L		Y	
		4B2B		Y	
S5	Pipes	EF-088-HBC-4"		Y	
		EF-089-HBC-4"		Y	
S6	Pipes	EN-06-HCB-12"		Y	
		EN-05-HCB-12"		Y	
		EN-12-HCB-3"		Y	
S7	Pipes	EN-07-GCB-10"		Y	
		EN-08-GCB-3"		Y	
		EN-57-GCB-3"		Y	
		EN-59-GCB-3"		Y	
S8	Pipe	EN-016-GCB-4"		Y	
S9	Valves	EN-HV-03		Y	
		EN-V009,010		Y	
S10	Instrument	EJ-PT-615	X	Y	
S11	Instrument	EN-PT-10		Y	For pressure boundary only
S12	Instrument	EN-PI-8		Y	For pressure boundary only
S13	Instrument	EN-FT-14		Y	For pressure boundary only
S14	Instrument	EN-FT-11		Y	For pressure boundary only
S15	Eductor	SEN01B		Y	
S16	CS pump	PEN01B		Y	
S17	Room cooler	SGL13B		Y	
S18	Switch	GL-HIS-29		Y	
N1	Conduit	6J1012,13		S	
		6J1036,37,38		S	
		6U1021		S	
N2	Pipes	EN-15-GCD-4"		S	Structural integrity only
		BN-02-HCD-4"		S	
N3	Conduit	6J1039		S	
	Instrument	EN-FI-14B		S	
N4	Pipe	LF-118-HCD-4"		S	
N5	Duct from RHR sump			S	
N6	Monorail	HFK18B		Y	

TABLE 3B-1 (Sheet 11)

Room Number 1111 Title Residual Heat Removal Pump Room A

Design Approach

_ Only safety-related equipment (SRE) is in the room.
_ Only nonsafety-related equipment (NSRE) is in the room.
_ Minimize SRE in the room and segregate from NSRE.
X Minimize NSRE in the room and segregate from SRE.
_ Other, see remarks.

Flooding Analysis

X Flooding from sources within the room will affect only equipment within the same train/subsystem;

therefore, post-accident safe shutdown is not compromised.
X Flooding from sources external to the room is not credible even with a single active failure.
_ Other, see remarks.

Seismic Design Analysis

_ Only SRE is in the room; therefore, there are no seismically induced failures.
_ The NSRE in the room is seismically restrained, therefore, no seismically induced failures are postulated.
_ The NSRE, which is postulated to fail as a result of an SSE, does not impact SRE.
X The NSRE, which is postulated to fail as a result of an SSE and impact SRE, does not adversely affect the SRE.
_ Other, see remarks.

Missile Analysis

_ No credible missile sources exist in the room.
X Missiles from rotating components generated within the room contain insufficient energy to escape their equipment housing(s).
X External missiles cannot enter the room due to missile protection.
_ Other, see remarks.

Pipe Break Analysis

X There are no high-energy lines in the room.
_ The high-energy line breaks have been evaluated and do not adversely affect SRE. The effects of the breaks are discussed in Table 3.6-4, with break locations shown in Figure 3.6-1.
X Moderate energy cracks within the room do not adversely affect SRE in the room.
_ Other, see remarks.

Remarks:

See reverse side for a listing of items located in the room.

TABLE 3B-1 (Sheet 11A)

Listing of items in room 1111

Item No. (1)	Description	Equipment Designation	Reqd for SSD (2)	Seis-mic Cat. (3)	Discussion
S1	Pipe	EJ-21-ECB-3"	X	Y	
S2	Pipes	EF-47-HBC-4"	X	Y	
		EF-48-HBC-4"	X	Y	
S3	Pipes	EG-23-HBC-1"	X	Y	
		EG-24-HBC-1"	X	Y	
S4	Conduit	1U3C1S	X	Y	
		1U1023,1048	X	Y	
S5	Conduit	1U3C1J,1K	X	Y	
S6	Conduit	1U3C1L,1M	X	Y	
S7	Conduit	4U1041	X	Y	
S8	Pipe	EJ-15-ECB-10"	X	Y	
S9	Pipes	EJ-3-ECB-14"	X	Y	
		EJ-4-HCB-14"	X	Y	
		EJ-5-ECB-14"	X	Y	
S10	Conduit	1B2B1N	X	Y	
	tray	1B2B	X	Y	
S11	Pipe	EJ-69-ECB-3/4"	X	Y	
S12	Valves	EF-V010,037	X	Y	
		EF-V038	X	Y	
S13	M.O. valve	EJ-HV-8812A	X	Y	
S14	M.O. valve	EJ-FCV-610	X	Y	
S15	Valve	EJ-8724A	X	Y	
S16	RHR pump	PEJ01A	X	Y	
S17	Room cooler	SGL10A	X	Y	
S18	Instrument	EJ-PI-601	X	Y	
S19	Conduit	1U1022,1049	X	Y	
	switch	GL-HIS-9	X	Y	
S20	Valve	EJ-8958A	X	Y	
S21	Instrument	EJ-PT-614	X	Y	
N1	Pipe	LF-116-HCD-4"		S	
		LF-124-HCD-4"		S	
		LF-432-HCD-4"		S	
N2	Monorail			Y	
N3	Conduit	5U1C1C,1L		S	
		6U1C1B		S	
N4	HVAC duct	6"		S	
N5	Sump	PLF01A		N	Rotating part
	pumps	PLF01B		N	totally contained
N6	Pipes	LF-175-HCD-2"		S	
		LF-176-HCD-2"		S	
		LF-177-HCD-2 1/2"		S	

Item No. (1)	Description	Equipment Designation	Reqd for SSD (2)	Seis-mic Cat. (3)	Discussion
N7	Exit register			N	Does not adversely affect SRE
N8	Switch	GL-TSH-53		N	Does not adversely affect SRE

TABLE 3B-1 (Sheet 12)

Room Number 1112 Title Containment Spray Pump Room A

Design Approach
_ Only safety-related equipment (SRE) is in the room.
_ Only nonsafety-related equipment (NSRE) is in the room.
_ Minimize SRE in the room and segregate from NSRE.
X Minimize NSRE in the room and segregate from SRE.
_ Other, see remarks.

Flooding Analysis
_ Flooding from sources within the room will affect only equipment within the same train/subsystem; therefore, post-accident safe shutdown is not compromised.
X Flooding from sources external to the room is not credible even with a single active failure.
_ Other, see remarks.

Seismic Design Analysis
_ Only SRE is in the room; therefore, there are no seismically induced failures.
_ The NSRE in the room is seismically restrained, therefore, no seismically induced failures are postulated.
_ The NSRE, which is postulated to fail as a result of an SSE, does not impact SRE.
X The NSRE, which is postulated to fail as a result of an SSE and impact SRE, does not adversely affect the SRE.
_ Other, see remarks.

Missile Analysis
X No credible missile sources exist in the room.
_ Missiles from rotating components generated within the room contain insufficient energy to escape their equipment housing(s).
X External missiles cannot enter the room due to missile protection.
_ Other, see remarks.

Pipe Break Analysis
X There are no high-energy lines in the room.
_ The high-energy line breaks have been evaluated and do not adversely affect SRE. The effects of the breaks are discussed in Table 3.6-4, with break locations shown in Figure 3.6-1.
X Moderate energy cracks within the room do not adversely affect SRE in the room.
_ Other, see remarks.

Remarks:

See reverse side for a listing of items located in the room.

WOLF CREEK

TABLE 3B-1 (Sheet 12A)

Listing of items in room 1112

Item No. (1)	Description	Equipment Designation	Reqd for SSD (2)	Seis-mic Cat. (3)	Discussion	Item No. (1)	Description	Equipment Designation	Reqd for SSD (2)	Seis-mic Cat. (3)	Discussion
S1	Conduit	1U3C1A,1B		Y							
S2	Conduit	1U1020,1021		Y							
		1U3C1R		Y							
	J-box	GLHISB		Y							
S3	Pipes	EF-045-HBC-4"		Y							
		EF-046-HBC-4"		Y							
S4	Pipes	EN-10-HCB-3"		Y							
		EN-11-HCB-3"		Y							
		EN-04-GCB-3"		Y							
		EN-56-GCB-4"		Y							
S5	Pipe	EN-14-GCB-4"		Y							
S6	Pipe	EN-15-HCB-12"		Y							
S7	Pipes	EN-01-HCB-12"		Y							
		EN-03-GCB-10"		Y							
S8	Conduit	1B2C1P		Y							
	tray	1B2C		Y							
S9	Valves	EN-V-003,004		Y							
		EN-HV-04									
S10	Valves	EN-V-005		Y							
		EN-V-024		Y							
		EN-V-098		Y							
S11	Valve	EN-V-014		Y							
S12	Instrument	EJ-PT-614	X	Y							
S13	Instruments	EN-PI-2,4		Y							
S14	Instrument	EN-FT-13		Y							
S15	CS pump	PEN01A		Y							
S16	Room cooler	SGL13A		Y							
S17	Instrument	EN-FT-5		Y							
S18	Eductor	SEN01A		Y							
N1	(Deleted)										
N2	Pipe	EN-15-GCD-4"		S							
N3	Conduit	5J1002,1003		S							
N4	Conduit	5J1004,1005		S							
N5	Conduit	5J1006,1007		S							
N6	Pipe	LF-116-HCD-4"		S							
N7	Ducts			S							
	10x6, 6x6			S							
N8	Monorail	HKF18B		Y							
N9	Conduit	5U1C1K		S							
N10	Instruments	GL-TSH-54		N	Does not adversely						
		EN-FI-13B		N	affect SRE						

TABLE 3B-1 (Sheet 13)

Room Number 1113 Title Safety Injection Pump Room A

Design Approach

_ Only safety-related equipment (SRE) is in the room.
_ Only nonsafety-related equipment (NSRE) is in the room.
_ Minimize SRE in the room and segregate from NSRE.
X Minimize NSRE in the room and segregate from SRE.
_ Other, see remarks.

Flooding Analysis

X Flooding from sources within the room will affect only equipment within the same train/subsystem;

therefore, post-accident safe shutdown is not compromised.
X Flooding from sources external to the room is not credible even with a single active failure.
_ Other, see remarks.

Seismic Design Analysis

_ Only SRE is in the room; therefore, there are no seismically induced failures.
X The NSRE in the room is seismically restrained, therefore, no seismically induced failures are postulated.
_ The NSRE, which is postulated to fail as a result of an SSE, does not impact SRE.
_ The NSRE, which is postulated to fail as a result of an SSE and impact SRE, does not adversely affect the SRE.
_ Other, see remarks.

Missile Analysis

X No credible missile sources exist in the room.
_ Missiles from rotating components generated within the room contain insufficient energy to escape their equipment housing(s).
X External missiles cannot enter the room due to missile protection.
_ Other, see remarks.

Pipe Break Analysis

X There are no high-energy lines in the room.
_ The high-energy line breaks have been evaluated and do not adversely affect SRE. The effects of the breaks are discussed in Table 3.6-4, with break locations shown in Figure 3.6-1.
X Moderate energy cracks within the room do not adversely affect SRE in the room.
_ Other, see remarks.

Remarks:

See reverse side for a listing of items located in the room.

WOLF CREEK

TABLE 3B-1 (Sheet 13A)

Listing of items in room 1113

Item No. (1)	Description	Equipment Designation	Reqd for SSD (2)	Seis-mic Cat. (3)	Discussion
S1	Tray	1U3C	X	Y	
S2	Conduit	1U3C1C,1D,1E		Y	
		1U3C1F,1V,1W		Y	
S3	Conduit	1U3C1N,1P		Y	
		1U3C1T,1U		Y	
S4	Conduit	1U3C1J,1K,1L		Y	
		1U3C1M,1S		Y	
S5	Conduit	1B2D1Q		Y	
	tray	1B2D		Y	
S6	Conduit	1U3C1Q,1U1010		Y	
	box	GLHIS10		Y	
S7	Pipes	EG-023-HBC-1"	X	Y	
		EG-024-HBC-1"	X	Y	
S8	Pipes	BG-217-HCC-3"	X	Y	
		BG-451-HCC-2"	X	Y	
	Instrument	BG-FT-110	X	Y	
S9	Valve	BG-HV-8104	X	Y	
S10	Pipes	BG-240-HCB-3"	X	Y	Structural integrity
		BG-248-HCB-2"	X	Y	only
S11	Pipes	EM-2-HCB-6"		Y	Structural integrity
		BN-33-HCB-8"		Y	only
		EM-1-HCB-8"		Y	
S12	Pipes	EM-23-HCB-6"		Y	Structural integrity
		EM-22-HCB-6"		Y	only
		EM-4-HCB-6"		Y	
S13	Pipes	EG-018-HBC-2"		Y	
		EG-019-HBC-2"		Y	
S14	Pipes	EG-015-HBC-2"	X	Y	
		EG-026-HBC-3"	X	Y	
S15	Pipes	EF-041-HBC-4"		Y	
		EF-042-HBC-4"		Y	
S16	Pipes	EM-6-CCB-4"		Y	
		EM-47-CCB-4"		Y	
S17	Pipes	EM-36-CCB-1 1/2"		Y	
		EM-44-CCB-1 1/2"		Y	
		EM-45-CCB-3"		Y	
S18	Valves	HV-8807A		Y	
		HV-8923A		Y	
		HV-8926		Y	
S19	Valve	EN-HV-8806A		Y	
S20	Valve	HV-8814B		Y	
S21	Valves	EM-8922A		Y	
		EM-HV-8814A		Y	
S22	Valve	EM-HV-8821A		Y	
S23	Valve	8921A		Y	
S24	A.O. valve	BG-FCV-110A	X	Y	
S25	SI pump			Y	
S26	Room cooler	SGL09A		Y	
S27	Instrument	EM-PT-919		Y	
S28	Instrument	EM-FT-918		Y	
S29	Instrument	BG-FT-183	X	Y	
S30	Instrument	EM-PI-977		Y	
N1	Conduit	5J1012,13,14,25		S	
N2	Conduit	6J1007,6J1C1A		S	
		6U5M2B,2C		S	
		5U5K1H,5J1C1E		S	
N3	Conduit	5U1C1K		S	
N4	(Deleted)				
N5	Pipes	BG-247-HCD-2"		S	Structural
		HE-040-HCD-1"		S	only
		HE-039-HCD-1"		S	Structural
					only
N6	Monorail			Y	
N7	Pipe	LF-422-HCD-1"		S	Structural
					only

TABLE 3B-1 (Sheet 14)

Room Number 1114 Title Centrifugal Charging Pump Room A

Design Approach

_ Only safety-related equipment (SRE) is in the room.
_ Only nonsafety-related equipment (NSRE) is in the room.
_ Minimize SRE in the room and segregate from NSRE.
X Minimize NSRE in the room and segregate from SRE.
_ Other, see remarks.

Flooding Analysis

X Flooding from sources within the room will affect only equipment within the same train/subsystem; therefore, post-accident safe shutdown is not compromised.
X Flooding from sources external to the room is not credible even with a single active failure.
_ Other, see remarks.

Seismic Design Analysis

_ Only SRE is in the room; therefore, there are no seismically induced failures.
X The NSRE in the room is seismically restrained, therefore, no seismically induced failures are postulated.
_ The NSRE, which is postulated to fail as a result of an SSE, does not impact SRE.
_ The NSRE, which is postulated to fail as a result of an SSE and impact SRE, does not adversely affect the SRE.
_ Other, see remarks.

Missile Analysis

_ No credible missile sources exist in the room.
X Missiles from rotating components generated within the room contain insufficient energy to escape their equipment housing(s).
X External missiles cannot enter the room due to missile protection.
_ Other, see remarks.

Pipe Break Analysis

_ There are no high-energy lines in the room.
X The high-energy line breaks have been evaluated and do not adversely affect SRE. The effects of the breaks are discussed in Table 3.6-4, Sheet 6 with break locations shown in Figure 3.6-1.
X Moderate energy cracks within the room do not adversely affect SRE in the room.
_ Other, see remarks.

Remarks:

See reverse side for a listing of items located in the room.

WOLF CREEK

TABLE 3B-1 (Sheet 14A)

Listing of items in room 1114

Item No. (1)	Description	Equipment Designation	Reqd for SSD (2)	Seis-mic Cat. (3)	Discussion	Item No. (1)	Description	Equipment Designation	Reqd for SSD (2)	Seis-mic Cat. (3)	Discussion
S1	Tray	1U3D	X	Y							
S2	Conduit	1B2E1R	X	Y							
	tray	1B2E	X	Y							
S3	Conduit	1U3D1C,1D	X	Y							
S4	Conduit	4U1014,1015	X	Y							
S5	Conduit	1U1024,1025	X	Y							
		1U3D1E	X	Y							
	J-box	GL-HIS-11	X	Y							
S6	Conduit	1U3D1A,1B	X	Y							
S7	Instrument	BG-PI-118	X	Y							
S8	Instrument	BG-PI-187	X	Y							
S9	Pipes	BG-148-HCB-6"	X	Y							
		BG-146-HCB-8"	X	Y							
S10	Pipe	BN-17-HCB-8"	X	Y							
S11	Pipe	EG-16-HBC-2 1/2"	X	Y							
		EG-17-HBC-2 1/2"	X	Y							
S12	Pipe	EF-037-HBC-4"	X	Y							
		EF-038-HBC-4"	X	Y							
S13	Pipes	BG-149-BCB-4"	X	Y							
		BG-150-BCB-2"	X	Y							
		BG-153-BCB-2"	X	Y							
		BG-154-BCB-2"	X	Y							
		BG-155-BCB-2"	X	Y							
		BG-157-BCB-4"	X	Y							
S14	Valves	BG-8546	X	Y							
		BN-LCV-112D	X	Y							
S15	Valve	BG-HV-8111	X	Y							
S16	Valve	BG-HV-8110	X	Y							
S17	Valve	BG-8481A	X	Y							
S18	C.C. pump	PBG05A	X	Y							
S19	Room cooler	SGL12A	X	Y							
N1	Conduit	5U1C1M		S							
	box	GL-TSH-56		S							
N2	Monorail	SGL12A		Y							
N3	Pipes	LF-125-HCD-4"		S							
		LF-126-HCD-4"		S							
		LF-127-HCD-4"		S							

TABLE 3B-1 (Sheet 15)

Room Number 1115 Title Normal Charging Pump Room

Design Approach
_ Only safety-related equipment (SRE) is in the room.
_ Only nonsafety-related equipment (NSRE) is in the room.
_ Minimize SRE in the room and segregate from NSRE.
X Minimize NSRE in the room and segregate from SRE.
_ Other, see remarks.

Flooding Analysis
_ Flooding from sources within the room will affect only equipment within the same train/subsystem;

therefore, post-accident safe shutdown is not compromised.
_ Flooding from sources external to the room is not credible even with a single active failure.
X Other, see remarks.

Seismic Design Analysis
_ Only SRE is in the room; therefore, there are no seismically induced failures.
_ The NSRE in the room is seismically restrained, therefore, no seismically induced failures are postulated.
_ The NSRE, which is postulated to fail as a result of an SSE, does not impact SRE.
X The NSRE, which is postulated to fail as a result of an SSE and impact SRE, does not adversely affect the SRE.
_ Other, see remarks.

Missile Analysis
_ No credible missile sources exist in the room.
X Missiles from rotating components generated within the room contain insufficient energy to escape their equipment housing(s).
X External missiles cannot enter the room due to missile protection.
_ Other, see remarks.

Pipe Break Analysis
_ There are no high-energy lines in the room.
X The high-energy line breaks have been evaluated and do not adversely affect SRE. The effects of the breaks are discussed in Table 3.6-4, Sheet 7 with break locations shown in Figure 3.6-1.
X Moderate energy cracks within the room do not adversely affect SRE in the room.
_ Other, see remarks.

Remarks:

See reverse side for a listing of items located in the room.

1) Safety-related equipment in this room has passive function. Flooding will not compromise this function.

TABLE 3B-1 (Sheet 15A)

Listing of items in room 1115

Item No. (1)	Description	Equipment Designation	Reqd for SSD (2)	Seis-mic Cat. (3)	Discussion	Item No. (1)	Description	Equipment Designation	Reqd for SSD (2)	Seis-mic Cat. (3)	Discussion
S1	Pipes	BG-269-HBC-3"	X	Y							
		BG-270-HBC-3"	X	Y							
S2	N.C. pump	PBG04	X	Y							
S3	Pipe	BG-020-HCB-4"	X	Y							
S4	Pipe	BG-021-BCB-3"	X	Y							
N1	Coil unit	SGL07		S							
N2	Valves	HE-V144		S							
		HE-V195		S							
N3	Floor drains			S							
N4	Pump drains			N	Does not adversely affect SRE						
N5	Conduit	6U5M2E		S							
	J-box	GL-TS-12		S							
N6	Conduit	5U5K1A,1B		S							
N7	Conduit	5GED1A		S							
N8	Pipe	KA-341-JDD-1"		S							
N9	HVAC duct	MHO-1029		S							
N10	Conduit	BG-FT-121		S							
N11	Monorail			Y							

TABLE 3B-1 (Sheet 16)

Room Number 1116 Title Boric Acid Tank Room B

Design Approach
_ Only safety-related equipment (SRE) is in the room.
_ Only nonsafety-related equipment (NSRE) is in the room.
_ Minimize SRE in the room and segregate from NSRE.
X Minimize NSRE in the room and segregate from SRE.
_ Other, see remarks

Flooding Analysis
X Flooding from sources within the room will affect only equipment within the same train/subsystem;

therefore, post-accident safe shutdown is not compromised.

X Flooding from sources external to the room is not credible even with a single active failure.
_ Other, see remarks.

Seismic Design Analysis
_ Only SRE is in the room; therefore, there are no seismically induced failures.
X The NSRE in the room is seismically restrained, therefore, no seismically induced failures are postulated.
_ The NSRE, which is postulated to fail as a result of an SSE, does not impact SRE.
_ The NSRE, which is postulated to fail as a result of an SSE and impact SRE, does not adversely affect the SRE.
_ Other, see remarks.

Missile Analysis
X No credible missile sources exist in the room.
_ Missiles from rotating components generated within the room contain insufficient energy to escape their equipment housing(s).
X External missiles cannot enter the room due to missile protection.
_ Other, see remarks.

Pipe Break Analysis
X There are no high-energy lines in the room.
_ The high-energy line breaks have been evaluated and do not adversely affect SRE. The effects of the breaks are discussed in Table 3.6-4, with break locations shown in Figure 3.6-1.
_ Moderate energy cracks within the room do not adversely affect SRE in the room.
X Other, see remarks.

Remarks:

See reverse side for a listing of items located in the room.

1) The only SRE in this room to be protected is the essential service water piping.

2) The boric acid storage and transfer equipment is not qualified for service post-LOCA or post-SSE. For these cases the BIT is used. The only accident for which the BA storage and transfer equipment is required to function is a high or moderate energy pipe failure in the BIT room. The accident scenario does not postulate turbine trip or loss of offsite power, therefore, the BA transfer pumps are available.

Additionally, an SSE is not postulated so that no missiles are generated which could cause failure of the BA storage and transfer equipment.

Following the BIT room pipe break, redundant BA storage and transfer systems are available to circumvent the consequences of a single active failure.

TABLE 3B-1 (Sheet 16A)

Listing of items in room 1116

Item No. (1)	Description	Equipment Designation	Reqd for SSD (2)	Seis-mic Cat. (3)	Discussion	Item No. (1)	Description	Equipment Designation	Reqd for SSD (2)	Seis-mic Cat. (3)	Discussion
S1	Pipe	EF-076-HBC-24"	X	Y							
		EF-080-HBC-24"	X	Y							
S2	Pipe	BG-221-HCC-2"		Y							
		BG-289-HCC-1"		Y							
		BG-388-HCC-3"		Y							
		BG-232-HCC-2"		Y							
S3	BA tank	TBG03B		Y							
S4	BA transfer pump	PBG02B		N	Not required post-SSE. See pipe break analysis						
S5	Instruments	LT-105,106		Y							
S6	Conduit	4J1003		Y							
S7	Pipe	BG-229-HCC-3"		Y							
		BG-231-HCC-3/4"		Y							
		BG-232-HCC-2"		Y							
		BG-230-HCC-3"		Y							
		BG-216-HCC-3"		Y							
		BG-238-HCC-2"		Y							
N1	Tray	563A		S							
N2	Pipes	LF-223-HCD-4"		S							
		LF-225-HCD-4"		S							
		HE-025-HCD-2"		S							
N3	Stairway and platform			S							
N4	All other NSRE			N	Does not adversely affect SRE						

TABLE 3B-1 (Sheet 17)

Room Number 1117 Title Boric Acid Tank Room A

Design Approach
_ Only safety-related equipment (SRE) is in the room.
_ Only nonsafety-related equipment (NSRE) is in the room.
_ Minimize SRE in the room and segregate from NSRE.
X Minimize NSRE in the room and segregate from SRE.
_ Other, see remarks.

Flooding Analysis
X Flooding from sources within the room will affect only equipment within the same train/subsystem;

therefore, post-accident safe shutdown is not compromised.
X Flooding from sources external to the room is not credible even with a single active failure.
_ Other, see remarks.

Seismic Design Analysis
_ Only SRE is in the room; therefore, there are no seismically induced failures.
X The NSRE in the room is seismically restrained, therefore, no seismically induced failures are postulated.
_ The NSRE, which is postulated to fail as a result of an SSE, does not impact SRE.
_ The NSRE, which is postulated to fail as a result of an SSE and impact SRE, does not adversely affect the SRE.
_ Other, see remarks.

Missile Analysis
X No credible missile sources exist in the room.
_ Missiles from rotating components generated within the room contain insufficient energy to escape their equipment housing(s).
X External missiles cannot enter the room due to missile protection.
_ Other, see remarks.

Pipe Break Analysis
_ There are no high-energy lines in the room.
_ The high-energy line breaks have been evaluated and do not adversely affect SRE. The effects of the breaks are discussed in Table 3.6-4, Sheet 8 with break locations shown in Figure 3.6-1.
_ Moderate energy cracks within the room do not adversely affect SRE in the room.
X Other, see remarks.

Remarks:

See reverse side for a listing of items located in the room.

1) The only SRE in this room to be protected is the essential service water piping.

2) See the analysis for Room 1116.

TABLE 3B-1 (Sheet 17A)

Listing of items in room 1117

Item No. (1)	Description	Equipment Designation	Reqd for SSD (2)	Seis-mic Cat. (3)	Discussion	Item No. (1)	Description	Equipment Designation	Reqd for SSD (2)	Seis-mic Cat. (3)	Discussion
S1	Conduit	4J1004,1J1004		Y							
S2	BA tank	TBG03A		Y							
S3	BA transfer pump	PBG02A		N	Not required post-SSE. See pipe break analysis.						
S4	Pipe	EF-076-HBC-24"	X	Y							
S5	Pipes	BG-237-HCC-2"		Y							
		BG-238-HCC-2"		Y							
		BG-219-HCC-2"		Y							
		BG-216-HCC-2"		Y							
		BG-218-HCC-3/4"		Y							
S6	Pipe	BG-215-HCC-3"		Y							
S7	Instrument	LT-104,102		Y							
S8	Pipes	BG-384-HCC-3"		Y							
		BG-223-HCC-2"		Y							
		BG-385-HCC-1"		Y							
S9	Pipe	BG-252-HCB-1"		Y							
N1	Pipes	FB-081-HBD-2"		N	Does not adversely affect SRE						
		FB-082-HBD-2"		N							
N2	Stairway and platform			S							
N3	All other NSRE			N	Does not adversely affect SRE						

TABLE 3B-1 (Sheet 18)

Room Number 1119 Title Stairway A-1

Design Approach

_ Only safety-related equipment (SRE) is in the room.
X Only nonsafety-related equipment (NSRE) is in the room.
_ Minimize SRE in the room and segregate from NSRE.
_ Minimize NSRE in the room and segregate from SRE.
_ Other, see remarks.

Flooding Analysis

_ Flooding from sources within the room will affect only equipment within the same train/subsystem; therefore, post-accident safe shutdown is not compromised.
_ Flooding from sources external to the room is not credible even with a single active failure.
X Other, see remarks.

Seismic Design Analysis

_ Only SRE is in the room; therefore, there are no seismically induced failures.
_ The NSRE in the room is seismically restrained, therefore, no seismically induced failures are postulated.
_ The NSRE, which is postulated to fail as a result of an SSE, does not impact SRE.
_ The NSRE, which is postulated to fail as a result of an SSE and impact SRE, does not adversely affect the SRE.
X Other, see remarks.

Missile Analysis

_ No credible missile sources exist in the room.
_ Missiles from rotating components generated within the room contain insufficient energy to escape their equipment housing(s).
_ External missiles cannot enter the room due to missile protection.
X Other, see remarks.

Pipe Break Analysis

X There are no high-energy lines in the room.
_ The high-energy line breaks have been evaluated and do not adversely affect SRE. The effects of the breaks are discussed in Table 3.6-4, with break locations shown in Figure 3.6-1.
_ Moderate energy cracks within the room do not adversely affect SRE in the room.
X Other, see remarks.

Remarks:

1) There is no SRE in the room.

2) Postulated hazards have no effect on SSD.

TABLE 3B-1 (Sheet 19)

Room Number 1120 Title General Floor Area No. 2

Design Approach
_ Only safety-related equipment (SRE) is in the room.
_ Only nonsafety-related equipment (NSRE) is in the room.
_ Minimize SRE in the room and segregate from NSRE.
X Minimize NSRE in the room and segregate from SRE.
_ Other, see remarks.

Flooding Analysis
_ Flooding from sources within the room will affect only equipment within the same train/subsystem;

therefore, post-accident safe shutdown is not compromised.
_ Flooding from sources external to the room is not credible even with a single active failure.
X Other, see remarks.

Seismic Design Analysis
_ Only SRE is in the room; therefore, there are no seismically induced failures.
X The NSRE in the room is seismically restrained, therefore, no seismically induced failures are postulated.
_ The NSRE, which is postulated to fail as a result of an SSE, does not impact SRE.
_ The NSRE, which is postulated to fail as a result of an SSE and impact SRE, does not adversely affect the SRE.
_ Other, see remarks.

Missile Analysis
X No credible missile sources exist in the room.
_ Missiles from rotating components generated within the room contain insufficient energy to escape their equipment housing(s).
X External missiles cannot enter the room due to missile protection.
_ Other, see remarks.

Pipe Break Analysis
X There are no high-energy lines in the room.
_ The high-energy line breaks have been evaluated and do not adversely affect SRE. The effects of the breaks are discussed in Table 3.6-4, with break locations shown in Figure 3.6-1.
X Moderate energy cracks within the room do not adversely affect SRE in the room.
_ Other, see remarks.

Remarks:

See reverse side for a listing of items located in the room.

1) Flooding from any source does not adversely affect SRE because all SRE is routed above the maximum design flood depth of 7 feet (El. 1981).

TABLE 3B-1 (Sheet 19A)

Listing of items in room 1120

Item No. (1)	Description	Equipment Designation	Reqd for SSD (2)	Seis-mic Cat. (3)	Discussion	Item No. (1)	Description	Equipment Designation	Reqd for SSD (2)	Seis-mic Cat. (3)	Discussion
S1	Pipes	EG-051-HBC-6"	X	Y							
		BG-032-HBC-6"	X	Y							
		BG-34-HBC-6"	X	Y							
		BG-35-HBC-6"	X	Y							
		EG-052-HBC-6"	X	Y							
S2	Valves	V-071, V-021	X	Y							
		TV-130,V-309	X	Y							
		V-205	X	Y							
S3	Flow element	EF-FE-58	X	Y							
	from pipe	EF-117-HBC-14"	X	Y							
N1	Conduit	6J4A1C		S							
		6U5A1E		S							
		5U1C1H		S							
N2	Tray	6U5A,5B		S							
N3	Pipes	LF-052-HCD-6"		S							
		LF-115-HCD-4"		S							
N4	Monorail			Y							
N5	All other NSRE			N	Does not adversely affect SRE						

TABLE 3B-1 (Sheet 20)

Room Number 1121 Title Access Pit (To Containment Spray Pump Rooms)

Design Approach
_ Only safety-related equipment (SRE) is in the room.
_ Only nonsafety-related equipment (NSRE) is in the room.
_ Minimize SRE in the room and segregate from NSRE.
X Minimize NSRE in the room and segregate from SRE.
_ Other, see remarks.

Flooding Analysis
_ Flooding from sources within the room will affect only equipment within the same train/subsystem; therefore, post-accident safe shutdown is not compromised.
_ Flooding from sources external to the room is not credible even with a single active failure.
X Other, see remarks.

Seismic Design Analysis
_ Only SRE is in the room; therefore, there are no seismically induced failures.
_ The NSRE in the room is seismically restrained, therefore, no seismically induced failures are postulated.
_ The NSRE, which is postulated to fail as a result of an SSE, does not impact SRE.
X The NSRE, which is postulated to fail as a result of an SSE and impact SRE, does not adversely affect the SRE.
_ Other, see remarks.

Missile Analysis
X No credible missile sources exist in the room.
_ Missiles from rotating components generated within the room contain insufficient energy to escape their equipment housing(s).
X External missiles cannot enter the room due to missile protection.
_ Other, see remarks.

Pipe Break Analysis
X There are no high-energy lines in the room.
_ The high-energy line breaks have been evaluated and do not adversely affect SRE. The effects of the breaks are discussed in Table 3.6-4, with break locations shown in Figure 3.6-1.
X Moderate energy cracks within the room do not adversely affect SRE in the room.
_ Other, see remarks.

Remarks:

See reverse side for a listing of items located in the room.

1) Room contains no safety-related equipment which would be adversely affected by flooding up to the maximum design flood depth (El. 1981).

WOLF CREEK

TABLE 3B-1 (Sheet 20A)

Listing of items in room 1121

Item No. (1)	Description	Equipment Designation	Reqd for SSD (2)	Seis-mic Cat. (3)	Discussion	Item No. (1)	Description	Equipment Designation	Reqd for SSD (2)	Seis-mic Cat. (3)	Discussion
S1	Pipe	EF-117-HBC-1"	X	Y							
S2	Marine doors		X	Y							
N1	All NSRE			N	Does not adversely affect SRE						

TABLE 3B-1 (Sheet 21)

Room Number 1122 Title General Floor Area No. 3

Design Approach
_ Only safety-related equipment (SRE) is in the room.
_ Only nonsafety-related equipment (NSRE) is in the room.
_ Minimize SRE in the room and segregate from NSRE.
X Minimize NSRE in the room and segregate from SRE.
_ Other, see remarks.

Flooding Analysis
_ Flooding from sources within the room will affect only equipment within the same train/subsystem;

therefore, post-accident safe shutdown is not compromised.
_ Flooding from sources external to the room is not credible even with a single active failure.
X Other, see remarks.

Seismic Design Analysis
_ Only SRE is in the room; therefore, there are no seismically induced failures.
X The NSRE in the room is seismically restrained, therefore, no seismically induced failures are postulated.
_ The NSRE, which is postulated to fail as a result of an SSE, does not impact SRE.
_ The NSRE, which is postulated to fail as a result of an SSE and impact SRE, does not adversely affect the SRE.
_ Other, see remarks.

Missile Analysis
X No credible missile sources exist in the room.
_ Missiles from rotating components generated within the room contain insufficient energy to escape their equipment housing(s).
X External missiles cannot enter the room due to missile protection.
_ Other, see remarks.

Pipe Break Analysis
_ There are no high-energy lines in the room.
X The high-energy line breaks have been evaluated and do not adversely affect SRE. The effects of the breaks are discussed in Table 3.6-4, Sheet 9 with break locations shown in Figure 3.6-1.
X Moderate energy cracks within the room do not adversely affect SRE in the room.
_ Other, see remarks.

Remarks:

See reverse side for a listing of items located in the room.

1) Flooding from any source does not adversely affect SRE because all SRE is located above the maximum flood depth of 7 feet (El. 1981).

TABLE 3B-1 (Sheet 21A)

Listing of items in room 1122

Item No. (1)	Description	Equipment Designation	Reqd for SSD (2)	Seis-mic Cat. (3)	Discussion
S1	Pipes	EF-099-HBC-8"	X	Y	
		EF-111-HBC-6"	X	Y	
		EF-108-HBC-4"	X	Y	
S2	Pipes	EF-100-HBC-4"	X	Y	
		EF-101-HBC-4"	X	Y	
S3	Conduit	1J3B1A		Y	BAT level indication;
		1J1004			not required for SSD
S4	Conduit	1U3E1A	X	Y	
S5	HVAC emer exhaust			Y	
S6	Pipes	EM-76-BCB-1"	X	Y	
		EM-74-BCB-4"	X	Y	
		EM-79-BCB-4"	X	Y	
S7	Pipes	EM-107-HCC-1"		Y	
		EM-103-BCB-1"		Y	
S8	Pipes	EF-062-HBC-4"	X	Y	
		EF-055-HBC-4"	X	Y	
		EF-056-HBC-4"	X	Y	
		EF-054-HBC-8"	X	Y	
S9	(Deleted)				
S10	(Deleted)				
S11	Door to turb bldg. El. 1974' column A1/AK			Y	
N1	Trays	5U1C,5J1C		S	
		5U5M		S	
		5U5M01,02,03		S	
N2	Pipes	HB-291-HCD-3"		S	
		HB-211-HCD-3"		S	
		AN-042-HCD-3"		S	
N3	Pipe	KA-003-JBD-8"		S	
N4	(Deleted)				
N5	(Deleted)				
N6	Pipes	FB-050-HBD-3"		S	
		FB-095-HBD-3"		S	
N7	Pipe	KA-023-JBD-6"		S	
N8	Trays (North/South)	5U1C,5J1B		S	
		5U5J,5K		S	
		5J1C		S	
N9	Trays	5U1C,5J1B		S	
		5U5J,5K		S	
		5J1C			
N10	HVAC duct (South East)			S	
N11	Pipe BM-305-GBD-3"			S	
	BL-25-HCD-1"			S	
N12	Pipe LF-022-HCD-4"			S	
N13	Pipes KA-024-JBD-2 1/2"			S	
	KA-148-JBD-1"			S	
N14	HVAC duct (South End)			S	
N15	Conduit 6U1C1F,1G			S	
N16	Pipe 1" domestic water			N	Does not adversely affect SRE
N17	Trays 5A3C			S	
	5G3D			S	

TABLE 3B-1 (Sheet 22)

Room Number 1123 Title Letdown Heat Exchanger Passageway

Design Approach

_ Only safety-related equipment (SRE) is in the room.
_ Only nonsafety-related equipment (NSRE) is in the room.
_ Minimize SRE in the room and segregate from NSRE.
X Minimize NSRE in the room and segregate from SRE.
_ Other, see remarks.

Flooding Analysis

_ Flooding from sources within the room will affect only equipment within the same train/subsystem; therefore, post-accident safe shutdown is not compromised.
_ Flooding from sources external to the room is not credible even with a single active failure.
X Other, see remarks.

Seismic Design Analysis

_ Only SRE is in the room; therefore, there are no seismically induced failures.
_ The NSRE in the room is seismically restrained, therefore, no seismically induced failures are postulated.
_ The NSRE, which is postulated to fail as a result of an SSE, does not impact SRE.
_ The NSRE, which is postulated to fail as a result of an SSE and impact SRE, does not adversely affect the SRE.
X Other, see remarks.

Missile Analysis

_ No credible missile sources exist in the room.
_ Missiles from rotating components generated within the room contain insufficient energy to escape their equipment housing(s).
_ External missiles cannot enter the room due to missile protection.
X Other, see remarks.

Pipe Break Analysis

X There are no high-energy lines in the room.
_ The high-energy line breaks have been evaluated and do not adversely affect SRE. The effects of the breaks are discussed in Table 3.6-4, with break locations shown in Figure 3.6-1.
_ Moderate energy cracks within the room do not adversely affect SRE in the room.
X Other, see remarks.

Remarks:

See reverse side for a listing of items located in the room.

1) SRE in room associated with letdown flow path which is not required for SSD.

2) Postulated hazards have no effect on SSD.

WOLF CREEK

TABLE 3B-1 (Sheet 22A)

Listing of items in room 1123

Item No. (1)	Description	Equipment Designation	Reqd for SSD (2)	Seis-mic Cat. (3)	Discussion	Item No. (1)	Description	Equipment Designation	Reqd for SSD (2)	Seis-mic Cat. (3)	Discussion
S1	Instruments	BG-FT-132		Y	Letdown path not						
		BG-PT-131		Y	required						
		BG-TIS-129		Y	Letdown path not required						
S2	Pipe	EF-163-HBC-1"	X	Y							
N1	Conduit	5U1001		N	Letdown path not						
		5J1016,17,18		N	required						
		6J1001		N	Letdown path not required						
N2	Pipe	KC-447-KBF-8"		N	Letdown path not required						
N3	HVAC duct			N	Letdown path not required						

TABLE 3B-1 (Sheet 23)

Room Number 1124 Title Letdown Heat Exchanger Valve Compartment

Design Approach
_ Only safety-related equipment (SRE) is in the room.
_ Only nonsafety-related equipment (NSRE) is in the room.
_ Minimize SRE in the room and segregate from NSRE.
X Minimize NSRE in the room and segregate from SRE.
_ Other, see remarks.

Flooding Analysis
_ Flooding from sources within the room will affect only equipment within the same train/subsystem;

therefore, post-accident safe shutdown is not compromised.
_ Flooding from sources external to the room is not credible even with a single active failure.
X Other, see remarks.

Seismic Design Analysis
_ Only SRE is in the room; therefore, there are no seismically induced failures.
_ The NSRE in the room is seismically restrained, therefore, no seismically induced failures are postulated.
_ The NSRE, which is postulated to fail as a result of an SSE, does not impact SRE.
_ The NSRE, which is postulated to fail as a result of an SSE and impact SRE, does not adversely affect the SRE.
X Other, see remarks.

Missile Analysis
_ No credible missile sources exist in the room.
_ Missiles from rotating components generated within the room contain insufficient energy to escape their equipment housing(s).
_ External missiles cannot enter the room due to missile protection.
X Other, see remarks.

Pipe Break Analysis
_ There are no high-energy lines in the room.
_ The high-energy line breaks have been evaluated and do not adversely affect SRE. The effects of the breaks are discussed in Table 3.6-4, Sheet 10 with break locations shown in Figure 3.6-1.
_ Moderate energy cracks within the room do not adversely affect SRE in the room.
X Other, see remarks.

Remarks:

See reverse side for a listing of items located in the room.

1) SRE in room associated with letdown flowpath which is not required for SSD.

2) Postulated hazards have no effect on SSD.

TABLE 3B-1 (Sheet 23A)

Listing of items in room 1124

Item No. (1)	Description	Equipment Designation	Reqd for SSD (2)	Seis-mic Cat. (3)	Discussion	Item No. (1)	Description	Equipment Designation	Reqd for SSD (2)	Seis-mic Cat. (3)	Discussion
S1	Pipes	BG-11-ECB-3"		Y	Letdown path not						
		BG-12-ECB-3"		Y	required						
		BG-29-ECB-3"		Y	Letdown path not						
		BG-30-ECB-3"		Y	required						
		BG-31-ECB-2"		Y	Letdown path not required						
S2	Pipes	BG-13-GCB-3"		Y	Letdown path not						
		BG-37-GCB-3"		Y	required						
		BG-308-GCB-2"		Y	Letdown path not						
		BG-040-GCB-3"		Y	required						
		BG-036-ECB-2"		Y	Letdown path not required						
S3	Valve	TCV-129		Y	Letdown path not required						
S4	Instruments	PT-131		Y	Letdown path not						
		TIS-129		Y	required						
		FE-132		Y	Letdown path not required						
N1	Pipe	BG-015-GCD-3"		N	Letdown path not required						
N2	Pipe	LF-105-HCD-4"		N	Letdown path not required						
N3	Pipe	KA-356-JDD-1"		N	Letdown path not required						
N4	HVAC duct			N	Letdown path not required						
N5	Conduit	5U1001,02		N	Letdown path not						
		6J1001,02,03		N	required						
		6U5A1E		N	Letdown path not						
		6J4A1C		N	required						
		5U1C1H		N	Letdown path not						
		5J1017		N	required						

TABLE 3B-1 (Sheet 24)

Room Number 1125 Title Letdown Heat Exchanger Room

Design Approach

_ Only safety-related equipment (SRE) is in the room.
_ Only nonsafety-related equipment (NSRE) is in the room.
_ Minimize SRE in the room and segregate from NSRE.
X Minimize NSRE in the room and segregate from SRE.
Other, see remarks.

Flooding Analysis

_ Flooding from sources within the room will affect only equipment within the same train/subsystem; therefore, post-accident safe shutdown is not compromised.
_ Flooding from sources external to the room is not credible even with a single active failure.
X Other, see remarks.

Seismic Design Analysis

_ Only SRE is in the room; therefore, there are no seismically induced failures.
X The NSRE in the room is seismically restrained, therefore, no seismically induced failures are postulated.
_ The NSRE, which is postulated to fail as a result of an SSE, does not impact SRE.
_ The NSRE, which is postulated to fail as a result of an SSE and impact SRE, does not adversely affect the SRE.
_ Other, see remarks.

Missile Analysis

X No credible missile sources exist in the room.
_ Missiles from rotating components generated within the room contain insufficient energy to escape their equipment housing(s).
X External missiles cannot enter the room due to missile protection.
_ Other, see remarks.

Pipe Break Analysis

_ There are no high-energy lines in the room.
X The high-energy line breaks have been evaluated and do not adversely affect SRE. The effects of the breaks are discussed in Table 3.6-4, Sheet 11 with break locations shown in Figure 3.6-1.
X Moderate energy cracks within the room do not adversely affect SRE in the room.
_ Other, see remarks.

Remarks:

See reverse side for a listing of items located in the room.

1) Flooding from any source does not adversely affect SRE because no SRE within this room is susceptible to external fluid initiated failure.

TABLE 3B-1 (Sheet 24A)

Listing of items in room 1125

Item No. (1)	Description	Equipment Designation	Reqd for SSD (2)	Seis-mic Cat. (3)	Discussion	Item No. (1)	Description	Equipment Designation	Reqd for SSD (2)	Seis-mic Cat. (3)	Discussion
S1	Letdown H.X.	EBG01	X	Y							
S2	Pipes	BG-011-ECB-3"		Y							
		BG-012-ECB-3"		Y							
		BG-029-ECB-3"		Y							
		EJ-035-ECB-3"		Y							
		BG-040-GCB-3"		Y							
S3	Pipes	BG-032-HBC-6"	X	Y							
		BG-040-GCB-3"	X	Y							
S4	Pipes	BG-164-BCB-2"	X	Y							
		BG-195-HCB-2"	X	Y							
N1	Pipe	BG-015-GCO-3"		S							
N2	HVAC duct			S							
N3	Monorail			Y							
N4	Conduit	6U5A1E		S							
		6J4A1C		S							
		5U1C1H		S							

TABLE 3B-1 (Sheet 25)

Room Number 1126 Title Boron Injection Tank Room

Design Approach
_ Only safety-related equipment (SRE) is in the room.
_ Only nonsafety-related equipment (NSRE) is in the room.
_ Minimize SRE in the room and segregate from NSRE.
X Minimize NSRE in the room and segregate from SRE.
_ Other, see remarks.

Flooding Analysis
_ Flooding from sources within the room will affect only equipment within the same train/subsystem;

therefore, post-accident safe shutdown is not compromised.
X Flooding from sources external to the room is not credible even with a single active failure.
X Other, see remarks.

Seismic Design Analysis
_ Only SRE is in the room; therefore, there are no seismically induced failures.
X The NSRE in the room is seismically restrained, therefore, no seismically induced failures are postulated.
_ The NSRE, which is postulated to fail as a result of an SSE, does not impact SRE.
_ The NSRE, which is postulated to fail as a result of an SSE and impact SRE, does not adversely affect the SRE.
_ Other, see remarks.

Missile Analysis
X No credible missile sources exist in the room.
_ Missiles from rotating components generated within the room contain insufficient energy to escape their equipment housing(s).
X External missiles cannot enter the room due to missile protection.
_ Other, see remarks.

Pipe Break Analysis
_ There are no high-energy lines in the room.
_ The high-energy line breaks have been evaluated and do not adversely affect SRE. The effects of the breaks are discussed in Table 3.6-4, Sheet 12 with break locations shown in Figure 3.6-1.
_ Moderate energy cracks within the room do not adversely affect SRE in the room.
X Other, see remarks.

Remarks:

See reverse side for a listing of items located in the room.

1) Flooding from pipe failure within this room does not affect safety shutdown because the BATs are available in this accident scenario.

2) See remarks for Room 1116.

TABLE 3B-1 (Sheet 25A)

Listing of items in room 1126

Item No. (1)	Description	Equipment Designation	Reqd for SSD (2)	Seis-mic Cat. (3)	Discussion
S1	Conduit	1U1026,27,28	X	Y	
S2	Conduit	4U1016,17,18	X	Y	
	J-box	4U3D5H	X	Y	
S3	(Deleted)				
S4	Conduit	4U1019	X	Y	
S5	BIT	TEM01	X	Y	
S6	Boron injection surge tank	TEM02	X	Y	
S7	BI recirc pump	PEM02A	X	Y	
S8	BI recirc pump	PEM02B	X	Y	
S9	(Deleted)				
S10	(Deleted)				
S11	Instruments	EM-TIS-944,945	X	Y	For pressure boundary only
S12	Instrument	EM-FT-917	X	Y	For pressure
		EM-PT-947	X	Y	boundary only
		EM-FT-949	X	Y	For pressure boundary only
S13	Valve	HV-8803A	X	Y	
S14	Valve	HV-8803B	X	Y	
S15	Valve	HV-8870B	X	Y	
S16	Valve	HV-8883	X	Y	
S17	Pipe (up to 8803A and B)	EM-074-BCB-4"	X	Y	
		EM-075-BCB-4"	X	Y	
S18	Pipe (downstream of 8803A and B)	EM-74-BCB-4"	X	Y	
		EM-75-BCB-4"	X	Y	
S19	Pipes	EM-107-HCC-1"	X	Y	
		EM-105-HCC-1"	X	Y	
		EM-111-BCC-1"	X	Y	
		EM-112-BCC-1"	X	Y	
S20	Pipes	EM-101-BCB-1"	X	Y	
		EM-103-BCB-1"	X	Y	
		EM-95-BCB-1"	X	Y	
		EM-100-BCB-1"	X	Y	
S21	Pipe	EM-76-BCB-1"	X	Y	
S22	Pipe	EM-79-BCB-3/4"	X	Y	
S23	Pipe	EM-118-HCC-3/4"	X	Y	
S24	Pipes	EM-91-HCC-2"	X	Y	
		EM-96-HCC-2"	X	Y	

Item No. (1)	Description	Equipment Designation	Reqd for SSD (2)	Seis-mic Cat. (3)	Discussion
S25	Pipe	EM-077-BCB-6"	X	Y	
N1	HVAC duct	S			
N2	Heat trace	3A and 3B	S		
N3	Heat trace	6A and 6B	S		
N4	Heat trace	4A and 4B	S		
N5	Heat trace	5A and 5B	S		
N6	Heat trace	7A and 7B	S		
N7	Instrument	EM-FI-3	S		Structural integrity only
N8	Conduit	5U5K1C,5U1006	S		
N9	Conduit	5J1C1B,5J1030 6U5D1D	S		
N10	Pipe	LF-238-HCD-4"	S		
N11	Pipe	KA-349-JDD-3/4"	S		
N12	(Deleted)				
N13	Pipes	HE-028-HCD-1" EM-113-HCD-1"	S		Structural integrity only
N14	Pipe	BL-114-HCD-1"	S		Structural integrity only
N15	Pipe	EM-123-HCD-2"	S		
N16	Ladder		N		Does not adversely affect SRE
N17	Conduit	item N18	S		
N18	Instruments	EM-LIS-946 EM-LIS-948	S		

TABLE 3B-1 (Sheet 26)

Room Number 1127 Title Stairwell A-2

Design Approach
- _ Only safety-related equipment (SRE) is in the room.
- _ Only nonsafety-related equipment (NSRE) is in the room.
- X Minimize SRE in the room and segregate from NSRE.
- _ Minimize NSRE in the room and segregate from SRE.
- _ Other, see remarks.

Flooding Analysis
- _ Flooding from sources within the room will affect only equipment within the same train/subsystem; therefore, post-accident safe shutdown is not compromised.
- _ Flooding from sources external to the room is not credible even with a single active failure.
- X Other, see remarks.

Seismic Design Analysis
- _ Only SRE is in the room; therefore, there are no seismically induced failures.
- X The NSRE in the room is seismically restrained, therefore, no seismically induced failures are postulated.
- _ The NSRE, which is postulated to fail as a result of an SSE, does not impact SRE.
- _ The NSRE, which is postulated to fail as a result of an SSE and impact SRE, does not adversely affect the SRE.
- _ Other, see remarks.

Missile Analysis
- X No credible missile sources exist in the room.
- _ Missiles from rotating components generated within the room contain insufficient energy to escape their equipment housing(s).
- X External missiles cannot enter the room due to missile protection.
- _ Other, see remarks.

Pipe Break Analysis
- _ There are no high-energy lines in the room.
- X The high-energy line breaks have been evaluated and do not adversely affect SRE. The effects of the breaks are discussed in Table 3.6-4, Sheet 13 with break locations shown in Figure 3.6-1.
- X Moderate energy cracks within the room do not adversely affect SRE in the room.
- _ Other, see remarks.

Remarks:

See reverse side for a listing of items located in the room.

1) Flooding from any source does not adversely affect SRE because all SRE is located above the maximum flood depth.

TABLE 3B-1 (Sheet 26A)

Listing of items in room 1127

Item No. (1)	Description	Equipment Designation	Reqd for SSD (2)	Seis-mic Cat. (3)	Discussion	Item No. (1)	Description	Equipment Designation	Reqd for SSD (2)	Seis-mic Cat. (3)	Discussion
S1	Pipes	EF-099-HBC-8"	X	Y							
		EF-108-HBC-4"	X	Y							
S2	Trays	1U1K,1J1L	X	Y							
S3	Instrument	EG-FT-62	X	Y							
S4	Conduit	4U3D5Z	X	Y							
		4U3D5C	X	Y							
S5	Trays	4U3D,3E	X	Y							
		4J3C	X	Y							
S6	Conduit	4J3C1C		Y							
N1	Conduit	6U53DZ		S							
N2	Pipes	FB-050-HBD-3"		N							
		FB-090-HBD-3"		N							
N3	Pipe	HF-107-HBD-3"		N							
N4	Stairs and platforms			Y							
N5	Pipe	BM-305-GBD-3"		S							
N6	Pipes	KC-300-KBF-2 1/2"		S							
		KC-468-KBF-2 1/2"		S							
N7	Pipes	KC-300-KBF-4"		S							
		KC-110-KBF-6"		S							
		KC-510-KBF-2 1/2"		S							
N8	Pipe	KA-351-JDD-1 1/2"		S							
N9	Trays	6J5B		S							
		6U5D,5E		S							

TABLE 3B-1 (Sheet 27)

Room Number 1128 Title General Area No. 5 Elev. 1974'

Design Approach
_ Only safety-related equipment (SRE) is in the room.
_ Only nonsafety-related equipment (NSRE) is in the room.
X Minimize SRE in the room and segregate from NSRE.
_ Minimize NSRE in the room and segregate from SRE.
Other, see remarks.

Flooding Analysis
_ Flooding from sources within the room will affect only equipment within the same train/subsystem;

therefore, post-accident safe shutdown is not compromised.
_ Flooding from sources external to the room is not credible even with a single active failure.
X Other, see remarks.

Seismic Design Analysis
_ Only SRE is in the room; therefore, there are no seismically induced failures.
X The NSRE in the room is seismically restrained, therefore, no seismically induced failures are postulated.
_ The NSRE, which is postulated to fail as a result of an SSE, does not impact SRE.
_ The NSRE, which is postulated to fail as a result of an SSE and impact SRE, does not adversely affect the SRE.
_ Other, see remarks.

Missile Analysis
X No credible missile sources exist in the room.
_ Missiles from rotating components generated within the room contain insufficient energy to escape their equipment housing(s).
X External missiles cannot enter the room due to missile protection.
_ Other, see remarks.

Pipe Break Analysis
_ There are no high-energy lines in the room.
X The high-energy line breaks have been evaluated and do not adversely affect SRE. The effects of the breaks are discussed in Table 3.6-4, Shet 14 with break locations shown in Figure 3.6-1.
X Moderate energy cracks within the room do not adversely affect SRE in the room.
_ Other, see remarks.

Remarks:

See reverse side for a listing of items located in the room.

1) Flooding from any source does not adversely affect SRE because all SRE is located above the maximum design flood depth of 7 feet (El. 1981).

WOLF CREEK

TABLE 3B-1 (Sheet 27A)

Listing of items in room 1128

Item No. (1)	Description	Equipment Designation	Reqd for SSD (2)	Seis-mic Cat. (3)	Discussion	Item No. (1)	Description	Equipment Designation	Reqd for SSD (2)	Seis-mic Cat. (3)	Discussion
S1	Tray	1B2F	X	Y							
S2	Tray	4B2F	X	Y							
N1	Pipe	FB-050-HBD-3"		S							
N2	Pipe	HF-107-HBD-3"		S							
N3	Pipe	LE-025-HCD-4"		S							
N4	HVAC duct	6" x 12"		S							
N5	HVAC duct	8" x 8"		S							
N6	Conduit	5U5K1P		S							
N7	Pipe	LE-034-HCD-4"		S							
N8	All other NSRE			N	Does not adversely affect SRE						

TABLE 3B-1 (Sheet 28)

Room Number 1129 Title Auxiliary Steam Condensor Recovery and Storage Tank Room

Design Approach

_ Only safety-related equipment (SRE) is in the room.
X Only nonsafety-related equipment (NSRE) is in the room.
_ Minimize SRE in the room and segregate from NSRE.
_ Minimize NSRE in the room and segregate from SRE.
_ Other, see remarks.

Flooding Analysis

_ Flooding from sources within the room will affect only equipment within the same train/subsystem; therefore, post-accident safe shutdown is not compromised.
_ Flooding from sources external to the room is not credible even with a single active failure.
X Other, see remarks.

Seismic Design Analysis

_ Only SRE is in the room; therefore, there are no seismically induced failures.
_ The NSRE in the room is seismically restrained, therefore, no seismically induced failures are postulated.
_ The NSRE, which is postulated to fail as a result of an SSE, does not impact SRE.
_ The NSRE, which is postulated to fail as a result of an SSE and impact SRE, does not adversely affect the SRE.
X Other, see remarks.

Missile Analysis

_ No credible missile sources exist in the room.
_ Missiles from rotating components generated within the room contain insufficient energy to escape their equipment housing(s).
_ External missiles cannot enter the room due to missile protection.
X Other, see remarks.

Pipe Break Analysis

_ There are no high-energy lines in the room.
_ The high-energy line breaks have been evaluated and do not adversely affect SRE. The effects of the breaks are discussed in Table 3.6-4, Sheet 15 with break locations shown in Figure 3.6-1.
_ Moderate energy cracks within the room do not adversely affect SRE in the room.
X Other, see remarks.

Remarks:

1) There is no SRE in the room.

2) Postulated hazards have no effect on SSD.

TABLE 3B-1 (Sheet 29)

Room Number 1130 Title North Corridor

Design Approach

_ Only safety-related equipment (SRE) is in the room
X Only nonsafety-related equipment (NSRE) is in the room.
_ Minimize SRE in the room and segregate from NSRE.
_ Minimize NSRE in the room and segregate from SRE.
_ Other, see remarks.

Flooding Analysis

_ Flooding from sources within the room will affect only equipment within the same train/subsystem;

therefore, post-accident safe shutdown is not compromised.
_ Flooding from sources external to the room is not credible even with a single active failure.
X Other, see remarks.

Seismic Design Analysis

_ Only SRE is in the room; therefore, there are no seismically induced failures.
_ The NSRE in the room is seismically restrained, therefore, no seismically induced failures are postulated.
_ The NSRE, which is postulated to fail as a result of an SSE, does not impact SRE.
_ The NSRE, which is postulated to fail as a result of an SSE and impact SRE, does not adversely affect the SRE.
X Other, see remarks.

Missile Analysis

_ No credible missile sources exist in the room.
_ Missiles from rotating components generated within the room contain insufficient energy to escape their equipment housing(s).
_ External missiles cannot enter the room due to missile protection.
X Other, see remarks

Pipe Break Analysis

_ There are no high-energy lines in the room.
_ The high-energy line breaks have been evaluated and do not adversely affect SRE. The effects of the breaks are discussed in Table 3.6-4, Sheet 16 with break locations shown in Figure 3.6-1.
_ Moderate energy cracks within the room do not adversely affect SRE in the room.
X Other, see remarks.

Remarks:

1) There is no SRE in the room.

2) Postulated hazards have no effect on SSD.

TABLE 3B-1 (Sheet 30)

Notes: (1) Item prefix S - Safety-related equipment (SRE)

N - Nonsafety-related equipment (NSRE)

(2) An X denotes that equipment is required for post-accident safe shutdown (SSD) of the reactor.

(3) Y - Component is functionally and structurally designed and constructed to meet seismic Category I requirements, as defined in Regulatory Guide 1.29.

N - Component is nonseismic Category I.

S - Component is seismically designed per requirements of position C.2 of R.G. 1.29.

(4) All conduit in the auxiliary building El. 1974', except in Room 1128, is seismically supported.

TABLE 3B-2

MAIN STEAM/MAIN FEEDWATER ISOLATION VALVE
COMPARTMENT DESIGN PARAMETERS

I. Initial Conditions for Analysis

Temperature	120°F
Pressure	14.7 psia
Relative Humidity	
Cases 1a and 2)	100%
(Case 1b)	70%
Water Level	0 ft

II. Design Conditions

Temperature	324°F*
Pressure	6.7 psig
Floodwater Level	1.33 ft

* This temperature represents the licensing basis MSLB, equivalent in flow area to a single ended steam line rupture (1.4 ft^2), with backflow but without superheat effects.

Table 3B-2a

TRANSIENT SUMMARY FOR THE SPECTRUM OF STEAMLINE BREAKS AT 102% POWER

Break Size (ft^2)	Reactor Trip Signal	Safety Injection Signal	Rx Trip/FW Isolation (sec)	Safety Injection (sec)	Steamline Isolation (sec)	AFW Actuation (sec)	SG Tube Uncovery (sec)
4.6	SI/LSP	LSP	3.230	28.230	18.230	61.230	57.500
1.0	OPΔT	LPP	13.323	76.577	262.203	109.577	172.500
0.7	OPΔT	LPP	16.828	102.487	383.784	135.487	235.500
0.5	OTΔT	LPP	21.715	141.513	583.342	169.395	289.500

SI/LSP - Safety Injection/Low Steamline Pressure
OPΔT/OTΔT - Overpower/Overtemperature Delta T
LPP - Low Pressurizer Pressure

TABLE 3B-3 (Sheet 1)

MASS AND ENERGY RELEASE DATA FOR
MAIN STEAM LINE BREAK IN MAIN STEAM/MAIN FEEDWATER ISOLATION
VALVE COMPARTMENT

A. Pressure Analysis

Time (Sec)	Mass Rate (Lbs/Sec)	Enthalpy (Btu/Lb)
0	0	0
.05	8147	1186
1	6421	1188
2	7380	1043
3	9986	837
3.5	10703	795
4	11345	763
4.2	11696	748
5	10755	651
6	8160	592
8	7842	591
10	7010	608
20	2762	854
30	1394	1092
40	1242	1111
90(1)	906	1204

TABLE 3B-3 (Sheet 2)

MASS AND ENERGY RELEASE DATA FOR
MAIN STEAM LINE BREAK IN MAIN STEAM/MAIN FEEDWATER ISOLATION
VALVE COMPARTMENT

B. Temperature Analysis

1. 102% Power - 4.6 ft^2 Steamline Break

Time (Sec)	Break Flow (lbm/sec)	Energy Flow (10^6 Btu/sec)	Break Enthalpy (Btu/lbm)	Saturation Enthalpy (Btu/lbm)	Superheat (Btu/lbm)
0	0	0	0	0	0
0.5	7346	8.765	1193	1193	0
5	5905	7.078	1199	1199	0
5.5	5834	6.994	1199	1199	0
6	6496	7.789	1199	1199	0
6.5	6537	7.838	1199	1199	0
8.5	6537	7.839	1199	1199	0
9.5	6468	7.758	1199	1199	0
11.5	6235	7.483	1200	1200	0
18.5(2)	5130	6.171	1203	1203	0
19	1795	2.159	1203	1203	0
20	1706	2.053	1203	1203	0
30	1210	1.457	1204	1204	0
35	1087	1.309	1204	1204	0
40.5	1006	1.211	1204	1204	0
50.5	932.5	1.122	1203	1203	0
55.5	915	1.101	1203	1203	0
57.5(3)	909.5	1.097	1206	1203	3
60.5	864	1.052	1218	1203	15
65.5	744.2	0.9196	1236	1201	35
70.5	563	0.7055	1253	1198	55
80.5	171.5	0.2197	1281	1176	105
90.5	80.11	0.1035	1292	1161	131
100.5	73.74	0.0955	1295	1160	135
120.5	77.46	0.1005	1297	1161	136
140.5	77.38	0.1004	1298	1161	137
160.5	85.98	0.1115	1297	1163	134
199.5	91.88	0.1191	1296	1164	132
599.5	91.87	0.1187	1292	1164	128
1200	91.86	0.1176	1281	1164	117
1800	91.85	0.1165	1268	1164	104

TABLE 3B-3 (Sheet 3)

MASS AND ENERGY RELEASE DATA FOR
MAIN STEAM LINE BREAK IN MAIN STEAM/MAIN FEEDWATER ISOLATION
VALVE COMPARTMENT

2. 102% Power - 1.0 ft^2 Steamline Break

Time (Sec)	Break Flow (lbm/sec)	Energy Flow (10^6 Btu/sec)	Break Enthalpy (Btu/lbm)	Saturation Enthalpy (Btu/lbm)	Superheat (Btu/lbm)
0	0	0	0	0	0
0.5	1921	2.29	1192	1192	0
5	1779	2.125	1194	1194	0
10	1680	2.009	1196	1196	0
15.5	1626	1.946	1197	1197	0
20.5	2047	2.44	1192	1192	0
22.5	2073	2.47	1191	1191	0
25	2054	2.448	1192	1192	0
30	1989	2.373	1193	1193	0
40.5	1865	2.229	1195	1195	0
50.5	1745	2.089	1197	1197	0
76.5	1482	1.779	1201	1201	0
100.5	1304	1.568	1203	1203	0
125.5	1178	1.418	1204	1204	0
150.5	1130	1.36	1204	1204	0
172.5(3)	1125	1.355	1204	1204	0
201.5	1111	1.34	1206	1204	2
215.5	1085	1.315	1212	1204	8
245.5	957.4	1.173	1226	1204	22
251.5	916.9	1.127	1229	1204	25
263.5(2)	818.4	1.013	1237	1204	33
273.5	315.7	0.4006	1269	1193	76
287.5	105.6	0.1353	1280	1173	107
301.5	89.59	0.1147	1281	1170	111
451.5	91.43	0.1168	1278	1171	107
601.5	91.42	0.1165	1275	1171	104
901.5	91.4	0.1159	1268	1171	97
1200	91.38	0.1153	1261	1171	90
1800	91.34	0.114	1248	1171	77

TABLE 3B-3 (Sheet 4)

MASS AND ENERGY RELEASE DATA FOR
MAIN STEAM LINE BREAK IN MAIN STEAM/MAIN FEEDWATER ISOLATION
VALVE COMPARTMENT

3. 102% Power - .7 ft^2 Steamline Break

Time (Sec)	Break Flow (lbm/sec)	Energy Flow (10^6 Btu/sec)	Break Enthalpy (Btu/lbm)	Saturation Enthalpy (Btu/lbm)	Superheat (Btu/lbm)
0	0	0	0	0	0
0.5	1361	1.623	1192	1192	0
5	1290	1.54	1194	1194	0
10	1238	1.479	1195	1195	0
15	1205	1.44	1196	1196	0
19	1194	1.428	1196	1196	0
19.5	1287	1.538	1195	1195	0
22	1434	1.709	1192	1192	0
26.5	1534	1.825	1189	1189	0
27.5	1534	1.824	1189	1189	0
30	1520	1.808	1190	1190	0
40.5	1463	1.743	1191	1191	0
100.5	1119	1.342	1199	1199	0
150.5	925.3	1.113	1202	1202	0
199.5	835.3	1.005	1203	1203	0
235.5(3)	834.3	1.004	1204	1203	1
245.5	834.6	1.005	1204	1203	1
299.5	782.7	0.9502	1214	1204	10
325.5	742.1	0.9048	1219	1204	15
351.5	687.6	0.8428	1226	1204	22
375.5	617.9	0.7621	1233	1204	29
383.5(2)	590.5	0.7301	1236	1204	32
391.5	403.4	0.5057	1254	1202	52
399.5	241.8	0.3061	1266	1195	71
405.5	169.7	0.2158	1272	1189	83
411.5	128	0.1632	1275	1184	91
415.5	112	0.143	1276	1182	94
451.5	90.73	0.1158	1277	1178	99
599.5	90.78	0.1156	1274	1178	96
1200	90.72	0.1143	1260	1178	82
1800	90.65	0.113	1246	1178	68

TABLE 3B-3 (Sheet 5)

MASS AND ENERGY RELEASE DATA FOR
MAIN STEAM LINE BREAK IN MAIN STEAM/MAIN FEEDWATER ISOLATION
VALVE COMPARTMENT

4. 102% Power - .5 ft^2 Steamline Break

Time (Sec)	Break Flow (lbm/sec)	Energy Flow (10^6 Btu/sec)	Break Enthalpy (Btu/lbm)	Saturation Enthalpy (Btu/lbm)	Superheat (Btu/lbm)
0	0	0	0	0	0
0.5	980.3	1.169	1192	1192	0
5	942.9	1.125	1193	1193	0
10	916	1.094	1194	1194	0
20	886.5	1.059	1195	1195	0
22.5	883.2	1.055	1195	1195	0
23.5	885.8	1.058	1195	1195	0
30	1129	1.341	1188	1188	0
32.5	1141	1.355	1188	1188	0
50.5	1100	1.308	1189	1189	0
75.5	1019	1.215	1192	1192	0
100.5	941	1.125	1195	1195	0
150.5	806.2	0.9667	1199	1199	0
201.5	699.2	0.8403	1202	1202	0
225.5	661.1	0.7949	1202	1202	0
251.5	631.7	0.7599	1203	1203	0
275.5	623.2	0.7498	1203	1203	0
289.5(3)	624.2	0.7511	1203	1203	0
301.5	623.7	0.7511	1204	1203	1
351.5	605.6	0.7321	1209	1203	6
375.5	597	0.7228	1211	1203	8
425.5	574	0.6974	1215	1204	11
451.5	557.5	0.6787	1217	1204	13
475.5	539.1	0.6577	1220	1204	16
501.5	515.2	0.6303	1223	1204	19
551.5	457.2	0.5628	1231	1204	27
575.5	425.1	0.525	1235	1204	31
583.5(2)	414.2	0.5121	1236	1204	32
593.5	274.8	0.3441	1252	1202	50
605.5	178.6	0.2254	1263	1196	67
631.5	101.6	0.1291	1271	1186	85
699.5	89.88	0.1142	1271	1184	87
1200	89.79	0.1131	1260	1184	76
1800	89.66	0.1117	1246	1184	62

Notes:
(1) Peak pressure reached prior to this point
(2) Approximate MSIV closure time
(3) Time of faulted steam generator tube uncovery

TABLE 3B-4

MASS RELEASE DATA FOR MAIN FEEDWATER
LINE BREAK IN MAIN STEAM/MAIN FEEDWATER ISOLATION
VALVE COMPARTMENT

Time (Min)	Mass Rate[1] (Gpm)
0	0
0	32,149
1.5	32,149
1.5	22,000
8.7	22,000
8.7	0

(1) Although the initial temperature of the feedwater is 446°F and approximately 20 percent of the initial fluid would flash, it has been conservatively assumed for flooding purposes that the entire mass released is nonflashing liquid.

TABLE 3B-5

SUMMARY OF NODALIZATION MODEL

Compartment	Compartment Volume (Ft^3)	Vent Path (X-Y)	Vent Area (Ft^2)	Flow Coefficient (C)
A. Pressure Analysis				
1	11291(1)	1-2	23.31	0.61
		1-6	587.10	0.61
2	11432(1)	2-3	4.91	0.61
		2-5	610.40	0.61
3	2113	3-4	4.91	0.61
4	2113			
5	37873	5-6	550.00	0.86
		5-7	187.00	0.85
6	37873	6-8	187.00	0.85
7	3726	7-9	198.00	0.94
8	3726	8-10	198.00	0.94
9	6209	9-10	203.14	0.94
		9-ATM	203.14	0.95(2)
10	6209	10-ATM	203.14	0.95(2)

(1) The difference in the volumes between compartments 1 & 2 is due to different volumes of HVAC ductwork.

(2) The flowpaths 9-ATM and 10-ATM are blowout panels with a set pressure of 0.347 psi.

TABLE 3B-5a

MAIN STEAM TUNNEL GOTHIC MODEL PARAMETERS

NODE	Description	Volume (ft^3)	Bottom Elevation	Top Elevation	Initial Relative Humidity
1	MST West	59,098.92	2,026′	2,088′-2″	0.70
2	MST East	59,239.92	2,026′	2,088′-2″	0.70
3	Environment	1.0E+08	2,000′	3,000′	0.50
4	Containment	2.5E+06	2,000′	2,205′	0.50

Flow Path	Description	Upstream Node	Downstream Node	Flow Area (ft^2)	Loss Coefficient
1	Clear Areas through Column AC	1	2	633.84	0.82
2	Break Flow	1F	1	--	--
3	MST West Vent	1	3	203.14	0.82
4	MST East Vent	2	3	203.14	0.82
5	Atmospheric pressure	3	2P	1.0E+05	0.001

Heat Sink	Material	Node	Surface Area (ft^2)	Thickness (ft)	Boundary Condition	
					Left	Right
1	Structural Steel	1	4,287.13	0.042	DLM	Adiabatic
2	Structural Steel	2	4,300.96	0.042	DLM	Adiabatic
3	Concrete Floor	1	945	2	DLM	Adiabatic
4	Concrete Floor	2	945	2	DLM	Adiabatic
5	Concrete Column	1	3,200	1	DLM	Adiabatic
6	Concrete Column	2	3,200	1	DLM	Adiabatic
7	Concrete Column	1	3,352.5	2	DLM	Adiabatic
8	Concrete Column	2	3,352.5	2	DLM	Convective
9	Interior Concrete	1	1,665	1	DLM	Adiabatic
10	Interior Concrete	2	1,665	1	DLM	Adiabatic
11	Concrete Column	1	1,639	2	DLM	Adiabatic
12	Concrete Column	2	1,639	2	DLM	Adiabatic
13	Reactor Bldg Wall	1	1,865	4	DLM	Isothermal
14	Reactor Bldg Wall	2	1,865	4	DLM	Isothermal
15	Concrete Roof	1	365	2	DLM	Convective
16	Concrete Roof	2	365	2	DLM	Convective

TABLE 3B-6

MISSILES

SUMMARY OF CONTROL ROD DRIVE MECHANISM MISSILE ANALYSIS

Postulated Missile	Weight (lb)	Thrust Area ($in.^2$)	Impact Area ($in.^2$)	Impact Velocity (ft/sec)	Kinetic Energy (ft-lb)	Energy Ratio **
Mechanism housing plug	11	4.91	7.07	NA	NA	NA
Drive shaft*	135	2.40	2.41	120	30,186	0.357
Drive shaft latched to mechanism	1200	12.57	11.04	NA	NA	NA

* The critical missile is the drive shaft alone. It is the limiting case and envelopes the other cases listed.

** Ratio of the missile impact energy to the Kinetic energy required for perforation of the missile shield, as determined by the Stanford Equation from ORNL-NSIC-5 (referenced f.m Standard Review Plan 3.5.3 for missiles striking steel barriers).

TABLE 3B-6 (Sheet 2)

PIPING TEMPERATURE ELEMENT ASSEMBLY - MISSILE CHARACTERISTICS

1. For a tear around the weld between the boss and the pipe:

Characteristics	"without well"	"with well"
Flow discharge area	0.11 $in.^2$	0.60 $in.^2$
Thrust area	7.1 $in.^2$	9.6 $in.^2$
Missile weight	11.0 lbs	15.2 lbs
Area of impact	3.14 $in.^2$	3.14 $in.^2$
Missile Weight Impact Area	3.5 psi	4.84 psi
Velocity	20 ft/sec	120 ft/sec

2. For a tear at the junction between the temperature element assembly and the boss for the "without well" element and at the junction between the boss and the well for the "with well" element.

Characteristics	"without well"	"with well"
Flow discharge area	0.11 $in.^2$	0.60 $in.^2$
Thrust area	3.14 $in.^2$	3.14 $in.^2$
Missile weight	4.0 lbs	6.1 lbs
Area of impact	3.14 $in.^2$	3.14 $in.^2$
Missile Weight Impact Area	1.27 psi	1.94 $in.^2$
Velocity	75 ft/sec	120 ft/sec

TABLE 3B-6 (Sheet 3)

CHARACTERISTICS OF OTHER MISSILES
POSTULATED WITHIN REACTOR CONTAINMENT

	Reactor Coolant Pump Temperature Element	Instrument Well of Pressurizer	Pressurizer Heaters
Weight	1.86 lbs	5.5 lbs	15 lbs
Discharge area	0.37 $in.^2$	0.442 $in.^2$	0.61 $in.^2$
Thrust area	0.79 $in.^2$	1.35 $in.^2$	2.4 $in.^2$
Impact area	0.1 $in.^2$	1.35 $in.^2$	2.4 $in.^2$
Missile Weight / Impact Area	18.6 psi	4.1 psi	6.25 psi
Velocity	110 ft/sec	100 ft/sec	55 ft/sec

TABLE 3B-7

EVALUATION OF RCS LOOP BRANCH LINE BREAKS
(See Figure 3.6-3)

RCS Loop Nozzle Number	Branch Line Description	Branch Line Identification	Pipe Break Evaluation
Loop 1 Cold Leg			
Nozzle 5	SIS from BIT (small break criteria)	BB-05-BCA-1 1/2"	No piping available for whip. Jet impingement from a break in this line will not affect any other lines.
		EM-083-BCA-1 1/2"	No motive force for break in this portion of piping.
Nozzle 10	Normal charging (small break criteria)	BB-004-BCA-3" to BB-8378B (2nd valve) (Pipe whip from both ends to break)	A break in this line will not propagate[1] to cause a break in any of the following: lines attached to any other loop, the hot leg and crossover leg of Loop 1, the BIT (Nozzle 5), line EM-87-BCA-1 1/2" to Loop 4, and EM-83-BCA-1 1/2" to Loop 1.
	Normal charging upstream of valve BB-8378B (2nd valve) (MEB 3-1 breaks on lines) (small break no LOCA criteria)	BG-24-BCB-3"	A break in this line will not propagate to break: any line directly connected to Loops 1 & 2 which could result in a loss-of-coolant accident or the Loop 2 seal injection lines.
Nozzle 12	Pressurizer spray line (small break criteria)	BB-003-BCA-4" (max propagation = 12.5 in.2)	A break in this line will not propagate to cause a break in any of the following: the hot leg, crossover leg, lines connected to other loops, BIT (Nozzle 5), charging line (Nozzle 10), line EM-087-BCA-1 1/2" to Loop 4, and all of Loop 4.

[1] In this context, propagation is defined as the failure of other pipes caused by the initial pipe break.

TABLE 3B-7 (Sheet 2)

Nozzle 14	Accumulator line (60.132 in.2) (large break criteria)	BB-002-BCA-10 (Pipe whip from both sides of break)	A break in this line will not propagate to cause a break in any line attached to any other loop. The following provision assures that propagation of this break will not cause further breaks whose combined area exceeds 12.03 in.2: Nozzle 10 is designed for jet impingement loads, and Nozzle 12 is protected from pipe whip and designed for jet impingement loads, or All Loop 1 branch piping, except Nozzle 12, is protected from pipe whip and designed for jet impingement loads.
	Upstream of valve 8948A	EP-03-BCA-10" and EP-26-BCA-6"	A break in this portion of the line will not result in a LOCA. Whip of this pipe will not impact other branch lines which might cause LOCA rupture of them.
<u>Loop 1 - Crossover Leg</u>			
Nozzle 6	Loop drain line (small break criteria)	BB-20-BCA-2"	A break of this line will not affect any other lines.
Nozzle 8	Crossover leg STUB line (small break criteria)	BB-15-BCA-3"	A break in this line will not propagate to any other loop, the hot leg or cold leg of Loop 1. No protection is required for any line connected to the crossover leg of Loop 1.
Nozzle 2	Flow instrument lines (3/4") (.375 inch hole) (small break criteria)		A break of these lines will not affect any other line.
<u>Loop 1 Hot Leg</u>			
Nozzle 1	Sample connection (2.34-inch hole) (small break criteria)	BB-18-BCB-3/4"	A break in this line will not affect any other line.
Nozzle 16	RHR shutdown suction line (large break criteria)	BB-007-BCA-12"	A break of this line will not affect lines to any other loops.

TABLE 3B-7 (Sheet 3)

			The following provision assures that propagation of this break will not cause further breaks whose combined area exceeds 17.32 in.2: protection from pipe whip and design for jet impingement loads is provided for a and (b or c). a. Accumulator line b. All Loop 1 branch lines except the pressurizer spray line. c. Pressurizer spray line
Loop 2 - Cold Leg			
Nozzle 5	SIS from BIT (small break criteria)	BB-24-BCA-1 1/2"	No piping is available for whip. Jet impinge- from a break in this line will not affect any other lines.
Nozzle 12	Pressurizer spray line (9.283 in.2)	BB-023-BCA-4"	A break in this line will not propagate to cause a break in any line attached to any other loop, the hot leg or crossover leg of Loop 2, or Nozzle 5. In the specific area of this pipe routing to the pressurizer, propagation of this break to the normal charging line to Loop 1, all of Loop 1, all of Loop 4, or the BIT line to Loop 3 will not occur.
Nozzle 14	Accumulator line (60.132 in.2) (large break criteria)	BB-022-BCA-10" (Pipe whip from both ends of break)	A break in this line will not propagate to cause a break in any line attached to any other loop. The following provision assures that propagation of this break will not cause further breaks whose combined area exceeds 12.03 in.2: protection from pipe whip and design for jet impingement loads is provided for a and (b or c). a. RHR and SI hot leg recirculation b. All Loop 2 branch lines except the pressurizer spray line. c. Pressurizer spray line
	Upstream of valve 8948B (large break, non-LOCA)	EP-06-BCA-10" & EP-28-BCA-6"	A break in this portion of the line will not result in a LOCA. Propagation of this break to the crossover leg stub connection, the charging line, the seal injection line, or the BIT line to Loop 3 will not occur.

TABLE 3B-7 (Sheet 4)

Loop 2 Crossover Leg			
Nozzle 6	Loop drain line (small break criteria)	BB-037-BCA-2"	A break of this line will not affect any other lines.
Nozzle 8	Crossover leg stub connection (12.5 in.2 total) (small break criteria)	BB-33-BCA-3"	A break of this line will not propagate to any other loop, the hot leg or cold leg of Loop 2. No protection is required for any line connected to the crossover leg of Loop 2.
Nozzle 2	Flow instrument lines (3/4") (.375 inch hole) (small break criteria)		A break of these lines will not affect any other lines.
Loop 2 Hot Leg			
Nozzle 13	RHR and SI hot leg recirculation (21.16 in.2) (large break criteria)	BB-026-BCA-6"	A break of this line will not affect any other lines.
Loop 3 Cold Leg			
Nozzle 5	SIS from BIT (small break criteria)	BB-40-BCA-1 1/2"	No piping is available for whip. Jet impingement from a break of this line will not affect any other lines.
Nozzle 14	Accumulator line (60.132 in.2) (large break criteria)	BB-39-BCA-10" (pipe whip from both ends of break)	A break in this line will not propagate to cause a break in any line attached to any other loop. To assure that propagation of this break will not cause additional breaks whose combined area exceeds 12.03 in.2, protection for pipes on this loop is provided as follows: 1. The RHR and SI hot leg recirculation line Nozzle 13 and the letdown line Nozzle 9 are designed for jet impingement loads. 2. Protection of the remainder of the pipes attached to this loop is not required.
	Upstream of valve 8948C (large break, non-LOCA)	EP-09-BCA-10" and EP-30-BCA-6"	A break in this portion of the line will not result in a LOCA, letdown line, or seal injection lines.

TABLE 3B-7 (Sheet 5)

Loop 3 Crossover Leg			
Nozzle 9	Letdown line (small break criteria)	BB-054-BCA-3"	A break of this line will not propagate to any other loop, the hot leg or cold leg of Loop 3, or the stub connection on the crossover leg of Loop 3. No protection of the flow taps is required.
Nozzle 8	Crossover leg stub connection (small break criteria)	BB-49-BCA-3"	A break of this line will not propagate to any other loop, the hot leg or cold leg of Loop 3. No protection is required for any line connected to the crossover leg of Loop 3.
Nozzle 2	Flow instrument lines (3/4") (.375 inch holes) (small break criteria)		A break of this line will not affect any other line.
Loop 3 Hot Leg			
Nozzle 1	Sample connection (3/4" pipe) (.234 inch hole) (small break criteria)	BB-52-BCB-3/4"	A break of this line will not affect any other line.
Nozzle 13	RHR and SI hot leg recirculation (21.16 in.2) (large break criteria)	BB-042-BCA-6"	A break of this line will not propagate to other lines except the sample line connection (Nozzle 1).
Loop 4 Cold Leg			
Nozzle 5	SIS from BIT (small break criteria)	BB-59-BCA-1 1/2"	Jet impingement from a break in this line will not affect any other line. No piping is available for whip.
Nozzle 11	Alternate charging (small break criteria)	BB-57-BCA-3" (pipe whip from both ends of break)	A break in this line will not propagate to cause a break in any line attached to any other loop, the hot leg or crossover leg of Loop 4, the BIT (Nozzle 5).
	Upstream of 8379B	BG-25-BCB-3"	A break in this line will not propagate to the normal charging line, the seal injection lines, or any line on the other loops whose rupture could cause a LOCA.

TABLE 3B-7 (Sheet 6)

Nozzle 14	Accumulator line (60.132 in.2) (large break criteria)	BB-58-BCA-10" (pipe whip from both ends of break)	A break in this line will not propagate to cause a break in any line attached to any other loop. A break in this line will not propagate to an additional break area greater than 12.03 in.2. Therefore: 1. The RHR shutdown suction line (Nozzle 16) and pressurizer surge line (Nozzle 15) are designed for jet impingement and are protected from pipe whip. 2. With respect to the small pipes attached to this loop, one of the following combinations of additional line losses may be tolerated: a. The boron injection line, and the flow taps or, b. The alternate charging line, BIT and the flow taps, or c. All other lines, or d. The excess letdown, and the flow taps.
	Upstream of valve 8948D	EP-12-BCA-10"	A break in this portion of the line will not result in a LOCA. In addition, propagation of this break to the SI hot leg recirculation line, the RHR shutdown suction line, pressurizer surge line, alternate charging, excess letdown, or seal injection lines will not cause a LOCA.
<u>Loop 4 Crossover Leg</u>			
Nozzle 3	Loop drain with excess letdown (small break criteria)	BB-074-BCA-2"	A break in this line will not propagate to any other loop, the hot or cold leg of Loop 4, the stub connection on the crossover leg of Loop 4, or the alternate charging line (non-LOCA portion). The air-operated valves on this line will not whip and impact larger pipes. No protection of the flow taps is required.
Nozzle 8	Crossover leg stub connection (small break criteria)	BB-66-BCA-3"	A break of this line will not propagate to any other loop, the hot leg or cold leg or Loop 4. No additional protection of the crossover leg connections is required.
Nozzle 2	Flow instrument lines (3/4") (.375 inch holes) (small break criteria)		A break in these lines will not affect any other line.

TABLE 3B-7 (Sheet 7)

Loop 4 Hot Leg

Nozzle 16	RHR shutdown suction line (large break criteria)	BB-070-BCA-12"	A break of this line will not affect the lines to any other loops. In order that propagation of this break will not cause further breaks whose combined area exceeds 17.32 in.2, the accumulator line and pressurizer surge line are protected from pipe whip and designed for jet impingement loads.
Nozzle 15	Pressurizer surge line (large break criteria)	BB-069-BCA-14"	A break of this line will not affect lines to any other loops, including pressurizer spray lines. The following provision assures that propagation of this break will not cause further breaks whose combined area exceeds 20.77 in.2: protection from pipe whip and design for jet impingement loads is provided for a and (b or c). a. Accumulator line and the RHR shutdown suction line b. All lines other than the 6" SI recirculation line c. SI recirculation line connected to the RHR shutdown suction line.

Assuming a non-LOCA break, the RHR and SI cold leg injection lines to Loop 4 are restrained to preclude the loss of the seal injection lines in that area.

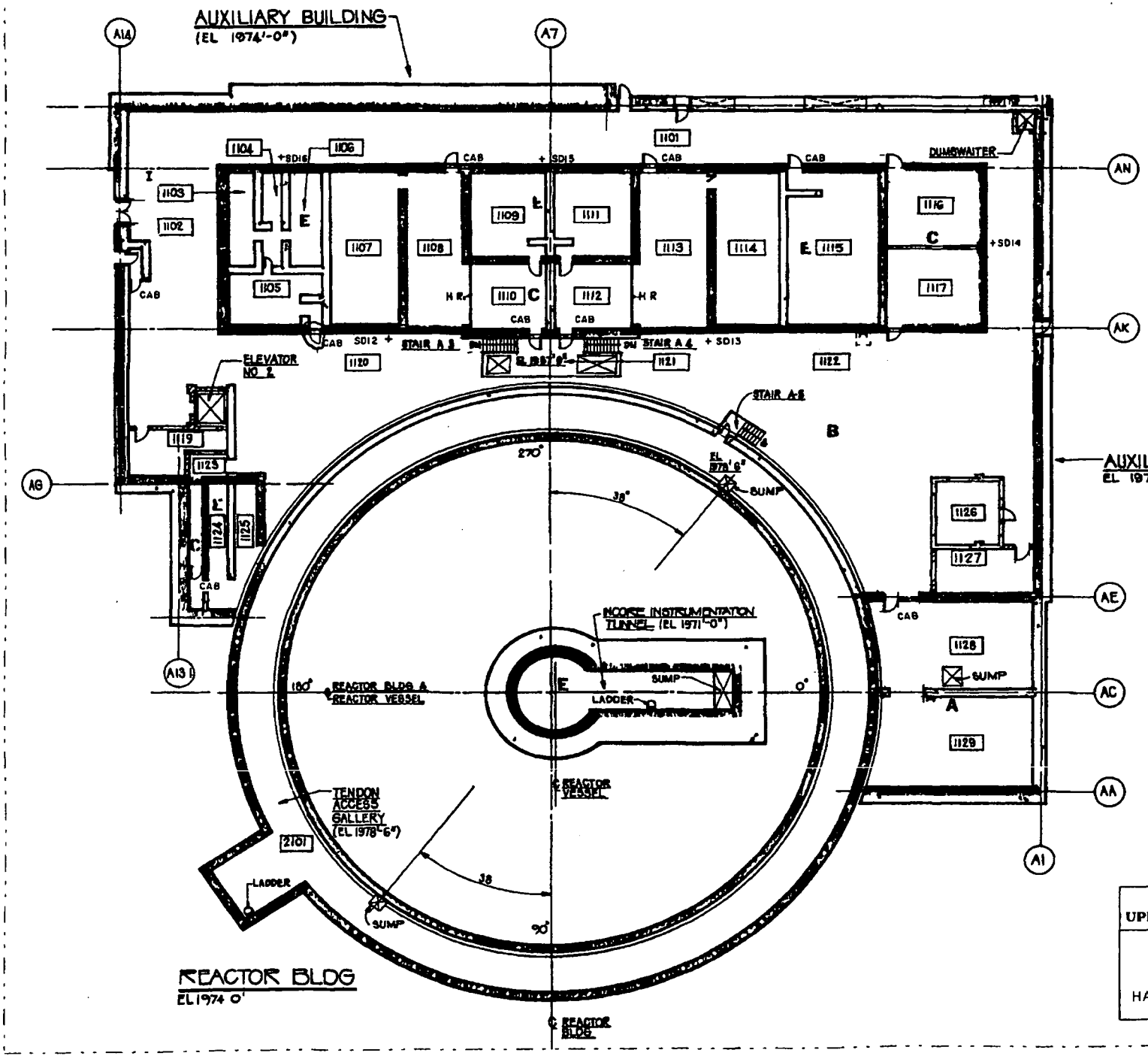

LEGEND

1101	GENERAL FLOOR AREA (NO 1)
1102	CHILLER & SURGE TANKS AREA
1103	LETDOWN CHILLER HEAT EXCH ROOM
1104	LETDOWN REHEAT HEAT EXCH ROOM
1105	VALVE COMPARTMENT
1106	MODERATING HEAT EXCH RM
1107	CENTRIFUGAL CHARGING PUMP RM "B"
1108	SAFETY INJECTION PUMP RM "B"
1109	RESIDUAL HEAT REMOVAL PUMP RM "B"
1110	CTMT SPRAY PUMP RM "B"
1111	RESIDUAL HEAT REMOVAL PUMP RM "A"
1112	CTMT SPRAY PUMP RM "A"
1113	SAFETY INJECTION PUMP RM "A"
1114	CENTRIFUGAL CHARGING PUMP RM "A"
1115	NORMAL CHARGING PUMP ROOM
1116	BORIC ACID TANK ROOM "B"
1117	BORIC ACID TANK ROOM "A"
1119	STAIR A-1 & A-1A
1120	GENERAL FLOOR AREA (NO 2)
1121	ACCESS PIT
1122	GENERAL FLOOR AREA (NO 3)
1123	PASSAGE
1124	VALVE COMPARTMENT
1125	LETDN HEAT EXCH RM
1126	BORON INJECTION TANK & PUMP RM
1127	STAIR A 2
1128	AUXILIARY FEEDWATER PUMP RM
1129	AUX STEAM CONDENSER RECOVERY & STORAGE TANK ROOM
1130	NORTH CORRIDOR

REV. 12

WOLF CREEK
UPDATED SAFETY ANALYSIS REPORT

FIGURE 3B-1

AUXILIARY BUILDING EL. 1974
HAZARDS ANALYSIS ROOM LOCATIONS

NOTES

1. SEE REF DWGS FOR ADD'L STEEL.
2. ALL WALLS AND SLABS 2'-0" THK. U.N.

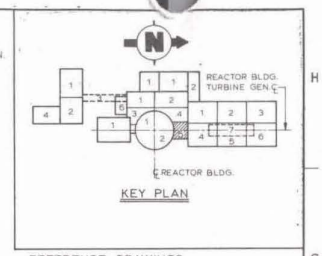

KEY PLAN

REFERENCE DRAWINGS

C-OS1014 REV. 6
C-OS1351 REV. 2
C-OS1451 (EL. 2037'-7 1/4", EL. 2042'-0" & EL. 2054'-0" ONLY) REV. 0

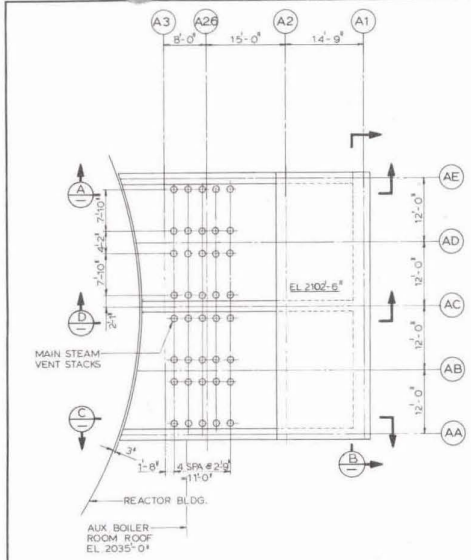

PLAN AT EL. 2090'-0" (UN.)

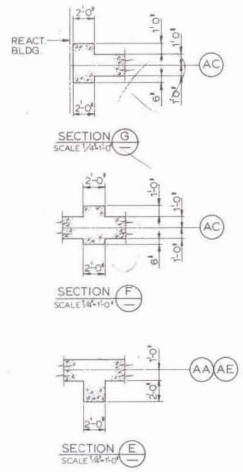

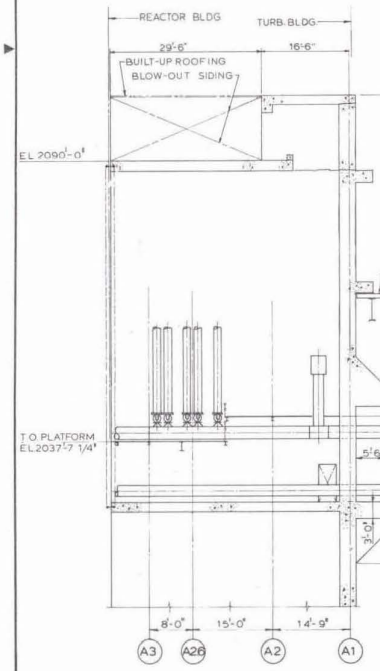

ELEVATION AT COL. LINE AE

SECTION A

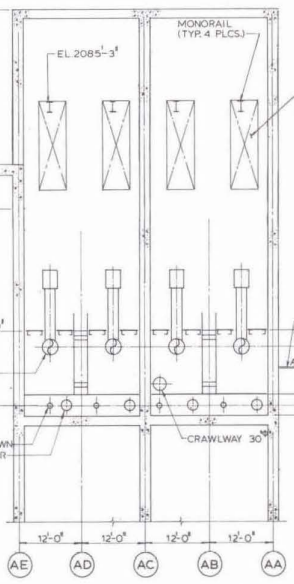

ELEVATION AT COL. LINE A1

SECTION B

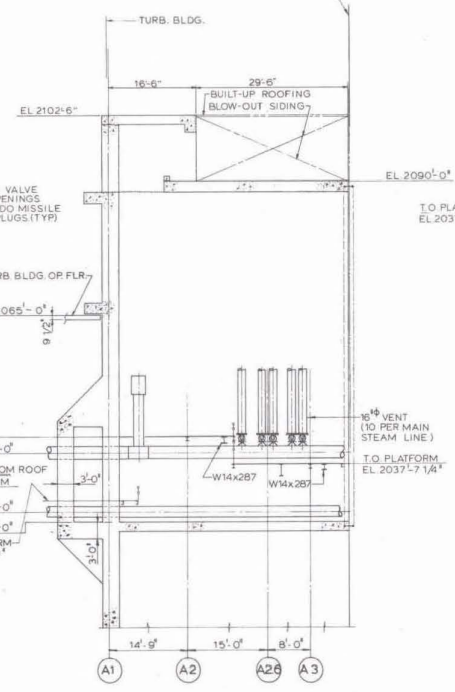

ELEVATION AT COL. LINE AA

SECTION C

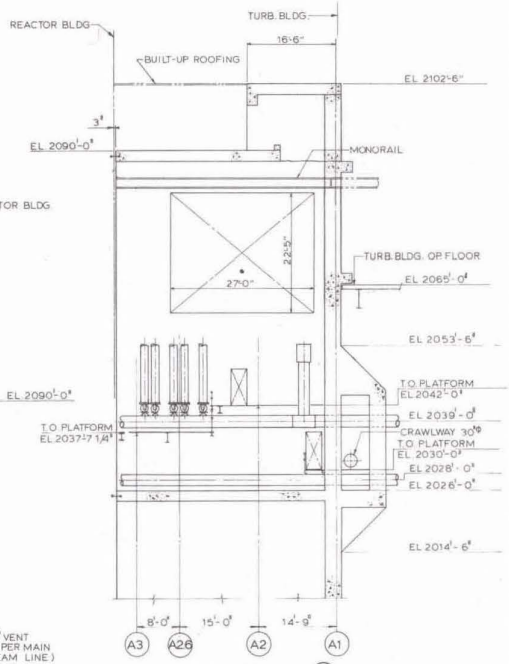

ELEVATION AT COL. LINE AC

SECTION D

Rev. 0

WOLF CREEK
UPDATED SAFETY ANALYSIS REPORT

FIGURE 3B-2

PLAN AND ELEVATION VIEW OF MAIN STEAM/MAIN FEEDWATER ISOLATION VALVE COMPARTMENT

(SK-C-250-A)

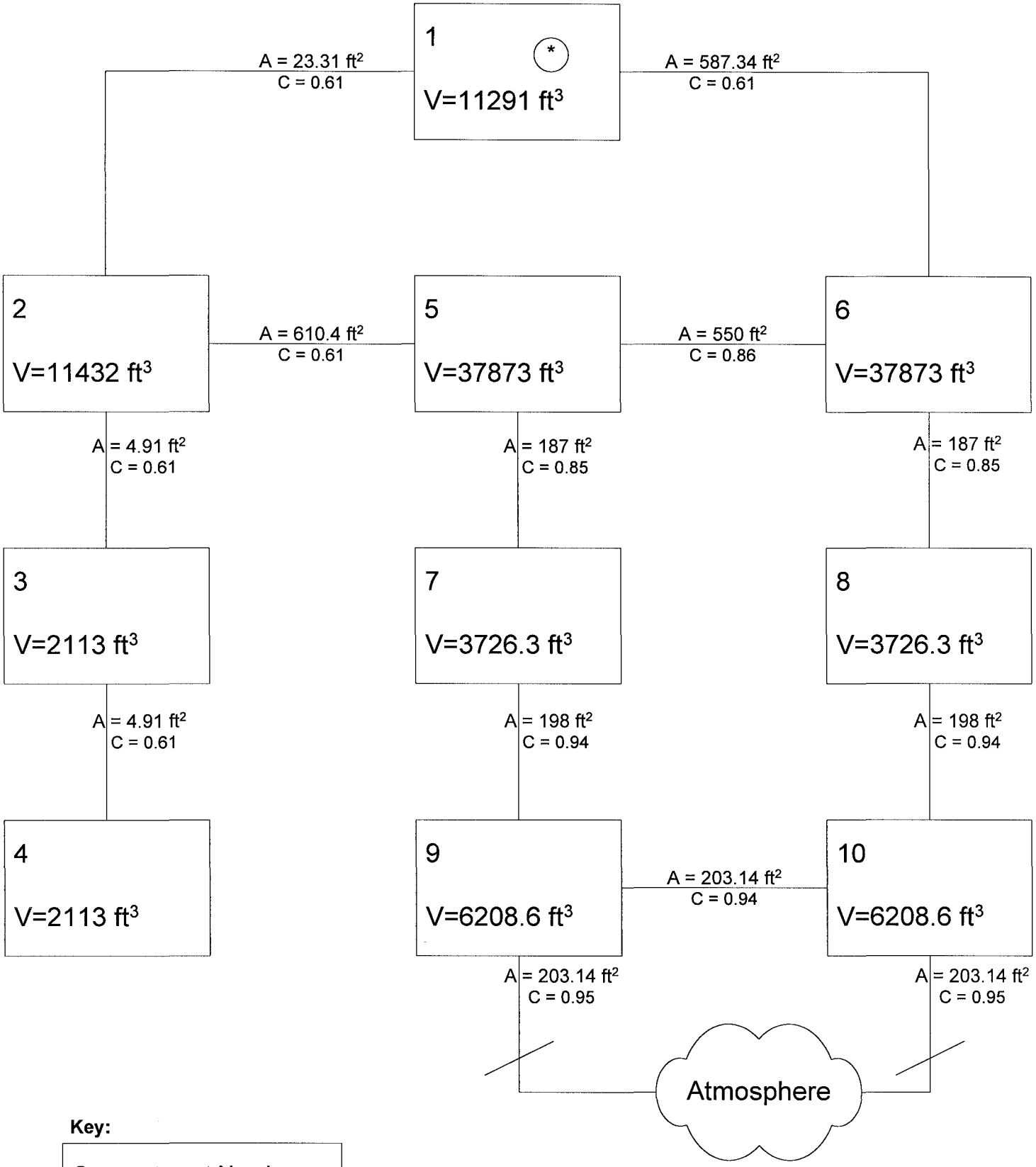

Key:

Compartment Number

Volume (cubic ft.)

Flow Area (sq. ft.)

Blowout Panel

(*) Pipe Break

Rev. 8

WOLF CREEK
UPDATED SAFETY ANALYSIS REPORT

FIGURE 3B-4

NODALIZATION MODEL FOR
MAIN STEAM/MAIN FEEDWATER
ISOLATION VALVE COMPARTMENT
PRESSURE ANALYSIS

SHEET 1

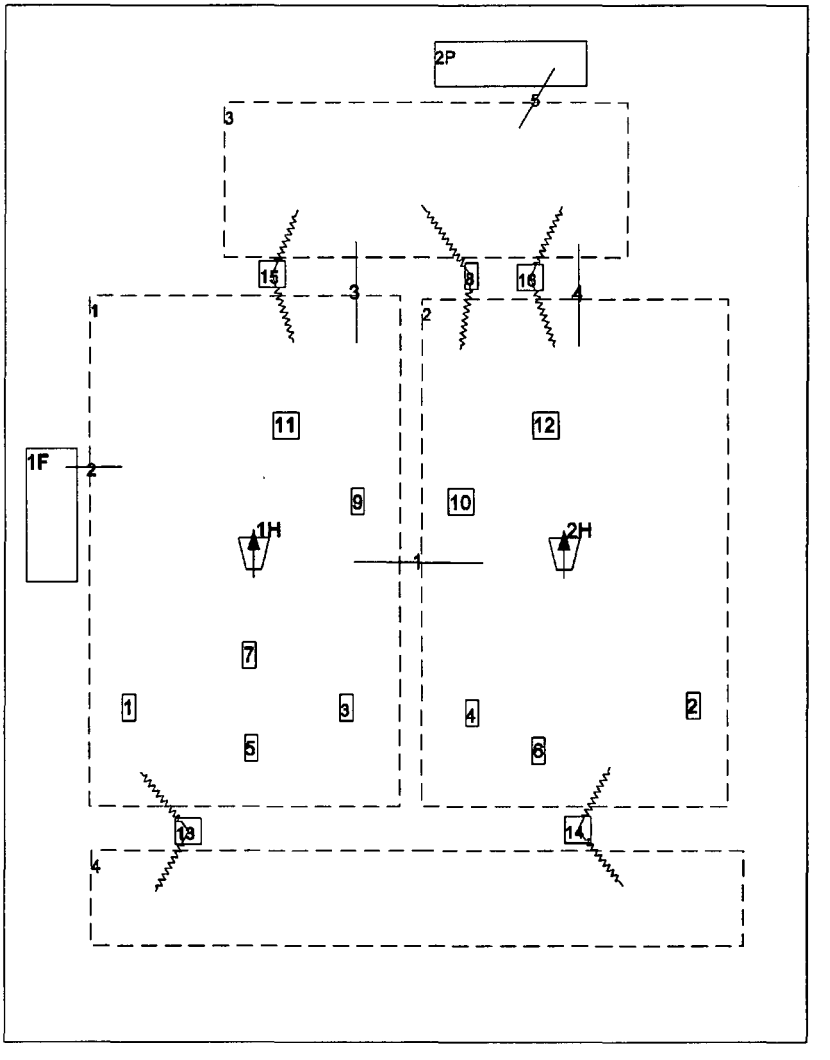

REV. 22

WOLF CREEK
UPDATED SAFETY ANALYSIS REPORT

FIGURE 3B-4, SHT.2
GOTHIC COMPARTMENT MODEL
FOR THE MAIN STEAM TUNNEL
TEMPERATURE ANALYSIS

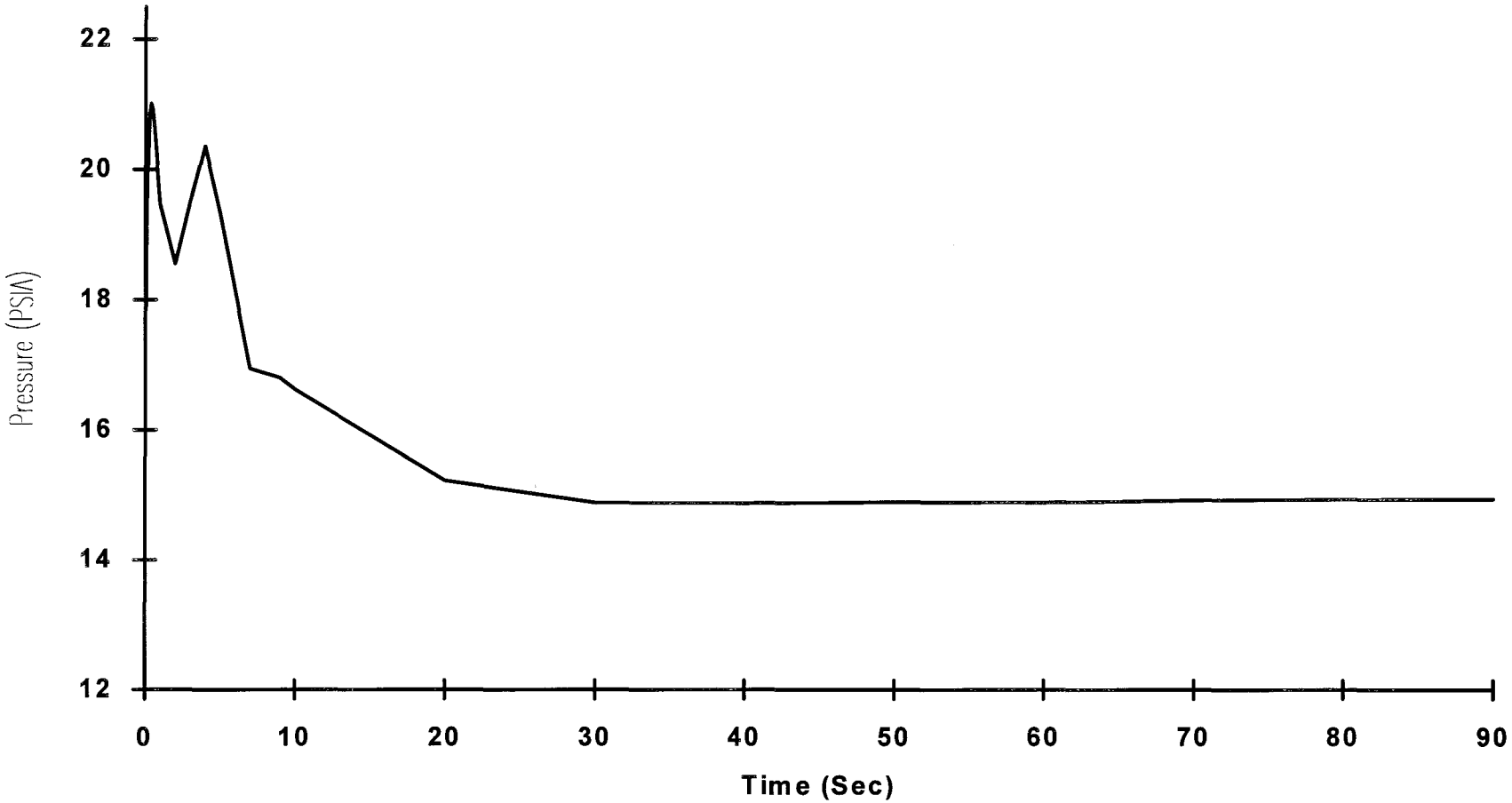

Rev. 8

Wolf Creek Updated Safety Analysis Report
Figure 3B-5 Main Steam/Main Feedwater Isolation Valve Compartment Pressure Transient

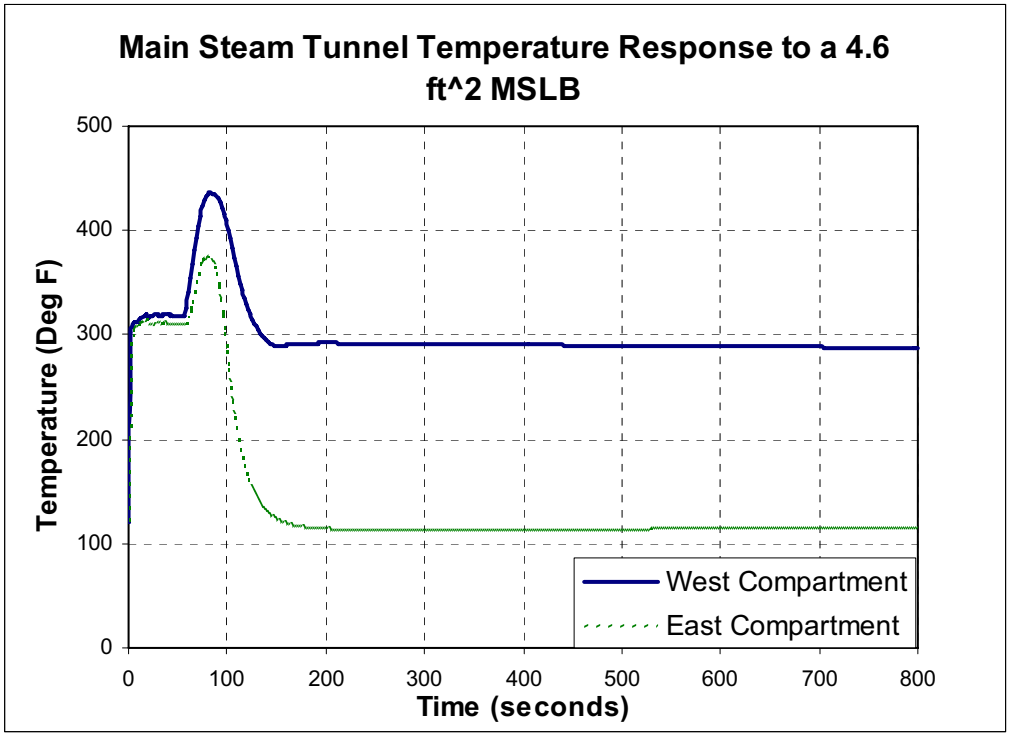

REV. 22

WOLF CREEK
UPDATED SAFETY ANALYSIS REPORT

FIGURE 3B-6a:
MAIN STEAM TUNNEL TEMPERATURE TRANSIENT FOR A 4.6 FT2 STEAMLINE RUPTURE

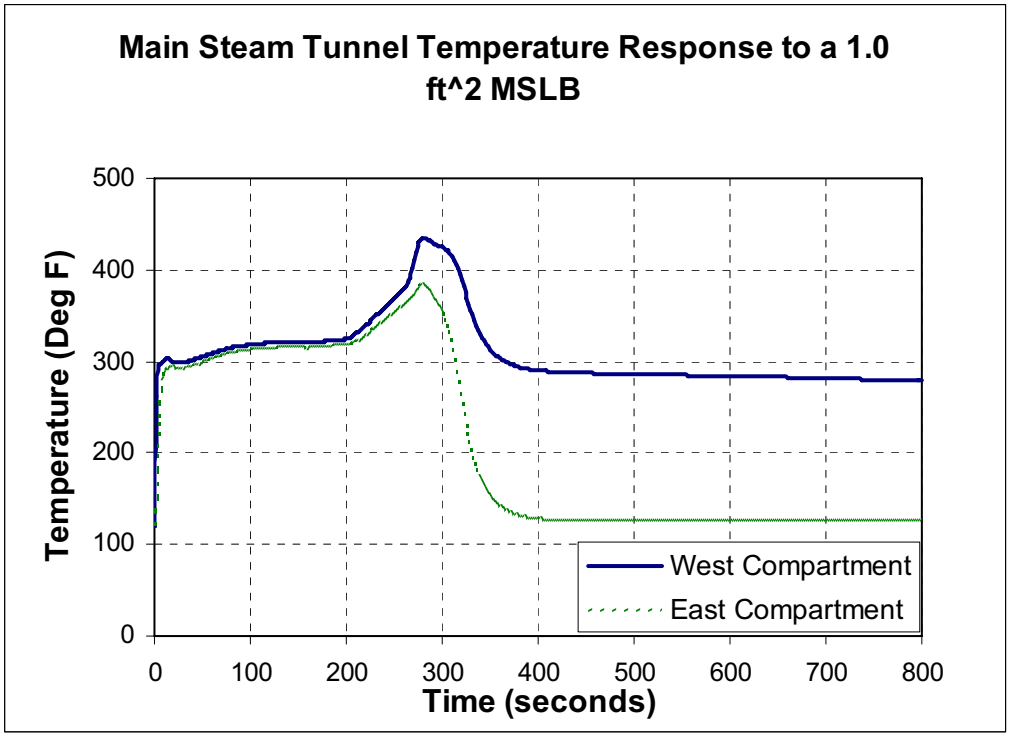

FIGURE 3B-6b:
MAIN STEAM TUNNEL TEMPERATURE TRANSIENT FOR A 1.0 FT2 STEAMLINE RUPTURE

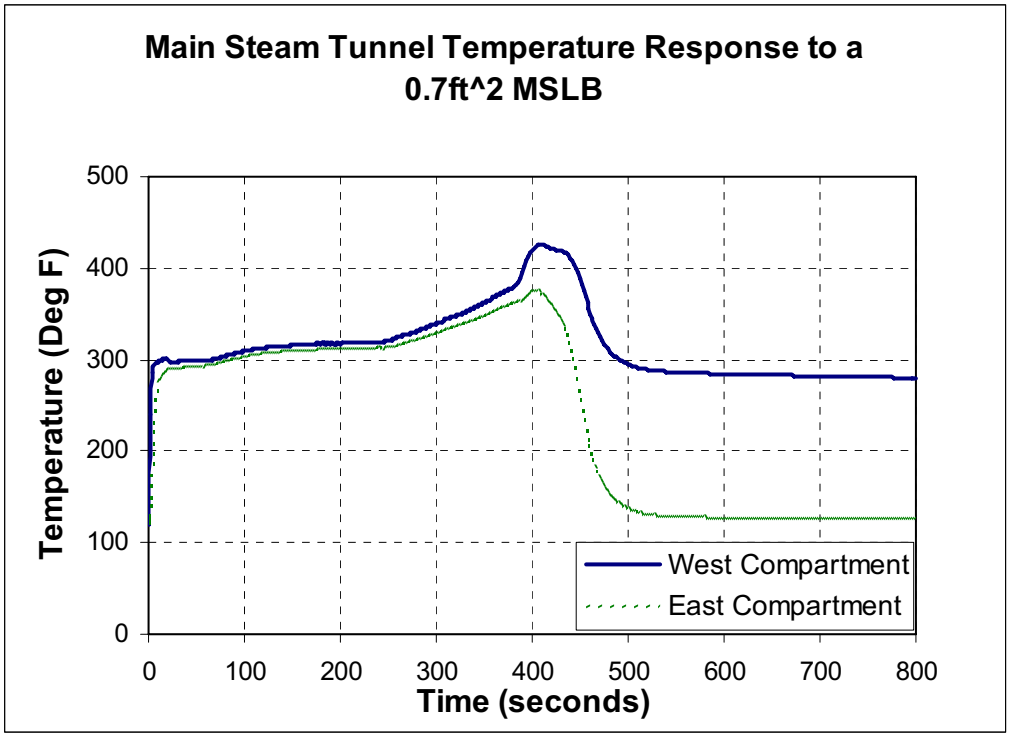

REV. 22

WOLF CREEK
UPDATED SAFETY ANALYSIS REPORT

FIGURE 3B-6c:
MAIN STEAM TUNNEL TEMPERATURE TRANSIENT FOR A 0.7 FT2 STEAMLINE RUPTURE

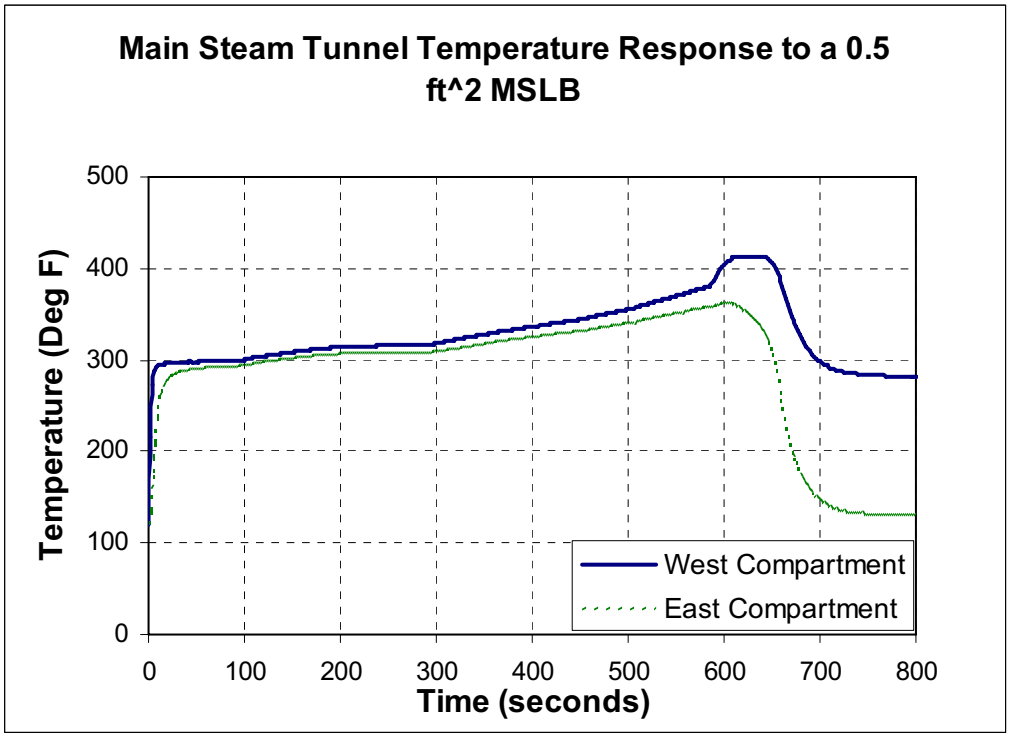

REV. 22

WOLF CREEK
UPDATED SAFETY ANALYSIS REPORT

FIGURE 3B-6d:
MAIN STEAM TUNNEL TEMPERATURE TRANSIENT FOR A 0.5 FT2 STEAMLINE RUPTURE

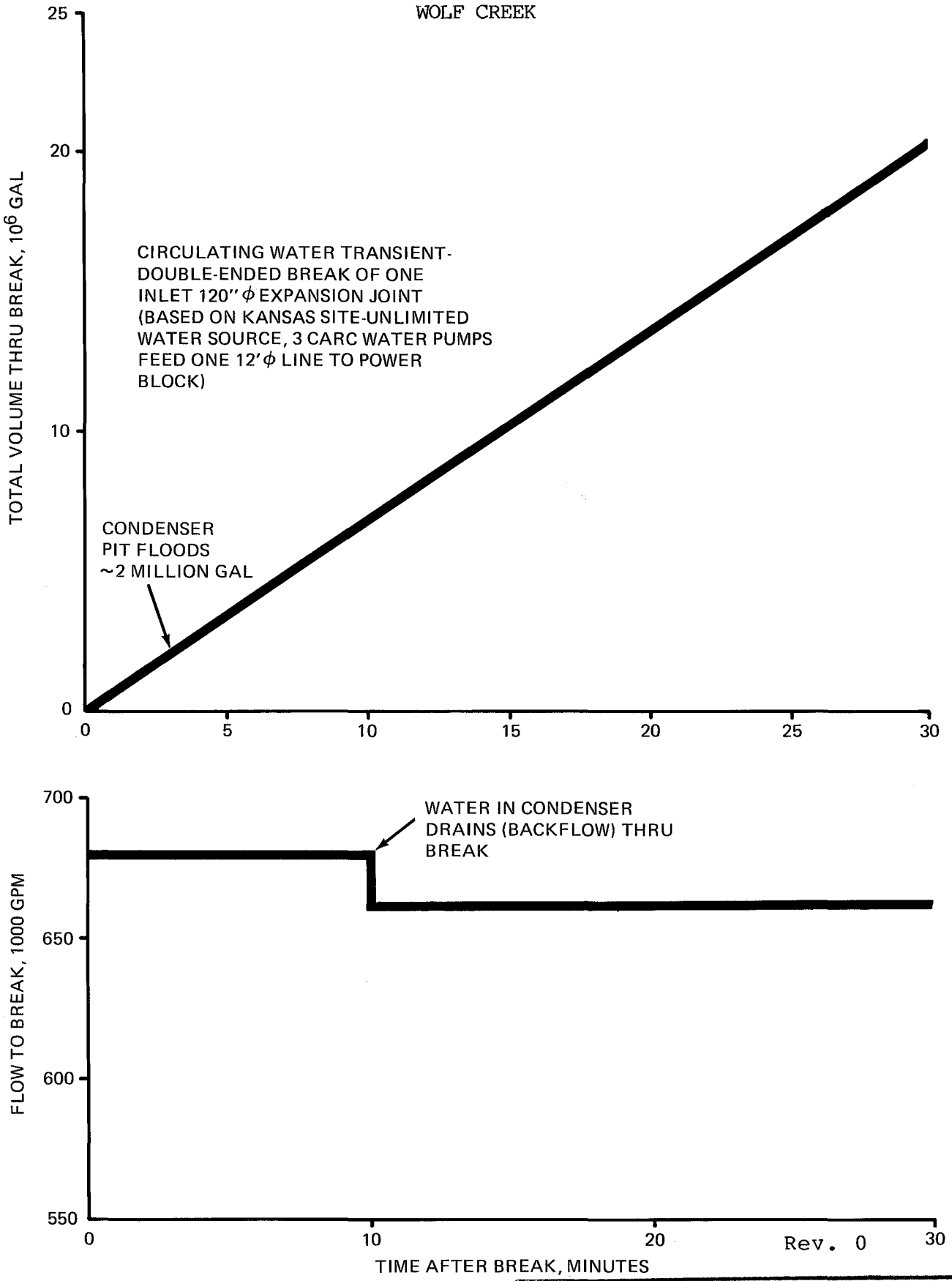

Rev. 0

WOLF CREEK
UPDATED SAFETY ANALYSIS REPORT

FIGURE 3B-7

TURBINE BUILDING CWS RUPTURE

APPENDIX 3C
SEISMIC EVALUATION OF WOLF CREEK GENERATING STATION STRUCTURES USING LIVERMORE SPECTRUM

3C.1 EVALUATION OF STRUCTURES

3C.1.1 INTRODUCTION

At the request of the NRC Staff, an evaluation was made to determine the effect a new free field response spectrum has on the safety-related structures and structural components at the Wolf Creek Generating Station. The new spectrum was prepared by Lawrence Livermore Laboratories(1) (LLL) for the NRC. In their report, LLL suggests for the Safe Shutdown Earthquake (SSE) an 84 percentile spectrum, based on real records from 10 earthquakes of magnitude (M_L) 5.3.$\pm$0.5 at rock sites measured within 20 km of the epicenter. Figure 3C-1 compares (at 5% critical damping) the LLL spectrum with the Wolf Creek spectra used for design. The design spectra is in accordance with Regulatory Guide 1.60 anchored at 0.12g ZPA (zero period acceleration) as reported in the Section 2.5. By linearly increasing the current design spectra g level upward to a ZPA of 0.15g the LLL spectrum is enveloped by a significant margin for periods greater than approximately 0.3 seconds and a good approximation is obtained for periods between approximately 0.04 and 0.3 seconds.

Current NRC licensing practice requires the Operating Basis Earthquake (OBE) to have a minimum return period in the order of 100 years. The LLL report confirms that the design OBE spectra, which is also in accordance with Regulatory Guide 1.60 but anchored at 0.06g, satisfies this criteria. Therefore this evaluation is limited to the effects of the Livermore SSE spectrum as approximated by a Regulatory Guide 1.60 Spectra anchored at 0.15g ZPA.

This evaluation is intended to identify additional margins inherent in the design of the affected structures as an aid to the NRC staff in expediting the licensing process. It should not be construed that this evaluation implies or in any way suggests that the response spectra as reported in Section 3.7 is either inadequate or unconservative.

3C.1.2 DISCUSSION

Wolf Creek is part of the Standardized Nuclear Unit Power Plant System (SNUPPS) which was designed for enveloping seismic loads obtained from several sites, all of which utilize Regulatory Guide 1.60 response spectrum anchored at a minimum of 0.2g ZPA. Therefore all standard plant (powerblock) safety-related

structures, including the reactor building, auxiliary building, control building, diesel generator building, fuel building, safety-related tanks and ESW Vertical Loop Chase automatically envelope the suggested Livermore spectrum and need not be considered in this evaluation. Other structural components, such as buried safety-related duct banks and buried ESWS piping, although not part of the standard power plant, are also designed using envelope seismic loads. Consequently, the only safety-related structures requiring further consideration are limited to the following:

ESWS Pumphouse
Electrical Manholes
Circulating and Warming Water Pipe Encasements
Ultimate Heat Sink Dam
ESWS Caissons

A description of these structures, including their design basis, is provided in Sections 3.8 and 2.5.6.5.

3C.1.2.1 Safety-Related Manholes, ESWS Caissons and Circulating and Warming Water Pipe Encasements

The design of the manholes, and ESWS caissons, as well as the circulating and warming water pipe encasements, is controlled by loading cases involving the OBE even when the 0.15g SSE is considered. The reason becomes apparent by examination of the load cases involving both the OBE and SSE as defined in Table 3.8-6:

OBE Load Case $U=1.4D + 1.7L + 1.9E_{OBE}$

SSE Load Case $U=1.0D + 1.0L + 1.0E_{SSE} + (T_O + R_O)$

Where U=Required Section Strength

D=Dead Load

L=Live Load

E_{OBE}, E_{SSE}=Seismic Loads

(T_O & R_O) are thermal and pipe reaction loads which are either negligible or do not affect design for these structures.

Each of these structures have lateral static earth pressure (including surcharge effects) as their predominant loading. Since static earth pressure is treated as live load, the required

increase in actual static earth pressure by 1.7 in the OBE load case completely overshadows the seismic effect in the SSE load case, particularly since the OBE load case also requires increase-ing the seismic loads by a factor of 1.9.

3C.1.2.2 ESWS Pumphouse

The pumphouse is more complicated than the other structures and requires a detailed evaluation to determine its capability to resist increased SSE loads. The pumphouse is of heavy shear wall reinforced concrete construction. Figures 3C-2 thru 3C-4 show the plan and sections of the building. Ground surface (grade) elevation is shown in Figure 3C-4.

3C.1.2.2.1 Seismic Analysis

The seismic analysis conducted for the design of the pumphouse considered a detailed finite element representation of the soil using the FLUSH Program. This method was selected in compliance with Standard Review Plan (SRP) (Section 3.7.2, Table 3.7.2-1, dated 11/24/75) criteria for deeply embedded structures. In the evaluation effort the same structural representation as used in the FLUSH analysis is employed, but in lieu of the finite element soil consideration the structure is attached to a fixed base. Otherwise the evaluation analysis approach was similar to that of the original design. The fixed base representation would be expected to result in conservative but realistic results for horizontal input motion as compared with the FLUSH analysis for the following reasons:

a. The input time history motion described in BC-TOP-4-A(2) is applied at the bottom of the base mat. This is conservative as compared to the Standard Review Plan FLUSH analysis approach.

b. No material or radiation damping of the soil (as included in the FLUSH analysis) is considered. This is conservative since these considerations absorb energy, effectively reducing response of the structure to input motion.

c. The presence of the soil surrounding the embedded portion of the structure is conservatively omitted. The presence of soil serves to reduce the effective height of the building as well as provide a mechanism allowing loads to be transferred laterally into the soil above the base mat, effectively reducing the building shears and moments.

The representation of side soil in the reanalysis model would produce no significant change in the amplitude of the response spectra peak or the peak frequency. Therefore, the fixed base reanalysis model defines an upper bound frequency for the response spectra peak. A fixed base analysis neglecting the soil surrounding the embedded portion of the structure also results in higher shears and moments in the base and lower levels of the structure for the same level of input motion regardless of frequency shifts. Therefore, neglecting side soil results in a conservative analysis.

To determine the adequacy of the fixed base model representation and validate the above statements a comparison of building shear and moment as well as key building response spectra are included in Figures 3C-5 thru 3C-11 for both the finite element (FLUSH) and fixed base representation for the 0.12g earthquake. Building shear and moments exhibit good correlation above El. 2,000. Below El. 2,000 the lack of supporting soil in the fixed base model yields conservative results. This conservatism may be somewhat excessive in the East-West direction. Horizontal building response spectra also exhibits good correlation between the two analyses. The fixed base representation results in an upward shift of the peaks by approximately 3 Hz in the North-South (N-S) direction and approximately 4-5 Hz in the East-West (E-W) direction. This is believed to be caused by the rigid foundation in the fixed base representation combined with no consideration of soil mass surrounding the structure below grade which may be mobilized with the structure. Both of these considerations tend to increase the first structural mode natural frequency. With the exception of N-S direction at El. 2,025 the fixed base model produced somewhat higher peak response. This is believed to be the result of not considering soil damping and dissipation effects. The exception at El. 2,025 N-S where the peak of the fixed base model is somewhat lower than that of the FLUSH analyses is reasonably counteracted by the excesses of the fixed base representation in the E-W direction.

Contrary to the conservative nature for horizontal motion, the fixed base model is not necessarily conservative when vertical seismic input motion is applied. The relative flexibility of the foundation creates a rocking phenomena which may couple with a vertical input, amplifying the vertical response above that predicted by the fixed base model. As shown in Figure 3C-8 the fixed base representation fails to include the coupling effect. For this reason the results for vertical input motion into the fixed base representation will not be used for evaluation of vertical motion effects in the pumphouse evaluation. Rather the original FLUSH analysis, adjusted linearly upward by 25% (to reflect the rise from 0.12g to 0.15g) will be used for evaluation

of vertical motion effects. This is conservative since due to the strain dependent nature of the soil the actual increase is less than linear.

The response spectra produced by FLUSH and the fixed base analyses are reasonably close. The response spectra are only used for seismic qualification of equipment, piping, and system supports. System supports addressed in this section, such as HVAC and cable tray supports were originally designed using peak accelerations through the lower frequencies. Evaluation of these supports for 0.15g was accounted for by increasing accelerations to accommodate the new floor response spectra generated, as defined in this Appendix. As such, frequency shifts have been accounted for. Equipment and piping are qualified on a case by case basis considering both FLUSH and fixed base response spectra and are discussed in Sections 3C.2 and 3C.3.

The seismic results used to evaluate the pumphouse are included in Figures 3C-12 through 3C-18. These results represent building moments, shear and response spectra developed in accordance with the fixed base representation previously discussed, excited in the E-W and N-S directions with the horizontal time history described in BC-TOP-4-A(2), representing the response spectra in accordance with Reg. Guide 1.60 anchored at 0.15g. The results for vertical input motion were obtained by conservatively increasing the FLUSH results obtained at 0.12g upward by 25% to represent the results of a 0.15g analysis.

3C.1.2.2.2 Structural Design

Design considerations associated with the increased SSE are limited to the portion of structure below El. 2,000 for several reasons.

- The portion of structure above El. 2,000 has much lower building shears and moments imposed (see Figure 3C-12).

- The bulk of the structure above El. 2,000 has a much greater cross-section resulting in a much greater capacity to accept seismic loads.

- The portion of structure above grade is designed to resist the effects of a tornado missile impact, which controls the wall thicknesses and reinforcing requirements, and provides excessive capability to resist applied seismic loads.

Structural considerations investigated included the following:

- Soil bearing pressure
- Base mat capability
- Capability of the walls to resist increased shear (including associated torsional effects) and flexure
- Building stability (i.e., overturning and sliding)
- Effects on HVAC and cable tray supports

Two separate torsional analyses were also conducted. The controlling result utilized a dynamic analysis that considered the structure mass and rigidity to be coincident. The inertia forces developed from this analysis were used to determine the torsion on the structure at each level by considering the eccentricity of each mass point above a given section with respect to the sections center of gravity. These results were confirmed to be more severe than those obtained by a dynamic analyses which considered the computed center of mass and rigidity of each mass point.

Allowable stresses and margins of safety are consistent with those imposed on the original design and as discussed in Section 3.8.

A refined analysis of building weight distribution and base mat configuration resulted in soil bearing pressures within that reported for the 0.12g seismic analysis. Since no increase in soil bearing pressure was realized, the stresses in the base mat were not adversely affected. The most significant effect of the increased SSE in wall stresses is shear stresses caused by combined shear and torsions effects. However, these stresses remain within 90% of allowable for the SSE case. Similarly, electrical cable tray and HVAC supports were also found to be within original design allowable stresses without exception.

3C.1.2.3 Ultimate Heat Sink

The Ultimate Heat Sink (UHS) for Wolf Creek Generating Station is formed by excavating a portion of the cooling lake bed and constructing a Seismic Category I dam. The earthen UHS Dam and UHS are normally submerged and are designed to remain functional under safe shutdown earthquake (SSE) conditions.

3C.1.2.3.1 Seismic Analysis

For the UHS Dam two methods of analysis were used for the seismic evaluation using the Lawrence Livermore Laboratories (LLL)

spectrum. The analyses were performed using pseudostatic and dynamic finite element mesh methods. In these analyses, a Regulatory Guide 1.60 spectrum anchored at 0.15g which enveloped the LLL spectrum was utilized.

The results of stability analysis for the static condition and pseudo-static with seismic coefficients of 0.12g and 0.15g with riprap over the UHS Dam are shown in Table 3C-2. Also shown are the results from Table 2.5-84 for static and pseudo-static analysis for the UHS Dam embankment without the riprap cover. In all cases the factor of safety exceeds the recommended minimum of 1.2 for pseudo-static analysis.

The UHS Dam embankment properties were the same as used for the analysis as given in Table 2.5-85 for the rapid drawdown, steady state and submerged condition analyses. For the end of construction, the soil properties were revised based on results of field density tests made during construction and on results of unconfined compression tests on specimens obtained from the constructed UHS Dam embankment.

For a SSE of 0.15g, the seismic slope stability of the ultimate heat sink dam was evaluated using the dynamic finite element mesh analysis.

The finite element model, the soil properties, and the procedure described in Subsection 2.5.6.5.4.2.2.2 were used in the present analysis. The artificial accelerograms for horizontal and vertical ground motions used in the previous analysis for 0.12g were scaled to 0.15g.

The computed factors of safety for various elements are presented in Table 3C-3. The comparison of artificial accelerogram and design response spectra for maximum horizontal and vertical ground acceleration of 15% of gravity and 5% spectra damping, are shown in Figures 3C-20 and 3C-21.

For the UHS slopes, a pseudo-static analysis was used for the seismic evaluation utilizing the (LLL) spectrum.

The results of pseudo-static analysis with a seismic coefficient of 0.15g is shown in Table 3C-4. These results are shown in addition to static an pseudo-static with 0.12g seismic coefficient analyses presented in Table 2.5-57.

These results are shown for the ESWS Intake Channel, however; they also apply to the UHS Reservoir in that the intake channel slopes between elevation 1,070 and 1,065 are 3:1, whereas the steepest side slope in the UHS Reservoir between elevation 1,070 and 1,065

is 6.7% (15:1). The slopes between elevation 1,070 and natural grade are both 5:1 for the intake channel and UHS reservoir, however; existing grade adjacent to the intake channel is higher so that the resulting height of slope is greater.

The results of the "Wedge Analysis" for UHS slopes with a seismic coefficient of 0.15g is shown in Table 3C-5. This also shows results previously presented in Table 2.5-56.

All of the results show that the factor of safety for a seismic coefficient of 0.15g exceeds the minimum requirement of 1.2. The same soil parameters were used for the additional analysis with a 0.15g seismic coefficient as was used for the previous analysis.

3C.1.3 CONCLUSIONS

All aspects of the Wolf Creek structures and structural components have been reevaluated using a response spectra which conservatively approximates the LLL suggested response spectrum and have been found to remain within all allowable stress limits imposed in the original design.

Effects of the LLL spectrum on equipment, including piping systems are addressed in Section 3C-2.

3C.1.4 REFERENCES

1. Lawrence Livermore Laboratories, "Seismic Hazard Analysis for the Wolf Creek Site," Appendix E, Wolf Creek Generating Station, Unit No. 1, Safety Evaluation Report (NUREG-0881), April 1982.

2. Bechtel Power Corporation, "Topical Report-Seismic Analysis of Structures and Equipment for Nuclear Power Plants" BC-TOP-4-A, Rev. 3, November 1974.

3C.2 EVALUATION OF PIPING SYSTEMS AND SUPPORTS

3C.2.1 INTRODUCTION

This section of Appendix 3C is intended to outline the methodology and results of a stress evaluation performed for all site specific Essential Service Water System Nuclear Class 3 piping at Wolf Creek Generating Station, to determine the effects of increasing the current SSE ground motion design spectra g level linearly from 0.12g (zero period acceleration) to 0.15 g. The basis for the selection of a 0.15g SSE design spectrum, as well as its effects on the various plant buildings, buried piping, electrical duct

banks and appurtenant structures are discussed in Section 3C.1. This section is therefore limited to the evaluation of ESWS piping and associated supports within the pumphouse.

3C.2.2 STRESS EVALUATION OF PIPING SYSTEMS

The Essential Service Water System site piping servicing the Wolf Creek plant powerblock extends from the pumphouse located adjacent to the ultimate heat sink into the west wall of the control building, where it enters the powerblock. The piping is buried below grade at all locations with the exception of the pumphouse. Buried ESWS piping, was designed for seismic loads obtained from several SNUPPS sites and is not affected by the increased design spectra. Therefore, only the piping within the aforementioned structures has been considered in the stress evaluation. The ESWS below ground piping was replaced and reevaluated using seismic loads which, when compared to the suggested load, yield conservative results.

For analytical purposes, all piping is divided into piping runs individually modeled and identified with a stress problem number. Each stress problem is modeled to include support and boundary conditions and analyzed using the applicable floor response accelerations. All piping stress problems within the pumphouse were investigated for possible stress increases resulting from higher floor response accelerations associated with a 0.15g SSE design spectrum.

SSE design accelerations used in the original dynamic analysis of each piping stress problem were compared to floor response spectral accelerations associated with the 0.15g design spectrum. Floor response accelerations resulting from the original "FLUSH" analysis, as well as the fixed base analysis (see Section C.1.2.2.1) were utilized as a basis for comparison. As described in Section 3C.1.2.2.1, spectral accelerations for the original "FLUSH" curves used in the comparison were conservatively adjusted upward by 25% to reflect the rise of 0.12g to 0.15g.

Where the original SSE design accelerations were not greater than the scaled "FLUSH" curves or the fixed base analysis curves, the stress problem was reanalyzed utilizing original analysis methods As defined in the USAR to evaluate the increased stress levels. Stress levels in the piping supports and their attachments, as well as the stress levels in the piping system were evaluated.

3C.2.3 STRESS EVALUATION RESULTS

The evaluation showed that safety margins above those required for design, and outlined in Section 3.8, exist in all stress levels

for these problems to ensure their integrity even with the increased spectral accelerations.

The reanalysis indicated all pipe stresses, although greater than the original design stresses, are within ASME code allowables.

The ESWS below ground piping was replaced and reevaluated with all pipe stresses within ASME code allowables.

3C.2.4 CONCLUSIONS

All Essential Service Water System Nuclear Class 3 piping, including supports, have been reevaluated to spectral accelerations which, when compared to those resulting from the suggested design spectra for 0.15g as per previous commitments, yield conservative results. The ESWS below ground piping was replaced and reevaluated using response spectra which, when compared to the suggested design spectra, yield conservative results.

The evaluation also considered the available stress margins in the piping and support systems and indicates that no modifications would be required for the piping or supports as a result of the suggested design spectra.

3C.3 EVALUATION OF EQUIPMENT

3C.3.1 INTRODUCTION

This section of Appendix 3C is intended to outline the methodology and results of an evaluation of the seismic qualification, performed for all safety-related, site specific Essential Service Water System equipment, to determine the effects of increasing the current SSE ground motion design spectra g level linearly from 0.12g (zero period acceleration) to 0.15g. The basis for the selection of a 0.15g SSE design spectrum, as well as its effects on the various plant buildings, piping, electrical duct banks, supports, and appurtenant structures, is discussed in Sections 3C.1 and 3C.2. This section is limited to a description of the evaluation of safety-related equipment within the affected site specific structures.

3C.3.2 EVALUATION OF SAFETY-RELATED EQUIPMENT

All safety-related equipment in the plant are required to be seismically qualified by the supplying vendors in accordance with the applicable project specifications, which outline methodology, regulatory requirements and industry standards to be followed, and the required response spectra for which the equipment must be qualified. For applicable industry standards and regulatory requirements, refer to the applicable portions of the USAR.

The equipment may have been qualified analytically, using accepted calculation methods and modeling techniques, or may have been subjected to a seismic simulation test program conducted in

accordance with current industry standards. In either case, a seismic qualification report was generated by the equipment supplier and submitted for engineering approval.

Completed and approved seismic qualification reports were reviewed to determine the degree of conservatism inherent in the seismic input level utilized by the equipment suppliers to qualify their equipment. Where equipment qualification was in process, the minimum requirements set forth by the applicable specification were reviewed. Table 3C-1 provides a descriptive summary of the affected equipment.

3C.3.2.1 Equipment Qualified by Analysis

For equipment qualified by analysis, the spectral acceleration values utilized by the equipment supplier as a basis for the seismic qualification analyses, or the specification requirements were compared to spectral acceleration values corresponding to the 0.15g SSE design spectrum. Floor response accelerations resulting from the original FLUSH seismic analysis, as well as the fixed base analysis (see Section 3C.1.2.2.2.1) were utilized as a basis for comparison.

As described in Section 3C.1.2.2.1, spectral accelerations for the original FLUSH curves were conservatively adjusted upward by 25% to reflect the rise from 0.12g to 0.15g.

Where applicable, other loads affecting the equipment, such as nozzle loads, were considered in the evaluation. Where the equipment qualification response spectra did not envelope the 0.15g SSE floor response spectra, the calculated stress levels of the equipment components were evaluated for available margins.

3C.3.2.2 Equipment Qualified by Testing

For equipment qualified by seismic simulation testing, the evaluation was performed by comparing the test response spectra (T.R.S.) provided by the supplier's testing laboratory to the 0.15g SSE floor response spectra in a similar manner as that outlined for equipment qualified by analysis.

3C.3.3 EQUIPMENT EVALUATION RESULTS

3C.3.3.1 Qualification Which Envelopes the 0.15g SSE Floor Response Spectrum

The majority of the equipment qualification evaluated utilized spectral acceleration values enveloping the 0.15g SSE floor response spectra and did not require further evaluation. This is

due to the fact that a significant portion of the equipment located within the affected structures is generic in nature (i.e. motor actuated valves, switches, indicating lights, etc.) and has been used throughout the plant. This type of equipment has, therefore, been qualified for use within the powerblock at a 0.20g SSE level.

In addition, some equipment suppliers have qualified their equipment to conservatively high "g" values in order to avoid repetitive testing or analysis, and allow the use of their equipment in various seismic zones. As an example, a number of electric motors have been qualified to 3 "g's" for all even frequencies from 2 to 34 Hz.

Instrumentation tubing servicing affected equipment was conservatively analyzed using SSE spectral accelerations equivalent to twice the OBE accelerations, and did not require further evaluation.

3C.3.3.2 Qualification Which did not Envelope the 0.15g SSE

Only three items were found to have been qualified to spectral values which did not envelope the 0.15g SSE floor response spectra. These items are:

1. E.S.W.S. Pumps - Equipment Tag No. EF-PEF01A and B
2. Traveling Water Screens - Equipment Tag No. EF-FEF01A and B
3. E.S.W.S. Control Panels - Equipment Tag No. EF-155 and EF-156

3C.3.3.2.1 E.S.W.S. Pumps and Traveling Water Screens

Spectral acceleration values used for the qualification of the E.S.W.S. pumps and the traveling water screens are exceeded by the 0.15g floor response spectra at frequencies above 33Hz (ZPA) and only by 0.09g. This minor excess is not considered significant since these components were qualified by analysis and the calculated stress levels of components for both pieces of equipment are well below allowables.

3C.3.3.2.2 E.S.W.S. Control Panels

The Essential Service Water Control Panel seismic simulation testing program consisted of resonance search testing and random multifrequency testing in both front-to-back and side-to-side directions with respect to the cabinet. Control accelerometers were mounted at the test table and response accelerometers were mounted at discrete points on the face of the cabinet. Test

Response Spectra (T.R.S.) "g" values at 5% damping were plotted for all accelerometer locations in both cabinet directions. Although the peak acceleration values of the test response spectra in both cabinet directions are well above the peak acceleration values for both the East-West and the North-South 0.15g SSE floor response spectra, T.R.S. values for the control accelerometers (table) are exceeded for the front-to-back cabinet direction by the 0.15g North-South floor response spectra at frequencies between 8 and 15 Hz.

This excess is illustrated in Figure 3C-19, and is obviously due to a shift of the floor response curve peak values from about 7Hz (Flush) to about 10Hz (Fixed-Base). The shift in peak values is caused by the rigidity of the fixed-base lumped-mass model as well as the conservative assumptions made in the building evaluation analysis by neglecting the soil mass surrounding the E.S.W.S. Pumphouse structure (see Section 3C.1.2.2.1).

The following control and monitoring devices are located within the E.S.W.S. control panels EF-155 and EF-156, and have therefore been evaluated further:

*E.S.W.S. Pump Pre-Lube Tank Level Indicators (Equipment No. EF-LI-0075 & 0076)
*E.S.W.S. Pump Switches (Equipment No. EF-HIS-0055B & 0056B)

*E.S.W.S. Self-Cleaning Strainer Differential Pressure Indicators (Equipment No. EF-PDI-0019 & 0020)
*E.S.W.S. Self-Cleaning Strainer Switches (Equipment No. F-HIS-0019 & 0020)
*Traveling Water Screen Switches (Equipment No. EF-HIS-0003 & 0004)
*E.S.W.S. Discharge Vent Switches (Equipment No. EF-HIS-0097 & 0098)
*Traveling Water Screen Spray Valve Switches (Equipment No. EF-HS-0091 & 0092)
*Traveling Water Screen Spray Valve Indicator Lights (Equipment No. EF-ZL-0091 & 0092)

Control Panels EF-155 and EF-156 are identical and are associated with trains A and B respectively

With the exception of the pre-lube tank level and the self-cleaning strainer differential pressure indicators, all devices contained within the control panels have been qualified to test response spectra SSE levels exceeding 5 g's (ZPA) and are not considered to be affected by the noted excess.

The aforementioned indicators were qualified to test response spectra (T.R.S.) SSE levels exceeding 3 g's (ZPA). The T.R.S. exceeds 6 g's in the range of 3 to 25 Hz. Consequently they are not considered to be affected by the noted excess.

In summary, the functional capabilities of the control panels will not be compromised by the increased SSE design spectrum due to the following:

1. The T.R.S excess exists only for one cabinet direction and only for the North-South building analysis.

2. The conservative assumptions utilized to generate the building floor response spectra result in an over-estimation of building response.

3. Examination of the equipment components located within the panel indicates sufficient margin exists to ensure their function during a postulated seismic event.

3C.3.4 CONCLUSION

All site specific safety-related equipment at the Wolf Creek Generating Station has been reevaluated for the effects of the new SSE design spectra anchored at 0.15g (ZPA). The evaluation indicates that the majority of equipment has been qualified to safely withstand spectral acceleration values which envelope the 0.15g SSE floor response spectra. For the three items of equipment which were qualified to spectral acceleration values which did not envelope the 0.15g floor response spectra, adequate safety margins exist to ensure the operability of safety-related systems during and after the postulated seismic event. No equipment modifications are therefore required.

TABLE 3C-1

Site Specific Safety-Related Equipment
Evaluated for a 0.15g SSE Design Spectrum

Equipment No.	Description	Location	Bechtel Specification	Qualification Method
EF-FEF01A&B	Traveling Water Screen-Trains A&B	E.S.W.S. Pumphouse	M-020	Analytical
EF-FEF02A&B	Self Cleaning Strainers-Trains A&B	E.S.W.S. Pumphouse	M-154	Analytical
EF-PEF01A&B	E.S.W.S. Pumps-Trains A&B	E.S.W.S. Pumphouse	M-089	Analytical
EF-DPEF01A&B	E.S.W.S. Pumps Motors-Trains A&B	E.S.W.S. Pumphouse	E-012	Analytical
EF-DFEF01A&B	Traveling Water Screen Motors - Trains A&B	E.S.W.S. Pumphouse	M-020	Analytical
EF-DFEF02A&B	Self Cleaning Strainers Motorized Actuators-Trains A&B	E.S.W.S. Pumphouse	M-154	Seismic Simulation Test
EF-HS-0003 EF-HS-0004	Local Control Stations-Trains A&B	E.S.W.S. Pumphouse	E-028	Analytical
GD-HIS-0011B-1 GD-HIS-0001B-1	Local Control Station Hand Switches-Trains A&B	E.S.W.S. Pumphouse	E-028	Seismic Simulation Test

TABLE 3C-1

Site Specific Safety-Related Equipment
Evaluated for a 0.15g SSE Design Spectrum

Equipment No.	Description	Location	Bechtel Specification	Qualification Method
EF-HV-0091 EF-HV-0092	Traveling Water Screen Spray Valves-Trains A&B	E.S.W.S. Pumphouse	M-223C	Seismic Simulation Test
EF-HV-0097 EF-HV-0098	E.S.W.S. Pump Vent Valves-Trains A&B	E.S.W.S. Pumphouse	M-223C	Seismic Simulation Test
EF-LI-0075 EF-LI-0076	E.S.W.S. Pump Pre-Lube Storage Tank Level Indicators-Trains A&B	E.S.W.S. Pumphouse	J-110	Seismic Simulation Test
Deleted Deleted				
EF-LT-0075 EF-LT-0076	E.S.W.S. Pre-Lube Storage Tank Level Transmitters-Trains A&B	E.S.W.S. Pumphouse	J-301	Seismic Simulation Test
EF-PDI-0019 EF-PDI-0020	Self Cleaning Strainers Diff. Pressure Indicators-Trains A&B	E.S.W.S. Pumphouse	J-110	Seismic Simulation Test
EF-PDT-0019 EF-PDT-0020	Self Cleaning Strainers Diff. Pressure Transmitters-Trains A&B	E.S.W.S. Pumphouse	J-301	Seismic Simulation Test
EF-PDV-0019 EF-PDV-0020	Self Cleaning Strainer Pressure Diff. Valves-Trains A&B	E.S.W.S. Pumphouse	M-223C	Seismic Simulation Test

TABLE 3C-1

Site Specific Safety-Related Equipment
Evaluated for a 0.15g SSE Design Spectrum

Equipment No.	Description	Location	Bechtel Specification	Qualification Method
EF-PT-0001 EF-PT-0002	E.S.W.S. Pump Discharge Pressure Transmitters-Trains A&B	E.S.W.S. Pumphouse	J-301	Seismic Simulation Test
EF-V-0001 EF-V-0004	E.S.W.S. Pump Isolation Check Valve-Trains A&B	E.S.W.S. Pumphouse	M-223B	Seismic Simulation Test
EF-1FEF03A&B	E.S.W.S. Pump Pre-Lube Stor. Tank Filter - Trains A&B	E.S.W.S. Pumphouse	M-105B	Analytical
EF-1TEF01A&B	E.S.W.S. Pump Pre-Lube Stor. Tank-Trains A&B	E.S.W.S. Pumphouse	M-105B	Analytical
EF-155&156	E.S.W.S. Auxiliary Control Panels-Trains A&B	E.S.W.S. Pumphouse	J-201	Seismic Simulation Test
EF-PI-0011 EF-PI-0012	E.S.W.S. Pump Discharge Pressure Indicators - Trains A&B	E.S.W.S. Pumphouse	J-301	Seismic Simulation Test
GD-CGD01A&B	E.S.W.S. Pump Room Supply Fans-Trains A&B	E.S.W.S. Pumphouse	M-619.2	Analytical
GD-TE-0001 GD-TE-0011	E.S.W.S. Pump Room Supply Fan Temp. Element-Trains A&B	E.S.W.S. Pumphouse	J-558B	Seismic Simulation Test

TABLE 3C-1

Site Specific Safety-Related Equipment
Evaluated for a 0.15g SSE Design Spectrum

Equipment No.	Description	Location	Bechtel Specification	Qualification Method
GD-D002 GD-TZ-001A	HVAC Flow Control Damper and Actuator - Train A	E.S.W.S. Pumphouse	M-627A	Seismic Simulation Test
GD-D004 GD-TZ-0001B	HVAC Flow Control Damper and Actuator - Train B	E.S.W.S. Pumphouse	M-627A	Seismic Simulation Test
GD-D009 GD-TZ-0011A	HVAC Flow Control Damper and Actuator - Train A	E.S.W.S. Pumphouse	M-627A	Seismic Simulation Test
GD-D011 GD-TZ-0011B	HVAC Flow Control Damper and Actuator - Train B	E.S.W.S. Pumphouse	M-627A	Seismic Simulation Test
GD-D012 GD-TZ-0001C	HVAC Flow Control Damper and Actuator - Train A	E.S.W.S. Pumphouse	M-627A	Seismic Simulation Test
GD-D013 GD-TZ-0011C	HVAC Flow Control Damper and Actuator - Train B	E.S.W.S. Pumphouse	M-627A	Seismic Simulation Test
NG-XNG05 NG-XNG06	E.S.W.S. MCC Transformers-Trains A&B	E.S.W.S. Pumphouse	E-075	Seismic Simulation Test
NG-05E NG-06E	E.S.W.S. Motor Control Center-Trains A&B	E.S.W.S. Pumphouse	E-018	Seismic Simulation Test

TABLE 3C-1

Site Specific Safety-Related Equipment
Evaluated for a 0.15g SSE Design Spectrum

Equipment No.	Description	Location	Bechtel Specification	Qualification Method
RP-315 RP-316	Local Distribution Panels	E.S.W.S. Pumphouse	E-028	Seismic Simulation Test
TBK-0201 TBK-0202 TBK-0203 TBK-0204	Terminal Boxes	E.S.W.S. Pumphouse	E-028	Analytical
EF-HIS-0055B EF-HIS-0056B	E.S.W.S. Pump Switches-Trains A&B	E.S.W.S. Pumphouse	J-201	Seismic Simulation Test
EF-HIS-0019B EF-HIS-0020B	E.S.W.S. Self Cleaning Strainer Switches-Trains A&B	E.S.W.S. Pumphouse	J-201	Seismic Simulation Test
EF-HIS-0097 EF-HIS-0098	E.S.W.S. Pump Disch. Vent Switches-Trains A&B	E.S.W.S. Pumphouse	J-201	Seismic Simulation Test
EF-HS-0091 EF-HS-0092	Traveling Water Screen Spray Valve Switches-Trains A&B	E.S.W.S. Pumphouse	J-201	Seismic Simulation Test
EF-ZL-0091 EF-ZL-0092	Traveling Screen Spray Valve Indicator Lights-Trains A&B	E.S.W.S. Pumphouse	J-201	Seismic Simulation Test

TABLE 3C-2

FACTORS OF SAFETY
UHS DAM

Condition	Embankment w/o Riprap*	Embankment w/ Riprap	Min F.S. Required*	Remarks
End of Const.		(See Remarks)		Soil Parameters Revised
0g	2.45	2.94	1.4	To c= 929 PSF& $_T$ = 118 PCF
0.12g	1.48	1.80	1.2	To correspond to Field
0.15g		1.63	1.2	Density and Embankment
				Specimen q_u Tests.
Steady State				
0g	2.50	2.47	1.5	
0.12g	1.57	1.53	1.2	
0.15g	1.42	1.2		
Submerged				
0g	4.67	3.71	1.5	
0.12g	2.09	1.62	1.2	
0.15g	1.41	1.2		
Rapid Drawdown				
0g	2.18	2.31	1.2	

*Table 2.5-84, Section 2.5.6.5.4.2.1 and Section 2.5.6.3.4.2.2.1

TABLE 3C-3

COMPUTED FACTOR OF SAFETY FOR THE FINITE ELEMENT MODEL OF UHS DAM
VERTICAL AND HORIZONTAL ACCELERATION 0.15G

Element No.	Initial Vertical Normal Stress σ_o' (psf)	Initial Shear Stress τ_o (psf)	τ_o / σ_o'	Cyclic Shear Strength τ_f (psf)	Induced[1] Shear Stress τd (psf)	F.S= τ_f / τ_d	
2	82.61	21.52	0.261	125.0	47.21	2.65	
3	187.01	38.75	0.207	205.0	84.18	2.43	
4	293.85	57.85	0.197	295.0	133.96	2.20	
5	403.42	76.58	0.190	370.0	(*)	(*)	
6	517.00	83.34	0.161	430.0	234.54	1.83	
7	622.00	90.62	0.146	480.0	280.02	1.71	
8	730.26	90.11	0.123	525.0	321.18	1.63	
9	830.84	79.52	0.096	535.0	358.15	1.49	
10	912.40	56.27	0.062	560.0	388.88	1.44	
11	955.98	29.33	0.031	565.0	409.74	1.38	
12	969.67	8.43	0.009	560.0	417.33	1.34	
18	622.32	90.62	0.146	480.0	264.16	1.82	
26	89.73	25.60	0.285	150.0	76.18	1.97	
27	184.50	40.67	0.220	230.0	116.93	1.97	
28	289.85	48.74	0.168	295.0	171.98	1.72	
29	396.79	63.03	0.159	350.0	221.58	1.58	
30	509.84	60.48	0.119	400.0	262.28	1.53	
31	615.58	56.85	0.092	440.0	297.78	1.48	
32	701.52	40.47	0.058	400.0	327.66	1.46	
33	747.62	20.29	0.027	490.0	347.92	1.41	
34	761.39	5.63	0.007	490.0	354.97	1.38	
39	509.84	60.48	0.119	400.0	255.70	1.56	
46	89.19	22.43	0.252	135.0	110.10	1.23	MIN
47	180.15	32.95	0.183	205.0	149.28	1.37	
48	288.32	34.86	0.121	275.0	191.46	1.44	
49	394.67	43.90	0.111	330.0	222.10	1.49	
50	489.18	28.16	0.058	370.0	246.84	1.50	
51	535.12	12.39	0.023	390.0	263.60	1.48	
52	547.84	3.28	0.006	400.0	268.97	1.49	
56	394.64	43.90	0.111	330.0	219.92	1.50	
63	182.06	25.86	0.142	200.0	137.16	1.46	
64	275.60	18.12	0.066	245.0	154.27	1.59	
65	318.72	9.28	0.029	265.0	166.36	1.59	
66	330.77	1.77	0 005	270.0	172.28	1.57	
69	275.60	18.12	0.066	250.0	154.43	1.62	
74	83.40	10.11	0.121	102.0	68.23	1.49	

(1) Included shear stresses from output of Quad 4, Run 789 GC, March 8, 1982.
(*) Not evaluated.

TABLE 3C-4

RESULTS OF SLOPE STABILITY ANALYSIS FOR
ESWS INTAKE CHANNEL EXCAVATED SLOPES

Condition	Effective Stress Parameters	Total Stress Parameters	Required F.S.
5:1 Slopes			
Submerged-Lake @ 1087	5.91		1.5
Submerged + 0.12g	2.16		1.2
Submerged + 0.15g	1.84		1.2
Rapid Drawdown	2.82		1.2
End of Const (Short-term)		2.86	1.5
End of Const (Long-term)	3.37	3.14	1.5
End of Const + .12g	1.86	1.74	1.2
End of Const + .15g	1.67	1.55	1.2
3:1 Slopes			
Submerged-Lake 1070	7.13		1.5
Submerged + 0.12g	3.37	3.88	1.2
Submerged + 0.15g	3.02	3.44	1.2
End of Const (Short-term)		5.69	1.5
End of Const (Long-term)	5.02	5.97	1.5

TABLE 3C-5

RESULTS OF SLOPE STABILITY ANALYSIS FOR
UHS EXCAVATED SLOPES USING WEDGE ANALYSIS

Condition	Computed Minimum Factor of Safety	Required Minimum Factor of Safety
End of Construction	7.8*	1.4
Steady State	5.3*	1.5
Steady State plus SSE (0.12g)	3.5*	1.2
(0.15g)	3.20	1.2

*Table 2.5-56

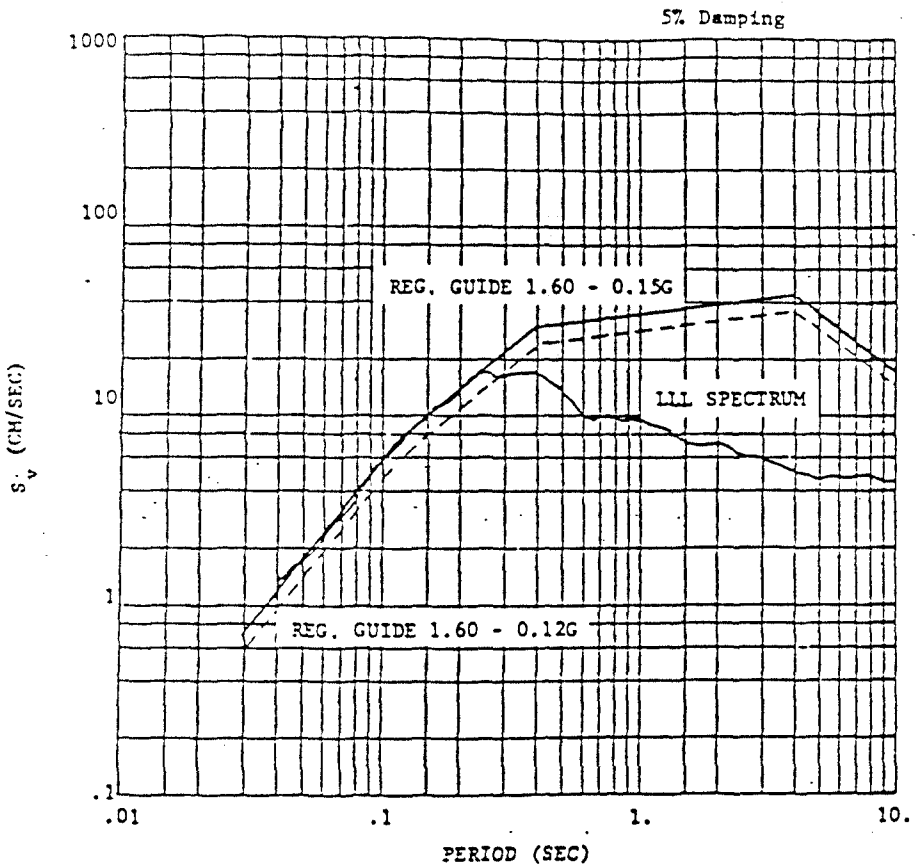

Rev. 1

WOLF CREEK
UPDATED SAFETY ANALYSIS REPORT

Figure 3C-1

Comparison of Lawrence Livermore Spectrum With Wolf Creek Design Spectra

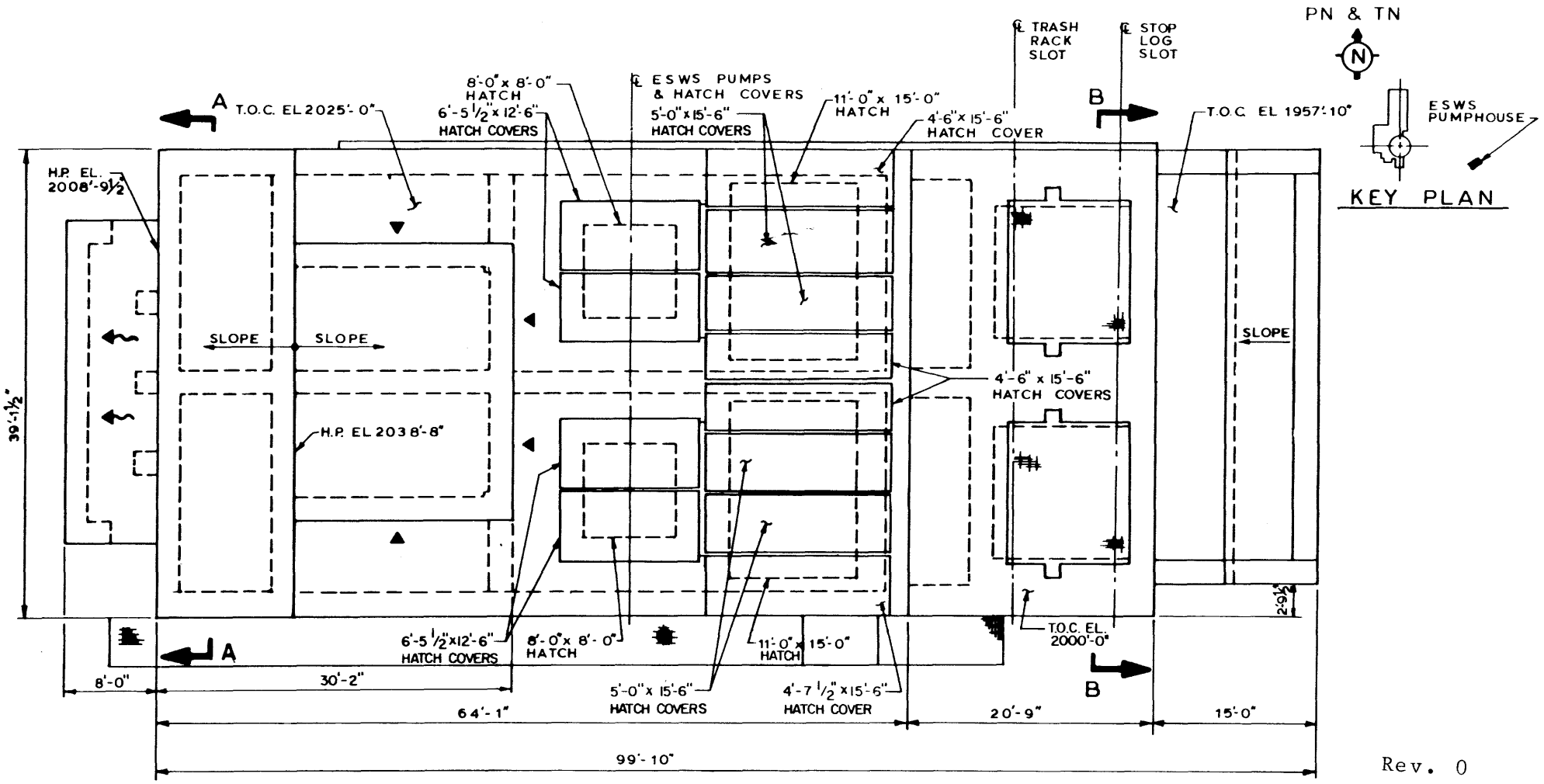

Rev. 0

NOTE: ROOFS AND HATCHES AT EL 2038'-8", EL 2025'-0" AND EL 2008'-9 1/2" HAVE f'c = 5000 psi MINIMUM AT 90 DAYS. ALL OTHER CONCRETE IS f'c = 4000 psi MINIMUM AT 28 DAYS

▶ AIR INTAKE

⇝ AIR EXHAUST

PLAN VIEW - E.S.W.S. PUMPHOUSE

WOLF CREEK
UPDATED SAFETY ANALYSIS REPORT

FIGURE 3C-2

PLAN VIEW - ESWS PUMPHOUSE

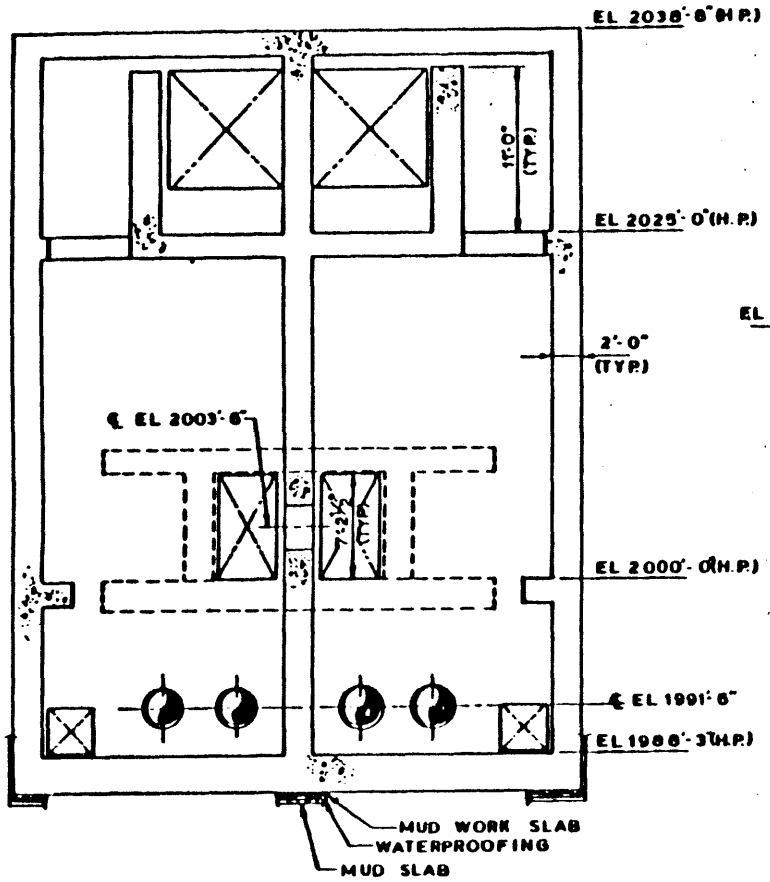

SECTION A-A

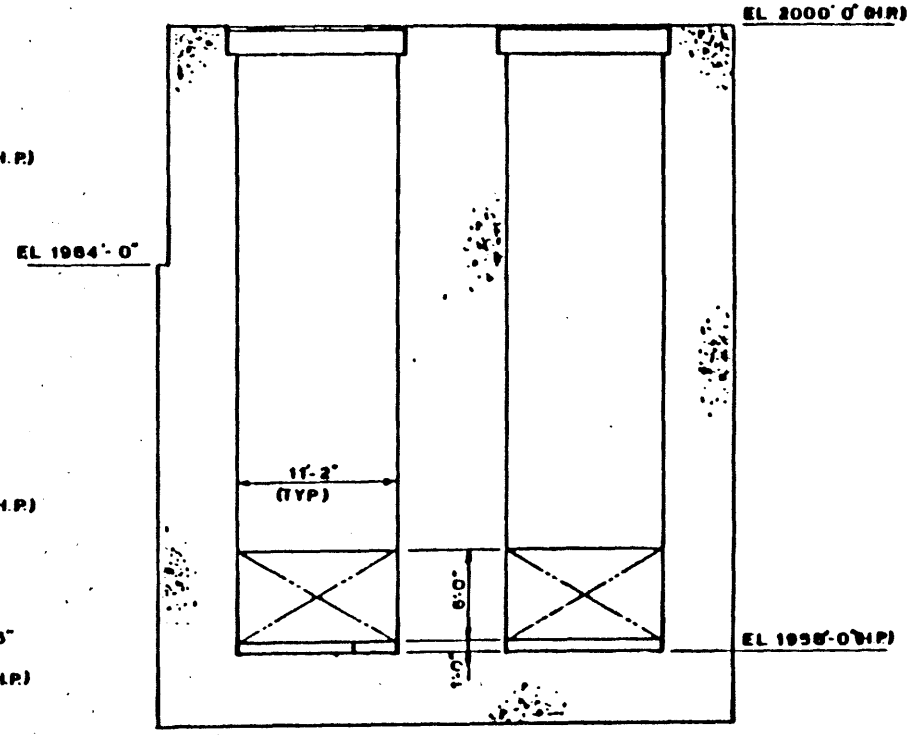

SECTION B-B

Rev. 0

WOLF CREEK UPDATED SAFETY ANALYSIS REPORT
FIGURE 3C-3 N-S SECTION - ESWS PUMPHOUSE

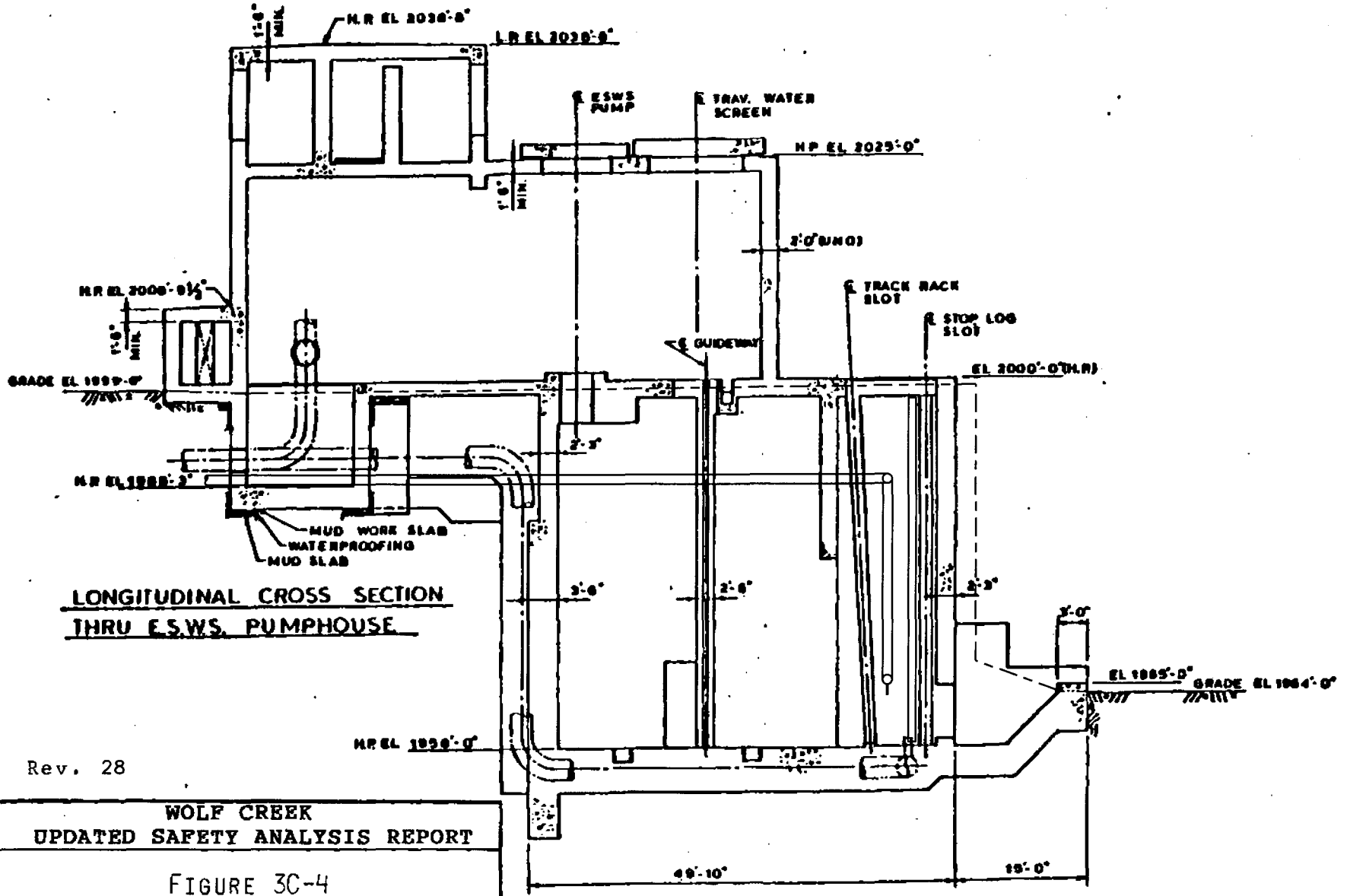

Rev. 28

WOLF CREEK
UPDATED SAFETY ANALYSIS REPORT

FIGURE 3C-4

E-W SECTION - ESWS PUMPHOUSE

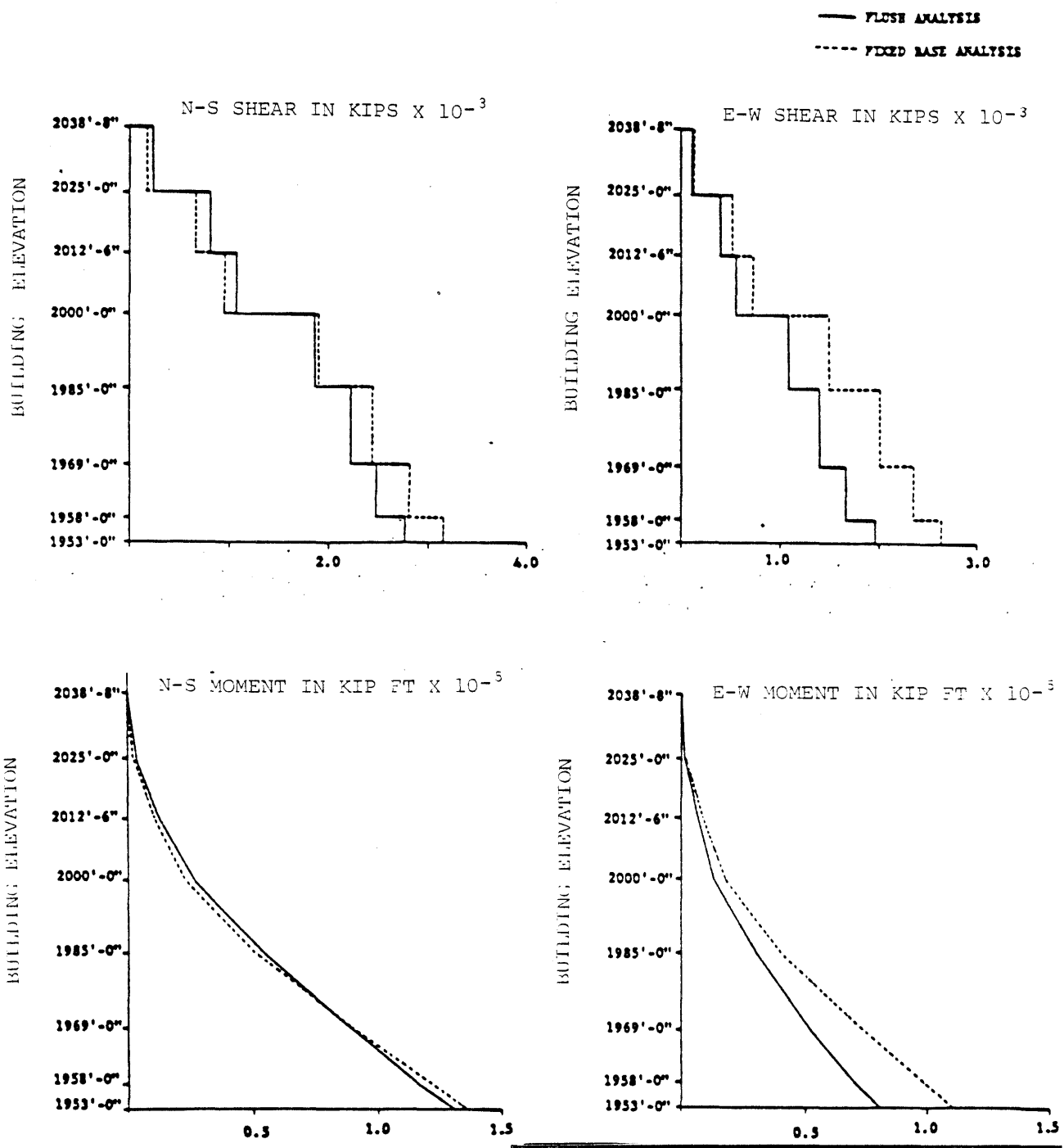

WOLF CREEK
UPDATED SAFETY ANALYSIS REPORT

FIGURE 3C-5

COMPARISON OF FLUSH & FIXED BASE ANALYSIS BUILDING SHEAR AND MOMENTS

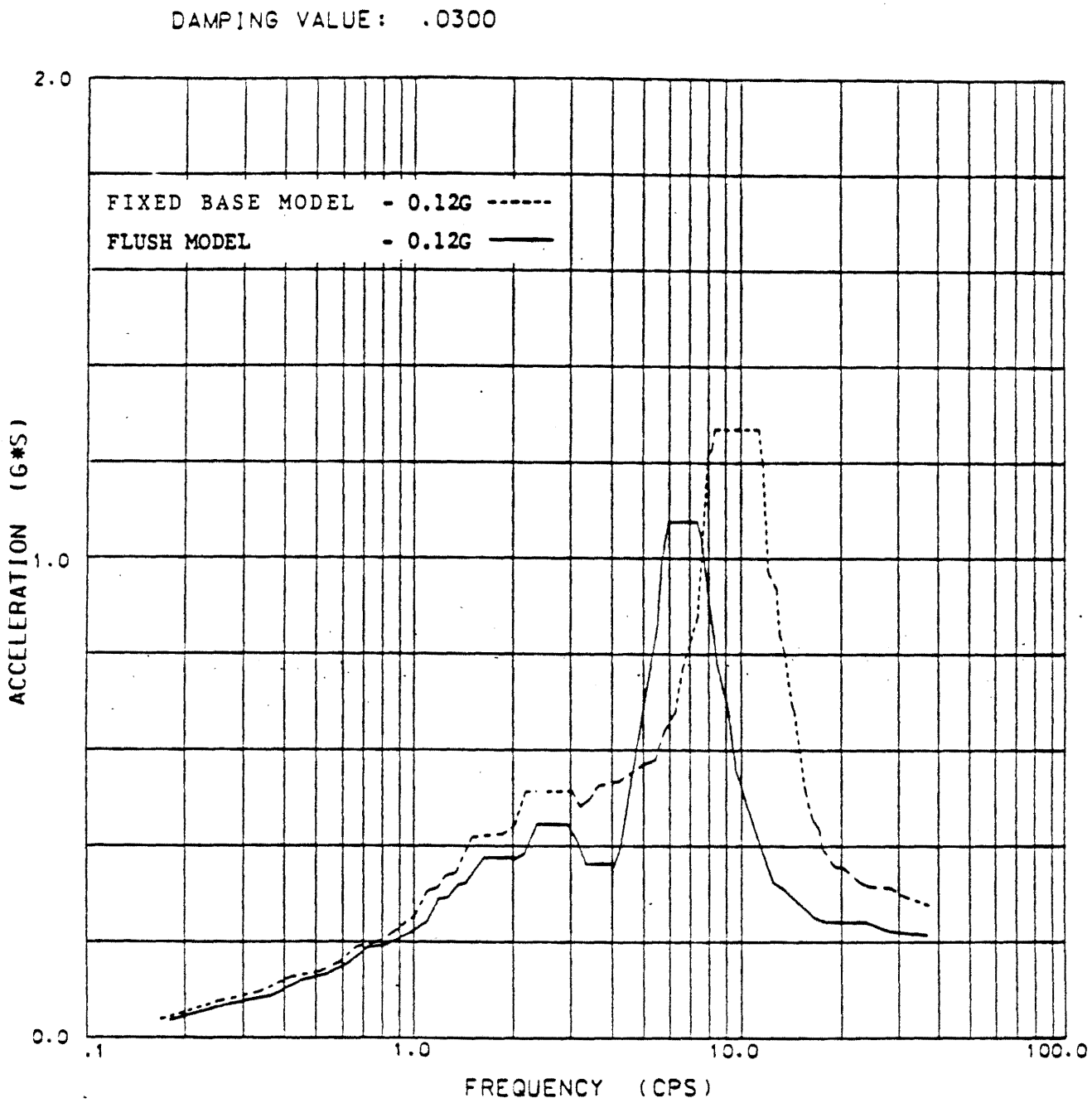

Rev. 0

WOLF CREEK
UPDATED SAFETY ANALYSIS REPORT

FIGURE 3C-6

COMPARISON OF FLUSH & FIXED BASE ANALYSIS PUMPHOUSE N-S RESPONSE SPECTRUM AT EL. 2000', 3% DAMPING

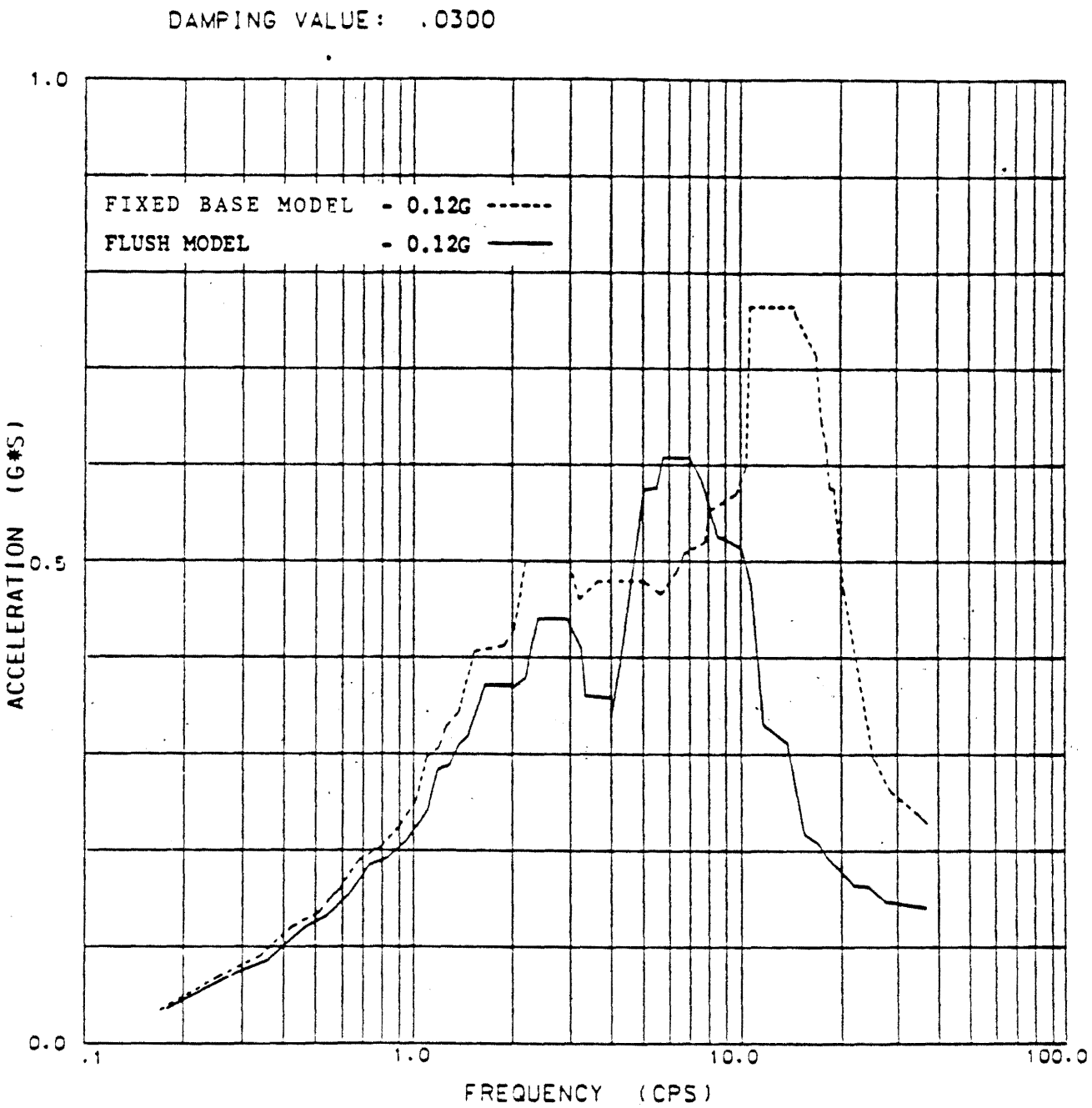

Rev. 0

WOLF CREEK
UPDATED SAFETY ANALYSIS REPORT

FIGURE 3C-7

COMPARISON OF FLUSH & FIXED BASE ANALYSIS PUMPHOUSE E-W RESPONSE SPECTRUM AT EL. 2000', 3% DAMPING

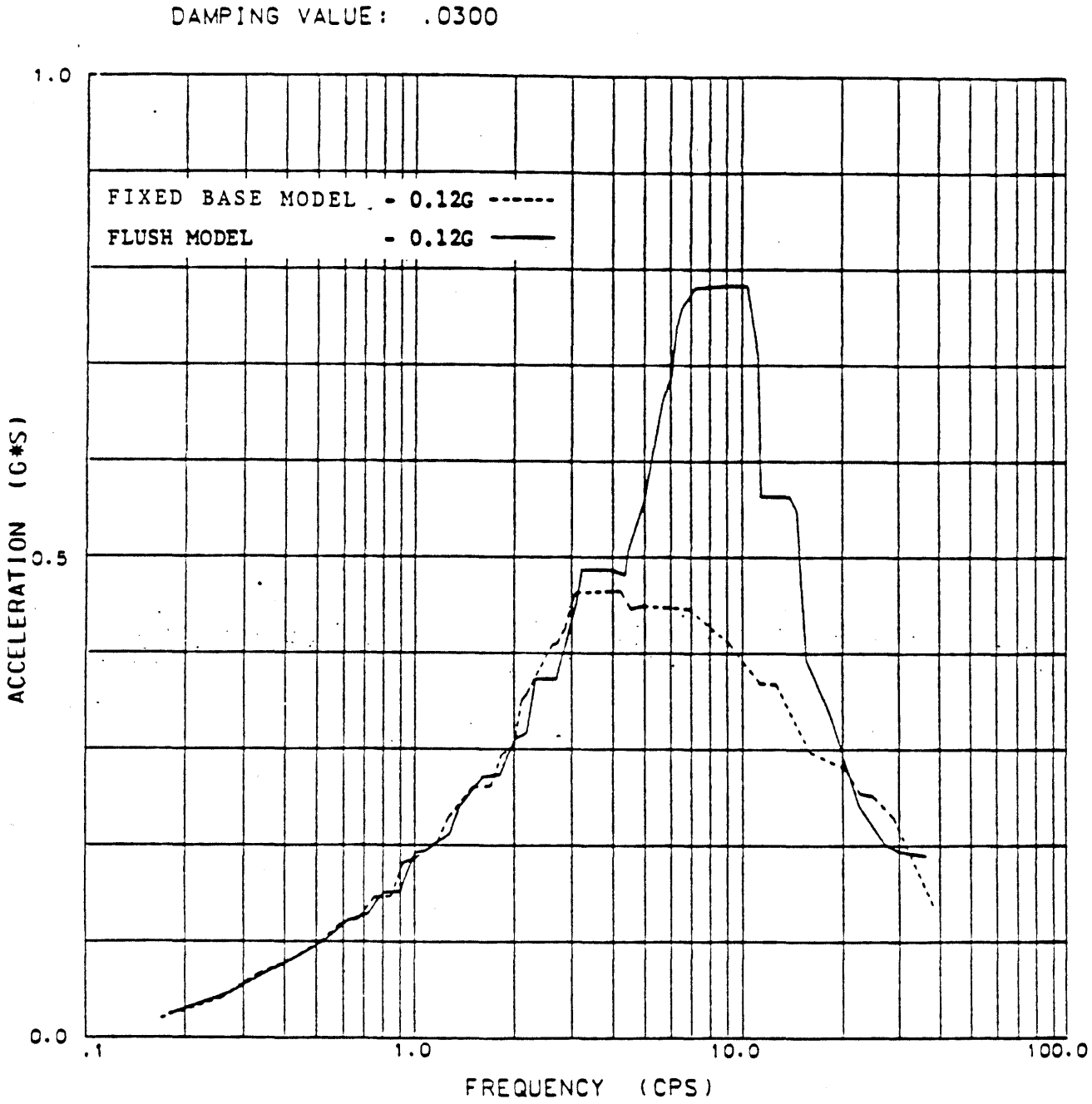

Rev. 0

WOLF CREEK
UPDATED SAFETY ANALYSIS REPORT

FIGURE 3C-8

COMPARISON OF FLUSH & FIXED BASE ANALYSIS PUMPHOUSE VERTICAL RESPONSE SPECTRUM AT EL. 2000', 3% DAMPING

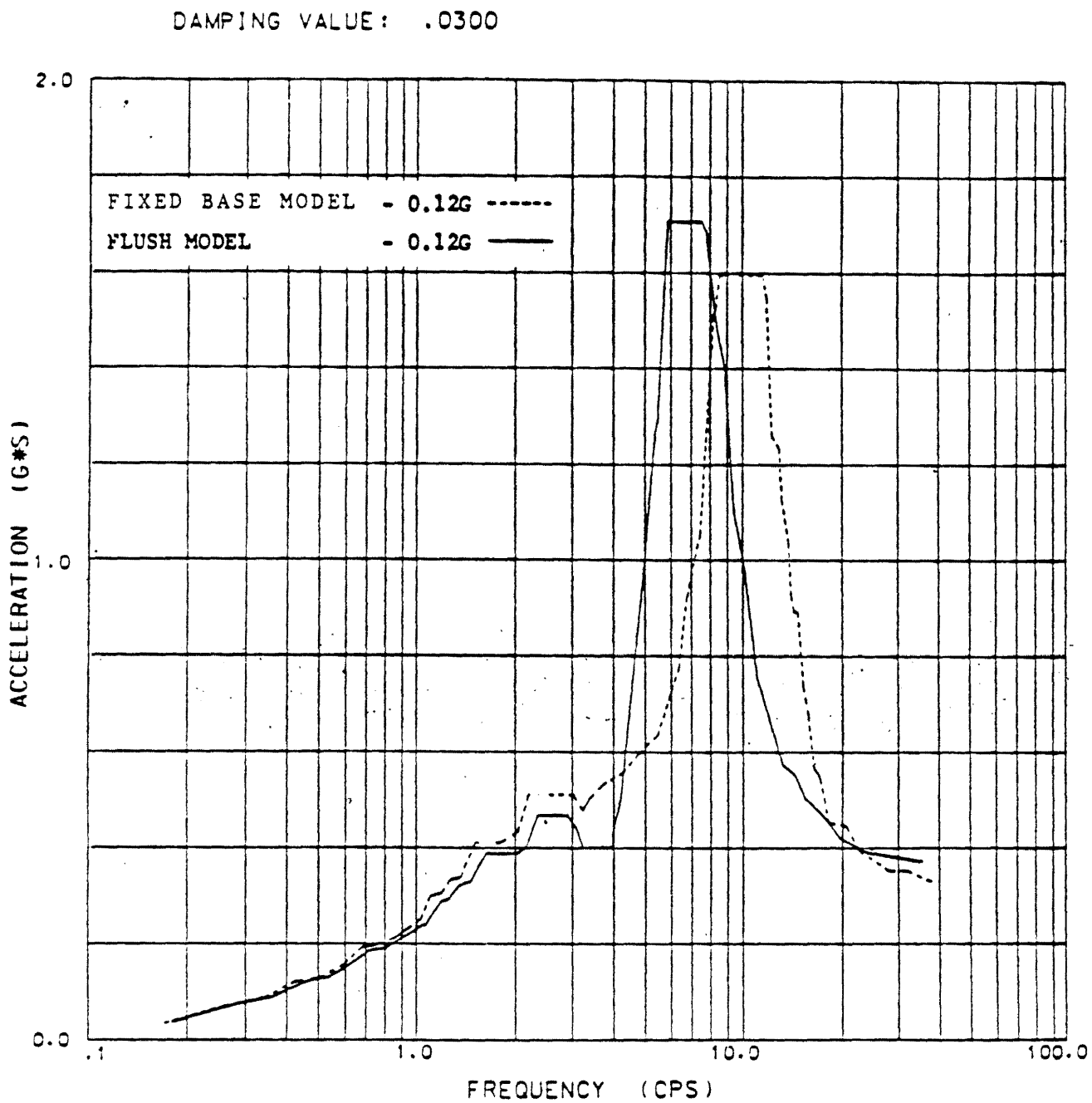

Rev. 0

WOLF CREEK
UPDATED SAFETY ANALYSIS REPORT

FIGURE 3C-9

COMPARISON OF FLUSH & FIXED BASE ANALYSIS PUMPHOUSE N-S RESPONSE SPECTRUM AT EL. 2025', 3% DAMPING

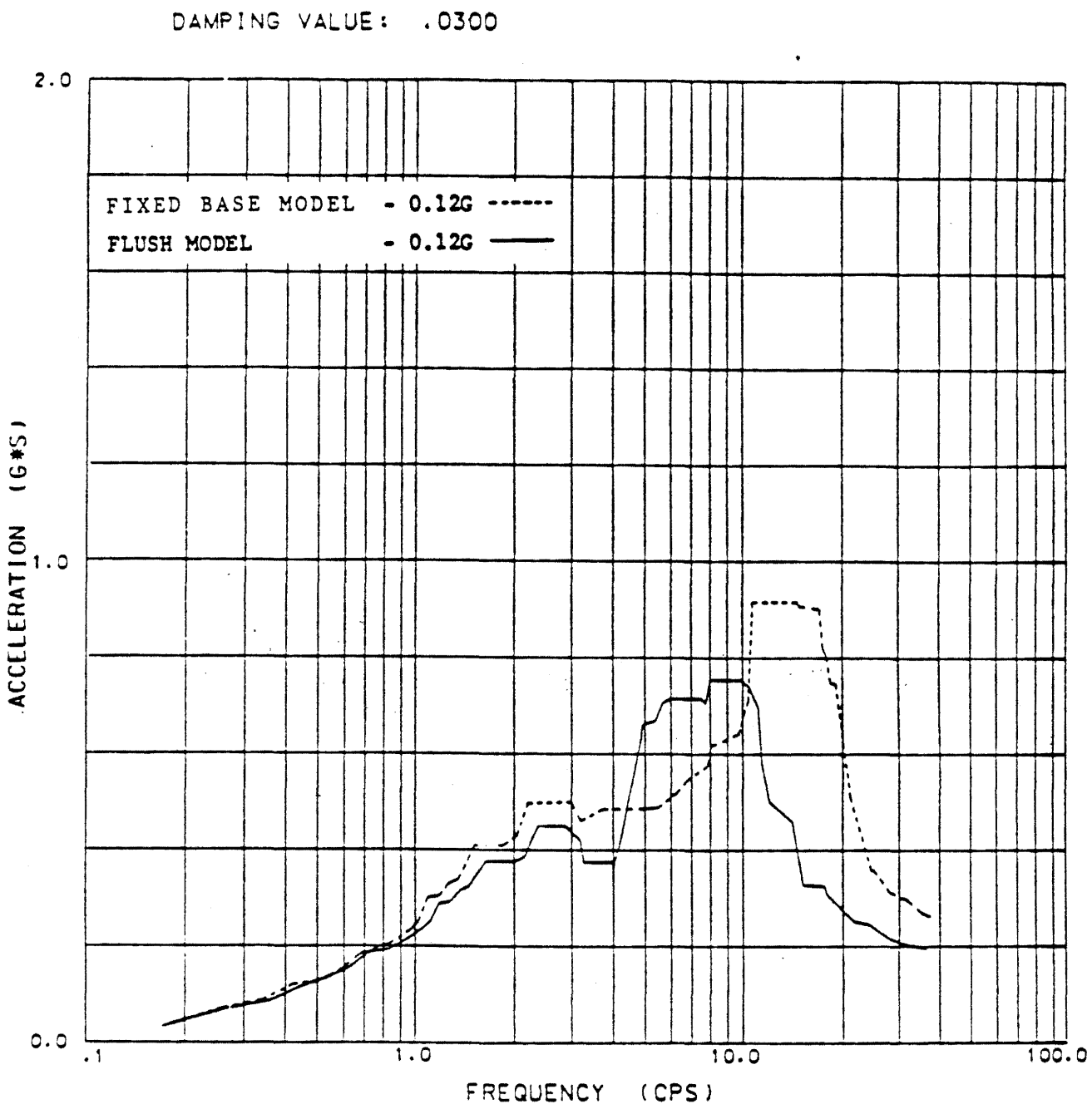

Rev. 0

WOLF CREEK
UPDATED SAFETY ANALYSIS REPORT

FIGURE 3C-10

COMPARISON OF FLUSH & FIXED BASE ANALYSIS PUMPHOUSE E-W RESPONSE SPECTRUM AT EL. 2025', 3% DAMPING

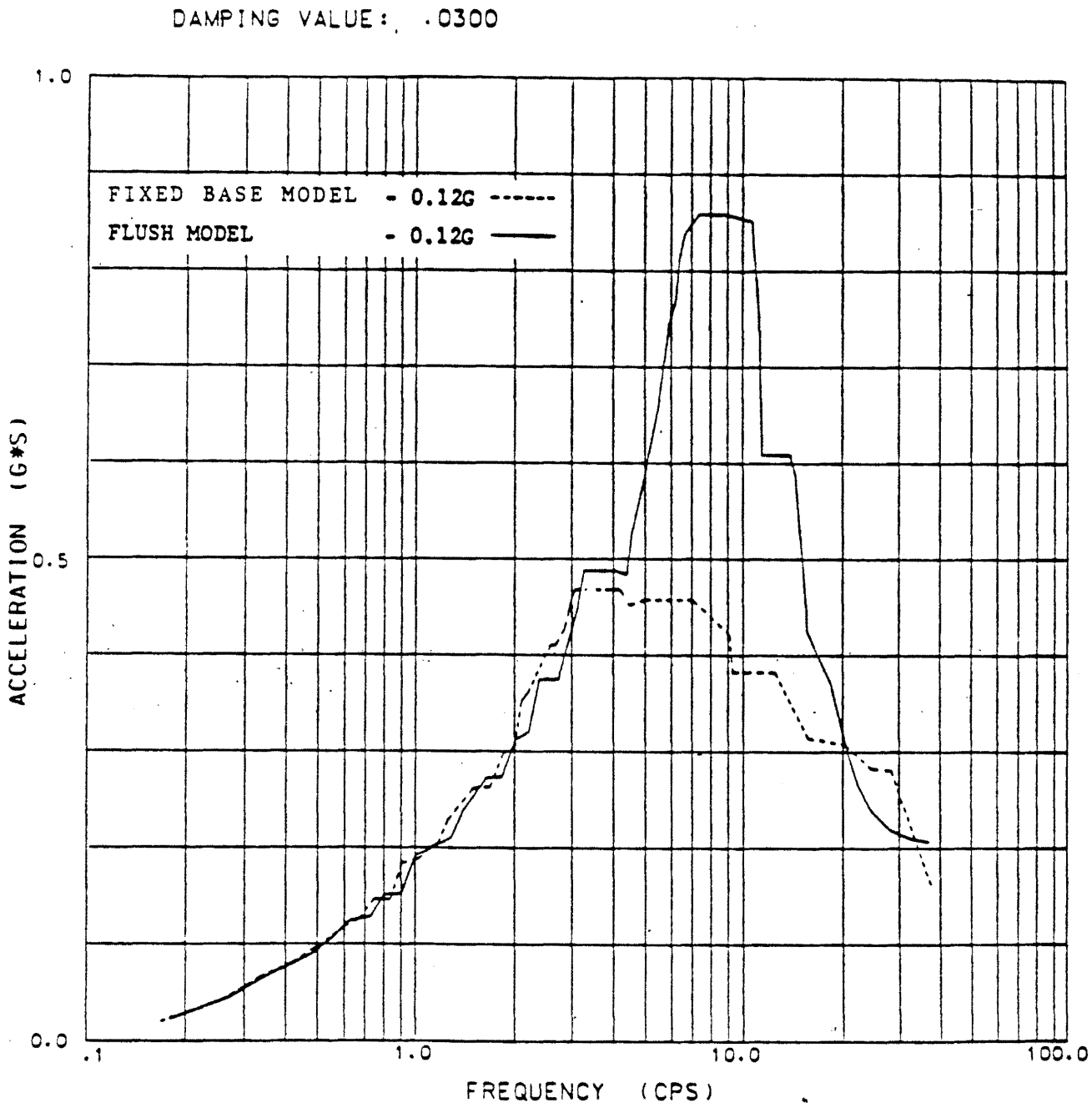

Rev. 0

WOLF CREEK
UPDATED SAFETY ANALYSIS REPORT

FIGURE 3C-11

COMPARISON OF FLUSH & FIXED BASE ANALYSIS PUMPHOUSE VERTICAL RESPONSE SPECTRUM AT EL. 2025', 3% DAMPING

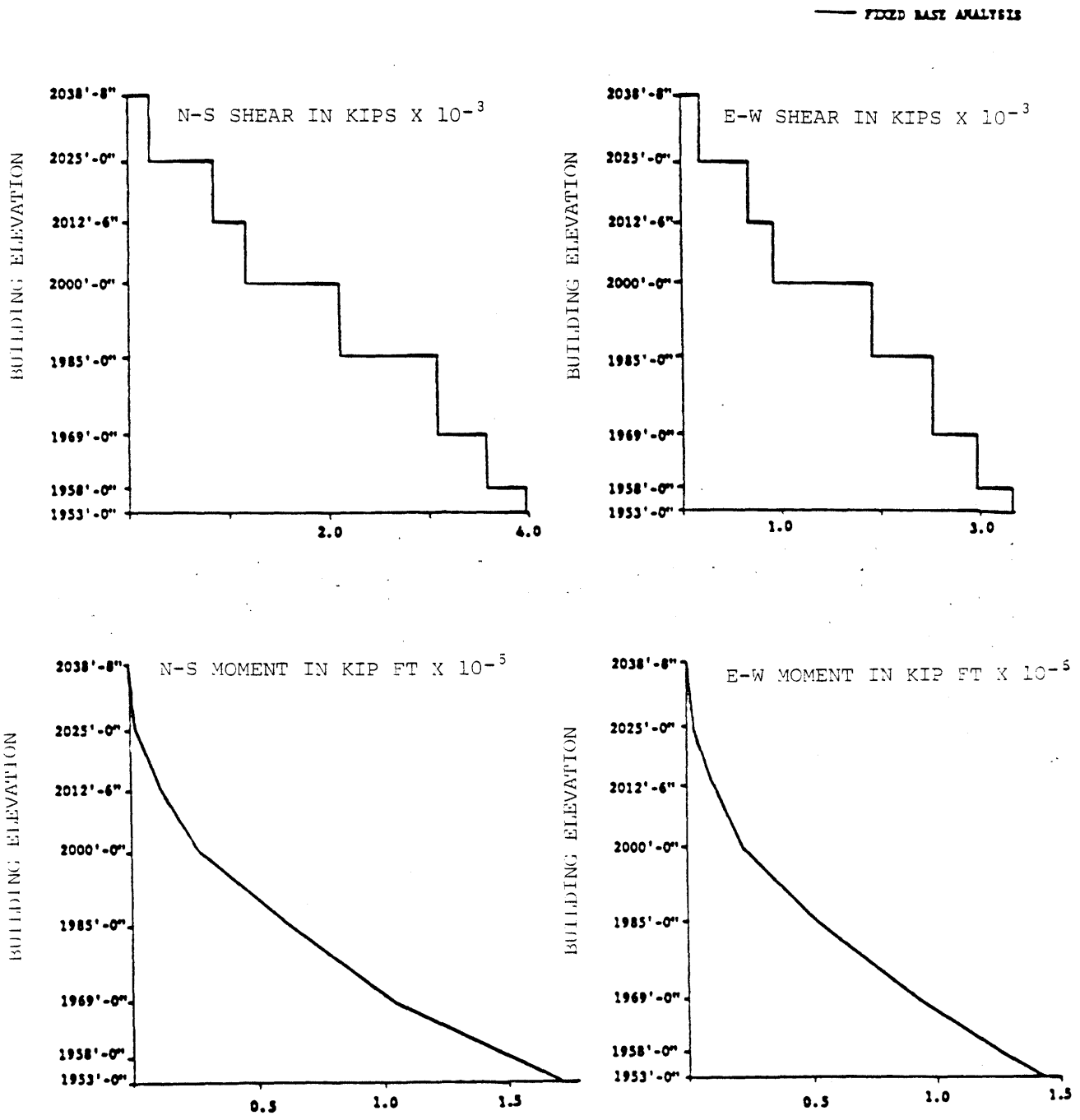

WOLF CREEK
UPDATED SAFETY ANALYSIS REPORT

FIGURE 3C-12

PUMPHOUSE SHEAR & MOMENTS FOR 0.15G SSE

Rev

Rev. 0

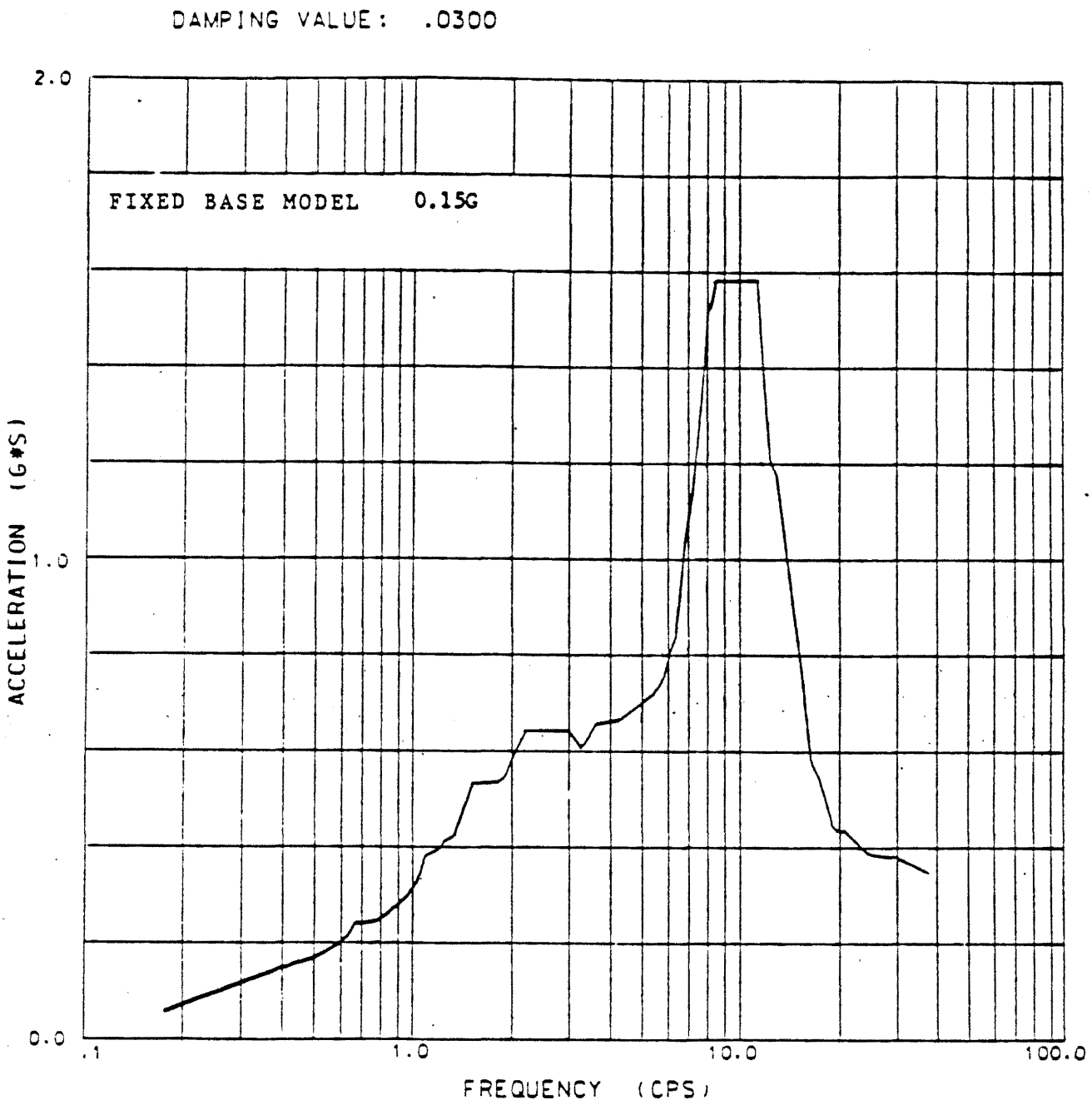

Rev. 0

WOLF CREEK
UPDATED SAFETY ANALYSIS REPORT

FIGURE 3C-13

PUMPHOUSE RESPONSE SPECTRUM FOR 0.15G SSE N-S DIRECTION AT EL. 2000', 3% DAMPING

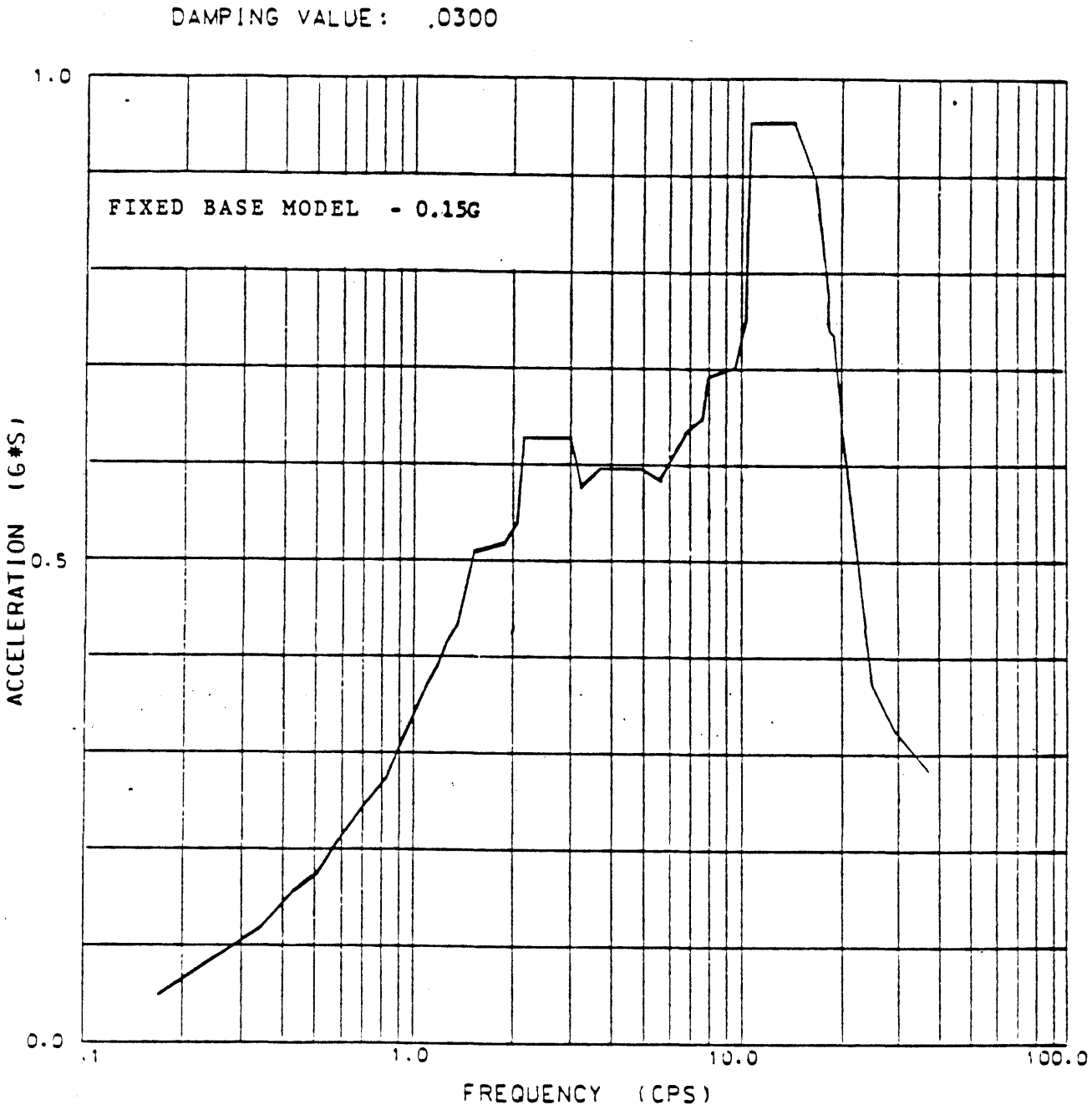

Rev. 0

WOLF CREEK
UPDATED SAFETY ANALYSIS REPORT

FIGURE 3C-14

PUMPHOUSE RESPONSE SPECTRUM FOR 0.15G SSE E-W DIRECTION AT EL. 2000', 3% DAMPING

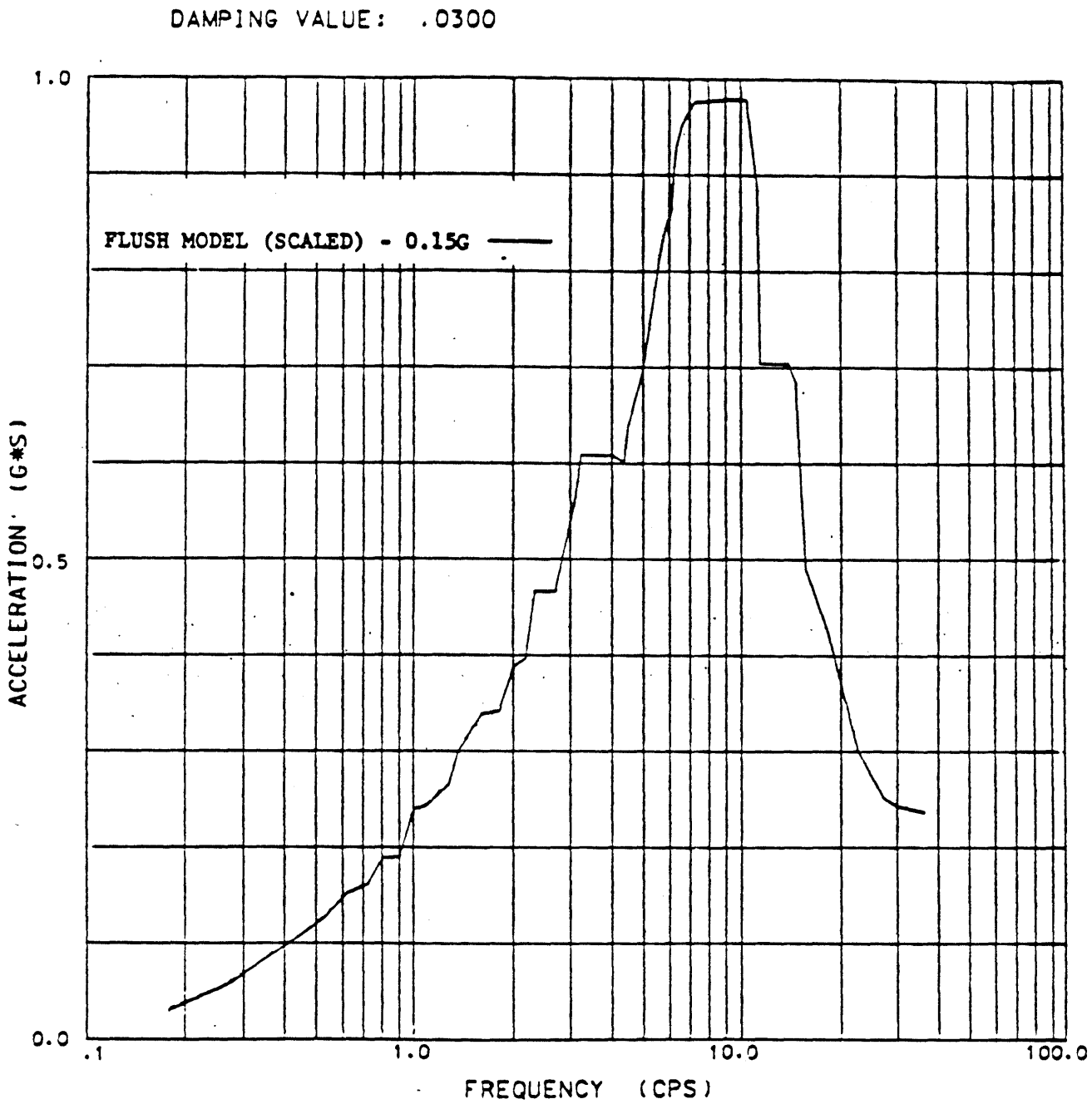

Rev. 0

WOLF CREEK
UPDATED SAFETY ANALYSIS REPORT

FIGURE 3C-15

PUMPHOUSE RESPONSE SPECTRUM FOR 0.15G SSE VERTICAL DIRECTION AT EL. 2000', 3% DAMPING

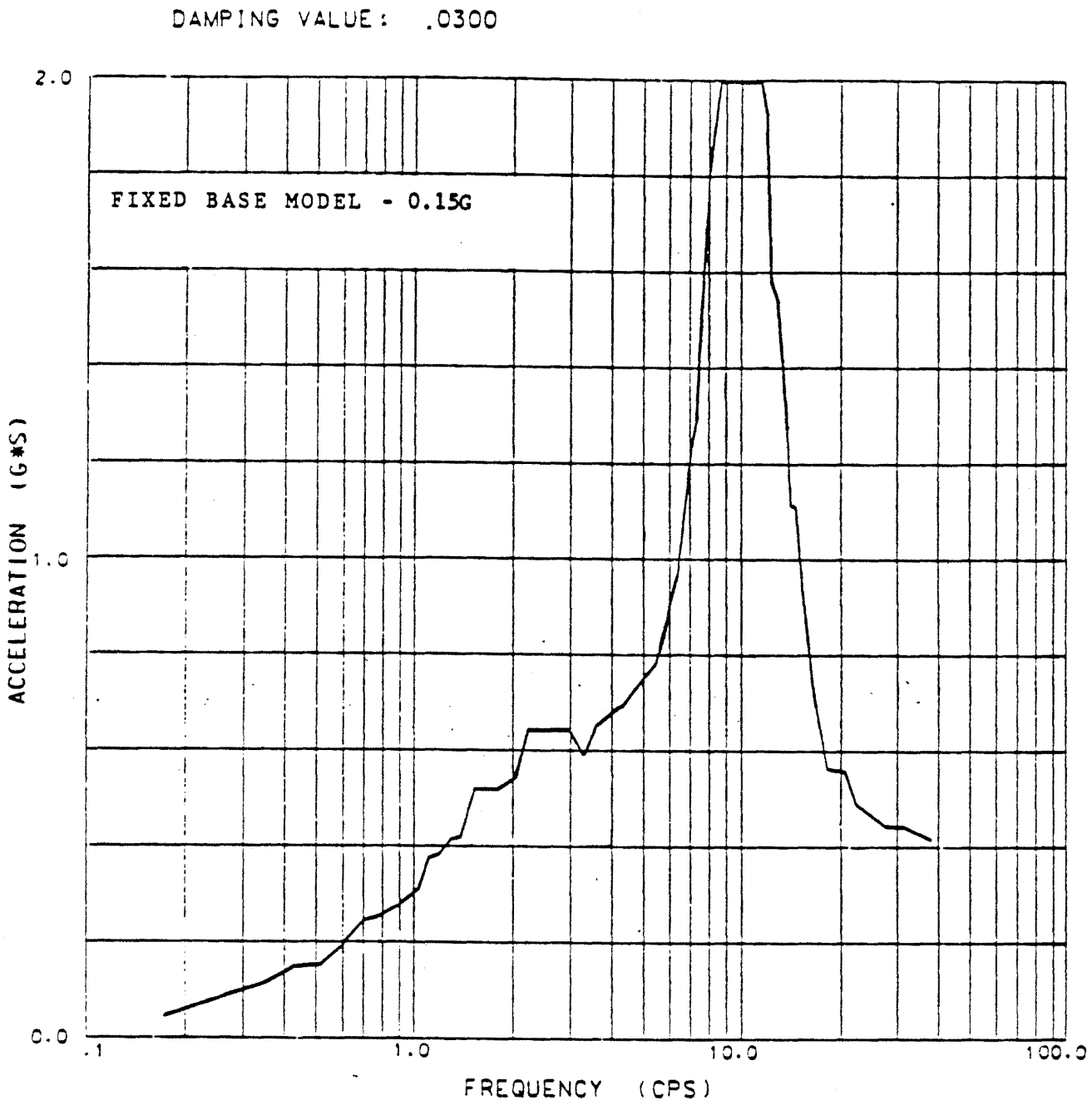

Rev. 0

WOLF CREEK
UPDATED SAFETY ANALYSIS REPORT

FIGURE 3C-16

PUMPHOUSE RESPONSE SPECTRUM FOR 0.15G SSE N-S DIRECTION AT EL. 2025', 3% DAMPING

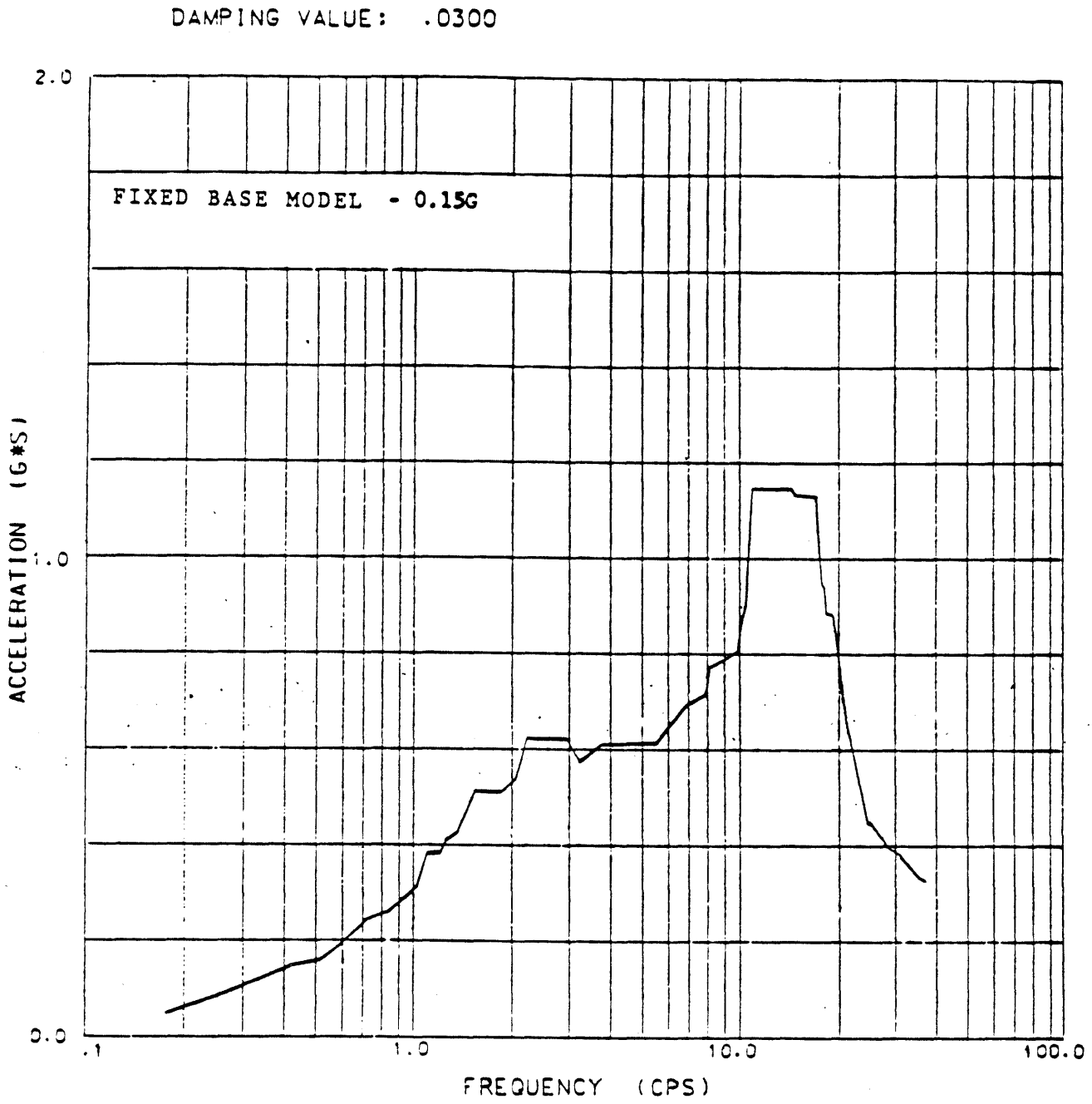

Rev. 0

WOLF CREEK
UPDATED SAFETY ANALYSIS REPORT

FIGURE 3C-17

PUMPHOUSE RESPONSE SPECTRUM FOR 0.15G SSE E-W DIRECTION AT EL. 2025', 3% DAMPING

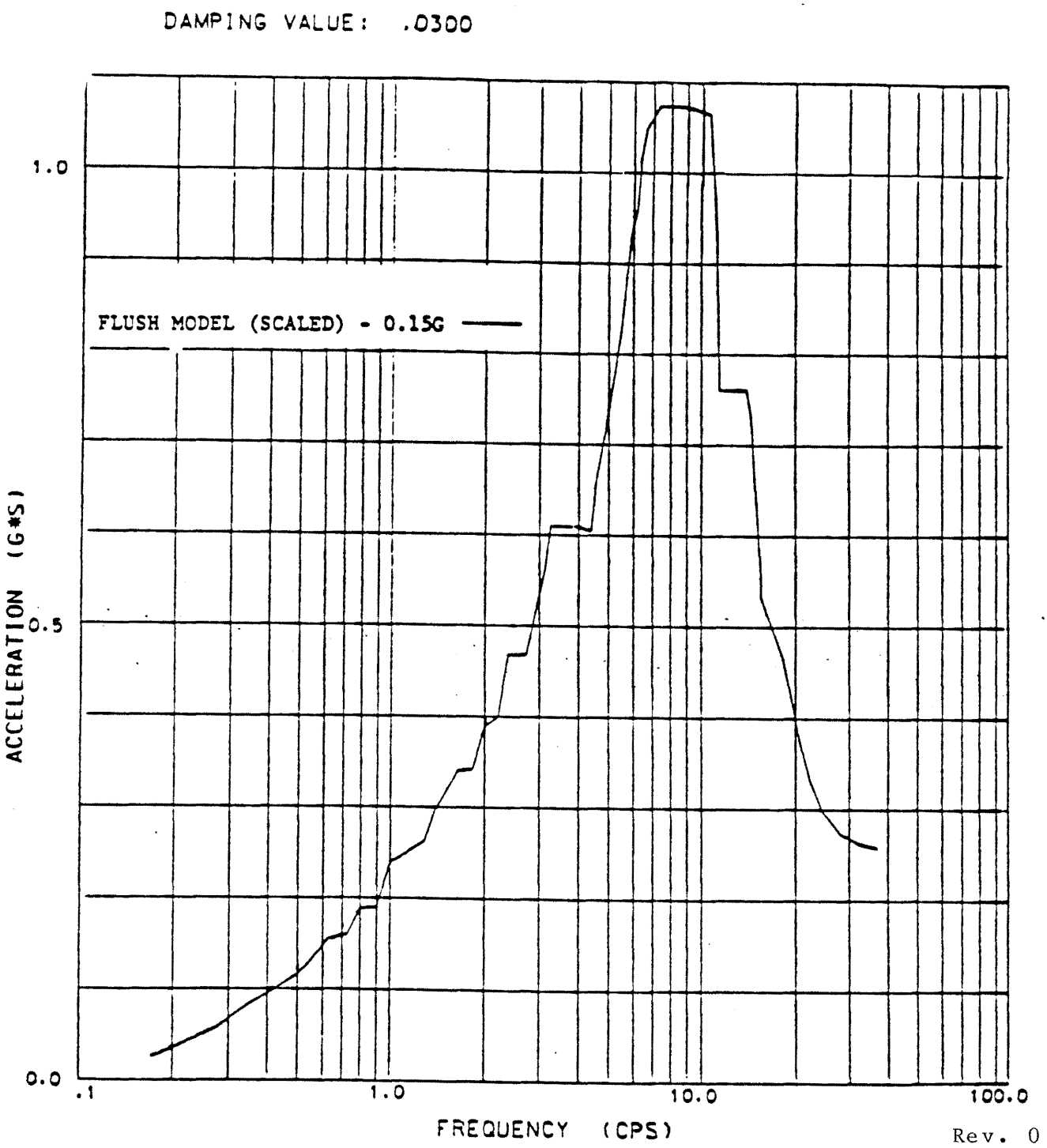

Rev. 0

WOLF CREEK
UPDATED SAFETY ANALYSIS REPORT

FIGURE 3C-18

PUMPHOUSE RESPONSE SPECTRUM FOR 0.15G SSE VERTICAL DIRECTION AT EL. 2025', 3% DAMPING

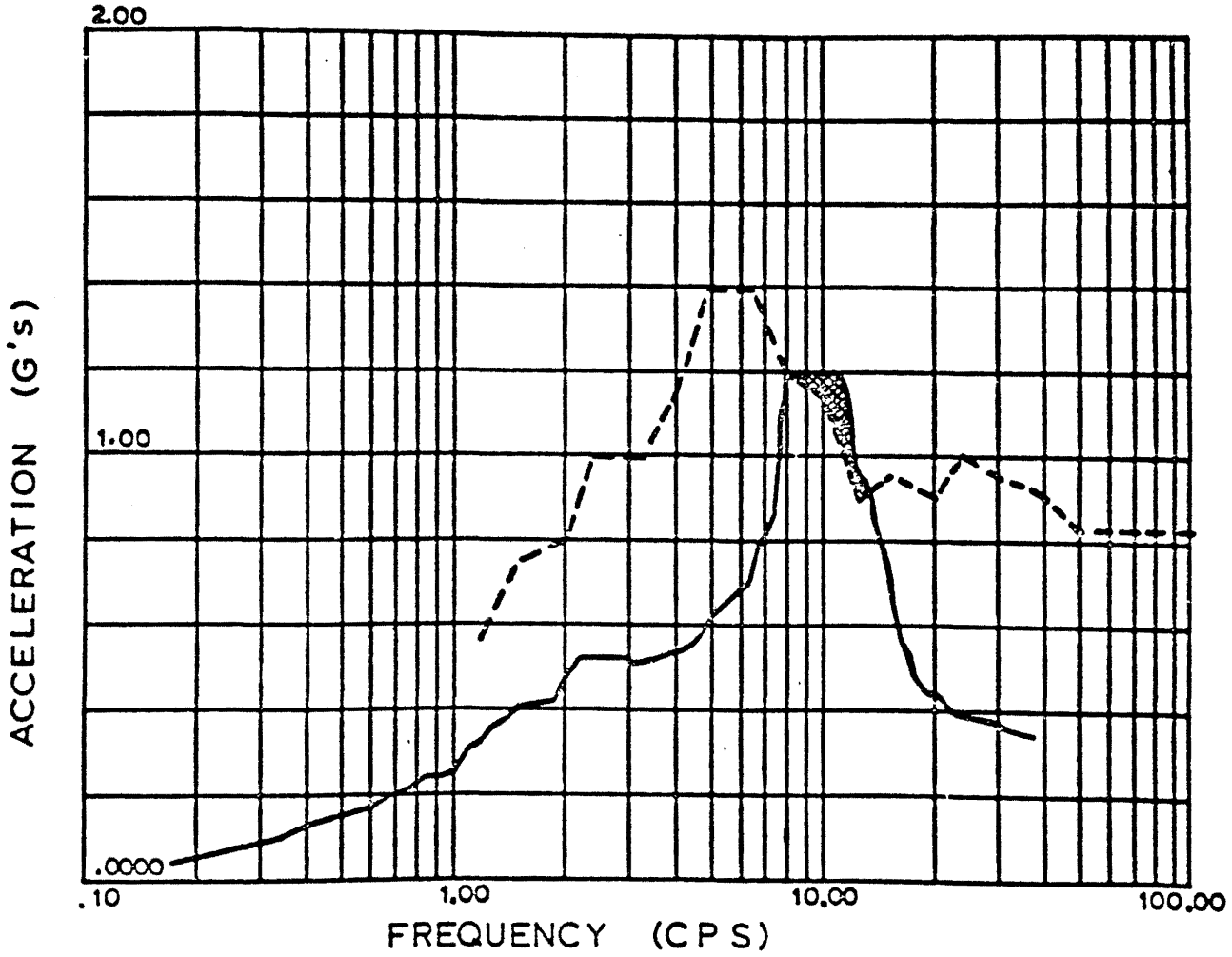

——— F.R.S. ELEV. 2000'-0"
N-S SSE (0.15g)
5% DAMPING

— — — T.R.S. 5% DAMPING

Rev. 0

WOLF CREEK
UPDATED SAFETY ANALYSIS REPORT

FIGURE 3C-19

TEST RESPONSE SPECTRA FRONT TO BACK HORIZONTAL DIRECTION ESWS CONTROL PANELS EF-155 AND EF-156

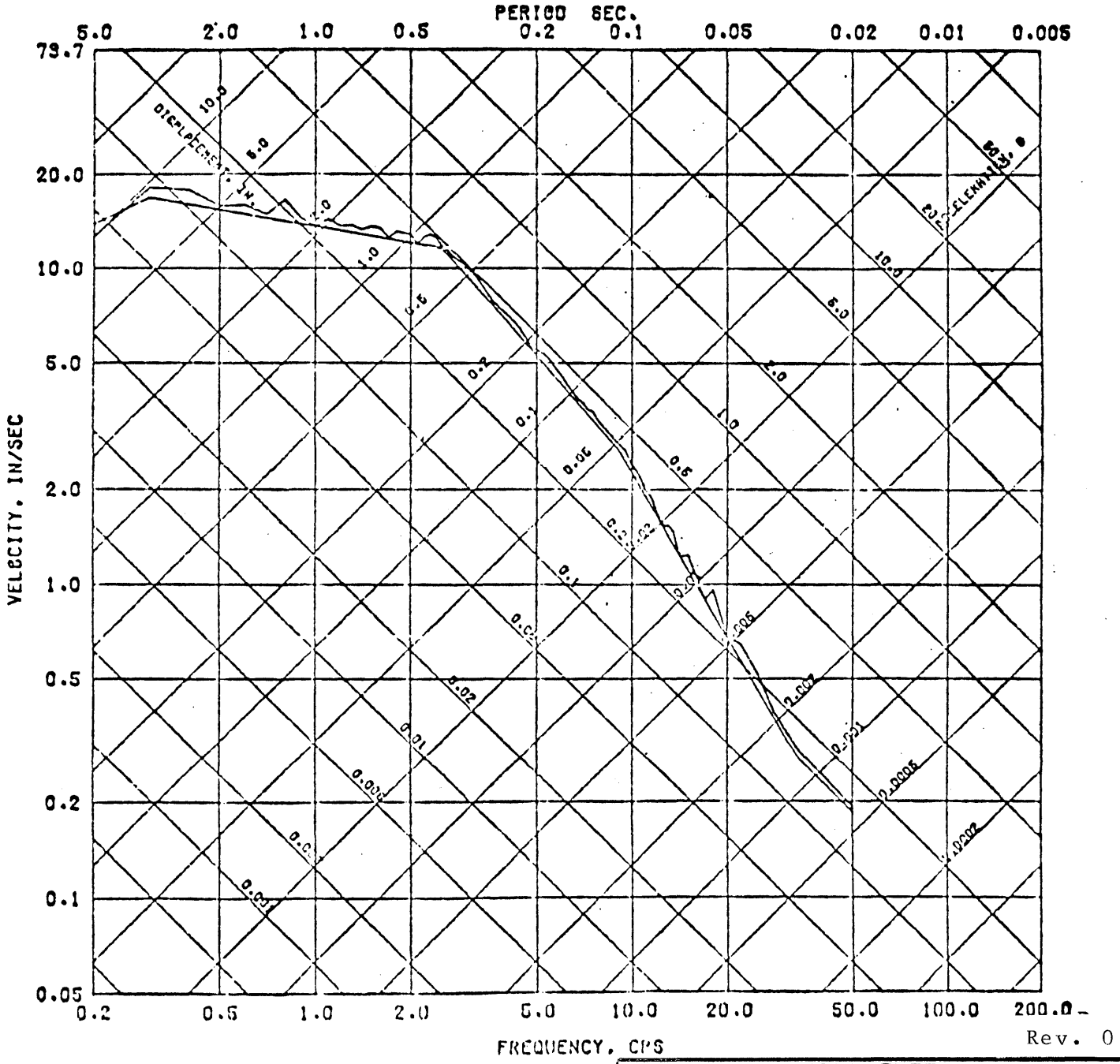

Rev. 0

WOLF CREEK
UPDATED SAFETY ANALYSIS REPORT

FIGURE 3C-20

COMPARISON OF ARTIFICIAL ACCELEROGRAM AND DESIGN RESPONSE SPECTRA FOR MAXIMUM HORIZONTAL GROUND ACCELERATION OF 15% OF GRAVITY AND 5% SPECTRA DAMPING

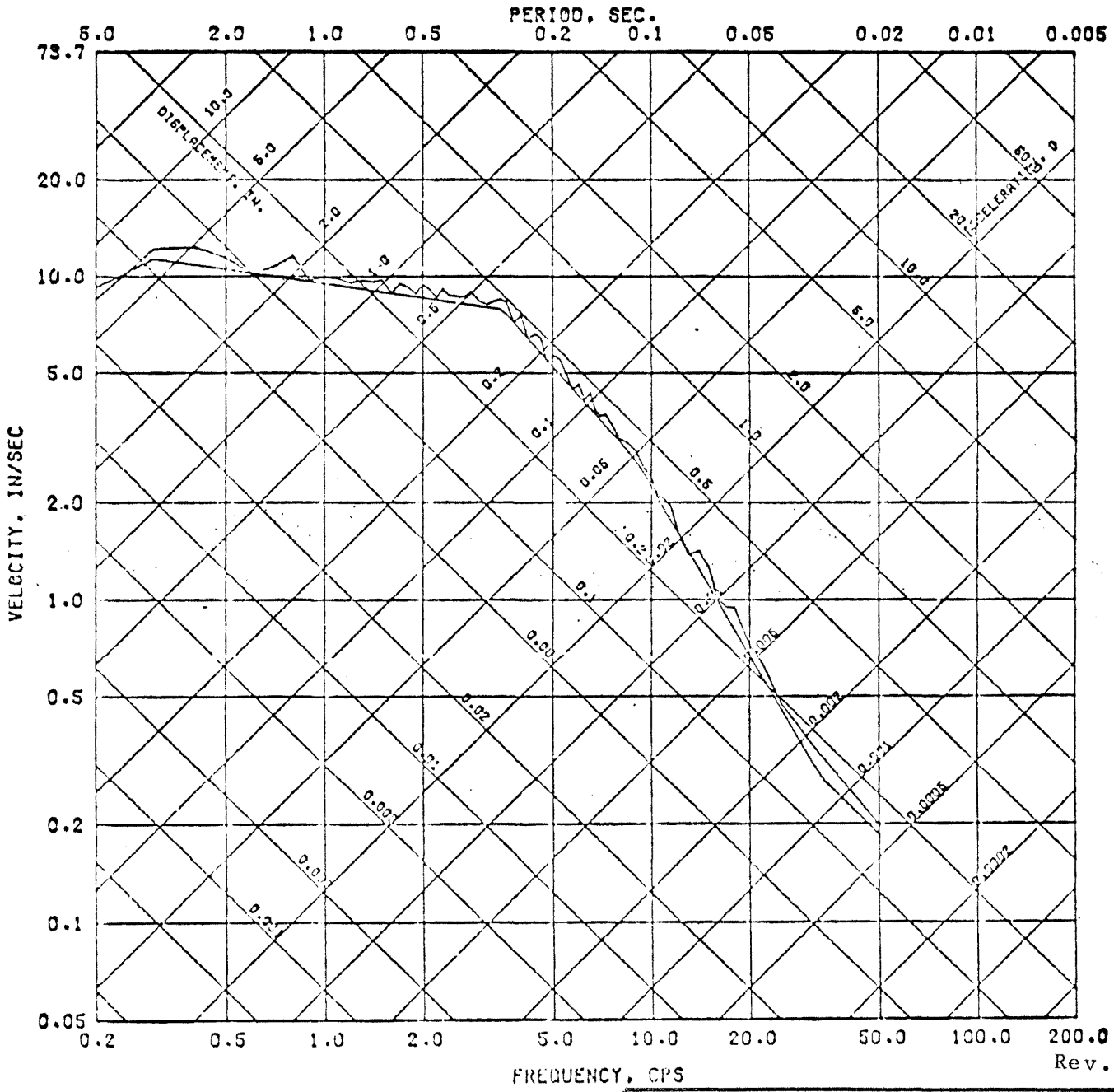

WOLF CREEK
UPDATED SAFETY ANALYSIS REPORT

FIGURE 3C-21

COMPARISON OF ARTIFICIAL ACCELEROGRAM AND DESIGN RESPONSE SPECTRA FOR MAXIMUM VERTICAL GROUND ACCELERATION OF 15% OF GRAVITY AND 5% SPECTRA DAMPING

APPENDIX 3D
FUKUSHIMA EA-12-049

3D.1 Introduction

On March 11, 2011, an earthquake-induced tsunami caused Beyond-Design-Basis (BDB) flooding at the Fukushima Dai-ichi Nuclear Power Station in Japan. The flooding caused by the tsunami rendered the emergency power supplies and electrical distribution systems inoperable resulting in an extended loss of alternating current (AC) power (ELAP) in five of the six units on the site. The ELAP led to the loss of core cooling as well as spent fuel pool cooling capabilities and a significant challenge to containment. All direct current (DC) power was lost early in the event on Units 1 & 2 and after some period of time at the other units. Units 1, 2, and 3 were affected to such an extent that core damage occurred and radioactive material was released to the surrounding environment.

The US Nuclear Regulatory Commission (NRC) assembled a special task force, the Near-Term Task Force (NTTF) in order to advise the Commission on actions the US Nuclear Industry should undertake in order to preclude a release of radioactive material in response to a natural disaster such as that seen at Fukushima Dai-ichi. NTTF members created NRC Report "Recommendations for Enhancing Reactor Safety in the 21st Century: The Near-Term Task Force Review of Insights from the Fukushima Dai-ichi Accident," referred to as the "90-day Report," which contained a large number of recommendations for improving safety at US nuclear power sites.

Subsequently, the NRC issued Order EA-12-049, "Order to Modify Licenses with Regard to Requirements for Mitigation Strategies for Beyond-Design-Basis External Events," (Reference 1), and Order EA-12-051, "Order to Modify Licenses with Regard to Reliable Spent Fuel Pool Instrumentation," (Reference 2).

3D.2 Order EA-12-049

NRC Order EA-12-049 was effective immediately and directed WCNOC to develop, implement, and maintain guidance and strategies to maintain or restore core cooling, containment, and spent fuel pool cooling in the event of a beyond-design-basis external event.

The Nuclear Energy Institute (NEI), working with the nuclear industry, developed guidelines for nuclear stations to implement the strategies specified in NRC Order EA-12-049. These guidelines were published in the NEI 12-06 document entitled "Diverse and Flexible Coping Strategies (FLEX) Implementation Guide" (Reference 3). This guideline was endorsed by the NRC in final interim staff guidance (ISG) document JLD-ISG-2012-01, Compliance with Order EA-12-049, Order Modifying Licenses with Regard to Requirements for Mitigation Strategies for Beyond-Design- Basis External Events, (Reference 4).

The NEI 12-06 FLEX implementation guide adopts a three-phase approach for coping with a BDB event:

- Phase 1 – The initial phase requires the use of installed equipment and resources to maintain or restore core cooling, containment, and SFP cooling capabilities.

- Phase 2 – The transition phase requires providing sufficient portable onsite equipment to maintain or restore these functions until resources can be brought from off site.

- Phase 3 – The final phase requires obtaining sufficient offsite resources to sustain these functions indefinitely.

This three-phase approach was utilized to develop the FLEX strategies for WCGS.

3D.3 Order EA-12-051

NRC Order EA-12-051 was effective immediately and directed WCNOC to provide a reliable means of remotely monitoring "wide-range spent fuel pool levels" to support effective prioritization of event mitigation and recovery actions in the event of a beyond-design-basis external event.

The NEI, working with the nuclear industry, developed guidelines for nuclear stations to implement the requirements specified in NRC Order EA-12-051. These guidelines were published in NEI 12-02 document, Industry Guidance for Compliance with NRC Order EA-12-051, “To Modify Licenses with Regard to Reliable Spent Fuel Pool Instrumentation” (Reference 5). This guideline was endorsed by the NRC in final interim staff guidance (ISG) document JLD-ISG-2012-03 Compliance with Order EA-12-051, Reliable Spent Fuel Pool Instrumentation, (Reference 6).

NEI 12-02 includes implementation guidance related to:

- Levels of required monitoring: Point 1 - Level that is adequate to support operation of the normal fuel pool cooling system, Point 2 - Level that is adequate to provide substantial radiation shielding for a person standing on the spent fuel pool operating deck, and Point 3 - level where fuel remains covered and actions to implement make-up water addition should no longer be deferred.

- Instrumentation design features, including; instruments, arrangement, mounting, qualification, independence, power supplies, accuracy, testing and display.

- Program elements, including; training, procedures, testing and calibration.

The guidance provided in NEI 12-02 was utilized to design and implement beyond design basis external events (BDBEE) Spent Fuel Pool Instrumentation for WCGS.

3D.4 BDB Program

Strategies, details, and programmatic controls for mitigating beyond-design-basis external events are contained in a plant program procedure (Reference 7). Program changes are controlled in accordance with NEI 12-06, Section 11.8, as endorsed by the NRC.

The plant program procedure also describes items such as a list of FLEX equipment, the BDB Storage Building, initial and periodic testing, FLEX equipment maintenance, and actions to be taken in the event of equipment unavailability.

3D.5 References

1. Order EA-12-049, "Order to Modify Licenses with Regard to Requirements for Mitigation Strategies for Beyond-Design-Basis External Events" dated March 12, 2012 (ADAMS ML12054A736).

2. Order EA-12-051, “Order to Modify Licenses with Regard to Reliable Spent Fuel Pool Instrumentation” dated March 12, 2012 (ADAMS ML12056A044).

3. NEI 12-06, “Diverse and Flexible Coping Strategies (FLEX) Implementation Guide,” Revision 0, dated August 2012 (ADAMS ML12242A378).

4. NRC Interim Staff Guidance JLD-ISG-2012-01, Compliance with Order EA-12-049, Order Modifying Licenses with Regard to Requirements for Mitigation Strategies for Beyond-Design-Basis External Events, Revision 0, dated August 29, 2012 (ML12229A174).

5. NEI 12-02, Industry Guidance for Compliance with NRC Order EA-12-051, “To Modify Licenses with Regard to Reliable Spent Fuel Pool Instrumentation.”

6. NRC Interim Staff Guidance JLD-ISG-2012-03, Compliance with Order EA-12-051, Reliable Spent Fuel Pool Instrumentation, Revision 0, dated August 29, 2012 (ADAMS ML12221A339).

7. Procedure AP 06-005, Diverse and Flexible Coping Mitigation Strategies (FLEX) Program.