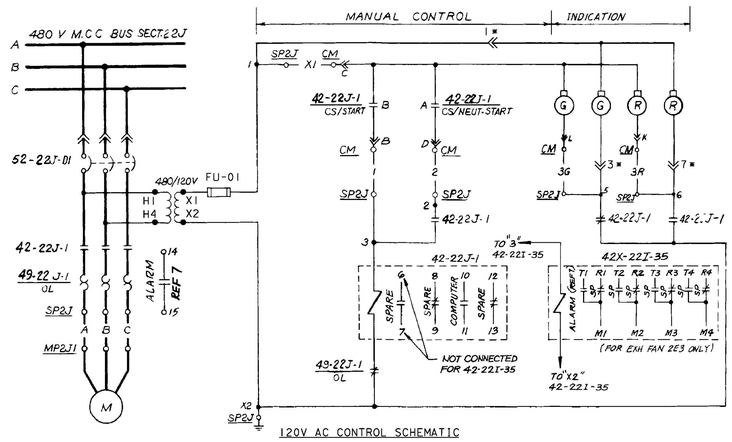

SUPPLY FAN 2S3 CONTAINMENT STRUCT PURGE CIRCUIT NO 2J01P00
CONTAINMENT PURGE EXHAUST FAN E3 SIMILAR EXCEPT AS SHOWN IN TABLE

DESCRIPTION	MOTOR LOC.		CIRCUIT BREAKER	BUS SECT	CIRCUIT NO	ALARM CKT. NO: OVER-CURRENT		COMPUTER CKT. NO: RUNNING	CONT'MT PURGE LOW FLOW ALARM: ALM CKT.	DEVICE	CONTACT	REF
SUPPLY FAN 2S3 CONTAINMENT STRUCT PURGE	MP2J1		52-22J-01	22J	2J01P00	AI2975D	—	CY1044D	—	—	—	-
CONT'MT. PURGE EXHAUST FAN E3	MP2I35		52-22I-35	22I	2I35P00	AI2974D		CY1045D	AF6149D	42X-22I-35	T1-M1	7

*THE QUICK DISCONNECT INDICATION LIGHT WIRING IS FOR 52-22J-01 ONLY.

CONTACTS		POSITIONS: STOP	NEUT.	START	REMARKS
—||—	A		X	X	THIS DWG.
—||—	B			X	THIS DWG.

CONTROL SWITCH 42-22J-1 (CS), 42-22I-35 (CS)
USED AT LOCATION CM
SPRING RETURN TO NEUT. FROM START

SELECT O-PUSH OPERATOR

CONTACTS		POSITIONS: VACUUM RELIEF REL	VACUUM RELIEF DER	OFF REL.	OFF DEP.	PRESSURE RELIEF REL.	PRESSURE RELIEF DEP.	REMARKS
—||—	A	X	X					THIS DWG.
—||—	B					X	X	THIS DWG.
—||—	C						X	THIS DWG
—||—	D		X					THIS DWG.

CONTROL SWITCH FCV663, 664 (CS)
USED AT LOC. CM

SPRING RETURN TO NEUTRAL FROM OPEN

CONTACTS		POSITIONS: CLOSE	NEUT.	OPEN	FCV 655, 657	FCV 662	FCV 654, 656
—||—	A		X	X	SPARE	SPARE	THIS DWG.
—||—	B			X	SPARE	SPARE	THIS DWG.
—||—	C		X	X	SPARE	SPARE	SPARE
—||—	D			X	SPARE	SPARE	THIS DWG.
—||—	E		X	X	THIS DWG	THIS DWG	SPARE
—||—	F			X	THIS DWG	THIS DWG	SPARE
—||—	G		X	X	SPARE	SPARE	SPARE
—||—	H			X	THIS DWG	SPARE	SPARE

USED AT LOC. CM
CONTROL SWITCH FCV655, 657 (CS), FCV662 (CS), FCV654, 656 (CS)

TABLE OF DEVICES

DEVICE NO	FUNCTION	RATING	MFR	TYPE	CAT./REF NO	REMARKS
42X-22I-35	CONTMT. PURGE EXHAUST FAN TIME DELAY RELAY	120 VAC	AGASTAT		TR-1413D	SET AT 60 SEC.
42-22J-1, 22I-35	480 V AC MOTOR STARTER	—	—	—	(3)	
49-22J-1, 22I-35	MOTOR OVERLOAD RELAY	—	—	—	—	PART OF MOTOR STARTER
52-22J-01, 22I-35, 52-22I-02, 08	480 V AC AIR CIRCUIT BREAKER	—	—	—	(3)	
52-22I-08R	480 V AC AIR CIRCUIT BKR. - BACK-UP	—	N/E	—	(3)	
FCV---	FLOW CONTROL VALVE	—	—	—	(5) (6)	
K613	CONTMT ISOLATION PH A AUX. REL.	—	—	—	(9) (10)(16)	
K622	CONTMT. VENT. ISOL AUX REL.	—	—	—	(9) (10)(15)	
POS----	VALVE POSITION SWITCH	—	—	—		SEE TABLE FOR NOS
RCV--	RADIATION CONTROL VALVE	—	—	—		
SV287, 288, 289, 290, 293, 294, 295, 296, 297, 311, 312, 314, 469, 470, 293A, 294A, 469A, 470A	SOLENOID VALVE	—	—	—		

SPRING RETURN TO NEUT FROM OPEN

CONTACTS		POSITIONS: CLOSE	NEUT	OPEN	FCV678 FCV660, 661 RCV11, 12	FCV679, 681
—||—	A		X	X	THIS DWG	THIS DWG
—||—	B			X	THIS DWG	THIS DWG
—||—	C		X	X	SPARE	SPARE
—||—	D			X	SPARE	THIS DWG

CONTROL SWITCH FCV660 (CS), FCV661 (CS), RCV11 (CS), RCV12 (CS), FCV679, 681 (CS), FCV678 (CS)
USED AT LOC. CM

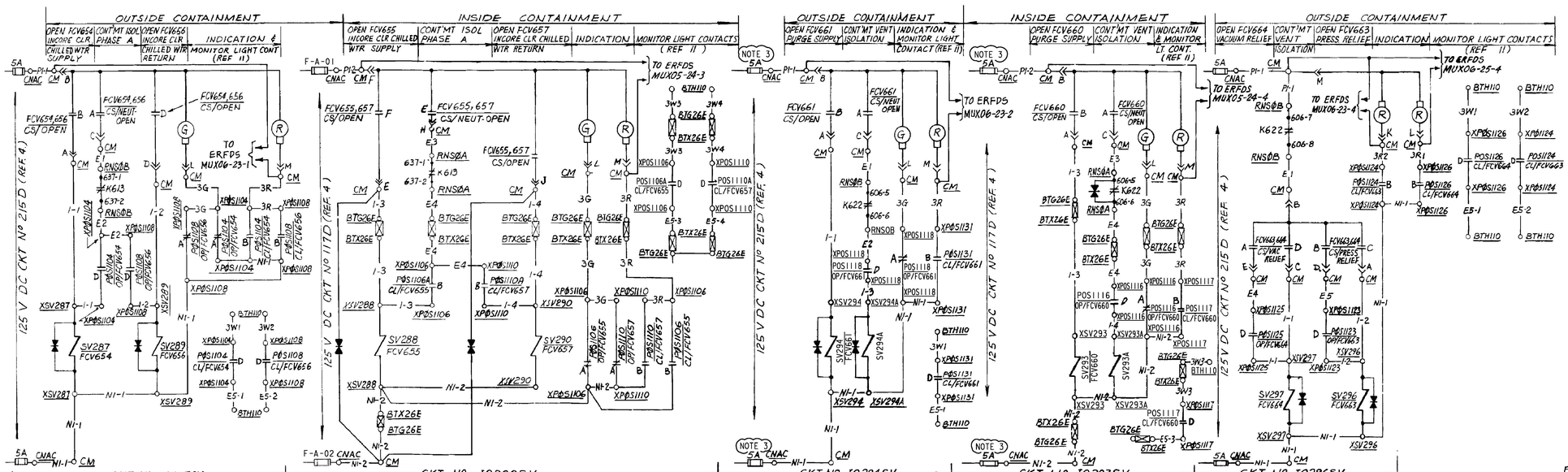

INCORE COOLER CHILLED WATER SUPPLY & RETURN VALVES FCV654, FCV656, FCV655 & FCV657 (SEE NOTE 2)
FOR CONTAINMENT AIR SAMPLE VALVES FCV679 & FCV681 ARE SIMILAR SEE TABLE

CONTAINMENT PURGE SUPPLY VALVES FCV661 & FCV660
FOR PURGE EXHAUST VALVES RCV12, RCV11 AND AIR SAMPLE VALVE FCV678 AND VACUUM PRESSURE RELIEF VALVE FCV 662 ARE SIMILAR SEE TABLE

VACUUM & PRESSURE RELIEF VALVES FCV663 & FCV664

DETAIL "A"
(FOR FCV678 & FCV662)

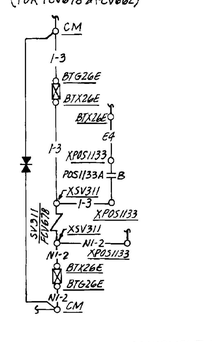

EQUIPMENT LOCATION NUMBERS

SP2J	480 V M.C.C BUS SECT. 22J
MP2J1	CONTAINMENT PURGE SUPPLY FAN 2S3
CM	CONTROL BOARD 2VB4 AUX. EQ & DSL
RNS0B	RACK NUCLEAR SAFEGUARD OUTPUT TRAIN B
BTH110	TERMINAL BOX AREA H Nº 110
PM123	MECHANICAL PANEL Nº 123 BLOWDOWN TANK
BTG26E	TERMINAL BOX Nº G26E
XSV294	INSTRUMENT No. SV294 LOCAL MOUNTED
XPOS1118	INSTRUMENT No. POS 1118 LOCAL MOUNTED
CNAC	CONTROL BD. 2VB1 SAFEGUARDS

REFERENCES

1. DESCRIPTION OF ELECT. SCHEMATIC DIAG'S, SYMBOLS & CKT. DESIGNATIONS 050003
2. EQUIPMENT LOCATION NUMBER LIST 103013
3. SINGLE LINE METER & RELAY DIAG., 480V BUS SECT. 22D, E, I & J 441232
4. SINGLE LINE METER & RELAY DIAG., 125/250V DC SYSTEM 441240
5. PIPING SCHEMATIC VENTILATION & AIR CONDITIONING SYSTEMS 108023
6. INSTRUMENT SCHEMATIC FLOW INSTRUMENT SYSTEMS 108032
7. SCHEMATIC DIAG. MAIN ANNUNCIATOR SH. 1, 15 ..... 500771, 85
8. VENTILATION CONTROLS AREA "F" & "G" 501395
9. (M) FUNCTION DIAGRAMS 663195
10. (M) SOLID STATE PROTECTION SYSTEM 663231
11. SCHEMATIC DIAGRAM MONITOR LIGHT BOX B 441455
12. SCHEMATIC DIAG. AUX. & FUEL HANDLING BLDG. VENT. SYS. (POV1) 454673
13. " " " " " " " " " (POV2) 454680
14. BLOCK DIAG.-ERFDS TECH. SUPPORT CTR. & CONT. RM. 445297
15. SCHEM. DIAG SSPS OUTPUT RELAYS, TRAIN A, TRAIN B 503089, 503093

NOTE:

1. THE SEAL-IN FOR VALVES FCV655, FCV657 AND FCV678 IS NOW A POSITION SWITCH CONTACT WHICH IS CLOSED WHEN THE VALVE IS IN THE OPEN OR INTERMEDIATE POSITION. PREVIOUSLY THE SEAL-IN WAS ONLY CLOSED WHEN THE VALVE WAS IN THE OPEN POSITION.
2. INCORE INSTRUMENT ROOM WATER CHILLER 2CH-4 AND SUPPLY FAN 2S-16 ARE DISABLED AND ABANDONED IN PLACE. ASSOCIATED COMPONENTS AND POWER/CONTROL FIELD CABLES AFFECTED BY THE SAID TWO EQUIPMENT ARE DISCONNECTED ON BOTH END AND SPARED. ALL OTHER COMPONENTS (FCVS), PIPING AND CABLES ASSOCIATED WITH THE INCORE INSTRUMENT ROOM CHILLER REMAIN FUNCTIONAL.
3. FUSES REMOVED DURING MODES 1, 2, 3 AND 4 (PER TS 3.6.3) TO DE-ENERGIZE FCV-660, FCV-661, RCV-11 AND RCV-12 VALVE OPERATORS.

CONTACTS		POSITIONS: CLOSE & INTERM.	OPEN	REMARKS 1116, 1118, 1188, 1191	REMARKS 1121, 1123, 1125
—||—	A	X		GREEN LT.	SPARE
—||—	B		X	SPARE	SPARE
—||—	C	X		SPARE	SPARE
—||—	D		X	SEAL IN	SEAL IN

VALVE OPEN POSITION SWITCH
POS1116, POS1118, POS1188, POS1191, POS1121, POS1123, POS1125

CONTACTS		POSITIONS: CLOSE	OPEN & INTERM.	REMARKS POS1104, 1108, 1159, 1176	REMARKS POS1106, 1110, 1133
—||—	A	X		SPARE	SPARE
—||—	B		X	RED LT.	RED LT.
—||—	C	X		SPARE	SPARE
—||—	D		X	MONITOR LT	SPARE

VALVE CLOSE POSITION SWITCH POS1104, POS1106
POS1108, POS1110, POS1133, POS1159, POS1176

CONTACTS		POSITIONS: CLOSE	OPEN & INTERM.	REMARKS	REMARKS POS1104, 1106, 1108, 1110, 1133, 1159, 1176
—||—	A	X		SPARE	SPARE
—||—	B		X	RED LT.	SEAL-IN
—||—	C	X		SPARE	SPARE
—||—	D		X	MONITOR LT.	NON LT.

VALVE CLOSE POSITION SWITCH POS1117, POS1131, POS1106A, POS1189, POS1192, POS1132, POS1124, POS1126, POS1106, POS1133A

CONTACTS		POSITIONS: CLOSE	OPEN & INTERM.	REMARKS	REMARKS POS1104, 1106, 1108, 1110, 1159, 1176
—||—	A	X		SPARE	SPARE
—||—	B		X	SPARE	SPARE
—||—	C	X		SPARE	SPARE
—||—	D		X	SPARE	SPARE

VALVE OPEN POSITION SWITCH POS1104, POS1106, POS1128, POS1108, POS1110, POS1133, POS1159, POS1176

CONTACTS		POSITION: CLOSE	OPEN & INTERM	REMARKS POS1130 REF 13
—||—	A	X		SPARE
—||—	B		X	SPARE
—||—	C	X		VENT INPUT
—||—	D		X	VENT INPUT
—||—	E	X		SPARE
—||—	F		X	SPARE

VALVE CLOSE POSITION SWITCH POS1130

ERFDS	DESCRIPTION		OUTSIDE CONTAINMENT (G): VALVE Nº	SOLENOID VLV Nº	SOLENOID VLV LOC	DC CKT Nº	VLV POS SW OPEN	VLV POS SW CLOSE	CIRCUIT Nº	CONT'MT VENT ISOL DEVICE	LOC	CONTACT	CONT'MT ISOL PH A DEVICE	LOC	CONTACT
MUX06-23-1	INCORE COOLER CHILLED WATER (SEE NOTE 2)	SUPPLY	FCV654	287	XSV287	215D	1104		I0287SV	—	—	—	K613	RNS0B	637-1 637-2
		RETURN	FCV656	289	XSV289		1108								
MUX06-23-2	CONT'MT PURGE	SUPPLY	FCV661	294 294A	XSV294 XSV294A	215D	1118	1131	I0294SV	K622	RNS0B	606-5 606-6	—	—	—
MUX06-23-3	CONT'MT PURGE	EXHAUST	RCV12	470 470A	XSV470 XSV470A	215D	1191	1192	I0470SV	K622	RNS0B	606-11 606-12	—	—	—
MUX06-24-1	CONTMT AIR SAMPLE	SUPPLY	FCV679	312 ⊕	PM123	215D	1176		I0312SV	K622	RNS0B	606-9 606-10	—	—	—
		RETURN	FCV681	314 ⊕	PM184		1159								
———	VACUUM PRESSURE RELIEF		FCV663	296	XSV296	215D	1123	1124	I0296SV	K622	RNS0B	606-7 606-8	—	—	—
			FCV664	297	XSV297		1125	1126							

ERFDS	INSIDE CONTAINMENT (F): VALVE Nº	SOLENOID VLV Nº	SOLENOID VLV LOC	DC CKT Nº	VLV POS SW OPEN	VLV POS SW CLOSE	CIRCUIT Nº	CONT'MT VENT ISOL DEVICE	LOC	CONTACT	CONT'MT ISOL PH A DEVICE	LOC	CONTACT	ERFDS
MUX05-24-3	FCV655	288	XSV288	117D	1106 1106A		I0288SV	—	—	—	K613	RNS0B	637-1 637-2	MUX05-24-3
	FCV657	290	XSV290		1110 1110A									
MUX05-24-4	FCV660	293 293A	XSV293 XSV293A	117D	1116	1117	I0293SV	K622	RNS0A	606-5 606-6	—	—	—	MUX05-24-4
MUX05-25-1	RCV11	469 469A	XSV469 XSV469A	117D	1188	1189	I0469SV	K622	RNS0A	606-11 606-12	—	—	—	MUX05-25-1
MUX05-25-3	FCV678	311	XSV311	117D	1133 1133A		I0311SV	K622	RNS0A	606-9 606-10	—	—	—	MUX05-25-3
MUX05-25-2	FCV662	295	XSV295	117D	1121	1132	I0295SV	K622	RNS0A	606-7 606-8	—	—	—	MUX05-25-2

⊕ CONTACT PROTECTOR DIODES NOT USED

* SEE NOTE 1
SEE NOTE 3
SEE DETAIL "A"

NUCLEAR SAFETY RELATED

P.G.&E. SYSTEM PHASE SEQUENCE A-C-B

KEY DWG. SECTION 9

UNIT 2

DATE	
04-16-2018	
D.D.	FAZI
R.E.	FXC2
I.V.	N/A
P.E.	N/A

REGISTERED PROFESSIONAL ENGINEER — NOT REGISTERED PER D.S.T.D.S. — STATE OF CALIFORNIA

REVISION DESCRIPTION: Revised Per DDN-2*1722

ELECTRICAL
SCHEMATIC DIAGRAM
CONTAINMENT PURGE SYSTEM

DIABLO CANYON POWER PLANT
PACIFIC GAS AND ELECTRIC COMPANY
SAN FRANCISCO, CALIFORNIA

DWG SCALE:
BILL OF MATL:
SUPSDS:
SUPSD BY:

DRAWING	SHEET	PAGE	REV
441490	1	0	19

UI-437631

RASTER=441490-1-0.dgn
DGN=441490-1-0.dgn
CAD User:FAZI Date: 04-16-2018