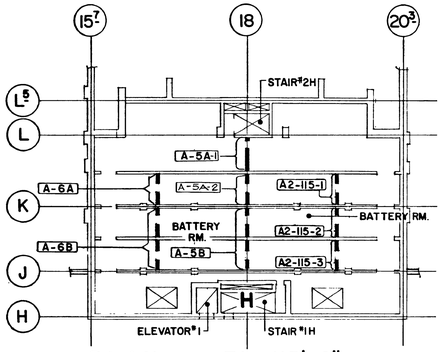

PLAN EL 115'-0"
ARCH. DWG 59563

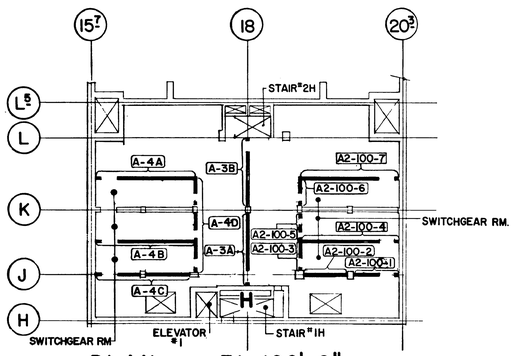

PLAN EL. 100'-0"
ARCH DWG 59550

PLAN EL. 85'-0"
ARCH. DWG. 59631

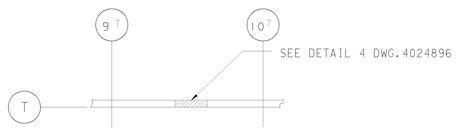

PLAN EL. 122'-6"
ARCH DWG 59560

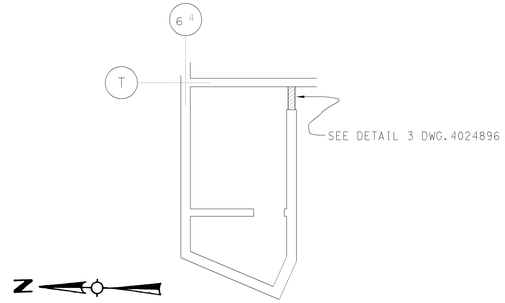

PLAN EL. 85'-0"
ARCH DWG 59553

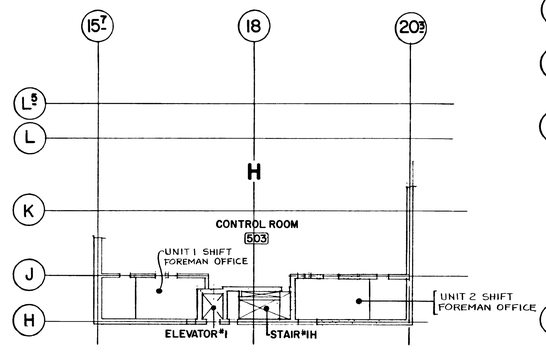

PLAN EL. 140'-0"
ARCH. DWG 59596

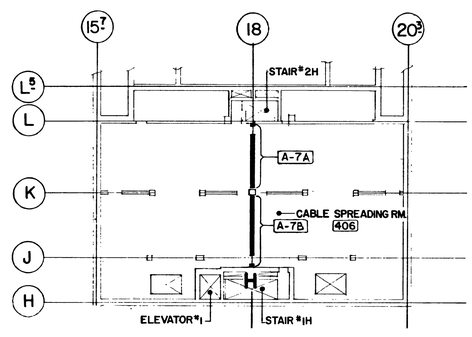

PLAN EL. 128'-0
ARCH. DWG 59567

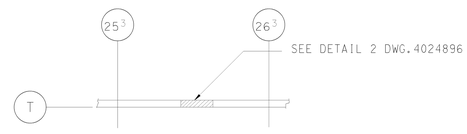

PLAN EL. 122'-6"
ARCH DWG 501251

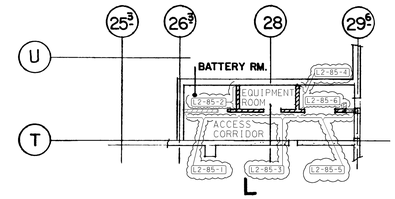

PLAN EL. 85'-0"
ARCH DWG 503045

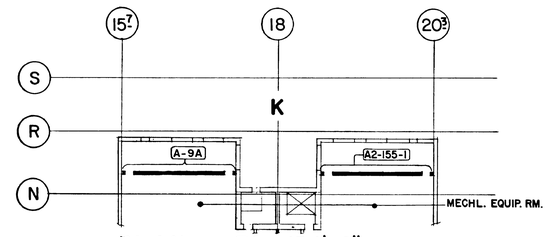

PLAN EL. 154'-6"
ARCH DWG 59581 & 59591

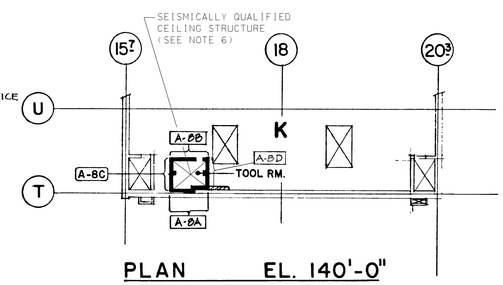

PLAN EL. 140'-0"
ARCH DWG. 59579

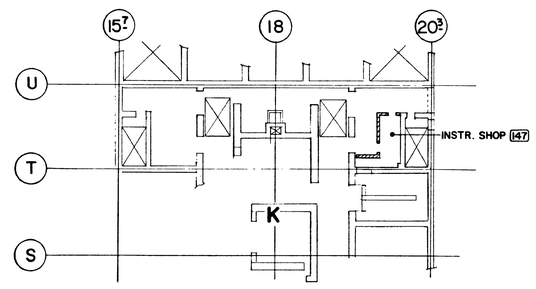

PLAN EL. 85'-0"
ARCH. DWG 59587

NOTES:

1. CONCRETE MASONRY WALL DIMENSIONS AND DETAIL REFERENCES AND AS-BUILT CONCRETE MASONRY WALL MODIFICATION REFERENCES ARE SHOWN ON ARCHITECTURAL DRAWINGS 59550, 59563, 59567, 59579, 59581, 59587, 59591, 59596, 59631, AND 503045.
2. FOR CONCRETE MASONRY WALL MODIFICATIONS, SEE DRAWINGS 4010616, 4010617, 4010618 AND 4010619, U.N.O.
3. FOR DESIGN BASIS OF SAFETY RELATED MASONRY WALLS, REFER TO DCM T-31.
4. ANY MODIFICATION OF SAFETY RELATED MASONRY WALLS, INCLUDING STEEL SUPPORTING MEMBERS, MUST BE APPROVED BY CIVIL ENGINEERING PRIOR TO INSTALLATION.
5. SAFETY RELATED EQUIPMENT AND SYSTEMS SHALL NOT BE LOCATED IN THE VICINITY (WITHIN A DISTANCE EQUAL TO THE WALL HEIGHT) OF EXISTING NON-SAFETY RELATED MASONRY WALLS UNLESS APPROVED BY CIVIL ENGINEERING.
6. SEISMICALLY QUALIFIED CEILING STRUCTURE, INCLUDING CONCRETE SLAB, METAL DECK AND SUPPORTING FRAMING IS RELIED UPON TO LATERALLY SUPPORT SAFETY RELATED MASONRY WALLS AND IS SEISMICALLY QUALIFIED TO THE REQUIREMENTS OF DCM T-31. QUALITY REQUIREMENTS FOR MODIFICATION OF THIS STRUCTURE SHALL BE THE SAME AS FOR DESIGN CLASS I STRUCTURES.

LEGEND:

- NON-SAFETY RELATED MASONRY WALLS
- SAFETY RELATED MASONRY WALLS (A 7A)

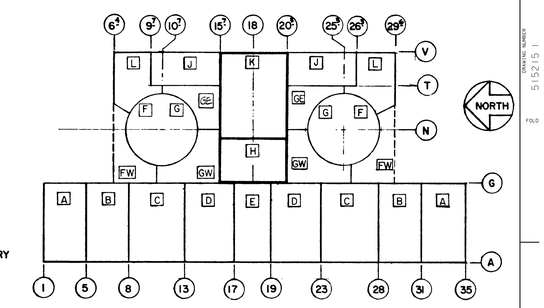

KEY PLAN
NO SCALE

UNIT 1 & 2

DATE	
09-16-2014	
D.D.	CRGM
R.E.	FxC2
I.V.	RXG2
P.E.	N/A

REVISION DESCRIPTION: REVISED PER DDN-2*936

ARCHITECTURAL
SAFETY RELATED MASONRY WALLS
AUXILIARY BUILDING
ELEV 85'-0", 100'-0", 115'-0", 140'-0", 154'-0"
DIABLO CANYON POWER PLANT
PACIFIC GAS AND ELECTRIC COMPANY
SAN FRANCISCO, CALIFORNIA

DWG SCALE:
BILL OF MATL:
SUPSDS:
SUPSD BY:

DRAWING	SHEET	PAGE	REV
515215	1	0	8

RASTER=515215.dgn
DGN=515215.dgn
CAD User:CRGM Date: 09-16-2014