10855 M-96-0

SYSTEM GA

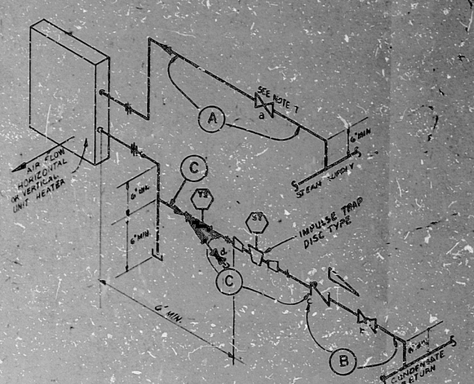

DETAIL NO.1
TYPICAL STEAM UNIT HEATER PIPING
(SEE TABLE "A" ON SHT.2)

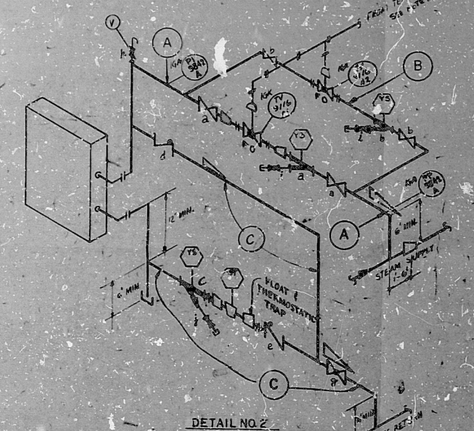

DETAIL NO.2
TYPICAL STEAM HEATING COIL PIPING
(SEE TABLE "B" ON SHT.2 INSTRUMENTATION AS SHOWN)

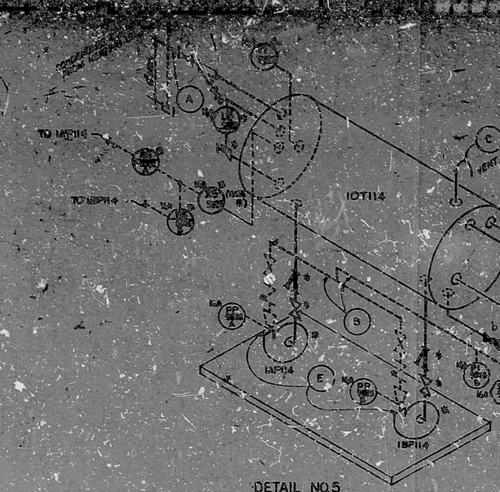

DETAIL NO.5
TYPICAL CONDENSATE RETURN UNITS (REF. H-96-0)
(SEE TABLE "C" ON SHT. 2, 1OT114 SHOWN)

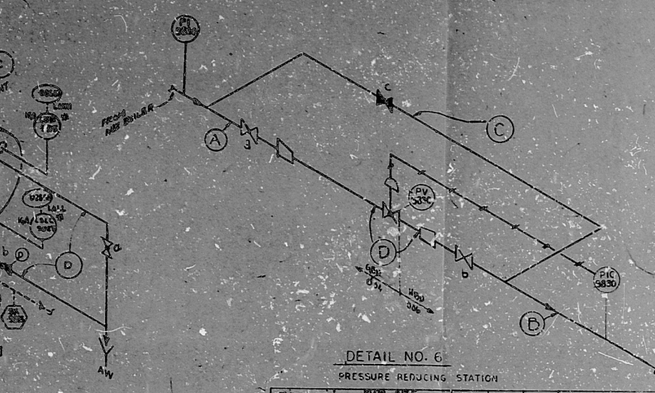

DETAIL NO. 6
PRESSURE REDUCING STATION

STATION NO.	PIPE SIZE A	B	C	D	PV	PIC DP	PI PP	MANUAL VALVES a	b	c
1	12"	12"	8"	10"	9835	9830	9830	V198	V199	V200

NOTES:

1. REDUCERS IN HORIZONTAL STEAM LINES SHALL BE ECCENTRIC TYPE-FLAT ON BOTTOM.
2. SEE SHEET TABLE B FOR THE LOCATION OF THE TEMPERATURE CONTROLLER.
3. USE GATE VALVE FOR ALL STEAM SHUTOFF AND CONDENSATE LINES 3" OR LARGER. USE GLOBE VALVE FOR CONDENSATE LINES 2" OR SMALLER.
4. CAPS ON SCALE POCKETS SHALL BE SCREWED FITTINGS. (THIS IS AN EXCEPTION TO THE PIPE CLASS HBD SPECIFICATION.)
5. THE PUMPS ALTERNATOR SWITCH (XS-9825) INCLUDES HIGH, LOW AND HIGH-HIGH FLOAT LEVEL SWITCH CONTACTS (SEE REFERENCES # 14, 15 AND 16 ON SH. 1)
6. AUTOMATIC AIR VENTS SHALL BE ARMSTRONG TYPE 33AV AIR VENT OR EQUIVALENT FIELD PURCHASED
7. VALVE NOS. (V-1106), (V-1204), (V-1207) HAVE BEEN REVISED FROM EBO-GT (GATE) TO EBO-GB (GLOBE)

TABLE "H" DRIP LEGS AT STEAM HEADER LOW POINTS
(SEE DETAIL NO. 8 ON THIS SHEET)

LOCATION (SEE ISO.)	MANUAL VALVE a	b	c	d	IMPULSE ST	YS-	LOCATION (SEE ISO.)	MANUAL VALVE a	b	c	d	IMPULSE ST	YS-
O-P-GA-01 (1,2)	V298	V299	V330	V301	ST-198	YS-296							
(C,B)	V302	V305	V309	V308	ST-199	YS-297	I-P-GA-04 (G,5)	V374	V375	V376	V377	ST-219	YS-317
(B,5)	V306	–	–	V307	ST-200	YS-298	(C,8)	V378	V379	V380	V381	ST-220	YS-318
(A,4)	V308	–	–	V309	ST-201	YS-299	(B,7)	V382	V383	V384	V385	ST-221	YS-319
(F,2)	V310	–	–	V311	ST-202	YS-300	(B,6)	V386	V387	V388	V389	ST-222	YS-320
(A,3)	V312	–	–	V313	ST-203	YS-301	(B,5)	V390	V391	V392	V393	ST-223	YS-321
O-P-GA-03 (C,5)	V314	V315	V316	V317	ST-204	YS-302	(A,5)	V394	V395	V396	V397	ST-224	YS-322
(B,4)	V319	V319	V320	V321	ST-205	YS-303	(B,4)	V398	V399	V400	V401	ST-225	YS-323
							I-P-GA-06 (C,7)	V402	V403	V404	V405	ST-226	YS-324
							O-P-GA-03 (H,5)	V430	V431	V432	V433	ST-328	YS-461
							I-P-GA-352	V434	V436	V437	V439	ST-334	YS-470
O-P-GA-05 (B,7)	V330	V331	V332	V333	ST-208	YS-306	O-P-GA-00 (D,5)	V640	V641	V642	V643	ST-558	YS-475
(B,5)	V334	V335	V336	V337	ST-209	YS-307							
(F,7)	V338	V339	V340	V341	ST-210	YS-308							
O-P-GA-07 (C,6)	V342	V343	V344	V345	ST-211	YS-309							
O-P-GA-08 (E,5)	V346	V347	V348	V349	ST-212	YS-310							
(A,4)	V350	V351	V352	V353	ST-213	YS-311							
(F,7)	V355	V355	V356	V357	ST-214	YS-312							
O-P-GA-10 (C,5)	V358	V359	V360	V361	ST-215	YS-313							
O-P-GA-11 (B,5)	V362	V363	V364	V365	ST-216	YS-314							
I-P-GA-02 (E,5)	V366	V367	V368	V369	ST-217	YS-315							
(D,5)	V370	V371	V372	V373	ST-218	YS-316	I-P-GA-06 (E,1)	V365	V377	V378	V379	ST-254	YS-371
I-P-GA-04 (E,4)	V496	V497	V498	V499	ST-246	YS-347	I-P-GA-06 (A,5)	V582	V580	V581	V582	ST-260	YS-372
O-P-GA-01 (B,6)	V573	–	–	V574	ST-250	YS-366	I-P-GA-06 (C,4)	V584	V583	V584	V585	ST-261	YS-373
							O-P-GA-11 (D,4)	V586	V588	V589	V587	ST-288	YS-463
I-P-GA-04 (B,4)	V541	V542	V543	V544	ST-251	YS-367	O-P-GA-10 (D,5)	V590	V591	V592	V593	ST-262	YS-387
I-P-GA-06 (F,6)	V575	V576	V577	V578	ST-253	YS-370							

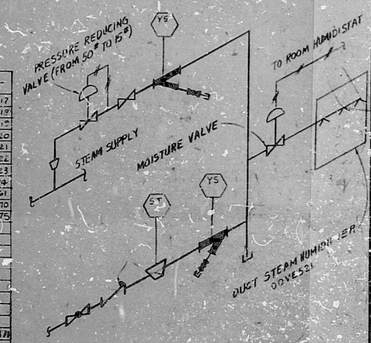

DETAIL NO. 9
STEAM HUMIDIFIER
(SEE NOTE 7, SH.1)

TABLE "G" END OF MAIN DRIPS
(SEE DETAIL NO. 7 ON THIS SHEET)

LOCATION (SEE ISO.)	MANUAL VALVE a	b	c	d	IMPULSE ST	YS-
I-P-GA-02 (A,5)	V274	V275	V276	V277	ST-194	YS-296
I-P-GA-04 (E,5)	V534	V535	V536	V537	ST-198	YS-301
I-P-GA-06 (B,2)	V554	V555	V556	V557	ST-199	YS-302

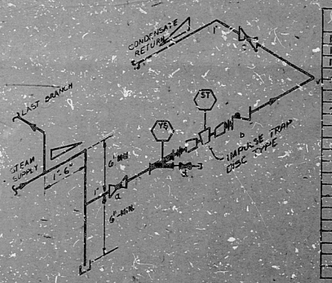

DETAIL NO.7
TYPICAL END OF MAIN DRIP
(SEE VALVE "G" ON THIS SHEET)

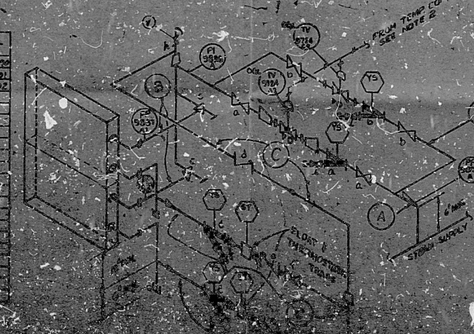

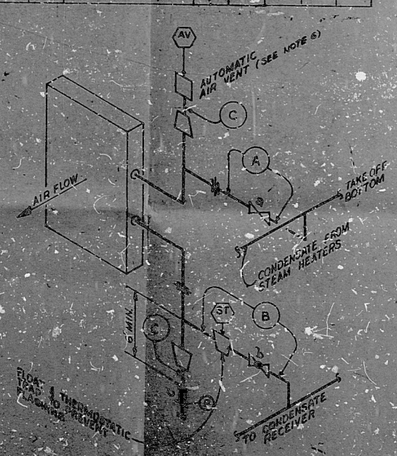

DETAIL NO. 8
TYPICAL UNIT HEATER PIPING
(SEE TABLE "A" ON SHT. 2)

REV.	DATE	DESCRIPTION	DRN.	CHK.	APPR.
7	7/8/80	INCORPORATED ECR 4-745 (ICR M-022-8 REVISED PER INE LIST)			
6	7/8/80	INCORPORATED DCN #1; ADDED I-P-GA-352 TO TABLE "H"			
5	9/24/79	ADDED DETAIL NO. 9			
4	7/16/79	ISSUED FOR DESIGN REVIEW AND INT. & DELETION			
3	7/16/79	REVISED PER REVISION LIST			
2	1/12/79	ISSUED FOR CONTRACT IDENTIFICATION			
1	1/5/79	ISSUED FOR REVIEW REVISED SEE LIST OF REVISIONS			
0	1/16/78	REVISED PER LIST OF REVISIONS			
A	5/4/77	ISSUED FOR CONSTRUCTION			

SCALE: NONE DWG. LAY

BECHTEL
SAN FRANCISCO

PUBLIC SERVICE ELECTRIC AND GAS COMPANY
HOPE CREEK GENERATION STATION

P&IS
PLANT HEATING
SCHEMATIC DETAILS

DWG. NO. M-96-0 SHT. 8 REV. 7

8409060144

PDR RIDS

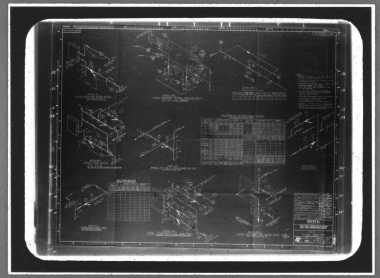

MMM 5824 FILMSORT® Brand Aperture & Camera Cards and DUPLICARD® Brand Copy Cards — Product of 3M Company, St. Paul, Minn.