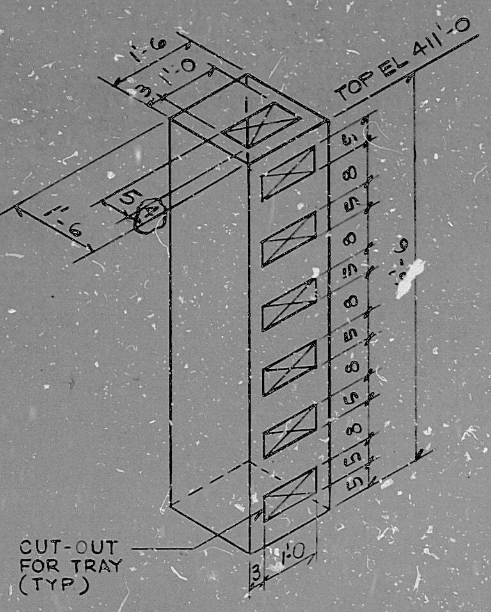

B300-NB
SCALE: 1/2"=1'-0

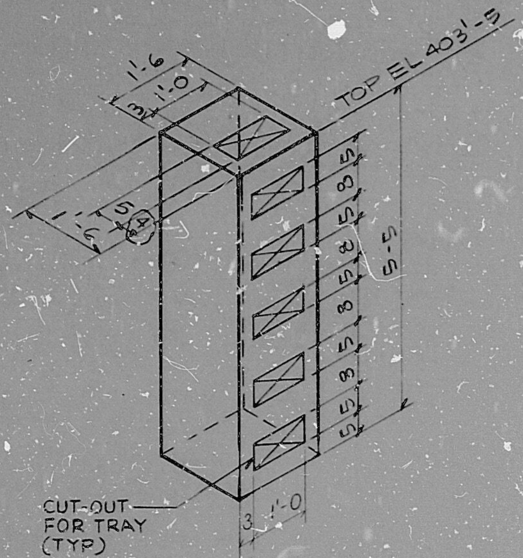

B301-NA
SCALE: 1/2"=1'-0

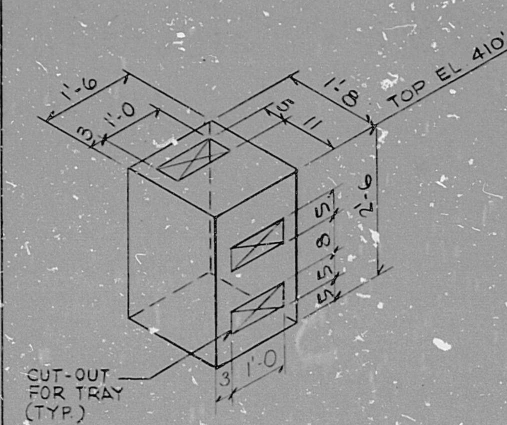

B302-SB, B303-SB
SCALE: 1/2"=1'-0

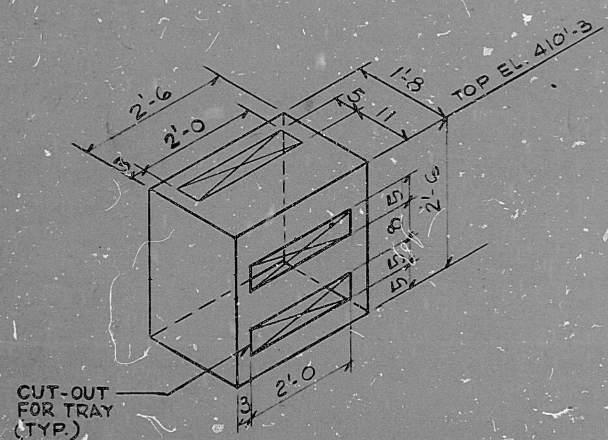

B304-SB
SCALE: 1/2"=1'-0

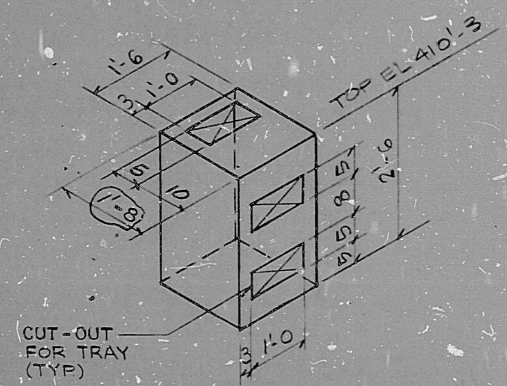

B305-SB
SCALE: 1/2"=1'-0

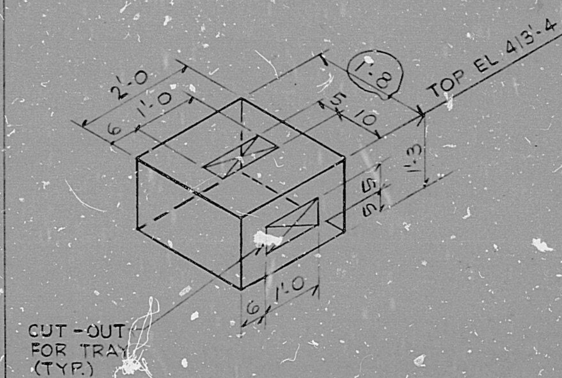

B306-SD
SCALE: 1/2"=1'-0

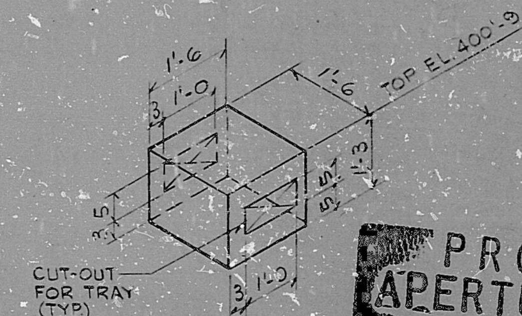

PRC APERTURE CARD

B307-NA
SCALE: 1/2"=1'-0

NOTE:
FOR BOX BRACINGS SEE BOX TYPE V DETAIL SH 3

NUCLEAR SAFETY RELATED | WPPSS QUALITY CLASS I, II & G

REV.	DATE	BY	APPROVED	
5				
4				
3				
2				
1	3-6-81	SP	KE	

EBASCO SERVICES INCORPORATED
DIV. ELEC. DR. LFM
CH. K. ENG
DATE DEC 1, 1980
APPROVED

WASHINGTON PUBLIC POWER SUPPLY SYSTEM
NUCLEAR PROJECTS NO. 3 & 5
BOX DETAILS
TRAY BOX DETAILS

WPPS-3240
D-5033
SHEET 3D

RIDS

8303290693

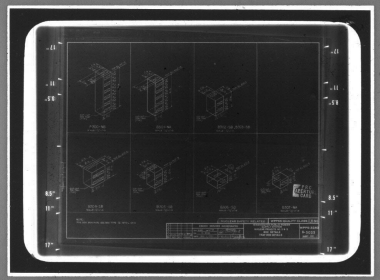

MMM 5824 — FILMSORT® Brand Aperture & Camera Cards and DUPLICARD® Brand Copy Cards — Product of 3M Company, St. Paul, Minn.