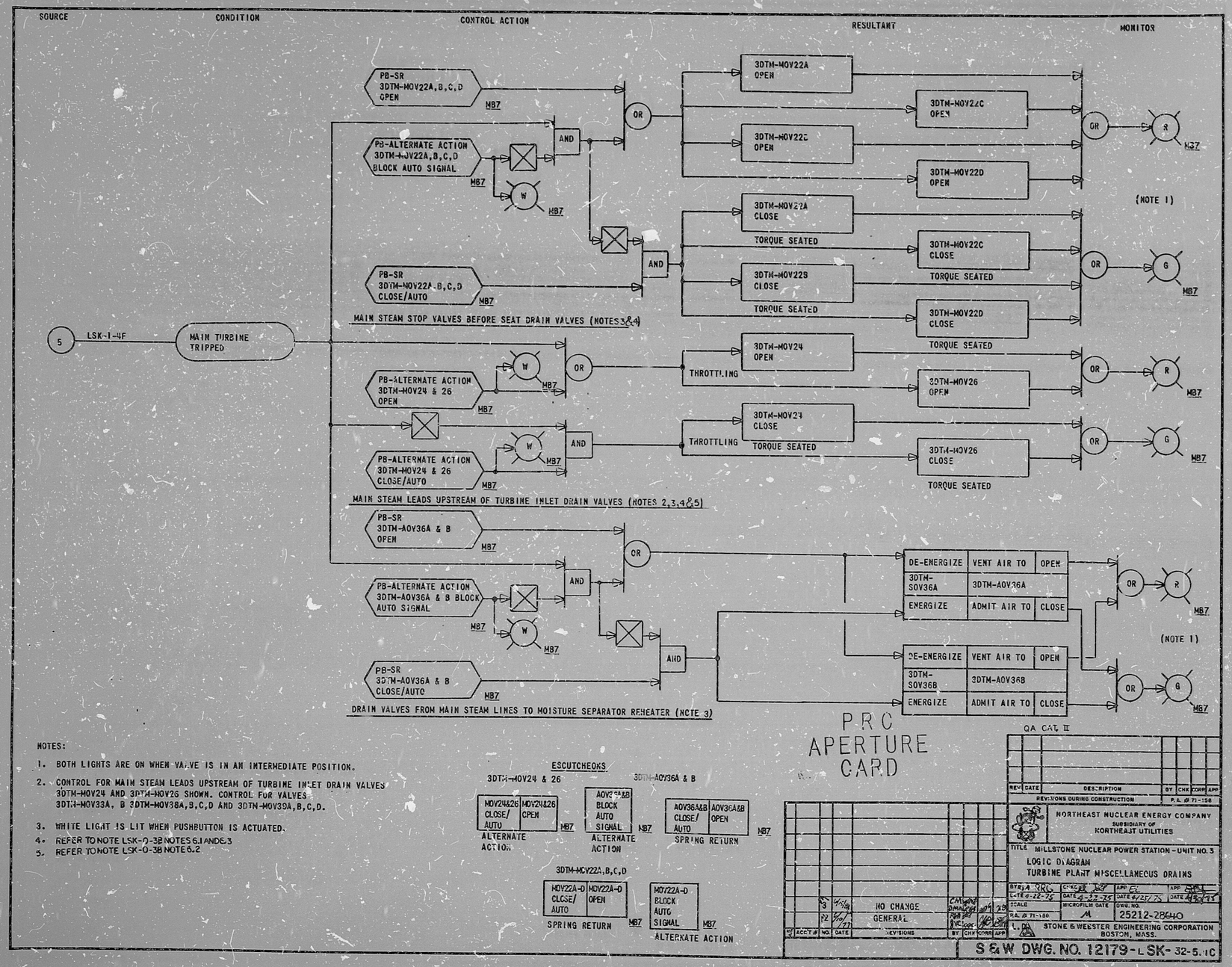

NOTES:

1. BOTH LIGHTS ARE ON WHEN VALVE IS IN AN INTERMEDIATE POSITION.
2. CONTROL FOR MAIN STEAM LEADS UPSTREAM OF TURBINE INLET DRAIN VALVES 3DTM-MOV24 AND 3DTM-MOV26 SHOWN. CONTROL FOR VALVES 3DTM-MOV33A, B 3DTM-MOV38A,B,C,D AND 3DTM-MOV39A,B,C,D.
3. WHITE LIGHT IS LIT WHEN PUSHBUTTON IS ACTUATED.
4. REFER TO NOTE LSK-0-32 NOTES 6.1 AND 6.3
5. REFER TO NOTE LSK-0-38 NOTE 6.2

ESCUTCHEONS

3DTM-MOV24 & 26

MOV24&26 CLOSE/ AUTO	MOV24&26 OPEN

ALTERNATE ACTION

3DTM-AOV36A & B

AOV36A&B BLOCK AUTO SIGNAL

ALTERNATE ACTION

AOV36A&B CLOSE/ AUTO	AOV36A&B OPEN

SPRING RETURN

3DTM-MOV22A,B,C,D

MOV22A-D CLOSE/ AUTO	MOV22A-D OPEN

SPRING RETURN

MOV22A-D BLOCK AUTO SIGNAL

ALTERNATE ACTION

PRC APERTURE CARD

QA CAT II

REV	DATE	DESCRIPTION	BY	CHK	CORR	APP
		REVISIONS DURING CONSTRUCTION				
3	4/1/79	NO CHANGE				
2	5/1/77	GENERAL				

ECF	ACCT #	NO.	DATE	REVISIONS	BY	CHK	CORR	APP

P.A. # 71-158

NORTHEAST NUCLEAR ENERGY COMPANY
SUBSIDIARY OF NORTHEAST UTILITIES

TITLE MILLSTONE NUCLEAR POWER STATION - UNIT NO. 3
LOGIC DIAGRAM
TURBINE PLANT MISCELLANEOUS DRAINS

DRAWN L.T.E. 6-22-75 | CHKD DATE 4-22-75 | APP. DATE 4/25/75 | APP. DATE 4/25/75
SCALE | MICROFILM DATE | DWG. NO. 25212-28640
P.A. # 71-158

STONE & WEBSTER ENGINEERING CORPORATION
BOSTON, MASS.

S & W DWG. NO. 12179-LSK-32-5.1C

RIDS

8212230234

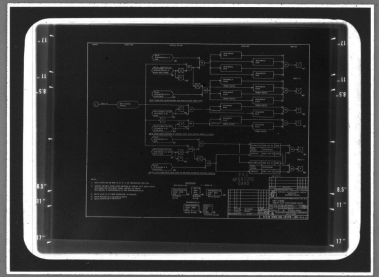

MMM 5831 — FILMSORT® Broad Aperture & Camera Cards and DUPLICARD® Broad Copy Cards — Product of 3M Company, St. Paul, Minn.