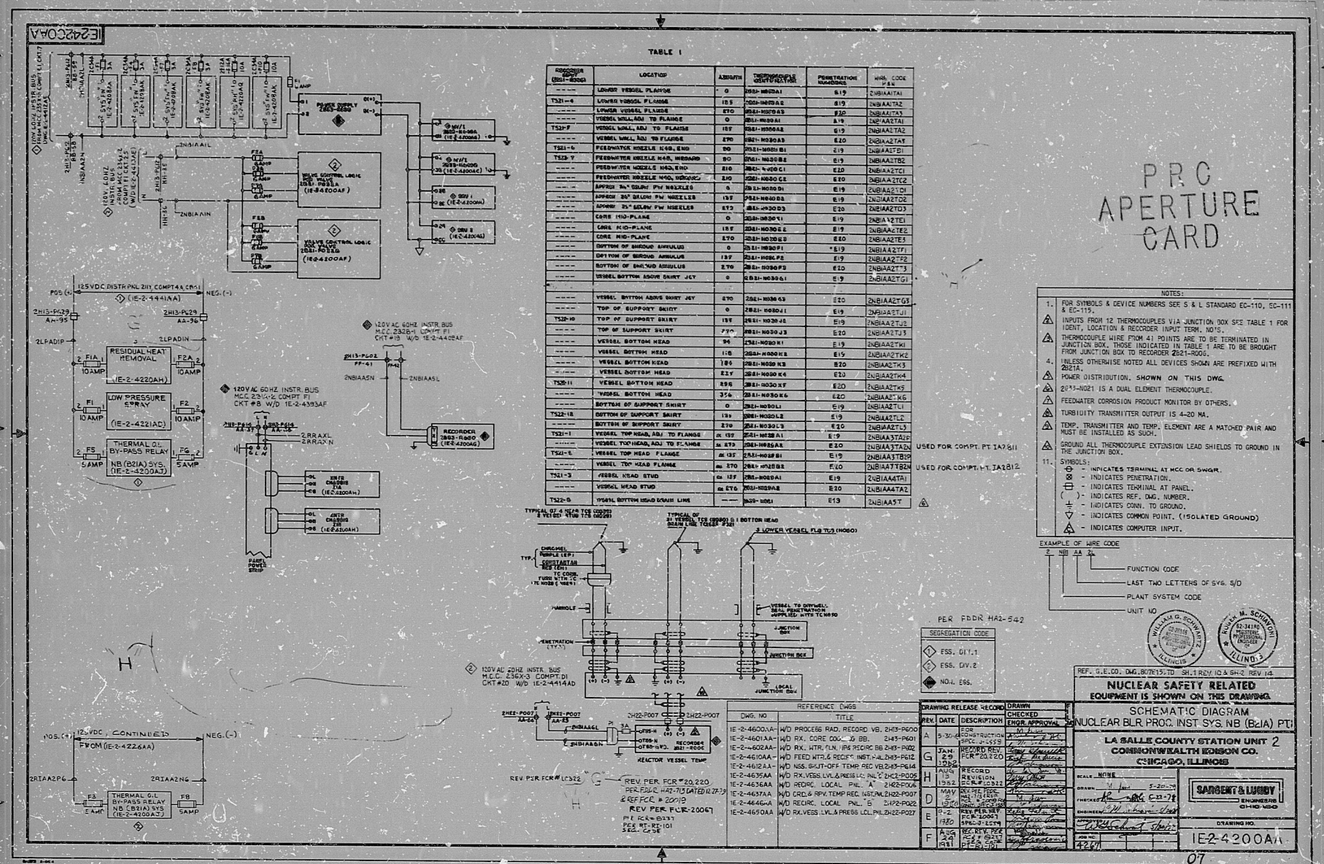
IE2420OAA
TABLE I
PRC APERTURE CARD
NOTES:
1. FOR SYMBOLS & DEVICE NUMBERS SEE S & L STANDARD EC-110, SC-111 & EC-115.
2. INPUTS FROM 12 THERMOCOUPLES VIA JUNCTION BOX SK2. TABLE 1 FOR IDENT, LOCATION & RECORDER INPUT TERM. NO'S.
3. THERMOCOUPLE WIRE FROM 41 POINTS ARE TO BE TERMINATED IN JUNCTION BOX, THOSE INDICATED IN TABLE 1 ARE TO BE BROUGHT FROM JUNCTION BOX TO RECORDER 2B21-R002.
4. UNLESS OTHERWISE NOTED ALL DEVICES SHOWN ARE PREFIXED WITH 2D21A.
5. POWER DISTRIBUTION, SHOWN ON THIS DWG.
6. 2D13-N021 IS A DUAL ELEMENT THERMOCOUPLE.
7. FEEDWATER CORROSION PRODUCT MONITOR BY OTHERS.
8. TURBIDITY TRANSMITTER OUTPUT IS 4-20 MA.
9. TEMP. TRANSMITTER AND TEMP. ELEMENT ARE A MATCHED PAIR AND MUST BE INSTALLED AS SUCH.
10. GROUND ALL THERMOCOUPLE EXTENSION LEAD SHIELDS TO GROUND IN THE JUNCTION BOX.
11. SYMBOLS:
- INDICATES TERMINAL AT MCC OR SWGR.
- INDICATES PENETRATION.
- INDICATES TERMINAL AT PANEL.
- INDICATES REF. DWG. NUMBER.
- INDICATES CONN. TO GROUND.
- INDICATES COMMON POINT. (ISOLATED GROUND)
- INDICATES COMPUTER INPUT.
EXAMPLE OF WIRE CODE
FUNCTION CODE
LAST TWO LETTERS OF SYS. S/D
PLANT SYSTEM CODE
UNIT NO
SEGREGATION CODE
ESS. DIV.1
ESS. DIV.2
NON ESS.
PER FDDR HA2-542
NUCLEAR SAFETY RELATED
EQUIPMENT IS SHOWN ON THIS DRAWING.
SCHEMATIC DIAGRAM
NUCLEAR BLR. PROC. INST. SYS. NB (B21A) PT1
LA SALLE COUNTY STATION UNIT 2
COMMONWEALTH EDISON CO.
CHICAGO, ILLINOIS
SARGENT & LUNDY
ENGINEERS
CHICAGO
DRAWING NO.
IE2-4200AA
REFERENCE DWGS
DRAWING RELEASE RECORD
REV. PER FCR# 20220
REV PER FCR# 20067
07

17"
11"
8.5"

RIDS

8308310153

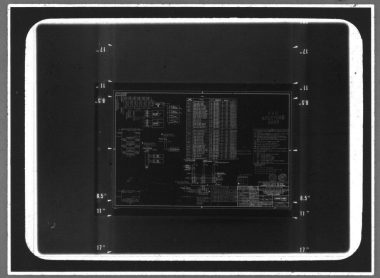

MMM 5824 — FILMSORT® Brand Aperture & Camera Cards and DUPLICARD® Brand Copy Cards — Product of 3M Company, St. Paul, Minn.