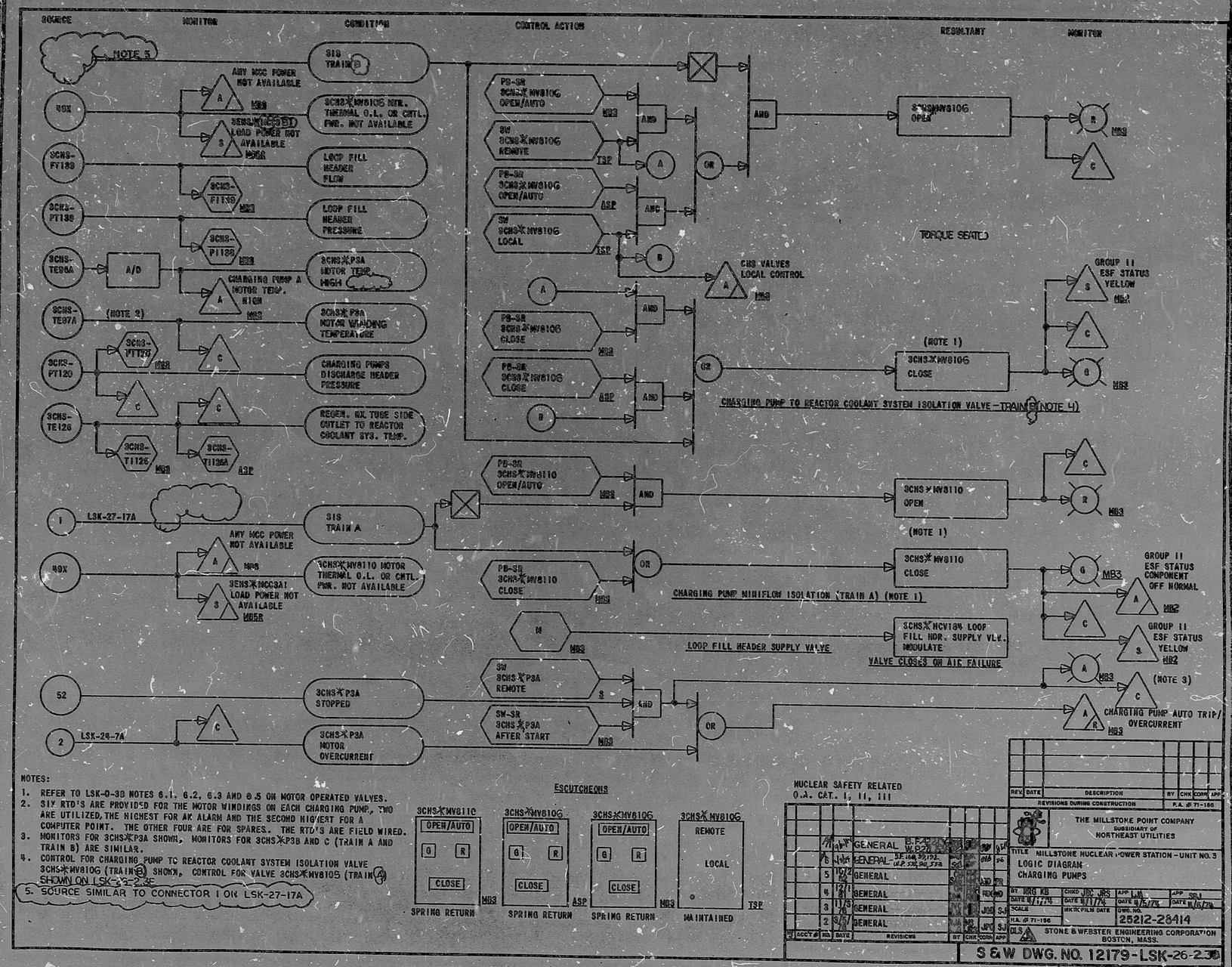

NOTES:

1. REFER TO LSK-0-3B NOTES 6.1, 6.2, 6.3 AND 6.5 ON MOTOR OPERATED VALVES.
2. SIX RTD'S ARE PROVIDED FOR THE MOTOR WINDINGS ON EACH CHARGING PUMP, TWO ARE UTILIZED, THE HIGHEST FOR AK ALARM AND THE SECOND HIGHEST FOR A COMPUTER POINT. THE OTHER FOUR ARE FOR SPARES. THE RTD'S ARE FIELD WIRED.
3. MONITORS FOR 3CHS-P3A SHOWN, MONITORS FOR 3CHS-P3B AND C (TRAIN A AND TRAIN B) ARE SIMILAR.
4. CONTROL FOR CHARGING PUMP TO REACTOR COOLANT SYSTEM ISOLATION VALVE 3CHS-MV810G (TRAIN B) SHOWN, CONTROL FOR VALVE 3CHS-MV8105 (TRAIN A) SHOWN ON LSK-23-2.3E
5. SOURCE SIMILAR TO CONNECTOR I ON LSK-27-17A

ESCUTCHEONS

3CHS-MV8110	3CHS-MV810G	3CHS-MV810G	3CHS-MV810G
OPEN/AUTO	OPEN/AUTO	OPEN/AUTO	REMOTE
G R	G R	G R	LOCAL
CLOSE	CLOSE	CLOSE	
MB3	ASP	MB3	TSP
SPRING RETURN	SPRING RETURN	SPRING RETURN	MAINTAINED

NUCLEAR SAFETY RELATED
Q.A. CAT. I, II, III

REV.	DATE	DESCRIPTION	BY	CHK	CORR	APP
7	4/74	GENERAL				
6	1/74	GENERAL				
5	10/72	GENERAL				
4	12/71	GENERAL				
3	11/5/71	GENERAL				
2	9/9/71	GENERAL				
1		REVISIONS				

REVISIONS DURING CONSTRUCTION — P.A. # 71-186

THE MILLSTONE POINT COMPANY
SUBSIDIARY OF NORTHEAST UTILITIES

TITLE: MILLSTONE NUCLEAR POWER STATION - UNIT NO. 3
LOGIC DIAGRAM - CHARGING PUMPS

BY: BRG KB — CHKD: JJC JRS — APP: LJM — APP: SRJ
DATE 4/17/74 — DATE 4/17/74 — DATE 4/5/74 — DATE 4/16/74
SCALE — MICROFILM DATE — DWG. NO. 25212-28414
P.A. # 71-186

STONE & WEBSTER ENGINEERING CORPORATION
BOSTON, MASS.

S & W DWG. NO. 12179-LSK-26-2.3D

6 70.3304A

APERTURE CARD

PDR RIDS

8503280167

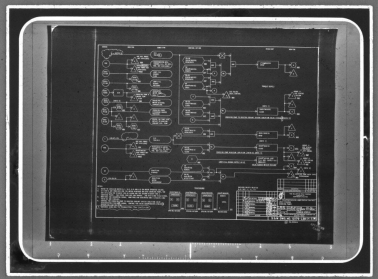

MMM 5824 — FILMSORT® Broad Aperture & Camera Cards and DUPLICARD® Broad Copy Cards — Product of 3M Company, St. Paul, Minn.