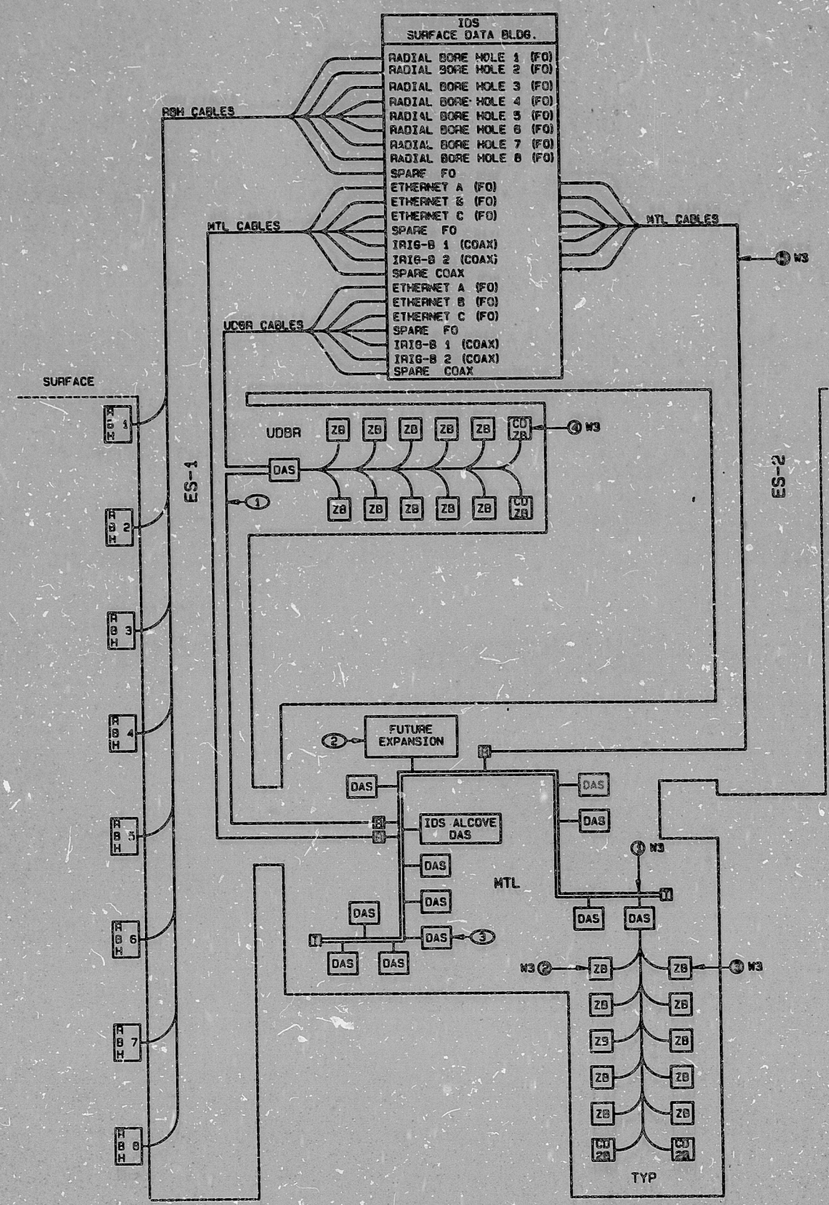

GENERAL NOTES

1. THIS TITLE I DRAWING DEPICTS ONLY THE MAJOR DESIGN FEATURES OF THIS PROJECT. ALL DETAILS, EQUIPMENT DESCRIPTIONS AND SPECIAL INSTRUCTIONS SHALL BE DEVLOPED DURING TITLE II EFFORT.
2. FOR SYMBOLS AND ABBREVIATIONS SEE DRAWING JS-025-ESF-T4.
3. FOR DRAWING INDEX SEE DRAWING JS-025-ESF-T2.
4. FOR QUALITY ASSURANCE LEVEL ASSIGNMENT SEE QALA NO. 6.7.1-0001, 6.7.1-0005, 6.7.1-0007.

KEYED NOTES:

(1) CABLES TO CONSIST OF:
ETHERNET A (FO)
ETHERNET B (FO)
ETHERNET C (FO)
SPARE FO
IRIG-B 1 (COAX)
IRIG-B 2 (COAX)
SPARE COAX

(2) TAPS FOR EXPANSION MAY BE ADDED AND LOCATED AS NECCESSARY.

(3) DATA ACQUISTION STATIONS MAY BE ADDED AND LOCATED AS NECESSARY ALONG THE MTL DISTRIBUTION NETWORK.

REFERENCE DRAWINGS

SIMPLIFIED BLOCK DIAGRAM ----------M1
TYP. INSTALLATION DETAILS ----------M3

SI APERTURE CARD

Also Available On Aperture Card

TITLE I

NO.	DATE	REVISIONS	BY / CK	SAF / QA	PE / AE	ACK / DOE

U.S. DEPARTMENT OF ENERGY
NEVADA OPERATIONS OFFICE — LAS VEGAS, NEVADA

DESIGNED: GEBS — DRAWN: SM
CHECKED:
SAFETY: D.A.
PROJECT ENGINEER

NEVADA NUCLEAR WASTE STORAGE INVESTIGATION
EXPLORATORY SHAFT FACILITY
INTEGRATED DATA SYSTEM CABLE PLANT

FACILITY DIAGRAM

SUBMITTED: HOLMES & NARVER INC. — AGENCY APPROVAL — DOE APPROVAL — DATE

HOLMES & NARVER INC.
ARCHITECTS-ENGINEERS
ENERGY SUPPORT DIVISION
1050 E. FLAMINGO ROAD LAS VEGAS, NEVADA 89109

T.O. NO. 5003M V000423-0
HOA NO. 6.6.6.6.0

DRAWING NUMBER JS-025-ESF-W2.B
SHEET ____ OF ____

PDR RIDS

8811150145

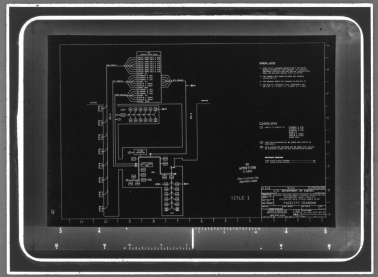

MMM 5924 — FILMSORT® Broad Aperture 8 Camera Cards and DUPLICARD® Broad Copy Cards — Product of 3M — St. Paul, Minn.