The Light company Houston Lighting & Power P.O. Box 1700 Houston, Texas 77001 (713) 228-9211

September 15, 1986
ST-HL-AE-1744
File No.: G9.10/C1.1

Mr. Vincent S. Noonan, Project Director
PWR Project Directorate #5
U. S. Nuclear Regulatory Commission
Washington, DC 20555

South Texas Project
Units 1 and 2
Docket Nos. STN 50-498, STN 50-499
Annotated FSAR Changes Concerning the Rule Change to GDC-4

References:
1) HL&P Letter to NRC, J. H. Goldberg to H. R. Denton, September 28, 1983, ST-HL-AE-1010
2) HL&P Letter to NRC, J. H. Goldberg to H. R. Denton, July 17, 1984, ST-HL-AE-1096
3) HL&P Letter to NRC, J. H. Goldberg to H. R. Denton, March 1, 1985, ST-HL-AE-1200
4) HL&P Letter to NRC, J. H. Goldberg to H. R. Denton, August 19, 1985, ST-HL-AE-1326
5) NRC Letter to HL&P, T. M. Novach to J. H. Goldberg, June 26, 1985, ST-AE-HL-90645
6) HL&P Letter to NRC, M. R. Wisenburg to V. S. Noonan, March 7, 1986, ST-HL-AE-1618
7) NRC Letter to HL&P, N. P. Kadambi to J. H. Goldberg, May 8, 1986, ST-AE-HL-90886

Dear Mr. Noonan:

The Houston Lighting & Power Company (HL&P) via References (1) through (2) provided technical justification in support of our request for a partial exemption to the General Design Criteria (GDC-4) regarding the treatment of Reactor Coolant System (RCS) pipe breaks inside containment at the South Texas Project Units 1 and 2. Reference (3) was a pro forma request that the Construction Permits for the South Texas Project Units 1 and 2 (CPPR-128 and CPPR-129 respectively) be amended to authorize a partial exception from GDC-4 to permit the elimination of postulated circumferential and longitudinal breaks in the RCS main loop piping and the associated dynamic effects from consideration in the structural design basis of the South Texas Project. Reference (4) modified the Construction Permit amendment request such that the duration of the exemption requested would date from the day of the issuance of the amended Construction Permit until Startup following the second

L1/NRC/ba

B001
1/1

refueling outage as opposed to the end of plant life. This modified request was reluctantly submitted as a result of Reference (5). Reference (6) summarized from References (1) thru (4) the specific requirements that would be eliminated based on NRC approval of our request and informed you that since we were confident that prior to Unit 1 fuel loading either the Commission would issue a final rule modifying the GDC-4 requirements for protection against the dynamic effects of postulated pipe ruptures or our exemption request would be approved, we were taking action to remove the pipe whip restraints on the RCS main loop and cross-over piping.

By letter dated May 8, 1986, (Reference 7) the NRC informed HL&P that since the Commission had approved the rule change to GDC-4, NRC action on our previous exemption request had become unnecessary and indicated that the next action by the NRC staff would be the evaluation of the design changes implemented at the STP after receipt of the FSAR changes from HL&P.

Attached are the annotated FSAR changes to Sections 1.3, 3.1, 3.6, 3.8, 3.9, 3.12, 5.4, 6.2 and various NRC question responses in the STP FSAR. These changes identify that reactor coolant loop (RCL) ruptures and the associated dynamic effects are no longer included in the design bases and will be included in a future FSAR amendment. HL&P requests an expedited review of the changes and a meeting to facilitate the review as soon as possible.

If you should have any questions on this matter, please contact Mr. M. E. Powell at (713) 993-1328.

Very truly yours,

M. R. Wisenburg
Manager, Nuclear Licensing

MEP/yd

Attachment: Annotated FSAR Changes Concerning Compliance to GDC-4 (FSAR Sections 1.3, 3.1, 3.6, 3.8, 3.9, 3.12, 5.4, 6.2, and Responses to NRC Questions 210.20N, 220.27N, 220.29N, 22.02, 221.1, 480.04N, 480.05N, 480.06N, 480.07N, 480.08N, 480.09N and 480.12N)

L1/NRC/ta

cc:

Hugh L. Thompson, Jr., Director
Division of PWR Licensing - A
Office of Nuclear Reactor Regulation
U.S. Nuclear Regulatory Commission
Washington, DC 20555

Robert D. Martin
Regional Administrator, Region IV
Nuclear Regulatory Commission
611 Ryan Plaza Drive, Suite 1000
Arlington, TX 76011

N. Prasad Kadambi, Project Manager
U.S. Nuclear Regulatory Commission
7920 Norfolk Avenue
Bethesda, MD 20814

Claude E. Johnson
Senior Resident Inspector/STP
c/o U.S. Nuclear Regulatory
Commission
P.O. Box 910
Bay City, TX 77414

M.D. Schwarz, Jr., Esquire
Baker & Botts
One Shell Plaza
Houston, TX 77002

J.R. Newman, Esquire
Newman & Holtzinger, P.C.
1615 L Street, N.W.
Washington, DC 20036

Director, Office of Inspection
and Enforcement
U.S. Nuclear Regulatory Commission
Washington, DC 20555

T.V. Shockley/R.L. Range
Central Power & Light Company
P.O. Box 2121
Corpus Christi, TX 78403

H.L. Peterson/G. Pokorny
City of Austin
P.O. Box 1088
Austin, TX 78767

J.B. Poston/A. vonRosenberg
City Public Service Board
P.O. Box 1771
San Antonio, TX 78296

Brian E. Berwick, Esquire
Assistant Attorney General for
the State of Texas
P.O. Box 12548, Capitol Station
Austin, TX 78711

Lanny A. Sinkin
Christic Institute
1324 North Capitol Street
Washington, D.C. 20002

Oreste R. Pirfo, Esquire
Hearing Attorney
Office of the Executive Legal Director
U.S. Nuclear Regulatory Commission
Washington, DC 20555

Charles Bechhoefer, Esquire
Chairman, Atomic Safety &
Licensing Board
U.S. Nuclear Regulatory Commission
Washington, DC 20555

Dr. James C. Lamb, III
313 Woodhaven Road
Chapel Hill, NC 27514

Judge Frederick J. Shon
Atomic Safety and Licensing Board
U.S. Nuclear Regulatory Commission
Washington, DC 20555

Citizens for Equitable Utilities, Inc.
c/o Ms. Peggy Buchorn
Route 1, Box 1684
Brazoria, TX 77422

Docketing & Service Section
Office of the Secretary
U.S. Nuclear Regulatory Commission
Washington, DC 20555
(3 Copies)

Advisory Committee on Reactor Safeguards
U.S. Nuclear Regulatory Commission
1717 H Street
Washington, DC 20555

TABLE 1.3-2

SIGNIFICANT DESIGN CHANGES

Item	References FSAR	Description of Change	
Cold shutdown modifications	Chapters 3, 5, 6, 7, 9	Modifications to reactor vessel head vent system to provide a safety-grade letdown path to the PRT. Accumulator vent valve modifications. CVCS modifications to provide safety-grade boration system and other modifications.	45
Flood protection	Section 3. 4	Category I structures are protected against flooding by watertight doors. (CONFORMS TO THE REQUIREMENTS OF GDC 4 AND ASB-1.)	
Pipe break criteria	Section 3. 6	The present design basis pipe breaks meet the intent of the recommendations of Branch Technical Position MEB 3-1 ~~which represents the most up-to-date interpretation of the requirements of RG 1.46.~~ As indicated in Section 3.6.2.1.1 and Table 3.6.1-3, intermediate break locations are limited to the stress determined breaks and terminal ends, i.e., no arbitrary intermediate breaks ~~(except for the feedwater system)~~ are postulated. These pipe breaks are used in the analysis of subcompartment pressurization, jet impingement, and pipe whip effects.	INSERT 46
Subsystem analysis	Section 3. 7. 3	Multiple spectra have been used to reduce excessive conservation in some cases. This change is based on current state of the art and availability of computer programs.	
Environmental Qualification	Section 3.10, 3.11	Revised program.	
Fuel	Chapter 4.0	Change from 9 grid to 10 grid.	45
Hafnium control rods	Sections 4.2, 4.3	Changes use of either Ag-In-Cd or B_4C control rods to Hafnium rods.	
Reduce number of full-length CRDMs from 61 to 57	Section 4.3	Revised regulatory criteria have made these control rods unnecessary.	
Load follow package	Section 4.3	Control rod D-bank and reduced average temperature provide return to power capability for load follow eliminating the need for part-length control rods.	
Elimination of part-length control rods	Sections 3.9.4, 4.2, 4.3, 7.7	Part-length control rods eliminated.	

STP FSAR

ATTACHMENT
ST-HL-AE 1744
PAGE 1 OF 137

INSERT

TABLE 1.3-2

Page 1.3-8

As discussed in Reference 3.6-14 and paragraph 3.6.2.1.1.1a, RCL ruptures and the associated dynamic effects are not included in the design bases.

TABLE 1.3-2 (Continued)

SIGNIFICANT DESIGN CHANGES

Item	References FSAR	Description of Change
Pressurizer power-operated relief valves	Sections 5.1, 5.4, 7.4	Changed from 3 PORVs to 2 PORVs. Changed from air-operated PORVs to safety related, solenoid-operated PORVs.
Reactor Vessel Head Vent System	Section 5.1, 5.4	Addition of Reactor Vessel Head Vent System.
RCL ~~Hot-leg~~ pipe restraints	3.6.2 ~~Section 5.4~~	(INSERT) ~~Addition of hot leg pipe restraint provides added reactor coolant loop support.~~
Reactor coolant piping	Section 5.4	Thermal sleeves in reactor coolant loop branch nozzles have been deleted.
Cold shutdown capability per BTP RSB 5-1	Section Appendix 5.4.A	Address BTP RSB 5-1, addition of safety-related capability for RCS letdown, pressurizer venting, steam generator power-operated relief and other modifications.
Hydrogen recombiners	Section 6.2.5	Changed to Westinghouse-supplied H_2 recombiners located inside containment.
Emergency Boration System	Section 6.8, 7.3	EBS deleted.
Reactor trip on turbine trip interlock	Section 7.3	Change from P-7 (10% power) to P-9 (50% power).
Narrow range steam generator water level measurements	Section 7.2	Measurements are compensated for temperature effects on reference fluid leg for STP.
Low feedwater flow signal for reactor trip	Section 7.2	Low feedwater flow signal for reactor trip has been deleted.

STP FS-7

ATTACHMENT
ST-HL-AE 1744
PAGE 3 OF 13

INSERT

TABLE 1.3-2

Page 1.3-9

As discussed in Reference 3.6-14 and paragraph 3.6.2.1.1.1a, RCL ruptures and the associated dynamic effects are not included in the design bases. Therefore, RCL pipe restraints are no longer required.

Report	Review Status	Section
Cadek, F. F., S. Cerni, J. M. Hellman, W. J. Leech, and J. R. Reavis, "Fuel Rod Bowing," WCAP-8691 (Proprietary) and WCAP-8692 (Nonproprietary), December 1975.	U	4.2 4.3

INSERT

INSERT

Page 1.6-2a

Swamy, S. A., Lee, Y. S., Clark, H. F. and Holmes, R.A., "Technical Bases for Eliminating Large Primary Loop Pipe Ruptures as the Structural Design Basis for the South Texas Project Units 1 & 2", WCAP-10559 (Proprietary) and WCAP-10560 (Non-Proprietary).	B	3.6

LIST OF TABLES (Continued)

CHAPTER 3

DELETED

LIST OF FIGURES (Continued)

CHAPTER 3

Equipment and facilities for fire detection, alarm and extinguishment are provided to protect both plant and personnel from fire or explosion. Fire Protection and Detection System reliability is ensured by periodic tests and inspections.

Administrative controls are used where applicable throughout the facility to minimize the probability and consequences of fires or explosions.

The Fire Protection System is designed such that a failure of any component of the system:

- Will not cause an accident resulting in significant release of radioactivity to the environment.
- Will not impair the ability of redundant equipment to safely shut down the reactor or limit the release of radioactivity to the environment in the event of a LOCA.

For further discussion, see the following sections of the FSAR.

Materials, Quality Control and Special Construction Techniques	3.8.1.6	
Independence of Redundant Safety-Related Systems	7.1.2.2	33
Independence of Redundant Systems	8.3.1.4	
Fire Protection System	9.5.1	

3.1.2.1.4 Criterion 4 - Environmental and Missile Design Bases: Structures, systems and components important to safety shall be designed to accommodate the effects of and to be compatible with the environmental conditions associated with normal operation, maintenance, testing, and postulated accidents, including LOCA's. These structures, systems and components shall be appropriately protected against dynamic effects, including the effects of missiles, pipe whipping and discharging fluids, that may result from equipment failures and from events and conditions outside the nuclear power unit. INSERT 1

3.1.2.1.4.1 Evaluation Against Criterion 4 - Safety-related structures, systems, and components are designed to accommodate the effects of and to be compatible with the environmental conditions (including the pressure, temperature, humidity and radiation conditions) associated with normal operation, maintenance, testing, and postulated accidents, including LOCAs. Protection criteria are presented in Sections 3.5 and 3.6 and the environmental conditions are described in Section 3.11. 33 33

These structures, systems, and components are appropriately protected against dynamic effects, including the effects of missiles, pipe whipping, and discharging fluids that may result from equipment failures and from events and conditions outside the nuclear power unit. Details of the design, environmental testing, and construction of these systems, structures and components are included in other sections of the FSAR:

INSERT 2

Section 3.1.2.1.4

Insert 1

However, the dynamic effects associated with postulated pipe ruptures of primary coolant loop piping in pressurized water reactors may be excluded from the design basis when analyses demonstrate the probability of rupturing such piping is extremely low under design basis conditions.

Insert 2

The dynamic effects associated with postulated ruptures in the RCS main loop piping are shown to be of extremely low probability of occurring under design conditions and are not included in the design basis.

Water Le[illegible] Flood) Design	3.4	33
Missile Pr[illegible]ction Criteria	3.5	
Criteria for Protection Against Dynamic Effects Associated with Postulated Rupture of Piping	3.6	
Design of Category I Structures	3.8	
Mechanical Systems and Components	3.9	33
Seismic Qualification of Seismic Category I Instrumentation and Electrical Equipment	3.10	
Environmental Design of Mechanical and Electrical Equipment	3.11	
Independence of Redundant Safety-Related Systems	7.1.2.2	
Independence of Redundant Systems	8.3.1.4	
Accident Analysis	15.0	33

3.1.2.1.5 Criterion 5 - Sharing of Structures, Systems or Components: Structures, systems, and components important to safety shall not be shared among nuclear power units unless it can be shown that such sharing will not significantly impair their ability to perform their safety functions, including, in the event of an accident in one unit, an orderly shutdown and cooldown of the remaining units.

3.1.2.1.5.1 Evaluation Against Criterion 5 - The ultimate heat sink is the only shared safety-related system. 33

For further discussion, see Section 9.2.5.

3.1.2.2 Group II - Protection by Multiple Fission Product Barriers (Criteria 10-19).

3.1.2.2.1 Criterion 10 - Reactor Design: The reactor core and associated coolant, control, and protection systems shall be designed with appropriate margins to assure that specified acceptable fuel design limits are not exceeded during any condition of normal operation, including the effects of anticipated operational occurrences.

3.1.2.2.1.1 Evaluation Against Criterion 10 - The reactor core and associated coolant, control, and protection systems are designed with adequate margins to:

1. Preclude significant fuel damage during normal core operation and operational transients (Condition I)* or any transient conditions arising from occurrences of moderate frequency (Condition II)*.

No change

*Defined by ANSI [illegible] - 1973

Question 210.20N

In order to assure that the pipe break criteria have been properly implemented, the Standard Review Plan requires the review of sketches showing the postulated rupture locations and of summaries of the data developed to select postulated break locations including, for each point, the calculated stress intensity, the calculated cumulative usage factor, and the calculated primary plus secondary stress range. The required sketches and tables for some high energy piping systems have not been provided at this time in the FSAR. Provide a schedule for submission of these data.

INSERT

Response

Initial stress summaries regarding pipe break locations, stress levels, cumulative usage factors are shown in Table 3.6.2-1. Sketches showing pipe break locations are provided in Figure 3.6.1-1. Final design information, including as-built reconciliation, will be provided prior to fuel load. 53

~~The South Texas Project (STP) has submitted a request to the NRC for exemption~~ to General Design Criterion 4 in order to delete postulation of Reactor Coolant Loop (RCL) pipe breaks based upon the "Leak Before Break" analyses. This has been justified in WCAP-10560. (Refer to HL&P to NRC letters ST-HL-AE-1010 dated September 28, 1983, ST-HL-AE-1096, dated July 17, 1984, ST-HL-AE-1200 dated March 1, 1985 and ST-HL-AE-1326, August 19, 1985). 53
Although the NRC has not yet responded to the request, the project is sufficiently confident such that the current design is proceeding on the assumption that the exemption will be granted. Thus, RCL pipe breaks are not postulated and the information requested is not pertinent to STP for that scope. However, it should be noted that primary component supports have been designed to withstand the structural loads associated with non-mechanistic Reactor Coolant pipe breaks at the locations described in WCAP-8082. 53

INSERT

Q210.20N

As discussed in Reference 3.6-14 and paragraph 3.6.2.1.1.1a, RCL ruptures and the associated dynamic effects are not included in the design bases.

Question 210.27N

Provide a listing of those postulated pipe breaks where limited displacements have been used to reduce break areas.

Response

~~Refer to the last paragraph of the response Q210.20N. Pipe breaks were postulated in accordance with WCAP-8082 for the design of primary components. Limited non-mechanistic pipe breaks were used in the design of primary component supports.~~

~~For the calculations of loop hydraulics for primary component support designs, reduced break areas (150 in^2) were used for the reactor vessel inlet and reactor vessel outlet breaks.~~

Limited displacements have not been used to reduce break areas for ~~balance of plant~~ piping on STP.

Question 210.29N

Provide the loads, load combinations, and stress limits that were used in the design of pipe rupture restraints. Include a discussion of the design methods applicable to the auxiliary steel used to support the pipe rupture restraint. Provide assurance that the pipe rupture restraint and supporting structure cannot fail during a seismic event.

Response

Refer to ~~the last~~ paragraph 3.6.2.1.1.1a ~~of the response to Question 210.20N~~. RCL pipe breaks have been eliminated thereby eliminating the need for RCS loop restraints.

Pipe whip restraints ~~for other than the RCL~~ are designed as a combination of an energy-absorbing element (EAE) and a supporting (auxiliary) structure capable of transmitting the resistance load from the EAE to the main building structures (concrete walls, slabs, and steel structures). The EAE usually is either thin gauge cellular crushable material (energy-absorbing material, (EAM)) or stainless steel U-bars. The design limits for EAEs are specified in Section 3.6.2.3.4.1.2.

The supporting structures typically are structural steel frames designed to the loads, load combinations, and stress limits as specified in Section 3.8.3.3 and Tables 3.8.3-2 and 3.8.4-2. Except for the main steam restraints inside the containment, the elastic working stress design method of Part I of the AISC specification 1969 (including supplements 1, 2 and 3) is used. The main steam line restraints inside the containment are designed using a non-linear method, with allowable ductilities per Section 3.5.3 and Table 3.5-13, where the ultimate strain is taken as 50 percent of ASTM specified minimum.

Both the Operating Basis Earthquake (OBE) and the Safe Shutdown Earthquake (SSE) seismic events are specifically included in the loading combinations prescribed for the structural integrity of the pipe whip restraints. The restraints and their structures are treated as structural subsystems whose seismic response is determined from their frequency characteristics and the appropriate floor response spectra.

3.6 PROTECTION AGAINST THE DYNAMIC EFFECTS ASSOCIATED WITH THE POSTULATED RUPTURE OF PIPING

Pipe failure protection is provided in accordance with the requirements of 10CFR50, Appendix A, General Design Criterion (GDC) 4.

In the event of a high- or moderate-energy pipe failure within the plant, adequate protection is provided to ensure that the essential structures, systems, or components are not adversely impacted by the effects of postulated piping failure. Essential systems and components are those required to shut down the reactor and mitigate the consequences of the postulated piping failure.

Appendix 3.6.B provides several examples of the evaluations made of the effects of postulated high energy pipe failures within the plant. The following sections provide the basis for selection of the pipe failures, the determination of the resultant effects, and details of the protection requirements. 53

3.6.1 Postulated Piping Failures in Fluid Systems Inside and Outside Containment

Table 3.6.1-1 provides a matrix of plant systems that indicates their classification: high-energy, moderate-energy, essential, or nonessential. Selection of pipe failure locations and evaluation of the consequences on nearby essential systems, components, and structures are presented in Section 3.6.2 and are in accordance with the requirements of 10CFR50, Appendix A, GDC 4. 40
~~Except for the reactor coolant loop (RCL),~~ selections and evaluations are in accordance with the guidance of Nuclear Regulatory Commission (NRC) Branch Technical Positions (BTP) ASB3-1 and MEB 3-1. ~~(including RG 1.46). For the RCL, Reference 1 provides the basis for the selection and evaluation of pipe breaks.~~ INSERT

3.6.1.1 Design Bases. The following design bases relate to the evaluation of the effects of the pipe failures determined in Section 3.6.2.

1. The selection of the failure type is based on whether the system is high- or moderate-energy during normal operating conditions of the system.

   High-energy piping includes those systems or portions of systems in which the maximum normal operating temperature exceeds 200°F or the maximum normal operating pressure exceeds 275 psig.

   Piping systems or portions of systems pressurized above atmospheric pressure during normal plant conditions and not identified as high-energy are considered moderate-energy.

   Piping systems that exceed 200°F or 275 psig for about 2 percent or less of the time the system is in operation or that experience high-energy pressures or temperatures for less than 1 percent of the plant operation time are considered moderate-energy.

INSERT

Page 3.6-1

The original design basis postulated pipe break locations in the reactor coolant loop (RCL) are described in Reference 3.6-1. A detailed fracture mechanics evaluation, as described in Reference 3.6-14, demonstrates that the probability of rupturing the RCL piping is extremely low under design basis conditions. Therefore, postulated RCL ruptures and the following associated dynamic effects are not included in the design basis: missile generation, pipe whip, break reaction forces, jet impingement forces, decompression waves within the ruptured pipe, and pressurization in cavities, subcompartments and compartments. To retain high safety margins, the design bases for emergency core cooling systems, containment pressure boundary, and equipment qualification are based on a non-mechanistic rupture of the RCL piping.

2. The following assumptions are used to determine the thermodynamic state in the piping system for the calculation of fluid reaction forces ~~(except for the Reactor Coolant System (RCS))~~:

   a. For those portions of piping systems normally pressurized during operation at power, the thermodynamic state in the pipe and associated reservoirs are those of full-(100-percent) power operation.

   b. For those portions of piping systems only pressurized during other normal plant conditions (e.g., startup, hot standby, reactor cooldown), the thermodynamic state and associated operating condition is determined as the mode giving the highest enthalpy.

   ~~For the RCS, including all Class 1 branch piping, the normal power operation conditions are used as stated in Reference 1.~~

3. Moderate-energy pipe cracks are evaluated for spray wetting, flooding, and other environmental effects.

4. Where postulated, each longitudinal or circumferential break in high-energy fluid system piping or leakage crack in moderate-energy fluid system piping is considered separately as a single initiating event occurring during normal plant conditions.

5. Offsite power is assumed to be unavailable if a trip of the turbine-generator system or trip of the reactor is a direct consequence of the postulated piping failure. 40

6. A single active component failure is assumed in systems used to mitigate the consequences of the postulated piping failure or to safely shut down the reactor, except as noted in paragraph 7 below. The single active component failure is assumed to occur in addition to the postulated piping failure and any direct consequences of the piping failure, such as unit trip and loss of offsite power (LOOP).

7. When the postulated piping failure occurs in one of two or more redundant trains of a dual-purpose, moderate-energy essential system, single failures of components in other trains are not assumed, because the system is designed to seismic Category I standards; powered from both offsite and onsite sources; and constructed, operated, and inspected to quality assurance, testing, and inservice inspection standards appropriate for nuclear safety systems.

   Failures are not assumed in a system or component which is normally operating at the time of break initiation and which also functions (without change in state) to mitigate the break event, provided the system is designed to seismic Category I requirements and is qualified for the environment associated with the break event.

5. For any postulated loss-of-coolant accident (LOCA), the structural and leaktight integrity of the Containment is maintained.

6. The escape of steam, water, combustible or corrosive fluids, gases, and heat in the event of a pipe rupture will not preclude:

   a. Subsequent access to any areas, as required, to cope with the postulated pipe rupture.

   b. Habitability of the control room.

   c. The ability of essential instrumentation, electric power supplies, components and controls to perform their safety functions to the extent necessary to meet the criteria outlined in Section 3.6.1.1.

3.6.2 Determination Of Break Locations and Dynamic Effects Associated With The Postulated Rupture Of Piping

This section describes the design bases for locating postulated breaks and cracks in high- and moderate-energy piping systems inside and outside of the Containment; the methodology used to define the jet thrust reaction at the break location; the methodology used to define the jet impingement loading on adjacent essential structures, systems or components; pipe whip restraint design; and the protective assembly design.

40

3.6.2.1 Criteria Used To Define High/Moderate-Energy Break/Crack Locations and Configurations. ~~Except for the RCS,~~ Nuclear Regulatory Commission (NRC) MEB 3-1 Ref. 3.6-3 is used as the basis of the criteria for the postulation of high-energy pipe breaks. Specific moderate-energy pipe crack locations are not ascertained; and, therefore, they are assumed to occur as described in Section 3.6.2.1.2.

A postulated high-energy pipe break is defined as a sudden, gross failure of the pressure boundary of a pipe either in the form of a complete circumferential severance (i.e., a guillotine break) or as a sudden longitudinal, uncontrolled crack. For moderate-energy fluid systems, pipe failures are confined to postulation of controlled cracks in piping. The effects of these cracks in moderate energy fluid systems on the safety-related equipment are analyzed for flooding and wetting only. These cracks do not result in jet impingement or whipping of the cracked piping.

Breaks as stated above are postulated in each pipe and branch run adjacent to a protective structure or compartment containing essential systems and components.

Piping is considered adjacent to a protective structure or compartment containing essential systems and components required for safe shutdown if the distance between the piping and structure is insufficient to preclude impairment of the structure's integrity from the effects of a postulated piping failure, assuming that the piping is unrestrained.

3.6.2.1.1 High-Energy Break Locations: With the exception of those portions of the piping identified in Section 3.6.2.1.1.5, breaks are postulated in high-energy piping at the following locations:

1. American Society of Mechanical Engineers (ASME) Boiler and Pressure Vessel (B&PV) Code, Section III, Division 1 - Class 1 Piping.

INSERT A

a. ~~The discrete break locations and orientations in the RCL are derived on the basis of stress and fatigue analysis. These postulated break locations and the methods used to determine them are described in Ref. 3.6-1. An analysis of each individual RCL confirms the break locations defined in Ref. 3.6-1. The stresses and cumulative usage factors resulting from seismic events are included in the stresses and cumulative usage factors which are discussed in Section 3.6.2.5 to verify the design basis break locations in the RCL noted therein.~~ 40

~~At postulated circumferential break locations, the piping is assumed to separate to allow double-ended flow unless structural restraints exist which physically limit the break opening area. As an example, for the reactor coolant pipe break at the reactor vessel nozzle, the pipe will be restrained, preventing the development of a full double-ended break. At other locations where a reduced break area is used primarily due to structural steel or concrete restraints, justification is provided in Section 3.6.2.5. Longitudinal breaks are assumed to have an opening area equal to the flow area of the pipe.~~ 45

b. Pipe breaks are postulated to occur at the following locations in ASME Code Section III Class 1 piping runs or branch runs outside the RCL as follows:

1) At terminal ends of the piping, including:

a) Piping connected to structures, components, or anchors that act as essentially rigid restraints to piping translation and rotational motion due to static or dynamic loading. 40

b) High/moderate-energy boundary such as piping runs which are maintained pressurized during normal plant conditions for only a portion of the run, i.e., up to the first normally closed valve. The terminal end of such piping is the piping connection to the closed valve.

c) Branch intersection points are considered a terminal end for the branch line except where the branch and the main piping systems are modeled in the same piping stress analysis and the branch line is shown to have a significant effect on the main run behavior (i.e., the nominal size of the branch line is at least one-half of that of the main or the ratio of the moment of inertia of main run pipe to the branch line is less than 10). 40 Q110.6 50 Q110.6

INSERT

Page 3.6-8

The original design basis postulated pipe break locations in the RCL are described in Reference 3.6-1. A detailed fracture mechanics evaluation, as described in Reference 3.6-14, demonstrates that the probability of rupturing the RCL piping is extremely low under design basis conditions. Therefore, postulated RCL ruptures and the following associated dynamic effects are not included in the design basis: missile generation, pipe whip, break reaction forces, jet impingement forces, decompression waves within the ruptured pipe and pressurization in cavities, subcompartments and compartments. To retain high safety margins, the design bases for emergency core cooling systems, containment pressure boundary, and equipment qualification are based on a non-mechanistic rupture of the RCL piping.

b. Other Containment Penetration Piping

Containment penetration piping between the penetration flued head and containment isolation valves, up to and including the restraints that define the terminal ends for the run as stated in 6) below, may be excluded from postulated breaks (i.e., may be treated as a break-exclusion zone) when all of the following design requirements are met:

1) ASME Code Section III Class 2 Piping: if the following conditions are not met, then requirements listed in Section 3.6.2.1.1.2 above apply.

   a) The maximum stress ranges as calculated by the sum of Equations (9) and (10) in ASME Section III, subarticle NC-3652, considering operational plant conditions (i.e., sustained loads, occasional loads, and thermal expansion and an OBE event) do not exceed 0.8 (1.2 S_h + S_A).

   b) The maximum stress, as calculated by Equation (9) in subarticle NC-3652 under the loadings resulting from a postulated piping failure of fluid system piping beyond these portions of piping, does not exceed 1.8S_h except that, following a piping failure outside Containment, the pipe between the isolation valves and the first restraint is permitted higher stresses provided that a plastic hinge is not formed and operability of the valves with such stress is assured in accordance with the requirements of Section 3.9.3. 40 53

2) Welded attachments, for pipe supports or other purposes, to these portions of piping are avoided except where detailed stress analyses or tests are performed to demonstrate that the maximum stresses do not exceed the limits defined in 1) above.

3) The number of circumferential and longitudinal piping welds and branch connections are minimized.

4) The length of these portions of piping is reduced to the minimum length practical.

5) Pipe anchors or restraints (e.g., connections to containment penetrations and pipe whip restraints) are not welded directly to the outer surface of the piping (e.g., flued integrally forged pipe fittings may be used) except where all such welds are 100 percent volumetrically examinable as part of the Inservice Inspection Program (Section 6.6) and a detailed stress analysis is performed to demonstrate that the maximum stresses do not exceed the limits defined in 1) above. Exceptions to the 100 percent volumetric weld examinations (e.g., due to access limitations) are documented in the ISI program. 53

NO CHANGE

meet the requirements of ASME Code, Section III, Sub-article NE-1120, and are designed so that the maximum stress range does not exceed 0.4 $(1.2\ S_h + S_A)$.

2. Through-wall leakage cracks are not required to be postulated in moderate-energy fluid system piping located in an area where a break in the high-energy fluid system is postulated, provided that such cracks do not result in environmental conditions more limiting than the high-energy pipe break.

3. Subject to paragraph 4 below, through-wall leakage cracks are required to be postulated in ASME, B&PV Code, Section III, Division 1 - Class 2 or 3 piping at locations where the maximum stress range in the piping is greater than 0.4 $(1.2\ S_h + S_A)$. 40

4. Individual cracks are not required to be postulated at specific locations determined by stress analyses when a review of the piping layout and plant arrangement drawings shows that the effects of through-wall leakage cracks are isolated or physically remote from structures, systems, and components required for safe shutdown. Q110.09

5. Through-wall leakage cracks are postulated in non-seismic Category I piping at welded points where the effects might compromise essential equipment or structures.

To simplify analysis, cracks may be postulated to occur everywhere in moderate-energy piping, regardless of the stress analysis results to determine the maximum damage from fluid spraying and flooding, with the consequent hazards or environmental conditions. Flooding effects are determined on the basis of 30-min operator time required to effect corrective actions. Further discussion of internal flooding effects is provided in Section 3.4.3 and 3.4.4. 53

Cracks in moderate energy ASME Code Class 1 piping are not postulated since there are no ASME Class 1 moderate energy systems. All the ASME Class 1 piping systems are inside the Containment Building and are high energy. 50 Q210.36N Q110.10

3.6.2.1.3 Types of Breaks/Cracks Postulated:

3.6.2.1.3.1 ASME Section III, Class 1 RCL Piping - High-Energy - ~~The~~ No ~~types of~~ breaks postulated in the ASME Section III, Class 1 primary RCL ~~are~~ AS discussed in Ref. 3.6-1 ARE 4 AND PARAGRAPH 3.6.2.1.1.1a

3.6.2.1.3.2 Piping Other than RCL Piping - High-Energy - The following types of breaks are postulated to occur at the locations determined in accordance with Section 3.6.2.1.1. 40

1. In piping whose nominal diameter is greater than or equal to 4 in., both circumferential and longitudinal breaks are postulated at each selected break location unless eliminated by comparison of longitudinal and axial stresses with the maximum stress as follows:

   a. If the maximum stress range exceeds the limits specified in Sections 3.6.2.1.1.1.b.2 and 3.6.2.1.1.2.b but the circumferential stress range is at least 1.5 times the axial stress range, only a longitudinal break is postulated. 49

the forcing function. It should be noted that the rise time for the jet thrust is no greater than one millisecond. For most applications, one of the following situations exists: 50 Q210 25N

- Superheated or saturated steam.
- Saturated or subcooled water.
- Cold water (nonflashing). 40

Analytical methods for calculation of jet thrust for the above-described situations are discussed in Refs. 3.6-5 and 3.6-6. ~~A discussion of the jet thrust forcing functions from RCL breaks is provided in Section 3.6.2.2.1.1~~.

For main feedwater, main steam, and reactor coolant surge lines, JET AND RELAP 4/5 is used to get the forcing function for the nonlinear time-history pipe whip load analysis. For other lines, Moody's thrust coefficient is used, as specified in Reference 3.6-6.

Nonlinear time-history pipe whip load analysis is a step-by-step determination of piping/whip restraint transient response through time, explicitly including both material (inelastic) and geometric (gap) nonlinear effects. The mathematical models are three-dimensional, lumped-mass models constructed from pipe elements, inelastic energy-absorbing elements, and energy-absorbing device support structure mass and stiffness characteristics. This analysis is performed using Reference 3.6-11, which is based on direct integration of the lumped-mass model's equation of motion. 49

Dynamic impact and potential rebound effects of the pipe whip problem are explicitly considered in the RELAP 4/5 computer code. Therefore, no additional dynamic amplification factor or rebound effect factor is applied to the nonlinear time-history results.

The energy balance dynamic analysis method is limited to intermediate-size high-energy lines under 14 in. in diameter. Jet thrust load is taken as the maximum thrust load (with an amplification factor of 1.1) and applied throughout the pipe break event. Maxixmum restraint device deformation is computed for the energy principle. An appropriate dynamic load factor is then applied to the calculated restraint load for restraint device design.

3.6.2.2.1.1 Time Functions of Jet Thrust Force on ~~Ruptured and Intact~~ RCL branch pipe break RCL Piping - To determine the thrust and reactive force loads to be applied to the RCL during the postulated ~~LOCA~~, it is necessary to have a detailed description of the hydraulic transient. Hydraulic forcing functions are calculated for the ~~ruptured and intact~~ RCLs as a result of a postulated ~~LOCA~~. These forces result from the transient flow and pressure histories in the RCS. 40 The calculation is performed in two steps. The first step is to calculate the transient pressure, mass flowrates, and thermodynamic properties as a function of time. The second step uses the results obtained from the hydraulic analysis, along with input of areas and direction coordinates, and calculates the time-history of forces at appropriate locations (e.g., elbows) in the RCLs.

The hydraulic model represents the behavior of the coolant fluid within the RCS. Key parameters calculated by the hydraulic model are pressure, mass 45

flowrate, a density. These are supplied to the thrust calculation, together with ent layout information, to determine the time-dependent loads exerted by the fluid on the loops. In evaluating the hydraulic forcing functions during a postulated LOCA, the pressure and momentum flux terms are dominant. The inertia and gravitational terms are taken into account in the evaluation of the local fluid conditions in the hydraulic model.

The blowdown hydraulic analysis is required to provide the basic information concerning the dynamic behavior of the reactor core environment for the loop forces reactor kinetics, and core cooling analysis. This requires the ability to predict the flow, quality, and pressure of the fluid throughout the reactor system. The MULTIFLEX code (Ref. 3.6-7) was developed with a capability to provide this information.

The MULTIFLEX computer code calculates the hydraulic transients within the entire primary coolant system. This hydraulic program considers a coupled, fluid-structure interaction by accounting for the deflection of the core support barrel. The depressurization of the system is calculated using the method of characteristics applicable to transient flow of a homogeneous fluid in thermal equilibrium.

The ability to treat multiple flow branches and a large number of mesh points gives the MULTIFLEX code the flexibility required to represent the various flow passages within the primary RCS. The system geometry is represented by a network of one-dimensional flow passages.

The THRUST computer program (Ref. 3.6-8) was developed to compute the transient (blowdown) hydraulic loads resulting from a LOCA.

NO CHANGE

The blowdown hydraulic loads on primary loop components are computed from the equation:

$$F = 144A \left[(P - 14.7) + \left[\frac{\dot{m}^2}{g \rho A^2_m \; 144} \right] \right]$$

The symbols and units are as follows:

F = Force (lb_f).

A = Aperture area (ft^2).

P = System pressure (psia).

$\dot{m}$ = Mass flowrate (lbm/s).

ρ = Density (lbm/ft^3)

g = Gravitational constant 32.174 ft-lbm/lb -s^2

A^2_m = Mass flow area (ft^2)

In the model to compute forcing functions, the RCL system is represented by a model similar to that employed in the blowdown analysis. The entire loop layout is represented in a global coordinate system. Each node is fully described by:

1. Blowdown hydraulic information.

2. The orientation of the streamlines of the force nodes in the system, which includes flow areas, and projection coefficients along the three axes of the global coordinate system.

Each node is modeled as a separate control volume with one or two flow apertures associated with it. Two apertures are used to simulate a change in flow direction and area. Each force is divided into its x, y, and z components using the projection coefficients. The force components are then summed over the total number of apertures in any one node to give a total x force, a total y force, and a total z force. These thrust forces serve as input to the piping/restraint dynamic analysis.

The THRUST code (which uses MULTIFLEX results as input) calculates forces exactly the same way as the (Ref. 3.6-8) STHRUST code, (which uses SATAN [Ref. 3.6-10] results as input).

3.6.2.2.1.2 Dynamic Analysis of the Reactor Coolant Loop Piping AND Equipment Supports ~~and Pipe Whip Restraints~~ - The dynamic analysis of the RCL for ~~loca~~ RCL branch pipe break loadings is described in Section 3.9.

3.6.2.3 Dynamic Analysis Methods To Verify Integrity and Operability.

3.6.2.3.1 Dynamic Analysis Methods To Verify Integrity and Operability for Other than RCL: The analytical methods of Refs. 3.6-5, 3.6-6, and 3.6-9 are used to determine the jet impingement effects and loading effects applicable to components and systems resulting from postulated pipe breaks and

cracks. Note that for short periods of time, the pressure and enthalpy in certain systems will be higher than full or normal power operation i.e., 102 percent power. However, the full power mode establishes the maximum demands of safety systems in the event of a postulated pipe rupture. Other modes of normal operation have reduced needs for safety systems to bring the plant to a safe shutdown. Therefore, the full power operation mode is used to determine the thermodynamics state in the piping system for the calculation of fluid reaction forces.

3.6.2.3.2 Dynamic Analysis Methods To Verify Integrity and Operability for the RCL

3.6.2.3.2.1 General - A LOCA is assumed to occur for a branch line break down to the second normally open automatic isolation valve (Case II, Figure 3.6.2-1) on outgoing lines and down to and including the second check valve (Case III, Figure 3.6.2-1) on incoming lines normally with flow. A pipe break beyond the restraint or second check valve does not result in an uncontrolled loss of reactor coolant if either of the two valves in the line closes.

Accordingly, both of the automatic isolation valves are suitably protected and restrained as close to the valves as possible so that a pipe break beyond the restraint does not jeopardize the integrity and operability of the valves. Further, periodic testing of the valves capability to perform their intended function is essential. This criterion takes credit for only one of the two valves performing its intended function. For normally closed isolation or incoming check valves (Cases I and IV, Figure 3.6.2-1), a LOCA is assumed to occur for pipe breaks on the reactor side of the valve.

Branch lines connected to the RCL are defined as large strictly for the purpose of pipe break criteria when they have an inside diameter greater than 4 in. up to the largest connecting line. Rupture of these lines results in a rapid blowdown from the RCL, and protection is basically provided by the accumulators and the low-head safety injection (LHSI) pumps.

Branch lines connected to the RCL are defined as small for the purpose of pipe break analysis if they have an inside diameter equal to or less than 4 in. This size is such that Emergency Core Cooling System (ECCS) analyses, using realistic assumptions, show that no fuel cladding damage is expected for a break area of up to 12.5 in.^{2} corresponding to 4 in. inside diameter piping.

Engineered safety features (ESFs) are provided for core cooling and boration, pressure reduction, and activity confinement in the event of a LOCA or steam or feedwater line break accident to ensure that the public is protected in accordance with 10CFR100 Guidelines. These safety systems are designed to provide protection for an RCS pipe rupture of a size up to and including a double-ended severence of the RCS main loop.

INSERT

INSERT

Page 3.6-18

The original design basis postulated pipe break locations in the RCL are described in Reference 3.6-1. A detailed fracture mechanics evaluation, as described in Reference 3.6-14, demonstrates that the probability of rupturing the RCL piping is extremely low under design basis conditions. Therefore, postulated RCL ruptures and the associated dynamic effects are not included in the design basis. However, to retain high safety margins,

To assure the continued integrity of the essential components and the engineered safety systems, consideration is given to the consequential effects of the pipe break itself to the extent that:

1. The minimum performance capabilities of the engineered safety systems are not reduced below that required to protect against the postulated break.

2. The containment leaktightness is not decreased below the design value if the break leads to a LOCA (1).

3. Propagation of damage is limited in type and/or degree to the extent that:

   a. A pipe break which is not a LOCA or steam/feedwater line break will not cause a LOCA or steam/feedwater line break.

   b. An RC~~S~~ branch pipe break will not cause a steam or feedwater system pipe break, and vice versa, in excess of small instrument or sample lines which are not required to function following accidents.

3.6.2.3.2.2 Large RC~~S~~ branch Piping - ~~Propagation of damage resulting from the rupture of an RCL is permitted to occur but must not exceed the design basis for calculating containment and subcompartment pressures, loop hydraulic forces, reactor internals, reaction loads, primary equipment support loads, or emergency core cooling system performance.~~ 40

Large branch line piping, as defined in Section 3.6.2.3.2.1, is restrained to meet the following criteria in addition to items 1 thru 3 of Section 3.6.2.3.2.1 for a pipe break resulting in a LOCA:

1. Propagation of the break to the unaffected loops is prevented to ensure the delivery capacity of the accumulators and low head pumps.

2. Propagation of the break in the affected loop is permitted to occur but does not exceed 20 percent of the flow area of the line which initially ruptured. The criterion is voluntarily applied so as not to substantially increase the severity of the LOCA.

3.6.2.3.2.3 Small Branch Lines - Should one of the small pressurized lines, as defined in Section 3.6.2.3.2.1, fail and result in a LOCA, the piping is restrained or arranged to meet the following criteria in addition to items 1 through 3 of Section 3.6.2.3.2.1:

1. Break propagation is limited to the affected leg; i.e., propagation to the other leg of the affected loop and to the other loops is prevented. Damage to the high-head safety injection (HHSI) lines connected to the other leg of the affected loop or to the other loops is prevented.

---

(1) The containment is here defined as the containment structure liner and penetrations and the steam generator shell, the steam generator steam side instrumentation connections, the steam, feedwater, blowdown, and steam generator drain pipes within the containment structure.

2. Propagation of the break in the affected leg is permitted but must be limited to a total break area of 12.5 in.^{2}. The exception to this case is when the initiating small break is a cold leg HHSI line. Further propagation is not permitted for this case.

3. Propagation of the break to a HHSI line connected to the affected leg is prevented if the line break results in a loss of core cooling capability due to a spilling injection line.

INSERT

3.6.2 3.2.4 Design and Verification of Adequacy of RCL Components and Supports - ~~The methods described below are used in the Westinghouse design and verification of the adequacy of primary RCL components and supports.~~ These methods are used only to determine jet impingement loads on RCL components and supports and are not used for design and checking of walls, RCS barriers, cable trays, etc.

The design basis postulated pipe rupture locations for the RCL piping are determined using the criteria given in Section 3.6.2.1. These design basis ruptures are used as the rupture locations for consideration of jet impingement effects on primary equipment and supports.

A dynamic analysis is used to determine maximum piping displacements at each design basis rupture location. The maximum piping displacements are used to compute the effective rupture flow area at each location. The flow area and rupture orientation is then used to determine the jet flow pattern and to identify any primary components which are potential targets for jet impingement.

The jet thrust at the point of rupture is based on the fluid pressure and temperature conditions occurring during full (100 percent) power operating conditions of the plant. At the point of rupture, the jet force is equal and opposite to the jet thrust. The force of the jet is conservatively assumed to be constant throughout the jet flow distance. The sub-cooled jet is assumed to expand uniformly at a half-angle of 10 degrees, from which the area of the jet at the target and the fraction of the jet intercepted by the target structure can be readily determined.

The shape of the target affects the amount of momentum change in the jet and thus affects the impingement force on the target. The target shape factor is used to account for target shapes which do not deflect the flow 90 degrees away from the jet axis.

The method used to compute the jet impingement load on a target is one of the following:

1. The dynamic effect of jet impingement on the target structure is evaluated by applying a step load whose magnitude is given by:

$$F_j = K_o P_o A_m B^{RS}$$

where:

F_j = Jet impingement load on target

INSERT

Page 3.6-20

The original design basis postulated pipe break locations in the RCL are described in Reference 3.6-1. The primary RCL components and supports design were based on these postulated break locations. A detailed fracture mechanics evaluation, as described in Reference 3.6-14, demonstrates that the probability of rupturing the RCL piping is extremely low under design basis conditions. Therefore, postulated RCL ruptures and the following associated dynamic effects are not included in the design basis: missile generation, pipe whip, break reaction forces, jet impingement forces, decompression waves within the ruptured pipe, and pressurization in cavities, subcompartments and compartments. The dynamic effects from ruptures in Class 1 branch lines and other high energy piping are reviewed to verify that the effects are bounded by the current analyses.

K_o = Dimensionless jet thrust coefficient based on initial fluid conditions in broken loop

P_o = Initial system pressure

A_{mB} = Calculated maximum break flow area

R = Fraction of jet intercepted by target

S = Target shape factor

Discharge flow areas for limited flow area circumferential breaks are obtained from reactor coolant analyses performed to determine the axial and lateral displacements of the broken ends as a function of time; A_{mB} is the maximum break flow area occurring during the transient, and is calculated as the total surface area through which the fluid must pass to emerge from the broken pipe. Using geometrical formulations, this surface area is determined to be a function of the pipe separation (axial and transverse) and the dimensions of the pipe (inside and outside diamter).

If a simplified static analysis is performed instead of a dynamic analysis, the above jet load (F_j) is multiplied by a dynamic load factor. For an equivalent static analysis of the target structure, the jet impingement force is multiplied by a dynamic load factor of 1.2 to 2.0, depending upon the time variance of the jet load. This factor assumes that the target can be represented as essentially a one-degree-of-freedom system, and the impingement force is conservatively applied as a step load.

The calculatoin of the dimensionless jet thrust coefficient and break flow area is discussed in Section 3.6.2.5.

2. The dynamic effect of jet impingement is evaluated by applying the following time-dependent load to the target structure.

$$F_j = KPA_BRS$$

where the system pressure, P, is a function of time; the jet thrust coefficient, K, is evaluated as a function of system pressure and enthalpy; and the break flow area, A_B, is a function of time.

3.6.2.3.3 Types of Pipe Whip Restraints:

3.6.2.3.3.1 Pipe Whip Restraints ~~Other than RCL Restraints~~ - To satisfy varying requirements of available space, permissible pipe deflection, and equipment operability, the restraints are designed as a combination of an energy-absorbing element and a restraint structure suitable for the geometry required to pass the restraint load from the whipping pipe to the main building structure.

The restraint structure is typically a structural steel frame or truss and the energy-absorbing element is usually either stainless steel U-bars or energy-absorbing material as described below:

1. Stainless Steel U-Bar

   This type consists of one or more U-shaped, upset-threaded rods of stainless steel looped around the pipe but not in contact with the pipe to allow unimpeded pipe motion during seismic and thermal movement of the pipe. At rupture, the pipe moves against the U-bars, which absorb the kinetic energy of the pipe motion by yielding plastically. A typical example of a U-bar restraint is shown in Figure 3.6.2-3.

2. Energy Absorbing Material 40

   This type of restraint consists of a crushable, stainless steel, internally honeycomb-shaped element designed to yield plastically under impact of the whipping pipe. A design hot position gap is provided between the pipe and the energy-absorbing material to allow unimpeded pipe motion during seismic and thermal pipe movements. A typical example of an energy-absorbing material restraint is shown in Figure 3.6.2-4.

3. 5-Way Restraint

   A five-way restraint is utilized to protect the main steam isolation valves (MSIVs) and main feedwater isolation valves in the event of a postulated pipe rupture outside the Containment. This restraint is designed so that postulated pipe breaks beyond the five-way restraint will not result in stresses greater than 1.8 S_b being transmitted to the piping between the isolation valve and containment penetration or formation of a plastic hinge between the isolation valve and the restraint.

4. Containment Main Steam Line Restraints 53

   The main steam line restraints inside containment are designed using nonlinear, inelastic methods with allowable ductilities given in Table 3.5-13. The anchorages to the internal structure are designed to the restraint backup structure using standard elastic design methods to ensure sufficient anchorage.

INSERT

3.6.2.3.3.2 Restraints for RCL - ~~Pipe restraint types and locations are discussed in Section 5.4.14. Loading combinations and stress limits are discussed in Section 3.9.1.~~ 45

3.6.2.3.4 Analytical Methods:

3.6.2.3.4.1 Pipe Whip Restraints ~~Other than RCL Restraints~~ - 40 Q11 11

1. Location of Restraints

   a. For purposes of determining pipe hinge length and thus locating the pipe whip restraints, the plastic moment of the pipe is determined in the following manner:

$$M_p = 1.1\, z_p S_y$$

INSERT Page 3.6-21

As discussed in Reference 3.6-14 and paragraph 3.6.2.1.1.1a, RCL ruptures and the associated dynamic effects are not included in the design bases. RCL pipe restraints are no longer required.

1) Stainless Steel U-Bars

$\varepsilon = 0.5\ \varepsilon_\mu$

where:

ε_μ = ultimate uniform strain of stainless steel (strain at ultimate stress).

2) Energy-Absorbing Material 40 Q110.11

$\varepsilon = 0.8\ \varepsilon_\mu$

where:

ε_μ = maximum strain at uniform crushable strength. 49

e. A dynamic increase factor is used for steel which is designed to remain elastic.

INSERT

3.6.2.3.4.2 RCL Restraints - ~~The forces associated with the rupture of reactor piping systems are considered in combination with normal operating loads and earthquake loads for the design of supports and restraints in order to assure the continued integrity of vital components and ECFs. Loading combinations and stress limits are discussed in Section 3.9.1~~.

3.6.2.4 Protective Assembly Design Criteria.

3.6.2.4.1 Jet Impingement Barriers and Shields: Barriers and shields, which may be of either steel or concrete construction, are provided to protect essential equipment, including instrumentation, from the effects of jet impingement resulting from postulated pipe breaks. Barriers differ from shields in that they may also accept the impact of whipping pipes. Barriers and shields include walls, floors, and structures specifically designed to provide protection from postulated pipe breaks. Barrier and shield design is based on the methods of Ref. 3.6-5, Section 3.0, and the elastic-plastic methods for dynamic analysis included in Ref. 3.6-12. Design criteria and loading combinations are in accordance with Sections 3.8.3 and 3.8.4. 49 40

3.6.2.4.2 Auxiliary Guardpipes: The use of guardpipes has been minimized by plant arrangement and routing of high-energy piping. Where they are used, guardpipes are designed to withstand all dynamic and environmental effects of postulated breaks of the enclosed pipe. Auxiliary guardpipes are used only if inservice inspection requirements can be satisfied. Design criteria, loading combinations, and methods of analysis are similar to those for barriers and shields described in Section 3.6.2.4.1.

3.6.2.5 Material To Be Submitted for the Operating License Review. 40 Q10.04

3.6.2.5.1 Piping Systems Other than RCL: Pipe break locations are obtained in accordance with the criteria of Section 3.6.2.1.

Figure 3.6.1-1 identifies the break locations in high-energy piping. The preliminary stress results utilized to determine the break types and locations

INSERT Page 3.6-23

As discussed in Reference 3.6-14 and paragraph 3.6.2.1.1.1a, RCL ruptures and the associated dynamic effects are not included in the design bases. RCL pipe restraints are no longer required.

are given in Table 3.6.2-1. The final summary stress analysis results (as-built condition) will be provided upon their completion. Associated stress nodes are shown in Figure 3.6.1-1. High-energy pipe break effects analysis for a selected portion of the plant are discussed in Appendix 3.6.B. Appendix 3.6.B also references the appropriate sheet of applicable high-energy lines shown in Figure 3.6.1-1. 53

Moderate-energy piping crack locations are defined in Section 3.6.2.1.2.4. Evaluation of the effects of moderate-energy cracks is discussed in Section 3.4.3 and 3.4.4. 53

The augmented inservice inspection plan is discussed in Section 6.6.

Pipe whip restraints are designed in accordance with Section 3.6.2.3. Pipe whip restraint location and orientation for each high-energy break are shown in Figure 3.6.1-1. Barriers and shields are designed in accordance with the criteria of Section 3.6.2.4. Jet thrust and impingement forces were determined in accordance with Ref. 3.6-5. Reaction forces for each pipe whip restraint are presented in Figure 3.6.1-1.

3.6.2.5.2 Reactor Coolant Loop:

1. INSERT ~~Table 3.6.2-3 and Figure 3.6.2-2 identify the design basis break locations~~ and orientations for the RCLs.

The primary and secondary stress intensity ranges and the fatigue cumulative usage factors at the design break locations specified in Ref. 3.6-1 are given in Table 3.6.2-4 for a reference fatigue analysis. The reference analysis has been prepared to be applicable for many plants. It uses seismic umbrella moments higher than those used in Ref. 3.6-1: In Ref. 3.6-1, one location was at the limit, but in the Reference analysis the primary stress is equal to the limits of equation (9) in NB-3650 (Section III of the ASME B&PV Code) at many locations in the system. Therefore, the results of the reference analysis may differ slightly from Ref. 3.6-1, but the philosophy and conclusions of Ref. 3.6-6 are valid. Consistent with Ref. 3.6-1, there are no other locations in the model used in reference fatigue analysis where the stress intensity ranges and/or usage factors exceed the criteria of 2.4 S_m and 0.2, respectively. 40 Q10.04

Actual plant moments for STP are also given in Table 3.6.2-4 at the design basis break locations so that the reference fatigue analysis can be shown to be applicable for this plant. Since actual plant moments are shown to be no greater than those used in the reference analysis, it follows that the stress intensity ranges and usage factors for STP are less than those for comparable locations in the reference model. Thus, it is shown that there are no locations other than those identified in Ref. 3.6-1 where the stress intensity ranges and/or usage factors for STP exceed the criteria of 2.4 S_m and 0.2, respectively. Thus, the applicability of Ref. 3.6-1 to STP is verified.

2. Pipe whip restraints RCL ~~associated with the main RCL~~ are NOT REQUIRED. ~~described in Section 5.4.14. Loading combinations and stress limits are discussed in Section 3.9.1~~.

INSERT Page 3.6-24

The original design basis postulated pipe break locations in the RCL are described in Reference 3.6-1. A detailed fracture mechanics evaluation, as described in Reference 3.6-14, demonstrates that the probability of rupturing the RCL piping is extremely low under design basis conditions. Therefore, postulated RCL ruptures and the associated dynamic effects are not included in the design basis.

DELETED

3. ~~As discussed in response to Q210.20N, STP has submitted a request to the NRC for exemption to General Design Criterion 4 in order to delete postulation of RCL pipe breaks based on the "Leak Before Break" analyses. Therefore, jet impingement loads associated with the rupture of the main RCL piping are no longer considered in the plant design. However, primary component supports have been designed to withstand the structural loads associated with non-mechanistic reactor coolant pipe breaks at the locations described in Reference 3.6-1.~~ 53

4. Design loading combinations and applicable criteria for ASME Class 1 components and supports are provided in Section 3.9. Pipe rupture loads include not only the jet thrust forces acting on the piping but also jet impingement loads on the primary equipment supports. 40 Q10.04

REFERENCES

Section 3.6:

3.6-1 "Pipe Breaks for the LOCA Analysis of the Westinghouse Primary Coolant Loop," WCAP-8082-P-A, (proprietary) and WCAP-8172-A (nonproprietary), January 1975.

3.6-2 "Subcompartment Pressure Analyses," BN-TOP-4, Rev. 1, Bechtel Power Corporation, October 1977.

3.6-3 USNRC BTP MEB 3-1 Postulated Break and Leakage Locations in Fluid System Piping Outside Containment. Branch Technical Position attached to SRP 3.6.2, November 24, 1975.

3.6-4 American Society of Mechanical Engineers, Boiler and Pressure Vessel Code, Section III, 1974 and 1975 Winter Addenda and other Addenda as appropriate.

3.6-5 "Design for Pipe Break Effects," Bechtel Power Corporation, BN-TOP-2, Revision 2, May 1974. 40

3.6-6 Moody, F. J., "Fluid Reaction and Impingement Loads." Paper presented at the ASCE Specialty Conference, Chicago, December 1973.

3.6-7 "MULTIFLEX, A FORTRAN-IV Computer Program for Analyzing Thermal-Hydraulic-Structure System Dynamics," WCAP-8708 (proprietary), February 1976, and WCAP-8709 (nonproprietary), February 1976.

3.6-8 "Documentation of Selected Westinghouse Structural Analysis Computer Codes," WCAP-8252, Revision 1, May 1977.

3.6-9 ANSI/ANS - 58.2, "American National Standard Design Basis for Protection of Nuclear Power Plants Against Effects of Postulated Pipe Rupture," December, 1980.

3.6-10 Bordelon, F.M., "A Comprehensive Space-Time Dependent Analysis of Loss of Coolant (SATAN IV Digital Code)" WCAP-7263, Proprietary (August 1971) and WCAP-7750, Non-Proprietary (August 1971) 45

3.6-11 "PIPERUP" - Pipe Rupture Analysis Program, ME351, June 24, 1982

3.6-12 Biggs, J.M., Introduction to Structural Dynamics, McGraw-Hill Book Company, New York, 1964 49

INSERT 1&2

INSERT

Page 3.6-26

INSERT 1

3.6-13 NUREG/CR 2913, "Two Phase Jet Loads", dated January, 1983

INSERT 2

3.6-14 "Technical Bases for Eliminating Large Primary Loop Pipe Ruptures as the Structural Design Basis for the South Texas Project", WCAP-10559, Proprietary (May 1984) and WCAP-10560, Non-Proprietary (May 1984)

TABLE 3.6.2-3

POSTULATED BREAK LOCATIONS FOR THE LOCA ANALYSIS OF THE PRIMARY COOLANT LOOP*

DELETED

Location of Postulated Rupture	Type	Break Opening Area**
1. Reactor Vessel Inlet Nozzle	Guillotine	Effective Cross-Sectional Flow Area of the Loop Pipe
2. Reactor Vessel Outlet Nozzle	Guillotine	Effective Cross-Sectional Flow Area of the Loop Pipe
3. Steam-Generator Inlet Nozzle	Guillotine	Cross-Sectional Flow Area of the Loop Pipe
4. Steam-Generator Outlet Nozzle	Guillotine	Cross-Sectional Flow Area of the Loop Pipe
5. Reactor Coolant Pump Inlet Nozzle	Guillotine	Cross-Sectional Flow Area of the Loop Pipe
6. Reactor Coolant Pump Outlet Nozzle	Guillotine	Cross-Sectional Flow Area of the Loop Pipe
7. 50° Elbow on the Intrados	Longitudinal	Cross-Sectional Flow Area of the Loop Pipe
8. Loop Closure Weld in Crossover Leg	Guillotine	Cross-Sectional Flow Area of the Loop Pipe

40

* Refer to Figure 3.6.2-2 for location of postulated breaks in Reactor Coolant Loop.

** Less break opening area will be used if justified by analysis, experiments, or considerations of physical restraints such as concrete walls or structural steel.

ATTACHMENT
ST-HL-AE-1744
PAGE 42 OF 127

TABLE 3.6.2-3 (Continued)

POSTULATED BREAK LOCATIONS FOR THE LOCA ANALYSIS OF THE PRIMARY COOLANT LOOP*

Location of Postulated Rupture	Type	Break Opening Area**
9. Residual Heat Removal (RHR) Line/Primary Coolant Loop Connection	Guillotine (Viewed from the RHR Line)	Cross-Sectional Flow Area of the RHR Line
10. Accumulator Line/Primary Coolant Loop Connection	Guillotine (Viewed from the Accumulator Line)	Cross-Sectional Flow Area of the Accumulator Line
11. Pressurizer Surge Line/Primary Coolant Loop Connection	Guillotine (Viewed from the Pressurizer Surge Line)	Cross-Sectional Flow Area of the Pressurizer Surge Line

DELETED

40

* Refer to Figure 3.6.2-2 for location of postulated breaks in Reactor Coolant Loop.

** Less break opening area will be used if justified by analysis, experiments, or considerations of physical restraints such as concrete walls or structural steel.

TABLE 3.6.2-4

PRIMARY PLUS SECONDARY STRESS INTENSITY RANGES AND CUMULATIVE USAGE FACTORS AT DESIGN BREAK LOCATIONS IN REACTOR COOLANT LOOP

Reference Fatigue Analysis			Loadings Used in Reference Analysis		STP Loadings	
Cumulative Usage Factor(2)	SI(psi)(2)	SI/S(2)(3)	M_1 (in-lb) OBE Moments(2)	M_1 (in-lb) Thermal Expansion Moments(2)	M_1 (in-lb) OBE Moments(2)	M_1 (in-lb) Thermal Expansion Moments(2)
Node no.(1)						
404						
413						
415						
438						
459						
468						
484						

(Later)

DELETED

40

1. The loop closure weld, residual heat removal line connection, accumulator line connection, and surge line connection locations have not been included in this table since selection of these locations for postulated breaks is independent of detailed stress and fatigue analyses. Also, node numbers are defined in reference.

2. Information to be provided at completion of RCL analysis.

3. SI = maximum primary plus secondary stress intensity range computed using equation 10 of NB-3653 of the ASME Code, Section III.

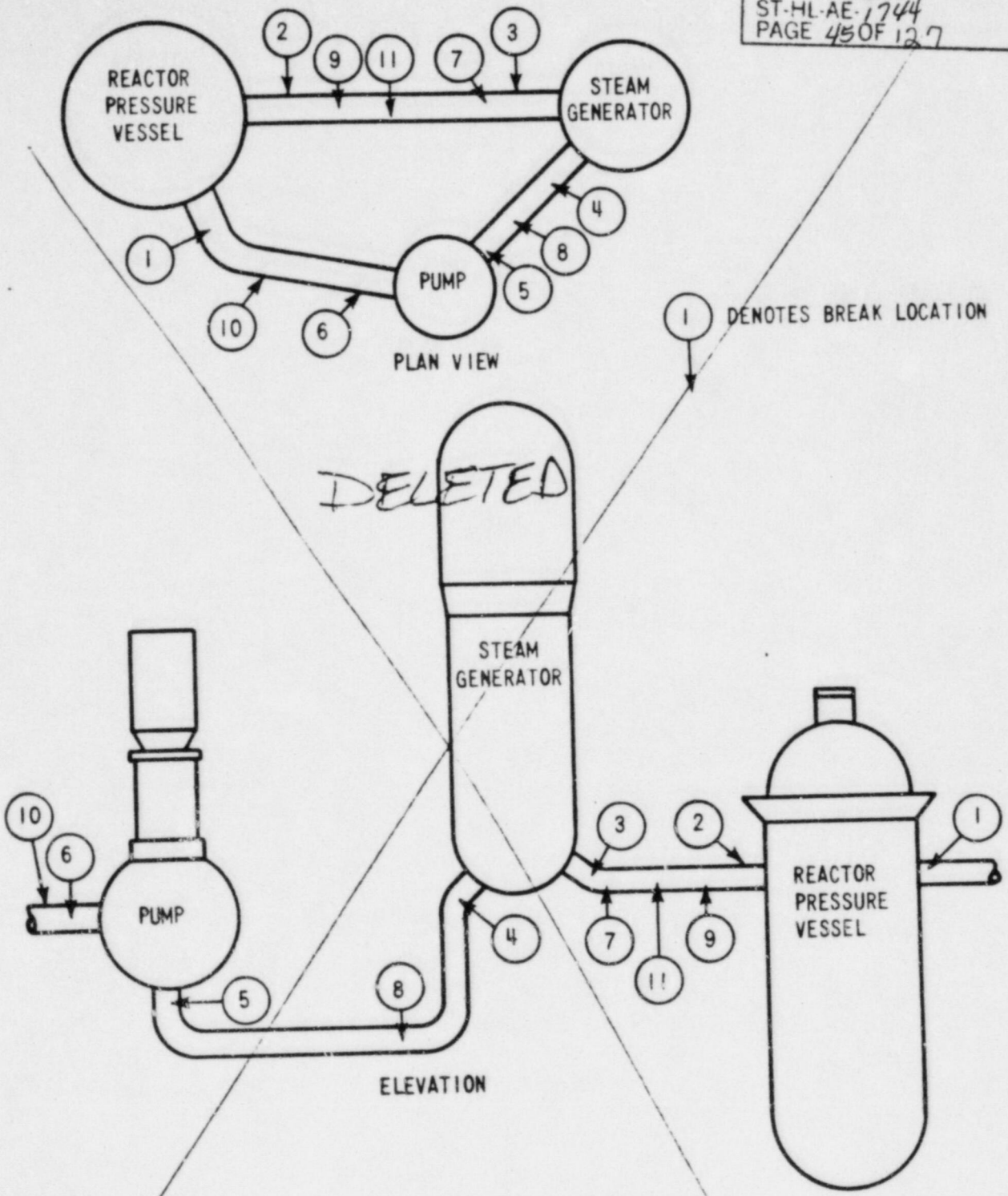

SOUTH TEXAS PROJECT UNITS 1 & 2

Location of Postulated Breaks in Main Reactor Coolant Loop

Figure 3.6.2-2

Amendment 10

3.8.3.1.6 Interior Fill Slab: The interior fill slab is 24 in. thick and is placed on top of the foundation mat liner plate. This slab provides protection for the foundation mat liner from any missiles generated in the primary loop compartments and from the effects of temperatures induced by a DBA. Reinforcement is provided to resist temperature and shrinkage forces.

3.8.3.1.7 Polar Crane: A polar crane consisting of a 417-ton (unit 1)/ 500-ton (unit 2) main hoist, and a 15-ton auxiliary hoist supported on twin bridge girders is provided inside the RCB for use during construction, maintenance, and repair operations. 40

The crane moves on a circular rail, which in turn is supported on girders. 40
Brackets anchored on the cylindrical wall through the liner support these girders (see Figure 3.8.1-6). The polar crane is anchored to the rails with 40
mechanical guides to prevent its derailment when subjected to earthquake forces.

Girders and brackets supporting the polar crane are designed to the same loading combinations as the crane itself. The crane is assumed to be loaded with its maximum operating load of 352 tons under both OBE and SSE. 40

3.8.3.1.8 Reactor Coolant System Component Supports: The support structures are of welded and/or bolted steel construction of linear and plate types. These supports are tension and compression struts or beams and columns. The supports permit unrestrained thermal growth of the supported system but restrain vertical, lateral, and rotational movement resulting from seismic and pipe-break loadings. This is accomplished using pin-ended columns for vertical supports and girders, hydraulic snubbers, and tie rods for lateral supports.

Shimming and grouting enable adjustment of all support elements during erection to achieve correct fitup and alignment. Final setting of equipment is achieved by shimming and grouting at the building structure/support interface.

3.8.3.1.8.1 Reactor Vessel Supports - The reactor vessel supports consist of individual air-cooled, plate-type support pads as shown on Figure 3.8.3-1. One pad is placed under four of the vessel nozzles and is supported by an embedded plate-type structure which distributes loads to the primary shield wall. Two additional embedded plate type supports transfer lateral 40
forces to the concrete.

In addition to transferring loads from the vessel to the supporting structure, the pads also provide for the passage for cooling through the support to prevent excessive primary shield wall concrete temperatures. 40

INSERT

~~The vertical upward force on the reactor vessel due to cavity pressurization is resisted by (1) the deadweight of the vessel and internals and (2) the restraint provided by the attached primary coolant loop piping. The cavity pressurization forces acting on the vessel are restricted to acceptable levels by judicious design of the flow geometry of the primary shield wall annulus.~~
The seal plates located at the upper reactor cavity are used ~~to limit the unbalanced pressure on the reactor vessel resulting from a circumferential break of the primary loop piping as well as~~ to provide shielding from neutron 40
and gamma streaming.

INSERT Page 3.8-51

The original design basis postulated pipe break locations in the RCL are described in Reference 3.6-1. The primary RCL components and supports design were based on these postulated break locations. A detailed fracture mechanics evaluation, as described in Reference 3.6-14, demonstrates that the probability of rupturing the RCL piping is extremely low under design basis conditions. Therefore, postulated RCL ruptures and the following associated dynamic effects are not included in the design basis: missile generation, pipe whip, break reaction forces, jet impingement forces, decompression waves within the ruptured pipe, and pressurization in cavities, subcompartments and compartments. The dynamic effects from ruptures in Class 1 branch lines and other high energy piping are reviewed to verify that the effects are bounded by the current analyses.

The blowdown analysis which determines the adequacy of the reactor vessel supports is comprehensive in that it includes ~~not only the cavity pressure forces but also~~ the effects of the hydraulic forces in the loop piping.

~~Therefore, due to the geometry of the shield wall and the characteristics of the postulated pipe break, the design of the vessel supports will not incorporate uplift restraints~~.

3.8.3.1.8.2 Steam Generator - The vertical supports for the SG (see Figure 3.8.3-3) consist of four vertical columns bolted at top to the vendor-supplied columns and at bottom to the floor slab. The lower lateral supports consist of supports attached to the walls of each SG subcompartment and bolted to the vendor-supplied beams. The upper lateral supports consist of supports attached to the walls of each SG subcompartment and bolted to the vendor-supplied ring girder around the generator shell connected to hydraulic snubbers and supported by struts on the compartment walls. Loads are transferred from the equipment to the ring girder by means of a number of bumper blocks between the girder and generator shell. 40 40

3.8.3.1.8.3 Reactor Coolant Pump - The RCP vertical supports consist of three vertical columns (see Figure 3.8.3-4) bolted at top to the vendor supplied columns and at bottom to the floor slab. The lateral supports consist of three supports attached to the compartment walls and bolted to the vendor-supplied tie-rod supports. 40

3.8.3.1.8.4 Pressurizer - The pressurizer (see Figure 3.8.3-5) is supported at its base by bolting the flange ring to the supporting floor slab. In addition, four lateral supports are provided which are attached to the compartment walls and bolted to the vendor-supplied supports which bear against the vessel lugs. 40 40

3.8.3.2 Applicable Codes, Standards and Specifications.

3.8.3.2.1 Codes, Specifications and Standards: The following codes, standards, and specifications are used as a basis for the design, fabrication, construction, testing, and surveillance of the Containment internal structure. Different issue dates of these documents may be used provided they meet the minimum requirements stated herein. 40

1. American Concrete Institute

ACI 211.1-70 - "Recommended Practice for Selecting Proportions for Normal Weight Concrete"

ACI 214-65 -"Recommended Practice for Evaluation of Compression Test Results of Field Concrete" 29

ACI 304-73 - "Recommended Practice for Measuring, Mining, Transporting and Placing Concrete"

ACI 305-72 - "Recommended Practice for Hot-Weather Concreting"

ACI 306-72 - "Recommended Practice for Cold-Weather Concreting"

The analysis results are then used to design the secondary shield wall utilizing the BSAP-POST OPTCON module. Concrete is assumed cracked whenever tensile stresses are present. 40

3.8.3.4.1.4 Other Concrete Internal Structures - Miscellaneous equipment, compartment slabs, and walls are analyzed using conventional beam/slab design assumptions and equations. Loadings for these structures consist of dead, live, seismic, pipe rupture, jet impingement, and subcompartment differential pressures where applicable. 40

3.8.3.4.1.5 Dynamic Analysis Procedures - Earthquake forces on the concrete internal structures are determined by a dynamic analysis in accordance with the techniques described in Section 3.7. The dynamic loads thus determined are then applied as static loads on the concrete structures, and a static analysis using the procedures described above is performed.

The impact effect of the pipe rupture on the structural system is considered by either a conservative energy balance method or by an exact nonlinear time-history analysis. The structural system allowable ductility factors are listed in Table 3.5-13. 40

For impulse effects such as jet impingement forces, the structural system is allowed to respond inelastically with allowable ductility factors equal to the values listed in Table 3.5-13. 40 49

Jet impingement loads due to main coolant loop pipe breaks will be conservatively considered as a step function whose magnitude is obtained in accordance with the methods described in Section 3.6.2. Dynamic load factors of 2.0 (or less if justified) are being used to account for the dynamic nature of the load. 40

3.8.3.4.2 Analysis of Steel Internal Structures: The steel internal structures are analyzed for all combinations of both service loads and nonservice loads as described in Table 3.8.3-2.

1. Static Analysis Procedures

   The steel internal structures are analyzed for static loads as appropriate either by conventional methods which are well documented in applicable textbooks, or by the Bechtel Structural Analysis Program (BSAP). (See Appendix 3.8.A for a detailed description of the computer programs.) 32

2. Dynamic Analysis Procedures

   Modal response spectra (MRS) analyses of the integrated floor systems were used for the analysis of seismic loads for design of beams and connections for the internal structural steel. 32

3. Dynamic effect of pipe rupture is discussed in Section 3.8.3.4.1.5.

3.8.3.4.3 Design and Analysis Procedure for RCS Supports: The linear support systems for components for the SGs, RCPs, and pressurizers are designed by elastic method of analysis. They are analyzed for and designed to

2. The small steam line break results in immediate reactor trip and ECCS actuation. | 41

3. A large shutdown margin, coupled with no feedback or decay heat, prevents heat generation during the transient.

4. The ECCS operates at a design capacity and repressurizes the RCS within a relatively short time.

3.9.1.1.8.3 Complete Loss of Flow - This accident involves a complete loss of flow from full power resulting from simultaneous loss of power to all RCPs. The consequences of this incident are a reactor trip and turbine trip on undervoltage followed by automatic opening of the Steam Dump System. For design purposes this transient is assumed to occur five times during the 40-year life of the plant.

3.9.1.1.9 Faulted Conditions: The following primary system transients have been considered faulted conditions. Each of the following accidents has been evaluated for one occurrence:

1. Reactor coolant loop branch pipe break ~~(large LOCA)~~

2. Large steam line break

3. FW line break

4. RCP locked rotor

5. Control rod ejection

6. SG tube rupture

7. Safe Shutdown Earthquake (SSE) Loop Branch

→ INSERT

3.9.1.1.9.1 Reactor Coolant loop branch Pipe Break ~~(large LOCA)~~ - Following rupture of a reactor coolant pipe resulting in a ~~large~~ loss of coolant, the primary system pressure decreases, causing the primary system temperature to decrease. Because of the rapid blowdown of coolant from the system and the comparatively large heat capacity of the metal sections of the components, it is likely that the metal will still be at or near the operating temperature by the end of blowdown. It is conservatively assumed that the ECCS is actuated to introduce water at a minimum temperature of 32°F into the RCS. The SI signal also results in reactor and turbine trips. | 41

3.9.1.1.9.2 Large Steam Line Break - This transient is based on a complete severance of the largest steam line. The following conservative assumptions were made:

1. The reactor is initially in a hot, zero-power condition.

2. The large steam line break results in immediate reactor trip and in actuation of the SIS. | 2 | 41

INSERT

Page 3.9-12

The original design basis postulated pipe break locations in the RCL are described in Reference 3.6-1. The primary RCL components and support designs were based on these postulated break locations. A detailed fracture mechanics evaluation, as described in Reference 3.6-14, demonstrates that the probability of rupturing the RCL piping is extremely low under design basis conditions. Therefore, postulated RCL ruptures and the following associated dynamic effects are not included in the design basis: missile generation, pipe whip, break reaction forces, jet impingement forces, decompression waves within the ruptured pipe, and pressurization in cavities, subcompartments and compartments.

3.9.1.1.9.3 Feedwater Line Break - This accident involves a double-ended rupture of the main FW piping from full power, resulting in the rapid blowdown of one SG and the termination of main FW flow to the others. The blowdown is completed in approximately 43 seconds. Conditions were conservatively chosen to give the most severe primary side and secondary side transients. All AFW flow that is delivered to the faulted SG exists at the break. The incident is terminated when the operator manually terminates flow to the faulted loop. |54|5

3.9.1.1.9.4 Reactor Coolant Pump Locked Rotor - This accident is based on the instantaneous seizure of an RCP with the plant operating at full power. The locked rotor can occur in any loop. Reactor trip occurs almost immediately, as the result of low coolant flow in the affected loop.

3.9.1.1.9.5 Control Rod Ejection - This accident is based on the single most reactive control rod's being instantaneously ejected from the core. This reactivity insertion in a particular region of the core causes a severe pressure increase in the RCS so that the pressurizer safety valves lift and also causes a more severe temperature transient in the loop associated with the affected region than in the other loops. For conservatism, the analysis is based on the reactivity insertion and does not include the mitigating effects (on the pressure transient) of coolant blowdown through the hole in the vessel head vacated by the ejected rod.

3.9.1.1.9.6 Steam Generator Tube Rupture - This accident postulates the double-ended rupture of an SG tube resulting in a decrease in pressurizer level and reactor coolant pressure. Reactor trip will occur due to the resulting SI signal. In addition, SI actuation automatically isolates the FW lines, by tripping all FW pumps and closing the FW isolation valves. When this accident occurs, some of the reactor coolant blows down into the affected SG, causing the shell side level to rise. The primary system pressure is reduced below the secondary safety valve setting. Subsequent recovery procedures call for isolation of the steam line leading from the affected SG. This accident will result in a transient which is no more severe than that associated with a reactor trip from full power. Therefore it requires no special treatment, insofar as fatigue evaluation is concerned, and no specific number of occurrences is postulated. |41

3.9.1.1.9.7 Safe Shutdown Earthquake: The mechanical dynamic or static equivalent loads due to the vibratory motion of the SSE have been considered on a component basis.

3.9.1.1.10 Test Conditions: The following primary system transients under test conditions are discussed:

1. Primary side hydrostatic test

2. Secondary side hydrostatic test

3.9.1.1.10.1 Primary Side Hydrostatic Test - The pressure tests include both shop and field hydrostatic tests which occur as a result of component or system testing. This hydro test has been performed at a water temperature which is compatible with reactor vessel material ductility requirements and a test pressure of 3,107 psig (1.25 times design pressure). In this test, the

No Change

RCS has been pressurized to 3,107 psig coincident with SG secondary side pressure of 0 psig. The RCS is designed for 10 cycles of these hydrostatic tests, which are performed prior to plant start-up. The number of cycles is independent of other operating transients.

Additional hydrostatic tests will be performed to meet the inservice inspection requirements of ASME Section XI. A total of four such tests is expected. The increase in the fatigue usage factor caused by these tests is easily covered by the conservative number (200) of primary side leakage tests that are considered for design. 41

3.9.1.1.10.2 Secondary Side Hydrostatic Test - The secondary side of the SG is pressurized to 1.25 design pressure with a minimum water temperature of 120°F coincident with the primary side at 0 psig.

For design purposes it is assumed that the SG will experience 10 cycles of this test.

These tests may be performed either prior to plant startup, or subsequently, following shutdown for major repairs, or both. The number of cycles is therefore independent of other operating transients.

3.9.1.2 Computer Programs Used in Analyses. 41

3.9.1.2.1 NSSS Systems and Components: For the NSSS scope of study, the following Westinghouse Electric Corporation-developed computer programs have been used in dynamic and static analyses to determine mechanical loads, stresses, and deformations of seismic Category I components and equipment. These are described and verified in References 3.9-1 and 3.9-16. 3.9-7 5

1. WESTDYN-7 - Static and dynamic analysis of redundant piping systems

2. FIXFM-3 - Time-history response of three-dimensional structures

3. WESDYN-2 - Piping system stress analysis from-time history displacement data - THESE CAPABILITIES HAVE BEEN INCORPORATED INTO WESDYN

4. STHRUST - Hydraulic loads on loop components from blowdown information

5. WESAN - Reactor coolant loop equipment support structures analysis and evaluation

6. WECAN - Finite element structural analysis

7. ICES STRUDL-II - Linear elastic frame analysis of RCS support structure 5 Q110.1

8. MULTIFLEX - THERMAL-hydraulic STRUCTURE SYSTEM DYNAMICS

3.9.1.2.2 BOP Systems and Components: For the BOP scope of study, the following public domain and/or Bechtel Power Corporation developed computer programs have been used.

3.9.1.2.2.1 ME101 Program - ME101 is a finite element computer program which performs linear elastic analysis of piping systems using standard beam theory techniques. The input data format is specifically designed for pipe stress engineering and the English system of units is used. 41

3.9.1.2.2.21 CE035-BASEPLATE II - A description of the program is provided in Appendix 3.8.A. Documentation of the verification is maintained in the Bechtel Information Services Library. 53

3.9.1.2.2.22 CE413-WELD - The WELD program is used to size fillet welds for connections of wide flanges, tubes, pipes, angles, and channel. The program computes weld sizes based on AISC, NF, B31.1 and minimum weld for minimum heat transfer. The program is verified by hand calculations. 53 51

3.9.1.2.2.23 RELAP5/REPIPE - Thermal-Hydraulic Transient Analysis - RELAP5/REPIPE is used for analysis of fluid transients in the piping system equations of conservation of mass, energy, and momentum are solved in one dimension for steam and/or water flow. The effects of noncondensible gas on steam/liquid flow are considered in the equations. REPIPE is the post processor which gives the forcing function for use in ME101. The program verification report is on file with Bechtel Data Processing. 53

3.9.1.2.2.24 ME150 FAPPS - FAPPS (Frame Analysis Program for Pipe Supports) is an inter-active computer program for the analysis and design of pipe supports. It optimizes member sizes, welds, baseplates and embedments based upon various user-specified design limitations. The program allows load combination by algebraic, absolute, or SRSS methods. The program has been verified against Bechtel Standard Structural Analysis Program CE901 (STRUDL) and hand calculations. 53

3.9.1.2.2.25 ME035 BASEPLATE - ME035 is a finite element-computer program for the analysis and design of baseplate. The program has important features like automatic mesh generation, availability of standard attachments, multiple plate thicknesses, and different printout options. The program has been verified against CDC Baseplate II (Bechtel CE035). 53

3.9.1.2.2.26 ME225 ANCHORPLATE ME225 is used to analyze and design interface anchors between non-seismic piping and seismically designed piping. Program has been verified by manual calculations. 53

3.9.1.3 Experimental Stress Analysis. Experimental stress analysis method has not been used for any seismic Category I ASME B&PV Code, Section III mechanical system or equipment. 50 0210 .39N

3.9.1.4 Considerations for the Evaluation of the Faulted Conditions.

3.9.1.4.1 Stress Criteria for Class 1 Components and Supports in Nuclear Steam Supply System Scope: The structural stress analyses performed on the NSSS Components and Components Supports consider the loadings shown in Table 3.9-2.1. These loads result from thermal expansion, pressure, weight, OBE, SSE, ~~design basis LOCA~~ RCL branch pipe break, and plant operational thermal and pressure transients.

3.9.1.4.2 Analysis of the Reactor Coolant Loop and Supports: The loads used in the analysis of the reactor coolant loop piping are described in detail below:

1. Pressure

Pressure loading has been identified as either membrane design pressure or general operating pressure, depending upon its application. The membrane design pressure is used in connection with the longitudinal pressure stress and minimum wall thickness calculations in accordance with the ASME B&PV Code.

The term "operating pressure" has been used in connection with determination of the system deflections and support forces. The steady-state operating hydraulic forces based on the system initial pressure are applied as general operating pressure loads to the reactor coolant loop model at change in direction or flow area.

2. Weight

A deadweight analysis has been performed to meet code requirements by applying a 1.0g load downward on the complete piping system. The piping is assigned a distributed mass or weight as a function of its properties. This method provides a distributed loading to the piping system as a function of the weight of the pipe and contained fluid during normal operating conditions.

3. Seismic

The forcing functions for the reactor coolant loop seismic piping analyses have been derived from dynamic response analyses of the Reactor Containment Building (RCB) subjected to seismic ground motion. Input is in the form of floor response spectrum curves at various elevations within the RCB.

For the OBE and SSE seismic analyses, 2 and 4 percent critical damping, respectively, have been used in the reactor coolant loop/supports system analysis.

In the response spectrum method of analysis, the total response loading obtained from the seismic analysis consists of two parts: the inertia response loading of the piping system and the differential anchor movements loading. Two sets of seismic moments are required to perform an ASME Code analysis. The first set includes only the moments resulting from inertia effects, and these moments are used in the resultant moment, M_i, value for Equations 9 and 13 of NB-3650. The second set includes the moments resulting from seismic anchor motions and is used in Equations 10 and 11 of NB-3650. Differential anchor movement is discussed in Section 3.7.

4. Loss-of-Coolant Accident

Blowdown loads have been developed in the ~~broken and unbroken~~ RCL branch reactor coolant loops as a result of transient flow and pressure fluctuations following a postulated pipe break ~~in one of the reactor coolant loops~~. Structural consideration of dynamic effects of postulated pipe break requires postulation of a finite number of break locations. Postulated pipe break locations are given in Section 3.6.

~~broken-loop and unbroken-loop~~ time-history dynamic analyses have been performed for these postulated break cases. Hydraulic models have been used to generate time-dependent hydraulic forcing functions used in the analysis of the reactor coolant loop for each break case. For a further description of the hydraulic forcing functions, refer to Section 3.6. |41

5. Transients

The ASME B&PV Code requires satisfaction of certain requirements relative to operating transient conditions. Operating transients are tabulated in Section 3.9.1.1.

The vertical thermal growth of the reactor pressure vessel (RPV) nozzle centerlines has been considered in the thermal analysis to account for equipment nozzle displacements as an external movement.

The hot moduli of elasticity, E, the coefficient of thermal expansion at the metal temperature, α, the external movements transmitted to the piping due to vessel growth, and the temperature rise above the ambient temperature, ΔT, define the required input data to perform the flexibility analysis for thermal expansion.

To provide the necessary high degree of integrity for the RCS, the transient conditions selected for fatigue evaluation are based on conservative estimates of the magnitude and anticipated frequency of occurrence of the temperature and pressure transients resulting from various plant operation conditions.

3.9.1.4.3 Reactor Coolant Loop Models and Methods: The analytical methods used in obtaining the solution consist of the transfer matrix method and stiffness matrix formulation for the static structural analysis, the response spectra method for seismic dynamic analysis, and time-history integration method for the LOCA dynamic analysis.

The integrated reactor coolant/loop supports system model is the basic system model used to compute loadings on components, component supports, and piping. The system model includes the stiffness and mass characteristics of the reactor coolant loop piping and components, the stiffness of supports, AND the stiffness of auxiliary line piping which affects the system~~, and the stiffness of piping restraints~~. The deflection solution of the entire system is obtained for the various loading cases from which the internal member forces and piping stresses are calculated.

1. Status

The reactor coolant loop/supports system model, constructed for the WESTDYNE computer program, is represented by an ordered set of data which numerically describes the physical system. Figure 3.9-6 shows an isometric line schematic of this mathematical model. The SG and RCP vertical and lateral support members are described in Section 5.4.14.

The spatial geometric description of the reactor coolant loop model is based upon the reactor coolant loop piping layout and equipment drawings. The node point coordinates and incremental length of the members are determined from these drawings. Geometrical properties of the piping and elbows, along with the modulus of elasticity, E, the coefficient of thermal expansion, α, the average temperature change from ambient temperature, ΔT, and the weight per unit length, are specified for each element. The primary equipment supports have been represented by stiffness matrices which define restraint characteristics of the supports. Due to the symmetry of the static loadings, the RPV centerline has been represented by a fixed boundary in the system mathematical model. The vertical thermal growth of the RPV nozzle centerline has been considered in the construction of the model.

The model is made up of a number of sections, each having an overall transfer relationship formed from its group of elements. The linear elastic properties of the section have been used to define the stiffness matrix for the section. Using the transfer relationship for a section, the load required to suppress all deflections at the ends of the section arising from the thermal and boundary forces for the section have been obtained. These loads have been incorporated into the overall load vector.

After all the sections have been defined in this matter, the overall stiffness matrix and associated load vector to suppress the deflection of all the network points are determined. By inverting the stiffness matrix, the flexibility matrix is determined. The flexibility matrix is multiplied by the negative of the load vector to determine the network point deflections due to the thermal and boundary force effects. Using the general transfer relationship, the deflections and internal forces are then determined at all node points in the system.

The static solutions for deadweight, thermal, and general pressure loading conditions are obtained by using the WESTDYNE computer program. The derivation of the hydraulic loads for the LOCA analysis of the loop is covered in Section 3.6.2.

2. Seismic

The model used in the static analysis has been modified for the dynamic analysis by including the mass characteristics of the piping and equipment. The effect of the equipment motion on the reactor coolant loop/supports system is obtained by modeling the mass and the stiffness characteristics of the equipment in the overall system model. 41

The SG has been typically represented by four discrete masses. The lower mass is located at the elevation of the lower support attachment point. The second mass has been located at the SG upper support elevation, the third mass has been located at the center of the upper shell, and the fourth mass is located at the top of the steam generator. 41

The RCP has been typically represented by a two-discrete-mass model. The lower mass is located at the intersection of the centerlines of the pump

suction and discharge nozzles. The upper mass is located near the center of gravity of the motor.

The RPV and core internals have been typically represented by approximately 10 discrete masses. The masses are lumped at various locations along the length of the vessel and along the length of the representation of the core internals.

The component lateral supports are inactive during plant heatup and cooldown and normal plant operating conditions. However, these restraints become active when the plant is at power and under the rapid motions of the reactor coolant loop components that occur from the dynamic loadings, and are represented by stiffness matrices and/or individual tension or compression spring members in the dynamic model. The analyses have been performed at the full-power condition. | 41

The response spectra method employs the lumped-mass technique, linear elastic properties, and the principle of modal superposition. The floor response spectra have been applied along both horizontal axes and the vertical axis simultaneously.

From the mathematical description of the system, the overall stiffness matrix, K, has been developed from the individual element stiffness matrices using the transfer matrix method. After deleting the rows and columns representing rigid restraints, the stiffness matrix has been revised to obtain a reduced stiffness matrix, K_R, associated with mass degrees of freedom only. From the mass matrix and the reduced stiffness matrix, the natural frequencies and the normal modes are determined.

The modal participation factor matrix is computed and combined with the appropriate response spectra value to give the modal amplitude for each mode. The total modal amplitude has been obtained by taking the square root of the sum of the squares of the contributions for each direction.

The modal amplitudes are then converted to displacements in the global coordinate system and applied to the corresponding mass point. From these data, the forces, moments, deflections, rotations, support reactions, and piping stresses have been calculated for all significant modes.

The total seismic response is computed by combining the contributions of the significant modes as described in Section 3.7. | 41

3. Loss-of-Coolant Accident

The mathematical model used in the static analyses has been modified for the LOCA analyses by including ~~to represent the sovereance of the reactor coolant loop piping at the postulated break location. Modifications include addition of~~ the mass characteristics of the RCL primary piping and equipment. ~~To obtain the proper dynamic solution, two masses, each containing six dynamic degrees of freedom and located on each side of the break, are included in the mathematical model.~~ The natural frequencies and eigenvectors are determined from this ~~broken-loop~~ model.

The time-history hydraulic forces at the node points have been combined to obtain the forces and moments acting at the corresponding structural lumped-mass node points.

The dynamic structural solution for the full-power LOCA and steam line break has been obtained by using a modified-predictor-corrector-integration technique and normal mode theory.

When elemenrs of the system can be represented as single-acting members (tension or compression members), they have been considered as nonlinear elements, which are represented mathematically by the combination of a gap, a spring, and a viscous damper. The force in this nonlinear element is treated as an externally applied force in the overall normal mode solution. Multiple nonlinear elements can be applied at the same node, if necessary.

The time-history solution has been performed in subprogram FIXFM-3. The input to this subprogram consists of the natural frequencies, normal modes, applied forces, and nonlinear elements. The natural frequencies and normal modes for the modified reactor coolant loop dynamic model have been determined with the WESTDYN-2 program. To properly simulate the release of the strain energy in the pipe, the internal forces in the system at the postulated break location due to the initial steady-state hydraulic forces, thermal forces, and weight forces are determined. The release of the strain energy is accounted for by applying the negative of these internal forces as a step function loading. The initial conditions are equal to zero because the solution is only for the transient problem (the dynamic response of the system from the static equilibrium position). The time-history displacement solution of all dynamic degrees of freedom has been obtained using subprogram FIXFM-3 and employing 4 percent critical damping.

The LOCA displacements of the RPV have been applied in time-history form as input to the dynamic analysis of the reactor coolant loop. The LOCA analysis of the RPV includes all the forces acting on the vessel, including internals reactions, ~~cavity pressure loads~~ and loop mechanical loads. The RPV analysis is described in Section 3.9.1.4.6.

The time-history displacement response of the loop is used in computing support loads and in performing the stress evaluation of the reactor coolant loop piping.

The support loads have been computed by multiplying the support stiffness matrix and the displacement vector at the support point. The support loads are used in the evaluation of the supports. 41

The time-history displacements of the FIXFM-3 subprogram have been used as input to the WESTDYN-2 subprogram to determine the internal forces, deflections, and stresses at each end of the piping elements. For this calculation, the displacements are treated as imposed deflections on the reactor coolant loop masses. The results of this solution have been used in the piping stress evaluation. 41

The resultant asymmetric external pressure loads on the RCP and steam generator resulting from a postulated pipe rupture and pressure buildup in the loop compartments are applied dynamically to the reactor coolant loop model. This model is the same integrated RCL/supports system model used to compute loadings on the components, component supports and RC piping, as discussed above. The response of the entire system is obtained for the various external pressure loading cases from which the internal member forces and piping stresses are calculated. The resultant equipment support loads and piping stresses resulting from the external pressure loading are added to the support loads and piping stresses calculated using the loop LOCA hydraulic forces and RPV motion.

The break locations considered for subcompartment pressurization are those postulated ~~for the~~ RCL branch pipe breaks ~~LOCA analysis~~, as discussed in Section 3.6 ~~and Reference 3.6-1. Three of these breaks have been identified as having the most significant effect on the RCL/supports system. They are the reactor coolant pump outlet nozzle break, steam generator outlet nozzle break, and the steam generator inlet elbow split on the intrados. (The RPV inlet nozzle and RPV outlet nozzle breaks are considered in the RPV dynamic analysis; see Section 3.9.1.4.6.)~~ 5 Q22.2 Q110.

~~Based on the design of the RCS supports and pipe restraint system, the use of single-ended break areas (equal to the cross-sectional area of the pipe) is a conservative upper bound for the RCP outlet nozzle and steam generator outlet nozzle breaks. The steam generator inlet elbow split break is also assumed to have a break area equal to the cross-sectional area of the pipe, as discussed in Reference 3.6-1.~~

The reactor coolant loop piping is evaluated in accordance with the faulted condition criteria of ASME III, NB-3650 and Appendix F. The loads included in the evaluation result from the SSE inertia loading, ~~deadweight, pressure, LOCA loop~~ hydraulic forces, asymmetric subcompartment pressurization forces, jet impingement loads from postulated pipe breaks and reactor vessel motion. Individual loadings at critical stress RCL branch pipe break locations are combined and primary stress intensities are calculated for the combined load sets. The primary stress intensities at all locations are within the faulted condition stress limit. 4

4. Transients

Operating transients in a nuclear power plant cause thermal and/or pressure fluctuations in the reactor coolant fluid. The thermal transients cause time-varying temperature distributions across the pipe wall. These temperature distributions resulting in pipe wall stresses may be further subdivided in accordance with the ASME B&PV Code into three parts, a uniform, a linear, and a nonlinear part. The uniform part results in general expansion loads; the linear part causes a bending moment across the wall; and the nonlinear part causes a skin stress.

The transients as defined in Section 3.9.1.1 are used to define the fluctuations in plant parameters. A one-dimensional finite difference heat conduction program has been used to solve the thermal transient problem. The pipe has been represented by about 100 elements through the thickness of the pipe. The convective heat transfer coefficient employed 4

in this program represents the time-varying heat transfer due to free and forced convection. The outer surface is assumed to be adiabatic while the inner surface boundary experiences the temperature of the coolant fluid. Fluctuations in the temperature of the coolant fluid produce a temperature distribution through the pipe wall thickness which varies with time. An arbitrary temperature distribution across the wall is shown on Figure 3.9-8.

The average through-wall temperature, T_A, is calculated by integrating the temperature distribution across the wall. This integration is performed for all time steps so that T_A is determined as a function of time.

$$T_A(t) = \frac{1}{H} \int_0^H T(X,t)dX$$

The range of temperature between the largest and smallest value of T_A is used in the flexibility analysis to generate the moment loadings caused by the associated temperature changes.

The thermal moment about the mid-thickness of the wall caused by the temperature distribution through the wall is equal to:

$$M = E \int_0^H (X - \frac{H}{2}) T(X,t)dX$$

The equivalent thermal moment produced by the linear thermal gradient as shown on Figure 3.9-8 about the mid-wall thickness is equal to:

$$M_L = E\alpha \frac{\Delta T_1}{12} H2$$

Equating M_L and M, the solution for T_1 as a function of time is:

$$\Delta T_1(t) = \frac{12}{H^2} \int_0^H (X - \frac{H}{2})T(X,t)dX$$

The maximum nonlinear thermal gradient, T_2, occurs on the inside surface and can be determined as the difference between the actual metal temperature on this surface and half of the average linear thermal gradient plus the average temperature.

$$\Delta T_{2I}(t) = T(0,t) - T_A(t) - \frac{\Delta T_1(t)}{2}$$

5. Load Set Generation

A load set is defined as a set of pressure loads, moment loads, through-wall thermal effects, and the axial thermal gradient at a given location and time in each transient. The method of load set generation is based on Reference 3.9-2. The through-wall thermal effects are functions of time and can be subdivided into four parts: 41

a. Average temperature, T_A, is the average temperature through-wall of the pipe which contributes to general expansion loads.

No Change

b. Radial linear thermal gradient, which contributes to the throughwall bending moment, ΔT_1.

c. Radial nonlinear thermal gradient, ΔT_2, which contributes to a peak stress associated with shearing of the surface.

d. The axial thermal gradient, defined by discontinuity temperature, $T_A - T_B$, represents the difference in average temperature at the cross-sections on each side of a discontinuity. |41

Each transient is described by at least two load sets representing the maximum and minimum stress state during each transient. The construction of the load sets is accomplished by combining the following to yield the maximum (minimum) stress state during each transient.

- ΔT_1
- ΔT_2
- $\alpha_A T_A - \alpha_B T_B$
- Moment loads due to T_A
- Pressure loads

This procedure produces at least twice as many load sets as transients for each point.

As a result of the normal mode spectral technique employed in the seismic analysis, the load components cannot be given signed values. Eight load sets are used to represent all possible sign permutations of the seismic moments at each point, thus assuring that the most conservative combination of seismic loads is used in the stress evaluation.

For all possible load set combinations, the primary-plus-secondary and peak stress intensities, fatigue reduction factors, K_e, and cumulative usage factors, U, have been calculated. The WESTDYNE program has been used to perform this analysis in accordance with the ASME B&PV Code, Section III, Subsection NB-3650. Since it is impossible to predict the order of occurrence of the transients over a 40-year life, it is assumed that the transients can occur in any sequence. This is a very conservative assumption.

The combination of load sets yielding the highest alternating stress intensity range has been used to calculate the incremental usage factor. The next most severe combination is then determined and the incremental usage factor calculated. This procedure is repeated until all combinations having allowable cycles $<10^6$ are formed. The total cumulative usage factor at a point is the summation of the incremental usage factors.

3.9.1.4.4 Primary Component Supports Models and Methods: The static and dynamic structural analyses employ the matrix method and normal mode theory for the solution of lumped-parameter, multimass structural models. The equipment support structure models are dual purpose since they are required: (1) to quantitatively represent the elastic restraints which the supports impose

upon the loop, and (2) to evaluate the individual support member stresses due to the forces imposed upon the supports by the loop. 5 Q110.1

A description of the supports is found in Section 5.4.14. Detailed models have been developed using beam elements and plate elements, where applicable.

The steam generator lower support is shown in Figure 3.9-13. The struts are represented by single-acting springs in the RCL analysis; the columns are modeled as individual double-acting springs. The steam generator upper support is shown in Figure 3.9-14. A model for the STRUDL (Reference 3.9-1) computer program (Figure 3.9-15) is constructed for the steam generator upper lateral support ring girder. Structure geometry, topology, member releases, and concrete flexibilities are included to accurately represent the behavior of the support system. Rigid spokes, extending from a point on the steam generator vertical axis to points where loads are transferred to the ring girder, are included in the model. The steam generator upper support model is used to determine the spring constants used to represent the support in the RCL model. 5 Q110.1

The reactor coolant pump supports are shown in Figure 3.9-16. Single-acting springs represent the tie bars and double-acting springs represent the columns in the RCL model. The brackets of the compression and tension tie bars have slotted pin holes which make the members single-acting only.

A three-dimensional finite element model is used for the RPV support structure. The WECAN (Reference 3.9-16) computer program is used for the support analysis.

~~The crossover leg restraints, steam generator inlet restraint, and the hot and cold leg primary shield wall restraints are modeled as single-acting elements.~~

For each operating condition, the loads (obtained from the RCL analysis) acting on the support structures are appropriately combined. The adequacy of each member of the steam generator supports AND reactor coolant pump supports ~~and piping restraints~~ is verified by solving the ASME III Subsection NF stress and interaction equations by means of hand calculations and the WESAN (Reference 3.9-1) computer program. The adequacy of the RPV support structure is verified using the WECAN computer program and comparing the resultant stresses to the criteria given in ASME III Subsection NF. 41

3.9.1.4.5 Analysis of Primary Components: Equipment which serves as part of the pressure boundary in the reactor coolant loop includes the SGs, the RCPs, the pressurizer, and the reactor vessel. This equipment is American Nuclear Society (ANS) Safety Class 1, and the pressure boundary meets the requirements of the ASME B&PV Code, Section III, Subsection NB. This equipment is evaluated for the loading combinations outlined in Table 3.9-2.1. The equipment is analyzed for: (1) the normal loads of dead weight, pressure, and thermal; (2) mechanical transients of OBE, SSE, and pipe ruptures, including the effects of asymmetric subcompartment pressurization; and (3) pressure and temperature transients outlined in Section 3.9.1.1. 5 Q110.1

The results of the reactor coolant loop analysis have been used to determine the loads acting on the nozzles and the support/component interface locations. These loads have been supplied for all loading conditions on an "umbrella"

load basis; that is, on the basis of previous plant analyses, a set of loads has been determined which should be larger than those seen in any single plant analysis. The umbrella loads represent a conservative means of allowing detailed component analysis prior to the completion of the system analysis. Upon completion of the system analysis, conformance has been demonstrated between the actual plant loads and the loads used in the analyses of the components. Any deviations where the actual load is larger than the umbrella have been handled by individualized analysis.

Seismic analyses have been performed individually for the RCP, the pressurizer, and the SG. Detailed and complex dynamic models have been used for the dynamic analyses. The response spectra corresponding to the building elevation at the highest component/building attachment elevation have been used for the component analysis. Seismic analyses for the SG have been performed using 2 percent damping for the OBE and 4 percent damping for the SSE. The analysis of the RCP for determination of loads on the motor, main flange, and pump internals has been performed using the damping for bolted steel structures; that is, 4 percent for the OBE and 7 percent for the SSE (2 percent for OBE and 4 percent for SSE is used in the system analysis). This damping is applicable to the RCP since the main flange, motor stand, and motor are all bolted assemblies (see Section 5.4). The RPV has been qualified by static stress analysis based on loads that have been derived from dynamic analysis.

Reactor coolant pressure boundary (RCPB) components have been further qualified to ensure against unstable crack growth under faulted conditions by performing detailed fracture analysis of the critical areas of this boundary. Actuation of the ECCS produces relatively high thermal stresses in the system. Regions of the pressure boundary which come into contact with ECCS water are given primary consideration. These regions include the reactor vessel belt line region, and the reactor vessel inlet nozzles. 41

Two methods of analysis have been used to evaluate thermal effects in the regions of interest. The first method is linear elastic fracture mechanics (LEFM). The LEFM approach to the design against failure is basically a stress intensity consideration in which criteria are established for fracture instability in the presence of a crack. Consequently, a basic assumption employed in LEFM is that a crack or crack line defect exists in the structure. The essence of the approach is to relate the stress field developed in the vicinity of the crack top to the applied stress on the structure, the material properties, and the size of defect necessary to cause failure.

The elastic stress field at the crack tip in any cracked body can be described by a single parameter designated as the stress intensity factor, K. The magnitude of K is a function of the geometry of the body containing the crack, the size and location of the crack, and the magnitude and distribution of the stress.

The criterion for failure in the presence of a crack is that failure will occur whenever the stress intensity factor exceeds some critical value. For the opening mode of loading (stresses perpendicular to the major plane of the crack), the stress intensity factor is designed as K_I and the critical stress intensity factor is designated K_{IC}. Commonly called the fracture toughness, K_{IC} is an inherent material property which is a function of temperature and

No Change

strain rate. Any combination of applied load, structural configuration, crack geometry, and size which yields a stress intensity factor, K_{IC}, for the material results in crack instability.

The LEFM Analysis Methods in ASME XI, Appendix A and ASME III, Appendix G are used to perform the fracture evaluation of postulated flaws to establish that the vessel integrity is maintained. This LEFM Analysis is considered accurate in the elastic range and conservative in the elastic-plastic range. Therefore, for faulted condition analyses, LEFM is considered applicable for the evaluation of the reactor vessel inlet nozzle and belt line region. 41

In addition, it has been well established that the crack propagation of existing flaws in a structure subjected to cyclic loading can be defined in terms of fracture mechanics parameters. Thus, the principles of LEFM are also applicable to fatigue growth of a postulated flaw at the vessel inlet nozzle and belt line region. 41

An example of a faulted condition evaluation carried out according to the procedure discussed above is given in Reference 3.9-3. This report discusses the evaluation procedure in detail as applied to a severe faulted condition (a postulated LOCA), and concludes that the integrity of the RCPB would be maintained in the event of such an accident.

The pressure boundary portion of RCS Class 1 valves has been designed and analyzed according to the requirements of NB-3500 of ASME B&PV Code, Section III.

Valves in sample lines connected to the RCS are not considered ANS Safety Class 1 nor ASME Class 1. This is because the nozzles where the line connects to the primary system piping are orificed to a 15/64-in. hole. This hole restricts the flow so that loss due to severance of one of these lines can be made up by normal charging flow.

3.9.1.4.6 Dynamic Analysis of Reactor Pressure Vessel for Postulated Loss of Coolant Accident:

3.9.1.4.6.1 Introduction - This section presents the method of computing the reactor pressure vessel response to a postulated RCL branch pipe break ~~loss of coolant accident (LOCA)~~. The structural analysis considers simultaneous application of the time-history loads on the reactor vessel resulting from the reactor coolant loop mechanical loads, internal hydraulic pressure transients, and ~~reactor cavity pressurization (for postulated breaks in the reactor coolant pipe at the vessel nozzles)~~. The vessel is restrained by reactor vessel support pads and shoes beneath four of the reactor vessel nozzles, and the reactor coolant loops with the primary supports of the steam generators and the reactor coolant pumps. 5 Q22.2 Q110.1

~~Pipe displacement restraints installed in the primary shield wall limit the break opening area of the vessel nozzle pipe breaks. An upper bound break area is determined from break areas calculated using reactor vessel and pipe relative motions for similar plant analyses. Detailed studies have shown that pipe breaks at the hot or cold leg reactor vessel nozzles, even with a limited break area, would give the highest reactor vessel support loads and the highest vessel displacements, primarily due to the influence of reactor cavity~~ 41

~~pressurization. By considering these breaks, the most severe reactor vessel~~ support loads are determined. For completeness, two breaks outside the shield wall, for which there is no cavity pressurization, were also analyzed; specifically, the pump outlet nozzle pipe break and the steam generator inlet nozzle pipe break were considered. In summary, four loss of coolant accident conditions were analyzed.

1. Reactor vessel inlet nozzle pipe break

2. Reactor vessel outlet nozzle pipe break

3. Reactor coolant pump outlet nozzle pipe break

4. Steam generator inlet nozzle pipe break

3.9.1.4.6.2 Interface Information - ~~Asymmetric reactor cavity pressurization loads were provided to Westinghouse based on the analysis described in Section 6.2.1.2.3.2~~. All ~~other~~ input information was developed within Westinghouse. This information includes: reactor internals properties, loop mechanical loads and loop stiffness, internal hydraulic pressure transients, and reactor support stiffnesses. These inputs allowed formulation of the mathematical models and performance of the analyses, as will be described. 41

3.9.1.4.6.3 Loading Conditions - Following a postulated pipe rupture ~~at the reactor vessel nozzle~~, the reactor vessel is excited by time-history forces. As previously mentioned, these forces are the combined effect of ~~three phenomena: (1)~~ reactor coolant loop mechanical loads~~, (2) reactor cavity pressurization forces~~ and ~~(3)~~ reactor internal hydraulic forces. 5 Q22.2 Q110.1

The reactor coolant loop mechanical forces are derived from the elastic analysis of the loop piping for the postulated break. This analysis is described in Section 3.9.1.4.3. The reactions on the nozzles of ~~all~~ the ~~unbroken~~ piping ~~legs~~ are applied to the vessel in the RPV blowdown analysis. — RCL

~~Reactor cavity pressurization forces arise for the pipe breaks at the vessel~~ nozzles from the steam and water which is released into the reactor cavity through the annulus around the broken pipe. The reactor cavity is pressurized asymmetrically with higher pressure on the side of the broken pipe resulting in horizontal forces applied to the reactor vessel. Smaller vertical forces arising from pressure on the bottom of the vessel and the vessel flanges are also applied to the reactor vessel. The analysis of asymmetric LOCA loads is consistent with NUREG-0609. The cavity pressure analysis is described in Section 6.2. 41

The internals reaction forces develop from asymmetric pressure distributions inside the reactor vessel. For a vessel inlet nozzle break and pump outlet nozzle break, the depressurization wave path is through the broken loop inlet nozzle and into the region between the core barrel and reactor vessel. This region is called the downcomer annulus. The initial waves propagate up, down and around the downcomer annulus and up through the fuel. In the case of an RPV outlet nozzle break and steam generator inlet nozzle break, the wave passes through the RPV outlet nozzle directly into the upper internals region, depressurizes the core, and enters the downcomer annulus from the bottom of the vessel. ~~Thus, for an outlet nozzle break, the downcomer annulus is~~

~~depressurized with much smaller differences in pressure horizontally across the core barrel than for the inlet break. For both the inlet and outlet nozzle breaks, the depressurization waves continue their propagation by reflection and translation through the reactor vessel fluid, but the initial depressurization wave has the greatest effect on the loads.~~ 5 Q22.2 Q110.1

The reactor internals hydraulic pressure transients were calculated including the assumption that the structural motion is coupled with the pressure transients. This phenomena has been referred to as hydroelastic coupling or fluid-structure interaction. The hydraulic analysis considers the fluid-structure interaction of the core barrel by accounting for the deflections of constraining boundaries which are represented by masses and springs. The dynamic response of the core barrel in its beam bending mode responding to blowdown forces compensates for internal pressure variation by increasing the volume of the more highly pressurized regions. The analytical methods used to develop the reactor internals hydraulics are described in WCAP-8708 (Reference 3.9-7).

3.9.1.4.6.4 Reactor Vessel and Internals Modeling - The reactor vessel is restrained by two mechanisms: (1) the four attached reactor coolant loops with the steam generator and reactor coolant pump primary supports; and (2) four reactor vessel supports, two beneath reactor vessel inlet nozzles and two beneath reactor vessel outlet nozzles. The reactor vessel supports are described in Section 5.4.14 and are shown in Figures 5.4-12 and 3.8.3-1. The support shoe provides restraint in the horizontal directions for downward reactor vessel motion.

The mathematical model of the RPV is a three-dimensional nonlinear finite element model which represents the dynamic characteristics of the reactor vessel and its internals in the six geometric degrees of freedom. The model was developed using the WECAN computer code. The model consists of three concentric structural submodels connected by nonlinear impact elements and stiffness matrices. The first submodel, Figure 3.9-11 represents the reactor vessel shell and associated components. The reactor vessel is restrained by the four reactor vessel supports and by the attached primary coolant piping. Each reactor vessel support is modeled by a linear horizontal stiffness and a vertical nonlinear element with lift-off capability. The attached piping is represented by a stiffness matrix. 41 Q22.2 Q110.1

The second submodel, Figure 3.9-12, represents the reactor core barrel, neutron panels, lower support plate, and secondary core support components. This submodel is physically located inside the first and is connected to it by a stiffness matrix at the internals support ledge. Core-barrel-to-vessel shell impact is represented by nonlinear elements at the core barrel flange, core barrel nozzle, and lower radial support locations.

The third and innermost submodel, Figure 3.9-12A, represents the lower core support plate, guide tubes, support columns, upper core plate, and fuel. The third submodel is connected to the first and second by stiffness matrices and nonlinear elements.

3.9.1.4.6.5 Analytical Methods - The time-history effects of ~~the cavity pressurization loads,~~ internals loads and loop mechanical loads are combined and applied simultaneously to the appropriate nodes of the mathematical model 5 Q22.2 Q110.1

of the reactor vessel and internals. The analysis is performed by numerically intergrating the differential equations of motion to obtain the transient response. The output of the analysis includes the displacements of the reactor vessel and the loads in the reactor vessel supports which are combined with other applicable faulted condition loads and subsequently used to calculate the stresses in the supports. Also, the reactor vessel displacements are applied as a time-history input to the dynamic reactor coolant loop ~~blowdown~~ analysis. The resulting loads and stresses in the piping components and supports include both loop blowdown loads and reactor vessel displacements. Thus, the effect of vessel displacements upon loop response and the effect of ~~loop~~ blowdown upon vessel displacement are both evaluated. 5 Q22.2 Q110 .1

RCL branch pipe

3.9.1.4.6.6 Results of the Analysis - As described, the reactor vessel and internals were analyzed for ~~four~~ postulated break locations. Table 3.9-12 summarizes the displacements and rotations of and about a point representing the intersection of the centerline of the nozzle ~~attached to the leg in which the break was postulated to occur~~ and the vertical centerline of the reactor vessel. Positive vertical displacement is up and positive horizontal displacement is away from and along the centerline of the vessel nozzle in the loop in which the break was postulated to occur. ~~These displacements were calculated using a conservative break opening area for the postulated pipe ruptures at the vessel inlet and outlet nozzles and double-ended ruptures at the pump outlet nozzle and SG inlet nozzle locations. These areas are estimated prior to performing the analysis. Following the reactor coolant system structural analysis, the relative motions of the broken pipe ends are obtained from the reactor coolant loop blowdown analysis. The actual break opening area is then verified to be less than the estimated area used in the analysis and assures that the analysis is conservative.~~ 41

The maximum loads induced in the vessel supports due to the postulated pipe break are given in Table 3.9-13. These loads are per vessel support and are applied at the vessel nozzle pad. ~~It is conservatively assumed that the maximum horizontal and vertical loads occur simultaneously and on the same support, even~~ though the time-history results show that these loads do ~~not occur simultaneously on the same support~~. The peak vertical and horizontal load occurs for a vessel inlet nozzle break. Note that the ~~peak~~ loads are conservative values since the break opening area for the vessel inlet and outlet nozzle break (as obtained from the dynamic loop analysis) is actually less than the estimated upper bound area used to generate the applied loads. If additional analysis was performed using the lower break opening area, the loads would be considerably reduced. Furthermore, the peak vertical load and peak horizontal load do not occur on the same vessel support. The largest vertical loads are produced on the supports beneath and opposite the broken nozzle. The largest horizontal loads are produced on the supports which are ~~the most perpendicular to the broken nozzle horizontal centerline~~. 41

3.9.1.4.7 Stress Criteria for Class 1 Components and Component Supports for BOP Scope of Supply: All Class 1 components and supports have been designed and analyzed for the design, normal, upset, emergency and faulted conditions as specified in the rules and requirements of the ASME B&PV Code, Section III. Stress criteria for Class 1 BOP valves and piping are outlined in Tables 3.9-5 and 3.9-7. Stress limits for Class 1 BOP component supports are given in Table 3.9-7B. 53

53

The Class 1 piping has been designed and analyzed for the design, normal, upset, emergency and faulted conditions in accordance with the requirements of NB-3600 of the ASME B&PV Code, Section III, 1974 Edition through Winter Addenda of 1975, NB-3658 of Summer Addenda of 1977, NB-3650 and NB-3680 of Summer Addenda of 1979. When the stresses as determined by the methods given in NB-3630 exceed the limits thereof, the design can be accepted provided it meets the requirements of NB-3200. The rules of NB-3630 meet all the requirements of NB-3200. 41

3.9.1.4.8 Evaluation of the Control Rod Drive Mechanisms - The Control Rod Drive Mechanisms (CRDMs) are evaluated for the effects of postulated RCL branch pipe ~~reactor vessel nozzle limited displacement~~ breaks. A time-history analysis of the CRDMs is performed for the vessel motion discussed in Section 3.9.1.4.6. A model of the CRDMs is formulated with gaps at the upper CRDM support modeled as nonlinear elements. The CRDMs are represented by beam elements with lumped masses. The translation and rotation of the vessel head is applied to this model. The resulting loads and stresses are compared to allowables to verify the adequacy of the system. The highest loads occur at the head adaptor, the location where the mechanisms penetrate the vessel head. The combined effect including seismic loads is shown to be less than the allowable loads at this location. 41 5 Q22.2 Q110 .1 41

3.9.2 Dynamic Testing and Analysis

3.9.2.1 Preoperational Vibration and Dynamic Effects Testing on Piping. Piping vibration tests will be performed during the initial test program to comply with the recommendations of Regulatory Guide (RG) 1.68 and satisfy the requirements of ASME B&PV Code, Section III.

3.9.2.1.1 Nuclear Steam Supply System Scope: A preoperational piping vibrational and dynamics effects testing program will be conducted for the reactor coolant loop/supports system during startup functional testing of the plant. The purpose of these tests will be to confirm that the system has been adequately designed and supported for vibration as required by Section III of the ASME Code, Paragraph NB-3622.3. The preoperational piping vibration and dynamic effects test program for the primary coolant loop system (this includes the hot legs, cold legs, cross-over legs, reactor coolant pumps, steam generators, and reactor vessel) at South Texas Units 1 and 2 is as follows: 41 Q110 .27

1. The primary coolant loop system as defined above will be instrumented with accelerometers to measure the dynamic response of the system during normal and transient operating conditions. In addition to normal steady state operation, the test conditions will include steady state operation with various combinations of reactor coolant pumps in operation and transient conditions due to the starting and tripping of the reactor coolant pumps.

These members supply the radial and torsional constraint of the internals at the bottom relative to the reactor vessel while permitting axial and radial growth between the two. One would expect to see, on the bearing surfaces of the key and keyway, burnishing, buffing, or shadow marks which would indicate pressure loading and relative motion between the two parts. Some scoring of engaging surfaces is also possible and acceptable.

13. Gaps at baffle joints. Check for unacceptable gaps between baffle and top former and at baffle to baffle joints. 41

Upper Internals

1. Thermocouple conduits, clamps, and couplings.

2. Guide tube, support column, orifice plate, and thermocouple assembly locking devices.

3. Upper core plate alignment inserts. Examine for any shadow marks, burnishing, buffing, or scoring. Check for locking devices for integrity of lockwelds.

4. Thermocouple conduit clamp welds.

5. Guide tube enclosure welds and card welds. 41

Acceptance standards are the same as required in the shop by the original design drawings and specifications.

During the hot functional test, the internals will be subjected to a total operating time at greater than normal full-flow conditions (four pumps operating) for at least 240 hours. This provides a cyclic loading of approximately 10^7 cycles on the main structural elements of the internals. In addition, there will be some operating time with only one, two, and three pumps operating.

Pre- and post-hot functional inspection results serve to confirm that the internals are well behaved. When no signs of abnormal wear and harmful vibrations are detected and no apparent structural changes take place, the four-loop core support structures are considered to be structurally adequate and sound for operation.

3.9.2.5 Dynamic System Analysis of the Reactor Internals Under Faulted Conditions. The following events are considered in the faulted conditions category:

1. LOCA (~~Both cold leg and hot leg~~ RCL branch pipe ruptures are considered.)

2. SSE

Maximum stresses for SSE and LOCA are obtained and combined.

Maximum stress intensities are compared to allowable stresses for the faulted condition. Elastic analysis is used to obtain the response of the structure, and the stress analysis of each component is performed according to ASME 41

Code-approved techniques. For faulted conditions, stresses are above yield in a few locations. For these cases only, some inelastic stress limits are applied.

The design rules of Subsection NG of the ASME B&PV Code, Section III, apply to those reactor internals components identified as core support structures. 41

The criteria for acceptability in regard to mechanical integrity analyses are that adequate core cooling and core shutdown must be assured. This implies that the deformation of the reactor internals must be sufficiently small so that the geometry remains substantially intact. Consequently, the limitations established for the internals are concerned with the deflections and stability of the parts in addition to stress criteria to assure integrity of the components.

For the critical internal structures, maximum allowable deflections, based on functional performance criteria, are listed in Table 3.9-9. The basic operational or functional criterion to be met for the reactor internals is that the plant shall be shut down and cooled in an orderly fashion so that fuel-cladding temperature is kept within specified limits following a Design Basis Accident.

Reactor Internals Analysis

The evaluation of the reactor internals is composed of two parts. The first part is the three-dimensional response of the reactor internals resulting from the ~~four hypothesized LOCA~~ RCL branch pipe break conditions mentioned in Section 3.9.1.4.6.1. The reactor internals response is taken from the WECAN RPV and internals system response as described in Section 3.9.1.4.6.4 for the RPV support analysis. ~~For reactor internals, this analysis has considered the effect of cavity pressure.~~ The second part of this evaluation is the core-barrel shell response which consists of the various n = 0, 2, 3, etc., ring mode response occurring in the horizontal plane. This second part, or ring mode evaluation, is independent of the loop forces ~~and cavity pressure~~. 41 5 Q110.1

Analysis of the reactor internals for blowdown loads resulting from ~~a LOCA~~ AN RCL branch pipe break is based on the time-history response of the internals to simultaneously applied blowdown forcing functions. The forcing functions are defined at points in the system where changes in cross-section of direction of flow occur in such a way that differential loads are generated during the blowdown transient. The dynamic mechanical analysis can employ the displacement method, lumped parameters, and stiffness matrix formulations, and assumes that all components behave in a linearly elastic manner.

In addition, because of the complexity of the system and the components, it is necessary to use finite element stress analysis codes to provide more detailed information at various points.

A blowdown digital computer program (Reference 3.9-7), which was developed for the purpose of calculating local fluid pressure, flow, and density transients that occur in pressurized water reactor coolant systems during a LOCA, is applied to the subcooled, transition, and saturated two-phase blowdown regimes. This in contrast to programs such as WHAM (Reference 3.9-8) which are applicable only to the subcooled region and which, due to their method of 41 41

solution, could not be extended into the region in which large changes in the sonic velocities and fluid densities take place. Multiflex is based on the method of characteristics wherein the resulting set of ordinary differential equations, obtained from the laws of conservation of mass, momentum, and energy, are solved numerically, using a fixed mesh in both space and time. 41

Although spatially one-dimensional, conservation laws are employed, the code can be applied to describe three-dimensional system geometries by use of the equivalent piping networks. Such piping networks may contain any number of pipes or channels of various diameters, dead ends, branches (with up to six pipes connected to each branch), contractions, expansions, orifices, pumps, and free surfaces (such as in the pressurizer). System losses such as friction, contraction, and expansion, as well as some effects of the water/solid interaction, are considered.

The blowdown code evaluates the pressure and velocity transients for a maximum of 2,400 locations throughout the system. Each reactor component for which calculations are required is designated as an element and assigned an element number. Forces acting upon each of the elements are calculated, summing the effects of:

1. The pressure differential across the element.

2. Flow stagnation on, and unrecovered orifice losses across, the element.

3. Friction losses along the element.

Input to the calculation code, in addition to the blowdown pressure and velocity transients, includes the effective area of each element on which the force acts due to the pressure differential across the element, a coefficient to account for flow stagnation and unrecovered orifice losses, and the total area of the element along which the shear forces act.

The reactor internals analysis has been performed using the following assumptions: 41

- The analysis considers the effect of hydroelasticity.

- The reactor internals are represented by a multimass system connected with springs and dashpots simulating the elastic response and the viscous damping of the components. The modeling is conducted in such a way that uniform masses are lumped into easily identifiable discrete masses while elastic elements are represented by springs.

  The model described is considered to have a sufficient number of degrees of freedom to represent the most important modes of vibration in the vertical direction. This model is conservative in the sense that further mass-spring resolution of the system would lead to further attenuation of the shock effects obtained with the present model.

The pressure waves generated within the reactor are highly dependent on the location and nature of the postulated pipe failure. In general, the more rapid the severance of the pipe, the more severe the imposed loadings on the components. A 1-millisecond time is taken as the limiting case.

No change

In the case of A ~~the~~ hot leg branch pipe break, the vertical hydraulic forces produce an initial upward lift of the core. A rarefaction wave propagates through the reactor hot leg nozzle into the interior of the upper core barrel. Since the wave has not reached the flow annulus on the outside of the barrel, the upper barrel is subjected to an impulsive compressive wave. Thus, dynamic instability (buckling) or large deflections of the upper core barrel, or both, are possible responses of the barrel during hot leg blowdown. In addition to the above effects, the hot leg break results in transverse loading on the upper core components as the fluid exits the hot leg nozzle.

In the case of A ~~the~~ cold leg branch pipe break, a rarefaction wave propagates along a reactor inlet pipe, arriving first at the core barrel at the inlet nozzle of the AFFECTED ~~broken~~ loop. The upper barrel is then subjected to a non-axisymmetric expansion radial impulse which changes as the rarefaction wave propagates both around the barrel and down the outer flow annulus between vessel and barrel. After the cold leg break, the initial steady-state hydraulic lift forces (upward) decrease rapidly (within a few milliseconds) and then increase in the downward direction. These cause the reactor core and lower support structure to move initially downward.

If a simultaneous seismic event with the intensity of the SSE is postulated with the LOCA, the combined effect of the maximum stresses for each case is considered. In general, the loading imposed by the earthquake is small compared to the blowdown loading. The seismic analysis of the reactor internals is discussed in Section 3.7.3.

A summary of the mechanical analysis is presented in the following paragraphs. Reference 3.9-9 provides the basic methodology used in the reactor internals blowdown analysis. | 41

Vertical Excitation Model for Blowdown

For the vertical excitation, the reactor internals are represented by a multimass system connected with springs and dashspots simulating the elastic response and the viscous damping of the components. Also incorporated in the multimass system is a representation of the fuel assembly, which includes the fuel assembly grids. In order to obtain an accurate simulation of the reactor internals response, the effects of internal damping, clearances between various internals, snubbing action caused by solid impact, and preloads in hold-down springs have been incorporated in the analytical model. The modeling is conducted in such a way that uniform masses are lumped into easily identifiable discrete masses while elastic elements are represented by springs. | 41 | 41

The appropriate dynamic differential equations for the multimass model describing the aforementioned phenomena are formulated and the results obtained using a digital computer program (Reference 3.9-1) which computes the response of the multimass model when excited by the time-dependent hydraulic forcing functions. The appropriate forcing functions are applied simultaneously and independently to each of the masses in the system. The results from the program give the forces, displacements, and deflections as functions of time for all the reactor internals components (lumped masses). Reactor internals response to both hot and cold leg branch pipe ruptures were analyzed.

Transverse Excitation Model for Blowdown

Various reactor internal components are subjected to transverse excitation during blowdown. The barrel, guide tubes, and upper support columns are analyzed to determine their response to this excitation.

1. Core Barrel

For the hydraulic analysis of the pressure transients during hot leg branch pipe blowdown, the maximum pressure drop across the barrel is a uniform radial compressive impulse.

The barrel is then analyzed for dynamic buckling using the following conservative assumptions:

a. The effect of the fluid environment is neglected.

b. The shell is treated as simply supported.

During a cold leg branch pipe blowdown, the upper barrel is subjected to a nonaxisymmetric expansion radial impulse which changes as the rarefaction wave propagates both around the barrel and down the outer flow annulus between vessel and barrel.

The analysis of transverse barrel response to a cold leg branch pipe blowdown is performed as follows:

a. The core barrel is analyzed as a shell with two variable sections to model the core barrel flange and core barrel.

b. The barrel with the core and neutron shielding pads is analyzed as a beam elastically supported at the top and at the lower radial support, and the dynamic response is obtained. | 41

2. Guide Tubes

The dynamic loads on rod cluster control guide tubes are more severe for a LOCA caused by hot leg branch pipe rupture than for an accident caused by cold leg branch pipe rupture, since the cold leg break leads to much smaller changes in the transverse coolant flow over the rod cluster control assembly guides. The guide tubes in closest proximity to the ~~ruptured~~ outlet nozzle FOR A HOT LEG BRANCH PIPE BREAK are the most severely loaded. The transverse guide tube forces during a blowdown decrease with increasing distance from the ruptured nozzle location. | 41

A detailed structural analysis of the rod cluster control guide tubes is performed to establish the equivalent cross-section properties and elastic end support conditions. An analytical model is verified by subjecting the control rod cluster guide tube to a concentrated force applied at the midpoint of the lower guide tube. In addition, the analytical model has been previously verified through numerous dynamic and static tests performed on the 17 x 17 guide tube design.

The response of the guide tubes to the transient loading from blowdown resulting from hot leg branch pipe breaks is found by representing the guide tube as an | 41

equivalent single-degree-of-freedom system and assuming the slope of the time-dependent load to be a step function with constant slope front end.

3. Upper Support Columns

Upper support columns located close to the ~~[illegible]~~ nozzle of the affected hot leg ~~break~~ will be subjected to transverse loads due to cross flow. The loads applied to the columns are computed with a method similar to the one used for the guide tubes, i.e, by taking into consideration the increase in flow across the column during the accident. The columns are studied as beams with variable sections and the resulting stresses are obtained using the reduced section modulus and appropriate stress risers for the various sections.

4. Results of Reactor Internals Analysis

Maximum stresses due to the SSE (vertical and horizontal components) and a LOCA were obtained and combined. All core support structure components were found to be within acceptable stress and deflection limits for both hot leg and cold leg LOCAs occurring simultaneously with the SSE; the stresses and deflections which would result following a faulted condition are less than those which would adversely affect the integrity of the core support structures. For the transverse excitation, it is shown that the barrel does not buckle during a hot leg branch pipe break and that it meets the allowable stress limits during all specified transients.

Also, the natural and applied frequencies are such that resonance problems will not occur.

The results obtained from linear analyses indicate that the relative displacement between the components will close the gaps, and consequently the structures will ~~impinge~~ impact on each other. Linear analysis will not provide information about the impact forces generated when components ~~impinge~~ impact on each other; however, in some instances, linear approximations can and are applied prior to and after gap closure. The effects of the gaps that could exist between vessel and barrel, between fuel assemblies, and between fuel assemblies and baffle plates, were considered in the analysis using both linear approximations and nonlinear techniques. Both static and dynamic stress intensities are within acceptable limits. |41

Even though control rod insertion is not required for plant shutdown, this analysis shows that most of the guide tubes will deform within the limits established to assure control rod insertion. For the guide tubes deflected above the no-loss-of-function limit, it must be assumed that the rods will not drop. However, the core will still shut down due to the negative reactivity insertion in the form of core voiding. Shutdown will be aided by the great majority of rods that do drop. Seismic deflections of the guide tubes are generally negligible by comparison with the no-loss-of-function limit. |41

3.9.2.6 Correlations of Reactor Internals Vibration Tests With the Analytical Results. As stated in Section 3.9.2.4, it is not considered necessary to conduct instrumented tests of the STP RPV internals, as their adequacy has been verified by use of the Sequoyah and Trojan results as well as by the 1/7 scale model test results. References 3.9-5 and 3.9-10 describe predicted vibration behavior based on studies performed prior to the plant tests. These |41

3. Spring preloads

4. Coolant flow forces (static)

5. Temperature gradients

6. Differences in thermal expansion

   a. Due to temperature differences

   b. Due to expansion of different materials

7. Interference between components

8. Vibration (mechanically or hydraulically induced)

9. All operational transients listed in Table 5.2-1

10. Pump overspeed

11. Seismic loads [OBE and SSE] | 41

12. Blowdown forces (due to cold and hot leg branch break)

The main objective of the analysis is to satisfy allowable stress limits, given in NB-3200 and NA Appendix F, to assure an adequate design margin, and to establish deformation limits which are concerned primarily with the functioning of the components. The stress limits are established not only to assure that peak stresses will not reach unacceptable values, but also to limit the amplitude of the oscillatory stress component in consideration of fatigue characteristics of the materials. Standard methods of determining strength of materials are used to establish the stresses and deflections of these components. The dynamic behavior of the reactivity control components has been studied using experimental test data and experience from operating reactors.

3.9.4.3.2 Drive Rod Assembly: All postulated failures of the drive rod assemblies either by fracture or uncoupling lead to a reduction in reactivity. If the drive rod assembly fractures at any elevation, that portion remaining coupled falls with, and is guided by, the RCCA. This always results in a reactivity decrease for control rods. | 30 | 30

3.9.4.3.3 Latch Assembly and Coil Stack Assembly: With respect to the CRDM system as a whole, critical clearances are present in the following areas:

1. Latch assembly - diametral clearances

2. Latch arm - drive rod clearances

3. Coil stack assembly - thermal clearances

4. Coil fit in coil housing

3.9.5.2 Design Loading Conditions. The design loading conditions that provide the basis for the design of the reactor internals are:

1. Fuel assembly weight
2. Fuel assembly spring forces
3. Internals weight
4. Control rod trip (equivalent static load)
5. Differential pressure
6. Spring preloads
7. Coolant flow forces (static)
8. Temperature gradients
9. Differences in thermal expansion
   a. Due to temperature differences
   b. Due to expansion of different materials
10. Interference between components
11. Vibration (mechanically or hydraulically induced)
12. One or more loops out of service
13. All operational transients listed in Table 3.9-8. 2
14. Pump overspeed
15. Seismic loads (OBE and SSE) 41
16. Blowdown forces (due to cold and hot leg branch pipe break)

The main objective of the design analysis is to satisfy allowable stress limits, to assure an adequate design margin, and to establish deformation limits which are concerned primarily with the functioning of the components. The stress limits are established not only to assure that peak stresses will not reach unacceptable values, but also to limit the amplitude of the oscillatory stress component in consideration of fatigue characteristics of the materials. Both low- and high-cycle fatigue stresses are considered when the allowable amplitude of oscillation is established. Dynamic analysis on the reactor internals has been provided in Section 3.9.2.

As part of the evaluation of design loading conditions, extensive testing and inspection have been performed from the initial selection of raw materials up to and including component installation and plant operation. Among these tests and inspections are those performed during component fabrication, plant construction, startup and checkout, and plant operation.

3.9.5.2.1 Normal and Upset: The normal and upset loading conditions that provide the basis for the design of the reactor internals are:

a) Fuel and Reactor Internals weight.

b) Fuel and Core Component Spring Forces including spring preloading forces.

c) Differential Pressure and Coolant Flow Forces.

d) Temperature Gradients.

e) Vibratory Loads including OBE seismic.

f) The normal and upset operational thermal transients listed in 3.9.1.1.6 and 3.9.1.1.7. 2 Q110.5

g) Control Rod Trip (equivalent static load).

h) Loads due to Loop(s) Out-of-Service.

i) Loss of Load/Pump Overspeed.

3.9.5.2.2 Emergency Conditions: The emergency loading conditions that provide the basis for the design of the reactor internals are:

a) Small Loss of Coolant Accident. 41

b) Small Steam Line Break.

c) Complete Loss of Flow.

3.9.5.2.3 Faulted Conditions: The following faulted loading conditions are considered the most limiting and provide the basis for the design of the reactor internals are:

a) The ~~Large Loss of Coolant Accident~~ {rupture of an RCL branch pipe}

b) The Safe Shutdown Earthquake.

3.9.5.3 Design Loading Categories. The combination of design loadings fits into either the normal, upset, or faulted condition as defined in the ASME B&PV Code, Section III. The allowable stress limits indicated in Subsections NG-3222 (Normal Conditions), NG-3223 (Upset Conditions), NG-3224 (Emergency Conditions) and Appendix F (Rules for Evaluating Faulted Conditions) are met. 4 2 Q110.5

Internal Structures are analyzed to meet the intent of the ASME Code in accordance with Subsection NG, paragraph NG.3311 (c). Stresses in the Core Support Structure induced by interaction with internal structures are analyzed and shown to be in conformance with Core Support Code Limits. Design and construction for Core Support Structures meet Subsection NG in full. 3 3

REFERENCES

Section 3.9:

3.9-1 ~~Vashi, K. M., (Ed.),~~ "Documentation of Selected Westinghouse Structural Computer Codes," WCAP-8252, Revision 1 (May 1977). ANALYSIS 5

3.9-2 "Sample Analysis of a Class 1 Nuclear Piping System," prepared by ASME Working Group on Piping, ASME Publication, 1972.

3.9-3 Bamford, W. H., and C. B. Buchalet, "Methods for Fracture Mechanics Analysis of Nuclear Reactor Vessels Under Severe Thermal Transients," WCAP-8510 (June 1976).

3.9-4 "Prediction of the Flow-Induced Vibration of Reactor Internals by Scale Model Tests" WCAP-8317-A (March 1974).

3.9-5 "UHI Plant Internals Vibration Measurement Program and Pre and Post Hot Functional Examinations," WCAP-8517 (March 1975).

3.9-6 Trojan Final Safety Analysis Report, Appendix A-12, Docket No. 50-344.

3.9-7 Takeuchi, K., et al., "Multiflex - A Fortran-IV Computer Program for Analyzing Thermal-Hydraulic-Structure System Dynamics," WCAP-8708 and WCAP-8709 (non-proprietary) (February 1976). 5

3.9-8 Fabic, S., "Computer Program WHAM for Calculation of Pressure Velocity and Force Transient in Liquid Filled Piping Networks," Daiser Engineers Report No. 67-49-R (November 1967).

3.9-9 Bohm, G. J., and J. P. LaFaille, "Reactor Internals Response Under a Blowdown Accident," First International Conference on Structural Mechanics in Reactor Technology, Berlin (September 20-24, 1971).

3.9-10 Boyd, C. N., W. Ciaramitaro, and N. R. Singleton, "Verification of Neutron Pad and 17 x 17 Guide Tube Designs by Preoperational Tests on the Trojan 1 Power Plant," WCAP-8780 (May 1976).

3.9-11 Cooper, F. W., Jr., "17 x 17 Drive Line Components Tests - Phase 1B 11, 111, D-Loop-Drop and Deflection," WCAP-8446, Westinghouse Proprietary Class 2 and WCAP-8449, Westinghouse Nonproprietary (December 1974).

3.9-12 Kraus, S., "Neutron Shielding Pads," WCAP-7870 (May 1972).

TABLE 3.9-2.3 (Cont'd.)

DESIGN LOADING COMBINATIONS FOR ASME III CODE
CLASS 1 COMPONENTS (BOP SCOPE OF SUPPLY)

DEFINITION OF TERMS

PD - Loadings associated with the design pressure.

PO - Loadings associated with operating pressures including, where applicable, any transient pressures associated with the loading conditions event under consideration.

DW - Loading associated with deadweight and liveweight.

OBE - Inertial loadings associated with the OBE.

SAM (OBE) - Anchor point displacement loading associated with OBE earthquake.

BS - Single nonrepeated anchor movement (building settlement).

SSE - Inertial loading associated with the SSE.

SAM (SSE) - Anchor point displacement loading associated with SSE. 41

RVC - Transient loadings associated with relief valve blowdown in a closed system.

RVO - Sustained loadings associated with relief valve in an open system.

FV - Transient loadings associated with fast valve closure.

TH - Loadings associated with thermal expansion.

LOCA - Loss of coolant accident - defined ~~in Appendix A of 10CFR Part 50~~ as those postulated accidents that result from the loss of reactor coolant, at a rate in excess of the capability of the reactor coolant make-up system, from breaks in the reactor coolant pressure boundary up to and including a break equivalent in size to the ~~double-ended~~ rupture of the largest branch pipe ~~of~~ connected to the reactor coolant loop ~~system~~.

This condition includes the loads from the postulated pipe break itself and also any associated system transients or dynamic effects resulting from the postulated pipe break.

HEB - Loadings associated with high-energy line pipe breaks (includes loadings from jet impingement, pipe motion, and pipe impact).

DU - Loadings associated with other transient dynamic event classified as an upset condition.

TABLE 3.9-8 (Continued)

SUMMARY OF REACTOR COOLANT SYSTEM DESIGN TRANSIENTS

Faulted Conditions*	Occurences
1. ~~Main~~ reactor coolant branch pipe break (~~Large~~ LOCA)	1
2. Large steam break	1
3. Feedwater line break	1
4. Reactor coolant pump locked rotor	1
5. Control rod ejection	1
6. Steam generator tube rupture	(included under upset conditions, reactor trip from full power with safety injection)
7. Safe Shutdown Earthquake	1
Test Conditions	
1. Primary side hydrostatic test	10
2. Secondary side hydrostatic test	10

*In accordance with ASME B&PV Code Section III, faulted conditions are not included in the fatigue evaluation.

TABLE 3.9-12

MAXIMUM REACTOR VESSEL DISPLACEMENTS AT ~~REACTOR VESSEL~~ NOZZLE CENTERLINE ELEVATION

	Maximum Horizontal Displacement (inches)	Maximum Vertical Displacement (inches)	Maximum Rotation (radians)
~~RPV Inlet Nozzle~~	(Later)	(Later)	(Later)
~~RPV Outlet Nozzle~~			
~~Double-Ended Pump Outlet~~			
~~Double-Ended SG Inlet~~			
ACCUMULATOR BRANCH LINE BREAK			
PRESSURIZER SURGE LINE BREAK			

5 Q22.2 Q110.1

41

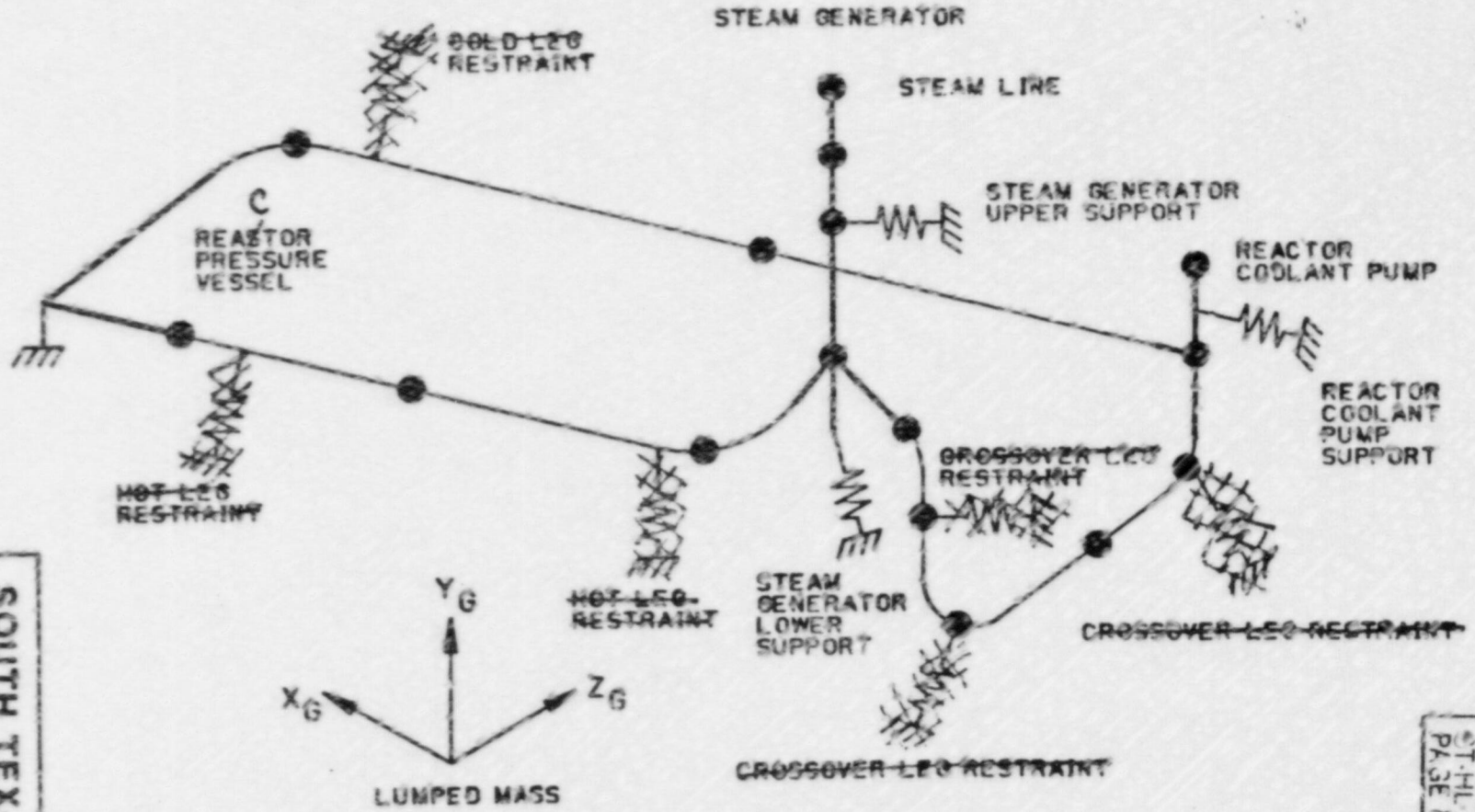

RCL GLOBAL COORDINATE SYSTEM

ATTACHMENT
ST-HL-AE-1944
PAGE 82 OF 127

SOUTH TEXAS PROJECT
UNITS 1 & 2

REACTOR COOLANT LOOP SUPPORT, DYNAMIC STRUCTURAL MODEL

Figure 3.9-6

Amendment 41

TABLE 3.12-1 (Continued)

REGULATORY GUIDE MATRIX

NO.	REGULATORY GUIDE TITLE	FSAR REFERENCE	REVISION STATUS	STATUS ON STP	
1.41	Preoperational Testing of Redundant On-Site Electric Power Systems to Verify Proper Load Group Assignments	14.2	Rev 0 (3/73)	A	36
1.42		Withdrawn			
1.43	Control of Stainless Steel Cladding of Low-alloy Steel Components	5.2.3.3.2 5.3.1.4	Rev 0 (5/73)	B	
1.44	Control of the Use of Sensitized Stainless Steel	3.9.5.1 4.5.2.4 5.2.3.4 5.3.1.4 10.3.6.2	Rev 0 (5/73)	C See Note 47 B	33
1.45	Reactor Coolant Pressure Boundary Leakage Protection Systems	5.2.5 11.5.2.9.8 Table 7.1-1	Rev 0 (5/73)	A	
1.46	Protection Against Pipe Whip Inside Containment	NONE ~~Table 3.3-2~~ ~~3.6~~ ~~3.6.2.1.2~~ ~~5.4.13.3~~	WITHDRAWN ~~Rev 0 (5/73)~~	~~B~~ C See Note 63	
1.47	Bypassed and Inoperable Status Indication for Nuclear Power Plant Safety Systems	7.1.2.6 Table 7.1-1 7.5.4 8.3.1.2.4 8.3.2.2.7 Figure 7.1-1	Rev 0 (5/73)	A	49 Q430.109N 43 36
1.48	Design Limits and Loading Combinations for Seismic Category I Fluid System Components	10.4.8.1.5 Table 3.7-1 Table 3.9-2.5	Rev 0 (5/73)	C See Note 30	

ATTACHMENT
ST-HL-AE-1944
PAGE 84 OF 137

TABLE 3.12-1 (Cont'd.)
REGULATORY GUIDE MATRIX
NOTES

If a work activity and contract is for a two-month period or less, an audit is not necessary when a facility preaward audit has been conducted. 43

The QA program for operations will conform to the requirements of RG 1.94 Revision 1, with the same clarification: 45

55. Refer to Sections 3.7.4.1 and 3.7.4.2 for the discussion on seismic instrumentation.

56. Refer to Section 5.2.3.3.2 for Westinghouse alternate approach to RG 1.71. Also, refer to Section 10.3.6.2, for the BOP conformance to RG 1.71.

57. STP alternate approach to RG 1.99 is discussed in Section 5.3.2.1.

58. STP alternate approach to RG 1.121 is discussed in Section 3.12.1. 33

59. Revision 0 is utilized during the construction phase for RG 1.58, Positions C.5, C.6, C.7, C.8, and C.10 of Rev. 1 are also utilized.

60. With respect to Section 3.1.2 of ANSI N45.2.3-1973, HL&P interprets the lighting level of 100 footcandles to be guidance. It is HL&P's normal practice that the lighting level for determining "metal clean" of accessible surfaces of piping and components is determined by the inspector. Typically he uses a standard two-cell flashlight supplemented by other lighting as he deems necessary.

61. See the response to Question 321.4 for the compliance with the Regulatory Guide. 53

62. RG 1.1 as clarified by NUREG-75/087. 38

63. ~~The basis for meeting the intent of~~ RG 1.46 HAS BEEN WITHDRAWN FOLLOWING THE ~~ISSUE~~ ISSUANCE ~~is the implementation~~ of NRC Branch Technical Position (BTP) MEB 3-1, NRC BTP ASB 3-1, AND ~~WCAP-8082-P-A, and WCAP-8172-A~~. Tables 3.6.1-2 and 3.6.1-3 provide a summary of the compliance with MEB 3-1 and ASB 3-1. 40

64. The discussion of STP conformance to RG 1.97 Rev. 2 is presented in Table 7.5-1 and Appendix 7B. As explained in Appendix 7B, implementation of RG 1.97 requirements was integrated with the control room design review and was performed using the Westinghouse Owner's Group Emergency Response Guidelines, and conforms with the intent of the RG. 53

65. The QA program during operations will conform to the requirements of Revision 2. 43

66. The quality of DG fuel oil will be checked as identified in Section 9.5.4.4. 49

LIST OF FIGURES (Continued)

Chapter 5

the spring-loaded safety valves. Note that setpoint studies to date indicate that the pressure rise in a four-loop plant for the design step load decrease of 10 percent from full power is limited to 60 psi. The pressure rise is not sufficient to actuate the PORVs, and thus this design is conservative. |38

|38

The pressurizer spray valves help to prevent actuation of the PORVs. The spray rate is selected to prevent the pressurizer pressure from reaching the operating setpoint of the PORVs following a step load reduction in power of ten percent of full load with reactor control.

5.4.13.4 Tests and Inspection. All safety and relief valves are subjected to hydrostatic tests, seat leakage tests, operational tests, and inspections as required. For safety and relief valves that are required to function during a faulted condition, additional tests are performed. These tests are described in Section 3.9.

5.4.14 Component Supports

INSERT

5.4.14.1 Design Bases. Component supports allow virtually unrestrained lateral thermal movement of the loop during plant operation and provide restraint to the loops and components during accident conditions. The loading combinations and design stress limits are discussed in Sections 3.9.1.1 and 3.9.1.4.7. Support design ~~except for pipe restraint~~ is in accordance with the ASME Code, Section III, Subsection NF. The design maintains the integrity of the RCS boundary for normal and accident conditions. Results of support stress evaluations are presented in Section 3.9.1.4.4. |30

5.4.14.2 Description. The support structures are welded structural steel sections. Linear type structures (tension and compression struts, columns, and beams) are used except for the reactor vessel supports, which are plate-type structures. Attachments to the supported equipment are non-integral type that are bolted to or bear against the components. The supports-to-concrete attachments are either embedded anchor bolts or fabricated assemblies. |38

The supports permit virtually unrestrained thermal growth of the supported systems but restrain vertical, lateral, and rotational movement resulting from seismic and pipe break loadings. This is accomplished using spherical bushings in the columns for vertical support and girders, bumper pedestals, hydraulic snubbers, and tie-rods for lateral support.

Because of manufacturing and construction tolerances, ample adjustment in the support structures must be provided to ensure proper erection alignment and fit-up. This is accomplished by shimming or grouting at the supports-to-concrete interface and by shimming at the supports-to-equipment interface.

Reactor Pressure Vessel

Supports for the reactor vessel (Figure 5.4-17) are individual air-cooled rectangular box structures beneath the vessel nozzles bolted to the primary shield wall concrete. Each box structure consists of a horizontal top plate that receives loads from the reactor vessel shoe, a horizontal bottom plate supported by and transferring loads to the primary shield wall concrete, and connecting vertical plates. The supports are air-cooled to maintain the supporting concrete temperature within acceptable levels.

INSERT

Page 5.4-42

As discussed in Reference 3.6-14 and paragraph 3.6.2.1.1.1a, RCL ruptures and the associated dynamic effects are not included in the design bases.

Steam Generator

As shown on Figure 5.4-13, the SG supports consist of the following elements: 38

1. Vertical Support

Four individual columns provide vertical support for each SG. These are bolted at the top to the SG and at the bottom to the concrete structure. Spherical ball bushings at the top and bottom of each column allow unrestrained lateral movement of the SG during heatup and cooldown. The column base design permits both horizontal and vertical adjustment of the SG for erection and adjustment of the system. 38

2. Lower Lateral Support

Lateral support is provided at the generator tubesheet by fabricated steel girders and struts. These are bolted to the compartment walls and include bumpers that bear against the SG but permit unrestrained movement of the SG during changes in system temperature. Stresses in the beam caused by wall displacements during compartment pressurization and the building seismic evaluation are considered in the design.

3. Upper Lateral Support

The upper lateral support of the SG is provided by a built-up ring plate girder at the operating deck. Two-way acting snubbers restrain sudden seismic or blowdown induced motion, but permit the normal thermal movement of the SG. Movement perpendicular to the thermal growth direction of the SG is prevented by struts.

Reactor Coolant Pump

Three individual columns, similar to those used for the SG, provide the vertical support for each pump. Lateral support for seismic and blowdown loading is provided by tension tie bars and compression struts. The pump supports are shown on Figure 5.4-14. 38

Pressurizer

The supports for the pressurizer, as shown in Figure 5.4-15, consist of:

1. A steel ring plate between the pressurizer skirt and the supporting concrete slab. The ring serves as a leveling and adjusting member for the pressurizer and may also be used as a template for positioning the concrete anchor bolts.

2. The upper lateral support consists of struts cantilevered off the compartment walls that bear against the "seismic lugs" provided on the pressurizer.

Pipe Restraints

1. Crossover Leg

Restraint at each elbow of the reactor coolant pipe between the pump and the SG (crossover leg) is required to prevent excessive stresses on the system resulting from postulated breaks in this pipe. The support includes pipe bumpers with straps and steel thrust blocks (as shown on Figure 5.4-16) and steel supporting members. A whip restraint tie rod is provided (as shown on Figure 5.4-17) to prevent whipping of the crossover leg pipe following a postulated break at the SG outlet nozzle. This restraint attaches to the primary shield wall and extends horizontally to the vertical run of the crossover leg pipe. 38

2. Hot Leg

A restraint is located at the 50° elbow in the hot leg to prevent excessive displacement of the hot leg following a postulated guillotine break at the SG inlet nozzle. This restraint consists of structural steel members which transmit loads to the concrete structure, as shown on Figure 5.4-18.

Hot Leg and Cold Leg

Pipe restraints are provided in the primary shield wall at the reactor coolant pipe as close to the elbow on the cold leg as possible, and on the hot leg as close to the RPV outlet nozzle safe end as possible (Figure 5.4-19). The function of these restraints is to limit the break area for guillotine breaks at the RPV safe end to approximately one square foot, such that peak cavity pressure is reduced. Insulation or cooling is provided such that the concrete temperatures are maintained within acceptable limits. 30

5.4.14.3 Evaluation. A detailed evaluation ensures the design adequacy and structural integrity of the reactor coolant loop and the primary equipment supports system. This detailed evaluation is made by comparing the analytical results with established criteria for acceptability. Structural analyses are performed to demonstrate design adequacy for safety and reliability of the plant in case of a large or small seismic disturbance and/or LOCA conditions. Loads which the system is expected to encounter often during its lifetime (thermal, weight, pressure) are applied and stresses are compared to allowable values as described in Section 3.9.1.4.7.

The SSE and design basis LOCA resulting in a rapid depressurization of the system are required design conditions for public health and safety. The methods used for the analysis of the SSE and LOCA conditions are given in Section 3.9.1.4.

The reactor vessel supports are not designed to provide restraint for vertical uplift movement resulting from seismic and pipe break loadings. However, RPV motion resulting from seismic and pipe break events is conservatively included in the RCS analyses described in Section 3.9.1.4.

Thermal analyses are performed for the RPV supports. Thermal growth of the supports are included in the RCS analyses as thermal anchor movement.

DELETED

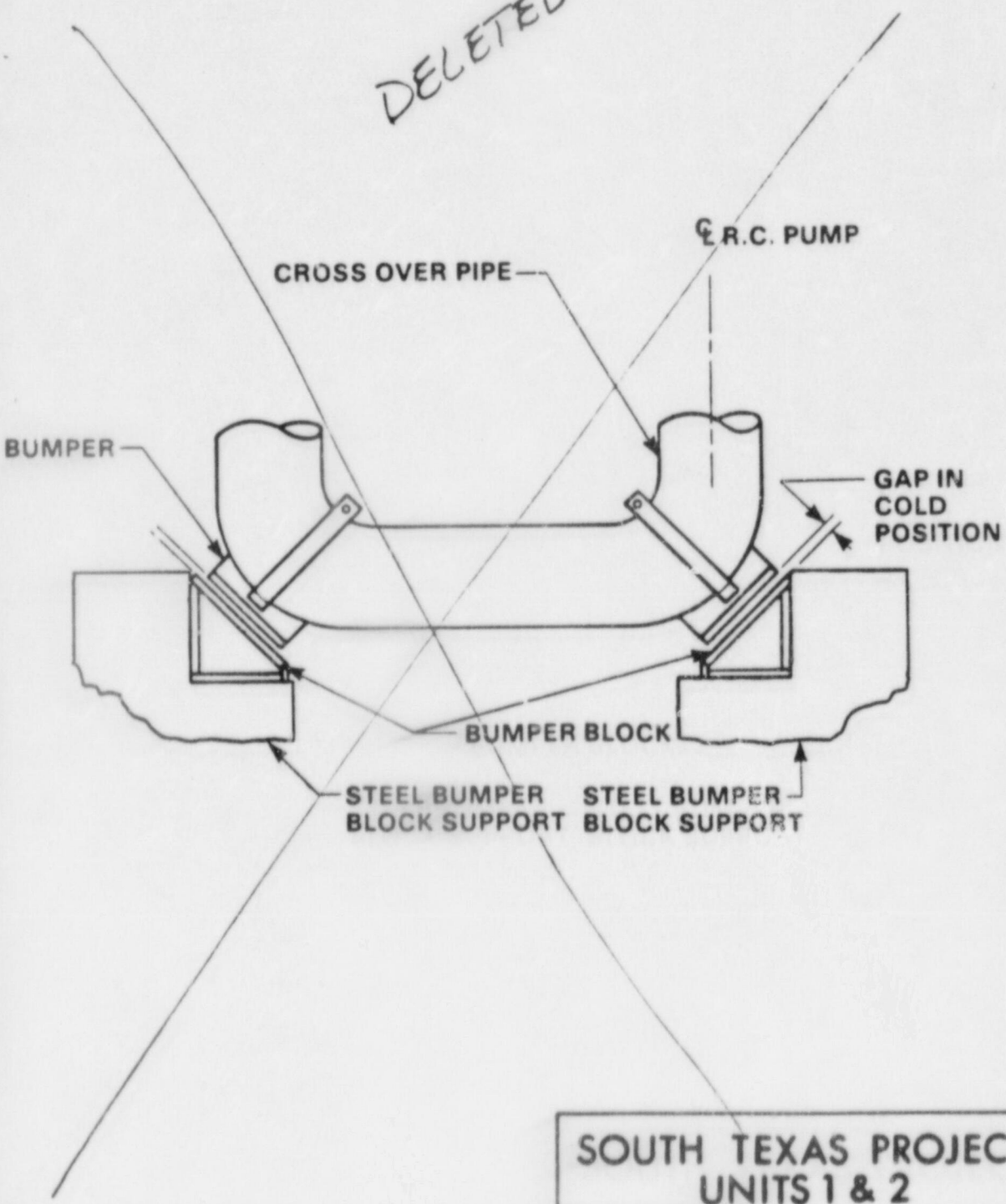

SOUTH TEXAS PROJECT
UNITS 1 & 2

Crossover Leg Support

Figure 5.4-16 Amendment 38

DELETED

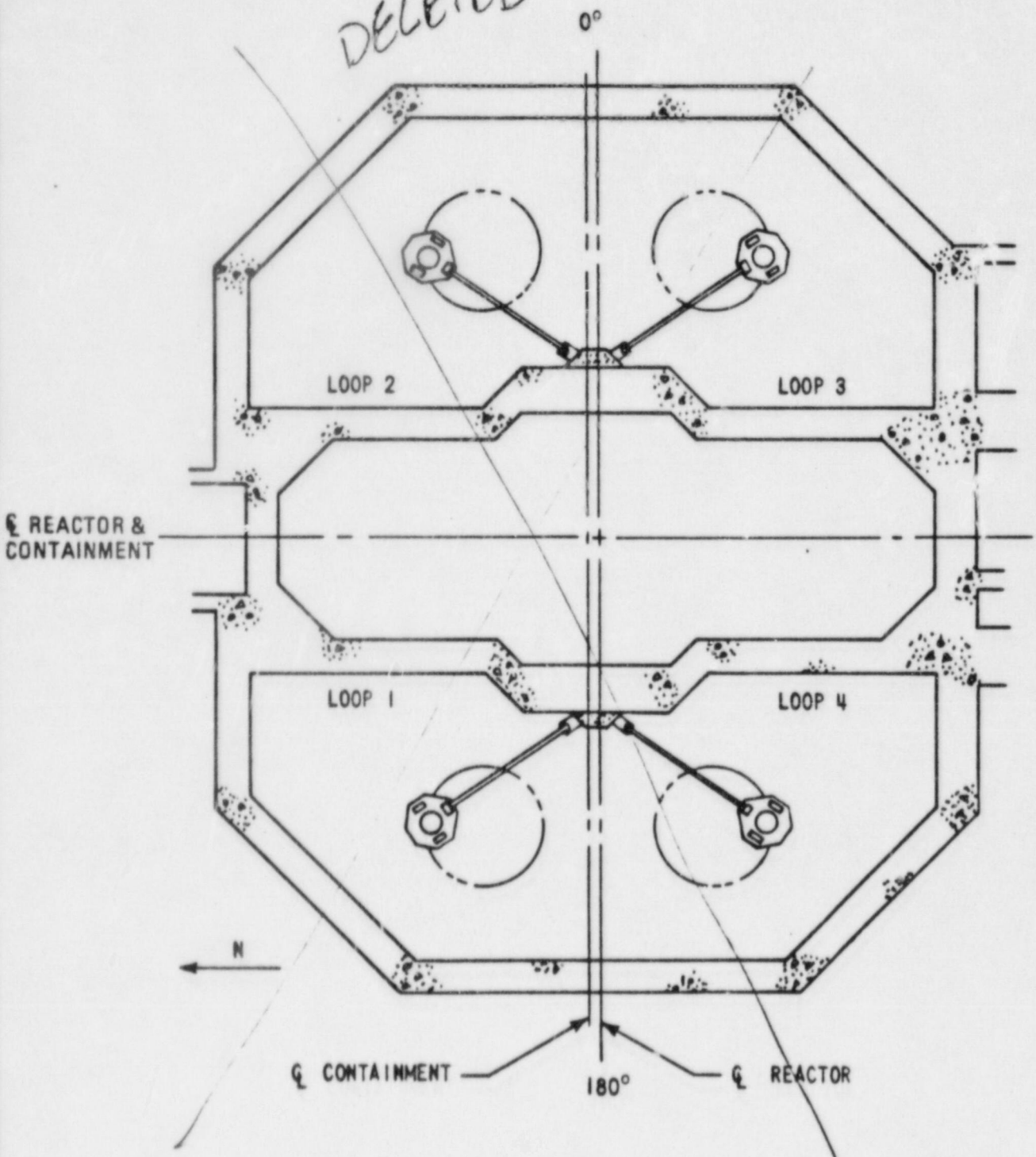

SOUTH TEXAS PROJECT
UNITS 1 & 2

Crossover Leg Vertical Run Restraints

Figure 5.4-17 Amendment 38

DELETED

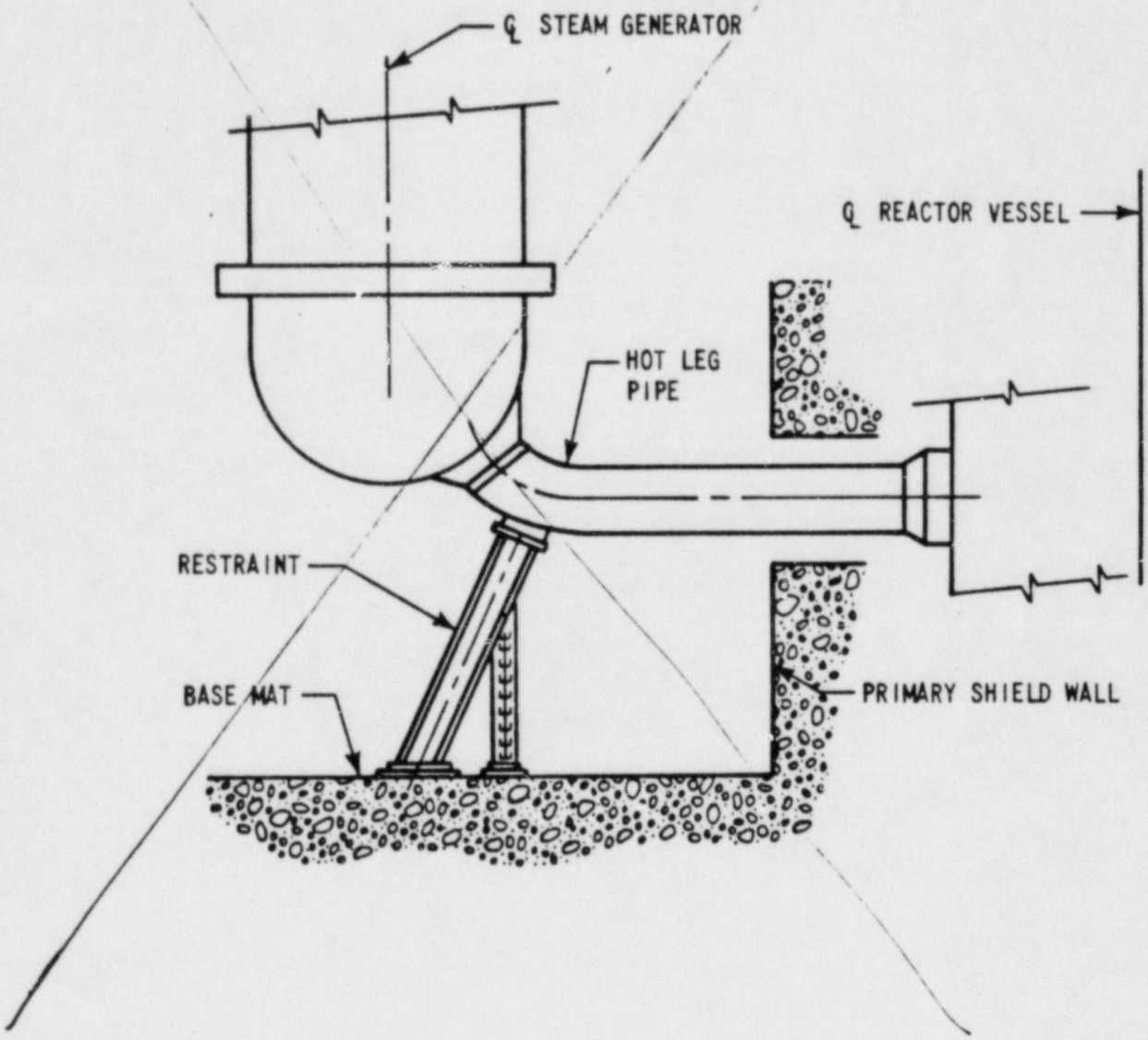

SOUTH TEXAS PROJECT
UNITS 1 & 2

Hot Leg Pipe Whip Restraint
Figure 5.4-18

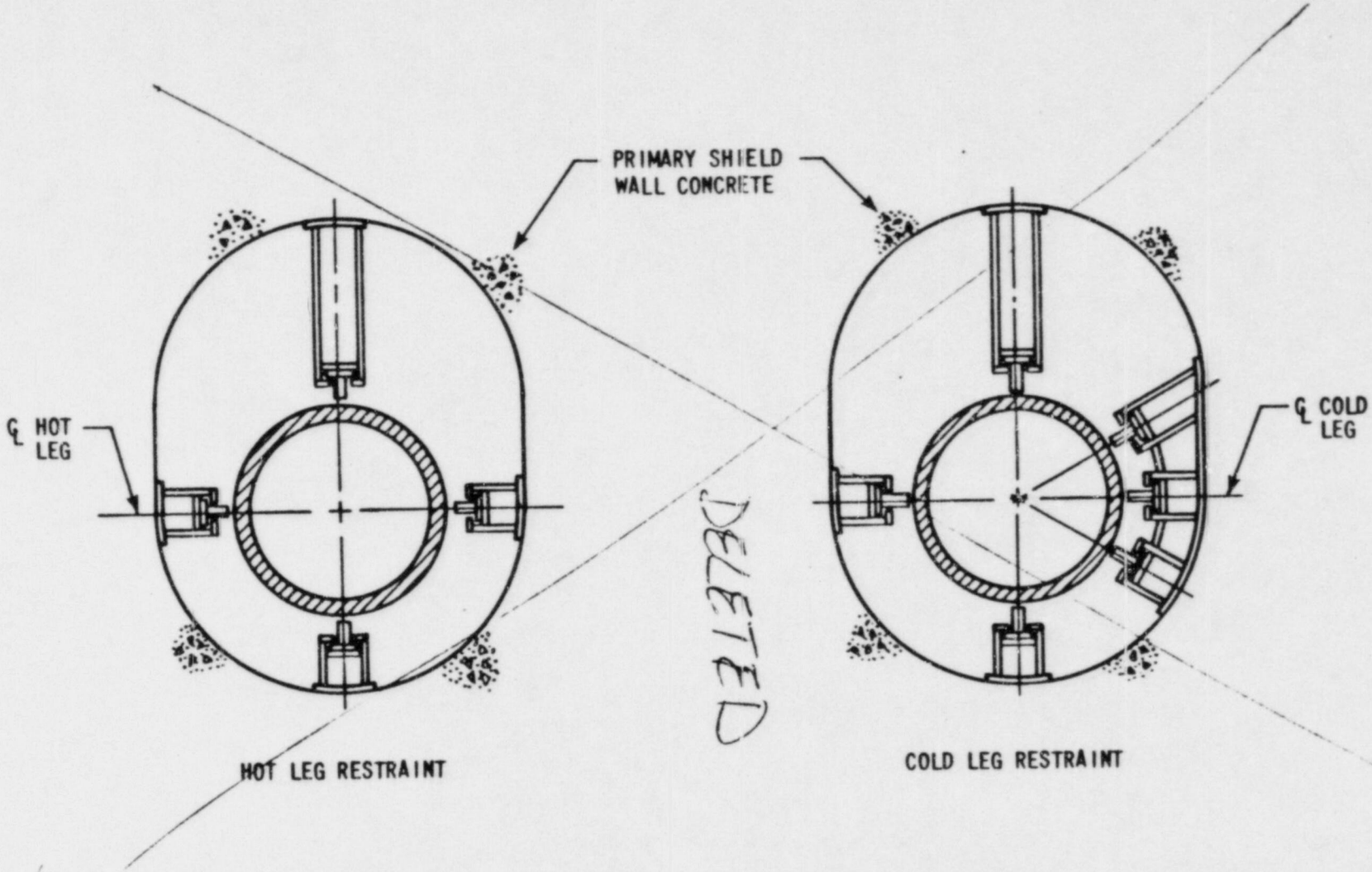

SOUTH TEXAS PROJECT
UNITS 1 & 2

Hot and Cold Leg Primary Shield
Wall Pipe Whip Restraints
Figure 5.4-19

ATTACHMENT
ST-HL-AE-1744
PAGE 94 OF 127

Question 022.02

In the unlikely event of a pipe rupture inside a major component subcompartment, the initial blowdown transient would lead to pressure loadings on both the structure and the enclosed component(s). To assure the integrity of these design features, we request that you perform a subcompartment, multi-node pressure response analysis, and provide the following information:

(1) Provide and justify the pipe break type, area and location for each analysis. Specify whether the pipe break was postulated for the evaluation of the compartment structural design, component supports design or both.

(2) For each compartment, provide a table of blowdown mass flow rate and energy release rate as a function of time for the break which results in the maximum structural load, and for the break which was used for the component supports evaluation.

(3) Provide a schematic drawing showing the compartment nodalization for the determination of maximum structural loads, and for the component supports evaluation. Provide sufficiently detailed plan and section drawings for several views, including principal dimensions, showing the arrangement of the compartment structure, major components, piping, and other major obstructions and vent areas to permit verification of the subcompartment nodalization and vent locations.

(4) Describe the nodalization sensitivity study performed to determine the minimum number of volume nodes required to conservatively predict the maximum pressure load acting on the compartment structure. The nodalization sensitivity study should include consideration of spatial pressure variation circumferentially, axially and radially within the compartment. Describe and justify the nodalization sensitivity study performed for the major component supports evaluation, where transient forces and moments acting on the components are of concern.

(5) Discuss the manner in which movable obstructions to vent flow (such as insulation, ducting, plugs, and seals) were treated. Provide analytical and experimental justification that vent areas will not be partially or completely plugged by displaced objects. Discuss how insulation for piping and components was considered in determining volumes and vent areas.

(6) Graphically show the pressure (psia) and differential pressure (psi) responses as functions of time for each node. Discuss the basis for establishing the differential pressure on structures and components.

(7) For the compartment structural design pressure evaluation, provide the peak calculated differential pressure and time of peak pressure for each node. Discuss whether the design differential pressure is uniformly applied to the compartment structure or whether it is spatially varied. If the design differential pressure varies depending on the proximity of the pipe break location, discuss how the vent areas and flow coefficients

No change

Question 022.02 (Continued)

were determined to essure that regions removed from the break location are conservatively designed.

(8) Provide the peak and transient loading on the major components used to establish the adequacy of supports design. This should include the load forcing functions (e.g., f_x (t), F_y (t), f_z (t)) and transient moments (e.g., M_x (t), M_y (t), M_z (t)) as resolved about a specific, identified coordinate system. Provide the projected area used to calculate these loads and identify the location of the area projections on plan and section drawings in the selected coordinate system. This information should be presented in such a manner that confirmatory evaluations of the loads and moments can be made.

Response

The response to the various portions of this question is identified by number in the left hand margin.

1. The spectrum of pipe breaks analyzed for each subcompartment is listed in Table 6.2.1.1-1. The break which results in the highest differential pressure across the walls of the respective compartment is designated as the Subcompartment Design Basis Accident (DBA). The high energy break used for the structural design evaluation of the RHR cubicle will be provided in an early amendment. These same breaks will be used for evaluation of primary system component support design, with the exception of within the steam generator compartment. Currently, a revised mass and energy release for the equipment support design evaluation within the steam generator compartment is being generated and will be submitted in an amendment.

2. The mass and energy release rates used for evaluating maximum structural load and component supports design are provided in Table 6.2.1.1-1, 6.2.1.2-2, 6.2.1.4-5, and 6.2.1.4-6. The mass and energy release rate used for the RHR cubicle structural design evaluation and a revised mass and energy release for the steam generator compartment component supports design evaluation will be submitted in an amendment.

3. Schematic drawings which show compartment nodalization for determination of the maximum structural loads are illustrated on Figures ~~6.2.1.2-1, 6.2.1.2-2,~~ 6.2.1.2-3, 6.2.1.2-4, 6.2.1.2-5, 6.2.1.2-6, and 6.2.1.2-7. Compartment nodalization for determination of maximum structural loads in the RHR cubicle will be provided in an amendment. Any nodalization changes from the current configuration will be reflected in an amendment.

4. STP utilized Bechtel code NE699 for the subcompartment pressure-temperature analysis, which is an NRC approved code. Refer to a letter from R.L. Baer, Chief, Light Water Reactors, Branch No. 2, Division of Project 53

Response (Continued)

4. Management to B.L. Lex, Bechtel Power Corporation, Febraury 1979, subject: Evaluation of Bechtel Topical Report BN-TOP-4, "Subcompartment Pressure and Temperature Analysis." Also NUREG-0609, "Asymmetric Blowdown Loads on PWR Primary System", page 13 states that sensitivity studies are not required for NRC approved codes. Therefore, sensitivity studies are not needed for STP subcompartment analysis. 53

5. Only normal flow paths between adjacent nodes based upon drawings of plant layout, equipment, and cable trays which could restrict flows were considered when flow areas were defined. Insulation breakage and plugging is assumed to conservatively yield peak pressure differentials which are used for the civil/structural support design. Insulation for piping and for components were subtracted from node volumes and from junction flow areas.

6. Representative pressure responses as a function of time are shown on Figures ~~6.2.1.2-18,~~ 6.2.1.2-20, 6.2.1.2-23, 6.2.1.2-24, 6.2.1.2-25, 6.2.1.2-26, 6.2.1.2-27, 6.2.1.2-28, and 6.2.1.2-29. The differential pressure on structures was conservatively equal to gage pressure. The differential pressure on components is the computed pressure different between nodes.

7. The peak differential pressure in various modes and the time of these peak differential pressures are presented for each subcompartment in Tables ~~6.2.1.2-2,~~ 6.2.1.2-5, 6.2.1.2-9, 6.2.1.2-11, 6.2.1.2-13, and 6.2.1.2-19. Vent and flow coefficients were modeled to conservatively represent the actual compartment configuration. This assures a representative pressure distribution throughout the compartment. Junction areas as well as flow coefficients are tabulated in Tables ~~6.2.1.2-3,~~ 6.2.1.2-6, 6.2.1.2-10, 6.2.1.2-11, 6.2.1.2-12, 6.2.1.2-14, 6.2.1.2-16, 6.2.1.2-18, and 6.2.1.2-20.

8. The transient loading on major components are given in Figures ~~6.2.1.2-19,~~ 6.2.1.2-20, and 6.2.1.2-21. The projected area on the three mutually perpendicular directions are given on Tables ~~6.2.1.2-4,~~ 6.2.1.2-7, and 6.2.1.2-8.

Question 222.1

Since pipe restraints are provided for large primary system lines that penetrate the reactor cavity, limited offset type breaks were analyzed for subcompartment pressure analyses. For breaks of this type, the break geometry may resemble an orifice in the broken pipe.

Data from a number of investigators have demonstrated that for two-phase flow the mass flow rate per unit area for orifices is higher than for pipes. Justify that the SATAN-V methods are conservative for prediction of flow through orifices. Orifice and short nozzle flow data are found in: (1) NEDO-13418, "Critical Flow of Saturated and Subcooled Water at High Pressure," Sozzi and Sutherland, July 1975; (2) "Blowdown Flow Rates of Initially Saturated Water," V. Simon, Topical Meeting on Water-Reactor Safety, Salt Lake City, Utah, March 1973; (3) "Choked Expansion of Subcooled Water and the I.H.E. Flow Model," R.L. Collins, Journal of Heat Transfer, May 1978; and (4) "The Marviken Full-Scale Critical Flow Tests Interim Report; Results from Test 7."

Response

SEE SECTION 6.2.1.2.2.1

~~The methods used for evaluation of critical flow in SATAN-V short term mass~~ and energy release analyses have been reviewed with respect to current data. The data present results which indicate that critical flow through an orifice is higher than critical flow through a pipe. The results of this evaluation show that SATAN-V results, in terms of pressure, break flow, break energy, and yield conservative results in comparison to the applicable data.

The critical flow calculation in SATAN-V is dependent upon the fluid conditions at the break location. For subcooled fluid conditions, a modification of the Zaloudek correlation is applied with a discharge coefficient of 1.0. The parameters which determine subcooled liquid critical flow are the reservoir pressure and the saturation pressure corresponding to reservoir conditions. The Moody correlation, a thermodynamic equilibrium critical flow model with a discharge coefficient of 1.0, is used for saturated and two-phase fluid conditions. The Moody model is a function of stagnation properties. (See Reference 1 for a more detailed description of these break flow models). Both of these correlations are independent of break geometry.

These critical flow models were compared to the subcooled and saturated data presented in References 2 (Sozzi and Sutherland) and 11 (Marviken results). References 3 and 4 were not suitable for direct application to the methods used in this analysis since they presented summaries of current research and did not include sufficiently detailed data. However, several of the studies referred to in these literature surveys were reviewed for applicable data (References 5-8). Most of the references did not specify

reservoir conditions, and it was therefore not possible to compare the Moody or Zaloudek equations to this data. Sozzi and Sutherland generated representative data for nozzles of varying entrance geometry, length and diameter. The Marviken report used here obtained data for one nozzle only.

In the two-phase region, the Moody model underpredicted some of the applicable data in the region of 0 percent to 0.4 percent quality. References 5, 6, 7 and 8 also provided two-phase data points for comparison purposes. By applying a multiplier to the SATAN-V correlation, the data fell beneath the curve generated from this modified correlation. The multiplier decreases linearly from a value of 1.4 at zero quality to 1.0 at 0.4 percent quality.

Similarly, the Zaloudek model was nonconservative when compared to serval subcooled data points. Additional data from References 9 and 10 were included in this comparison. A multiplier on the Zaloudek correlation, varying linearly from 1.4 at zero degrees subcooling to 1.0 at 50°F subcooling, provided a correlation which represented an upper bound to most of the data. Only a few of the Marviken data obtained in the early portion of the transient did not fall beneath the curve generated by the adjusted break flow model.

However, closer inspection of the Marviken results shows that, in general, the trend of the Marviken data with respect to subcooling is opposite to other data trends (e.g., Sozzi and Sutherland). It is felt that the results obtained from the methods of flow in this facility were not indicative of the actual break flow in the very early portion of the test due to the transient nonequilibrium effects. However, the modified correlation still provided a conservative prediction of nearly all the Marviken data, expecially those obtained during the transient where the data are felt to be most meaningful.

In order to determine the effect of these modified correlations, the adjusted critical flow model was programmed into the SATAN-V code for all break locations analyzed. These locations and break sizes are specified in Table 1.

Results indicate that for all break locations, the analyses performed using the adjusted critical flow model compare favorably to the analyses which used the unmodified correlations. The largest variation in break flow was less than 1 percent. Figures 1 through 5 present plots of break flow transients obtained using SATAN-V with and without the adjusted critical flow model. Results for all break locations clearly do not indicate any need for reanalysis. There was no change to the peak release rate for all breaks, and the transients shown in Figures 1 through 5 are virtually identical. Since a 40 percent margin was applied to the pressure differentials calculated from these break flow transients, the results currently reported are sufficiently conservative under review of the current critical flow data. Of this 40 percent, 10 percent is directly attributable to the calculated mass and energy releases.

REFERENCES

1. "Westinghouse Mass and Energy Release Data for Containment Design," WCAP-8264.

2. Sozzi, G. L., and W. A. Sutherland, "Critical Flow of Saturated and Subcooled Water at High Pressure," NEDO-13418.

3. Simon, V., "Blowdown Flow Rates of Initially Saturated Water," Topical Meeting on Water Reactor Safety, (Salt Lake City, Utah, March 1973).

4. Collins, R. L., "Choked Expansion of Subcooled Water and the I.H.E. Flow Model," Journal of Heat Transfer, 100, (May 1978).

5. Moody, F. J., "Maximum Flow Rate of a Single Component, Two-Phase Mixture," Journal of Heat Transfer, (February 1965).

6. Starkman, E. S., V. E. Schrock, K. F. Neusen, and D. J. Maneely, "Expansion of a Very Low Quality Two-Phase Fluid Through a Convergent- ivergent Nozzle," ASME Journal of Basic Engineering, (June 1964).

7. Henry, R. E., and H. K. Fauske, "Two-Phase Critical Flow at Low Qualities," Nuclear Science and Engineering, 41, (1970).

8. Cruver, J. E., and R. W. Moulton, "Critical Flow of Liquid-Vapor Mixtures," A. I. Ch. E. Journal, 13, (January 1967).

9. Powell, A. W., "Flow of Subcooled Water Through Nozzles," WAPD-PT(V)-90.

10. Schrock, V. E., E. S. Starkman, and R. A. Brown, "Flashing Flow of Initially Subcooled Water in Convergent-Divergent Nozzles," Journal of Heat Transfer, 99 (May 1977).

11. "The Marviken Full-Scale Critical Flow Tests Interim Report; Results from Test 7".

Table 1

Break Location	Break Area, Sq. In.
SG Inlet Nozzle Elbow	777
SG Outlet Nozzle	755
RCP Cold Leg Nozzle	594
Reactor Cavity Cold Leg Nozzle	150
Reactor Cavity Hot Leg Nozzle	150

DELETED

ATTACHMENT
ST-HL-AE-1744
PAGE 102 OF 127

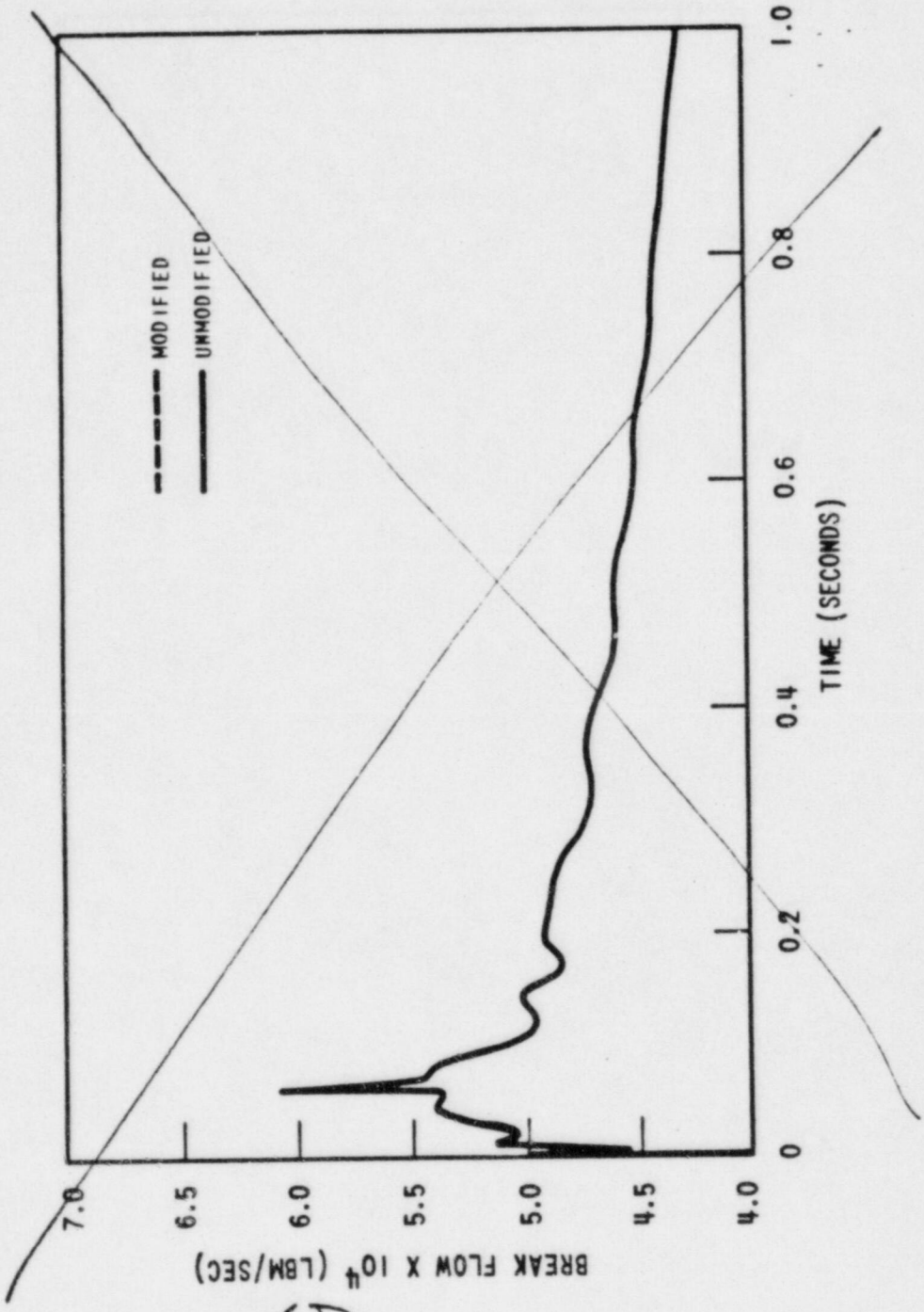

DELETED

Amendment 8, 10/22/79

SOUTH TEXAS PROJECT UNITS 1 & 2

Figure Q222.1-1. Steam Generator Inlet Elbow Break Comparison

ATTACHMENT
ST-HL-AE-1744
PAGE 103 OF 127

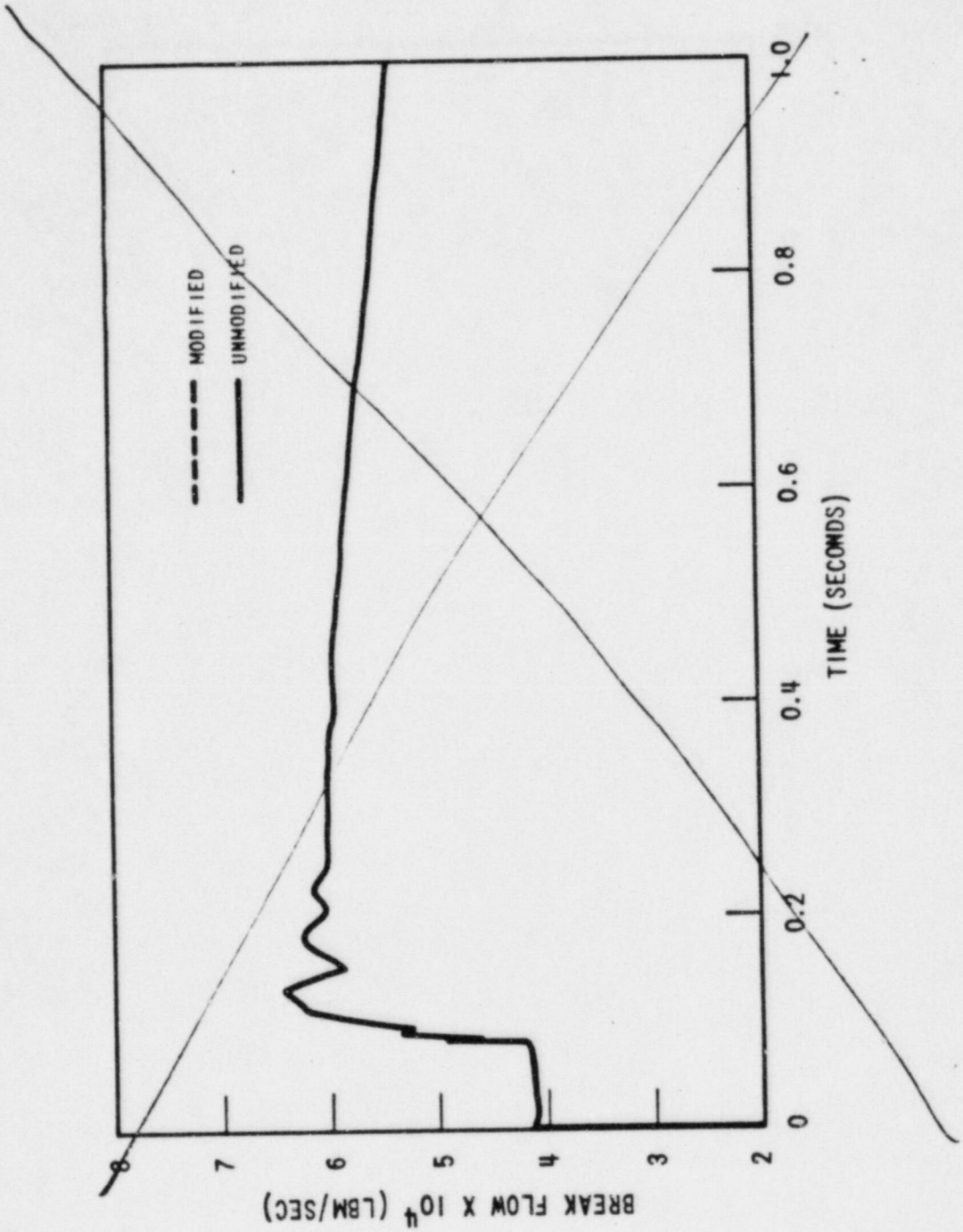

DELETED

Amendment 8, 10/22/79

SOUTH TEXAS PROJECT UNITS 1 & 2

Figure Q222.1-2. Steam Generator Outlet Nozzle Break Comparison

ATTACHMENT
ST-HL-AE-1244
PAGE 104 OF 127

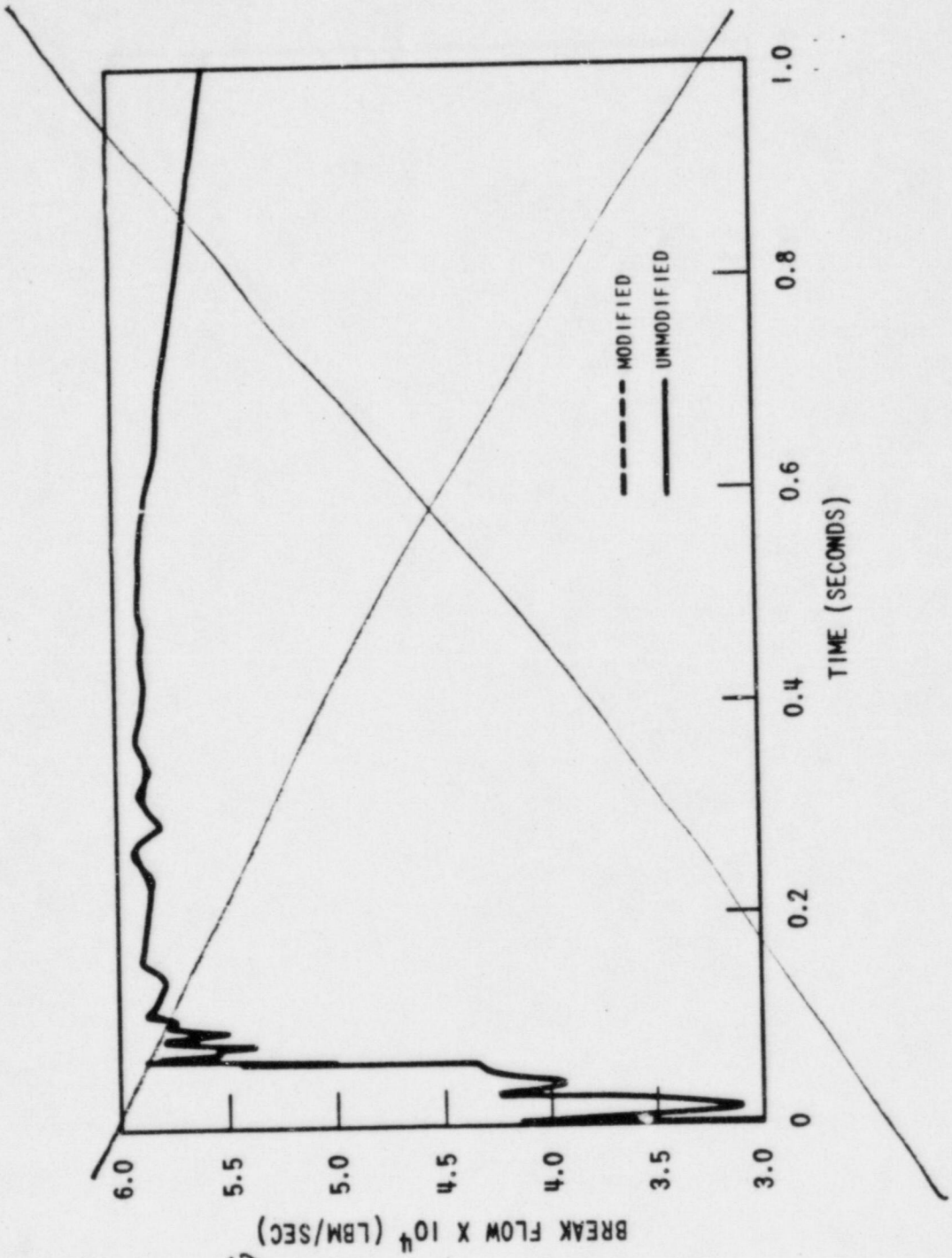

DELETED

Amendment 8, 10/22/79

SOUTH TEXAS PROJECT UNITS 1 & 2

Figure Q222.1-3. Reactor Coolant Pump Outlet Nozzle Break Comparison

ATTACHMENT
ST-HL-AE-1744
PAGE 105 OF 127

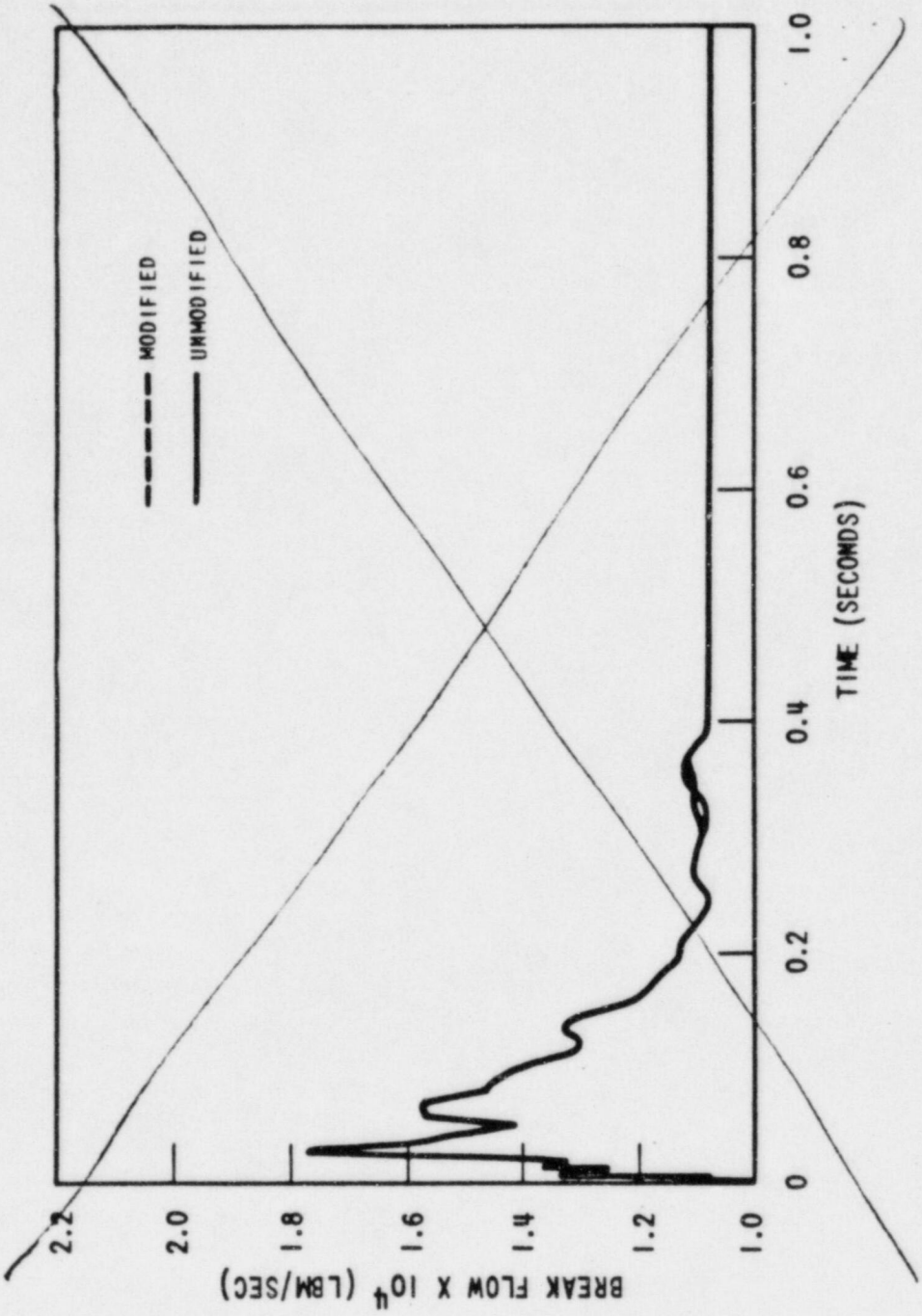

DELETED

Amendment 8, 10/22/79

SOUTH TEXAS PROJECT UNITS 1 & 2

Figure Q222.1-4. Reactor Cavity Hot Leg Break Comparison

ATTACHMENT
ST-HL-AE-1744
PAGE 106 OF 127

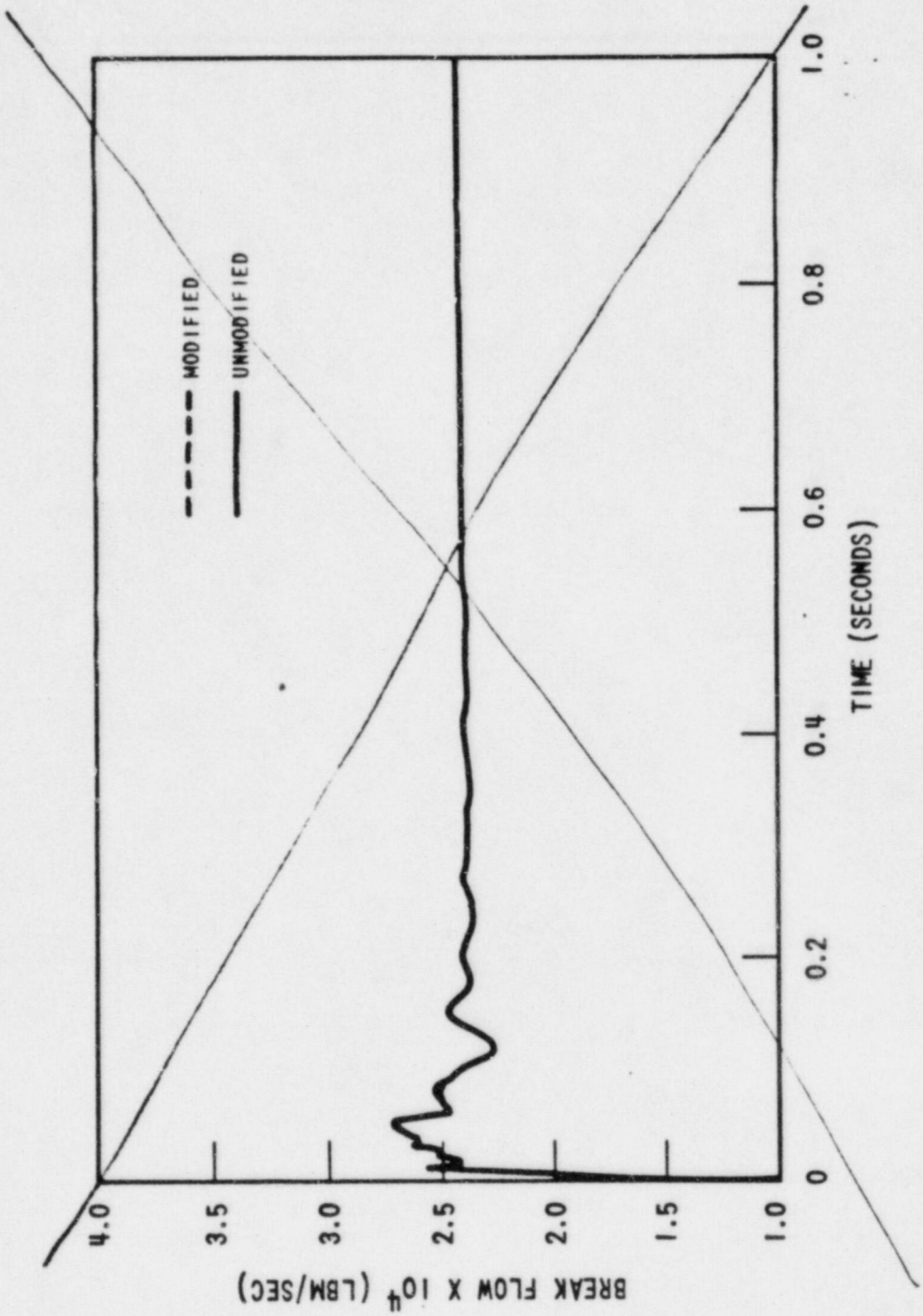

DELETED

Amendment 8, 10/22/79

SOUTH TEXAS PROJECT UNITS 1 & 2

Figure Q222.1-5. Reactor Cavity Cold Leg Break Comparison

Question 480.04N

In Section 6.2.1.2.2.1 of the FSAR, it is stated that for the reactor cavity subcompartment analysis, the postulated pipe rupture occurs in the inspection toroid and only a small fraction of the blowdown enters the reactor cavity. Justify that only a small fraction of the break flow enters the cavity, i.e., discuss how the break flow is prevented from entering the cavity, and why it is not appropriate to postulate a break inside the cavity. Provide appropriate plan and elevation drawings of the reactor cavity showing the inspection toroid, piping, pipe restraints, postulated break location and vent paths (flow area) to the reactor cavity and steam generator compartment, including the blowout panel for venting to the lower reactor cavity.

Response

Section 6.2.1.2.2.1 has been revised. ~~See paragraph 6.2.1.2.2 for a discussion of design features to contain the distribution of blowdown. See Figures 6.2.1.2.1 and 6.2.1.2.2 for plan and elevation drawings of the toroid, piping, pipe restraints and lower reactor cavity~~.

~~Additional drawings were provided under separate cover letter dated June 14, 1985, ST-HL-AE-1272~~.

~~Note:~~

~~STP has applied for exemption from certain provisions of GDC 4 (ST-HL-AE-1096 dated July 17, 1984, ST-HL-AE-1200 dated March 1, 1985) which may affect the response provided for this question.~~

Question 480.05N

The reactor cavity model described in Section 6.2.1.2.3.2 indicates that "one hundred and eighty-degree symmetry was assumed...". Explain and justify the use of the one hundred and eighty-degree model versus modeling the entire reactor cavity and inspection toroid.

Response

Section 6.2.1.2.2.1 has been revised. ~~Symmetry of the reactor cavity is no longer assumed. See Section 6.2.1.2 for a description of the reactor cavity model.~~

~~Note:~~

~~STP has applied for exemption from certain provisions of GDC 4 (ST-HL-AE-1096, dated July 17, 1984, ST-HL-AE-1200, dated March 1, 1985) which may affect the response provided for this quesiton.~~

Question 480.06N

Concerning the blowout panel in the heating, ventilating, and air conditioning ducting leading from the loop compartment subpedestal space to the lower reactor cavity (i.e., junction 110 in Table 6.2.1.1-4):

1. Justify the constant vent area of 4.05 square feet given for this vent path in Table 6.2.1.2-4.

2. Provide the dynamic analysis of the blowout panel that gives the vent area as a function of time after the break.

3. Provide drawings showing details of the blowout panel and surrounding areas.

4. With regard to possible generation of missiles, describe the potential for damage to safety-related systems by the blowout panel during a loss-of-coolant accident within the reactor cavity/inspection toroid.

Response

Section 6.2.1 has been revised. ~~The following responses are based no the revised section~~.

1. The HVAC panels are in junction 108 of the revised analysis model. There are two panels, one on either side of the ducting supplying cooling air from the reactor cavity cooling units. The total vent area is 13.5 square feet.

2. The panels are assumed to relieve at 1 psi differential pressure across the panels. Since they are light panels they are assumed to provide full open area instantaneously when the differential pressure value is reached. This occurred at 0.122 seconds into the analysis.

3. The surrounding area is shown in Figure 1.2-12 and drawings showing the blowout panel locations are provided in the response Q480.04N.

4. There are no safety-related equipment or components susceptible to damage by a missile which might be created by the blowout panel during a LOCA. Safty-related equipment in the space with the HVAC panels are protected by concrete structures or located at a substantially higher evaluation taking them out of the area of potential impact. This will be verified as part of the ongoing hazard analysis program.

Note:
STP has applied for exemption from certain provisions of GDC 4 (ST-HL-AE-1096, dated July 17, 1984, ST-HL-AE-1200, dated March 1, 1985) which may affect the response provided for this question.

Question 480.07N

For the reactor cavity analysis, provide justification that vent areas will not be partially or completely plugged by displaced objects (e.g., insulation). Of particular concern is the rationale for not considering the blockage of the vent paths through the restricted clearance spaces around the primary piping nozzles in the reactor cavity/inspection toroid analysis.

Response

Section 6.2.1.2.2.1 has been revised, ~~to include some plugging by displaced objects. For example, the open vent area through the RCS piping restreints in the RCS cold leg piping penetrations in the primary shield wall is assumed to be reduced by plugging caused by displace objects. It should be noted that the nozzle break is postulated in the toroid. To assume blockage of the space between the nozzle and the flow limiting seal plate would underestimate pressures in the reactor cavity.~~

~~Note:~~

~~STP has applied for exemption from certain provisions of GDC 4 (ST-HL-AE-1096, dated July 17, 1984, ST-HL-AE-1200, dated March 1, 1985) which may affect the response provided for this question.~~

Question 480.08N

In Table 6.2.1.2-1, it is stated that the short term mass and energy release rates "include a 10% margin not used" in the subcompartment analysis. Explain the origin of this 10% margin and justify why it is not to be used in the subcompartment analysis. Present the mass and energy release rates actually used in the subcompartment analyses.

Response

The 10 percent margin was applied to calculated results by the NSSS vendor and represents an additional degree of conservatism deemed unnecessary in view of the other margins (e.g. volumes, vent areas) used in the calculations. The mass energy release rates used in the subcompartment analyses are obtained by multiplying the values in the table by a factor of 0.9091.

Note:

STP has applied for exemption from certain provisions of GDC 4 (ST-HL-AE-1096, dated July 17, 1984, ST-HL-AE-1200, dated March 1, 1985) which may affect the response provided for this question.

Question 480.09N

Provide the results of the nodal sensitivity studies performed for the steam generator subcompartment analysis referenced in Section 6.2.1.2.3.3. The concern results because of the gross nodal modeling, particularly in nodes 1 through 8, which does not account for flow restrictions and variations around piping and other obstructions.

Response

Section 6.2.1 has been revised. The steam generator subcompartment analysis has been changed to include a finer nodalization, specifically 33 nodes instead of 8 nodes used previously. This finer nodalization more carefully accounts for flow restrictions presented by piping, platforms, supports, equipment and other structures in the steam generator compartments. The NRC-approved COPDA computer program (Reference 6.2.1.2-2) was used to perform the subcompartment analyses. The modeling for the COPDA program requires that nodal boundaries be taken at significant flow restrictions. The addition of arbitrary nodal boundaries would violate this requirement and could lead to erroneous results. This and the guidelines and recommendations of Section 3.2 of NUREG-0609 have been followed in the nodalization. In light of this and since COPDA is an NRC-approved program no sensitivity studies were performed. This is consistent with Section 3.2.1 of NUREG-0609.

Note:

STP has applied for exemption from certain provisions of GDC 4 (ST-HL-AE-1096, dated July 17, 1984, ST-HL-AE-1200, dated March 1, 1985) which may affect the response provided for this question.

Question 480.12N

The response to Q022.2, regarding the subcompartment analysis, is incomplete since it refers to a future amendment. Provide additional information to complete the response.

Response

The response to Q022.2 has been revised.

Note:

STP has applied for exemption from certain provisions of GDC 4 (ST-HL-AE-1096, dated July 17, 1984, ST-HL-AE-1200, dated March 1, 1985) which may affect the response provided for this question.

6.2 CONTAINMENT SYSTEMS

6.2.1 Containment Functional Design

6.2.1.1 Containment Structure

6.2.1.1.1 Design Bases: The Containment design basis is to limit the release of radioactive materials, subsequent to postulated accidents, such that resulting calculated offsite doses are less than the guideline values of 10CFR100. In order to meet this requirement, a design (maximum) Containment leakage rate has been defined in conjunction with performance requirements placed on other Engineered Safety Feature (ESF) systems.

The capability of the Containment structure to maintain leaktight integrity and to provide a predictable environment for operation of ESF systems is assured by a comprehensive design, analysis, and testing program that includes consideration of:

1. Peak Containment pressure and temperature associated with the most severe postulated accident coincident with the Safe Shutdown Earthquake.

2. Maximum external pressure to which the Containment may be subjected as a result of inadvertent Containment systems' operations that potentially reduce Containment internal pressure below outside atmospheric pressure.

6.2.1.1.1.1 Postulated Accident Conditions - The spectrum of postulated accidents considered in determining Containment design peak pressure (and temperature), subcompartment peak pressure, and internal pressure are summarized in Table 6.2.1.1-1. The spectrum of breaks used in the Emergency Core Cooling System (ECCS) analysis for maximum Containment peak pressure is defined in Section 6.2.1.5 and Section 15.6.5. For postulated subcompartment pipe break accidents, a discussion of break locations is given in Section 3.6.2. A INSERT 1

For Containment structure and subcompartment peak pressure analysis, it is assumed that each accident can occur concurrent with a loss of offsite power and the most limiting single active failure. No two accidents are assumed to occur simultaneously or consecutively.

For each of the categories of Containment peak pressure, subcompartment peak pressure, Containment external pressure, and Containment vacuum pressure, the Design Basis Accident (DBA) is defined as the most severe of the spectrum of accidents postulated for each case. The DBA calculated pressure, margin between calculated and design pressure values, and results for the margin for Containment are given in Table 6.2.1.1-2. Containment design parameters are given in Table 6.2.1.1-3. The DBA calculated pressures and margin between calculated and design pressure values for various subcompartment analyses are presented in Tables 6.2.1.2-2, 6.2.1.2-5, 6.2.1.2-9, 6.2.1.2-11, 6.2.1.2-13, 6.2.1.2-15, 6.2.1.2-17 and 6.2.1.2-19.

6.2.1.1.1.2 Mass and Energy Release - The sources and amounts of mass and energy release for the most severe of the accidents listed in Table 6.2.1.1-1 under the categories of Containment peak pressure, subcompartment

INSERT

Page 6.2-1

As discussed in Reference 3.6-14 and paragraph 3.6.2.1.1.1a, RCL ruptures and the associated dynamic effects are not included in the design bases. Subcompartment analyses are based on RCL branch pipe breaks or secondary system pipe breaks. Containment pressure and temperature design is based on non-mechanistic double-ended guillotine [redacted] breaks.

qualification for equipment in the RCB were LOCA and MSLB. A spectrum of break sizes was considered in equipment qualification. The MSLB provides the highest RCB atmosphere temperature; the LOCA provides the highest RCB atmosphere pressure. Combined MSLB/LOCA pressure and temperature profiles will be used for qualification of the equipment. 49

6.2.1.2 Containment Subcompartments.

6.2.1.2.1 Design Bases: Subcompartments within the Containment, principally the reactor cavity, the Steam Generator (SG) compartments, the pressurizer compartment, the surge line compartment, the main steam line compartment, and the feedwater line compartment, are designed to withstand the transient differential pressures and jet impingement forces of a postulated pipe break. Venting of these chambers is employed to keep the differential pressures with in structural limits. In addition, ~~restraints on the coolant piping, reactor vessel, SGs, etc., are designed so that~~ neither pipe whip nor forces transmitted through component supports threaten the integrity of the subcompartments of the Containment structure. 49 49

INSERT 1

The spectrum of pipe breaks analyzed for each subcompartment is listed in Table 6.2.1.1-1. The characteristics of the ~~main coolant~~ pipe ruptures were determined in accordance with the methods and criteria of Section 3.6.2. ~~The structural analysis of the Reactor Coolant Loop for the breaks identified~~ in Section 3.6 yielded calculated break flow areas less than equivalent single-ended break flow areas. These reduced break areas result from considering the loop piping stiffness, primary equipment and primary equipment supports, and restraints designed ~~specifically to limit pipe displacements in the event of a postulated pipe rupture~~. The accident that results in the maximum differential pressure across the walls of the respective compartment is designated as the subcompartment Design Basis ~~Accident (DBA)~~. Calculated ~~DBA~~ differential pressures are compared to the design pressure values used in the structural design of subcompartment walls and equipment to ensure that peak calculated values are less than design values. These design and calculated pressure differentials are presented under each subcompartment section below. 49 49

6.2.1.2.2 Design Features:

6.2.1.2.2.1 Reactor Cavity - The reactor cavity is a heavily reinforced concrete structure that performs the dual function of providing reactor vessel support and radiation shielding. It is described in Section 3.8.3.1 and is shown in the general arrangement drawings of Section 1.2. At the elevation of the primary piping nozzles, the reactor vessel is surrounded by an inspection toroid. ~~in which the pipe rupture is postulated to occur.~~ NO PIPE RUPTURES ARE POSTULATED IN THE REACTOR CAVITY OR INSPECTION TOROID. 49

~~As discussed in Section 3.6.3.1.8.1, a seal plate is provided around the vessel nozzles in the inspection toroid to minimize the blowdown into the cavity. Thus, a relatively small amount of mass and energy from the break in the toroid enters the cavity through the restricted clearance spaces between the seal plate and nozzles and the opening between the vessel support and the concrete walls around the support. Venting from the reactor cavity is achieved through (a) the door connecting the cavity to the loop compartment subpedestal space and (b) two blowout panels in the heating, ventilating and air conditioning duct that again connects the cavity to the loop compartment.~~ 49

INSERT

Page 6.2-9

INSERT 1

As discussed in Reference 3.6-14 and paragraph 3.6.2.1.1.1a, RCL ruptures and the associated dynamic effects are not included in the design bases.

~~subpedestal. The major portion of the blowdown~~ from the cold leg rupture is discharged through primary piping penetrations into the SG compartment and from there to the Containment. The reactor cavity and inspection toroid subcompartment is shown in Figure 6.2.1.2-1. The physical arrangement of the seal plate, reactor vessel, seal ring etc. is shown in Figure 6.2.1.2-2. The left half of this figure is in section with the plane of the section going through the cold leg without support, while the right half is in section with the sectional plane going through the hot leg. The blowdown takes place in the inspection gallery.

The total free-volume of the toroid is 2,177 ft^3. Eight primary pipe penetrations from the toroid to the SGs have a total combined vent area of 103.2 ft^2 while a total flow area of 14.18 ft^2 vents the inspection torus to the cavity The reactor cavity has a net free volume of 10,537 ft^3 with the following two vent paths into the subpedestal region (a) a door of area 23.6 ft^2 opening at 3.0 psi differential and (b) two panels in the HVAC duct an area of 13.5 ft^2 blowing out at 1 psi differential. While several different cases were analyzed for the design, the worst case (in which the HVAC plate situated in the support near the break blows out) is presented. Pipe restraints are employed to limit the circumferential break flow area to less than 150 in^2. The results of this analysis are used for the reactor cavity wall design and to generate the vessel support loads.

6.2.1.2-3

6.2.1.2.2.2 Steam Generator Compartments - The SG subcompartments are shown in Figure ~~6.2.1.2~~ The SG and its supports have been described in Section 3.8.3.1 and the general arrangement of the SG and associated structural arrangement is presented in Section 1.2. The general arrangement drawings presented in Section 1.2 have been used to define nodal boundaries of Figure 6.2.1.2-3. The SG subcompartments consist of the entire free volume between the primary shield and the secondary shield walls and from El. 19 ft to 83 ft. Each quadrant containing a SG has a volume of 41011.0 ft^3 and has a vent area to the Containment of 571.3 ft^2 at the top of the SG compartment. In addition to the above vent path, two more vent paths vent the break nodes to the Containment. These are (a) the 8 penetration paths that lead the hot and cold leg pipes to the reactor cavity with a vent area of 105 ft^2 and (b) the 6 HVAC vents between the SG compartments above El. 19 ft and subpedestal region below EL. 16 ft with a total area of 146 ft^2. SG compartments A and D, and B and C are directly connected together while A and B and C and D are connected via a passage which ranges from (El. 33' 6 1/2" and 19'0") to (El. 26'2" an 19'0"), respectively. The SG subcompartments are shown in Figure 6.2.1.2-3 (Sheet 3 of 8).

6.2.1.2.2.3 Pressurizer Compartment - The pressurirer subcompartment, shown in the general arrangement drawings of Section 1.2, consists of a vertical, rectangular, reinforced concrete structure surrounding the pressurizer which is supported at its base by a steel skirt. The pressurizer subcompartment is shown on Figure 6.2.1.2-4.

6.2.1.2.2.4 Surge Line Subcompartment - The surge line subcompartment consists of the area above the grating at El. 37 ft 3 in., the area below El. 37 ft 3in., and the vestibule where the surge line penetrates the secondary shield wall. These subcompartments are shown in the general arrangement drawings of section 1.2 and on Figure 6.2.1.2-5.

6.2.1.2.2.5 Main Steam Line and Feedwater Line Subcompartments - The main steam line and feedwater line subcompartments are located between the secondary shield wall and the Containment wall where ruptures in these lines may occur. The general arrangement drawings in Section 1.2 show the equipment and structures in these locations. The most confined spaces resulting in maximum local pressures from either break are near the pipe penetrations to the outside of the Containment. Vent paths consist of a combination of series and parallel flow resistances joining major elevations of approximately one-half of the Containment. The subcompartments are shown on Figure 6.2.1.2-6. 49

6.2.1.2.2.6 Regenerative Heat Exchanger Subcompartment - The regenerative heat exchanger subcompartment arrangement is shown in the general arrangement drawings of Section 1.2 and on Figure 6.2.1.2-7. The nodal model net free volumes and vent areas are listed in Tables 6.2.1.2-15 and 6.2.1.2-16. The vent areas out of the regenerative heat exchanger subcompartment consist of two openings-the auxiliary feedwater pipe penetration opening and the wire mesh door. The subcompartment volumes and vent area are reduced to account for obstructions caused by equipment and insulation around piping and vessels. No blowout panels are used, thus the flow area is assumed to be constant with respect to time.

6.2.1.2.2.7 Radioactive Pipe Chase Compartment - The radioactive pipe chase subcompartment is shown on Figure 6.2.1.2-8. The nodal model net free volumes and vent areas are listed in Table 6.2.1.2-17 and 6.2.1.2-18. The vent area out of the subcompartment is a manway hole in the floor. The subcompartment volumes and vent areas are reduced to account for obstructions caused by equipment and insulation around piping and vessels. No blowout panels are used, thus the flow area is assumed to be constant with respect to time. 49

6.2.1.2.2.8 RHR Valve Room Subcompartment - The RHR valve room subcompartment is shown on Figure 6.2.1.2-9. The CVCS letdown line passes through both RHR 1A and RHR 1B valve rooms. Because the valve rooms are identical, only the valve room for RHR 1A is modeled and the results of the analysis are representative of both rooms. The nodal model net free volumes and vent areas are listed in Tables 6.2.1.2-19 and 6.2.1.2-20. The vent area out of the subcompartment is via a wire mesh door. The subcompartment volumes and vent areas are reduced to account for obstructions caused by equipment and insulation around piping and vessels. No blowout panels are used, thus the flow area is assumed to be constant with respect to time.

6.2.1.2.3 Design Evaluation:

6.2.1.2.3.1 General - The subcompartment pressure transients were determined using the COPDA computer code (Reference 6.2.1.2-1). The COPDA code employs a finite difference technique to solve the time dependent equations for the conservation of mass, energy and momentum. This code and the assumptions inherent to it are fully explained in Reference 6.2.1.2-2. Loss coefficients utilized were based on the formulations of References 6.2.1.2-3 and 6.2.1.2-4.

No change

Nodalization of each subcompartment was based on the physical arrangement of the interconnected subcompartment and the structure, equipment, piping, ventilation ducting, floor grating, and other physical obstructions to flow. By appropriate selection of node boundaries based on the physical arrangement, pressure differences within a node are minimized while pressure differences between nodes are maximized.

The Loss of Coolant Accident blowdown model used to calculate the short-term mass and energy release rates for all primary system ruptures, including the surge line break and the pressurizer spray line break, is fully described in Reference 6.2.1.2-5. The mass and energy release data are presented in Table 6.2.1.2-1. 49

The RELAP 5 code (Reference 6.2.1.2-6) was used to calculate the short-term blowdown of the main steam line and main feedwater line. The mass and energy release rates for these two lines are provided in Table 6.2.1.2-1. Letdown line break blowdown was calculated using methodology of Reference 6.2.1.2-7 and is given in Table 6.2.1.2-1. 49

6.2.1.2.3.2 Reactor Cavity - ~~The~~ No pipe breaks ~~utilized for~~ are postulated in the reactor cavity and inspection toroid. ~~design evaluation was the 150-in.² limited displacement break in the cold leg at the safe end to pipe weld. Reactor vessel supports and pipe restraints are designed to ensure a break flow area of less than this amount.~~

The nodalization scheme selected for the model is shown in Figure 6.2.1.2-1. The nodal boundaries were chosen wherever restrictions to flow occurred. The node boundaries in the torus run in the center of the coolant pipes and additional nodes are designated for the support area adjacent to the break nodes. Nodes in the support area were modeled because this would bound all cases including the one in which the HVAC plate welded to the supports will be blown out. Two cases, one in which the HVAC plate stays in place and the other in which it blows out, have been studied. The case in which the HVAC plate blows out has been shown to give the maximum calculated pressure across the shield wall.

In the analysis, the insulation on the reactor vessel was conservatively assumed to remain intact (uncrushed) and to be flush against the pressure vessel. However, the insulation which extends below the bottom of the vessel is assumed to break loose into small crushable pieces. 49

The insulation around the coolant pipe is conservatively assumed to plug some sections of the wagon-wheel restraint in the penetration. Thus, with these major assumptions, the 50 node, 122 junction model of Figure 6.2.1.2-10 is simulated for the 180 sq. in. break using COPDA. The volume of each subcompartment as well as the initial conditions prior to the postulated accident are given on Table 6.2.1.2-2. The junction parameters, namely vent areas, L/A's, head loss coeffients used in the calculation, are given in Table 6.2.1.2-3. The head loss is presented under two headings namely, expansion losses and contraction losses.

The homogeneous equilibrium option has been used in the analysis. This flow option is described in Reference 6.2.1.2-2. The resulting peak pressure

~~is presented in Table 6.2.1.2-2. The complete pressure time profiles for all subcompartment nodes are shown in Figure 6.2.1.2-18.~~

~~The subcompartment pressures, when applied to the projected areas of the sub compartments on the reactor vessel, yield the force on the vessel. These force components at various elevations impose a moment about a chosen axis. The axis system passing through the cold and hot legs and the center line of the vessel has been selected to determine the moments for the vessel. Time histories of the horizontal and vertical forces and upending moment imposed on the vessel by the asymmetric pressurization of the reactor cavity are presented in Figure 6.2.1.2-19. The force and moment coefficients for each subcompartment are given in Table 6.2.1.2-4.~~

6.2.1.2.3.3 Steam Generator Subcompartment - SG subcompartment design pressure is determined by ~~limited area~~ breaks in the pressurizer surge line and SI accumulator injection lines ~~reactor coolant hot and cold legs~~. ~~The pipe supports and other restraints limit the break size to less than double-ended area breaks~~. The blowdown for ~~five~~ these breaks ~~SG inlet elbow split, SG outlet nozzle limited area circumferential break (split model), SG outlet nozzle limited area circumferential break (guillotine model) RCP outlet nozzle limited area circumferential break (split model)], and RCP outlet nozzle limited area circumferential break (guillotine model)~~ is presented on Table 6.2.1.2-1. The noding of the SG compartments is shown on Figure 6.2.1.2-3. The node and junction diagram is shown on Figure 6.2.1.2-11. ~~As in the reactor cavity analysis,~~ the flow parameters were evaluated to account for all obstructions such as cable trays supports and various small sized piping. The principal obstructions within the SG loop compartments are the SG and reactor coolant pumps. The node and junction parameters for the SG loop compartments are given on Tables 6.2.1.2-5 and 6.2.1.2-6. 49

The flow from one node to the other was calculated using the homogeneous equilibrium model option for the analysis. The peak pressures for each subcompartment are listed in Table 6.2.1.2-5.

~~Below is a summary of the break size and break node for each one of the 10 cases:~~

~~1. Steam Generator inlet nozzle split, 777 in^2, break node = 12~~

~~2. Steam Generator outlet nozzle split, 777 in^2, break node = 15~~

~~3. Steam Generator outlet nozzle split, 777 in^2, break node = 12~~

~~4. Steam Generator outlet nozzle split, 755 in^2, break node = 14~~

~~5. Steam Generator outlet nozzle split, 755 in^2, break node = 2~~

~~6. Steam Generator outlet nozzle split, 755 in^2, break node = 3~~

~~7. Steam Generator inlet nozzle split, 777 in^2, break nodes 12 and 15~~

~~8. Reactor Coolant Pump outlet split, 594 in^2. break node = 12~~

~~9. Reactor Coolant Pump outlet circumferential break (guillotine model), 594 in^2, break node = 12~~

~~10. Steam Generator outlet nozzle guillotine, 777 in^2, break nodes - 12, 14 50 percent blowdown in each~~

The pressure differential given on Table 6.2.1.2-5 is generally evaluated with respect to node 41, the Containment volume, except where specified. ~~Cases 8 through 10 are not reflected on this table since these breaks did not yield high peak differential pressures when compared to the other break cases~~. The pressure time histories for all ~~these~~ cases are presented in nodes close to the break in Figure 6.2.1.2-20. The nodes considered here are 1, 2, 3, 12, 13, 14, 15, 21, 22, 23, 24, 30, 31, 32, and 33. These nodes are in the SG compartment in which the breaks occur. 49

Force coefficients on the SG and RCP ~~has~~ have been evaluated to help facilitate determination of forces and moments due to the pressures generated by the breaks. Force coefficients represent the projections of the SG and RCP on three mutually perpendicular planes selected for this purpose. These coefficients have been presented in Table 6.2.1.2-7 and 6.2.1.2-8 for these two components.

The forces and moments plot versus time for the SG and RCP have been presented on Figures 6.2.1.2-21 and 6.2.1.2-22 for cases 1, 7, 8, and 9.

6.2.1.2.3.4 Pressurizer Subcompartment - The pressurizer subcompartment design pressure is established by a double-ended break in the pressurizer spray line at the side of the pressurizer. This break location is in the most restrictive location and results in the maximum pressure and equipment load. The noding of the pressurizer subcompartment is shown on Figure 6.2.1.2-4 with a node and junction diagram provided on Figure 6.2.1.2-12. Node and junction parameters are provided in Tables 6.2.1.2-9 and 6.2.1.2-10. Plots of calculated pressure are given on Figure 6.2.1.2-23, and calculated and design peak pressure are compared in Table 6.2.1.2-9. Mass and energy release rates are provided in Table 6.2.1.2-1.

6.2.1.2.3.5 Surge Line Subcompartment - Surge line subcompartments are shown on Figure 6.2.1.2-5, with a node and junction diagram given on Figure 6.2.1.2-13. The model shown is for breaks in the pressurizer skirt area and in the vestibule. Node and junction parameters are provided in Tables 6.2.1.2-11 and 6.2.1.2-12. Curves of calculated and design pressures are provided on Figure 6.2.1.2-24 and calculated and design pressures are compared in Table 6.2.1.2-11. Mass and energy release rates are provided in Table 6.2.1.2-1. 49

6.2.1.2.3.6 Main Steam and Feedwater Line Subcompartments - The main steam and feedwater line subcompartments are shown on Figure 6.2.1.2-6, with a node and junction diagram given on Figure 6.2.1.2-14. A double-ended main steam line rupture (8.1 ft^2) was assumed to occur in either Node 1 or 3, with the peak pressure occurring for the break in Node 3.

A double-ended rupture (2.837 ft^2) of the main feedwater line was assumed to occur in either Node 5 or 7, with the peak pressure occurring for the break in Node 7. 49

Node and junction parameters utilized in the analyses are given in Tables 6.2.1.2-13 and 6.2.1.2-14. Plots of calculated pressures are given on Figures

6.2.1.2-25 and 6.2.1.2-26, while calculated and design values are compared in Table 6.2.1.2-13. Mass and energy release rates are provided in Table 6.2.1.2-1. The mass and energy release rates are calculated using RELAP 5 analysis.

6.2.1.2.3.7 Regenerative Heat Exchanger Subcompartment - A double-ended rupture of the CVCS letdown line is the limiting break in the regenerative heat exchanger subcompartment. A node and junction diagram is given on Figure 6.2.1.2-15. The nodal model initial conditions, control volumes, vent areas and corresponding flow coefficients and inertial terms are given in Tables 6.2.1.2-15 and 6.2.1.2-16. The calculated subcompartment pressure response is shown on Figure 6.2.1.2-27. Calculated and design pressures are compared in Table 6.2.1.2-15. The blowdown rate for the CVCS letdown line break is calculated using ANSI 58.2, Appendix E2, Methodology (Reference 6.2.1.2-7) and applying that to a one dimensional Henry-Fauske model for saturated liquid. Mass and energy release rates are shown in Table 6.2.1.2-1. Plant operation is assumed to be in the heat-up mode. The break is assumed to occur at the inlet to the regenerative heat exchanger. The break area is 0.0884 ft^2 for each end of the double-ended break (0.1768 ft^2 total area). There are no significant restrictions to forward flow, but the reverse flow is restricted by the CVCS letdown orifices (0.00166 ft^2) located immediately downstream of the regenerative heat exchanger. In addition, the reservoir of reverse flow is limited since high energy fluid conditions extend only to the letdown heat exchanger.

6.2.1.2.3.8 Radioactive Pipe Chase Subcompartment - A double-ended rupture of the CVCS letdown line is the limiting break in the radioactive pipe chase subcompartment. A node and junction diagram is illustrated on Figure 6.2.1.2-16. The flow model initial conditions, control volumes, intercompartment flow paths, and corresponding flow coefficients and inertial terms are listed in Tables 6.2.1.2-17 and 6.2.1.2-18. The calculated subcompartment pressure response is shown on Figure 6.2.1.2-28. The calculated and design pressures are compared in Table 6.2.1.2-17. The blowdown rate for the CVCS letdown line break is calculated using ANSI 58.2, Appendix E2 methodology and applying that to a one dimensional Henry-Fauske model for saturated liquid. Mass and energy release rates are given in Table 6.2.1.2-1. Plant operation is assumed to be in the heat-up mode. The break is assumed to occur at the Containment penetration. The break area is 0.0884 ft^2 for each end of double-ended break (0.1768 ft^2 total area). A significant restriction to forward flow is the CVCS letdown orifices (0.00166 ft^2) located immediately downstream of the regenerative heat exchanger. For reverse flow, the letdown heat exchanger reduces the line temperature to 115°F and a pressure reducing valve, immediately downstream of the letdown heat exchanger, reduces the line pressure to 300 psig, therefore, the reservoir of high energy fluid downstream of the break is limited. 49

6.2.1.2.3.9 RHR Valve Room Subcompartment - A double-ended rupture of the CVCS letdown line is the limiting break in the RHR 1A and RHR 1B valve rooms. Because the valve rooms are identical, a break was postulated only in RHR 1A valve room. The results are representative for both valve rooms. A node and junction diagram is shown on Figure 6.2.1.2-17. The nodal model initial conditions, control volumes, vent areas, and corresponding flow coefficients and inertial terms are listed in Table 6.2.1.2-19 and 6.2.1.2-20.

No change

The calculated subcompartment pressure response is shown on Figure 6.2.1.2-29. Calculated and design pressures are compared in Table 6.2.1.2-19. The blowdown rate for the CVCS letdown line break is calculated using ANSI 58.2 Appendix E2 methodology and applying that to a one dimensional Henry-Fauske model for saturated liquid. Mass and energy release rates are given in Table 6.2.1.2-1. Plant operation is assumed to be in the heat-up mode. The break is assumed to occur at the penetration of the valve room wall. The break area is 0.0884 ft^2 for each end of the double-ended break (0.1768 ft^2 total area). A significant restriction to forward flow are the CVCS letdown orifices (0.00166 ft^2) located immediately downstream of the regenerative heat exchanger. For reverse flow, the letdown heat exchanger reduces the line temperature to 115°F and the pressure reducing valve, immediately downstream of the letdown heat exchanger, reduces the line pressure to 300 psig, thereby limiting the reservoir of high energy fluid downstream of the break.

non-mechanistic double-ended guillotine

~~6.2.1.3 Mass~~ and Energy Release Analyses For Postulated Loss-of-Coolant Accidents. The Containment System receives mass and energy releases following a postulated rupture of the Reactor Coolant System (RCS). These releases are assumed to continue through blowdown and post-blowdown. The release rates are ~~The~~ calculated for pipe failure at three distinct locations: (1) hot leg, (2) pump suction, and (3) cold leg. Because of the pressure in the RCS before the postulated rupture, mass and energy flow rapidly from the RCS to the Containment. As the water exits from the rupture, a portion of it flash~~es~~ into steam due to the pressure and temperature in the Containment as compared to the pressure and temperature of the RCS. The blowdown would reduce~~s~~ the pressure in the RCS.

During the reflood phase, these breaks have the following different characteristics. For a cold leg pipe break, all of the fluid which leaves the core must vent through a SG (SG) and become~~s~~ superheated. However, relative to breaks at other locations, the core flooding rate (and therefore the rate of fluid leaving the core) for cold leg breaks ~~is~~ would be low because all the core vent paths include the resistance of the reactor coolant pump. For a hot leg pipe break, the vent path resistance ~~is~~ would be relatively low, which would result~~s~~ in a high core flooding rate, but the majority of the fluid which exits the core would bypass~~es~~ ~~the~~ the SGs in venting to the Containment. The pump suction break would combine~~s~~ the effects of the relatively high core flooding rate, as in the hot leg break, and SG heat addition, as in the cold leg break. As a result, the pump suction break would yield~~s~~ the highest energy flowrates during the post-blowdown period. The spectrum of breaks analyzed includes the largest cold and hot leg breaks, reactor inlet and outlet respectively, and a range of pump suction breaks from the largest to 3.0 ft^2. Because of the phenomena of reflood, as discussed above, the pump suction break location ~~is~~ would be the limiting case with the double-ended pump suction break being the most limiting. This conclusion is supported by Westinghouse Nuclear Energy System studies of smaller hot leg breaks, which have been shown on similar plants to be less severe than the double-ended hot leg. Cold leg breaks, however, ~~are~~ would be lower both in the blowdown peak and in the reflood pressure rise. Thus, an analysis of smaller pump suction breaks is representative of the spectrum of the break sizes.

The Loss-of-Coolant Accident (LOCA) analysis calculations model is typically divided into three phases: (1) blowdown, which includes the period from accident occurrence (when the reactor is at steady-state, full-power operation) to

TABLE 6.2.1.1-1

CONTAINMENT DESIGN ACCIDENTS

Containment Design Parameter	Postulated Accidents Analyzed
	Loss-of-Coolant Accidents (LOCA)
Peak Pressure/ Temperature	DEPSG, Min. SI, Min. CHRS (LOCA-1)
	DEPSG, Max. SI, Min. CHRS (LOCA-2)
	DEHL, Max. SI, Min. CHRS (LOCA-3)
	DECL, Max. SI, Min. CHRS (LOCA-4) 49
	0.6 DEPSG, Max. SI, Min. CHRS (LOCA-5)
	3 ft^2 PSS, Max. SI, Min. CHRS (LOCA-6)
	Secondary System Breaks (MSLB)
	1.4 ft^2 DER, Min. CHRS, 102% Power
	1.4 ft^2 DER, MSIV Fails, 102% Power
	1.4 ft^2 DER, MFIV Fails, 102% Power 49
	0.86 ft^2 Split, Min. CHRS, 102% Power
	0.86 ft^2 Split, MFIV Fails, 102% Power
	0.86 ft^2 Split, MSIV Fails, 102% Power
	1.4 ft^2 DER, Min CHRS, 70% Power
	1.4 ft^2 DER, MFIV Fails, 70% Power
	1.4 ft^2 DER, MSIV Fails, 70% Power
	0.908 ft^2 Split, Min. CHRS, 70% Power
	0.908 ft^2 Split, MFIV Fails, 70% Power
	0.908 ft^2 Split, MSIV Fails, 70% Power
	1.4 ft^2 DER, Min. CHRS, 30% Power
	1.4 ft^2 DER, MFIV Fails, 30% Power
	1.4 ft^2 DER, MSIV Fails, 30% Power
	0.942 ft^2 Split, Min. CHRS, 30% Power
	0.942 ft^2 Split, MFIV Fails, 30% Power
	0.942 ft^2 Split, MSIV Fails, 30% Power
	1.4 ft^2 DER, Min, CHRS, 0% Power
	1.4 ft^2 DER, MFIV Fails, 0% Power
	1.4 ft^2 DER, MSIV Fails, 0% Power
	0.4 ft^2 Split, Min. CHRS 0% Power
	0.4 ft^2 Split, MFIV Fails, 0% Power
	0.4 ft^2 Split, MSIV Fails, 0% Power
Subcompartment Peak Pressure	Loop Compartment
	~~Steam Generator Inlet Elbow Split, Break Area = 777 in^2~~
	DER - PRESSURIZER SURGE LINE
	~~Steam Generator outlet nozzle limited area circumferential break (split model) - Break Area = 755 in^2~~ 49
	DER - SI Accumulator Injection line
	~~Steam Generator outlet nozzle limited area circumferential break (guillotine model) - Break Area = 755 in^2~~

TABLE 6.2.1.1-1 (Continued)

Containment Design Parameter	Postulated Accidents Analyzed	
Subcomparatment Peak Pressure (Continued)	~~Loop Compartment~~	
	~~Reactor Coolant Pump outlet nozzle limited area circumferential break (split model) - Break Area = 594 in^2~~	
	~~Reactor Coolant Pump outlet nozzle limited area circumferential break (guillotine model) break area = 594 in^2~~	49
	Reactor Cavity	
	~~150 in^2 Cold Leg Guillotine Break in Inspection Toroid~~	14
	Pressurizer Subcompartment	
	Spray Line Break on Side of Pressurizer	
	Surge Line Subcompartments	
	Surgeline Break in Pressurizer Skirt area Surge Line Break in Vestibule	49
	Steam Line Subcompartment	
	Double ended MSL Break at Containment Wall	
	Feedwater Line Subcompartment	
	Double Ended FWL Break at Containment Wall	
	Miscellaneous High Energy Line Subcompartment	
	Letdown Line Break in Regenerative HX Compartment CVCS Line Break in Pipe Chase Compartment	
	RHR Valve Room subcompartment	49
External Pressure	Inadvertent Spray Activation	

Chapter 6 Tables & Figures

- Replace data in Table 6.2.1.2-1A thru F

  "To be provided later". This will be replaced with data from breaks in the Pressurizer Surge Line and the SI Accumulator Injection Line when the calculation is finalized.

- Delete Tables 6.2.1.2-2
  6.2.1.2-3
  6.2.1.2-4

- Revise Tables 6.2.1.2-5 "To be provided later"
  6.2.1.2-6
  6.2.1.2-7
  6.2.1.2-8

- Delete Figures 6.2.1.2-1 Sheets 1-7
  6.2.1.2-2
  6.2.1.2-10 Sheets 1-4
  6.2.1.2-18 Sheets 1-12
  6.2.1.2-19 Sheets 1-12

- Revise Figures 6.2.1.2-20 Sheets 1-91 "To be provided later"
  6.2.1.2-21 Sheets 1-40
  6.2.1.2-22 Sheets 1-32

Note: Figures will be revised at finalization of subcompartment analyses.