50-361

UNITED STATES
NUCLEAR REGULATORY COMMISSION
WASHINGTON, D.C. 20555-0001

March 23, 1999

Mr. Harold B. Ray
Executive Vice President
Southern California Edison Company
San Onofre Nuclear Generating Station
P. O. Box 128
San Clemente, California 92674-0128

SUBJECT: REVIEW OF PRELIMINARY ACCIDENT SEQUENCE PRECURSOR ANALYSIS OF OPERATIONAL CONDITION AT SAN ONOFRE NUCLEAR GENERATING STATION, UNIT 2

Dear Mr. Ray:

Enclosed for your review and comment is a copy of the preliminary Accident Sequence Precursor (ASP) analysis of an operational condition which was discovered at San Onofre Nuclear Generating Station, Unit 2 (San Onofre 2) on February 5, 1998 (Enclosure 1), and was reported in Licensee Event Report (LER) No. 361/98-003. This analysis was prepared by our contractor at the Oak Ridge National Laboratory (ORNL). The results of this preliminary analysis indicate that this condition may be a precursor for 1998. In assessing operational events, an effort was made to make the ASP models as realistic as possible regarding the specific features and response of a given plant to various accident sequence initiators. We realize that licensees may have additional systems and emergency procedures, or other features at their plants that might affect the analysis. Therefore, we are providing you an opportunity to review and comment on the technical adequacy of the preliminary ASP analysis, including the depiction of plant equipment and equipment capabilities. Upon receipt and evaluation of your comments, we will revise the conditional core damage probability calculations where necessary to consider the specific information you have provided. The object of the review process is to provide as realistic an analysis of the significance of the event as possible.

In order for us to incorporate your comments, perform any required reanalysis, and prepare the final report of our analysis of this event in a timely manner, we request that you complete your review and provide any comments within 30 days of receipt of this letter. We have streamlined the ASP Program with the objective of significantly improving the time after an event in which the final precursor analysis of the event is made publicly available. As soon as our final analysis of the event has been completed, we will provide for your information the final precursor analysis of the event and the resolution of your comments.

1/1
D F01

We have also enclosed several items to facilitate your review. Enclosure 2 contains specific guidance for performing the requested review, identifies the criteria that we will apply to determine if any credit should be given in the analysis for the use of licensee-identified additional equipment or specific actions in recovering from the event, and describes the specific information that you should provide to support such a claim. Enclosure 3 is a copy of LER No. 361/98-003, which documented the event.

Please contact me at 301-415-1352 if you have any questions regarding this request. This request is covered by the existing OMB clearance number (3150-0104) for NRC staff followup review of events documented in LERs. Your response to this request is voluntary and does not constitute a licensing requirement.

Sincerely,
Original Signed By
James W. Clifford, Senior Project Manager
Project Directorate IV-2
Division of Licensing Project Management
Office of Nuclear Reactor Regulation

Docket No. 50-361

Enclosures: 1. Preliminary Accident Sequence Precursor
2. Guidance
3. LER 361/98-003

cc w/encls: See next page

DISTRIBUTION:
Docket
PUBLIC
PDIV-2 Reading
JZwolinski/SBlack
WBateman
JClifford
EPeyton
OGC
ACRS
KBrockman, RIV
LSmith, RIV
PO'Reilly, RES
SMays, RES

Document Name: SOASPLET.WPD

OFC	PDIV-2	PDIV-2
NAME	JClifford	EPeyton
DATE	3/23/99	3/22/99

OFFICIAL RECORD COPY

cc w/encls:
Mr. R. W. Krieger, Vice President
Southern California Edison Company
San Onofre Nuclear Generating Station
P. O. Box 128
San Clemente, California 92674-0128

Chairman, Board of Supervisors
County of San Diego
1600 Pacific Highway, Room 335
San Diego, California 92101

Alan R. Watts, Esq.
Woodruff, Spradlin & Smart
701 S. Parker St. No. 7000
Orange, California 92668-4702

Mr. Sherwin Harris
Resource Project Manager
Public Utilities Department
City of Riverside
3900 Main Street
Riverside, California 92522

Regional Administrator, Region IV
U.S. Nuclear Regulatory Commission
Harris Tower & Pavilion
611 Ryan Plaza Drive, Suite 400
Arlington, Texas 76011-8064

Mr. Michael Olson
San Onofre Liaison
San Diego Gas & Electric Company
P.O. Box 1831
San Diego, California 92112-4150

Mr. Steve Hsu
Radiologic Health Branch
State Department of Health Services
Post Office Box 942732
Sacramento, California 94234

Resident Inspector/San Onofre NPS
c/o U.S. Nuclear Regulatory Commission
Post Office Box 4329
San Clemente, California 92674

Mayor
City of San Clemente
100 Avenida Presidio
San Clemente, California 92672

Mr. Dwight E. Nunn, Vice President
Southern California Edison Company
San Onofre Nuclear Generating Station
P.O. Box 128
San Clemente, California 92674-0128

LER No. 361/98-003

Event Description: Inoperable sump recirculation valve

Date of Event: February 5, 1998

Plant: San Onofre Nuclear Generating Station, Unit 2

Event Summary

San Onofre Nuclear Generating Station, Unit 2 (San Onofre 2), was in a mid-cycle outage when personnel discovered that the linestarter for the containment emergency sump outlet valve was jammed because of grit in the sliding cam. The grit would have prevented the valve from opening on a recirculation actuation signal (RAS). This would result in one inoperable train while in the recirculation mode of the Emergency Core Cooling System (ECCS) and the Containment Spray (CS) system. This condition existed for about 18 days until the unit shut down for a mid-cycle outage. The core damage probability (CDP) at San Onofre 2 increased during these 18 days because of the increased susceptibility to a postulated loss-of-coolant accident (LOCA) initiator that progressed to the recirculation phase. The estimated increase in the CDP (i.e., the importance) for this event is 7.2×10^{-6}.

Event Description

On February 5, 1998, utility electricians were replacing Square D linestarters as part of planned maintenance. The electricians discovered the mechanical interlock on the linestarter for the Train A containment emergency sump outlet valve (HV-9305) jammed. The sump outlet valve was in the closed position at the time the failure was discovered, fulfilling the containment isolation function of the valve (Fig. 1). However, the as-found condition of the linestarter would have prevented valve HV-9305 from opening. Consequently, the recirculation function for Train A of High Pressure Safety Injection (HPSI) and CS could not be fulfilled without some recovery action. The Train A containment emergency sump outlet valve was last cycled open and closed on January 6, 1998. San Onofre 2 was shut down for the mid-cycle outage on January 24, 1998. Therefore, from the nature of the failure, the licensee considered the Train A containment emergency sump outlet valve inoperable for approximately 18 days before it was no longer required by Technical Specifications. Consequently, ECCS Train A and CS Train A were inoperable for approximately 18 days.[1]

Additional Event-Related Information

The licensee had just started programmatically replacing all of the Square D linestarters – 60 of 86 linestarters at Unit 2, and 61 of 86 linestarters at Unit 3 had already been replaced. All remaining old linestarters (26 at Unit 2 and 25 at Unit 3) were replaced; no additional failures were discovered.

The grit that caused the linestarter for the Train A containment emergency sump outlet valve to jam was identified as gunite similar to what was used to stabilize the hillsides outside the protected area. The grit was not discovered on or around other switchgear room components or in the ventilation ducts. However, some grit was found in other 480-V ac motor control center buckets, but had not affected the operation of the associated

linestarters. The grit was assumed to have been introduced before plant startup and was known not to migrate after being deposited.[1]

The HPSI system has three centrifugal pumps divided between two trains (Fig. 1). Pump P-017 is in Train A and pump P-019 is in Train B. The third pump, P-018, is a swing pump and can be aligned to either train on the suction or discharge side. P-018 is normally aligned to Train A. Because the HPSI pumps do not automatically stop in response to an RAS signal, operators are directed to stop the pumps before the RWST level decreases below 5%.[2]

While the recirculation phase of ECCS Train A was compromised between January 6, 1998, and January 24, 1998, the opposite train – ECCS Train B – was inoperable six times during this same period. These six occasions were as follows:

1. 1 h, 43 min, to perform an in-service test of an HPSI pump (January 12, 1998),
2. 27 h, 5 min, to repair a Component Cooling Water (CCW) heat exchanger tube leak (January 13, 1998) (CCW is required to support ECCS.),
3. 6 h, 36 min, to perform heat treatment of the main condenser (January 16, 1998). (This treatment process increases the heat load on the salt water cooling (SWC) system, which is required to support ECCS.),
4. 19 min, to swap the in-service SWC pump to the opposite train (January 22, 1998),
5. 5 h, 45 min, to perform maintenance work on the Train B Refueling Water Storage Tank (RWST) outlet valve (January 23, 1998), and
6. 5 h, 31 min, to perform an additional heat treatment of the main condenser (January 24, 1998).

Modeling Assumptions

This event was modeled as an 18-day (432-h) condition assessment with the Train A containment emergency sump outlet valve failed (valve HV-9305). The CCW heat exchanger maintenance (27 h, 5 min) was included in the modeling because the heat exchanger was out of service during this period and not readily recoverable. Likewise, the maintenance period with the unavailable RWST outlet valve (5 h, 45 min) was included in the event model because of the immediate impact on Train B during the injection phase of an accident. The two periods involving heat treatment of the main condenser (6 h, 36 min and 5 h, 31 min) were not included in the model of this event because any heat treatment would likely be terminated quickly by the operator. Even if this were not done, a turbine trip initiated by a LOCA would self-limit any added heat loads on the SWC system. The in-service test of the Train B HPSI pump (1 h, 43 min) was not modeled because of operator staffing for the test, the ability to restore the normal lineup quickly, and the limited time the pump was unavailable. The time required to swap pumps (19 min) was not modeled because of the limited time required to perform the task. Therefore, three distinct cases, totaling 432 h (18 days), were modeled as part of this event.

Case 1. 399 h, 10 min, with only the Train A containment emergency sump outlet valve failed (valve HV-9305).

Case 2. 27 h, 5 min, with the Train A containment emergency sump outlet valve failed (valve HV-9305) and CCW Train B unavailable.

Case 3. 5 h, 45 min, with the Train A containment emergency sump outlet valve failed (valve HV-9305) and the RWST Train B outlet valve unavailable because of maintenance (valve HV-9301).

The CS pumps are not represented in the Integrated Reliability and Risk Analysis System (IRRAS) model for San Onofre. However, because Train B of the CS system and all of the containment emergency fan coolers were available throughout the 18-day event, no attempt was made to incorporate the unavailability of one train of CS into the IRRAS model for San Onofre. This is estimated to have an insignificant impact on the calculated importance of this event because CS impacts containment pressure and not core cooling.

The failed Train A containment emergency sump outlet valve was modeled by setting basic event HPR-SMP-FC-SUMPA (Containment Sump A Failure) failure probability from 6.1×10^{-3} to TRUE (i.e., probability = 1.0 that the valve would fail on demand). The associated common-cause failure basic event (HPR-MOV-CF-SUMP) was adjusted from 1.1×10^{-3} to the β factor of the Multiple Greek Letter method used in the IRRAS models (8.8×10^{-2}) based on the failure of the Train A containment emergency sump outlet valve.

It was assumed that the operators would correctly follow procedures and secure the HPSI pumps before the RWST level decreased below 5%. Therefore, this was not modeled in the analysis.

An evaluation of this event,[3] prepared by the licensee, estimated that if a small-break LOCA (SLOCA) (⅜–2 in. pipe diameter) occurred, 250 min would be available to recover a recirculation flow path before the onset of core damage. Operators would initiate recirculation flow about 118 min after an SLOCA occurred. Although other CE plants consider depressurization an option, simulator exercises at San Onofre 2 indicated that operating crews would not attempt to cool down and depressurize the plant for a leak in this size range. Conversely, it was not expected that small-small-break LOCAs (SSLOCAs) (<⅜ in. pipe diameter) would proceed to the recirculation phase because sufficient time was assumed to be available to cool down and depressurize the primary system. This differentiation required the IRRAS model to be adjusted to reflect the different operator responses expected following an SSLOCA and an SLOCA. Because the importance of medium-break and large-break LOCAs calculated by the licensee using a methodology which parallels the IRRAS development was less than 1.0×10^{-6}, these larger LOCAs were not specifically modeled (i.e., the contribution to the overall importance of the event from these events is small).

Recovery from the CCW heat exchanger maintenance could begin at the time a LOCA event is recognized because the operating staff was aware of the maintenance being performed from pre-shift briefings. Recovery from the RWST Train B outlet valve maintenance was not considered likely because this flow path would be required immediately following the occurrence of a LOCA.

The recovery from the train B CCW heat exchanger maintenance to repair a tube leak was expected to require 200 min.[3] This assumes 15 min for operators to recognize that a small-break LOCA occurred and to order the restoration of the CCW heat exchanger, 120 min for maintenance personnel to reassemble the CCW heat exchanger, 60 min for operators to realign the system valves correctly, and 5 min to restore power and start the appropriate CCW pump. These time estimates made by the licensee are conservative, yet still leave an additional 50 min before core damage would occur following an SLOCA. Performance shaping factors considered that the process would be governed by a maintenance procedure and performed under stress outside

the control room by a skilled crew.[3] Based on this, the licensee estimated a 60% probability of success in restoring the CCW heat exchanger within 250 min. In addition, one HPSI pump and one residual heat removal (RHR) pump were affected by the maintenance on the CCW heat exchanger. Because the CCW system is not directly modeled by the San Onofre IRRAS model, a basic event was added to several fault trees to represent the CCW system failure probability during the ~27 h maintenance period. The new basic event (CCW-TRNB-FAIL) was added such that a failure to return the train B CCW heat exchanger to service would cause the affected pumps (HPI-MDP-FC-P019 and RHR-MDP-FC-P016) to be failed during the ~27 h CCW maintenance period. The probability of basic event CCW-TRNB-FAIL was adjusted to 0.4 for Case 2; for Cases 1 and 3, the probability of this basic event occurring is zero.

Two viable options for recovering from the Train A containment emergency sump outlet valve failing closed exist.[3] First, the failure of the valve could be traced to the breaker linestarter and replacement could be initiated. Secondly, it is possible to cross-connect the HPSI Train A suction to the Train B suction. In either case, 132 min (250 - 118 min) would be available before the onset of core damage following an SLOCA. Because operator training and emergency operating procedures focus attention on the correct entry into the recirculation mode, it is assumed that the operators would quickly notice the failure of the train A sump valve to open. Recognition and correction of the breaker failure are assumed to require 40 min.[3] This would allow an additional 92 min (132 - 40 min) to complete repairs before the onset of core damage. Performance shaping factors considered that the breaker repair process would not be governed by a maintenance procedure and performed under stress outside the control room by a skilled crew.[3] Based on this, the licensee estimated a 50% probability of success in restoring the linestarter and opening the train A sump valve within 132 min of RAS. A new basic event (HPR-SMPA-XHE-NRE) was added to the High Pressure Recirculation (HPR) fault tree to represent the probability (0.5) that electricians would fail to repair the breaker linestarter. Recognition of the failure and cross-connecting the HPSI pump suctions is assumed to require 20 min. This action allows an additional 112 min (132 - 20 min) to complete realignment before the onset of core damage. Performance shaping factors considered that the breaker repair process would be governed by an operating procedure and performed under stress outside the control room by a skilled crew.[3] Based on this, the licensee estimated an 80% probability of success in cross-connecting the HPSI pump suction if there were an SLOCA. A new basic event (HPR-XCONN-XHE-NR) was added to the HPR fault tree to represent the probability (0.2) that operators fail to cross-connect the HPSI pump suctions within 132 min of RAS. Because these two new events involve separate groups of plant personnel (electricians and operators), the basic events are considered to be independent. Independence is also assumed when these two new basic events are compared with the effort to restore the CCW heat exchanger, which would involve mechanics.

Analysis Results

Determining the overall increase in the CDP required determining the increase in the CDP for the three different cases and then summing the cases. The three cases are as follows:

Case 1. 399 h, 10 min, with only the Train A containment emergency sump outlet valve failed (valve HV-9305).

Case 2. 27 h, 5 min, with the Train A containment emergency sump outlet valve failed (valve HV-9305) and CCW Train B unavailable.

Case 3. 5 h, 45 min, with the Train A containment emergency sump outlet valve failed (valve HV-9305) and the RWST Train B outlet valve unavailable because of maintenance (valve HV-9301).

The combined increase in the CDP from this 432-h event (i.e., the importance) is 7.2×10^{-6}. This increase is above a base probability for the 432-h period (the CDP) of 3.9×10^{-5}. Most of the increase (89%) is driven by Case 1. As expected, the common-cause failure of the containment sump valve shows up most often in the cut sets of the most significant sequences because it is driven by the initial sump valve failure. Potential recovery actions and the CCW train B failure are more conspicuous in Case 2. Failure of injection flow is prominent in Case 3 because of the maintenance on the Train B RWST outlet valve. However, the dominant core damage sequence in each case of this event (sequence 2 on Fig. 2) involves

- an SLOCA,
- a successful reactor trip,
- a successful initiation of emergency feedwater,
- a successful initiation of high pressure injection, and
- a failure of high pressure recirculation.

The SLOCA sequences account for 88% of the calculated increase in the CDP for this event. The next most dominant sequence among all three cases involves an SSLOCA with a failure to cool down the plant before requiring HPR. This sequence contributes 5% to the calculated importance of this event.

The nominal CDP over a 432-h period estimated using the IRRAS model for San Onofre is 3.9×10^{-5}. This model was modified to include possible recovery actions as discussed in Reference 3. The failed Train A containment emergency sump outlet valve linestarter increased the CDP by 18% to 4.6×10^{-5}. This latter value (4.6×10^{-5}) is the conditional core damage probability (CCDP) for the 432-h period in which the linestarter was failed.

Definitions and probabilities for selected basic events are shown in Table 1. The conditional probabilities associated with the highest probability sequences are shown in Table 2. Table 3 lists the sequence logic associated with the sequences listed in Table 2. Table 4 describes the system names associated with the dominant sequences. Minimal cut sets associated with the dominant sequences are shown in Table 5.

Acronyms

CCDP	conditional core damage probability
CCW	component cooling water
CDP	core damage probability
CS	containment spray
ECCS	emergency core cooling system
HPR	high-pressure recirculation
HPSI	high-pressure safety injection
IRRAS	Integrated Reliability and Risk Analysis System
LOCA	loss-of-coolant accident

LOOP	loss of offsite power
MOV	motor-operated valve
RAS	recirculation actuation signal
RHR	residual heat removal
RWST	refueling water storage tank
SGTR	steam generator tube rupture
SLOCA	small-break LOCA
SSLOCA	small-small-break LOCA
SRV	safety/relief valve
SWC	salt water cooling
TRANS	transient event

References

1. LER 361/98-003, Rev. 1, "Inoperable Valve Due to Grit in Linestarter Mechanism," March 17, 1998.

2. San Onofre, *Final Safety Analysis Report (Updated Version)*.

3. Letter from Dwight E. Nunn, Vice President, San Onofre Nuclear Generating Station, to U. S. Nuclear Regulatory Commission, "Linestarter and AFW Supplemental Information," April 7, 1998.

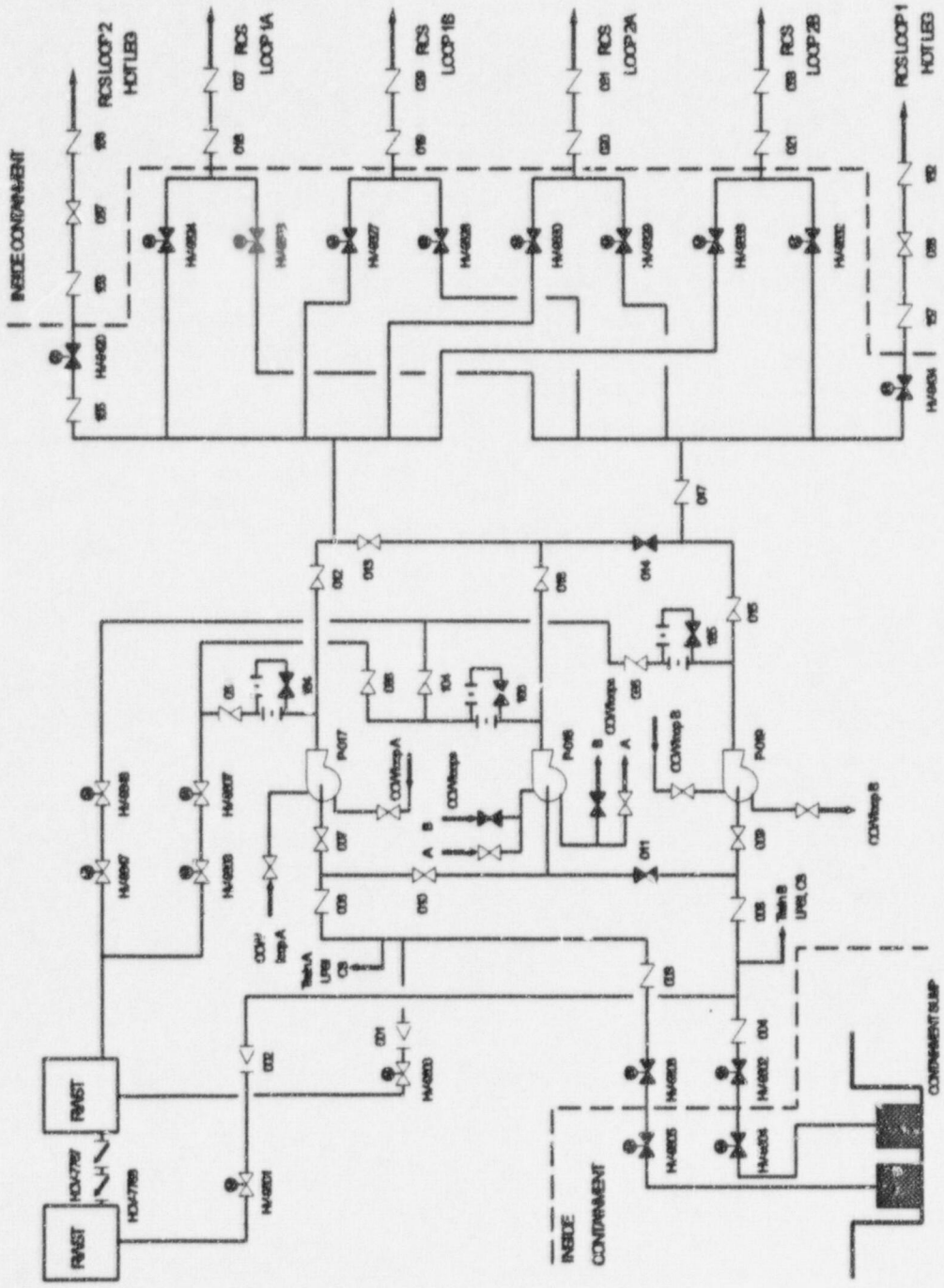

Fig. 1 San Onofre High Pressure Injection System (*source: San Onofre Nuclear Generating Station, Units 2 and 3, Individual Plant Examination*). [CCW is component cooling water system, CS is containment spray, LPSI is low-pressure safety injection, RCS is reactor coolant system, and RWST is refueling water storage tank.]

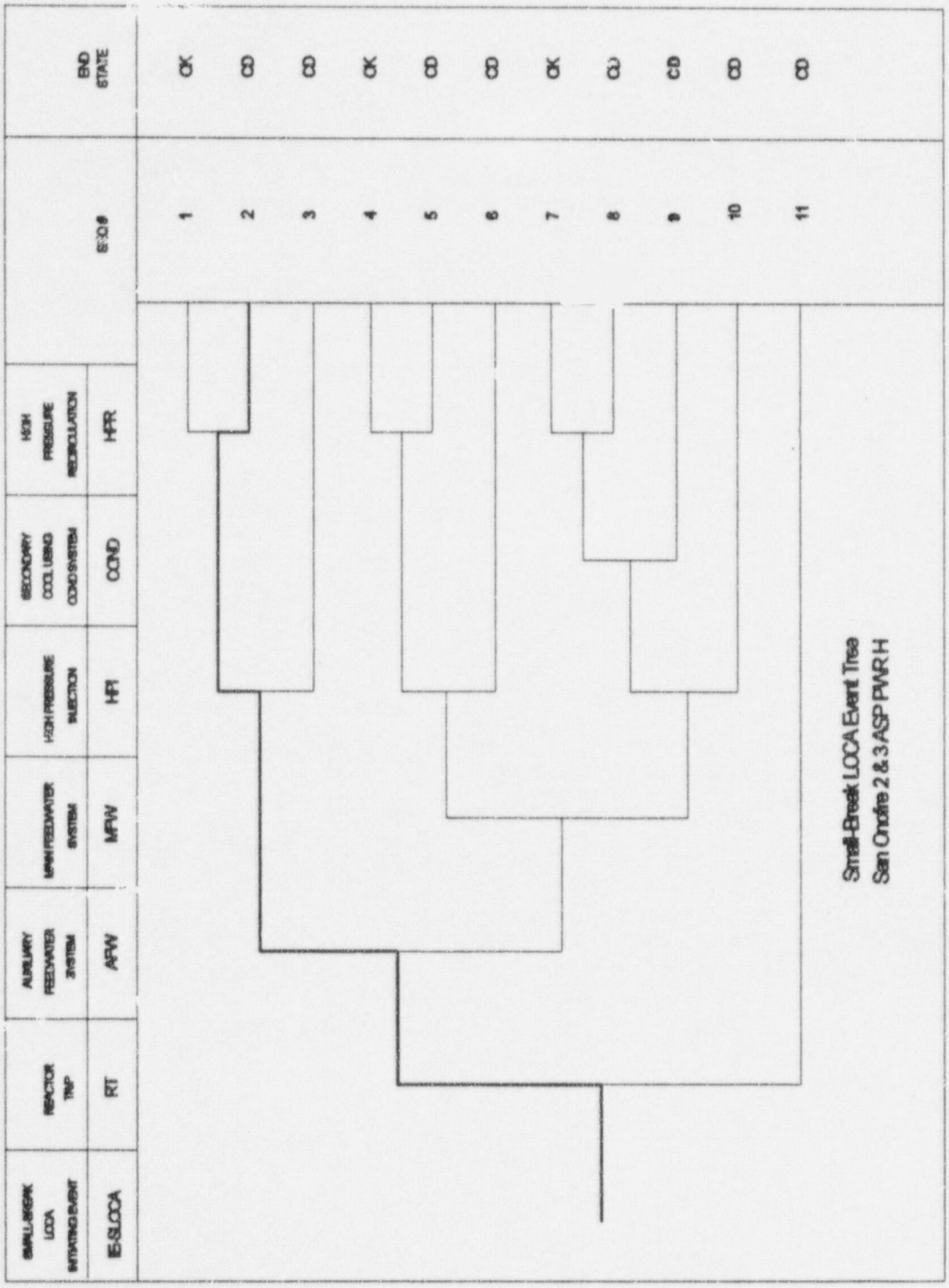

Fig. 2 Dominant core damage sequence for LER No. 361/98-003.

Table 1. Definitions and Probabilities for Selected Basic Events for LER No. 361/98-003

Event name	Description	Base probability	Current probability	Type	Modified for this event
IE-LOOP	Initiating Event–loss of offsite power (LOOP) (Includes the Probability of Recovering Offsite Power in the Short Term)	1.1 E-005	1.1 E-005		No
IE-SGTR	Initiating Event–Steam Generator Tube Rupture (SGTR)	2.1 E-006	2.1 E-006		No
IE-SLOCA	Initiating Event–SLOCA	1.6 E-007	1.6 E-007		Yes
IE-SSLOCA	Initiating Event–SSLOCA	2.1 E-006	2.1 E-006	NEW	Yes
IE-TRANS	Initiating Event–Transient (TRANS)	6.2 E-004	6.2 E-004		No
CCW-TRNB-FAIL	Train B CCW Heat Exchanger is not Returned to Service	0.0 E+000	4.0 E-001	NEW	Yes (Case 2)
HPI-MOV-OC-SUCB	RWST Train B Outlet Valve Fails Closed	1.4 E-004	1.0 E+000	TRUE	Yes (Case 3)
HPR-MOV-CF-SUMP	Common-Cause Failure of Sump Isolation motor-operated valves (MOVs)	1.1 E-003	8.8 E-002		Yes
HPR-SMP-FC-SUMPA	Containment Sump Train A Failure (Valve HV-9305 Stuck Closed)	6.1 E-003	1.0 E+000	TRUE	Yes
HPR-XCONN-XHE-NR	Operator Fails to Cross-Connect HPSI Suction from Train B to Train A	2.0 E-001	2.0 E-001	NEW	No
HPR-XHE-NOREC	Operator Fails to Recover the HPR System	1.0 E+000	1.0 E+000		No
HPR-XHE-XM-HLEG	Operator Fails to Initiate Hot-Leg Recirculation	1.0 E-003	1.0 E-003		No
PCS-VCF-HW	Failure of Equipment Required for Plant Cooldown	1.0 E-003	1.0 E-003		No
PCS-XHE-XM-CDOWN	Operator Fails to Initiate Cooldown	1.0 E-003	1.0 E-003		No
PPR-SRV-CO-TRAN	Safety/Relief Valves (SRVs) Open During a Transient	2.0 E-002	2.0 E-002		No
PPR-SRV-OO-1	SRV 1 Fails to Reseat	1.6 E-002	1.6 E-002		No

Table 1. Definitions and Probabilities for Selected Basic Events for LER No. 361/98-003 (Continued)

Event name	Description	Base probability	Current probability	Type	Modified for this event
PP[illegible]V-OO-2	SRV 2 Fails to Reseat	1.6 E-002	1.6 E-002		No
RHR-MDP-CF-AB	Common-Cause Failure of RHR Motor-Driven Pumps	5.6 E-004	5.6 E-004		No
RHR-MOV-CF-HX	Common-Cause Failure of RHR Heat Exchanger Isolation MOVs	1.1 E-003	1.1 E-003		No
RHR-MOV-CF-SUC	Common-Cause Failure of RHR Suction MOVs	1.3 E-003	1.3 E-003		No
RHR-PSF-VF-BYP	Flow Diverted From Heat Exchangers or Reactor Vessel	9.0 E-003	9.0 E-003		No
RHR-XHE-NOREC	Operator Fails to Recover the RHR System	3.4 E-001	3.4 E-001		No
RHR-XHE-XM	Operator Fails to Actuate the RHR System	1.0 E-003	1.0 E-003		No

Table 2. Sequence Conditional Probabilities for LER No. 361/98-003

Event tree name	Sequence number	Conditional core damage probability (CCDP)[d]	Core damage probability (CDP)	Importance (CCDP-CDP)	Percent contribution[e]
SLOCA	02	5.9 E-006	1.8 E-007	5.7 E-006	89.2
SSLOCA	03	4.0 E-007	1.3 E-008	3.8 E-007	5.9
SSLOCA	05	1.5 E-007	4.7 E-009	1.5 E-007	2.3
TRANS	05	7.5 E-008	2.4 E-009	7.2 E-008	1.1
Subtotal Case 1 (shown)[a]		4.2 E-005	3.6 E-005	6.4 E-006	
Subtotal Case 2[b]		3.2 E-006	2.4 E-006	7.0 E-007	
Subtotal Case 3[c]		6.4 E-007	5.2 E-007	1.2 E-007	
Total (all sequences)		**4.6 E-005**	**3.9 E-005**	**7.2 E-006**	

[a]Case 1 represents the increase in the CDP because of the long-term unavailability of the Train A containment emergency sump outlet valve HV-9305 (399.1 h).

[b]Case 2 represents the increase in the CDP because of maintenance being performed on the Train B CCW heat exchanger while the Train A containment emergency sump outlet valve HV-9305 was unavailable (27.1 h).

[c]Case 3 represents the increase in the CDP because of maintenance being performed on the Train B RWST outlet valve while the Train A containment emergency sump outlet valve HV-9305 was unavailable (5.8 h).

[d]Because case 1 presents the largest contibution to the total importance, the reported percent contribution to the total importance is for case 1 only.

[e]Because case 1 presents the largest contibution to the total importance, the reported dominant sequences are ordered according to the importance of case 1.

Table 3. Sequence Logic for Dominant Sequences for LER No. 361/98-003 (Case 1 Only)

Event tree name	Sequence number	Logic
SLOCA	02	/RT, /AFW, /HPI, HPR
SSLOCA	03	/RT,/AFW, /HPI, /COOLDOWN, RHR, HPR
SSLOCA	05	/RT,/AFW, /HPI, COOLDOWN, HPR
TRANS	05	/RT, /AFW, SRV, SRV-RES, /HPI, /COOLDOWN, RHR, HPR

Table 4. System Names for LER No. 361/98-003 (Case 1 Only)

System name	Logic
AFW	No or Insufficient Auxiliary Feedwater System Flow
COOLDOWN	Reactor Coolant System Cooldown to RHR Decay Heat Removal Mode of Operation
HPI	No or Insufficient HPSI Flow
HPR	No or Insufficient HPR Flow
RHR	No or Insufficient RHR System Flow
RT	Reactor Fails to Trip
SRV	SRVs Open During a Transient
SRV-RES	SRVs Fail to Reseat

Table 5. Conditional Cut Sets for Higher Probability Sequences for LER No. 361/98-003

Cut set number	Percent contribution	CCDP[a]	Cut sets[b]
SLOCA Sequence 02		5.9 E-006	
1	96.6	5.6 E-006	HPR-MOV-CF-SUMP, HPR-XHE-NOREC
2	1.1	6.4 E-008	HPR-SMP-FC-SUMPA, HPR-XHE-XM-HLEG
SSLOCA Sequence 03		4.0 E-07	
1	57.2	2.3 E-007	RHR-PSF-VF-BYP, RHR-XHE-NOREC, HPR-MOV-CF-SUMP, HPR-XHE-NOREC
2	18.7	7.4 E-008	RHR-XHE-XM, HPR-MOV-CF-SUMP, HPR-XHE-NOREC
3	8.4	3.3 E-008	RHR-MOV-CF-SUC, RHR-XHE-NOREC, HPR-MOV-CF-SUMP, HPR-XHE-NOREC
4	6.7	2.8 E-008	RHR-MOV-CF-HX, RHR-XHE-NOREC, HPR-MOV-CF-SUMP, HPR-XHE-NOREC
5	3.6	1.4 E-008	RHR-MDP-CF-AB, RHR-XHE-NOREC, HPR-MOV-CF-SUMP, HPR-XHE-NOREC
SSLOCA Sequence 05		1.5 E-007	
1	48.1	7.4 E-008	PCS-XHE-XM-CDOWN, HPR-MOV-CF-SUMP, HPR-XHE-NOREC
2	48.1	7.4 E-008	PCS-VCF-HW, HPR-MOV-CF-SUMP, HPR-XHE-NOREC
TRANS Sequence 05		7.5 E-008	
1	28.6	2.1 E-008	PPR-SRV-CO-TRAN, PPR-SRV-OO-1, RHR-PSF-VF-BYP, RHR-XHE-NOREC, HPR-MOV-CF-SUMP, HPR-XHE-NOREC
2	28.6	2.1 E-008	PPR-SRV-CO-TRAN, PPR-SRV-OO-2, RHR-PSF-VF-BYP, RHR-XHE-NOREC, HPR-MOV-CF-SUMP, HPR-XHE-NOREC
3	9.3	7.0 E-009	PPR-SRV-CO-TRAN, PPR-SRV-OO-1, RHR-XHE-XM, HPR-MOV-CF-SUMP, HPR-XHE-NOREC
4	9.3	7.0 E-009	PPR-SRV-CO-TRAN, PPR-SRV-OO-2, RHR-XHE-XM, HPR-MOV-CF-SUMP, HPR-XHE-NOREC

Cut set number	Percent contribution	CCDP[a]	Cut sets[a]
5	4.2	3.1 E-009	PPR-SRV-CO-TRAN, PPR-SRV-OO-1, RHR-MOV-CF-SUC, RHR-XHE-NOREC, HPR-MOV-CF-SUMP, HPR-XHE-NOREC
6	4.2	3.1 E-009	PPR-SRV-CO-TRAN, PPR-SRV-OO-2, RHR-MOV-CF-SUC, RHR-XHE-NOREC, HPR-MOV-CF-SUMP, HPR-XHE-NOREC
7	3.4	2.6 E-009	PPR-SRV-CO-TRAN, PPR-SRV-OO-1, RHR-MOV-CF-HX, RHR-XHE-NOREC, HPR-MOV-CF-SUMP, HPR-XHE-NOREC
8	3.4	2.6 E-009	PPR-SRV-CO-TRAN, PPR-SRV-OO-2, RHR-MOV-CF-HX, RHR-XHE-NOREC, HPR-MOV-CF-SUMP, HPR-XHE-NOREC
9	1.8	1.3 E-009	PPR-SRV-CO-TRAN, PPR-SRV-OO-1, RHR-MDP-CF-AB, RHR-XHE-NOREC, HPR-MOV-CF-SUMP, HPR-XHE-NOREC
10	1.8	1.3 E-009	PPR-SRV-CO-TRAN, PPR-SRV-OO-2, RHR-MDP-CF-AB, RHR-XHE-NOREC, HPR-MOV-CF-SUMP, HPR-XHE-NOREC
Subtotal Case 1[b] (shown above)		**4.2 E-005**	
Subtotal Case 2[c]		**3.2 E-006**	
Subtotal Case 3[d]		**6.4 E-007**	
Total (all sequences)		**4.6 E-005**	

[a]The change in conditional probability (importance) is determined by calculating the conditional probability for the period in which the condition existed, and subtracting the conditional probability for the same period but with plant equipment assumed to be operating nominally. The conditional probability for each cut set within a sequence is determined by multiplying the probability that the portion of the sequence that makes the precursor visible (e.g., the system with a failure is demanded) will occur during the duration of the event by the probabilities of the remaining basic events in the minimal cut set. This can be approximated by $1 - e^{-p}$, where p is determined by multiplying the expected number of initiators that occur during the duration of the event by the probabilities of the basic events in that minimal cut set. The expected number of initiators is given by λt, where λ is the frequency of the initiating event (given on a per-hour basis), and t is the duration time of the event. This approximation is conservative for precursors made visible by the initiating event. The frequencies of interest for this event are: $\lambda_{TRANS} = 6.2 \times 10^{-4}$/h, $\lambda_{LOOP} = 1.1 \times 10^{-5}$/h, $\lambda_{SLOCA} = 1.6 \times 10^{-7}$/h, $\lambda_{SSLOCA} = 2.1 \times 10^{-6}$/h, and $\lambda_{SGTR} = 2.1 \times 10^{-6}$/h.

[b]Case 1 represents the increase in the CDP because of the long-term unavailability of the Train A containment emergency sump outlet valve (399.1 h).

[c]Case 2 represents the increase in the CDP because of Train B CCW heat exchanger maintenance while the Train A containment emergency sump outlet valve was unavailable (27.1 h).

[d]Case 3 represents the increase in the CDP because of Train B RWST outlet valve maintenance while the Train A containment emergency sump outlet valve was unavailable (5.8 h).

[e]Basic event HPR-SMP-FC-SUMPA is a TRUE type event which is not normally included in the output of fault tree reduction programs but has been added to aid in understanding the sequences to potential core damage associated with the event.

GUIDANCE FOR LICENSEE REVIEW OF PRELIMINARY ASP ANALYSIS

Background

The preliminary precursor analysis of an operational event that occurred at your plant has been provided for your review. This analysis was performed as a part of the NRC's Accident Sequence Precursor (ASP) Program. The ASP Program uses probabilistic risk assessment techniques to provide estimates of operating event significance in terms of the potential for core damage. The types of events evaluated include actual initiating events, such as a loss of off-site power (LOOP) or loss-of-coolant accident (LOCA), degradation of plant conditions, and safety equipment failures or unavailabilities that could increase the probability of core damage from postulated accident sequences. This preliminary analysis was conducted using the information contained in the plant-specific final safety analysis report (FSAR), individual plant examination (IPE), and the licensee event report (LER) for this event.

Modeling Techniques

The models used for the analysis of 1998 events were developed by the Idaho National Engineering Laboratory (INEL). The models were developed using the Systems Analysis Programs for Hands-on Integrated Reliability Evaluations (SAPHIRE) software. The models are based on linked fault trees. Four types of initiating events are considered: (1) transients, (2) loss-of-coolant accidents (LOCAs), (3) losses of offsite power (LOOPs), and (4) steam generator tube ruptures (PWR only). Fault trees were developed for each top event on the event trees to a supercomponent level of detail. The only support system currently modeled is the electric power system.

The models may be modified to include additional detail for the systems/ components of interest for a particular event. This may include additional equipment or mitigation strategies as outlined in the FSAR or IPE. Probabilities are modified to reflect the particular circumstances of the event being analyzed.

Guidance for Peer Review

Comments regarding the analysis should address:

- Does the "Event Description" section accurately describe the event as it occurred?
- Does the "Additional Event-Related Information" section provide accurate additional information concerning the configuration of the plant and the operation of and procedures associated with relevant systems?
- Does the "Modeling Assumptions" section accurately describe the modeling done for the event? Is the modeling of the event appropriate for the events that occurred or that had the potential to occur under the event conditions? This also includes assumptions regarding the likelihood of equipment recovery.

Appendix G of Reference 1 provides examples of comments and responses for previous ASP analyses.

Criteria for Evaluating Comments

Modifications to the event analysis may be made based on the comments that you provide Specific documentation will be required to consider modifications to the event analysis. References should be made to portions of the LER, AIT, or other event documentation concerning the sequence of events. System and component capabilities should be supported by references to the FSAR, IPE, plant procedures, or analyses. Comments related to operator response times and capabilities should reference plant procedures, the FSAR, the IPE, or applicable operator response models. Assumptions used in determining failure probabilities should be clearly stated.

Criteria for Evaluating Additional Recovery Measures

Additional systems, equipment, or specific recovery actions may be considered for incorporation into the analysis. However, to assess the viability and effectiveness of the equipment and methods, the appropriate documentation must be included in your response. This includes:

- normal or emergency operating procedures.*
- piping and instrumentation diagrams (P&IDs),*
- electrical one-line diagrams,*
- results of thermal-hydraulic analyses, and
- operator training (both procedures and simulator),* etc.

Systems, equipment, or specific recovery actions that were not in place at the time of the event will not be considered. Also, the documentation should address the impact (both positive and negative) of the use of the specific recovery measure on:

- the sequence of events,
- the timing of events,
- the probability of operator error in using the system or equipment, and
- other systems/processes already modeled in the analysis (including operator actions).

For example, Plant A (a PWR) experiences a reactor trip, and during the subsequent recovery, it is discovered that one train of the auxiliary feedwater (AFW) system is unavailable. Absent any further information regrading this event, the ASP Program would analyze it as a reactor trip with one train of AFW unavailable. The AFW modeling would be patterned after information gathered either from the plant FSAR or the IPE. However, if information is received about the use of an additional system (such as a standby steam generator feedwater system) in recovering from this event, the transient would be modeled as a reactor trip with one train of AFW unavailable, but this unavailability would be mitigated by the use of the standby feedwater system. The

---

Revision or practices at the time the event occurred.

mitigation effect for the standby feedwater system would be credited in the analysis provided that the following material was available:

- standby feedwater system characteristics are documented in the FSAR or accounted for in the IPE,
- procedures for using the system during recovery existed at the time of the event,
- the plant operators had been trained in the use of the system prior to the event,
- a clear diagram of the system is available (either in the FSAR, IPE, or supplied by the licensee),
- previous analyses have indicated that there would be sufficient time available to implement the procedure successfully under the circumstances of the event under analysis,
- the effects of using the standby feedwater system on the operation and recovery of systems or procedures that are already included in the event modeling. In this case, use of the standby feedwater system may reduce the likelihood of recovering failed AFW equipment or initiating feed-and-bleed due to time and personnel constraints.

Materials Provided for Review

The following materials have been provided in the package to facilitate your review of the preliminary analysis of the operational event.

- The specific LER, augmented inspection team (AIT) report, or other pertinent reports.

- A summary of the calculation results. An event tree with the dominant sequence(s) highlighted. Four tables in the analysis indicate: (1) a summary of the relevant basic events, including modifications to the probabilities to reflect the circumstances of the event, (2) the dominant core damage sequences, (3) the system names for the systems cited in the dominant core damage sequences, and (4) cut sets for the dominant core damage sequences.

Schedule

Please refer to the transmittal letter for schedules and procedures for submitting your comments.

References

1. R. J. Belles et al., "Precursors to Potential Severe Core Damage Accidents: 1997, A Status Report," USNRC Report NUREG/CR-4674 (ORNL/NOAC-232) Volume 26, Lockheed Martin Energy Research Corp., Oak Ridge National Laboratory, and Science Applications International Corp., Oak Ridge, Tennessee, November 1998.

NRC FORM 366 (MMM-YYYY) U.S. NUCLEAR REGULATORY COMMISSION

LICENSEE EVENT REPORT (LER)

(See reverse for required number of digits/characters for each block)

FACILITY NAME (1)	Docket Number (2)	Page (3)
San Onofre Nuclear Generating Station (SONGS) Unit 2	05000-361	1 of 7

TITLE (4): Inoperable Valve Due to Grit in Linestarter Mechanism

EVENT DATE (5)			LER NUMBER (6)			REPORT DATE (7)			OTHER FACILITIES INVOLVED (8)	
MONTH	DAY	YEAR	YEAR	SEQUENTIAL NUMBER	REVISION NUMBER	MONTH	DAY	YEAR	FACILITY NAME	DOCKET NUMBER
									SONGS Unit 3	05000-362
02	05	1998	1998	-- 003 --	01	04	17	1998	FACILITY NAME	DOCKET NUMBER

OPERATING MODE (9)	5	THIS REPORT IS SUBMITTED PURSUANT TO THE REQUIREMENTS OF 10 CFR §: (Check One or More) (11)							
			20.2201(b)		20.2203(a)(2)(v)	X	50.73(a)(2)(i)		50.73(a)(2)(viii)
POWER LEVEL (10)	000		20.2203(a)(1)		20.2203(a)(3)(i)		50.73(a)(2)(ii)		50.73(a)(2)(x)
			20.2203(a)(2)(i)		20.2203(a)(3)(ii)		50.73(a)(2)(iii)		73.71
			20.2203(a)(2)(ii)		20.2203(a)(4)		50.73(a)(2)(iv)		OTHER
			20.2203(a)(2)(iii)		50.36(c)(1)		50.73(a)(2)(v)		Specify in Abstract below or in NRC Form 366A
			20.2203(a)(2)(iv)		50.36(c)(2)		50.73(a)(2)(vii)		

LICENSEE CONTACT FOR THIS LER (12)

NAME	TELEPHONE NUMBER (Include Area Code)
R.W. Krieger, Vice President, Nuclear Generation	714-368-6255

COMPLETE ONE LINE FOR EACH COMPONENT FAILURE DESCRIBED IN THIS REPORT (13)

CAUSE	SYSTEM	COMPONENT	MANUFACTURER	REPORTABLE TO EPIX	CAUSE	SYSTEM	COMPONENT	MANUFACTURER	REPORTABLE TO EPIX
E	BQ, BP, BE	RLY	5345	Y					

SUPPLEMENTAL REPORT EXPECTED (14)				EXPECTED SUBMISSION DATE (15)	MONTH	DAY	YEAR
	Yes (If yes, complete EXPECTED SUBMISSION DATE)	X	No				

ABSTRACT (Limit to 1400 spaces, i.e., approximately fifteen single-spaced typewritten lines.) (16)

On 2/5/1998, while replacing a linestarter for the containment emergency sump outlet valve during the mid-cycle outage, Southern California Edison (SCE) discovered the linestarter's mechanical interlock was jammed. The cause was grit in the sliding cam. This condition would have prevented the valve from opening on a Recirculation Actuation Signal (RAS), making one train of the Emergency Core Cooling System (ECCS) and Containment Spray (CS) inoperable in the recirculation mode. SCE believes the interlock jammed on 1/6/1998. The ECCS and CS trains were inoperable for about 18 days, when Unit 2 was shutdown for its scheduled mid-cycle outage.

Technical Specification (TS) 3.5.2 requires two trains of ECCS to be operable in Modes 1 and 2, and in Mode 3 at and above 400 psia pressurizer pressure. TS 3.6.6.1 requires two trains of CS to be operable in Modes 1, 2, and 3. Consequently, this event is reportable under 10 CFR 50.73(a)(2)(i).

Corrective actions included accelerating the linestarter replacement program in both units, and increased surveillance for Unit 3.

The safety significance was small for Unit 2 and minimal for Unit 3.

Plant: San Onofre Nuclear Generating Station Units 2 & 3
Reactor Vendor: Combustion Engineering
Event Date: February 5, 1998
Event Time: 1100 PST

	Unit 2	Unit 3
Mode:	5, Cold shutdown	1, Power operation
Power:	0 percent	99.8 percent (approx.)
Temperature:	91 degrees F (approx.)	548 degrees F (approx.)
Pressure:	Atmospheric	2250 psia (approx.)

Description of Event:

On February 5, 1998 (discovery date), while performing the planned replacement of Square D (S345) linestarters (RLY) (see Additional Information, below) for Train A containment emergency sump outlet valve 2HV9305 (ISV), maintenance personnel (utility, non-licensed) discovered the linestarter's mechanical interlock was jammed. Photograph 1 shows a typical linestarter with its interlock. While 2HV9305 was closed fulfilling its containment isolation function, it would not have opened to fulfill its recirculation function for High Pressure Safety Injection (HPSI) (BQ), and Containment Spray (CS) (BE). See Figure 1. The valve had been cycled open/closed on January 6, 1998. Due to the nature of the failure (see the Cause of the Event section, below), Southern California Edison (SCE) believes that the interlock jammed during that last close cycle. Consequently, 2HV9305, Emergency Core Cooling System (ECCS) Train A, and Containment Spray Train A were inoperable from January 6, 1998, until the unit was shutdown for its planned mid-cycle outage on January 24, 1998.

Technical Specification (TS) 3.5.2 requires two trains of ECCS to be operable in Modes 1 and 2, and in Mode 3 at and above 400 psia pressurizer pressure. (A train of ECCS is defined as a train of HPSI, Low Pressure Safety Injection (LPSI)(BP), and Charging (CB). However, Charging does not take suction from the emergency sump. LPSI automatically trips on Recirculation actuation Signal (RAS).) With one train of ECCS inoperable, but with at least 100 percent of the ECCS flow equivalent to a single operable ECCS train available, TS 3.5.2 Action A requires the inoperable train be restored to operable within 72 hours. If Action A is not completed, Action B requires being in Mode 3 within 6 hours and below 400 psia pressurizer pressure within 12 hours. Consequently, this condition is being reported under 10 CFR 50.73(a)(2)(i).

TS 3.6.6.1 requires two trains of CS to be operable in Modes 1, 2, and 3. As discussed above, CS Train A was inoperable between January 6, 1998, and January 24, 1998. TS 3.6.6.1 Action A requires the train be returned to operable within 72 hours. If that action is not met, Action B requires being in Mode 3 within 6 hours and Mode 4 within 84 hours.

Operations records showed that Train B ECCS (the opposite Train) was inoperable on six occasions between January 6, 1998, and January 24, 1998. These six occasions were:

1. January 12, 1998, for an inservice test of a HPSI pump for 1 hour and 43 minutes.

2. January 13, 1998, for 27 hours and 5 minutes when a Component Cooling Water (CCW) heat exchanger tube leak was repaired. CCW is a required support system for ECCS.

3. January 16, 1998, for 6 hours and 36 minutes for main condenser heat treatment. The heat treat process increases the temperature of the Salt Water Cooling System (SWC), reducing the system's ability to remove heat. SWC is a required support system for ECCS. The affected train of ECCS is conservatively declared inoperable.

4. January 22, 1998, for 19 minutes while Operations swapped the inservice SWC pump to the opposite train.

5. January 23, 1998, for 5 hours and 45 minutes for Recirculation Actuation Signal (RAS) Train B valve 2HV9301 breaker work. 2HV9301 is the Refueling Water Storage Tank (RWST) outlet valve.

6. January 24, 1998, for 5 hours and 31 minutes another main condenser heat treatment.

For both trains of ECCS inoperable, TS 3.5.2 requires immediate entry into TS 3.0.3 (initiate action to enter Mode 3 within 1 hour, be in Mode 3 within 7 hours, and, for inoperable ECCS, be less than 400 psia within 13 hours). Because SCE was unaware that Train A was inoperable, TS 3.0.3 was unknowingly applicable.

Cause of the Event:

Visual observation of the affected interlock found an accumulation of what appeared to be fine sand or grit on the back side of the linestarter assembly. The grit was tan colored, and had adhered to almost all parts of the interlock assembly. Concentrations of grit were located around the four openings at the bottom of the mounting plate and on the top sides of most components. The heaviest accumulations were around the four openings, indicating the majority of the grit entered through those openings, as opposed to entering though the open sides of the backing plate, and that the grit was introduced after the linestarter was installed.

When the interlock was dismantled, both guide posts and plastic sliding cams showed the presence of grit. The sliding cams were difficult to move on their guide post. Previous experience with both new and worn interlocks of this type has never shown binding from grit.

The interlock parts and grit were analyzed in the laboratory. The debris was identified using Energy Dispersive X-ray Spectroscopy (EDS) as primarily silicon, aluminum, and calcium, with traces of other metallic elements. To allow examination with a Scanning Electron Microscope (SEM), one sliding cam was cut into pieces to reveal the surface of the bore. Debris, consisting of fine particles with sharp edges, had galled the sliding plastic parts of the interlock, closing the clearance.

The cause investigation concluded that:

1. Based on the color, visual appearance, and elemental makeup, the grit is most likely gunite particles. Gunite was used to stabilize hillsides outside the protected area during original plant construction.

2. There was no conclusive evidence of any significant quantities of grit on or around other switchgear room components, nor was any evidence of it found in the ventilation ducts.

3. Based on the evidence gained from the locations and ages of clean components, it is concluded that the grit was introduced prior to 1993, and most likely prior to plant startup. Once deposited, the grit does not migrate, so that deposition is not an on-going problem.

4. The presence of grit, by itself, is not a sufficient reason to conclude that a given linestarter is inoperable. This conclusion is based on field evidence, laboratory testing, and the fact that only the one linestarter was found to be jammed by grit contamination.

Corrective Actions:

As stated in the Additional Information section, SCE has been programmatically replacing Square D linestarters. As of February 5, 1998 (the discovery date), 60 of 86 linestarters in Unit 2, and 61 of 86 linestarters in Unit 3 had already been replaced. Additional Motor Control Center (MCC) inspections were made, and the same contamination was found in other buckets of MCC 2BE as well as MCC cubicles 2BJ47 and 3BE13. See the Safety Significance of the Event section, below. Therefore:

1. All remaining old interlocks in Unit 2 (26) were removed, inspected, and replaced with new interlocks during the Cycle 9 mid-cycle outage. No additional failures were discovered.

2. All remaining old interlocks in Unit 3 (25) were visually inspected, and verified to be in the neutral position, and re-verified after each completed operation of the valve, assuring the associated valves were capable of performing at least one more operation. (See the Safety Significance, below.) The interlocks which could be replaced with the unit on-line (16 total) were replaced prior to the mid-cycle outage. The remainder (9) were replaced during the Unit 3 Cycle 9 mid-cycle outage.

Safety Significance of the Event:

Based on equipment inspections and maintenance records, only linestarters installed prior to January 27, 1993, are subject to contamination. As discussed above, the majority of the safety related linestarters in Units 2 and 3 were replaced with new linestarters in 1995 (or later). The following discussion addresses the potential effects the grit may have on components which are still installed in Units 2 and 3.

Safety Significance Of Grit On Other Components:

480 VAC MCCs contain components in addition to reversing motor linestarters. Only components with exposed moving parts, tight tolerances, and relatively low operating forces are subject to binding. The only components other than reversing linestarters with moving parts are:

1. Non-reversing starters. Non-reversing starters do not have a mechanical interlock and the moving parts are primarily shielded by an outer case. Both reversing and non-reversing starters have relay coils which are unaffected by grit contaminants and their contacts are self cleaning. The moving parts of these starters have relatively loose tolerances and strong operating forces so they are not expected to bind from the additional friction of a thin layer of contamination.

2. Auxiliary contactors. The moving parts of auxiliary contactors are typically not exposed, and the self cleaning wiping action of the contacts normally prevents the accumulation of foreign material.

3. Agastat relays. Agastat relays are sealed to prevent entry of dust, and the motion of the internal mechanism does not lend itself to binding.

4. Circuit breakers. The circuit breakers used have a molded case which tightly seals the unit. In the unlikely event that contamination should penetrate the breaker housing, the mechanism itself has loose tolerances and large operating forces, making it unlikely to bind.

5. Switches. Switches are normally sealed, and are manually operated, making them unlikely to bind from a thin layer of contamination.

Therefore, this event had no safety significance for components other than the Square D linestarters in the affected 480 VAC MCCs.

Safety Significance for Unit 2:

SCE estimated the reported condition constituted an incremental increase in core damage probability of approximately 6E-6 for the period January 6, 1998, the date the valve became inoperable, through January 24, 1998, the date the unit exited TS 3.5.2 for the mid-cycle outage, when unproceduralized recovery actions are credited. This increase in risk is characterized as small. Details of the risk evaluation were provided in Reference 1 (see Additional Information, below).

Safety Significance For Unit 3:

As discussed in the Corrective Actions section, linestarters which could be replaced with the unit operating were replaced. Prior to the March 8, 1998, unit shutdown, 16 linestarters had already been replaced and none were jammed. SCE expected these linestarters would have operated as required to mitigate the consequences of an accident because:

1. All old interlocks were visually inspected, and verified to be in the neutral position. The presence of the grit has no adverse effect on valve operation if the interlock is in the neutral position. The linestarter's solenoid is strong enough to overcome any grit induced resistance. The valve will still operate in either direction. It is only the interlock's return spring (which returns the interlock to its neutral position) which cannot overcome the friction caused by the grit. Therefore, the associated valves were expected to be capable of performing at least one more operation upon demand.

2. The linestarters have shown reliable operation since the pre-1993 introduction of the contaminant.

3. Redundant components and trains were available to fulfill the required safety function for a valve which might fail to operate because of a jammed interlock.

Therefore, this event has minimal safety significance for Unit 3.

Additional Information:

Reference 1: Letter, Dwight E. Nunn, SCE, to Document Control Desk (USNRC), Linestarter and AFW Supplemental Information, April 7, 1998.

In LER 2-97-010, SCE reported that both trains of ECCS were made inoperable because of the failure of a check valve to open completely. The cause of that failure was a valve design defect, a cause not present for the event reported herein.

In early 1995, during the Unit 2 Cycle 7 refueling outage, Square D mechanical interlocks jammed during preventative maintenance. SCE concluded the mechanical interlocks jammed due to excessive wear of the sliding cams caused by the manual cycling performed as part of the preventative maintenance program. Corrective actions included, among other things, the planned change out of the linestarters prior to returning to service from the Cycle 10 refueling outages for both Units 2 and 3. It was during this planned change out that the condition being reported herein was discovered. Because of the fine dust appearance of the grit to the naked eye, it is not reasonable to expect that this problem could have been identified by a prudent individual examining the cubicles using industry accepted QA inspection techniques. The grit cannot be differentiated from normal dust accumulation without optical microscopy, or SEM and EDS. Grit was not a contributor to the failure mechanism of the interlock in 1995.

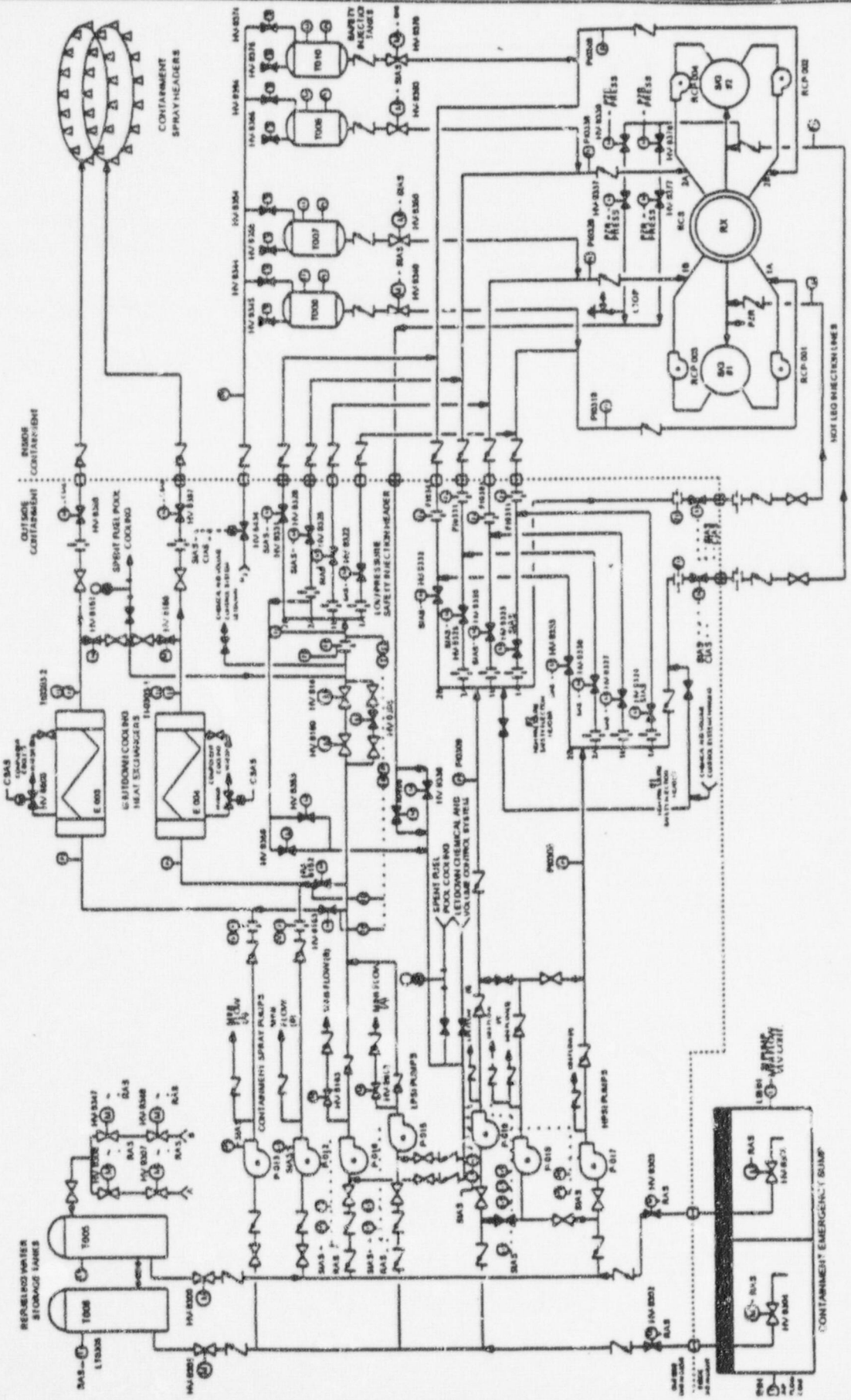

Figure 1 - Safety Injection, Containment Spray, and Shutdown Cooling Systems

Figure 1 - Typical Square D Linestarter with Mechanical Interlock