Florida Power
CORPORATION

INTEROFFICE CORRESPONDENCE

A-C-XMYL-FRM

Nuclear Engineering	N6TD	240-1534
Office	MAC	Telephone

SUBJECT: Crystal River Unit 3
Quality Document Transmittal - Analysis/Calculation

TO: Records Management - NR2A

The following analysis/calculation package is submitted as the QA Record copy:

DOCNO (FPC DOCUMENT IDENTIFICATION NUMBER)	REV.	SYSTEM(S)	TOTAL PAGES TRANSMITTED
S-96-0013	1	See Attached	65

TITLE
Qualification of Tanks per U.S.I. A-46

KWDS (IDENTIFY KEYWORDS FOR LATER RETRIEVAL)
SQUG, Tank, Seismic

DXREF (REFERENCES OR FILES - LIST PRIMARY FILE FIRST)
S-91-0003

VEND (VENDOR NAME)	VENDOR DOCUMENT NUMBER (DXREF)	SUPERSEDED DOCUMENTS (DXREF)
FPC	N/A	N/A

TAG

SWHE-1A	WDT-3A	CDHE-4A
SWHE-1B	WDT-3B	CDHE-4B
SWHE-1C	WDT-3C	
SWHE-1D	WDT-5	

PART NO.

COMMENTS (USAGE RESTRICTIONS, PROPRIETARY, ETC.)

NOTE:
Use Tag number only for valid tag numbers (i.e., RCV-8, SWV-34, DCH-99), otherwise; use Part number field (i.e., CSC14599, AC1459). If more space is required, write "See Attachment" and list on separate sheet.

DESIGN ENGINEER	DATE	VERIFICATION ENGINEER	DATE	SUPERVISOR, NUCLEAR ENG	DATE
M. L. Thompson / MARK THOMPSON	12/3/97	B. Keith Henshaw	12-03-97		12-4-97

cc: Nuclear Projects (If MAR/CGWR/PEERE
Return to Service Related) ☐ Yes ☒ No
Supervisor, Config. Mgt. Info.
Mgr., Nucl. Operations Eng. (Original) w/attach

Calculation Review form Part III actions required ☐ Yes ☒ No
(If Yes, send copy of the form to Nuclear Regulatory Assurance and a copy of the Calculation to the Responsible Organization(s) identified in Part III on the Calculation Review form.)

Rev

Florida Power
CORPORATION

ANALYSIS/CALCULATION SUMMARY

A-C-SUM FRM

DOCUMENT IDENTIFICATION NUMBER	DISCIPLINE	CONTROL NO.	REVISION LEVEL
	S	96-0013	1

TITLE

Qualification of Tanks per U.S.I. A-46

CLASSIFICATION (CHECK ONE)
☒ Safety Related
☐ Non Safety Related

MAR/SP/CGWR/PEERE NUMBER
N/A

VENDOR DOCUMENT NUMBER
N/A

	APPROVAL SIGNATURES	PRINTED NAME
Design Engineer	ML Thompson	Mark Thompson
Date	12/3/97	
Verification Engineer	B. Keith Henshaw	Bryan K. Henshaw
Date	12-03-97	
Supervisor	Don Jopling	D. L. Jopling
Date	12-4-97	

ITEMS REVISED

Replaced all pages in attachment M. Also revised Pages 2 and 3.

Attachments P, Q, R, & S were added to calculation.

PURPOSE SUMMARY

The purpose of this revision is to analyze selected tanks and condensers and ensure the seismic capacity is greater than the seismic demand. The secondary purpose of this calculation is to make a correction to the weight of SWHE-1A, -1B, -1C, and -1D.

RESULTS SUMMARY

The tanks and condensers analyzed in this calculation are seisimically qualified for design basis loading at CR-3. The increased weight for SWHE-1A, -1B, -1C, and -1D has not affected original conclusions of S96-0013, Rev. 0 which determined that the Heat Exchangers were seismically qualified for CR-3 design basis loading.

Florida Power
CORPORATION

CALCULATION REVIEW

CALC-REV.FRM

CALCULATION NO./REV.
S-96-0013, Rev. 1

PART I - **DESIGN ASSUMPTION/INPUT REVIEW: APPLICABLE** ☐ **Yes** ☒ **No**

The following organizations have reviewed and concur with the design assumptions and inputs identified for this calculation:

Nuclear Plant Technical Support System Engr — Signature/Date

Nuclear Plant Operations — Signature/Date

OTHER(S)

Signature/Date

Signature/Date

PART II - **RESULTS REVIEW: APPLICABLE** ☐ **Yes** ☒ **No**

The following organizations have reviewed and concur with the results of this calculation and understand the actions which the organizations must take to implement the results.

Nuclear Plant Technical Support System Engr — Signature/Date

Nuclear Plant Operations — Signature/Date

Nuclear Plant Maintenance — Signature/Date
☐ Yes ☐ N/A

Nuclear Licensed Operator Training — Signature/Date
☐ Yes ☐ N/A

Manager, Site Nuclear Services — Signature/Date
☐ Yes ☐ N/A

Sr. Radiation Protection Engineer — Signature/Date
☐ Yes ☐ N/A

OTHERS:

Signature/Date

Signature/Date

Florida Power
CORPORATION

CALCULATION REVIEW

Page 2 of 2

CALCULATION NO./REV.
S-96-0013, Rev. 1

PART III - CONFIGURATION CONTROL: APPLICABLE ☐ Yes ☒ No

The following is a list of Plant procedures/lesson plans/other documents and Nuclear Engineering calculations which require updating based on calculation results review:

Document	Date Required	Responsible Organization

Upon completion, forward a copy to the Manager, Nuclear Regulatory Assurance Group for tracking of actions if any items are identified in Part III. If calculations are listed, a copy shall be sent to the original file and the calculation log updated to reflect this impact.

PART IV - NUCLEAR ENGINEERING DOCUMENTATION REVIEW

The responsible Design Engineer must thoroughly review the below listed documents to assess if the calculation requires revision to these documents. If "Yes," the change authorizations must be listed below and issued concurrently with the calculation.

Enhanced Design Basis Document	☐ Yes ☒ No	(TC#)	Vendor Qualification Package		(VQP#)
FSAR	☐ Yes ☒ No	(Letter#)	Topical Design Basis Doc.	☐ Yes ☒ No	(TC#)
Improved Tech. Specification	☐ Yes ☒ No	(Letter#)	E/SQPM	☐ Yes ☒ No	(TC#)
Improved Tech. Spec. Bases	☐ Yes ☒ No	(Letter#)	Other Documents reviewed:		
Config. Mgmt. Info. System	☐ Yes ☒ No	(CIDP#)		☐ Yes ☐ No	(CHANGE DOC. REFERENCE)
Analysis Basis Document	☐ Yes ☒ No	(TC#)		☐ Yes ☐ No	(CHANGE DOC. REFERENCE)
Design Basis Document	☐ Yes ☒ No	(TC#)		☐ Yes ☐ No	(CHANGE DOC. REFERENCE)
Appendix R Fire Study	☐ Yes ☒ No	(TC#)		☐ Yes ☐ No	(CHANGE DOC. REFERENCE)
Fire Hazardous Analysis	☐ Yes ☒ No	(TC#)		☐ Yes ☐ No	(CHANGE DOC. REFERENCE)
NFPA Code Conformance Document	☐ Yes ☒ No	(TC#)		☐ Yes ☐ No	(CHANGE DOC. REFERENCE)

PART V - PLANT REVIEWS/APPROVALS FOR INSTRUMENT SETPOINT CHANGE

PRC/DNPO approval is required if a setpoint is to be physically changed in the plant through the NEP 213 process.

PRC Review Required ☐ Yes ☒ No

PRC Chairman /Date

DNPO Review Required ☐ Yes ☒ No

DNPO /Date

DESIGN ENGINEER/DATE
E. Keith for MARK THOMPSON (PER TELECON)

DESIGN ENGINEER - PRINTED NAME
MARK THOMPSON

CALCULATION VERIFICATION REPORT

Crystal River Unit 3

CALVERRP.FRM

Page 1 of 1

CALCULATION NUMBER
S-96-0013, Revision 1

PROJECT/TITLE
Qualification of Tanks per U.S.I. A-46

	YES	NO	N/A	
1.	☒	☐	☐	Are inputs including codes, standards, regulatory requirements, procedures, data, and Engineering methodology correctly selected and applied?
2.	☒	☐	☐	Have assumptions been identified? Are they reasonable and justified? (See NEP 101, V.c., for discussion on assumptions and justification.)
3.	☒	☐	☐	Are references properly identified, correct, and complete? (See NEP 101, V.c, for discussion on references).
4.	☒	☐	☐	Have applicable construction and operating experiences been considered?
5.	☒	☐	☐	Was an appropriate Design Analysis/Calculation method used?
6.	☐	☐	☒	In cases where computer software was used, has the program been verified or reverified in accordance with NEP 135 for safety related design applications and/or are inputs, formulas, and outputs associated with spreadsheets accurate?
7.	☒	☐	☐	Is the output reasonable compared to inputs?
8.	☐	☐	☒	Has technical design information provided via letter, REA, IOC or telecon by other disciplines or programs been verified by that discipline or program?
9.	☒	☐	☐	Has technical design information provided via letter or telecon from an external Engineering Organization or vendor been confirmed and accepted by FPC?
10.	☐	☒	☐	Do the calculation results indicate a non-conforming condition exists? If "Yes," immediately notify the responsible Supervisor.
11.	☐	☒	☐	Do the results require a change to other Engineering documents? If "Yes," have these documents been identified for revision on the Calculation Review Form?

I have performed a verification on the subject calculation package and find the results acceptable.

VERIFICATION ENGINEER	DATE	SUPERVISOR, NUCLEAR ENGINEERING	DATE
B. Keith	12-03-97		12-4-97

Florida Power
CORPORATION

INTEROFFICE CORRESPONDENCE

Nuclear Engineering Design (NED)	NA1E	3581
Office	MAC	Te..phone

SUBJECT: Crystal River Unit 3
Quality Document Transmittal - Analysis/Calculation, Page 1 of 2

TO: Records Management - NR2A

The following analysis/calculation package is submitted as the QA Record copy:

DOCNO (FPC DOCUMENT IDENTIFICATION NUMBER)	REV	SYSTEM(S)	TOTAL PAGES TRANSMITTED
S-06-0013	0	See Attached	93

TITLE
Qualification of Tanks per U.S.I. A-46

KWDS (IDENTIFY KEYWORDS FOR LATER RETRIEVAL)
SQUG, Tank

DXREF (REFERENCES OR FILES - LIST PRIMARY FILE FIRST)
SP-83-033

VEND (VENDOR NAME)	VENDOR DOCUMENT NUMBER (DXREF)	SUPERSEDED DOCUMENTS (DXREF)
Programmatic Solutions, Inc	None	n/a

TAG

See Attached		

PART NO.

COMMENTS (USAGE RESTRICTIONS, PROPRIETARY, ETC.)
This calculation provides seismic qualification of tanks per the "SQUG" guidelines.
This calculation was done by Programmatic Solutions, Inc. under Contract N00991AA.

NOTE:
Use Tag number only for valid tag numbers (i.e., RCV-8, SWV-34, DCH-99), otherwise; use Part number field (i.e., CSC14599, AC1459). If more space is required, write "See Attachment" and list on separate sheet.

[illegible] ENGINEER	DATE	VERIFICATION ENGINEER	DATE	SUPERVISOR, NUCLEAR ENG.	DATE
	2/9/96	N/A			2/9/96

cc: MAR Office (If MAR Related) ☐ Yes ☒ No
Mgr. Nucl. Config. Mgt.
Mgr., Nucl. Eng. Design
(Original) w/attach

Plant Document Updates Required ☐ Yes ☒ No (If Yes, send copy of the Calculation Review form to Nuclear Licensing and a copy of the Calculation to the Responsible Organization(s) identified in Part III on the Calculation Review form.)
A/E PROGRAMMATIC SOLUTIONS, INC ☒ Yes ☐ No (INFO ONLY)
(If yes, Transmit w/attach)

Florida Power
CORPORATION

INTEROFFICE CORRESPONDENCE

Nuclear Engineering Design (NED)	NA1E	3581
Office	MAC	Telephone

SUBJECT: Crystal River Unit 3
Quality Document Transmittal - Analysis/Calculation, Sheet 2 of 2

TO: Records Management - NR2A

DOCNO (FPC DOCUMENT IDENTIFICATION NUMBER): **S-96-0013**, REV. **0**

Systems:

CA
CH
DC
DH
DL
EG
IA
MS
MU
SF
SW
WD

Tag Numbers:

CAT-5A
CAT-5B
CHT-1
DCT-1A
DCT-1B
DHHE-1A
DHHE-1B
DLHE-1A
DLHE-1B
DLHE-2A
DLHE-2B
EGT-1A
EGT-1B
EGT-2A
EGT-2B
IADR-1
IAT-1A
IAT-1B
MSV-411-AR1
MSV-411-AR2
MSV-411-AR3
MSV-412-AR1
MSV-412-AR2
MSV-412-AR3
MSV-413-AR1
MSV-413-AR2
MSV-413-AR3
MSV-414-AR1
MSV-414-AR2
MSV-414-AR3
MUHE-2A
MUHE-2B
MUT-1
SFDM-1
SWHE-1A
SWHE-1B
SWHE-1C
SWHE-1D
SWT-1
WDT-1A
WDT-1B
WDT-1C

Florida Power
CORPORATION

DESIGN ANALYSIS/CALCULATION

Crystal River Unit 3

Page 1 of 3

DOCUMENT IDENTIFICATION NO	REVISION
S96-0013	0

1. PURPOSE

The purpose of this calculation is to evaluate the anchorage adequacy under seismic loading of those items of equipment identified as Class 21 "Tanks and Heat Exchangers" according to the SQUG-GIP (Reference 1). The methodology of Section 7 of the PSP for Seismic Verification of Nuclear Power Plant Equipment (Reference 2) was used where applicable (i.e., For flat bottomed vertical tanks or for horizontal tanks/heat exchangers supported on saddles).

For equipment items not meeting the intent of the PSP Section 7 methodology (for example, small vertical tanks supported on legs), an evaluation of the anchorage is performed using extremely conservative values to assure anchorage adequacy.

2. DESIGN INPUTS

Design input values were obtained from the vendor equipment drawings, foundation drawings and anchorage drawings referenced in the individual evaluations (Attachments A through Appendix O).

Acceleration values used to define the seismic demand for each specific item evaluated were obtained from Section 5.0 of the E/SQPM (Reference 3).

3. ASSUMPTIONS

In any instance where required information was not available (such as dimensions, anchor bolt type, etc.), appropriate conservative assumptions were made and are documented in the individual evaluations. For example, if required dimensions were not available, field measurements may have been obtained and these data were referenced when used; or if the anchor bolt type was unknown, a conservative anchor bolt dimension, type, and GIP reduction factor would be documented and used in the evaluation.

4. REFERENCES

(1) Generic Implementation Procedure (GIP) for Seismic Verification of Nuclear Power Plant Equipment, Revision 2, SQUG, February 1992.

(2) Florida Power Corporation Plant Specific Procedure for Seismic Verification of Nuclear Power Plant Equipment, Revision 0.

(3) Florida Power Corporation "Environmental and Seismic Qualification Program Manual (E/SQPM)", Rev. 8, Section 5.0, Seismic Qualification Data.

5.0 TANK AND HEAT EXCHANGER CALCULATIONS

Individual anchorage adequacy evaluations of the following Class 21 items of equipment were performed and are documented in Attachments A through O, respectively, of this calculation:

Boric Acid Storage Tanks	CAT-5A, CAT-5B
Chilled Water Expansion Tank	CHT-1
Decay Heat Closed Cycle Surge Tank	DCT-1A, DCT-1B
Decay Heat Removal Heat Exchangers	DHHE-1A, DHHE-1B
Emergency Diesel Generator Lube Oil Coolers	DLHE-1A, DLHE-1B, DLHE-A, DLHE-2B
Emergency Diesel Generator Air Receivers	EGT-1A, EGT-1B, EGT-2A, EGT-2B
Instrument Air Dryer	IADR-1
Instrument Air Receivers	IAT-1A, IAT-1B
Main Steam Valve Air Reservoirs	MSV-411-AR1 Through MSV-414-AR3
RCP Seal Return Coolers	MUHE-2A, MUHE-2B
Make-Up Tank	MUT-1
Spent Fuel Coolant Demineralizer	SFDM-1
Nuclear Service CCC Heat Exchangers	SWHE-1A, SWHE-1B, SWHE-1C, SWHE-1D
Nuclear Service Closed Cycle Surge Tank	SWT-1
Waste Gas Decay Tanks	WDT-1A, WDT-1B, WDT-1C

5.0 CONCLUSIONS

It was determined that the anchorage for all of the equipment presented in the individual anchorage evaluations included in Attachments A thorough O are adequate.

For the equipment where the methodology of Section 7 of the PSP for Seismic Verification of Nuclear Power Plant Equipment (Reference 2) was applied, all requirements of this procedure were met.

For equipment for which simplified analysis methods were used to evaluate the anchorage it was found in all cases that significant margins remained between calculated seismic demand and anchorage capacity even though various conservative assumptions were used. For example, seismic accelerations were overestimated because 2% damping curves were used when 4% damping should be applied (because 4% curves were not available).

(3) Florida Power Corporation "Environmental and Seismic Qualification Program Manual (E/SQPM)", Rev. 8, Section 5.0, Seismic Qualification Data.

5.0 TANK AND HEAT EXCHANGER CALCULATIONS

Individual anchorage adequacy evaluations of the following Class 21 items of equipment were performed and are documented in Attachments A through ~~O~~ R, respectively, of this calculation:

Boric Acid Storage Tanks	CAT-5A, CAT-5B
Chilled Water Expansion Tank	CHT-1
Decay Heat Closed Cycle Surge Tank	DCT-1A, DCT-1B
Decay Heat Removal Heat Exchangers	DHHE-1A, DHHE-1B
Emergency Diesel Generator Lube Oil Cool	DLHE-1A, DLHE-1B, DLHE-A, DLHE-2B
Emergency Diesel Generator Air Receivers	EGT-1A, EGT-1B, EGT-2A, EGT-2B
Instrument Air Dryer	IADR-1
Instrument Air Receivers	IAT-1A, IAT-1B
Main Steam Valve Air Reservoirs	MSV-411-AR1 Through MSV-414-AR3
RCP Seal Return Coolers	MUHE-2A, MUHE-2B
Make-Up Tank	MUT-1
Spent Fuel Coolant Demineralizer	SFDM-1
Nuclear Service CCC Heat Exchangers	SWHE-1A, SWHE-1B, SWHE-1C, SWHE-1D
Nuclear Service Closed Cycle Surge Tank	SWT-1
Waste Gas Decay Tanks	WDT-1A, WDT-1B, WDT-1C
REACTOR COOLANT BLEED TANKS	WDT-3A, WDT-3B, WDT-3C
REACTOR COOLANT DRAIN TANK	WDT-5
MAIN CONDENSER	CDHE-4A, CDHE-4B

5.0 CONCLUSIONS

It was determined that the anchorage for all of the equipment presented in the individual anchorage evaluations included in Attachments A thorough O are adequate.

For the equipment where the methodology of Section 7 of the PSP for Seismic Verification of Nuclear Power Plant Equipment (Reference 2) was applied, all requirements of this procedure were met.

For equipment for which simplified analysis methods were used to evaluate the anchorage it was found in all cases that significant margins remained between calculated seismic demand and anchorage capacity even though various conservative assumptions were used. For example, seismic accelerations were overestimated because 2% damping curves were used when 4% damping should be applied (because 4% curves were not available).

Florida Power
CORPORATION

DESIGN ANALYSIS/CALCULATION

Crystal River Unit 3

Page 3 of 3

DOCUMENT IDENTIFICATION NO	REVISION
S96-0013	~~0~~ 1

7. ATTACHMENTS

A.	Boric Acid Storage Tank	Six Pages
B.	Chilled Water Expansion Tank	Five Pages
C.	Decay Heat Closed Cycle Surge Tank	Six Pages
D.	Decay Heat Removal Heat Exchangers	Six Pages
E.	Emergency Diesel Generator Lube Oil Coolers	Six Pages
F.	Emergency Diesel Generator Air Receivers	Six Pages
G.	Instrument Air Dryer	Six Pages
H.	Instrument Air Receivers	Six Pages
I.	Main Steam Valve Air Reservoirs	Five Pages
J.	RCP Seal Return Coolers	Six Pages
K.	Make-Up Tank	Six Pages
L.	Spent Fuel Coolant Demineralizer	Six Pages
M.	Nuclear Service CCC Heat Exchangers	Six Pages
N.	Nuclear Service Closed Cycle Surge Tank	Six Pages
O.	Waste Gas Decay Tanks	Six Pages
P.	REACTOR COOLANT BLEED TANKS	22 PAGES
Q.	REACTOR COOLANT DRAIN TANK	10 PAGES
R.	MAIN CONDENSERS	3 PAGES
S.	EXCERPT FROM "CIVIL ENGINEERING & NUCLEAR POWER" CONFERENCE	17 PGS.

Attachment "A"

Boric Acid Storage Tank

Six Pages Total

FPC – Crystal River Unit 3
Seismic Verification of Tanks

Rev	By	Date	Chk'd By	Date
0	DHR	10/9/95	Pds	1/22/96

Calculation For:
Horizontal Tank

Equip. ID:	CAT–5A
Building:	AUXILIARY
Elevation:	119
Rm Row/Col:	302 / O

Equipment Description:
BORIC ACID STORAGE TANK A

Also Applicable for:
CAT–5B

Tank

Drawing: M–6063 Rev. 2
Anch. Drw.: SC–422–010 and SC–422–043
Vendor: Babcock & Wilcox, Buffalo Tank Div.
Model:

Step 1:

(1) Input Data — See Figure 7–13 of Florida Power Plant Specific Procedure for "Seismic Verification of Nuclear Plant Equipment", Rev. 1, 9/12/94

				Applicable?
Tank:	Diameter (ft)	D	9.00	OK
	Length (ft)	L	17.08	OK
	Thickness of tank shell (in)	t	0.27	min. thick. calc.
	Weight of tank plus fluid (lbf)	W_{tf}	73000.00	
	Weight density (lbf/ft ^ 3)	G_{am}	61.16	OK
	Height of c.g. above anchorage (ft)	H_{cg}	5.28	OK
Saddle:	Spacing (ft)	S	9.92	OK
	Height of saddle plate from bottom of the tank to the base plate (in)	h	12.00	
	Shear modulus (psi)	G	1.12E+07	
	Elastic modulus (psi)	E	2.90E+07	
	Number of Saddles	N_s	2.00	OK
Base Plate:	Thickness base plate under saddle (in)	t_b	0.75	
	Min. yield strength (psi)	f_y	30000.00	
	Thickness of leg of weld	t_w	0.25	Assumed
	Eccentricity from anchor bolt CL to the vertical saddle plate	e_s	2.70	Assumed
Bolts:	Number of locations, each saddle	N_L	2.00	OK
	Number of anchor bolts per location	N_B	2.00	OK
	Diameter of anchor bolt (in)	d	1.00	
	Distance between extreme anchor bolts in base plate of saddle (ft)	D'	8.50	OK

Loading: SSE Floor reponse spectra at 4% damping

FPC – Crystal River Unit 3
Seismic Verification of Tanks

Calculation For:
Horizontal Tank

Rev	By	Date	Chk'd By	Date
0	DHA	10/9/95	Pds	1/22/96

Step 2:
(2) Anchor Bolt Allowables (From GIP Section 4.4 and Appendix C)

Allowables for 1.0" Cast-In-Place Bolts

Pnom =	26.69	ksi	Vnom =	13.35	ksi
RLp =	1.00	embedment red. factor	RLs =	1.00	
RSp =	1.00	spacing red. factor	RSs =	1.00	
REp =	1.00	edge distance red. factor	REs =	1.00	
RFp =	0.93	for fc=3000 psi concrete	RFs =	0.93	
RCp =	1.00	cracked concrete red. fact.	RCs =	1.00	

Pu' = Pnom (RLp)(RSp)(REp)(RFp)(RCp) = Pnom (0.93) = 24.71 Kip
Vu' = Vnom (RLs)(RSs)(REs)(RFs)(RCs) = Vnom (0.93) = 12.36 Kip

Step 3:
(3) Base Plate Bending Strength Reduction Factor (RB)

RB = Bending strength reduction factor = $\frac{(fy)\ (tb \wedge 2)}{(3)\ (Pu')}$ 0.23

Step 4:
(4) Base Plate Weld Strength Reduction Factor (RW)

RW = Weld strength red. fact. = $\frac{(tw)\ (es)\ (30600)\ (2.83)}{Pu'}$ 2.36

Step 5:
(5) Anchor Tension and Shear Allowable

Pu = (Pu') (smaller of RB, RW) = 5.63 Kip

Vu = Shear allowable anchor load = (Vu') = 12.36 Kip

Step 6:
(6) Calculated Ratios

Alp = (Pu') / (Vu') = 0.46
Wb = (Wtf) / [(NS) * (NL) * (NB)] = 9125.00 lbs
Vu / Wb = 1.35
Hcg / D' = 0.62
Hcg / S = 0.53
F1 = SQRT [(NS ^ 2) + 1] = 2.24
F2 = SQRT [(NL ^ 2) * (Hcg / D') ^ 2 + (.667 ^ 2)
+ ((Hcg/S) ^ 2) * ((NS ^ 2) / (NS − 1) ^ 2)] = 1.77

FPC -- Crystal River Unit 3
Seismic Verification of Tanks

Calculation For:
Horizontal Tank

Rev	By	Date	Chk'd By	Date
0	DHR	10/9/95	Pds	1/22/96

Step 7:
(7) Determine Acceleration Capacity of Tank Anchorage

$$Llow = [(Vu) / (Wb)] * [(1) / (F1)] = 0.61\ g$$

$$Lup = \frac{[(Vu) / (Wb) + (0.7) / (Alp)]}{[(0.7) / (Alp)] * (F2) + (F1)} = 0.58\ g$$

Lamb = Smaller of Llow or Lup = 0.58 g

Step 8:
(8) Is Tank/Heat Exchanger Rigid or Flexible in Transverse or Vertical?

Sc = From Figure 7-14 for Tanks = 20.00 ft
(Use D = 9.000 ft)
(Use t = 0.269 in)

Is Tank / Heat Exchanger Rigid or Flexible ?
Rigid if Sc >or= S , Flexible if Sc < S
From Step 1, S = 9.917 ft

Tank in Transverse or Vertical Direction is **Rigid**

Step 9:
(9) Is Tank/Heat Exchanger Rigid or Flexible in Longitudinal Direction?

Flong. = [(1) / (2PI)] * SQRT[(ks)*(g) / (Wtf)]

$$\text{where } ks = \frac{1}{\frac{(h^3)}{(3 * E * Iyy)} + \frac{(h)}{(As * G)}}$$

(Use Iyy = 183.31 in^4)
(Use As = 23.91 in^2)

therefore, ks = 6.52E+06
Flong. = 29.5685

Tank in Longitudinal Direction (see Note below): **Rigid**
(Rigid if Flong >or= 33 , Flexible if Flong < 33)

Note: The preceeding evaluation of ks is for unbraced saddles. The saddles for the horizontal tank in question are braced by two cross members connecting the top and bottom extremes of the saddles on each side of the tank. This cross bracing supplies significant stiffening to the bending resistance of the saddles. The calculated longitudinal frequency (29.6 Hz) underestimates the actual frequency and the tank will be assumed as rigid (Flong > 33). It is also noted that the maximum acceleration in the range above 20 Hz is much less than the spectral peak (< 0.15 g vs. 0.71 g).

FPC – Crystal River Unit 3
Seismic Verification of Tanks

Calculation For:
Horizontal Tank

Rev	By	Date	Chk'd By	Date
0	DHR	10/9/95	Pds	1/22/96

Step 10:
(10) Compare Seismic Demand to Capacity Acceleration

From Steps 8 and 9, if tank/heat exchanger is:

rigid – Use Zero Period Acceleration (ZPA) of 4% damped floor response spectrum
flexible – Use Peak Spectral Acceleration (SPA) of 4% damped floor response spectrum

The seismic loading is the 4% damped SSE spectra for the Auxiliary Building at 119' which is determined in FPC calculation S–94–0011, "Seismic Verification of Tanks – SQUG Methodology", Rev. 0, 1/19/94. From calculation S–94–0011 pages 27 and 28:

OBE FRS Peak (4% damping) =	0.353 g
OBE FRS ZPA (4% damping) =	0.050 g

Since tank is rigid, use 4% SSE ZPA (SSE ZPA = 2 times OBE ZPA),

therefore, Horizontal 4% SSE ZPA =	0.10 g
Vertical 4% SSE ZPA (2/3 Horiz.) =	0.07 g

Anchorage is Adequate if:

(1) Lamb > ZPA (for rigid tanks/heat exchangers) or
(2) Lamb > SPA (for flexible tanks/heat exchangers)

ZPA (use ZPA as explained above)	=	0.10 g
Anchorage Capacity, Lamb, from Step 7	=	0.58 g
Check if Capacity (Lamb) > Demand (ZPA) ?		OK

Step 11:
(11) Confirm Stresses in the Saddle are Acceptable

The saddle and stiffners are only about 5" deep (between the Saddle pad and top of the plinth). In addition the saddles are well braced laterally (two cross members connecting top and bottom of each saddle on each side of tank). Bending of the braced saddle is adequate by inspection.

For shear the anchorage has been determined as adequate and the amount of shear area in the stiffened saddles is much greater than the area of the anchor bolts (4 1" anchor bolts per plinth). The shear capacity of the saddles is also adequate by inspection.

CONCLUSION

The Horizontal Tanks under evaluation:

CAT–5A
CAT–5B

are acceptable in accordance with Section 7 of the FPC PSP for "Seismic Verification of Nuclear Plant Equipment".

FPC – Crystal River Unit 3
Seismic Verification of Tanks

Calculation For:
Horizontal Tank

Rev	By	Date	Chk'd By	Date
0		10/9/95	Pds	1/22/96

FLORIDA POWER CORPORATION
ST. PETERSBURG, FLORIDA
CRYSTAL RIVER PLANT
UNIT NO. 3 855,000 KW

Structural - Anchor Bolt List
TURBINE BUILD FLR. SLAB EL. 145'-0"
MATERIAL AS SHOWN ON DWG. NO. SC-405-024, 025 & 027

WORK ORDER	SIZE DRAWING	REV	FPC DRAWING NO.
4203	S-423-043	0	SC-423-043

GILBERT ASSOCIATES, INC.
ENGINEERS AND CONSULTANTS
READING, PENNA.

DRAFTING				ENGINEERING APP'L			
REV	CH	APP	DATE	REV	CH	APP	DATE

STANDARD TYPES SPECIAL TYPES

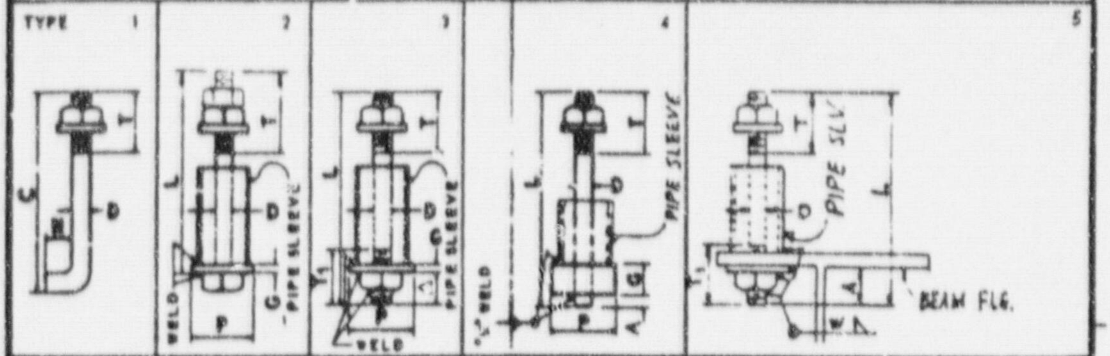

TYPE	MARK	NO. REQD	DIAM D	LENGTH L	A	B	C	H	THREADS T	THREADS T₁	NO. OF NUTS SQ	NO. OF NUTS HEX	SQ PLATE P	SQ PLATE G	WELD	WASHERS	PIPE SLEEVE DIA	PIPE SLEEVE LENGTH
4	E20	16	1"	11"	1/2"				3"			32	6"	1/2"	1/4"	16	2"	0'-4
2	E21	16	5/8"	1'-6"					2"			32	3"	3/8"	1/4"	16	1½"	1'-4⅝"
~~1~~	~~E22~~	~~4~~	~~1/2"~~	~~—~~	~~—~~	~~—~~	~~1'-9"~~	[illegible]	~~1/2"~~			~~4~~				~~8~~		
2	E23	8	1¼"	2'-6"					3"			8	6"	5/8"	5/16"	8	2½"	1'-9⅝"
5	E24	4	1¼"	3'-2"	2 3/16"				3"	3"		8	BEAM	FLG.	5/16"	8	2½"	3'-8⅝"
5	E25	6	1¼"	3'-9"	1 15/16"				3"	3"		12	BEAM	FLG.	5/16"	12	2½"	2'-10⅝"
5	E26	24	1¼"	8'-8"	2⅛"				5"	3"		48	BEAM	FLG.	5/16"	48	2½"	8'-9½"
5	E27	24	1⅜"	3'-1"	2 15/16"				4"	6"		48	BEAM	FLG.	7/16"	48	3"	1'-10⅞"
4	E28	8	1⅜"	3'-1"	1"				4"			8	7"	7/8"	7/16"	8	3"	2'-0⅝"
5	E29	4	3/4"	1'-7"	1¼"				2"	2"		8	BEAM	FLG.	1/4"	4	2"	0'-8½"
1	E30	4	3/8"				1'-1"	3"	2"									

DIMENSIONS ARE IN INCHES UNLESS OTHERWISE NOTED

NOTES:- ALL MATERIAL TO BE A.S.T.M. A-36 STEEL

Attachment "B"

Chilled Water Expansion Tank

Five Pages Total

FPC – Crystal River Unit 3
Seismic Verification of Tanks

Calculation For:
Tank suspended on 4 Legs

Rev	By	Date	Chk'd By	Date
0	DHR	10/8/95	PdS	1/22/96

Equip. ID: CHT-1
Building: CONTROL
Elevation: 181
Rm Row/Col: 302 / G

Equipment Description:
CHILLED WATER EXPANSION TANK

Also Applicable for:

Horizontal Tank Suspended on 4 Legs

Drawing: 55-144-1-0 (SD 400-3)
Anch. Drw.: SC-405-045 and SC-423-037
Vendor: Taco Inc.
Model: ASME Expansion Tank SD 400-3

Methodology

Tank CHT-1 is a small tank suspended from the ceiling on four legs with cross bracing in both directions. Each leg is attached to the reinforced concrete ceiling with 4 approx. 1/2" diameter anchor bolts. Field inspection verified that the tank is welded to the saddles which prevents longitudinal motion and (1) prevents the tank from falling and (2) prevents pipe break. The SQUG methodology given in Section 7 of the Florida Power PSP "Seismic Verification of Nuclear Plant Equipment", Rev. 1, 9/12/94 is not applicable.

The following simplified calculation uses conservative assumptions for the anchor bolt size and type, overestimates applicable seismic accelerations, and uses conservative values for uncertain dimensions to determine the adequacy of the tank anchorage.

Dimensions

Dimensions are obtained from the referenced drawing when possible and from conservative measurements obtained during walkdowns (as noted).

Tank:	Outside Diameter (in)	D	16.00	from drawing
	Overall Length (in)	L	72.00	from drawing
	Weight of the tank (galvanized) (lb)	W_t	133 lb	from drawing
	Tank Capacity (gal)	C	60	from drawing
	Weight of water (lb/gal)	W_w	8.34	
	Distance base plate to tank c.g. (in)	h	48.00	field estimate
Anchorage:	(Assume worst case = unknown 3/8" expansion anchors)			
	Diameter Anchor Bolt (in)	b_d	0.375	Assumed
	Number anchor bolt total	N_b	16.00	
	Number bolt per leg	N_{leg}	4.00	
	Bolt Embedment (approx.) (in)	L_b	3.75	10 x Diam.
	Concrete strength (psi)	f'_c	3000.00	
Base Plate:	Thickness base plate each leg (in)	t_{bp}	0.50	field estimate
	Side Dimensions (in)	l_{bp}	8.00	field estimate
	Base plate spacing (narrow) (in)	s	20.00	field estimate

FPC – Crystal River Unit 3
Seismic Verification of Tanks

Calculation For:
Tank suspended on 4 Legs

Rev	By	Date	Chk'd By	Date
0	DHR	10/8/95	PDS	1/22/96

Calculation

(1) Weight — The tank weight consists of the empty tank and the contents:

W tank = W t + W contents =
W tank = (Wt) + (C) x (W w) = 633 lb
Use W tank = 650 lb

(2) C. G. — The tank C. G. was estimated during the walkdown to be less than 4' from the anchorage base – plate.

C.G. = 48.00 in

(3) Loading — To determine the Seismic Demand should use Control Complex Elev. 181' SSE floor reponse spectra at 4% damping. The spectra for the Control Complex at 193' are obtained from Figure 19A in the FPC "Environmental and Seismic Qualification Program Manual", (E/SQPM), Rev. 8, Section 5.0, Seismic Qualification Data.

SSE Spectrum Peak (3% damping) = 1.35g   ZPA for 3% = 0.25g
SSE Spectrum Peak (5% damping) = 1.10g   ZPA for 5% = 0.25g

Tank is cross braced in both horizontal directions and is probably rigid; however, conservatively use peak floor response spectrum applies and further, conservatively use 3% SSE values as 4% SSE values:

Horizontal 4% SSE Peak = 1.35 g
Vertical 4% SSE Peak (2/3 Horiz.) = 0.90 g

(4) Overturning — Worst case will be for horizontal earthquake acting in the narrow tank leg direction (see figure). Vertical seismic force act in a downward direction assisting pullout.

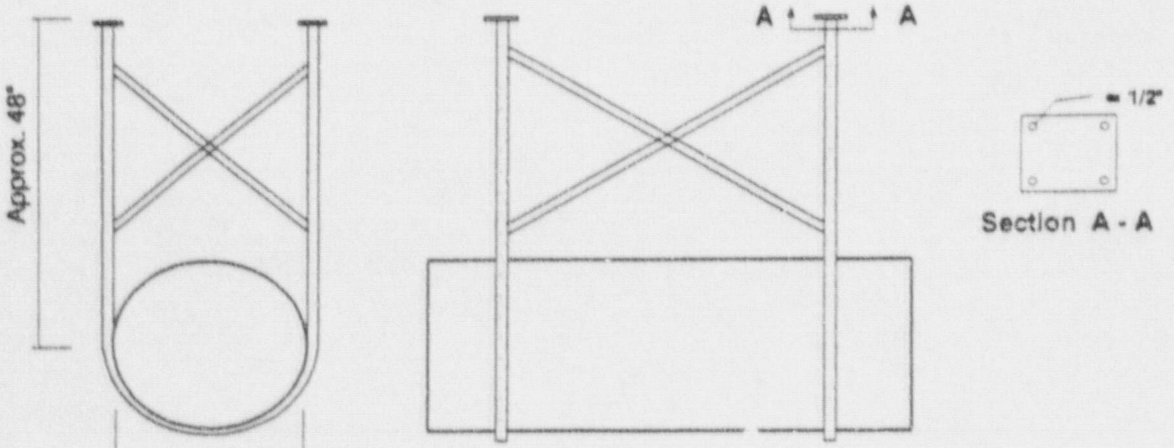

FPC – Crystal River Unit 3
Seismic Verification of Tanks

Calculation For:
Tank suspended on 4 Legs

Rev	By	Date	Chk'd By	Date
0	Dm	10/8/95	Pds	1/22/96

Overturning (Continued)

(a) Conservatively determine the pullout force per leg as the sum of the pullout per leg due to vertical seismic loads plus the two pullout loads due to horizontal seismic loads acting parallel and perpendicular to the tank axis, i.e.,

Pullout / leg = P1 + P2 + P3, where

1. Pullout due to vertical earthquake per leg:
P1 = (W) * (1.0 + SSE vert) / 4 = 309 lb

2. Pullout due to worst horiz. earthquake per leg:
P2 = (W) * (SSE hor) * (h) / (D * 2) = 1316 lb

3. Pullout due to other horiz. earthquake per leg:
P3 = (W) * (SSE hor) * (h) / (Arm * 2) = 439 lb
(estimate Arm = 48" from field measurement)

Therefore, Pullout / leg = P = P1 + P2 + P3 = 2064 lb

(b) Determine anchor bolt pullout forces, Pu:
Each tank leg has 4 anchor bolts, maximum pullout per anchor bolts:

Pu = (P) / 4 = 516 lb

(c) Determine anchor bolt shear forces, Vu:
Total shear = (W) (SSE Horiz.) = 878 lb
Vu = (Total shear) / (16 bolts) = 55 lb

(5) Anchor Bolt Allowables (Assume = unknown 3/3" expansion anchors)

Conservatively assume that the anchor bolts are 3/8" expansion anchors of unknown type to minimize allowables (bolts are probably 1/2" diameter cast-in-place bolts).

Allowables for 3/8" Expansion Anchor Bolts (From GIP Table C.2.1)

Pnom =	1.46	ksi	Vnom =	1.42	ksi
RTp =	0.60	type red. factor	RTs =	0.60	
RLp =	1.00	embedment red. factor	RLs =	1.00	
RSp =	1.00	spacing red. factor	RSs =	1.00	
REp =	1.00	edge distance red. factor	REs =	1.00	
RFp =	0.93	for fc=3000 psi concrete	RFs =	0.93	
RCp =	1.00	cracked concrete red. fact.	RCs =	1.00	

Pu' = Pnom (RTp) (RLp) (RSp) (REp) (RFp) (RCp) = 0.81 Kip
Vu' = Vnom (RTs) (RLs) (RSs) (REs) (RFs) (RCs) = 0.79 Kip

FPC – Crystal River Unit 3
Seismic Verification of Tanks

Calculation For:
Tank suspended on 4 Legs

Rev	By	Date	Chk'd By	Date
0	DHR	10/8/95	Pds	1/22/96

(6) Evaluate Anchorage

	Allowable	>	Maximum?	
Maximum anchor bolt pullout	811 lb		516 lb	OK
Maximum anchor bolt shear	789 lb		55 lb	OK

Interaction: The linear interaction formula for expansion bolts is taken from Section C.2.11 of the GIP:

$$\frac{Pu}{P\,all} + \frac{Vu}{V\,all} < 1$$

$$0.64 + 0.07 = 0.71$$ OK

CONCLUSION

This extremely conservative analysis demonstrates that the tank under evaluation would be adequately anchored even if the worst case assumption of 3/8" expansion anchors of unknown type and manufacture is imposed.

The tank under evaluation:

CHT-1

is acceptable.

Attachment "C"

Decay Heat Closed Cycle Surge Tank

Six Pages Total

FPC – Crystal River Unit 3
Seismic Verification of Tanks

Calculation For:
Vertical Tank on 4 Legs

Rev	By	Date	Chk'd By	Date
0	aHL	10/9/95	Pds	12/13/95

Equip. ID: DCT-1A
Building: AUXILIARY
Elevation: 095
Rm Row/Col: 306/S

Equipment Description:
DECAY HEAT CLOSED CYCLE SURGE TANK

Also Applicable for:
DCT-1B

Vertical Tank on 4 Wide Flange Legs
Drawing: 5-315-D2 Rev. 3 (M001859)
Anch. Drw.: SC-422-042 and SC-423-026
Vendor: Plant City Steel Co.
Model: Vertical Dished Head 5000 Gal Tank

Methodology Tank DCT-1A is not a flat bottomed vertical tank so the SQUG methodology given in Section 7 of the Florida Power PSP "Seismic Verification of Nuclear Plant Equipment", Rev. 1, 9/12/94, is not applicable. DCT-1A is supported by 4 wide flange sections (8WF31) spaced at 90% around the perimeter. Since the tank anchorage will be the critical element, this calculation will focus on the anchorage.

Dimensions Dimensions are obtained from the referenced drawings

Tank:	Outside Diameter (in)	D	90.00
	Overall Height (in)	H	195.00
	Thickness of tank shell (in)	t_s	0.250
	Thickness of tank head (top/bottom) (in)	t_h	0.375
	Weight density steel (lbf/in ^ 3)	W_{st}	0.2840
	Weight density fluid (lbf/in ^ 3)	W_{fl}	0.0361
	Height of shell portion (in)	h_s	157.00
	Height of heads (top & bottom) (in)	h_h	19.00
	Nominal Height of water (in)	h_w	159.00
Anchorage:	Cast-in-Place Bolts (see SC-423-026)		
	Diameter Anchor Bolt (in)	b_d	0.875
	Number anchor bolt total	N_b	8.00
	Number bolt per leg	N_{leg}	2.00
	Bolt Embedment (approx.) (in)	L_b	10.00
	Bolt Spacing (center to center) (in)	S_b	5.00
	Bolt Edge Distance (in)	E_b	6.50
	Concrete strength (psi)	f'_c	3000.00
Base Plate:	Thickness base plate each leg (in)	t_{bp}	1.00
	Side Dimensions (in)	l_{bp}	12.00

FPC – Crystal River Unit 3
Seismic Verification of Tanks

Calculation For:
Vertical Tank on 4 Legs

Rev	By	Date	Chk'd By	Date
0		10/9/95	Pds	12/13/95

Calculation

(1) Weight The tank weight consists of the shell portion and the top and bottom heads. The tank is conservatively assumed to be cylindrical with top and bottom circular disks:

W tank = W shell + 2 (W head) + W contents =
W shell = (pi) (D) (hs) (ts) (Wst) = 3152 lb
W head = 2 (pi) (th) [(D) (hh) + (D/2) ^ 2] (Wst) = 2499 lb
W contents = (pi) (D/2) ^ 2 (hw) (W fl) = 36516 lb
W tank = 42167 lb

(2) C. G. The tank is located 2'-6" above the anchorage. The C. G. is calculated from the anchorage base-plate.

Tank cg = $\frac{\text{(W Steel) (H/2) + (W water) (hw/2)}}{\text{(W tank)}}$ 81.91 in
C.G. = (Tank cg) + (2'-6") = 111.91 in

(3) Loading To determine the Seismic Demand should use Auxiliary Building Elev. 95' SSE floor reponse spectra at 4% damping. The spectra for the Auxiliary Building at 95' are identical to the Ground Response spectra. [Reference: "Environmental and Seismic Qualification Program Manual", (E/SQPM), Rev. 8, Section 5.0 Seismic Qualification Data, Figure 22].

OBE Spectrum Peak (2% damping) = 0.135g ZPA for 2% = 0.05g
OBE Spectrum Peak (5% damping) = 0.100g ZPA for 5% = 0.05g

Conservatively for 4% SSE use 2 times the 2% OBE;
therefore, Horizontal 4% SSE Peak = 0.27 g
Vertical 4% SSE Peak (2/3 Horiz.) = 0.18 g

Assume tank is flexible, use Spectral Peak as acceleration

(4) Overturning Worst case will be for horizontal earthquake at 45 degrees to tank legs. Therefore determine overturning for horizontal along 45 deg to legs and vertical earthquake acting upward (assisting overturning).

Let F1 and F2 each represent vertical force in two legs (see Figure); i.e., F1 is the upward force resisting overturning and f2 is the force assisting overturning:

FPC – Crystal River Unit 3
Seismic Verification of Tanks

Calculation For:
Vertical Tank on 4 Legs

Rev	By	Date	Chk'd By	Date
0	DHR	10/9/95	Pds	12/13/95

Overturning (Continued)

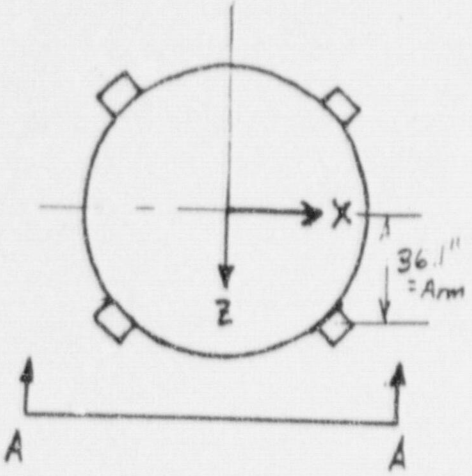

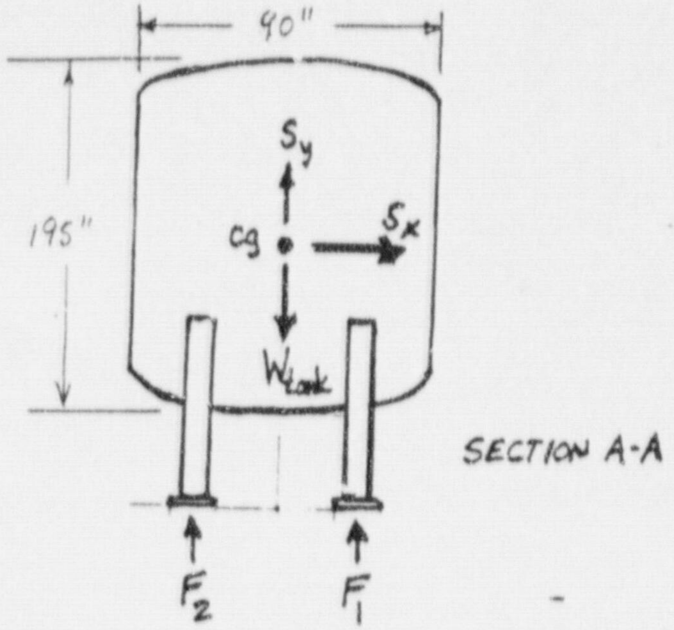

(a) Moment arm = Arm =
[(D / 2) + (l bp / 2)] / sqrt(2) = 36.06 in

(b) Sum Forces vertical:
F1 + F2 = (W tank) (1.0 – SSE vert) =
F1 + F2 = 42167 lb * (0.82) = 34577 lb

(c) Sum Moments about Z:
F1 (Arm) = F2 (Arm) + (W tank) (SSE hor) (cg) =
F1 – F2 = (W tank) (SSE hor) (cg) / (Arm) = 35331 lb

(d) Solve equations (c) and (b) for F1:
F1 + (F1 – 35331) = 34577 lb
F1 = 34954 lb
F2 = –377 lb

(e) Determine anchor bolt pullout forces:
Each force (F1 and F2) represent two of the tank legs and each leg has two 7/8" diameter anchor bolts. The maximum and minimum forces are:
Max. anchorage vertical force (F1/4) = 8738 lb
Min. anchorage vertical force (F2/4) = –94 lb
Since negative anchorage forces represent bolt pullout, only the minimum force needs to be considered for this tank. Pu = 94 lb

(f) Determine anchor bolt shear forces:
Total shear = (W tank) (SSE Horiz.) = 11385 lb
Bolt shear = (Total shear) / (8 bolts) = Vu = 1423 lb

FPC – Crystal River Unit 3
Seismic Verification of Tanks

Calculation For:
Vertical Tank on 4 Legs

Rev	By	Date	Chk'd By	Date
0	DHR	10/8/95	Pds	12/13/95

(5) Anchor Bolt Allowables (From GIP Section 4.4 and Appendix C)

Allowables for 7/8" Cast–In–Place Bolts (From SC–423–026)

Pnom =	20.44 ksi		Vnom =	10.22 ksi
RLp =	1.00	embedment red. factor	RLs =	1.00
RSp =	0.80	spacing red. factor	RSs =	1.00
REp =	0.94	edge distance red. factor	REs =	0.72
RFp =	0.93	for fc=3000 psi concrete	RFs =	0.93
RCp =	1.00	cracked concrete red. fact.	RCs =	1.00

Pu' = Pnom (RLp) (RSp) (REp) (RFp) (RCp) = 14.31 Kip
Vu' = Vnom (RLs) (RSs) (REs) (RFs) (RCs) = 6.84 Kip

(6) Evaluate Anchorage

	Allowable	>	Maximum?	
Maximum anchor bolt pullout	14308 lb		94 lb	OK
Maximum anchor bolt shear	6840 lb		1423 lb	OK

Interaction: The interaction curves for cast–in–place bolts are taken from Section C.3.7 and Figure C.3–2 of the GIP. Since the GIP anchorage criteria for cast–in–place bolts and headed studs ensure that failure does not occur in concrete, the interaction formulation for steel failure is recommended:

for $0.0 < (V/Va) < 0.3$, $(P/Pa) < 1$
for $0.3 < (V/Va) < 1.0$, $0.7 \times (P/Pa) + (V/Va) < 1$

therefore, Since $(V/Va) = 0.21$
$(P/Pa) = 0.01$ OK

CONCLUSION

The tanks under evaluation:

DCT–1A
DCT–1B

are acceptable.

FPC – Crystal River Unit 3
Seismic Verification of Tanks

Calculation For:
Vertical Tank on 4 Legs

Rev	By	Date	Chk'd By	Date
0		10/8/95	Pds	12/13/95

SC-423-026

FLORIDA POWER CORPORATION
ST. PETERSBURG, FLORIDA
CRYSTAL RIVER PLANT
UNIT NO. 3 855,000 KW

Structural – Anchor Bolt List

AUXILIARY BLDG. - 42 & 53 EQUIPMENT FOUND.

MATERIAL AS SHOWN ON DWG. NO SC-422-341 / SC-422-042

WORK ORDER	SIZE	DRAWING	REV	FPC DRAWING NO.
4203-00	S	423-026	0	SC-423-026

GILBERT ASSOCIATES, INC.
ENGINEERS AND CONSULTANTS
READING, PENNA.

DRAFTING				ENGINEERING APP'L			
REV	CH	APP	DATE	REV	CH	APP	DATE
JFE	REL	W.W.					

STANDARD TYPES | SPECIAL TYPES

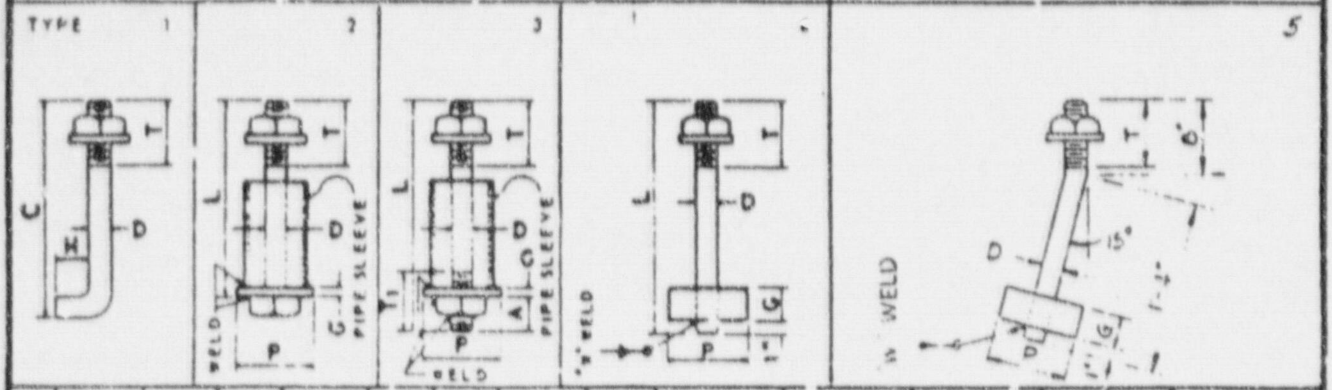

TYPE	MARK	NO REQD	DIAM D	LENGTH L	A	B	C	H	THREADS T	THREADS T₁	NO OF NUTS SQ	NO OF NUTS HEX	SQ PLATE P	SQ PLATE G	"a" WELD	WASHERS	PIPE SLEEVE DIA	PIPE SLEEVE LENGTH
4	01	20	1¼"	2'-9"					3			20	6"	5/8"	5/16"	20	2½"	1'-6⅜"
4	02	32	7/8"	1'-5"					2½"			32	4"	1/2"	1/4"	32	2"	1'-0"
4	03	8	1¼"	2'-0"	—	----	--	---	3"			8	6"	5/8"	5/16"	8	2½"	1'-6⅜"
4	04	68	1"	1'-6"					2½"			68	5"	1/2"	1/4"	68	2"	1'-3½"
4	05	6	½"	1'-7"					1½"			8	3"	3/8"	1/4"	8	1½"	11⅝"
4	06	12	¾"	1'-9"					2"			12	4"	3/8"	1/4"	12	2"	1'-0⅝"
4	07	68	¾"	1'-5"					2"			68	4"	3/8"	1/4"	68	2"	1'-0⅝"
4	08	24	1⅛"	2'-0"					2¼"			24	5"	1/2"	1/4"	24	2½"	1'-6½"
5	09	80	1"	2'-0"					2½"			80	5"	1/2"	1/4"	80	–	–
4	010	32	3/8"	1'-2"					1¼"			32	3"	3/8"	3/16"	32	1"	0'-9"
4	011	12	½"	1'-5"					1½"			12	3"	3/8"	1/4"	12	1½"	1'-0⅝"

Attachment "D"

Decay Heat Removal Heat Exchangers

Six Pages Total

FPC – Crystal River Unit 3
Seismic Verification of Tanks

Calculation For:
Horizontal Heat Exchanger

Rev	By	Date	Chk'd By	Date
0		10/30/95		1/22/96

Equip. ID:	DHHE–1A
Building:	AUXILIARY
Elevation:	075
Rm Row/Col:	304/P–Q

Equipment Description:
DECAY HEAT REMOVAL HEAT EXCHANGER A

Also Applicable for:
DHHE–1B

Heat Exchanger
Drawing: 68–G–198–2–1 Rev 5
Anch. Drw.: SC–422–003, SC–422–004 and SC–423–021
Vendor: Yuba Heat Transfer Co.
Model: BEU–37–237

Step 1:
(1) Input Data See Figure 7–13 of Florida Power Plant Specific Procedure for "Seismic Verification of Nuclear Plant Equipment", Rev. 1, 9/12/94

				Appliicable?
Tank:	Diameter (ft)	D	3.12	OK
	Length (ft)	L	28.83	OK
	Thickness of tank shell (in)	t	0.24	
	Weight of tank plus fluid (lbf)	W_{tf}	30800.00	
	Weight density (lbf/ft^3)	G_{am}	139.49	OK
	Height of c.g. above anchorage (ft)	H_{cg}	2.32	OK
Saddle:	Spacing (ft)	S	14.67	OK
	Height of saddle plate from bottom of the tank to the base plate (in)	h	9.14	
	Shear modulus (psi)	G	1.12E	
	Elastic modulus (psi)	E	2.90E+	
	Number of Saddles	N	2.0	OK
Base Plate:	Thickness base plate under saddle (in)	t_b	0.63	
	Min. yield strength (psi)	f_y	30000.00	
	Thickness of leg of weld	t_w	0.25	
	Eccentricity from anchor bolt CL to the vertical saddle plate	e_s	3.00	
Bolts:	Number of locations, each saddle	N_L	2.00	OK
	Number of anchor bolts per location	N_B	1.00	OK
	Diameter of anchor bolt (in)	d	1.00	
	Distance between extreme anchor bolts in base plate of saddle (ft)	D'	2.25	OK

Loading: SSE Floor reponse spectra at 4% damping

FPC – Crystal River Unit 3
Seismic Verification of Tanks

Calculation For:
Horizontal Heat Exchanger

Rev	By	Date	Chk'd By	Date
0	DHL	10/30/95	Pds	1/22/96

Step 2:
(2) Anchor Bolt Allowables (From GIP Section 4.4 and Appendix C Table C.3-1)

Allowables for 1.0" Cast-In-Place Bolts (Mark D49 type 2 from SC-423-021)
(also from SC-422-041)

Actual Embedment = 19.00 Allowable= 10.00 in
Actual Spacing = 27.00 Allowable= 12.63 in
Actual Edge Distance = 9.00 Allowable= 8.75 in

Pnom =	26.69	ksi	Vnom =	13.35	ksi
RLp =	1.00	embedment red. factor	RLs =	1.00	
RSp =	1.00	spacing red. factor	RSs =	1.00	
REp =	1.00	edge distance red. factor	REs =	1.00	
RFp =	0.93	for fc=3000 psi concrete	RFs =	0.93	
RCp =	1.00	cracked concrete red. fact.	RCs =	1.00	

Pu' = Pnom (RLp)(RSp)(REp)(RFp)(RCp) = 24.71 Kip
Vu' = Vnom (RLs)(RSs)(REs)(RFs)(RCs) = 12.36 Kip

Step 3:
(3) Base Plate Bending Strength Reduction Factor (RB)

RB = Bending strength reduction factor = $\frac{(fy)\ (tb \wedge 2)}{(3)\ (Pu')}$ 0.16

Step 4:
(4) Base Plate Weld Strength Reduction Factor (RW)

RB = Weld strength red. fact. = $\frac{(tw)\ (es)\ (30600)\ (2.83)}{Pu'}$ 2.63

Step 5:
(5) Anchor Tension and Shear Allowable

Pu = (Pu') (smaller of RB, RW) = 3.91 Kip
Vu = Shear allowable anchor load = (Vu') = 12.36 Kip

Step 6:
Calculated Ratios

Alp = (Pu') / (Vu') = 0.32
Wb = (Wtf) / [(NS) * (NL) * (NB)] = 7700.00 lbs
Vu / Wb = 1.61
Hcg / D' = 1.03
Hcg / S = 0.16
F1 = SQRT [(NS ^ 2) + 1] = 2.24
F2 = SQRT [(NL ^ 2) * (Hcg / D') ^ 2 + (.667 ^ 2)
+ ((Hcg/S) ^ 2) * ((NS ^ 2) / (NS-1) ^ 2)] = 2.19

FPC – Crystal River Unit 3
Seismic Verification of Tanks

Calculation For:
Horizontal Heat Exchanger

Rev	By	Date	Chk'd By	Date
0	DHL	10/30/95	Fds	1/22/96

Step 7:
(7) Determine Acceleration Capacity of Tank Anchorage

$$\text{Llow} = [\,(\text{Vu}) / (\text{Wb})\,] * [\,(1) / (\text{F1})\,] = 0.72\ \text{g}$$

$$\text{Lup} = \frac{[\,(\text{Vu}) / (\text{Wb}) + (0.7) / (\text{Alp})\,]}{[\,(0.7) / (\text{Alp})\,] * (\text{F2}) + (\text{F1})} = 0.54\ \text{g}$$

Lamb = Smaller of Llow or Lup = 0.54 g

Step 8:
(8) Is Tank/Heat Exchanger Rigid or Flexible in Transverse or Vertical?

Sc = From Figure 7–15 for Heat Exch. = 12.00 ft
(Use D = 3.123 ft)
(Use t = 0.237 in)

Is Tank / Heat Exchanger Rigid or Flexible ?
Rigid if Sc >or= S , Flexible if Sc < S
From Step 1, S = 14.667 ft

Tank / Heat Exchanger in Transverse or Vertical = **Flexible**

Step 9:
(9) Is Tank/Heat Exchanger Rigid or Flexible in Longitudinal Direction?

$$\text{Flong.} = [\,(1) / (2\text{PI})\,] * \text{SQRT}[\,(\text{ks})*(\text{g}) / (\text{Wtf})\,]$$

$$\text{where ks} = \frac{1}{\dfrac{(h \,\hat{}\, 3)}{(3 * E * \text{Iyy})} + \dfrac{(h)}{(\text{As} * G)}}$$

(Use Iyy = 14.15 in^4)
(Use As = 30.25 in^2)

therefore, ks = 1.55E+0
Flong. = 22.1603

Tank / Heat Exchanger in Longitudinal Direction = **Flexible**

Step 10:
(10) Compare Seismic Demand to Capacity Acceleration

From Steps 8 and 9, if tank/heat exchanger is:
rigid – Use Zero Period Acceleration (ZPA) of 4% damped floor response spectrum
flexible – Use Peak Spectral Acceleration (SPA) of 4% damped floor response spectrum

FPC – Crystal River Unit 3
Seismic Verification of Tanks

Calculation For:
Horizontal Heat Exchanger

Rev	By	Date	Chk'd By	Date
0	DHR	10/30/95	Pds	1/22/96

Step 10 (Continued):

The seismic loading is the 4% damped SSE spectra for the Auxiliary Building at 75' which are identical to the ground response spectra. [Reference: "Environmental and Seismic Qualification Program Manual", (E/SQPM), Rev. 8, Section 5.0 Seismic Qualification Data, Figure 22]. From E/SQPM Section 5.0;

OBE Spectrum Peak (2% damping) = 0.135g ZPA for 2% = 0.05g
OBE Spectrum Peak (5% damping) = 0.100g ZPA for 5% = 0.05g

Conservatively, for 4% SSE take 2 times 2% OBE Peak =
therefore, Horizontal 4% SSE Peak = 0.27 g
Vertical 4% SSE Peak (2/3 Horiz.) = 0.18 g

Anchorage is Adequate if:
(1) Lamb > ZPA (for rigid tanks/heat exchangers) or
(2) Lamb > SPA (for flexible tanks/heat exchangers)

SPA (use peak as specified above) = 0.27 g
Anchorage Capacity, Lamb, from Step 7 = 0.54 g

Check if Capacity (Lamb) > Demand (SPA) ? OK

Step 11:
(11) Confirm Stresses in the Saddle are Acceptable

The saddle and stiffners are only about 6" deep (between the Saddie pad and top of the plinth). Bending of the stiffened saddle is adequate by inspection.

For shear the anchorage has been determined as adequate and the amount of shear area in the stiffened saddles is much greater than the area of the anchor bolts (2 1" anchor bolts per plinth) and is therefore also adequate.

CONCLUSION

The Heat Exchangers under evaluation:

DHHE–1A
DHHE–1B

are acceptable in accordance with Section 7 of the FPC PSP for "Seismic Verification of Nuclear Plant Equipment".

FPC – Crystal River Unit 3
Seismic Verification of Tanks

Calculation For:
Horizontal Heat Exchanger

Rev	By	Date	Chk'd By	Date
0	DHR	10/30/95	Pds	1/22/96

FLORIDA POWER CORPORATION
ST. PETERSBURG, FLORIDA
CRYSTAL RIVER PLANT
UNIT NO. 3 855,000 KW

Structural - Anchor Bolt List

DECAY HEAT PIT EQUIPMENT FND'S.

MATERIAL AS SHOWN ON DWG. NO SC-422-003&004

WORK ORDER	G/AI DRAWING	REV	FPC DRAWING NO.
4203	S 423-021	0	SC 423-021

GILBERT ASSOCIATES, INC.
ENGINEERS AND CONSULTANTS
READING, PENNA.

DRAFTING				ENGINEERING APP'L			
RJM	W.C.	W.W.					
REV	CH	APP	DATE	REV	CH	APP	DATE

STANDARD TYPES

SPECIAL TYPES

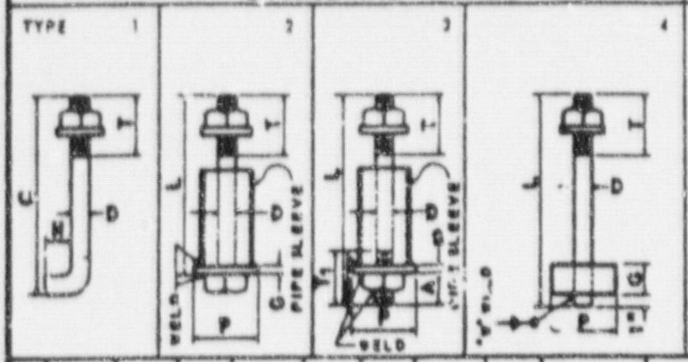

TYPE	MARK	NO. REQD.	DIAM	LENGTH					THREADS		NO. OF NUTS		SQ PLATE		WELD	WASHERS	PIPE SLEEVE	
			D	L	A	B	C	H	T	T_1	SQ	HEX	P	G			DIA	LENGTH
2	D48	40	7/8"	1'-4"					2½"			40	4"	½"	¼"	40	2"	1'-0"
2	D48	8	1"	1'-10"					2½"			8	5"	½"	¼"	8	2"	1'-6"

DIMENSIONS ARE IN INCHES UNLESS OTHERWISE NOTED

NOTES:- ALL BOLT MATERIAL TO BE A.S.T.M. A36

Florida Power
CORPORATION

DESIGN ANALYSIS/CALCULATION
Crystal River Unit 3

Page 1 of 6

DOCUMENT IDENTIFICATION NO	REVISION
S96-0013	0

Attachment "E"

Emergency Diesel Generator Lube Oil Coolers

Six Pages Total

FPC – Crystal River Unit 3
Seismic Verification of Tanks

Calculation For: DLHE–1A

Horizontal Heat Exchanger

Rev	By	Date	Chk'd By	Date
0		10/30/95	Pds	12/13/95

Equip. ID: DI HE–1A

Building: DIESEL

Elevation: 119

Rm Row/Col: 301 / Q

Equipment Description:

EMERGENCY DIESEL GENERATOR
LUBE OIL COOLER 1A

Also Applicable for:

DLHE–1B, DLHE–2A and DLHE–2B

Horizontal Heat Exchanger

Drawing: 5–047–19–142–061
Anch. Drw.: SC–421–176
Vendor: Colt Industries
Model: 19142 "CPK" Stacking

Methodology:

The DLHE heat exchangers are stacked one on top of the other. In the following calculation it is assumed that the length of the "saddle" member extends from the bottom of the upper heat exchanger to the top of the base plate at the foundation. The weight is also increased by the ratio of the moments about the base to adjust for the presence of the bottom heat exchanger; that is, W' = [(h1 + h2) / h2] x W, where h1 is the height to the cg of the lower heat exchanger, h2 is the height of the cg of the upper heat exchanger, and W is the weight of one heat exchanger. This is very conservative since the heat exchangers are actually "connected" by four sections along the length (2 pipe sections and two stiffened saddles about 10" high) and will be much stiffer than the assumed configuration.

The anchorage configuration beneath the two saddle base plates are different (see drawing SC–421–176 for details). One configuration uses four 1" diameter by 1' long, Phillips Wedge anchors WS–100120 with 7" minimum embedment while the other uses four 3/4" by 1'–3.5" long Maxi–bolts MB–750 with 9.25" minimum embedment. This calculation presents the Phillips configuration since the saddle stiffness is lower and the anchorage capacity reduction factors are greater; however, both configurations are OK.

Step 1:

(1) Input Data See Figure 7–13 of Florida Power Plant Specific Procedure for "Seismic Verification of Nuclear Plant Equipment", Rev. 1, 9/12/94
(Notes are at the bottom of page 4.)

				Applicable?
Tank:	Diameter (ft)	D	1.67	OK
	Length (ft)	L	14.78	OK
	Thickness of tank shell (in)	t	0.38	3/8 in
	Weight of tank plus fluid (lbf)	W_{tf}	8000.00	See Note 1
	Weight density (lbf/ft ^ 3)	G_{am}	186.84	See Note 1
	Height of c.g. above anchorage (ft)	H_{cg}	3.58	
Saddle:	Spacing (ft)	S	7.21	OK
	Height of saddle plate from bottom of the tank to the base plate (in)	h	33.00	
	Shear modulus (psi)	G	1.12E+07	
	Elastic modulus (psi)	E	2.90E+07	
	Number of Saddles	N_s	2.00	OK

FPC – Crystal River Unit 3
Seismic Verification of Tanks

Calculation For: DLHE–1A
Horizontal Heat Exchanger

Rev	By	Date	Chk'd By	Date
0	Dhl	10/30/95	Pds	12/13/95

Base Plate:	Thickness base plate under saddle (in)	t_b	0.75	
	Min. yield strength (psi)	f_y	30000.00	
	Thickness of leg of weld	t_w	0.38	
	Eccentricity from anchor bolt CL to the vertical saddle plate	e_s	3.00	
Bolts:	Number of locations, each saddle	N_L	2.00	OK
	Number of anchor bolts per location	N_B	2.00	OK
	Diameter of anchor bolt (in)	d	1.00	
	Distance between extreme anchor bolts in base plate of saddle (ft)	D'	1.42	OK

Loading: SSE Floor reponse spectra at 4% damping

Step 2:
(2) Anchor Bolt Allowables (From GIP Section 4.4 and Appendix C Table C.2–1)

Allowables for 1.0" Phillips Wedge WS–100120 Expansion Anchors (see SC–421–176)

Actual Embedment =	7.00	Min. Allow=	4.50	in
Actual Spacing =	9.00	Min. Allow=	10.00	in
Actual Edge Distance =	12.00	Min. Allow=	10.00	in

Pnom =	6.95	ksi	Vnom =	9.53	ksi
RTp =	1.00	manuf. type red. factor	RTs =	1.00	
RLp =	1.00	embedment red. factor	RLs =	1.00	
RSp =	0.90	spacing red. factor	RSs =	1.00	
REp =	1.00	edge distance red. factor	REs =	1.00	
RFp =	0.87	for fc=3000 psi concrete	RFs =	0.95	
RCp =	1.00	cracked concrete red. fact.	RCs =	1.00	
RRp =	1.00	essential relays red. factor	RRs =	1.00	

Pu' = Pnom (RTp)(RLp)(RSp)(REp)(RFp)(RCp)(RRp) = 5.42 Kip
Vu' = Vnom (RTs)(RLs)(RSs)(REs)(RFs)(RCs)(RRs) = 9.05 Kip

Step 3:
(3) Base Plate Bending Strength Reduction Factor (RB)

RB = Bending strength reduction factor = $\frac{(fy)\ (tb \wedge 2)}{(3)\ (Pu')}$ 1.04

Step 4:
(4) Base Plate Weld Strength Reduction Factor (RW)

RB = Weld strength red. fact. = $\frac{(tw)\ (es)\ (30600)\ (2.83)}{Pu'}$ 17.97

FPC – Crystal River Unit 3
Seismic Verification of Tanks

Calculation For: DLHE–1A
Horizontal Heat Exchanger

Rev	By	Date	Chk'd By	Date
0	DHL	10/30/95	Pds	12/13/95

Step 5:

(5) Anchor Tension and Shear Allowable

Pu = (Pu') (smaller of RB, RW) = 5.63 Kip
Vu = Shear allowable anchor load = (Vu') = 9.05 Kip

Step 6:

(6) Calculated Ratios

Alp = (Pu') / (Vu') = 0.62
Wb = (Wtf) / [(NS) * (NL) * (NB)] = 1000.00 lbs
Vu / Wb = 9.05
Hcg / D' = 2.53
Hcg / S = 0.50
F1 = SQRT [(NS ^ 2) + 1] = 2.24
F2 = SQRT [(NL ^ 2) * (Hcg / D') ^ 2 + (.667 ^ 2)
+ ((Hcg/S) ^ 2) * ((NS ^ 2) / (NS – 1) ^ 2)] = 5.20

Step 7:

(7) Determine Acceleration Capacity of Tank Anchorage

Llow = [(Vu) / (Wb)] * [(1) /(F1)] = 4.05 g

$$\text{Lup} = \frac{[\,(\text{Vu})/(\text{Wb}) + (0.7)/(\text{Alp})\,]}{[\,(0.7)/(\text{Alp})\,] * (\text{F2}) + (\text{F1})} = 1.26\ \text{g}$$

Lamb = Smaller of Llow or Lup = 1.26 g

Step 8:

(8) Is Tank/Heat Exchanger Rigid or Flexible in Transverse or Vertical?

Sc = From Figure 7 – 15 for Heat Exch. = 11.00 ft
(Use D = 1.667 ft)
(Use t = 0.375 in)

Is Tank / Heat Exchanger Rigid or Flexible ?
Rigid if Sc >or= S , Flexible if Sc < S
From Step 1, S = 7.208 ft

Tank / Heat Exchanger in Transverse or Vertical = **Rigid**

Step 9:

(9) Is Tank/Heat Exchanger Rigid or Flexible in Longitudinal Direction?

Flong. = [(1) / (2PI)] * SQRT[(ks)*(g) / (Wtf)]

$$\text{where ks} = \frac{1}{\dfrac{(h^3)}{(3 * E * Iyy)} + \dfrac{(h)}{(As * G)}}$$

(Use Iyy = 243.24 in ^ 4)
(Use As = 20.50 in ^ 2)

therefore, ks = 5.43E+05
Flong. = 25.7684

Tank / Heat Exchanger in Longitudinal Direction = **Flexible**

FPC – Crystal River Unit 3
Seismic Verification of Tanks

Calculation For: DLHE–1A
Horizontal Heat Exchanger

Rev	By	Date	Chk'd By	Date
0		10/30/95	Pds	12/13/95

Step 10:
(10) Compare Seismic Demand to Capacity Acceleration

From Steps 8 and 9, if tank/heat exchanger is:

rigid – Use Zero Period Acceleration (ZPA) of 4% damped floor response spectrum
flexible – Use Peak Spectral Acceleration (SPA) of 4% damped floor response spectrum

The seismic loading is the 4% damped SSE spectra for the Diesel Generator Building at 119' elevation. According to sketch A on page 5--20 of the "Environmental and Seismic Qualification Program Manual", (E/SQPM), Rev. 0, Section 5.0 Seismic Qualification Data, this elevation is represented by Figure 22. From E/SQPM Section 5.0 Figure 22;

OBE Spectrum Peak (2% damping) = 0.135g ZPA for 2% = 0.05g
OBE Spectrum Peak (5% damping) = 0.100g ZPA for 5% = 0.05g

Conservatively, for 4% SSE take 2 times 2% OBE Peak =
therefore, Horizontal 4% SSE Peak = 0.27 g
Vertical 4% SSE Peak (2/3 Horiz.) = 0.18 g

Anchorage is Adequate if:
(1) Lamb > ZPA (for rigid tanks/heat exchangers) or
(2) Lamb > SPA (for flexible tanks/heat exchangers)

SPA (use peak as specified above) = 0.27 g
Anchorage Capacity, Lamb, from Step 7 = 1.26 g
Check if Capacity (Lamb) > Demand (SPA) ? OK

Step 11:
(11) Confirm Stresses in the Saddle are Acceptable

The saddle and stiffners are only about 3.5" deep (between the Saddle pad and top of the plinth). Bending of the stiffened saddle is adequate by inspection.

For shear the anchorage has been determined as adequate and the amount of shear area in the stiffened saddles is much greater than the area of the anchor bolts (4 1" anchor bolts per plinth) and is therefore also adequate.

CONCLUSION

The Heat Exchangers under evaluation:

DLHE–1A DLHE–2A
DLHE–1B DLHE–2B

are acceptable in accordance with Section 7 of the FPC PSP for "Seismic Verification of Nuclear Plant Equipment".

NOTES
(1) **As noted under "Methodology" the subject heat exchangers are stacked one on top of the other. The total "wet" weight from the vendor drawing is 12050 lbs, and the "equivalent" weight was calculated using 1/2 this weight as the weight of each heat exchanger [W'= W * (h1 + h2) / h2]. The "eqivalent" weight density falls outside the applicable range in Table 7–6 of the PSP (see step 1 reference), but the weight density for a single heat exchanger meets these requirements.**

FPC – Crystal River Unit 3
Seismic Verification of Tanks

Calculation For: DLHE–1A
Horizontal Heat Exchanger

Rev	By	Date	Chk'd By	Date
0	DHR	10/30/95	Pds	12/13/95

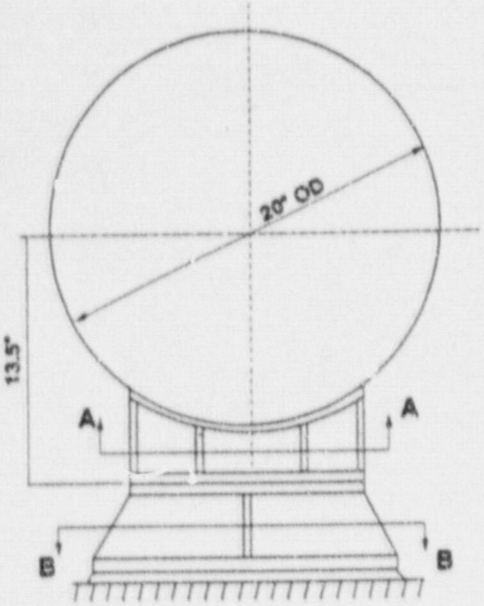

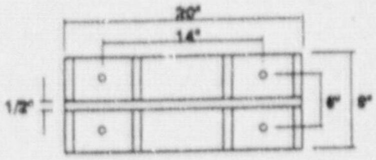

Section A-A

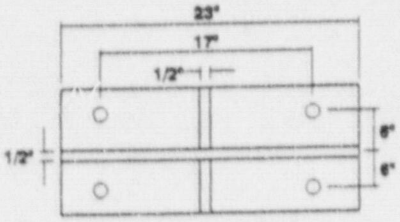

Section B-B

Attachment "F"

Emergency Diesel Generator Air Receivers

Six Pages Total

FPC – Crystal River Unit 3
Seismic Verification of Tanks

Calculation For:
Vertical Tank on Skirt

Rev	By	Date	Chk'd By	Date
0	DHL	10/30/95	Pds	12/13/95

Equip. ID:	EGT−1A
Building:	DIESEL
Elevation:	119
Rm Row/Col:	301 / N

Equipment Description:
EMERGENCY DIESEL GENERATOR A
AIR RECEIVER 1A

Also Applicable for:
EGT−1B, EGT−2A and EGT−2B

Vertical Tank (Air Receiver) on Skirt

Drawing:	PT−8027−X (4203−86−034−0)
Anch. Drw.:	SC−421−171, SC−421−172, SC−423−044
Vendor:	Morrison Brothers Co.
Model:	30 x 103 Air Receiver

Methodology — EGT−1A is a vertically oriented air receiver for which the SQUG methodology given in Section 7 of the Florida Power PSP "Seismic Verification of Nuclear Plant Equipment", Rev. 1, 9/12/94, is not applicable. EGT−1A is welded to a 15−1/2" high cylindrical skirt that is anchored to a reinforced concrete plinth by four 3/4"diameter cast−in−place bolts spaced at 90 degrees around the perimeter. Since the tank anchorage is the critical element, this calculation will focus on the anchorage.

Dimensions — Dimensions are obtained from the referenced drawings

Tank:	Outside Diameter (in)	D	30.00	
	Overall Height (in)	H	103.00	
	Thickness of tank shell (in)	t_s	0.437	
	Thickness of tank head (top/bottom) (in)	t_h	0.375	
	Weight density steel (lbf/in ^ 3)	W_{st}	0.2840	
	Weight density contents (lbf/in ^ 3)	W_{fl}	0.0001	air
	Height of shell portion (in)	h_s	85.00	
	Height of heads (top & bottom) (in)	h_h	9.00	
	Nominal Height of contents (in)	h_w	0.00	not applicable
Anchorage:	Cast−in−Place Bolts, type B−13 (see SC−423−044)			
	Diameter Anchor Bolt (in)	b_d	0.75	
	Number anchor bolt total	N_b	4.00	
	Number bolt per leg	N_{leg}	1.00	
	Bolt Embedment (in.) (type B−13 has an embedment > 16")	L_b	16.00	minimum from SC−423−044
	Bolt Spacing (center to center) (in)	S_b	21.00	
	Bolt Edge Distance (in)	E_b	10.00	minimum
	Concrete strength (psi)	f'_c	3000.00	
Base Plate:	Thickness angle (4 welded to skirt) (in)	t_{bp}	0.25	Estimated
	Angle Dimensions (square) (in)	l_{bp}	3.00	Estimated

FPC – Crystal River Unit 3
Seismic Verification of Tanks

Calculation For:
Vertical Tank on Skirt

Rev	By	Date	Chk'd By	Date
0	DM	10/30/95	Pds	12/13/95

Calculation

(1) Weight The tank weight consists of the shell portion and the top and bottom heads. The tank is conservatively assumed to be cylindrical with top and bottom circular disks:

W tank = W shell + 2 (W head) + W contents =
W shell = (pi) (D) (hs) (ts) (Wst) = 994 lb
W head = 2 (pi) (th) [(D) (hh) + (D/2) ^ 2] (Wst) = 331 lb
W contents = (pi) (D/2) ^ 2 (hw) (W fl) = 0 lb
W skirt (stand) (from drawing) = 182 lb
W tank = 1507 lb

(2) C. G. The bottom of the tank is 6.0 in above the anchorage. The C.G. is calculated from the anchorage base-plate as:

$$\text{Tank cg} = \frac{(\text{W Steel})\ (\text{H}/2)\ +\ (\text{W contents})(\text{hw}/2)}{(\text{W tank})} \qquad 51.50 \text{ in}$$

C.G. = (Tank cg) + (dist. to bottom) = 57.50 in

(3) Loading To determine the Seismic Demand use Diesel Generator Building spectra for elevation 119' (SSE 4% damping). The spectra for the Diesel Generator Building at 119' are identical to the Ground Response spectra. [Reference: "Environmental and Seismic Qualification Program Manual", (E/SQPM), Rev. 8, Section 5.0 Seismic Qualification Data, Figure 22].

OBE Spectral Peak (2% damping) = 0.135g ZPA for 2% = 0.05g
OBE Spectral Peak (5% damping) = 0.100g ZPA for 5% = 0.05g

Conservatively use 2*(2% OBE Peak) as 4% SSE Peak =

therefore, Horizontal 4% SSE Peak = 0.27 g
Vertical 4% SSE Peak (2/3 Horiz.) = 0.18 g

(4) Overturning Worst case will be for horizontal earthquake at 45 degrees to tank legs. Therefore determine overturning for horizontal along 45 deg to legs and vertical earthquake acting upward (assisting overturning).

Let F1 and F2 each represent vertical force in two legs (see Figure on next page); i.e., F1 is the upward force resisting overturning and F2 is the force assisting overturning:

FPC – Crystal River Unit 3
Seismic Verification of Tanks

Calculation For:
Vertical Tank on Skirt

Rev	By	Date	Chk'd By	Date
0	DM	10/30/95	Pds	12/13/95

Overturning (Continued)

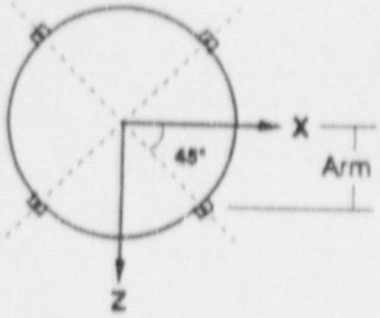

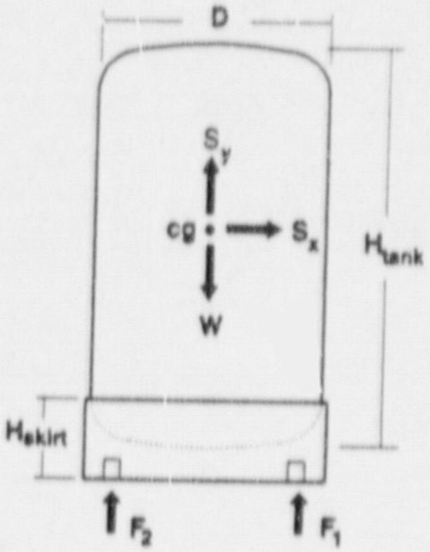

(a) Moment arm = Arm =
[(D / 2) + (l bp / 2)] / sqrt(2) = 11.67 in

(b) Sum Forces vertical:
F1 + F2 = (W tank) (1.0 – SSE vert) =
F1 + F2 = 1507 * (1 – SSEv) = 1236 lb

(c) Sum Moments about Z:
F1 (Arm) = F2 (Arm) + (W tank) (SSE hor) (cg) =
F1 – F2 = (W tank) (SSE hor) (cg) / (Arm) = 2006 lb

(d) Solve equations (c) and (b) for F1:
F1 + (F1 – 2006) = 1236 lb
F1 = 1621 lb
F2 = –385 lb

(e) Determine anchor bolt pullout forces:
Each force (F1 and F2) represent two of the tank legs and each leg has one 3/4" diameter anchor bolts. The maximum and minimum forces are:
Max. anchorage vertical force (F1/2) = 811 lb
Min. anchorage vertical force (F2/2) = –192 lb

Since negative anchorage forces represent bolt pullout, only the minimum force needs to be considered for this tank. Pu = 192 lb

(f) Determine anchor bolt shear forces:
Total shear = (W tank) (SSE Horiz.) = 407 lb
Bolt shear = (Total shear) / (4 bolts) = Vu = 102 lb

Calc S96-0013 rev. 0

FPC – Crystal River Unit 3
Seismic Verification of Tanks

Calculation For:
Vertical Tank on 4 Legs

Rev	By	Date	Chk'd By	Date
0	am	10/31/95	Pds	12/13/95

Overturning (Continued)

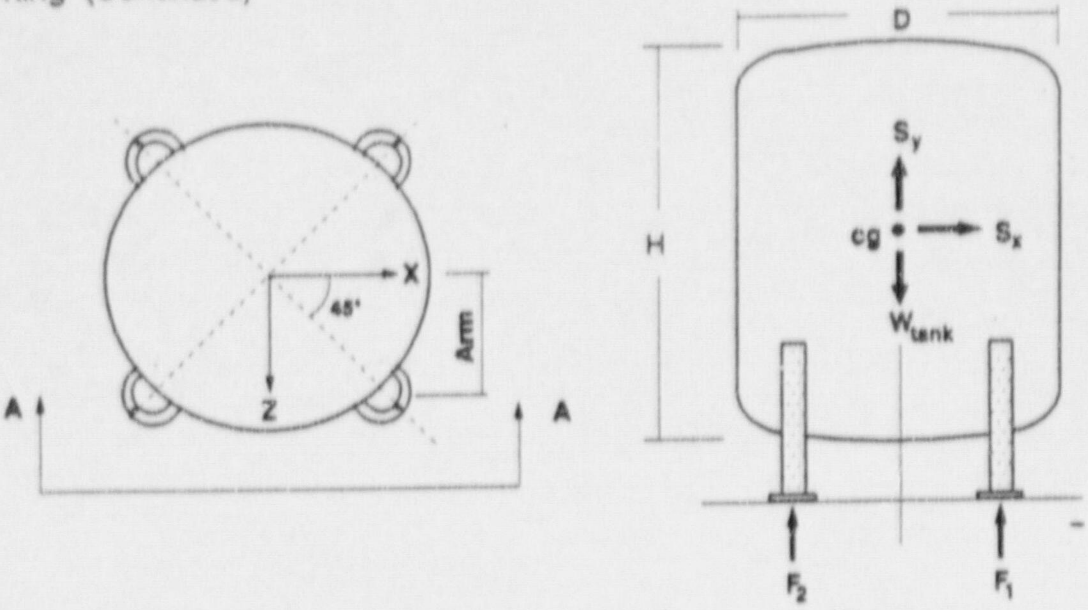

Section A - A

(a) Moment arm = Arm =
[(D / 2) + (l bp / 2)] / sqrt(2) = 15.29 in

(b) Sum Forces vertical:
F1 + F2 = (W tank) (1.0 – SSE vert) =
F1 + F2 = 3540 * (1 – SSEv) = 1874 lb

(c) Sum Moments about Z:
F1 (Arm) = F2 (Arm) + (W tank) (SSE hor) (cg) =
F1 – F2 = (W tank) (SSE hor) (cg) / (Arm) = 10647 lb

(d) Solve equations (c) and (b) for F1:
F1 + (F1 – 10647) = 1874 lb
F1 = 6261 lb
F2 = –4387 lb

(e) Determine anchor bolt pullout forces:
Each force (F1 and F2) represent two of the tank legs and each leg has two 1" diameter anchor bolts. The maximum and minimum forces are:
Max. anchorage vertical force (F1/4) = 1565 lb
Min. anchorage vertical force (F2/4) = –1097 lb

Since negative anchorage forces represent bolt pullout, only the minimum force needs to be considered for this tank. Pu = 1097 lb

(f) Determine anchor bolt shear forces:
Total shear = (W tank) (SSE Horiz.) = 2499 lb
Bolt shear = (Total shear) / (8 bolts) = Vu = 312 lb

Calc S96-0013 rev. 0

FPC – Crystal River Unit 3
Seismic Verification of Tanks

Calculation For:
Vertical Tank on 4 Legs

Rev	By	Date	Chk'd By	Date
0	DMR	10/3/95	Pds	12/13/95

(5) Anchor Bolt Allowables (From GIP Section 4.4 and Appendix C)

Allowables for 1" Cast-In-Place Bolts (Type D-53 from SC-423-027)

Pnom =	26.69 ksi		Vnom =	13.35 ksi
RLp =	1.00	embedment red. factor	RLs =	1.00
RSp =	0.79	spacing red. factor	RSs =	1.00
REp =	0.88	edge distance red. factor	REs =	0.47
RFp =	0.93	for fc=3000 psi concrete	RFs =	0.93
RCp =	1.00	cracked concrete red. fact.	RCs =	1.00

Pu' = Pnom (RLp) (RSp) (REp) (RFp) (RCp) = 17.17 Kip

Vu' = Vnom (RLs) (RSs) (REs) (RFs) (RCs) = 5.83 Kip

(6) Evaluate Anchorage

	Allowable	>	Maximum?	
Maximum anchor bolt pullout	17172 lb		1097 lb	OK
Maximum anchor bolt shear	5829 lb		312 lb	OK

Interaction: The interaction curves for cast-in-place bolts are taken from Section C.3.7 and Figure C.3-2 of the GIP. Since the GIP anchorage criteria for cast-in-place bolts and headed studs ensure that failure does not occur in concrete, the interaction formulation for steel failure is recommended:

for $0.0 < (V/Va) < 0.3$, $(P/Pa) < 1$

for $0.3 < (V/Va) < 1.0$, $0.7 \times (P/Pa) + (V/Va) < 1$

therefore, since $(V/Va) = 0.05$

$(P/Pa) = 0.06 < 1$ OK

CONCLUSION

The tank(s) under evaluation:

SFDM-1

is/are acceptable.

Calc S96-0013 rev. 0

FPC – Crystal River Unit 3 Seismic Verification of Tanks

Calculation For:
Vertical Tank on 4 Legs

Rev	By	Date	Chk'd By	Date
0	[illegible]	10/31/95	PdJs	12/13/95

FLORIDA POWER CORPORATION
ST. PETERSBURG FLORIDA
CRYSTAL RIVER PLANT
UNIT NO. 3 855,000 KW

Structural - Anchor Bolt List
AUXILIARY BLDG FL EL 119-0" (NORTH)
MATERIAL AS SHOWN ON DWG NO [illegible]

4203	[illegible]	0	[illegible]
WORK ORDER	SIZE DRAWING	REV	FPC DRAWING NO

GILBERT ASSOCIATES, INC.
ENGINEERS AND CONSULTANTS
READING PENNA

DRAFTING: MADE [illegible] CH [illegible] APP [illegible]
ENGINEERING APP'L: [illegible]
REV CH APP DATE REV CH APP DATE

STANDARD TYPES

SPECIAL TYPES

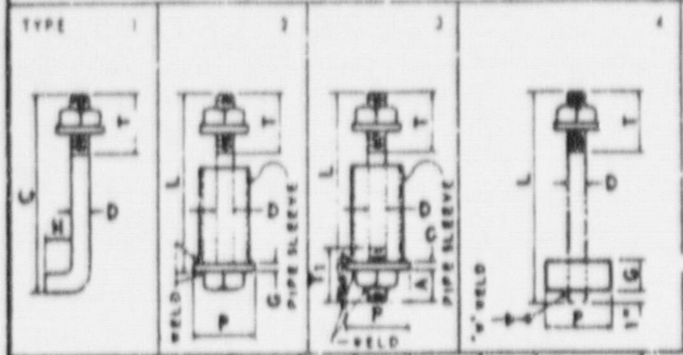

TYPE	MARK	NO REQ'D	DIAM D	LENGTH L	A	B	C	H	THREADS T	THREADS T1	NO. OF NUTS SQ	NO. OF NUTS HEX	SQ PLATE P	SQ PLATE G	"x" WELD	WASHERS	PIPE SLEEVE DIA	PIPE SLEEVE LENGTH
4	D-53	12	1"φ	1'-11"					2½"			12	5"	½"	¼"	12	2"	1'-5½"
4	D-55	8	½"φ	1'-9"					1½"			8	3"	⅜"	¼"	8	1½"	1'-5⅝"
4	D-56	12	⅞"φ	2'-2"					2½"			12	4"	½"	¼"	12	2"	1'-5½"

DIMENSIONS ARE IN INCHES UNLESS OTHERWISE NOTED

NOTES:- ALL MATERIAL TO BE A.S.T.M. A36 STEEL.

Florida Power
CORPORATION

DESIGN ANALYSIS/CALCULATION

Crystal River Unit 3

Page 1 of 6

DOCUMENT IDENTIFICATION NO	REVISION
S96-0013	0

Attachment "G"

Instrument Air Dryer

Six Pages Total

FPC -- Crystal River Unit 3
Seismic Verification of Tanks

Calculation For:
Vertical Tanks on Skid

Rev	By	Date	Chk'd By	Date
0	DJM	10/31/95	Pds	12/13/95

Equip. ID: IADR-1
Building: TURBINE
Elevation: 095
Rm Row/Col: 302 / A

Equipment Description:
INSTRUMENT AIR DRYER 1

Also Applicable for:

Vertical Tanks (Air Dryer) on Skid

Drawing:	4203-75-326-0
Anch. Drw.:	SC-405-011, SC-405-012, SC-408-102 and SC-423-033
Vendor:	Lectrodryer Division, McGraw-Edison Co.
Model:	Model 6581

Methodology

IADR-1 has two vertical dryer tanks on a common skid for which the SQUG methodology given in Section 7 of Florida Power PSP "Seismic Verification of Nuclear Plant Equipment", Revision 1, 9/12/94, is not applicable. IADR-1 includes the two dryer tanks and associated piping mounted on two 56.5" long angles (longitudinally), which are in turn welded to two 27" long angles in the shallow or transverse direction. This skid (at the 27" angles) is mounted on a reinforced concrete plinth by four 3/4" diameter cast-in-place bolts spaced at 22" (narrow dimension) and 54.25". Since the tank anchorage is the critical element, a conservative calculation assuming the c.g. of the air dryer to be 3/4 of the height dryer tanks is used to check the anchorage adequacy.

Dimensions

Dimensions are obtained from the referenced drawings

Tank:	Onerall Length (in)	L	56.50	
	Overall Height (in)	H	100.00	Estimated
	Weight of the Instrument Dryer (lb)	W	4500	from drawing
	Weight density contents (lbf/in ^ 3)	W_{fl}	0.0001	air
	Height of c. g. (3/4 H) (in)	h_{cg}	75.00	
Anchorage:	Cast-in-Place Bolts, type AB-213 (see SC-423-033)			
	Diameter Anchor Bolt (in)	b_d	0.75	
	Number anchor bolt total	N_b	4.00	
	Number bolt per corner	N_{leg}	1.00	
	Bolt Embedment (in.) (type AB-213 has an embedment > 13")	L_b	13.00	minimum from SC-423-033
	Bolt Spacing (minimum) (in)	S_b	22.00	SC-408-102
	Bolt Edge Distance (in)	E_b	4.88	See NOTE 1
	Concrete strength (psi)	f'_c	3000.00	
Allowables:	GIP Table C.3-1 Cast-in-place Bolt Allowables			
	Pullout Capacity (kip)	P_{nom}	15.03	
	Shear Capacity (kip)	V_{nom}	7.51	

FPC – Crystal River Unit 3
Seismic Verification of Tanks

Calculation For:
Vertical Tanks on Skid

Rev	By	Date	Chk'd By	Date
0	DKM	10/31/95	Pds	12/13/95

Allowables: (Continued) GIP Table C.3–1 Cast–in–place Bolt Allowables

Minimum Embedment	(in)	L_{min}	7.50
Minimum Spacing	(in)	S_{min}	9.50
Minimum Edge Distance	(in)	E_{min}	6.63

Calculation

(1) Weight The Instrument Dryer weight is taken from the vendor drawing as:

W dryer = 4500 lb
Conservatively use for total weight W = 5000 lb

(2) C. G. The c.g. of the dryers is conservatively taken to be at 3/4 of the height above the concrete plinth.

C.G. = (3/4) x Height = 75.00 in

(3) Loading To determine the Seismic Demand use 4% SSE Turbine Building spectra for elevation 95'. The spectra for the Turbine Building at 95' are identical to the Ground Response spectra. [Reference: "Environmental and Seismic Qualification Program Manual", (E/SQPM), Rev. 8, Section 5.0 Seismic Qualification Data, Figure 22]. Although the Instrument Air Dryer appears to relatively rigid (freq. > 33 Hz.), conservatively assume the system is flexible and use the spectral peak as the seismic demand.

OBE Spectral Peak (2% damping) = 0.135g ZPA for 2% = 0.05g
OBE Spectral Peak (5% damping) = 0.100g ZPA for 5% = 0.05g

Conservatively use two times the 2% OBE Peak as 4% SSE Peak:

therefore, Horizontal 4% SSE Peak = 0.27 g
Vertical 4% SSE Peak (2/3 Horiz.) = 0.18 g

(4) Overturning Worst case overturning will be for horizontal earthquake normal to the long axis of the base (i. e., earthquake acting transverse to the dryers). Therefore determine overturning for horizontal earthquake acting N–S (parallel to the short axis) combined with vertical earthquake acting upward (assisting the overturning).

Let F1 and F2 each represent vertical force in two anchor points (see Figure on next page); i.e., F1 is the upward force resisting overturning and F2 is the force "assisting" overturning:

FPC – Crystal River Unit 3
Seismic Verification of Tanks

Calculation For:
Vertical Tanks on Skid

Rev	By	Date	Chk'd By	Date
0	TAM	10/31/95	Pds	12/13/95

Overturning (Continued)

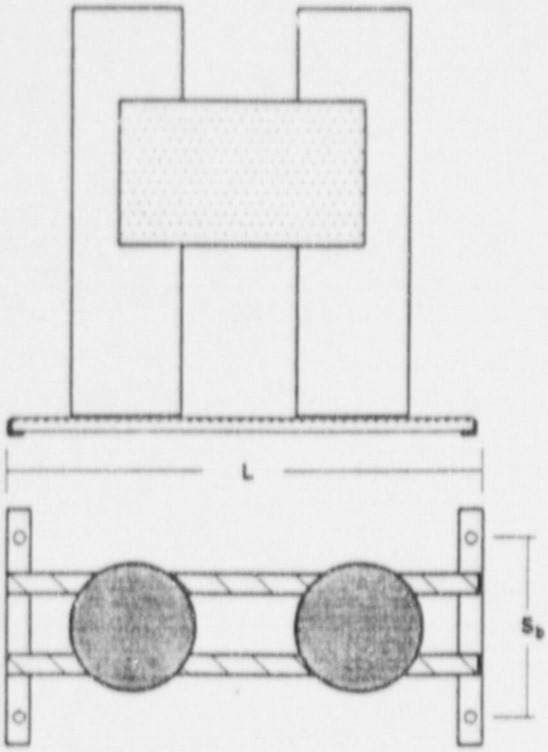

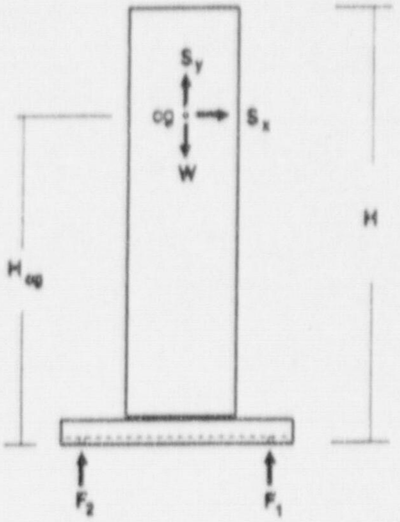

(a) Moment arm = Arm = 11.00 in **(from drawing)**

(b) Sum Forces vertical:
F1 + F2 = (W dryer) (1.0 – SSE vert) =
F1 + F2 = 5000 * (1 – SSEv) = 3690 lb

(c) Sum Moments about Z:
F1 (Arm) = F2 (Arm) + (W dryer) (SSE hor) (cg) =
F1 – F2 = (W dryer) (SSE hor) (cg) / (Arm) = 9205 lb

(d) Solve equations (c) and (b) for F1:
F1 + (F1 – 9205) = 3690 lb
F1 = 6447 lb
F2 = –2757 lb

(e) Determine anchor bolt pullout forces:
Each force (F1 and F2) represents two of the dryer anchorages and each anchorage has one 3/4" diameter anchor bolt. The maximum and minimum forces per anchor point are:
Max. anchorage vertical force (F1/2) = 3224 lb
Min. anchorage vertical force (F2/2) = –1379 lb

Since negative anchorage forces represent bolt pullout, only the minimum force needs to be considered for this tank. Pu = 1379 lb

(f) Determine anchor bolt shear forces:
Total shear = (W tank) (SSE Horiz.) = 1350 lb
Bolt shear = (Total shear) / (4 bolts) = Vu = 338 lb

FPC – Crystal River Unit 3
Seismic Verification of Tanks

Calculation For:
Vertical Tanks on Skid

Rev	By	Date	Chk'd By	Date
0		10/31/95	Pds	12/13/95

(5) Anchor Bolt Allowables (From GIP Section 4.4 and Appendix C)

Allowables for 3/4" Cast–In–Place Bolts (AB–213 Type 2 from SC–423–033)

Pnom =	15.03	ksi	Vnom =	7.51	ksi	**(Table C.3–1)**
RLp =	1.00	embedment red. factor	RLs =	1.00		**Lmin = 7.50"**
RSp =	1.00	spacing red. factor	RSs =	1.00		**Smin = 9.50"**
REp =	0.90	edge distance red. factor	REs =	0.55		**See NOTE 1**
RFp =	0.93	for fc=3000 psi concrete	RFs =	0.93		
RCp =	1.00	cracked concrete red. fact.	RCs =	1.00		

Pu' = Pnom (RLp) (RSp) (REp) (RFp) (RCp) = 12.57 Kip
Vu' = Vnom (RLs) (RSs) (REs) (RFs) (RCs) = 3.85 Kip

(6) Evaluate Anchorage

	Allowable	>	Maximum?	
Maximum anchor bolt pullout	12570 lb		1379 lb	OK
Maximum anchor bolt shear	3848 lb		338 lb	OK

Interaction: The interaction curves for cast–in–place bolts are taken from Section C.3.7 and Figure C.3–2 of the GIP. Since the GIP anchorage criteria for cast–in–place bolts and headed studs ensure that failure does not occur in concrete, the interaction formulation for steel failure is recommended:

for $0.0 < (V/Va) < 0.3, \quad (P/Pa) < 1$
for $0.3 < (V/Va) < 1.0, \quad 0.7 \times (P/Pa) + (V/Va) < 1$

therefore, since $(V/Va) = 0.09$
$(P/Pa) = 0.11 < 1$ OK

CONCLUSION

The Instrument Air Dryer under evaluation:

IADR–1

is acceptable.

NOTES

(1) The calculated edge distance reduction factor is extremely conservative. The top of the reinforced concrete plinth is approximately 5" above the concrete floor (see drawing SC–408–102) and the embedment length (> 13") exceeds the minimum embedment (6.625") by more than 6". Therefore there is only edge distance consideration over part of the anchor bolt length. The true edge distance reduction factors for this anchorage are closer to 1.0; however, values based on the conservative interpretation of edge distance (4–7/8" to plinth edge) are used in this calculation.

FPC – Crystal River Unit 3
Seismic Verification of Tanks

Calculation For:
Vertical Tanks on Skid

Rev	By	Date	Chk'd By	Date
0	DHR	10/31/95	Pds	12/13/95

FLORIDA POWER CORPORATION
ST. PETERSBURG, FLORIDA
CRYSTAL RIVER PLANT
UNIT NO. 3 855,000 KW

Structural - Anchor Bolt List
TURBINE ROOM EQUIPMENT FOUNDS.
MATERIAL AS SHOWN ON DWG. NO SC-408-101 & SC-408-102

WORK ORDER	SIZE DRAWING	REV	FPC DRAWING NO.
4203	S-423-033	0	SC 423-033

GILBERT ASSOCIATES, INC.
ENGINEERS AND CONSULTANTS
READING, PENNA.

DRAFTING · ENGINEERING APP'L
MADE · CH · APP · DATE
REV · CH · APP · DATE

STANDARD TYPES

SPECIAL TYPES

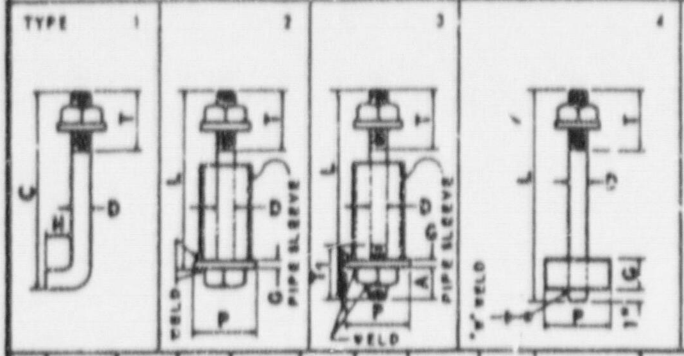

TYPE	MARK	NO. REQD.	DIAM D	LENGTH L	A	B	C	K	THREADS T	THREADS T1	NO. OF NUTS SQ	NO. OF NUTS HEX	SQ PLATE P	SQ PLATE G	# WELD	WASHERS	PIPE SLEEVE DIA	PIPE SLEEVE LENGTH
2	AB-201	4	1"	1'-8"					2 1/2"			4	5"	1/2"		4	2"	1'-0 3/4"
2	AB-202	44	1"	1'-5"					2 1/2"			44	5"	1/2"		44	2"	1'-0 1/4"
2	AB-203	32	7/8"	1'-6"			——		2 1/4"			32	4"	1/2"		32	2"	1'-0"
2	AB-204	8	7/8"	1'-4"					2 1/4"			8	4"	1/2"		8	2"	1'-0 1/4"
2	AB-205	12	1"	2'-1"					2 1/2"			12	5"	1/2"		12	2"	1'-0 3/4"
2	AB-206	12	3/4"	1'-9"					2"			12	4"	3/8"		12	2"	1'-0 5/8"
2	AB-207	44	3/4"	1'-4"					2"			44	4"	3/8"		44	2"	1'-0 5/8"
2	AB-208	16	5/8"	1'-4"					2"			16	3"	3/8"		16	1 1/2"	1'-0 1/8"
1	AB-209	42	5/8"				1'-2"	3"	1 1/2"			42				42		
2	AB-210	8	1/2"	1'-6"					1 1/2"			8	3"	1/4"		8	1 1/2"	1'-0 1/4"
2	AB-211	4	1/2"	1'-3"					1 1/2"			4	3"	1/4"		4	1 1/2"	1'-0 1/2"
2	AB-212	16	3/4"	1'-5"					2"			16	4"	3/8"		16	2"	1'-0 3/8"
2	AB-213	4	3/4"	1'-4"					2"			4	4"	3/8"		4	2"	1'-0 3/8"
2	AB-214	4	5/8"	1'-6"					2"			4	3"	3/8"		4	1 1/2"	1'-0 3/8"

DIMENSIONS ARE IN INCHES UNLESS OTHERWISE NOTED

NOTES:-ALL MATERIAL TO BE A.S.T.M. A36 STEEL

Florida Power
CORPORATION

DESIGN ANALYSIS/CALCULATION

Crystal River Unit 3

DOCUMENT IDENTIFICATION NO	REVISION
S96-0013	0

Attachment "H"

Instrument Air Receivers

Six Pages Total

S96-0013 rev. 0

FPC – Crystal River Unit 3
Seismic Verification of Tanks

Calculation For:
Vertical Tank on Skirt

Rev	By	Date	Chk'd By	Date
0	DHL	10/31/95	Pds	12/13/95

Calculation

(1) Weight — The tank weight consists of the shell portion and the top and bottom heads. The tank is conservatively assumed to be cylindrical with top and bottom circular disks:

W tank = W shell + 2 (W head) + W contents =
W shell = (pi) (D) (hs) (ts) (Wst) = 915 lb
W head = 2 (pi) (th) [(D) (hh) + (D/2) ^ 2] (Wst) = 453 lb
W contents = (pi) (D/2) ^ 2 (hw) (W fl) = 0 lb
W skirt (stand) (estimated) = 150 lb
W tank = 1517 lb
Conservatively use for W tank = 1600 lb

(2) C. G. — The bottom of the tank is 6.0 in above the anchorage. The C.G. is calculated from the anchorage base-plate as:

$$\text{Tank cg} = \frac{(\text{W Steel})\ (H/2) + (\text{W contents})(hw/2)}{(\text{W tank})} \qquad 64.50 \text{ in}$$

C.G. = (Tank cg) + (dist. to bottom) = 70.50 in

(3) Loading — To determine the Seismic Demand use 4% SSE Turbine Building spectra for elevation 95'. The spectra for the Turbine Building at 95' are identical to the Ground Response spectra. [Reference: "Environmental and Seismic Qualification Program Manual", (E/SQPM), Rev. 8, Section 5.0 Seismic Qualification Data, Figure 22].

OBE Spectral Peak (2% damping) = 0.135g ZPA for 2% = 0.05g
OBE Spectral Peak (5% damping) = 0.100g ZPA for 5% = 0.05g

Conservatively use 2 x (2% OBE Peak) as 4% SSE Peak;

therefore, Horizontal 4% SSE Peak = 0.27 g
Vertical 4% SSE Peak (2/3 Horiz.) = 0.18 g

(4) Overturning — Worst case will be for horizontal earthquake at 45 degrees to tank legs. Therefore determine overturning for horizontal along 45 deg to legs and vertical earthquake acting upward (assisting overturning).

Let F1 and F2 each represent vertical force in two legs (see Figure on next page); i.e., F1 is the upward force resisting overturning and F2 is the force assisting overturning:

S96-0013 rev. 0

FPC – Crystal River Unit 3
Seismic Verification of Tanks

Calculation For:
Vertical Tank on Skirt

Rev	By	Date	Chk'd By	Date
0	DML	10/3/95	Pds	12/13/95

Equip. ID:	IAT – 1A
Building:	TURBINE
Elevation:	095
Rm Row/Col:	303 / A

Equipment Description:
INSTRUMENT AIR RECEIVER A

Also Applicable for:
IAT – 1B

Vertical Tank (Air Receiver) on Skirt

Drawing: FN – 83 – 27 (83 – 124 – 0) and 4203 – 83 – 047 – A
Anch. Drw.: SC – 405 – 011, SC – 405 – 012, SC – 408 – 101 and SC – 423 – 033
Vendor: American Welding & Tank Co.
Model: 650 Gal. Vertical Air Receiver (200 psi ASME Design)

Methodology

IAT – 1A is a vertical air receiver for which the SQUG methodology given in Section 7 of the Florida Power PSP "Seismic Verification of Nuclear Plant Equipment", Rev. 1, 9/12/94, is not applicable. IAT – 1A is welded to a 34" diameter cylindrical skirt that is anchored to a reinforced concrete plinth by four angle tabs welded to the skirt at 90 degrees around the perimeter with one 5/8" diameter cast – in – place bolt per angle. Since the tank anchorage is the critical element, this calculation focuses on adequacy of the anchorage.

Dimensions

Dimensions are obtained from the referenced drawings

Tank:	Outside Diameter (in)	D	41.00	
	Overall Height (in)	H	129.00	
	Thickness of tank shell (in)	t_s	0.250	40.5" inside dia.
	Thickness of tank head (top/bottom) (in)	t_h	0.250	40.5" inside dia.
	Weight density steel (lbf/in ^ 3)	W_{st}	0.2840	
	Weight density contents (lbf/in ^ 3)	W_{fl}	0.0001	air
	Height of shell portion (in)	h_s	100.00	approx.
	Height of heads (top & bottom) (in)	h_h	14.50	approx.
	Nominal Height of contents (in)	h_w	0.00	not applicable
Anchorage:	Cast – in – Place Bolts, type AB – 208 (see SC – 423 – 033)			
	Diameter Anchor Bolt (in)	b_d	0.63	
	Number anchor bolt total	N_b	4.00	
	Number bolt per leg	N_{leg}	1.00	
	Bolt Embedment (in.) (type AB – 208 has an embedment > 13")	L_b	13.00	minimum from SC – 423 – 033
	Bolt Spacing (center to center) (in)	S_b	31.48	SC – 408 – 101
	Bolt Edge Distance (in)	E_b	4.00	SC – 408 – 101
	Concrete strength (psi)	f'_c	3000.00	
Base Plate:	Thickness angle (4 welded to skirt) (in)	t_{bp}	0.25	Estimated
	Angle Dimensions (square) (in)	l_{bp}	6.00	SC – 408 – 101

Calculation: S96-0013 rev. 0

Calc S96-0013 rev. 0

FPC – Crystal River Unit 3
Seismic Verification of Tanks

Calculation For:
Vertical Tank on Skirt

Rev	By	Date	Chk'd By	Date
0		10/3/95	Pds	12/13/95

Overturning (Continued)

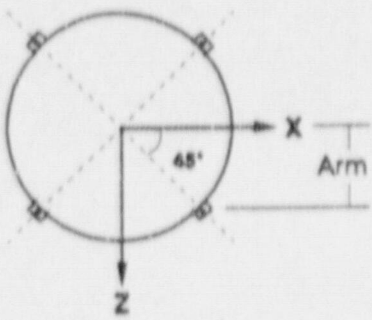

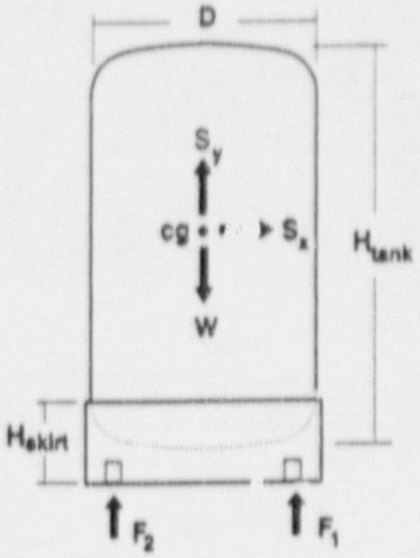

(a) Moment arm = Arm =
(37" diam. / 2) * sin (45) = 15.74 in

(b) Sum Forces vertical:
F1 + F2 = (W tank) (1.0 – SSE vert) =
F1 + F2 = 1600 * (1 – SSEv) = 1244 lb

(c) Sum Moments about Z:
F1 (Arm) = F2 (Arm) + (W tank) (SSE hor) (cg) =
F1 – F2 = (W tank) (SSE hor) (cg) / (Arm) = 1935 lb

(d) Solve equations (c) and (b) for F1:
F1 + (F1 – 1935) = 1244 lb
F1 = 1589 lb
F2 = –345 lb

(e) Determine anchor bolt pullout forces:
Each force (F1 and F2) represent two of the tank legs and each leg has one 5/8" diameter anchor bolt. The maximum and minimum forces are:
Max. anchorage vertical force (F1/2) = 795 lb
Min. anchorage vertical force (F2/2) = –173 lb
Since negative anchorage forces represent bolt pullout, only the minimum force needs to be considered for this tank. Pu = 173 lb

(f) Determine anchor bolt shear forces:
Total shear = (W tank) (SSE Horiz.) = 410 lb
Bolt shear = (Total shear) / (4 bolts) = Vu = 102 lb

Calc S96-0013 rev.0

FPC – Crystal River Unit 3
Seismic Verification of Tanks

Calculation For:
Vertical Tank on Skirt

Rev	By	Date	Chk'd By	Date
0		10/31/95	Pds	12/13/95

(5) Anchor Bolt Allowables (From GIP Section 4.4 and Appendix C)

Allowables for 5/8" Cast–In–Place Bolts (AB–208 Type 2 from SC–423–033)

Pnom =	10.44	ksi	Vnom =	5.22	ksi	(Table C.3–1)
RLp =	1.00	embedment red. factor	RLs =	1.00		Lmin = 6.25"
RSp =	1.00	spacing red. factor	RSs =	1.00		Smin = 7.875"
REp =	0.90	edge distance red. factor	REs =	0.54		Emin = 5.5"
RFp =	0.93	for fc=3000 psi concrete	RFs =	0.93		
RCp =	1.00	cracked concrete red. fact.	RCs =	1.00		

Pu' = Pnom (RLp) (RSp) (REp) (RFp) (RCp) = 8.68 Kip
Vu' = Vnom (RLs) (RSs) (REs) (RFs) (RCs) = 2.59 Kip

(6) Evaluate Anchorage

	Allowable	>	Maximum?	
Maximum anchor bolt pullout	8683 lb		173 lb	OK
Maximum anchor bolt shear	2593 lb		102 lb	OK

Interaction: The interaction curves for cast–in–place bolts are taken from Section C.3.7 and Figure C.3–2 of the GIP. Since the GIP anchorage criteria for cast–in–place bolts and headed studs ensure that failure does not occur in concrete, the interaction formulation for steel failure is recommended:

for $0.0 < (V/Va) < 0.3$, $(P/Pa) < 1$
for $0.3 < (V/Va) < 1.0$, $0.7 \times (P/Pa) + (V/Va) < 1$

therefore, since $(V/Va) = 0.04$
$(P/Pa) = 0.02 < 1$ OK

CONCLUSION

The tanks under evaluation:

IAT–1A
IAT–1B

are acceptable.

Calc S94-0013 rev.0

FPC -- Crystal River Unit 3
Seismic Verification of Tanks

Calculation For:
Vertical Tank on Skirt

Rev	By	Date	Chk'd By	Date
0	DHH	10/31/95	Pds	12/13/95

FLORIDA POWER CORPORATION
ST. PETERSBURG, FLORIDA
CRYSTAL RIVER PLANT
UNIT NO. 3 855,000 KW

Structural - Anchor Bolt List
TURBINE ROOM EQUIPMENT FOUNDS.
MATERIAL AS SHOWN ON DWG. NO SC-408-101 & SC-408-102

4203	S-423-033	0	SC-423-033
WORK ORDER	SIZE DRAWING	REV	FPC DRAWING NO

GILBERT ASSOCIATES, INC.
ENGINEERS AND CONSULTANTS
READING, PENNA.

DRAFTING: REV CH APP DATE — ENGINEERING APP: REV CH APP DATE

STANDARD TYPES

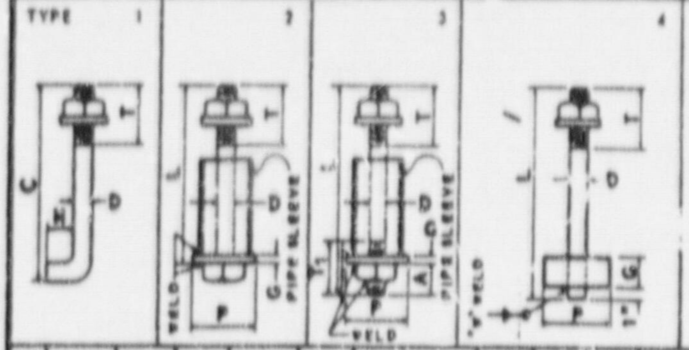

SPECIAL TYPES

TYPE	MARK	NO. REQD	DIAM	LENGTH					THREADS		NO. OF NUTS		SQ PLATE		# WELD	WASHERS	PIPE SLEEVE	
			D	L	A	B	C	H	T	T1	SQ	HEX	P	G			DIA	LENGTH
2	AB-201	4	1"	1'-8"					2½"			4	5"	½"		4	2"	1'-0½"
2	AB-202	44	1"	1'-5"					2½"			44	5"	½"		44	2"	1'-0¼"
2	AB-203	32	⅞"	1'-6"			—		2¼"			32	4"	½"		32	2"	1'-0"
2	AB-204	8	⅞"	1'-4"					2¼"			8	4"	½"		8	2"	1'-0¼"
2	AB-205	12	1"	2'-1"					2½"			12	5"	½"		12	2"	1'-0[illegible]"
2	AB-206	12	¾"	1'-9"					2"			12	4"	[illegible]"		12	2"	1'-0[illegible]"
2	AB-207	44	¾"	1'-4"					2"			44	4"	[illegible]"		44	2"	1'-0⅛"
2	AB-208	16	¾"	1'-4"					2"			16	3"	⅜"		16	1½"	1'-0⅛"
1	AB-209	42	¾"				1'-2"	3"	1½"			42				42		
2	AB-210	8	½"	1'-6"					1½"			8	3"	¼"		8	1½"	1'-0¼"
2	AB-211	4	½"	1'-3"					1½"			4	3"	¼"		4	1½"	1'-0¼"
2	AB-212	16	¾"	1'-5"					2"			16	4"	[illegible]"		16	2"	1'-0[illegible]"
2	AB-213	4	¾"	1'-4"					2"			4	4"	[illegible]"		4	2"	1'-0[illegible]"
2	AB-214	4	¾"	1'-6"					2"			4	3"	[illegible]"		4	1½"	1'-0⅛"

DIMENSIONS ARE IN INCHES UNLESS OTHERWISE NOTED

NOTES:-ALL MATERIAL TO BE A.S.T.M. A36 STEEL

Attachment "I"

Main Steam Valve Air Reservoirs

Five Pages Total

Calc S94-0013 rev.0

FPC – Crystal River Unit 3
Seismic Verification of Tanks

Calculation For:
Air Reservoir

Rev	By	Date	Chk'd By	Date
0	DHL	9/26/95	Pds	1/22/96

Equip. ID: MSV–411–AR1
Building: INTERMEDIATE
Elevation: 119
Rm Row/Col: 309 / [illegible]

Equipment Description:
MSV–411 AIR RESERVOIR 1

Also Applicable for:
MSV–411–ARi, MSV–412–ARi,
MSV–413–ARi, MSV–414–ARi, i = 1 to 3

Air Reservoir Data
Drawing (s): I–308–335
Anch. Drawing:

I. INTRODUCTION

Because structural drawings and details for these Air Reservoirs were not available, a bounding calculation using very conservative assumptions is required. The following calculation demonstrates that the capacity of the anchorage for the Main Steam Valve Air Reservoirs greatly exceeds postulated seismic loading. The calculation covers the following Air Reservoirs:

Main Steam Valve	Associated Air Reservoirs
MSV – 411	MSV – 411 – AR1 MSV – 411 – AR2 MSV – 411 – AR3
MSV – 412	MSV – 412 – AR1 MSV – 412 – AR2 MSV – 412 – AR3
MSV – 413	MSV – 413 – AR1 MSV – 413 – AR2 MSV – 413 – AR3
MSV – 414	MSV – 414 – AR1 MSV – 414 – AR2 MSV – 414 – AR3

II. METHODOLOGY

All of the above Air Reservoirs are well mounted on walls near the associated valves. Since the only significant seismic effects are the weight of the air reservoirs themselves, the air reservoirs are conservatively assumed to be 7 feet long by 3 feet in diameter with 0.375 inch wall thickness. To demonstrate that the anchorage capacity greatly exceeds seismic demand, it was further assumed that the anchorage configuration consists of four 3/8 inch diameter expansion anchors in a square pattern spaced 30 inches apart. This anchor bolt size and type underestimates the actual anchorage capacity and the anchorage spacing is less than the actual spacing (minimizing the resisting moment arm). A square pattern also allows a single calculation to be valid for wall mounted air reservoirs with the long axis (cylinder centerline) oriented in either the vertical or the horizontal direction (see the attached figure for the assumed geometry).

Calc S96-0013 rev. 0

FPC – Crystal River Unit 3
Seismic Verification of Tanks

Calculation For:
Air Reservoir

Rev	By	Date	Chk'd By	Date
0	WR	9/26/95	Pds	1/22/96

Expansion anchors were assumed (rather than Cast-in-place bolts) to minimize anchorage capacity. The shear and pullout capacities of these anchors were obtained from the SQUG GIP (Reference 1) Table C.2-1 and were further reduced by a generic reduction factor of 0.6 per Table C.2-2 of the GIP to account for "Unknown" concrete fasteners.

A maximum acceleration (demand) of 0.3g is assumed to act simultaneously in both horizontal directions and will be combined with a vertical acceleration of 2/3 the horizontal (or 0.2g) by absolute summation. Since the Air Reservoirs are rigid (that is, frequency > 30 Hz. since loaded only by self-weight), the actual seismic demand for these air reservoirs would be the Zero Period Acceleration (ZPA) of the 4% damped SSE spectra at the 119' elevation of the Intermediate Building which is about 0.1g; therefore, the assumed acceleration values used in the calculation are extremely conservative.

All of the assumptions described above and used in the following anchorage calculation conservatively bound the actual configurations, weights, seismic peak accelerations and load combination methods and will therefore overestimate the seismic demand.

III. CALCULATION

(1) Air Reservoir parameters:

h = reservoir height = 84.00 in
r = reservior radius = 18.00 in
t = reservior thickness = 0.375 in
ws = weight density (steel) = 0.284 lb / in ^ 3
W = total weight =
[(h) (2 pi r) (t) + (2 pi r ^ 2) (t)] (ws) = 1229 lb
use W = 1250 lb

(2) Anchorage Configuration:

n = number of anchor bolts = 4
s = anchor spacing (horizontal or vertical) = 30.0 in
d = diameter of anchor bolt = 0.375 in
Pa = pullout capacity (GIP) 1460 lb x 0.6 = 876 lb
Va = shear capacity (GIP) 1420 lb x 0.6 = 852 lb

(3) Calculated Seismic Demand:

ah = horizontal acceleration = 0.3 g
av = vertical acceleration = 0.2 g
V = Shear (vertical) per bolt: (1 + av) * (W) / n = 375 lb
P = Pullout (horizontal) = P1 + P2 + P3, where
P1 = (r) * (1 + av) * (W) / [(s) * (n/2)] = 113 lb
P2 = (r) * (ah) * (W) / [(s) * (n/2)] = 450 lb
P3 = [(sh) * (W)] / 4 = 94 lb
P = P1 + P2 + P3 = 656 lb

Calc S94-0013 rev.0

FPC – Crystal River Unit 3
Seismic Verification of Tanks

Calculation For:
Air Reservoir

Rev	By	Date	Chk'd By	Date
0	DHL	9/26/95	Pds	1/22/96

III. CALCULATION
(Continued)

(4) Capacity Check:

Shear:	$V < Va$	$375 < 852$	OK
Pullout:	$P < Pa$	$656 < 876$	OK

Interaction (bilinear):

for $0.3 < V / Va < 1.0$

then $0.7 * (P / Pa) + V / Va < 1.0$ $\quad 0.96 < 1.0$ OK

IV. CONCLUSION

A bounding calculation for the Air Reservoir anchorage has been performed using very conservative assumptions:

(1) Assumed air reservoir weight and dimensions exceed actual
(2) Assumed seismic demand exceeds actual seismic demand
(3) Assumed 3 simultaneous seismic loads combined by absolute sum
(4) Assumed anchor bolt spacing (anchorage moment arm) is less than actual
(5) Assumed anchor bolt type and size underestimate actual capacity

Based upon these very conservative assumptions, the bounding calculation demonstrates that the seismic capacity of the subject Air Reservoir anchorage exceeds the expected seismic demand.

REFERENCES

(1) Generic Implementation Procedure (GIP) "For Seismic Verification of Nuclear Plant Equipment", Revision 2, February 1992.

Calc S94-0013 rev 0

FPC – Crystal River Unit 3
Seismic Verification of Tanks

Calculation For:
Air Reservoir

Rev	By	Date	Chk'd By	Date
0		9/26/95	Pds	1/22/96

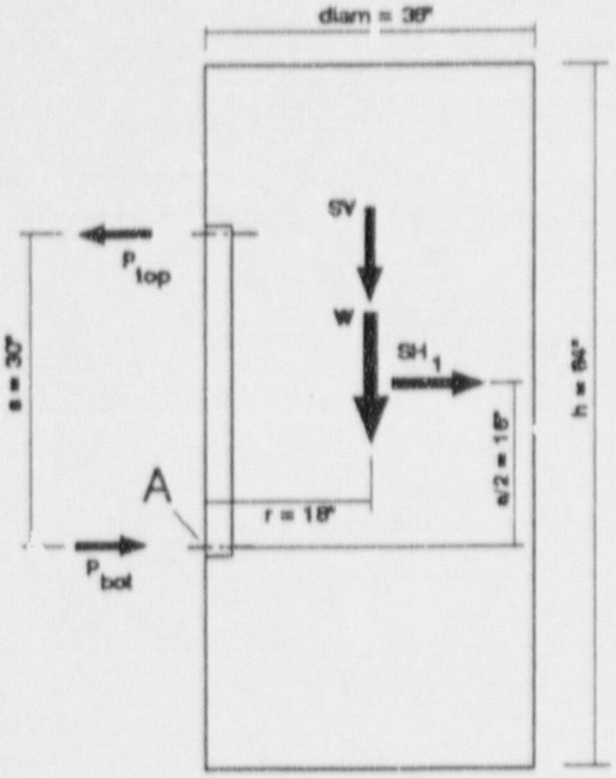

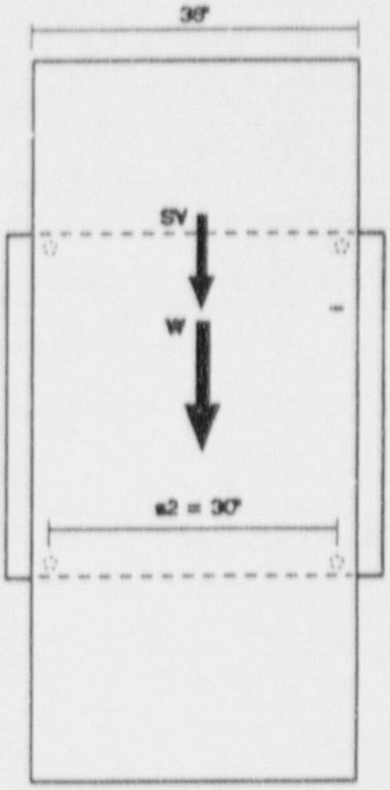

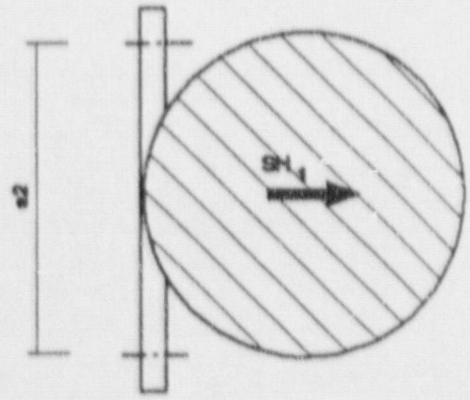

Attachment "J"

RCP Seal Return Coolers

Six Pages Total

Calc S96-0013 rev.0

FPC – Crystal River Unit 3
Seismic Verification of Tanks

Calculation For:
Horizontal Heat Exchanger

Rev	By	Date	Chk'd By	Date
0		11/28/95	Pds	1/22/96

Equip. ID: MUHE–2B
Building: AUXILIARY
Elevation: 119
Rm Row/Col: 302 / L–M

Equipment Description:
RCP SEAL RETURN COOLER A

Also Applicable for:
MUHE–2A

Seal Cooler Data
Drawing:
Anch. Drw.: SC–421–110, SC–422–043, and SC–423–032
Vendor:

Introduction

Vendor drawings for the Seal Coolers were not available so field measurements were obtained during a walkdown on 10/24/95. The Seal Coolers are smaller than typical heat exchangers and do not meet all of the conditions for heat exchanger calculations according to Table 7.6 of the Florida Power Plant Specific Procedure for "Seismic Verification of Nuclear Plant Equipment", Rev. 1, 9/12/94 (for example, the 10" outer diameter is below the applicable 1 ft to 14 ft range); therefore a conservative calculation of the anchorage is performed.

Since the Seal Cooler is effectively a rugged 10" diameter pipe section that is rigid in the longitudinal direction, the calculation focuses on anchorage capacity to resist demand due to overturning from horizontal seismic loads acting transverse to the seal cooler combined with vertical seismic loads acting upward (to assist in overturning). Use of field measurements and conservative assumptions in the calculations to confirm anchorage adequacy are acceptable as long as the results show significant margins above allowable values.

(1) Input Data (Notes appear at the bottom of page 2)

Tank:	Diameter (in)	D	10.00	
	Length (ft)	L	17.83	
	Thickness of tank shell (in)	t	0.125	See Note 1
	Weight of Seal Cooler (lb)	W_{tf}	2000	See Step 4
	Weight density (lbf/ft ^ 3)	G_{am}	180	See Step 4
	Height of c.g. above anchorage (in)	H_{cg}	7.500	
Saddle:	Spacing (ft)	S	14.917	
	Height of saddle plate from bottom of the tank to the base plate (in)	h	2.500	
	Shear modulus (psi)	G	1.12E+07	
	Elastic modulus (psi)	E	2.90E+07	
	Number of Saddles	N_s	2.00	

Calc S94-0013 rev. 0

FPC – Crystal River Unit 3
Seismic Verification of Tanks

Calculation For:
Horizontal Heat Exchanger

Rev	By	Date	Chk'd By	Date
0		11/28/95	Pds	1/22/96

Base Plate:	Thickness base plate under saddle (in)	t_b	0.375
	Depth of the base plate (in)	h_b	7.00
	Width of the base plate (in)	b_b	5.00
	Anchor bolt spacing (in)	s_b	6.00
Bolts:	Number of locations, each saddle	N_L	2.00
	Number of anchor bolts per location	N_B	1.00
	Diameter of anchor bolt (in)	d	0.75

Loading: SSE Floor reponse spectra at 4% damping

(2) Anchor Bolt Allowables (From GIP Section 4.4 and Appendix C Table C.3–1)

Allowables for .75" Cast–In–Place Bolts (Mark D60 type 4 from SC–423–032)
(edge distances from SC –422–043 are minimum in transverse direction)

Actual Embedment =	7.50	Allowable=	7.50	in	**See Note 2**
Actual Spacing =	6.00	Allowable=	9.50	in	–
Actual Edge Distance =	4.00	Allowable=	6.63	in	

Pnom =	15.03	ksi	Vnom =	7.51 ksi
RLp =	1.00	embedment red. factor	RLs =	1.00
RSp =	0.86	spacing red. factor	RSs =	1.00
REp =	0.84	edge distance red. factor	REs =	0.37
RFp =	0.93	for fc=3000 psi concrete	RFs =	0.93
RCp =	1.00	cracked concrete red. fact.	RCs =	1.00

Pu' = Pnom (RLp)(RSp)(REp)(RFp)(RCp) = 10.05 Kip
Vu' = Vnom (RLs)(RSs)(REs)(RFs)(RCs) = 2.59 Kip

(3) Seismic Demand

The seismic loading is the 4% damped SSE spectra for the Auxiliary Building at 119' which is determined in FPC calculation S–94–0011, "Seismic Verification of Tanks – SQUG Methodology", Rev. 0, 1/19/94. From calculation S–94–0011 pages 27 and 28:

OBE FRS Peak (4% damping) = 0.353 g
OBE FRS ZPA (4% damping) = 0.050 g

Assume Seal Cooler is flexible in transverse direction, therefore take 4% SSE SPA as demand (SSE SPA = 2 times OBE SPA), or:

Sh = Horizontal 4% SSE SPA = 0.706 g
Sv = Vertical 4% SSE SPA (2/3 Horiz.) = 0.471 g

NOTES

(1) Minimum Thickness Calculation: $\frac{(P)*(Do)}{2*(Sm+y*P)}$ **+ t–add = 0.112, use 0.125"**
(with P = 200 psi, Sm = 20000 psi, y = 0.4 and additional thickness, t–add, = 1/16")

(2) The actual embedment for 3/4" diameter D60 type 4 anchor bolts (from drawing SC–423–032) is at least 18", however, the minimum from the GIP Table C.3–1 is assumed for simplicity.

Calc S96-0013 rev. 0

FPC – Crystal River Unit 3
Seismic Verification of Tanks

Calculation For:
Horizontal Heat Exchanger

Rev	By	Date	Chk'd By	Date
0		11/28/95	Pds	1/22/96

(4) Determine Total Weight

The weight of the seal cooler is determined by assuming that the weight density of the heaviest heat exchanger from Table 7.6 of the Florida Power Plant Specific Procedure for "Seismic Verification of Nuclear Plant Equipment", Rev. 1, 9/12/94 is applicable. This weight density is then multiplied by the seal cooler volume:

$$W = (\text{G am}) * (\text{Volume}) = (180\ \text{lb/ft}^3) * (\text{Volume}) =$$
$$(\text{G am}) * [(D/2)^2 * (\pi) * (L)] = \quad 1750.78\ \text{lb}$$

Conservatiively take $W =$ 2000.00 lb

(5) Calculate Overturning due to Transverse Loading

Worst case overturning will be for horizontal earthquake acting transverse; i.e., resisted by the anchor bolt with 6 in center to center spacing.

Let F1 and F2 each represent vertical force in anchor bolts at each side of the saddle base plate (see Figure on next page). Thus, F1 is the upward force resisting overturning and F2 is the force assisting overturning:

(a) Sum forces vertical:

$$F1 + F2 = (W) * (1.0 - Sv) = \quad 1058.67\ \text{lb}$$

(b) Sum moment about base plate edge (see Figure on page 4):

$$(F2 * a2) + (F1 * a1) + (Sh * Hcg * W) = (W) * (1 - Sv) * (hb/2)$$

where $a1 = (hb - sb)/2 =$ 0.50 in

$a2 = (sb) + (hb - sb)/2 =$ 6.50 in

(c) Solve equation (a) for F1, substitute into (b) and solve for F2:

$$F1 = (W) * (1.0 - Sv) - (F2) = (Wv) - (F2)$$
$$F2 = \{ (W) * [(1 - Sv) * (hb/2) - (Sh * Hcg)] - [(W) * (1.0 - Sv) * (a1)] \} / (a2 - a1)$$

therefore, $F2 =$ −1235.67 lb

$F1 =$ 2294.33 lb

(d) Determine anchor bolt pullout forces:

Each force (F1 and F2) represent two of the heat exchanger anchor bolts. The maximum and minimum anchor bolt forces are therefore:

P max = 1147.16 lb

P min = −617.83 lb

Since negative anchorage forces represent bolt pullout, only the minimum force needs to be considered. That is, P = 617.83 lb

(e) Determine anchor bolt shear forces:

Total shear = (W) * (SSE Horiz.) = 1412.00 lb

Bolt shear = (Total shear) / (4 bolts) = V = 353.00 lb

Calc S96-0013 rev 0

FPC – Crystal River Unit 3
Seismic Verification of Tanks

Calculation For:
Horizontal Heat Exchanger

Rev	By	Date	Chk'd By	Date
0	DHR	11/28/95	PDS	1/22/96

(6) Figure 1: Calculation geometry

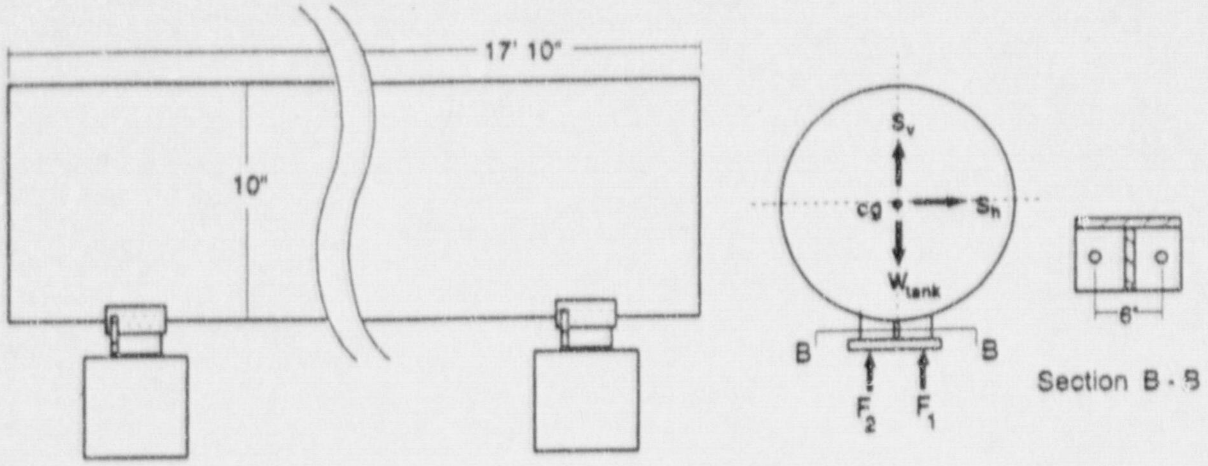

(7) Evaluate Anchorage

	Allowable	>	Maximum?	
Maximum anchor bolt pullout	10050.09 lb		617.83 lb	OK
Maximum anchor bolt shear	2590.81 lb		353.00 lb	OK

Interaction: The interaction curves for cast–in–place bolts are taken from Section C.3.7 and Figure C.3–2 of the GIP. Since the GIP anchorage criteria for cast–in–place bolts and headed studs ensure that failure does not occur in concrete, the interaction formulation for steel failure is recommended:

for $0.0 < (V/Va) < 0.3$, $(P/Pa) < 1$
for $0.3 < (V/Va) < 1.0$, $0.7 \times (P/Pa) + (V/Va) < 1$

therefore, since $(V/Va) = 0.136$
$(P/Pa) = 0.061 < 1$ OK

(8) Confirm Stresses in the Saddle are Acceptable

The saddle and stiffners are only about 2.5" deep (between the Saddle pad and top of the plinth). Bending of the stiffened saddle is adequate by inspection.

For shear the anchorage has been determined as adequate and the amount of shear area in the stiffened saddles is much greater than the area of the anchor bolts (2 3/4" anchor bolts per plinth) and is therefore also adequate.

CONCLUSION

The Seal Coolers under evaluation:

MUHE–2A MUHE–2B

are acceptable since anchorage capacity greatly exceeds demand.

Calc S96-0013 rev. 0

FPC – Crystal River Unit 3 Seismic Verification of Tanks

Calculation For:

Horizontal Heat Exchanger

Rev	By	Date	Chk'd By	Date
0	[illegible]	11/28/96	Rds	1/22/96

FLORIDA POWER CORPORATION
ST. PETERSBURG FLORIDA
CRYSTAL RIVER PLANT
UNIT NO. 3 855,000 KW

Structural - Anchor Bolt List

AUXILIARY BLDG EQUIP FDN FL EL 119-0"

MATERIAL AS SHOWN ON DWG. NO 5C-422-043

4203 | WORK ORDER | SIZE | DRAWING [illegible] | C REV | FPC DRAWING NO [illegible]

GILBERT ASSOCIATES, INC
ENGINEERS AND CONSULTANTS
READING, PENNA

DRAFTING: REV CH APP DATE | ENGINEERING APP: REV CH APP DATE 7-9-71

STANDARD TYPES | SPECIAL

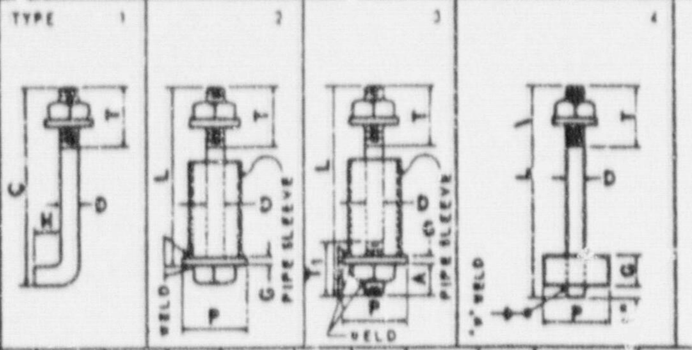

TYPE	MARK	NO REQD	DIAM	LENGTH					THREADS		NO OF NUTS		SQ PLATE		# WELD	WASHERS	PIPE SLEEVE	
			D	L	A	B	C	H	T	T_1	SQ	HEX	P	G			DIA	LENGTH
4	D-58	16	7/8"φ	1'-10"					2 1/4"			16	4"	1/2"	1/4"	16	2"	1'-5 1/2"
4	D-59	11	1/2"φ	1'-9"					1 1/2"			11	3"	3/8"	1/4"	11	1 1/2"	1'-5 5/8"
4	D-60	4	3/4"φ	1'-10"					2"			4	4"	3/8"	1/4"	4	2"	1'-5 5/8"
4	D-61	16	1"φ	1'-10"					2 1/2"			16	5"	1/2"	1/4"	16	2"	1'-5 1/2"

DIMENSIONS ARE IN INCHES UNLESS OTHERWISE NOTED

NOTES: - ALL MATERIAL TO BE A.S.T.M. A36 STEEL

MUHE-2B Page 5 of 5

Attachment "K"

Make-Up Tank

Six Pages Total

Calc S96-0013 rev. 0

FPC – Crystal River Unit 3
Seismic Verification of Tanks

Calculation For:
Vertical Tank on 4 Legs

Rev	By	Date	Chk'd By	Date
0	DHR	10/31/95	Pds	12/12/95

Equip. ID:	MUT–1
Building:	AUXILIARY
Elevation:	119
Rm Row/Col:	302 / L

Equipment Description:
MAKE–UP TANK

Also Applicable for:

Vertical Tank on 4 Legs:

Drawing: M–6057 (Babcock & Wilcox) & SK–7848–1
Anch. Drw.: SC–421–110, SC–412–111, SC–422–043, SC–423–027
Vendor: Babcock & Wilcox
Model: ASME Section III Dished Head

Methodology: Tank MUT–1 is not a flat bottomed vertical tank so the SQUG methodology given in Section 7 of the Florida Power PSP "Seismic Verification of Nuclear Plant Equipment", Rev. 1, 9/12/94, is not applicable. MUT–1 is supported by 4 legs (6" x 6" x 1/2" angle 5'–11" long welded to an 8" x 8" x 1" base plate) spaced at 90% around the perimeter. Each leg is anchored to a reinforced concrete plinth (12" x 12" x 5" high) by one 1" diameter cast–in–place bolt. Since anchorage is the critical element, calculation focuses on anchorage.

Dimensions: Dimensions are obtained from the referenced drawings

Tank:	Outside Diameter (in)	D	96.00	
	Overall Height (in)	H	161.00	
	Thickness of tank shell (in)	t_s	0.438	See Note 1
	Thickness of tank head (top/bottom) (in)	t_h	0.438	See Note 1
	Weight density steel (lbf/in ^ 3)	W_{st}	0.2840	
	Weight density fluid (lbf/in ^ 3)	W_{fl}	0.0361	
	Height of shell portion (in)	h_s	123.00	
	Height of heads (top & bottom) (in)	h_h	19.00	
	Nominal Height of water (in)	h_w	123.00	Assume height of shell
Anchorage:	Cast–in–Place Bolts, type D–53 (see SC–423–027)			
	Diameter Anchor Bolt (in)	b_d	1.000	
	Number anchor bolt total	N_b	4.00	
	Number bolt per leg	N_{leg}	1.00	
	Bolt Embedment (in.) (type D–53 has an embedment > 10 x O.D.)	L_b	10.00	10 x Out. Diam.
	Bolt Spacing (center to center) (in)	S_b	68.00	
	Bolt Edge Distance (in)	E_b	> 8.75	See Note 2
	Concrete strength (psi)	f'_c	3000.00	
Base Plate:	Thickness base plate each leg (in)	t_{bp}	1.00	
	Side Dimensions (square, in)	l_{bp}	8.00	

Calc S94-0013 rev. 0

FPC – Crystal River Unit 3
Seismic Verification of Tanks

Calculation For:
Vertical Tank on 4 Legs

Rev	By	Date	Chk'd By	Date
0	DMR	10/31/95	Pds	12/13/95

Calculation

(1) Weight

The tank weight consists of the shell portion, the top and bottom heads, and the leg attachments (4 leg angles, a steel attachment ring, cross bracing, etc.). The tank is conservatively assumed to be cylindrical with top and bottom circular disks. The calculated weight uses an estimated thickness (see Note 1) to further overestimate weight to account for legs and miscellaneous steel.

W tank = W shell + 2 (W head) + W contents =
W shell = (pi) (D) (hs) (ts) (Wst) = 4609 lb
W head = 2 (pi) (th) [(D) (hh) + (D/2) ^ 2] (Wst) = 3223 lb
W contents = (pi) (D/2) ^ 2 (hw) (W fl) = 32140 ib
Calculated W tank = 39972 lb
Use as W tank = 40000 lb

(2) C. G.

The bottom of the tank is 16.5 in above the anchorage. The C.G. is calculated from the anchorage base-plate as:

$$\text{Tank cg} = \frac{(W\ Steel)\ (H/2) + (W\ water)\ (hw/2)}{(W\ tank)} \qquad 65.22\ \text{in}$$

C.G. = (Tank cg) + (dist. to bottom) = 81.72 in

(3) Loading

To determine the Seismic Demand use Auxiliary Building Elevation 119' SSE floor reponse spectra at 4% damping. These spectra are determined in FPC calculation S-94-0011, "Seismic Verification of Tanks – SQUG Methodology", Rev. 0, 1/19/94. From S-94-0011 pages 27 and 28:

OBE FRS Peak (4% damping) = 0.353 g
OBE FRS ZPA (4% damping) = 0.05 g

Conservatively assume tank is flexible and use peak spectral acceleration. For 4% SSE FRS peak use 2 times OBE Peak, therefore:

Horizontal 4% SSE Peak = 0.71 g
Vertical 4% SSE Peak (2/3 Horiz.) = 0.47 g

(4) Overturning

Worst case will be for horizontal earthquake at 45 degrees to tank legs. Therefore determine overturning for horizontal along 45 deg to legs and vertical earthquake acting upward (assisting overturning).

Let F1 and F2 each represent vertical force in two legs (see Figure on next page); i.e., F1 is the upward force resisting overturning and F2 is the force assisting overturning:

Calc S96-CC13 rev.0

FPC – Crystal River Unit 3
Seismic Verification of Tanks

Calculation For:
Vertical Tank on 4 Legs

Rev	By	Date	Chk'd By	Date
0	DHR	10/31/95	Pds	12/13/95

Overturning (Continued)

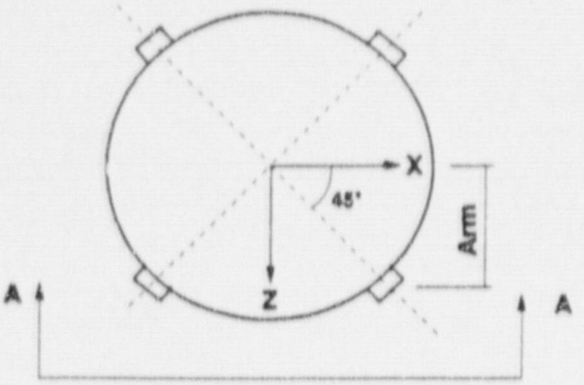

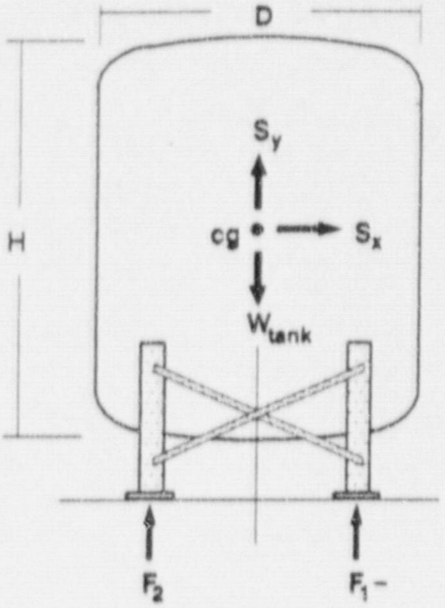

Section A - A

(a) Moment arm = Arm =
from drawing SC-422-043 = 2'-10" = 34.00 in

(b) Sum Forces vertical:
F1 + F2 = (W tank) (1.0 – SSE vert) =
F1 + F2 = 40000 * (1-SSEv) = 21173 lb

(c) Sum Moments about Z:
F1 (Arm) = F2 (Arm) + (W tank) (SSE hor) (cg) =
F1 – F2 = (W tank) (SSE hor) (cg) / (Arm) = 67878 lb

(d) Solve equations (c) and (b) for F1:
F1 + (F1 – 67878) = 21173 lb
F1 = 44526 lb
F2 = -23352 lb

(e) Determine anchor bolt pullout forces:
Each force (F1 and F2) represents two of the tank legs and each leg has one 1" diameter anchor bolt. The maximum and minimum forces are:
Max. anchorage vertical force (F1/2) = 22263 lb
Min. anchorage vertical force (F2/2) = -11676 lb

Since negative anchorage forces represent bolt pullout, only the minimum force needs to be considered for this tank. Pu = 11676 lb

(f) Determine anchor bolt shear forces:
Total shear = (W tank) (SSE Horiz.) = 28240 lb
Bolt shear = (Total shear) / (4 bolts) = Vu = 7060 lb

Calc S96-003 rev. 0

FPC – Crystal River Unit 3
Seismic Verification of Tanks

Calculation For:
Vertical Tank on 4 Legs

Rev	By	Date	Chk'd By	Date
0	DHL	10/31/95	Pds	12/13/95

(5) Anchor Bolt Allowables (From GIP Section 4.4 and Appendix C)

Allowables for 1" Cast-In-Place Bolts (Type D-53 from SC-423-027)

Pnom =	26.69	ksi	Vnom =	13.35	ksi
RLp =	1.00	embedment red. factor	RLs =	1.00	
RSp =	1.00	spacing red. factor	RSs =	1.00	
REp =	1.00	edge distance red. factor	REs =	1.00	(See Note 2)
RFp =	0.93	for fc=3000 psi concrete	RFs =	0.93	
RCp =	1.00	cracked concrete red. fact.	RCs =	1.00	

Pu' = Pnom (RLp) (RSp) (REp) (RFp) (RCp) = 24.71 Kip **(See Note 2)**
Vu' = Vnom (RLs) (RSs) (REs) (RFs) (RCs) = 12.36 Kip **(See Note 2)**

(6) Evaluate Anchorage

	Allowable	>	Maximum?	
Maximum anchor bolt pullout	24710 lb		11676 lb	OK
Maximum anchor bolt shear	12360 lb		7060 lb	OK

Interaction: The interaction curves for cast-in-place bolts are taken from Section C.3.7 and Figure C.3-2 of the GIP. Since the GIP anchorage criteria for cast-in-place bolts and headed studs ensure that failure does not occur in concrete, the interaction formulation for steel failure is recommended:

for $0.0 < (V/Va) < 0.3$, $(P/Pa) < 1$
$0.3 < (V/Va) < 1.0$, $0.7 \times (P/Pa) + (V/Va) < 1$

therefore, since $(V/Va) = 0.57$
$0.7 \times (P/Pa) + (V/Va) = 0.90$ OK

CONCLUSION

The tank(s) under evaluation:

MUT-1

is/are acceptable.

NOTES:

(1) The specified minimum thickness given on the drawing (M-6057) is not legible. A value of 7/16" is assumed for the shell and head thicknesses. A minimum thickness calculation using the ASME formula:

$tm = [P D] / [2(Sm + yP)] + a$ where
P = internal design pressure (psi)
D = outside diameter (in)
Sm = allowable stress intensity (psi)
y = 0.4
a = additional thickness (corrosion, etc.) (in)

yields a thickness of about 0.365" (with P = 100 and a = 1/8"). Since these values are only used to determine the weight of the tank, 7/16" is a conservative estimation.

(2) The reinforced plinth is 5" high (see drawing SC-422-043). The minimum embedment for the D-53 type 4 cast-in-place bolt (see SC-423-027) is (L - T - G - bt - 1" = 23" - 2.5" - .5" - 1" - 1" = 18"). Therefore, even if the plinth is ignored, the remaining embedment exceeds the Emin (18" - 5" = 13" > 10"), and the edge reduction factor can be taken as 1.0 (i.e., ignore the plinth edge).

Calc S96-0013 rev. 0

FPC – Crystal River Unit 3
Seismic Verification of Tanks

Calculation For:
Vertical Tank on 4 Legs

Rev	By	Date	Chk'd By	Date
0	DHL	10/3/95	Pds	12/13/95

FLORIDA POWER CORPORATION
ST. PETERSBURG, FLORIDA
CRYSTAL RIVER PLANT
UNIT NO. 3 — 855,000 KW

Structural - Anchor Bolt Lis
AUXILIARY BLDG FL EL 119-0" (NORTH)
MATERIAL AS SHOWN ON DWG. NO. SC-421-111

4203	[illegible]	0	[illegible]
WORK ORDER	SIZE DRAWING	REV	FPC DRAWING NO

GILBERT ASSOCIATES, INC.
ENGINEERS AND CONSULTANTS
READING, PENNA.

DRAFTING: REV · CH · APP · DATE — ENGINEERING APP.: REV · CH · APP · DATE

STANDARD TYPES — **SPECIAL TYPES**

TYPE 1 · 2 · 3 · 4

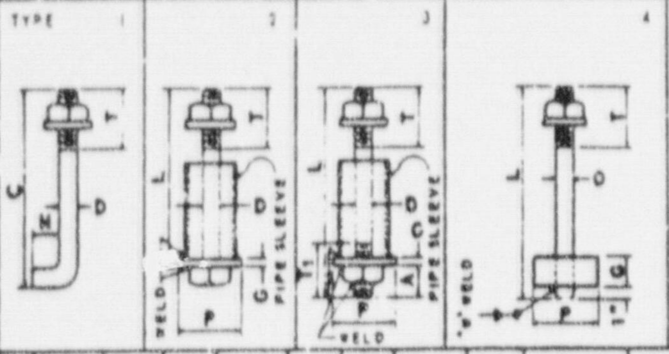

TYPE	MARK	NO. REQ'D	DIAM. D	LENGTH L	A	B	C	H	THREADS T	THREADS T1	NO. OF NUTS SQ	NO. OF NUTS HEX	SQ PLATE P	SQ PLATE G	B WELD	WASHERS	PIPE SLEEVE DIA	PIPE SLEEVE LENGTH
4	D-53	12	1"φ	1'-11"					2½"			12	5"	½"	¼"	12	2"	1'-5½"
4	D-55	8	½"φ	1'-9"					1½"			8	3"	⅜"	¼"	8	1½"	1'-5⅜"
4	D-56	12	⅞"φ	2'-2"					2½"			12	4"	½"	¼"	12	2"	1'-5½"

DIMENSIONS ARE IN INCHES UNLESS OTHERWISE NOTED

NOTES:- ALL MATERIAL TO BE A.S.T.M. A36 STEEL.

Florida Power
CORPORATION

DESIGN ANALYSIS/CALCULATION

Crystal River Unit 3

Page 1 of 6

DOCUMENT IDENTIFICATION NO	REVISION
S96-0013	0

Attachment "L"

Spent Fuel Coolant Demineralizer

Six Pages Total

Calc S94-0013 rev 0

FPC – Crystal River Unit 3
Seismic Verification of Tanks

Calculation For:
Vertical Tank on 4 Legs

Rev	By	Date	Chk'd By	Date
0	DHH	10/31/95	Pds	12/13/95

Equip. ID:	SFDM–1
Building:	AUXILIARY
Elevation:	119
Rm Row/Col:	302 / J

Equipment Description:
SPENT FUEL COOLANT DEMINERALIZER

Also Applicable for:

Vertic... Tank on 4 Legs

Drawing: 40–45 001 06 (FPC M001160)
Anch. Drw.: SC–421–110, SC–412–111, SC–422–043, SC–423–027
Vendor: Babcock & Wilcox
Model:

Methodology — Tank SFDM–1 is not a flat bottomed vertical tank so the SQUG methodology given in Section 7 of the Florida Power PSP "Seismic Verification of Nuclear Plant Equipment", Rev. 1, 9/12/94, is not applicable. SFDM–1 is supported by 4 legs (3" Sch 40 pipe welded to a 7–1/4" diameter x 1/4" circular base plate) spaced at 90% around the perimeter. Since the tank anchorage is the critical element, this calculation will focus on the anchorage.

Dimensions — Dimensions are obtained from the referenced drawings

Tank:	Outside Diameter (in)	D	36.00	
	Overall Height (in)	H	195.00	
	Thickness of tank shell (in)	t_s	0.313	5/16" drawing
	Thickness of tank head (top/bottom) (in)	t_h	0.313	5/16" assumed
	Weight density steel (lbf/in ^ 3)	W_{st}	0.2840	
	Weight density fluid (lbf/in ^ 3)	W_{fl}	0.0361	
	Height of shell portion (in)	h_s	48.00	
	Height of heads (top & bottom) (in)	h_h	7.88	
	Nominal Height of water (in)	h_w	74.00	
Anchorage:	Cast–in–Place Bolts, type D–53 (see SC–423–027)			
	Diameter Anchor Bolt (in)	b_d	1.000	
	Number anchor bolt total	N_b	8.00	
	Number bolt per leg	N_{leg}	2.00	
	Bolt Embedment (in.) (type D–53 has an embedment > 10 x O.D.)	L_b	10.00	10 x Out. Diam.
	Bolt Spacing (center to center) (in)	S_b	6.00	
	Bolt Edge Distance (in)	E_b	6.00	
	Concrete strength (psi)	f'_c	3000.00	
Base Plate:	Thickness base plate each leg (in)	t_{bp}	0.25	
	Side Dimensions (circ. diam., in)	l_{bp}	7.25	

Calc S96-0013 rev. 0

FPC – Crystal River Unit 3
Seismic Verification of Tanks

Calculation For:
Vertical Tank on 4 Legs

Rev	By	Date	Chk'd By	Date
0	DM	10/31/95	Pds	12/13/95

Calculation

(1) Weight

The tank weight consists of the shell portion and the top and bottom heads. The tank is conservatively assumed to be cylindrical with top and bottom circular disks:

W tank = W shell + 2 (W head) + W contents =
W shell = (pi) (D) (hs) (ts) (Wst) = 482 lb
W head = 2 (pi) (th) [(D) (hh) + (D/2) ^ 2] (Wst) = 339 lb
W contents = (pi) (D/2) ^ 2 (hw) (W fl) = 2719 lb
W tank = 3540 lb

(2) C. G.

The bottom of the tank is 14.125 in above the anchorage. The C.G. is calculated from the anchorage base–plate as:

$$\text{Tank cg} = \frac{(\text{W Steel})\ (\text{H}/2) + (\text{W water})\ (\text{hw}/2)}{(\text{W tank})} \qquad 51.02\ \text{in}$$

C.G. = (Tank cg) + (dist. to bottom) = 65.15 in

(3) Loading

To determine the Seismic Demand use Auxiliary Building Elevation 119 SSE floor reponse spectra at 4% damping. These spectra are determined in FPC calculation S–94–0011, "Seismic Verification of Tanks – SQUG Methodology", Rev. 0, 1/19/94. From S–94–0011 pages 27 and 28:

OBE FRS Peak (4% damping) = 0.353 g
OBE FRS ZPA (4% damping) = 0.05 g

Conservatively assume tank is flexible and use peak spectral acceleration. For 4% SSE FRS peak use 2 times OBE Peak, therefore:

Horizontal 4% SSE Peak = 0.71 g
Vertical 4% SSE Peak (2/3 Horiz.) = 0.47 g

(4) Overturning

Worst case will be for horizontal earthquake at 45 degrees to tank legs. Therefore determine overturning for horizontal along 45 deg to legs and vertical earthquake acting upward (assisting overturning).

Let F1 and F2 each represent vertical force in two legs (see Figure on next page); i.e., F1 is the upward force resisting overturning and F2 is the force assisting overturning:

Attachment "M"

Nuclear Service CCC Heat Exchangers

Six Pages Total

Attachment M CALC. S96-0013 Rev. 1 Pg 2 of 6

FPC - Crystal River Unit 3
Seismic Verification of Tanks

Calculation For:
Horizontal Heat Exchanger

Rev	By	Date	Chk'd By	Date
0				
1	THR	11/22/97	SKH	12-03-97

Equip. ID:	SWHE-1A
Building:	AUXILIARY
Elevation:	095
Row/Col:	Sea Water

Equipment Description:
NUCLEAR SERVICE CLOSED CYCLE
COOLING HEAT EXCHANGER 3A

Also Applicable for:
SWHE-1C; for SWHE-1B and 1D see S97-0002

Heat Exchanger

Drawing:	3-69-06-30275-D1 Rev. 4 and 3-69-06-30225-B1 (M1307)
Anch. Drw.:	SC-422-028, SC-422-041 and SC-423-026
Vendor:	Struther Wells Corp.
Model:	Type 37-4INX32-6H-EXCH

Step 1:
(1) Input Data See Figure 7-13 of Florida Power Plant Specific Procedure for "Seismic Verification of Nuclear Plant Equipment", Rev. 1, 9/12/94
(Notes are at the bottom of page 4.)

				Appliicable?
Tank:	Diameter (ft)	D	3.16	OK
	Length (ft)	L	41.00	OK
	Thickness of tank shell (in)	t	0.44	7/16 in
	Weight of tank plus fluid (lbf)	W_{tf}	70000.0	Rev. 1 change
	Weight density (lbf/ft^3)	G_w	218.21	NO
	Height of c.g. above anchorage (ft)	H_{cg}	2.08	
Saddle:	Spacing (ft)	S	22.00	See Note 1
	Height of saddle plate from bottom of the tank to the base plate (in)	h	6.06	
	Shear modulus (psi)	G	1.12E+07	
	Elastic modulus (psi)	E	2.90E+07	
	Number of Saddles	N_s	2.00	OK
Base Plate:	Thickness base plate under saddle (in)	t_b	1.00	
	Min. yield strength (psi)	f_y	30000.0	
	Thickness of leg of weld	t_w	0.50	
	Eccentricity from anchor bolt CL to the vertical saddle plate	e_s	5.00	
Bolts:	Number of locations, each saddle	N_L	2.00	OK
	Number of anchor bolts per location	N_B	1.00	OK
	Diameter of anchor bolt (in)	d	1.00	
	Distance between extreme anchor bolts in base plate of saddle (ft)	D'	1.83	OK

Loading: SSE Floor reponse spectra at 4% damping

ATTAHMENT M S·96·0013, Rev 1 pg 3 of 6

FPC - Crystal River Unit 3
Seismic Verification of Tanks

Calculation For:
Horizontal Heat Exchanger

Rev.	By	Date	Chk'd By	Date
0				
1		11/12/97	RKH	12/03/97

Step 2:
(2) Anchor Bolt Allowables (From GIP Section 4.4 and Appendix C Table C.3-1)

Allowables for 1.0" Cast-In-Place Bolts (Mark D4 type 4 from SC-423-026)
(also from SC-422-041)

Actual Embedment =	13.00	Min Allow.	10.00	in
Actual Spacing =	22.00	Min Allow.	12.63	in
Actual Edge Distance =	9.00	Min Allow.	8.75	in

Pnom =	26.69	ksi	Vnom	13.35	ksi
RLp =	1.00	embedment red. factor	RLs =	1.00	
RSp =	1.00	spacing red. factor	RSs =	1.00	
REp =	1.00	edge distance red. factor	REs =	1.00	
RFp =	0.93	for fc=3000 psi concrete	RFs =	0.93	
RCp =	1.00	cracked concrete red. fact.	RCs =	1.00	

Pu' = Pnom (RLp)(RSp)(REp)(RFp)(RCp) = 24.71 Kip
Vu' = Vnom (RLs)(RSs)(REs)(RFs)(RCs) = 12.36 Kip -

Step 3:
(3) Base Plate Bending Strength Reduction Factor (RB)

RB = Bending strength reduction factor = $\frac{(fy)\ (tb^2)}{(3)\ (Pu')}$ 0.40

Step 4:
(4) Base Plate Weld Strength Reduction Factor (RW)

RB = Weld strength red. fact.= $\frac{(tw)\ (es)\ (30600)\ (2.83)}{Pu'}$ 8.76

Step 5:
(5) Anchor Tension and Shear Allowable

Pu = (Pu') (smaller of RB, RW) = 10.00 Kip
Vu = Shear allowable anchor load = (Vu') = 12.36 Kip

Step 6:
(6) Calculated Ratios

Alp = (Pu') / (Vu') = 0.81
Wb = (Wtf) / [(NS) * (NL) * (NB)] = 17500.0 lbs
Vu / Wb = 0.71
Hcg / D' = 1.14
Hcg / S = 0.09
F1 = SQRT [(NS^2) + 1] = 2.24
F2 = SQRT [(NL^2) * (Hcg / D')^2 + (.667^2)
+ ((Hcg/S)^2) * ((NS^2) / (NS-1)^2)] = 2.38

Attachment M

FPC - Crystal River Unit 3
Seismic Verification of Tanks

Calculation For:
Horizontal Heat Exchanger

S.960013, Rev.1 Page 4 of 6

Rev.	By	Date	Chk'd By	Date
0				
1	~~11/22/97~~ [illegible]	11/12/97	RKH	12/03/97

Step 7:
(7) Determine Acceleration Capacity of Tank Anchorage

Llow = [(Vu) / (Wb)] * [(1) /(F1)] = 0.32 g

$$Lup = \frac{[\,(Vu) / (Wb) + (0.7) / (Alp)\,]}{[\,(0.7) / (Alp)\,] * (F2) + (F1)} = 0.37\ g$$

Lamb = Smaller of Llow or Lup = 0.32 g

Step 8:
(8) Is Tank/Heat Exchanger Rigid or Flexible in Transverse or Vertical?

Sc = From Figure 7-15 for Heat Exch. = 13.00 ft
(Use D = 3.156 ft)
(Use t = 0.438 in)

Is Tank / Heat Exchanger Rigid or Flexible ? -
Rigid if Sc >or= S , Flexible if Sc < S
From Step 1, S = 22.000 ft

Tank / Heat Exchanger in Transverse or Vertical **Flexible**

Step 9:
(9) Is Tank/Heat Exchanger Rigid or Flexible in Longitudinal Direction?

Flong. = [(1) / (2PI)] * SQRT[(ks)*(g) / (Wtf)]

$$\text{where } ks = \frac{1}{\dfrac{(h^3)}{(3 * E * Iyy)} + \dfrac{(h)}{(As * G)}}$$

(Use Iyy = 907.08 in^4)
(Use As 29.25 in^2)

therefore, ks = 4.67E+07
Flong. = 80.8208342

Tank / Heat Exchanger in Longitudinal Direction **Rigid**

Step 10:
(10) Compare Seismic Demand to Capacity Acceleration

From Steps 8 and 9, if tank/heat exchanger is:
rigid - Use Zero Period Acceleration (ZPA) of 4% damped floor response spectrum
flexible - Use Peak Spectral Acceleration (SPA) of 4% damped floor response spectrum

Attachment M

FPC - Crystal River Unit 3
Seismic Verification of Tanks

Calculation For:
Horizontal Heat Exchanger

S-96-0013, Rev. 1 Page 5 of 6

Rev.	By	Date	Chk'd By	Date
0				
1	~~11/12/97~~ DJM	11/12/97	BKH	12/03/97

Step 10 (Continued):

The seismic loading is the 4% damped SSE spectra for the Auxiliary Building at 75' which are identical to the ground response spectra. [Reference: "Environmental and Seismic Qualification Program Manual", (E/SQPM), Rev. 8, Section 5.0 Seismic Qualification Data, Figure 22]. From E/SQPM Section 5.0;

OBE Spectrum Peak (2% damping) = 0.135g ZPA for 2% = 0.05g
OBE Spectrum Peak (5% damping) = 0.100g ZPA for 5% = 0.05g

Conservatively, for 4% SSE take 2 times 2% OBE Peak =
therefore, Horizontal 4% SSE Peak = 0.27 g
Vertical 4% SSE Peak (2/3 Horiz.) = 0.18 g

Anchorage is Adequate if:

(1) Lamb > ZPA (for rigid tanks/heat exchangers) or
(2) Lamb > SPA (for flexible tanks/heat exchangers)

SPA (use peak as specified above) = 0.27 g
Anchorage Capacity, Lamb, from Step 7 = 0.32 g

Check if Capacity (Lamb) > Demand (SPA) ? **OK**

Step 11:

(11) Confirm Stresses in the Saddle are Acceptable

The saddle and stiffners are only about 6" deep (between the Saddle pad and top of the plinth). Bending of the stiffened saddle is adequate by inspection.

For shear the anchorage has been determined as adequate and the amount of shear area in the stiffened saddles is much greater than the area of the anchor bolts (2 1" anchor bolts per plinth) and is therefore also adequate.

CONCLUSION

The Heat Exchangers under evaluation:

SWHE-1A
SWHE-1C

are acceptable in accordance with Section 7 of the FPC PSP for "Seismic Verification of Nuclear Plant Equipment".

For the following Heat Exchangers mounted on steel frames see S97-0002:

SWHE-1B
SWHE-1D

NOTES

(1) **The spacing between saddles (22') slightly exceeds the SQUG exclusion rule of 20' max. spacing. However, the heat exchanger is rigid longitudinally, the results vary only slightly versus the same heat exchanger with 20' saddle spacing, the capacity >> demand, and SWHE-1A is located at the base elevation in a low seismic area. It is concluded that the intent of the caveat is met.**

Attachment M

FPC – Crystal River Unit 3 Seismic Verification of Tanks Calculation For: Horizontal Heat Exchanger	S-96-0013, Rev. 1			Page 60 66
Rev	By	Date	Chk'd By	Date
0	JM	11/12/97	Pds	1/22/96
1	JM	11/12/97	BKH	12/03/97

FLORIDA POWER CORPORATION
ST PETERSBURG, FLORIDA
CRYSTAL RIVER PLANT
UNIT NO. 3 855 000 KW

Structural – Anchor Bolt List

MATERIAL AS SHOWN ON DWG. NO. SC-422-[illegible] SC-422-[illegible]

GILBERT ASSOCIATES, INC
ENGINEERS AND CONSULTANTS
READING PENNA

STANDARD TYPES	SPECIAL TYPES

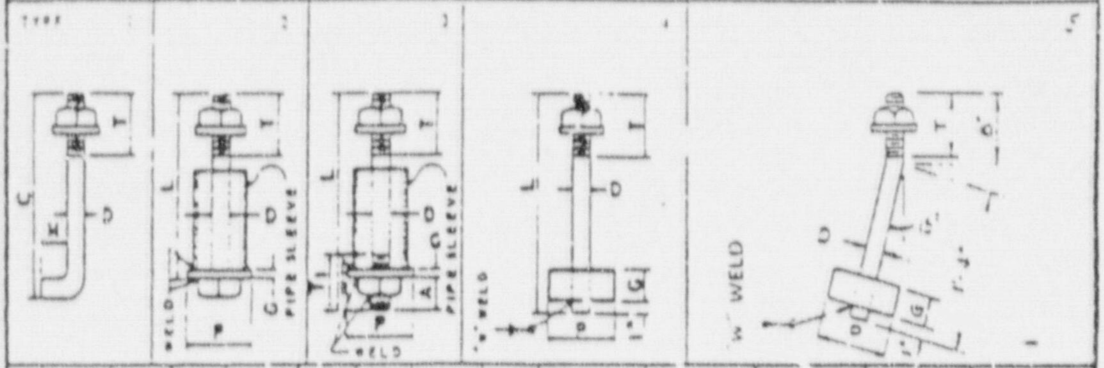

TYPE	MARK	NO REQD	DIAM D	LENGTH L	A	B	C	H	THREADS T	THREADS T1	NO OF NUTS SQ	NO OF NUTS HEX	SQ PLATE P	SQ PLATE G	WELD	WASHERS	PIPE SLEEVE DIA	PIPE SLEEVE LENGTH
4	01	20	1¼'	2-9					3'			20	6'	5/8'	5/16'	20	2½'	1'-6⅝'
4	02	32	7/8'	1'-5'					2½'			32	4'	½'	¼'	32	2'	1'-0'
4	03	8	1¼'	2'-0'	—	—	—	—	3'			8	6'	5/8'	5/16'	8	2½'	1'-6⅝'
4	04	68	1"	1'-6					2½'			68	5'	½'	¼'	68	2'	1'-0½'
4	05	8	½'	1'-7'					1½'			8	3'	3/8'	¼'	8	1½'	11⅝'
4	06	12	¾'	1'-9'					2'			12	4'	3/8'	¼'	12	2'	1'-0⅝'
4	07	68	¾'	1'-5'					2'			68	4'	3/8'	¼'	68	2'	1'-0⅝'
4	08	24	1⅛'	2'-3'					2½'			24	5'	½'	¼'	24	2½'	1'-6½'
5	09	80	1'	2'-0'					2½'			80	5'	½'	¼'	80	–	–
4	010	32	5/8'	1'-2'					1¼'			32	3'	3/8'	3/16'	32	1'	0'-9'
4	011	12	½'	1'-5'					1¼'			12	3'	3/8'	¼'	12	1½'	1'-0⅝'
4	012	4	1⅛'	2'-0'					2½'			4	5'	½'	¼'	4	2½'	1'-6'
4	013	8	1'	1'-5'					2½'			8	5'	½'	¼'	8	2'	1'-0½'

DIMENSIONS ARE IN INCHES UNLESS OTHERWISE NOTED

NOTES:- ALL BOLT MATERIAL TO BE A.S.T.M. A36

Florida Power
CORPORATION

DESIGN ANALYSIS/CALCULATION

Crystal River Unit 3

Page 1 of 6

DOCUMENT IDENTIFICATION NO	REVISION
S96-0013	0

Attachment "N"

Nuclear Service Closed Cycle Surge Tank

Six Pages Total

Calc S96-0013 rev. 0

FPC – Crystal River Unit 3
Seismic Verification of Tanks

Calculation For:
Vertical Tank on 4 Legs

Rev	By	Date	Chk'd By	Date
0	DMR	11/2/95	Pds	12/13/95

Equip. ID: SWT-1
Building: AUXILIARY
Elevation: 095
Rm Row/Col: 307/S

Equipment Description:
NUCLEAR SERVICE CLOSED CYCLE SURGE TANK

Also Applicable for:

Vertical Tank on 4 Wide Flange Legs
Drawing: 5-315-D1 Rev. 3
Anch. Drw.: SC-422-042 and SC-423-026
Vendor: Plant City Steel Co.
Model:

Methodology Tank SWT-1 is not a flat bottomed vertical tank so the SQUG methodology given in Section 7 of the Florida Power PSP "Seismic Verification of Nuclear Plant Equipment", Rev. 1, 9/12/94, is not applicable. SWT-1 is supported by 4 wide flange sections (12WF53) spaced at 90% around the perimeter. Since the tank anchorage will be the critical element, this calculation will focus on the anchorage.

Dimensions Dimensions are obtained from the referenced drawings

Tank:	Outside Diameter (in)	D	132.00
	Overall Height (in)	H	192.00
	Thickness of tank shell (in)	t_s	0.625
	Thickness of tank head (top/bottom) (in)	t_h	0.875
	Weight density steel (lbf/in ^ 3)	W_{st}	0.2840
	Weight density fluid (lbf/in ^ 3)	W_{fl}	0.0361
	Height of shell portion (in)	h_s	129.00
	Height of heads (top & bottom) (in)	h_h	31.50
	Nominal Height of water (in)	h_w	138.00
Anchorage:	Cast-in-Place Bolts (see SC-423-026)		
	Diameter Anchor Bolt (in)	b_d	0.875
	Number anchor bolt total	N_b	8.00
	Number bolt per leg	N_{leg}	2.00
	Bolt Embedment (approx.) (in)	L_b	12.00
	Bolt Spacing (center to center) (in)	S_b	7.00
	Bolt Edge Distance (in)	E_b	7.00
	Concrete strength (psi)	f'_c	3000.00
Base Plate:	Thickness base plate each leg (in)	t_{bp}	1.00
	Side Dimensions (in)	l_{bp}	14.00

S96-0013 rev. 0

FPC – Crystal River Unit 3
Seismic Verification of Tanks

Calculation For:
Vertical Tank on 4 Legs

Rev	By	Date	Chk'd By	Date
0	DiM	11/2/95	Pds	12/13/95

Calculation

(1) Weight The tank weight consists of the shell portion and the top and bottom heads. The tank is conservatively assumed to be cylindrical with top and bottom circular disks:

W tank = W shell + 2 (W head) + W contents =
W shell = (pi) (D) (hs) (ts) (Wst) = 9495 lb
W head = 2 (pi) (th) [(D) (hh) + (D/2) ^ 2] (Wst) = 13294 lb
W contents = (pi) (D/2) ^ 2 (hw) (W fl) = 68175 lb
W tank = 90964 lb

(2) C. G. The tank is located 2'–6" above the anchorage. The C. G. is calculated from the anchorage base–plate.

$$\text{Tank cg} = \frac{(\text{W Steel})\ (H/2) + (\text{W water})\ (hw/2)}{(\text{W tank})} \qquad 75.76 \text{ in}$$

C.G. = (Tank cg) + (2'–6") = 105.76 in

(3) Loading To determine the Seismic Demand should use Auxiliary Building Elev. 95' SSE floor reponse spectra at 4% damping. The spectra for the Auxiliary Building at 95' are identical to the Ground Response spectra. [Reference: "Environmental and Seismic Qualification Program Manual", (E/SQPM), Rev. 8, Section 5.0 Seismic Qualification Data, Figure 22].

OBE Spectral Peak (2% damping) = 0.135g ZPA for 2% = 0.05g
OBE Spectral Peak (5% damping) = 0.100g ZPA for 5% = 0.05g

Conservatively use 2*(2% OBE Peak) as 4% SSE =
therefore, Horizontal 4% SSE Peak = 0.27 g
Vertical 4% SSE Peak (2/3 Horiz.) = 0.18 g

Assume tank is flexible, use Spectral Peak as acceleration

(4) Overturning Worst case will be for horizontal earthquake at 45 degrees to tank legs. Therefore determine overturning for horizontal along 45 deg to legs and vertical earthquake acting upward (assisting overturning).

Let F1 and F2 each represent vertical force in two legs (see Figure); i.e., F1 is the upward force resisting overturning and f2 is the force assisting overturning:

Calc S96-0013 rev. C

FPC – Crystal River Unit 3
Seismic Verification of Tanks

Calculation For:
Vertical Tank on 4 Legs

Rev	By	Date	Chk'd By	Date
0	DHM	11/2/95	PDS	12/13/95

Overturning (Continued)

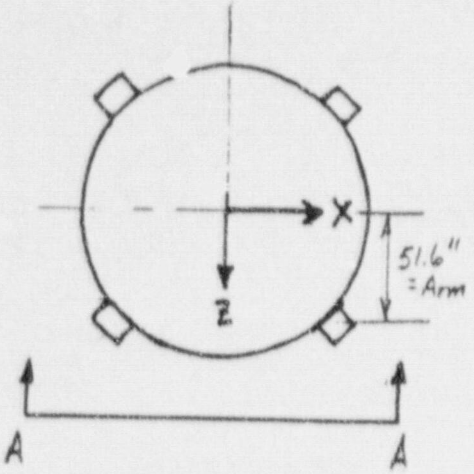

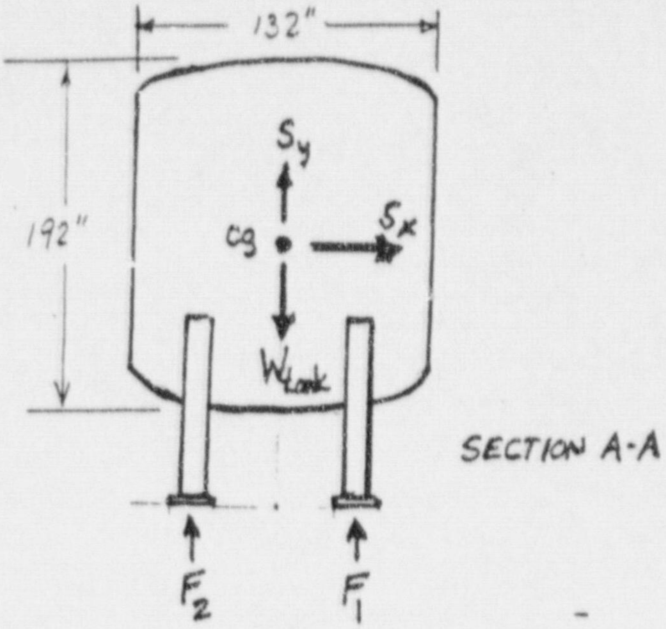

(a) Moment arm = Arm =
[(D / 2) + (l bp / 2)]^2 / sqrt(2) = 51.62 in

(b) Sum Forces vertical:
F1 + F2 = (W tank) (1.0 – SSE vert) =
F1 + F2 = 90964 lb * (0.82) = 74590 lb

(c) Sum Moments about Z:
F1 (Arm) = F2 (Arm) + (W tank) (SSE hor) (cg) =
F1 – F2 = (W tank) (SSE hor) (cg) / (Arm) = 50323 lb

(d) Solve equations (c) and (b) for F1:
F1 + (F1 – 50323) = 74590 lb
F1 = 62456 lb
F2 = 12134 lb

(e) Determine anchor bolt pullout forces:
Each force (F1 and F2) represent two of the tank legs and each leg has two 7/8" diameter anchor bolts. The maximum and minimum bolt forces are:
Max. anchor bolt axial force (F1/4) = 15614 lb
Min. anchor bolt axial force (F2/4) = 3033 lb

Since all anchor forces are positive, bolt pullout (negative force) does not occur for this tank. Therefore, pullout is zero, Pu = 0 lb

(f) Determine anchor bolt shear forces:
Total shear = (W tank) (SSE Horiz.) = 24560 lb
Bolt shear = (Total shear) / (8 bolts) = Vu = 3070 lb

Calc S94-0013 rev.0

FPC – Crystal River Unit 3
Seismic Verification of Tanks

Calculation For:
Vertical Tank on 4 Legs

Rev	By	Date	Chk'd By	Date
0	DHR	11/2/95	Pds	12/13/95

(5) Anchor Bolt Allowables (From GIP Section 4.4 and Appendix C)

Allowables for 7/8" Cast–In–Place Bolts (From SC–422–026)

Pnom =	20.40 ksi		Vnom =	10.20 ksi
RLp =	1.00	embedment red. factor	RLs =	1.00
RSp =	1.00	spacing red. factor	RSs =	1.00
REp =	1.00	edge distance red. factor	REs =	0.84
RFp =	0.93	for fc=3000 psi concrete	RFs =	0.93
RCp =	1.00	cracked concrete red. fact.	RCs =	1.00

Pu' = Pnom (RLp) (RSp) (REp) (RFp) (RCp) = 18.89 Kip
Vu' = Vnom (RLs) (RSs) (REs) (RFs) (RCs) = 7.92 Kip

(6) Evaluate Anchorage

	Allowable	>	Maximum?	
Maximum anchor bolt pullout	18887 lb		0 lb	OK
Maximum anchor bolt shear	7917 lb		3070 lb	OK
Interaction: (P / Pa) + (V / Va) < 1	1		0.39	OK

The interaction curves for cast–in–place bolts are taken from Section C.3.7 and Figure C.3–2 of the GIP. Since the GIP anchorage criteria for cast–in–place bolts and headed studs ensure that failure does not occur in concrete, the interaction formulation for steel failure is recommended:

for 0.0 < (V/Va) < 0.3, (P/Pa) < 1
for 0.3 < (V/Va) < 1.0, 0.7 x (P/Pa) + (V/Va) < 1

therefore, since (V/Va) = 0.39
0.7 x (P/Pa) + (V/Va) = 0.39 < 1 OK

CONCLUSION

The Tank under evaluation:

SWT–1

is acceptable.

Calc S96-0013 rev. 0

FPC – Crystal River Unit 3
Seismic Verification of Tanks

Calculation For:
Vertical Tank on 4 Legs

Rev	By	Date	Chk'd By	Date
0	DHM	11/2/95	Pds	12/13/95

SC-423-026

FLORIDA POWER CORPORATION
ST. PETERSBURG, FLORIDA
CRYSTAL RIVER PLANT
UNIT NO. 3 855,000 KW
Structural – Anchor Bolt List
AUXILIARY BLDG. - N2.1 S2. EQUIPMENT FOUND.
MATERIAL AS SHOWN ON DWG. NO SC-422-341 / SC-422-042

WORK ORDER	SIZE	DRAWING	REV	FPC DRAWING NO.
4203-00	S	423-026	0	SC-423-026

GILBERT ASSOCIATES, INC.
ENGINEERS AND CONSULTANTS
READING, PENNA.

DRAFTING				ENGINEERING APP'L			
MADE JFE	CH REL	APP W.C.					
REV	CH	APP	DATE	REV	CH	APP	DATE

STANDARD TYPES

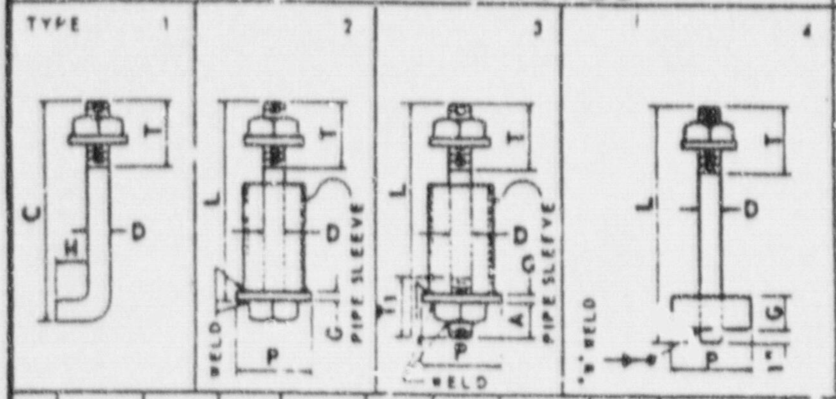

SPECIAL TYPES

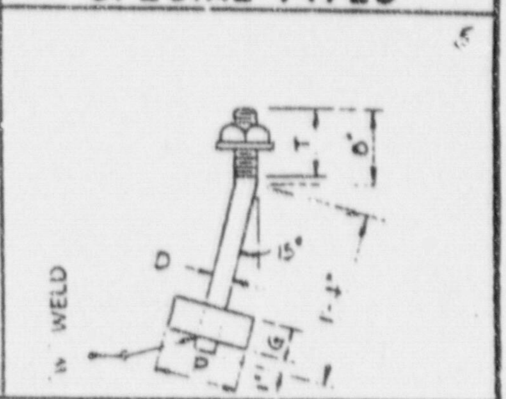

TYPE	MARK	NO REQD	DIAM D	LENGTH L	A	B	C	H	THREADS T	THREADS T₁	NO OF NUTS SQ	NO OF NUTS HEX	SQ PLATE P	SQ PLATE G	"B" WELD	WASHERS	PIPE SLEEVE DIA	PIPE SLEEVE LENGTH
4	01	20	1¼"	2'-9"					3"			20	6"	⅝"	5/16"	20	2½"	1'-6⅝"
4	02	32	⅞"	1'-5"					2½"			32	4"	½"	¼"	32	2"	1'-0"
4	03	8	1¼"	2'-0"					3"			8	6"	⅝"	5/16"	8	2½"	1'-6⅜"
4	04	68	1"	1'-6					2½"			68	5"	½"	⅓"	68	2"	1'-3½"
4	05	6	½"	1'-7"					1½"			8	3"	⅜"	¼"	8	1½"	11⅝"
4	06	12	¾"	1'-9"					2"			12	4"	⅜"	¼"	12	2"	1'-0⅝"
4	07	68	¾"	1'-5"					2"			68	4"	⅜"	¼"	88	2"	1'-0⅛"
4	08	24	1⅛"	2'-0"					2⅜"			24	5"	½"	¼"	24	2½"	1'-6½"
5	09	80	1"	2'-0"					2½"			80	5"	½"	¼"	80	–	–
4	010	32	⅜"	1'-2"					1¼"			32	3"	⅜"	3/16"	32	1"	0'-9"
4	011	12	½"	1'-5"					1½"			12	3"	⅜"	¼"	12	1½"	1'-0⅝"

Attachment "O"

Waste Gas Decay Tanks

Six Pages Total

Calc S96-0013 rev. 0

FPC – Crystal River Unit 3
Seismic Verification of Tanks

Calculation For:
Vertical Tank on 4 Legs

Rev	By	Date	Chk'd By	Date
0		10/26/95	Pds	12/13/95

Equip. ID: WDT–1A
Building: AUXILIARY
Elevation: 095
Rm Row/Col: 302 / Q

Equipment Description:
WASTE GAS DECAY TANK A

Also Applicable for:
WDT–1B, WDT–1C

Vertical Tank on 4 Wide Flange Legs

Drawing: M–6122 Rev. 4 and SK–8079–1
Anch. Drw.: SC–422–028, SC–422–041 and SC–423–026
Vendor: Buffalo Tank Div., Bethlehem Steel Corp.
Model: PLS 135–1/2" x 455" x .655"

Methodology

Tank WDT–1A is a vertical tank supported on 4 WF legs with a 135" high shell and ASME elliptical heads (top and bottom). The SQUG methodology given in Section 7 of the Florida Power PSP "Seismic Verification of Nuclear Plant Equipment", Rev. 1, 9/12/94, is for flat bottomed vertical tanks and is therefore not applicable. WDT–1A is supported by 4 wide flange sections (10 WF 45) 7'–5.25" long spaced at 90% around the perimeter. Each leg is welded to a 10" x 12" x 3/4" base plate with 2 holes for 1–1/8" diameter anchor bolts. Since the tank anchorage will be the critical element, this calculation will focus on the anchorage.

Dimensions

Dimensions are obtained from the referenced drawings

Tank:	Outside Diameter (in)	D	145.31	
	Overall Height (in)	H	210.00	
	Thickness of tank shell (in)	t_s	0.655	
	Thickness of tank head (top/bottom) (in)	t_h	0.655	
	Weight density steel (lbf/in ^ 3)	W_{st}	0.2840	
	Weight density contents (lbf/in ^ 3)	W_{fl}	0.0001	waste gas?
	Height of shell portion (in)	h_s	135.50	
	Height of heads (top & bottom) (in)	h_h	37.25	
	Nominal Height of contents (in)	h_w	210.00	assume full height
Anchorage:	Cast–in–Place Bolts (see SC–423–026)			
	Diameter Anchor Bolt (in)	b_d	1.125	
	Number anchor bolt total	N_b	8.00	
	Number bolt per leg	N_{leg}	2.00	
	Bolt Embedment (in) (type D8 has an embedment > 19")	L_b	11.25	10 x outside diam.
	Bolt Spacing (center to center) (in)	S_b	5.50	from SC–422–041
	Bolt Edge Distance (in)	E_b	6.25	from SC–422–041
	Concrete strength (psi)	f'_c	3000.00	
Base Plate:	Thickness base plate each leg (in)	t_{bp}	0.75	
	Side Dimensions (in)	l_{bp}	10.00	(10" x 12")

Calc S96-0013 rev. 0

FPC – Crystal River Unit 3
Seismic Verification of Tanks

Calculation For:
Vertical Tank on 4 Legs

Rev	By	Date	Chk'd By	Date
0	DTR	10/26/95	Pds	12/13/95

Calculation

(1) Weight

The tank weight consists of the shell portion and the top and bottom heads. The tank is conservatively assumed to be cylindrical with top and bottom circular disks:

W tank = W shell + 2 (W head) + W contents + W legs =
W shell = (pi) (D) (hs) (ts) (Wst) = 11507 lb
W head = 2 (pi) (th) [(D) (hh) + (D/2) ^ 2] (Wst) = 12496 lb
W contents = (pi) (D/2) ^ 2 (hw) (W fl) = 348 lb
W legs = (4) [(45 lbs per WF) + (W base pl.)] = 416 lb
W tank = 24767 lb **(calculated)**

use W tank = 25180 lb **(from drawing)**

(2) C. G.

The tank is located 1'–8.75" above the anchorage. The C. G. is calculated from the bottom of the anchorage base–plate.

$$\text{Tank cg} = \frac{(\text{W Steel})\ (H/2) + (\text{W contents})\ (hw/2)}{(\text{W tank})} \qquad 105.00 \text{ in}$$

C.G. = (Tank cg) + (1'–8.75") = 125.75 in

(3) Loading

To determine the Seismic Demand should use Auxiliary Building Elev. 95' SSE floor reponse spectra at 4% damping. The spectra for the Auxiliary Building at 95' are identical to the Ground Response spectra. [Reference: "Environmental and Seismic Qualification Program Manual", (E/SQPM), Rev. 8, Section 5.0 Seismic Qualification Data, Figure 22].

OBE Spectral Peak (2% damping) = 0.135g ZPA for 2% = 0.05g
OBE Spectral Peak (5% damping) = 0.100g ZPA for 5% = 0.05g

Conservatively use 2*(2% OBE Peak) as 4% SSE;
therefore, Horizontal 4% SSE Peak = 0.27 g
Vertical 4% SSE Peak (2/3 Horiz.) = 0.18 g

Assume tank is flexible, use Spectral Peak as acceleration

(4) Overturning

Worst case will be for horizontal earthquake at 45 degrees to tank legs. Therefore determine overturning for horizontal along 45 deg to legs and vertical earthquake acting upward (assisting overturning).

Let F1 and F2 each represent vertical force in two legs (see Figure); i.e., F1 is the upward force resisting overturning and f2 is the force assisting overturning:

Calc S96-0013 rev. 0

Overturning (Continued)

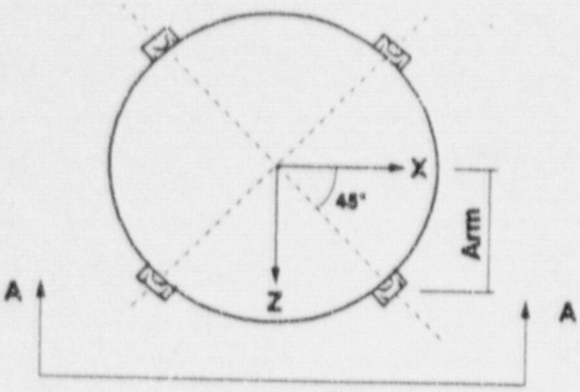

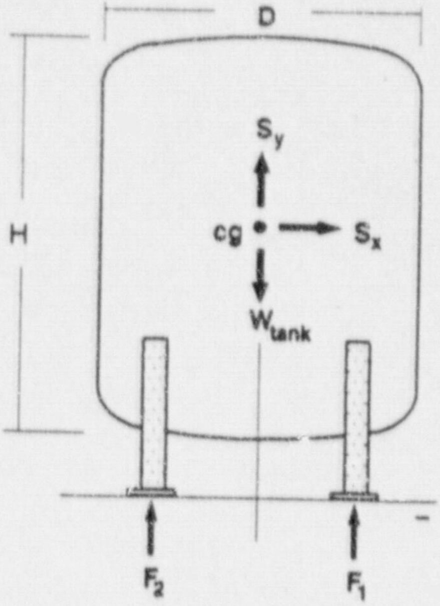

Section A - A

(a) Moment arm = Arm =
[(D / 2) + (lbp / 2)]^2 / sqrt(2) = 54.91 in

(b) Sum Forces vertical:
F1 + F2 = (W tank) (1.0 – SSE vert) =
F1 + F2 = 25180 lb * (0.82) = 20648 lb

(c) Sum Moments about Z:
F1 (Arm) = F2 (Arm) + (W tank) (SSE hor) (cg) =
F1 – F2 = (W tank) (SSE hor) (cg) / (Arm) = 15569 lb

(d) Solve equations (c) and (b) for F1:
F1 + (F1 – 15569) = 20648 lb
F1 = 18109 lb
F2 = 2539 lb

(e) Determine anchor bolt pullout forces:
Each force (F1 and F2) represent two of the tank legs and each leg has two 1–1/8" diameter anchor bolts. The maximum and minimum bolt forces are:
Max. anchor bolt axial force (F1/4) = 4527 lb
Min. anchor bolt axial force (F2/4) = 635 lb

Since all anchor forces are positive, bolt pullout (negative force) does not occur for this tank. Therefore, pullout is zero, Pu = 0 lb

(f) Determine anchor bolt shear forces:
Total shear = (W tank) (SSE Horiz.) = 6799 lb
Bolt shear = (Total shear) / (8 bolts) = Vu = 850 lb

Calc S96-0013 rev.0

FPC – Crystal River Unit 3 Seismic Verification of Tanks Calculation For: Vertical Tank on 4 Legs	Rev	By	Date	Chk'd By	Date
	0	DHM	10/26/95	Pds	12/13/95

(5) Anchor Bolt Allowables (From GIP Section 4.4 and Appendix C)

Allowables for 1-1/8" Cast-In-Place Bolts (D8 type 4 from SC-423-026)

Pnom =	33.80	ksi	Vnom =	16.90	ksi
RLp =	1.00	embedment red. factor	RLs =	1.00	
RSp =	0.75	spacing red. factor	RSs =	1.00	
REp =	0.85	edge distance red. factor	REs =	0.40	
RFp =	0.93	for fc=3000 psi concrete	RFs =	0.93	
RCp =	1.00	cracked concrete red. fact.	RCs =	1.00	

Pu' = Pnom (RLp) (RSp) (REp) (RFp) (RCp) = 20.13 Kip

Vu' = Vnom (RLs) (RSs) (REs) (RFs) (RCs) = 6.33 Kip

(6) Evaluate Anchorage

	Allowable	>	Maximum?	
Maximum anchor bolt pullout	20130 lb		0 lb	OK
Maximum anchor bolt shear	6326 lb		850 lb	OK

Interaction: The interaction curves for cast-in-place bolts are taken from Section C.3.7 and Figure C.3-2 of the GIP. Since the GIP anchorage criteria for cast-in-place bolts and headed studs ensure that failure does not occur in concrete, the interaction formulation for steel failure is recommended:

for $0.0 < (V/Va) < 0.3$, $(P/Pa) < 1$

for $0.3 < (V/Va) < 1.0$, $0.7 \times (P/Pa) + (V/Va) < 1$

therefore, since $(V/Va) = 0.13$

$(P/Pa) = 0.00 < 1$ OK

CONCLUSION

The vertical tanks under evaluation.

WDT-1A

WDT-1B

WDT-1C

are acceptable.

Calc S94-0013 rev. 0

FPC – Crystal River Unit 3
Seismic Verification of Tanks

Calculation For:
Vertical Tank on 4 Legs

Rev	By	Date	Chk'd By	Date
0	DML	10/26/95	Pds	2/13/95

FLORIDA POWER CORPORATION
ST PETERSBURG, FLORIDA
CRYSTAL RIVER PLANT
UNIT NO 3
855,000 KW

[illegible]	S	423-026	0	SC-423-026
WORK ORDER	SIZE	DRAWING NO	REV	[illegible]

GILBERT ASSOCIATES, INC
ENGINEERS AND CONSULTANTS
READING PENNA

Structural – Anchor Bolt List

[illegible]

MATERIAL AS SHOWN ON DWG. NO SC-422-[illegible] SC-422-[illegible]

DRAFTING				ENGINEERING APP.			
[illegible]	[illegible]	[illegible]	[illegible]				
REV	CH	APP	DATE	REV	CH	APP	DATE

STANDARD TYPES

SPECIAL TYPES

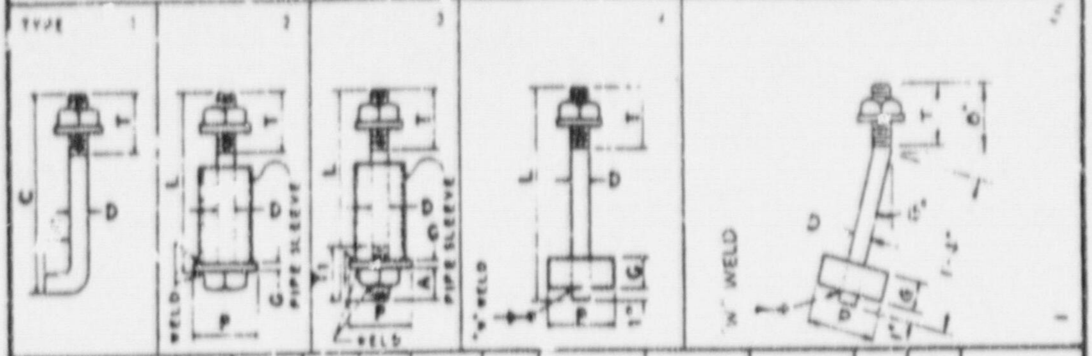

TYPE	MARK	NO REQD	DIAM	LENGTH	A	B	C	H	THREADS		NO OF NUTS		SQ PLATE		WELD	WASHERS	PIPE SLEEVE	
			D	L					T	T1	SQ	HEX	P	G			DIA	LENGTH
4	D1	20	1¼"	2'-9"					3"			20	6"	⅝"	5/16"	20	2½"	1'-6½"
4	D2	32	⅞"	1'-5"					2¼"			32	4"	½"	¼"	32	2"	1'-0"
4	D3	8	1¼"	2'-0"	—			—	3"			8	6"	⅝"	5/16"	8	2½"	1'-6½"
4	D4	68	1"	1'-6"					2½"			68	5"	½"	¼"	68	2"	1'-0½"
[illegible]	[illegible]	6	½"	[illegible]					1½"			8	3"	⅜"	¼"	8	1½"	11⅜"
[illegible]	[illegible]	12	¾"	1'-8"					2"			12	4"	⅜"	¼"	12	2"	1'-0⅜"
4	[illegible]	88	¾"	1'-5"					2"			88	4"	⅜"	¼"	88	2"	1'-0⅜"
4	D8	24	1⅛"	2'-3"					2⅝"			24	5"	½"	¼"	24	2½"	1'-6½"
5	D9	80	1"	2'-0"					2½"			80	5"	½"	¼"	80	-	-
4	D10	32	⅝"	1'-2"					1¼"			32	3"	⅜"	3/16"	32	1"	0'-9"
4	D11	12	½"	1'-5"					1½"			12	3"	⅜"	¼"	12	1½"	1'-0⅜"
4	D12	4	1⅛"	2'-0"					2⅝"			4	5"	½"	½"	4	2½"	1'-6"
4	D13	8	1"	1'-5"					2½"			8	5"	½"	¼"	8	2"	1'-0½"

DIMENSIONS ARE IN INCHES UNLESS OTHERWISE NOTED

NOTES:- ALL BOLT MATERIAL TO BE A.S.T.M. A36

FPC – Crystal River Unit 3
Seismic Verification of Tanks

Calculation For:
Vertical Tank on Skirt

Rev	By	Date	Chk'd By	Date
0		10/30/95	Pds	12/13/95

(5) Anchor Bolt Allowables (From GIP Section 4.4 and Appendix C)

Allowables for 3/4" Cast–In–Place Bolts (B–13 Type 2 from SC–423–044)

Pnom =	15.03 ksi		Vnom =	7.51 ksi
RLp =	1.00	embedment red. factor	RLs =	1.00
RSp =	1.00	spacing red. factor	RSs =	1.00
REp =	1.00	edge distance red. factor	REs =	1.00
RFp =	0.93	for fc=3000 psi concrete	RFs =	0.93
RCp =	1.00	cracked concrete red. fact.	RCs =	1.00

Pu' = Pnom (RLp) (RSp) (REp) (RFp) (RCp) = 13.92 Kip
Vu' = Vnom (RLs) (RSs) (REs) (RFs) (RCs) = 6.95 Kip

(6) Evaluate Anchorage

	Allowable	>	Maximum?	
Maximum anchor bolt pullout	13915 lb		192 lb	OK
Maximum anchor bolt shear	6953 lb		102 lb	OK

Interaction: The interaction curves for cast–in–place bolts are taken from Section C.3.7 and Figure C.3–2 of the GIP. Since the GIP anchorage criteria for cast–in–place bolts and headed studs ensure that failure does not occur in concrete, the interaction formulation for steel failure is recommended:

for $0.0 < (V/Va) < 0.3$, $(P/Pa) < 1$
for $0.3 < (V/Va) < 1.0$, $0.7 \times (P/Pa) + (V/Va) < 1$

therefore, since $(V/Va) = 0.01$
$(P/Pa) = 0.01 < 1$ OK

CONCLUSION

The tanks under evaluation:

EGT–1A	EGT–2A
EGT–1B	EGT–2B

are acceptable.

FPC – Crystal River Unit 3
Seismic Verification of Tanks

Calculation For:
Vertical Tank on Skirt

Rev	By	Date	Chk'd By	Date
0	DHL	10/30/95	PDS	12/13/95

FLORIDA POWER CORPORATION
ST. PETERSBURG, FLORIDA
CRYSTAL RIVER PLANT
UNIT NO. 3 — 855,000 KW
Structural - Anchor Bolt List
STEEL [illegible]
MATERIAL AS SHOWN ON DWG NO SEE NOTES

WORK ORDER	SIZE	DRAWING	REV	FC DRAWING NO
4203 [illegible]	[illegible]	[illegible]	0	[illegible]

GILBERT ASSOCIATES, INC
ENGINEERS AND CONSULTANTS
READING, PENNA

DRAFTING — ENGINEERING APP.
REV CH APP DATE REV CH APP DATE

STANDARD TYPES — SPECIAL TYPES

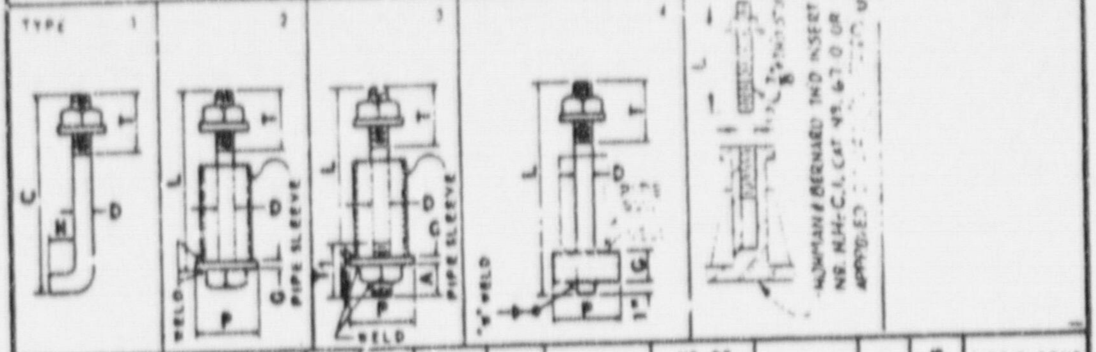

TYPE	MARK	NO. REQD	DIAM D	LENGTH L	A	B	C	H	THREADS T	THREADS T₁	NO. OF NUTS SQ	NO. OF NUTS HEX	SQ PLATE P	SQ PLATE G	WELD	WASHERS	PIPE SLEEVE DIA	PIPE SLEEVE LENGTH
4	B-11	28	1½"ϕ	2'-6"					4"			28	7"	¾"	⅜"		2½"ϕ	1'-11½"
2	B-12	16	½"ϕ	1'-6"					2"			16	3"	¼"	3/16"		1½"ϕ	[illegible]
2	B-13	16	¾"ϕ	1'-0"					2½"			16	4"	⅜"	¼"		2"ϕ	1'-0½"
1	B-14	8	¾"ϕ				2'-0"	3"	2½"			8						
4	B-15	28	¾"ϕ	1'-9"					2½"			28	4"	⅜"	¼"			
5	B-16	16	⅝"ϕ	0'-6"								16						
4	B-17	216	1"ϕ	2'-0"					2½"			216	5"	½"	¼"	216		
1	B-18	74	½"ϕ	1'-6"			1'-0"	6"	1½"			74				74		

DIMENSIONS ARE IN INCHES UNLESS OTHERWISE NOTED

NOTES:- ALL MATERIAL TO BE ASTM A-36 STEEL U.N.
MATERIAL AS SHOWN ON DWG'S: SC-421-171, SC-421-172,
SC-421-173 & SC-421-174.

Florida Power
CORPORATION

DESIGN ANALYSIS/CALCULATION

Crystal River Unit 3

Sheet P1 of 22

DOCUMENT IDENTIFICATION NUMBER	REVISION	REI/MAR/SP NUMBER/FILE
S-96-0013	1	N/A

ATTACHMENT P

REACTOR COOLANT BLEED TANKS

WDT-3A WDT-3B WDT-3C

Attachment "P"

Florida Power
CORPORATION

DESIGN ANALYSIS/CALCULATION

Crystal River Unit 3

Sheet P2 of 22

DOCUMENT IDENTIFICATION NUMBER: S-96-0013
REVISION: 1
FIEI/MAR/SP NUMBER/FILE: N/A

REACTOR COOLANT BLEED TANKS WDT-3A, WDT-3B, WDT-3C

CHECK SEISMIC CAPACITY OF BLEED TANKS USING PSP SECTION 7 METHODOLOGY. (NOTE: SINCE THE TANKS ARE NOT FLAT BOTTOM TANKS, AND THEY SIT ON TANK SKIRTS NOT ALL THE STEPS IN THE PSP ARE APPLICABLE.)

PARAMETERS (SECT 7.3.1 pg 7-5 & TABLE 7-1 pg 7-25)

• LARGE CYLINDRICAL TANK	YES	(DWG 18130 SHT 1)
• AXIS OF SYMMETRY IS VERTICAL	YES	(DWG 18130 SHT 1)
• FLAT BOTTOM	NO	(DWG 18130 SHT 1)
• ANCHORED TO CONCRETE PAD	YES	(DWG SC-422-041)
• TANK MATERIAL SA240 TP304	YES	(DWG 18130 SHT 1)
• ANCHOR BOLTS EVENLY SPACED	YES	(DWG SC-422-041)
• ANCHOR BOLTS CAST IN PLACE	YES	(DWG SC-422-041, SC-423-026)
• FLUID IS WATER OR SIMILAR	YES	(EDBD 6/19 PG 22)
• TANK RADIUS: R = 5 TO 35 ft	YES	(DWG 18130 SHT 1)
• TANK HEIGHT: H' = 10 TO 80 ft	YES	(DWG 18130 SHT 1)
• MAX FLUID HEIGHT: H = 10 TO 80 ft	YES	(DWG 18130 SHT 1)
• MIN SHELL thickness: t_s = 3/16" to 1" IN LOWER 10% OF TANK	YES	(DWG 18130 SHT 1)
• EFFECTIVE SHELL THICKNESS: t_{ef} = 3/16" TO 1"	YES	(SEE STEP 2)
• DIAMETER OF BOLTS: d = 1/2 to 2"	YES	(DWG SC-422-041, SC-423-026)
• ANCHOR BOLTS CAST IN PLACE	YES	(DWG SC-422-041, SC-423-026)
• NUMBER OF BOLTS: N = 8 OR MORE	YES	(DWG SC-422-041, SC-423-026)
• TANK WALL THICK. TO RADIUS RATIO: t_s/R = .001 to .01	YES	(SEE STEP 2)
• EFF. TANK WALL THICK TO RADIUS RATIO: t_{ef}/R = .001 to .01	YES	(SEE STEP 2)
• FLUID HEIGHT TO RADIUS RATIO: H/R = 1.0 to 5.0	YES	(SEE STEP 2)

Attachment P

Florida Power
CORPORATION

DESIGN ANALYSIS/CALCULATION

Crystal River Unit 3

Sheet P3 of 22

DOCUMENT IDENTIFICATION NUMBER	REVISION	REI/MAR/SP NUMBER/FILE
S-96-0013	1	N/A

EVALUATION PROCESS (STARTING ON PG-7-6)

STEP 1: TANK INFO.

TANK WEIGHT = 46K (REF DWG 18130 SHT 1)

NOMINAL TANK RADIUS: $R = 120"$

HEIGHT OF TANK: $H' = 422"$ (SEE NEXT PAGE)

MINIMUM SHELL THICKNESS: $t_{min} = 0.25"$

MIN SHELL thickness in lowest 10% of tank height: $t_s = 11/32"$

YIELD STRENGTH OF TANK: $\sigma_y = 30$ KSI (REF PG P21)

CHAIR HEIGHT: $h_c = 9"$

MODULUS OF ELASTICITY OF TANK MATERIAL: $E_s = 28.3E6$ psi (REF PG P22)

SKIRT thickness $t_s' = 0.375"$

FLUID INFO

DENSITY: $\gamma_f = 62.4 \text{ lb/ft}^3 = 0.0361 \text{ lb/in}^3$

FLUID HEIGHT: $H = 388"$ (SEE NEXT PAGE)

FREE BOARD: N/A (DOMED TANK)

BOLT INFO

NUMBER OF BOLTS: $N = 20$

BOLT DIAMETER: $d = 1\frac{1}{4}"$

EFFECTIVE LENGTH OF ANCHOR BOLT: $h_b = (1'\text{-}6\frac{3}{8}" + 9") = 27\frac{3}{8}"$ [PIPE SLEEVE PLUS CHAIR HEIGHT]

MODULUS OF ELASTICITY BOLT: $E_b = 30E6$ psi

ATTACHMENT "P"

Florida Power
CORPORATION

DESIGN ANALYSIS/CALCULATION

Crystal River Unit 3

Sheet P4 of 22

DOCUMENT IDENTIFICATION NUMBER	REVISION	REI/MAR/SP NUMBER/FILE
S-96-0013	1	N/A

SINCE THE RC BLEED TANKS ARE NOT FLAT BOTTOMED TANKS, EPRI REPORT EPRI NP-5228-SL REV 1 VOLUME 4, RECOMMENDS DETERMINING AN EQUIVALENT CYLINDRICAL TANK. IT SUGGESTS FINDING AN EQUIVALENT TANK WITH THE SAME RADIUS & VOLUME (PG 2-39)

FROM FSAR TABLE 11-5 THE BLEED TANKS HAVE: (REF PG P19)

TANK VOLUME = 11050 ft^3
LIQUID VOLUME = 10150 ft^3

EQUIVALENT HEIGHT OF A TANK WITH A RADIUS OF 10';

$$H' = VOLUME/\pi R^2$$
$$= [11050/\pi(10)^2]\cdot 12$$
$$H' = 422"$$

EQUIVALENT HEIGHT OF WATER:

$$H = [10150/\pi(10)^2]\cdot 12$$
$$H = 388"$$

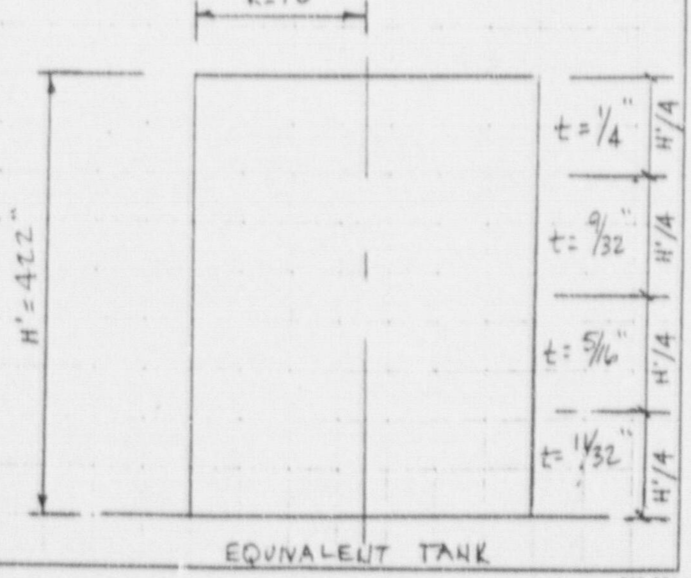

EQUIVALENT TANK

DOCUMENT IDENTIFICATION NUMBER	REVISION	REI/MAR/SP NUMBER/FILE
S-96-0013	1	N/A

STEP 2: DETERMINE THE FOLLOWING RATIOS

$H/R = 388"/120" = 3.23$

$t_s/R = 0.344"/120" = 0.0029$

$$t_{av} = \frac{(0.25 * 105) + (0.281 * 105) + (0.3125 * 105) + (0.344 * 105)}{422}$$

$t_{av} = 0.295"$

$t_{ef} = [t_{av} + t_{min}]/2 = [0.295 + 0.25]/2$
$= 0.2725"$

$t_{ef}/R = 0.2725/120 = 0.0023$

$A_b = \pi d^2/4 = \pi (1.25)^2/4 = 1.23 \text{ in}^2$ (CROSS SECTION AREA ANCHOR BOLT)

$$t' = \left[\frac{N A_b}{2\pi R}\right]\left[\frac{E_b}{E_s}\right] = \left[\frac{20 * 1.23}{2\pi * 120}\right]\left[\frac{30E6}{28.3E6}\right]$$

$t' = 0.035$ [EQUIVALENT SHELL THICKNESS HAVING SAME X-SECT AREA AS ANCHOR BOLT]

$$c' = \left[\frac{t'}{t_s}\right]\left[\frac{h_c}{h_b}\right] = \left[\frac{0.035}{0.344}\right]\left[\frac{9}{27.375}\right]$$

$c' = 0.034$ (COEFFICIENT OF TANK)

$W = 62.4 \text{ lb/ft}^3 * 10150 \text{ ft}^3 = 633360 \text{ lbs}$ (WEIGHT OF FLUID)
$+ 46000$ (WEIGHT OF TANK)
679360 lbs

DOCUMENT IDENTIFICATION NUMBER	REVISION	REI/MAR/SP NUMBER/FILE
S-96-0013	1	N/A

STEP 3: FLUID STRUCTURAL MODAL FREQUENCY

DETERMINE F_f

FROM TABLE 7-2 USING
$H/R = 3.23$
$t_{eq}/R = 0.002$

$F_f' = 0.9$

$F_f = F_f' \left[1200/R \right]$

$= 0.9 \left[1200/120 \right]$

$F_f = 9 \, hz$ (for C.S. TANKS)

$F_f = 9 \left[28.3E6/30E6 \right]^{1/2}$ (STAINLESS STEEL TANK)

$= 8.75 \, hz$

STEP 4: DETERMINE SPECTRAL ACCELERATION
(USING 4% GROUND RESPONSE SPECTRUM FROM
CALCULATION S94-011 (G.C. CALC DC-5520-161.05E) pg 12 & 13)
(REF PG P17 & P18)

OVER FREQUENCY RANGE OF:

$0.8 F_f < F < 1.2 F_f$
$7 hz < F < 10.5 hz$

OBE ACCELERATION @ 7hz = 0.07 G

SSE ACCELERATION @ 7hz = 2*OBE = 0.14 G

ATTACHMENT P

Florida Power
CORPORATION

DESIGN ANALYSIS/CALCULATION

Crystal River Unit 3

Sheet P7 of 22

DOCUMENT IDENTIFICATION NUMBER	REVISION	REI/MAR/SP NUMBER/FILE
S-96-0013	1	N/A

STEP 5: DETERMINE BASE SHEAR LOAD (Q)

FROM FIG 7-3: WHEN $H/R = 3.23$
$t_{ef}/R = 0.0022$

$Q' = 0.753$

$$Q = Q' \cdot W \cdot S_{af} = \frac{0.753 * 679360 * 0.14}{1000} = 72 \text{ K}$$

STEP 6: BASE OVERTURNING MOMENT AT BASE
(DUE TO TANK CONTENT)

SINCE THESE TANKS ARE NOT FLAT BOTTOM TANKS REFER TO EPRI REPORT EPRI NP-5228-SL REV 1 VOLUME 4 PAGE 2-40, 2-7, 2-49 & 2-50 IN DETERMINING THE OVERTURNING MOMENT

(EQ 2-3 PG 2-7)

$$M = WH\left[\left(\frac{M_s}{M} * \frac{H_{sb}}{H} * G\right)^2 + \left(\frac{m_f}{m} * \frac{H_{fb}}{H} * G\right)^2 + \left(\frac{m_r}{m} * \frac{H_{rb}}{H} - \frac{m_f}{m} * \frac{H_{fb}}{H}\right)^2 * G^2\right]^{1/2}$$

FROM TABLE 2-3 PG 2-48 (INTERPOLATING)

FOR $H/R = 3.23$ $M_s/M = 0.14$
$H_{sb}/H = 0.832$

FROM TABLE 2-4 PG 2-49 (INTERPOLATING)

FOR $H/R = 3.23$ $m_f/m = 0.722$
$t_{ef}/R = .002$ $H_{fb}/H = 0.563$
$m_r/m = 0.886$
$H_{rb}/H = 0.471$

ATTACHMENT P

Florida Power CORPORATION

DESIGN ANALYSIS/CALCULATION

Crystal River Unit 3

Sheet P8 of 22

DOCUMENT IDENTIFICATION NUMBER	REVISION	REI/MAR/SP NUMBER/FILE
S-96-0013	1	N/A

STEP 6: CONTINUED

$$M = 633360 * 388 \left[(0.14 * 0.832 * 0.14)^2 + (0.722 * 0.563 * 0.14)^2 + (0.866 * 0.471 - 0.722 * 0.563)^2 (.14)^2 \right]^{1/2}$$

$$= 633360 * 388 \left[(0.0163)^2 + (0.057)^2 + (.0014)^2 (.14)^2 \right]^{1/2}$$

$$= 1.46 \text{ E7 in-lb}$$

STEP 7: DETERMINE BOLT TENSILE LOAD CAPACITY
(REF. 1 GIP SECTION 4 & APP. C)

FOR 1 1/4" ϕ CAST IN PLACE BOLT: (REF TABLE C.3-1 pg C.3-2)

PULLOUT CAP. = 41.72 K/bolt 41.72/.890 in^2 = 46.88 Ksi

SHEAR CAP. = 20.86 K/bolt 20.86/.890 in^2 = 23.44 Ksi

MIN EMBED = 12 1/2" < 18 3/8" (pipesleeve Length PER DWG SC-423-026) ∴ OK

MIN SPACING = 15 3/4" < 38 3/8" (REF DWG 18130 SHT 3 SECTION F-F) ∴ OK

FOR 3000 psi CONCRETE USE REDUCTION FACTOR OF $\left[\frac{3000}{3500}\right]^{1/2} = 0.857$

PULLOUT CAP = 41.72 * 0.857 = 35.75 K/bolt

SHEAR CAP = 20.86 * 0.857 = 17.88 K/bolt

ATTACHMENT P

DOCUMENT IDENTIFICATION NUMBER	REVISION	RE/MAR/SP NUMBER/FILE
S-96-0013	1	N/A

STEP 8 CHECK TOP PLATE

PER DWG 18130 SHT 3, THE TOP PLATE HAS A VERTICAL RING PLATE AT THE OUTER EDGE OF THE TOP PLATE. THEREFORE, TO DETERMINE THE MAXIMUM STRESS IN THE TOP PLATE REFER TO " FORMULAS FOR STRESS & STRAIN" 5th ED. BY RAYMOND J ROARK & WARREN C. YOUNG, TABLE 26 CASE 8b (pg 393)

$$\sigma_b = \frac{3W}{2\pi t^2}\left[(1+v)\ln\frac{2b}{\pi r_0'} + \beta_1\right]$$

$$\sigma_b = \frac{3 * 41720}{2\pi(.75)^2}\left[(1+0.3)\ln\left(\frac{2*4.25}{\pi*1.5}\right) + 0.067\right]$$

$$\sigma_b = 29528\,psi < 30000\,psi$$

∴ TOP PLATE IS OK

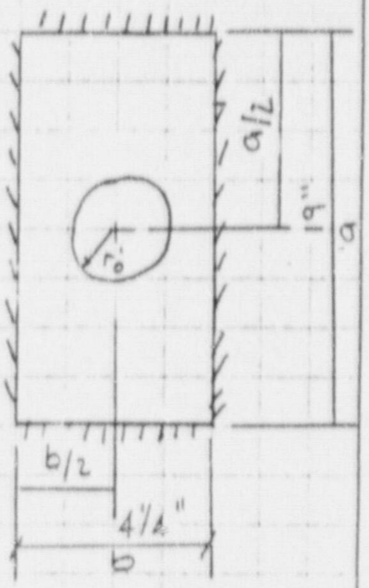

WASHER DIAMETER FOR 1¼"Φ BOLT = 3"

∴ $r_0' = 1\frac{1}{2}$"

$t = 3/4$"

$a/b = 4.47$

$\beta_1 = 0.067$

$W = 41720$ lbs

$V = 0.3$

f_y plate = 30 ksi

ATTACHMENT P

Florida Power CORPORATION

DESIGN ANALYSIS/CALCULATION

Crystal River Unit 3

Sheet P10 of 22

DOCUMENT IDENTIFICATION NUMBER	REVISION	REI/MAR/SF NUMBER/FILE
S-96-0013	1	N/A

STEP 9: CHECK SKIRT STRESSES AT CHAIR ATTACHMENT

NOTE! DUE TO THE CONFIGURATION OF THE TOP PLATE, THIS EQUATION IS A CONSERVATIVE ASSESSMENT.

$$\sigma = \frac{P_U e}{t_s^2}\left[\frac{1.32\,Z}{\frac{1.43ah^2}{Rt_s'} + (4ah^2)^{0.333}} + \frac{0.031}{[Rt_s']^{1/2}}\right]$$

WHERE $$Z = \frac{1.0}{\frac{0.177at_b}{[Rt_s']^{1/2}}\left[\frac{t_b}{t_s'}\right]^2 + 1.0}$$

$P_U = 41720$ lbs

e = ANCHOR BOLT ECCENTRICITY = 2 1/8"

t_s' = SHELL (SKIRT) THICKNESS = 3/8"

a = TOP PLATE WIDTH (USE DISTANCE BETWEEN STIFFENERS) = 19"

h = CHAIR HEIGHT = 8 1/4"

R = NOMINAL RADIUS OF SKIRT = 120 1/2"

t_b = BOTTOM PLATE THICKNESS = 3/4"

$$Z = \frac{1.0}{\frac{0.177*19*0.75}{[120.5*0.375]^{1/2}}\left(\frac{0.75}{0.375}\right)^2 + 1.0} = 0.40$$

$$\sigma = \frac{41720*2.125}{(0.375)^2}\left[\frac{1.32*0.40}{\frac{1.43*19*(8.25)^2}{(120.5*0.375)} + (4*19*(8.25)^2)^{0.333}} + \frac{0.031}{[120.5*.375)^{1/2}}\right]$$

$\sigma = 8630$ psi $< f_y = 30000$ psi

∴ SKIRT SHELL AT CHAIR ATTACHMENT IS OK

ATTACHMENT P

Sheet P11 of 22

DOCUMENT IDENTIFICATION NUMBER	REVISION	REI/MAR/SP NUMBER/FILE
S-96-0013	1	N/A

STEP 10: CHECK VERTICAL STIFFENER PLATES

NOTE: THIS IS A CONSERVATIVE CHECK SINCE THE VERTICAL STIFFENERS ALSO HAVE A RING PLATE ON THEIR OUTER EDGE.

K = VERT. PLATE WIDTH = $3\frac{3}{4}$"
J = VERT. PLATE THK. = $\frac{3}{8}$"
C = CHAIR THK = 3/4"

1) $\frac{K}{J} < \frac{95}{\left[f_y/1000\right]^{1/2}}$

$10 < 17.34$ ∴ OK

2) $J > 0.04(h-c)$ & $J > 0.5$"

$0.04(8.25-.75)$

$0.375 > 0.3$

$J = 0.375 \ngtr 0.5$
however since there is a continuous outer ring at the outside edge of the stiffeners & this ring is 1/2" thick this is acceptable

3) $\frac{P_u}{2KJ} < 21000\,psi$

$\frac{41720}{2 * 3.75 * 0.375} < 21000\,psi$

$14833\,psi < 21000\,psi$ ∴ OK

VERTICAL STIFFENER PLATES ARE OK

ATTACHMENT P

Florida Power CORPORATION

DESIGN ANALYSIS/CALCULATION

Crystal River Unit 3

Sheet P12 of 22

DOCUMENT IDENTIFICATION NUMBER	REVISION	REI/MAR/SP NUMBER/FILE
S-96-0013	1	N/A

STEP 11: CHAIR TO SKIRT WALL WELD

NOTE: THIS IS A VERY CONSERVATIVE CHECK AS THE CHAIR IS A CONTINUOUS RING AROUND THE SKIRT

$$W_w = P_u\left[\left(\frac{1}{a+2h}\right)^2 + \left(\frac{e}{ah+0.667h^2}\right)^2\right]^{1/2}$$

$$= 41720\left[\left(\frac{1}{19+2(8.25)}\right)^2 + \left(\frac{2.125}{19*8.25+0.667(8.25)^2}\right)^2\right]^{1/2}$$

$$= 1254 \text{ lb/in}$$

$$W_w < 30600\, t_w/\sqrt{2}$$

$$1254 < 30600*0.3125/\sqrt{2}$$

$$1254 \text{ lb/in} < 6761 \text{ lb/in}$$

$\therefore$ WELD BETWEEN CHAIR & SKIRT WALL IS OK

STEPS 12, 13 & 14 ARE NOT APPLICABLE FOR A DOMED TANK WITH A SKIRT AROUND IT'S BASE.

ATTACHMENT P

Florida Power CORPORATION

DESIGN ANALYSIS/CALCULATION

Crystal River Unit 3

Sheet P13 of 22

DOCUMENT IDENTIFICATION NUMBER	REVISION	REI/MAR/SP NUMBER/FILE
S-96-0013	1	N/A

STEP 15: DETERMINE DIAMOND-SHAPE BUCKLING STRESS CAPACITY FACTOR FOR SKIRT

$$\sigma_{pd} = (0.6\gamma + \Delta\gamma)\frac{E_s}{R/ts'}$$

$$\gamma = 1 - 0.731(1 - e^{-\phi}) = 1 - 0.731(1 - (2.72)^{-1.12}) = 0.508$$

$$\phi = \frac{1}{16}\left[R/t_s\right]^{1/2} = 1/16\left[120/0.375\right]^{1/2} = 1.12$$

$\Delta\gamma$ = INTERNAL PRESSURES = N/A

$$\sigma_{pd} = (0.6 * 0.508)\frac{28.3E6}{120/.375}$$

σ_{pd} = 26956 psi

STEP 16: DETERMINE ALLOWABLE BUCKLING STRESS FOR SKIRT

$\sigma_c = 0.72\,\sigma_{pd}$

$= 0.72 * 26956$

σ_c = 19408 psi

Florida Power CORPORATION

DESIGN ANALYSIS/CALCULATION

Crystal River Unit 3

Sheet P14 of 22

DOCUMENT IDENTIFICATION NUMBER	REVISION	REI/MAR/SP NUMBER/FILE
S-96-0013	1	N/A

CHECK TANK SKIRT STRESSES

CONSIDER COMPRESSIVE STRESS TO BE P/A

SKIRT
O.D = 20'-1"
ID = 20'-0 1/4"

$A_{SKIRT} = \left[(120.5)^2 - (120.125)^2 \right] \pi$

$= 283.5 \text{ in}^2$

VERTICAL COMPRESSIVE LOAD = [TANK WT + LIQUID WT] * SSE VERT

$P = [46K + 633.4K][1 + 0.667(.14)]$

$P = 742.4 \text{ K}$

$P/A = 742.4 / 283.5 = 2.62 \text{ ksi}$

CONSIDER SKIRT BENDING STRESS TO BE M_{TOTAL}/S

$S = \pi \left[(OD)^4 - (ID)^4 \right] / (32 * OD)$

$= \pi \left((241)^4 - (240.25)^4 \right) / (32 * 241)$

$S = 17027 \text{ in}^3$

$M_{TOTAL} = M_{STEPS} + M_{TANK\ WT}$

$= 1.46E7_{in\text{-}lb} + \overset{\text{TANK WT}}{46000} * \overset{\text{SKirt HT}}{130''} * \overset{\text{ZPA}}{.11g}$

$= 1.53E7 \text{ in-lb}$

$M_{TOTAL}/S = 1.53E7 / 17027$

$= 896 \text{ psi}$

TOTAL STRESS IN SKIRT = 2620 + 896 = 3516 psi

3516 psi < 19408 psi

∴ SKIRT IS OK

ATTACHMENT P

Florida Power CORPORATION

DESIGN ANALYSIS/CALCULATION

Crystal River Unit 3

Sheet P15 of 22

DOCUMENT IDENTIFICATION NUMBER	REVISION	REI/MAR/SP NUMBER/FILE
S-96-0013	1	N/A

STEP 17&18: INSTEAD OF CHECKING FOR OVERTURNING CAPACITY, DETERMINE TENSION IN BOLTS DUE TO VERTICAL LOAD & OVERTURNING MOMENT

(REF ATTACH S FOR DETERMINING BOLT STRESSES)

TOTAL VERTICAL LOAD $P = 0.743E6$ lbs (REF PG P14)

TOTAL OVERTURNING MOMENT $M = 1.53E7/12 = 1.275E6$ ft lbs (REF PG P14)

TOTAL # OF BOLTS = (20) 1¼"Φ BOLTS

RING DIAMETER $D = 20'-5\frac{1}{4}"$ (DWG 18130 SHT 3 SECTION F-F)

BEARING PLATE WIDTH $t_c = 6"$ (DWG 18130 SHT 3 SECT C-C)

4"Φ BOLT $A_b = 0.890\ in^2$ (ROOT AREA)

RATIO OF MODULUS OF ELASTKITY FOR STEEL TO THAT OF CONCRETE IS $n = 10$ (REF PG 6-2-14 OF ATTACH S)

COMPUTE e/D & t_2/t_1 (REF ATT S pg 6-2-14)

$e = M/P = 1.275E6/0.743E6 = 1.716\ ft$

$e/D = 1.716/20.44 = 0.084$

$t_1 = NA_b/\pi D = 20 * .890/\pi(12 * 20.44)$
$= .023\ in$

$$t_2 = \frac{t_c + (n-1)t_1}{n} = \frac{6 + (10-1).023}{10}$$

$= .627\ in$

$t_2/t_1 = .627/.023$

$= 27$

Florida Power CORPORATION

DESIGN ANALYSIS/CALCULATION

Crystal River Unit 3

Sheet P16 of 22

DOCUMENT IDENTIFICATION NUMBER	REVISION	REV/MAR/SP NUMBER/FILE
S-96-0013	1	N/A

PER FIG-2 ATTACH PG 6-2-11, WHEN e/D IS LESS THAN 0.25 K GOES TO 1.0.

THEREFORE THE NEUTRAL AXIS IS LOCATED AT THE DIAMETRAL AXIS OF THE RING SECTION. SINCE THE LOAD "P" IS DOWNWARD, THE ANCHOR BOLTS SEE NO TENSILE STRESSES AND THE CYLINDRICAL RING IS IN COMPRESSION ONLY (REF ATT S PG 6-2-13)

STEP 19: COMPUTE SHEAR LOAD CAPACITY (Q_{CAP})

CONSIDER ONLY 16 OF THE 20 BOLTS TO TAKE SHEAR LOADING SINCE 4 BOLTS HAVE EDGE DISTANCE VIOLATIONS.
SINCE THIS IS NOT A FLAT BOTTOM TANK THE SHEAR CAPACITY IS SIMPLY THE BOLT SHEAR CAPACITY TIMES THE NUMBER OF BOLTS IN THE SKIRT

$$Q_{CAP} = 16 * 17.87 K$$
$$= 286 K$$

$F_v = 17.87$ K/bolt (Ref STEP 7)

STEP 20: CHECK SHEAR LOAD CAPACITY AGAINST SHEAR LOAD

$Q_{CAP} = 286 K$

$Q_{DEM.} = 72 K$ (STEP 5)

FACTOR SAFETY = $286/72 = 3.97 > 1.0$

∴ ANCHOR BOLTS ARE OK IN SHEAR

STEPS 21 & 22 ARE NOT APPLICABLE FOR DOMED TANKS ON SKIRTS

CALCULATION

SUBJECT FPC - Crystal River Unit 3 Seismic Verification of Tanks			IDENTIFIER DC-5520-161.0SE		PAGE 12 OF
REV.	0	1	2	3	
MICROFILMED					PAGES 114
ORIGINATOR	S.J. Serhan				WO.
DATE	01/18/94				

ANALYSIS/CALCULATION
DOC ID # S-96-0013 ATT # P
REV 1 SHEET P12 OF 22

Using the Power Method described in Calculation DC-5520-127.0SE, the 4.0% damped ground spectrum is derived as follows:

$\beta 1 := 3 \qquad \beta 2 := 5 \qquad \beta 3 := 4$

$$n := \frac{\ln\left(\frac{\beta 3}{\beta 1}\right)}{\ln\left(\frac{\beta 2}{\beta 1}\right)} \qquad n = 0.563$$

$$A4final_J = \left(A3final_J\right)^{(1-n)} \cdot \left(A5final_J\right)^{n}$$

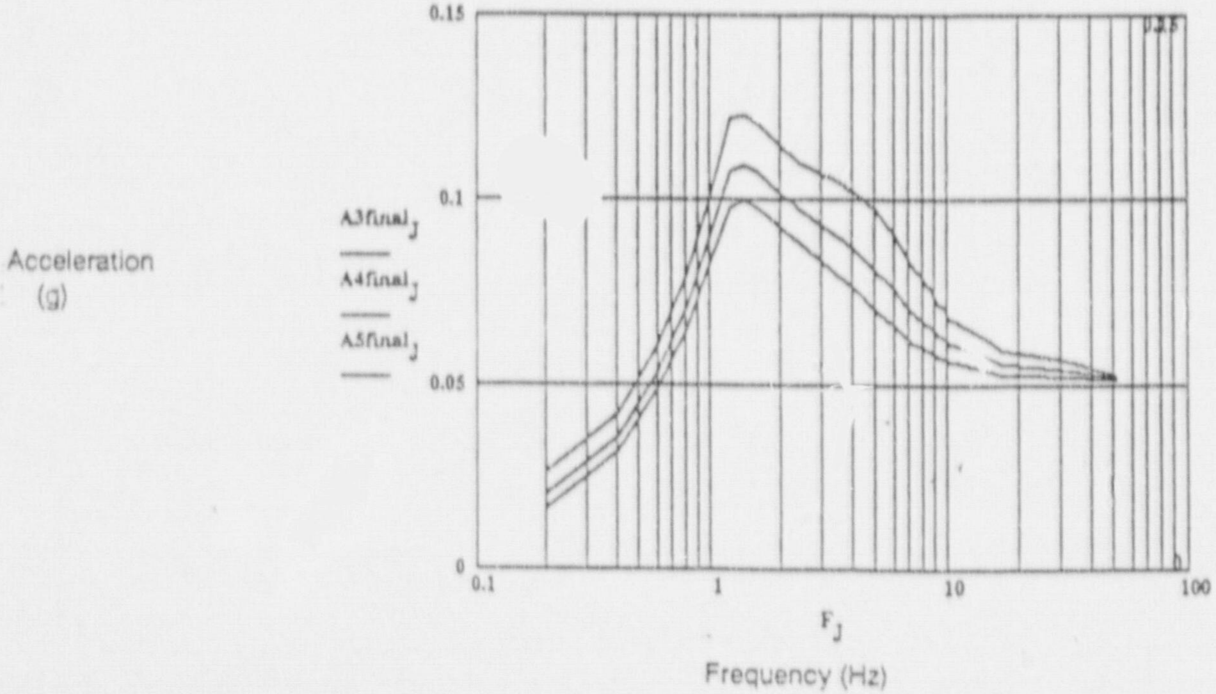

Figure OBE Ground Response Spectra for 3.0%, 4.0%, and 5.0% equipment damping.
Horizontal Direction.

CALCULATION	SUBJECT FPC - Crystal River Unit 3 Seismic Verification of Tanks		IDENTIFIER DC-5520-161.0SE		PAGE 13 OF
	REV.	0	1	2	3
	MICROFILMED				PAGES 114
	ORIGINATOR	S.J. Serhan			WO.
	DATE	01/18/94			

Listing of the 4.0% Damped Horizontal OBE Ground Spectrum

$J := 1..35$

ANALYSIS/CALCULATION
DOC ID # S-96-0013 ATT # P
REV 1 SHEET P18 OF 22

Frequency (Hz)	Acceleration (g)
F_J	A4final
0.2	0.02
0.4	0.036
0.6	0.053
0.8	0.071
1	0.089
1.2	0.108
1.4	0.109
1.6	0.107
1.8	0.10[illegible]
2	0.101
2.2	0.099
2.4	0.097
2.6	0.095
2.8	0.094
3	0.092
3.2	0.091
3.4	0.09
3.6	0.089
3.8	0.087
4	0.086
4.2	0.085
4.4	0.084
4.6	0.083
4.8	0.082
5	0.081
5.2	0.08
5.4	0.079
5.6	0.078
5.8	0.076
6	0.07[illegible]
6.2	0.07[illegible]
6.4	0.073
6.6	0.072
6.8	0.071
7	0.07

TABLE 11-5
Disposal System Component Data

			CAPACITY, FT^3 (each tank)		DESIGN		MATERIAL					
ITEM NO.	NAME	TYPE	Total	Liquid	Temp. F	Press psig	Body	Lining	VENTED TO	DESIGN CODE	SEISMIC DESIGN	COMMENTS
WDT-3A WDT-3B WDT-3C	R.C. Bleed Tanks	V/S	1[illegible]050	10,150	250	25	SS	None	V.H.	ASME III-C	Class I	Maximum operating temp/press is 150F/±3 psig. Contains nearly one primary system volume.
WDT-4	Misc. Waste Storage Tank	H/S	3,150	2,750	250	25	SS	None	V.H.	ASME III-C	Class I	Maximum operating temp/press is 150F/±3 psig.
WDT-5	Reactor Coolant Drain Tank	V/L	831	561	300	100	SS	None	V.H.	ASME III-C	Class I	Rupture disk provides overpressure relief. Internal plate coils provide cooling.
WDT-6	Spent Resin Storage Tank	V/L	920	860	150	15	SS	None	Sump	ASME III-C	Class I	Nominal resin capacity 800 ft^3 or two year's retention as design basis.
WDT-7A WDT-7B	Concentrated Waste Storage Tanks	V/L	920	728	200	15	SS	None	V.H.	ASME III-C	Class I	Nominal one year's retention of evaporator concentrate.
WDT-8A WDT-8B	Concentrated Boric Acid Tanks	V/L	920	728	200	15	SS	None	V.H.	ASME III-C	Class I	Nominal one year's storage per Table 11-3, Item I.1.
WDT-9	Neutralizer Tank	V/L	530	470	150	15	CS	Rubber	Atm. Closed Vent System	ASME III-C	Class	

Legend: V/S = vertical skirt
H/S = horizontal saddle
V/L = vertical legs
V/H = vent header

ANALYSIS/CALCULATION
DOC ID # S-96-0013 ATT # P
REV 1 SHEET P19 OF 22

FPC – Crystal River Unit 3
Seismic Verification of Tanks

Calculation For:
Vertical Tank on 4 Legs

Rev	By	Date	Chk'd By	Date
0	TMR	~~[illegible]~~ 10/6/...	Pds	12/13/95

SC-423-026

FLORIDA POWER CORPORATION
ST. PETERSBURG, FLORIDA
CRYSTAL RIVER PLANT
UNIT NO. 3 855,000 KW
EL 95' Structural - Anchor Bolt List
AUXILIARY BLDG - 42 + 52 EQUIPMENT FOUND.
MATERIAL AS SHOWN ON DWG. NO SC-422-041/SC-422-042

WORK ORDER	SIZE	DRAWING	REV	FPC DRAWING NO
4203-00	S	423-026	0	SC-423-026

GILBERT ASSOCIATES, INC.
ENGINEERS AND CONSULTANTS
READING, PENNA.

DRAFTING: REV CH APP DATE
ENGINEERING APP'L: REV CH APP DATE

STANDARD TYPES | SPECIAL TYPES

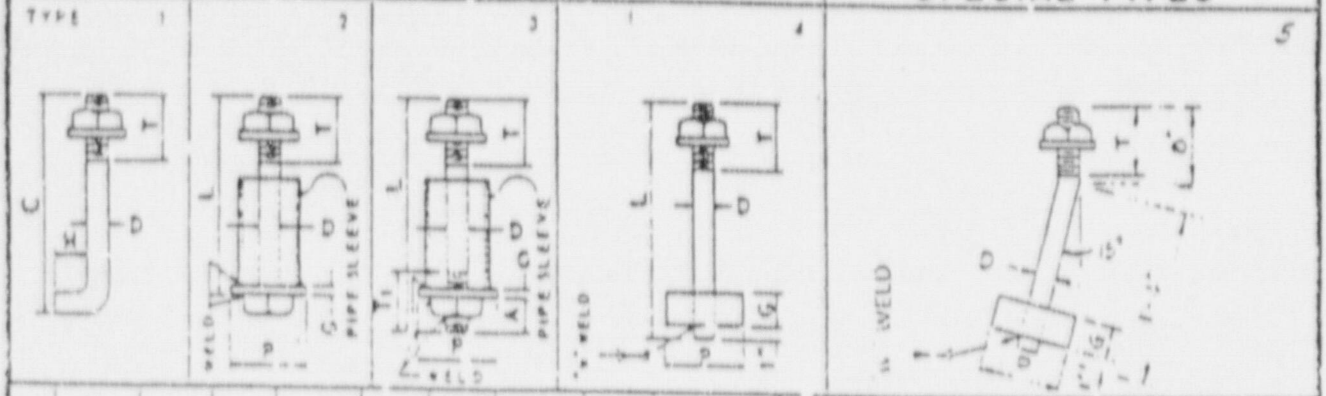

TYPE	MARK	NO REQD	DIAM D	LENGTH L	A	B	C	H	THREADS T	THREADS T1	NO OF NUTS SQ	NO OF NUTS HEX	SQ PLATE P	SQ PLATE G	WELD	WASHERS	PIPE SLEEVE	PIPE SLEEVE LENGTH
4	01	20	1¼"	2'-9"					3			20	6"	5/8"	5/16"	20	2½"	1'-6⅝"
4	02	32	⅞"	1'-5"					2½"			32	4"	½"	¼"	32	2"	1'-0"
4	03	8	1¼"	2'-0"	—	...	...	...	3"			8	6"	5/8"	5/16"	8	2½"	1'-6⅝"
4	04	68	1"	1'-3"					2½"			68	5"	½"	¼"	68	2"	1'-3½"
4	05	8	½"	1'-7"					1½"			8	3"	⅜"	¼"	8	1½"	11⅝"
4	06	12	¾"	1'-9"					2"			12	4"	⅜"	¼"	12	2"	1'-0⅝"
4	07	88	¾"	1'-5"					2"			88	4"	⅜"	¼"	88	2"	1'-0⅝"
4	08	24	1⅛"	2'-0"					2¼"			24	5"	½"	¼"	24	2½"	1'-6½"
5	09	80	1"	2'-0"					2¼"			80	5"	½"	¼"	80	—	—
4	010	32	⅝"	1'-2"					1¼"			32	3"	⅜"	3/16"	32	1"	0'-9"
4	011	12	½"	1'-5"					1½"			12	3"	⅜"	¼"	12	1½"	1'-0⅝"

ANALYSIS/CALCULATION
DOC ID # S-96-0013 ATT # P
REV 1 SHEET P20 OF 22

TABLE I-2.2
YIELD STRENGTH VALUES S_y FOR AUSTENITIC STEELS, HIGH NICKEL ALLOYS, AND COPPER-NICKEL ALLOYS

	Spec. No.	Nominal Composition	Type or Grade	Class	Product Form (Note (1))	Specified Min. Yield Strength, ksi
	High Alloy Steels Type 304 Stainless Steels					
S83	SA-182	. . .	F304L	. . .	Forg.	25
W85	SA-213	. . .	TP304L	. . .	Smls. Tube	
	SA-240	. . .	304L	. . .	Plate	
	SA-249	. . .	TP304L	. . .	Wld. Tube	
	SA-312	. . .	TP304L	. . .	Wld. & Smls. Pipe	
	SA-358	. . .	304L	1	Wld. Pipe	
	SA-403	. . .	WP304L	. . .	Fitting	
	SA-403	. . .	WP304LW	. . .	Wld. Fitting	
	SA-479	. . .	304L	. . .	Bar	
	SA-688	. . .	TP304L	. . .	Wld. Tube	
	SA-813	. . .	TP304L	. . .	Wld. Tube	
	SA-814	. . .	TP304L	. . .	Wld. Tube	
S83	SA-182	. . .	F304LN	. . .	Forging	30
W85	SA-213	. . .	TP304LN	. . .	Smls. Tube	
	SA-240	. . .	304LN	. . .	Plate	
	SA-249	. . .	TP304LN	. . .	Wld. Tube	
	SA-312	. . .	TP304LN	. . .	Wld. & Smls. Pipe	
	SA-336	. . .	. . .	F304LN	Forging	
	SA-358	. . .	304LN	. . .	Wld. Pipe	
	SA-376	. . .	TP304LN	. . .	Smls. Pipe	
	SA-403	. . .	WP304LN	. . .	Fitting	
	SA-403	. . .	WP304LNW	. . .	Wld. Fitting	
	SA-479	. . .	304LN	. . .	Bar	
	SA-688	. . .	TP304LN	. . .	Wld. Tube	
	SA-813	. . .	TP304LN	. . .	Wld. Tube	
	SA-814	. . .	TP304LN	. . .	Wld. Tube	
	SA-351	. . .	CF3	. . .	Casting	
	SA-351	. . .	CF8	. . .	Casting	
	SA-451	. . .	CPF3	. . .	Cast Pipe	
	SA-451	. . .	CPF8	. . .	Cast Pipe	
	SA-182	. . .	F304 & F304[illegible]	. . .	Forg.	
	SA-213	. . .	TP304 & T[illegible]H	. . .	Smls. Tube	
	SA-240	. . .	304 & 304H	. . .	Plate	
	SA-240	. . .	305	. . .	Plate	
	SA-249	. . .	TP304 & TP304H	. . .	Wld. Tube	
	SA-312	. . .	TP304 & TP304H	. . .	Smls. & Wld. Pipe	
	SA-336	. . .	. . .	F304 & F3C4H	Forg.	
	SA-358	. . .	304 & 304H	1	Wld. Pipe	
	SA-376	. . .	TP304 & TP304H	. . .	Smls. Pipe	
	SA-403	. . .	WP304 & WP304H	. . .	Fitting	
	SA-403	. . .	WP304W & WP304HW	. . .	Wld. Fitting	
	SA-430	. . .	FP304 & FP304H	. . .	Forg. Pipe	
	SA-451	. . .	CPF8	. . .	Cast Pipe	
	SA-452	. . .	TP304H	. . .	Cast Pipe	
	SA-479	. . .	302	. . .	Bar	
	SA-479	. . .	304 & 304H	. . .	Bar	
	SA-479	. . .	ER308	. . .	Bar	
	SA-688	. . .	TP304	. . .	Wld. Tube	
	SA-813	. . .	TP304 & [illegible]P304H	. . .	Wld. Tube	
	SA-814	. . .	TP304 & TP304H	. . .	Wld. Tube	

ANALYSIS/CALCULATION -
DOC ID # S-96-0013 ATT # P
REV 1 SHEET P21 OF 22

TABLE I-6.0
MODULI OF ELASTICITY *E* OF MATERIALS FOR GIVEN TEMPERATURES

Material	Modulus of Elasticity *E* = Value Given × 10⁶ psi, for Temp. °F of										
	-325	-200	-100	70	200	300	400	500	600	700	800
Ferrous Materials											
Carbon Steels with C ≤ 0.30%	31.4	30.8	30.2	29.5	28.8	28.3	27.7	27.3	26.7	25.5	24.2
Carbon steels with C > 0.30%	31.2	30.6	30.0	29.3	28.6	28.1	27.5	27.1	26.5	25.3	24.0
Carbon-molybdenum steels	31.1	30.5	29.9	29.2	28.5	28.0	27.4	27.0	26.4	25.3	23.9
Nickel steels	29.6	29.1	28.5	27.8	27.1	26.7	26.1	25.7	25.2	24.6	23.0
Chrome-molybdenum steels											
½-2 Cr	31.6	31.0	30.4	29.7	29.0	28.5	27.9	27.5	26.9	26.3	25.5
2¼-3 Cr	32.6	32.0	31.4	30.6	29.8	29.4	28.8	28.3	27.7	27.1	26.3
5-9 Cr	32.9	32.3	31.7	30.9	30.1	29.7	29.0	28.6	28.0	27.3	26.1
Straight chromium steels	31.2	30.7	30.1	29.2	28.5	27.9	27.3	26.7	26.1	25.6	24.7
Austenitic, precipitation hardened, and other high alloy steels	30.3	29.7	29.1	28.3	27.6	27.0	26.5	25.8	25.3	24.8	24.1
Nonferrous Materials High Nickel Alloys											
N02200 (200) N02201 (201)	32.1	31.5	30.9	30.0	29.3	28.8	28.5	28.1	27.8	27.3	26.7
N04400 (400) N04405 (405)	27.8	27.3	26.8	26.0	25.4	25.0	24.7	24.3	24.1	23.7	23.1
N07750 (750)	33.2	32.6	31.9	31.0	30.2	29.8	29.5	29.0	28.7	28.2	27.6
N07718 (718)	31.0	30.5	29.9	29.0	28.3	27.8	27.6	27.1	26.8	26.4	25.8
N06002 (X)	30.5	29.9	29.4	28.5	27.8	27.4	27.1	26.6	26.4	25.9	25.4
N06600 (600)	33.2	32.6	31.9	31.0	30.2	29.9	29.5	29.0	28.7	28.2	27.6
N06625 (625)	32.1	31.5	30.9	30.0	29.3	28.8	28.5	28.1	27.8	27.3	26.7
N08020 (20Cb-3)	30.0	29.4	28.8	28.0	27.3	26.9	26.6	26.2	25.9	25.5	24.9
N08800 (800) N08810 (800H)	30.5	29.9	29.4	28.5	27.8	27.4	27.1	26.6	26.4	25.9	25.4
N08825 (825)	30.0	29.4	28.8	28.0	27.3	26.9	26.6	26.2	25.9	25.5	24.9
N10001 (B)	33.3	32.7	32.0	31.1	30.3	29.9	29.5	29.1	28.8	28.3	27.7
S85 N10665 (B-2)	33.6	33.0	32.3	31.4	30.6	30.1	29.8	29.3	29.0	28.6	27.9
S85 N10276 (C-276)	31.9	31.7	30.7	29.8	29.1	28.6	28.3	27.9	27.6	27.1	26.5
Aluminum and Aluminum Alloys											
A03560 (356) A95083 (5083) A95086 (5086) A95456 (5456)	11.4	11.1	10.8	10.3	9.8	9.5	9.0	8.1	...	...	...

ANALYSIS/CALCULATION
DOC ID # S-96-0013 ATT # P
REV 1 SHEET P22 OF 22

Florida Power
CORPORATION

DESIGN ANALYSIS/CALCULATION

Crystal River Unit 3

Sheet Q1 of 10

DOCUMENT IDENTIFICATION NUMBER	REVISION	REI/MAR/SP NUMBER/FILE
S-96-0013	1	N/A

ATTACHMENT Q

REACTOR COOLANT DRAIN TANK -

WDT-5

9/88

900 871

Florida Power
CORPORATION

DESIGN ANALYSIS/CALCULATION

Crystal River Unit 3

Sheet Q2 of 10

DOCUMENT IDENTIFICATION NUMBER	REVISION	REI/MAR/SP NUMBER/FILE	
S96-0013	1	N/A	ATTACHMENT Q

VI. DETAILED CALCULATIONS

WDT-5 IS A VERTICAL, CYLINDRICAL TANK SUPPORTED ON A SKIRT. THE SKIRT IS ANCHORED WITH EIGHT, $1\frac{1}{4}$" Φ A36 ANCHOR BOLTS TO AN OCTAGONAL CONCRETE AT EL. 95'-0" OF THE REACTOR BUILDING. (REF DWGS SC-[illegible]1-009, SC-423-024 & M119A-001)

TO EVALUATE THE SKIRT AND ANCHORAGE FOR THIS TANK, THE PROCEDURE FROM EPRI NP-5228-SL, REV 1, VOL. 4 IS FOLLOWED.

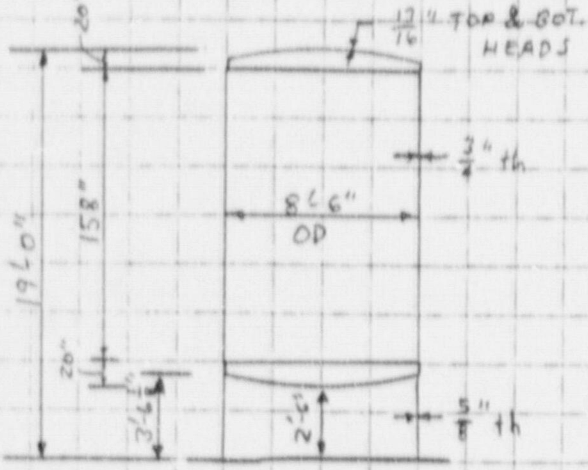

TANK DIMENSIONS
(REF 2)

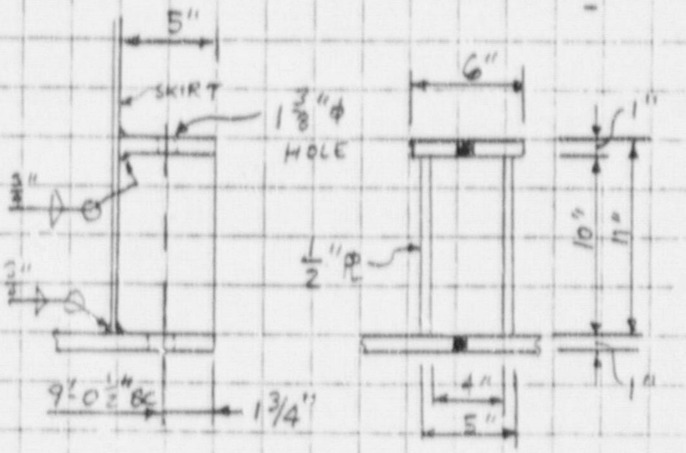

ANCHOR BOLT CHAIR

(FROM PG Q8) { NORMAL WATER VOLUME = 561 ft³
TOTAL VOLUME = 831 ft³

(FROM DWG M119A-001) TANK MATERIAL IS A-240 TYPE 304
ANCHOR BOLT CHAIRS ARE A-285 Gr. C
SKIRT IS A-285 Gr. C

(REF PG Q9) F_y for A-285 Gr. C = 30 ksi

Florida Power CORPORATION

DESIGN ANALYSIS/CALCULATION

Attachment Q

Crystal River Unit 3

Sheet Q3 of 10

DOCUMENT IDENTIFICATION NUMBER	REVISION	REI/MAR/SP NUMBER/FILE
S-96-0013	1	N/A

ALTHOUGH TANK IS NOT COMPLETELY FULL, ASSUME TANK AS A RIGID MASS AND USE PEAK OF F FOR RESPONSE SPECTRUM FROM REF. 3, PEEK OF GROUND RESPONSE (APPLICABLE FOR THIS ELEVATION) @ 2% DAMPING FOR SSE = .27g; @ 5% DAMPING PEAK = .2g. INTERPOLATING BETWEEN GIVES A PEAK @ 4% DAMPING OF ABOUT .22g.

VERTICAL RESPONSE = $^2/_3$(.22g) = .15g

WEIGHT OF TANK WITH SKIRT IS APPROXIMATELY 19250 lb

WEIGHT OF FLUID ⇒ 561 ft^3 (62.4 lb/ft^3) = 35007 lb

TOTAL WEIGHT = 19250 lb + 35007 = 54257 lb

USE 55000 lb

ASSUME C.G. @ VERTICAL CENTER OF TANK

158"/2 + 20" + 30" = 129" ABOVE SKIRT BASE

HORIZONTAL SHEAR = 55000 lb (.22g) = 12100 lb

OVERTURNING MOMENT = 12100 lb (129") = 1,560,900 lb-IN

VERTICAL COMPRESSIVE LOAD = 55000 lb (1 + .15g) = 63250 lb

CHECK SKIRT

t/R = .625"/51" = .0123" ⇒ OUTSIDE RANGE FOR USING TABLES & FIGURES FROM REFS. 1

∴ CONSIDER COMPRESSIVE STRESS AS P/A

$A = ((51")^2 - (50.375")^2)\pi = 199 \ IN^2$

$f_a = 63250 \ lb / 199 \ IN^2 = 318 \ psi$

BENDING STRESS = M/S

$S = \pi ((102")^4 - (100.75")^4) / (32(102") = 5013.9 \ IN^3$

DOCUMENT IDENTIFICATION NUMBER	REVISION	REI/MAR/SP NUMBER/FILE
S-96-0013	1	N/A

f_b = 1,560,900 lb-in / 5017.9 in^2 = 311 psi

TOTAL COMPRESSIVE STRESS IN SKIRT = 318 + 311 = 629 psi

STRESS IS VERY LOW

∴ BUCKLING NOT A CONCERN

CHECK ANCHOR BOLTS & ANCHOR BOLT CHAIRS:

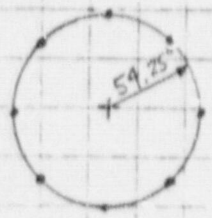

ANCHOR BOLT LAYOUT

FROM DWG SC-423-024 (PGQ10) ANCHOR BOLTS ARE A36, 1 $\frac{1}{4}$" φ, 3'-5" TOTAL LENGTH

THEY HAVE A $\frac{5}{8}$" THICK, 6" SQUARE PLATE WASHER, WELDED WITH $\frac{5}{16}$" FILLET WELDS TOP AND BOTTOM 1" FROM THE EMBEDDED END

THEY HAVE A 2 $\frac{1}{2}$" φ PIPE SLEEVE EXTENDING ≈ 2' UP FROM THE PLATE WASHER (HEAD).

FROM REF.1, PULLOUT CAPACITY = 41.72 KIP

SHEAR CAPACITY = 20.86 KIP

ALL EMBEDMENT, SPACING, AND EDGE DISTANCE REQUIREMENTS ARE MET (EMBEDMENT DEPTH = 20.5")

FROM PG.2-35,36 OF EPRI NP-5228-SL REV1 VOL 4 FINAL REPORT

CHECK ANCHOR BOLT CHAIR TOP PLATE

$$S = \frac{P_u}{f c^2}(.375g - .22d) \le F_y$$

P_u = 41.72 k = 41720 lb

f = DISTANCE FROM OUTSIDE OF TOP PLATE TO EDGE OF HOLE = 1.0625 IN

C = TOP PLATE THICKNESS = 1"

Florida Power CORPORATION

DESIGN ANALYSIS/CALCULATION

Attachment Q

Crystal River Unit 3

Sheet Q5 of 10

DOCUMENT IDENTIFICATION NUMBER	REVISION	REI/MAR/SP NUMBER/FILE
S 96-0013	1	N/A

g = DISTANCE BETWEEN VERTICAL PLATES = 4"

d = ANCHOR BOLT DIAMETER = $1\frac{1}{4}$"

LET $S = F_y$ AND SOLVE FOR P_u

$$\frac{30000 + (1.0625)(1)^2}{(0.375 * 4 - C.22 * 1.25)} = P_u = 26020 \text{ lbs/bolt}$$

CHECK SKIRT STRESSES AT CHAIR ATTACHMENT (PG2-36 EPRI NP-5228 SL REV1 VOL4)

$$S = \frac{P_u e}{t_s^2}\left[\frac{1.32\, Z}{\frac{1.43\, a h^2}{R t_s} + (4 a h^2)^{.333}} + \frac{.031}{\sqrt{R t_s}}\right] \leq F_y$$

$$Z \frac{1.0}{\frac{0.177\, a t_b}{\sqrt{R t_s}}\left(\frac{t_b}{t_s}\right)^2 + 1.0}$$

(REF M1194-001)

P_u = 41720 lb

e = ANCHOR BOLT ECCENTRICITY = 3.25 IN

t_s = SHELL (SKIRT) THICKNESS = .625 IN

a = TOP PLATE WIDTH = 6"

h = CHAIR HEIGHT = 11"

R = NOMINAL RADIUS OF SKIRT = 108.5/2 - [3.25 + 0.625/2] = 50.6875 in

t_b = BOTTOM PLATE THICKNESS = 1"

$$Z = \frac{1.0}{\frac{0.177(6")(1")}{\sqrt{(50.6875)(.625 \text{ IN})}}\left(\frac{1}{.625}\right)^2 + 1.0} = .6743$$

$$S = \frac{41720 \text{ lb } (2.5 \text{ IN})}{(.625)^2}\left[\frac{1.32(.6743)}{\frac{1.43(6")(11")^2}{(50.6875)(.625)} + (4(6)(11)^2)^{.333}} + \frac{.031}{\sqrt{(50.6875)(.625)}}\right]$$

= 6527 psi < 30000 psi Ok

DOCUMENT IDENTIFICATION NUMBER	REVISION	UFILE
S-96-0013	1	N/

CHECK STIFFNER PLATES (PG EPRI NP-5228-SL REV1 VOL 4)

$$\frac{k}{j} \le 95\sqrt{Fy/1000}$$

k = VERTICAL PLATE WIDTH = 5"

j = VERTICAL PLATE THICKNESS = $\frac{1}{2}$"

$$\frac{5}{.5} = 10 \le 95\sqrt{30000/1000} = 17.34 \quad \text{OK}$$

$$j = .5" \ge .5" \quad \text{OK}$$

$$\frac{P_u}{2kj} = \frac{41720\ \text{lb}}{2(5)(.5)} = 8344\ \text{psi} < 21000\ \text{psi} \quad \text{Ok}$$

CHECK CHAIR TO SKIRT WELD (PG 2-37 EPRI NP-5228-SL REV1 VOL4)

$$W = P_u\left[\left[\frac{1}{a+2h}\right]^2 + \left[\frac{e}{ah+.667h^2}\right]^2\right]^{.5}$$

$$= 41720\ \text{lb}\left[\left[\frac{1}{6+2(11")}\right]^2 + \left[\frac{3.25"}{6(11)+.667(11)^2}\right]^2\right]^{.5}$$

$$= 1754 \le \frac{t_w \cdot 30600}{\sqrt{2}} = \frac{0.75(30600)}{\sqrt{2}} = 16228 \quad \text{Ok}$$

∴ ANCHOR BOLTS AND CHAIRS ARE FULLY EFFECTIVE

SHEAR ON ANCHOR BOLTS

8 bolts TAKING SHEAR LOAD

$$F_v = 12100\ \text{lb}/8 = 1512.5\ \text{lb}/\text{BOLT} < 20860\ \text{lb}$$

Florida Power
CORPORATION

DESIGN ANALYSIS/CALCULATION

Attachment Q

Crystal River Unit 3

Sheet Q7 of 10

DOCUMENT IDENTIFICATION NUMBER	REVISION	REI/MAR/SP NUMBER/FILE
S-96-0013	1	N/A

DETERMINE MAX TENSION ON BOLTS DUE TO VERTICAL LOAD AND OVERTURNING MOMENT (REF ATTACH S)

TOTAL VERTICAL LOAD P = 63250 lb (REF PG Q2)

TOTAL OVERTURNING MOMENT M = 1560900 in-lb/12 = 130075 ft/lbs (REF PG Q2)

NUMBER OF BOLTS N = 8

RING DIAMETER D = 9'-0½"

BEARING PLATE WIDTH $t_c = 9^3/4$"

1¼" φ BOLT $A_b = 0.890 \text{ in}^2$ (ROOT AREA)

$$e = M/P = 130075/63250 = 2.06$$

$$e/D = 2.06/9.04 = 0.22 < 1/4$$

PER FIG-2 ATTACH S PG 6-2-11 WHEN e/D IS LESS THAN 0.25 K GOES TO 1.0. THEREFORE THE NEUTRAL AXIS IS LOCATED AT THE CENTER OF THE RING SECTION, SINCE THE LOAD "P" IS DOWNWARD, THE ANCHOR BOLTS SEE NO TENSILE STRESSES AND THE CYLINDRICAL RING IS IN COMPRESSION ONLY

TABLE 11-5
Disposal System Component Data

ITEM NO.	NAME	TYPE	CAPACITY, FT^3 (each tank)		DESIGN		MATERIAL		VENTED TO	DESIGN CODE	SEISMIC DESIGN	COMMENTS
			Total	Liquid	Temp. F	Press psig	Body	Lining				
WDT-3A WDT-3B WDT-3C	R.C. Bleed Tanks	V/S	11,050	10,150	250	25	SS	None	V.H.	ASME III-C	Class I	Maximum operating temp/press is 150F/±3 psig. Contains nearly one primary system volume.
WDT-4	Misc. Waste Storage Tank	H/S	3,150	2,750	250	25	SS	None	V.H.	ASME III-C	Class I	Maximum operating temp/press is 150F/±3 psig.
WDT-5	Reactor Coolant Drain Tank	V/L	831	561	300	100	SS	None	V.H.	ASME III-C	Class I	Rupture disk provides overpressure relief. Internal plate coils provide cooling.
WDT-6	Spent Resin Storage Tank	V/L	920	860	150	15	SS	None	Sump	ASME III-C	Class I	Nominal resin capacity 800 ft^3 or two year's retention as design basis.
WDT-7A WDT-7B	Concentrated Waste Storage Tanks	V/L	920	728	200	15	SS	None	V.H.	ASME III-C	Class I	Nominal one year's retention of evaporator concentrate.
WDT-8A WDT-8B	Concentrated Boric Acid Tanks	V/L	920	728	200	15	SS	None	V.H.	ASME III-C	Class I	Nominal one year's storage per Table 11-3, Item I.1.
WDT-9	Neutralizer Tank	V/L	530	470	150	15	CS	Rubber	Atm. Closed Vent System	ASME III-C	Class	

Legend:
V/S = vertical skirt
H/S = horizontal saddle
V/L = vertical legs
V/H = vent header

ANALYSIS/CALCULATION
DOC ID # S-96-0013 ATT # Q
REV 1 SHEET Q 8 OF 10

TABLE 2 Tensile Requirements

	Grade A		Grade B		Grade C	
	ksi	[MPa]	ksi	[MPa]	ksi	[MPa]
Tensile strength	45–65	[310–450]	50–70	[345–485]	55–75	[380–515]
Yield strength, min[A]	24	[165]	27	[185]	30	[205]
Elongation in 8 in. or [200 mm], min, %[B]	27		25		23	
Elongation in 2 in. or [50 mm], min, %	30		28		27	

[A] Determined by either the 0.2 % offset method or the 0.5 % extension-under-load method.

[B] See Specification A 20/A 20M.

SUPPLEMENTARY REQUIREMENTS

Supplementary requirements shall not apply unless specified in the order.

A list of standardized supplementary requirements for use at the option of the purchaser are included in Specification A 20/A 20M. Those which are considered suitable for use with this specification are listed below by title.

S3. Simulated Post-Weld Heat Treatment of Mechanical Test Coupons,
S4. Additional Tension Test, and
S14. Bend Test.

ADDITIONAL SUPPLEMENTARY REQUIREMENTS

Also listed below are additional optional supplementary requirements suitable for this specification:

S57. Copper-Bearing

S57.1 The copper content, by heat analysis shall be 0.20–0.35 % and by product analysis 0.18–0.37 %.

S58. Restricted Copper

S58.1 The maximum incidental copper content by heat analysis shall not exceed 0.25 %.

1990 ANNUAL BOOK OF ASTM STANDARDS SECTION 1 VOLUME 01.04

ANALYSIS/CALCULATION
DOC ID # S-96-0013 ATT # Q
REV 1 SHEET Q9 OF 10

FLORIDA POWER CORPORATION
ST. PETERSBURG, FLORIDA
CRYSTAL RIVER PLANT
UNIT NO. 3 — 863,000 KW

Structural - Anchor Bolt List

REACTOR BLDG SLAB EL. 95'-0"

MATERIAL AS SHOWN ON DWG. NO E-421-008 & 009

WORK ORDER	SIZE DRAWING	REV	FPC DRAWING NO.
4203	S-423-024	1	SC-423-024

GILBERT ASSOCIATES, INC.
ENGINEERS AND CONSULTANTS
READING, PENNA.

DRAFTING: MADE B.E.L. CH APP — ENGINEERING APP'L
REV 1 CH APP DATE 11-18-72 — REV CH APP DATE

STANDARD TYPES — SPECIAL TYPES

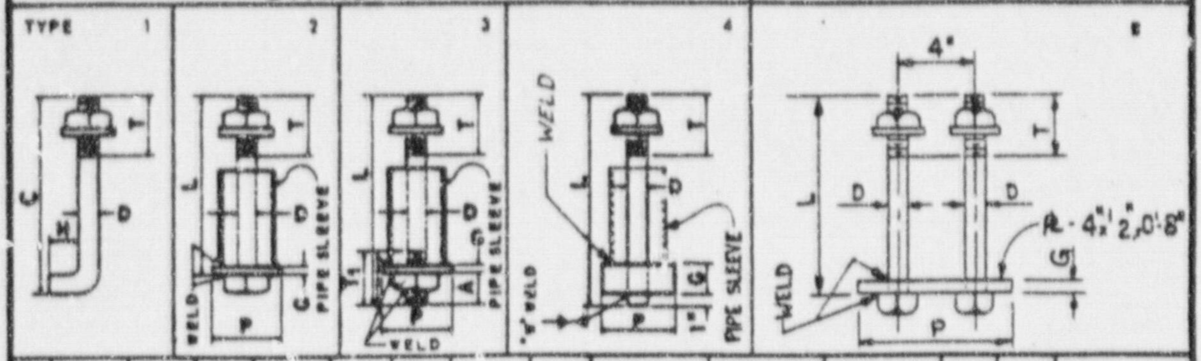

TYPE	MARK	NO. REQ'D.	DIAM	LENGTH					THREADS		NO. OF NUTS		SQ PLATE		# WELD	WASHERS	PIPE SLEEVE	
			D	L	A	B	C	H	T	T1	SQ	HEX	P	G			DIA	LENGTH
	POUR	#1																
4	A13	16	2 1/2"	2'-0 1/2"					4"			16	6 1/2"	1 1/4"	3/8"	16		
	POUR	#2																
5	A11	12	3/4"	9"					2"			24	AS	NOTED		24		
4	A14	1	3/4"	1'-0"					2"			1	4"	3/8"	1/4"	1		
	POUR	#3																
4	A15	8	1 1/4"	3'-5"					3"			8	6"	5/8"	5/16"	8	2 1/2"	1'-11 1/8"
2	A16	4	1/2"	1'-8"					1 1/2"			4	3"	3/8"		4	1 1/2"	1'-5 1/8"
2	A17	4	3/8"	1'-7"					1 1/4"			4	2"	1/4"		4	1"	1'-4 3/4"
4	A18	8	3/4"	2'-0"					2"			8	4"	3/8"	1/4"	8	2"	1'-7 5/8"
	POUR	#4																
4	A14	3	3/4"	1'-0"					2"			3	4"	3/8"	1/4"	3		
	POUR	#5																
4	A14	2	3/4"	1'-0"					2"			2	4"	3/8"	1/4"	2		
4	A19	28	1"	1'-9"					3 1/2"			28	5"	1/2"	1/8"	28		

△1

DIMENSIONS ARE IN INCHES UNLESS OTHERWISE NOTED

NOTES:- ALL MATERIAL TO BE A.S.T.M. A36

ANALYSIS/CALCULATION
DOC ID # S-96-0013 ATT # Q
REV 1 SHEET Q10 OF 10

DOCUMENT IDENTIFICATION NUMBER	REVISION	REI/MAR/SP NUMBER/FILE
S-96-0013	1	N/A

ATTACHMENT R

MAIN CONDENSERS

CDHE 4A
CDHE 4B

NATURE SAVER™ FAX MEMO 01616

Date 12/4/97	# of pages ▸ 2
To Kirk	From Wally Djordjevic
Co./Dept.	Co.
Phone #	Phone # 617 933 4428
Fax # 352 563 4697	Fax #

CALCULATION OF SEISMIC CAPACITY OF
CRYSTAL RIVER CONDENSERS

Objective

The purpose of this calculation is to show the seismic adequacy of the turbine condensers at the Crystal River plant. The condensers have not been analyzed for seismic loads. Numerous condensers have survived major earthquakes significantly larger than the Crystal River earthquake design basis event. This conclusion is based on and documented by the work performed by Stevenson & Associates in post-earthquake (Loma Prieta 1989) reconnaissance at Meer Island as well as similar findings/conclusions documented by the BWR Owners Group in support of their evaluations for alternative main steam isolation valve (MSIV) leakage pathway. The MSIV leakage pathway study has necessitated seismic evaluation of turbine condensers. The BWR plants that have performed these evaluations have used experience data to verify the adequacy of the condenser itself and performed simple anchorage evaluations to demonstrate the anchorage adequacy of the condenser. The same approach is being used for the evaluation of the Crystal River condensers.

Summary

Since the condenser cannot overturn due to design basis seismic forces for normal condenser water levels, the analysis considered only the shear resistance for this design analysis. The evaluation shows the shear capacity of the anchorage for the condensers of 371 kips in the governing N-S direction exceeds the demand seismic shear load of 256 kips.

References

1. BWR Owners Group MSIV Leakage Pathway Study and Methodology, 1995
2. S&A Meer Island Post-Loma Prieta Study of Turbine Condensers, 1996
3. Foster-Wheeler Corporation Crystal River Condenser Drawing 93-817-3-101
4. FPC Calculation S-91-0003, Rev. 0, 3/22/91

Evaluation

Per reference 3, the total operating load for condenser with a normal water level of 8'-4" is 2,324 kips. The horizontal reaction loads at the shear key ("anchor T") and the support at the southeast corner (for condenser 3B) due to pressure drop are 604 kips maximum. These loads are taken by the so-called anchor T and in bearing against the concrete wall against which the condenser bears on its eastern boundary. As such, they are not resolved into the existing anchor bolts. The thermal expansion loads are self-relieved by the slotted base plate configurations of the western two supports. As such, thermal loads are also not taken by the existing anchorage.

The existing anchorage was originally designed to be a tension-only anchorage to resist "uplift forces" that could occur at start-up under certain assumptions. As such, this design condition is clearly not concurrent with operation of the plant and does not need to be considered concurrently with a seismic design basis earthquake.

Checking the overturning moment (OTM) and using the peak of the 4% ground spectrum factored by 1.5 for multi-modal effects:

OTM = 2,324k x 0.22g x 1.5 x 43'/2 = 16,500 ft-k

The restoring moment (RM) reduced to include the effect of vertical earthquake (2/3 of horizontal peak) is:

RM = [2,324k – 0.67(0.22g)(2,324k)] x 15' = 29,700 ft-k

ANALYSIS/CALCULATION
DOC ID # S-96-0013 ATT # R
REV 1 SHEET R2 OF 3

The two western supports (for Condenser 3B example) are slotted to relieve thermal expansion, but they are slotted at approximately a 45° angle to the N-S and E-W directions and since rotation is prevented by the configuration the supports are active for both directions of earthquake. The two eastern supports (for condenser 3B example) are slotted in the N-S direction, so they can only resist an E-W earthquake. Thus, all of the N-S earthquake loads are taken by the western supports and the anchor T; therefore, only two supports (thus, 12 anchors) are active.

All of the seismic lateral force is taken by the two supports and the anchor T. Use the peak of the response spectrum since the fundamental frequency is not known.

$V_{total} = 2{,}324k \times 0.22g = 511$ kips

The anchor T can take shear in both directions. The shear area of the T in any orthogonal direction utilizing both legs of the T is 42 in x 2 in = 84 in2. The shear capacity of the shear key, for A36 steel using a 0.4Fy for faulted loads is:

$V_{anchorT} = 84 \times 0.4 \times 36ksi = 1210$ kips

Checking the weld capacity

$V_{anchorTweld} = 82'' \times 3/4'' \times 0.707 \times 0.3 \times 70\ ksi \times 1.7 = 1550\ kips > 1210$ kips so 1210 kips governs.

The allowable for the anchor T must be reduced by the 604 kips needed for operating loads leaving a capacity of approximately 600 kips for the anchor T for the N-S earthquake. Since the reaction from the N-S earthquake is one-half of 511 kips, the anchor T can sustain its component of reaction from the N-S earthquake.

The six added 1.25" diameter bolts reside in oversized 1.75" wide slots, so they must be considered inactive. Checking the original 6 anchor bolts (6 -1.75" diameter bolts) in the western supports:

The total shear force resistance of the six anchors is based on the fact that the shear plane is not through the threaded portion of the studs is:

$6(\pi d^2 / 4)\ 0.17Fu \times 1.7 = 6(\pi[1.75^2]/4)\ 0.22\ (58) \times 1.7 = 313$ kips

The shear reaction on the two western supports is one-half of 511 kips, or 256 kips, which is less than 313 kips, so OK.

Therefore, the anchorage of the Crystal River condensers is adequate.

PERFORMED BY: WALTER DJORDJEVIC - Stevenson & Associates 11/21/97

ANALYSIS/CALCULATION
DOC ID # S-96-0013 ATT # R
REV 1 SHEET R3 OF 3

SECOND ASCE
CONFERENCE ON

CIVIL ENGINEERING AND NUCLEAR POWER

Vol. I:
Materials and Structural Design, Including Design and Analysis of Supports for Cable Tray and HVAC Ducts

SPONSORED BY
AMERICAN SOCIETY OF CIVIL ENGINEERS
STRUCTURAL DIVISION
NUCLEAR STRUCTURES AND MATERIALS COMMITTEE
GEOTECHNICAL DIVISION
TENNESSEE VALLEY SECTION
THE UNIVERSITY OF TENNESSEE
DEPARTMENT OF CIVIL ENGINEERING

Knoxville, Tennessee
September 15-17, 1980

ANALYSIS/CALCULATION
DOC ID # S-96-0013 ATT # S
REV 1 SHEET S1 OF 17

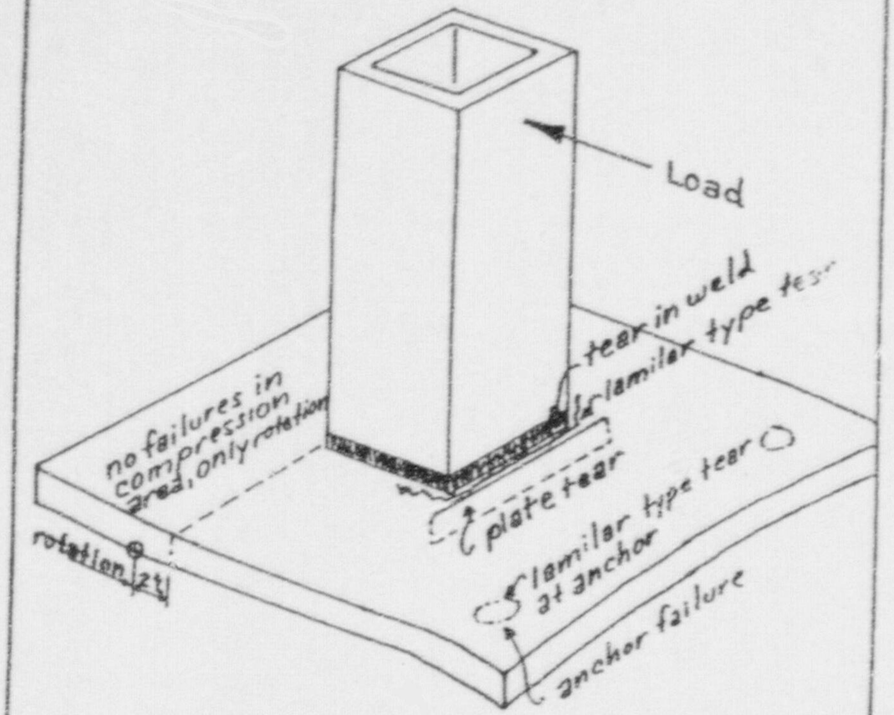

Typical Failure Mechanisms

Figure 6

ANALYSIS/CALCULATION
DOC ID # S-96-0013 ATT # S
REV 1 SHEET S 2 OF 17

A NEW METHOD FOR CALCULATING ANCHOR-BOLT STRESSES

By Harold S. Davis[1]

INTRODUCTION

The determination of stresses in a circular array of anchor bolts may appear to be an easy, routine task. However, just the opposite is true because basic equations are cumbersome and their solution time-consuming. In this paper the basic equations are simplified by expressing them in terms of trigonometric functions called B-factors. By using these factors and the numerical procedures described below, stresses can be obtained with a hand computer in a fraction of the time previously required. Or, the required number and size of anchor bolts can be determined directly if external loads and design stresses are known. The simplified equations can also be used to calculate longitudinal stresses in reinforced concrete towers and chimneys, and at the base of steel storage vessels.

A review of anchor-bolt theory is presented first. This is followed by a

---

[1] Consulting Engineer, Projects Section; UNC Nuclear Industries, Inc.; Richland, WA.

description of the simplified equations and B-factors. Their application in solving anchor-bolt problems is then illustrated with several numerical examples. The basic equations are presented in the Appendix.

ANCHOR BOLT THEORY

In the typical anchor-bolt problem, vertical tension forces are taken solely by the anchor bolts located on one side of the neutral axis while compressive forces are provided by the bearing surface located on the other side of the neutral axis. In general, it is assumed that a) plane sections remain plane after bending and b) stresses vary linearly with distance from the neutral axis. As shown in Fig. 1, the anchor bolts are replaced by an equivalent steel area, or ring, having a thickness t_1 and a diameter of D. The compression side of the ring has an equivalent steel thickness of t_2. The neutral axis is located at a distance of kD from the compression side of the ring section; or by the angle α, where $\alpha = \cos^{-1}(1 - 2k)$. The distance between the resultant of the tension forces (T) and the resultant of the compressive forces (C), acting on the equivalent ring section, is equal to jD. The distance from the central axis to the resultant of the compressive forces is defined as z. The eccentricity of loading (e) equals the bending moment (M) at the section divided by the axial load (P). Additional information on anchor-bolt theory is presented in the references listed in Appendix I.

As noted above, the equations and procedures introduced in this paper may also be used to compute longitudinal stresses in cylindrical structures such as reinforced-concrete towers, silos and chimneys, or at the base of steel storage tanks. In order to use the equations, geometrical parameters for these structures must correspond to the conditions of Fig. 1.

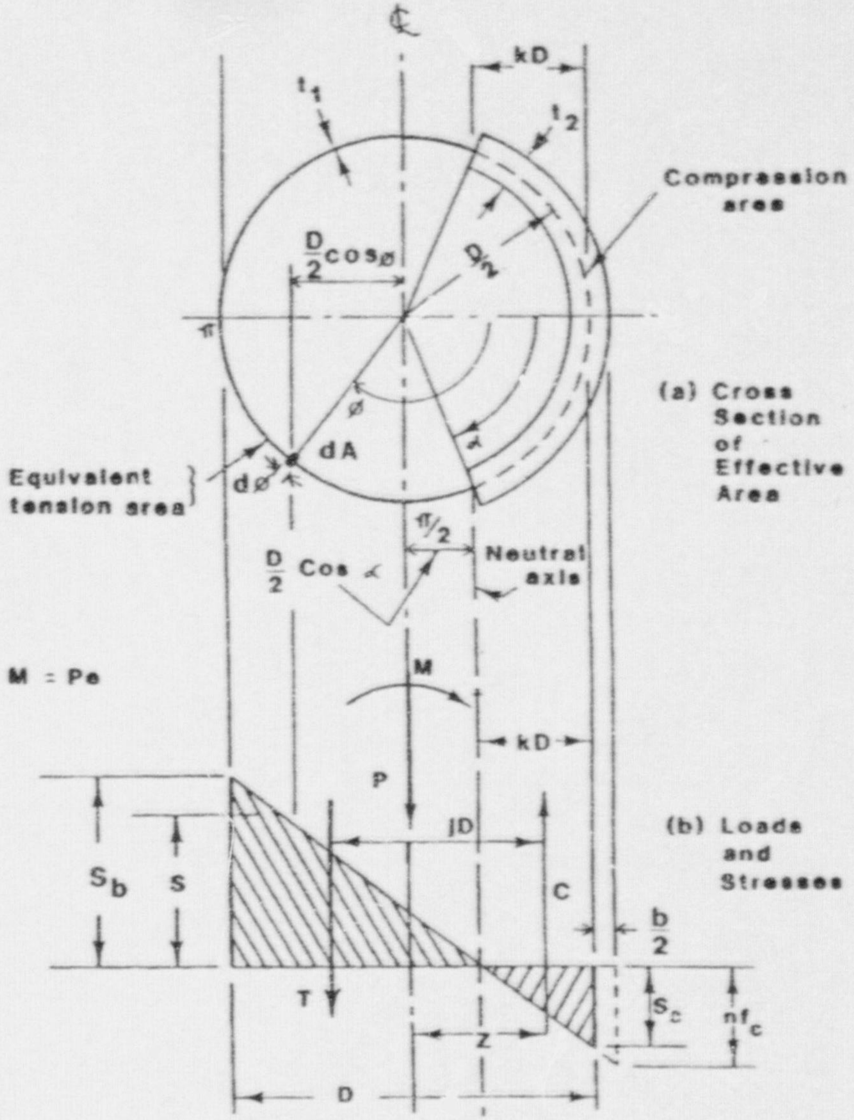

FIG. 1. - Anchor-Bolt Theory

ANALYSIS/CALCULATION

DOC ID # S-96-0013 ATT # 5

REV 1 SHEET S3 OF 17

BASIC EQUATIONS AND B-FACTORS

The basic equations are presented in the appendix. Some of these equations have been published previously $^{(1-5)}$; whereas, others are unique. Only the simplified equations, required for making anchor-bolt calculations, are discussed below.

The following equation is of prime interest since it can be used to locate the neutral axis or to determine required thicknesses:

$$\frac{t_2}{t_1} = B\left(1 \mp \frac{1}{\frac{e}{jD} \pm \frac{z}{jD}}\right) \quad . \qquad (1)$$

The two upper signs must be used when P is upward; whereas, the l signs apply when P is downward. Factor B is defined as:

$$B = \frac{\pi}{\tan\alpha - \alpha} + 1 \quad . \qquad (2)$$

Values of j and z/jD are also complex functions of α and are defined by equations given in the appendix. Numerical values of B, j, and z/jD are tabulated in Table 1(a) for values of k between 0 and 0.5, and in Table 1(b) for values of k between 0.5 and 1.0.

B, j and z/jD are explicit functions of k. Therefore, the thickness ratio (t_2/t_1) can be computed with equation 1, for any given value of k and selected values of eccentricity ratio (e/D). Tables 2 and 3 list values of thickness ratio obtained in this manner for k between 0 and 1.0 and a number of eccentricity ratios between 0.25 and infinity. Thickness ratios listed in Table 2 result when the axial load produces compression on the free-body section; whereas, values listed in Table 3 result when the axial load is in tension. The general relationship between these factors is shown in Fig. 2.

TABLE 1(a).—Values of B, j and z/jD When k Is Between 0.0 and 0.5

k	B	j	z/jD	k	B	j	z/jD
0	∞	0.75000	0.66667	0.25	5.5872	0.77866	0.57587
0.01	1154.3782	0.75245	0.66184	0.26	5.14731	0.77922	0.57271
0.02	400.0562	0.75452	0.65736	0.27	4.75135	0.77974	0.56958
0.03	213.4778	0.75638	0.65309	0.28	4.39372	0.78024	0.56645
0.04	135.9344	0.75808	0.64896	0.29	4.06970	0.78072	0.56334
0.05	95.3555	0.75967	0.64494	0.30	3.77524	0.78117	0.56025
0.06	71.1112	0.76115	0.64102	0.31	3.50691	0.78159	0.55716
0.07	55.3166	0.76254	0.63719	0.32	3.26176	0.78199	0.55409
0.08	44.3783	0.76386	0.63343	0.33	3.03725	0.78237	0.55103
0.09	36.4506	0.76510	0.62973	0.34	2.83118	0.78272	0.54798
0.10	30.4968	0.76628	0.62609	0.35	2.64164	0.78305	0.54494
0.11	25.9034	0.76741	0.62250	0.36	2.46696	0.78336	0.54190
0.12	22.2732	0.76848	0.61896	0.37	2.30568	0.78364	0.53888
0.13	19.3502	0.76950	0.61546	0.38	2.15650	0.78391	0.53586
0.14	16.9586	0.77047	0.61200	0.39	2.01831	0.78415	0.53285
0.15	14.9747	0.77140	0.60858	0.40	1.89009	0.78437	0.52984
0.16	13.3094	0.77228	0.60519	0.41	1.77094	0.78456	0.52684
0.17	11.8968	0.77313	0.60183	0.42	1.66009	0.78474	0.52385
0.18	10.6877	0.77394	0.59850	0.43	1.55681	0.78489	0.52086
0.19	9.6442	0.77471	0.59520	0.44	1.46047	0.78503	0.51787
0.20	8.7372	0.77545	0.59192	0.45	1.37050	0.78514	0.51489
0.21	7.9436	0.77615	0.58867	0.46	1.28640	0.78523	0.51191
0.22	7.2452	0.77682	0.58544	0.47	1.20770	0.78531	0.50893
0.23	6.6273	0.77747	0.58223	0.48	1.13397	0.78536	0.50595
0.24	6.0772	0.77808	0.57904	0.49	1.06486	0.78539	0.50298
0.25	5.5872	0.77866	0.57587	0.50	1.00000	π/4	0.50000

TABLE 1(b).—Values of B, j and z/jD When k Is Between 0.5 and 1.0

k	B	j	z/jD	k	B	j	z/jD
0.50	1.00000	π/4	0.50000	0.75	0.17898	0.77866	0.42413
0.51	0.93909	0.78539	0.49702	0.76	0.16453	0.77808	0.42096
0.52	0.88185	0.78536	0.49405	0.77	0.15089	0.77747	0.41777
0.53	0.82802	0.78531	0.49107	0.78	0.13802	0.77682	0.41456
0.54	0.77736	0.78523	0.48809	0.79	0.12589	0.77615	0.41133
0.55	0.72966	0.78514	0.48511	0.80	0.11445	0.77545	0.40808
0.56	0.68471	0.78503	0.48213	0.81	0.103689	0.77471	0.40480
0.57	0.64234	0.78489	0.47914	0.82	0.093566	0.77394	0.40150
0.58	0.60238	0.78474	0.47615	0.83	0.084056	0.77313	0.39817
0.59	0.56467	0.78456	0.47316	0.84	0.075135	0.77228	0.39481
0.60	0.52908	0.78437	0.47016	0.85	0.066779	0.77140	0.39142
0.61	0.49546	0.78415	0.46715	0.86	0.058967	0.77047	0.38800
0.62	0.46371	0.78391	0.46414	0.87	0.051679	0.76950	0.38454
0.63	0.43371	0.78364	0.46112	0.88	0.044897	0.76848	0.38104
0.64	0.40536	0.78336	0.45810	0.89	0.038605	0.76741	0.37750
0.65	0.37855	0.78305	0.45506	0.90	0.032788	0.76628	0.37391
0.66	0.35321	0.78272	0.45202	0.91	0.027434	0.76510	0.37027
0.67	0.32925	0.78237	0.44897	0.92	0.022534	0.76386	0.36657
0.68	0.30658	0.78199	0.44591	0.93	0.018078	0.76254	0.36281
0.69	0.28515	0.78159	0.44284	0.94	0.014062	0.76115	0.35898
0.70	0.26488	0.78117	0.43975	0.95	0.010487	0.75967	0.35506
0.71	0.24572	0.78072	0.43666	0.96	0.007356	0.75808	0.35104
0.72	0.22760	0.78024	0.43355	0.97	0.004684	0.75638	0.34691
0.73	0.21047	0.77974	0.43042	0.98	0.002500	0.75452	0.34264
0.74	0.19428	0.77922	0.42729	0.99	0.000866	0.75245	0.33816
0.75	0.17898	0.77866	0.42413	1.00	0.000	0.75000	0.33333

TABLE 2(a)—Values of Thickness Ratio (t_2/t_1)

When Axial Load is in Compression

e/D → k	0.35	0.40	0.45	0.50	0.55	0.60	0.70	0.80	0.90
0.00	*	*	*	*	*	*	*	*	*
0.05	-	-	-	7297	1301	754	440	329	272
0.10	-	-	-	1186	363	225	137	103	86.1
0.15	-	-	-	393	158	103	65.1	49.9	41.8
0.20	-	-	-	174	83.2	56.8	36.9	28.6	24.1
0.25	-	-	2737	89.9	48.4	34.3	22.9	18.0	15.2
0.30	-	-	247	51.8	30.4	22.2	15.2	12.1	10.3
0.35	-		93.5	30.9	19.4	14.6	10.2	8.18	7.01
0.40	-	-	44.9	19.5	12.9	9.93	7.10	5.75	4.95
0.45	-	-	24.9	12.6	8.75	6.87	5.01	4.09	3.54
0.50	-	109	14.7	8.32	5.99	4.79	3.56	2.93	2.55
0.55	-	30.7	9.01	5.54	4.12	3.34	2.52	2.10	1.83
0.60	-	13.8	5.64	3.69	2.82	2.32	1.78	1.49	1.31
0.65	-	7.17	3.54	2.44	1.91	1.60	1.24	1.05	0.924
0.70	32.5	3.93	2.21	1.59	1.27	1.07	0.845	0.718	0.637
0.75	7.24	2.18	1.34	1.00	0.813	0.696	0.556	0.476	0.424
0.80	2.76	1.18	0.780	0.598	0.495	0.428	0.346	0.298	0.267
0.85	1.14	0.592	0.415	0.327	0.274	0.240	0.196	0.170	0.153
0.90	0.429	0.254	0.186	0.150	0.128	0.113	0.094	0.082	0.074
0.95	0.110	0.072	0.055	0.045	0.039	0.034	0.029	0.025	0.023
1.00	0.00	0.00	0.00	0.00	0.00	0.00	0.00	0.00	0.00

ANALYSIS/CALCULATION

DOC ID # S-96-0013 ATT # 5

REV 1 SHEET 3 5 OF 17

TABLE 2(b)—Values of Thickness Ratio (t_2/t_1)

When Axial Load is in Compression

e/D → k	1.00	1.2	1.6	2.0	3.0	5.00	10.0	∞
0.00	∞	∞	∞	∞	∞	∞	∞	∞
0.05	237	197	161	143	124	111	103	95.4
0.10	75.4	63.0	51.4	45.9	39.8	35.7	33.0	30.5
0.15	36.7	30.8	25.2	22.5	19.5	17.5	16.2	15.0
0.20	21.3	17.9	14.7	13.1	11.4	10.2	9.45	8.74
0.25	13.5	11.4	9.37	8.39	7.29	6.54	6.04	5.59
0.30	9.13	7.74	6.39	5.73	4.99	4.47	4.13	3.82
0.35	6.25	5.32	4.40	3.96	3.45	3.09	2.86	2.64
0.40	4.43	3.78	3.14	2.83	2.46	2.21	2.04	1.89
0.45	3.18	2.72	2.27	2.04	1.79	1.60	1.48	1.37
0.50	2.29	1.97	1.65	1.49	1.30	1.17	1.08	1.00
0.55	1.65	1.43	1.20	1.08	0.948	0.854	0.798	0.730
0.60	1.19	1.03	0.866	0.783	0.687	0.618	0.572	0.529
0.65	0.839	0.730	0.617	0.559	0.491	0.442	0.409	0.379
0.70	0.580	0.507	0.430	0.390	0.343	0.309	0.286	0.265
0.75	0.387	0.339	0.289	0.262	0.231	0.209	0.193	0.179
0.80	0.244	0.215	0.184	0.167	0.148	0.133	0.124	0.114
0.85	0.141	0.124	0.106	0.097	0.086	0.078	0.072	0.067
0.90	0.068	0.060	0.052	0.047	0.042	0.038	0.035	0.033
0.95	0.022	0.019	0.016	0.015	0.013	0.012	0.011	0.010
0.00	0.00	0.00	0.00	0.00	0.00	0.00	0.00	0.00

TABLE 3(a)—Values of Thickness Ratio (t_2/t_1)

When Axial Load is in Tension

e/D → k	0.35	0.40	0.45	0.50	0.55	0.60	0.70	0.80	0.90
0.00	∞	∞	∞	∞	∞	∞	∞	∞	∞
0.05	9.11	14.0	18.3	22.2	25.7	28.9	34.5	39.2	43.2
0.10	2.33	3.93	5.37	6.65	7.80	8.86	10.7	12.2	13.6
0.15	0.878	1.69	2.41	3.06	3.64	4.17	5.10	5.88	6.54
0.20	0.362	0.850	1.28	1.67	2.02	2.34	2.89	3.36	3.75
0.25	0.138	0.459	0.745	1.00	1.23	1.44	1.80	2.10	2.36
0.30	0.031	0.255	0.453	0.630	0.769	0.933	1.18	1.39	1.57
0.35	-	0.140	0.282	0.410	0.524	0.627	0.806	0.955	1.08
0.40	-	0.672	0.177	0.271	0.355	0.430	0.561	0.670	0.763
0.45	-	0.033	0.111	0.181	0.243	0.299	0.396	0.477	0.545
0.50		0.009	0.068	0.120	0.167	0.209	0.281	0.341	0.392
0.55		-	0.040	0.079	0.114	0.146	0.200	0.245	0.282
0.60	-	-	0.022	0.051	0.077	0.101	0.141	0.174	0.202
0.65	-	-	0.011	0.032	0.051	0.069	0.098	0.900	0.143
0.70		-	0.004	0.020	0.033	0.046	0.067	0.084	0.098
0.75	-	-	0.000	0.011	0.021	0.029	0.044	0.056	0.066
0.80	-	-	-	0.005	0.012	0.018	0.027	0.035	0.041
0.85	-	-	-	0.003	0.006	0.010	0.015	0.020	0.024
0.90	-	-	-	0.001	0.003	0.004	0.007	0.010	0.012
0.95	-	-	-	0.006	0.001	0.001	0.002	0.003	0.904
1.00	.00	.00	.00	.00	.00	.00	.00	.00	.00

ANALYSIS/CALCULATION

DOC ID # S-96-0013 ATT # S

REV 1 SHEET S 6 OF 17

TABLE 3(b)—Values of Thickness Ratio (t_2/t_1)
When Axial Load is in Tension

e/D → k	1.00	1.2	1.6	2.0	3.0	5.00	10.0	∞
0.00	∞	∞	∞	∞	∞	∞	∞	∞
0.05	46.7	52.5	60.7	66.3	74.6	82.2	83.4	95.4
0.10	14.7	16.6	19.3	21.1	23.8	26.2	28.3	30.5
0.15	7.11	8.06	9.39	10.3	11.6	12.9	13.9	15.0
0.20	4.09	4.65	5.45	5.98	6.78	7.80	8.09	8.74
0.25	2.58	2.95	3.46	3.81	4.33	4.79	5.17	5.59
0.30	1.72	1.97	2.33	2.57	2.92	3.23	3.49	3.8[illegible]
0.35	1.19	1.37	1.62	1.79	2.04	2.26	2.44	2.64
0.40	0.843	0.972	1.16	1.28	1.46	1.62	1.75	1.89
0.45	0.604	0.700	0.834	0.923	1.05	1.17	1.27	1.37
0.50	0.436	0.507	0.606	0.672	0.769	0.854	0.924	1.00
0.55	0.315	0.367	0.440	0.489	0.560	0.623	0.674	0.730
0.60	0.226	0.265	0.318	0.354	0.406	0.452	0.489	0.529
0.65	0.160	0.188	0.227	0.253	0.290	0.323	0.350	0.379
0.70	0.111	0.131	0.158	0.177	0.203	0.226	0.245	0.265
0.75	0.074	0.088	0.107	0.119	0.137	0.153	0.165	0.179
0.80	0.047	0.056	0.068	0.076	0.088	0.098	0.106	0.114
0.85	0.027	0.032	0.040	0.044	0.051	0.057	0.062	0.067
0.90	0.013	0.016	0.019	0.022	0.025	0.028	0.030	0.033
0.95	0.004	0.005	0.006	0.007	0.008	0.009	0.010	0.10
1.00	0.00	0.00	0.00	0.00	0.00	0.00	0.00	0.00

ANALYSIS/CALCULATION
DOC ID # S-96-0013 ATT # S
REV 1 SHEET S 7 OF 17

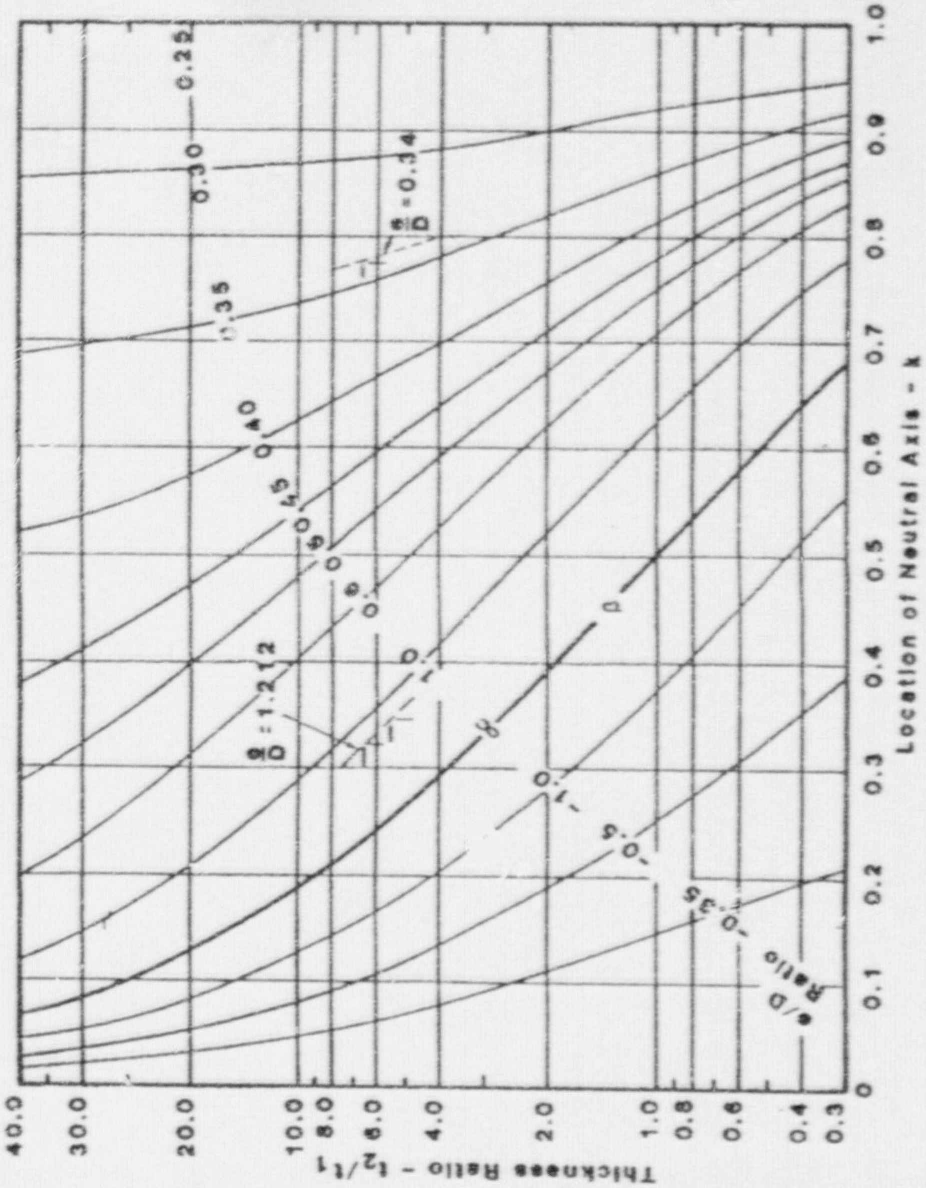

FIG. 2. - Anchor-Bolt Parameters

When the axial load is zero and e/D is equal to infinity, t_2/t_1 is equal to B. This pure moment relationship is defined by the darker curve in Fig. 2. Curves located above this B curve correspond to downward loads, which produce compression on the section; whereas, curves located below this curve correspond to upward, or tensile loads. When drawn to a larger scale, a chart of this type can be used to locate the neutral axis, if the thickness and eccentricity ratios are known. On the other hand, k can be obtained from data presented in Tables 2 and 3, or by using the numerical procedure described later in the paper. The latter method is the most precise.

Once k is known, stresses may be computed using the following B-factor:

$$B_1 = \frac{(\tan\alpha - \alpha) + \pi}{\sec\alpha + 1} , \qquad (3)$$

where $\alpha = \cos^{-1}(1-k)$ in radians. The tensile stress (S_b) in the most-distant anchor bolt and the maximum compressive stress (S_c) on the opposite side of the neutral axis are given by the following equations:

$$S_b = \frac{P\left(\frac{e}{jD} \pm \frac{z}{jD}\right)}{t\ D_1\ B_1} \quad \text{and} \qquad (4)$$

$$S_c = S_b\left(\frac{1 - \cos\alpha}{1 + \cos\alpha}\right) \qquad (5)$$

These equivalent steel stresses occur on the circle defined by D. The use of the above equations for computing anchor-bolt stresses and for determining the required number and size of bolts is described below.

LIMITING VALUES OF ECCENTRICITY RATIO

When a cylindrical structure oscillates in a vertical plane about its foundation, anchor bolts on one side are subjected to tension, alternately with bolts located on the other side. During each cycle, the neutral axis moves back and forth across the section. The anchor-bolt equations described above can be used to locate the neutral axis at any particular point in the cycle if the eccentricity ratio (e/D) is equal to or greater than 1/4. When k = 1.0 or zero, the limiting value of j = 0.75 and the corresponding value of e/jD is 1/3. (See Table 1.)

When e/D is equal to or less than 1/4 the neutral axis is located at the diametral axis of the ring section. In this case, stresses can be determined from the basic equation:

$$S = \frac{P}{A} \pm \frac{Mc}{I} \qquad (6)$$

The section modulus (I/c) for a cylindrical ring is equal to $\pi\,(D/2)^2 t$, or AD/4. Substituting the latter factor in the above equation, it becomes:

$$S = \frac{P}{A}\ (1 \pm \frac{4e}{D}) \qquad (7)$$

This simple equation can be used to compute peak stresses when the section is subjected entirely to compressive stresses, or when it is subjected entirely to tensile stresses. If the axial load is downward, the area (A) to be used in the above formula is equal to πDt_2; whereas, A is equal to πDt_1 when the axial load is upward.

ILLUSTRATIVE ANCHOR-BOLT PROBLEM

"Process Equipment Design," by Brownell and Young (Ref. 3), includes an excellent chapter on the theory and design of anchor bolts for vertical vessels. A typical anchor-bolt problem is solved on page 189, using the basic equations. Design parameters from this illustrative problem will be used as input in the numerical examples discussed below. The results

ANALYSIS/CALCULATION
DOC ID # S-96-0013 ATT # S
REV 1 SHEET S 8 OF 17

obtained herein are compared with those presented in Ref. 3, in order to demonstrate the accuracy and merits of the new method.

In the anchor-bolt problem of Ref. 3, 24 steel anchor bolts, 2 1/2 in. in diameter, are located uniformly around a 11.0 ft bolt circle. The weight of the cylindrical tower, which is 10.0 ft in diameter, is 600,000 lb. The tower is subjected to an overturning moment of 8 x 10^6 ft lb, about its base caused by wind. The bearing plate is 12 in. wide and rests on a concrete foundation. The compressive strength (f'_c) of the concrete is 3000 psi. The ratio (n) of the modulus of elasticity for steel to that of concrete is equal to 10. The allowable tensile stress (S_{ta}) is 20,000 psi at the bolt threads; whereas, the allowable compressive stress (f_{ca}) is 1200 psi in the concrete.

COMPUTATION OF ANCHOR-BOLT STRESSES

The new method for calculating anchor-bolt stresses consists of the following steps. The anchor-bolt array and loads described in the preceding paragraph, are used in the sample calculations.

1) Compute e/D and t_2/t_1.

$$e = \frac{M}{P} = \frac{8 \times 10^6}{0.6 \times 10^6} = 13.333 \text{ ft}$$

$$t_1 = \frac{NA_b}{\pi D} = \frac{24\ (3.72)}{\pi(11 \times 12)} = 0.2153 \text{ in.}$$

$$t_2 = \frac{t_c + (n-1)t_1}{n} = \frac{12+9t_1}{10} = 1.3938 \text{ in.}$$

$$\frac{e}{D} = \frac{13.333}{11.0} = \underline{1.212} > 1/4$$

and

$$\frac{t_2}{t_1} = \underline{6.474}$$

Note: 1 in. = 25.4 mm; 1 ft = 0.305 m; 1 lb = 0.453 kg; 1 psi = 6.89 kPa

2) Locate the neutral axis.

Determine k corresponding to values of e/D and t_2/t_1 obtained above.

By inspection of Fig. 2, k = 0.321. (or see page 17.)

3) Determine values of coefficients and compute factor B_1.

Determine j and z/jD from Table 1, corresponding to the above k.

By interpolation: j = 0.782 and z/jD = 0.554, when k = 0.321

Therefore: e/jD = 1.550.

Compute B_1 for $\alpha = \cos^{-1}(1-2k) = 1.2047$ rad, with equation 3.

$$B_1 = \frac{(\tan\alpha - \alpha) + \pi}{\sec\alpha + 1} = \frac{1.4035 + \pi}{2.7933 + 1} = \underline{1.1982}.$$

4) Compute tensile stress (S_b) in most-distant bolt using equation 4.

$$S_b = \frac{P\left(\frac{e}{jD} - \frac{z}{jD}\right)}{t_1\ D\ B_1} = \frac{600{,}000\ (1.550 - 0.554)}{0.2153\ (11 \times 12)(1.198)} = \underline{17{,}552} \text{ psi}$$

5) Compute maximum compression stress (S_c) on opposite side of bolt circle using equation 5.

$$S_c = S_b \left(\frac{1 - \cos\alpha}{1 + \cos\alpha}\right) = 17{,}552 \left(\frac{1 - 0.3580}{1 + 0.3580}\right) = \underline{8298} \text{ psi}$$

6) Compute maximum stress in concrete.

$$f_c = \frac{S_c}{n} = \frac{8{,}298}{10} = 830 \text{ psi} \quad (\text{at } D = 11.0 \text{ ft})$$

$$f_{c(max)} = \frac{S_c}{n}\left(\frac{kD + b/2}{kD}\right) = 830\left(\frac{3.531 + 0.5}{3.531}\right) = \underline{948} \text{ psi} \quad (\text{at } D = 12.0 \text{ ft})$$

ANALYSIS/CALCULATION

DOC ID # S-96-0013 ATT # S

REV 1 SHEET S 9 OF 17

The results obtained above are almost identical to those calculated by Brownell and Young in Ref. 3; however, the above results are more precise and were obtained with less effort. (These results are summarized later in Table 6 as Case 1.)

As defined in Fig. 1, t_1 represents the equivalent thickness of a ring having a diameter of D and the same area as the anchor bolts. On page 189 of Ref. 3, Brownell and Young used the root area of the bolt threads to compute t_1. In order to be consistent with the conditions of the reference problem, this procedure is used in the above calculation. It is based on the assumption that the free-body section cuts through the bolt threads. If the free-body section cuts through the unthreaded length of the bolts, then the gross bolt area should be used to compute t_1. In this case, the resulting value of S_b is the average tensile stress in the gross section of the bolt. The maximum stress will occur at the threads, and is equal to S_b times the gross bolt area divided by the net area at the threads. Depending upon the job specifications, the net area may be defined as the root area or as the tensile stress area.

LOCATING THE NEUTRAL AXIS

In order to compute anchor-bolt stresses accurately, it is necessary to first locate the neutral axis. The easiest way to do this is to select k from a chart similar to Fig. 2. However, the eccentricity curves may be so far apart that interpolation is difficult and accuracy poor. This is especially the case when e/D is very small. On the other hand, the numerical procedure described below may be used to determine k. It is based upon the fact that any e/D curve is essentially a straight line between consecutive k-values, if the difference between these k-values is small.

With reference to the anchor-bolt problem discussed above, e/D and t_2/t_1 are equal to 1.212 and 6.474, respectively. Reference to Fig. 2, or Table 2, indicates that k is probably between 0.33 and 0.32. Values of t_2/t_1, corresponding to these two k-values, are computed with equation 1 as follows:

k	j	e/jD	z/jD	$\frac{e}{jD} - \frac{z}{jD}$	B	t_2/t_1
0.33	0.78237	1.54914	0.55103	0.99811	3.03725	6.080
0.32	0.78199	1.54989	0.55409	0.99580	3.26176	6.537

Values of j, z/jD and B, in the above chart, are selected from Table 1. A more accurate value of k is then determined by interpolating between the resulting thickness ratios. For example:

$$k = 0.32 + \frac{(0.33-0.32)(6.537-6.474)}{(6.537-6.080)} = \underline{0.321}$$

The value of k, obtained in this manner, is usually accurate enough for most anchor-bolt calculations.

Values of t_2/t_1 and k from the above table are plotted in Fig. 2 for information. The dashed line between points define a localized design curve for e/d = 1.212. Such a curve could have been used to obtain k = 0.321.

A GENERAL FORMAT FOR LOCATING THE NEUTRAL AXIS

When k is very small, or very large, it may be necessary to repeat the above calculations in order to locate the neutral axis accurately. As an example, assume that it is necessary to determine k when the eccentricity ratio is 0.34 instead of 1.212. Reference to Fig. 2, or Table 2, indicates that k is probably between 0.75 and 0.80, when e/D = 0.34 and t_2/t_1 = 6.474.

Calculations, similar to those described above, are summarized in the upper tabular section of Fig. 3. The objective of these initial calculations is

ANALYSIS/CALCULATION
DOC ID # S-96-0013 ATT # S
REV 1 SHEET S10 OF 17

$\left(\frac{e}{jD} \overset{+}{\ominus} \frac{z}{jD} \right)$ $B = \frac{\qquad}{\tan \alpha - \alpha} + 1$

α (rad)	k	j	$\frac{e}{jD}$	$\frac{z}{jD}$	$\frac{e}{jD} \overset{+}{\ominus} \frac{z}{jD}$	B	t_2/t_1	T
	0.80	0.77545	0.43846	0.40808	0.03038	0.11445	3.882	
	0.78	0.77682	0.43768	0.41456	0.02312	0.13802	5.108	2
	0.77	0.77747	0.43732	0.41777	0.01955	0.15089	7.869	1
Δ =	0.01	-.00065		-.00321				
2.16036	0.778	0.77695	0.43761	0.41520	0.02241	0.14054	6.412	2
2.15796	0.777	0.77702	0.43757	0.41552	0.02205	0.14180	6.573	1
2.15945	0.77762	0.77697	0.43759	0.41532	0.02227	0.14102	6.4733	OK

$k = k_1 + (k_2 - k_1)(T_1 - T)/(T_1 - T_2)$

k_1	$k_2 - k_1$	$T_1 - T$	$T_1 - T_2$	k
0.77	.01	1.395	1.761	0.7779
0.777	.001	0.099	0.161	0.77762

Reference Data

Summary

α = 2.15945 rad

k = 0.77762

FIG. 3. - Format For Locating Neutral Axis

The first approximation of k (0.7779) is obtained by linearly interpolating between thickness ratios of 6.108 and 7.869. An inspection of e/D curves plotted in Fig. 2 indicates that the true value of k will be slightly smaller than 0.778, but larger than 0.777. (These values provide a Δk of 0.001, although some other Δk-value could be used in the next iteration, if desired.) Coefficients j and z/jD, corresponding to these two k-values, are obtained by linear interpolation of values recorded previously for k = 0.78 and k = 0.77. The algebraic difference between respective j-values (-0.00065) is recorded on the middle line of the upper tabular section, as well as the algebraic difference (-0.00321) for respective values of z/jD. These difference values are used to obtain values of j and z/jD for the next iteration. For example, when k is equal to 0.778, j = 0.77747 + 0.8 (-0.00065) = 0.77695.

Rather than obtain values of the B-factor by interpolation, it is better to compute them with equation 2. Values of thickness ratio, corresponding to k-values of 0.778 and 0.777, are then computed with equation 1. They equal 6.41224 and 6.57288, respectively. Linearly interpolating between these two value of thickness ratio indicates that k is equal to 0.77762, when t_2/t_1 = 6.474 and e/D = 0.3[illegible]. This k-value is used to compute a final value for α and the corresponding value of t_2/t_1. This computed value is equal to the prescribed thickness ratio (6.474); thus, the solution for k is verified.

The final value of k obtained using the format of Fig. 3 is quite exact. As noted earlier, one iteration is all that is usually required for most anchor-bolt problems. However, two iterations and several significant figures are used in the computations presented in Fig. 3, because e/D is small. Greater precision can be obtained with a third iteration, but is probably of academic interest only. However, when performing more than two iterations, values of j and z/jD should be computed with the basic equations given in the appendix. Using these exact values of j and z/jD, a third iteration produced the following results, starting with $t_2/t_2 = 6.474$ and $e/D = 0.34$:

$k = 0.777624$ $\quad j = 0.776980$ $\quad B = 0.141012$

$\alpha = 2.15947$ rad $\quad \dfrac{z}{jD} = 0.415326$ $\quad \dfrac{t_2}{t_1} = 6.4740$

The required precision will depend upon requisites of the particular anchor-bolt problem. The procedure described above, and incorporated in the format of Fig. 3, will simplify and standardize the calculations, and produce the desired precision with a minimum of effort.

DESIGN APPLICATIONS

Calculations illustrated above are typical of analyses required to locate the neutral axis and to determine stresses when the anchor-bolt layout and external loads are known. In the typical design problem, the external loads and allowable stresses are given and it is necessary to determine the size and number of anchor-bolts, and perhaps the bearing width. For balanced design conditions, the maximum tensile stress (S_b) in the bolts and the maximum compressive stress (S_c) in the foundation are equal to their respective design limits, S_{ba} and S_{ca}. In this special case, the neutral axis is located by the following equation:

$$\alpha_{bal} = \cos^{-1}\left(\frac{S_{ba} - S_{ca}}{S_{ba} + S_{ca}}\right) \text{ rad} \qquad (8)$$

This equation is exact when S_{ba} and S_{ca} occur on the circle defined by D. If the compression forces do not lie exactly on the bolt circle, an average diameter may be used in the calculations.

The required number (N) of anchor bolts can be determined directly from the following formula:

$$NA_b = \frac{\pi P}{S_{ba}} \left(c_1 \frac{e}{D} \pm c_2\right) \qquad (9)$$

A_b is the area of one bolt and NA_b equals the total bolt area (πDt_1). This equation is exact because $c_1 = 1/jB_1$ and $c_2 = z/jDB_1$. However, c_1 and c_2 can be obtained from Table 4. These design values of c_1 and c_2 are then inserted in the above equation to determine N and A_b. The adequacy of a particular anchor-bolt array should then be verified using the analysis procedure described in the first part of this paper.

A general calculation procedure is illustrated by the following example. Design requirements are assumed to be the same as for the illustrative problem considered earlier, except that the number of bolts is not known initially. Also, it is assumed that the free-body section does not cut through the bolt threads. In this case, S_{ba} equals 15,355 psi, which corresponds to an allowable stress of 20,000 psi at the threads, multiplied by the ratio of net to gross bolt area. A value of 1000 psi corresponds to S_{ca} at D/2, whereas, the allowable stress in the concrete is 1200 psi. (The maximum compressive stress will occur at the outer edge of the bearing plate, so that it is desirable to allow for this fact when selecting an approximate value of S_{ca} at D/2.) More exact approximations could be used for S_{ba} and S_{ca}; however, such precision is usually not required at this stage of the design calculations.

The design calculations may be performed in the following manner:

TABLE 4.-Values of Design Coefficients

k	B_1	j	z/jD	$c_1=1/jB_1$	$c_2=z/jDB_1$
0.00	π/2	0.7500	0.6667	0.8488	0.4244
0.05	1.5039	0.7597	0.6449	0.8753	0.4288
0.10	1.4436	0.7663	0.6261	0.9040	0.4337
0.15	1.3862	0.7714	0.6086	0.9352	0.4390
0.20	1.3304	0.7755	0.5919	0.9693	0.4449
0.25	1.2755	0.7787	0.5759	1.0068	0.4515
0.30	1.2210	0.7812	0.5603	1.0484	0.4589
0.35	1.1666	0.7831	0.5449	1.0946	0.4671
0.40	1.1119	0.7844	0.5298	1.1466	0.4765
0.45	1.0564	0.7851	0.5149	1.2057	0.4874
0.50	1.0000	π/4	0.5000	1.2732	0.5000
0.55	0.9421	0.7851	0.4851	1.3520	0.5149
0.60	0.8821	0.7844	0.4702	1.4453	0.5330
0.65	0.8201	0.7831	0.4551	1.5571	0.5549
0.70	0.7547	0.7812	0.4398	1.6961	0.5827
0.75	0.6945	0.7787	0.4241	1.8750	0.6192
0.80	0.6091	0.7755	0.4081	2.1170	0.6700
0.85	0.5245	0.7714	0.3914	2.4716	0.7462
0.90	0.4260	0.7663	0.3739	3.0633	0.8777
0.95	0.2996	0.7597	0.3551	4.3936	1.1852
1.00	0.00	0.7500	0.3333	∞	∞

1) Locate neutral axis approximately, based upon allowable design stresses.

$$\alpha_{bal} = \text{Cos}^{-1}\left(\frac{S_{ba} - S_{ca}}{S_{ba} + S_{ca}}\right) \text{rad}$$

S_{ba} = Allowable tensile stress

S_{ca} = Allowable compressive stress

For the design stresses given in the reference problem:

$$\alpha_{bal} = \text{Cos}^{-1}\left(\frac{15{,}1555 - 10(1000)}{15.155 + 10(1000)}\right)$$

$$= 1.36 \text{ rad}$$

$$k = (1-\cos\alpha)/2 = 0.395$$

Assume 2-1/2 in. ∅ Bolts

A_{net} = 3.715 in.^{2}

A_{gross} = 4.909 in.^{2}

$$S_{ba} = 20{,}000 \times \frac{3.72}{4.91} = 15{,}155 \text{ psi}$$

(D = 11.0 ft)

2) Determine design parameters.

$$e = \frac{M}{P} = \frac{8 \times 10^6}{0.6 \times 10^6} = 13.333 \qquad \frac{e}{D} = \frac{13.333}{11.0} = 1.212 > 1/4$$

c_1 = 1.141 and c_2 = 0.476 (Table 5, k = 0.395)

3) Determine required number of 2-1/2 in. ∅ bolts using equation 9.

$$NA_b = \frac{\pi P}{S_b}(c_1 \frac{e}{d} \pm c_2) = \frac{\pi (600{,}000)}{15{,}155}(1.141 \times 1.212 - 0.476)$$

$$= 112.8 \text{ in.}$$

$$N = \frac{112.8}{4.909} = 22.98 = \underline{23}$$

However, consider using 22 bolts, because 12-in. bearing width is greater than required for balanced design.

4) Verify adequacy of 22 anchor bolts if 2 1/2 in. in diameter.

The bearing plate, or concrete ring wall, is 12 in. wide. It has an average diameter of 11.0 ft and an outside diameter of 12.0 ft. The eccentricity ratio equals 1.212. Using the gross bolt area, $t_1 = 22 \times (4.909)/132\pi = 0.2604$ in. The compression thickness $= t_2 = (12 + 9t_1)/10 = 1.4344$ in., and $t_2/t_1 = 5.508$. The neutral axis, corresponding to these parameters, is located using the format of Fig. 3. Thus,

$$k = 0.34387 \quad \text{and} \quad \alpha = 1.25323 \text{ rad},$$

$$B = 2.759 \quad \text{and} \quad B_1 = 1.1733 \; .$$

Anchor-bolt stresses are computed using equations 4 and 5.

$$S_b = 14{,}898 \text{ psi and} \quad S_c = 8808 \text{ psi} \quad (D = 11.0 \text{ ft})$$

$$S_t = 14{,}898 \left(\frac{4.909}{3.715} \right) = 19{,}686 \text{ psi} \quad (9 = 11.0 \text{ ft})$$

$$f_c = \frac{7808}{10} \left(\frac{3.783 + 0.5}{3.783} \right) = 884 \text{ psi} \quad (D = 12.0 \text{ ft})$$

5) Compare maximum working stresses with allowable design values

$$S_t = 19{,}686 \text{ psi} < 20{,}000 \text{ psi}$$

$$f_c = 884 \text{ psi} < 1{,}200 \text{ psi}$$

Thus, 22 anchor bolts, 2-1/2 in. in diameter, are satisfactory.

COMMENTS ON DESIGN PROCEDURE

The required bolt area (NA_b), defined by equation 9, will cause a tensile stress in the most-distant anchor bolt equal to the maximum allowable stress, only if the corresponding value of t_2/t_1 is satisfied. For example, when $k = 0.395$ and $e/D = 1.212$, the corresponding thickness ratio can be obtained from equation 1 as follows:

$$\frac{t_2}{t_1} = 1.9481 \left(1 + \frac{1}{1.54541 - 0.53135} \right) = \underline{3.87}.$$

B is computed with equation 2; whereas, values of j and k/jD are taken from Table 1. (Or, an approximate value of t_2/t_1 could be selected directly from Fig. 2 or Table 2, corresponding to $k = 0.4$ and $e/D = 1.2$.) The equivalent thickness of the bolts $= t_1 = NA_b/\pi D = 112.8/132\pi = 0.272$ in. Thus, t_2 required for balanced design is equal to 0.272 (3.87), or 1.053 in. This equivalent steel thickness conforms to a concrete bearing width of:

$$t_c = nt_2 - (n-1)t_1 = 10(1.053) - 9(0.272) = \underline{8.08} \text{ in.}$$

Ordinarily, it is not feasible to provide an anchor-bolt array having the exact values of NA_b and t_c required by balanced design conditions. However, these parameters may be used as a guide in selecting nominal values for bolt size, number of bolts and bearing width. For example, requirements of the above problem could possibly be satisfied by 23 anchor bolts and an 8.0 in. bearing width. On the other hand, the specified bearing width (12 in.) is significantly greater than 8.08 in., so that 22 bolts may be adequate. Validity of a particular choice should be verified by locating the neutral axis and then computing stresses. The results for 22 bolts and a 12-in. bearing width are summarized in Table 6 as Case 2.

TABLE 6.—Stress Summary

Case	Bolts (2-1/2 in. diameter)	t_2/t_1	k	Unit Stresses - psi		
				S_b	S_t	f_c
Ref. 3	24	6.474	0.32	17,450	17,450	965
1	24	6.474	0.321	17,552	17,552	948
2	22	5.508	0.3439	14,898	19,686	884
3	24	5.124	0.3542	13,882	18,264	855

Note: 1 in. = 25.4 mm; 1 psi = 6.89 kPa and $\frac{e}{D} = 1.212$.

On the other hand, the designer may prefer to use 24 bolts in order to provide an even number of bolts with a nominal 15° angular spacing. For 24 bolts, t_2/t_1 = 5.124, using the gross area of the bolts and a 12-in. bearing width. The results for this anchor-bolt array are summarized in Table 6 as Case 3. The effects on the location of the neutral axis and upon working stresses, caused by using 24 bolts instead of 22, are indicated by comparing respective parameters and stress values for Case 3 with those for Case 2.

The effect of using the gross-bolt area to compute t_1 and to locate the neutral axis, instead of the root area, is shown by comparing stress values in Table 6 for Case 3 and Case 1, respectively. The maximum tensile stress (18,264 psi) obtained for Case 3 is greater than that (17,552 psi) obtained for Case 1. Therefore, it is more accurate and conservative to use the gross-bolt area to locate the neutral axis, rather than the root area, unless the free-body section actually passes through the bolt threads.

CONCLUSIONS

The simplified equations, B-factors and numerical data presented in this paper provide a rapid, accurate and convenient method for performing anchor-bolt calculations. If any two of the anchor-bolt parameters (e/D, t_2/t_1 and k) are known, the other one can be determined using the equations and computation aids described above. Anchor-bolt stresses, produced by the external loads acting on a given bolt circle, can be computed accurately once k is known. On the other hand, if the allowable stresses and external loads are given, the required number of anchor bolts can be obtained directly by using equations 8 and 9, which required little effort to solve.

APPENDIX I—REFERENCES

1. Taylor, F.W., Thompson, S.E., and Smulski, E., Concrete, Plain and Reinforced, Vol. 1, 4th ed., John Wiley & Sons, Inc., New York, 1925.
2. ----- "Specification for the Design and Construction of Reinforced Concrete Chimneys," ACI Standard 505-54, Journal of the American Concrete Institute, Vol. 26, No. 1, American Concrete Institute, Detroit, Sept., 1954.
3. Brownell, L.E. and Young, E.H., Process Equipment Design, Chapt. 10, John Wiley & Sons, Inc., New York, 1959, pp. 183-190.
4. Jorgensen, S.M., "Anchor Bolt Calculations," Petroleum Refiner, Vol. 25, May 25, 1946.
5. Gartner, A.I., "Nomograms for the Solution of Anchor Bolt Problems," Petroleum Refiner, Vol. 30, July 7, 1951.

APPENDIX II.—UNITS

The following ratios and factors are dimensionless and may be used directly with either U.S. Customary or SI units:

Eccentricity ratio = e/D; $n = E_s/E_c$; and

Thickness ratio = t_2/t_1; Factors: B, B_1, j, k, e/jD and z/jD.

However, the U.S. Customary units are utilized in the paper in order to conform with those used in the illustrative problem of Ref. 3. For this reason, the following conversion factors may be of interest:

1 in. = 25.4 mm; 1 lb = 0.453 kg; and

1 ft = 0.305 m; 1 psi = 6.89 kPa .

APPENDIX III—NOTATION

The following symbols are used in this paper:

A = cross-sectional area of one anchor bolt;

B = B-factor;

b = width of bearing ring;

C = resultant of compression forces;

c = a coefficient

D = diameter of bolt circle;

E = modulus of elasticity;

e = eccentricity;

f_c = compressive stress in concrete;

j = a factor used to express distance between T and C;

k = a factor used to locate neutral axis;

M = bending moment;

N = number of anchor bolts

n = ratio of moduli of elasticity (steel to concrete);

P = axial load;

S = equivalent steel stress;

T = resultant of tensile forces;

t = equivalent ring thickness;

z = distance between centroidal axis and C.

The following subscripts are used in the paper:

a = allowable

b = bolt

c = compression

t = tension

bal = balanced design

APPENDIX IV.—Derivation of Equations

Anchor-bolt parameters are defined in Fig. 1. Let S equal stress in ring at angle ϕ. Since S varies linearly with distance from neutral axis:

$$\frac{S}{\cos(\pi-\phi)+\cos\alpha} = \frac{S_b}{1+\cos\alpha} = \frac{S_c}{1-\cos\alpha} \qquad \text{(A-1)}$$

$$T = 2\int_{\alpha}^{\pi} S\,dA = 2\int_{\alpha}^{\pi} S_b \left(\frac{\cos(\pi-\phi)+\cos\alpha}{1+\cos\alpha}\right)\left(\frac{Dt_1}{2}\right) d\phi \qquad \text{(A-2)}$$

$$\therefore T = S_b D t_1 \left(\frac{(\tan\alpha-\alpha)+\pi}{\sec\alpha+1}\right) = \underline{S_b\, D\, t_1\, (B_1)} \qquad \text{(A-3)}$$

Similarly:

$$C = 2\int_{0}^{\alpha} S\,dA = 2\int_{0}^{\alpha} S_b \left(\frac{\cos\phi-\cos\alpha}{1+\cos\alpha}\right)\left(\frac{D}{2}\,t_2\right) d\phi \qquad \text{(A-4)}$$

$$\therefore C = S_b D t_2 \left(\frac{\tan\alpha-\alpha}{\sec\alpha+1}\right) = \underline{S_b D t_2\, B_2} \qquad \text{(A-5)}$$

When $P = 0$, $T = C$ and $t_1 B_1 = t_2 B_2$

$$\therefore \frac{t_2}{t_1} = \frac{B_1}{B_2} = B = \frac{(\tan\alpha-\alpha)+\pi}{(\tan\alpha-\alpha)} \qquad \text{(A-6)}$$

If P is downward in compression:

$\underline{T + P - C = 0}$ $(\Sigma F_v = 0)$

$$\text{(or)}\ DS_b\, t_1 B_1 + P - DS_b\, t_2 B_2 = 0 \qquad \text{(A-7)}$$

ANALYSIS/CALCULATION
DOC ID # S-96-0013 ATT # S
REV 1 SHEET S16 OF 17

$$\therefore S_b = \frac{P}{t_2B_2 - t_1B_1} \qquad (A\text{-}8)$$

$$\underline{M - Pz - TjD = 0} \qquad (\Sigma M = 0)$$

$$\text{(or)}\ P\ (e - z) - (DS_b t_1 B_1)\ jD = 0$$

$$\therefore S_b = \frac{P\ (e - z)}{D^2 t_1\ j\ B_1} = \frac{P}{Dt_1B_1}\left(\frac{e}{jD} - \frac{z}{jD}\right) \qquad (A\text{-}9)$$

Equate equations (A-8) and (A-9) and solve for B:

$$\therefore B = \frac{B_1}{B_2} = \frac{t_2}{t_1}\left(\frac{1}{1 + \cfrac{1}{\frac{e}{jD} - \frac{z}{jD}}}\right) \qquad (A\text{-}10)$$

If P is upward, in tension, the above equation becomes:

$$\therefore B = \frac{B_1}{B_2} = \frac{t_2}{t_1}\left(\frac{1}{1 - \cfrac{1}{\frac{e}{jD} + \frac{z}{jD}}}\right) \qquad (A\text{-}11)$$

Basic equations for computing j and z are presented below: (3)

$$j = \frac{1}{2}\left[\frac{\frac{\pi-\alpha}{2} + 1.5\cos\alpha\sin\alpha + (\pi-\alpha)\cos^2\alpha}{\sin\alpha + (\pi-\alpha)\cos\alpha} + \frac{\frac{\alpha}{2} - 1.5\cos\alpha\sin\alpha + \alpha\cos^2\alpha}{\sin\alpha - \alpha\cos\alpha}\right] \qquad (A\text{-}12)$$

$$z = \frac{D}{2}\left[\cos\alpha + \frac{\frac{\alpha}{2} - 1.5\cos\alpha\sin\alpha + \alpha\cos^2\alpha}{\sin\alpha - \alpha\cos\alpha}\right] \qquad (A\text{-}13)$$

EFFECT OF PLATE FLEXIBILITY ON DESIGN OF EXPANSION ANCHORED BASE PLATES

By Surendra K. Goel,[1] M. ASCE, Tara P. Khatua,[1]
and Thomas G. Longlais,[1] A.M.ASCE

INTRODUCTION

Expansion anchored plate assemblies, which are commonly used to attach pipe supports to hardened concrete, are designed with the assumption that the base plate is rigid. There has been a concern that the rigid plate assumption may result in an underestimation of forces in some anchors. The underestimation is due to the prying action between the plate and the supporting concrete and due to an unequal distribution of loads among the anchors because of the anchor configuration with respect to the point of application of the load. The intent of this paper is to investigate the effect of these factors on the final anchor loads to be used in the design.

The prying action results in additional force on anchors because due to plate flexibility, the plate pushes against the concrete in the vicinity of the anchor and, to satisfy local equilibrium, increases the anchor force. The prying action force in the anchor is a function of the relative stiffness of the base plate with respect to that of the anchors. For a given base plate, the stiffer the anchors, the greater the prying action, and vice-versa.

The original concern with the prying action was due to an erroneous use of high anchor bolt stiffness based on anchor material. The stiffness obtained from tests on expansion anchors installed in concrete is much lower. Use of this test stiffness gives a realistic anchor force which

---

[1] Sargent & Lundy, Engineers, Chicago, Illinois

ANALYSIS/CALCULATION
DOC ID # S-96-0013 ATT # S
REV 1 SHEET S 17 OF 17