Westinghouse Electric Corporation
Energy Systems
Box 355
Pittsburgh Pennsylvania 15230-0355

DCP/NRC1179
NSD-NRC-97-5484
Docket No.: 52-003

December 11, 1997

Document Control Desk
U.S. Nuclear Regulatory Commission
Washington, DC 20555

ATTENTION: T. R. QUAY

SUBJECT: AP600 RESPONSE TO FSER OPEN ITEMS

Dear Mr. Quay:

Enclosed with this letter are the Westinghouse responses to FSER open items on the AP600. A summary of the enclosed responses is provided in Table 1. Included in the table is the FSER open item number, the associated OITS number, and the status to be designated in the Westinghouse status column of OITS.

The NRC should review the enclosure and inform Westinghouse of the status to be designated in the "NRC Status" column of OITS.

Please contact me on (412) 374-4334 if you have any questions concerning this transmittal.

C L Haag for BAM

Brian A. McIntyre, Manager
Advanced Plant Safety and Licensing

jml

Enclosure

cc: W. C. Huffman, NRC (Enclosure)
T. J. Kenyon, NRC (Enclosure)
J. M. Sebrosky, NRC (Enclosure)
J. P. Segala, NRC (Enclosure)
D. C. Scaletti, NRC (Enclosure)
N. J. Liparulo, Westinghouse (w/o Enclosure)

1/1

E004

Table 1
List of FSER Open Items Included in Letter DCP/NRC1179

FSER Open Item	OITS Number	Westinghouse status in OITS
100.32F	6153	Confirm W
100.33F	6154	Confirm W
410.333F	6108	Action N
410.334F	6109	Confirm W
410.336F	6111	Confirm W
410.337F	6112	Action N
410.338F	6113	Confirm W
410.348F	6203	Confirm W
410.349F	6204	Action N
410.350F	6205	Confirm W
410.353F	6208	Confirm W
410.354F	6209	Action N
410.355F	6210	Confirm W
410.363F	6218	Confirm W
410.364F	6219	Confirm W
420.127F	6242	Confirm W
480.1090F	6225	Action N
480.1091F	6226	Action N
480.1092F	6227	Action N
480.1093F	6228	Action N
480.1100F	6235	Action N
480.1101F	6236	Action N

Table 1 (Continued)
List of FSER Open Items Included in Letter DCP/NRC1179

FSER Open Item	OITS Number	Westinghouse status in OITS
720.414F	5896	Confirm W
720.416F	5898	Action N
720.420F	6132	Confirm W
720.440F	6178	Confirm W

Enclosure to Westinghouse
Letter DCP/NRC1179

December 11, 1997

Question 100.32F

Appendix 1A of the SSAR indicates that Regulatory Guide (RG) 1.101 is not applicable to the AP600 standard design. Westinghouse states that section 13.3 of the SSAR indicates that emergency planning is the responsibility of the Combined License Applicant and no reference to RG 1.101 will be added. The staff disagrees. RG 1.101, Revision 2, references NUREG-0654/FEMA-REP-1, and item II.H, "Emergency Facilities and Equipment", of NUREG-0654/FEMA-REP-1 is applicable to the TSC, OSC, and Decontamination Facility identified in the AP600 design. Westinghouse should reference RG 1.101, Revision 2, as applicable to the AP6900 design.

Response:

Appendix 1A of the SSAR will be changed to reflect that AP600 "conforms" to RG 1.101. The clarification shall be revised to state the following:

> Emergency planning is the responsibility of the Combined License applicant. See section 13.3 for the Combined License information on emergency planning. RG 1.101 (Revision 2) references NUREG-0654/FEMA-RFP-1 and item II.H, "Emergency Facilities and Equipment" of NUREG-0654/FEMA-REP-1 is applicable to the technical support center (TSC), operations support center (OSC), and the emergency operations facility (EOF) in the AP600 design. Designing the EOF, including specification of its location, in accordance with the AP600 human factors engineering program is the responsibility of the Combined License applicant. See section 18.2.6 for the Combined License information on designing the EOF. The AP600 design conforms with the design criteria of item II.H that pertain to the TSC and OSC.

Attached is a markup to the appropriate SSAR section to reflect the clarification provided above.

SSAR Revisions:

The statements concerning Reg. **Guide 1.101, Rev. 2, 10/81 - Emergency Planning and Preparedness for Nuclear Power Reactors** within appendix 1A are modified as indicated by the ~~lined strikeout~~ (text deletion) and ***bold italics*** (text addition):

Reg. Guide 1.101, Rev. 2, 10/81 - Emergency Planning and Preparedness for Nuclear Power Reactors

General	NUREG-0654, FEMA-REP-1	*Conforms*	~~Not applicable to AP600 design certification. This is~~ ***Emergency planning is the responsibility of*** the Combined License applicant~~'s responsibility~~. See Section 13.3 for the Combined License information on emergency planning. ***RG 1.101 (Revision 2) references NUREG-0654/FEMA-REP-1 and item II.H, "Emergency Facilities and Equipment" of NUREG-0654/FEMA-REP-1 is applicable to the technical support center (TSC), operations support center (OSC), and the emergency***

operations facility (EOF) in the AP600 design. Designing the EOF, including specification of its location, in accordance with the AP600 human factors engineering program is the responsibility of the Combined License applicant. See section 18.2.6 for the Combined License information on designing the EOF. The AP600 design conforms with the design criteria of item II.H that pertain to the TSC and the OSC.

ITAAC Revision:

None

Question: 100.33F (CITS #6154)

Because of the unique design of the AP600, the habitability system for the Technical Support Center (TSC) is not the same as for the Main Control Room (MCR). At currently operating reactors, the TSC habitability system is either the same as for the MCR or the TSC has been provided a separate habitability system. At these sites, should the TSC become uninhabitable, it is usually evacuated to the MCR or another location onsite where habitability can be established. Not having the TSC in the same habitability envelope as the MCR, as discussed above, increases the likelihood that the TSC will have to be evacuated. In addition, Westinghouse has indicated that should the TSC become uninhabitable, the functions and staff will be relocated to the Emergency Offsite Facility (EOF), and not the MCR or another facility onsite where habitability can be established. Consequently, the EOF will have to be activated and staffed early in order to assure that the functions and support provided to the MCR by the TSC are not impeded. Westinghouse should provide a COL Action Item to staff the EOF at an "Alert" emergency classification level (rather than a "Site Area Emergency", which is the current practice) and the response to RAI 100.10 (a), (b), (c), (d), and (f) should be incorporated into the AP600 SSAR.

Response:

When a source of ac power is available, the nuclear island nonradioactive ventilation system (VBS) provides normal and abnormal HVAC service to the main control room and the TSC. If offsite power is not available, backup power is automatically provided by either of the two nonsafety-related diesels within the onsite standby power system. Subsection 9.4.1 provides additional design details of the VBS.

The VBS system provides for cooling, heating, humidity control, filtration, (HEPA and charcoal), and pressurization following design basis accidents except for a station blackout (loss of nonsafety-related ac power, including the diesels). The habitability system for the TSC is the same as the main control room. If nonsafety-related ac power is not available, including the diesels, the habitability of the main control room is provided by the main control room emergency habitability system (VES) as discussed in section 6.4. Although the TSC is not supplied by either the VBS or the VES during a station blackout, it still remains habitable. The doors to the TSC can be opened to aid with ventilation and control of room temperature for the two hours that the workstations continue to operate. The TSC workstations are powered from the non-Class 1E uninterruptable power supplies, therefore plant monitoring capability from the TSC exists for two hours following a station blackout.

During a station blackout in current operating plants (which includes loss of the safety-related diesels), HVAC service is lost to both the TSC and the main control room. Opening of doors is used in both places to aid ventilation and control of room temperature.

The only scenario where the AP600 TSC will become uninhabitable is the very unlikely occurrence of an unacceptable radiation level in the TSC, forcing its evacuation.

Since the habitability system for the AP600 TSC is similar to the habitability system for existing plant TSCs, the staffing of the emergency operations facility (EOF) for the AP600 will occur consistent with current operating practice and with revision 1 of NUREG-0654/FEMA-REP-1.

Attached is a markup of the appropriate SSAR section to reflect the description above and the response to RAI 100.10 (a), (b), (c), (d) and (f).

SSAR Revisions:

SSAR subsection 18.8.3.5, **Technical Support Center Mission and Major Tasks,** are modified as indicated by the ~~lined strikeout~~ (text deletion) and ***bold italics*** (text addition):

11 Technical Support Center Mission and Major Tasks

The mission of the technical support center (TSC) is to provide an area and resources for use by personnel providing plant management and technical support to the plant operating staff during emergency evolutions. The TSC relieves the reactor operators of peripheral duties and communications not directly related to reactor system manipulations and prevents congestion in the control room.

~~The size of the TSC complies with the size requirements of Reference 28. Its location is in the annex building as shown in Figure 1.2-19. The TSC complies with the habitability requirements of References 27 when electrical power is available. Air conditioning, heating and ventilation are discussed in section 9.4.~~

Communications needs are established for the staff within the TSC, and between the TSC and the plant, the Combined License holder management, outside authorities and the public.

The design includes adequate shielding as discussed in Chapter 12. Adequate space, resources and access is provided for maintenance, emergency equipment and storage.

Consistent with NUREG 0737, the following criteria are established for the technical support center:

- The technical support center is nonsafety-related and is not required to be available after a safe shutdown earthquake.
- The technical support center has no emergency habitability requirements.

The size of the TSC complies with the size requirements of Reference 28. The TSC is located adjacent to the passage from the annex building to the nuclear island control room as shown in Figure 1.2-19. The TSC complies with the habitability requirements of References 27 when electrical power is available.

When a source of ac power is available, the nuclear island nonradioactive ventilation system (VBS) provides normal and abnormal HVAC service to the main control room and the TSC. The VBS and its support systems provide these functions in a reliable and failure tolerant fashion. If offsite power is not available, backup power is automatically provided by either of the two nonsafety-related diesels within the onsite standby power system. Subsection 9.4.1 provides additional design details of the VBS.

The VBS system provides for cooling, heating, humidity control, filtration, (HEPA and charcoal), and pressurization following design basis accidents except for a station blackout (loss of nonsafety-related ac

power, including the nonsafety-related diesels). If nonsafety-related ac power is not available, including the diesels, the habitability of the main control is provided by the main control room emergency habitability system (VES) as discussed in section 6.4. Although the TSC is not supplied by either the VBS or the VES during a station blackout, it still remains habitable. The doors to the TSC can be opened to aid with ventilation and control of room temperature for the two hours that the workstations continue to operate. The TSC workstations are powered from the non-Class 1E uninterruptable power supplies, therefore plant monitoring capability from the TSC exists for two hours following a station blackout.

Should habitability be challenged within the TSC due to lack of cooling or a high radiation level resulting from a beyond-design-basis accident, the TSC personnel and the functions of the TSC are transferred to the emergency operations facility (EOF) where habitability is not dependent on plant systems and with communication and data transfer links to the main control room to provide essential exchange of information.

A communicator is assigned to the main control room as part of the emergency staffing. The communicator is responsible for providing direct interface between the TSC and the main control room operators. If the TSC function has been transferred to the EOF, then the communicator provides the direct interface between the EOF and the control room operators. The Combined License applicant is responsible for the EOF design, including the specification of its location (subsection 18.2.6) and emergency planning, and associated communication interfaces among the main control room, the TSC, and the EOF (subsection 13.3).

Subsection 18.2.1.2 provides a description of assumptions and constraints, including utility requirements, that are used as inputs to the human factors engineering program and the human system interface design. As stated earlier under section 18.8, the human system interface design includes the design of the operation and control centers (main control room, TSC, remote shutdown room, emergency operations facility, local control stations and associated workstations) and each of the human system interface resources. The control room design (environment, layout, number and design of workstations) in the main controlling area of the main control room supports emergency operations with a maximum crew compliment consisting of eleven individuals. These eleven include two individuals with senior reactor operator licenses, three with reactor operator licenses, one observer from the NRC, one from the plant owner's management and one communicator.

The design of the TSC's interfaces is included with the design of the human system interface. Subsection 18.8.1 provides an implementation plan for the design of the human system interface. As shown in figure 18.2-3, the results of the human factors engineering program elements are used as input and bases for developing the operation and control center system and human system interface resources functional design. This includes task analysis. Section 18.5 provides the implementation plan for the task analysis activities.

Providing an alternate source of power for the TSC functionality and habitability is not required. For those remote events that jeopardize the habitability of the TSC, transfer of the TSC functions and personnel to the EOF, provision of a communicator in the main control room, and assuring adequate

communication and data transfer between the main control room and the EOF provide a reliable and flexible means of providing the TSC functions for those severe sequences that result in an uninhabitable TSC.

The non-Class 1E dc and uninterruptable power supply system provide approximately two hours of backup power supply to the TSC displays should offsite power and both diesels fail. The probability of the loss of all ac is calculated based on the probability of a loss of offsite power and the probability of both diesel generators failing (reference 48).

SSAR subsection 18.8.6, **References,** is modified by adding reference 48 as indicated below in ***bold italics***:

48. AP600 Probability Risk Assessment, Chapter 59, September 1996.

ITAAC Revisions: None

Question 410.333F (OITS 6108)

Re:

Sections 8.3.1.1.3 and 9.5.4 of the SSAR describe the ancillary ac DGs and the ancillary DG fuel oil supply system, respectively, but there is no discussion of the ancillary DG lubricating oil system. The SSAR needs to be revised to include information discussing the major components of the ancillary DG lubricating oil system, information describing how the ancillary DG lubricating oil system meets the pertinent recommendations of NUREG/CR-0660, and a detailed piping and instrumentation diagram of the ancillary DG lubricating oil system.

Response:

The ancillary diesel generators described in SSAR subsections 8.3.1.1.3 and 9.5.4 are 25 kw stationary non-safety diesel generators that are not used for the first 72 hours following the loss of all ac power. They are procured as a unit on a skid with all components except the fuel supply and external exhaust piping. Each skid is about 3 ft x 4 ft x 6 ft and includes the complete engine of about 40 hp with a simple, vendor specific lubricating system. These diesel generator packages are rugged and have a long history of satisfactory performance. They will be procured for a given AP600 plant at the time of construction. There is no requirement in the Standard Review Plan that dictates a specific lubricating oil system design must be specified for this non-safety diesel. No additional information is required for the SSAR.

SSAR Revision: None

Question 410.334F (OITS 6109)

Re:

During a meeting on December 13 and 14, 1994 and in a conference call on November 5, 1996, Westinghouse agreed to add a statement to the SSAR that would discuss meeting the manufacturer's specifications regarding the capability to detect and control system leakage, measures to assure quality of the lube oil, and provisions to prevent unacceptable crankcase explosions. However, these statements are not included in the SSAR. (OITS No. 350).

Response:

In a letter dated December 9, 1996, the NRC provided a recommended closure for OITS No. 350 by revising SSAR Section 8.3 "to meet manufacturer's design specifications." This was included in the first sentence of the last paragraph of SSAR subsection 8.3.1.1.2.1, Revision 11, as: "The onsite diesel generators will be procured in accordance with an equipment specification which will include requirements based upon the manufacturer's standards and applicable recommendations from documents such as NUREG/CR-0660 (Reference 15)." The SSAR will be revised to explicitly identify detection of system leakage and prevention of crankcase explosions. Control of system leakage and quality of lube oil are included in the SSAR change included in the response to Question 410.328 (OITS 6103).

SSAR Revision:

Subsection 8.3.1.1.2.1, last paragraph, revise to state: "The onsite diesel generators will be procured in accordance with an equipment specification which will include requirements based upon the manufacturer's standards and applicable recommendations from documents such as NUREG/CR-0660 (Reference 15). ***Capability to detect system leakage and to prevent crankcase explosions will be based upon manufacturer's recommendations.*** Control of moisture in the starting air system by the equipment described above will be based upon manufacturer's recommendations. Dust and dirt in the diesel generator room is controlled by the diesel generator building ventilation system described in subsection 9.4.10. Personnel . . ."

Question 410.336F (OITS 6111)

Re:

RAI #: 410.336F
NUREG/CR-0660 recommends that DG engine combustion air should be taken from outside the DG building and at least 6.1 m (20 ft) from the ground level through filters. Also, room ventilation air should be filtered and taken from a level at least 6.1 m (20 ft) above ground level. The piping for the room ventilation air should be separate from that used for the DG engine combustion air. Room ventilation air, hot cooling system air, and DG engine exhaust gas should not be permitted to circulate back into the DG room or into any other part of the power plant building. In its response to RAI Q410.179 dated August 3, 1994, Westinghouse stated that the DG engine exhaust discharge elevation is approximately 6.1 m (20 ft) higher than the combustion air inlet filters and the nearest building ventilation inlet air louvers. With exhaust gas temperatures of approximately 540°C (1000°F), the DG exhaust gases will have sufficient thermal buoyancy to rise or remain at elevations above the air inlets to the buildings or the DG engine. During a meeting on December 13 and 14, 1994, Westinghouse stated, in response to RAI Q410.179, that the exhaust discharge elevation is shown on the general arrangement drawing in Figure 1.2-21. However, Figure 1.2-21 does not show any elevations or SDCAIES components. In its response to RAI Q410.183 dated August 3, 1994, Westinghouse stated that a separate outdoor filtered supply of combustion air is provided for the DG engines, and the ventilation system for the DG building service module, which includes most of the electrical switchgear, is provided with inlet air filters to clean the cooling air. The room ventilation system that operates when the DG is in service uses low-elevation inlet air louvers for non-filtered cooling air that is exhausted through roof vent fans after cooling the DG room in one pass. However, Westinghouse has not addressed whether the DG engine combustion air is taken from outside the DG building and at least 6.1 m (20 ft) from the ground level. In addition, none of this information is included in the SSAR. (OITS Nos. 333 and 354).

Response:

SSAR subsection 9.4.10.2.1.1 states that air intake louvers for the normal heating and ventilation subsystem air handling units are located as high in the diesel generator building wall as possible. The diesel/generator building is not tall enough to allow these louvers to be 20 feet high. These louvers are on walls other than the south wall. Ventilation system arrangement, including the provision of appropriate filters is discussed in other subsections of SSAR Subsection 9.4.10.

Air for combustion enters the combustion air cleaner areas A and B (rooms 60313 and 60323) though 11 ft. by 12 ft. roll up grills in the south wall. The combustion air cleaner areas are separated from the balance of the diesel generator building by a full partition so that air for combustion is taken from outside the diesel generator building. Combustion air then passes through intake air filters (two per engine), which are mounted about 10 feet high in the building. The tops of the combustion exhaust ducts are 36 feet high and they are directed south. This provides adequate separation of ventilation inlet, combustion air inlet and combustion exhaust. SSAR subsection 8.3.1.1.2.1 will be revised to clarify the source of combustion air.

AP600

SSAR Revision:

Subsection 8.3.1.1.2.1, fifth paragraph, revise to state: "The diesel-generator combustion air intake and engine exhaust subsystem provides combustion air directly ***from the outside*** to the diesel engine ***while protecting it from dust, rain, snow and other environmental particulates.*** ~~and~~ ***It then*** discharges exhaust gases from the engine to the outside of the diesel generator building ***more than 20 feet higher than the air intake***. The combustion air circuit ***is separate from the ventilation subsystems and*** includes weather protected dry type inlet air filters piped directly to the inlet connections . . . "

Question 410.337F (OITS 6112)

Re:

RAI #: 410.337F
Sections 8.3.1.1.3 and 9.5.4 of the SSAR describe the ancillary ac DGs and the ancillary DG fuel oil supply system, respectively, but there is no discussion of the ancillary DG combustion air intake and exhaust system. The SSAR needs to be revised to include information discussing the major components of the ancillary DG combustion air intake and exhaust system, information describing how the ancillary DG combustion air intake and exhaust system meets the pertinent recommendations of NUREG/CR-0660, and a detailed piping and instrumentation diagram of the ancillary DG combustion air intake and exhaust system.

Response:

The ancillary diesel generators described in SSAR subsections 8.3.1.1.3 and 9.5.4 are 25 kw stationary non-safety diesel generators that are not used for the first 72 hours following the loss of all ac power. They are procured as a unit on a skid with all components except the fuel supply and external exhaust piping. Each skid is about 3 ft x 4 ft x 6 ft and includes the complete engine of about 40 hp with a simple, vendor specific air intake and exhaust system. These diesel generator packages are rugged and have a long history of satisfactory performance. They will be procured for a given AP600 plant at the time of construction. The intake air is taken from an area adjacent to the diesel generator room. The room is opened to the outside by opening a roll up door prior to starting the diesels. The external exhaust system will carry combustion exhaust products outside the building and away from the combustion air inlet. There is no requirement in the Standard Review Plan that dictates a specific combustion air intake and exhaust design must be specified for this non-safety diesel. No additional information is required for the SSAR.

SSAR Revision: None

Question 410.338F (OITS 6113)

Re:

During a meeting on December 13 and 14, 1994, Westinghouse agreed to add a statement to the SSAR that would discuss meeting the manufacturer's specifications regarding the air flow capacity of the SDCAIES. In addition, Westinghouse agreed to add a statement to the SSAR that describes how the silencer module and other system components are protected from possible clogging from adverse atmospheric conditions, such as: dust storms, rain, ice, snow, etc. However, these statements are not included in the SSAR. (OITS Nos. 356 and 357).

Response:

The diesel-generator and its auxiliaries have no safety-related functions. SSAR subsection 8.3.1.1.2.1 and Figures 8.3.1-4 and 8.3.1-5 discuss and depict the diesel-generator air intake and exhaust systems. Placement of the silencer and other system components is consistent with protecting them from possible clogging due to adverse atmospheric conditions, such as, dust storms, rain, ice, snow, etc. Specific design criteria, such as air flow capacity will be established during the equipment procurement process.

In a letter dated December 9, 1996, the NRC provided a recommended closure for OITS No. 357 by revising SSAR Section 8.3 "to meet manufacturer's design specifications." This was included in the first sentence of the last paragraph of SSAR subsection 8.3.1.1.2.1, Revision 11, as: "The onsite diesel generators will be procured in accordance with an equipment specification which will include requirements based upon the manufacturer's standards and applicable recommendations from documents such as NUREG/CR-0660 (Reference 15)." The SSAR will be revised to explicitly identify protection of the silencer module and other system components from possible clogging:

SSAR Revision:

Subsection 8.3.1.1.2.1, fifth paragraph, revise to state: " . . . turbochargers. The engine exhaust gas circuit consists of the engine exhaust gas discharge pipes from the turbocharger outlets to a single vertically mounted outdoor silencer which discharges to the atmosphere. ***Manufacturer's recommendations are considered in the design of features to protect the silencer module and other system components from possible clogging due to adverse atmospheric conditions, such as, dust storms, rain, ice, and snow.***"

Question 410.348F (OITS 6203)

Re:

RAI #: 410.348F
The VCS operates during normal plant operation and shutdown to maintain suitable temperatures in the served areas of the containment building. The two fan coil units (FCUs) assemblies are located on a platform at Elevation 45593 mm (149 ft-7 in), approximately 180° apart to provide proper mixing of return and supply air. The top of the ring header is at Elevation 53797 mm (176 ft-6 in). Westinghouse needs to state, under the component description Subsections of SSAR Section 9.4 for the ductwork and accessories, that the equipment, ductwork, and supports are designed as seismic Category II, or provide an alternative to preclude them from collapsing onto safety-related equipment or structures during an SSE. Otherwise the staff can not conclude that the VAS, VBS, VCS, VFS, VHS, VRS, VTS, VXS, and VZS complies with Position C.2 of Regulatory Guide 1.29.

Response:

SSAR subsection 3.2.1.1.2 describes the application of "seismic Category II" to plant structures, systems, and components. Section 3.7 discusses the criteria used for the design of seismic Category II structures, systems and equipment. Table 3.2-3 indicates the seismic categories for mechanical components and equipment in the HVAC systems. As required in Section 3.2, a number of components are seismic Category I because of their function. The balance are designated non-seismic because their function does not require them to be Category I. As with other systems and structures throughout the plant, the designation of seismic Category II is applied in accordance with subsection 3.2.1.1.2 as they are placed or routed in the plant. Note that other sections of the SSAR do not explicitly reiterate this requirement for structures, systems and components. The application of seismic Category II requirements is similar to the other global requirements defined throughout the SSAR which are usually not explicitly reiterated in the description sections for the structures, systems or components.

With respect to VCS, system equipment and ductwork whose failure could affect the operability of safety-related systems or components are designed to seismic Category II requirements. The remaining portion of the system is nonseismic. This applies to other systems as well. Although unnecessary, a statement which reiterates the seismic Category II requirements of Section 3.2, similar to that in the second paragraph of subsection 9.4.1.1.1 (for VBS), will be added to other SSAR subsections describing HVAC systems.

SSAR Revision:

Subsection 9.4.2.1.1 (VXS), add as last sentence: "***System equipment and ductwork whose failure could affect the operability of safety-related systems or components are designed to seismic Category II requirements. The remaining portion of the system is nonseismic.***"

Subsection 9.4.3.1.1 (VAS), add as last sentence: "***System equipment and ductwork whose failure could affect the operability of safety-related systems or components are designed to seismic Category II requirements. The remaining portion of the system is nonseismic.***"

Subsection 9.4.6.1.1 (VCS), add as last sentence: "***System equipment and ductwork whose failure could affect the operability of safety-related systems or components are designed to seismic Category II requirements. The remaining portion of the system is nonseismic.***"

Subsection 9.4.7.1.1 (VFS), add as last sentence: "***System equipment and ductwork whose failure could affect the operability of safety-related systems or components are designed to seismic Category II requirements. The remaining portion of the system is nonseismic.***"

Subsection 9.4.8.1.1 (VRS), add as last sentence: "***The system is nonseismic.***"

Subsection 9.4.9.1.1 (VTS), add as last sentence: ""***The system is nonseismic.***"

Subsection 9.4.10.1.1 (VZS), add as last sentence: "***The system is nonseismic.***"

Subsection 9.4.11.1.1 (VHS), add as last sentence: "***The system is nonseismic.***"

Question 410.349F (OITS 6204)

Re:

RAI #: 410.349F
The system description, component design parameters, and piping and instrument diagram (P&ID) are given in Section 9.4.6, Table 9.4.6-1, and Figure 9.4.6-1 of the SSAR, respectively. However, Westinghouse needs to revise SSAR Figure 9.4.6-1 to provide information in Note 13 to state the required time for a timer delay. Additionally, Westinghouse needs to provide the final location for the duct mounted relief damper as indicated in Note 4 of SSAR Figure 9.4.6-1. During a meeting on January 25 and 26, 1995, Westinghouse stated that they will revise SSAR Figure 9.4.6-1 to add typical details for relief dampers.

Response:

The containment recirculation cooling system serves no safety-related function and therefore has no nuclear safety design basis. The containment recirculation cooling system is not required to mitigate the consequences of a design basis accident or loss of coolant accident. The timers identified in Note 13 of Figure 9.4.6-1 are for restart of the recirculation fans in the containment recirculation fan coil units. They limit cycling of the fan motors and are for investment protection only. The time delay will be specified upon procurement of the fan coil units based on manufacturer's recommendations and is not appropriate for inclusion in the SSAR. The duct mounted relief damper identified in Note 4 of Figure 9.4.6-1 is addressed in subsection 9.4.6.2.2. Subsection 9.4.6.2.2 was revised at the request of NRC to include:

" **Pressure Relief Damper**

Pressure relief dampers relieve high pressure differential across the ductwork to protect the equipment or components from possible damage resulting from abnormal containment pressure transients. The pressure relief dampers are the weight loaded type. The damper(s) will be placed in their standard design positions during final duct layout. They will be located so that the entire containment ring duct can be relieved without damage."

No further changes to the SSAR are required.

SSAR Revision:

None

Question 410.350F (OITS 6205)

Re:

RAI #: 410.350F
The VCS fans are designed, rated and tested to conform to ANSI/AMCA 210-85, "Laboratory Method of Testing Fans for Rating Purposes," ANSI/AMCA 211-85 "Certified Ratings Program Air Performance" and ANSI/AMCA 300-85, "Reverberant Room Method of Testing Fans for Rating Purposes." The chilled water cooling coils are designed and rated in accordance with ASHRAE 33-78, "Method of Testing for Rating Forced Circulation Air Cooling and Air Heating Coils," and ANSI/ARI 410-91, "Forced Circulation Air Cooling and Air Heating Coils." The VCS ductwork meets the design, testing, and construction requirements in accordance with SMACNA-1985, "HVAC Duct Construction Standards - Metal and Flexible." The shutoff, balancing and backdraft dampers are tested and rated in conformance with ANSI/AMCA 211-85 standard and ANSI/AMCA 500-1983, "Testing Methods for Louvers, Dampers, and Shutters." The VCS airflow are balanced in accordance with SMACNA-1983, "HVAC Systems - Testing, Adjusting, and Balancing." Westinghouse needs to provide code data for the pressure relief damper in SSAR section 9.4.6.2.2 and SSAR Table 3.2-3.

Response:

SSAR subsection 9.4.6.2.2 will be revised to provide code data for the pressure relief damper. SSAR Table 3.2-3 already identifies ANSI/AMCA-500 as the principal construction code for dampers.

SSAR Revision:

Subsection 9.4.6.2.2, "Pressure Relief Damper" section, add as last sentence: "***They meet the performance and testing requirements of ANSI/AMCA-211 (Reference 5) and ANSI/AMCA-500 (Reference 14).***"

Question 410.353F (OITS 6208)

Re:

RAI #: 410.353F
The supply AHUs are located in the south air handling equipment room of the annex building at Elevation 48158 mm (158 ft-0 in). The exhaust filtration units are located within the radiologically controlled portion of the annex building at Elevation 41224 mm (135 ft-3 in) and 44577 mm (146 ft-3 in). The common air intake plenum No. 3 for the supply and makeup air for the exhaust fan, which is non-protected from the turbine missiles, is located at the extreme south end of the annex building between Elevation 48158 mm (158 ft-0 in) and 54864 mm (180 ft-0 in). The ductwork located inside containment, whose potential failure could affect safety-related equipment, is designed to seismic Category II. The VFS description, piping and instrumentation diagram and component design parameters are given in AP600 SSAR Section 9.4.7, Tables 3.2-3, 9.4-1 and 9.4.7-1 and Figure 9.4.7-1, respectively. However, Westinghouse needs to reinstate SSAR Table 9.4-2, "Minimum Instrumentation for Atmospheric Cleanup Systems," for the VFS exhaust filtration units and VBS supplemental air filtration units that conforms to the instrumentation requirements of ASME N 509, Table 4-2, "Instrumentation for Non-ESF Air-Cleaning Units" and revise SSAR Section 9.4.7.5 accordingly.

Response:

SSAR subsection 9.4.7.5 provides a description of instrumentation associated with the containment air filtration system. The description provided is consistent with the applicable items in Table 4-2 of ASME N509. Note that all instrumentation provided with the system can be monitored and alarmed in the main control room as described in SSAR Chapter 7. The specifics of display and alarm will be developed as part of the human factors implementation process described in SSAR Chapter 18. Since the balance of the SSAR will be used as a guide for the level of detail to be implemented during this process, a statement will be added to subsection 9.4.7.5 which references system consistency with ASME N509.

SSAR Revision:

Subsection 9.4.7.5, first paragraph, add as last sentence: "***Display and monitoring of system instrumentation is consistent with the requirements of Table 4-2 of ASME N509 (Reference 2).***"

Question 410.354F (OITS 6209)

Re:

Each exhaust air filtration unit consists of a 100 percent capacity electric heater to maintain 70 percent or less RH of the effluent air, an upstream high efficiency filter bank, a charcoal adsorber with pre- and post HEPA filter banks, an exhaust fan, and instrumentation and controls. The postfilters downstream of the charcoal adsorbers have a DOP efficiency of 95%. The isolation dampers in the exhaust air subsystem are bubble tight, single blade or parallel blade type, and conform to AMCA 500 standard and N509 standard. The representative samples of charcoal adsorbent are tested to verify a minimum charcoal efficiency of 90 percent in accordance with the guidance of RG 1.140 at frequencies identified in ASME N509 Standard and each HEPA filter cell is individually shop tested to verify an efficiency of at least 99.97-percent. The exhaust air subsystem filtration units are designed, constructed and tested to conform with ASME N509 and N510 standards and guidelines of RG 1.140. However, Westinghouse needs to state that (1) the exhaust air subsystem filtration units are also designed and tested to conform with ASME AG-1-1994, "Code on Nuclear Air and Gas treatment," (2) revise SSAR Section 9.4.13 accordingly to list the ASME AG-1-1994 Code and (3) revise applicable Subsections of SSAR Sections 9.4.1 and 9.4.7 to invoke ASME AG-1-1994 with reference number, where applicable. Additionally, Westinghouse needs to clarify the HEPA filter efficiency data as presented in SSAR Table 9.4-1, i.e., 99 percent versus 99.97 percent as stated in SSAR Section 9.4.7.2.2.

Response:

1. Westinghouse considers that ASME AG-1-1994 is applicable to safety-related filtration units and not to nonsafety-related filtration units. As noted above, the filtration units do meet ASME N509 and N510 requirements. Westinghouse notes that ASME N509 references applicable portions of ASME AG-1.

2. The HEPA filter efficiency is 99.97 percent as presently stated in all of SSAR 9.4 including SSAR Table 9.4-1 and SSAR Tables 9.4.1-1 and 9.4.7-1 and the appropriate text sections.

SSAR Revision:

None.

Question 410.355F (OITS 6210)

Re:

RAI #: 410.355F
Each charcoal adsorber is a single tray assembly with welded construction and 101.6 mm (4-in) thickness Type III rechargeable adsorber cell. However, Westinghouse needs to state that the charcoal adsorber design conforms with the IE Bulletin 80-03 requirements in SSAR Section 9.4.7.2.2.

Response:

SSAR subsection 9.4.7.2.2 will be revised to include this reference.

SSAR Revision:

Subsection 9.4.7.2.2, "Charcoal Adsorbers" portion, revise last sentence to state: " . . . 4-inch deep Type III rechargeable adsorber cell, ***conforming with IE Bulletin 80-03 (Reference 29).***"

Question 410.363F (OITS 6218)

Re:

RAI #: 410.363F
The differential pressure controllers, with sensors in the general health physics area and sensors mounted outdoors (shielded from wind effects), modulate the automatic inlet vanes of the supply fan to maintain the area at negative pressure. A separate differential pressure controller, with a sensor in the hot machine shop modulates a damper in the supply air duct to the hot machine shop to maintain a negative pressure with respect to the outdoors. However, Westinghouse needs to state that the general health physics area and hot machine shop areas are maintained at a negative pressure with respect to the surrounding spaces and outdoors and should quantify the measurable negative pressure accordingly.

Response:

SSAR subsection 9.4.11.2.3 will be revised to include reference to surrounding spaces which do not have exhaust monitored for radiation. The VHS system will maintain a slightly negative pressure with respect to the outside environment and surrounding areas as noted in the SSAR. The reason for maintaining a negative pressure is to ensure that airborne radioactivity is detected to avoid being released to surrounding areas in an uncontrolled fashion. The value of "slightly negative pressure" is not critical as this is a nonsafety-related function. For this reason, no change to the SSAR is necessary to record the value of "slightly negative pressure"..

SSAR Revision:

Subsection 9.4.11.2.3, "Normal Plant Operation" portion, first paragraph revise to state:
"During normal operation, one supply air handling unit and one exhaust fan operate continuously to maintain suitable temperatures in the health physics and hot machine shop areas of the annex building. The supply air flow is automatically modulated to maintain a negative pressure in the areas served with respect to the outdoors ***and to surrounding areas which do not have their exhausts monitored for radioactivity***. Differential pressure controllers, with sensors in the general health physics area and sensors mounted outdoors (shielded from wind effects), modulate the automatic inlet vanes of the supply fan to maintain area negative pressure. In addition, a separate differential pressure controller with a sensor in the hot machine shop modulates a damper in the supply air duct to the hot machine shop to maintain a negative pressure in the shop with respect to outdoors ***and to surrounding areas which do not have their exhausts monitored for radioactivity***.

Question 410.364F (OITS 6219)

Re:

RAI #: 410.364F
The VHS consists of the supply air subsystem and the exhaust air subsystem. The supply air subsystem consists of two 100-percent capacity (14,000 scfm, each) AHUs, each with a low efficiency filter bank and high efficiency filter bank, hot water heating coil, chilled water cooling coil bank, a centrifugal fan with automatic inlet vanes, and associated dampers, instrumentation and controls, and ductwork. Each AHU draws 100 percent outside air through a common louvered outdoor air intake plenum number 2 as described in the text of SSAR Section 9.4.2. The two AHUs discharge into a distribution system to the health physics and hot machine shop areas. The temperature in the health physics area is maintained within the design range by a temperature controller located in the area, which modulates the control valve on the chilled water supply lines to the cooling coil and the face and by-pass dampers of the hot water heating coil. Westinghouse needs to (1) state that the supply of the chilled and hot water is provided from the VWS and VYS, respectively, (2) provide the location of the steam humidifier, and (3) describe how temperature is controlled in the hot machine shop.

Response:

SSAR subsection 9.4.11.2 will be revised to better describe system design features. There is no specific temperature control for the hot machine shop. The quantity of heated or cooled air is sufficient to maintain the required temperature in the hot machine shop.

SSAR Revision:

Subsection 9.4.11.2.1, second paragraph, revise to state:
"The supply air system consists of two 100 percent capacity air handling units of about 14,000 scfm each with a ducted air distribution system and automatic controls. The air handling units are located in the lower south air handling equipment room on elevation 135'-3" of the annex building. ***Heating coils are supplied with water from the hot water heating system and cooling coils are supplied from the central chilled water system.*** The air handling units draw 100 percent outdoor air through the common, louvered outdoor air intake plenum #2 as described in subsection 9.4.2. They discharge into a duct distribution system which is routed to the health physics and machine shop areas. Humidification is controlled to maintain a minimum 35 percent relative humidity via a steam humidifier ***located in the main system supply duct and supplied with water from the demineralized water system***."

Subsection 9.4.11.2.3, "Normal Plant Operation" portion, second paragraph, revise to state:
"The temperature in the health physics ***and the hot machine shop*** areas is maintained within the design range by a temperature ***sensor~~controller~~*** located in the ***health physics*** area, ***with*** which ***a controller*** modulates the control valve on the chilled water supply lines to the cooling coil and the face and bypass damper of the heating coil."

RAI 420.127F (OITS #6242)

On October 21, 1997, Westinghouse submitted a design description which shows the arrangement of differential pressure instruments that will be used to measure the core makeup tank (CMT) level. Ten level channels are installed on each CMT with eight of these being narrow range level switches that are qualified for post-accident monitoring. Four of these narrow range level switches are used to actuate the automatic depressurization system (ADS) stage 1 valves and the other four level switches to actuate ADS stage 4 valves. The remaining two level channels are wide range level indication channels which are used to verify the level during normal operation, but are not qualified for post-accident monitoring.

Because the CMT is full during normal operation and four level switches share one set of level taps, the staff is concerned that a postulated common-mode failure in the level sensing line could make all 4 level switches at each CMT incorrectly stick at the high position without being detected until the next surveillance period. The instrument channel operation test for CMT level is performed every 92 days and the channel calibration is performed every 24 months. A common undetectable failure will inhibit a protective action. Address this concern.

Response:

The October 21, 1997 Westinghouse letter which submitted a description of this design discussed the acceptability of sharing the CMT level taps. That discussion is revised and supplemented in this response.

The 8 CMT narrow range DP level switches do not have continuous readouts. When the CMT level drops during a LOCA (as a result of CMT injection) these DP sensors make contact when the level drops below their setpoint. DP switches were selected because of their simplicity, reliability and use in similar operating conditions.

The use of shared level taps is acceptable for the CMT level DP sensors based on the following evaluation. Figure 1 shows CMT and all 10 DP level instruments. Figure 2 shows additional details of one set of the narrow range CMT DP level instruments including their calibration valves. This evaluation includes a failure modes and effects analysis (FMEA) as shown in Table 1. Discussion of this FMEA follows:

1. Inadvertent closure of one of the root isolation valves (V1 or V2) would block operation of all 4 DP instruments associated with that CMT connection. These valves are locked open to eliminate the need to consider these valves from being inadvertently closed as a credible single failure.

2. Inadvertent closure of one of the DP level sensor isolation valves (V3 or V4) would result in blocking one DP level sensor. This is considered a credible single failure which can be tolerated because there are 3 other DP sensors which can actuate ADS during an LOCA.

3. Inadvertent opening of one of the DP level sensor equalization valves (V5) would result in failure of the one CMT level sensor. The 3 other DP level sensors would be unaffected because the common upper line is required to be located at the elevation of the upper level tap connection to the CMT. As a result, as the CMT level drops below the upper level tap the 3 other DP level sensors would retain filled sensing lines up

to the elevation of the upper tap. The 3 unaffected DP level sensors are sufficient to actuate ADS during an LOCA.

4. Inadvertent opening of one of the DP sensor vent valves (V6 or V7) would cause an RCS leak. It is not considered credible for this failure to occur during high pressure operation because the instruments will not normally be maintained or calibrated in such conditions. Even if a operator did start to open one of these valves he would hear / see the cold water leaking out as soon as he cracked the valve part way open and immediately close the valve. An error during shutdown maintenance could leave one of these valves open. However, as soon as the RCS is started to be pressurized the leakage from the RCS would be detected while the plant is cold and at low pressures (when only one CMT is required).

5. Leakage through one of the DP sensor vent valves (V6 or V7) would cause an RCS leak. If this leakage is greater than 0.5 gpm it will be quickly identified and isolated. A leak of 0.5 gpm will produce a DP error of about 1 inch of water. Leakage through V6 will cause a lower level reading; the error is small enough that the ADS actuation setpoint would not be reached. Leakage through V7 will cause a higher level reading; the error is small enough that the DP sensors will be able to actuate ADS as required should a LOCA occur.

6. Breaking of an upper level tap would cause the four DP sensors to read low and satisfy the 2 / 4 low level logic portion of ADS actuation. However, actuation of ADS will not occur because the low level actuation signal is interlocked with the CMT actuation signal which will not be generated following such a small break because the CVS can makeup for the fluid loss through the 3/8" orifice in the CMT connection.

7. Plugging of an upper level tap would have similar effects to closing the upper tap root valve (V1). This failure mode is not credible because the CMT has very good water quality and because the lines are verified to not be plugged during their calibration. Reactor coolant makeup is used to fill the CMT's and the inside surfaces of the CMT's and its connecting piping are stainless steel.

8. Breaking of a lower level tap would cause the four DP sensors to read high. This failure would prevent actuation of ADS from the affected CMT. ADS is not required following such a small break because the CVS can makeup for the fluid loss through the 3/8" orifice in the CMT connection. Even if ADS is required the other CMT and its level instruments would provide the actuation signals even with consideration for a single failure.

9. Plugging of a lower level tap would have similar effects to closing the lower tap root valve (V2). This failure mode is not credible because the CMT has very good water quality. Reactor coolant makeup is used to fill the CMT's and the inside surfaces of the CMT's and its connecting piping are stainless steel.

SSAR Change Add note to SSAR figure 6.3-1.

Note 18. Upper and lower CMT level piping headers are 1" pipe. Locate upper header about 1" lower than connection to CMT.

ITAAC Change None

Table 1 - FMEA of CMT Level Instruments

Component	Failure Mode	Effect on CMT	Failure Detection	Remarks
Valve V1 or V2, normally open, locked open	closed	Fails four narrow range DP level sensors. Other CMT will provide protection in most LOCAs. Wide range DP level sensors will help operators to use manual ADS.	Administrative controls on valve position locks.	Locking these valves open eliminates this failure mode
Valve V3 or V4, normally open	closed	Fails the one associated DP level sensor. The other 3 DP level sensors are unaffected by this failure.	Calibration of instrument every refueling outage will detect valve mispositioning.	
Valve V5, normally closed	open	No effect on DP level sensors because common upper sensor line is located at the elevation of the CMT connection.	Calibration of instrument every refueling outage will detect valve mispositioning.	
Valve V6, normally closed	open	Causes four narrow range DP sensors to read low, satisfying the ADS actuation setpoint. ADS would be actuated if CMT's are actuated.	The open valve results in increasing CMT leak as RCS pressure is increased. RCS leakage and CMT top temperature instruments would detect this leakage. Leakage would be detected and isolated before plant is put in conditions where a LOCA is possible.	Because CMT's are located inside containment, the most likely time this valve would be mispositioned is during shutdown conditions. CVS has capability to makeup for leakage.

Component	Failure Mode	Effect on CMT	Failure Detection	Remarks
	leak	Causes the affected DP sensor to read low; below the ADS actuation setpoint. The other 3 DP sensors would read only slightly low such that the ADS setpoint would not be not be satisfied as a result of the leak. ADS would be actuated if a LOCA occurred and the CMT's drained.	RCS leakage and CMT top temperature instruments would detect this leakage.	CVS makeup is capable of maintaining RCS conditions such that the CMT's do not drain.
Valve V7, normally closed	open	Causes four narrow range DP sensors to read high, which prevents them from actuating ADS. CMT level sensors in the other CMT provides protection for non-LOCA events.	Causes increasing CMT leak as RCS pressure is increased. RCS leakage and CMT top temperature instruments would detect this leakage. Leakage would be detected and isolated before plant is put in conditions where a LOCA is possible.	Because CMT's are located inside containment, the most likely time this valve would be mispositioned is during shutdown conditions. CVS has capability to makeup for leakage.
	leak	Causes the affected DP sensor to read high, such that it would not reach its ADS setpoint if the CMT drained. The other 3 DP sensors would read only slightly high such that their ADS setpoint would be satisfied if a LOCA occurred and the CMT's drained.	RCS leakage and CMT top temperature instruments would detect this leakage.	CVS makeup is capable of maintaining RCS conditions such that the CMT's do not drain.

Component	Failure Mode	Effect on CMT	Failure Detection	Remarks
Upper Tap (L1)	break	Causes four narrow range DP sensors to read low, satisfying the ADS actuation setpoint. ADS would be actuated if CMT's were actuated.	The break results in a significant CMT leak. RCS leakage and CMT top temperature instruments would detect this leakage. The leak would be isolated before plant is put in conditions where a LOCA is possible.	CVS makeup is capable of maintaining RCS conditions such that the CMT's do not drain.
	plug	Fails four narrow range DP level sensors. Other CMT will provide protection in most LOCAs. Wide range DP level sensors will help operators to use manual ADS.	During calibration the sensing lines will be shown to be unplugged. Plugging is not considered likely because the CMT water is reactor grade water and the surfaces in contact with the water are stainless steel.	Calibration and water quality eliminate this failure mode.
Lower Tap (L2)	break	Causes four narrow range DP sensors to read high, which prevents them from actuating ADS. CMT level sensors in the other CMT provides protection for non-LOCA events.	The break results in a significant CMT leak. RCS leakage and CMT top temperature instruments would detect this leakage. The leak would be isolated before plant is put in conditions where a LOCA is possible.	CVS makeup is capable of maintaining RCS conditions such that the CMT's do not drain.

Component	Failure Mode	Effect on CMT	Failure Detection	Remarks
	plug	Fails four narrow range DP level sensors. Other CMT will provide protection in most LOCAs. Wide range DP level sensors will help operators to use manual ADS.	During calibration the sensing lines will be shown to be unplugged. Plugging is not considered likely because the CMT water is reactor grade water and the surfaces in contact with the water are stainless steel.	Calibration and water quality eliminate this failure mode.

Figure 1 - CMT Level Instruments

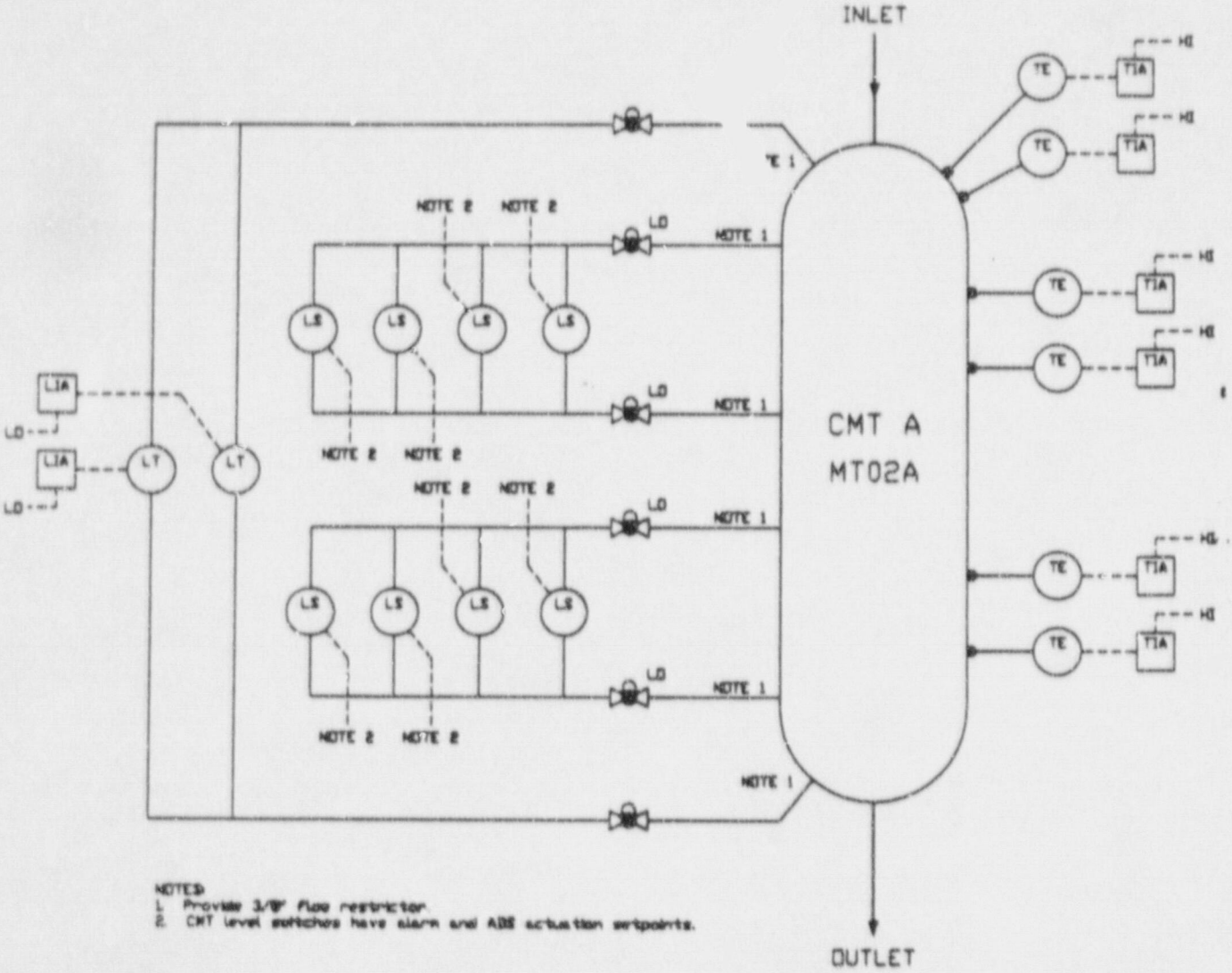

Figure 2 - CMT Level Instrument Details

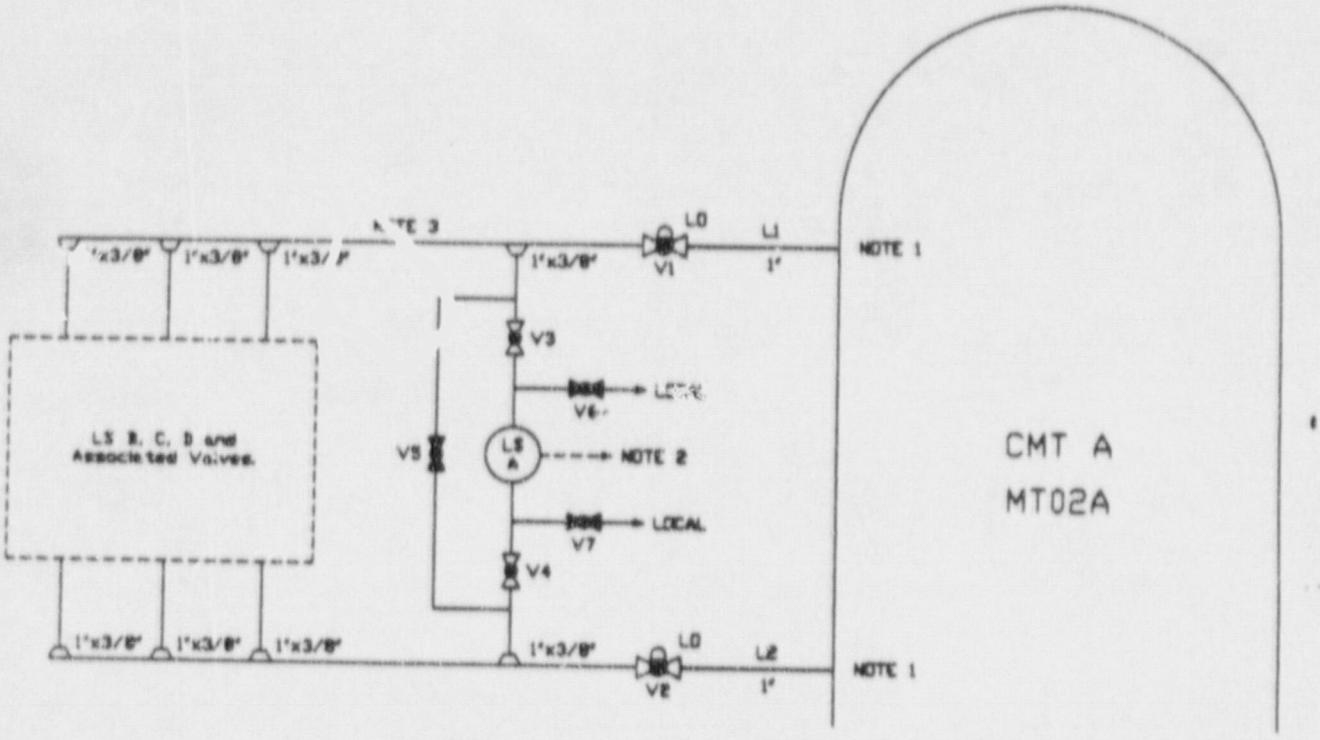

NOTES:
1. Provide 3/8" flow restrictor.
2. CMT level switches have alarm and ADS actuation setpoints.
3. Locate upper level tap line about 1' below CMT connection.

Question 480.1090F (OITS - 6225)

LCO 3.6.6 Passive Containment Cooling System (PCS) - Operating

For the development of an Action Completion Time or a Surveillance Requirements Frequency the staff believes that STS Containment Spray and Cooling Systems (Credit not taken for iodine removal by the Containment Spray System) LCO 3.6.6B is the appropriate basis. The AP600 containment spray is not safety-related, therefore STS Containment Spray and Cooling Systems (Credit taken for iodine removal by the Containment Spray System) LCO 3.6.6A is not considered an appropriate basis as referenced in Westinghouse's response to SCSB comments 34 and 44 (Ref. Westinghouse letter NSD-NRC-97-5263, "Response to NRC SCSB Comments on Containment Systems Technical Specification," from Brian A. McIntyre (W) to T. R. Quay (NRC), dated August 19, 1997). This is considered to be an open item.

Response:

See response to SCSB Open Item 480.1092F for the response to this Open Item (480.1090F) and Open Item 480.1093F.

No Technical Specification changes are requested by this Open Item.

SSAR Revision: NONE

Question 480.1091F (OITS - 6226)

LCO 3.6.6 Passive Containment Cooling System (PCS) - Operating

The staff is concerned about blockage of the upper annulus drains (due to such possible failure modes as debris accumulation, animal habitation obstructions, freezing, or other unidentified/ unanticipated mechanisms) rendering the passive containment cooling system (PCS) inoperable. Westinghouse's response to SCSB comment 36(g) (Ref. Westinghouse letter NSD-NRC-97-5263, "Response to NRC SCSB Comments on Containment Systems Technical Specification," from Brian A. McIntyre (W) to T. R. Quay (NRC), dated August 19, 1997) is only partially acceptable to the extent that the upper annulus drains are at least mentioned in the Background section. The PRA results which illustrate that the AP600 is consistent with the Commission's safety goals is based on a stated surveillance interval of 7 days (weekly) to verify that the upper annulus drains are not obstructed to preclude blockage of the air flow path. Therefore, this requirement should be incorporated into LCO 3.6.6. Westinghouse needs to develop conditions, actions, completion times and surveillances for upper annulus drains. A revised surveillance interval would be acceptable if, when factored into the PRA, does not alter the perceived safety of the PCS design. This is considered to be an open item.

Response:

Surveillance of the air flow path, including the upper annulus drains, is currently specified in SR 3.6.6.5 at a Frequency of 24 months. This Frequency is based on the passive nature of the air flow path and the absence of credible failure modes.

A comparable STS function is the inspection of the containment recirculation sump screen for blockage. Both the annulus drains and sump are passive features, drains, which could become blocked, interfering with the function of the containment cooling system . STS SR 3.5.2.8 specifies visual inspection of the sump for blockage each [18 months]. On the basis of the STS comparison method discussed in an NRC letter (Samuel J. Collins to Howard Bruschi, "Optimized Completion Times and Surveillance Frequencies - AP600 Technical Specifications", dated March 27, 1997), the 24-month Surveillance Frequency specified for AP600 SR 3.6.6.5 is correct.

Additionally, the AP600 SR 3.6.6.5 Bases will be revised, in resolution of Open Item 480.1098F (v), to include a description of the PCS annulus drain inspection.

Regarding the link to the PRA, see the response to FSER open item 720.440F.

SSAR Revision: NONE

Question 480.1092F (OITS - 6227)

LCO 3.6.6 Passive Containment Cooling System (PCS) - Operating

The Completion Time of LCO 3.6.6, Action C.2, deviates from STS ECCS LCO 3.5.2 Action C and STS RWST LCO 3.5.4 Action C and is unacceptable. The required Completion Time for C.2 of 84 hours to be in MODE 5 is unacceptable, it should be 36 hours. This is consistent with STS ECCS LCO 3.5.2, STS RWST LCO 3.5.4 and STS Containment Spray and Cooling Systems (Credit not taken for iodine removal by the Containment Spray System) LCO 3.6.6B. While 84 hours would be consistent with STS Containment Spray and Cooling Systems (Credit taken for iodine removal by the Containment Spray System) LCO 3.6.6A, the AP600 containment spray is not safety-related. This is considered to be an open item.

Response:

Westinghouse letter, "Response to NRC Letter Regarding AP600 Technical Specification Completion Times and Surveillance Frequencies", NSD-NRC-97-5156, dated June 6, 1997, Enclosure 1, includes a markup of the AP600 Technical Specifications specifying times which are consistent with NUREG-1431 precedents. The STS precedent cited for AP600 LCO 3.6.6, Action C.2 is STS LCO 3.6.6C, Action B.2, which specifies a Completion Time of 84 hours to reach Mode 5. Of the STS choices, this precedent most closely matches the AP600 safety function and system design. Both the AP600 Passive Containment Cooling System and the STS LCO 3.6.6C are two train containment cooling systems. The STS LCO 3.6.6C Actions also specify 72 hours for restoration of one inoperable containment cooling system train, consistent with the comparable AP600 Action A.1, applicable to one inoperable flow path.

STS LCO 3.6.6B is not considered comparable to AP600 since it considers two trains of spray and two cooling trains. Since each of the four trains can provide 100% of the cooling assumed in a DBA, 7 days are permitted to restore one inoperable train. It is expected that the standard time specified for going to MODE 5, 36 hours, takes into account the 7 days already permitted for restoration of an inoperable train. Westinghouse does not consider the four train/ 7 day/ 36 hour STS precedent applicable to AP600.

The STS LCO 3.6.6C two train / 72 hour/ 84 hour STS precedent more closely matches the AP600 two flow path containment cooling system.

No changes to the AP600 Technical Specifications are needed.

This response is also applicable to SCSB Open Items 480.1090F and 480.1093F.

SSAR Revision: NONE

Question 480.1093F (OITS - 6228)

LCO 3.6.6 Passive Containment Cooling System (PCS) - Operating

The LCO Surveillance and Frequency of the PCS air flow path and baffles, SR 3.6.6.4, are consistent with STS Containment Spray and Cooling Systems (Credit not taken for iodine removal by the Containment Spray System) LCO 3.6.6B.5 and on that basis are acceptable. It is noted that in response to SCSB comment 44 (Westinghouse letter NSD-NRC-97-5263, "Response to NRC SCSB Comments on Containment Systems Technical Specification," from Brian A. McIntyre (W) to T. R. Quay (NRC), dated August 19, 1997), Westinghouse references STS Containment Spray and Cooling Systems (Credit taken for iodine removal by the Containment Spray System) LCO 3.6.6A. The AP600 containment spray is not safety-related and therefore STS LCO 3.6.6B is deemed to the appropriate basis. While there is no difference between SR 3.6.6B.5 and 3.6.6A.5, use of LCO 3.6.6A is considered to be unacceptable. This is considered to be an open item.

Response:

See response to SCSB Open Item 480.1092F on this same subject.

No Technical Specification changes are requested by this Open Item.

SSAR Revision: NONE

Question 480.1100F (OITS - 6235)

LCO 3.6.7 Passive Containment Cooling System (PCS) - Shutdown

Similar to Open Item 440.1091F above, the Westinghouse response to SCSB comment 36(g) (Ref. Westinghouse letter NSD-NRC-97-5263, "Response to NRC SCSB Comments on Containment Systems Technical Specification," from Brian A. McIntyre (W) to T. R. Quay (NRC), dated August 19, 1997) is only partially acceptable to the extent that the upper annulus drains are at least mentioned in the Background section. The PRA results which illustrate that the AP600 is consistent with the Commission's safety goals is based on a stated surveillance interval of 7 days (weekly) to verify that the upper annulus drains are not obstructed to preclude blockage of the air flow path. Therefore, this requirement should be incorporated into technical specification. A revised surveillance interval would be acceptable if, when factored into the PRA, does not alter the perceived safety of the PCS design.

Westinghouse will need to develop the appropriate LCO condition, required action, and completion times to totally address this concern. This is considered to be an open item.

Response:

This Open Item is addressed by the response to SCSB Open Items 480.1091F and 720.440F.

No change to the AP600 Technical Specifications are needed.

SSAR Revision: NONE

Question 480.1101F (OITS - 6236)

LCO 3.6.7 Passive Containment Cooling System (PCS) - Shutdown

(a) LCO 3.6.7, Action C: Condition is unacceptable. Action C cannot be based on itself. The logic needs to be revised to be based on Action A and Action B. This is considered to be an open item.

(b) LCO 3.6.7, Action C: Required Actions C.1.1 and C.1.2 are unacceptable. They should be rewritten to be fully consistent with the intent of the Bases Action C.1 (as currently documented). For example:

- "C.1.1 If in MODE 5 with the RCS open and/or the pressurizer level not visible, then close the RCS and/or restore the pressurizer level to its visible range." This is considered to be an open item.

- "C.1.2 If in MODE 6 with the upper internals in place and/or the refueling cavity less than full, then remove the upper internals and/or increase the refueling cavity level to full." This is considered to be an open item.

Response:

(a) The corrections noted for LCO 3.6.7, Condition C, were made in the 8/97 revision of the AP600 Technical Specifications.

(b) The NRC-proposed wording for Required Actions is equivalent to the existing wording, except that it further defines the potential initial plant condition. When this LCO is applicable, the plant is either in MODE 5 or 6. The desired end-state is specified in Required Action C.1.1 for all MODE 5 conditions and in Required Action C.1.2 for all MODE 6 conditions. The existing wording and similar wording have been reviewed and accepted for several other specifications, including LCO 3.3.2 Required Actions U, V, W, X, and Y, LCO 3.4.13 Action B, LCO 3.5.3 Action D, LCO 3.5.5 Action E, LCO 3.5.7 Action E, and LCO 3.5.8 Action E.

No Technical Specification change is needed.

SSAR Revision: NONE

Question: 720.414F

Pertaining to SER Chapter 19.2.3.3.7, Equipment Survivability

The staff performed a review of the AP600 Emergency Response Guidelines and the AP600 SAMG to confirm the equipment and instrumentation identified in Table D.6-2 through D.6-4. The following equipment was not identified: containment penetrations, containment vent and containment sprays, and SI accumulator isolation valve (Step 12 of AFR-C.1 directs the operator to close the valve). The following instrumentation was not identified: PXS, CVS and RNS flow (needed as part of AFR-C.1 of the ERGs), containment spray flow (needed to verify containment spray actuation), containment temperature (need to know if containment penetrations and seals are being challenged, to track the course of the accident, and verify actuation of the containment spray system), containment sump water temperature (ERGs have operator verify RNS has switched over to recirculation mode), subcooling margin monitor (in response to TMI Action Item II.F.2, the staff believes that the subcooling margin monitor along with the core exit thermocouples provide unambiguous indication of an approach to ICC for the AP600), hot leg level indication (needed to terminate the recovery actions, Step 15.c of AFR-C.1 in ERGs).

Why are not IRWST water level, containment water level, core exit temperature, feedwater flow, containment temperature, containment radiation. SG radiation (indication of a tube failure), PCS level, and PCS flow included in the instrumentation identified for Time Frame 2?

Why are not PASS and containment radiation included in the instrumentation identified for Time Frame 3? The resolution of the discrepancies identified for the three time frames is an open item.

Response:

The NRC staff identified equipment and instrumentation which they believed needs to be added to the equipment survivability assessment. The following discussion addresses the suggestions one by one.

Containment Penetrations

Containment penetrations are implicitly assumed to be part of the containment shell in the tables of equipment. They are specifically addressed in the Assessment of Equipment Survivability in section D.8.2.9. Containment Penetrations have been added to the tables of equipment in Appendix D of PRA Revision 11.

Containment Vent

The AP600 passive containment cooling system (PCS) removes heat from the containment and limits containment pressurization by decay heat steaming. The containment reaches an equilibrium pressure that is less than containment failure pressure (Chapter 40 of the PRA report). Therefore, the only mechanism available for long-term overpressure of the containment is core-concrete interaction (CCI).

The frequency of CCI in the baseline at-power PRA (based on the frequency of sequences in which cavity flooding fails) is less than 1×10^{-8} per reactor-year. CCI occurs in equipment survivability Time Frame 3. A containment vent path for a CCI scenario is available with the current AP600 design configuration. With the reactor coolant system depressurized and open to the containment atmosphere via either the ADS or the vessel failure, the containment may be vented via the residual heat removal suction lines to the spent fuel pit. The manual valve RNS V052 from the spent fuel pit to the RNS pump suction would be opened and then the RNS hot leg suction isolation valves (RNS V001A or B and V002A or B and V022) operated remotely to control the containment vent process. The minimum line size in the vent path is 8 inches and is adequate to vent the non-condensibles generated during the CCI. The containment vent path has been added to the equipment survivability assessment in Appendix D of PRA Revision 11.

Nonsafety-Related Containment Sprays

Containment sprays did not exist in the design when the equipment survivability assessment was performed. As they have since been added exclusively for severe accident, the spray valve and spray flow rate are added to the equipment survivability assessment (Appendix D of PRA revision 11) and severe accident management guidelines for Time Frames 2 and 3. The severe accident management guidelines information was provided in WCAP-13914, revision 2 (Westinghouse letter DCP/NRC1080, dated October 14, 1997.

SI Accumulator Isolation Valve

The accumulator isolation valve is closed in the event of *recovery* within the AFR.C-1 (prior to fuel damage) to prevent noncondensable gases from being injected into the RCS. The action to isolate the accumulators is not part of a severe accident scenario that progresses beyond the ERGs into the SAMGs. Therefore, it is not appropriate to include the accumulator isolation valves in the equipment survivability assessment.

PXS, CVS, RNS Injection Flow Rates and Containment Water Levels

CVS and RNS flow rates are added to the tables in Time Frames 1 and 2 of PRA Appendix D, Rev. 11. PXS flow rate is not metered. PXS flow can be monitored by tracking containment water levels (IRWST and sump) which are added to the tables.

Containment Temperature

Containment temperature is not seen as a parameter that is required for establishing a controlled, stable state. The PRA shows that the containment shell temperature does not exceed 400°F in a severe accident except for IRWST vent diffusion flame conditions, which the NRC believes fails the containment with a probability of 1.0. Therefore, the inclusion of containment temperature in the equipment survivability assessment is not needed.

Containment Sump Water Temperature

The NRC states in this open item that the ERGs have the operator verify RNS has switched over to recirculation based on containment sump temperature. The action to verify recirculation is not part of a severe accident scenario that progresses beyond the ERGs into the SAMGs. Therefore, the sump water temperature induction is not needed in the equipment survivability assessment.

Subcooling Margin Monitor

Subcooling margin monitor uses the RCS temperature and RCS pressure in Time Frame 1 to determine the degree of subcooling in the RCS. Both the RCS pressure and core-exit thermocouples are already included in the Time Frame 1 equipment survivability list.

Hot Leg Level Indication

NRC states in this open item that hot leg level indication is needed to terminate recovery actions late in AFR-C.1. Recovery within AFR.C-1 is not part of a severe accident sequence that progresses from the ERGs to the SAMGs. Therefore, it does not need to be included in the equipment survivability assessment.

Core exit temperature within Time Frame 2

The core-exit T/C's perform their active operation in Time Frame 1 and fail in Time Frame 2.

Feedwater Flow within Time Frame 2

Feedwater flow does not need to be monitored in Time Frame 2 for a controlled, stable state. If the RCS is pressurized sufficiently for heat removal through the steam generators in Time Frame 2, the steam generator tubes will have already failed due to creep rupture. Injection into the SGs in Time Frame 2 is only needed to maintain SG water level to scrub fission products. SG level is monitored in Time Frame 2.

Containment Radiation in Time Frames 2 and 3

Radiation monitors inside containment are used at the end of Time Frame 1 to help identify that core damage is beginning. Once in a severe accident (Time Frame 2) radiation monitors are only needed to establish trends in the containment radiation. This can be accomplished with auxiliary building penetration area radiation monitors outside the containment. These monitors are added to the list of instrumentation for Time Frames 2 and 3.

Steam Generator Radiation Monitor in Time Frame 2

Steam generator radiation monitors are not required to identify tube failure in Time Frame 2. Tube failure needs to be identified in Time Frame 1. Time Frame 2 is too late, active operation is completed for the purpose of identifying the tube failure. However, it is considered to be prudent to monitor secondary system radiation for the purpose of mitigating fission product releases, so SG radiation monitors are added to the list of instrumentation for the assessment of survivability in Time Frame 2.

PCS Water Level and Flowrate in Time Frame 2

PCS water level and flowrate are not viewed as essential in Time Frame 2. The containment pressure is sufficient for determining if the containment heat removal is available.

Post Accident Sampling in Time Frame 3

Post accident sampling is already included in Time Frame 3.

SSAR Revision: None.

PRA Revision: A markup of Appendix D for PRA Revision 11 will be provided under separate cover.

Question: 720.416F (OITS #5898)

Pertaining to Chapter 19.2.3.3.7, Equipment Survivability

The MAAP4 results provide the containment environment associated with the combustion of hydrogen resulting from the equivalend of 100 percent oxidation of the active fuel cladding where: 1) igniters are functioning (local burning scenario), 2) igniters were artificially defeated (global burning scenario), and 3) jet burning and igniters were defeater (global burning scenario). To calculate more severe bounding containment environments, cavity flooding was defeated in some sequences resulting in ex-vessel hydrogen generation dur to core-concrete interaction. However, the global and local burning scenarios provided by Westinghouse fail to identify the regions of active burning caused by diffusion flames or igniters. Equipment of instrumentation located within these regions could be exposed to thermal environments more severe than the three discussed above. For the equipment and instrumentation needed during Time Frames 1, 2, and 3, Westinghouse should establish a minimum separation distance from these regions of active burning or assure that the equipment/instrumentation located with these regions are radiatively shielded. This is an open item. This open item does not apply to the containment shell near the IRWST because radiative shielding would diminish heat transfer across the containment shell thereby impacting PCCS performance. Also, Westinghouse has provided a PAR on an IRWST vent, igniters inside the IRWST, and teh fourth stage of the ADS to minimize the build up of hydrogen inside the IRWST.

Response:

Sustained Burning Environments

Sustained burning of combustible gases can occur in the containment as a diffusion flame at the location where the gas plume encounters a continuous oxygen source. Equipment which is needed after core damage (Time Frames 2 and 3) should either be located well away or shielded from these locations or there should be other redundant equipment located outside the zone of influence to demonstrate reasonable assurance of the function survivability.

Burning at igniters away from combustible gas sources will be limited. The igniters will light off the plume, and the flame will flash back to the source of the combustible gas within a compartment supplied with air. The locations of the diffusion flames can be identified by identifying the combustible gas release points in the containment. Combustible gas generation begins as hydrogen is released from the RCS to the containment during the in-vessel phase of the accident (Time Frame 2). After vessel failure (Time Frame 3), hydrogen and carbon monoxide can be released by core-concrete interaction. A continuous oxygen source can be provided in the compartments which form the natural circulation flow path in the containment, the steam generator and loop compartment rooms, the CMT room and the upper compartment. Therefore, diffusion flame environments can be postulated in these compartments near the combustible gas source.

Except for the break, the source locations are pre-determined by ADS vent points and the geometry of the containment. During the in-vessel phase of the accident, hydrogen will be released from the break and from the ADS system. If the system is fully depressurized, the sustained hydrogen release will be from the stage 4 ADS valves and, depending on the size and location, the break. ADS stages 1 through 3 relieve to the IRWST. The environments associated with hydrogen released to the IRWST is fully covered in reference 720.416F-1. The stage 4 valves relieve to the steam generator loop compartments. Generally, the break location can be postulated to be in one of the steam generator loop compartments also which is essentially lumped together with the hydrogen release from the ADS stage 4 valves, but piping connected to the RCS is also located in the accumulator rooms or valve

vaults and the CVS compartment. For releases to these dead-ended compartments, the plume cannot encounter an oxygen supply until it reaches the CMT room.

Ex-vessel combustible generation occurs in the reactor cavity in Time Frame 3. The reactor cavity does not have a continuous air supply, so the first locations where oxygen is available along the flow pathways is where the sustained burning can be postulated. The flow paths from the reactor cavity to the containment air supply are through the RCDT room access into the vertical access tunnel, through the loop nozzle holes into the steam generator rooms, and past the reactor vessel flange through the seal ring (should the seal ring fail) into the refueling pool.

Therefore, sustained burning can be postulated in the following locations:

1. IRWST vent exits in the upper compartment (Time Frame 2)
2. Stage 4 valves outlet in the steam generator loop compartments at 112-ft elevation (Time Frame 2)
3. Vents from the accumulator rooms into the CMT room (Time Frame 2) Sustained burning will however exist from only one of the two accumulator rooms for a given break.
4. RCDT room access into the vertical access tunnel (Time Frame 3)
5. Loop nozzle holes into the steam generator loop compartment (Time Frame 3)
6. Seal ring into the refueling pool (Time Frame 3).

The equipment necessary for equipment survivability is defined in PRA Tables D.6-2 through D.6-4. The equipment in Table D.6-2 includes equipment and instrumentation operation during Time Frame 1 - core uncovery and heatup and is prior to the release of significant quantities of hydrogen and therefore would not have to be considered for protection from sustained hydrogen burning. The following tabulation is specified as the equipment and instrumentation to be used in Time Frame 2 and 3 to provide reasonable assurance of achieving a controlled stable state.

EQUIPMENT AND INSTRUMENTATION	SUSTAINED HYDROGEN COMBUSTION SURVIVABILITY ASSESSMENT
Equipment	
PXS equipment (injection)	The PXS equipment utilized for introduction of cooling water includes component redundancy and is separated into two delivery flow paths. The two flow paths are physically separated into two trains such that if one train is disabled due to a sustained burn from DVI or other line break within that subsystem the other subsystem will function. For example if the containment recirculation A isolation valves (V117A, V118A located in room 11206) were disabled, the containment recirculation B valves (V117B, V118B located in room 11207) will provide the identical function.
CVS equipment (injection)	The equipment providing for CVS injection is located within the CVS compartment with the exception of CVS makeup isolation valve V081 which is located in room 11304. In accordance with the above, a sustained burn will not occur within the CVS compartment (room 11209) and therefore the equipment within this compartment utilized for CVS makeup will be operable. CVS makeup isolation valve V081 is a normally open fail open stop check valve and therefore it will be in the correct position for severe accident scenario and is considered operable.
RNS equipment (injection)	Injection via the RNS is dependent only upon check valves within containment and therefor is not susceptible to sustained burning effects.
Main Feedwater (high pressure injection into the SG)	The operability of main feedwater system to inject high pressure feedwater to steam generators is not dependent upon equipment located within containment and therefore not susceptible to sustained burning effects.
Startup Feedwater (high pressure injection into the SG)	The operability of startup feedwater system to inject high pressure feedwater to steam generators is not dependent upon equipment located within containment and therefore not susceptible to sustained burning effects.
Condensate (low pressure injection into the SG)	The operability of the condensate system to provide makeup for low pressure feedwater to steam generators is not dependent upon equipment located within containment and therefore not susceptible to sustained burning effects.
Fire Water (low pressure injection into the SG)	The operability of the fire water system to provide makeup for low pressure feedwater to steam generators is not dependent upon equipment located within containment and therefore not susceptible to sustained burning effects.
Service Water (low pressure injection into the SG)	The operability of the service water system to provide makeup for low pressure feedwater to steam generators is not dependent upon equipment located within containment and therefore not susceptible to sustained burning effects.
Containment Shell	The operability of the containment shell during sustained burning is addressed by Reference 720.416F-1
Igniters	Igniters are specified and designed to withstand the effects of sustained burning and are therefore considered operable for these events.

Instrumentation	
RCS Pressure	There are four RCS pressurizer pressure transmitters. Two transmitters PT-191A and PT-191C are located in room 11300 (maintenance floor room) at a distance of greater than 20 feet from CMT (MT-02B) and are therefor beyond the distance which could potentially cause operability concerns. Transmitters PT-191B and PT-191D are located separately from the transmitters 191A and C in room 11201 (the steam generator compartment 1 room) with a steel plate between the fourth stage ADS valves and the transmitters thus precluding radiative heating which could potentially cause operability concerns.
Containment Pressure	There are three wide range containment pressure transmitters. Two of the transmitters PT-012 and PT-014 are located in the northern section of room 11300 (maintenance floor room) whereas PT-113 is in the southern section of room 11300. In this manner the three transmitters cannot all be exposed to a sustained flame from either one of the CMT base vents. Therefore continued operability of the containment pressure function is provided.
SG 1 Wide Range Level	There are four steam generator wide range levels for SG 1. Two of the transmitters LT-011 and LT-015 are located in the room 11300 (maintenance floor room) at a distance of greater than 20 feet from CMT (MT-02B) and are therefor beyond the distance which could potentially cause operability concerns. Transmitters LT-012 and LT-016 are located separately from the transmitters 011 and 015 in room 11201 (the steam generator compartment 1 room) with a steel plate between the fourth stage ADS valves and the transmitters thus precluding radiative heating which could potentially cause operability concerns.
SG 2 Wide Range Level	There are four steam generator wide range levels for SG 2. Two of the transmitters LT-013 and LT-017 are located the northern section of room 11300 (maintenance floor room) whereas transmitters LT-014 and LT-018 are in the southern section of room 11300. Based on this layout at least two of the transmitters will not be exposed to a sustained flame from either one of the CMT base vents. Therefore continued operability of the SG 2 wide range level indication function is provided.
Containment Hydrogen Monitors	There are 16 distributed containment hydrogen monitors. In accordance with the above there are no sustained burns that could potentially effect the four global sensors which are located at an elevation of 164 feet or the two sensors located within the dome. Further, local sustained burns as discussed above may effect the sensors within that vicinity but other distributed sensors would not be impacted by the local burns.

Post accident Sampling Function	Successful post accident sampling is dependent on the availability of either of the hot leg sample source isolation valves and the containment isolation valves in series with the isolation valve. The sample isolation valve from reactor coolant hot leg number 1 is located in room 11201 (the steam generator compartment 1 room) with a steel plate between the fourth stage ADS valves and the valve thus precluding radiative heating which could potentially cause operability concerns. The sample isolation valve from reactor coolant hot leg number 2 is located in room 11202 (the steam generator compartment 2 room) with a steel plate between the fourth stage ADS valves and the valve thus precluding radiative heating which could potentially cause operability concerns. The containment isolation valves are located in room 11300 (maintenance floor room) less than 20 feet from CMT (MT-02A). However, a steel plate at the base of the CMT prevents a sustained flame existing on the containment side of CMT 02A and therefore effecting the operability of either of the containment isolation valve.

Reference:

720.416F-1 "Assessment of the Potential Impact of Diffusion Flames on the AP600 Containment Wall and Penetrations," Revision 1, April 1997.

SSAR Change: None

PRA Change: None

Question: 720.420F (OITS # 6132)

720.420 The staff notes several inconsistencies in Westinghouse's characterization of the pathways for debris transport to the upper containment, specifically: (1) the area around the reactor vessel flange is identified as a debris flow path in Section B.2 and Table B-2 of Appendix B, but RPV drawings indicate that there is a permanent seal ring there, and no flow path, (2) the flow area specified in Table B-2 for the annular openings between the coolant loops and the biological shield (16 m^2) is substantially greater than the steam relief area through the same pathway reported I the RPV vessel insulation discussion in Appendix K of DOE/ID-10460 (0.7 m^2), and (3) the impact of the RPV insulation and boro-silicate shield blocks on the flow paths and areas does not appear to have been considered. Westinghouse needs to resolve these discrepancies. The total flow area of debris transport into the steam generator compartment, and the flow area between the steam generator compartment and the upper compartment assumed in the calculation should also be clarified. This is Open Item 19.2.3.3.4-1.

Response:

Section B.2 of AP600 PRA Appendix B will be revised to address this open item.

PRA Revision:

Below is a markup of sections B.2 and B.6 of PRA Appendix B. The changes noted by the markup will be incorporated in Revision 11 of the PRA.

B.2 Direct Containment Heating

Direct Containment Heating (DCH) is defined as the rapid energy addition to the containment atmosphere as a result of several physical and chemical processes that can occur if the core debris is forcibly ejected from the reactor vessel. The prerequisites for direct containment heating are vessel failure occurs at a location where a substantial portion of the core debris that has relocated to the lower head is ejected into the reactor cavity before the RCS gases are discharged from the RCS and that the RCS is at a high pressure (sometimes called high pressure melt ejection or HPME). Under these conditions, it is postulated that the molten core debris on the reactor cavity floor will be swept out of the reactor cavity with the gases that are discharged from the reactor cavity. The airborne, fragmented core debris then rapidly transfers its sensible heat to the containment atmosphere in one of the containment compartments, as dictated by the gas flow from the reactor cavity. In addition to transfer of sensible heat, the unoxidized metal in the core debris can undergo an exothermic oxidation reaction in the presence of the oxygen in the containment compartment. This heat is also added to the containment atmosphere in that compartment. Finally, if the flammable gases in that containment compartment (including the added flammable gases from the oxidation reactions in that compartment) are ignited, the heat of combustion will be added to the containment atmosphere gases in that compartment. Experimental evidence (reference 3) shows that containment compartmentalization and the flow paths from the reactor cavity to each compartment have a strong effect on the containment conditions that can result from a high pressure melt ejection. A screening model for predicting the potential impact of direct containment heating on the containment integrity was developed from the experimental considerations (reference B-4).

The Pilch 2-Cell model presented in reference B-4 was used to determine the potential impact of the direct containment heating on the integrity of the containment for the AP600 design. The input parameters for the model, presented in Table B-2, are based on the AP600 reactor cavity and containment design. The area above the operating deck is modelled as one cell and the steam generator compartments are modelled as the second cell. Various dead-end volumes are not included in the 2-cell model since their vapor space would not be easily accessible for energy transfer form core debris ejected from the reactor cavity. For the AP600 design, the possible flow paths for core debris transported from the reactor cavity are the area around the reactor vessel flange which communicates directly with the upper containment volume (the volume above the operating deck). There are two flow paths from the cavity to the steam generator compartments: 1) the area where the coolant loops penetrate through the biological shield, and 2) a ventilation shaft from the roof of the reactor coolant drain tank room that Tee's to a common tunnel between the two steam generator compartments. For the purposes of applying the Pilch 2-Cell model to the AP600 configuration, the two steam generator compartments were modelled as one compartment since the compartment volumes and flow areas are nearly identical for each steam generator compartment.

The flow configuration from the reactor cavity during DCH can not be easily determined due to the impact of dislodging or damaging the reactor vessel insulation and the structures that are part of the ventilation system used to cool the cavity concrete and ex-core detectors during normal operation. These are described in reference B-7. A bounding calculation was performed that assumed that the permanent refueling cavity seal ring is completely dislodged at the beginning of the high pressure melt ejection and that the reactor vessel insulation and ventilation system structures completely block the flowpaths represented by the coolant loop penetrations through the biological shield between the reactor cavity and the steam generator compartments.

Also in this deterministic assessment of DCH, the reactor vessel was assumed to fail at the bottom of the hemispherical head to maximize the amount of core debris that would be forcibly ejected from the reactor vessel prior to the discharge of high pressure gases from the vessel. It was assumed that 50 percent of the total UO_2 and Zr in the core would be forcibly ejected from the vessel at vessel failure. In addition, it was conservatively assumed that 90 percent of the Zr was unoxidized during the in-vessel core heatup and relocation phase of the accident.

The application of the Pilch 2-Cell model to the AP600 design leads to the conclusion that direct containment heating would not challenge the integrity of the containment. The results of the bounding analysis show a pressure increase of ~~46.4 psia (0.32 MPa)~~ ***50.6 psia***. Based on an initial containment pressure of 45 psia ~~(0.31 MPa)~~, this yields a final pressure of ~~91.4 psia (0.63 MPa)~~ ***5.6 psia***, which is well below the point where containment failures are predicted to occur.

B.6 References

B-7 ***Westinghouse letter DCP/NRC0382, to T. R. Quay, NRC, from B. A. McIntyre, Westinghouse, "Presentation Material from the August 17, 1995 Meeting in AP600 Reactor Vessel Insulation," dated August 17, 1995.***

Table B-2 MAJOR INPUT PARAMETERS FOR THE PILCH 2-CELL DCH MODEL	
Parameter	**Value**
Volume of SG Compartments (Cell #1), meter^3	7099.18
Volume of Upper Containment (Cell #2), meter^3	40265.5
Flow Area of Tunnel From Cavity to SG Compartments, meter^2	~~3.5052~~ *7.8*
Flow Area Through Loop Nozzle Penetrations, meter^2	~~16.1544~~ *0*
Flow Area past RV Flange, meter^2	~~2.1082~~ *4.33*
Flow Area From SG Compartments to Upper Containment, meter^2	*28.3*
Mass of UO2 in the Core, kg	75900
Mass of Zr in the Core, kg	19200
Fraction of Core Mass Ejected from Reactor Vessel	0.5
Fraction of Core Mass Ejected from Reactor Cavity	1.0
Initial Containment Pressure, MPa	0.31
Initial Containment Relative Humidity	1.0
Temperature of Ejected Core Debris, °K	2478
Fraction of Ejected Zirc Unoxidized	0.5
RCS Pressure at Vessel Failure, MPa	15.17
RCS Gas Temperature at Vessel Failure, °K	925

Question: 720.440F (OITS # 6178)

Passive Containment Cooling System

Flooding of the PCS annulus due to plugging of the upper annulus drains is the only PRA-postulated mechanism for the failure of PCS cooling. The probability of plugging is minimized in the design by including two 100 percent drains, and a weekly surveillance of the annulus floor and drains to identify and eliminate debris that can potentially plug the drains. WEC has credited this surveillance in the PRA but has not incorporated it in the Technical Specifications. This is Open Item 720.440F.

Response:

Flooding of the PCS annulus due to plugging of the upper annulus drains is modeled in the AP600 PRA and was assigned a failure probability of 1.0E-04 per demand. In the PRA model, a weekly surveillance interval was considered. The technical specifications, on the other hand, specify surveillance every two years. In addition, the specific drain configuration has changed since the Level 2 PRA was revised in September 1996. As was modeled in the PRA, Revision 8, the drains were located in the floor of the annulus. However, the two 100 percent drain openings are now located in the side wall of the shield building with screens provided to prevent entry of small animals into the drains.

The fact that the surface area of the drains is vertical makes them less susceptible to clogging due to build-up of randomly collected debris, as compared to a configuration with horizontal floor drains. Thus, the drain configuration is more resistant to random plugging than a horizontal floor drain configuration, and would have a smaller failure probability. On the other hand, the technical specification surveillance interval is a factor of 100 above the assumed surveillance used in the PRA model. This change is deemed to have a negative effect compared to the PRA modeling assumption of a weekly surveillance. However, in the PRA failure probability estimate, no attempt was made to tie the estimated failure probability to the surveillance interval. A relatively conservative value of 1.0E-04 per demand was used. There is no systematic drain plugging mechanism envisioned. Thus, the demand failure rate is similar to a "shock failure" mode postulated in common cause failure (CCF) models. There is no need to revise this demand probability due to the revised drain configuration. However, the uncertainty in the failure rate increases due to the increased surveillance interval. The results of sensitivity studies performed to address this uncertainty for the PCS failure probability are summarized below:

PCS Failure Probability	LRF	Containment Effectiveness	LRF/CDF
0.0001 (base case)	1.82E-08	89.2 %	10.8 %
0.001	1.84E-08	89.1 %	10.9 %
0.01	1.97E-08	88.3 %	11.7 %
0.1	3.33E-08	80.3 %	19.7 %
1.0	1.69E-07	0.0 %	100 %

From the sensitivity analysis, it can be seen that a 10-fold increase in the PCS failure probability has negligible effect on large release frequency (LRF). Thus, if one looks at the upper uncertainty range of PCS failure probability with a factor of 10 increase, the LRF change would be negligible. This provides us the confidence to retain the original CCF estimate of 1.0E-04 per demand for the PCS drains to randomly plug.

As a conclusion, the AP600 PRA model estimate of failure for PCS horizontal drains to plug due to CCF is acceptable to represent the current AP600 design where the vertical drains with screens to prevent small animals from entering the annulus drains are inspected every two years. Thus, the plant risk is not affected by the design change or inspection times. Moreover, the uncertainty in the LRF is insensitive to a factor of 10 (even a factor of a 100) increase in the PCS failure probability, as demonstrated above.

SSAR Revision: None.

PRA Revision:

The following change on page 40-2 of PRA Chapter 40, Passive Containment Cooling, will be made in PRA Revision 11:

> There are two ***100 percent*** drains in the ~~floor of the annulus~~ ***vertical wall of the shield building.*** ~~Weekly~~ Surveillance of these ***drains*** is performed ***every two years***. One drain is sufficient to prevent overflowing of the passive containment cooling system to block the air inlet.
>
> The probability, q(PC), of failure of the PC event tree node due to the drain plugging is considered to be a rare event due to the following considerations:
>
> - The annulus is shielded from random accumulation of debris that may potentially plug the drains.
> - ***The drains are located on the shield building vertical wall above the annulus floor, and have screens to prevent small animals from entering the drains.***
> - ~~Surveillance is performed often enough, once a week, to remedy any plugging potential.~~
>
> There are no data on this failure mode. Even if it is assumed that both drains will plug once during the plant lifetime, the failure probability would be 5E-04 per week, for a 40-year plant lifetime. ~~If the weekly surveillance is omitted or it misses the failure mode with a probability of 0.01 per surveillance opportunity, the probability of the failure continuing into a second week would be 5E-06.~~
>
> Based on the rarity of this failure mode and engineering judgement, a failure probability of .0001 is assigned to the PC node, given that a core damage event has occurred.
>
> q(PC) = 1E-04.

Figure 40-2 of PRA Chapter 40, Passive Containment Cooling, will be revised in PRA Revision 11 as shown on the next page.

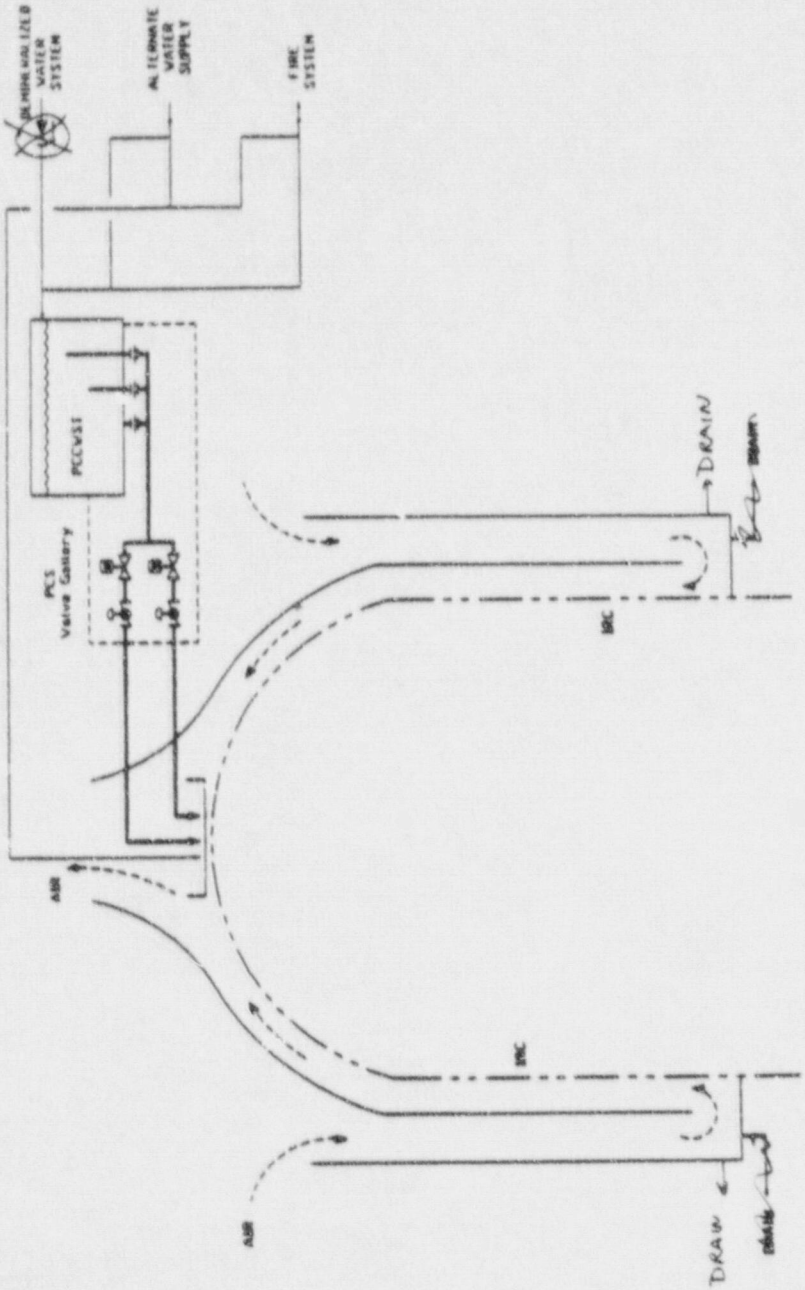

Figure 40-2

AP600 Passive Containment Cooling