PDR-016

50-250
50-251

UNITED STATES
NUCLEAR REGULATORY COMMISSION
WASHINGTON, D. C. 20555

JAN 06 1986

Ellyn R. Weiss, Esquire
Harmon, Weiss & Jordan
2001 S Street, NW, Suite 430
Washington, DC 20009

IN RESPONSE REFER
TO FOIA-85-729

Dear Ms. Weiss:

This is in further response to your letter dated October 31, 1985, in which you requested, pursuant to the Freedom of Information Act (FOIA), copies of the NRC inspection report and related records regarding the evaluation of the auxiliary feedwater system at Turkey Point Units 3 and 4.

Copies of the 15 documents listed on the enclosed Appendix F are being placed in the NRC PDR in folder FOIA-85-729 under your name.

The NRC has not completed its search for and review of documents subject to your request. We will respond as soon as those actions are completed.

Sincerely,

Donnie H. Grimsley

Donnie H. Grimsley, Director
Division of Rules and Records
Office of Administration

Enclosure: As stated

APPENDIX F

1. 10/16/79 Letter to R. E. Uhrig from D. G. Eisenhut; NRC Requirements For Auxiliary Feedwater Systems At Turkey Point Plant Units 3 and 4. (12 pages)

2. 12/24/81 Letter to R. E. Uhrig from M. Grotenhuis; Issuance of Amendment No. 75 to Facility Operating License No. DPR-31 and Amendment No. 69 to Facility Operating License DPR-41 for Turkey Point Units 3 and 4. (23 pages)

3. 09/15/82 Letter to R. E. Uhrig from S. A. Varga; TMI Action Plan Item II.E.1.2, Auxiliary (Emergency Feedwater Systems) Automatic Initiation and Flow Indication. (24 pages)

4. 11/04/82 Letter to R. E. Uhrig from D. G. McDonald; Issuance of Amendment No. 89 to Operating License DPR-31 and Amendment No. 83 to Operating License DPR-4 for Turkey Points Units 3 and 4. (15 pages)

5. 01/31/83 Internal FPL memo to W. C. Miller from L. Goebel; AFW System Upgrage. (17 pages)

6. 07/22/85 Slide Presentation - Turkey Point Plant Aux. Feedwater System. (5 pages)

7. 07/23/85 Memo to H. Denton, et. al., from P. S. Tam; Daily Highlight - Turkey Point Unit 3. (1 page)

8. 07/25/85 Memo to H. Denton, et. al. from D. G. McDonald; Daily Highlight - Turkey Point Units 3 and 4 Part 21 Notification Relating to Main Steam Isolation Valve Closure Time. (6 pages)

9. 08/13/85 Operating Reactors Events Briefing (No. 85-13). (7 pages)

10. 09/16/85 Operating Reactors Events Briefing (No. 85-16). (10 pages)

11. Undated Reportable Event No. 01531, Unevaluated Information. (1 page)

12. Undated Reportable Event No. 01532, Unevaluated Information. (1 page)

13. Undated Reportable Event No. 01534, Unevaluated Information. (1 page)

14. Undated Reportable Event No. 01555, Unevaluated Information. (1 page)

15. 10/29/85 Memo to Chairman Palladino from W. J. Dircks; re: 9/20/85 letter from ACRS on Turkey Point. (5 pages)

HARMON, WEISS & JORDAN
2001 S STREET, N.W.
SUITE 430
WASHINGTON, D.C. 20009

GAIL McGREEVY HARMON
ELLYN R. WEISS
WILLIAM S. JORDAN, III
DIANE CURRAN
DEAN R. TOUSLEY

TELEPHONE
(202) 328-3500

October 31, 1985

FREEDOM OF INFORMATION ACT REQUEST
FOIA-85-729
Rec'd 11-4-85

Mr. Joseph Felton, Director
Division of Rules and Records
Office of Administration
U.S. Nuclear Regulatory Commission
Washington, D.C. 20555

RE: FREEDOM OF INFORMATION ACT REQUEST

Dear Mr. Felton,

Pursuant to the federal Freedom of Information Act, I hereby request a copy of each of the following:

1. NRC's recent "system evaluation" of the auxiliary feedwater system at Turkey Point Units 3 and 4. This evaluation is more fully described in the attached article which appeared in the October 29, 1985 issue of "Inside NRC".

2. All related documents including but not limited to reports, memoranda, notes, drafts prepared by NRC staff and/or contractors in connection with this system evaluation.

3. All documents prepared by Florida Power and Light and/or its contractors, employees or agents in connection with this system evaluation or in response to the evaluation.

Your response within ten days will be appreciated.

Very truly yours,

Ellyn R. Weiss

ENC.

ERW/jjh

8512300025

Inside N.R.C.

An exclusive report on the U.S. Nuclear Regulatory Commission

Vol. 7, No. 22 – October 29, 1985

INPO PROTESTS NRC REVIEWS OF INPO-ACCREDITED TRAINING PROGRAMS

The Institute of Nuclear Power Operations (INPO) is asking NRC Executive Director for Operations William Dircks to stop the NRC staff from checking on utility training programs after INPO has accredited them. INPO President Zack Pate has also written the NRC commissioners asking their help in reining in the staff. The staff activities, Pate said, "are impeding or undermining INPO efforts."

The NRC commissioners agreed last year not to pass new training rules for two years so INPO could prove that voluntary utility efforts to meet INPO accreditation standards produced superior results. The commissioners said, however, that the staff would monitor the situation (INRC, 1 April, 13). In July, INPO and NRC signed a coordination plan. Pate wrote: "INPO has cooperated fully with the NRC in this area and recognizes the NRC's need to monitor training progress." But some recent NRC actions, he said, "are not in keeping with the...coordination plan."

Pate complained of staff actions in three areas. First, he said, the staff has distributed Nureg/CR-4344, "Instructional Skills Evaluation in Nuclear Industry Training." The document duplicates material in two INPO documents but contains some different recommendations, he said, adding, "NRC issuance of documents that duplicate INPO training-related documents is specifically precluded by the coordination plan."

Second, without consulting INPO, NRC's Office of Nuclear Reactor Regulation (NRR) announced it will conduct "post-accreditation reviews of (INPO) accredited training programs using newly developed criteria," Pate wrote. "Superimposing these reviews on the accreditation process and the performance-oriented inspections conducted by I&E (NRC Office of Inspection & Enforcement) and

(Continued on page 4)

FIRST NRC 'SYSTEM EVALUATION' SLAMS TURKEY POINT MAINTENANCE

The first of NRC's new system evaluations, on the auxiliary feedwater (AFW) system at Florida Power & Light Co.'s (FP&L) Turkey Point-3 and -4, has resulted in a report harshly critical of FP&L's maintenance, training, modification design and testing, and quality assurance at the plant. According to the report, a special NRC inspection team assessing the operational readiness of the AFW system found modifications made without analysis of their safety impacts, operators untrained in the system's peculiarities, design flaws that could lead to uncontrolled radiation releases in a steam generator tube rupture or total loss of AFW flow control valves, a maintenance backlog that kept control room instruments out of service for months, and a maintenance training program suspended since March 1984 while the training department prepared programs to meet Institute of Nuclear Power Operations (INPO) accreditation requirements.

The inspection is the first of at least three system evaluations that the NRC staff plans to perform while developing new performance-based regulatory criteria. The other plants have not been named. The shift is occurring as the NRC staff takes a tougher regulatory line after a series of plant mishaps blamed on poor plant management (INRC, 14 Oct., 1). Besides forcing management attention to what NRC perceives as lingering maintenance problems at Turkey Point (INRC, 30 Sept., 1), the staff will be using the inspection findings to develop new methods to get substantial changes at poorly managed plants.

For the inspection, NRC called in design and engineering experts from NRC headquarters and Region II and NRC contractors. They started with the AFW system as described in the operating license and then traced modifications, looking for design control, maintenance and surveillance quality, operating procedures, and adequacy of testing, especially after modifications or maintenance. In his let-

INSIDE THIS ISSUE

ter accompanying the inspection report, James Taylor, director of the Office of Inspection & Enforcement (IE), said 10 findings could result in enforcement action.

FP&L has not yet responded formally to the report, according to spokeswoman Stacy Shaw, but the utility has protested several findings, in the exit interview and in a subsequent letter (INRC, 14 Oct., 19). Taylor noted that management began a "performance enhancement program" after receiving low ratings on the last SALP (systematic assessment of licensee performance) report, but said, "The inspection team noted that performance in the functional areas of maintenance, surveillance testing, and design changes and modifications has not markedly improved." Taylor said he understood the utility "took prompt action...to address the team's safety concerns," adding NRC will follow up.

Specific findings from the report included:

—The safety grade backup air system for the non-safety grade instrument air system, vital to keeping AFW flow control valves (and the system) operating, had never been functionally tested though it had been "substantially modified." A test showed operators had only six to seven minutes, instead of 15 to 20 minutes, to valve in new nitrogen bottles to the backup system in the worst case. Response would have been hampered by an incorrect annunciator response procedure, and the annunciator alarm set-point was halved without a safety evaluation. "The team concluded that the weaknesses identified...could have all contributed to a significant risk of a loss of AFW flow."

—The AFW system is shared by Turkey Point-3 and -4, and its design basis requires that one pump be able to remove decay heat from both units. However, operators must assure the correct division of flow between the units. Operators were not trained in the situation and their procedures did not cover it.

—The AFW turbine steam supply isolation valves could not be shut from the control room if an AFW actuation signal was present. Operators had no training to recognize the signal's override of control room switches. "The team concluded that the lack of operator awareness that the steam flowpaths in question could not be isolated remotely from the control room could have resulted in an unnecessary and potentially significant radioactive release to the environment following a steam generator tube rupture."

—"Programmatic weaknessess" were found in maintenance, including "the consistent failure to evaluate the root cause of equipment malfunctions and to trend these failures to provide input to the preventive maintenance program," though key parts of the AFW system had experienced recurrent component failures.

—"Formal classroom training sessions for maintenance technicians had been discontinued in August 1984. Licensee management stated that maintenance training had been discontinued to dedicate training resources to developing training materials required to support INPO accreditation of the maintenance training program....A very limited amount of on-the-job training and vendor supplied training had been conducted since the decision to discontinue classroom training."

—"Over half of the I&C (instrument & control) technicians that conduct surveillance tests (15 of 27 at the time of the inspection) had an average of less than 6.5 months of experience at Turkey Point. The electrical and mechanical maintenance groups have also recently experienced high turnover rates among their technicians."

—"Management controls did not exist to ensure that safety related maintenance activities were performed by qualified personnel....Maintenance procedures generally lacked detail. Complex safety related maintenance activities were often considered to be within the scope of the 'skill of the trade' and therefore not requiring procedures....Post-maintenance testing requirements were typically not included as part of electrical and I&C plant work orders (PWOs)."

—The apparent result was "a large backlog of safety related PWOs throughout both units." Steam jet air ejector process radiation monitors had been out of service about six months, the unit 4 containment sump high level annunciator had been out since December 1984 and two of four post-accident sump level monitors out since February, and several area radiation monitors on both units were out of service for greater than six months. Both units had leaking power operated relief valves (porvs) and unit 4's block valves also leaked, resulting in elevated temperatures in the common discharge pipe downstream of the pressurizer safety relief valves. As a result of the last, all three unit 4 control room annunciators continuously showed alarms, impairing operators' ability to recognize relief valve failures.

—"During a system walkdown, the drain lines on the turbine casings and the exhaust silencers were noted to be hot. Water was flowing from the drains on the A and C turbines. The steam supply isolation valves for the A and C turbines were leaking and allowing steam to reach the turbines even though the valves were closed....The associated steam supply valves on unit 4 also appeared to be leaking....The B turbine did not appear to have any leakage from its steam supply valves....No current

PWOs were noted on the leaking steam supply valves."

—Seismic qualification "was not being properly maintained," with control air lines not properly anchored and a temporary scaffolding erected above all four instrument racks for both units' AFW flow transmitters so that a collapse could have failed all AFW.

—"Programmatic weaknesses" were found in the design change process. "The engineering group often did not provide post-modification testing requirements....Modifications were installed without a detailed design analysis....Design bases for safety related systems were difficult to retrieve." The team found the utility "frequently base(d) design changes on engineering judgment that the new design was bounded by the original design analysis. Documentation justifying the engineering judgment typically did not exist."

—At least partially as a result, "Four of six AFW steam supply isolation valve motor operators were changed from AC to DC motors without adequate design analysis. Motor overload protection for the new DC motors was not properly sized. Further, the new power cables were not properly sized to ensure adequate operating voltage for the motor operators in the event of a loss of off-site power. The licensee had not performed any cable sizing calculations to support this design change."

—Potentials for common mode failures were introduced by design changes. Common relays and limit switches were put into redundant Train A and B flow control circuits and design of nitrogen backup systems could fail redundant control room annunciator circuits.

—Safety related station batteries were modified but no calculations were done to show the new ones could meet the design basis and plant procedures and technical specifications were not changed to recognize the new batteries' different requirements.

—"Excessive reliance was placed on operator action instead of design features to ensure the proper functioning of the AFW system."

—"A review of the corporate and site quality assurance (QA) auditing activities revealed that these audits, as implemented, neither had identified nor were capable of identifying quality concerns of a technical and operational nature" like those NRC found. "Both the corporate vendor audit and the plant audit programs were designed to assure that QA programs met NRC requirements and licensee commitments from a programmatic basis only....(which) meant that FP&L management was not receiving important feedback on the quality of activities affecting the safe operation of the plant."

Several industry sources said FP&L was objecting to some of the report's conclusions and pressing to have them changed. They said industry groups are concerned about the apparent new militancy in the NRC staff and will try to get the NRC commissioners or friendly members of Congress to intervene.

In developing performance indicators, NRC is also conducting special maintenance program reviews at seven plants. William Russell of the Office of Nuclear Reactor Regulation said NRC is ahead in developing performance indicators in the maintenance area since staffers have already been visiting plants to determine where industry initiatives are working and where NRC action is needed (INRC, 19 Aug., 1). Turkey Point is also on that list, with a review scheduled for later this year, along with Carolina Power & Light Co.'s Brunswick and Arkansas Power & Light Co.'s Arkansas Nuclear One. Program reviews have already been done at Northeast Utilities' Millstone, Toledo Edison Co.'s Davis-Besse, Sacramento Municipal Utility District's Rancho Seco, and Wisconsin Public Service Corp.'s Kewaunee.

Region II Administrator Nelson Grace noted INPO and the Nuclear Utility Management & Human Resources Committee (Numarc) want NRC to stay out of management areas and said he agreed NRC should not be managing plants. But, he said, "We can and must touch on those areas, to the extent that all of our (inspection) findings must be laid at the doorstep of top management....The buck stops there."—*Margaret L. Ryan and Eric Lindeman, Washington*

MERITS OF USER FEE SCHEME TO BE RESOLVED BY HOUSE-SENATE CONFERENCE

The merits of a proposed scheme by which NRC would be required to collect user fees to offset 50% of its authorized budget will be battled out by House and Senate conferees when a budget conference begins meeting this week. The House was expected to approve by the end of last week its version of the budget reconciliation bill, which includes the user fee scheme. Since the proposal is not included in the Senate version of the bill, it will first be considered by that body in conference.

The conference is expected to continue for at least a week, so it is uncertain when the user fee provision will be considered. In the meantime, industry lobbyists are working to kill the provision, questioning the basis for setting budget recovery at 50%. Fighting in the industry's corner is Rep. Dan Rostenkowski (D-Ill.), chairman of the House Ways & Means Committee, who argued before the Rules Committee that the user fee is really a tax and so must be considered by his committee first. The

3. Verify that the AFW pumps in your plant will supply the necessary flow to the steam generator(s) as determined by items 1 and 2 above considering a single failure. Identify the margin in sizing the pump flow to allow for pump recirculation flow, seal leakage and pump wear.

7910260301

F/1

(4)

UNITED STATES
NUCLEAR REGULATORY COMMISSION
WASHINGTON, D. C. 20555

OCTOBER 26 1979

Docket Nos.: 50-250
50-251

Dr. Robert E. Uhrig, Vice-President
Advanced Systems and Technology
Florida Power and Light Company
P. O. Box 529100
Miami, Florida 33152

Dear Dr. Uhrig:

SUBJECT: NRC REQUIREMENTS FOR AUXILIARY FEEDWATER SYSTEMS AT TURKEY POINT PLANT, UNITS 3 AND 4

The purpose of this letter is to advise you of our requirements for the auxiliary feedwater systems at the subject facility. These requirements were identified during the course of the NRR Bulletins and Orders Task Force review of operating reactors in light of the accident at Three Mile Island, Unit 2.

Enclosure 1 to this letter identifies each of the requirements applicable to the subject facility. These requirements are of two types, (1) generic requirements applicable to most Westinghouse-designed operating plants, and (2) plant-specific requirements applicable only to the subject facility. Enclosure 2 contains a generic request for additional information regarding auxiliary feedwater system flow requirements.

The designs and procedures of the subject facility should be evaluated against the applicable requirements specified in Enclosure 1 to determine the degree to which the facility currently conforms to these requirements. The results of this evaluation and an associated schedule and commitment for implementation of required changes or actions should be provided for NRC staff review within thirty days of receipt of this letter. Also, this schedule should indicate your date for submittal of information such as design changes, procedure changes or Technical Specification changes to be provided for staff review. You may also provide your response to the items in Enclosure 2 at that time.

In addition to the requirements identified in this letter, other requirements which may be applicable to the subject facility are expected to be generated by the Bulletins and Orders Task Force. Such requirements are those resulting from our review of the loss-of-feedwater event and the small break loss-of-coolant accident as described in the Westinghouse report WCAP-9600, "Report on Small

F/1

Break Accidents for Westinghouse NSSS System." Our specific concerns include systems reliability (other than the auxiliary feedwater system), analyses, guidelines and procedures for operators, and operator training.

We plan to identify, in separate correspondence, the requirements resulting from the additional items from the Bulletins and Orders Task Force review.

Sincerely,

Robert L. Tedesco for
Darrell G. Eisenhut, Acting Director
Division of Operating Reactors
Office of Nuclear Reactor Regulation

Enclosures:
As stated

cc: Mr. Robert Lowenstein, Esquire
Lowenstein, Newman, Reis and Axelrad
1025 Connecticut Avenue, N.W.
Suite 1214
Washington, D. C. 20036

Environmental and Urban Affairs Library
Florida International University
Miami, Florida 33199

Mr. Norman A. Coll, Esquire
Steel, Hector and Davis
1400 Southeast First National
Bank Building
Miami, Florida 33131

Mr. Henry Yaeger, Plant Manager
Turkey Point Plant
Florida Power and Light Company
P. O. Box 013100
Miami, Florida 33101

Mr. Jack Shreve
Office of the Public Counsel
Room 4, Holland Building
Tallahassee, Florida 32304

ENCLOSURE 1

X.16 (W) TURKEY POINT UNITS 3 & 4

AUXILIARY FEEDWATER SYSTEMS

X.16.1 System Description

X.16.1.1 Configuration-Overall Design

The auxiliary feedwater system (AFWS) for the Turkey Point plant (Units 3 & 4), as shown in Figure 1, consists of three steam turbine driven pumps, i.e., one pump normally aligned to each unit and the third pump is a shared standby for either unit. Each pump normally delivers 600 gpm (@ 2775 ft. head) feedwater to the three steam generators (SG) in each unit. Also, the control room operator can manually direct flow from any pump to all three steam generators of either unit. Under a design basis accident, only one pump would be required in order to cool the plant down to a condition where the RHR system can be put into operation to continue the safe plant shutdown process.

Primary water supply for the AFWS comes from the seismic Category I condensate storage tanks (CST) of both units. Each CST has a capacity of 250,000 gallons with a minimum reserved storage capacity of 185,000 gallons of demineralized water. With this quantity of water, the licensee indicated that the unit can be kept at hot standby condition for 15 hours and then cooled to 350°F, at which point the RHR system can be put in service, or the unit can be kept at hot standby condition for about 23 additional hours. All the manually operated valves associated with CST's are locked open. A secondary water supply comes from the non-seismic Category 1 water treatment system. An additional feedwater supply can be provided from the main feedwater system of the adjacent Units 1 & 2 (non-nuclear power plant).

X.16.1.2 Components - Design, Classification

The AFWS is designed according to seismic Category I requirements. The AFWS is classified as an engineered safety related system and its associated instrumentation and controls are designed accordingly.

X.16.1.3 Power Sources

The turbine driven pumps are supplied with steam from the main steam line of either or both units upstream of the MSIV. The operator normally selects the steam supply from the Unit which has lost its normal feedwater supply. The turbines have an atmosphere exhaust. Steam can also be supplied from the Unit having normal feedwater supply and from an auxiliary steam system connection to Units 1 & 2. The turbine driven pump steam supply line has a normally closed AC motor operated valve in series with a normally closed DC solenoid air operated valve. The pump discharge control valves are DC solenoid operated air valves.

X.16.1.4 Instrumentation and Control

X.16.1.4.1 Controls

The steam generator water level is manually controlled by the control room operator using either one of the DC solenoid operated air valves.

Local manual operation of these valves can be performed on loss of compressed air. The AFW pump feedwater discharge rate is always greater than the turbine steam consumption when the steam pressure is higher than 120 psig. When the steam pressure is reduced to 120 psig, the RHR system is started and the AFW pumps are shut down.

X.16.1.4.2 Information Available to Operator

Low water level in the condensate storage tank will alarm and annunciate in the main control room. In addition, AFW flow indication, SG water level, and control valve position indication are provided in the control room.

X.16.1.4.3 Initiating Signals for Automatic Operation

All three AFW pumps will automatically start by any of the following signals from either Unit:

(a) safety injection

(b) low-low water level in any of the three steam generators

(c) loss of voltage on both 4160V buses

(d) loss of both main feedwater pumps.

Any one of these signals will also automatically open the normally closed motor operated and air operated valves in series which isolate the main steam line from the steam supply header of each AFW pump turbine. Air to operate the AFW control valves to the steam generators is supplied when the steam supply valves commence opening. The AFWS can also be started manually in the control room or from the local station.

X.16.1.5 Testing

The Turkey Point Units 3 and 4 Technical Specifications require the following testing of the auxiliary feedwater system.

1) Monthly test of each auxiliary feedwater pump to run for 15 minutes and verify a flow rate of 600 gpm to the steam generators.

2) Tests of auxiliary feedwater discharge valves during the monthly pump tests.

3) Tests of steam supply and turbine pressure valves during monthly pump tests.

These tests are designed to verify the operability of the auxiliary feedwater system and its ability to respond properly when required.[1]

X.16.1.6 Technical Specifications

The Turkey Point Units 3 and 4 Technical Specifications provide for the following limiting conditions for operation with respect to the Auxiliary Feedwater System:

1) Two out of three AFWS pumps must be operable for single nuclear unit operation.

2) Three out of three AFWS pumps must be operable for dual nuclear unit operation.

[1] The licensee advised that the type of periodic (monthly) testing performed for the AFWS includes full flow path discharge to the SG's, i.e., a single actuation of AFWS and delivery to SG's while power is being produced.

3) The condensate storage tank must contain a minimum of 185,000 gallons of water.

4) System piping, interlocks and valves must be operable.

If any of the above conditions cannot be met within 48 hours, the reactor must be shut down and the reactor coolant temperature must be reduced to less than 350°F.

X.16.2 Reliability Evaluation

X.16.2.1 Dominant Failure Modes

The AFWS simplified flow diagram for Turkey Point Unit 3 is illustrated in Figure 1. This AFWS design reflects a redundant, highly shared, system between Units 3 and 4. Operation of any one of the three steam turbine driven pumps would be expected to result in successful decay heat removal from either Units 3 or 4. Accordingly, the success criterion selected for this reliability evaluation was: Failure of AFWS is insufficient AFWS flow from one AFWS pump to 2 of 3 steam generators in one unit.

The following failure modes were found to dominate the demand unavailability of the Turkey Point AFWS.

LOFW with Offsite AC Available

The Turkey Point AFWS was found to be highly redundant in that there was no obvious single faults (active components, manual valves or human errors) identified that dominate the availability of the AFWS.

The periodic testing practice followed involves full flow path testing to the steam generators. This type of testing is of quality in that it yields an advantage on detectability of valves that might be mispositioned through human errors. Also, the AFWS manual valves are locked open and this practice further reduces the chance of inadvertant closure through human error.

Several unlikely common mode vulnerabilities were identified that might serve to limit the availability of the highly redundant Turkey Point AFWS; their ultimate impact should be further considered in a longer time assessment. These were:

a) The possible common sharing of the lube oil cooling by the service (city) water system which is DC powered.

b) The potential for common disabling of Unit #3 and/or #4 AFWS by a single failure of the connecting piping between the headers in the AFWS pump discharge and steam supply paths.

LOFW with Only Onsite AC Available

The impact of shared emergency diesel generators (EDG) and their contribution to the unavailability of the Turkey Point AFWS were estimated to be very small. The steam admission valves to the turbine pumps are AC operated, but either of the two EDG's operating would suffice to operate at least one or more of the three AC valves in each header in Unit 3 and 4. Further, the human can serve as backup to open these valves if for some reason, the AC or DC valves in either Unit 3 or 4 steam admission header failed to operate electrically.

The dominant faults appear to remain similar to those discussed for the preceeding LOFW transient event.

LOFW with Only DC Available

As noted above the steam admission valves are AC operated in Turkey Point Units #3 and #4. The dominant fault contribution for this event was assessed to be failure of the human to open at least one of the steam admission valves by local manual action. The licensee estimated that such actions could be accomplished within about 10 minutes.

X.16.2.2 Principle Dependencies Identified

One dependency identified was the AC dependency for the steam admission valves that,for the event including complete loss of AC, would require local manual action to initiate the AFWS.

Several additional dependencies were identified that should be considered further,but on a longer term consideration as to their ultimate impact on the AFWS. These were (a) the potential for common lubrication cooling faults in the service (city) water system and (b) the potential for common disabling of the AFWS due to breaks in the single line in the AFWS discharge headers and in the steam supply headers to all turbine driven AFW pump turbines.

X.16.3 Recommendations for this Plant

The short-term recommendations (both generic, denoted by GS, and plant-specific) identified in this section represent actions to improve AFW system reliability that should be implemented by January 1, 1980, or as soon thereafter as is practicable. In general, they involve upgrading of Technical Specifications or establishing procedures to avoid or mitigate potential system or operator failures. The long-term (both generic, denoted by GL, and plant-specific) recommendations identified in this section involve system design evaluations and/or modifications to improve AFW system reliability and represent actions that should be implemented by January 1, 1981, or as soon thereafter as is practicable.

X.16.3.1 Short-Term

1. Recommendation GS-1 - The licensee should propose modifications to the Technical Specifications to limit the time period that one AFW system pump and its associated flow train and essential instrumentation can be inoperable.

   The outage time limit and subsequent action time should be as required in current Standard Technical Specifications; i.e., 72 hours and 12 hours, respectively.

2. Recommendation GS-2 - The licensee should lock open single valves or multiple valves in series in the AFW system pump suction piping and lock open other single valves or multiple valves in series that could interrupt all AFW flow. Monthly inspections should be performed to verify that these valves are

locked and in the open position. These inspections should be proposed for incorporated into the surveillance requirements of the plant Technical Specifications. See Recommendation GL-2 for the longer term resolution of this concern.

3. Recommendation GS-4 - Emergency procedures for transferring to alternate sources of AFW supply should be available to the plant operators. These procedures should include criteria to inform the operators when, and in what order, the transfer to alternate water sources should take place. The following cases should be covered by the procedures:

   - The case in which the primary water supply is not initially available. The procedures for this case should include any operator actions required to protect the AFW system pumps against self-damage before water flow is initiated; and,

   - The case in which the primary water supply is being depleted. The procedure for this case should provide for transfer to the alternate water sources prior to draining of the primary water supply.

4. Recommendation GS-5 - The as-built plant should be capable of providing the required AFW flow for at least two hours from one AFW pump train independent of any alternating current power source. If manual AFW system initiation of flow control is

required following a complete loss of alternating current power, emergency procedures should be established for manually initiating and controlling the system under these conditions. Since the water for cooling the lube oil for the turbine-driven pump may be dependent on alternating current power, design or procedural changes shall be made to eliminate this dependency as soon as practicable. Until this is done, the emergency procedures should provide for an individual to be stationed at the turbine-driven pump in the event of the loss of all alternating current power to monitor pump bearing and/or lube oil temperatures. If necessary, this operator would operate the turbine-driven pump in an on-off mode until alternating current power is restored. Adequate lighting powered by direct current power sources and communications at local stations for manual initiation and control of the AFW system should also be provided if manual initiation and control of the AFW system is needed. (See Recommendation GL-3 for the longer term resolution of this concern).

5. Recommendation GS-6 - The licensee should confirm flow path availability of an AFW system flow train that has been out of service to perform periodic testing or maintenance as follows:

   - Procedures should be implemented to require an operator to determine that the AFW system valves are properly aligned and a second operator to independently verify that the valves are properly aligned.

- The licensee should propose Technical Specifications to assure that prior to plant startup following an extended cold shutdown, a flow test would be performed to verify the normal flow path from the primary AFW system water source to the steam generators. The flow test should be conducted with AFW system valves in their normal alignment.

6. Recommendation GS-7 - The licensee should verify that the automatic start AFW system signals and associated circuitry are safety-grade. If this cannot be verified, the AFW system automatic initiation system should be modified in the short-term to meet the functional requirements listed below. For the longer term, the automatic initiation signals and circuits should upgraded to meet safety-grade requirements as indicated in Recommendation GL-5.

   - The design should provide for the automatic initiation of the auxiliary feedwater system flow.
   - The automatic initiation signals and circuits should be designed so that a single failure will not result in the loss of auxiliary feedwater system function.
   - Testability of the intiation signals and circuits shall be a feature of the design.
   - The initiation signals and circuits should be powered from the emergency buses.
   - Manual capability to initiate the auxiliary feedwater system from the control room should be retained and

should be implemented so that a single failure in the manual circuits will not result in the loss of system function.

- The alternating current motor-driven pumps and valves in the auxiliary feedwater system should be included in the automatic actuation (simultanous and/or sequential) of the loads to the emergency buses.
- The automatic initiation signals and circuits shall be designed so that their failure will not result in the loss of manual capability to intiate the AFW system from the control room.

X.16.3.2 Additional Short Term Recommendations

The following additional short term recommendations resulted from the staff's Lessons Learned Task Force review and the Bulletins & Orders Task Force review of AFW systems at Babcock & Wilcox-designed operating plants subsequent to our review of the AFW system designs in W- and C-E-designed operating plants. They have not been examined for specific applicability to ths facility.

1. Recommendation - The licensee should provide redundant level indications and low level alarms in the control room for the AFW system primary water supply to allow the operator to anticipate the need to make up water or transfer to an alternate water supply and prevent a low pump suction pressure condition from occurring. The low level alarm setpoint should allow at least 20 minutes for operator actions, assuming that the largest capacity AFW pump is operating.

2. Recommendation - The licensee should perform a 72-hour endurance test on all AFW system pumps, if such a test or continuous period of operation has not been accomplished to date. Following the 72-hour pump run, the pumps should be shut down and cooled down and then restarted and run for one hour. Test acceptance criteria should include demonstrating that the pumps remain with design limits with respect to bearing/bearing oil temperatures and vibration and that pump room ambient conditions (temperatures, humidity) do not exceed environmental qualification limits for safety-related equipment in the room.

3. Recommendation - The licensee should implement the following requirements as specified by Item 2.1.7.b on page A-32 of NUREG-0578:

   "Safety-grade indication of auxiliary feedwater flow to each steam generator shall be provided in the control room.

   The auxiliary feedwater flow instrument channels shall be powered from the emergency buses consistent with satisfying the emergency power diversity requirements for the auxiliary feedwater system set forth in Auxiliary Systems Branch Technical Position 10-1 of the Standard Review Plan, Section 10.4.9."

4. Recommendation - Licensees with plants which require local manual realignment of valves to conduct periodic tests on one AFW system train and which have only one remaining AFW train available for

operation, should propose Technical Specifications to provide that a dedicated individual who is in communication with the control room be stationed at the manual valves. Upon instruction from the control room, this operator would re-align the valves in the AFW system train from the test mode to its operational alignment.

X.16.3.3 Long-Term

Long-term recommendations for improving the system are as follows:

1. Recommendation GL-3 - At least one AFW system pump and its associated flow path and essential instrumentation should automatically initiate AFW system flow and be capable of being operated independently of any alternating current power source for at least two hours. Conversion of direct current power to alternating current is acceptable.

2. Recommendation - GL-5 - The licensee should upgrade the AFW system automatic initiation signals and circuits to meet safety-grade requirements.

3. Recommendation - The AFW pump discharge lines and turbine driven AFW pump steam supply lines for each unit combine into single lines through which all water and steam respectively from either unit must flow. A pipe break in either of these single flow paths would cause loss of the capability to provide AFW flow to all the steam generators of one unit. The licensee should evaluate the consequences of a

postulated pipe break in these sections of the AFW discharge or steam supply, assuming a concurrent single active failure and 1) determine any AFW system modifications or procedures necessary to detect and isolate the break, and direct the required AFW flow to the steam generators before they boil dry or 2) describe how the plant can be brought to a safe shutdown condition by use of other available systems following such a postulated pipe break.

4. Recommendation - The lube oil cooling of the three turbine driven AFW pumps is provided from a common source; namely the service (city) water system. The licensee should evaluate this cooling water system to determine if there are potential common mode (electrical or mechanical) failures that could disable the lube oil cooling for all three turbine driven pumps. The licensee should provide the results of the evaluation and 1) indicate any system modifications or procedures necessary to prevent a common mode failure of the lube oil cooling system or 2) provide information that demonstrates that the turbine driven AFW pumps can operate for at least two hours without lube oil cooling water and independent of AC power.

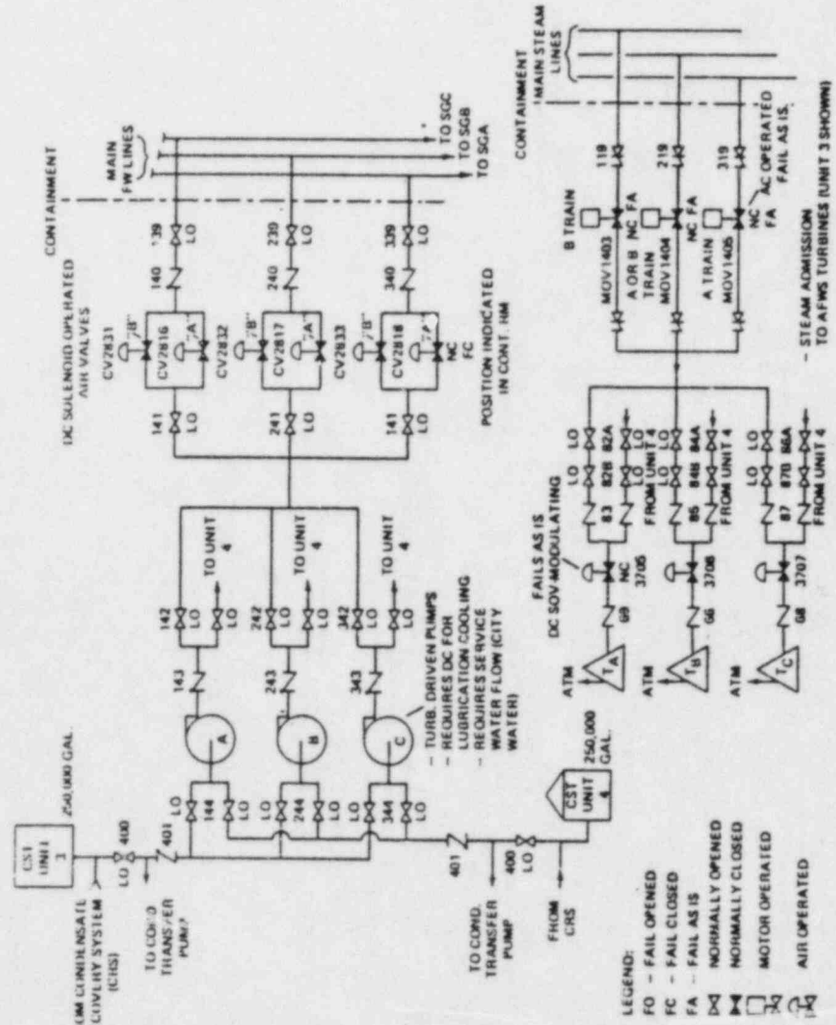

Auxiliary Feedwater System
Turkey Point (Units 3 and 4)
Figure 1

ENCLOSURE 2

Basis for Auxiliary Feedwater
System Flow Requirements

As a result of recent staff reviews of operating plant Auxiliary Feedwater Systems (AFWS), the staff concludes that the design bases and criteria provided by licensees for establishing AFWS requirements for flow to the steam generator(s) to assure adequate removal of reactor decay heat are not well defined or documented.

We require that you provide the following AFWS flow design basis information as applicable to the design basis transients and accident conditions for your plant.

1. a. Identify the plant transient and accident conditions considered in establishing AFWS flow requirements, including the following events:

   1) Loss of Main Feed (LMFW)
   2) LMFW w/loss of offsite AC power
   3) LMFW w/loss of onsite and offsite AC power
   4) Plant cooldown
   5) Turbine trip with and without bypass
   6) Main steam isolation valve closure
   7) Main feed line break
   8) Main steam line break
   9) Small break LOCA
   10) Other transient or accident conditions not listed above

   b. Describe the plant protection acceptance criteria and corresponding technical bases used for each initiating event identified above. The acceptance criteria should address plant limits such as:

   - Maximum RCS pressure (PORV or safety valve actuation)
   - Fuel temperature or damage limits (DNB, PCT, maximum fuel central temperature)
   - RCS cooling rate limit to avoid excessive coolant shrinkage
   - Minimum steam generator level to assure sufficient steam generator heat transfer surface to remove decay heat and/or cool down the primary system.

2. Describe the analyses and assumptions and corresponding technical justification used with plant condition considered in 1.a. above including:

   a. Maximum reactor power (including instrument error allowance) at the time of the initiating transient or accident.

   b. Time delay from initiating event to reactor trip.

   c. Plant parameter(s) which initiates AFWS flow and time delay between initiating event and introduction of AFWS flow into steam generator(s).

   d. Minimum steam generator water level when initiating event occurs.

   e. Initial steam generator water inventory and depletion rate before and after AFWS flow commences - identify reactor decay heat rate used.

f. Maximum pressure at which steam is released from steam generator(s) and against which the AFW pump must develop sufficient head.

g. Minimum number of steam generators that must receive AFW flow; e.g. 1 out of 2?, 2 out of 4?

h. RC flow condition - continued operation of RC pumps or natural circulation.

i. Maximum AFW inlet temperature.

j. Following a postulated steam or feed line break, time delay assumed to isolate break and direct AFW flow to intact steam generator(s). AFW pump flow capacity allowance to accommodate the time delay and maintain minimum steam generator water level. Also identify credit taken for primary system heat removal due to blowdown.

k. Volume and maximum temperature of water in main feed lines between steam generator(s) and AFWS connection to main feed line.

l. Operating condition of steam generator normal blowdown following initiating event.

m. Primary and secondary system water and metal sensible heat used for cooldown and AFW flow sizing.

n. Time at hot standby and time to cooldown RCS to RHR system cut in temperature to size AFW water source inventory.

3. Verify that the AFW pumps in your plant will supply the necessary flow to the steam generator(s) as determined by items 1 and 2 above considering a single failure. Identify the margin in sizing the pump flow to allow for pump recirculation flow, seal leakage and pump wear.

UNITED STATES
NUCLEAR REGULATORY COMMISSION
WASHINGTON, D. C. 20555

December 24, 1981

Docket Nos. 50-250
and 50-251

Dr. Robert E. Uhrig, Vice President
Advanced Systems and Technology
Florida Power and Light Company
Post Office Box 529100
Miami, Florida 33152

Dear Dr. Uhrig:

The Commission has issued the enclosed Amendment No. 75 to Facility Operating License No. DPR-31 and Amendment No. 69 to Facility Operating License No. DPR-41 for the Turkey Point Plant Unit Nos. 3 and 4, respectively. The amendments consist of changes to the Technical Specifications in response to your application transmitted by letter dated April 13, 1981.

These amendments change the Technical Specifications to conform with our Bulletins and Orders Task Force review of the Auxiliary Feedwater System following the Three Mile Island accident.

Copies of the Safety Evaluation and the Notice of Issuance are also enclosed.

Sincerely,

Marshall Grotenhuis

Marshall Grotenhuis, Project Manager
Operating Reactors Branch No. 1
Division of Licensing

Enclosures:
1. Amendment No. 75 to DPR-31
2. Amendment No. 69 to DPR-41
3. Safety Evaluation
4. Notice of Issuance

cc w/enclosures:
See next page

F/2

~~8201150072~~

Closes 43844/5
still open 42324/5

UNITED STATES NUCLEAR REGULATORY COMMISSION

DOCKET NOS. 50-250 AND 50-251

FLORIDA POWER AND LIGHT COMPANY

NOTICE OF ISSUANCE OF AMENDMENT TO FACILITY OPERATING LICENSES

The U. S. Nuclear Regulatory Commission (the Commission) has issued Amendment No. 75 to Facility Operating License No. DPR-31, and Amendment No. 69 to Facility Operating License No. DPR-41 issued to Florida Power and Light Company (the licensee), which revised Technical Specifications for operation of Turkey Point Plant, Unit Nos. 3 and 4 (the facilities) located in Dade County, Florida. The amendments are effective as of the date of issuance.

The amendments change the Technical Specifications to conform with the Commission's Bulletins and Orders Task Force review regarding Auxiliary Feedwater Pump requirements following the Three Mile Island Accident.

The application for the amendments complies with the standards and requirements of the Atomic Energy Act of 1954, as amended (the Act), and the Commission's rules and regulations. The Commission has made appropriate findings as required by the Act and the Commission's rules and regulations in 10 CFR Chapter I. which are set forth in the license amendments. Prior public notice of these amendments was not required since the amendments do not involve a significant hazards consideration.

The Commission has determined that the issuance of these amendments will not result in any significant environmental impact and that pursuant to 10 CFR §51.5(d)(4) an environmental impact statement or negative declaration and environmental impact appraisal need not be prepared in connection with issuance of these amendments.

For further datails with respect to this action, see (1) the application for amendments dated April 13, 1981, (2) Amendment Nos. 75 and 69 to License Nos. DPR-31 and DPR-41, and (3) the Commission's related Safety Evaluation. All of these items are available for public inspection at the Commission's Public Document Room, 1717 H Street, N. W., Washington, D. C. and at the Environmental and Urban Affairs Library, Florida International University, Miami, Florida 33199. A copy of items (2) and (3) may be obtained upon request addressed to the U. S. Nuclear Regulatory Commission, Washington, D. C. 20555, Attention: Director, Division of Licensing.

Dated at Bethesda, Maryland, this 24th day of December, 1981.

FOR THE NUCLEAR REGULATORY COMMISSION

Steven A. Varga, Chief
Operating Reactors Branch No. 1
Division of Licensing

Robert E. Uhrig
Florida Power and Light Company

cc: Mr. Robert Lowenstein, Esquire
Lowenstein, Newman, Reis and Axelrad
1025 Connecticut Avenue, N.W.
Suite 1214
Washington, D. C. 20036

Environmental and Urban Affairs Library
Florida International University
Miami, Florida 33199

Mr. Norman A. Coll, Esquire
Steel, Hector and Davis
1400 Southeast First National
Bank Building
Miami, Florida 33131

Mr. Henry Yaeger, Plant Manager
Turkey Point Plant
Florida Power and Light Company
P. O. Box 013100
Miami, Florida 33101

Honorable Dewey Knight
County Manager of Metropolitan
Dade County
Miami, Florida 33130

Bureau of Intergovernmental Relations
660 Apalachee Parkway
Tallahassee, Florida 32304

Resident Inspector
Turkey Point Nuclear Generating Station
U. S. Nuclear Regulatory Commission
Post Office Box 1207
Homestead, Florida 33030

Regional Radiation Representative
EPA Region IV
345 Courtland Street, N.W.
Atlanta, Georgia 30308

Mr. Jack Shreve
Office of the Public Counsel
Room 4, Holland Building
Tallahassee, Florida 32304

Administrator
Department of Environmental
Regulation
Power Plant Siting Section
State of Florida
2600 Blair Stone Road
Tallahassee, Florida 32301

UNITED STATES
NUCLEAR REGULATORY COMMISSION
WASHINGTON, D. C. 20555

FLORIDA POWER AND LIGHT COMPANY

DOCKET NO. 50-250

TURKEY POINT PLANT UNIT NO. 3

AMENDMENT TO FACILITY OPERATING LICENSE

Amendment No. 75
License No. DPR-31

1. The Nuclear Regulatory Commission (the Commission) has found that:

   A. The application for amendment by Florida Power and Light Company (the licensee) dated April 13, 1981, complies with the standards and requirements of the Atomic Energy Act of 1954, as amended (the Act) and the Commission's rules and regulations set forth in 10 CFR Chapter I;

   B. The facility will operate in conformity with the application, the provisions of the Act, and the rules and regulations of the Commission;

   C. There is reasonable assurance (i) that the activities authorized by this amendment can be conducted without endangering the health and safety of the public, and (ii) that such activities will be conducted in compliance with the Commission's regulations;

   D. The issuance of this amendment will not be inimical to the common defense and security or to the health and safety of the public; and

   E. The issuance of this amendment is in accordance with 10 CFR Part 51 of the Commission's regulations and all applicable requirements have been satisfied.

2. Accordingly, the license is amended by changes to the Technical Specifications as indicated in the attachment to this license amendment, and paragraph 3.B of Facility Operating License No. DPR-31 is hereby amended to read as follows:

   (B) Technical Specifications

   The Technical Specifications contained in Appendices A and B, as revised through Amendment No. 75, are hereby incorporated in the license. The licensee shall operate the facility in accordance with the Technical Specifications.

3. This license amendment is effective as of the date of its issuance.

FOR THE NUCLEAR REGULATORY COMMISSION

Steven A. Varga, Chief
Operating Reactors Branch No. 1
Division of Licensing

Attachment:
Changes to the Technical
Specifications

Date of Issuance: December 24, 1981

UNITED STATES
NUCLEAR REGULATORY COMMISSION
WASHINGTON, D. C. 20555

FLORIDA POWER AND LIGHT COMPANY

DOCKET NO. 50-251

TURKEY POINT PLANT UNIT NO. 4

AMENDMENT TO FACILITY OPERATING LICENSE

Amendment No. 69
License No. DPR-41

1. The Nuclear Regulatory Commission (the Commission) has found that:

   A. The application for amendment by Florida Power and Light Company (the licensee) dated April 13, 1981, complies with the standards and requirements of the Atomic Energy Act of 1954, as amended (the Act) and the Commission's rules and regulations set forth in 10 CFR Chapter I;

   B. The facility will operate in conformity with the application, the provisions of the Act, and the rules and regulations of the Commission;

   C. There is reasonable assurance (i) that the activities authorized by this amendment can be conducted without endangering the health and safety of the public, and (ii) that such activities will be conducted in compliance with the Commission's regulations;

   D. The issuance of this amendment will not be inimical to the common defense and security or to the health and safety of the public;

   E. The issuance of this amendment is in accordance with 10 CFR Part 51 of the Commission's regulations and all applicable requirements have been satisfied.

2. Accordingly, the license is amended by changes to the Technical Specifications as indicated in the attachment to this license amendment, and paragraph 3.B of Facility Operating License No. DPR-41 is hereby amended to read as follows:

   (B) Technical Specifications

   The Technical Specifications contained in Appendices A and B, as revised through Amendment No. 69, are hereby incorporated in the license. The licensee shall operate the facility in accordance with the Technical Specifications.

3. This license amendment is effective as of the date of its issuance.

FOR THE NUCLEAR REGULATORY COMMISSION

Steven A. Varga, Chief
Operating Reactors Branch No. 1
Division of Licensing

Attachment:
Changes to the Technical
Specifications

Date of Issuance: December 24, 1981

ATTACHMENT TO LICENSE AMENDMENTS

AMENDMENT NO. 75 TO FACILITY OPERATING LICENSE NO. DPR-31

AMENDMENT NO. 69 TO FACILITY OPERATING LICENSE NO. DPR-41

DOCKET NOS. 50-250 AND 50-251

Revise Appendix A as follows:

Remove Pages	Insert Pages
3.8-1	3.8-1
	3.8-2
B3.8-1	B3.8-1

3.8 STEAM AND POWER CONVERSION SYSTEMS

Applicability: Applies to the operating status of the steam and power conversion systems.

Objective: To define conditions of the steam-relieving capacity and auxiliary feedwater system.

Specification:

1. When the reactor coolant of a nuclear unit is heated above 350°F the following conditions must be met:

   a. TWELVE (12) of its steam generator safety valves shall be operable (except for testing).

   b. System piping, interlocks and valves directly associated with the related components shall be operable.

   c. Its condensate storage tank shall contain a minimum of 185,000 gallons of water.

   d. Its main steam stop valves shall be operable and capable of closing in 5 seconds or less.

2. The iodine-131 activity on the secondary side of a steam generator shall not exceed 0.67 Ci/cc.

3. During power operation, if any of the conditions of 3.8.1 or 3.8.2 cannot be met within 48 hours, the reactor shall be shut down and the reactor coolant temperature reduced below 350°F.

4. The following number of independent steam generator auxiliary feedwater pumps and associated flow path shall be operable when the reactor coolant is heated above 350°F:

   a. Single Nuclear Unit Operation

      Two auxiliary feedwater pumps capable of being powered from an operable steam supply.

   b. Dual Nuclear Unit Operation

      Three auxiliary feedwater pumps capable of being powered from an operable steam supply.

5. During power operation, if any of the conditions of 3.8.4 cannot be met, the reactor shall be shut down and the reactor coolant temperature reduced below 350°F, unless one of the following conditions can be met;

a. For single unit operation with one of the two required auxiliary feedwater pumps inoperable, restore the inoperable pump to operable status within 72 hours or the reactor shall be shut down and the reactor coolant temperature reduced below 350°F within the next 12 hours.

b. For dual unit operation with one of the three required auxiliary feedwater pumps inoperable, restore the inoperable pump to operable status within 72 hours or a reactor shall be shut down and its reactor coolant temperature reduced below 350°F within the next 12 hours.

B3.8 BASES FOR LIMITING CONDITIONS FOR OPERATION, STEAM AND POWER CONVERSION SYSTEMS

In the unlikely event of complete loss of electrical power to the nuclear units, decay heat removal will be assured by the availability of the steam-driven auxiliary feedwater pumps and steam discharge to the atmosphere via the steam generator safety valves and power relief valves.(1) The operability of the auxiliary feedwater system ensures that the Reactor Coolant System can be cooled down to less than 350° F from normal operating conditions in the event of a total loss of off-site power. Each steam driven auxiliary feedwater pump is capable of delivering a total feedwater flow of 600 gpm to the entrance of the steam generators. This capacity is sufficient to ensure that adequate feedwater flow is availiable to remove decay heat and reduce the Reactor Coolant System temperature to less than 350° F when the Residual Heat Removal System may be placed into operation. The minimum amount of water in the condensate storage tanks is established from FSAR Figure 9.11-1, and meets safe shutdown requirements. (2)

The limit on secondary coolant iodine-131 specific activity is based on a postulated release of secondary coolant equivalent to the contents of three steam generators to the atmosphere due to a net load rejection. The limiting dose for this case would result from radioactive iodine in the secondary coolant. I-131 is the dominant isotope because of its low MPC in air and because the other shorter lived iodine isotopes cannot build up to significant concentrations in the secondary coolant under the limits of primary system leak rate and activity. One tenth of the iodine in the secondary coolant is assumed to reach the site boundary making allowance for plate-out and retention in water droplets. The inhalation thyroid dose at the site boundary is then:

$$\text{Dose (Rem)} = C \cdot V \cdot B \cdot DCF \cdot X/Q \cdot 0.1$$

Where: C = secondary coolant I-131 specific activity
= 1.34 curies/m^3 (μCi/cc) or 0.67 Ci/m^3, each unit
V = equivalent secondary coolant volume released = 214 m^3
B = Breathing rate = 3.47×10^{-4} m^3/sec.
X/Q = atmospheric dispersion parameter = 1.54×10^{-4} sec/m^3
0.1 = equivalent fraction of activity released
DCF = Dose conversion factor, Rem/Ci

The resultant thyroid dose in less than 1.5 Rem.

References

(1) FSAR - Section 10.3
(2) FSAR - Section 14.2.5

UNITED STATES
NUCLEAR REGULATORY COMMISSION
WASHINGTON, D. C. 20555

SAFETY EVALUATION BY THE OFFICE OF NUCLEAR REACTOR REGULATION

RELATED TO AMENDMENT NO. 75 TO FACILITY OPERATING LICENSE NO. DPR-31

AND AMENDMENT NO. 69 TO FACILITY OPERATING LICENSE NO. DPR-41

FLORIDA POWER AND LIGHT COMPANY

TURKEY POINT PLANT UNIT NOS. 3 AND 4

DOCKET NOS. 50-250 AND 50-251

I. INTRODUCTION

By letter dated April 13, 1981 the Florida Power and Light Company (the licensee) submitted a request to modify the Technical Specifications for the Turkey Point Plant Unit Nos. 3 and 4. The amendments would change the Technical Specifications to conform to our Bulletins and Orders Task Force review following the Three Mile Island Accident. The requirements of this Task Force regarding Auxiliary Feedwater System were set forth in our letter dated October 16, 1979. The licensee responded on December 20, 1979, July 22, 1980 and January 14, July 23, 1981, in addition to the April 13, 1981 amendment request. As noted in the following evaluation some responses are not complete and some of our review is not complete. Those items for which additional information is necessary to complete our review will be specifically requested from the licensee in a separate letter.

II. BACKGROUND

The Three Mile Island Unit 2 (TMI-2) accident and subsequent investigations and studies highlighted the importance of the Auxiliary Feedwater System (AFWS) in the mitigation of transients and accidents. As part of our assessment of the TMI-2 accident and related implications for operating plants, we evaluated the AFW systems for all operating plants having nuclear steam supply systems (NSSS) designed by Westinghouse (NUREG-0611) or Combustion Engineering (NUREG-0635). Our evaluations of these system designs are contained in the NUREGs along with our recommendations for each plant and the concerns which led to each recommendation. The objectives of the evaluation were to: (1) identify necessary changes to AFW system design or related procedures at the operating facilities in order to assure the continued safe operation of these plants, and (2) to identify other system characteristics of the AFW systems which, on a long term basis, may require system modifications. To accomplish these objectives, we:

(1) Reviewed plant specific AFW system designs in light of current regulatory requirements (SRP) and,

(2) Assessed the relative reliability of the various AFW systems under various loss of feedwater transients (one of which was the initiating event of TMI-2) and other postulated failure conditions by determining the potential for AFW system failure due to common causes, single point vulnerabilities, and human error.

We concluded that the implementation of the recommendations identified during this review can be expected to improve the reliability of the AFW systems for each operating plant.

The following plant specific recommendations did not apply to this plant: GS-3, GS-8, GL-1, GL-2, and GL-4. The basis for these recommendations can be found in Appendix III of NUREG-0611 and the system description which determined the basis for not applying these recommendations can be found in Section X of NUREG-0611.

III. IMPLEMENTATION OF OUR RECOMMENDATIONS

A. Short Term Recommendations

1. Recommendation GS-1 - The licensee should propose modifications to the Technical Specifications to limit the time period that one AFW system pump and its associated flow train and essential instrumentation can be inoperable. The outage time limit and subsequent action time should be as required in current Technical Specifications; i.e., 72 hours and 12 hours, respectively.

   The licensee responded in a letter dated December 20, 1979, and agreed to submit a proposed Technical Specification amendment to include the outage time limit and subsequent action time as stated in the Standard Technical Specifications; i.e., 72 hours and 12 hours.

   The proposed Technical Specification was submitted in a letter dated April 13, 1981. We have reviewed the licensee's response to this recommendation and conclude that it meets the requirements of this recommendation and is therefore acceptable. The proposed Technical Specification has also been reviewed and found acceptable. It is hereby incorporated into Appendix A of the licenses for the Turkey Point Units.

2. Recommendation GS-2 - The licensee should lock open single valves or multiple valves in series in the AFW system pump suction piping and lock open other single valves or multiple valves in series that could interrupt all AFW flow. Monthly inspections should be performed to verify that these valves are locked and in the open position. These inspections should be proposed for incorporation into the surveillance requirements of the plant Technical Specifications.

   The licensee responded in a letter dated December 20, 1979, stating that the AFWS operability is verified on a monthly basis in accordance with Technical Specification 4.10 by starting the AFW pumps and establishing flow to the steam generators. Valves that could affect AFW flow are locked open and their positions are verified monthly by procedure as specified in the Technical Specifications. However, the steam admission valves to the AFW pump turbine are part of the AFW control system and cannot be locked open because that could activate the AFW system. The steam pressure control valves, located between the steam admission valves and the AFW pump turbines, cannot be locked in any position because they are part of the AFW control system. The operability of these valves is tested monthly in compliance with Technical Specification 4.10.

   We have reviewed the licensee's response and conclude that it meets the requirement of this recommendation and is, therefore, acceptable.

3. Recommendation GS-4 - Emergency procedures for transferring to alternate sources of AFW supply should be available to the plant operators. These procedures should include criteria to inform the operators when, and in what order, the transfer to alternate water sources should take place. The following cases should be covered by the procedures:

   (1) The case in which the primary water supply is not initially available. The procedures for this case should include any operator actions required to protect the AFW system pumps against self-damage before water flow is initiated; and

   (2) The case in which the primary water supply is being depleted. The procedure for this case should provide for transfer to the alternate water sources prior to draining of the primary water supply.

   The licensee responded in a letter dated December 20, 1980, stating that Turkey Point Units 3 and 4 share two safety grade condensate storage tanks (CST) between the two units. Make-up water to the CST can be provided from non-safety grade equipment such as the condenser hot well, the primary water storage tank or the fire main system. The licensee further stated that a non-safety grade 500,000 gallon deaerated water storage tank is being constructed and will be available to supply the CSTs.

We find the licensees response incomplete in that the procedures the operators are to follow in the two cases required by this recommendation are not mentioned. Further the use of the 500,000 gallon deaerated water storage tank is not spelled out. The AFW sources of water are appropriately restricted by Technical Specifications (3.8.1c and 3.8.3) which spell out the minimum volume of water which must be available to the AFW pumps (185,000) and the action to take should the supply drop below the 185,000 gallons.

4. Recommendation GS-5 - The as-built plant should be capable of providing the required AFW flow for at least two hours from one AFW pump train independent of any alternating current power source. If manual AFW system initiation of flow control is required following a complete loss of alternating current power, emergency procedures should be established for manually initiating and controlling the system under these conditions. Since the water for cooling the lube oil for the turbine-driven pump may be dependent on alternating current power, design or procedural changes shall be made to eliminate this dependency as soon as practicable. Until this is done, the emergency procedures should provide for an individual to be stationed at the turbine-driven pump in the event of the loss of all alternating current power to monitor pump bearing and/or lube oil temperatures. If necessary, this operator would operate the turbine-driven pump in an on-off mode until alternating current power is restored. Adequate lighting powered by direct current power sources and communications at local stations for manual initiation and control of the AFW system should also be provided if manual initiation and control of the AFW system is needed. (See Recommendation GL-3 for the longer term resolution of this concern.)

The licensee responded in a letter dated December 20, 1979, stating that the as-built AFWS is capable of providing required flow for at least two hours from one AFW train independent of any AC power source after AFW initiation. No manual operation is requred upon loss of AC power because the steam control and AFW discharge control system have a nitrogen backup for operation of air control valves. Service water used for cooling the turbine driven pumps lube oil is supplied by gravity feed. The licensee stated that procedures would be prepared to describe how to assure at least two hour supply of lube oil cooling water in the event of loss of all AC power. The licensee also proposed to install a sound powered phone line from the AFW pumps to the control room. The modifications are planned to be completed during 1981. In conjunction with this modification, DC lighting will also be installed at the AFW pump location.

We have reviewed the licensee's response and conclude that it meets the requirements of the recommendation and is therefore acceptable.

5. Recommendation GS-6 - The licensee should confirm flow path availability of an AFW system flow train that has been out of service to perform periodic testing or maintenance as follows:

   (1) Procedures should be implemented to require an operator to determine that the AFW system valves are properly aligned and a second operator to independently verify that the valves are properly aligned.

   (2) The licensee should propose Technical Specifications to assure that prior to plant startup following an extended cold shutdown, a flow test would be performed to verify the normal flow path from the primary AFW system water source to the steam generators. The flow test should be conducted with AFW system valves in their normal alignment.

   The licensee responded in a letter dated December 20, 1979, stating that a proposed Technical Specification amendment will be provided to specify performing a flow test to verify the normal flow path. In addition, valve position will be determined by an operator and verified by a second operator and incorporated into the appropriate procedures.

   The proposed Technical Specification was submitted by letter dated April 13, 1981. We have reviewed the licensee's response to this recommendation and conclude that it meets the requirements of this recommendation and is therefore acceptable. The proposed Technical Specification has also been reviewed and found acceptable. It is hereby incorporated into Appendix A to the licenses for the Turkey Point Plant.

6. Recommendation GS-7 - The licensee should verify that the automatic start AFW system signals and associated circuitry are safety-grade. If this cannot be verified, the AFW system automatic initiation system should be modified in the short-term to meet the functional requirements listed below. For the longer term, the automatic initiation signals and circuits should be upgraded to meet safety-grade requirements as indicated in Recommendation GS-5.

   (1) The design should provide for the automatic initiation of the auxiliary feedwater system flow.

   (2) The automatic initiation signals and circuits should be designed so that a single failure will not result in the loss of auxiliary feedwater system function.

(3) Testability of the initiation signals and circuits shall be a feature of the design.

(4) The initiation signals and circuits should be powered from the emergency buses.

(5) Manual capability to initiate the auxiliary feedwater system from the control room should be retained and should be implemented so that a single failure in the manual circuits will not result in the loss of system function.

(6) The alternating current motor-driven pumps and valves in the auxiliary feedwater system should be included in the automatic actuation (simultaneous and/or sequential) of the loads to the emergency buses.

(7) The automatic initiation signals and circuits shall be designed so that their failure will not result in the loss of manual capability to initiate the AFW system from the control room.

The licensee responded in a letter dated December 20, 1979, stating that the as-built system is safety grade with one exception. The actuation of the pressure regulating valves for steam supply to the AFW pump turbines is not designed in accordance with the single failure criterion. However, the licensee committed to modify the system to meet the single failure criterion.

We conclude that the licensee's response meets this Short Term Recommendation (control grade) and is therefore acceptable. However, the proposed modification of pressure regulating valves actuation to meet the single failure criterion (safety grade) is still under review. This review will be reported in a supplement to this report.

B. Additional Short Term Recommendations

1. Recommendation - The licensee should provide redundant level indications and low level alarms in the control room for the AFW system primary water supply to allow the operator to anticipate the need to make up water or transfer to an alternate water supply and prevent a low pump suction pressure condition from occurring. The low level alarm set-point should allow at least 20 minutes for operator actions, assuming that the largest capacity AFW pump is operating.

The licensee responded in a letter dated December 20, 1979, stating that redundant level indicators and low level alarms for the AFWS primary water supply (CSTs) will be provided in the control room. The setpoint of the existing non-redundant low level alarm has been adjusted to allow at least 20 minutes for operator action assuming the largest capacity AFW pump is operating. The setpoint of the second, to be added, low level alarm will be similarly adjusted when it is installed.

We have reviewed the licensee's response to this recommendation and conclude that it meets the requirements of this recommendation and it is therefore acceptable.

2. Recommendation (This recommendation has been revised from the original recommendation in NUREG-0611 - The licensee should perform a 48-hour endurance test on all AFW system pumps, if such a test or continuous period of operation has not been accomplished to date. Following the 48-hour pump run, the pumps should be shut down and cooled down and then restarted and fun for one hour. Test acceptance criteria should include demonstrating that the pumps remain within design limits with respect to bearing/bearing oil temperatures and vibration and that pump room ambient conditions (temperature, humidity) do not exceed environmental qualification limits for safety-related equipment in the room.

   The licensee should provide a summary of the conditions and results of the tests. The summary should include the following: (1) A brief description of the test method (including flow schematic diagram) and how the test was instrumented (i.e., where and how bearing temperatures were measured). (2) A discussion of how the test conditions (pump flow, head, speed and steam temperature) compare to design operating conditions. (3) Plots of bearing/bearing oil temperature vs. time for each bearing of each AFW pump/driven demonstrating that temperature design limits were not exceeded. (4) A plot of pump room ambient conditions do not exceed environmental qualification limits for safety-related equipment in the room. (5) A statement confirming that the pump vibration did not exceed allowable limits during tests.

   By letter dated January 14, 1981, the licensee provided the results of the 48-hour endurance tests for the AFW pumps. The test was conducted according to conditions specified in the recommendation. Data on the bearing oil temperature for each pump-driver indicated that the design temperature limits were not exceeded during test. Data on pump environment indicated that ambient conditions did not exceed the environmental qualification limits for the AFW pumps. Pump vibration data taken during the test demonstrate that the allowable limits for the AFW pumps were satisfactory during any of the testing.

We have reviewed the licensee's response and conclude that it meets this recommendation and is, therefore, acceptable.

3. Recommendation - The licensee should implement the following requirements as specified by Item 2.1.7.b on page A-32 of NUREG-0578:

   "Safety-grade indication of auxiliary feedwater flow to each steam generator shall be provided in the control room. The auxiliary feedwater flow instrument channels shall be powered from the emergency buses consistent with satisfying the emergency power diversity requirements for the auxiliary feedwater system set forth in Auxiliary Systems Branch Technical Position 10-1 of the Standard Review Plan, Section 10.4.9."

   In a letter dated November 21, 1979, the licensee committed to provide control grade indication and safety grade indication.

   We have reviewed the licensee's response regarding the control grade modification and conclude that it meets the requirements of this recommendation and is therefore acceptable. The safety grade modification is still under review. This review will be updated in a supplement to this report.

4. Recommendation - Licensees with plants which require local manual realignment of valves to conduct periodic tests on one AFW system train, and there is only one remaining AFW train available for operation, should propose Technical Specifications to provide that a dedicated individual who is in communication with the control room be stationed at the manual valves. Upon instruction from the control room, this operator would realign the valves in the AFW system train from the test mode to its operational alignment.

   The licensee responded in a letter dated December 20, 1979, indicating that a proposed Technical Specification amendment to enhance the current specification on AFWS surveillance tests will be submitted to NRC for review.

   To date the proposed Technical Specification has not been received. We will review the proposed Technical Specification when it becomes available and provide our evaluation in a supplement to this SER input.

C. Long Term Recommendations

1. Recommendation GS-3 - At least one AFW system pump and its associated flow path and essential instrumentation should automatically initiate AFW system flow and be capable of being operated independently of any AC power source for at least two hours. Conversion of DC power to AC power is acceptable.

In a letter dated July 20, 1980, the licensee stated that the as-built AFWS in Turkey Point Units 3 and 4 relies on the operation of AC motor operated steam admission valves to supply steam to the AFW turbine driven pumps. However, the licensee has committed to make design modification to the steam supply valves. Two of the three valves will be converted to DC power operated.

We have reviewed the licensee's response to this recommendation and conclude that it meets the requirement of this recommendation and is therefore acceptable.

2. Recommendation GL-5 - The licensee should upgrade the AFW system automatic initiation signals and circuits to meet safety-grade requirements.

   The licensee responded in a letter dated December 20, 1979, stating that the as-built system is safety grade with one exception. The actuation of the pressure regulating valve for steam supply to the AFW pump turbine is not designed in accordance with the single failure criterion. The licensee committed to modify the system to meet the single failure criterion.

   The licensee's safety grade automatic initiation system design is still under review. This review will be reported in a supplement to this report.

3. Recommendation - The AFW pump discharge lines and turbine driven AFW pump steam supply lines for each unit combine into single lines through which all water and steam respectively from either unit must flow. A pipe break in either of these single flow paths would cause loss of the capability to provide AFW flow to all the steam generators of one unit. The licensee should evaluate the consequences of a postulated pipe break in these sections of the AFW discharge or steam supply, assuming a concurrent single active failure and (1) determine any AFW system modifications or procedures necessary to detect and isolate the break, and direct the required AFW flow to the steam generators before they boil dry or (2) describe how the plant can be brought to a safe shutdown condition by use of other available systems following such a postulated pipe break.

   The licensee in a letter dated December 20, 1979, stated that operating procedures will be in place by 1981 to provide direction to the operations regarding isolation of AFWS steam supply lines or feedwater line piping breaks. Procedures regarding unit shutdown using other available means will also be in place by 1981. In conjunction with the proposed operating procedures, steam and feedwater piping modifications are being developed by the licensee to ensure redundancy in the common AFW discharge header and the common steam supply header to the AFW pump turbine. The modifications are planned during the Unit 4 steam generator replacement outage, currently scheduled to begin in the fall of 1982.

We require the licensee to provide details of the proposed piping modification being developed to provide redundancy in the discharge header and common steam supply header. We will review the information when it becomes available and provide a supplement to this SER input.

4. Recommendation - The lube oil cooling of the three turbine driven AFW pumps is provided from a common source, namely the service (city) water system. The licensee should evaluate this cooling water system to determine if there are potential common mode (electrical or mechanical) failures that could disable the lube oil cooling for all three turbine driven pumps. The licensee should provide the results of the evaluation and (1) indicate any system modifications or procedures necessary to prevent a common mode failure of the lube oil cooling system or (2) provide information that demonstrates that the turbine driven AFW pumps can operate for at least two hours without lube oil cooling water and independent of AC power.

   The licensee responded in a letter dated December 20, 1979, stating that the AFW pump lube oil cooling system will be modified to provide lube oil cooling water from the AFW pump discharge.

   We have reviewed the licensee's response and conclude that it meets the requirements of this recommendation and is therefore acceptable.

5. Basis for AFWS Flow Requirement - In our letter dated October 16, 1979, we requested the licensee to respond to Enclosure 2, regarding the AFWS Flow design basis. The licensee has not yet responded to this recommendation. We will provide our evaluation of their response in a supplement to this report.

IV. ENVIRONMENTAL CONSIDERATION

We have determined that the amendments do not authorize a change in effluent types or total amounts nor an increase in power level and will not result in any significant environmental impact. Having made this determination, we have further concluded that the amendments involve an action which is insignificant from the standpoint of environmental impact and, pursuant to 10 CFR §51.5(d)(4), that an environmental impact statement or negative declaration and environmental impact appraisal need not be prepared in connection with the issuance of these amendments.

V. CONCLUSION

We have concluded, based on the considerations discussed above, that: (1) because the amendments do not involve a significant increase in the probability or consequences of accidents previously considered and do not involve a significant decrease in a safety margin, the amendments do not involve a significant

significant hazards consideration, (2) there is reasonable assurance that the health and safety of the public will not be endangered by operation in the proposed manner, and (3) such activities will be conducted in compliance with the Commission's regulations and the issuance of these amendments will not be inimical to the common defense and security or to the health and safety of the public.

Date: December 24, 1981

(7)

(3)

X

SEP 15 1982

Distribution:
Docket File
NRC PDR
Local PDR
ORB #1 Rdg
DEisenhut
CParrish
DMcDonald
OELD
ACRS-10
OI&E (1)
NSIC
Gray

Docket Nos. 50-250
50-251

Dr. Robert E. Uhrig, Vice President
Advanced Systems and Technology
Florida Power and Light Company
Post Office Box 529100
Miami, Florida 33152

Dear Dr. Uhrig:

RE: TMI ACTION PLAN ITEM II.E.1.2, AUXILIARY (EMERGENCY FEEDWATER SYSTEMS) AUTOMATIC INITIATION AND FLOW INDICATION

NUREG-0737 Item II.E.1.2 requires that the Auxiliary Feedwater Systems (AFWS) in pressurized water reactor facilities be upgraded where necessary to ensure safety grade automatic initiation and flow indication. We have reviewed your submittals for Turkey Point, Units 3 and 4, in relation to the long term safety grade requirements for the automatic initiation and flow indication of the AFWS.

Based on our review, we have concluded that the automatic initiation and flow indication portions of the AFWS comply with the long term safety grade requirements and are acceptable.

The enclosed Safety Evaluation Report provides the details of our review.

Sincerely,

Original signed by:
S. A. Varga

Steven A. Varga, Chief
Operating Reactors Branch #1
Division of Licensing

Enclosure:
Safety Evaluation Report

cc: See next page

441 005
447 357

8209280510

F/3

Robert E. Uhrig
Florida Power and Light Company

cc: Harold F. Reis, Esquire
Lowenstein, Newman, Reis and Axelrad
1025 Connecticut Avenue, N.W.
Suite 1214
Washington, D. C. 20036

Environmental and Urban Affairs Library
Florida International University
Miami, Florida 33199

Norman A. Coll, Esquire
Steel, Hector and Davis
1400 Southeast First National
Bank Building
Miami, Florida 33131

Mr. Henry Yaeger, Plant Manager
Turkey Point Plant
Florida Power and Light Company
P. O. Box 013100
Miami, Florida 33101

Mr. Jack Shreve
Office of the Public Counsel
Room 4, Holland Building
Tallahassee, Florida 32304

Administrator
Department of Environmental Regulation
Power Plant Siting Section
State of Florida
2600 Blair Stone Road
Tallahassee, Florida 32301

Resident Inspector
Turkey Point Nuclear Generating Station
U. S. Nuclear Regulatory Commission
Post Office Box 1207
Homestead, Florida 33030

James P. O'Reilly
Regional Administrator - Region II
U. S. Nuclear Regulatory Commission
101 Marietta Street - Suite 3100
Atlanta, Georgia 30303

SAFETY EVALUATION

TURKEY POINT UNITS 3 & 4 AUXILIARY FEEDWATER AUTOMATIC INITIATION AND FLOW INDICATION

ACTION PLAN ITEM II.E.1.2

INTRODUCTION AND SUMMARY

To improve the reliability of Auxiliary Feedwater Systems (AFWS) at pressurized water reactor (PWR) facilities, the staff is requiring licensees to upgrade the system where necessary to ensure safety grade automatic initiation and flow indication. The criteria for this upgrading are contained in NUREG-0737 (Clarifications of TMI Action Plan Requirements), Section II.E.1.2.

The evaluation of the Turkey Point AFWS design was performed for the NRC by Franklin Research Center (FRC) as part of a technical assistance contract program. The results of the FRC evaluation are reported in the attached Technical Evaluation Report (TER - C5257 - 273/284).

Based on our review of the FRC TER and subsequent conversations with the licensee, we conclude that the AFW automatic initiation and flow indication designs are acceptable.

EVALUATION

The attached TER provides a technical evaluation of the electrical, instrumentation, and control design aspects of the Turkey Point Units 3 & 4 AFWS with regard to automatic initiation and flow indication. The AFWS flow path to each steam generator contains two normally closed flow control valves (one train "A" valve and one train "B" valve) in parallel. Both valves are commanded to open on an automatic start signal. As flow increases above the setpoint (400 gpm per steam generator), AFWS flow controllers (one per valve) modulate the valve positions to

maintain desired flow. These valves fail closed on loss of air or electrical power.

As noted on page 8 of the TER, if all of the flow controllers are set for zero flow, no AFWS flow will be initiated to the steam generators on an automatic start signal. This is, in effect, a bypass of the AFWS automatic start signal. There is no annunciation of this condition provided in the control room. The 400 gpm setpoint is administratively established as part of Operating Procedure #202.1 (Reactor Startup-Cold Condition to Hot Shutdown Condition).

If all of the flow controllers were set at zero flow, the operator would be able to detect this via the AFWS flow indication (one flow channel per steam generator) and the flow controller output signals (although this is indirect indication of valve position). One of the first priorities of the operator is to verify that AFWS flow to the steam generators has been established. If the operator failed to diagnose this situation (i.e., all discharge valves closed), a low steam generator water level alarm would sound in the control room, after which the operator would still have sufficient time to determine the situation and take the necessary actions to establish flow. Based on the above, the staff finds this aspect of the Turkey Point AFWS design to be acceptable.

The Turkey Point AFWS design uses three turbine driven pumps which are shared between units. As noted in the TER there is no diversity of pump power supplies, however, since there are multiple sources of steam for these pumps which must

be available in accordance with the Turkey Point Technical Specifications, the Auxiliary Systems Branch (ASB) has found this arrangement to be acceptable.

Page 7 of the TER lists a channel bypass provided for periodic testing of the AFWS and for removal of a channel from service for maintenance purposes. It is stated in the TER that placing a channel in bypass changes the coincidence logic from two-out-of-three to two-out-of-two to accomplish an AFWS automatic start. This was based on a description of this bypass contained in Florida Power & Light (FPL) Company Letter L-81-36 dated February 3, 1981. In actuality, this is not a bypass since removing a channel from service places that channel in the tripped condition, thereby changing the coincidence logic from two-out-of-three to one-out-of-two. FPL should amend the February 3, 1981 letter to accurately describe how the AFWS actuation logic is affected when a channel is removed from service. In addition, the conclusion portions of the TER (pages 9 and 13) indicate that control room annunciation of these "bypasses" should be, but is not, provided. It is our understanding, following telephone conversations with the licensee (Florida Power and Light - FP&L), that annunciation (both alarm and light indication) is automatically provided whenever a channel is placed in the tripped condition. Based on the above, we find this design aspect to be acceptable.

We have reviewed the Turkey Point Units 3 & 4 Technical Specifications regarding surveillance requirements for the AFWS instrument channels (used for both automatic start and flow indication) and the automatic actuation logic. Based on conversations with FP&L during which they stated that Item 24 (Logic Channels) of Table 4.1-1 (Minimum Frequencies for Checks, Calibrations, and Test of Instrument Channels) includes testing of the AFWS automatic actuation logic, we find the

Turkey Point Technical Specification surveillance requirements concerning the AFWS to be acceptable.

The environmental qualification of safety related systems including AFWS circuits and components is being reviewed by the Equipment Qualification Branch as part of their review of licensee responses to "Guidelines for Evaluating Environmental Qualification of Class 1E Electrical Equipment in Operating Reactors," issued to the licensee in NRR letter dated March 5, 1980.

In order to adequately determine from the control room the performance of the AFWS, steam generator level instrumentation is used, in addition to flow indication. The requirements for this steam generator level instrumentation are specified in Regulatory Guide 1.97 Revision 2 (R.G. 1.97 - "Instrumentation for Light-Water-Cooled Nuclear Power Plants to Assess Plant and Environs Conditions During and Following an Accident"). The steam generator level instrumentation at Turkey Point should be in conformance with these requirements and implemented in accordance with the schedule for implementation of the referenced R.G.

CONCLUSION

Based on our review of the Franklin Research Center TER and subsequent conversations with the licensee, we conclude that the Turkey Point Units 3 & 4 AFWS automatic initiation and flow indication systems comply with the staff's long term safety grade requirements, and therefore, are acceptable.

Principal Contributor: R. Kendall

TECHNICAL EVALUATION REPORT

AUXILIARY FEEDWATER SYSTEM AUTOMATIC INITIATION AND FLOW INDICATION (F-16, F-17)

FLORIDA POWER AND LIGHT COMPANY
TURKEY POINT UNITS 3 AND 4

NRC DOCKET NO. 50-250, 50-251
NRC TAC NO. 42324, 42325
NRC CONTRACT NO. NRC-03-79-118

FRC PROJECT C5257
FRC ASSIGNMENT 9
FRC TASKS 273, 284

Prepared by
Franklin Research Center
20th and Race Street
Philadelphia, PA 19103

Author: J. E. Kaucher
FRC Group Leader: K. Fertner

Prepared for
Nuclear Regulatory Commission
Washington, D.C. 20555

Lead NRC Engineer: R. Kendall

June 18, 1982

Franklin Research Center
A Division of The Franklin Institute
The Benjamin Franklin Parkway, Phila., Pa. 19103 (215) 448-1000

8209280530

CONTENTS

FOREWORD

This Technical Evaluation Report was prepared by Franklin Research Center under a contract with the U.S. Nuclear Regulatory Commission (Office of Nuclear Reactor Regulation, Division of Operating Reactors) for technical assistance in support of NRC operating reactor licensing actions. The technical evaluation was conducted in accordance with criteria established by the NRC.

Mr. J. E. Kaucher contributed to the technical preparation of this report through a subcontract with WESTEC Services, Inc.

1. INTRODUCTION

1.1 PURPOSE OF REVIEW

The purpose of this review is to provide a technical evaluation of the emergency feedwater system design to verify that both safety-grade automatic initiation circuitry and flow indication are provided at Turkey Point Units 3 and 4. In addition, the steam generator level indication available at these units is described to assist subsequent NRC staff review.

1.2 GENERIC ISSUE BACKGROUND

A post-accident design review by the U.S. Nuclear Regulatory Commission (NRC) after the March 28, 1979 incident at Three Mile Island (TMI) Unit 2 has established that the auxiliary feedwater (AFW) system should be treated as a safety system in a pressurized water reactor (PWR) plant. The designs of safety systems in a nuclear power plant are required to meet the general design criteria (GDC) specified in Appendix A of 10CFR50 [1].

The relevant design criteria for the AFW system design are GDC 13, GDC 20, and GDC 34. GDC 13 sets forth the requirement for instrumentation to monitor variables and systems (over their anticipated ranges of operation) that can affect reactor safety. GDC 20 requires that a protection system be designed to initiate automatically in order to assure that acceptable fuel design limits are not exceeded as a result of anticipated operational occurrences. GDC 34 requires that the safety function of the designed system, that is, the residual heat removal by the AFW system, can be accomplished even in the case of a single failure.

On September 13, 1979, the NRC issued a letter [2] to each PWR licensee that defined a set of short-term requirements specified in NUREG-0578 [3]. It required that the AFW system have automatic initiation and single failure-proof design consistent with the requirements of GDC 20 and GDC 34. In addition, AFW flow indication in the control room must be provided to satisfy the requirements set forth in GDC 13.

During the week of September 24, 1979, seminars were held in four regions of the country to discuss the short-term requirements. On October 30, 1979, another letter was issued to each PWR licensee providing additional clarification of the NRC staff short-term requirements without altering their intent [4].

Post-TMI analyses of primary system response to feedwater transients and reliability of installed AFW systems also established that, in the long term, the AFW system should be upgraded in accordance with safety-grade requirements. These long-term requirements were clarified in the letter of September 5, 1980 [5]. This letter incorporated in one document, NUREG-0737 [6], all TMI-related items approved by the commission for implementation at that time. Section II.E.1.2 of NUREG-0737 clarifies the requirements for the AFW system automatic initiation and flow indication.

1.3 PLANT-SPECIFIC BACKGROUND

In Reference 2, the NRC informed the Licensee, Florida Power and Light Company (FPL), that it would have to meet the requirements of NUREG-0578. Reference 4 clarified and reiterated this requirement.

On November 21, 1979 [7], FPL replied to the two NRC letters on the subject of short-term requirements. Comments in FPL's letter relative to the AFW system centered on interim control-grade automatic initiation and flow indication systems.

On January 14, 1980 [8], FPL provided detailed information on the AFW design, citing specific items of Sections 2.1.7.a and 2.1.7.b of NUREG-0578.

On February 3, 1981 [9], FPL sent a letter to the NRC describing proposed AFW system changes in detail.

On April 13, 1981 [10], FPL submitted a revision to the Turkey Point Technical Specifications to the NRC Director, Division of Licensing.

By letter dated July 23, 1981 [11], FPL submitted additional information concerning the Turkey Point Units 3 and 4 AFW system.

2. REVIEW CRITERIA

To improve the reliability of the AFW system, the NRC required licensees to upgrade the system, where necessary, to ensure timely automatic initiation when required. The system upgrade was to proceed in two phases. In the short term, as a minimum, control-grade signals and circuits were to be used to automatically initiate the AFW system. This control-grade system was to meet the following requirements of NUREG-0578, Section 2.1.7.a [3]:

"1. The design shall provide for the automatic initiation of the auxiliary feedwater system.

2. The automatic initiation signals and circuits shall be designed so that a single failure will not result in the loss of auxiliary feedwater system function.

3. Testability of the initiating signals and circuits shall be a feature of the design.

4. The initiating signals and circuits shall be powered from the emergency buses.

5. Manual capability to initiate the auxiliary feedwater system from the control room shall be retained and shall be implemented so that a single failure in the manual circuits will not result in the loss of system function.

6. The ac motor-driven pumps and valves in the auxiliary feedwater system shall be included in the automatic actuation (simultaneous and/or sequential) of the loads to the emergency buses.

7. The automatic initiating signals and circuits shall be designed so that their failure will not result in the loss of manual capability to initiate the AFW system from the control room."

In the long term, these signals and circuits were to be upgraded in accordance with safety-grade requirements. Specifically, in addition to the above requirements, the automatic initiation signals and circuits must have independent channels, use environmentally qualified components, have system bypassed/inoperable status features, and conform to control system interaction criteria, as stipulated in IEEE Std 279-1971 [12].

The capability to ascertain the AFW system performance from the control room must also be provided. In the short term, steam generator level indication and flow measurement were to be used to assist the operator in maintaining the required steam generator level during AFW system operation. This system was to meet the following requirements from NUREG-0578, Section 2.1.7.b [3]:

"1. Safety-grade indication of auxiliary feedwater flow to each steam generator shall be provided in the control room.

2. The auxiliary feedwater flow instrument channels shall be powered from the emergency buses consistent with satisfying the emergency power diversity requirements of the auxiliary feedwater system set forth in Auxiliary Systems Branch Technical Position 10-1 of the Standard Review Plan, Section 10.4.9 [13]."

The NRC staff has determined that, in the long term, the overall flowrate indication system for Westinghouse plants must include either one AFW flowrate indicator with one wide-range steam generator level indicator for each steam generator, or two flowrate indicators. The flowrate indication system must be environmentally qualified, powered from a highly reliable, battery-backed non-Class 1E power source, periodically testable, part of the plant's quality assurance program, and capable of display on demand.

The operator relies on steam generator level instrumentation and AFW flow indication to monitor AFW system performance. The requirements for this steam generator level instrumentation are specified in Regulatory Guide 1.97, Revision 2, "Instrumentation for Light-Water-Cooled Nuclear Power Plants to Assess Plant and Environs Conditions During and Following an Accident" [14].

3. TECHNICAL EVALUATION

3.1 GENERAL DESCRIPTION OF THE AUXILIARY FEEDWATER SYSTEM

The auxiliary feedwater (AFW) system at Turkey Point Units 3 and 4 supplies water to the secondary side of the steam generator for reactor decay heat removal when normal feedwater sources are unavailable due to loss of offsite power or other malfunctions. The system consists of three steam turbine-driven pumps (600 gpm at 2775 feet of water) capable of supplying feedwater to any or all of the six steam generators in the two units. All three pumps are interconnected on the discharge side to two common discharge lines, one line to each unit. These common discharge lines each branch into three supply lines for the three steam generators in each unit. The AFW lines to each steam generator contain two normally closed, dc, air-operated flow control valves in parallel.

3.2 AUTOMATIC INITIATION

3.2.1 Evaluation

Auxiliary feedwater flow to the steam generators is automatically initiated when preset levels of any of the following parameters are exceeded:

Turbine-Driven Pumps

1. Safety injection (2 of 3)
2. Low steam generator level in any one steam generator (2 of 3)
3. Loss of voltage on both 4160 V buses
4. Loss of both main feedwater pumps.

All initiating signals and circuits are supplied from redundant, Class 1E, vital power supplies, as is the control power for all AFW valves. In addition, all ac-operated valves are automatically loaded onto the diesel generators.

The normal valve configuration for the AFW system is all AFW pump suction valves open, discharge flow control valves closed, and the steam admission

valves to the turbine-driven pumps closed. The steam admission valves to two of the three AFW pumps are being modified so that they are dc-operated; thus, two of the AFW pumps will start independently of ac power availability. However, all three AFW pumps are turbine-driven, and the AFW system, therefore, does not meet the pump power supply diversity requirement. The AFW pumps discharge control valves are dc solenoid/air-operated valves. The air supply for all valves is backed by a seismically qualified nitrogen supply that automatically initiates on loss of normal air supply.

The operation of any one AFW pump will provide the necessary capacity for removing decay heat to prevent overpressurization of the reactor coolant system and to maintain steam generator levels. All three AFW pumps start upon automatic system actuation, and automatic isolation of a leaking steam generator is a design feature of the system and is provided by the main steam isolation system.

The primary source of water for the AFW system is the 250,000-gal, Seismic Category 1, condensate storage tanks (CST) of both units. Sufficient water inventory (185,000 gal) is maintained in the tanks to bring the plant to hot standby, hold there for 15 hours, and subsequently cool down to the residual heat removal system entry temperature of 350°F. Indication of CST level is provided in the main control room, and annunciation and alarm of CST low water level is provided. The backup water supply for the AFW system uses water from the plant water treatment system to resupply the CST; this method could not be used if the CST were not available. The Licensee further stated that a non-safety-grade 500,000-gallon deaerated water storage tank is being constructed and will be available to supply the CSTs.

A review of initiation logic and wiring diagrams revealed no credible single malfunction that would prevent protective action at the system level when required. In addition, the Licensee has stated that the design of the AFW system initiation logic meets IEEE Std 279-1971 in that no single component failure will prevent the automatic start signal from being initiated, and the initiating signals and circuits are powered from safety-grade power supplies.

Manual operation of the AFW system is provided in the control room and at the local station. Each control circuit is independent so that a single failure in one train will not affect the redundant train. In addition, the automatic initiating circuits are designed to be electrically independent from the control room manual start circuit so that the failure of the automatic initiating signals does not affect the control room manual capability of AFW pumps. None of the protection signals for the automatic initiation of AFW are used as control signals; consequently, there is no control and protection system interaction.

Seismic requirements for the emergency feedwater system were not considered in the single failure analysis because the NRC will address this issue separately. A determination of whether components are qualified for accident and post-accident environments was not conducted. The environmental qualification of safety-related systems, including AFW system circuits and components, is being determined separately by the NRC and is not within the scope of this review. Review of the initiation circuit diagrams revealed no credible single malfunction that would prevent proper system action when required.

The electrical isolation and physical separation of elements of the proposed auxiliary feedwater actuation system design comply with the requirements of NUREG-0578 [3] and IEEE Std 279-1971 [12].

Concerning bypasses, the Licensee has stated the following:

Channel Bypasses

- Trip Channel Bypass - This bypass is provided for periodic testing of the system and to remove a channel from service due to a component failure. This bypass is manually initiated and manually removed. Only one channel can be bypassed at a time, and the coincidence logic is 2 of 2 while in test.

Operating Bypasses

- The Licensee has stated that the system contains no operating bypasses.

The design of the AFW control valves is such that the initiation signal operates a solenoid valve in series with the control air signal to each

control valve. There are no overrides in the control circuit for the solenoid valve; however, the air signal to the control valve can be controlled automatically or manually by the operator in the control room via hand indicating controllers mounted on the main control consoles 3 and 4. This design allows for considerable operational flexibility, but in effect allows the operator to override an actuation signal by taking manual control of the flow control valves and thus does not meet the requirements of IEEE Std 279-1971. The salient points are that where operating requirements necessitate automatic or manual bypass of a protective function, the design should be such that the bypass will be removed automatically whenever permissive conditions are not met; continuous indication of the bypass condition in the control room is required; and a means for administratively controlling the bypass should be provided.

The AFW pump discharge lines and turbine-driven AFW pump steam supply lines for each unit combine into single lines through which all water and steam, respectively, from either unit must flow. A pipe break in either of these single flow paths would cause loss of the capability to provide AFW flow to all the steam generators of one unit. The Licensee has agreed to develop operating procedures to provide direction to the operators regarding isolation of AFW system steam supply lines or feedwater line piping breaks. Steam and feedwater piping modifications are also being developed to ensure redundancy in the common AFW discharge header and the common steam supply header to the AFW pump turbines.

The Turkey Point Technical Specifications require that each AFW pump be tested once each month. AFW flow is initiated by manually opening valves (from the control room) to admit steam to the AFW pump turbine and therefore establish AFW flow to the steam generators. Channel functional tests are required at least once every 62 days, and initiating signals and circuits are tested during the integrated safeguards test performed during each refueling outage.

3.2.2 Conclusion

It is concluded that the initiation signals, logic, and associated circuitry of the Turkey Point Units 3 and 4 AFW system comply with the long-term safety-grade requirements of Section 2.1.7.a of NUREG-0578 [3] and the subsequent clarification issued by the NRC with the following exceptions:

- Annunciation of channel bypasses, in the control room, is not provided.
- The manual bypass capability for controlling the AFW flow control valves should be designed in accordance with IEEE Std 279-1971, to provide automatic removal of the bypass when permissive conditions are not met, continuous indiction in the control room of the bypass condition, and a means for administratively controlling the bypass switch.

3.3 FLOW INDICATION

3.3.1 Evaluation

Each of the AFW pump headers to each steam generator is equipped with a flow transmitter with output indicated in the control room and locally at the AFW control valve location. In addition, wide-range, non-safety-grade steam generator level indication is provided. Both flow and level are continuously displayed in the control room.

The AFW flow indication system is powered from the vital bus sytem, which is a Class 1E power source. The AFW flow signal is also used as an input to the AFW flow control system.

The Licensee has stated that the AFW flow indication system is part of the plant quality assurance program.

AFW flow indication system channel checks are performed every 12 hours and channel functional tests are performed monthly. Channel calibration is performed each refueling outage.

The environmental qualification of flow measurement and indication equipment is being reviewed separately by the NRC and is outside the scope of this review.

3.3.2 Conclusion

It is concluded that the sensors, transmitters, indicators, and recorders of the Turkey Points Units 3 and 4 AFW flow measurement system comply with the requirements of Section 2.1.7.b of NUREG-0578 and the subsequent clarification issued by the NRC.

3.4 DESCRIPTION OF STEAM GENERATOR LEVEL INDICATION

Steam generator level instrumentation at Turkey Point Units 3 and 4 serves several purposes in addition to control room panel indication. There are three safety-related measurement channels and two non-safety-related channels for each of the three steam generators in each nuclear unit. One non-safety-related channel in each steam generator employs a wide-range sensor for indication and recording only (one 3-pen recorder in the control room). Safety-related channels employ narrow-range sensors that provide signals for the following:

1. reactor trip, turbine trip, feedwater pump trip, and automatic initiation of AFW system based on low-low levels
2. turbine trip and feedwater pump trip based upon high-high levels
3. control of main feedwater flow control valves through an isolation device.

The remaining non-safety-related channel in each steam generator is available as an alternate means for control of the main feedwater flow control valves.

All safety-related channels are powered from emergency buses. All are independent and separated to the extent that cables are run in separate raceways.

Non-safety-related channels are powered from normal 120-Vac non-class 1E buses.

Low and high level alarms are provided on the main annunciator panels for each steam generator.

Safety-related channels are checked every 31 days as part of engineered safety features actuation system surveillance. Calibration is performed during scheduled refueling outages (12- to 18-month intervals).

Separate control room panel indicators are provided for each safety-related channel of measurement (nine for each nuclear unit). A selector switch permits the operator to record any one of the channels for each steam generator.

Table 1 lists the safety-related channels for all three steam generators of each nuclear unit; Table 2 lists non-safety-related narrow-range instrumentation for the three steam generators of each nuclear unit; and Table 3 lists non-safety-related wide-range instrumentation for the three steam generators of each nuclear unit.

Table 1

Safety-Related Level

Steam Generator	Instruments Tag No.	Instruments Channel	Transmitter Range (inches of water column)
1	LT-474	I	30.13-138.22
1	LT-475	II	" "
1	LT-476	II	" "
2	LT-484	II	" "
2	LT-485	II	" "
2	LT-486	II	" "
3	LT-494	II	" "
3	LT-495	II	" "
3	LT-496	II	" "

Table 2

Non-Safety-Related Level

Steam Generator No.	Level Instruments (Narrow Range) Tag No.	Safety Channel	Transmitter Range (inches of water column)
1	LT-478	NSR	0-143
2	LT-488	"	"
3	LT-498	"	"

Table 3

Non-Safety-Related Level

Steam Generator No.	Level Instruments (Wide Range) Tag No.	Transmitter Range (inches of water column)
1	LT-477	0-513
2	LT-487	"
3	LT-497	"

4. CONCLUSIONS

It is concluded that the initiation signals, logic, and associated circuitry of the Turkey Point Units 3 and 4 auxiliary feedwater system comply with the long-term, safety-grade requirements of Section 2.1.7.a of NUREG-0578 [3] and the subsequent clarification issued by the NRC with the following exceptions:

- Annunciation of channel bypasses, in the control room, is not provided.
- The manual bypass capability for controlling the AFW flow control valves should be designed in accordance with IEEE Std 279-1971, to provide automatic removal of the bypass when permissive conditions are not met, continuous indication in the control room of the bypass condition, and a means for administratively controlling the bypass switch.

It is concluded that the sensors, transmitters, indicators, and recorders of the Turkey Point Units 3 and 4 AFW flow measurement system comply with the requirements of Section 2.1.7.b of NUREG-0578 and the subsequent clarification issued by the NRC.

5. REFERENCES

1. Code of Federal Regulations, Title 10, Office of the Federal Register, National Archives and Records Service, General Services Administration, Revised January 1, 1980

2. NRC generic letter to all PWR licensees. Subject: Short-term Requirements Resulting from Three Mile Island Accident NRC, September 13, 1979

3. NUREG-0578 TMI-2 Lessons Learned Task Force Status Report and Short-term Recommendations NRC, July 1979

4. NRC generic letter to all PWR licensees. Subject: Clarification of Lessons Learned Short-term Requirements NRC, October 30, 1979

5. NRC generic letter to all PWR licensees. Subject: Short-term Requirements Resulting from Three Mile Island Accident NRC, September 5, 1980

6. NUREG-0737 Clarification of TMI Action Plan Requirements NRC, November 1980

7. R. E. Uhrig (FPL) Letter to D. G. Eisenhut (Division of Operating Reactors [DOR] NRC) Subject: Short-term Requirements-FPL Responses November 21, 1979

8. R. E. Uhrig (FPL) Letter to A. Schwencer (DOR, NRC) Subject: Reply to NRC Recommendations 2.1.7.a and 2.1.7.b of NUREG-0578 January 14, 1980

9. R. E. Uhrig (FPL) Letter to D. G. Eisenhut (DOR, NRC) Subject: Detailed Description of FPL Replies to NUREG-0578 February 3, 1981

10. R. E. Uhrig (FPL) Letter to D. G. Eisenhut (Director, Office of Nuclear Reactor Regulation, Division of Licensing) Subject: Proposed Changes to the Technical Specification for Turkey Point Units 3 and 4 April 13, 1981

11. R. E. Uhrig (FPL)
Letter to S. A. Varga (DOR, NRC)
Subject: Responses to Questions Raised in Reference 14
July 23, 1981

12. IEEE Std 279-1971
"Criteria for Protection Systems for Nuclear Power Generating Stations"
Institute of Electrical and Electronics Engineers, Inc., New York, NY

13. NUREG-75/087
Standard Review Plan, Section 10.4.9, Rev. 1
NRC

14. Regulatory Guide 1.97 (Task RS 917-4)
Instrumentation for Light-Water-Cooled Nuclear Power Plants to Assess Plant and Environs Conditions During and Following an Accident, Rev. 2
NRC, December 1980

(8)

UNITED STATES
NUCLEAR REGULATORY COMMISSION
WASHINGTON, D. C. 20555

November 4, 1982

Docket Nos. 50-250
and 50-251

Dr. Robert E. Uhrig, Vice President
Advanced Systems and Technology
Florida Power and Light Company
Post Office Box 529100
Miami, Florida 33152

Dear Dr. Uhrig:

The Commission has issued the enclosed Amendment No. 89 to Facility Operating License No. DPR-31 and Amendment No. 83 to Facility Operating License No. DPR-41 for the Turkey Point Plant Unit Nos. 3 and 4, respectively. The amendments consist of changes to the Technical Specifications in response to your application transmitted by letter dated May 6, 1982.

These amendments change the Technical Specifications to conform with the Commission's Bulletins and Orders Task Force review regarding Auxiliary Feedwater Pump requirements following the Three Mile Island Accident.

The issuance of the enclosed amendments and the Safety Evaluation concludes our review of your responses to the September 21, 1979 letter and TMI Action Items II.E.1.1 and II.E.1.2 are complete.

Copies of the Safety Evaluation and the Notice of Issuance are also enclosed.

Sincerely,

Daniel G. McDonald, Jr.

Daniel G. McDonald, Project Manager
Operating Reactors Branch #1
Division of Licensing

Enclosures:
1. Amendment No. 89 to DPR-31
2. Amendment No. 83 to DPR-41
3. Safety Evaluation
4. Notice of Issuance

cc w/enclosures:
See next page

~~8211160142~~

F/4

Robert E. Uhrig
Florida Power and Light Company

cc: Harold F. Reis, Esquire
Lowenstein, Newman, Reis and Axelrad
1025 Connecticut Avenue, N.W.
Suite 1214
Washington, D. C. 20036

Bureau of Intergovernmental Relations
660 Apalachee Parkway
Tallahassee, Florida 33130

Norman A. Coll, Esquire
Steel, Hector and Davis
1400 Southeast First National
Bank Building
Miami, Florida 33131

Mr. Henry Yaeger, Plant Manager
Turkey Point Plant
Florida Power and Light Company
P. O. Box 013100
Miami, Florida 33101

Mr. M. R. Stierheim
County Manager of Metropolitan
Dade County
Miami, Florida 33130

Resident Inspector
Turkey Point Nuclear Generating Station
U. S. Nuclear Regulatory Commission
Post Office Box 1207
Homestead, Florida 33030

Regional Radiation Representative
EPA Region IV
345 Courtland Street, N.W.
Atlanta, Georgia 30308

Mr. Jack Shreve
Office of the Public Counsel
Room 4, Holland Building
Tallahassee, Florida 32304

Administrator
Department of Environmental
Regulation
Power Plant Siting Section
State of Florida
2600 Blair Stone Road
Tallahassee, Florida 32301

James P. O'Reilly
Regional Administrator - Region II
U. S. Nuclear Regulatory Commission
101 Marietta Street - Suite 3100
Atlanta, Georgia 30303

UNITED STATES
NUCLEAR REGULATORY COMMISSION
WASHINGTON, D. C. 20555

FLORIDA POWER AND LIGHT COMPANY

DOCKET NO. 50-250

TURKEY POINT PLANT UNIT NO. 3

AMENDMENT TO FACILITY OPERATING LICENSE

Amendment No. 89
License No. DPR-31

1. The Nuclear Regulatory Commission (the Commission) has found that:

   A. The application for amendment by Florida Power and Light Company (the licensee) dated May 6, 1982, complies with the standards and requirements of the Atomic Energy Act of 1954, as amended (the Act) and the Commission's rules and regulations set forth in 10 CFR Chapter I;

   B. The facility will operate in conformity with the application, the provisions of the Act, and the rules and regulations of the Commission;

   C. There is reasonable assurance (i) that the activities authorized by this amendment can be conducted without endangering the health and safety of the public, and (ii) that such activities will be conducted in compliance with the Commission's regulations;

   D. The issuance of this amendment will not be inimical to the common defense and security or to the health and safety of the public; and

   E. The issuance of this amendment is in accordance with 10 CFR Part 51 of the Commission's regulations and all applicable requirements have been satisfied.

8211160147

2. Accordingly, the license is amended by changes to the Technical Specifications as indicated in the attachment to this license amendment, and paragraph 3.B of Facility Operating License No. DPR-31 is hereby amended to read as follows:

   (B) Technical Specifications

   The Technical Specifications contained in Appendices A and B, as revised through Amendment No. 89 , are hereby incorporated in the license. The licensee shall operate the facility in accordance with the Technical Specifications.

3. This license amendment is effective as of the date of its issuance.

FOR THE NUCLEAR REGULATORY COMMISSION

Steven A. Varga, Chief
Operating Reactors Branch #1
Division of Licensing

Attachment:
Changes to the Technical
Specifications

Date of Issuance: November 4, 1982

UNITED STATES
NUCLEAR REGULATORY COMMISSION
WASHINGTON, D. C. 20555

FLORIDA POWER AND LIGHT COMPANY

DOCKET NO. 50-251

TURKEY POINT PLANT UNIT NO. 4

AMENDMENT TO FACILITY OPERATING LICENSE

Amendment No. 83
License No. DPR-41

1. The Nuclear Regulatory Commission (the Commission) has found that:

   A. The application for amendment by Florida Power and Light Company (the licensee) dated May 6, 1982, complies with the standards and requirements of the Atomic Energy Act of 1954, as amended (the Act) and the Commission's rules and regulations set forth in 10 CFR Chapter I;

   B. The facility will operate in conformity with the application, the provisions of the Act, and the rules and regulations of the Commission;

   C. There is reasonable assurance (i) that the activities authorized by this amendment can be conducted without endangering the health and safety of the public, and (ii) that such activities will be conducted in compliance with the Commission's regulations;

   D. The issuance of this amendment will not be inimical to the common defense and security or to the health and safety of the public; and

   E. The issuance of this amendment is in accordance with 10 CFR Part 51 of the Commission's regulations and all applicable requirements have been satisfied.

2. Accordingly, the license is amended by changes to the Technical Specifications as indicated in the attachment to this license amendment, and paragraph 3.B of Facility Operating License No. DPR-41 is hereby amended to read as follows:

   (B) Technical Specifications

   The Technical Specifications contained in Appendices A and B, as revised through Amendment No. 83, are hereby incorporated in the license. The licensee shall operate the facility in accordance with the Technical Specifications.

3. This license amendment is effective as of the date of its issuance.

FOR THE NUCLEAR REGULATORY COMMISSION

Steven A. Varga, Chief
Operating Reactors Branch #1
Division of Licensing

Attachment:
Changes to the Technical
Specifications

Date of Issuance: November 4, 1982

ATTACHMENT TO LICENSE AMENDMENTS

AMENDMENT NO. 89 TO FACILITY OPERATING LICENSE NO. DPR-31

AMENDMENT NO. 83 TO FACILITY OPERATING LICENSE NO. DPR-41

DOCKET NOS. 50-250 AND 50-251

Revise Appendix A as follows:

Remove Page	Insert Page
4.10-1	4.10-1

4.10 AUXILIARY FEEDWATER SYSTEM

Applicability: Applies to periodic testing requirements of the auxiliary feedwater system.

Objective: To verify the operability of the Auxiliary Feedwater and its ability to respond properly when required.*

Specifications:

1. Each turbine-driven auxiliary feedwater pump shall be started at intervals not greater than one month, run for 15 minutes and a flow rate of 600 gpm established to the steam generators. The monthly frequency is not intended to require the test while at cold shutdown. The testing requirement is met by performing this test during startup subsequent to cold shutdown.

2. The auxiliary feedwater discharge valves shall be tested by operator action during pump tests.

3. Steam supply and turbine pressure valves shall be tested during pump tests.

4. These tests shall be considered satisfactory if control panel indication and visual observation of the equipment demonstrate that all components have operated properly.

5. At least once per 18 months:

   a. Verify that eachautomatic valve in the flow path actuates to its correct position upon receipt of each auxiliary feedwater actuation test signal.

   b. Verify that each auxiliary feedwater pump receives a start signal as designed automatically upon receipt of each auxiliary feedwater actuation test signal.

N.A. during cold or refueling shutdowns (only for the Unit at cold or refueling shutdown). The specified tests, however, shall be performed within one surveillance interval prior to starting the turbine.

* NOTE: If any local manual realignment of valves is required when operating the Auxiliary Feedwater pumps, a dedicated individual, who is in communication with the control room, shall be stationed at the auxiliary feedwater pump area. Upon instructions from the control room, this operator would realign the valves in the AFW system train to its normal operational alignment.

UNITED STATES
NUCLEAR REGULATORY COMMISSION
WASHINGTON, D. C. 20555

SAFETY EVALUATION BY THE OFFICE OF NUCLEAR REACTOR REGULATION

RELATED TO AMENDMENT NO. 89 TO FACILITY OPERATING LICENSE NO. DPR-31

AND AMENDMENT NO. 83 TO FACILITY OPERATING LICENSE NO. DPR-41

FLORIDA POWER AND LIGHT COMPANY

TURKEY POINT PLANT UNIT NOS. 3 AND 4

DOCKET NOS. 50-250 AND 50-251

I. INTRODUCTION

By letter dated May 6, 1982, the Florida Power and Light Company (the licensee) submitted a request to modify the Technical Specifications for the Turkey Point Plant Unit Nos. 3 and 4. The amendments would change the Technical Specifications to conform to the Bulletins and Orders Task Force review following the Three Mile Island Accident. The requirements of this Task Force regarding Auxiliary Feedwater System were set forth in our letter dated October 16, 1979.

II. BACKGROUND

The licensee has addressed this issue in their responses dated December 20, 1979, July 22, 1980 and January 14, April 13 and July 23, 1981. We reviewed their responses and issued Amendment Nos. 75 and 69 on December 24, 1981 based on our initial Safety Evaluation (SE). We indicated in our SE that open items remained for which an additional Technical Specification change and information was necessary to complete our review.

The automatic initiation and flow indication, NUREG-0737 Item II.E.1.2, portion of the auxiliary feedwater review were determined to be in compliance with the long term safety grade requirements. The acceptability of this portion of the Auxiliary Feedwater System and the SE were sent to the licensee in a letter from Steven A. Varga dated September 15, 1982.

III. IMPLEMENTATION OF OUR RECOMMENDATIONS

We have completed our review of the licensee's responses dated January 7, May 6 and June 9, 1982 which address the open items identified in our initial SE. The results of the review and implementation of our recommendations are:

A. Recommendation GS-4 - "Emergency procedures for transferring to alternate sources of AFW supply should be available to the plant operators. These procedures should include criteria to inform the operators when, and in what order, the transfer to alternate water sources should take place. The following cases should be covered by the procedures.

1. The case in which the primary water supply is not initially available. The procedures for this case should include any operator actions required to protect the AFW system pumps against self-damage before water flow is initiated; and,

2. The case in which the primary water supply is being depleted. The procedure for this case should provide for transfer to the atlernate water sources prior to draining of the primary water supply."

Technical Specifications are in place which insure the minimum condensate storage tank level is 185,000 gallons. This quantity of water is sufficient to maintain a hot standby condition for 15 hours and a subsequent cooldown to 350°F followed by initiation of the residual heat removal system. Alarms warn the operator of low level situations so that make-up flow can be established from alternate water supplies to the condensate storage tank. Procedures are in effect for initiation of makeup from the condenser hotwell, the primary water system or the service water system. Thus, it is insured that water will always be initially available for the AFW pumps.

Following automatic initiation of the auxiliary feedwater pumps, the operator ascertains adequate condensate storage tank level, sufficient flow to the steam generators and notifies the Nuclear Turbine Operator to inspect the pumps for proper operation.

The minimum condensate storage tank level control and the emergency procedures to establish alternate water supplies, insure an adequate quantity of water is available to the pumps, for the case there the condensate storage tank is being depleted.

We conclude that this recommendation is satisfactorily met.

B. Additional Short Term Recommendations

1. Recommendation - "Licensees with plants which require local manual realignment of valves to conduct periodic tests on one AFW system train, and there is only one remaining AFW train available for operation, should propose Technical Specifications to provide that a dedicated individual who is in communication with the control room be stationed at the manual valves. Upon instruction from the control room, this operator would realign the valves in the AFW system train from the test mode to its operational alignment."

By letter dated May 6, 1982, the licensee submitted a proposed amendment to Technical Specification 4.10 which applies to periodic test requirements of the auxiliary feedwater system. The amended Technical Specification requires that:

> "If any local manual realignment of valves is required when operating the Auxiliary Feedwater pumps, a dedicated individual, who is in communication with the control room, shall be stationed at the auxiliary feedwater pump area. Upon instructions from the control room, this operator would realign the valves in the AFW system train to its normal operational alignment."

We conclude that the amended Technical Specification fulfills the requirements of the additional short term recommendation, pending approval of it by the Division of Licensing.

C. Recommendation - "The AFW pump discharge lines and turbine driven AFW pump steam supply lines for each unit combine into single lines through which all water and steam respectively from either unit must flow. A pipe break in either of these single flow paths would cause loss of the capability to provide AFW flow to all the steam generators of one unit. The licensee should evaluate the consequences of a postulated pipe break in these sections of the AFW discharge or steam supply assuming a concurrent single active failure and 1) determine any AFW system modifications or procedures necessary to detect and isolate the break, and direct the required AFW flow to the steam generators before they boil dry or 2) describe how the plant can be brought to a safe shutdown condition by use of other available systems following such a postulated pipe break."

The licensee has developed procedures regarding shutdown through the use of alternate systems and regarding isolation os AFWS steam supply or feedwater line piping breaks.

The proposed AFW pipe modifications, described in the June 7, 1982 letter in response to the above requirement, will provide sufficient redundancy to eliminate the concern of a single pipe break disrupting feedwater flow to the steam generators.

We conclude that this recommendation has been satisfactorily met.

D. Basis for Auxiliary Feedwater System Flow Requirements

The licensee was requested to supply Auxiliary Feedwater (AFW) design basis information in Enclosure 2 of our October 16, 1979 letter. By letter dated January 7, 1982 the licensee supplied the AFW system flow design bases and criteria.

The licensee verified that the AFW minimum flow rate requirements could be maintained under the following transient conditions:

1. Loss of main feedwater

2. Loss of main feedwater with concurrent loss of offsite AC power

3. Loss of main feedwater with concurrent loss of onsite and offsite AC power

4. Rupture of a main steam line

5. Small break Loss of Coolant Accident (LOCA)

6. Turbine trip with and without turbine bypass valve

7. Main steam isolation valve closure

8. Plant cooldown

9. Startup (Enclosure 3 of June 9, 1982 letter)

Based on our review of the licensee's submittal, we conclude that the AFW system can provide sufficient flow for heat removal requirements following any design basis transient or accident with a concurrent worst case single active failure.

E. SUMMARY

We have determined that the licensee has fulfilled all the requirements necessary to conform with the Commission's Bulletins and Orders Task Force review regarding Auxiliary Feedwater Pump requirements following the Three Mile Island Accident.

IV. ENVIRONMENTAL CONSIDERATION

We have determined that the amendments do not authorize a change in effluent types or total amounts nor an increase in power level and will not result in any significant environmental impact. Having made this determination, we have further concluded that the amendments involve an action which is insignificant from the standpoint of environmental impact and, pursuant to 10 CFR §51.5(d)(4), that an environmental impact statement or negative declaration and environmental impact appraisal need not be prepared in connection with the issuance of these amendments.

V. CONCLUSION

We have concluded, based on the considerations discussed above, that: (1) because the amendments do not involve a significant increase in the probability or consequences of an accident previously evaluated, do not create the possibility of an accident of a type different from any evaluated previously, and do not involve a significant reduction in a margin of safety, the amendments do not involve a significant hazards consideration, (2) there is reasonable assurance that the health and safety of the public will not be endangered by operation in the proposed manner, and (3) such activities will be conducted in compliance with the Commission's regulations and the issuance of the amendments will not be inimical to the common defense and security or to the health and safety of the public.

Date: November 4, 1982

UNITED STATES NUCLEAR REGULATORY COMMISSION

DOCKET NOS. 50-250 AND 50-251

FLORIDA POWER AND LIGHT COMPANY

NOTICE OF ISSUANCE OF AMENDMENTS TO FACILITY OPERATING LICENSES

The U. S. Nuclear Regulatory Commission (the Commission) has issued Amendment No. 89 to Facility Operating License No. DPR-31, and Amendment No. 83 to Facility Operating License No. DPR-41 issued to Florida Power and Light Company (the licensee), which revised Technical Specifications for operation of Turkey Point Plant, Unit Nos. 3 and 4 (the facilities) located in Dade County, Florida. The amendments are effective as of the date of issuance.

The amendments change the Technical Specifications to conform with the Commission's Bulletin and Orders Task Force review regarding Auxiliary Feedwater Pump requirements following the Three Mile Island Accident.

The application for amendments complies with the standards and requirements of the Atomic Energy Act of 1954, as amended (the Act), and the Commission's rules and regulations. The Commission has made appropriate findings as required by the Act and the Commission's rules and regulations in 10 CFR Chapter I, which are set forth in the license amendments. Prior public notice of these amendments was not required since the amendments do not involve a significant hazards consideration.

The Commission has determined that the issuance of these amendments will not result in any significant environmental impact and that pursuant to 10 CFR §51.5(d)(4) an environmental impact statement or negative declaration and environmental impact appraisal need not be prepared in connection with issuance of these amendments.

For further details with respect to this action, see (1) the application for amendments dated May 6, 1982, (2) Amendment Nos. 89 and 83 to License Nos. DPR-31 and DPR-41, and (3) the Commission's related Safety Evaluation. All of these items are available for public inspection at the Commission's Public Document Room, 1717 H Street, N.W., Washington, D.C. and at the Environmental and Urban Affairs Library, Florida International University, Miami, Florida 33199. A copy of items (2) and (3) may be obtained upon request addressed to the U. S. Nuclear Regulatory Commission, Washington, D.C. 20555, Attention: Director, Division of Licensing.

Dated at Bethesda, Maryland, this 4th day of November, 1982.

FOR THE NUCLEAR REGULATORY COMMISSION

Steven A. Varga, Chief
Operating Reactors Branch #1
Division of Licensing