UNITED STATES
NUCLEAR REGULATORY COMMISSION
REGION II
101 MARIETTA STREET, N.W.
ATLANTA, GEORGIA 30323

Report Nos.: 50-369/85-38 and 50-370/85-39

Licensee: Duke Power Company
422 South Church Street
Charlotte, NC 28242

Docket Nos.: 50-369 and 50-370 License Nos.: NPF-9 and NPF-17

Facility Name: McGuire 1 and 2

Inspection Conducted: October 15-17, 1985 and January 27-31, 1986

Inspectors: _____ 6/2/86
B. T. Debs Date Signed
F. McCoy
S. D. Stadler
W. Poertner
P. Moore

Accompanying Personnel: Graydon L. Yoder, Ph.D. (ORNL)

Approved by: _____ 6/2/86
B. Wilson, Acting Section Chief Date Signed
Division of Reactor Safety

SUMMARY

Scope: This routine, unannounced inspection was in the area of Nuclear Service Water System Operability.

Results: Five violations were identified.

REPORT DETAILS

1. Persons Contacted

Licensee Employees

+G. Vaughn, General Manager, Nuclear Stations
*+T. L. McConnell, McGuire Nuclear Station Manager
*+R. L. Gill, McGuire Licensing
*+E. O. McCraw, Compliance Engineer
*+W. J. Kronenwetter, Design Engineer
*+W. M. Suslick, Associate Engineer

Other licensee employees contacted included construction craftsmen, engineers, technicians, operators, mechanics, security force members, and office personnel.

NRC Resident Inspectors

*+W. Orders, Senior Resident Inspector
R. Pierson, Resident Inspector

*Attended exit interview on 10/17/85
+Attended exit interview on 01/31/86

2. Exit Interview

The inspection scope and findings were summarized on October 17, 1985, and January 31, 1986, with those persons indicated in paragraph 1 above. The inspector described the areas inspected and discussed in detail the inspection findings. No dissenting comments were received from the licensee. The results of the inspection were discussed with utility management during a meeting in Atlanta on March 14, 1986. The details of this meeting are documented in Section 11 of this report.

During the exit interview the enforcement findings were presented as preliminary and unresolved. Following NRC management review, the following findings were determined:

369/85-38-01, 370/85-39-01 Violation - Failure to adequately perform preoperational test on control room chiller - see paragraphs 7 and 8.

369/85-38-02, 370/85-39-02 Violation - Failure to implement and maintain procedures - see paragraphs 7 and 8.

369/85-38-03, 370/85-39-03 Violation - Failure to meet Technical Specification 3.7.4 for RN system operability - see paragraph 7.

369/85-38-04, 370/85-39-04 Violation - Failure to perform 10 CFR 50.59 evaluation on degraded equipment - see paragraph 8.

369/85-38-05, 370/85-39-05 Violation - Failure to identify and correct conditions adverse to quality as required by 10 CFR 50, Appendix B, Criterion XVI - see paragraph 12.

369/85-38-06, 370/85-39-06 Unresolved Item - NRC followup of licensee response of April 25, 1986 - see paragraph 11.

3. Licensee Action on Previous Enforcement Matters

This subject was not addressed in the inspection.

4. Unresolved Items

An Unresolved Item is a matter about which more information is required to determine whether it is acceptable or may involve a violation or deviation. A new unresolved item identified during this inspection is discussed in Section 11.

5. Nuclear Service Water System Description

The McGuire Final Safety Analysis Report (FSAR) states that the Nuclear Service Water (RN) System provides assured cooling water for various Auxiliary Building and Reactor Building heat exchangers during all phases of station operations. Each unit has two redundant "essential headers" serving two trains of equipment necessary for safe station shutdown, and a "non-essential header" serving equipment not required for safe shutdown. In conjunction with the Ultimate Heat Sink, comprised of Lake Norman and the Standby Nuclear Service Water Pond (SNSWP), the RN System is designed to meet design flow rates and pressure heads for normal station operation and also those flow rates and pressure heads required for safe station shutdown normally or as the result of a postulated Loss of Coolant Accident (LOCA). The system is further designed to tolerate a single failure following a LOCA, and/or seismic event causing loss of Lake Norman, and/or loss of station power plus offsite power (station blackout). Sufficient margin is provided in the equipment design to accommodate anticipated corrosion and fouling without degradation of system performance.

6. Summary of NRC Findings

On October 4, 1985, the NRC Senior Resident Inspector reported to Region II management that the 1A nuclear service water system, designated by the licensee as the RN system, had failed to meet the acceptance criteria of its quarterly inservice test. Although the Technical Specification Action Statement period of 72 hours expired on October 7, 1985, both units continued operation at full power based on the licensee's contention that the 1A RN pump had been made operable by cross connecting it with the Unit 2 2A RN pump. On October 10, 1985, NRC informed Duke Power Company (DPC) that operation in the unit shared mode was an unacceptable unanalyzed condition. DPC restored unit separation and began justification for continuing operation with the apparently degraded pump.

Licensee representatives stated that they suspected that the pump was not actually degraded, rather the pump discharge line flow orifice reading was in error. One of the possible reasons stated was buildup of silt, mud, or corrosion at the orifice. Licensee representatives subsequently stated several months later that the flow indication was erroneous and the pump was not actually degraded.

The NRC became concerned that if system fouling was that bad at the pump discharge, what was the status of the downstream components, especially heat exchangers. A reactive inspection was conducted October 15-17, 1985, to review these matters. Numerous phone conferences and letters were exchanged in ensuing months, and a followup inspection was conducted January 27-31, 1986.

A summary of the major NRC findings presented in this report are as follows:

a. Preop tests and subsequent surveillance tests performed in 1979 were not adequate to ascertain operability of RN components.

   - Several test procedures did not contain acceptance criteria. For example, a quarterly test of RN heat exchanger 1-A on October 7, 1985, indicated potential fouling but the test procedure contained no acceptance criteria. The potential fouling was apparently pursued only because of questions from the NRC and not addressed by the licensee until October 14 when it was attributed to a faulty flow instrument. The heat exchanger was assumed to be operable during this period of evaluation.

   - Flow was not measured through control room air conditioner heat exchangers.

   - Test results were recorded in units of differential pressure when acceptance criteria were in units of flow rate.

   - Heat transfer characteristics of heat exchangers were not normally determined. Fouling factors or empirical tests could have been used.

   - RN system was not originally preop tested in the most limiting post-LOCA configuration in that both trains were not aligned to simultaneously draw water from the Standby Nuclear Service Water Pond.

b. The positions of valves specified in preop test data were different from the positions in operating procedures.

c. The RN system had not been flow balanced since 1982 even though engineering documents required it to be.

d. The following heat exchanger fouling problems had occurred:

- Containment spray heat exchanger 1A tested per IEB 81-03 showed increasing delta P from 20 psid in 1983 to 29 psid in 1985.
- In October 1982, a containment ventilation heat exchanger would not function due to fouling.
- Periodic cleaning of control room air conditioning heat exchangers had been necessary since 1982 due to fouling.
- RCP motor coolers required cleaning three times during the period 1984 - 1985.
- Unit 1 component cooling water heat exchanger observed to be fouled in September 1984.

e. Inservice testing of the 1A RN pump indicated degraded flow on October 4, 1985. Instead of entering a Technical Specification Action Statement which would have required the operating unit to be brought to the hot standby mode within six hours, the licensee inappropriately cross-connected RN train A and train B and continued to operate.

f. A flow balance test on RN train 1A conducted on December 17, 1985, revealed flow rates through several safety-related heat exchangers to be below FSAR values. At the request of the NRC in January 1986, the licensee evaluated these test results pursuant to 10 CFR 50.59. This evaluation, which was based upon heat transfer tests by DPC and calculations by Westinghouse, was completed and justified continued operation on January 14, 1986. The licensee apparently assumed the system to be operable between December 17 and January 14.

Although it appears that RN heat exchangers were becoming progressively more fouled with time, the licensee did not recognize the symptoms or place priority consideration on the overall system operability and associated safety concerns. Rather fouled components required for continued operation were cleaned as needed but no regard shown for the status of dormant safety equipment, such as the containment spray heat exchangers.

When the concern was raised by the NRC, the licensee devoted significant resources toward correcting the problem. As a result, during the months of investigation, there were several instances when individual components were found not to be capable of FSAR specified performance. On these occasions, the licensee revised their accident analysis supporting calculations to justify continued power operation. This mode of operation complies with regulatory requirements but does not appear to represent to the NRC the most conservative safety philosophy.

7. McGuire Nuclear Service Water System History

1979

Preoperational functional testing was completed by the licensee on July 25, 1979, for the Unit 1 RN system and on November 12, 1982, for the Unit 2 RN system. In January 1986, NRC Region II inspectors reviewed selected areas of preoperational test packages for both Units 1 and 2 RN systems.

It was noted that during the conduct of the Unit 1 preoperational tests of nuclear service water, the safety evaluation section (8) of the major procedure form was marked as not applicable. Administrative Plant Manual, Section 4.2.4.1(e) requires that prior to procedure use, a safety evaluation of major changes to a procedure shall be performed. Examples of the major changes made to the preoperational procedures included changes to the minimum acceptable RN flow criteria, initial RN system configuration at test initiation, and the methods utilized to determine component flows. The use of "not applicable" for safety evaluations was allowed by a licensee internal memorandum dated September 14, 1979. The memorandum deleted the procedural requirement for a safety evaluation prior to fuel load.

The primary objective of the nuclear service water preoperational functional test was to verify that the system could supply designed cooling water flow to various components and to set each component throttle valve to provide the proper flow rate. Adequate system and component flow was to be verified for all modes of operation.

One of the safety related RN loads during post-LOCA conditions is the control room air conditioner which requires a minimum flow of 789 GPM as stated in McGuire FSAR Table 9.2.2-1(8). During the RN preoperational test for Unit 1, the flow to the control room air conditioning was unable to be determined due to problems encountered with the installed instrumentation. Subsequently, a major change to the preoperational test procedure, TP/1/A/1400/01, was approved by the licensee to delete the requirement to verify the minimum RN flow of 789 GPM. The change to the preoperational test was justified by the licensee on the basis that the flow control valve is air operated and fails open during accident conditions. This justification assumed that there were no internal obstructions and that the wide open valve flow would meet or exceed the FSAR required flow. Due to this procedure revision, the subsequent RN preoperational test for Unit 2 also did not verify adequate flow to the control room air conditioning.

As stated later in this report, subsequent functional flow test data obtained in late 1985 and early 1986 indicated that the required 789 GPM was not being met. Failure to test the aforementioned component represents a violation of 10 CFR 50, Appendix B, Criteria XI which requires a test program to be established to assure that all testing required to demonstrate system components perform satisfactorily in service (369/85-38-01, 370/85-39-01).

The inspector noted that in several instances during the conduct of the preoperational tests of the RN system, the measured flows were stated as differential pressure (psid) rather than flow (GPM). The engineers who performed the tests and the preoperational logs indicated this was due to problems experienced with the installed flow instrumentation. To continue the tests with the inoperable flow instrumentation, the licensee utilized temporary differential pressure instrumentation. The conversion from differential pressure to GPM was not made on test data enclosures. To verify that the minimum FSAR flow results were achieved for the RN components preoperationally tested, the inspector, in early 1986, requested that the licensee convert the differential pressures to flows. In each case it was verified, based on the licensee's calculations, that the minimum acceptable flow rates had been achieved as stated in McGuire FSAR table 9.2.2-1. The values from that table appear later in this report.

To assure minimum RN component flows, including adequate flow to the containment spray heat exchangers during design LOCA conditions, the normally throttled valves associated with each RN component were required to be set during preoperational testing of the RN system. These throttled positions established during preoperational testing were to be incorporated into operating and surveillance procedures to protect these throttled settings during future operations. The inspectors noted that, in some cases and particularly for Unit 1, the throttled valve positions listed in the licensee's RN operating procedures and their locked valve verification procedures were not consistent with earlier preoperational "as left" data. It was noted, however, for those throttled valves reviewed, the operational positions were further open than the "as left" preoperational test positions. The licensee acknowledged these discrepancies and committed to revise the operational procedures to meet those valve settings established during recent 1985 and 1986 RN flow testing.

The inspection team noted that since 1976 the licensee has had a functional system description for the RN system. Section 5 of this system description (MCSD-0138.00) states that annually each essential RN train must be checked for proper throttling. Also, after any throttle valve is repositioned, the entire train must be checked for proper throttling. The system description then presents a detailed procedure to verify that the minimum flow conditions for operability of the safety related portion of the system are met. The licensee had decided not to adopt the aforementioned recommendations. Consequently, no RN flow balances had been performed beyond 1982 until requested by the NRC in late 1985. Functional system descriptions are not used as procedures by licensees and, consequently, failure to follow MCSD-0138.00 is not considered to be a violation. However, compliance with this document would have prevented the above violation. However, The requirements to verify proper throttling position should have been in plant procedures.

Failure to measure flow through components and failure to specify positions of throttled valves in procedures represent examples of inadequate

procedural controls and are, therefore, a violation of McGuire Technical Specification 6.8.1 and 10 CFR 50, Appendix B, Criteria V which requires that adequate written procedures be implemented and maintained (369/85-38-02, 370/85-39-02).

In addition to adding procedural requirements for RN throttled valve positions as addressed above, the licensee has implemented several other positive methods to control these valves. Currently, these valves are verified locked every six months under the Locked Valve Verification Procedure 4700/23. In addition, independent verification is utilized to ensure that the valves are returned to the proper position following valve repositioning for maintenance or other activities. Despite these positive controls, the inspectors noted the following recent deficiencies in the licensee's control over these throttle valves:

- The Locked Valve Verification Procedure requires that the operator verify the valve to be locked. No verification of the actual throttle position is required.

- The valve locks utilized for RN throttled valves are chain locks. These chain locks work well for wide open valves, but the slack in the chains cannot ensure that a valve remains open 1/4 turn. A valve that is required to be open 1/4 to 3/8 turn could be locked in the full-closed position without detection.

One potential solution identified by the licensee for better control of these throttle valves include the use of locking collars which are used on throttle valves in other systems. Since the locking collars can be sized to ensure the exact valve opening desired, their use would provide positive indication of valve position.

The licensee initiated a 10 CFR 50.72 notification to the NRC stating that prior to January 27, 1986, the RN systems for Unit 1 and 2 had never been tested under the requisite design basis accident configuration. Specifically, the system valves had never been positioned to supply the required flow to essential headers for Units 1 and 2 with the system taking suction solely from the Nuclear Service Water Pond. This issue is discussed in Section 6. of this report.

1981

In response to IE Bulletin 81-03 which addressed the potential fouling of safety related heat exchangers by clam and shell debris, the licensee committed to the NRC to monitor two RN supplied heat exchangers on a quarterly basis. One of these heat exchangers is the 1A Containment Spray (NS) heat exchanger. Additionally in the licensee's response, it was stated that "if significant fouling is detected on these heat exchangers, other heat exchangers in the RN system will be inspected." The licensee performed their monitoring under procedure PT/1/A/4403/04. This procedure for the 1A NS heat exchanger requires that the test be performed for a FSAR accident

RN flow of 5000 GPM to the NS heat exchanger and that the heat exchanger differential pressure (D/P) be recorded. In October 1985, the inspectors reviewed the past test data which indicated the following:

| DATE OF TEST | D/P (PSID) |
|---|---|
| 6/20/83 | 20 |
| 9/22/83 | Not Available |
| 10/2/83 | 23.5 |
| 1/18/84 | 25 |
| 4/11/84 | 23 |
| 7/18/84 | 25 |
| 11/9/84 | 29.5 |
| 2/28/85 | 23.5 |
| 6/27/85 | 25 |
| *10/7/85 | 29 |

*RN flow was 4600 GPM

The test procedure did not specify criteria for determining "significant fouling" and, thus, other components were not inspected as a result of these tests. Further discussion of these findings appears later in this report under the section titled 1985.

1982

On October 22, 1982, the licensee identified that fouling of the RN supplied lower containment ventilation heat exchangers was a problem which was causing unacceptable temperature increases in the lower containment areas. This subsequently forced the units to operate at reduced reactor power during certain seasonal conditions. In April 1983, the licensee attempted to add a penetrant/dispersant to the RN system in an attempt to clean lower containment cooling units. The attempt was ineffectual. Eventually the licensee modified the coolers with a self-cleaning mechanism which corrected the problem.

As a result of a control room air conditioning trip due to fouling of the RN supplied, safety related air conditioning chillers, the licensee established a cleaning threshold based on increasing air conditioning condenser pressures. On the following dates, these chillers have been rodded out to maintain operability.

| TRAIN A | TRAIN B |
|---|---|
| 11/19/82 | 3/83 |
| 10/03/83 | 01/07/85 |
| 12/19/83 | 10/21/85 |
| 05/30/84 | 11/05/85 |
| 10/31/84 | |
| 09/25/85 | |
| 10/24/85 | |
| 10/31/85 | |

1984

In March 1984, the licensee began development of a heat exchanger performance monitoring program. At the time of this inspection, Duke Power Company had not fully implemented this program at their nuclear plant.

The inspector reviewed the section of the program which requires monitoring the performance of heat exchangers such as those in the RN system. The program appeared to be very comprehensive with provisions for monitoring both flows and heat transfer capabilities, for increasing the frequency of monitoring as warranted, and for initiating corrective actions as necessary. Once fully implemented, this Performance Monitoring Program will be a major improvement in the licensee's ability to monitor plant equipment performance and to promptly identify degraded performance. A key to the relative success of the program, however, will be the effectiveness and timeliness of corrective actions taken in response to an identified deficiency. The inspector noted that this corporate monitoring program was scheduled to be implemented in stages at the various plants. The RN heat exchangers were scheduled for performance monitoring implementation during the second phase of the program which will be several months into 1986. As a result of the fouling and degraded performance being experienced with the RN heat exchangers and concerns expressed by the NRC, the licensee indicated this phase of the program will be implemented on a priority basis.

Also in 1984, the licensee began to experience RN fouling problems in their reactor coolant pump motor coolers. The licensee has performed the following cleanings of these coolers on the dates indicated:

| UNIT 1 | UNIT 2 |
|---|---|
| 12/31/84 | 8/10/84 |
| | 11/08/85 |

In September 1984, the licensee evaluated the Unit 1 Component Cooling (KC) heat exchanger for fouling, although, according to the licensee, there was no indication of reduced heat transfer or high differential pressure. As part of the evaluation, DPC engineering calculated a fouling factor for the KC heat exchangers. These calculations were based on informal test data which appeared to the cognizant engineer as nonrepresentative. In November 1984 the Unit 1 KC heat exchanger was cleaned. In June and July 1985, the Unit 2 KC heat exchanger was cleaned. Although visual inspection of the heat exchanger by DPC engineering did not support the calculated fouling factor (the calculated fouling factor appeared to be less conservative), the licensee did not perform further evaluation of past operability of these heat exchangers.

1985

On October 4, 1985, following in-service testing, the 1A Nuclear Service Water pump performance was found to be degraded. The pump curve generated from the test data deviated from the previously established base-line curve. Delivered flow was estimated to be approximately 85 percent of that required. Technical Specification (TS) 3.7.4 requires two loops of RN to be operable. With only one loop operable, they must restore both loops to operable within 72 hours or be in hot standby within the next 6 hours and cold shutdown within the following 30 hours.

The licensee performed a 10 CFR 50.59 analysis to justify cross connecting the 1A and the 2A RN trains in an attempt to boost 1A RN flow. After reviewing the 50.59 analysis and extensive interaction with the licensee, the NRC Region II, on October 10, 1985, informed the licensee that the NRC considered the licensee was not meeting the requirement of TS 3.7.4 which requires two operable RN loops since the 1A train was inoperable due to a degraded pump and that the cross connected configuration could not be justified by a 50.59 analysis since it represented the possibility of an unreviewed safety question and, in effect, changed the Technical Specification.

The licensee's action to cross connect the 1A and 2A RN trains and to continue two unit operation for greater than 72 hours was contrary to TS 3.7.4 and, therefore, represents a violation (369/85-38-03, 370/85-39-03).

During this time period, the licensee discovered that one of the cross connect valves had an erroneous position indication. Thus, the valve was actually closed when thought to be open. This matter was discussed previously in Region II Inspection Report 50-369/85-35, 50-370/85-36.

As a result of the interactions with the NRC, the licensee split the RN trains and took compensatory measures to continue operation of the 1A train under reduced flow conditions. Further details of the apparent degradation of the 1A RN pump are contained in NRC Region II Inspection Report 50-369/85-37. As a result of the aforementioned event, during the period of October 15-17, 1985, Region II inspectors reviewed the overall RN system performance in light of the recent event.

The inspectors reviewed the licensee's quarterly performance, PT/1/A/4403/04, data on the 1A NS heat exchanger which was tabulated earlier in this report under 1981.

The following observations were made by the inspectors regarding PT/1/A/4403/04:

- The performance test lacked qualitative and quantitative acceptance criteria.

- The test results suggest an increasing D/P across the 1A NS heat exchanger.

- The pressure drop could not be measured at the required design basis accident RN flow of 5000 GPM for the 1A NS heat exchanger because this flow could not be achieved for the test performed on October 7, 1985. The measured flow was recorded as 4600 gpm.

- The 1A NS heat exchanger outlet throttle valve was closed to the extent that the as found flow through this heat exhanger was 800 gpm. It appears doubtful that the required accident flow of 5000 gpm could have been achieved with this as found valve position.

The licensee indicated that, at that time, a qualitative or quantitative acceptance criteria had not been determined but that work had begun to provide such criteria. 10 CFR 50 Appendix B Criteria V states that procedures shall include appropriate quantitative or qualitative acceptance criteria for determining that important activities have been satisfactorily accomplished. Contrary to this regulation, PT/1/A/4403/04 did not contain an appropriate acceptance criteria. This represents another example of violation (319/85-38-02, 50-370/85-39-02).

Regarding the aforementioned increasing D/P across the 1A NS heat exchanger, the licensee indicated that, although the test results suggest an increasing D/P, some mathematical analysis should be performed to prove the apparent trend of an increasing D/P.

Regarding the low 1A NS heat exchanger RN flow recorded on October 7, 1985, the licensee indicated that the low reading could have been a result of a calibration problem. As a result of the inspector's questioning, the licensee issued Work Request Number 65574 to check the calibration of the flow instrument used to obtain the recorded 4600 GPM. On October 14, 1986, the calibration results indicated that, at a flow of 5000 GPM, the instrument indicated 4820 GPM. The licensee then took action to recalibrate the instrument.

Based on the data reviewed and discussions with licensee personnel, the inspector stated the following concerns:

> Since the licensee did not have an acceptance criteria for the increased D/P, could the apparently increasing D/P suggest heat exchanger fouling which may have reduced heat exchange capacity to an unacceptable level? Could system flow reductions due to fouling affect other RN system component performance? These concerns were discussed with plant management on October 17, 1985. The inspector requested management to consider the feasibility of performing a RN system integrated flow test to provide confidence that all RN safety related loads could be provided the requisite design basis flows. Additionally, the inspector discussed the feasibility of measuring the heat transfer capability of the 1A NS heat exchanger.

After growing concern by NRC Region II regarding the current ability of the Unit 1 RN system to perform its safety function under accident conditions, the licensee was requested, on October 18, 1985, to provide the NRC Region II Office with a statement of operability for the RN system. On October 23, 1985, the operability statement was received from the licensee. This statement concluded that the RN system is operable and capable of performing its intended safety function.

The statement of operability included an engineering evaluation by Duke Power Company. The evaluation summarized the results of a Westinghouse computer calculation which utilizes the LOTIC code. This code predicts containment pressure response from inputs including the heat transfer capability (UA) of the containment spray and component cooling water heat exchangers. The Duke Power engineering calculations used to determine the UA for the 1A NS heat exchanger assumed the same fouling factor which was calculated for the Component Cooling Water (KC) heat exchanger in early 1985. The inspectors expressed reservation over this assumption; questioning the credibility of applying the existing fouling factor for a single pass horizontal type heat exchanger (KC heat exchanger) to the NS heat exchanger which is a vertical U-tube heat exchanger. Additionally, RN flows through the tubes of the KC heat exchanger unlike the NS heat exchanger where RN flow is on the shell side. It, however, was agreed by the NRC that for lack of any other available data this approach was acceptable until specific empirical data could be obtained.

Based on the aforementioned assumptions and calculation as utilized in the LOTIC program (WCAP-8282), a maximum containment pressure of 13.3 psig was predicted during a design basis accident. The McGuire containment design pressure is 15.0 psig.

In response to NRC concerns over the potential fouling and degradation of the 1A NS heat exchanger, the licensee developed a performance test PT/0/A/4208/01, Containment Spray Heat Exchanger Performance Test. The purpose of the test was to:

- Determine if a high flow flush reduces the heat exchanger differential pressure.
- Assure the structural integrity of the heat exchanger tubes.
- Determine the overall heat transfer coefficient and fouling factor of the NS heat exchangers.

The McGuire FSAR analysis utilized a containment spray heat exchanger UA of $2.04 \times 10^6$ BTU-Hr-Deg. F. Empirical data from the aforementioned test indicated that an actual UA of $7.35 \times 10^5$ BTU-Hr-Deg. F existed under current plant conditions. This information was provided to Westinghouse on November 27, 1985, to perform a LOTIC run utilizing this data. A containment response model which is less conservative than the one used in the FSAR analysis was used by Westinghouse (WCAP-10325) for this run. Use

of this model was accepted by the NRC since this WCAP had been reviewed and found technically sound by the NRC staff, although the NRC's Safety Evaluation Report had not been issued at that time. This LOTIC run of November 27, 1985, indicated that, for the aforementioned UA, a peak containment pressure of 14.42 psig would be realized under design basis accident conditions.

In addition to the heat transfer test, the licensee performed a heat exchanger tube integrity test using the tritium activity of the Refueling Water Storage tank (RWST) as a tracer source. The test results indicated insignificant leakage.

Several cleaning attempts using various chemical and hydraulic techniques were employed by the licensee to clean the 1A NS heat exchanger. The latest performance test results (January 28, 1986) indicate that a UA of 2.03 x $10^6$ BTU/Hr-Deg. F had been achieved.

The inspectors viewed video tapes of the licensee's fiber optic inspection of the 1A NS heat exchanger. Approximately the first seven feet of the upper portion of the tube bundle could be viewed. The tape indicated that a fairly uniform silica deposit completely covered the tubes, prior to cleaning.

Confirmatory UA calculations were performed by the inspection team. These calculations appear as Attachment 4 to this report. Those calculations closely approximate those of the licensee.

8. Review Of Flow Balance Testing

The inspectors conducted a review of the RN flow balance testing conducted on December 17, 1985, January 27, 1986, and January 28, 1986, for Train 1A of the Nuclear Service Water System. Additionally, flow balance testing conducted on January 30, 1986, for Train 1B of the Nuclear Service Water System was reviewed.

The Train 1A flow balance test conducted on December 17, 1985, was in accordance with procedure TT/1/A/9100/105, Change 0 through Change 1. The test provided for:

- Isolation of Train 1A and 1B essential header.
- The low level intake providing Train 1A suction.
- Isolation of the Unit 1 non-essential header from Train 1A.
- Control Room and Equipment Room A Train Cooling Chillers being supplied by Nuclear Service Water Train 1A.

- Securing of Nuclear Service Water Train 2A due to a condition of Nuclear Service Water operability resultant from prior degraded pump performance in Train 1A when supplying Control and Equipment room cooling.

- Alignment of service water valves in accordance with a lineup that was consistent with actual Safety Injection and Containment Spray conditions.

The Train 1A flow balance test conducted on January 27, 1986, was performed in this same manner with the exception that Change 2 of procedure TT/1/A/9100/105 was also in effect which changed the Train 1A suction from the low level intake to the service water pond in order to duplicate the most restrictive condition of operation for testing.

Flow rates through those essential heat exchangers required to mitigate accident consequences during Safety Injection and Containment Spray were measured during these tests and compared to target values which were specified in the FSAR. Measurement results and comparisons for Train 1A tests are delineated in Table 1.

The data for the December 17, 1985 test reflects that FSAR specified flow rate values could not be attained for the containment spray heat exchanger (4% degraded), control room chiller heat exchanger (10% degraded), the charging pump oil cooler (46% degraded), spent fuel pool pump room air handling unit (27% degraded), and containment spray pump room air handling unit (56% degraded).

Although the data from the December 17th test indicated multicomponent degradation, the licensee performed an informal evaluation to support continued operation. The results of this evaluation were not documented. Not until requested by the NRC in January 1986, did the licensee perform a detailed engineering evaluation as required by 10 CFR 50.59. Failure to perform this requisite evaluation is considered a violation of the aforementioned 10 CFR 50.59 (369/85-38-04, 370/85-39-04).

In an operability statement dated January 14, 1986, the licensee performed an engineering evaluation to demonstrate the adequacy of the tested performance of the charging pump oil cooler, the containment spray pump room air handling unit and the spent fuel pool cooling pump room air handling unit with the observed reduced flow rates. In the operability statement the licensee stated that the degraded containment spray heat exchanger flow was adequate, and justified continued operation of Unit 1. This operability statement was based on the actual tested values of the thermal efficiency for this particular heat exchanger and a containment pressure calculation performed by Westinghouse and forwarded to Duke Power Company by letter DAP-86-513 dated January 16, 1986. The Westinghouse calculation was based on assumptions which included the following:

- An active sump volume of 90,000 cubic feet.

- A thermal efficiency heat transfer coefficient of UA=7.35 x $10^5$ BTU-Hr-Deg. F for the containment spray heat exchanger and UA=1.64 x $10^6$ BTU-HT-Hr-Deg. F for the RHR heat exchanger. The licensee stated that, for the containment spray heat exchanger, this represented a 75% reduction in the UA coefficient. This value was a conservative selection by the licensee since the testing performed on December 17, 1985, demonstrated the UA value to be nearly 58% degraded.

Under these assumptions the Westinghouse calculation demonstrated that during a LOCA, containment pressure would remain below the containment design pressure of 15 psig with service water flow through the containment spray heat exchanger reduced to 4800 gpm. The licensee, therefore, considered that the results of their evaluations and calculations justified continued operation of Unit 1. The basis for this conclusion was reviewed and accepted by the NRC

Between December 17, 1985 and January 27, 1986, three cleaning cycles were accomplished on the RN side of the 1A containment spray heat exchanger. The licensee concluded that heat exchanger thermal efficiency increased from 42.1% to 74.7% as a result of these cleaning cycles. The affects of these cleaning cycles is also demonstrated in the reduced RN header pressure delineated in Table 1, for the flow balance test of January 27, 1986.

The data in Table 1 for the January 27, 1986 test reflects that, even after the cleaning evolutions, FSAR specified flow rate values could again not be attained for the containment spray heat exchanger (2% degraded), control room chiller heat exchanger (0.5% degraded), Spent Fuel Pool Pump Room Air Handling Unit (30% degraded), containment spray pump room air handling unit (56% degraded), diesel generator cooling water heat exchanger (8% degraded), and safety injection pump motor air handling unit (15% degraded). Degradation of the charging pump cooling flows was attributed to faulty flow indication which required instrument replacement.

The licensee stated that as a result of this test, Train 1A of nuclear service water was declared inoperable pending resolution of the degraded flow conditions and correction of the faulty flow indicator associated with the charging pump oil cooler.

The inspectors noted that these flow balance tests were accomplished with Unit 2 Train A secured which was not conservative with respect to the design basis accident. Worst case conditions should assume Unit 2 Train A providing unit cooldown loads during the operation of Unit 1 Train A to mitigate accident conditions. This in effect would reduce the net positive suction head for Unit 1 Train A. The inspectors considered that testing should reflect this condition. The licensee stated that on January 28, 1986, another flow balance would be performed and that Train 2A would service necessary cooldown loads for Unit 2 during this test.

In conjunction with resolution of the degraded flow conditions reflected in the service water Train 1A flow balance testing, the licensee had requested that Westinghouse perform an analysis to determine new acceptable minimum values of service water flow through containment spray and component cooling water heat exchangers. The licensee was considering that a throttling back of these two major heat exchangers would result in a higher RN header pressure thus providing increased flow thru the smaller essential heat exchangers. A Westinghouse calculation was forwarded to Duke Power Company in January 1986 which demonstrated that, with service water flow through the component cooling water heat exchanger reduced to 6000 gpm and service water flow through the containment spray heat exchanger reduced to 3800 gpm, peak containment pressure would remain below the containment design value of 15 psig during a LOCA.

On January 28, 1986, a third nuclear service water flow balance test was accomplished on train 1A. This test provided for reduced target flow values of 6000 GPM through the component cooling water heat exchanger and 3800 gpm through the containment spray heat exchanger which the licensee considered to be acceptable target values based on the aforementioned Westinghouse calculation. This flow balance test was performed under the same conditions as the January 27, 1986 test with the exception that Train 2A was aligned to provide a cooldown load of greater than or equal to 6000 gpm for Unit 2, the flow instrument for the charging pump oil cooler had been replaced, and the RN system took suction only from the SNSWP. The results of this test are delineated in Table 2. The result of this test demonstrated that flow values through all heat exchangers were within the new acceptable values established by the licensee within the operability statement of January 14, 1986. On March 11, 1986, the licensee made a 10 CFR 50.72 notification to the NRC stating that, prior to January 27, 1986, the RN system for both units had never been tested under the requisite accident conditions with all RN being supplied by the SNSWP. Apparently after addressing both NRC and DPC engineering concerns regarding the desired RN flow test system configuration, the licensee later realized that the preoperational test configuration had not tested the system under the design basis accident configuration. The aforementioned event represents another example of a violation of 10 CFR 50, Appendix B, Criterion XI (369/85-38-01, 370/85-39-01).

The NRC later learned from the licensee that during the establishment of the flow test system configuration on January 28, 1986, the RN system entered a pressure transient. While base loading the RN pumps (gradually placing requisite heat exchangers on the line), a significant decrease in RN header pressure was experienced. This event was not allowed to go full term and was terminated by throttling down on large component flows. The test was repeated with the throttled valve positions and acceptable results were obtained. On March 12, 1986, NRC Region II learned of the January 28 flow transient shortly after DPC management had been informed of it. The NRC expressed concern regarding the transient since it suggests that, under actual accident conditions, the RN system's pumps could have lost net positive suction head resulting in a loss of the ultimate heat sink for both units. This concern is further addressed in Section 10 of this report.

The Nuclear Service Water Train 1B flow balance test was conducted on January 30, 1986, with the same test methodology utilized for the January 28, 1986 flow balance test for Train 1A. The results of this test are delineated in Table 3. The results of this test demonstrated that established operability values could not be obtained for the Spent Fuel Pool Pump Room Air Handling Unit (5% degraded) and the Residual Heat Removal Pump Room Air Handling Unit (1% degraded). The licensee was advised by the NRC that prior to establishing Train 1B as being fully operable, these degraded conditions would require further evaluation and resolution.

TABLE 1

Results of Heat Exchanger Flows and Comparison to FSAR Target Values During Nuclear Service Water Train 1A Flow Balance Testing of December 17, 1985 and January 27, 1986.

| | | December 17, 1985 Data | | January 27, 1986 | |
|---|---|---|---|---|---|
| Heat Exchanger | Target Flow Rate (GPM) | Flow Rate (GPM) | Header Pressure (psig) | Flow Rate (GPM) | Header Pressure (psig) |
| 1. Component Cooling Water | 8000 | 8000 | 67.5 | 8000 | 56 |
| 2. Containment Spray | 5000 | 4800 | 67.5 | 4887 | 56 |
| 3. Diesel Generator Cooling Water | 900 | 900 | 67.5 | 830 | 56 |
| 4. Control Room Chiller | 789 | 707 | 67.5 | 785 | 56 |
| 5. Charging Pump Oil Cooler | 28 | 15 | 67.5 | 3 | 56 |
| 6. Safety Injection Pump Oil Cooler | 20 | 21 | 67.5 | 17 | 56 |
| 7. Spent fuel Pool Pump Air Handling Unit | 20 | 14.7 | 67.5 | 14 | 56 |
| 8. Containment Spray Pump Air Handling Unit | 45 | 20 | 67.5 | 20 | 56 |
| 9. Residual Heat Removal Pump Air Handling Unit | 45 | 51 | 67.5 | 52 | 56 |

TABLE 2

Results of Heat Exchanger Flows and Comparison to FSAR Target Values and Licensee Established Operability Values During Nuclear Service Water Train 1A Flow Balance Testing of January 28, 1986.

| Heat Exchanger | Target Flow From FSAR (GPM) | Licensee Established Operability Value for Flow (GPM) | January 28, 1986 DATA Flow Rate (GPM) | Header Pressure (psig) |
|---|---|---|---|---|
| 1 Component Cooling Water | 8000 | 6000+ | 6000 | 62.5 |
| 2. Containment Spray | 5000 | 3800+ | 3970 | 62.5 |
| 3. Diesel Generator Cooling Water | 900 | 900 | 950 | 62.5 |
| 4. Control Room Chiller | 789 | 789 | 946 | 62.5 |
| 5. Charging Pump Oil Cooler | 28 | 15 | 22 | 62.5 |
| 6. Safety Injection Pump Oil Cooler | 20 | 20 | 23 | 62.5 |
| 7. Spent fuel Pool Pump Air Handling Unit | 20 | 14.7 | 19 | 62.5 |
| 8. Containment Spray Pump Air Handling Unit | 45 | 20.0 | 23.5 | 62.5 |
| 9. Residual Heat Removal Pump Air Handling Unit | 45 | 45.0 | 64.5 | 62.5 |

+Based on assumption that Containment Spray Heat Exchanger Thermal Efficiency is greater than or equal to 70%. Thermal performance data reflects it is currently 74.7% and past history indicates degradation will increase due to fouling.

TABLE 3

Results of Heat Exchanger Flows and Comparison to FSAR Target Values and Licensee Established Operability Values During Nuclear Service Water Train 1B Flow Balance Testing of January 30, 1986.

| Heat Exchanger | Target Flow From FSAR (GPM) | Licensee Established Operability Value for Flow (GPM) | January 28, 1986 DATA Flow Rate (GPM) | Header Pressure (psig) |
|---|---|---|---|---|
| 1 Component Cooling Water | 8000 | 6000+ | 6900 | 52 |
| 2. Containment Spray | 5000 | 3800+ | 5000 | 52 |
| 3. Diesel Generator Cooling Water | 900 | 900 | 920 | 52 |
| 4. Control Room Chiller * | 789 | 789 | 912 | 52 |
| 5. Charging Pump Oil Cooler | 28 | 15 | 20 | 52 |
| 6. Safety Injection Pump Oil Cooler | 20 | 20 | 28.2 | 52 |
| 7. Spent fuel Pool Pump Air Handling Unit | 20 | 14.7 | 14 | 52 |
| 8. Containment Spray Pump Air Handling Unit | 45 | 20.0 | 46 | 52 |
| 9. Residual Heat Removal Pump Air Handling Unit | 45 | 45.0 | 44.5 | 52 |

+Based on assumption that Containment Spray Heat Exchanger Thermal Efficiency is greater than or equal to 70%. Thermal performance data reflects it is currently 74.7% and past history indicates degradation will increase due to fouling.

Following performance of the nuclear service water train 1A flow balance test of January 28, 1986, the inspector observed a train 1A Diesel Generator operability test. During performance of this test, the inspectors noted that the flow indicator for service water flow through the diesel generator cooling water heat exchanger was off scale high (greater than 1000 gallons per minute) rather than indicating an expected value of 900 gallons per minute. Interviews with licensee personnel who had performed the earlier Train 1A flow balance test reflected that, during test restoration, valve 1RN73A was left in the test position rather than being returned to the normal position. The test position for this valve is "throttled to 900 gallons per minute in the test lineup configuration". The normal position for this valve is "throttled to 900 gallons per minute in the normal lineup configuration." Since the normal RN system lineup configuration isolates the large engineered safety feature loads, RN header pressure was increased which resulted in greater flow through those valves which were not throttled back from the test position. Failure to restore valve 1RN73A to its normal position is contrary to step 12.8 of procedure TT/1/A/9100/105 and is a third example of a violation for failure to properly implement procedures (369/85-38-02, 370/85-39-02).

The inspectors noted that restoration of the 1A train service water diesel generator heat exchanger outlet isolation valve (1RN73A) and the 1A train service water containment spray heat exchanger outlet isolation valve (IRN137A) to their normal throttled positions could result in insufficient nuclear service water flow being supplied to the diesel generator heat exchanger and containment spray heat exchanger when the containment spray heat exchanger is placed on line during transfer to cold leg recirculation unless specific operator actions were taken to ensure proper flow through these heat exchangers. A review of the emergency operating procedures for safety injection (EP/1/A/5000/01, EP/2/A/5000/01) and for transfer to cold leg recirculation (EP/1/A/5000/2.3, EP/2/A/5000/2.3) reflected that provisions were not established to assure proper service flow through the diesel generator cooling water heat exchanger and containment spray heat exchanger when these component were required during accident conditions. These inadequacies in the emergency operating procedures are considered a fourth example of violation 369/85-38-02, 370/85-39-02, failure to properly establish and implement procedures.

During the course of this inspection, test procedure TT/1/A/9100/105, RN Train 1A Flow Verification, was revised, and test procedure TT/1/A/9100/107, RN Train 1B Flow Verification, was written to leave the service water outlet isolation valve to the containment spray heat exchangers in the tested throttle position. Additionally, licensee actions were initiated to revise emergency operating procedures EP/1/A/5000/01, EP/2/A/5000/01, EP/1/A/5000/2.3, EP/2/A/5000/2.3 in order to establish adequate service water flow through the diesel generator heat exchanger and containment spray heat exchanger, during safety injection and transfer to cold leg recirculation.

9. Changes to the McGuire Containment Pressure Response Model

During the course of the licensee's engineering evaluations to justify the apparent RN system degradation, many changes were made to the input parameters used in the McGuire containment pressure response model.

The following parameters have significant effect on peak containment pressure:

- ice mass
- NS and KC heat exchanger UAs
- NS and KC heat exchanger tube and shell flows
- mass and energy releases into containment
- auxiliary containment spray flow
- auxiliary containment spray actuation time
- active containment sump volume

Table 4 provides a chronology of these parameters and when each parameter was changed by Duke. Some values such as active containment sump are based on engineering judgement by Duke since calculations have not been completed to justify the value.

TABLE 4

McGuire Containment Pressure Response Model Changes

| Parameter | 10/31 | 11/28 | 1/17 | 1/28 |
|---|---|---|---|---|
| Ice Mass (millions of LBM) | 2.220 | 2.220 | 2.220 | 2.220 |
| NS HX UA (millions of BTU/HR-°F) | 1.86 | 0.735 | 0.735 | 2.03 |
| KC HX UA (millions of BTU/HR-°F) | 5.00 | 5.00 | 5.00 | 2.98 |
| NS/RN Flow (GPM) | 5000 | 5000 | 4800 | 3800 |
| KC/RN Flow (GPM) | 8000 | 8000 | 8000 | 6000 |
| Mass and Energy Release Model (year) | 1974 | 1979 | 1979 | 1979 |
| ND Containment Spray Flow (GPM) | 1623 | 1623 | 1841 | 1841 |
| ND Containment Spray Actuation Time (SEC) | 3000 | 3000 | 3000 | 3000 |

| | | | | |
|---|---|---|---|---|
| Active Containment Sump Volume ($FT^3$) | 46,500 | 46,500 | 90,000 | 90,000 |
| Peak Pressure (Psig) | 13.3 | 14.42 | 14.45 | 12.7 |

10. RN System Walkdown

The inspectors conducted a detailed walkdown of portions of the Unit 1 Nuclear Service Water System. The inspectors reviewed the system operating procedures, the valve checklist procedure and the system piping drawings. The inspection was conducted to confirm that procedural valve lineups and drawings matched the as-built configurations, to verify that equipment conditions were satisfactory and items that might degrade performance were identified and evaluated, to verify that valves were in proper positions and locked if appropriate, and to verify that instrumentation was properly valved in.

The inspectors made the following observations. Valves 1RN 893 and 1RN 894, the inlets to the 1A1 and 1A2 Diesel generator Air Dryer and after dryer respectively, were mislabeled. Valve 1RN894 was labeled as 1RN893. The Nuclear Service Water System valve checklist correctly described these valves and the licensee made arrangements to correct the label plates on the valves prior to the inspector leaving the site.

The inspector noted slight inaccuracies in the system piping diagrams, in that relief valve 1RN-295 is located upstream of flow element 5360 as opposed to downstream as indicated on DWG MC-1574-2.0 and vent valve 1RN141 is located upstream of flow element 5930 as opposed to downstream of the flow element as indicated on DWG MC-1574-2.0. The licensee made arrangements to correct these inaccuracies prior to the inspectors leaving the site.

11. Details of NRC/DPC Management Meeting Held on March 14, 1986

a. Attendance at the Duke - NRC Management Conference on March 14, 1986, held at DPC's request at the NRC's Region II Office included:

Duke Power Company

G. Vaughn, General Manager, Nuclear Stations
T. L. McConnell, McGuire Nuclear Station Manager
W. A. Haller, Manager, Technical Services
R. L. Gill, McGuire Licensing
B. H. Hamilton, McGuire Superintendent of Technical Services
J. E. Snyder, Supervising Engineer
E. O. McCraw, Compliance Engineer
W. J. Kronenwetter, Design Engineer
R. W. Revels, Design Engineer
W. M. Suslick, Associate Engineer

Nuclear Regulatory Commission

R. D. Walker, Deputy Regional Administrator
A. F. Gibson, Director, Division of Reactor Safety
C. A. Julian, Chief, Operations Branch
B. T. Debs, Acting, Chief, Operational Programs Section
M. V. Sinkule, Chief, Reactor Projects Section
F. R. McCoy, Reactor Engineer
W. T. Orders, Senior Resident Inspector, McGuire
C. W. Burger, Project Inspector
C. L. Vanderniet, Reactor Engineer

b. Members of the Duke Power Company staff met with members of the NRC Region II staff to discuss the status of the McGuire Units 1 and 2 Nuclear Service Water System. A copy of the meeting agenda and DPC handouts appear as Attachments 1, 2, and 3 to this inspection report. DPC representatives stated that, from the information available to the DPC staff, the Nuclear Service Water System had been and is currently operable. The NRC staff acknowledged that, once the NRC had surfaced concerns regarding the Nuclear Service Water System, the licensee has placed extensive resources on solving the problem.

As a result of the aforementioned meeting, NRC representatives contacted DPC staff on March 24, 1986, to request additional information. DPC staff agreed to formally submit a response by April 25, 1986, regarding the following seven requested items.

- Provide the as-found and as-left RN flow balance test results for all RN trains.

- Provide the as-found and as-left UA test results for all containment spray heat exchangers.

- Provide an RN operability determination for early October 1985 when RN flow was recorded as 800 GPM to the 1A containment spray heat exchangers.

- Provide safety evaluation of the January 28, 1986 RN header pressure transient.

- Provide an RN operability determination based on the 1A containment spray heat exchanger throttle valve setting which existed just prior to the first heat transfer test and based on expected flow under accident conditions prior to heat exchanger cleaning cycles.

- Provide the final parameters for use in the LOTIC program and their engineering basis.

- Provide DPC plans to prevent a recurrence of these events.

By memo of April 25, 1986, Duke Power Company responded to these requests. The responses contend that the RN system was continuously operable. Inspectors will follow up on this information during a future inspection.

The resolution of these matters represents unresolved item (369/85-38-06, 370/85-39-06).

12. General Conclusions

During the operating history of the McGuire plant, the licensee has experienced an increasing degradation of the RN system. It is apparent that the licensee has dealt with this situation on a case-by-case basis. Until prompted by the NRC, the licensee had not determined the full extent of the RN system degradation or taken adequate corrective action to preclude repetition. Although the licensee has recently dedicated significant resources to addressing the problem, serious doubt exists regarding the past operability of the RN system and those safety related systems, such as containment spray, for which RN is an ancillary system. This doubt is fostered as a result of aggregate observations of significantly reduced heat transfer capability of various safety related heat exchangers, reduced RN flows, improper throttle valve settings, increased corrosion, and lack of adequate preoperational testing. This situation is contrary to 10 CFR 50, Appendix B, Criterion XVI which requires that measures shall be established to assure that conditions adverse to quality, such as failures, malfunctions, deficiencies, deviations, defective material and equipment, and nonconformances are promptly identified and corrected. In the case of significant conditions adverse to quality, the measures shall assure that the cause of the condition is determined and corrective action taken to preclude repetition. The identification of the significant condition adverse to quality, the cause of the condition, and the corrective action taken shall be documented and reported to appropriate levels of management. The licensee's failure to meet these requirements, in the case of the RN system, is a violation (369/85-38-05, 370/85-39-05).

ATTACHMENT 1

DUKE POWER/NRC REGION II

MEETING TO DISCUSS McGUIRE NUCLEAR STATION
NUCLEAR SERVICE WATER SYSTEM PERFORMANCE

MARCH 14, 1986

AGENDA

| | |
|---|---|
| • OPENING REMARKS | GERALD VAUGHN |
| • OVERVIEW OF NUCLEAR SERVICE WATER SYSTEM | NEAL McCRAW |
| • NUCLEAR SERVICE WATER SYSTEM EXPERIENCE | TONY McCONNELL |
| • RECENT OPERATIONAL EXPERIENCE (10/04/85 TO PRESENT) | BILL SUSLICK |
| • DESIGN CONSERVATISMS | BILL KRONENWETTER |
| • CLOSING REMARKS | GERALD VAUGHN |

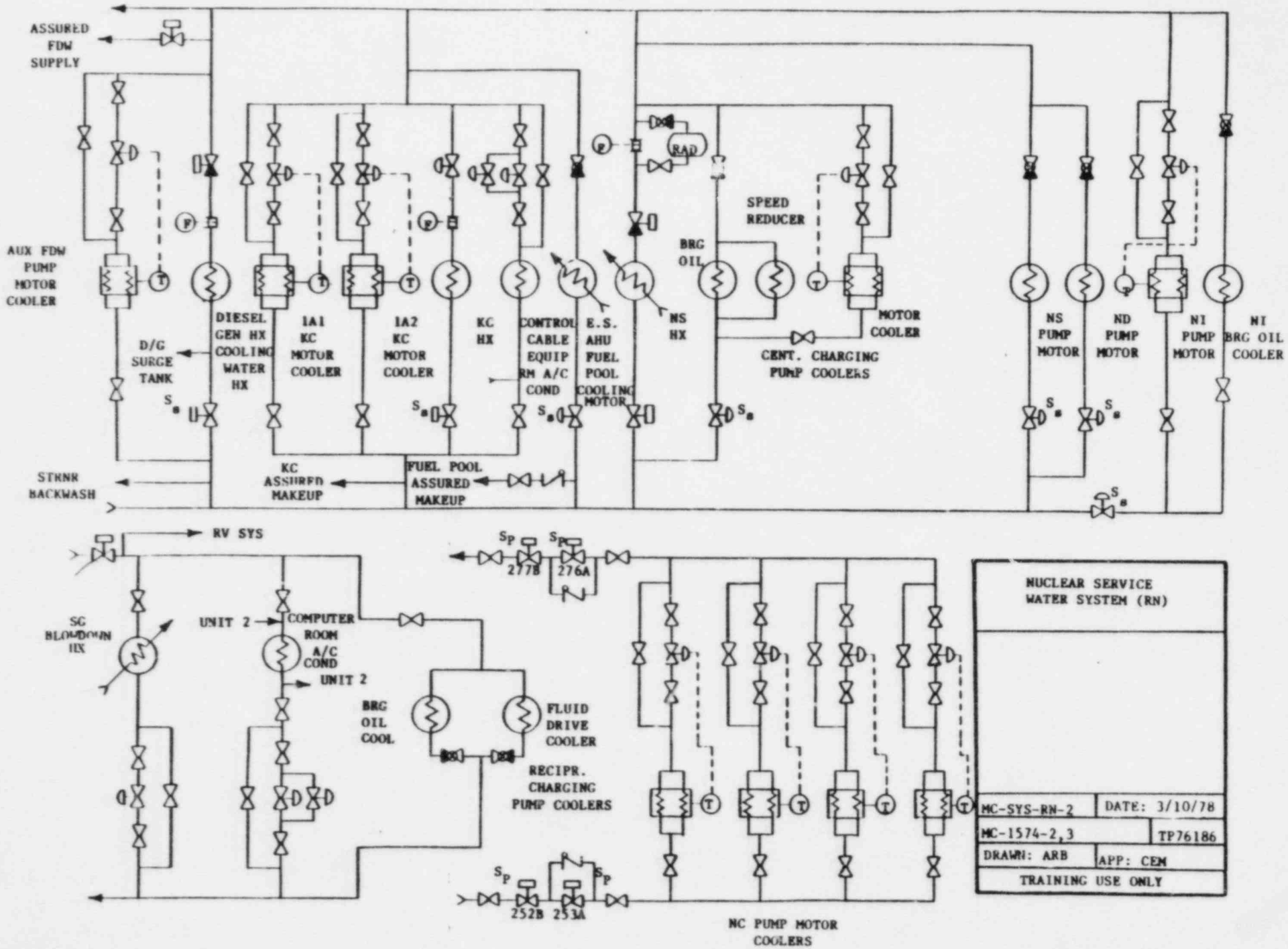
ASSURED FDW SUPPLY
AUX FDW PUMP MOTOR COOLER
D/G SURGE TANK
DIESEL GEN HX COOLING WATER HX
1A1 KC MOTOR COOLER
1A2 KC MOTOR COOLER
KC HX
CONTROL CABLE EQUIP RM A/C COND
E.S. AHU FUEL POOL COOLING MOTOR
NS HX
RAD
BRG OIL
SPEED REDUCER
MOTOR COOLER
CENT. CHARGING PUMP COOLERS
NS PUMP MOTOR
ND PUMP MOTOR
NI PUMP MOTOR
NI BRG OIL COOLER
STRNR BACKWASH
KC ASSURED MAKEUP
FUEL POOL ASSURED MAKEUP
RV SYS
SG BLOWDOWN HX
UNIT 2
COMPUTER ROOM A/C COND
UNIT 2
BRG OIL COOL
FLUID DRIVE COOLER
RECIPR. CHARGING PUMP COOLERS
277B
276A
252B
253A
NC PUMP MOTOR COOLERS
NUCLEAR SERVICE WATER SYSTEM (RN)
MC-SYS-RN-2
DATE: 3/10/78
MC-1574-2,3
TP76186
DRAWN: ARB
APP: CEM
TRAINING USE ONLY

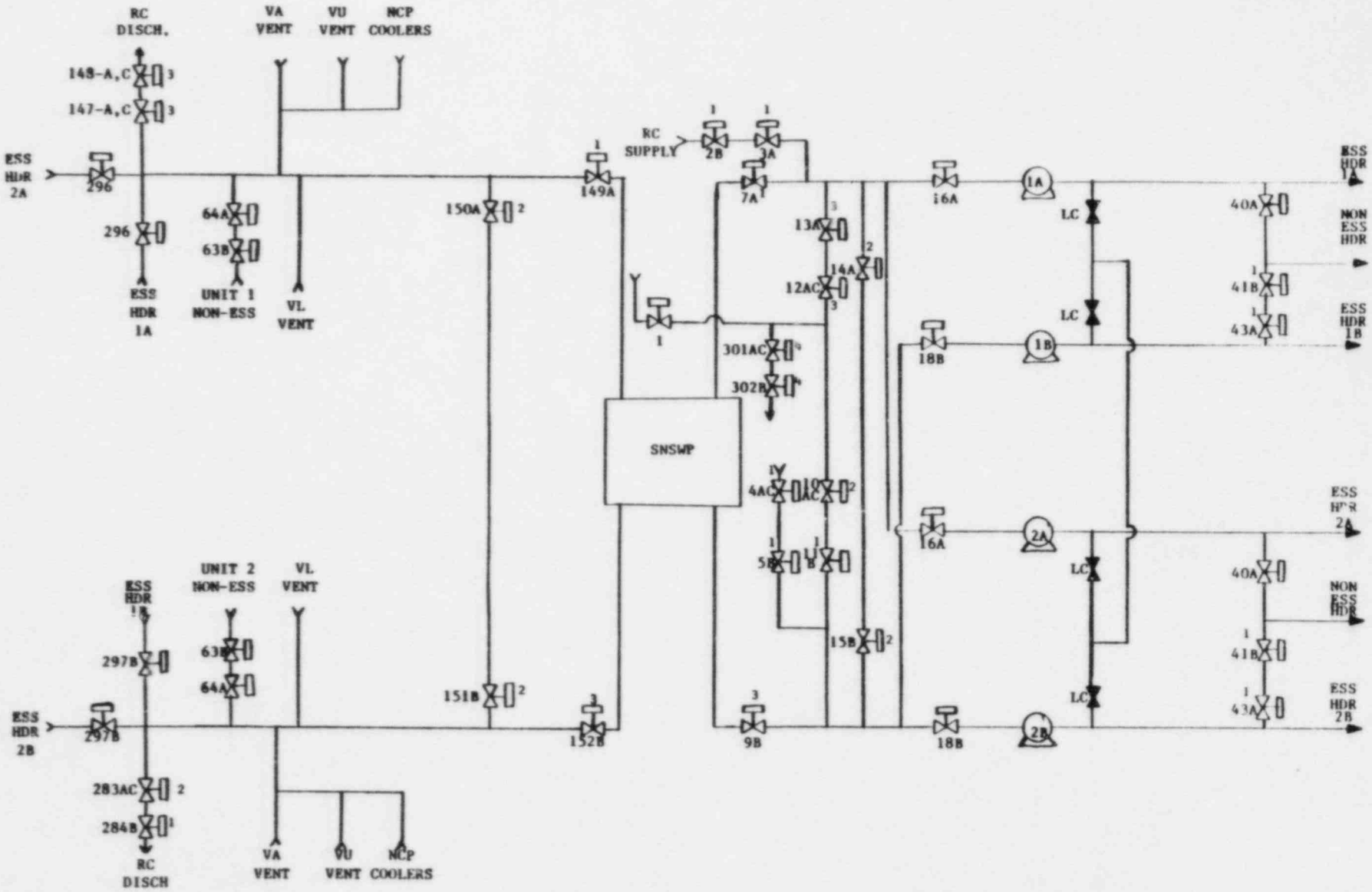


| | | | |
|---|---|---|---|
| NUCLEAR SERVICE WATER SYSTEM (RN) | 1. AUTO CLOSE ON UNIT 1 OR 2 $S_B$ OR BLACKOUT.<br>2. AUTO CLOSE ON UNIT 1 OR 2 $S_B$.<br>3. AUTO OPEN ON UNIT 1 OR 2 $S_B$ OR BLACKOUT.<br>4. AUTO CLOSE ON UNIT 1 OR UNIT 2 HIHI CONTAINMENT PRESSURE. | MC-SYS-RN-14 | DATE: 2-1-83 |
| | | REF: MC-1574, 2574 | |
| | | DRAWN: DWA | APP: DWA |
| | | TRAINING USE ONLY | |

# NUCLEAR SERVICE WATER SYSTEM EXPERIENCE

## I. ESTABLISHMENT OF BASIS FOR RN SYSTEM OPERABILITY

- RN SYSTEM PRE-OPERATION FUNCTIONAL TEST COMPLETION DATES

  7/25/79 - UNIT 1
  11/12/82 - UNIT 2

- NRC PRE-OPERATIONAL INSPECTION DATES COVERING RN SYSTEM TESTING

  11/03/78 - UNIT 1 INSPECTION REPORT 369/78-33
  8/16/83 - UNIT 2 INSPECTION REPORT 370/82-19

- SURVEILLANCE TESTING IMPLEMENTATION DATES

  1/06/80 - UNIT 1, TRAIN A
  2/06/80 - UNIT 1, TRAIN B
  2/22/83 - UNIT 2, TRAIN B
  2/23/83 - UNIT 2, TRAIN A

  IWV AND IWP TESTING WOULD HAVE BEEN IMPLEMENTED DURING THESE TIME FRAMES.

- THE PRE-OPERATIONAL TESTS, IWP TESTS, IWV TESTS AND ESF TESTS WERE OUR STANDARDS FOR ESTABLISHING AND MAINTAINING RN SYSTEM OPERABILITY.

## II. MAINTENANCE OF COMPONENTS BASED ON MONITORING OF OPERATIONAL PARAMETERS

- REFER TO LIST OF EQUIPMENT CLEANINGS

- PERFORMANCE MONITORING PROGRAM BEGAN DEVELOPMENT IN MARCH, 1984

III. BEGAN EVALUATING RN SYSTEM HX'S FOR FOULING EVEN THOUGH THERE WERE NO INDICATIONS OF FOULING

- DATE WHEN UNIT 1 COMPONENT COOLING (KC) HX'S WERE EVALUATED FOR FOULING WITHOUT INDICATIONS OF A FOULING PROBLEM

  9/01/84

- DATE WHEN KC HX'S WERE CLEANED

  11/84 - UNIT 1
  6/85 - 7/85 - UNIT 2

- EVALUATION AND INSPECTION/CLEANING DID NOT DETERMINE THAT KC HX'S WERE INOPERABLE

IV. RN SYSTEM OPERABILITY REEVALUATION BASED ON 1A RN PUMP TEST RESULTS

- DATE WHEN A FLOW MEASUREMENT PROBLEM ON 1A RN PUMP WAS IDENTIFIED

  10/04/85

- A REEVALUATION OF OPERABILITY CRITERIA WAS BEGUN TO REFOCUS OPERABILITY CONCERNS FROM THE RN PUMP TO THE RN SYSTEM AS A WHOLE

V. ACTION ITEMS RESULTING FROM REEVALUATION OF RN SYSTEM OPERABILITY CRITERIA

- BEGAN THE PERFORMANCE MONITORING PROGRAM ON RN HX'S ON 11/01/85

- THE RN SYSTEM TESTING PLAN WAS SUBMITTED TO REGION II ON 12/01/85

- THE UPDATED RN SYSTEM TESTING PLAN WAS SUBMITTED TO REGION II TO INCLUDE TESTING OF ALL 62 RN HX'S AND RESOLVE 1A RN PUMP FLOW INDICATION PROBLEM ON 12/18/85

NOTE: IN ALL THE TESTING AND ANALYSIS DONE IN 1985, WE DID NOT DETERMINE THAT ANY OF THE HX'S EVALUATED WERE INOPERABLE.

# EQUIPMENT CLEANINGS

- LOWER CONTAINMENT VENTILATION HX FOULING WAS IDENTIFIED AS ONE OF THE FACTORS IN THE LOWER CONTAINMENT COOLING PROBLEM

  10/22/82

  NOTE: (A) FOULING OCCURRED AT LAKE TURNOVER IN THE FALL. ONLY TIME WE HAD TO CLEAN.
  (B) BIOFOULING WAS EVIDENT DUE TO HOT AIR ON SHELL SIDE.

- CONTROL ROOM VENTILATION (SHARED BETWEEN UNITS 1 AND 2)

| TRAIN A | TRAIN B |
|---|---|
| 11/19/82 | 3/83 |
| 10/03/83 | 1/07/85 |
| 12/19/83 | 10/21/85 |
| 5/30/84 | 11/05/85 |
| 10/31/84 | |
| 9/25/85 | |
| 10/24/85 | |
| 10/31/85 | |

- PENETRANT/DISPERSANT ADDED TO THE RN SYSTEM IN ATTEMPT TO CLEAN LOWER CONTAINMENT COOLING UNITS

  4/27/83

- REACTOR COOLANT PUMP MOTOR COOLERS

| UNIT 1 | UNIT 2 |
|---|---|
| 12/31/84 | 8/10/84 |
| | 11/08/85 |

ATTACHMENT 2

ASSUMPTIONS

1. ALL SAFETY RELATED EQUIPMENT REQUIRE FLOWS CONCURRENTLY THROUGHOUT DESIGN BASIS EVENT.

2. HEAT EXCHANGERS DESIGNED FOR MAXIMUM POND TEMPERATURE OF $95^{o}F$.

FLOW AND FOULING DESIGN MARGIN

AFFECTS ON CONTAINMENT PEAK PRESSURE

(CONTAINMENT DESIGN = 14.9 PSIG)

| | NS Hx UA ($x10^{-6}$ BTU/HR-°F) | KC Hx UA ($x10^{-6}$ BTU/HR-°F) | RN FLOW TO NS Hx (GPM) | RN FLOW TO KC Hx (GPM) | PEAK CONT. PRESSURE (PSIG) |
|---|---|---|---|---|---|
| CLEAN HEAT TRANSFER COEFFICIENT | 5.18 | 8.11 | 5000 | 8000 | - |
| DESIGN (FSAR) | 2.94 | 5.00 | 5000 | 8000 | 12.36 |
| 75% NS DEGRADED FROM DESIGN | 0.735 | 5.00 | 5000 | 8000 | 14.42 |
| REDUCED FLOWS AND DEGRADED HXs | 1.47 | 2.98 | 3800 | 6000 | 13.59 |

Q = UA (LMTD)
U = (FOULING, FLOW)

NUCLEAR SERVICE WATER

ESSENTIAL COMPONENT FLOW REQUIREMENTS

| COMPONENT | DESIGN FLOWS (FSAR) | PRESENT ACCEPTANCE FLOWS |
|---|---|---|
| KD Hx | 900 | 900 |
| KC Hx | 8000 | 6000 |
| NS Hx | 5000 | 3800 |
| VC/YC Condenser | 775 | 775 |
| KF ES Cooler | 20 | 15 |
| NS ES Cooler | 45 | 20 |
| ND ES COOLER | 45 | 20 |
| NV Pump Coolers | 28 | 15 |
| NI PUMP COOLER | 20 | 20 |

## ADDITIONAL DESIGN MARGINS

1. LOWER SNSW POND TEMPERATURE

2. HIGHER ICE WEIGHT

3. LOWER RWST TEMPERATURE

ATTACHMENT 3

## PERFORMANCE MONITORING PROGRAM

* Reliability, Efficiency and Availability
* Monitors the overall health of equipment
* Development begun in March, 1984
* Tangible results already being realized

NUCLEAR SERVICE WATER PUMP (RN) 1A

* RN Pump 1A did not meet its quarterly IWP acceptance criteria (10/4/85)

* Replaced impeller (10/5 - 10/6/85)

* Performed new pump head curve/IWP baseline test (10/7/85)

* Troubleshooting

* Evaluated the pump acceptance criteria based on the actual system demand

* Conducted the pump head curve using the 2A and 1A KC flow elements in series with the 1A RN flow element

* Using the most conservative head curve results 1A RN pump was declared operable (10/11/85)

* Optimum replacement was a calibrated 84" flanged spool-piece with a 0.831 beta ratio orifice

* Installation (February 26-28,1986)

* 1A RN Pump head curve conducted with new flow element (March 3, 1986)

** Summary - The pump was never inoperable, fouling of the flow element resulted in errors in the conservative direction.

RN PUMP 1A DYNAMIC HEAD VS. FLOWRATE

JOHN R. PRINC 3-4-86

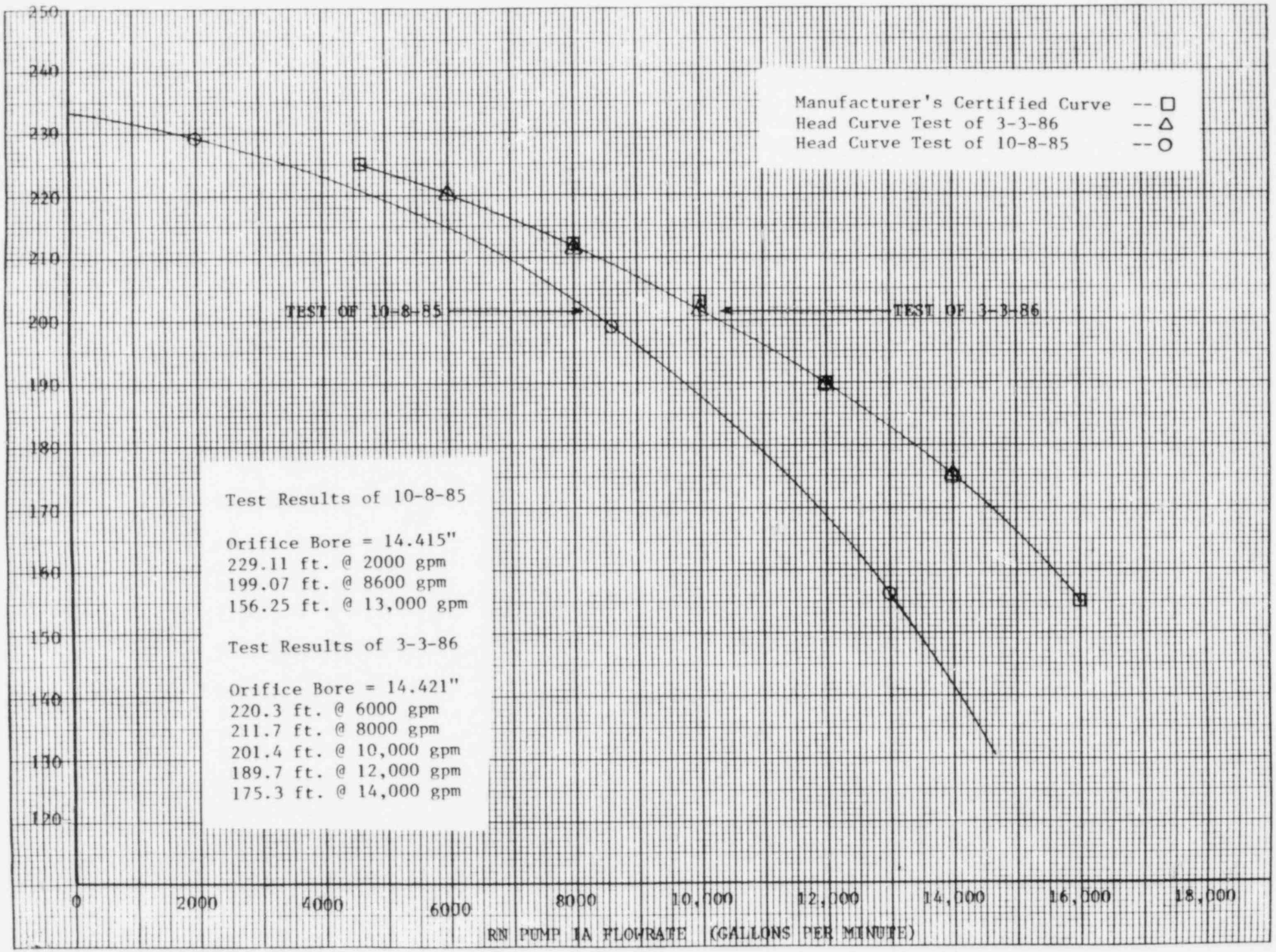

## CONTAINMENT SPRAY (NS) HEAT EXCHANGER

* 1A NS Heat Exchanger had a high differential pressure

* Commission expressed concerns of biological attack of stainless steel tubes

* Testing Performed:
  1. Structural Integrity Test
  2. Minute Leakage Test
  3. Heat Balance Test

* Structural Integrity and Minute Leakage Test indicated insignificant leakage

* Visual Examination of the tubes

* Heat Balance Testing quantified the extent fouling had occurred

* Peak Containment Accident Pressure (LOTIC) calculations showed the heat exchanger could still perform its function

* Cleaning iterations

* Tested and cleaned the other NS heat exchangers based on 1A experience

** Summary:
  1. NS Heat Exchangers are intact
  2. The NS Heat Exchangers were fouled; however reanalysis proved operability

Containment Spray Heat Exchanger Testing

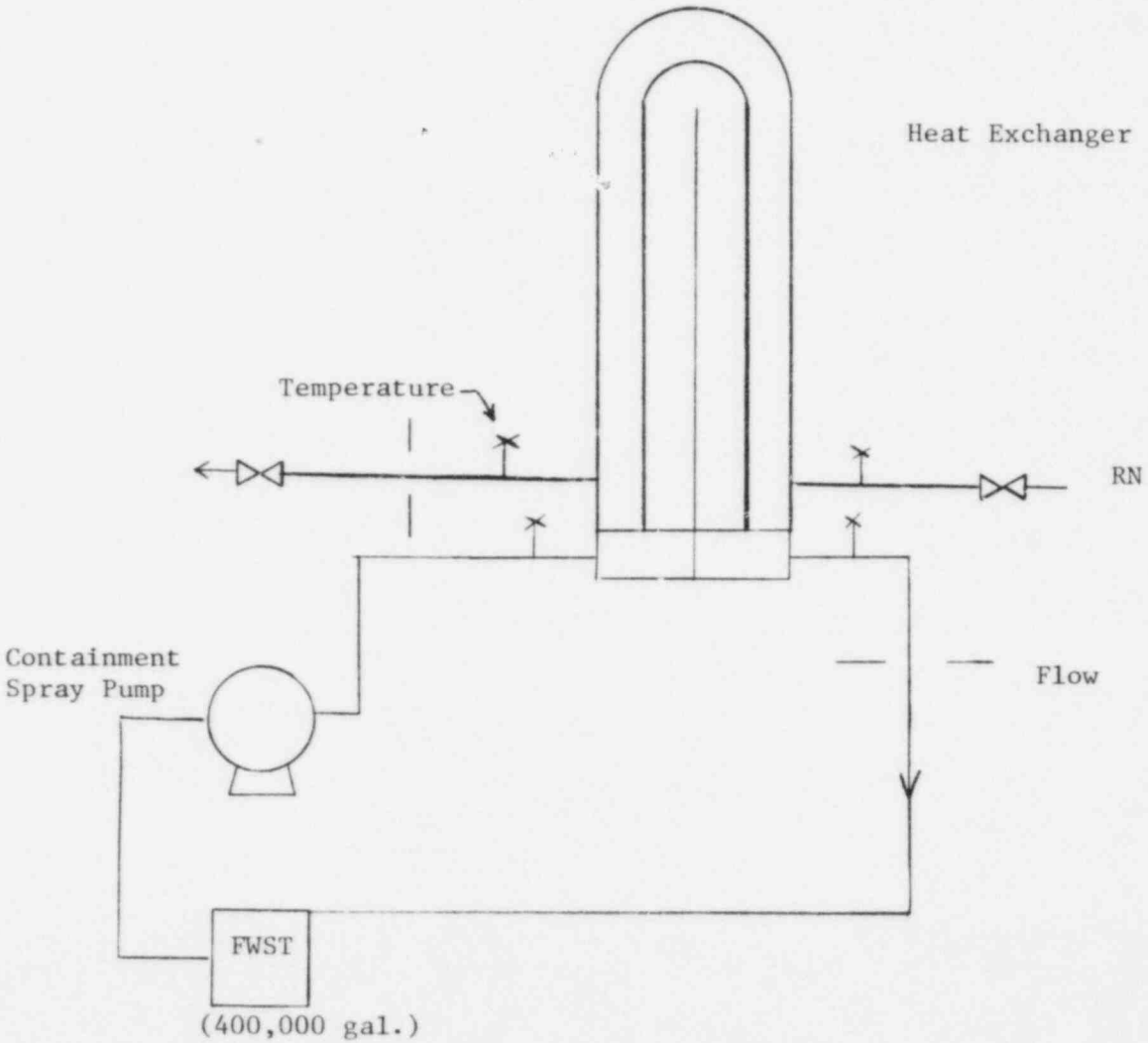

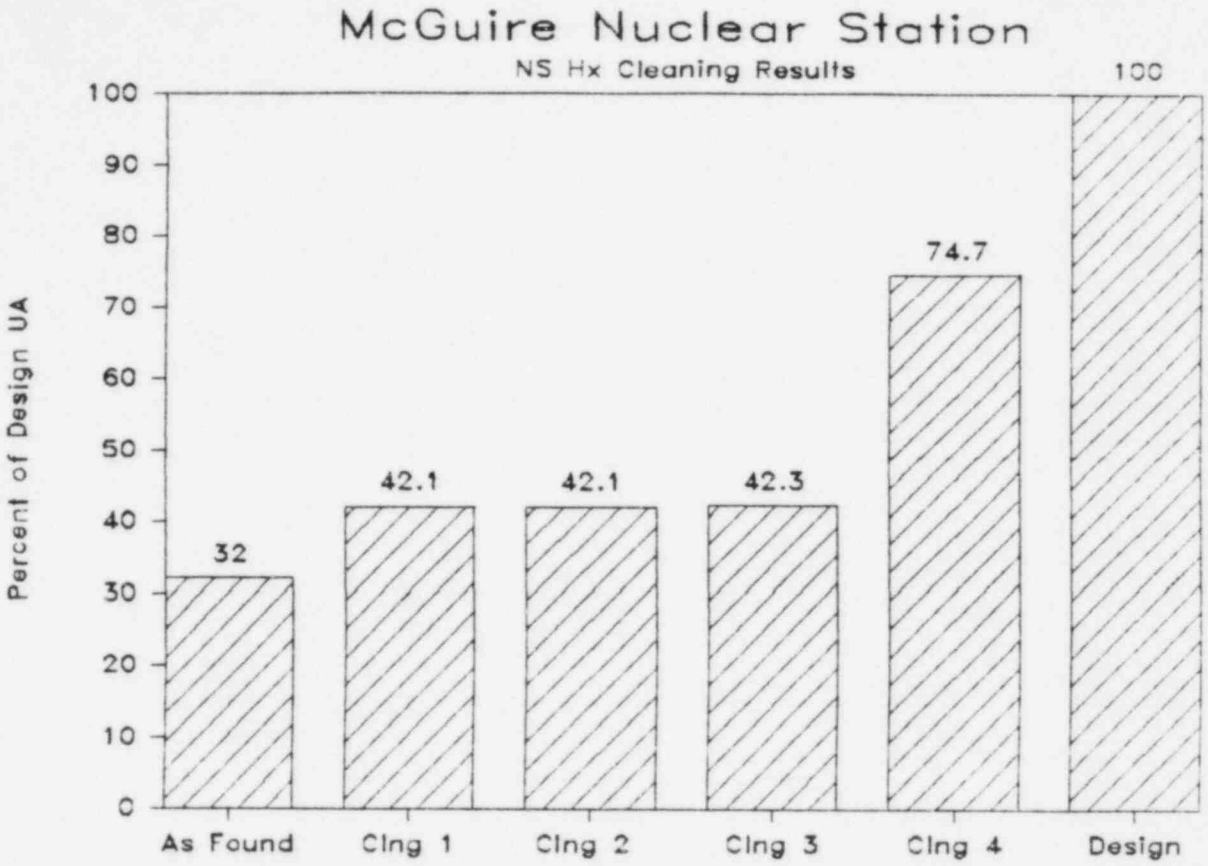
McGuire Nuclear Station
NS Hx Cleaning Results
Percent of Design UA
100
90
80
70
60
50
40
30
20
10
0
32
42.1
42.1
42.3
74.7
100
As Found
Clng 1
Clng 2
Clng 3
Clng 4
Design

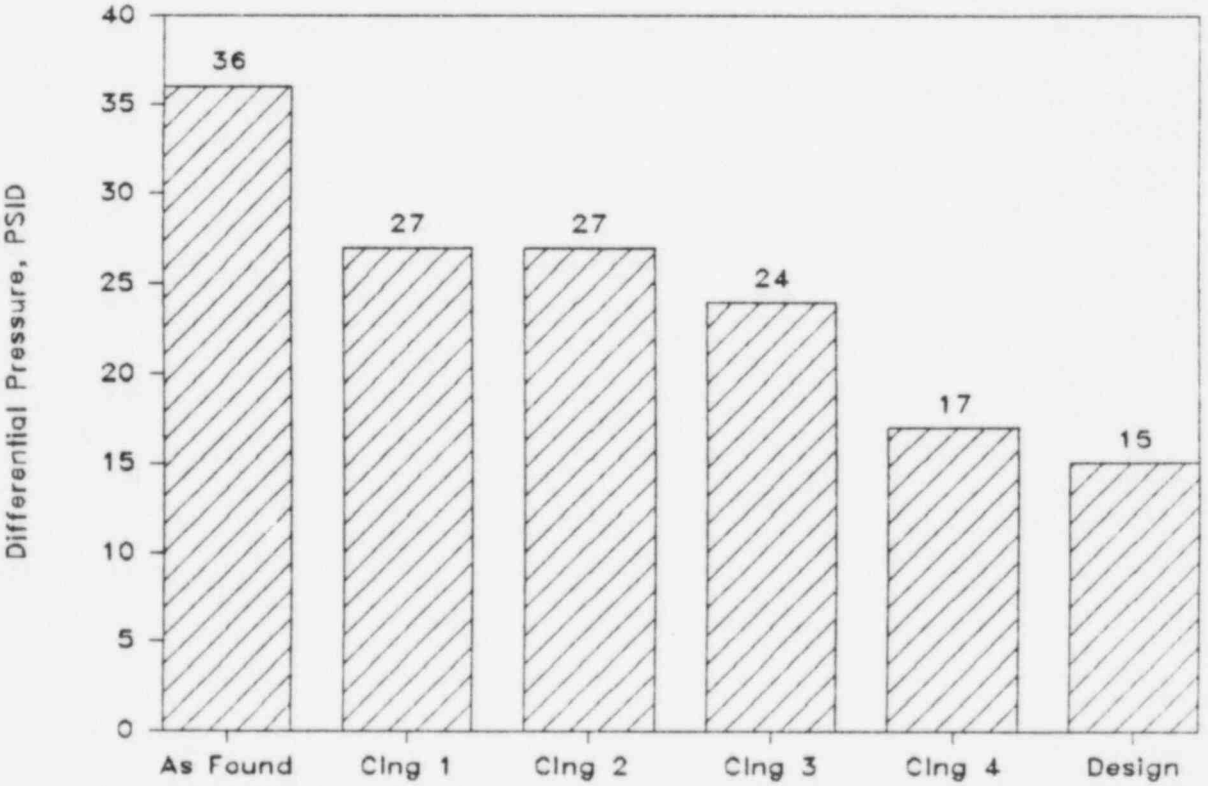
Differential Pressure, PSID
40
35
30
25
20
15
10
5
0
36
27
27
24
17
15
As Found
Clng 1
Clng 2
Clng 3
Clng 4
Design

OTHER HEAT EXCHANGERS and FLOW BALANCE

* Began evaluation and procedure generation for testing essential heat exchangers (10/24/85)

* 1A Train RN flow balance performed aligned to low level intake (12/17/85)

* 1A NV Pump Speed Reducer Oil Cooler cleaned (12/20/85)

* Conducted test using NSWP as suction (1/27/86)

* Inadequate flow to some heat exchangers

* Reanalyzed the necessary flow rates to the KC and NS heat exchangers

* Design review of alignment configuration to properly conduct flow balance to meet all design assumptions

* Conducted the 1A Train flow balance throttling flow to the KC and NS heat exchangers, aligned to NSWP with 6000 gpm supplied to other unit(1/28/86)

* Performed other flow balances (1/30 - 2/28/86)

* Began extensive cleaning, testing and inspections of all essential heat exchangers (2/3/86)
  Total Cleaned/Tested/Inspected: 54
  Total Number of Heat Exchangers: 62

** Summary:
  Cleaning and testing of all essential RN system components is on schedule to meet March 31, 1986 completion

ATTACHMENT 4

NRC Inspection Team Confirmatory UA Calculations

Calculations were performed to evaluate the containment spray heat exchanger UA value used in containment pressure calculations performed by Westinghouse for Duke Power on November 28, 1985 and January 17, 1986. The following nomenclature is used in the subsequent calculations:

Nomenclature

| | | |
|---|---|---|
| A | - | heat exchanger area |
| Di | - | tube inside diameter |
| Do | - | tube outside diameter |
| Fi | - | tube inside fouling factor |
| Fo | - | shell side fouling factor |
| $F_{oAPP}$ | - | appropriate shellside fouling factor |
| G | - | mass flux |
| hi | - | tube inside heat transfer coefficient |
| ho | - | shell side heat transfer coefficient |
| K | - | water thermal conductivity |
| $K_{ss}$ | - | stainless steel thermal conductivity |
| Pr | - | water Prandtl number |
| $Re_D$ | - | Reynolds Number $\frac{GD}{\mu}$ |
| $\sigma Fo$ | - | two standard deviation uncertainty in Fo |
| $\mu$ | - | liquid viscosity |

The UA design value for this heat exchanger is $2.95 \times 10^6$ Btu/h/°F while Duke provided Westinghouse with a degraded value of $7.35 \times 10^5$ Btu/h/°F, 24.9% of the design value. Experimentally determined UA (11/22/85) values indicated that the actual degraded value was ~$8.77 \times 10^5$ Btu/h/°F, 29.7% of the design value.

Confirmatory UA calculations were performed by initially determining a design heat transfer coefficient for the shell side of the heat exchanger. This was done by using design value fouling factors, and assuming that the tube side heat transfer was correctly predicted by the McAdams equation at the design conditions.

$$\frac{hiDi}{k} = 0.23\ Re_D^{.8}\ Pr^{1/3} \qquad (1)$$

The UA for the heat exchanger is

$$UA = \frac{A}{\frac{1}{h_o} + \frac{D_o}{Di}\frac{1}{hi} + F_i\frac{Do}{Di} + F_o + \frac{D_o}{2K_{ss}}\ln\frac{D_o}{Di}} \qquad (2)$$

For the design condition, all values (including UA) are known except $h_o$, which was determined to be 918 Btu/h/°F/ft² using equation (2).

The information supplied to Westinghouse by Duke was acquired from experimental testing of heat exchanger 1A on 11/22/85. The data from this experiment was used to determine an appropriate value for the degraded UA by first determining the as-tested fouling factor. In order to do this, experimental flow rates, temperatures, etc. had to be used to determine both tube side ($h_i$) and shell side (ho) heat transfer coefficients appropriate

for the test. Tube side heat transfer coefficients were determined using equation (1) evaluated at the test conditions. Shell side heat transfer coefficients were assumed to scale as:

$$\frac{h_o\ Do}{K} \propto Re_D^{.6}\ Pr^{1/3} \qquad (3)$$

This equation is used frequently in determining shell side heat transfer for shell and tube heat exchangers. Equation (3) was evaluated at both design and test conditions, and an $h_o$ for the test was calculated from the design $h_o$ determined above. Equation (2) was then used to determine the fouling factor appropriate for the shell side under as tested conditions assuming the tube side fouling factor is the design value of .0005 (this assumption actually has no impact on the final UA since the two fouling factors are not a function of flow and fluid conditions). The shell side factor was determined to be

$$F_o = .00912 \qquad (4)$$

for the experiment vs. the 0.001 design value. In addition to this calculations, the experimental error associated with the testing equipment and procedure was used to determine an uncertainty value for $F_o$. This calculation was performed using propagation of errors (see for example Beers, 1957, "Introduction to the Theory of Error") through the equation (5), the energy balance on the NS side of the heat exchanger (only the NS flow was used to determine overall heat flow).

$$Q = \overset{o}{m}C_p\ (T_{out} - T_{in}) \tag{5}$$

The uncertainty in temperature measurements were given to the NRC team by licensee representatives as .4°F including both RTD, and signal conditioning equipment error. These RTD's were apparently calibrated before testing, which increases confidence in the temperature measurements. Additionally, errors in the flow measurements were also included. Handbook uncertainty values for uncalibrated orifice plates are typically 1%-2.5% of measured flow. In addition to this, there are uncertainties associated with the other instrumentation necessary to make the flow measurements (DP cells, readouts, etc.). The orifice plate was an uncalibrated process device so it was estimated the overall uncertainty was ~5% of the measured value. Each of the uncertainties stated above were treated as one standard deviation ($1\sigma$) uncertainties. It is believed that a two standard deviation ($2\sigma$) uncertainty bound should be applied in order to insure conservatism (two standard deviations give a 95% certainty of the measurement). The $2\sigma$ value for Q was found to be ~12%. Additionally, since design heat flow was based solely on calculations and not on tests. It was assumed that a 2.5% error ($1\sigma$ value) was present in the design heat flow determination. It was also assumed that equations (1) and (3) could be used to correctly scale with temperature level and flow rate (0 uncertainty was assigned to this process). The two errors above, experimental and design, were used to determine overall error in $F_o$ by propagating errors through the calculations described above. The two-standard deviation uncertainty in $F_o$ was determined to be:

$$\sigma F_o = .00149 \tag{6}$$

for the uncleaned case of heat exchanger 1-A. An appropriate UA value for the Westinghouse calculations was then determined by using:

$$F_{oAPP} = F_o + \sigma F_o \tag{7}$$

These values were determined for three cases: unit 1-A before cleaning, unit 1-A as it existed after last cleaning, and unit 2-B. The table below summarizes these results (in all cases, RN flow was assumed to be 4800 gpm).

Summary of Calculations

| UNIT | STATUS | $F_o$ | σFo | UA |
|---|---|---|---|---|
| 1-A | uncleaned (11/22/85) | .009 | .0015 | $8.18 \times 10^5$ |
| 1-A | cleaned (01/16/86) | .0033 | .0007 | $1.63 \times 10^6$ |
| 2-B | uncleaned (01/24/86) | .011 | .0127 | $7.16 \times 10^5$ |
| | Westinghouse input | | | $7.35 \times 10^5$ |

The UA value calculated for the 2-B uncleaned case is slightly below that given to Westinghouse on 11/28/85 and 01/17/86. However, if the containment pressure calculations performed on 01/17/86 are used as a starting point, and the containment pressure change with UA change is similar to that noted in the 3 calculations performed on 11/28/85, the peak containment pressure can be estimated for a UA value of $7.16 \times 10^5$. These calculations estimate that the peak containment pressure for this UA value would be approximately P = 14.56 psig, still below the 15 psig limiting value.

The calculational methods used to evaluate heat exchanger performance appear to be reasonable. However, when calculations are being performed to determine heat exchanger performance at reduced flow, it is also necessary to apply appropriate fouling factors to heat exchangers which are suspected of being fouled. This has not been done in previous Duke calculations. As an example, the inspection team looked at the charging pump speed reducer oil cooler. Duke has found the oil inlet temperature to increase from 141°F to 166°F when RN flow to the heat exchanger is reduced from 20 gpm to 10.7. In addition to the reduced water flow, the effect of fouling should also be considered. Confirmatory calculations were performed assuming both reduced flow and a fouling factor of ~.008 on the RN side and .001 on the oil side (design fouling factors were presented as a sum of $F_o + F_i$ =.0025). The RN fouling factor is an estimate based on findings in the uncleaned containment spray heat exchanger ($F_o$ =.009) and recognizing that continuous water flow through the oil cooler might reduce fouling somewhat. A summary of the maximum oil temperatures is presented in the following table.

A calculation with the RN cooling water temperature reduced to 65°F is given to demonstrate the cooling water temperature effect on heat exchanger performance. As can be seen in the below table, the reduction in RN temperature from 95°F to 65°F has a significant impact on oil temperature. A similar effect would be seen in other heat exchangers in the train (although not exactly the same magnitude).

Comparison of Oil Cooler Assumptions

| Cooling Water Inlet Temp. | Flow (gpm) | $F_i$ | $T_{oil}$ (°F) |
|---|---|---|---|
| 95°F (Design) | 20 | .0015 | 141 |
| 95°F | 10.7 | .0015 | 166 |
| 95°F | 10.7 | .008 | 185 |
| 65°F | 10.7 | .008 | 155 |