DESCRIPTION OF THE OLD AND NEW REACTOR INSTRUMENTATION AND CONTROL SYSTEMS FOR THE AFRRI TRIGA MARK F REACTOR FACILITY

Prepared By: Ken Hodgdon
Angela Munno
Charles Williamson

11 MAY 1988

8812090011 880705
PDR ADOCK 05000170
P PDC

OUTLINE

I. Introduction

II. Description of the current Reactor Instrumentation and Control System

A. System Overview

B. Reactor Console

C. Power Monitor and Safety Systems

1. Operational Channels

a. Multirange Linear Channel

b. Wide-range Log Channel

2. High Flux Safety Channels 1 and 2/Pulse Channel

3. Fuel Temperature Safety Channels 1 and 2

D. Rod Withdrawal Prevent Interlocks

E. Facility Interlock System

F. Facility Status Panel

G. Reactivity Computer

H. Servo Controller Description

I. Rod Drive Mechanisms

1. Standard Control Rod Drives

2. Transient Control Rod Drive

J. Scram Circuit

K. Modes Of Operation

III. New Reactor Instrumentation and Control System Hardware

A. System Overview

B. Control System Console (CSC)

1. Control Panels and Indicators

2. CRT Displays

3. Printer

C. Data Acquisition and Control Unit (DAC)

1. Shelf One Components

2. Shelf Two Components

3. Shelf Three Components

4. Shelf Four Components

5. Shelf Five Components

6. Shelf Six Components

7. BC-20 Computer

8. Expansion Chassis

D. Power Monitor and Safety Systems

1. NM-1000 Operational Channel

2. NP-1000 Safety Channel

3. NPP-1000 Safety/Pulse Channel

4. Fuel Temperature Safety Channels 1 and 2

E. Rod Withdrawal Prevent Interlocks

F. Facility Interlocks

G. Facility Status Panel

H. Reactivity Computer

I. Servo Controller Description

J. Rod Drive Mechanisms

1. Standard Control Rod Drives

2. Stepping Motor General Operational Description

3. Transient Control Rod Drive

K. Scram Circuit

1. Monitoring Components

2. Control Inputs

3. Operating Inputs

L. Modes Of Operation

IV. New Reactor Instrumentation and Control System: Software

A. CSC Processes

B. DAC Processes

V. Glossary

I. INTRODUCTION

The new AFRRI reactor instrumentation and control system replaces a 1972 Vintage solid state analog system installed at AFRRI in 1978. The present control console was acquired by AFRRI from the decommissioned Diamond Ordinance Radiation Facility (DORF). The decline of system reliability and increased maintenance time and costs prompted AFRRI in 1985 to request bids for a new reactor instrumentation and control system. In 1986, a contract was awarded to GA Technologies of La Jolla, California, for the design and fabrication of this system.

The new system incorporates state-of-the-art digital microprocessor technology to perform the identical functions of the old console while improving reactor performance, flexibility, system reliability, and reactor data acquisition capabilities. The new system includes microprocessor-based neutron monitoring channels and a digital control system incorporating the IBM PC/AT microcomputer in its industrial version. The instrumentation and control system consists of a standard industrial hardened neutron operational channel (NM-1000), neutron flux hardened safety channels (NP-1000 and NPP-1000), a data acquisition computer (DAC), and a control system computer (CSC) in the reactor console.

Guidance for the design and manufacture of this unit complies with the American Nuclear Society and the American National Standards Institute guide ANSI/ANS 15.15 - 1978 "Criteria for the Reactor Safety Systems of Research Reactors." This standard is intended to serve the research reactor community in lieu of the ad hoc application of similar standards for power reactors (IEEE STANDARD 279-1971). ANSI/ANS 15.15 clearly states in 5.1 that for negligible risk research reactors compliance with the single failure criterion for protective actions is not mandatory. AFRRI SAR analysis has shown that AFRRI meets the criteria of a negligible risk reactor.

However, if the single failure criteria were applied, section 5.2 (3) allows the use of simple redundancy - monitoring the same reactor parameters using duplicate equipment to satisfy single failure criteria in the reactor safety system (RSS).

It is important for reviewers to understand that all safety circuits are still hardwired and of the same type as currently used, and that these safety functions are completely independent of the DAC and CSC. The system provides for redundancy in that two independent input assemblies provide the operator with duplicate hardwired readouts of both the fuel temperature and percent power. Furthermore, the geometry and construction of these two units provides a means to assure that no common mode failure (except loss of facility AC power which results in a reactor scram) can disable both of these redundant channels.

II. DECRIPTION OF THE CURRENT REACTOR INSTRUMENTATION AND CONTROL SYSTEM

A. SYSTEM OVERVIEW

The current instrumentation and control system consists of a solid-state analog console, an operational power channel, two high flux safety channels, two fuel Temperature Safety Channels, a pulse channel, facility interlocks, a facility status panel, a reactivity computer, and control rod drive mechanisms. A block diagram of this current system is shown in Figure 1.

B. REACTOR CONSOLE

The current console is a desk-type unit located in the reactor control room (room 3160). Instrumentation contained in the control console is connected by means of special circuits to control rod drives, the facility interlock system, and various detectors positioned within and above the reactor core.

All circuitry for the safety channels, (high flux, pulse, and fuel temperature) the operational channels, and the SCRAM circuitry are located on IC boards in the left and right drawers of the console; control rod circuits and terminal blocks are located to the rear of the center portion of the console.

C. POWER MONITOR AND SAFETY SYSTEMS

The AFRRI TRIGA reactor core is monitored by six detectors. One thermocouple from each of the two instrumented fuel elements comprises two of the six detectors. A fission detector, two ion chambers and a pulse detector comprise the remaining reactor detectors. These six detectors are used to provide six independent "channels" which monitor the power level and fuel temperature of the core. A "channel" is the combination of a detector, interconnecting

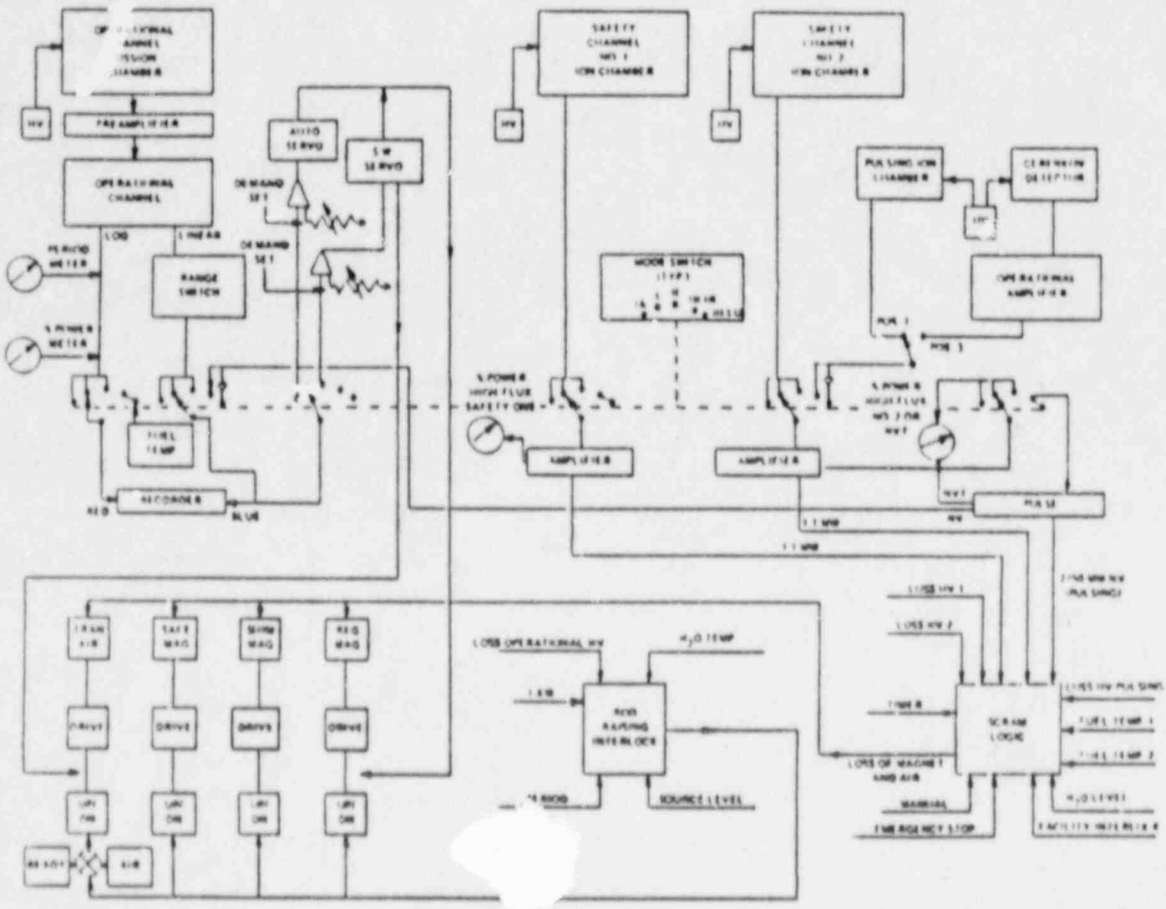

Figure #1 AFRRI control and safety systems

cables or lines, amplifiers, and output device(s) which measure a specific variable. The six channels utilized in the AFRRI-TRIGA reactor included: the multirange linear channel, the wide range log channel, high flux safety channels one and two, and fuel temperature safety channels one and two. Some of these channels, in addition to having readouts on the reactor console, form part of the reactor scram circuitry, and the system of rod withdrawal prevent interlocks.

1. OPERATIONAL CHANNELS

The operational channels both use the same fission detector and consist of the multirange linear channel and the wide range log channel.

a. Multirange Linear Channel (Operational Channel)

The multirange linear channel reports reactor power from source level (~10^{-3} thermal watts) to full steady state power (1.0 MWt). A block diagram of this channel is shown in Figure 2. The output of the fission detector, fed through a preamplifier, serves as the channel input. The multirange linear channel consists of two circuits: the count rate circuit and the campbelling circuit. For power levels less than 1 kilowatt (thermal), as selected on the power range select switch, the count rate circuit is used. The count rate circuit generates an output voltage proportional to the number of pulses or counts received from the fission detector. Hence, the output is proportional to the neutron population and the reactor power level. For steady state power levels at or above 1 kilowatt (thermal), as selected on the power range select switch, the campbelling circuit is used. The campbelling circuit generates an output voltage proportional to the reactor power level by a verified technique of noise envelope amplitude detection and measurement known as campbelling. The output from the appropriate circuit is fed

OPERATIONAL CHANNELS

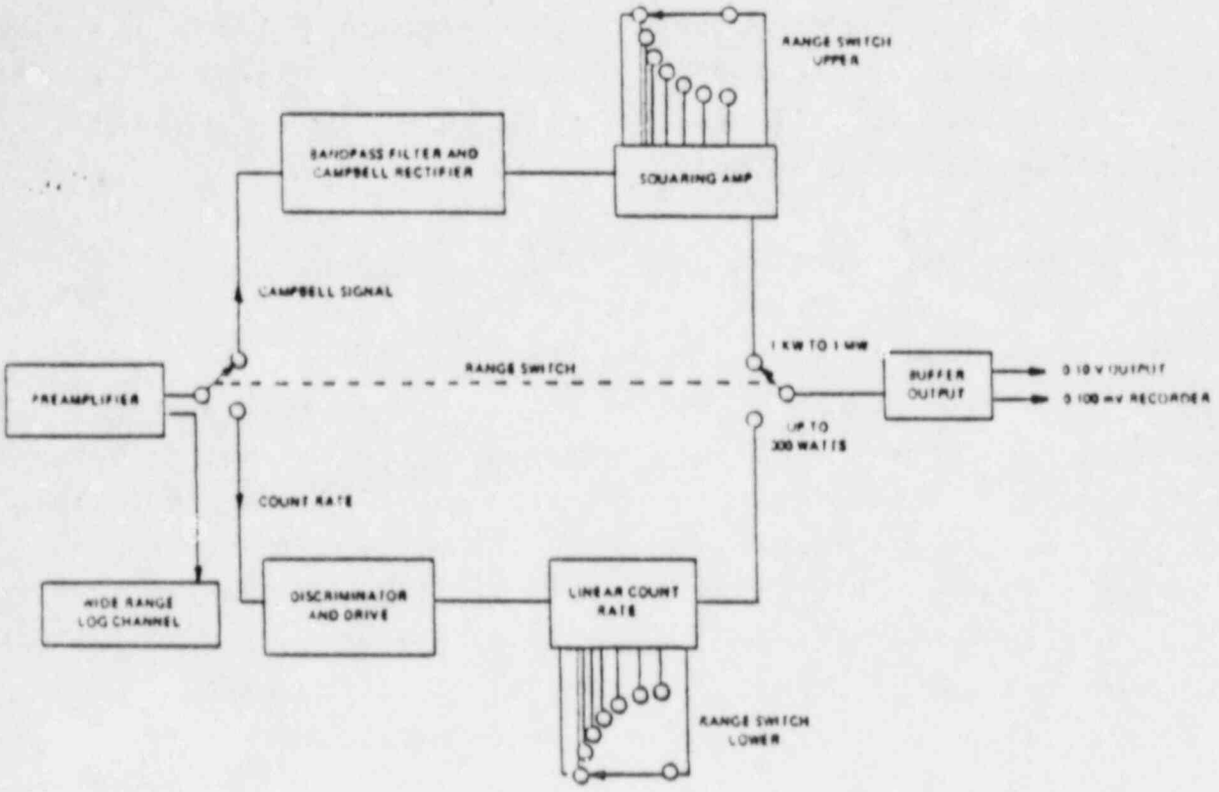

Figure #2 Multirange linear channel

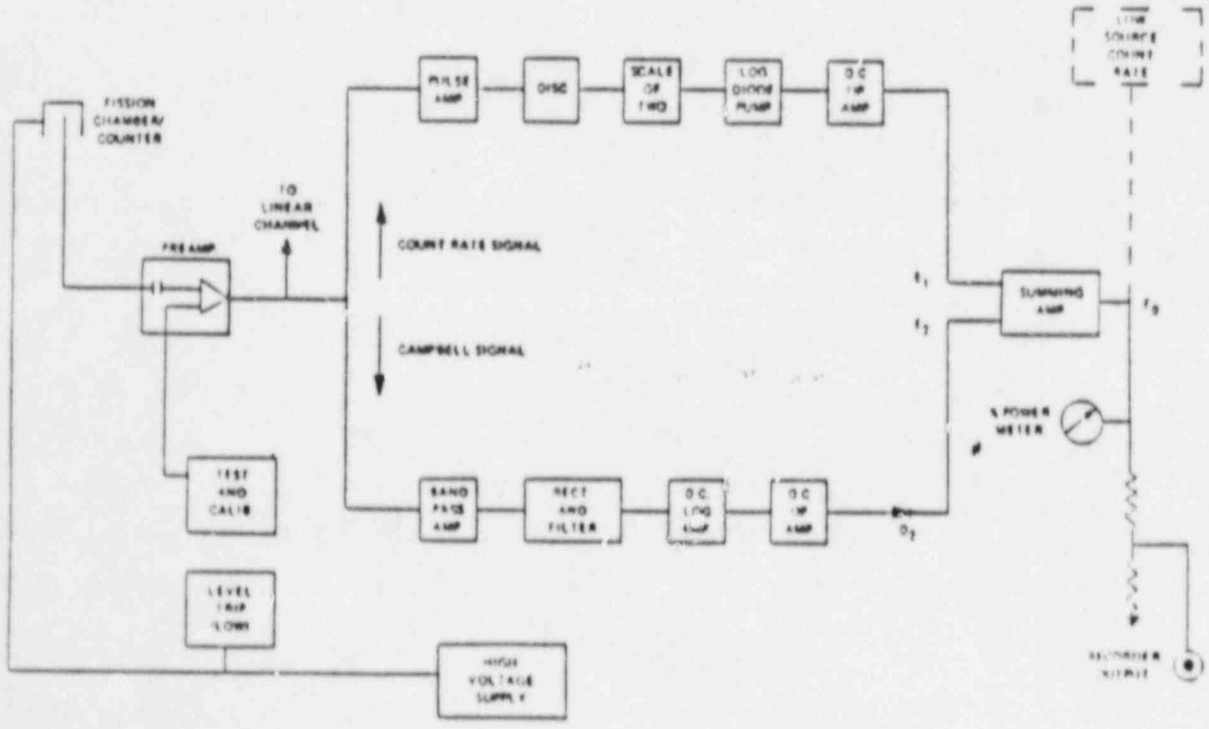

Figure #3 Block diagram of wide range log channel

to an amplifier which supplies a signal to the chart recorder between 0 and 100 percent of the power indicated by the power range select switch on the console. The strip chart records this output for all steady state modes of operation but not during pulse operation.

b. Wide-Range Log Channel (Operational Channel)

The wide-range log channel also measures reactor power from source level (~10^{-3} thermal watts) to full steady state power (1.0 MWt). A block diagram of this channel is shown in Figure 3. The circuitry of this channel is similar to that of the multirange linear channel. The preamplifier output of the same fission chamber which feeds the linear channel also feeds into the count rate and campbelling circuits of the wide-range log channel. The outputs of these two circuits are log amplified and then summed in a summing amplifier. The summing amplifier supplies a signal to the strip chart recorder located on the reactor console. The power level is indicated in a ten-decade log scale (~10^{-3} watts (thermal) to 1.0 MWt). The strip chart recorder records this output for all steady state modes of operations but not during pulse operations.

During steady state modes, the wide-range log channel also measures the rate of change of the power level, which is displayed on the period/log meter located on the reactor console.

The wide-range log channel forms part of the rod withdrawal prevent interlock system. The channel activates variable set point bistable trips in the rod withdrawal prevent interlock system if source neutrons (~10^{-3} watts thermal) are not present, if the reactor power is above 1 kilowatt thermal when switching to the pulse mode, if a steady state power increase has a period of 3 seconds or faster

during certain steady state modes, and if high voltage is not supplied to the fission detector.

2. High Flux Safety Channels One and Two/Pulse Channel

High flux safety channels one and two independently report reactor power level, but operate in an identical manner during steady state operation. Each channel consists of an ion chamber placed above the core and the associated electronic circuitry. The steady state power level, as measured by the two high flux safety channels, is displayed as a percent of full power on two separate meters located on the reactor console. Safety channels one and two are shown in Figures 4 and 5.

During pulse operation, high flux safety channel one is shunted and the sensor for high flux safety channel two is switched to a third independent ion chamber placed above the core. High flux channel two measures the peak power level achieved during a pulse (NV channel) and the total integrated power produced by a pulse (NVT channel). The NV channel output is displayed on the strip chart recorder located on the reactor console. The NVT channel output is displayed on the reactor console NVT meter.

Knobs for each channel, located on the reactor console, allow the channels to be checked for calibration. Switching these knobs to any mode other than "operate" causes an immediate reactor SCRAM. Loss of high voltage to these chambers also causes an immediate SCRAM.

The high flux safety channels form part of the SCRAM logic circuitry. When the steady state reactor power level, as measured by either high flux safety channels, reaches a maximum power level a bistable trip circuit is activated,

HIGH FLUX SAFETY CHANNELS

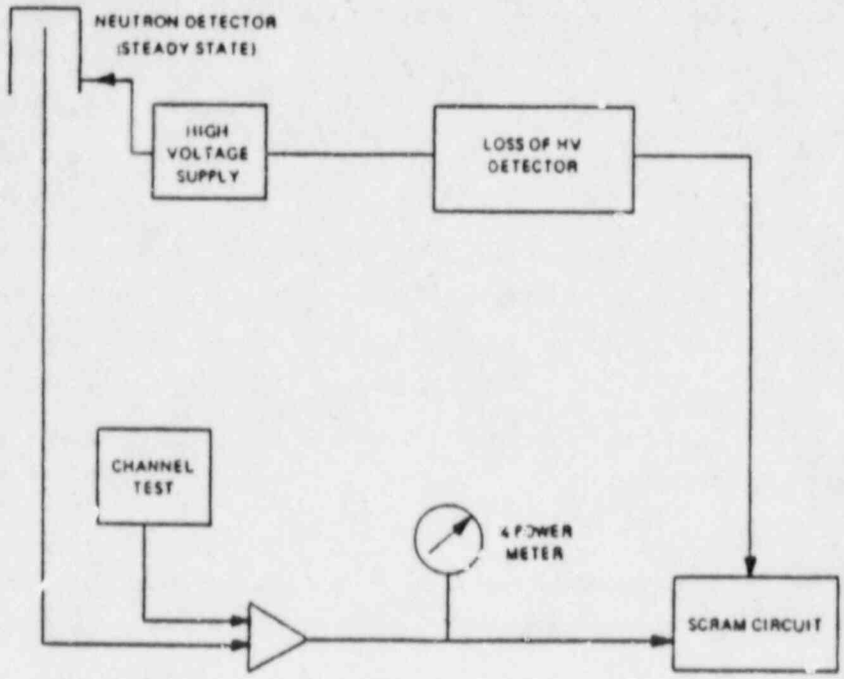

Figure #4. High flux safety channel one

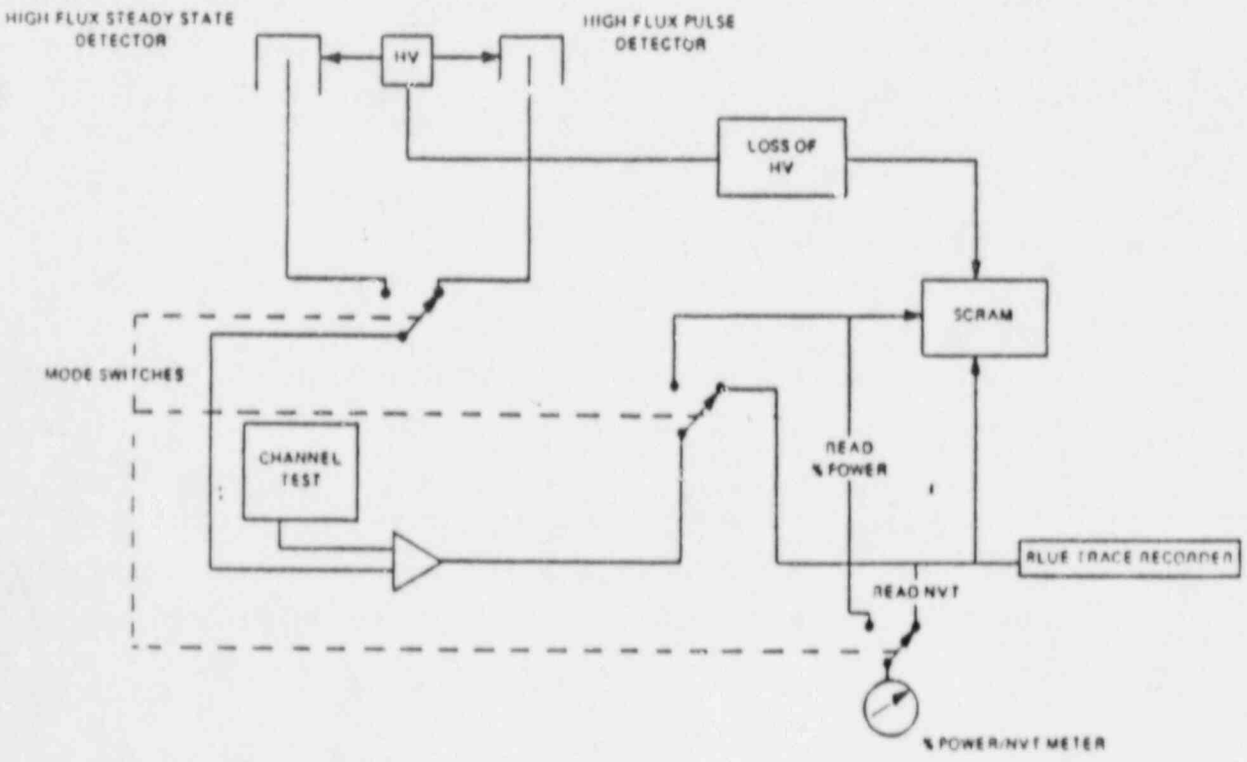

Figure #5. High flux safety channel two

which breakes the scram logic circuit, causing an immediate reactor SCRAM. A test knob for each safety channel, located on the reactor console, adds additional current to the channel and provides a means of testing the bistable trip circuit without actually exceeding 100 percent of authorized power.

3. Fuel Temperature Safety Channels 1 and 2

Fuel temperature safety channels one and two are independent of one another, but operate in an identical manner. One thermocouple from each of the two instrumented fuel elements (one in the B-ring and one in the C-ring), provides input to fuel temperature channels one and two respectively. The two fuel temperature signals are amplified and displayed on two separate meters located on the reactor console. During pulse operation, the output of fuel temperature safety channel one is also recorded on the reactor console strip chart recorder. The fuel temperature safety channels have internal compensation for the chromel/alumel (type K) thermocouples and high noise rejection. The channels also have zero and calibrate modes for checking channel operation. Switching to either of these modes results in an immediate reactor SCRAM.

In addition to providing information to the reactor operator on fuel temperature, the fuel temperature safety channels also form a part of the reactor scram logic circuit. When the set maximum fuel temperature is reached, a bistable trip is activated which opens the scram circuit, causing an immediate reactor SCRAM.

D. ROD WITHDRAWAL PREVENT INTERLOCKS

A rod withdrawal prevent (RWP) interlock stops an upward motion of the standard control rods and prevents air from

being supplied to the transient control rod unless specific operating conditions are met. An RWP interlock, however, does not prevent a control rod from being lowered or SCRAMMED. Therefore, any RWP interlock prevents any further positive reactivity from being inserted into the core until specific conditions are satisfied.

The system of RWP interlocks prevents control rod withdrawal under the following circumstances:

1. Air being supplied to the transient rod unless the reactor power level is below 1 kilowatt (thermal).

2. Any control rod withdrawal if the source level neutrons ($\sim 10^{-3}$ thermal watts) are not present.

3. Further control rod withdrawal unless the power level is changing on a 3-second or longer period as measured by the wide-range log channel during steady state operations.

4. Any control rod withdrawal unless high voltage is supplied to the fission chamber for the multirange linear and wide-range log channels.

5. Any control rod withdrawal if the wide-range log channel is in any mode other than "operate".

6. Any control rod withdrawal unless the bulk pool water temperature is less than 50°C.

E. FACILITY INTERLOCK SYSTEM

The facility interlock system is designed to eliminate the possibility of accidental radiation exposure of personnel

working in the exposure rooms or the preparation area, and to prevent interference (i.e., contact or impact) between the reactor tank lead shielding doors and the reactor core shroud. These interlocks prevent rotation (i.e., opening and closing) of the reactor tank shielding doors and the operation and movement of the reactor core between different regions unless specific operating conditions are satisfied.

F. FACILITY STATUS PANEL

The facility status panel, or auxiliary console, is located adjacent to the current console in the reactor control room. The panel contains radiation area monitors (RAM) modules and readouts, the steady state timer, strip chart recorders for a stack gas monitoring system and core temperature, meter displays with alarms for the reactor room continuous air monitor (CAM), conductivity cell readouts, water gamma monitor meter, reactor ventilation system air flow, and the reactivity computer (see below). Since the components of this system do not impact on the new system except for certain outputs, the panel will not be discussed further; although portions will be moved into the new auxiliary consoles which will be located adjacent to the new control console.

G. ACTIVITY COMPUTER

The GA Technologies Model R-20A reactivity computer is an (analog) computer which is used to perform reactor control rod worth measurements and calibrations. It is connected into the circuitry of the linear power channel (operational channel). This system does not involve any safety systems.

H. SERVO CONTROLLER DESCRIPTION

In automatic (steady state) mode of operation, the flux controller (analog computer) operates as an automatic reactor control system. A comparator circuit in the regulator used in regulating reactor power to a preset value established by the operator. The flux controller compares the output signal of the wide range linear channel with a demand power signal and adjusts the regulating rod position in an appropriate direction to compensate for any difference in power signals.

In automatic mode of operation, the comparator circuit in the regulator uses three sources of information:

1. Power demand from the power demand potentiometer
2. Reactor power information from the linear power channel
3. Reactor period information from the period circuit.

The regulating rod is controlled automatically in response to a power level and period signal by means of a solid state flux controller. This regulator system uses tachometer feedback from the regulating rod drive to make a high performance flux controller without overshoot.

I. ROD DRIVE MECHANISMS

Reactor power in the AFRRI-TRIGA reactor is regulated by using three standard control rods and one transient control rod, all four of which contain neutron-absorbing material (boron). Control rod movement within the core is accomplished using rack and pinion electromechanical drives for the standard rods and a pneumatic-electromechanical drive for the transient control rod.

1. Standard Control Rod Drives

The current standard control rod drive consists of a two-phase motor, a magnetic coupler, a rack and pinion gear system, and a potentiometer which is used to provide an indication of rod position which is displayed on the reactor console. The pinion gear engages a rack attached to a draw tube supporting an electromagnet. The magnet engages an iron armature attached to the top end of a long connecting rod. The connecting rod attaches at its lower end to the top of the control rod. The system is shown in Figure 6.

The ROD DOWN microswitch indicates when the control rod is at its lower limit of travel (fully inserted into the core). When the rod is fully inserted, the rod armature rests on a washer attached to a pull rod. This pull rod extends through the drive mounting and is attached to an adjustable fixture. This fixture, in turn, activates the microswitch located in the rod drive housing.

The MAGNET UP microswitch indicates the drive is at its upper limit of travel. At this position, the magnet draw tube contacts a pull rod that extends vertically through the drive mount and pushes a fixture that activates the microswitch.

The MAGNET DOWN microswitch indicates that the drive is at its lower limit of travel. A rigid adjustable fixture at the upper end of the draw tube engages the actuating level of the microswitch. This stops the movement of the reactor drive.

2. Transient Control Rod Drive

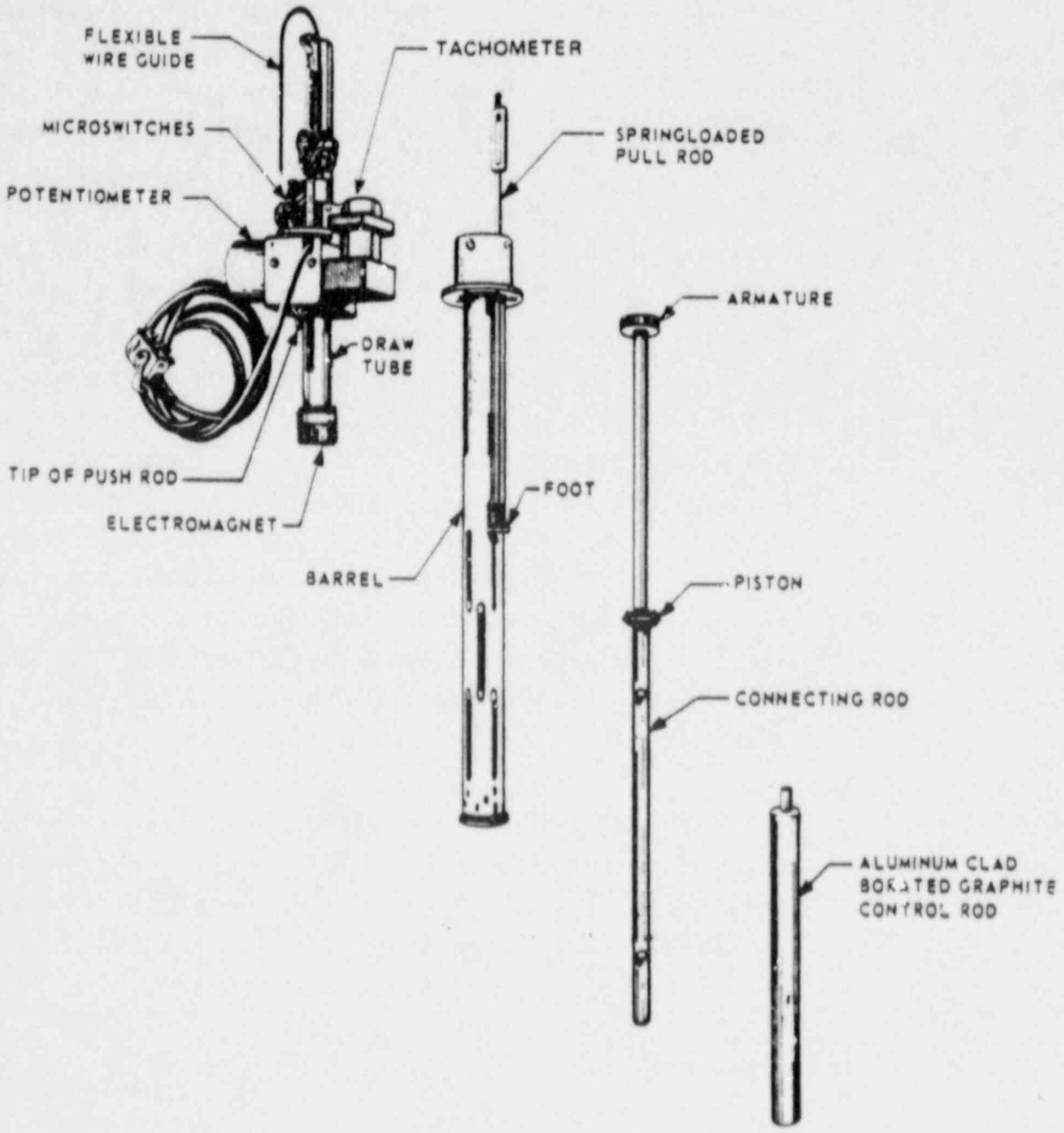

Figure #6 Regulating rod drive mechanism

The transient rod drive is a single-acting pneumatic cylinder. A diagram of the drive system is shown in Figure 7. A piston within the cylinder is attached to the transient control rod by means of a connecting rod. The piston rod passes through an air seal at the lower end of the cylinder. For pneumatic operation, compressed air admitted at the lower end of the cylinder is used to drive the piston upward. As the piston rises, the air being compressed above the piston is forced out through vents at the upper end of the cylinder. At the end of the stroke, the piston strikes the anvil of a shock absorber; the piston is decelerated at a controlled rate during its final inch of travel. Adjustment of the anvil's position, i.e., the volume of the cylinder, controls the piston's stroke length and hence the amount of reactivity inserted during a pulse.

The electromechanical portion of the transient rod drive consists of an electric motor, a ball-nut drive assembly, and the externally-threaded air cylinder.

A system of microswitches is used to indicate the position of the air cylinder (anvil) and the transient rod. Two of these switches, the DRIVE UP AND DRIVE DOWN microswitches, are actuated by a small bar attached to the bottom of the air cylinder. A third microswitch, the ROD DOWN microswitch, is actuated when the piston reaches its lower limit of travel. The transient rod anvil, measured by a potentiometer, is displayed on the reactor console.

J. SCRAM CIRCUIT

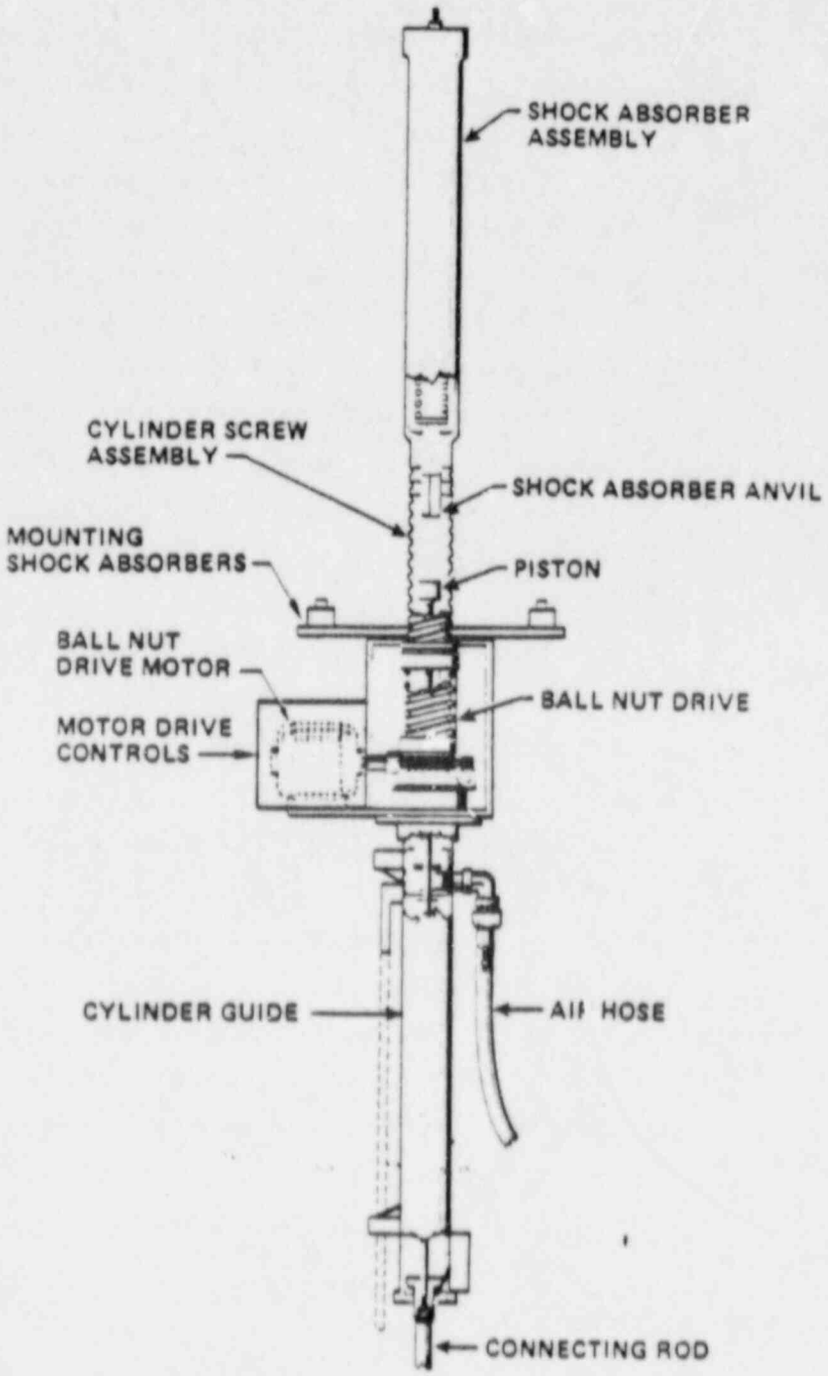

Figure #7 Transient rod drive mechanism

The scram logic circuitry assures that a set of reactor core and operational conditions will be satisfied for reactor operation to occur or continue in accordance with the AFRRI Reactor Technical Specifications. The scram logic circuit involves a set of open-on-failure logic relay switches in series; any SCRAM signal or component failure in the SCRAM logic, therefore, results in a loss of standard control rod magnet power and the loss of air to the transient rod cylinder. The result is a reactor SCRAM. The time between activation of the scram logic and the total insertion of the control rods is limited by the technical specifications to assure the safety of the reactor and the fuel elements for the range of anticipated transients for the AFRRI TRIGA reactor. The SCRAM logic circuitry causes an automatic SCRAM under the following conditions:

1. The steady state timer causes a reactor scram after a given elapsed time, as set on the timer, during steady state operations.

2. The pulse timer causes a reactor scram after a given elapsed time as set on the timer, during pulse operations.

3 The manual SCRAM bar, located on the reactor console, allows the reactor operator to manually scram the reactor.

4. Movement of the console key to the "off" position.

5. The reactor tank shielding doors in any position other than fully opened or fully closed.

6. Activation of any of the emergency stop buttons in either of the exposure rooms or on the reactor console.

7. Any of the safety channels (high Flux or fuel temperature) in any position other than "operate".

8. A loss of AC power to the reactor console.

9. Reaching the maximum power level setting on the high flux channels one or two.

10. A loss of high voltage of any of the detectors for the high flux channels one or two.

11. Reaching the maximum fuel temperature setting on fuel temperature channels one or two.

12. Loss of pool water. (Operationally set so that a six inch loss of pool water causes a scram).

K. MODES OF OPERATION

The reactor instrumentation and control system can operate and monitor the state of the reactor core in any of our modes of operation. These modes are

1. Steady State Automatic - The reactor is monitored and power adjusted using a servo feed back loop to move a single standard rod.

2. Steady State Manual - The reactor is monitored and power is adjusted manually by an operator using any control rod.

3. Steady State Square Wave - The reactor is monitored and power is adjusted using a servo feedback loop to move both a single standard control rod and the transient control rod.

4. Pulse - The reactor is monitored and placed on a prompt critical excursion by the rapid election of the transient rod from a critical or subcritical core.

III. NEW REACTOR INSTRUMENTATION AND CONTROL SYSTEM HARDWARE DESCRIPTION

A. SYSTEN OVERVIEW

The new console consists of a state-of-the-art microprocessor-based instrumentation and control system which operates the Armed Forces Radiobiology Research Institute's (AFRRI) TRIGA Mark F nuclear research reactor. This system will replace the current control console while improving or maintaining the existing operational capabilities and safety characteristics. In addition, this system will interface with AFRRI custom-built equipment and with the existing GA Technologies' TRIGA Mark F reactor hardware and equipment. The new console has an expected design life of fifteen years.

The basic elements of this system consist of a Control Console, a Data Acquisition and Control Unit (DAC), two independent power monitor and safety systems, an operational channel, two independent fuel temperature safety channels, a pulse channel, facility interlocks, and a facility status panel. A simplified block diagram of the new system is provided in Figure 8.

B. CONTROL SYSTEM CONSOLE (CSC)

The Control System Console (CSC) is a desk-type unit located in the AFRRI Reactor Control Room (room 3160). A view of the CSC is shown in Figure 9. Operators conduct reactor operations using a set of control switches and a keyboard on the console and receive feedback information through the Reactor Status CRT, the Reactor Control CRT, indicators, and annunciators.

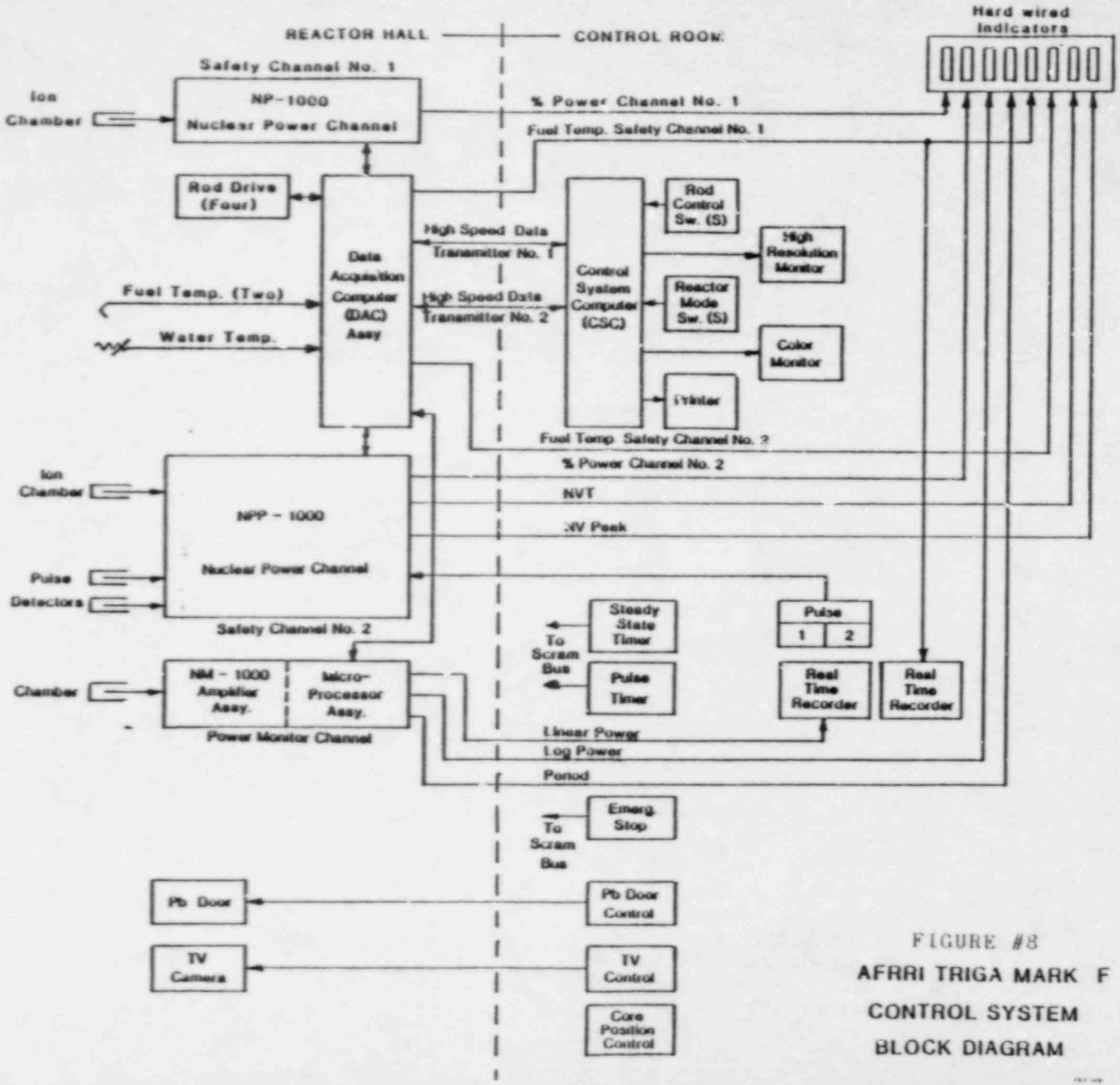

FIGURE #8

AFRRI TRIGA MARK F

CONTROL SYSTEM

BLOCK DIAGRAM

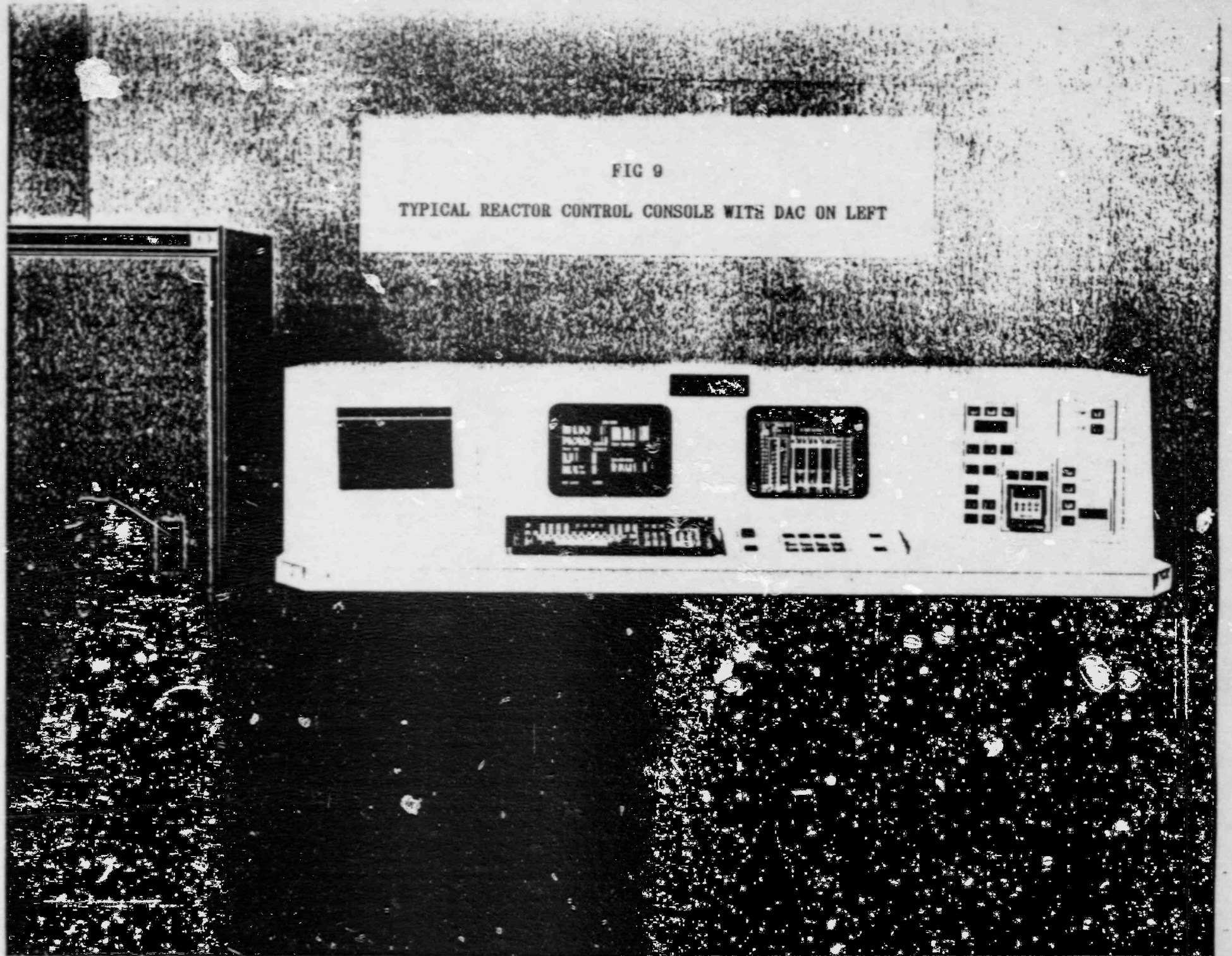

FIG 9

TYPICAL REACTOR CONTROL CONSOLE WITH DAC ON LEFT

Operators adjust the rod positions by issuing commands to the CSC which transmits these commands to the DAC. The DAC will re-issue the commands to the drive mechanisms. During reactor operations the CSC receives raw data from the DAC, processes this data, and presents the data in meaningful engineering units and graphic displays on a number of peripheral systems. The CSC also provides data storage and logging capabilities.

1. Control Panels and Indicators

The rod control panel, located directly below the high-resolution color monitor, contains the SCRAM switch, the magnet ON/OFF/RESET key switch, the manual rod controls, and the alarm acknowledge switch. The rod control panel is shown in Figure 10.

To the left of the Reactor Control CRT are eight vertical LED bar graph displays indicating percent power (Safety Flux channels #1 and #2), log power, NVT (energy released in a pulse), period, fuel temperature #1 and #2, PNV (peak power in a pulse).

To the right of the reactor status CRT is the mode control panel containing the console power-on switch, the lamp test indicator, time delay indicator, reactor operate indicator, emergency stop indicator, exposure room open indicator, pulse detector selection switch, camera selection switches, lead door function switches, core movement function switches, the pre-start run checks switch, reactor mode switches, thumb-wheel switches to set reactor run to a preset time, and thumb-wheel switches to set percent power demand in the automatic mode. This is shown in Figure 11.

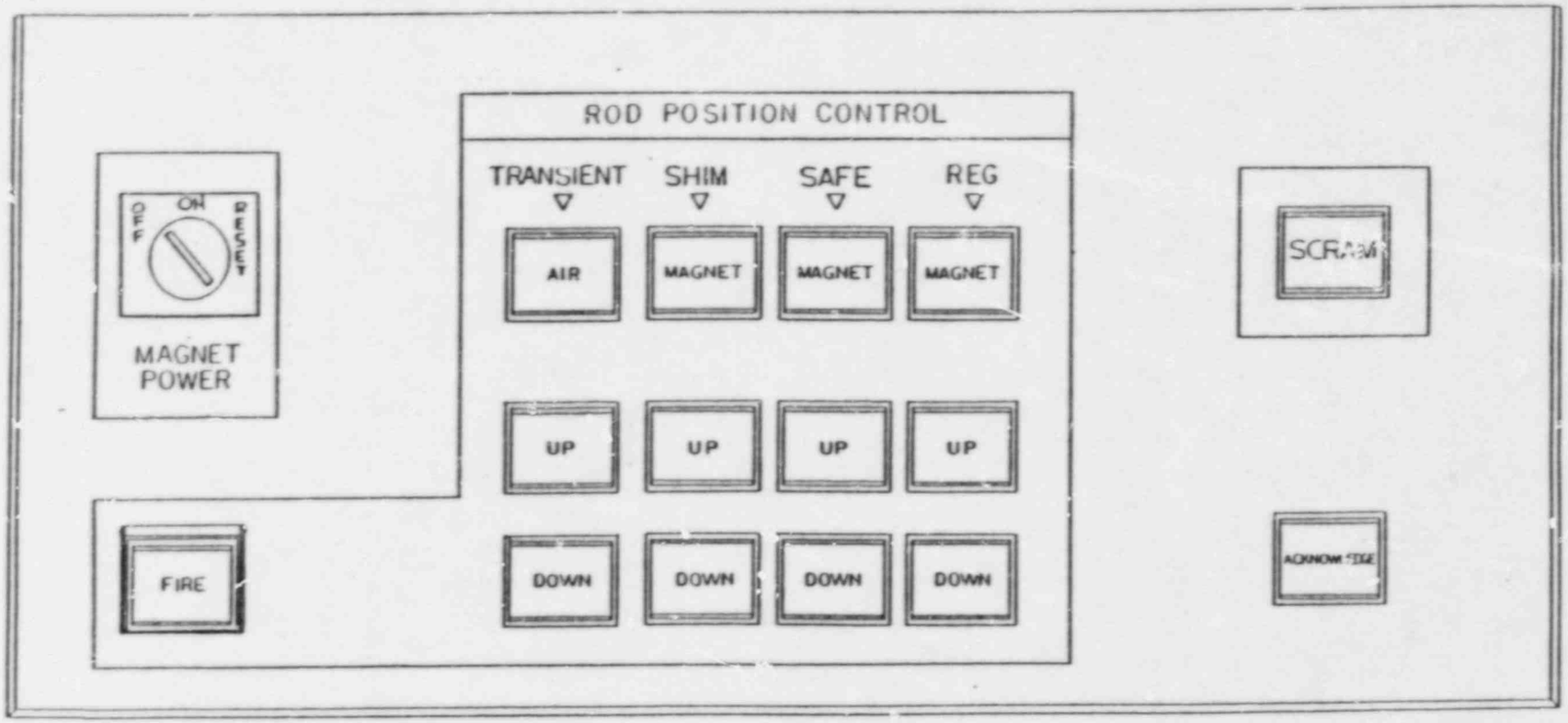

FIG 10 Rod Control Panel

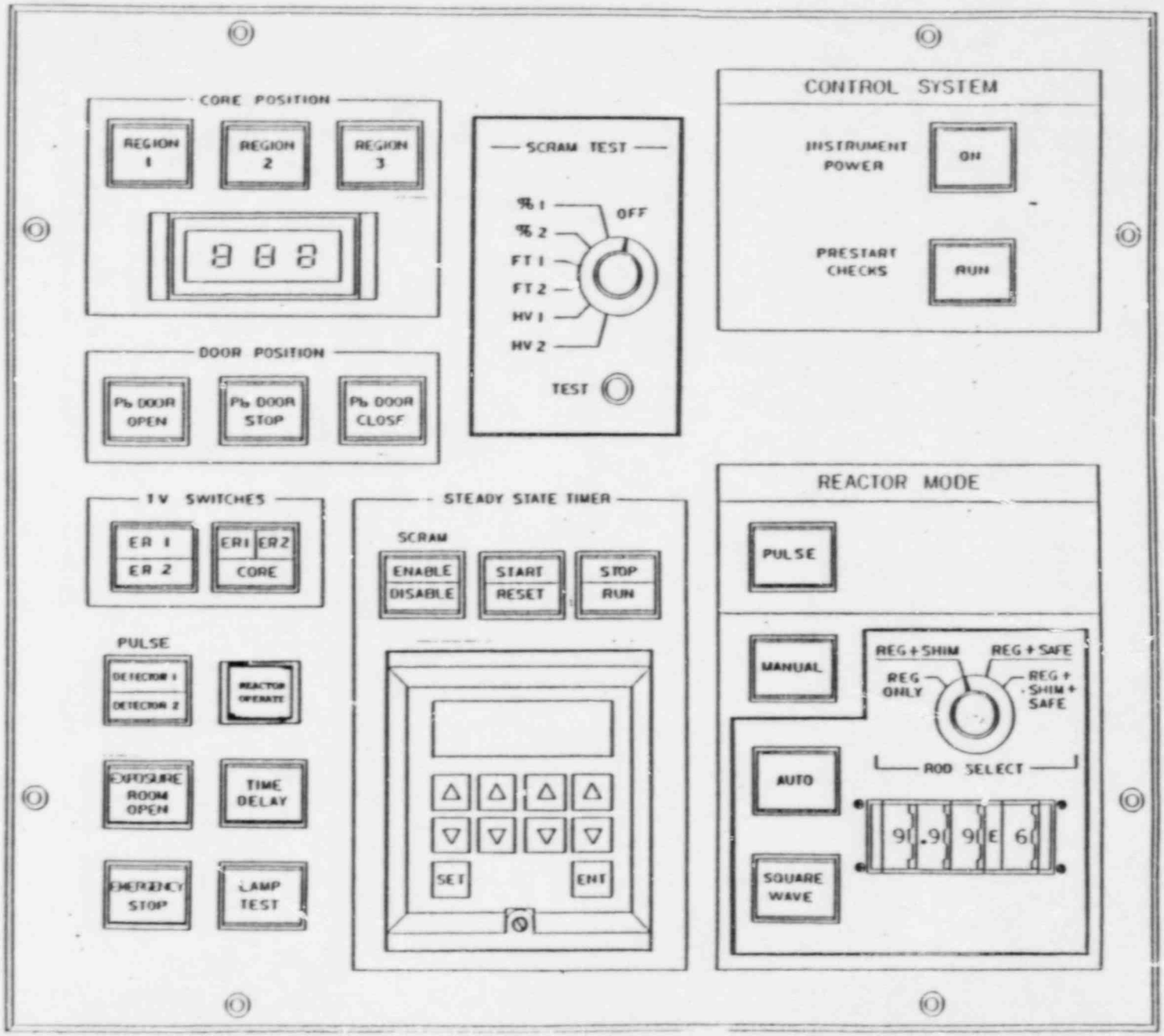
CORE POSITION
REGION 1
REGION 2
REGION 3
888
SCRAM TEST
OFF
%1
%2
FT1
FT2
HV1
HV2
TEST
CONTROL SYSTEM
INSTRUMENT POWER
ON
PRESTART CHECKS
RUN
DOOR POSITION
Pb DOOR OPEN
Pb DOOR STOP
Pb DOOR CLOSE
TV SWITCHES
ER 1
ER 2
ER1 ER2
CORE
STEADY STATE TIMER
SCRAM
ENABLE DISABLE
START RESET
STOP RUN
SET
ENT
REACTOR MODE
PULSE
MANUAL
REG+SHIM
REG+SAFE
REG ONLY
REG+SHIM+SAFE
ROD SELECT
AUTO
SQUARE WAVE
PULSE
DETECTOR 1
DETECTOR 2
REACTOR OPERATE
EXPOSURE ROOM OPEN
TIME DELAY
EMERGENCY STOP
LAMP TEST

2. CRT Display

The CSC Controls two color CRT monitors. A high resolution color graphics (Reactor Control) CRT provides the operator with a real-time graphic display of the reactor status (Figure 12). This CRT displays a number of strategic parameters using bar graphs and alerts the operator to any abnormal or dangerous conditions. A Reactor Status CRT displays pertinent diagnostic messages and reactor status and facility status information.

3. Printer

The CSC also interfaces with a near-letter-quality (dot matrix) color printer, reducing the amount of manual logging of reactor data. The printer can be used to print out log information, historical data (such as pulse information), or any files stored in the CSC hard disk or floppy disk files.

C. DATA ACQUISITION AND CONTROL UNIT (DAC)

The DAC is located in the AFRRI Reactor Room (room 3161) adjacent to the reactor and provides high speed data acquisition and control capability. The DAC monitors the operational channel, the high flux safety channels, the fuel temperature channels, water level and temperature, and control rod positions. The DAC, on command from the CSC, re-issues the commands to raise and lower the control rods or scram the reactor. The DAC communicates with the CSC via a primary and a secondary serial data trunk. The secondary trunk serves as a back-up should the primary trunk fail. These serial data

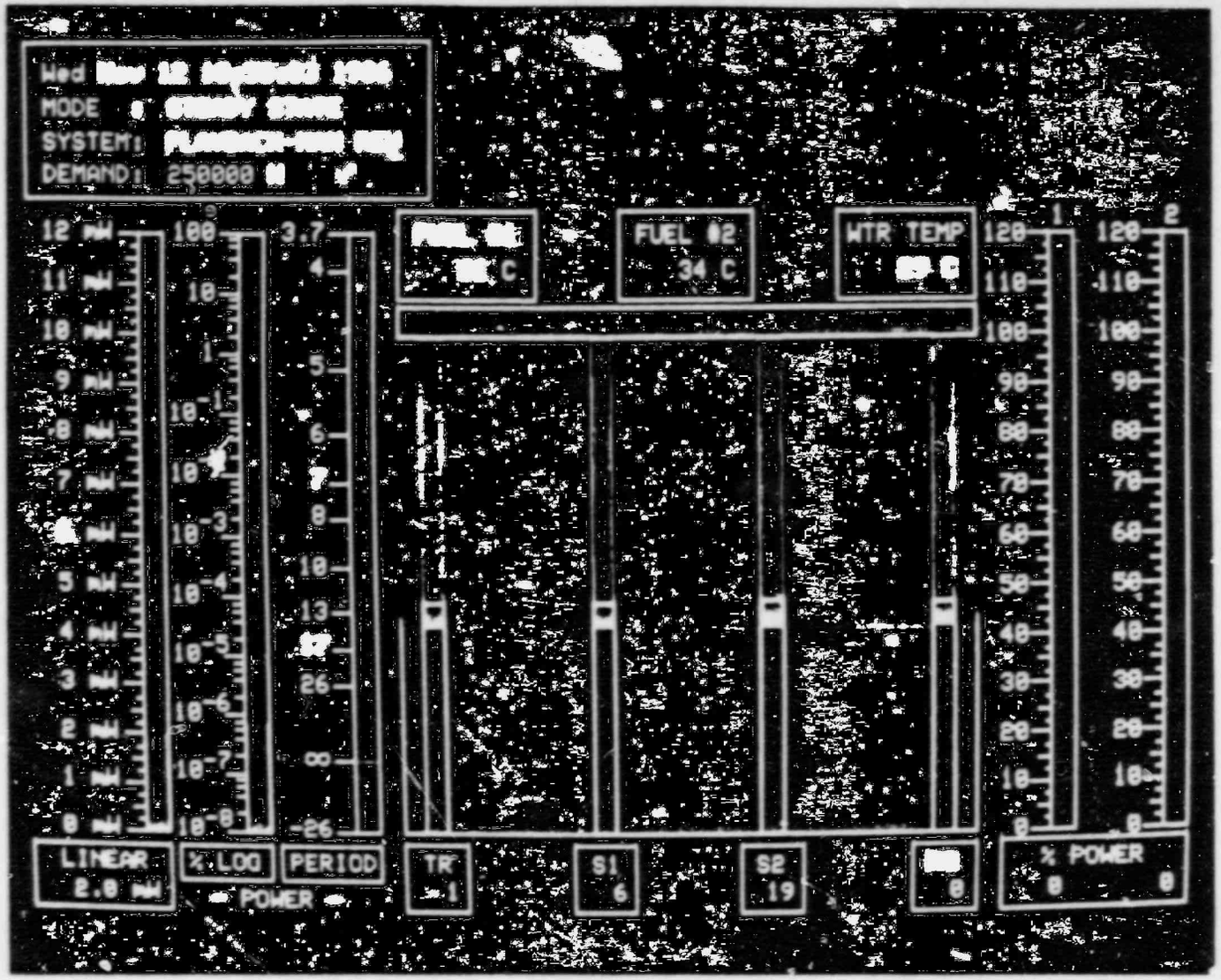

FIG 12 Typical CRT display of reactor operational information

trunks drastically reduce the wiring requirements between the Reactor Room and the Control Console.

The DAC is an eight-shelf cabinet which contains an industrially hardened microprocessor-based computer. Figure 13 shows the basic configuration of the cabinet. The DAC input and outputs are summarized in Figure 14. The DAC consists of power supplies and conditioning equipment, relay boards, optical isolator boards, input scanner boards, Action Pak monitors, various analog termination and serial communications boards, and an Action Instruments BC-20 microcomputer. Additionally, the DAC also houses the NP-1000 and NPP-1000 safety channels which are described below. The wire harness for the DAC is shown in Figure 15.

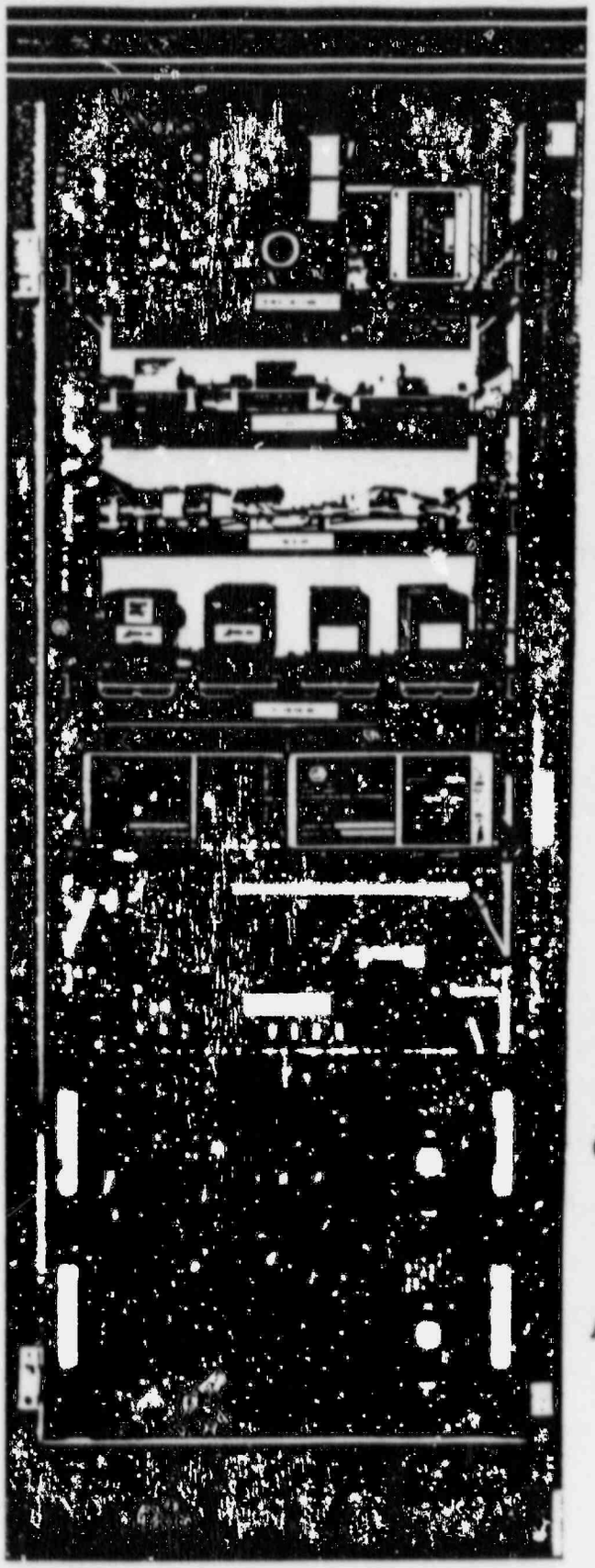

POWER CONDITIONING

AC DIGITAL I/O

DC DIGITAL I/O

ACTION PAKS

NP/NPP-1000

ANALOG TERMINATION AND
TRANSLATOR DRIVE

COMPUTER EXPANSION

AT TYPE COMPUTER

FIG 13 Shelves in DAC

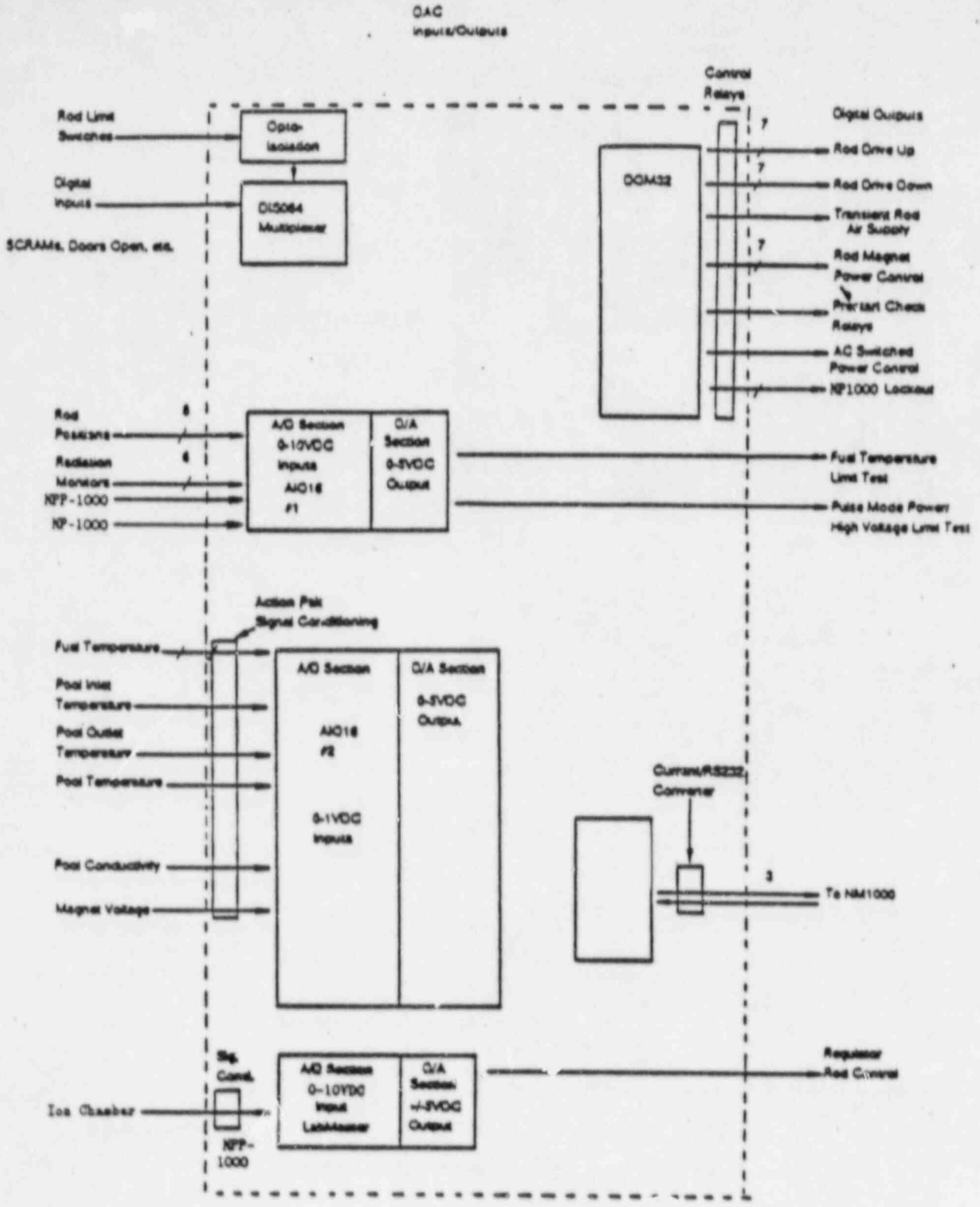

FIG 14 DAC Inputs/Outputs

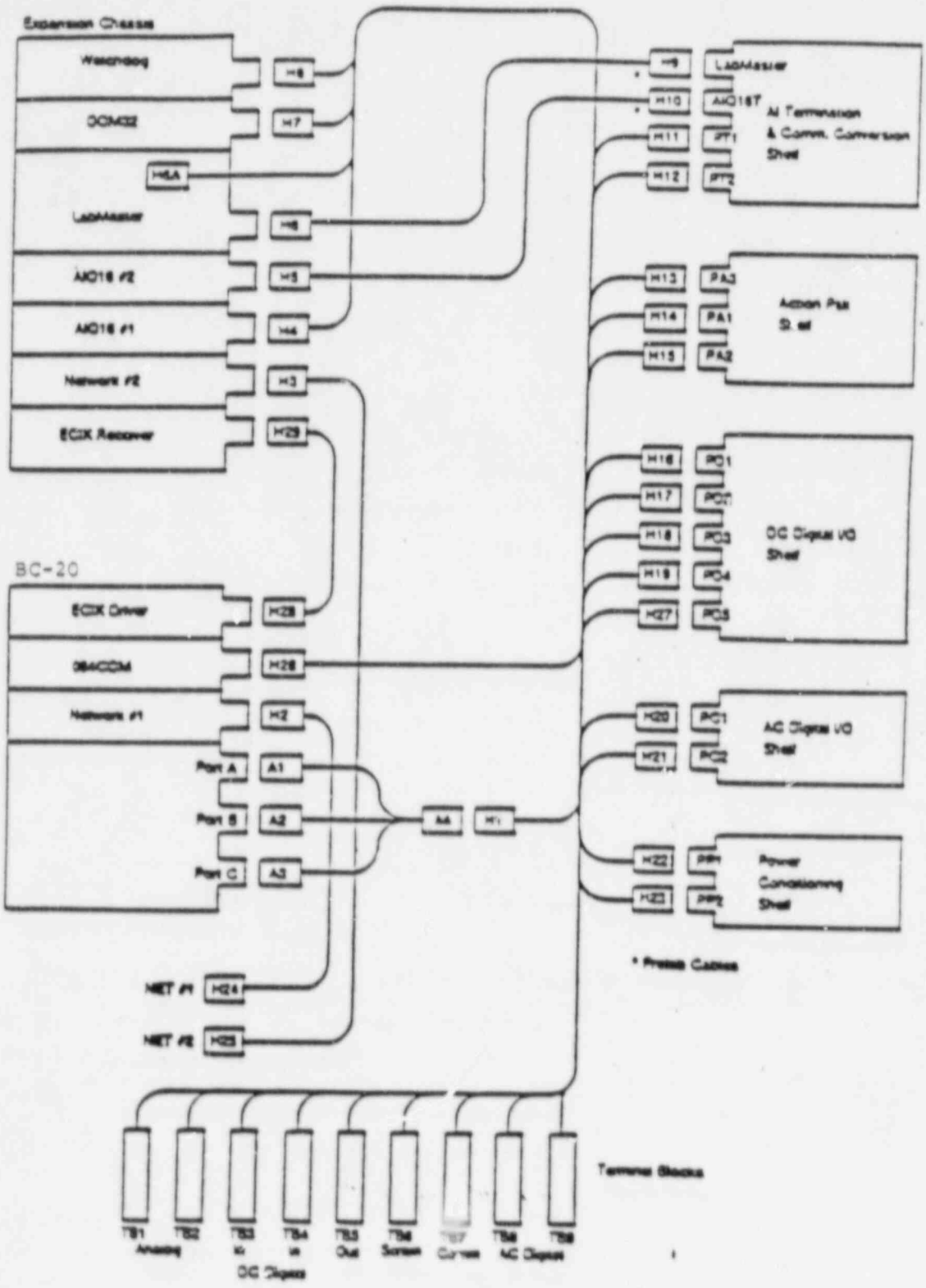

FIG 15 DAC Wire Harness Diagram

1. Shelf One Components

The components of shelf 1 of the DAC are shown in Figure 16. The shelf consists of power supply and conditioning equipment. The magnet power supply supplies magnet power to the control rod electromagnets in the SCRAM circuit. The potentiometer power supply supplies power to the potentiometers that monitor rod positions. The solenoid power supply provides power to the solenoid controlling the air for the transient rod mechanism. The auxiliary power supply furnishes power for control relays (RLY08s), the Opto-isolator, and the DIS064 scanner board. The ACQ power conditioner contains a trip breaker and two line filters. It provides two 120 VAC outputs. One is a direct output from the line filters; the other is switched by a remotely-controlled relay.

2. Shelf Two Components

The components of shelf two are shown in Figure 17. These components are:

1. Two RLY08 relay boards which handle output signals regarding rod movement. Board 1 controls the up movement of the transient and standard rods; board 2 controls the down movement of the transient and standard rods.

2. Six optical isolator module boards which contain up tofour opto-isolator signal conditioning modules. These boards protect the DAC components from voltage surges.

3. Shelf Three Components

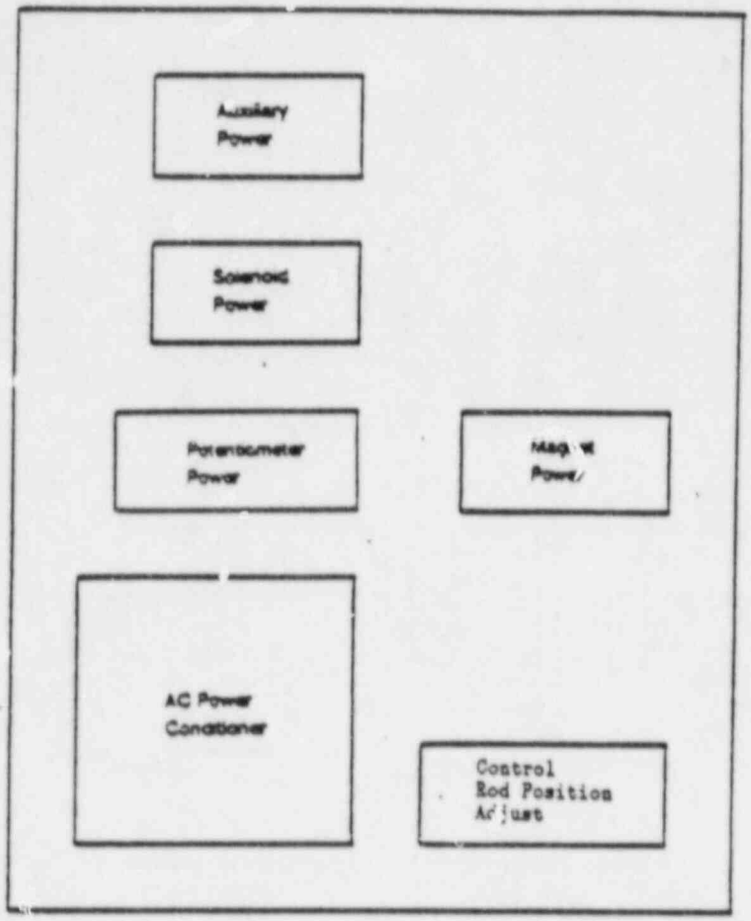

FIG 18 Shelf 1: Power Conditioning

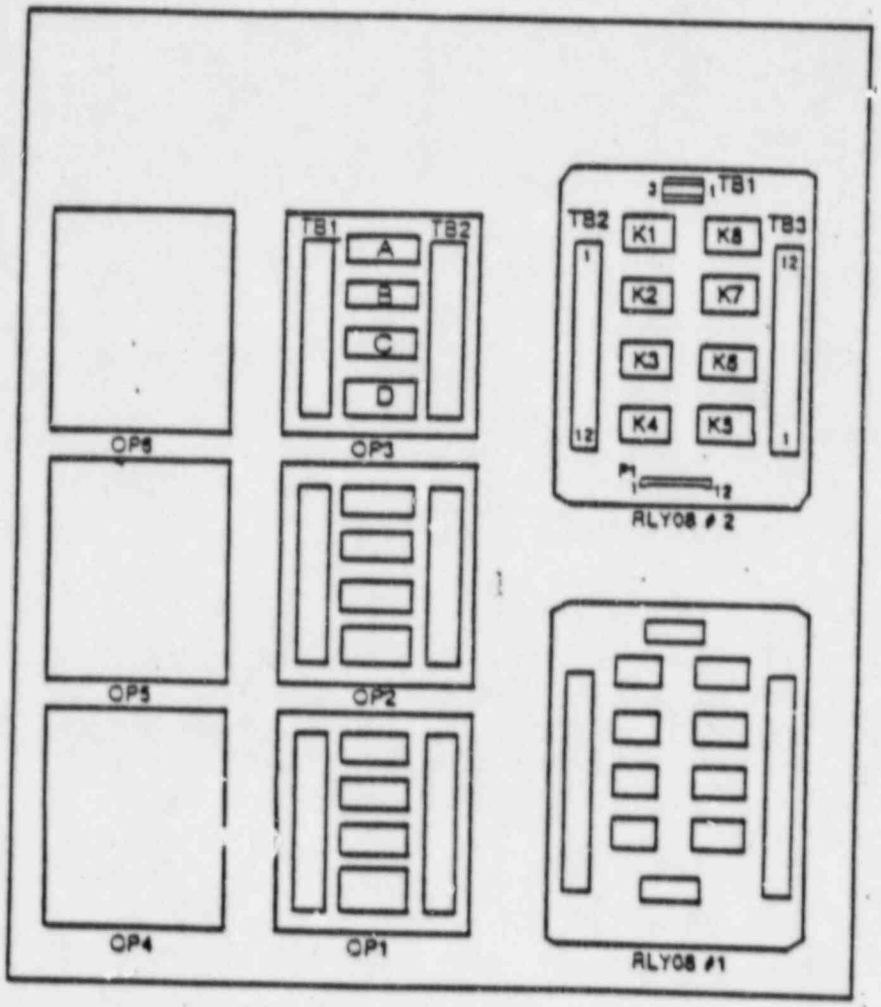

FIG 17 Shelf 2: AC Digital I/O

The components of shelf three are shown in Figure 18. These components are:

1. Three RLY08 relay boards provide a variety of digital output signals. These include control of the standardcontrol rod electromagnetic current; transfer of test signal inputs into the Action Pak limit alarms during pre-start test mode; DAC watchdog contacts in the SCRAM circuit; control of switched 120 VAC power; NM-1000, NPP-1000 lockout during pulse mode; and control of the transient rod air solenoid.

2. The digital input scanner board (DIS064) has a capacity of 64 inputs. The module consists of a Remote Intelligent Module (RIM808), which controls the DIS064, and a diode matrix/terminator board. The DIS064, scans up to 64 isolated contacts and the scan cycle is ten milliseconds.

4. Shelf Four Components

Shelf four of the DAC contains 18 Action Pak modules which are used to monitor or condition reactor sensor signals. Actions Paks also perform the function of the bistable trips in the old console. A summary of Action Pak functions is provided in Table 19.

5. Shelf Five Components

Shelf five contains the NPP-1000 and the NP-1000 nuclear instruments that are the safety flux channels #1 and #2. A relay box is also located on the shelf in order to switch one of three detectors into the NPP-1000.

6. Shelve Six Components

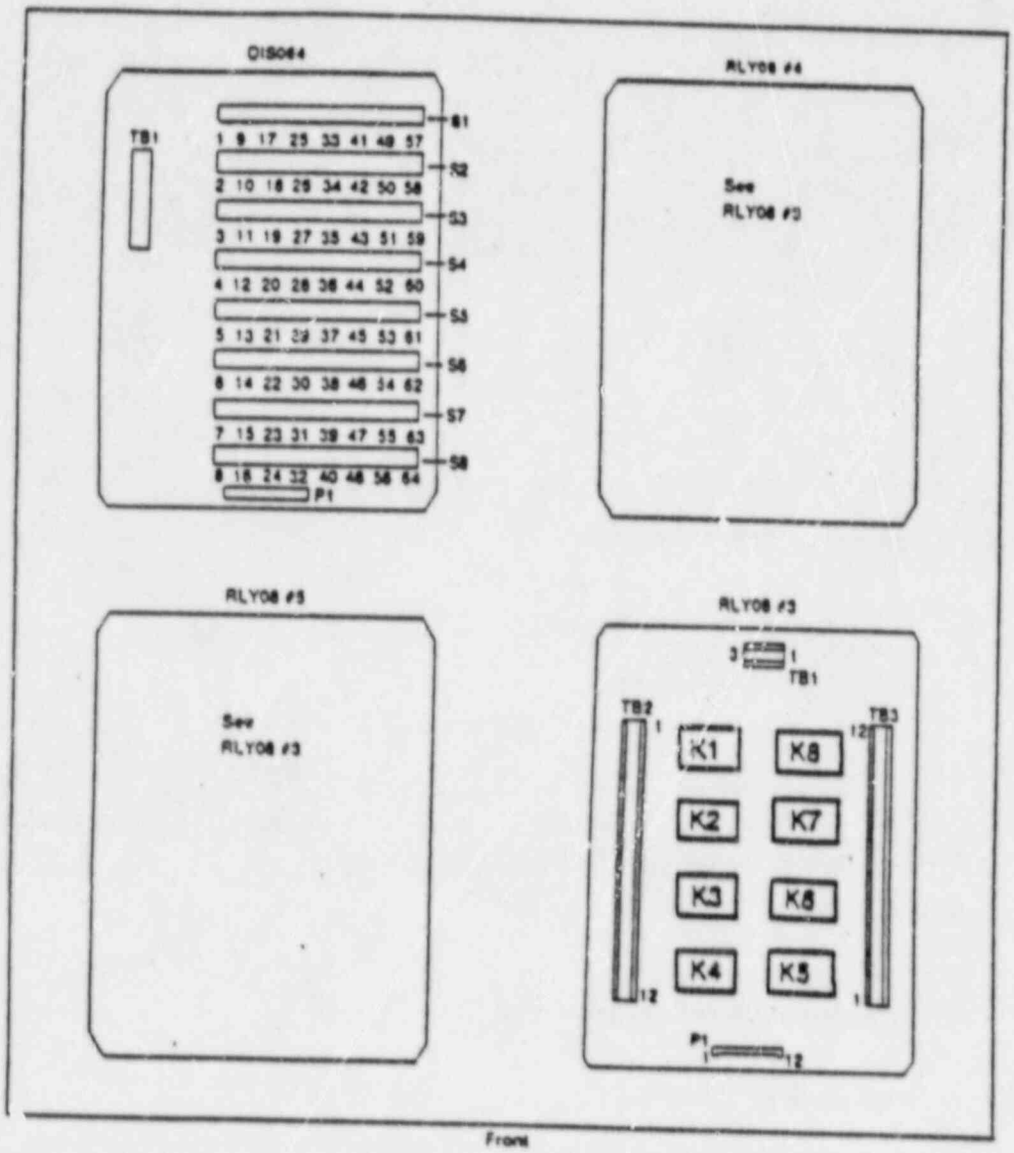

FIG 18 Shelf 3: DC Digital I/O

FIGURE #19 ACTION PAKS BY FUNCTION

ACTION PAK MODEL #	LOCATION	FUNCTION ON SHELF
4440	1	Spare
4440	2	Spare
4151	3	Water temperature in
4151	4	Water temperature out
4151	5	Water temperature pool
4300	6	Magnet voltage
4150	7	Fuel temperature 1
4150	8	Fuel temperature 2
4150	9	Fuel temperature 3
4010	10	Fuel temperature calibration
4010	11	Pulse H.V. and power calibration
4001S	12	Pool conductivity
1000	13	Fuel temperature 1 limit
1000	14	Fuel temperature 2 limit
1000	15	Fuel temperature 3 limit
1020	16	Magnet power ground detector
1000	17	Pulse high voltage limit
1000	18	Pulse power limit

Shelf six of the DAC contains the following components:

1. Translator interface board and associated relays for selecting auto and square wave operation using the regulating rod, the shim rod, and/or the safety rod for reactor control.

2. AI016T analog input termination board receives all inputs to the AI016 board number 2 in the BC-20 expansion chassis (shelf seven).

3. The Lab Master daughter board is an A/D converter for the Lab Master mother board located in the BC-20 microcomputer in the pulse mode, and a D/A converter for the translator input in the servo configuration.

7. Shelves Seven and Eight

Shelves seven and eight contain the BC-20 IBM PC/AT-compatible microcomputer (shelf eight) and expansion chassis (shelf seven).

BC-20 Microcomputer

The BC-20 consists a CPU board, ECIK driver board, RAM expansion board, and network boards.

The CPU board consists of an Intel central processing unit (CPU) board with 256K on-board RAM and an Intel 80286/math co processor. It is configured to boot up from two ROMDISK memory boards (firmware) when power is turned on.

The ECIK driver board transfers computer bus signals to and from the ECIK receiver board in the expansion

chassis. The board has active circuitry to provide additional signal drive for the expansion chassis bus.

The RAM expansion board adds 384K of RAM. The board includes an RS232 serial input/output port, printer port (not used), and a battery-backed real-time clock. The RS232 connects to the DIS064 digital input scanner (shelf 3).

The two IC/Network boards are high-speed, token-passing, local area network boards that operate at one megabaud over standard IBM communication cables. The network boards handle communication between the DAC and the CSC. The two boards provide system redundancy; the computer automatically switches to the alternate board if the main board fails.

Two ROMDISK boards store up to 360K bytes each of selected programs as firmware in EPROM's. The ROMDISK boards have been preprogrammed by GA Technologies before delivery to AFRRI.

8. Expansion Chassis

The expansion chassis consists of a watchdog board, DOM32 digital output module, high-speed analog input board (Lab Master), two analog input boards (AI016), and ECIK receiver board.

The watchdog board acts as fail-safe hardware capable of shutting down the reactor in case of a computer malfunction. The board controls relay contacts in the SCRAM circuit such that if the DAC loses power or stops operating, the relay will be de-energized and the reactor SCRAMMED. The board has two individual outputs connected

to redundant watchdog relays. The board also acts as a monitor of the DAC software by providing four completely independent outputs which constantly check for proper operation of four separate software modules.

The DOM32 digital output module provides up to 32 TTL level digital outputs. Most of these outputs are used to control the RLY08 boards on shelves two and three.

The Lab Master high speed analog input board connects directly to the Lab Master daughter board on shelf six. When the system is in pulse mode, the mother board receives high-speed analog input from the pulse ion chamber via the signal conditioner on shelf one, and its daughter board. In the Servo configuration, the Lab Master generates a $\pm$5 Volt analog signal from the Digital output from the BC-20 Servo controller software. This signal is used to drive the stepping motor translators.

Two AI016 analog input boards receive 16 analog inputs per board. These inputs are received from terminal blocks TB1 and TB2 at the bottom of the DAC cabinet. Figure 20 summarizes these inputs.

The ECIK receiver board connects to the ECIK driver board in the BC-20 computer for bus signal communication between the BC-20 and the expansion chassis. Transmission is via a special-purpose shielded ribbon cable.

D. POWER MONITOR AND SAFETY SYSTEMS

The Power Monitor and Safety Systems monitor the power from source level to full power (up to 1.5 megawatts) and the rate of power change (from -30 to +2 second period) in the steady state modes. The operational channel provides monitor

FIG 20 DAC Analog Inpv. Summary

AIO16 #1 - 0 TO 10VDC INPUTS

CH0	TRANSIENT ROD POSITION
CH1	REGULATOR ROD POSITION
CH2	SHIM 1 ROD POSITION
CH3	SHIM 2 ROD POSITION
CH4	SHIM 3 ROD POSITION
CH5	SHIM 4 ROD POSITION
CH6	SHIM 5 ROD POSITION
CH7	SHIM 6 ROD POSITION
CH8	AREA RADIATION MONITOR #1
CH9	AREA RADIATION MONITOR #2
CH10	AREA RADIATION MONITOR #3
CH11	AREA RADIATION MONITOR #4
CH12	AREA RADIATION MONITOR #5
CH13	AREA RADIATION MONITOR #6
CH14	NPP-1000
CH15	NP-1000

AIO16 #2 - 0 TO 1 VDC INPUTS

CH0	FUEL TEMPERATURE #1
CH1	FUEL TEMPERATURE #2
CH2	FUEL TEMPERATURE #3
CH3	POOL INLET WATER TEMPERATURE
CH4	POOL OUTLET WATER TEMPERATURE
CH5	POOL WATER TEMPERATURE
CH6	SPARE
CH7	SPARE
CH8	PRIMARY COOLANT CONDUCTIVITY
CH9	MAGNET VOLTAGE LEVEL
CH10	SPARE
CH11	SPARE
CH12	SPARE
CH13	SPARE
CH14	SPARE
CH15	SPARE

and control (in automatic modes) of the reactor power using a Fission chamber, NM-1000 neutron channel computer, interfaces with the DAC and CSC and a display on the high resolution monitor. Two independent Power Monitor and Safety Systems are provided to monitor the reactor and shut the reactor down (SCRAM) in the event of an overpower condition. These channels utilize an NP-1000 or NPP-1000 nuclear instrumentation system, ion chambers, a pulse detector, interfaces with the CSC and DAC, and displays on the high-resolution monitor and hard-wired vertical LED bargraph displays. The pulse channel monitors the power level up to 5000 megawatts in the pulse mode. The DAC will collect the pulse channel information and transmit the data to the CSC for processing. Each of these channels is explained in more detail below.

1. NM-1000 OPERATIONAL CHANNEL

The NM-1000 replaces the old fission chamber system. The NM-1000 is an industrial neutron monitor system which has been used for many years in nuclear power plants. It utilizes a neutron detector and a microcomputer to process instrument readings. These are routed to the DAC and then to the CSC for readout and/or processing. The NM-1000 is contained in two NEMA enclosures, one for the amplifier and one for the processor assemblies. The enclosures are mounted on the east wall of the reactor room to the right of the reactor and adjacent to the DAC. A block diagram of the NM-1000 is shown in Figure 21.

The amplifier assembly contains the following:

1. Modular plug-in type subassemblies for pulse preamplifier electronics.

OPERATIONAL POWER MONITOR
FUNCTIONAL BLOCK DIAGRAM

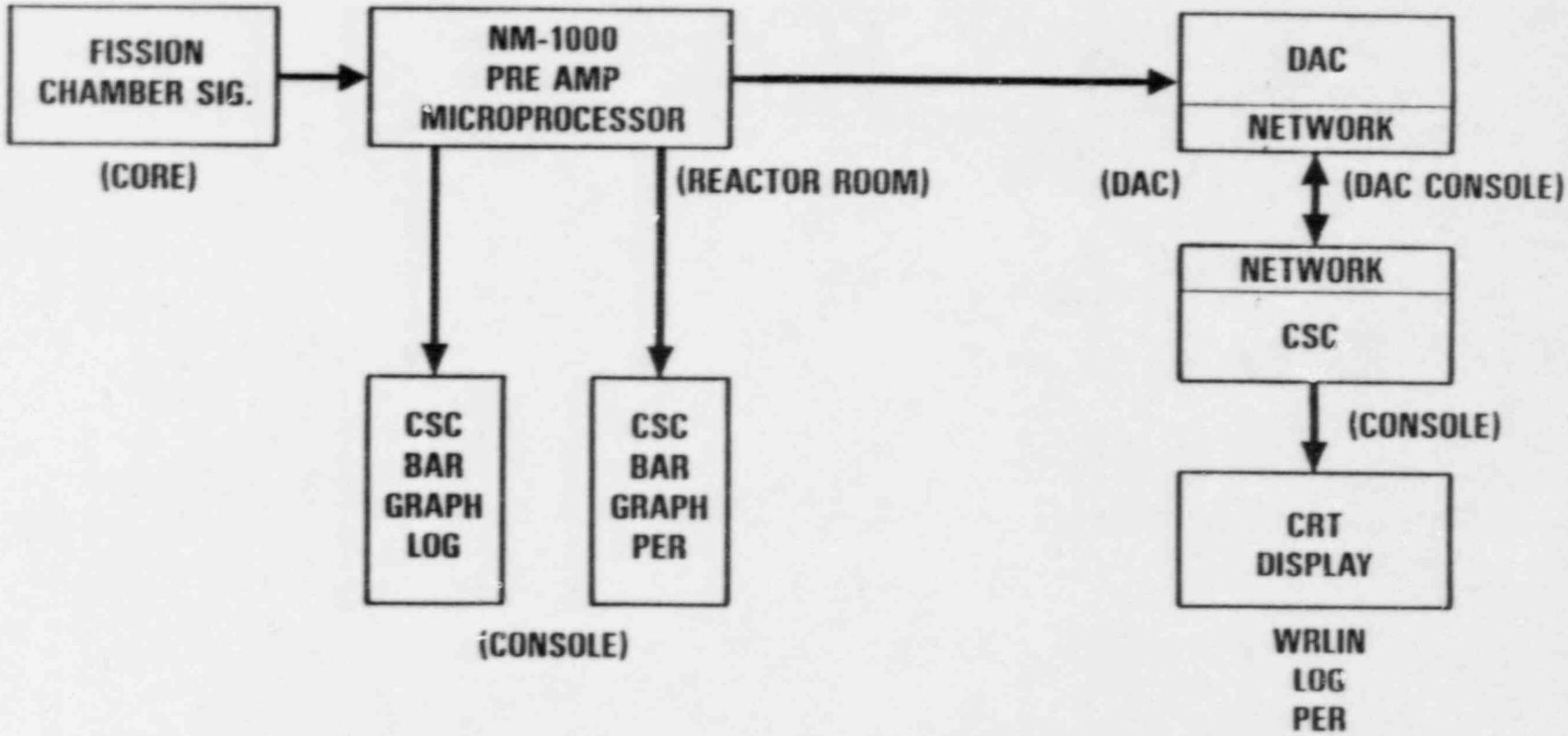

FIG 21

2. Bypass filter and RMS electronics.

3. Signal conditioning circuits.

4. Low voltage power supplies.

5. Detector high-voltage supply.

6. Digital diagnostics and communication electronics.

The processor assembly consists of:

1. Modular plug-in subassemblies for communication electronics (between amplifier and processor).

2. Microprocessor.

3. Control/display module.

4. Low voltage power supplies.

5. Isolated 4 to 20 MA outputs.

6. Isolated RWP outputs.

The amplifier/processor circuit design employs the latest concepts in automatic on-line self diagnostics and calibration verification. Detection of acceptable circuit performance is automatically assessed. The system is calibrated and checked (including the testing of RWP trip points) prior to operation during the prestart checks. The checkout data is recorded for future use. The accuracy of the channels is ±3% of full

scale, and RWP trip settings are repeated within 1% of full-scale input.

The neutron detector uses a standard 0.2 counts/nv fission chamber that has provided reliable service in the past. It has, however, been improved with additional shielding to increase the signal-to-noise ratio. The low noise construction of the chamber assembly allows the system to respond to a neutron source level which would otherwise be masked by noise.

NP-1000 SAFETY CHANNEL

The NP-1000 power safety channel is a complete linear percent power monitoring system housed within one compact enclosure in the DAC. A block diagram of the NP-1000 (safety Channel 1) is given in Figure 22. The NP-1000 enclosure contains the following:

1. Current-to-voltage conversion signal conditioning.

2. Power supply trip circuits.

3. Isolation devices.

4. Computer interface circuitry.

The power level trip circuit is hardwired into the SCRAM system and the isolated analog outputs are monitored by the CSC as well as being hardwired to a vertical LED bargraph indicator. The system uses an uncompensated ion chamber to detect neutrons.

3. NPP-1000 SAFETY/PULSE CHANNEL

SAFETY CHANNEL POWER MONITOR
FUNCTIONAL BLOCK DIAGRAM

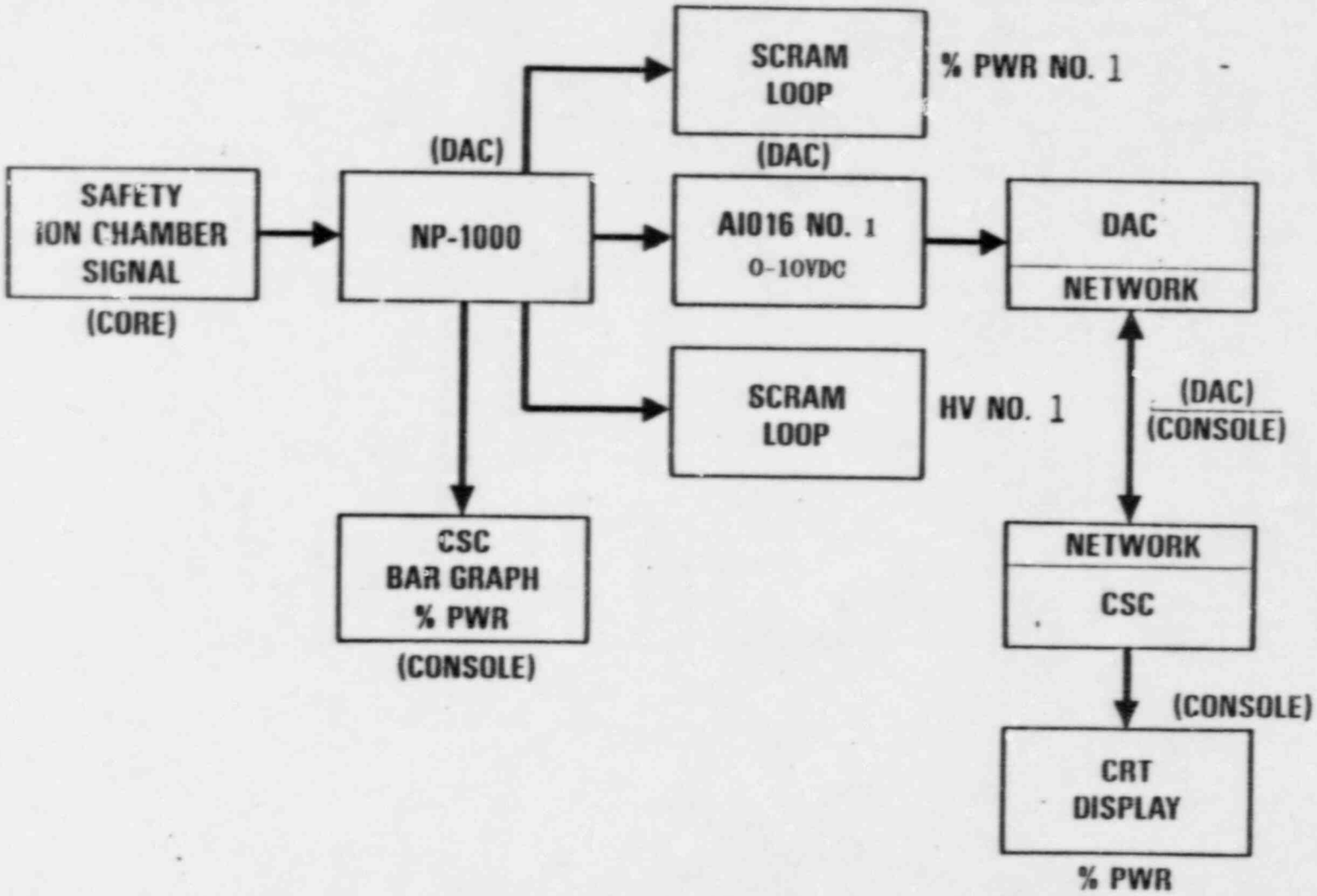

FIG 22

The NPP-1000 system is identical to the NP-1000, except that a pulse integrator circuit is added to measure total energy in the pulse mode. The CSC automatically selects the proper gain setting for pulse or steady state mode, depending on the mode selected by the reactor operator. A block diagram of the NPP-1000 is given in Figure 23.

4. FUEL TEMPERATURE SAFETY CHANNELS

The fuel temperature safety channel is a redundant, fail-safe monitor of fuel temperature and will scram the reactor if a specified trip limit is reached. Both sensors are type K thermocouples. These voltage inputs are optically isolated and converted to 4 to 20 milliamp output signals. Each current loop provides three important functions: 1) Input to a high/low trip unit that scrams the reactor if the signal is too low or high; 2) Input to a vertical LED bargarph located on the reactor control console; and 3) Input to the computer via the AI016 #2 analog input board. Refer to figure 24.

E. ROD WITHDRAWAL PREVENT INTERLOCKS

The Rod Withdrawal Prevent Interlocks have not been changed, except for the removal of the Operational Channel Calibrate RWP. The calibrate signals are performed only during the prestart checks, which can only be initiated in the SCRAMMED configuration. Therefore, the RWP was not required.

F. FACILITY INTERLOCKS

The facility interlocks have not been changed. The new console has a plug that matches the facility interlock input

SAFETY CHANNEL/PULSE POWER MONITOR FUNCTIONAL BLOCK DIAGRAM

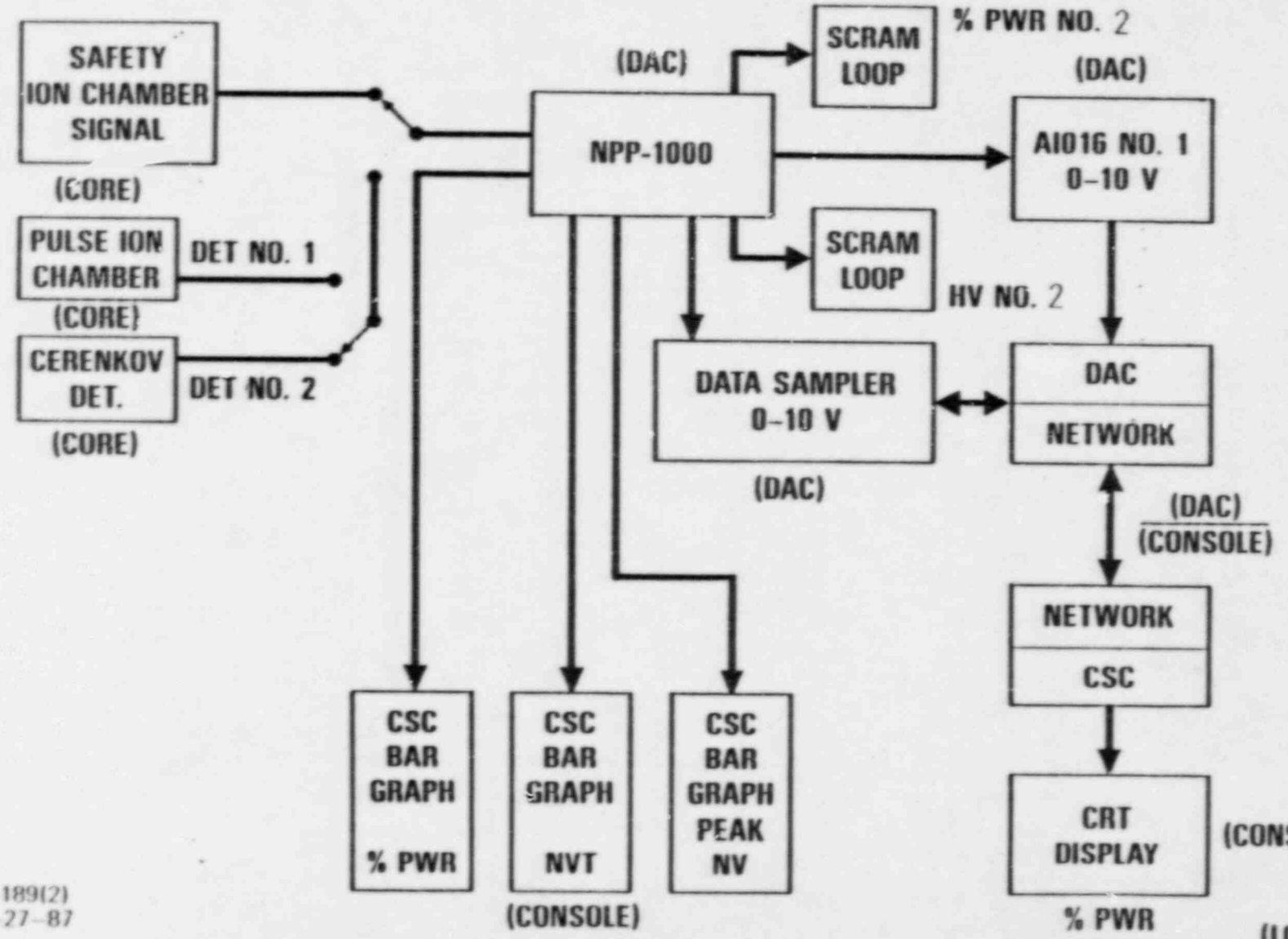

I–189(2)
7–27–87

FIG. 23

FUEL TEMPERATURE MONITOR
FUNCTIONAL BLOCK DIAGRAM

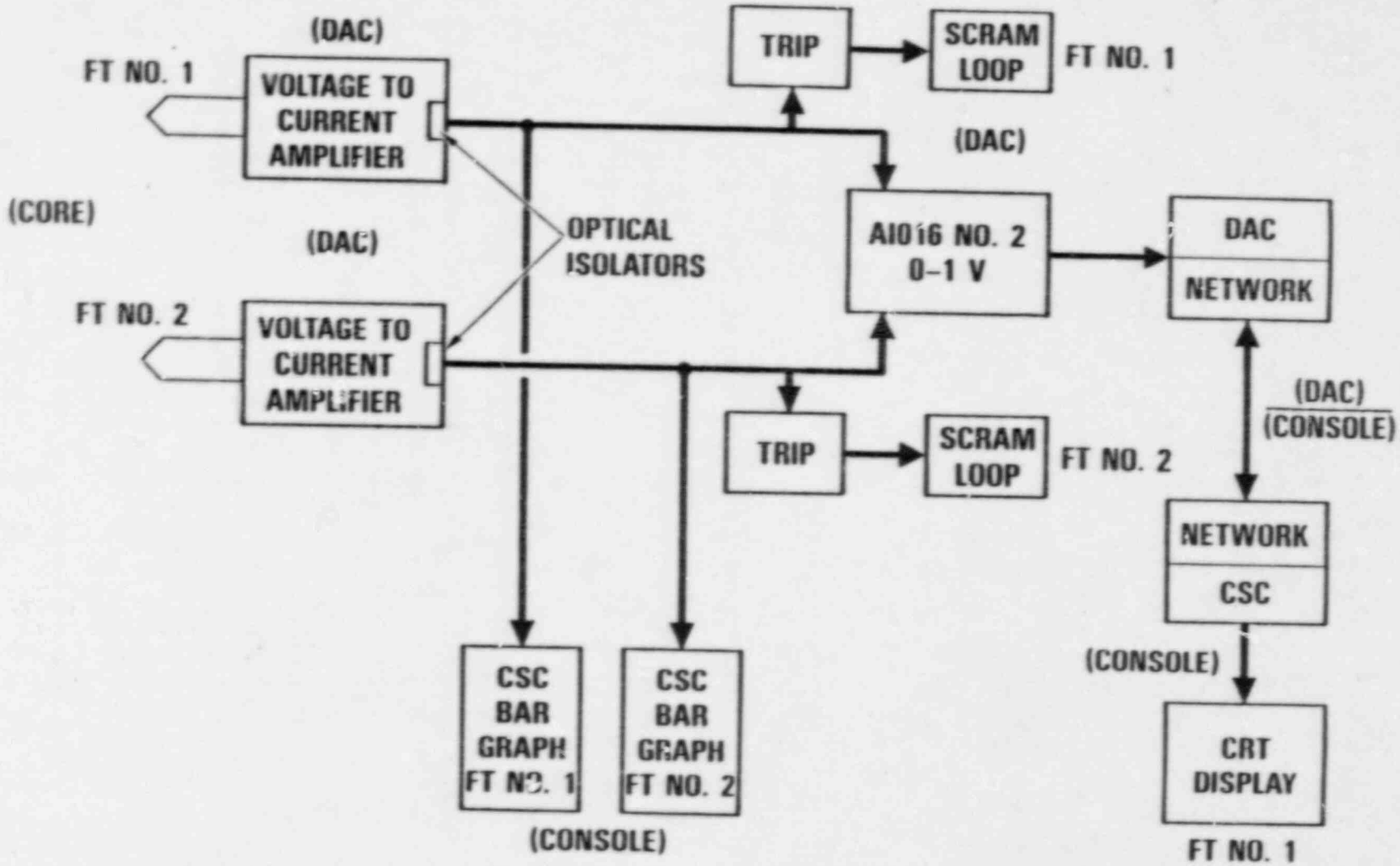

1-189(6)
7-27-87

FIG 24

plug on the old console. Facility interlocks are fed through circuits electronically equivalent to the old console and into controls located on the mode control panel (right of the high resolution CRT).

G. FACILITY STATUS PANEL

The facility status panel (or auxiliary panel) has been rewired by the reactor staff to eliminate outdated components. New racks have been installed to house the facility instrumentation. Facility analog parameters are digitized and interfaced into the DAC and are read out on the reactor status CRT.

H. ACTIVITY COMPUTER

The GA Model R-20A reactivity computer, which is part of the old reactor instrumentation, is interfaced into the DAC and provides reactivity worth measurements used in rod calibrations.

I. SERVO CONTROLLER DESCRIPTION

The Servo Controller, in the Automatic and Square Wave Modes, controls the reactor power automatically to within ±1% of the demand power level selected by the operator. Thumbwheel switches are provided on the Mode Control panel for the desired power selection. The Servo Controller will track and stabilize reactor power through the utilization of a PID algorithm (Proportional, Intergral, Derivative). Unlike the old console which servoed just the Reg Rod in Automatic Mode (and the Transient Rod and Reg Rod in the Square Wave Mode), the new console will be capable of servoing any combination of the three standard control rods (REG, SAFE, or SHIM). It will not, however, servo the Transient Rod in any mode. The

operator will be able to select which combination of rods will be servoed via a Servoed Rod Selector Switch located on the Mode Control Panel of the new control console. The Servo Controller system utilizes the latest digital computer technology coupled with extensively developed software. The old console used an analog computer to servo the rods while the new console uses a digital computer to servo the rods.

Reactor flux level and change is accurately and rapidly measured by an analog/digital input from the Operational (fission) Channel. The PID algorithm in the DAC then responds to this input as compared to the operator set Demand Power Level Setting through the servoed control rods which are powered by precise translator/stepping motor drives. These (operator selected) drives will be driven up or down automatically to control the power level to within ±1% of the Demand Power Level Setting.

J. ROD DRIVES

1. STANDARD CONTROL ROD DRIVES

The MURRI reactor standard control rod drives (Safe, Shim, and Regulating rods) have been updated with new stepping motors. The mechanical system has not been changed. A functional block diagram of the new control rod drives, which interface with the DAC, is shown in Figure 25.

The rod drive mechanisms for each of the new Standard Control Rod Drives will be an electric stepping-motor-actuated linear drive equipped with a magnetic coupler and a positive feedback potentiometer. The purpose of each of the rod drive mechanisms is to position the reactor control rod elements.

STEADY-STATE STANDARD ROD DRIVE FUNCTIONAL BLOCK DIAGRAM

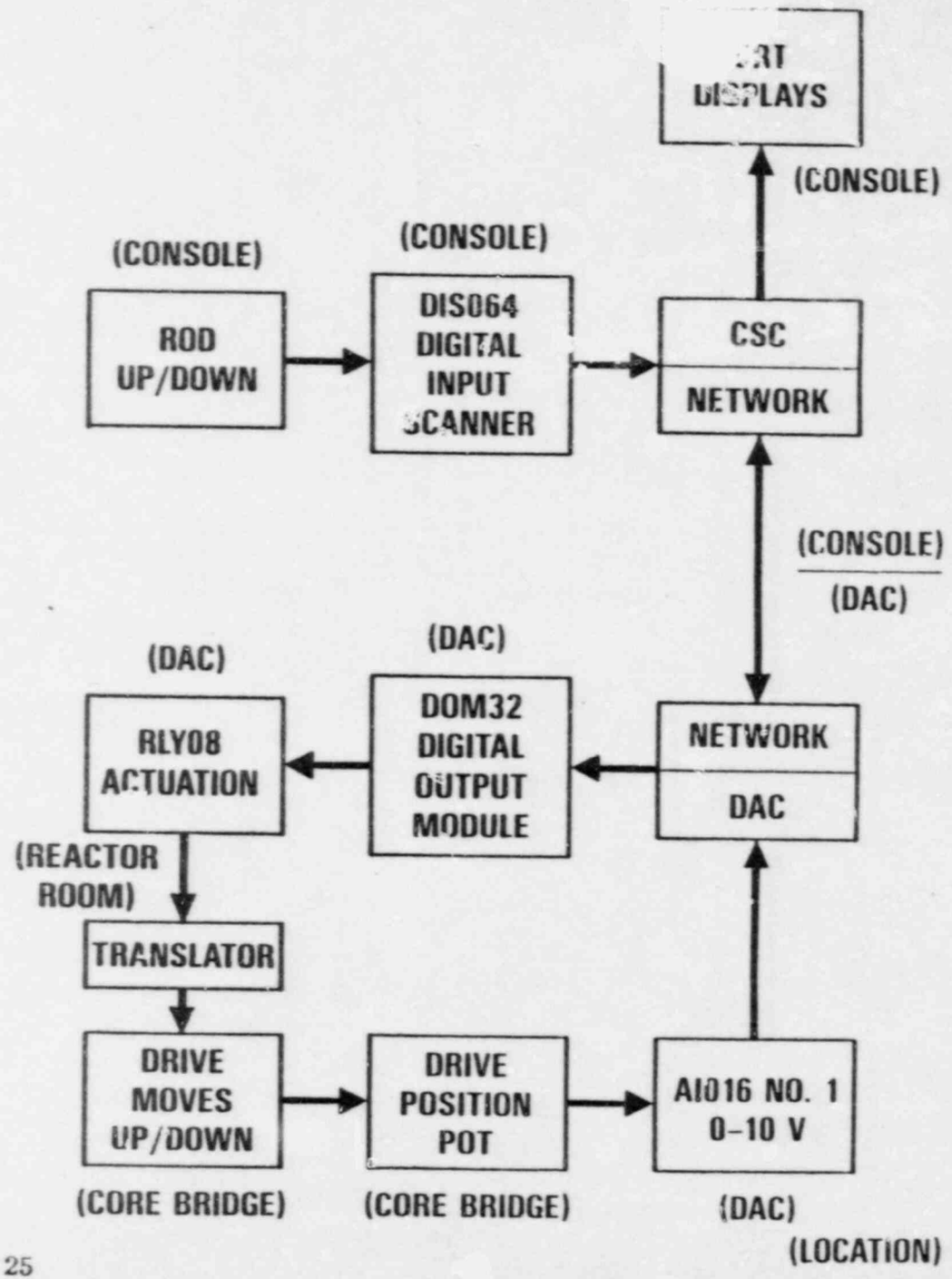

I-189(7)
7-27-87

FIG 25

2. STEPPING MOTOR GENERAL OPERATIONAL DESCRIPTION

A stepping motor drives a pinion gear and a 10-turn potentiometer via a chain and pulley gear mechanism. The potentiometer is used to provide rod position information. The pinion gear engages a rack attached to the magnet draw tube. An electromagnet, attached to the lower end of the draw tube, engages an iron armature. The armature is screwed and pinned into the upper end of a connecting rod that terminates at its lower end in the control rod.

When the stepping motor is energized (via the rod control UP/DOWN switch on the operator's console), the pinion gear shaft rotates, thus raising the magnet draw tube. If the electromagnet is energized, the armature and the connecting rod will raise with the draw tube so that the control rod is withdrawn from the reactor core. In the event of a reactor scram, the magnet is de-energized and the armature will be released. The connecting rod, the piston, and the control rod will then drop, thus reinserting the control rod.

Stepping motors operate on phase-switched dc power. The motor shaft advances 200 steps per revolution (1.8 deg per step). Since current is maintained on the motor windings when the motor is not being stepped, a high holding torque is maintained.

The torque vs speed characteristic of a stepping motor is greatly dependent on the drive circuit used to step the motor. To optimize the torque characteristic vs motor frame size, a Translator Module was selected to drive the stepping motor. This combination of stepping motor and translator module

produces the optimum torque at the operating speeds of the control rod drives.

3. TRANSIENT CONTROL ROD DRIVE

The transient rod drive has been refurbished and the motor replaced. The new drive is mechanically equivalent to the old drive, using a combined pneumatic/electromechanical drive system. A functional block diagram of the new transient drive is shown in Figure 26.

K. SCRAM CIRCUIT

The SCRAM circuit is shown in Figure 27. Most of the scram circuit components are located in the DAC. The circuit is completely hardwired and does not in any way depend on the computer in the console (CSC) or in the DAC, nor on any software. Additionally, watchdog timer circuits in both the CSC and DAC would initiate a scram should there be a failure in any one of four control software modules. If not reset properly by any one of four software modules, the watchdog relays will de-energize, opening the SCRAM circuit and cause a reactor SCRAM.

1. Monitoring Components

The SCRAM circuit is monitored for two things: power supply output, and shorts to ground. The voltage output is monitored by an Action PAK unit. This data is displayed on the reactor status CRT. Isolation from the chassis ground is monitored by an Action Pak unit. This unit is configured to monitor for a high or low alarm. In each case, a relay

TRANS. DRIVE FUNCTIONAL BLOCK DIAGRAM

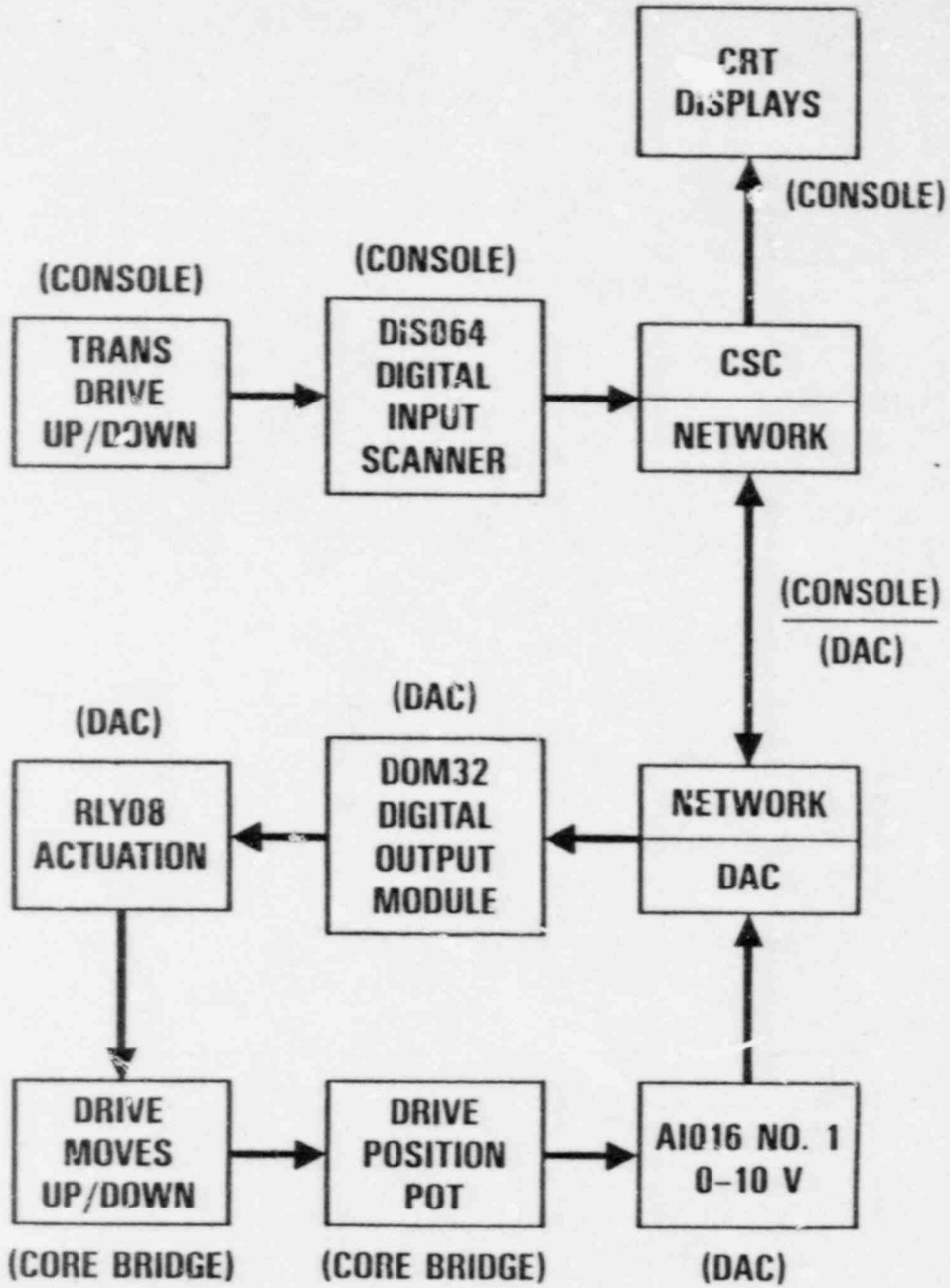

I-189(8)
7-27-87

FIG 26

contact closure is provided to the DAC computer (BC-20) and the condition displayed on the reactor status CRT. The scram circuit is shown in Figure 27.

2. Control Inputs

The following are control inputs in the DAC:

1. The reactor fuel temperature:

   The reactor fuel temperature is monitored using two type K (chromel/alumel) thermocouple inputs. Each thermocouple is conditioned by an Action Pak high/low alarm limits. If a temperature channel exceeds the limit set point or decreases to zero, the unit will open its contact in the SCRAM circuit and close its contact to the DAC computer digital input.

2. The NP-1000 and NPP-1000 flux safety channels: Enclosed in the NP and NPP are the high voltage power supplies for the associated detectors. Trip circuits in each of these devices monitor for a decrease in high voltage. At approximately a 20% decrease this trip will scram the reactor. Since the NPP-1000 is also the pulse monitoring instrument, the pulse high voltage is monitored at the same time as the safety high voltage.

3. Low Water level: Three sets of isolated contacts are used to indicate a safe water level in the reactor pool. One set of contacts is in the supply train; a second set is in the return train; and the third set provides a digital input to the

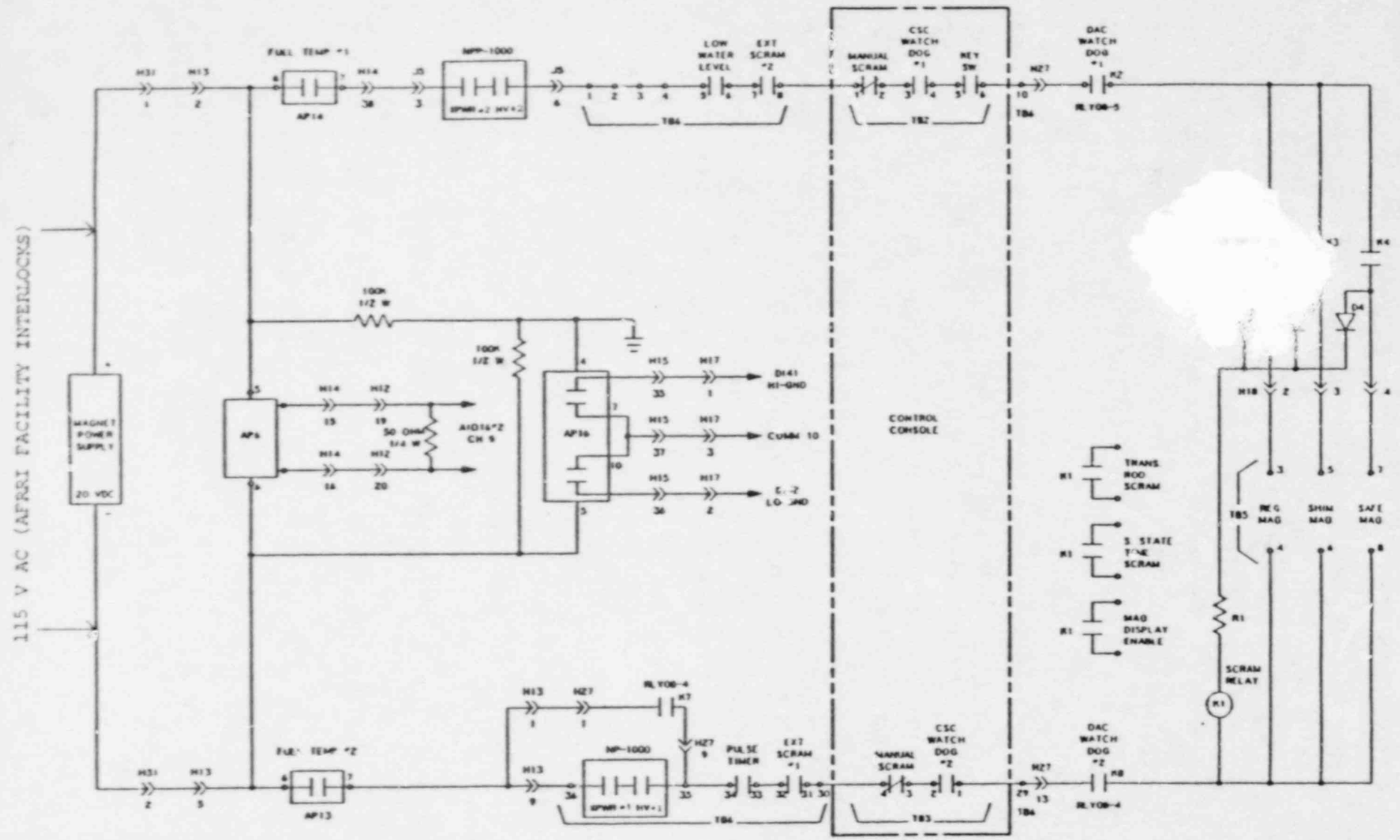

FIG 27 SCRAM Circuit

DAC computer. This third signal should not be confused with the "low water level" digital SCRAMS. It is a warning not a SCRAM condition, which is displayed to the operator on the Reactor Control CRT should the pool water level drop approximately three inches. The SCRAMS are set at a six inch water level loss.

4. External scrams: There is one set of external SCRAM contacts in both the supply and return trains. These contacts are used for external SCRAMs.

5. CSC manual SCRAM switch: The SCRAM circuit is connected to the CSC and the DAC. The large red SCRAM push button on the CSC has three sets of contacts. One set is in the supply train and one set is in the return train. A third set provides digital input to the CSC computer (IBM 7532). Pressing the SCRAM button opens the contacts in the SCRAM circuit and closes the contacts to the CSC computer digital input.

6. CSC Watchdog: The CSC computer includes a watchdog timer board. The watchdog board has four independent timers, all of which must be continuously retriggered by the operating software modules to prevent timeout.

   If a monitored software module fails or hangs up, the associated timer will timeout and both watchdog relays will be de-energized, opening their contacts in the SCRAM circuit. Also, if the CSC computer recognizes a SCRAM condition, either

internally or externally, it will command the watchdog to reset and stop all timers. This causes an immediate SCRAM.

7. CSC magnet power key switch: The key switch on the CSC provides a secure method of preventing inadvertent startup of the reactor. It has three positions: "Off" interrupts the magnet power and forces a SCRAM condition; "On" enables magnet power; and "Reset" enables magnet power and signals the CSC to reset from a SCRAM condition. The switch returns to the "On" position when released. As the switch is moved from one position to another, the switch position is signaled via digital inputs to the CSC.

8. DAC watchdog: A watchdog board is included in the DAC computer also. The DAC watchdog is identical to the CSC watchdog and operates in the same manner.

9. Steady State timer: A steady State timer, if enabled by the operator, will scram the reactor after a preset time during steady state operations.

10. Pulse timer: A pulse timer (up to 15 seconds) will scram the reactor after a pulse according to the preset time (nomally 0.5 seconds).

3. Operating Outputs

Outputs controlled by the SCRAM circuit include the electromagnets for the reg, shim, and safe rods, and the solenoid controlling the air supply to the transient rod.

If the voltage from the power supply is adequate and all of the input control conditions are normal, the SCRAM interlock relay in the transient rod solenoid circuit will be energized and the solenoid control enabled.

Voltage is also supplied to the normally open contacts of the magnet control relays. These relays are controlled by the DAC computer as directed by the CSC computer. A closed contact will energize the associated electromagnet. If the rod is in contact with the magnet, it will follow the motion of the drive mechanism.

If, at any time, one or more of the input control conditions become abnormal, its SCRAM contacts will open. This will remove voltage from all rod magnets and solenoids, thereby dropping all control rods into the safe position. The SCRAM condition must be cleared and the computer reset before operations can be resumed.

L. MODES OF OPERATION

There are four standard operating modes: manual, automatic, square-wave, and pulse.

The manual and automatic modes apply to the steady-state reactor condition; the square wave and pulse modes are the conditions implied by their names and require a pulse rod drive.

The manual and automatic reactor control modes are used for reactor operations from source level to 100% power. These two modes are used for manual reactor start up, change in power level, and steady-state operation. The square-wave operation allows the power level to be raised quickly to a

desired power level. The pulse mode generates high-power levels for very short periods of time.

Manual rod control is accomplished through the use of push buttons on the rod control panel. The top row of push buttons (magnet) is used to interrupt the current to the rod drive magnet. If the rod is above the down limit, the rod will fall back into the core and the magnet will automatically drive to the down limit, where it again contacts the armature.

The middle row of push button (up) and the bottom row (down) are used to position the control rods. Depressing these push buttons causes the control rod to move in the direction indicated. Several interlocks prevent the movement of the rods in the up direction under conditions such as the following:

1. Scrams not reset.
2. Magnet not coupled to armature.
3. Source level below minimum count.
4. Two UP switches depressed at the same time.
5. Mode switch in the pulse position.

There is no interlock inhibiting the DOWN direction of the control rods except in the case of the rods being servoed while in the Automatic Mode.

Automatic (servo) power control can be obtained by switching from manual operation to automatic operation. All the instrumentation, safety, and interlock circuitry described above applies and is in operation in this mode. However, the servoed rods are controlled automatically in response to the power level and period signal. The reactor power level is compared with the demand level set by the operator and is used to bring the reactor power to the demand level on a fixed

preset period. The purpose of this feature is to automatically maintain the preset power level during long term power runs. Options are available to maintain power by movement of a single rod or by bank operation of the rods.

In a square wave operation, the reactor is first brought to critical below 1 KW, leaving the transient rod partially in the core. All of the steady state instrumentation is in operation. The transient rod is ejected from the core by means of the transient rod FIRE push button. When the power level reaches the demand level it is maintained the same as the automatic mode.

Reactor control in the pulsing mode consists of establishing criticality at a flux level below 1 KW in the steady state mode. This is accomplished by the use of the motor driven control rods, leaving the transient rod either fully or partially inserted. The mode selector switch is then depressed. The TRANSIET ROD FIRE switch automatically connects the pulsing chamber to monitor and record peak flux (nv) and energy release (nvt). Pulsing can be initiated from either the critical or subcritical reactor state.

IV. REACTOR INSTRUMENTATION AND CONTROL SYSTEM SOFTWARE DESCRIPTION

The software for the computer based Research Reactor Instrumentation and Control System is divided into fifteen different processes. Each one performs a specific function or functions and is essential for system performance. A major division occurs in that eleven processes are associated with the Control System Computer (CSC) while the remaining four belong to the Data Acquisition Computer (DAC). When operated as a whole, the software utilizes these processes in such a way to present the operator with an instrumentation and control system that is essentially "real time".

The following paragraphs describe each of the fifteen processes in brief terms as to their function or functions. In order to better understand the following information, it is suggested that flow diagrams FIG 1 (CSC) and FIG 2 (DAC) be utilized.

A. CSC Processes

1. SC (State Controller)
   The SC is a major process in the CSC and performs six functions. It (1) receives input commands from the Reactor Control Console (RCC) keyboard via the KEY process, (2) it receives rod control and mode control panel commands via the ZACK process, (3) is initialized during "power on" via the BOOT process, (4) accepts system generated commands from the DISP process (see A.3.) and the DCP process (see item B.3.), (5) transmits commands to the DCP process, and (6) provides menu screen information to the standard resolution display on the RCC.

2. BOOT

CSC

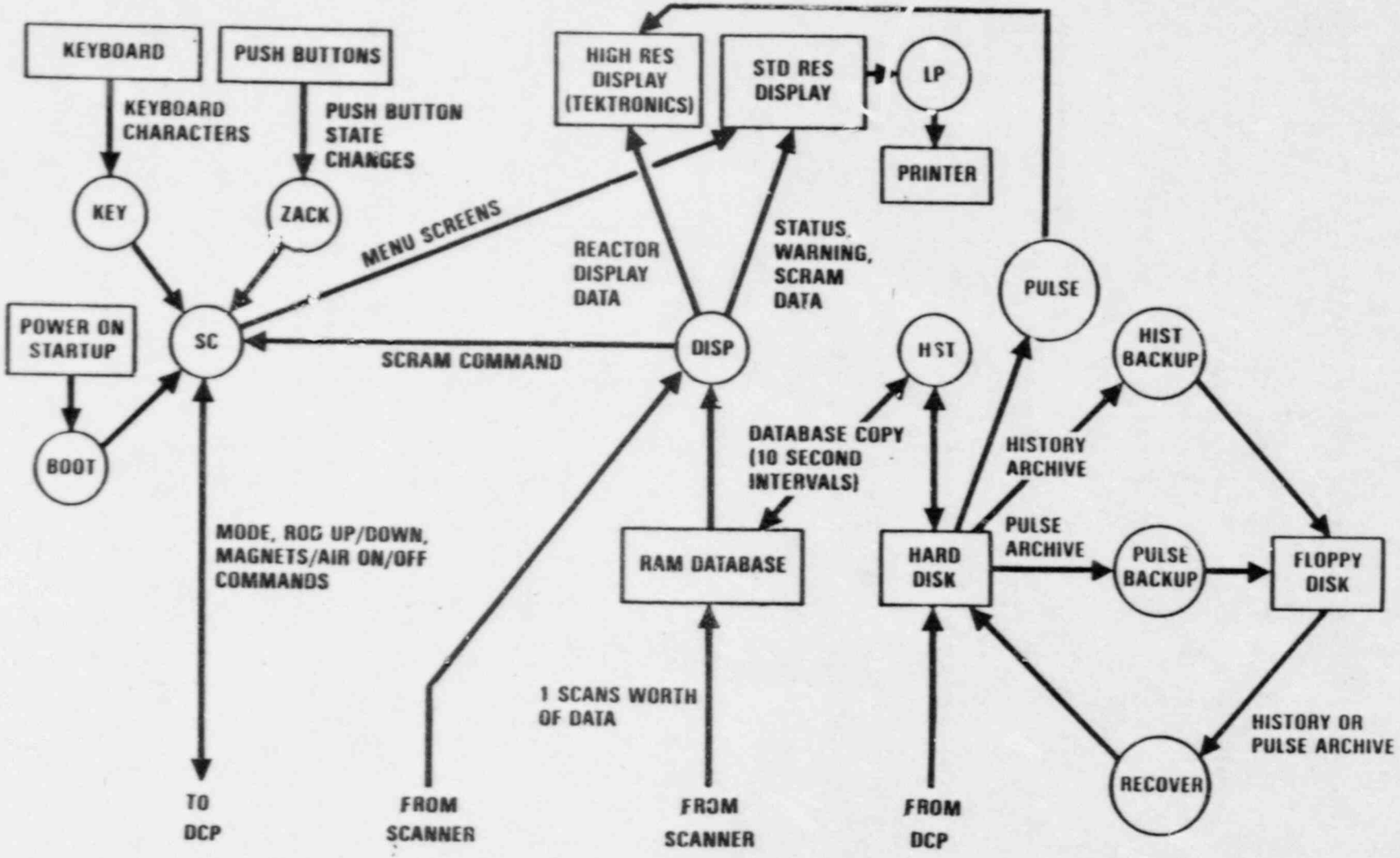
KEYBOARD
PUSH BUTTONS
KEYBOARD CHARACTERS
PUSH BUTTON STATE CHANGES
KEY
ZACK
MENU SCREENS
HIGH RES DISPLAY (TEKTRONICS)
STD RES DISPLAY
LP
PRINTER
REACTOR DISPLAY DATA
STATUS, WARNING, SCRAM DATA
PULSE
POWER ON STARTUP
SC
DISP
HST
HIST BACKUP
SCRAM COMMAND
BOOT
DATABASE COPY (10 SECOND INTERVALS)
HISTORY ARCHIVE
MODE, ROD UP/DOWN, MAGNETS/AIR ON/OFF COMMANDS
RAM DATABASE
HARD DISK
PULSE ARCHIVE
PULSE BACKUP
FLOPPY DISK
1 SCANS WORTH OF DATA
HISTORY OR PULSE ARCHIVE
RECOVER
TO DCP
FROM SCANNER
FROM SCANNER
FROM DCP

FIG 1

Initialization of the system database when AC power is applied is the sole function of the BOOT process.

3. DISP (DISPlay/animator)
   Four functions are performed by the DISP process. (1) Provides real-time animation of the reactor rods, rod drive positions and various bar graphs representing power and period on the high resolution display. (2) Updates the status, warning and scram displays on the standard resolution screen. (3) Commands the SC to go to the scram state when a scram is detected in the database and (4) receives new data commands from the SCANNER process (see item B.4.) located in the DAC.

4. KEY (KEYboard monitor)
   When a key on the keyboard is depressed, the KEY processes sole function is to tell the SC process that a key has been depressed.

5. ZACK (ZACK Dis064 monitor)
   The ZACK process, like the KEY process, indicates to the SC process that push button on the rod control or mode control panel has been depressed.

6. HST (HiSTory data logger and playback)
   The HST process has two functions. (1) Write information from the database into the hard disk and (2) read information from the hard disk into the database. In the Steady State mode at 10 second intervals (configurable interval), the information displayed on both the high and standard resolution screens is recorded on hard disk. This process continues for five minutes after the reactor is scrammed. It will also record the current screens at all scrams and warnings. The HST process, during the

playback mode will reverse this operation for operator convenience in either automatic or manual control.

7. PULSE (PULSE graphics playback)
   The PULSE process has the one function of displaying a selected pulse of ten (10) pulses stored on the hard disk. The display is shown on the high resolution screen. Coordinate axis scaling can be changed to enhance resolution. The pulse data on the hard disk comes directly from the DCP (see item B.3.).

8. LP (Line Printer)
   LP process is another single function process. It take data from standard resolution screen and formats the data for printer input.

9. HIST BACKUP (HISTory archive BACKUP)
   The HIST BACKUP process allows hard disk history archive data to be written onto floppy disks.

10. PULSE BACKUP (PULSE archive BACKUP)
    The PULSE BACKUP process allows hard disk pulse archive data to be written onto floppy disks.

11. RECOVER (restore history or pulse archive)
    The RECOVER process allows restoration from floppy disk of either history or pulse archive data back onto the hard disk.

B. <u>DAC Processes</u>

1. DAC (DAC start up)
   The DAC process is needed only to initializes the GENESIS process. It has no other function.

DAC

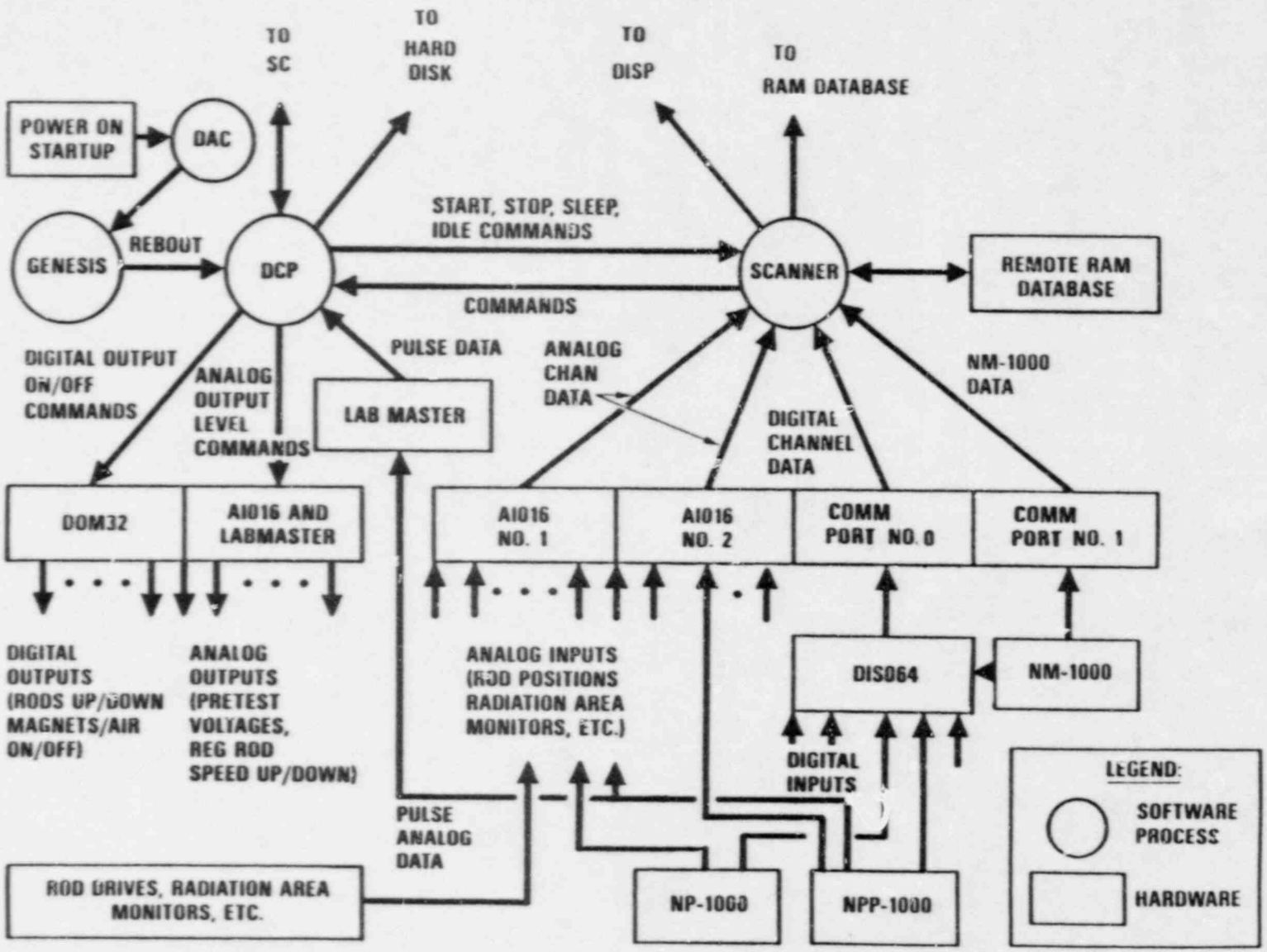
TO SC
TO HARD DISK
TO DISP
TO RAM DATABASE
POWER ON STARTUP
DAC
GENESIS
REBOUT
DCP
START, STOP, SLEEP, IDLE COMMANDS
COMMANDS
SCANNER
REMOTE RAM DATABASE
DIGITAL OUTPUT ON/OFF COMMANDS
ANALOG OUTPUT LEVEL COMMANDS
PULSE DATA
LAB MASTER
ANALOG CHAN DATA
DIGITAL CHANNEL DATA
NM-1000 DATA
DOM32
AI016 AND LABMASTER
AI016 NO. 1
AI016 NO. 2
COMM PORT NO. 0
COMM PORT NO. 1
DIGITAL OUTPUTS (RODS UP/DOWN MAGNETS/AIR ON/OFF)
ANALOG OUTPUTS (PRETEST VOLTAGES, REG ROD SPEED UP/DOWN)
ANALOG INPUTS (ROD POSITIONS RADIATION AREA MONITORS, ETC.)
DIS064
NM-1000
DIGITAL INPUTS
PULSE ANALOG DATA
ROD DRIVES, RADIATION AREA MONITORS, ETC.
NP-1000
NPP-1000
LEGEND:
SOFTWARE PROCESS
HARDWARE

FIG 2

2. GENESIS (real start up and network/scanner monitor)
The GENESIS process performs two important functions, (1) AC power on initialization of the DAC software, and (2) General system diagnostics. For example, before it boots the DCP process, it checks for proper operation of the communication network between the DAC and CSC. During normal operation the GENESIS process periodically checks operation of the network, DAC and CSC. If improper operation is detected it will initiate a DAC reboot sequence.

3. DCP (DAC Command Processor)
The DAC process is the major process in the DAC. It performs five (5) functions which is more than any other DAC process. (1) The process communicates with the CSC's SC process through which reactor rods are moved and mode changes are implemented. In short, it's through this process that the control system commands reactor hardware devices by the use of analog and relay contact closure signals. (2) The process keeps track of which mode the system is in. (3) Another function is the high speed acquisition and transfer of pulse data directly to the CSC's hard disk. This method of data gathering uses the DCP process since it is faster than the typical SCANNER process. (4) The DCP sends start/stop commands to the SCANNER process for proper system operations, and (5) the DCP process contains the control system pretest mode software.

4. SCANNER (digital, analog and NM-1000 input scanner)
The SCANNER process handles all control system inputs other than pulse data as mentioned in B.3. These include analog, digital and RS232. It (1) continually scans these inputs approximately every 200

milliseconds. (2) It transfers this data to the CSC's and a local database. (3) It performs preconfigured alarm set-point checks on all incoming data and sends notification of any alarms to the CSC's DISP process. (4) It performs the auto mode PID algorithm. This algorithm calculates rod speed and direction each scan cycle and adjusts the speed and direction of the rods accordingly.

V. GLOSSARY

Action Pak: The Action Pak is a patented logic circuit designed by Action Instruments. The action paks fulfill the function of the bistable trips in the old console.

AI016 (Analog Input) Boards: The AI016 is a multifunction high speed analog/digital input/output expansion board for the DAC and CSC computer (IBM-7532 and BC-20, respectively).

BC-20: The IBM-compatible microcomputer located in the DAC. The BC-20 is manufactured by Action Instruments and includes an expansion chassis.

CSC (Control System Console): The CSC is the reactor console located in the reactor control room. The CSC includes a control panel.

DAC (Digital Acquisition and Control Unit): The DAC is an industrial microprocessor-based computer packaged in an industrially hardened cabinet. The DAC cabinet is physically divided into seven shelves, and has rows of terminal blocks along the bottom of the cabinet.

DIS064 (Digital Input Scanner) Multiplexer: The DIS064 is a digital input scanner with a capacity of 64 inputs. The module consists of two parts. The bottom board is a Remote Intelligent Module, or RIM808, which controls the DIS064. Mounted on standoffs atop the RIM808 is a diode matrix and terminator board. The two are connected via a ribbon cable.

DOM32 (digital Output Module): The DOM32 is a general purpose digital output board for the interface of 32 TTL level digital outputs to the IBM PC/AT (or equivalent) in the DAC and CSC.

ECIK (Expansion Chassis Interface Connector) Driver Board: The ECIK driver board, located in the CSC, transfers computer bus signals to and from the ECIK receiver board in the expansion chassis. The board has active circuitry to provide additional signal drive for the extender chassis bus.

ECIK Receiver Board: The ECIK receiver board connects to the ECIK driver board in the IBM-7532 computer for bus signal communication between the 7532 and the expansion chassis. Transmission is via a special-purpose shielded ribbon cable.

EPROM (Eraseable Programmable Read Only Memory) Disk Boards: The EPROM disk boards are located in the BC-20. They contain firmware which is programmed by GA Technologies prior to delivery to the reactor facility.

IC-DOS: The operating system for the IBM-7532 and BC-20 industrial microcomputers. IC-DOS is a variation of PC-DOS used in IBM PC and compatible computers.

Labmaster: The labmaster is a high-speed analog input board which connects directly to the labmaster daughter terminations board on shelf five of the DAC via a 50 pin ribbon cable. In pulse mode, the labmaster mother board receives high-speed analog input from the ion chamber via the signal conditioner on shelf one and the labmaster daughter board. In the servo configuration, the Lab Master acts as a D/A connecter by taking the digital output from the BC-20 Computer and producing a ± 5 volt analog signal which is used to drive the stepping motor translators.

Network: The I/C network board is a high-speed, token passing, local area network board that handles communication between the DAC and CSC. There are two network boards in the DAC (in the BC-20 computer) and the CSC to provide system redundancy.

Optical Isolator Boards: The optical isolator boards are located on shelf two of the DAC and provide protection of the BC-20 from high voltage surges.

RLY08 (Relay): A relay board located in the DAC. Each board contains eight relays and control Control Rod movement.

Watchdog Board: The watchdog board acts as a hardware fail safe capable of shutting down the reactor in case of computer failure. The board controls relay contacts in the SCRAM circuit such that if the DAC or CSC computers lose power or stop operating, the relays will be de-energized and the reactor SCRAMMED.

384COM: The 384COM is a 384K expansion board in the BC-20 computer with a RS232 serial I/O port, a parallel printer port, and a battery-backed real-time clock. Only the RS232 port is used. It connects to the DIS064 digital input scanner on shelf 3 of the DAC.