Florida
Power
CORPORATION
Crystal River Unit 3
Docket No. 50-302
Operating License No. DPR-72

November 24, 1998
3F1198-01

U.S. Nuclear Regulatory Commission
Attn: Document Control Desk
Washington, DC 20555-0001

Subject: License Amendment Request #240, Revision 0
Addition of Safety-Related Diesel-Driven Emergency Feedwater Pump

References:

1. FPC to NRC letter, 3F0697-10, dated June 14, 1997, "Technical Specification Change Request Notice 210"
2. FPC to NRC letter, 3F0997-30, dated September 25, 1997, "Supplement to Technical Specification Change Request Notice 210"
3. NRC to FPC letter, 3N0198-10, dated January 24, 1998, "Crystal River Unit 3 - Issuance of Amendment RE: Small Break Loss-of-Coolant Accident Mitigation (TAC NO. M98991)"
4. FPC to NRC letter, 3F0491-05, dated April 24, 1991, "Natural Circulation Cooldown"
5. FPC to NRC letter, 3F1297-47, dated December 24, 1997, "Technical Specification Change Request Notice 210, Request for Additional Information (TAC No. M98991)"

Dear Sir:

Florida Power Corporation (FPC) submitted Technical Specification Change Request Notice (TSCRN) 210 in Reference 1. Several supplements were made to TSCRN 210, including References 2 and 5. The requested changes were issued in Reference 3 as Amendment No. 163 to Operating License No. DPR-72 for Crystal River Unit 3 (CR-3). Portions of Amendment No. 163 were approved until Cycle 12 only. FPC committed to submit a License Amendment Request (LAR) to remove the interim Improved Technical Specifications (ITS) and provide a resolution to the Emergency Diesel Generator (EGDG) capacity limitations. FPC has determined that the optimal solution is the installation of a Diesel-Driven Emergency Feedwater Pump (EFP-3). Installation of EFP-3 involves an unreviewed safety question and requires changes and additions to the ITS and Bases. This letter provides the information to support the proposed license changes.

A001

The EFP-3 modifications will be completed during the next refueling outage scheduled to begin October 1, 1999. Much of the installation will be completed prior to the outage, however, some interconnections between the new and existing systems cannot be initiated until the plant is shutdown. In addition, a large number of procedures, including Emergency Operating Procedures, will have to be changed and training completed prior to the outage in order to implement the modifications on schedule. Therefore, FPC requests that this LAR be approved by July 19, 1999. The license amendment will be implemented prior to restart from the refueling outage.

An overview of the proposed modifications was presented to the NRC Staff on September 21, 1998. At that time, the Staff requested information concerning the post-modification testing of the proposed changes. This information will be sent in a separate submittal by January 29, 1999.

Submittal Format

Attachment A – Regulatory Commitment

This attachment includes a statement of the commitment made in this letter and associated completion date.

Attachment B – Operational Safety Assessment

This attachment provides an integrated, operationally oriented assessment of the impact the proposed changes will have on plant response to design basis and licensing basis events. The Background section provides a detailed discussion of the current Emergency Feedwater (EFW) system, operator actions and accident mitigation challenges. The Description section shows how the proposed modifications eliminate these challenges. This attachment includes sketches of the EFW system before and after the proposed modifications. These sketches are referenced in the Background and Discussion sections of the attachment.

Attachment C – Description and Justification of Proposed ITS and ITS Bases Changes

This attachment provides background information and a description of plant changes. The proposed ITS and Bases changes are described and the reasons for the changes are discussed. The No Significant Hazards Evaluation is also included in this attachment.

Attachment D – Proposed Revised ITS and Bases Pages

This attachment includes the revised ITS and Bases pages. Changes are marked with revision lines.

Attachment E – Strikeout Version of ITS and Bases Pages

This attachment is provided to facilitate the review of the ITS and Bases changes. A large quantity of text was deleted from numerous ITS and Bases pages. Several new specifications were added. This section shows what text was added and what was deleted. The pages provided in Attachment D show the composite result of the additions and deletions.

Attachment F – Discussion of EFW System Water Sources

This attachment is included to revise information presented on EFW System water sources presented in Reference 4. These changes are necessary to reflect recent calculations that more accurately reflect usable tank volumes.

Attachment G – Simplified Drawing of the EFW System

This drawing is provided to facilitate the review of the proposed ITS and Bases changes. This drawing shows the existing EFW system and the proposed modifications.

If you have any questions regarding this submittal, please contact Mr. Sid Powell, Manager, Nuclear Licensing at (352) 563-4883.

Sincerely,

JJHolden

John J. Holden
Director
Site Nuclear Operations

JJH/pei
Attachments

xc: Regional Administrator, Region II
Senior Resident Inspector
NRR Project Manager

STATE OF FLORIDA

COUNTY OF CITRUS

John J. Holden states that he is the Director, Site Nuclear Operations for Florida Power Corporation; that he is authorized on the part of said company to sign and file with the Nuclear Regulatory Commission the information attached hereto; and that all such statements made and matters set forth therein are true and correct to the best of his knowledge, information, and belief.

JJHolden

John J. Holden
Director
Site Nuclear Operations

Sworn to and subscribed before me this 24th day of ~~December~~ November, 1998, by John J. Holden.

Charlene Miller

Signature of Notary Public
State of Florida

CHARLENE MILLER
COMMISSION NO. CC666870
EXPIRES 11/4/2000
BONDED THRU ASA • 1-888-NOTARY1

(Print, type, or stamp Commissioned Name of Notary Public)

Personally Known ✓ -OR- Produced Identification _____

FLORIDA POWER CORPORATION
CRYSTAL RIVER UNIT 3
DOCKET NO. 50-302/LICENSE NO. DPR-72

ATTACHMENT A

LICENSE AMENDMENT REQUEST #240, REVISION 0
ADDITION OF SAFETY-RELATED DIESEL-DRIVEN EMERGENCY FEEDWATER PUMP

Regulatory Commitment

ATTACHMENT A

Regulatory Commitment

The following table identifies those actions committed to by Florida Power Corporation in this document. Any other actions discussed in the submittal represent intended or planned actions by Florida Power Corporation. They are described to the NRC for the NRC's information and are not regulatory commitments. Please notify the Manager, Nuclear Licensing of any questions regarding this document or any associated regulatory commitments.

Commitment	Due Date
FPC will submit information concerning post-modification testing of the proposed EFW changes.	January 29, 1999

FLORIDA POWER CORPORATION
CRYSTAL RIVER UNIT 3
DOCKET NO. 50-302/LICENSE NO. DPR-72

ATTACHMENT B

LICENSE AMENDMENT REQUEST #240, REVISION 0
ADDITION OF SAFETY-RELATED DIESEL-DRIVEN EMERGENCY FEEDWATER PUMP

Operational Safety Assessment

Introduction

This document provides an operationally oriented safety assessment supporting specific modifications to the Emergency Feedwater (EFW) system which will be installed during the next refueling outage, 11R, scheduled in the fall of 1999. The focus of this safety assessment will be accident management operations that credit EFW for design basis accidents as well as station blackout (SBO) and post seismic event cooling.

The Background section will address the current EFW system configuration and operation including operational challenges to maintain controlled and monitored EFW flow to the steam generators. The EFW system is required to support steam generator cooling for certain events, which include a spectrum of small break loss-of-coolant accidents (SBLOCAs). Certain single failures, when taken concurrently with a loss-of-offsite power (LOOP), require operator action to maintain EFW to the steam generators. These operator actions and resulting system configurations were reviewed by the NRC, and resulted in Improved Technical Specification (ITS) changes (License Amendment No. 163), some of which are only valid until Cycle 12. The Discussion section will address planned modifications designed to improve accident management response in terms of EFW system configuration and operation.

Background and Current Configuration (Refer to Figure 1, Page 8 of 9)

The motor-driven EFW pump (EFP-1) is powered from the "A" train 4160VAC emergency bus, which in turn auto-connects to the "A" train emergency diesel generator (EGDG-1A) during a LOOP. The steam driven EFW pump (EFP-2) receives steam from either or both steam generators through parallel block valves, ASV-204 and ASV-5. ASV-204 is an "A" train DC vital powered valve, while ASV-5 is a "B" train DC vital powered valve. Both valves receive an auto-open signal from the Emergency Feedwater Initiation and Control (EFIC) system should the demand for EFW exist. EFIC will start both EFW pumps if any of the following conditions exist:

- Loss of all four reactor coolant pumps
- Actuation of both trains of Engineered Safeguards (ES) High Pressure Injection (HPI)
- Loss of both main feedwater pumps
- Low steam generator level
- Low steam generator pressure

Existing load limitations on EGDG-1A prohibit concurrent operation of EFP-1 with either: 1) the "A" train Decay Heat Pump (DHP-1A), which automatically starts on a Low Pressure Injection (LPI) actuation (reactor coolant system (RCS) pressure less than 500 psig) in the LPI mode[1], or 2) the "A" train Control Complex Chiller. Therefore, EFP-1 is interlocked with the LPI actuation such that an LPI actuation concurrent with a LOOP (EGDG-1A output breaker closed)

[1] DHPs start with the suction aligned to draw water from the borated water storage tank. The water is pumped to the reactor vessel via the core flood injection lines, provided reactor coolant system pressure is below the shutoff head of the DHPs.

results in EFP-1 automatically tripping. For the purpose of this document, the described interlock will be referred to as the LPI/EFP-1 trip interlock.

Certain single failures require operator action to maintain controlled and monitored EFW to the steam generators. Three limiting single failures were addressed in License Amendment No. 163 that required additional analyses, plant modifications and Emergency Operating Procedure (EOP) changes to direct operator actions for successful accident management during design basis accidents. Each single failure was evaluated for impact during a SBLOCA with a concurrent LOOP. A description of each single failure, the related challenges and the actions implemented to ensure a successful accident management response follows:

Loss of "A" Train DC Electrical System or Battery (LOBA)

This single failure results in a loss of the "A" train ES, including EFP-1. EGDG-1B starts and loads its respective ES bus, which supplies emergency power to the "B" train auto-connected loads. The challenge was to define any limitations on the capability of EFP-2 to maintain steam generator cooling until steam generator cooling was no longer necessary. Steam generator pressure response was analyzed and compared to EFP-2 operational requirements. It was determined that operator action would be required to stop EFP-2 at a predetermined steam generator pressure and then restart EFP-2 if and when steam generator pressure recovered. Operator guidance was developed to stop EFP-2 if steam generator pressure reaches approximately 160 psig[2]. For the spectrum of SBLOCAs where EFW is required to remove decay heat, a subsequent heatup of the RCS will result in steam generator pressure increasing after EFP-2 is stopped. When steam generator pressure reaches approximately 500 psig[2] then EFP-2 is placed back in operation. EFP-2 will continue to be cycled as long as it is needed.

There are defense-in-depth measures that can be implemented (EOP directed) to minimize or even eliminate the need to cycle EFP-2, even though they are not credited in the design basis solution. A diesel generator was installed during the recent design outage to provide power to an auxiliary feedwater pump (FWP-7) during a LOOP. Both the diesel generator and FWP-7 can be started from the control room. Isolation valves are opened locally and control valves are managed in the control room. To provide EFW to the Once Through Steam Generators (OTSGs) from EFP-2, auxiliary steam from neighboring coal fired units (Units 1 and 2) can be aligned to provide adequate steam pressure. This regulated steam supply would alleviate the need to cycle EFP-2 based on low steam generator pressure.

Loss of "B" Train DC Electrical System or Battery (LOBB)

This single failure results in a loss of the "B" train ES. EGDG-1A starts and loads its respective ES bus, which supplies emergency power to the "A" train auto-connected loads, including EFP-1. ASV-204 ("A" train steam valve) automatically opens to start EFP-2. This configuration presents several challenges:

[2] This is an error-corrected value used in the emergency operating procedure.

- With EFP-1 operating, EGDG-1A does not have enough margin to load the "A" train control complex chiller or manually start the "A" train LPI pump to support Emergency Core Cooling System (ECCS) piggyback[3] operation.

- EFW control valves in the EFP-2 flow path to both steam generators fail open as a result of the loss of "B" train DC power. Steam generator overfill protection is initially provided by the "A" train powered EFW block valves in the same flow path that contains the failed open control valves. The block valves will cycle closed when the overfill actuation level setpoint is reached, and reopen when the overfill reset level setpoint is subsequently reached. Operator action is required to close and deenergize the cycling EFW block valves.

- With the EFW control valves failed open, the resulting elevated flow rate could challenge EFP-2 operability due to inadequate suction head.

Plant modifications were installed and operator guidance incorporated into EOPs to provide the means for successful accident management:

- Cavitating venturis were installed at the discharge of both EFW pumps to limit EFW flow, which provides protection against runout/inadequate NPSH.

- A motor operated valve (EFV-12) was installed in the EFW cross-tie pipe. This enables three EOP directed operator actions:

  1. Energize and open EFV-12 to establish a controlled and monitored flow path from EFP-2 to both steam generators via the "A" train powered control valves,
  2. Close and deenergize the cycling EFW block valves, and
  3. Stop EFP-1 (EGDG-1A load management) which provides margin to start the "A" train LPI pump for ECCS piggyback operation and start the "A" train control complex chiller.

EFP-2 will continue to provide EFW to both steam generators; however, steam generator pressure will decrease over time as a result of a reduction in decay heat, steam removal by EFP-2 and the energy transport through the break. The same strategy for cycling EFP-2, as described for a LOBA, would be employed in this situation.

Loss of EFP-2

For a single failure of EFP-2, both EGDGs start and provide emergency power to the auto-connected loads, including EFP-1. In order to maintain EFP-1 in operation and manually load the "A" train LPI pump to support ECCS piggyback operation, a different EGDG-1A load management strategy was developed.

---

[3] ECCS piggyback operation is defined as LPI aligned to take suction from the reactor building emergency sump (RBES) with the discharge supplying net positive suction head (NPSH) to its respective train HPI pump, as the HPI pumps cannot take suction directly from the RBES.

Plant modifications were installed and operator guidance incorporated into EOPs to provide the means for successful accident management:

- Pull-to-Lock switches were installed on closed cycle cooling water pumps (SWP-1A and 1B) and their respective heat sink pumps (RWP-2A and 2B). This enables EOP directed operator actions to stop the "A" train pumps (SWP-1A and RWP-2A) and keep them from restarting, while the "B" train pumps continue to provide cooling to supported components. These actions constitute EGDG-1A load management required to maintain EFP-1 operating while providing enough margin to start the "A" train LPI pump to support ECCS piggyback operation. Note that for this scenario, the "B" train control complex chiller is placed in service, which is powered from EGDG-1B.

- A switch was installed to defeat the LPI/EFP-1 trip interlock. This enables EOP directed operator actions to defeat the interlock after EGDG-1A load management is accomplished and permits continued operation of EFP-1 while RCS pressure and temperature decreases through the LPI actuation setpoint, as well as enables starting the "A" train LPI pump to support ECCS piggyback operation.

Discussion (Refer to Figure 2, Page 9 of 9)

Although successful accident management is supported by the current system configuration and EOP directed operator actions, improved accident management response will be achieved by the installation of several key EFW modifications:

- A new diesel-driven EFW pump (EFP-3) will be installed to functionally replace EFP-1.
- The auto-start logic will be removed from EFP-1.
- The auto-open logic will be removed from ASV-204.

The combination of these modifications will eliminate the need to load manage EGDG-1A and prevent the steam generator overfill scenario during a LOBB.

EFP-3 will be installed as a functional replacement for EFP-1. EFP-3 will start and provide controlled and monitored EFW flow to both steam generators through the same EFW block and control valves as EFP-1 currently uses. Removing the auto-start logic from EFP-1 eliminates the need to perform EGDG-1A load management to accommodate ES loads required to mitigate design basis accidents. Therefore, operator actions to cross-tie EFW and stop EFP-1 for the LOBB scenario, or stop SWP-1A and RWP-2A for a failure of EFP-2, will no longer be required. EFP-1 will remain available as a manually started pump.

ASV-204 will no longer be required to open to mitigate a design basis accident. Credit for EFP-2 automatically starting to reduce load on EGDG-1A will not be required, since the auto-start feature for EFP-1 will be removed. As an added measure, the control switch for EFP-1 will be maintained in the pull-to-lock position during normal operation. With the removal of the auto-open signal from ASV-204, the overfill challenge during a failure of "B" DC electrical system is eliminated. ASV-204 will remain available as an "A" train powered motor operated valve, remotely operated from the control room.

For a single failure of EFP-3, EFP-2 would establish and maintain the required level in the available steam generator(s). As previously discussed, EFP-2 operation is a function of steam generator pressure. EFP-2 can be cycled as needed to maintain the steam generators as functional heat sinks. However, FWP-7 should be available and can be placed in service to eliminate or minimize the need for cyclic operation of EFP-2. Another alternative is to align auxiliary steam from Units 1 and 2 to supply EFP-2 with a constant pressure steam source. EFP-1 would also be available provided EGDG-1A load management could be implemented or off-site power was available.

It should be noted that the LPI/EFP-1 trip interlock circuit will remain functional as well as the ability to defeat it. Maintaining the LPI/EFP-1 trip circuit would prevent overloading EGDG-1A in the event it was determined that EFP-1 was needed to be placed in service during a beyond design basis event. This is considered a prudent EGDG protection scheme. In addition, the ability to defeat the LPI/EFP-1 trip is needed to prevent EFP-1 from tripping after EGDG-1A load management is accomplished (via stopping SWP-1A and RWP-2A and placing their control handles in pull-to-lock). This would allow a continued cooldown using EFP-1 without interrupting EFW to the steam generators.

Station Blackout

EFP-3 will also provide an additional tool for coping with a Station Blackout (SBO) event. The current mitigation strategy uses EFP-2 to establish and maintain steam generator levels. This preserves the steam generators as a heat sink to remove core decay heat via natural circulation. The addition of EFP-3, which is independent of SBO affected support systems, provides a redundant means of supplying the steam generators with EFW.

Post Seismic Event Cooling

EFP-1 may still be required to provide EFW to the steam generators following a seismic event. There are a number of reasons why this is necessary and reasonable. EFP-3 is designed to take suction from the emergency feedwater tank (EFT-2 containing 150,000 gallons), the condensate storage tank (CDT-1 containing 120,000 gallons) and the fire service storage tanks (FST-1A and FST-1B containing 300,000 gallons each). This volume of water satisfies the natural circulation cooldown requirements, however FST-1A and FST-1B are not considered seismically rugged. Therefore, continued cooling could require drawing water from the condenser hotwell (150,000 gallons) using EFP-1.

Assuming a seismic event were to occur with a concurrent LOOP, then the following will describe EFW availability in terms of applied single failures:

- If EFP-3 is considered as the single failure, then EFP-2 would be assumed to automatically start and provide EFW to the steam generators. Although FWP-7 is not seismically qualified, if it was available it could be used, even during a LOOP, to provide EFW to the steam generators from the hotwell. In addition, EFP-1 could be manually loaded on EGDG-1A without load management. This is because both diesel generators will start and energize their

respective busses which are not significantly loaded (no ES actuations). The "B" train control complex chiller could be placed in service instead of the "A" train if additional margin on EGDG-1A is needed.

- If EFP-2 is considered as the single failure, then EFP-3 would automatically start and provide EFW to the steam generators. Assuming FST-1A and FST-1B were not available, and prior to exhausting the contents of EFT-2 and CDT-1 (approximately 40 hours after the event), EFP-1 can be manually started on EGDG-1A without load management. This is because both EGDGs will start and energize their respective busses, neither of which would be significantly loaded (no ES actuations). The "B" train control complex chiller could be placed in service further increasing the margin on EGDG-1A.

- A failure of the "A" train DC electrical system (LOBA) would result in a loss of all "A" train components. EFP-2 would provide EFW to the steam generators. As stated earlier, if FWP-7 were available, it could be placed in service to minimize or eliminate the need to cycle EFP-2.

- A failure of the "B" train DC electrical system (LOBB) would result in a loss of all "B" train components, leaving only EGDG-1A to carry loads needed to establish and maintain safe shutdown conditions. EFP-3 would automatically start to provide EFW to the steam generators. Prior to exhausting the contents of EFT-2 and CDT-1, one of three options can be implemented to continue providing EFW to the steam generators:

  1. Align EFP-1 to take suction from the hotwell, stop EFP-3 and start EFP-1. This sequence is necessary because an interlock will be installed to prevent concurrent operation of EFP-3 with EFP-1, which in turn prohibits simultaneous operation of all three EFW pumps. This interlock is designed to prevent exceeding EFW flow-induced steam generator tube impingement limits.

  2. Start and place FWP-7 in service with the suction aligned to the hotwell.

  3. Close and deenergize the EFW block valves in the flow path from EFP-2 to both steam generators. This is necessary because the EFW control valves in that same path would be failed open due to the loss of DC electric power. Align EFP-2 to take suction from the hotwell and start EFP-2 by opening ASV-204 ("A" train power). Energize and open EFV-12 (EFW cross-connect valve). This establishes a controlled and monitored EFW flow path from EFP-2 to both steam generators. At this point EFP-3 would be stopped.

Summary and Conclusions

A comparison of current EFW configuration and operation to that which will result from plant modifications during 11R shows significant improvements for overall accident management capabilities. Operator actions will no longer be required (credited) to offset the effects of single failures that formed the basis for License Amendment No. 163. The following table represents a

comparison of single failures, given an accident requiring EFW during a LOOP, and operator action(s) needed to manage EFW and EGDG-1A load:

	Current Operation		Post 11R Operation	
Single Failure	Affected Equipment	Operator Actions	Affected Equipment	Operator Actions
LOBA	"A" train ES, EFP-1	Cycle EFP-2	"A" train ES, EFP-3	Cycle EFP-2
LOBB	"B" train ES	X-tie EFW Close EFW block valves Stop EFP-1	"B" train ES, EFP-2 (ASV-5)	None
EFP-2	EFP-2	Stop SWP-1A Stop RWP-2A Defeat LPI/EFP-1 interlock	EFP-2	None
EFP-3	N/A	N/A	EFP-3	Cycle EFP-2

A basic EFW management strategy will exist, following modifications installed in 11R, that preferentially uses EFP-2 and EFP-3 which are the safety-related EFW pumps credited for EFW delivery to the steam generators for all design basis accidents. FWP-7 is expected to be available for all events that require steam generator cooling and will be used to prevent or minimize EFP-2 cycling as defense-in depth. For LOOP events, depending on the single failure assumed, EFP-1 can also be used to provide EFW to the steam generators, but may require EGDG-1A load management. In addition, auxiliary steam from Units 1 and 2 can also be aligned to supply EFP-2 with steam.

The following matrix indicates the depth of EFW available after a single failure is assumed with and without a LOOP:

Failure	EFW Pump(s) Available (in order of use)	
	w/LOOP	w/o LOOP
EFP-2	EFP-3 FWP-7 EFP-1	EFP-3 EFP-1 FWP-7
EFP-3	EFP-2 FWP-7 EFP-1	EFP-2 EFP-1 FWP-7
"A" Train Vital Power	EFP-2 FWP-7	EFP-2 FWP-7
"B" Train Vital Power	EFP-3 FWP-7 EFP-2 (ASV-204/EFV-12)	EFP-3 EFP-1 FWP-7

The combination of diverse prime movers for each of the safety-related pumps and a diesel generator backed auxiliary feedwater pump provides a significant improvement in EFW system capability for those events or accidents that require steam generator cooling. Procedural guidance will be developed, verified and validated to assure that operators are adequately equipped to manage these evolutions.

Figure 1

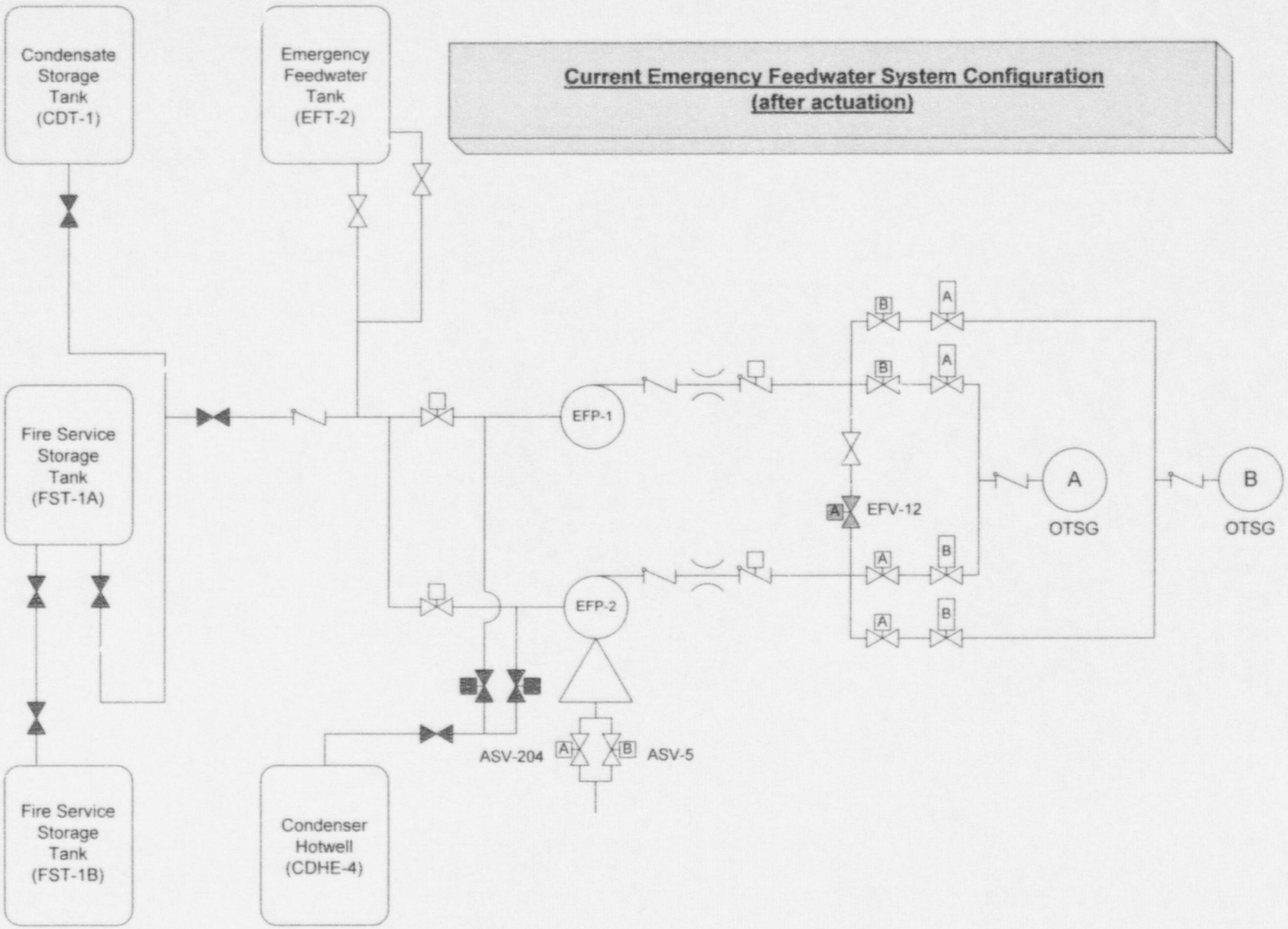
Current Emergency Feedwater System Configuration
(after actuation)
Condensate Storage Tank (CDT-1)
Emergency Feedwater Tank (EFT-2)
Fire Service Storage Tank (FST-1A)
Fire Service Storage Tank (FST-1B)
Condenser Hotwell (CDHE-4)
EFP-1
EFP-2
EFV-12
ASV-204
ASV-5
A
B
OTSG
OTSG

Figure 2

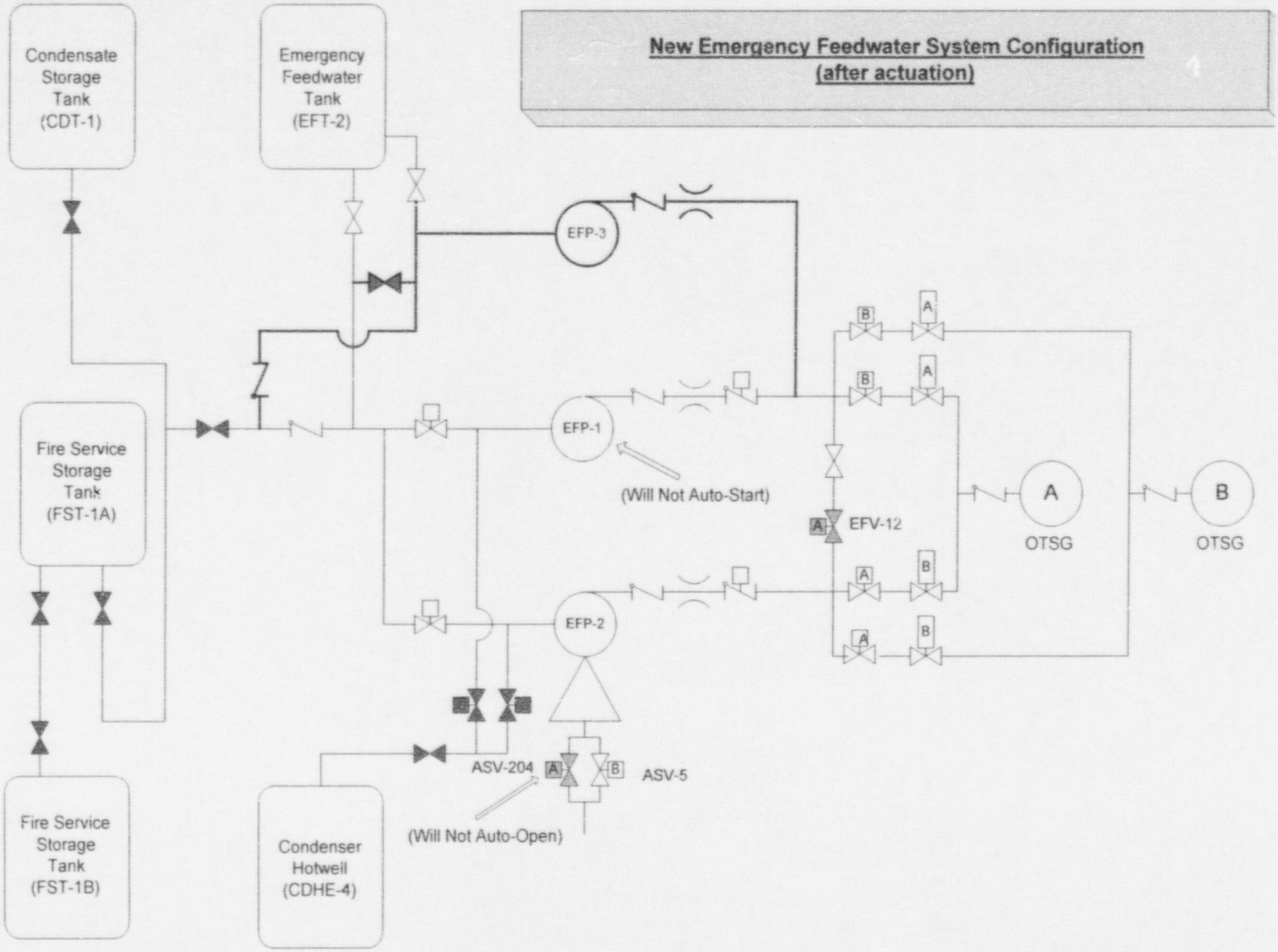
New Emergency Feedwater System Configuration
(after actuation)
Condensate Storage Tank (CDT-1)
Emergency Feedwater Tank (EFT-2)
EFP-3
EFP-1
(Will Not Auto-Start)
EFP-2
Fire Service Storage Tank (FST-1A)
Fire Service Storage Tank (FST-1B)
Condenser Hotwell (CDHE-4)
ASV-204
ASV-5
(Will Not Auto-Open)
EFV-12
A
OTSG
B
OTSG

FLORIDA POWER CORPORATION
CRYSTAL RIVER UNIT 3
DOCKET NO. 50-302/LICENSE NO. DPR-72

ATTACHMENT C

LICENSE AMENDMENT REQUEST #240, REVISION 0
ADDITION OF SAFETY-RELATED DIESEL-DRIVEN EMERGENCY FEEDWATER PUMP

Description and Justification of Proposed ITS and ITS Bases Changes

Introduction

This document provides the basis for the proposed Improved Technical Specifications (ITS) changes associated with the installation of a Diesel-Driven Emergency Feedwater Pump (EFP-3) and associated modifications. The proposed amendment will remove the license changes that were made for one cycle only in Reference 1 and introduce new ITS that address the issue of emergency power for the Emergency Feedwater (EFW) System. This submittal will also demonstrate that the proposed modifications and associated license changes involve no significant hazards consideration in accordance with 10 CFR 50.92.

Background

In early 1997, it was determined that Small Break Loss-of-Coolant Accidents (SBLOCA) with a concurrent Loss-of-Offsite Power (LOOP) and certain single failures posed a challenge to accident management with respect to Emergency Diesel Generator (EGDG) load limitations and increased reliance on EFW. In order to permit continued operation with these conditions, a number of modifications and proceduralized operator actions were proposed by FPC in Reference 1 and approved by the NRC in Amendment No. 163.

Overview of Proposed Plant Changes

Many of the ITS changes approved in Amendment No. 163 were approved until Cycle 12 only. FPC committed to determine and implement a permanent solution to the EFW and EGDG limitations and remove these conditions. The optimal solution has been determined to be the addition of a safety-related Diesel-Driven Emergency Feedwater Pump (EFP-3) along with several other modifications. EFP-3 will take the place of the Motor-Driven EFW Pump (EFP-1) for meeting ITS requirements and performing the required accident mitigation functions. The existing EFP-1 will be maintained in place and will serve as a safety-grade manual backup. This arrangement provides CR-3 with a highly reliable and diverse EFW system consisting of a safety-related Turbine-Driven Emergency Feedwater Pump (EFP-2) and the new safety-related EFP-3. In addition, the safety-grade EFP-1 and a non-safety-related diesel-backed Auxiliary Feedwater Pump (FWP-7) are available for defense-in-depth.

The addition of EFP-3 allows the EFW system to perform its functional goals without placing significant load on the EGDGs. This reduction in loading will enable the "A" EGDG to carry all required ES loads during a SBLOCA/LOOP without load management. The proposed modifications remove the cross-train dependencies for the EFW system that emerged from the single failure of a DC bus or EFP-2. Therefore, plant vulnerability is reduced by these changes. In addition, the proposed modifications eliminate four operator actions that are required by Emergency Operating Procedures (EOPs) to mitigate design basis accidents.

This License Amendment Request (LAR) removes the cycle specific limitations that were required to manage EGDG loading and EFW operation and proposes new ITS and Bases consistent with the planned plant modifications. Due to the long lead-time in procuring and

installing the equipment, FPC is proceeding with the modifications prior to receiving NRC approval. The new systems and components will not be placed in service until NRC approval of this LAR is received.

Description of Proposed Plant Changes

EFP-3 will be a direct replacement for EFP-1 for meeting ITS requirements. Revised ITS appropriate for EFP-3 are included in Attachment D, along with the other ITS changes requested. There are several differences between EFP-3 and EFP-1. The most significant difference is that EFP-3 will be driven by a self-contained, dedicated diesel engine. A simplified drawing of the revised EFW system is included in Attachment G.

EFP-3 will be housed in a new building located on the southwest corner of the hurricane wave step, elevation 112'-6". A separate structure was chosen to house EFP-3 because insufficient room was available inside existing Class I structures. The building will be Seismic Class I and watertight up to the elevation needed to protect against the design basis flooding and external events. The building and structures were designed to minimize recirculation from the diesel exhaust to the diesel air intake. The building will house the pump, diesel engine, batteries and charging system, associated switchgear and a diesel fuel oil storage tank.

EFP-3 will be installed in parallel to EFP-1 and will use the existing "A" train flow path currently used by EFP-1. EFP-3 will have a cavitating venturi in its discharge line. In addition, EFP-3 will have a minimum flow recirculation line for pump protection, plus a full flow recirculation line for testing. The EFW flow control and block valves will function as before and will continue to be powered by station safety-related AC and DC power. The Emergency Feedwater Initiation and Control (EFIC) system will control the flow from EFP-3 just as it did for EFP-1.

EFP-3 will actuate on an "A" train EFIC signal. The EFIC signal will be removed from EFP-1. In addition, an electrical interlock will be installed that will prevent both EFP-1 and EFP-3 from running at the same time. This interlock will be based on diesel speed and discharge pressure of EFP-3. If EFP-1 is running and EFP-3 starts and meets the speed and pressure criteria, EFP-1 will trip. If EFP-3 is running and meeting the criteria, EFP-1 cannot be started. This interlock is needed because the EFW system was not designed for concurrent operation of all three EFW pumps. In addition to this interlock, the EFP-1 control switch will normally be maintained in the pull-to-lock position by administrative controls.

EFP-3 has several design features that will allow it to be self-sufficient. The engine will be capable of starting and running without AC or DC power from the station safety-related and non-safety-related busses. The self-contained battery and starting air systems will be sufficient to assure EFP-3 is capable of starting. The indications and controls needed to start and shutdown EFP-3 will be located both in the main control room and in the EFP-3 building. These instruments will be powered by the dedicated EFP-3 DC bus. Once started, the pump can continue to run without starting air, AC or DC power. The cooling system for the EFW diesel engine is also self-sufficient. Cooling is provided by an attached radiator and shaft-driven fan.

The normal water supply for EFP-3 will be the Emergency Feedwater Tank (EFT-2), which contains an ITS minimum water volume of 150,000 gallons. The backup water supplies will be the Condensate Storage Tank (CDT-1) and the Fire Service Tanks (FSTs). Please note that the usable volumes of CDT-1 and the FSTs have changed from those presented in Reference 4. A description of the changes to these values and the reasons for the changes are presented in Attachment F.

Discussion of EFP-3 Reliability

EFP-3 is being designed to be highly reliable. The pump, with its subsystems, will be more self-sufficient than EFP-1. Industry data was evaluated which showed that safety-related diesel-driven pumps are more than 98% reliable. A sensitivity study was done to determine the potential impact that EFP-3 would have on the plant Probabilistic Safety Assessment (PSA). The study determined that the addition of EFP-3 resulted in a net core damage frequency (CDF) decrease of approximately 3%. The primary factor driving the decrease in CDF is the addition of a third safety-grade EFW pump.

A motor-driven pump (with offsite power available and backed by an emergency diesel generator on a loss of offsite power) is more reliable than a self-contained diesel-driven pump. Therefore, the replacement of EFP-1 with EFP-3 for design basis accident mitigation is considered an unreviewed safety question. The reliability of a motor-driven pump is greater due to the high probability that offsite power will be available. Once offsite power is lost, the reliability of a self-contained diesel-driven pump is slightly greater than an EGDG supplied motor-driven pump. The self-contained diesel for EFP-3 is a simpler design than the EGDGs and is not subject to failure from external factors such as bus faults, faulted loads and other electrical failures.

EFP-3 will replace EFP-1 as the "A" train EFW pump to meet ITS requirements and for automatic actuation to mitigate design basis accidents. When considering overall EFW system reliability, the availability of EFP-1 must also be considered. EFP-1 will be maintained safety-grade and availability will be tracked under the Maintenance Rule program in accordance with 10 CFR 50.65. Therefore, EFP-1 is expected to be capable of delivering EFW flow if offsite power is available or if the "A" train EGDG has adequate capacity to support the pump.

As stated previously, EFP-1 is more reliable than EFP-3 when offsite power is available. In this circumstance, EFP-1 will remain available for use. EFP-3 is more reliable than EFP-1 if offsite power is not available. Therefore, the combination of both EFP-3 and EFP-1 provides greater reliability than the existing EFW system whether offsite power is available or not.

Other Related Modifications

Several other modifications were evaluated as part of the review for Amendment No. 163. In Reference 1, FPC committed to install an automatic signal to open the "A" train Auxiliary Steam Valve (ASV-204) on an EFIC signal to admit steam to EFP-2. This plant configuration was

needed as part of the strategy to mitigate a SBLOCA/LOOP with the loss of the "B" DC bus. With the addition of EFP-3, EFP-2 is no longer needed in this scenario. During a SBLOCA/LOOP with a failure of the "B" DC bus, EFP-3 will start and deliver controlled EFW during the entire event with no need for load management. Therefore, the automatic opening of ASV-204 is being removed, eliminating the block valve cycling issue. ASV-204 is still available to be manually opened from the control room if "A" train DC power is available.

EFP-1 currently receives a trip signal from the ES signal that initiates Low Pressure Injection (LPI) at 500 psig. This feature was added to ensure that the "A" train EGDG does not exceed its load capability on the start of the LPI pump. This trip can be defeated to allow EFP-1 to continue operating. In Reference 1, FPC had committed to remove these features. However, it has been determined that these features provide protective functions for the "A" train EGDG in case EFP-1 is used in beyond design basis accident scenarios. These features will not adversely affect the analysis because EFP-1 will not be needed to mitigate design basis accidents. Therefore, the trip signal and the defeat switch will be maintained on EFP-1. The LPI trip signal will not affect the operation of EFP-3.

Another modification that will be retained is the LPI interlock that prevents starting the LPI pumps on a 4 psig Reactor Building Isolation and Cooling (RBIC) signal coincident with a LOOP. Although preliminary EGDG loading calculations indicate that the start of the LPI pumps will not overload the EGDGs, the start of LPI pumps is considered an unnecessary challenge to the system. The LPI pumps cannot inject water until the reactor coolant system (RCS) is well below 500 psig. The RBIC signal is an anticipatory start signal and is not required for accident mitigation. All design functions of the LPI system are achieved by the 500 psig start signal. FPC had not committed to remove this interlock, however, the Bases text describing this interlock was inadvertently marked as valid for Cycle 12 only.

Impact on Emergency Diesel Generator Loading

Removing the automatic start of EFP-1 removes all significant challenges to the "A" train EGDG. The final EGDG loading calculations are not complete, but preliminary calculations indicate both EGDGs will have steady state auto-connected and essential manual loads below 3300 kW. Each EGDG is verified to accept loading in excess of 3300 kW (mid-range of the 200 hour service rating) per ITS Surveillance Requirement (SR) 3.8.1.11. Achieving this EGDG load profile was the primary goal of the addition of EFP-3.

Operator Actions

The proposed modifications reduce the number of operator actions (OAs) that need to be taken during a SBLOCA/LOOP. The addition of EFP-3 allows deletion of four of these actions. These actions were designated in References 3 and 5 as follows:

OA9 - If "B" DC power is lost, cross-tie EFP-2 to train "A" (EFV-12) AND Secure EFP-1.

OA10 - Put EFIC in manual permissive AND Close EFW block valves (deenergize after closure).

OA11 - Manage EGDG load in order to extend EFP-1 operation by – Shutdown of SWP-1A and RWP-2A after verifying redundant pumps are operating and placing switches in pull-to-lock to prevent reactuation of pumps (EGDG loading). Place EFP-1 Trip Defeat Switch in defeat position to prevent automatic trip of EFP-1 on RCS pressure of 500 psig.

OA15 – If EFP-2 is not operating when in a LOOP condition with inadequate subcooling, limit cooldown prior to EFP-1/LPI.

Operator actions OA9 and OA11 are no longer required to mitigate design basis accidents because the addition of EFP-3 eliminates cross-train dependencies and EGDG load management. Operator action OA10 can be deleted because the removal of the automatic open signal to ASV-204 eliminates block valve cycling on a loss of the "B" DC bus. Operator action OA15 can be deleted because the EFP-1/LPI trip interlock does not affect the operation of EFP-3.

Description and Justification of the Proposed ITS Changes

The proposed ITS and Bases changes fall into two categories: 1) new or revised ITS and Bases to account for equipment changes associated with the new EFP-3, and 2) those ITS and Bases requirements being deleted because they were approved until Cycle 12 only.

The new ITS requirements and revisions (category 1 changes) involve revised SR and Bases for EFP-3 (SR 3.7.5), and new ITS and Bases for the diesel fuel oil supply, lube oil and starting air for EFP-3 (3.7.19). Also, the option to use EFP-3 for Once Through Steam Generator (OTSG) cooling is added to the Bases for 3.4.6, RCS Loops – MODE 5, Loops Filled. The Bases for 3.4.6, Background, lists all feedwater pumps that may be available in MODE 5. EFP-3 is added here for completeness.

The Bases for 3.7.5 are revised to describe the new EFP-3 and the new role for EFP-1 as a manual defense-in-depth pump. The Bases are also revised to indicate that EFP-3 cannot directly access the condenser hotwell. The phrase "with the exception of the loss of all AC power (Ref. 3)" is deleted from the Applicable Safety Analysis because with the addition of EFP-3, the EFW system is able to maintain its function on a LOOP with a single failure. These criteria can be met because both EFP-2 and EFP-3 are independent of AC power.

In Section 3.7.5, EFW System, one SR is being revised and one new SR is being added. These changes are being made to provide SRs that adequately demonstrate OPERABILITY of EFP-3 and essential subsystems. SR 3.7.5.1 and Bases are revised to add verification of proper valve position for starting air and fuel oil flow paths for EFP-3 on a 45-day frequency. This SR is revised because the starting air and fuel oil flow paths have similar safety significance to the other flow paths (water and steam) covered by the SR. Verification of starting air and fuel oil flow paths will ensure these systems are available to support the OPERABILITY of EFP-3.

SR 3.7.5.6 is added to provide assurance that the DC electrical support system will be available to support OPERABILITY of EFP-3. This SR is based on a similar SR currently approved for the station DC system required by ITS 3.8.4, DC Sources - Operating. SR 3.7.5.6 was determined necessary because DC power is essential for starting EFP-3. No SR needs to be performed in MODES 4 or 5 because the EFW system is not required to be OPERABLE in those modes. The purpose for the SR is given in the Bases.

ITS 3.7.19 was added to ensure essential subsystems are within limits needed to maintain EFP-3 OPERABLE. The specification includes requirements for fuel oil, lube oil, and starting air. The Limiting Condition for Operation (LCO), Applicability, Actions and SR format and content were based on the ITS for Emergency Diesel Generator fuel oil, lube oil and starting air (ITS 3.8.3). This specification has an allowed outage time (AOT) for these parameters if they are less than the limit but above a minimum value. Below the minimum allowed value, EFP-3 must be declared inoperable. The AOTs are commensurate with the safety significance of having the parameter below its limit. A more detailed explanation of the LCO, Applicability, Actions and SRs are given in the Bases to 3.7.19.

A number of ITS and Bases are being revised to remove the requirements that permitted operation of CR-3 until Cycle 12 only (category 2 changes). All text marked with the footnote "Note – Valid until Cycle 12 only," and the note itself, is being deleted except for a few instances as discussed below. All of these ITS and Bases are returned to the wording that was approved prior to Amendment No. 163, except as noted.

In general, the text marked "Note - Valid until Cycle 12 Only" was deleted. However, portions of this text were retained because it is still applicable. The following text is retained in ITS Bases 3.5.2, Background:

"Certain size small break LOCA scenarios require emergency feedwater to maintain steam generator cooling until core decay heat can be removed solely by ECCS cooling."

Similar text is retained in the Bases 3.7.5, Applicable Safety Analysis:

"or at which core decay heat can be removed solely by ECCS"

These sections of text were inadvertently marked with the note. FPC did not intend to remove the need for EFW in the mitigation strategy for SBLOCAs. Therefore, this information is being retained in the Bases for ECCS and EFW.

FPC also requests that the following text be retained in ITS Bases 3.3.5, Background:

"In addition, the LPI pump is prohibited from starting on a RB isolation concurrent with a loss of offsite power."

This information is still accurate because the associated Engineered Safeguards Actuation feature is not being removed. This text was also inadvertently marked with the note.

ITS 3.7.18, Control Complex Cooling System, was a new specification in Amendment No. 163 and is requested to be retained with some changes. The separate Actions for "A" and "B" trains are deleted and replaced by a single Action (see Criteria 1, 2, and 3 below for justification). The LCO and Actions for ITS 3.7.18 are reformatted to ensure two "trains" of Control Complex Cooling are OPERABLE and that Actions properly address inoperable Control Complex Cooling trains. A "train" of Control Complex Cooling is defined in the Bases for 3.7.18.

The Action for Condition A is also changed to include a provision that allows a seven day allowed outage time with one or more trains inoperable as long as at least 100% of the cooling capability of a single OPERABLE Control Complex Cooling train is available. The format of this Action is similar to that of ITS 3.5.2, ECCS - Operating, Condition A. This change allows operational flexibility while ensuring that at least one functional train is available whenever less than the required number of trains is OPERABLE.

The word "available" is added to Condition B to indicate that the functional system placed in service does not have to meet the requirements of an OPERABLE train as defined in the Bases. The available train will have to provide at least 100% of the cooling capability of a single OPERABLE Control Complex Cooling train. Condition C addresses the appropriate action if the time limit of Condition A is exceeded in MODES 1, 2, 3, or 4.

The changes to 3.7.18, Condition A, make Conditions D and E unnecessary. If less than 100% of the cooling capacity of a single OPERABLE Control Complex Cooling train is not available in MODES 1, 2, 3 and 4, Specification 3.0.3 must be entered. In a similar condition during movement of irradiated fuel assemblies, Condition B.2 applies which suspends movement of the assemblies. Therefore, Conditions D and E are redundant and can be deleted. Additional information about these changes is added to the 3.7.18 Bases.

The following Criteria provide the justification for deleting the text marked with the footnote "Note – Valid for Cycle 12 Only." The content of the text marked with the note is similar for various ITS and the reasons for deleting this text are the same for many specifications. These reasons are described below and are labeled Criterion 1 through 3. After all three Criteria are described, each of the affected ITS and Bases are listed followed by the appropriate deletion criteria. Please note that a single ITS or Bases may have more than one criterion that justifies deletion of different portions of the text.

Criterion 1

Criterion 1 is the justification for deleting Actions that require verifying EFP-2 and its flow path are OPERABLE. These actions were placed on "B" train equipment to assure that that EFP-2 was available for mitigation of design basis accidents that involved certain single failures. This category includes Actions involving restoration of the steam supply for EFP-2 (ASV-5 and ASV-204), the EFW flow path and cross-tie valves (EFV-12 and EFV-13), and verification that both trains of ECCS and support equipment are OPERABLE. These Actions were needed because of the increased reliance on EFP-2 for accident mitigation due to the limitations of EFP-1.

EFP-1 received an automatic trip signal on an LPI 500 psig signal coincident with a LOOP. This trip placed additional importance on the "B" train of EFW. Flow from EFP-2 was relied upon in some scenarios to limit EFP-1 flow in order to prevent overloading EGDG-1A. In other scenarios, EFP-1 had to be removed from the EGDG-1A to allow loading of the Control Complex Chiller or the LPI pump. With the addition of EFP-3 and associated subsystems, EFP-2 no longer has a special role in accident mitigation. EFP-3 is not dependent on an EGDG for electrical power, does not receive a trip signal upon LPI actuation and does not rely upon EFP-2 for load sharing. Because EFP-1 had limitations on its availability, additional Actions were warranted to ensure EFP-2 availability. Since EFP-3 does not have these limitations, the additional Actions associated with EFP-2 can be eliminated.

The automatic open function of ASV-204 is being removed because EFP-2 is no longer needed on a failure of the "B" train DC bus. Therefore, the references to ASV-204 as the "A" train steam supply for the "B" train EFP-2 are deleted. On a failure of the "B" DC bus, EFP-3 will operate throughout the event and no "A" train loads will have to be shed from the "A" train EGDG. Similarly, references to the cross-tie valves are being deleted because they are not required for accident mitigation with a loss of the "B" train DC bus or other single failures. Therefore, the Actions associated with the referenced EFW steam and water flow paths are no longer required.

Criterion 2

Criterion 2 is the justification to delete Actions that assure Operability of "B" train equipment including the EGDG, AC Electrical Power Distribution, AC Vital Bus Subsystem, SW System, DC System, RW System and the Control Complex Cooling System. These actions were needed to address the increased vulnerability and dependence on "B" train equipment. In some accident scenarios, "A" train equipment would have to be shutdown to manage load on the "A" train EGDG. This increased reliance on the "B" train equipment. This criterion is also the justification to delete Actions that were separated into different Conditions for "A" train and "B" train due to cross-train dependencies and EGDG loading limitations. The Actions for "B" train equipment had additional requirements or shorter allowed outage times. With the addition of EFP-3, the "A" train EFW system is functionally equivalent to the "B" train. EFP-3 is independent of the "A" train EGDG, therefore, no load management of "A" train EGDG loads is required to mitigate design basis accidents. Also, EFP-3 does not receive a trip signal on an LPI actuation. Therefore, no special actions are required for the "B" train equipment and these requirements can be deleted. This criteria also applies to deletion of references to the Framatome Technologies Incorporated (FTI) documents that supported startup from the 1996-1997 design outage.

Criterion 3

Criterion 3 encompasses editorial and format changes. These changes are editorial in nature and require no other justification. These changes include the numerous instances where the deletion of requirements involved the correction of Action letter designations, page numbers and other format changes. In addition, this category includes the deletion of the footnote "NOTE – Valid Until Cycle 12 Only."

ITS Affected

3.5.2 ECCS – Operating, Criteria 1, 3
3.7.5 Emergency Feedwater (EFW) System – Actions, Criteria 1, 2, 3
3.7.7 Nuclear Services Closed Cycle Cooling Water (SW) System, Criteria 1, 2, 3
3.7.8 Decay Heat Closed Cycle Cooling Water (DC) System, Criteria 1, 2, 3
3.7.9 Nuclear Services Seawater (RW) System, Criteria 1, 2, 3
3.7.10 Decay Heat Seawater (RW) System, Criteria 1, 3
3.7.18 Control Complex Cooling System, Criteria 1, 2, 3
3.8.1 AC Sources - Operating, Criteria 1, 2, 3
3.8.9 Distribution Systems - Operating, Criteria 1, 2, 3

Bases Affected

B 3.3.5 Engineered Safeguards Actuation System Instrumentation, Criteria 2, 3
B 3.5.2 ECCS - Operating, Criteria 1, 2, 3
B 3.7.5 Emergency Feedwater (EFW) System - Actions, Criteria 1, 2, 3
B 3.7.7 Nuclear Services Closed Cycle Cooling Water (SW) System, Criteria 1, 2, 3
B 3.7.8 Decay Heat Closed Cycle Cooling Water (DC) System, Criteria 1, 2, 3
B 3.7.9 Nuclear Services Seawater System (RW), Criteria 1, 2, 3
B 3.7.10 Decay Heat Seawater System (RW), Criteria 1, 2, 3
B 3.7.18 Control Complex Cooling System, Criteria 1, 2, 3
B 3.8.1 AC Sources – Operating, Criteria 1, 2, 3
B 3.8.3 Diesel Fuel Oil, Lube Oil, and Starting Air, Criteria 2, 3
B 3.8.9 Distribution Systems – Operating, Criteria 1, 2, 3

NO SIGNIFICANT HAZARDS EVALUATION:

An evaluation of the proposed license amendment has been performed according to 10 CFR 50.91(a)(1) regarding significant hazards considerations, using the standards in 10 CFR 50.92(c).

1. *Does not involve a significant increase in the probability or consequences of an accident previously evaluated.*

This change involves the addition of a new safety-related Diesel-Driven Emergency Feedwater Pump (EFP-3). The Emergency Feedwater (EFW) System is not an initiator for any design basis accident except for those accidents associated with an increase in primary to secondary cooling and a loss of heat sink. The new EFP-3 functionally replaces the Motor-Driven Emergency Feedwater Pump (EFP-1) and is no more likely to cause an inadvertent cooldown than the existing EFP-1. The starting logic of the Emergency Feedwater Initiation and Control system is the same for EFP-3 as it was for EFP-1 before. No other control or logic changes are being made that would make EFP-3 more likely to cause a cooldown transient.

EFP-3 has a slightly greater probability of failing to start compared to EFP-1 with offsite power available. Therefore, there is a slight increase in the probability of an event that involves a loss

of heat sink when considering only the Improved Technical Specifications (ITS) required EFW Pumps. The new EFP-3 will be highly reliable and therefore this increase in risk is not significant. Loss of EFP-3 alone does not cause a total loss of heat sink without the loss of the Turbine-Driven Emergency Feedwater Pump (EFP-2) and the remaining feedwater pumps. The most important of these feedwater pumps is EFP-1, which will be maintained as a safety-grade backup. EFP-3 is less reliable than EFP-1 with offsite power available. However, if offsite power is not lost, EFP-1 should be available for use. Therefore, the overall EFW system reliability is enhanced.

The consequences of the failure of EFP-3 to start or inadvertently actuate were considered. Failure of EFP-3 to start will have the same impact as failure of EFP-1. Therefore, the consequences of evaluated accidents are the same. EFP-3 will be designed to have minimum and maximum flows equivalent to EFP-1. No changes to the system will cause a decrease in the ability of the EFW system to remove heat from the Once Through Steam Generators (OTSGs). Similarly, the heat removal capability of EFP-3 will not be different than EFP-1. Therefore, there will not be the potential of a significantly greater overcooling event due to inadvertent start of EFP-3.

The license changes associated with the addition of EFP-3 remove a number of ITS Actions that established compensatory measures due to the possibility of overloading the Emergency Diesel Generators (EGDGs) and cross-train dependencies with EFP-2. These compensatory actions are no longer required. The changes to the EFW system eliminate EGDG limitations and reliance of the "A" train EFW pump on EFP-2. The revised ITS Actions ensure the equipment required to mitigate an accident is restored to OPERABLE status in accordance with previously approved limits. In addition, replacing required operator actions with automatic functions provides greater assurance that mitigating actions will occur. Therefore, these changes will not adversely affect the probability or consequences of evaluated accidents.

Based on the above, the addition of EFP-3 and the associated license changes do not involve a significant increase in the probability or consequences of a previously evaluated accident.

2. *Does not create the possibility of a new or different kind of accident from any accident previously evaluated.*

EFP-3 performs the same functions as the existing EFP-1. No plant conditions are changed to cause new or different accidents. Although a diesel engine has different failure modes than a motor-driven pump, the consequences of a pump failure are the same. An interlock and administrative controls are provided to ensure that both EFP-3 and EFP-1 do not run at the same time. The interlock and administrative controls prevent any new interactive failure modes that could be caused by having both "A" train pumps (or all three EFW pumps) operating at the same time.

The revised ITS Actions ensure equipment is restored to OPERABLE status in accordance with previously approved timeframes. No new plant configurations or conditions are created by these Actions.

Therefore, these changes cannot create the possibility of an accident of a different type than previously evaluated in the SAR.

3 *Does not involve a significant reduction in the margin of safety.*

EFP-3 is designed to meet the same performance criteria as EFP-1. EFP-3 will replace EFP-1 in the ITS. The pump will perform the same functions, will be reliable and meet the same design criteria. There are no functions performed by EFP-1 that will be significantly different with EFP-3. The margin of safety provided by the specification relates to the ability to provide a heat sink. EFP-3 will provide the same margin of safety. In addition, EFP-1 will be available as a safety-grade backup and can deliver EFW to the OTSGs if offsite power is available or if the "A" train EGDG has adequate load margin.

The cooling capability of EFP-3 will be equivalent to EFP . Therefore, EFP-3 provides the same protection to the fuel cladding from temperature excursions as EFP-1. The EFP-3 modifications will be done without making penetrations through reactor coolant system (RCS) or containment boundaries. Therefore, the integrity of these fission product barriers remains unchanged.

The proposed changes to the ITS delete temporary restrictions placed on systems due to the potential to overload the EGDGs and cross-train dependencies with EFP-2. These compensatory actions are no longer required. The changes to the EFW system eliminate EGDG limitations and reliance of the "A" train EFW pump on EFP-2. The revised ITS Actions ensure the equipment required to mitigate an accident is restored to OPERABLE status in accordance with previously approved limits. In addition, replacing required operator actions with automatic functions provides greater assurance that mitigating actions will occur.

Based on the above evaluation, there is no reduction in the margin of safety associated with the proposed equipment, system and license changes.

ENVIRONMENTAL IMPACT EVALUATION:

10 CFR 51.22(c)(9) provides criteria for and identification of licensing and regulatory actions eligible for categorical exclusion from performing an environmental assessment. A proposed amendment to an operating license for a facility requires no environmental assessment if operation of the facility in accordance with the proposed amendment would not: (1) involve a significant hazards consideration, (2) result in a significant change in the types or significant increase in the amounts of any effluents that may be released off-site, or (3) result in a significant increase in individual or cumulative occupational radiation exposure. FPC has reviewed this license amendment and has determined that it meets the eligibility criteria for categorical exclusion set forth in 10 CFR 51.22(c)(9). Pursuant to 10 CFR 51.22(c), no environmental impact statement or

environmental assessment need to be prepared in connection with the issuance of the proposed license amendment. The basis for this determination is as follows:

1. The proposed license amendment does not involve a significant hazards consideration as described previously in the evaluation.

2. As discussed in the significant hazards evaluation, this change does not result in a significant change or significant increase in the radiological doses for any Design Basis Accident. The proposed license amendment does not result in a significant change in the types or a significant increase in the amounts of any effluents that may be released off-site. FPC has concluded that there will not be a significant increase in the types or amounts of any effluents that may be released off-site and does not involve irreversible environmental consequences beyond those already associated with the Final Environmental Statement.

3. The proposed license amendment does not result in a significant increase to the individual or cumulative occupational radiation exposure because this is a change to plant equipment that does not interface with radiologically contaminated systems and does not require operator or other actions that could increase occupational radiation exposure.