SIR-86-002
Revision 2
Project: GPCO-07-1
April, 1986

EVALUATION OF IGSCC FLAW INDICATIONS AND WELD OVERLAY DESIGNS FOR PLANT E. I. HATCH UNIT 1 - FALL 1985/86 MAINTENANCE/REFUELING OUTAGE

Prepared by:

Structural Integrity Associates

Prepared for:

Georgia Power Company

Prepared by: H L Gustin Date: april 17, 1986
H. L. Gustin

Prepared by: An-Yu Kuo Date: 4-17-1986
A. Y. Kuo

Reviewed by: Date: 4/17/86
P. C. Riccardella

STRUCTURAL INTEGRITY ASSOCIATES, INC

REVISION CONTROL SHEET

Report No. SIR-86-002

SECTION	PARAGRAPH(S)	DATE	REVISION	REMARKS
All	All	3/6/86	0	Initial Issue
1-1 - 1-9 2-1 - 2-3 3-1 - 3-8 4-1 - 4-6 5-1 - 5-21 6-1 - 6-18 7-1 - 7-3 8-1 - 8-2 A-1 - A-36	All	3/28/86	1	Incorporated Client & SI Comments
B-1 - B-18	All	3/28/86	1	Incorporated Client & SI Comments
1-1 - 1-9 2-1 - 2-3 3-1 - 3-8 4-1 - 4-6 5-1 - 5-21 6-1 - 6-18 7-1 - 7-3 8-1 - 8-2 A-1 - A-36	All	4/16/86	2	Editorial Changes
B-1 - B-18	All	4/16/86	2	Editorial Changes

TABLE OF CONTENTS

Section Page

TABLE OF CONTENTS
(continued)

LIST OF TABLES

LIST OF FIGURES

1.0 INTRODUCTION

1.1 Background

During the Winter 1985/86 maintenance/refueling outage at Georgia Power Company's Plant E.I. Hatch Unit 1, ultrasonic examination of recirculation, residual heat removal (RHR) and reactor water cleanup (RWCU) system welds identified 21 welds with indications believed to be due to intergranular stress corrosion cracking (IGSCC). Similar indications were previously identified at the plant in 1982 and 1984. Of the indications observed between 1982 and the present, a total of 35 have been repaired using the weld overlay technique. In addition, an overlay was applied to one weld (24B-R-12) to enhance inspectability. An additional 11 indications have been treated with the Induction Heating Stress Improvement (IHSI) process, which has been shown to produce a favorable residual stress distribution which inhibits both growth of shallow flaws and initiation of new flaws. No identified flaws have been left without either weld overlay or IHSI repair. The history and status of the flaws identified at Plant Hatch Unit 1 are summarized in Table 1-1.

At the direction of Georgia Power Company, Structural Integrity Associates (SI) has performed re-evaluations of all previously applied weld overlay repairs, prepared designs for those welds requiring repair this outage, and performed analyses of those flaws treated with IHSI which were acceptable without further repair. This report documents the results of these efforts, which demonstrate that design basis safety margins are maintained after IHSI or weld overlay repairs, considering worst case interpretation of the UT indications observed during inspection.

1.2 Summary of Inspection Results

Figures 1-1 and 1-2 contain sketches (Loop A and Loop B, respectively) of portions of the recirculation, residual heat removal (RHR), and the RWCU systems at Hatch Unit 1.

Table 1-1 provides a weld-by-weld summary of the flaw indications identified in these systems since 1982, and the corrective action taken for each. A more detailed discussion of the observed flaws for those welds with flaws identified during the present outage appears in Sections 4 and 5 of this report.

1.3 Summary of Outage Activities - 1985/86

1.3.1 Re-evaluation and Upgrade of Previously Applied Weld Overlays

In order to produce a consistent design basis for all weld overlay repairs applied at Hatch Unit 1, all pre-existing weld overlays were re-evaluated to determine their conformance with current criteria. Where necessary, additional material was added to pre-existing overlays to upgrade their design to the same standard as was used for design of new weld overlay repairs. The design bases used throughout this report are briefly summarized below, and discussed in greater detail in Sections 2 and 4.

1. Where the original flaw indication was circumferential in orientation, the design basis flaw was taken to be 360° in length and through the original pipe wall. This assumption negates uncertainty in flaw characterization, and eliminates the concern of potential butt weld low toughness due to use of flux-shielded weld processes (SMAW, SAW).

2. Axially oriented flaw indications do not present a structural integrity concern. Those weld overlays previously applied to locations with only axial flaws were evaluated assuming that only leakage protection (2 layer weld overlay) and residual stress modification (to inhibit new flaw initiation) were required.

3. No credit was taken for the first weld overlay layer.

4. The as-built overlay thickness, minus 0.1" to allow for the first weld layer, was used in the evaluation.

All previously applied welds were upgraded if they were determined to be insufficient to meet the above design bases.

1.3.2 Surface Finish Improvement of All Weld Overlays

Recent EPRI sponsored work has demonstrated that it is possible to ultrasonically inspect an overlay-repaired weld through the existing weld overlay. In order to do this reliably, it is generally desirable for the weld overlay surface to be smoother than the as-welded condition. In order to take the maximum advantage of these recent inspection developments, Georgia Power performed surface finish improvement operations on all weld overlay repairs (pre-existing and newly applied). This effort typically involved grinding of the overlay surface, preceeded in some cases by addition of new material to insure that the as-built thickness following surface improvement was not less than the required design thickness.

The surface improvement effort will improve the demonstrable reliability of the overlays in the future by allowing Georgia Power to monitor flaws and flaw growth (if any) underneath the overlay.

1.3.3 Inspection

During the 1985/86 maintenance/refueling outage, all previously applied and new weld overlays were ultrasonically re-inspected following surface preparation. In addition, Georgia Power Company and Southern Company Services performed a 100% inservice inspection of accessible welds in the systems of concern, as commited in Reference 1. This inspection included all welds which were treated with IHSI during this outage. This inspection program meets or exceeds the requirements of NRC Generic Letter 84-11 [2] and ASME Section XI [3].

1.3.4 Induction Heating Stress Improvement (IHSI)

In order to minimize future occurrences of IGSCC at Hatch Unit 1, Georgia Power Company has treated the unrepaired welds in the affected systems with the IHSI process. This process produces a compressive residual stress distribution on the inner portion of the pipe wall, which will inhibit future

IGSCC initiation and growth of shallow flaws. A total of 107 welds in the recirculation, RHR, and RWCU systems were successfully treated, including all 10 of the 12" riser safe end to inlet nozzle welds and both of the 28" safe end to outlet nozzle welds.

1.3.5 Weld Overlay Repairs and Flaw Evaluations

In the course of the inspections performed on Hatch Unit 1, a total of 24 welds were identified which contained flaws requiring disposition. Weld overlays were applied to 12 of these locations. The flaws in the balance of the locations were shown by fracture mechanics analyses to be acceptable without repair other than IHSI. The disposition of each of these flaws is included in Table 1-1.

In addition to the weld overlay repairs described above, a weld overlay was applied to one unflawed weld (24B-R-12) to simplify future inspection of this weld. This weld is adjacent to weld 24B-R-13. The overlay on the latter weld partially obscured weld 24B-R-12, making proper placement of a UT crystal for inspection of this weld very difficult. Because of the recent improvements in inspection through overlays, it was decided to extend the 24B-R-13 overlay to cover 24B-R-12 also. Since this weld was partially clad with Inconel weld metal, the weld overlay of this weld was made with Inconel.

1.4 Summary of Report

Section 2 of this report presents the weld overlay design and flaw evaluation criteria used in the analyses of Hatch Unit 1 welds.

Section 3 presents stress component and stress combination data, and residual stress assumptions used in the repair and crack growth analyses. Information on pipe component dimensions is also included in this section.

Section 4 discusses the re-evaluation of previously applied weld overlays and the design of overlays applied during the 1985/86 outage. A comparison of design and as-built weld overlay design dimensions is presented. A discussion of the examination requirements during weld overlay application is included in this section.

Section 5 addresses flawed pipe analyses which were performed to demonstrate acceptability of minor flaws with IHSI as a repair. The fracture mechanics crack growth analyses which are the basis of this conclusion are discussed.

Section 6 addresses the system-wide effects of weld overlay shrinkage on flawed locations. The analysis which was performed on the Hatch Unit 1 recirculation system is presented, together with predicted shrinkage-induced stress data.

Section 7 of this report summarizes the report analyses and conclusions.

TABLE 1-1

Summary of Weld Overlay Activity for Plant Hatch Unit 1

WELD #	IHSI	PRE-IHSI FLAW DESCRIPTION	POST-IHSI FLAW DESCRIPTION	DISPOSITION
RWCU-6-D-4	NO	CIR. 1.6"X50%		OVERLAY B6
RWCU-6-D-5	NO	CIR. 1.5"X70%		OVERLAY B6
RWCU-6-D-18	NO	CIR. 1.25"X39%		OVERLAY B6
RWCU-6-D-18A	NO	CIR. 1"X43%		OVERLAY B6
12AR-F-2	NO	CIR. 20-30%X360*		OVERLAY B4/SURFACE FINISH B6
12AR-F-3	NO	CIR. 20-30%X360*		OVERLAY B4 SURFACE FINISH B6
12AR-F-4	YES	CIR. 4"X13%	CIR. 3.2"X32%	OVERLAY B6
12AR-G-3	NO	CIR. 2.1"X50%		OVERLAY B6
12AR-G-4	YES		CIR. 5.375"X 20%	LEAVE AS IS
12AR-H-2	NO	CIR. 20-30%X360*		OVERLAY B4/SURFACE FINISH B6
12AR-H-3	NO	CIR. 20-30%X360*		OVERLAY B4/SURFACE FINISH B6
12AR-H-4	NO	CIR. 5"X35%		OVERLAY B6
12AR-J-3	NO	CIR. 20-30%X360*		OVERLAY B4/SURFACE FINISH B6
12AR-K-2	NO	CIR. 30%X360*		OVERLAY B4/SURFACE FINISH B6
12AR-K-3	NO	CIR. 30%X360*		OVERLAY B4/SURFACE FINISH B6
12BR-A-4	YES	CIR. 2"X22%	2.6"X20%	LEAVE AS IS
12BR-B-3	YES	CIR. 1.75"X20%	THROUGH WALL AXIALS	OVERLAY B6
12BR-C-2	NO	CIR. 20-30%X360*		OVERLAY B4/SURFACE FINISH B6
12BR-C-3	NO	CIR. 25%X360*		OVERLAY B4 SURFACE FINISH B6
12BR-C-4	NO	CIR. X39%		OVERLAY B6
12BR-C-5	YES	LAMINATION	LAMINATION	LEAVE AS IS
12BR-D-2	NO	CIR. X50%		OVERLAY B6
12BR-D-3	NO	CIR. 20%X360*		OVERLAY B4/SURFACE FINISH B6
12BR-E-2	NO	CIR. 25%X360*		OVERLAY B4/SURFACE FINISH B6
12BR-E-3	NO	CIR. 30%X360*		OVERLAY B4/SURFACE FINISH B6
12BR-E-4	YES	CIR. 25%X2.5"	CIR. 2.75"X19%(PIPE) CIR. 2"X14%(SE)	LEAVE AS IS
20B-D-3	NO	CIR. 3"X30% AXIAL X94%		OVERLAY B2/SURFACE FINISH B6
20B-D-4	YES		AXIAL X 18%	LEAVE AS IS
22AM-1	NO	AXIALX63%		OVERLAY B2/SURFACE FINISH B6
22AM-4	NO	AXIALX72%		OVERLAY B2/SURFACE FINISH B6
22BM-1	NO	AXIALX64%		OVERLAY B2/SURFACE FINISH B6
22BM-4	NO	AXIALX67%		OVERLAY B2/SURFACE FINISH B6
22AM1-BC1	YES	INT. CIR.: 8.8"X11%	GEOMETRY	LEAVE AS IS
22BM1-BC1	YES	INT. CIR.:12.7"X29%	GEOMETRY	LEAVE AS IS
24A-R-13	NO	AXIALX50%		OVERLAY B4/SURFACE FINISH B6
24B-R-13	NO	AXIALX47%		OVERLAY B2/SURFACE FINISH B6

TABLE 1-1

TABLE 1-1
(continued)

28A-2	YES		CIR. 1"X13% CIR. 5.25"X15%	LEAVE AS IS
28A-4	YES	7 AXIALS 14% MAX.	7 AXIALS 14% MAX.	LEAVE AS IS
28A-6	YES	CIR. 2.5"X30% 2 AXIALS	AXIAL 0.3"X29%	LEAVE AS IS
28A-10	NO	CIR. 50%X360°		OVERLAY 84/SURFACE FINISH 86
28A-12	YES		CIR. 14"X29% AXIALX41%	OVERLAY 86
28B-3	NO	CIR. 32%X360°		OVERLAY 84/SURFACE FINISH 86
28B-4	NO	CIR. 31%X360°	LACK OF FUSION IN WELD OVERLAY	OVERLAY 84/SURFACE FINISH 86
28B-8	YES		2 AXIALS: 0.25"X 24%	LEAVE AS IS
28B-10	YES		4 CIRC. 6.5" TOTAL X 23% 2 AXIALS: 31%, 26%	LEAVE AS IS
28B-11	NO	CIR. 49%X360°		OVERLAY 84/SURFACE FINISH 86
28B-16	YES	SHORT CIR. 10% AXIAL 20%	CIR. 2.65"X24% CIR. 4"X18% CIR. 1.5"X40%	OVERLAY 86

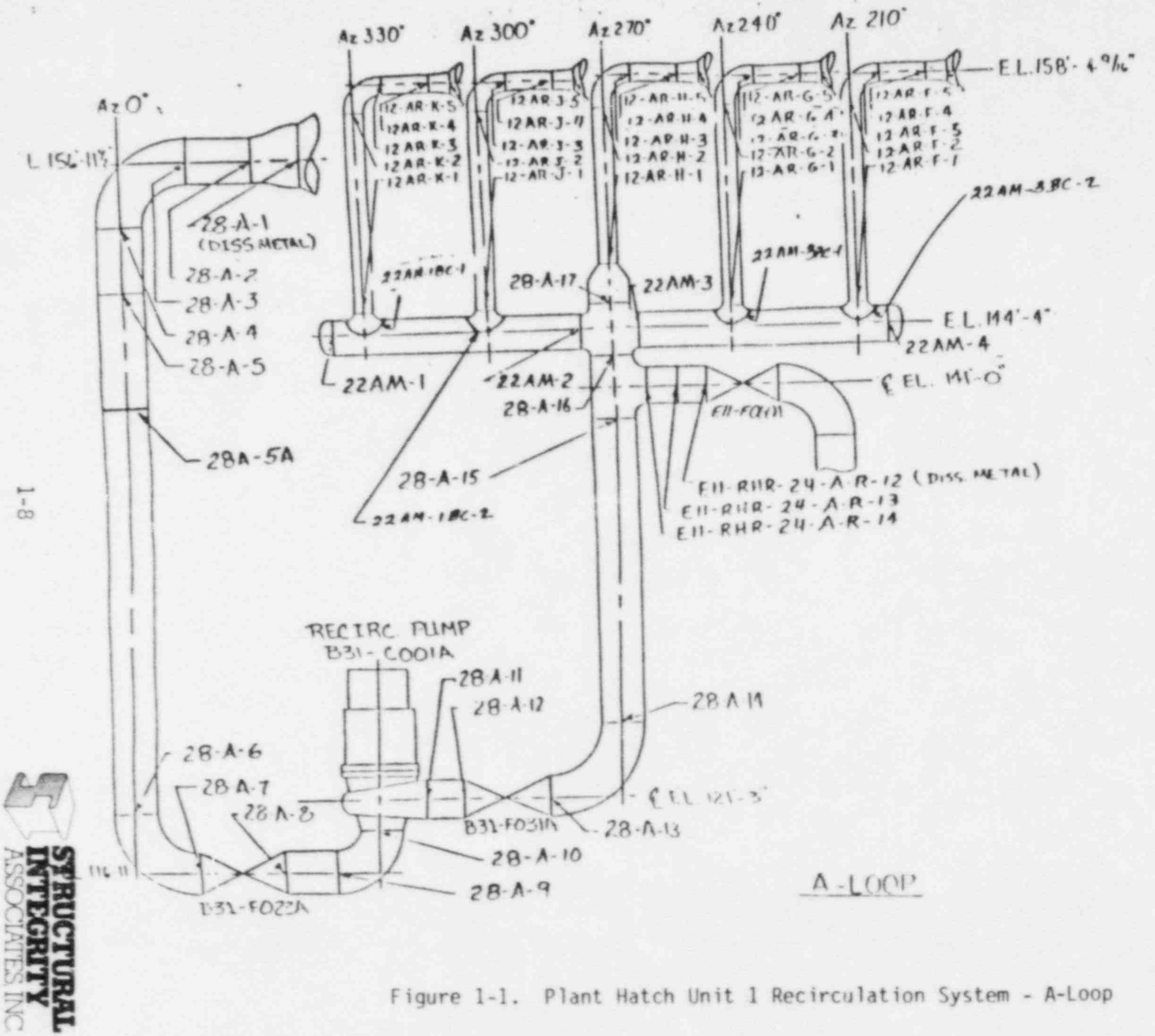

NOTES:

1. WELD NUMBERS ARE PRECEDED BY B31-RECIRC UNLESS OTHERWISE NOTED.

Figure 1-1. Plant Hatch Unit 1 Recirculation System - A-Loop

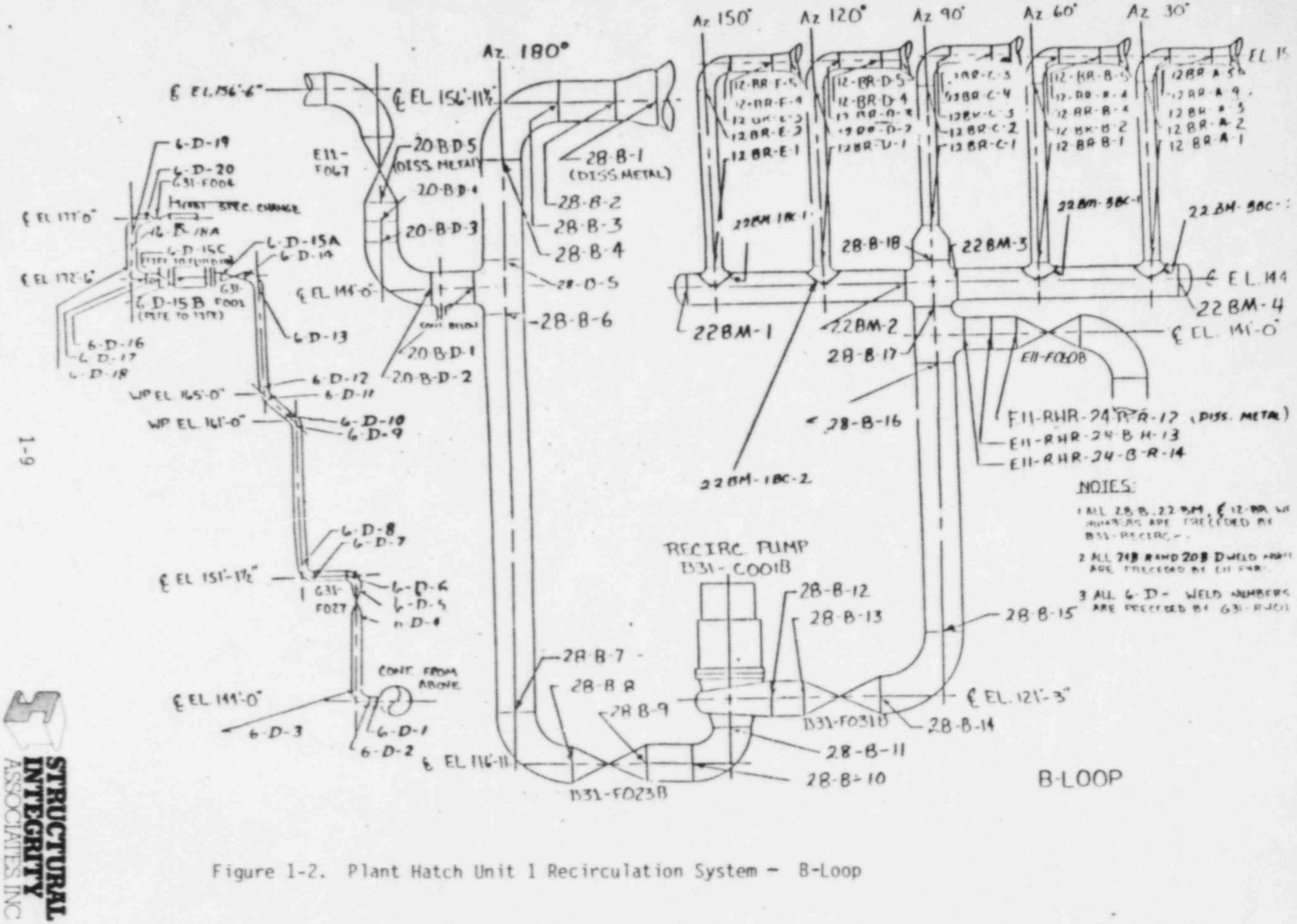

Figure 1-2. Plant Hatch Unit 1 Recirculation System - B-Loop

2.0 FLAW EVALUATION AND REPAIR CRITERIA

2.1 Summary of Pertinent Criteria Documents

The evaluation and repair of flaws in primary nuclear power plant piping is governed by the requirements of ASME Section XI [3]. In particular, for flaws detected in austenitic stainless steel piping, the pertinent sub-sections of ASME Section XI are IWB-3500 and IWB-3600. Paragraph IWB-3640 forms the basis for weld overlay repair of the IGSCC flaws identified in the Hatch Unit 1 recirculation, residual heat removal (RHR), and reactor water clean-up (RWCU) systems.

In addition to the requirements of ASME Section XI, several other documents provide guidance for the treatment of IGSCC flaws at Hatch Unit 1. These documents include:

1. U.S. NRC Generic Letter 84-11, "Inspection of BWR Stainless Steel Piping" dated April 19, 1984 [2].
2. NUREG 1061, "Report of the U.S. Nuclear Regulatory Commission Piping Review Committee" Volumes 1 and 3 [4] (non-mandatory).
3. U.S. NRC letter from John F. Stolz to J.T. Beckham (GPC), dated August 1, 1985 [5].
4. Letter from John A. Zwolinski (NRC) to Dennis L. Farrar (Commonwealth Edison Company) dated January 7, 1986 "Inspection and Repair of Reactor Coolant System Piping - Quad Cities Unit 2" and attached Safety Evaluation Report [6].

Each of these documents modified or extended the basic ASME Section XI requirements. The resulting evaluation and design bases as applied by Structural Integrity to the Hatch Unit 1 flaw evaluation and weld overlay design effort are summarized below.

2.2 Criteria for Acceptance of Flaws Without Weld Overlay Repair

A total of 12 flawed locations were evaluated for acceptability without repair. All of these locations were treated with the Induction Heating Stress Improvement (IHSI) process to produce a favorable residual stress distribution. The post-IHSI flaw indications at each location were evaluated using weld specific stress information, and a conservative crack growth correlation taken from Reference 7. This analysis is discussed in detail in Section 5.

ASME Section XI [3] provides criteria by which flaws may be accepted without repair. The tables provided in IWB-3640 define an acceptable end of cycle flaw depth as a function of flaw length and applied stress. Reference 2 defines the allowable flaw depth (end of cycle) as 2/3 of the ASME Section XI acceptable value, and also places limits on flaw length for circumferentially oriented flaws. The criteria used in this report for flaw acceptance incorporate the guidance provided in these documents as follows:

1. A flaw must be currently no deeper than 2/3 of the ASME Section XI acceptable depth.

2. The flaw must not be predicted to grow to a depth which exceeds the allowable depth in (1) within the next fuel cycle, considering the effects of IHSI, and under the influence of pressure, dead weight, thermal expansion, and weld overlay shrinkage stresses.

3. Document 4 above [6] presents an NRC staff position regarding flaw size for which credit for IHSI may be taken in flaw evaluation. This position is that a circumferential flaw must be no deeper than 30% of pipe wall, and no longer than 10% of circumference. This position was used as a guideline for flaw evaluation.

2.3 Evaluation of Previously Applied Weld Overlays and Weld Overlay Design Criteria

During the 1982 and 1984 in-service inspections, Georgia Power Company identified flaws requiring repairs in a total of 23 welds at Hatch Unit 1.

Each of these repaired welds was re-evaluated during the 1985/86 outage to determine the adequacy of the existing weld overlays in light of current criteria. It was also the intention of Georgia Power to improve the surface finish of each existing weld overlay by grinding or wash pass application, in order to improve inspectability. The evaluation described herein also served to determine any limits on material removal for the purpose of the surface finish improvement.

The previously applied overlays were re-evaluated based upon the following:

1. Georgia Power Company provided measurements of actual pipe wall thickness and as built weld overlay thickness and lengths.

2. The first layer of the weld overlay was not considered in design evaluation, in accordance with Reference 2. Since measurements of actual first layer thicknesses were not available, 0.1" was deducted from the as-built weld overlay thickness to account for the first layer.

3. Where the original flaw leading to repair was circumferentially oriented, the flaw was evaluated as if it were 360^{0} long and 100% through wall. The weld overlay thickness required to repair such a flaw was determined using weld specific stresses from Reference 8 and the computer program, pc-CRACK [9]. (This program automates the ASME Section XI calculations).

4. The required overlay thickness from pc-CRACK was compared with the as-built overlay thickness excluding the first welding layer to determine whether the as-built overlay was sufficient to repair the assumed flaw. This was generally the case.

IGSCC-like flaws were detected in 21 welds, during the 1985/86 inspection, beyond those previously repaired. Of these, 12 were determined to require weld overlay repairs. Criteria for designing new repairs were the same as those discussed above for evaluating previously repaired locations. This evaluation is discussed in detail in Section 4.

3.0 STRESS COMPONENTS AND COMBINATIONS

3.1 Summary of Stress Components

The stress information required for weld overlay design and flawed pipe analysis was taken from Reference 8. The components considered in these designs and analyses included pressure, dead weight, seismic (OBE), and thermal expansion stresses. These components are presented in Table 3.1 for each weld requiring repair or flaw evaluation.

3.2 Stress Combinations for Weld Overlay Design

Section IWB-3640 of ASME Section XI [3] defines allowable flaw depth as a function of the stress ratio (Pm+Pb)/Sm. The pertinent stress combination for weld overlay design is therefore

$$P_m + P_b = \sigma_p + \sigma_{DW} + \sigma_{seismic}$$

Reference 6 recommends including thermal expansion stresses in the above Pm + Pb value, to account for the concern of potentially low toughness flux weld material. Since the design basis for the Hatch Unit 1 weld overlays assumes a through wall flaw extending 360°, no credit for the flux weld material is taken, so the toughness concern does not apply and thermal stresses are not included in the design. Thermal stresses are included in the Table 3-1 for completeness, however.

Weld overlay design is discussed in detail in Section 4 of this report.

3.3 Stress Combinations for Flawed Pipe Analysis

A total of 12 flawed locations at Hatch Unit 1 were shown to be acceptable without repair. All of these locations were successfully treated with IHSI. To demonstrate that a flaw did not require repair, a fracture mechanics crack growth analysis of each flaw is required. Input for this analysis included the applied stress, the residual stress distribution (post-IHSI), and the secondary stress which results from shrinkage of weld overlays at other locations in the system.

The steady state applied stresses which influence crack growth include components due to pressure, dead weight, and thermal expansion. These individual components are tabulated in Table 3.1. The applied stress for crack growth may be expressed as:

$$\sigma_{\text{applied}} = \sigma_{\text{pressure}} + \sigma_{\text{dead weight}} + \sigma_{\text{thermal}}$$

In addition to these stresses, weld overlay shrinkage induced stresses are considered. These stresses are discussed in Section 6.

3.4 Residual Stresses

All identified flawed locations which were not weld overlay repaired were treated with the Induction Heating Stress Improvement process (IHSI). This process imposes a compressive residual stress distribution on the inside portion of the pipe wall which inhibits crack growth and initiation. The post-IHSI residual stress distribution assumed for each affected pipe size (12", 20", 28") is shown in Figures 3-1 (12"), and 3-2 (28"). These residual stress distributions were included in the crack growth analysis described in Section 5.

A large body of laboratory data and analytical solutions exist on post-IHSI residual stresses in austenitic pipe welds. These data are summarized in Reference 10. These stress distributions were curvefit by third order polynomials for use in the analysis, and the resulting equations are given in Figures 3-1 and 3-2.

3.5 Weld Overlay Shrinkage-Induced Stresses

Weld overlays shrink upon cooling after application, producing both radial and axial stresses in the repaired system. The radial shrinkage stresses are confined to the immediate area of the overlay. The axial stresses may affect locations remote from the repaired locations, however. The axial stress at the location of unrepaired flaws are included in the crack growth and allowable flaw size analyses for these locations. These shrinkage stresses for each unrepaired flaw location are shown in Table 6-2. The derivation and application of these stress values is discussed in greater detail in Section 6.

3.6 Summary of Pipe Geometries

IGSCC flaw indications were observed in pipes in the reactor water clean up (RWCU-6"), recirculation (12", 22", and 28") and residual heat removal (RHR-20", 24") systems. The geometry of each pipe size (outside diameter and nominal wall thickness) is summarized in Table 3-2.

TABLE 3-1

Stress Components for Flaw Location at Plant E.I. Hatch Unit 1

	STRESS COMPONENTS			
WELD NUMBER	PRESSURE	DEADWEIGHT	THERMAL	SEISMIC (OBE)
RWCU-6-D-4	4193	517	850	2227
RWCU-6-D-5	4193	796	4314	5658
RWCU-6-D-18	4193	877	2237	1109
RWCU-6-D-18A	4193	616	921	759
12AR-F-2	6667	260	2816	801
12AR-F-3	6667	414	4971	2400
12AR-F-4	6667	1101	7407	1833
12AR-G-3	6667	188	4947	1593
12AR-G-4	6667	214	6284	1814
12AR-H-2	6667	387	328	1036
12AR-H-3	6667	602	6000	1212
12AR-H-4	6667	2637	7677	2103
12AR-J-3	6667	876	4588	1674
12AR-K-2	6667	300	2040	1599
12AR-K-3	6667	631	3771	2497
12BR-A-4	6667	1443	7407	1680
12BR-B-3	6667	344	3190	723
12BR-C-2	6667	339	3485	1422
12BR-C-3	6667	327	6416	1559
12BR-C-4	6667	1783	7792	2440
12BR-C-5	6667	1783	7792	2440
12BR-D-2	6667	396	3079	1270
12BR-D-3	6667	756	4803	1794
12BR-E-2	6667	142	2507	1780
12BR-E-3	6667	564	4550	2789
12BR-E-4	6667	1448	7424	1821
20B-D-3	5391	643	3176	1790
20B-D-4	5391	643	3176	1790

TABLE 3-1 (continued)

Stress Components for Flaw Location
at Plant E.I. Hatch Unit 1

WELD NUMBER	STRESS COMPONENTS PRESSURE	 DEADWEIGHT	 THERMAL	 SEISMIC (OBE)
22AM-1	7250	0	0	0
22AM-4	7250	0	0	0
22BM-1	7250	0	0	0
22BM-4	7250	0	0	0
22AM-1BC-1	*	*	*	*
22BM-1BC-1	*	*	*	*
24A-R-13	7749	1036	5111	4350
24B-R-13	7568	540	3139	3848
28A-2	7212	607	772	896
28A-4	7212	454	415	718
28A-6	7212	585	677	1052
28A-10	7028	417	792	2292
28A-12	7302	482	652	1457
28B-3	7212	855	1000	859
28B-4	5819	568	917	1652
28B-8	7212	397	468	866
28B-10	7028	444	652	2525
28B-11	7028	444	652	2525
28B-16	7302	1086	1272	1863

* These locations were classified as geometrical reflectors due to weld configuration instead of flaws in 1985/86.

TABLE 3-2
Piping System Geometry Data

System	Pipe Size (nominal) (in.)	Pipe O.D. (in.)	Wall Thickness (in.)
RWCU	6	6.628	0.5494
Recirculation	12	12.746	0.693
RHR	20	20.00	0.937
Recirculation	22	22.00	1.10
RHR	24	24.01	1.15
Recirculation (Suction)	28	28	1.213
(Discharge)	28	28	1.39

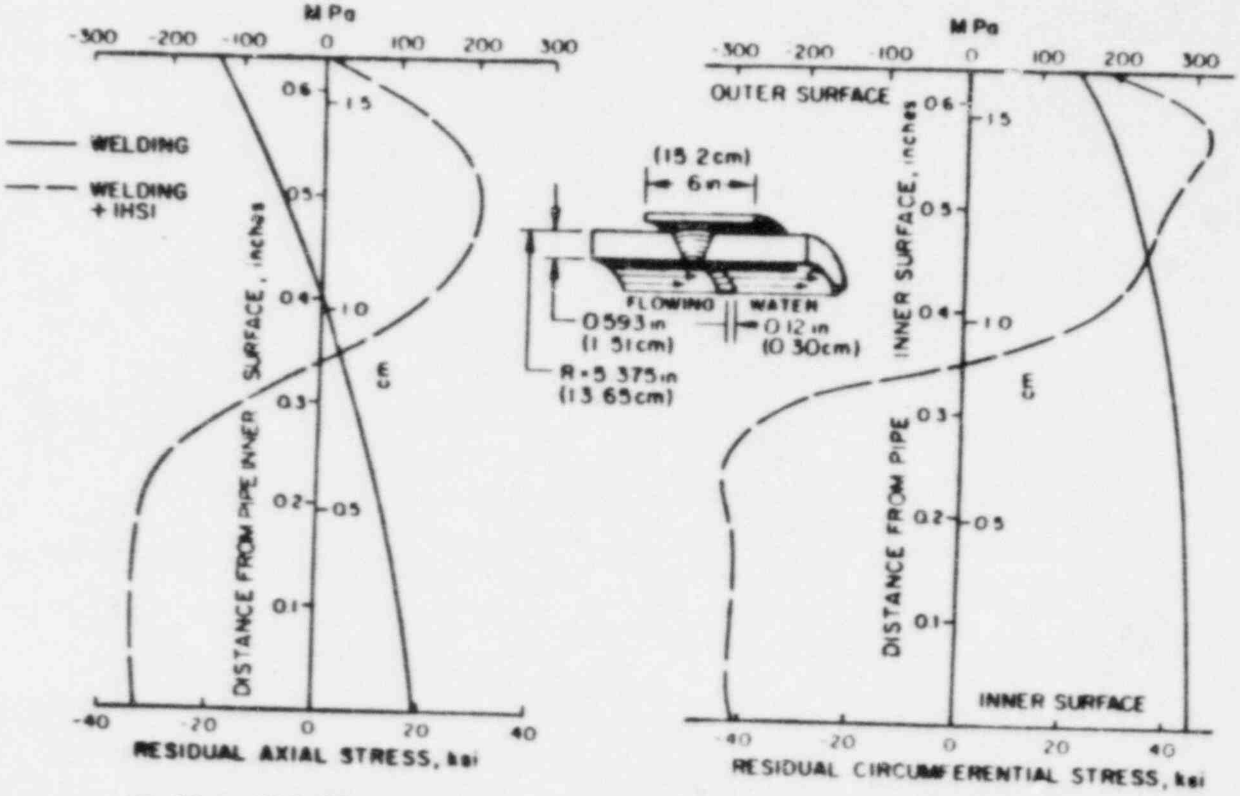

$$\sigma = -30.71 - 212.18x + 1411.87x^2 - 1505.44x^3$$

Figure 3-1. Through-Wall Residual Stresses Computed at a Cross-Section in the Sensitized Zone, 0.12 Inch (0.3 cm) from Weld Centerline, of a Welded and IHSI Treated 10-Inch Schedule 80 Pipe [10]

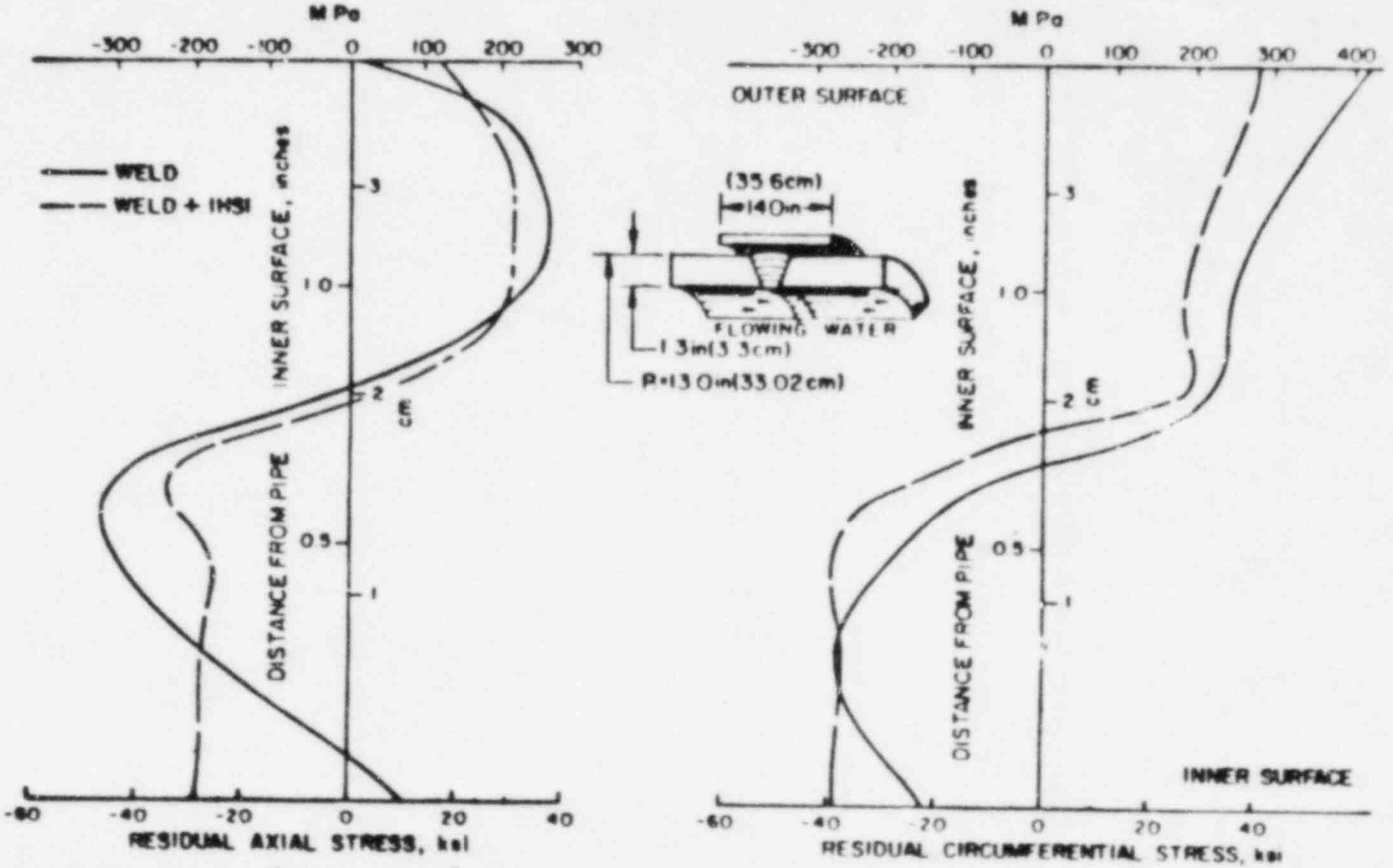

$\sigma = -28.93 - 143.55x + 467.84x^2 - 261.87x^3$

Figure 3-2. Through-Wall Residual Stress Profile for a Welded and IHSI Treated 26-Inch Schedule 80 Pipe at a Cross-Section 0.12 Inch (0.3 cm) from the Weld Centerline [10]

4.0 WELD OVERLAY DESIGN

4.1 Introduction

A total of 36 welds at Plant Hatch Unit 1 have been repaired using the weld overlay technique. Of these, 23 were repaired during the 1982 or 1984 outages. These pre-existing repairs were re-evaluated during the 1985/86 outage to determine their conformance with current standards. In addition, the surface finish of these pre-existing repairs was improved (by building up the overlay and grinding) during the 1985/86 outage, to improve ultrasonic inspectability. The weld overlay thickness after surface finish improvement met or exceeded the required design thickness without credit for the first welding layer, in all cases.

Twelve new weld overlay repairs were applied to IGSCC-like flaw indications during 1985/86. In addition, an overlay which partially covered an unflawed weld (24B-R-12) was extended to improve inspectability of this weld.

The detailed discussion of each category of repaired welds is provided in the following sections.

4.2 Design Basis

4.2.1 Re-evaluation of Previous Overlays

Weld overlays for all welds with previously reported circumferential flaw indications were evaluated assuming flaws were through the original pipe wall and extended 360° circumferentially. The required overlay thickness for each repair was determined based upon the requirements of ASME Section XI, IWB-3640 [3]. The applied stress ratio used in this evaluation was determined from data presented in Reference 8, with stress components combined as defined in Section 3 of this report.

In accordance with NRC Generic Letter 84-11 [2], no credit in the design was taken for the first overlay layer. That is, the specified design thickness listed in Table 4-1 is in addition to any first layer thickness. Because reliable information on first layer thickness for the previous overlays was not repeatable, a first layer thickness of 0.1" was assumed and discounted from as-built thickness measurements.

For previously repaired welds with only axial flaws present, the overlay is not required to provide structural reinforcement. Two layers of weld material are required to provide a leak barrier only, in accordance with References 2 and 4.

The above design assumptions formed the basis for re-evaluation of the 23 overlays which were applied to Hatch Unit 1 prior to the 1985/86 outage. Effectively, a new design was prepared for each weld. During the surface finish operation for these overlays, the "new design" was used to guide material build-up and grinding operations. The as-built (post-surface finish) thickness for each overlay was compared with the new design to determine acceptability of each overlay. The design and as-built dimensions for each evaluated overlay are presented in Table 4-1. The dimensions listed in the as-built columns represent the arithmetic average of measurements taken at 4 azimuthal locations. It should be noted that the thickness of the as-built overlay meets or exceeds the design value in all cases. As-built thicknesses are the average measured thickness values following deduction of 0.1" for each pre-existing overlay.

4.2.2 1985/86 Weld Overlay Designs

Where a circumferentially oriented flaw requiring repair was detected during the present outage, a weld overlay repair was designed using the same approach as described above for re-evaluation of weld overlay repairs. The weld specific stress combinations discussed in Section 3 of this report were used. The flaw was assumed to extend 360^0 circumferentially and to be through original pipe wall. The progam pc-CRACK was used to size the weld overlay using ASME Section XI IWB-3640 criteria. The design thickness included no credit for the first welding layer. Design and as-built dimensions for the new (1985/86) weld overlays are presented for comparison in Table 4-1. All weld overlay designs are included in Appendix A.

4.3 Weld Overlay Inspection

The weld metal used for weld overlay application at Hatch Unit 1 was Type 308L stainless steel, containing 0.02 wt% carbon max, material, which has been shown to be highly resistant to IGSCC propagation [11]. This material was chosen to prevent degradation of the weld overlay structural integrity by propagation of an IGSCC flaw through the original pipe wall and into the overlay. The resistance of the weld metal to IGSCC is traceable to its duplex structure (austenite-ferrite). However, because this structure is different from that normally found in the base metal, there is a possibility of dilution of the first welding layer material with base metal, which could potentially make the first layer less resistant to IGSCC propagation. NRC Generic Letter 84-11 [2] recommends that no credit be taken in the design of weld overlays for the first welding layer, to address this concern. This recommendation has been implemented at Hatch Unit 1, as previously discussed.

In addition, Georgia Power has added three separate, conservative inspections of the weld overlays to demonstrate weld overlay IGSCC resistance and overall integrity. These include:

1. Delta ferrite measurements of the first welding layer were made on each weld overlay. During the 1985/86 outage, a delta ferrite level of 7.5 FN minimum was taken as the acceptance criteria for the first layer. Delta ferrite content at or above the 7.5 FN level was considered to be indicative of minimal dilution of weld metal by base metal, and to demonstrate excellent IGSCC resistance of the first weld metal layer. If the weld metal passed this examination, the examination described in (2) below was then performed. If the layer did not pass the delta ferrite test, another layer was applied on top of the layer, and this new layer was examined to the same delta ferrite criterion as above.

2. A first weld overlay layer which passed criterion (1) above was then examined by the dye penetrant method to demonstrate that no flaws had "blown through" the layer. The weld metal was then carefully cleaned prior to continuing with weld overlay application.

3. The completed weld overlay was examined ultrasonically in accordance with EPRI-qualified procedures to demonstrate proper weld overlay bonding and quality and to provide a baseline inspection for future inservice inspections.

The above combination of inspections make up a highly conservative demonstration of weld overlay integrity. It is reasonable to include this first overlay layer in the design thickness since the delta ferrite level does not affect structural reliability. The fact that this option has not been exercised at Hatch Unit 1 further illustrates the level of conservatism which has been incorporated into the overlay design.

TABLE 4-1
Weld Overlay Design and As-Built Dimensions

Weld Number	Design Length	As-Built Length	Design Thickness[1]	As-Built Thickness[2]
RWCU-6-D-4	2.0	2.820	0.167	0.208
RWCU-6-D-5	2.0	2.026	0.206	0.228
RWCU-6-D-18	3.5	3.090	0.165	0.205
RWCU-6-D-18A	4.0	3.539	0.165	0.231
12AR-F-2	3.2	3.823	0.250	0.500
12AR-F-3	3.2	4.190	0.263	0.271
12AR-F-4	4.0	4.528	0.257	0.389
12AR-G-3	4.0	4.517	0.250	0.253
12AR-H-2	3.2	3.810	0.246	0.420
12AR-H-3	3.2	4.469	0.250	0.331
12AR-H-4	4.0	4.414	0.306	0.366
12AR-J-3	3.2	4.194	0.257	0.279
12AR-K-2	3.2	4.764	0.251	0.278
12AR-K-3	3.2	4.284	0.270	0.358
12BR-B-3	4.0	4.113	0.242	0.340
12BR-C-2	3.2	4.066	0.249	0.463
12BR-C-3	3.2	3.723	0.251	0.268
12BR-C-4	4.0	4.127	0.294	0.305
12BR-D-2	4.0	4.323	0.250	0.318
12BR-D-3	3.2	4.249	0.257	0.380
12BR-E-2	3.2	3.983	0.251	0.300
12BR-E-3	3.2	3.839	0.252	0.284
20B-D-3	5.0	9.143	0.33	0.408

---

[1] Design Thickness is the result of the 1985/86 re-evaluation, and not the original design in the case of previously overlayed welds.

[2] Design and As-Built Thickness takes no credit for the first overlay layer.

TABLE 4-1
(continued)

Weld Number	Design Length	As-Built Length	Design Thickness[1] (in)	As-Built Thickness[2]
22AM-1	5.2	6.332	0.376	0.445
22AM-4	5.2	6.750	0.376	0.478
22BM-1	5.2	7.777	0.369	0.418
22BM-4	5.2	6.638	0.376	0.466
24A-R-13	3.75	4.006	0.200[3]	0.240
24B-R-12	Blend	N/A	0.200	0.522
24B-R-13	5.6	8.010	0.200[3]	0.290
28A-10	4.2	4.643	0.480	0.533
28A-12	4.0	6.278	0.520	0.688
28B-3	6.0	6.152	0.440	0.509
28B-4	6.2	5.976	0.429	0.631
28B-11	4.2	4.720	0.493	0.648
28B-16	4.0	5.501	0.560	0.594

---

[1] Design Thickness is the result of the 1985/86 re-evaluation, and not the original design, in the case of previously overlayed welds.

[2] Design and As-Built Thickness takes no credit for the first overlay layer.

[3] Axial Flaw only.

5.0 FLAWED PIPE EVALUATION

5.1 Review of Unrepaired Flaw Status

5.1.1 Previous Outages

Section XI of the ASME Boiler and Pressure Vessel Code recognizes that some flaws detected by routine inspection may be acceptable for continued operation without repair. At Hatch Unit 1, some minor flaws were observed during previous inspections of the recirculation and associated systems (1982, 1984) which were sufficiently shallow to allow justification of continued operation without repair [12]. These previous flaws are listed in Table 5-1.

During the 1985/86 maintenance/refueling outage, the welds with unrepaired flaws were re-inspected using the latest EPRI-qualified ultrasonic (UT) inspection techniques both before and after IHSI treatment. The results of this re-inspection of previously unrepaired, flawed welds are shown in Table 5-2. All of these welds were either treated with the IHSI process or repaired with a Type I weld overlay (which assumes the existence of a 360° through-wall circumferential flaw as a design basis). The disposition of each of these welds is also shown in Table 5-2.

It should be noted that two welds (22AM-1BC-1 and 22BM-1BC-1) are identified as having only geometric reflectors in the 1985/86 results column. This does not constitute a conflict with previous inspection results, but rather re-interpretation of available data for these welds. To clarify this point, the following paragraph, which is taken from the pertinent inspection result documentation [13], is included:

"During the 1984 refueling outage, weld number 1B31-1RC-22BM-1BC-1 (pipe to branch connection weld) was ultrasonically examined. This examination revealed several circumferentially-oriented indications which were reported to GPC by INF# I84H1006. A re-examination was performed during the 1985/86 refueling outage prior to IHSI. The results of this examination revealed no significant change from 1984 data and was reported to GPC by INF# I85H1002.

Another examination was performed after IHSI and this examination revealed similar indications as detected in the 1984 and the 1985 pre-IHSI data. After carefully reviewing, comparing and evaluating all data taken on this weld, the conclusion is that these indications are geometrical type reflectors caused by the weld configuration."

A similar discussion appears in the inspection documentation for weld 22AM-1BC-1 post-IHSI.

5.1.2 Present Outage

During the 1985/86 inspection program a total of 9 welds were determined to contain IGSCC-type flaw indications which were acceptable without requiring weld overlay repair. In addition, 12BR-C-5 was determined to contain a flaw not traceable to IGSCC. These welds and the flaw indications associated with each are shown in Tables 5-2 and 5-3. All of these welds were treated with the IHSI process. Where available, the results are presented for both pre-IHSI and post-IHSI [13] inspections, for comparison purposes.

The flaw in weld 12BR-C-5 is a laminar indication embedded in the safe-end material outside the weld heat affected zone. This flaw is acceptable by ASME Section XI, IWB-3500 criteria, as discussed in Section 5.4 of this report. In addition, this flaw was not observable after IHSI.

Of the remaining 9 welds, 3 are 12" pipe-to-safe end welds containing only short circumferential flaws, 1 is 20" with only axial, 1 is a 28" pipe-to-safe end weld containing 2 short circumferential flaws, 3 are 28" welds containing only axial flaws, and 1 is a 28" weld containing flaws with both axial and circumferential character.

All of these flaw indications were shown to be acceptable without repair by fracture mechanics crack growth analyses, as discussed in Sections 5.2 and 5.3 of this report.

5.2 Analytical Basis

5.2.1 Review of Criteria

Evaluation of flaws for acceptance without repair is governed by Section XI of the ASME Code [3]. ASME Section XI, paragraph IWB-3640 addresses the acceptance of flaws in stainless steel which are deeper than those defined as acceptable without further evaluation by paragraph IWB-3500. Allowable flaw depth is presented as a function of applied stress and flaw length. The pertinent tables from the latest Code edition are in Tables IWB-3641-1, IWB-3641-3 and IWB-3641-5.

NRC Generic Letter 84-11 [2] modifies the acceptance criteria of IWB-3640 to allow for uncertainty in IGSCC flaw sizing techniques. The allowable flaw depth defined in NRC Generic Letter 84-11 is two-thirds of the IWB-3640 value. In addition, NRC Generic Letter 84-11 defines the maximum acceptable length of a circumferential flaw without repair as that length which, if it is extended through the pipe wall, would lead to a flaw with less than Code safety margins on net section collapse of the flawed pipe. (This length is approximately 30% of circumference).

Based upon the above considerations, the criteria for acceptance of flaws without weld overlay repair were taken as:

1. Flaw Depth:

   A flaw was acceptable if its predicted depth following one cycle of IGSCC growth was less than 2/3 of the appropriate IWB-3640 table value (IWB-3641-3 for axial flaws and IWB-3641-5 for circumferential flaws). It should be noted that the IHSI treatment applied to all flawed, unoverlayed welds effectively arrests any further growth for the flaws presented in Table 5-3.

2. Flaw Length:

The aggregate flaw length was limited to the NRC Generic Letter 84-11 value of roughly 30% of circumference for circumferential flaws. Axial flaws are self-limiting in length and are predicted to self-arrest long before they could grow long enough to produce a structural concern.

Review of Tables 5-2 and 5-3 will show that all flaws which were considered to be acceptable with IHSI only are significantly shorter and more shallow than the above criteria limits.

An NRC Safety Evaluation Report for Quad Cities Unit 2 [6] issued on January 7, 1986 presents a criterion for effectiveness of IHSI as a repair which is based upon flaw dimensions. IHSI is considered effective if a) the flaw is less than 30% of pipe wall thickness deep, and b) the flaw is less than 10% of circumference long. Review of the flaws listed in Tables 5-2 and 5-3 shows that all meet the depth criterion. All but 2 (welds 12AR-G-4 (13%) and 12BR-E-4 (12%)) meet the length criterion. This topic was discussed with the NRC by telephone [14]. The conclusion was that these welds were acceptable for the next cycle, but re-inspection following a cycle of operation would probably be required.

The above acceptance criteria were used with a crack growth analysis to demonstrate that the flaws listed in Tables 5-2 and 5-3 did not require weld overlay repair. These analyses are discussed in the next section.

5.2.2 Crack Growth Calculation Methodology

An analytical model of a 360° circumferential crack in a cylinder of radius to thickness ratio of 10:1 [15] was used for the fracture mechanics evaluation. For the post-IHSI case, applied loading is the sum of the same piping stresses from Table 3-1 and the post-IHSI residual stress distributions given in Figure 3-2 for 28-inch pipe or Figure 3-1 for 12-inch pipe.

For purposes of the fracture mechanics analysis, the axial stress distributions of piping stress, and post-IHSI residual stress were all expressed in terms of third degree polynomials of the form:

$$\sigma = A_0 + A_1x + A_2x^2 + A_3x^3 \qquad (1)$$

where σ and x are defined as the stress and the radial distance from the inside surface, respectively, and A_0 - A_3 are the coefficients resulting from the curvefit.

The stress intensity factor for a circumferential crack in a cylinder of radius to thickness ratio of 10:1 can be expressed as follows [15].

$$K_I = \sqrt{\pi a}\ (A_0F_1 + \frac{2a}{\pi} A_1F_2 + \frac{a^2}{2} A_2F_3 + \frac{4}{3\pi} a^3A_3F_4) \qquad (2)$$

where F_1, F_2, F_3, and F_4 are magnification factors and a is crack depth.

For linear elastic fracture mechanics evaluation, stress intensity factors can be calculated independently for piping stress and pre-and post-IHSI residual stress distributions. The resultant stress intensity factor is the superposition of the appropriate loading cases.

A large body of laboratory data exists on stress corrosion crack growth rates for sensitized stainless steels in simulated BWR environments. These data are summarized in Figure 5-1, taken from Reference 7. These data were obtained using fracture mechanics type specimens with different crack sizes and loadings which can be characterized by the crack tip stress intensity factor K. The data represent a wide variation in material sensitization, as well as levels of dissolved oxygen in the water. While subject to some criticism because the simulated water chemistry in these tests did not contain levels of impurities (chlorides, sulfates, etc.) that could exist in operating BWRs, the widely used power law "best estimate" curve of Figure 5-1, is believed to provide a representative crack propagation rate for plant crack growth assessments. The "best estimate" curve can be described by a power law representation of the form:

$$da/dt = 2.27 \times 10^{-8}(K)^{2.26}$$

where a is the crack depth in units of inches, t is time in units of hours, and K is the stress intensity factor in units of ksi $\sqrt{in.}$

Crack growth analyses typically make use of one of the two assumptions illustrated in Figure 5-2 regarding crack length extension: self-similar crack growth or constant aspect ratio crack growth. The former assumes that the incremental crack extension is the same at all points on the crack front, while the latter assumes that the ratio of depth to length remains constant during crack extension. Considering field and laboratory experience with circumferential crack extension, it appears that the self-similar assumption may underpredict crack length versus time, while the constant aspect ratio assumption overpredicts.

Recent work by Gerber [16] under contract to EPRI provides a new approach for addressing circumferential crack extension which is more technically defensible than the above self-similar or constant aspect ratio approaches. This approach utilizes data generated in a laboratory stress corrosion test of a 26-inch diameter welded pipe specimen at Battelle Pacific Northwest Laboratories [11]. IGSCC was induced in this pipe through loading to a high applied stress in a simulated BWR environment, and was accelerated by the use of graphite wool to create an artificial crevice. Crack growth occurrred and was monitored both during operation and at several scheduled shutdown intervals for the test. A number of small cracks initiated early in the test. The length of these was periodically measured. The initiation of new cracks was noted and their lengths were susbsequently tracked as well. At the completion of the test, there were a total of 63 cracks with a combined length of 32.57 inches.

The average effective circumferential crack extension observed in this test is presented in Figure 5-3. This rate includes both growth of existing cracks as well as new defects initiating and contributing to the effective crack growth rate in each inspection interval. Examination of Figure 5-3 suggests that an average effective circumferential crack growth rate of 0.5

mils/hour should give a reasonably conservative estimate. It should be pointed out, however, that although this is an average effective rate, it is based on a laboratory test in which the local environment, load and cycles were all intentionally modified to accelerate IGSCC relative to actual plant conditions. Test and analytical data [18] have also shown that the IHSI will suppress not only crack initiation but also crack propagation for small cracks in both the length and depth directions.

5.2.3 Allowable Flaw Size Methodology

Allowable flaw sizes for various levels of primary applied loading ($P_m + P_b$) have been specified in ASME Section XI, IWB-3640 [3]. A tabulation of allowable flaw sizes as a function of applied load is given in Table IWB-3641-1, from ASME Section XI, IWB-3640. Note that this table permits very large defects in some cases (as great as 75% of pipe wall) and does not include consideration of any stress other than primary, notably secondary and peak stresses from the design stress report as well as any weld residual stresses or misalignment/fit-up stresses which might exist from construction. The argument for this exclusion is that, given the extremely high ductility of austenitic stainless steel, these strain controlled effects will self relieve after a small amount of plastic deformation and/or stable crack extension, and will have little or no impact on the loads and flaw sizes needed to cause unstable crack propagation or pipe rupture.

However, some recent fracture toughness data may invalidate the above argument, at least for some classes of austenitic weld metal [19]. To account for possibility of low ductility weld metal, secondary stresses from the stress report [8] were also included in the present analyses, as required by the latest Addendum to Reference 3.

It is important to note that the very low measured toughness occurred only in a small percentage of the materials addressed in Reference 19, and may be of only limited concern from a probabilistic viewpoint. Indeed, most IGSCC observed to date has been restricted to weld heat affected zones, which should exhibit the high toughness attributed to base material. Also, the low toughness data to date has been limited to flux types of weldments (submerged arc or shielded metal arc). Nevertheless, to address these possible concerns, the analysis procedure used throughout this report includes thermal expansion and weld overlay shrinkage effects as a primary stress condition in determining allowable flaw size from Table IWB-3641-5.

5.2.4 Effects of Weld Overlay Shrinkage

As the weld overlays applied throughout the recirculation system cooled, they produced an axial contraction which in turn produced a secondary steady state stress at other locations in the system. This effect is discussed in detail in Section 6. A finite element analysis of the as-repaired configuration of the recirculation system was performed to determine the magnitude of the stresses throughout the system which resulted from the aggregate shrinkage of weld overlay repairs. These stresses are presented in Table 6-2 for all non-overlay repaired flaw locations. The stresses determined by this analysis were treated as applied stresses for the purposes of crack growth analysis and as P_e stresses in the IWB-3641-5 allowable flaw size determination. The total applied stress used in crack growth analyses was determined from consideration of pressure, dead weight, thermal expansion, and shrinkage stresses. Refer to Section 6 for a detailed discussion of weld overlay shrinkage analyses.

5.3 Results of Crack Growth Analyses

An analysis of the flaws in each of the welds listed in Table 5-2 was conducted by the methods described above. All of these locations were successfully treated by the IHSI process, so the further IGSCC susceptibility of these flaws is considered to be mitigated.

Because of the concern regarding the potential low toughness of flux shielded butt weld material, the allowable flaw sizes for these evaluations were taken from Table IWB-3641-5 of Section XI of the ASME Code (Winter, 1985 Addenda, Reference 3). These values expressly address the low toughness concern. For the purpose of this analysis, the additional limits of NRC Generic Letter 84-11 [2] were imposed. That is, the allowable flaw depths from IWB-3641-5 were factored by 2/3 to account for possible UT sizing uncertainties. The result of this additional conservatism is that, for the flaws in question, the acceptable end-of-cycle flaw depth was taken to be 40% of pipe wall thickness for the circumferential flaw cases, which is considerably greater than the observed flaw depths (26% maximum).

Because of the beneficial effects of IHSI in modifying the residual stresses of the affected locations, none of the flaws listed in Table 5-2 is predicted to grow significantly during the next operating cycle. This is illustrated in Figures 5-4 and 5-5, which present stress intensity vs. crack growth for the limiting 12 inch and 28 inch flaw depths. Stress intensity due to IHSI and applied stress is presented on these figures. It may be seen that the net stress intensity for each case (the sum of the IHSI and applied stress curves) is negative for a significant portion of the pipe wall. This implies that no crack growth due to IGSCC will occur.

Axial flaws which were not weld overlay repaired appear only in 20 inch and 28 inch pipe. The observed axial flaws are both short and shallow, and would not present a structural integrity concern even if through-wall. Crack growth analysis does not predict growth of these flaws.

In summary, all flaws which are addressed in this section are predicted to be arrested by the IHSI treatment which was applied during the current outage. Present flaw depths are significantly below allowable flaw depths, which include a factor of 2/3 on Code allowable flaw depths.

5.4 Evaluation of Non-IGSCC Flaws Observed

Flaws traceable to sources other than IGSCC were identified in three welds during the 1985/86 maintenance/refueling outage. One of these (12BR-C-5) was a small subsurface inclusion and/or lamination in the base metal of the safe end away from the heat affected zone in a 12 inch safe end to nozzle weld. This location was successfully treated by IHSI. The other three locations (24B-R-12, 28A-12 and 28B-4) were locations to which weld overlays had been applied. The flaws observed in these three welds appear to be local lack of fusion or lack of bonding in some portion of the weld overlay material. The flaws identified at each of the four welds are presented in Table 5-4. All of these flaws were shown to be acceptable without repair by the methods of ASME Section XI, IWB-3500.

Each is discussed in detail below:

5.4.1 Weld 12BR-C-5

This weld was determined to contain an inclusion and/or lamination type flaw in the safe end base metal away from the Inconel butter. This flaw is a subsurface flaw and is acceptable by reference to Table IWB-3514-3 of ASME Section XI, from where the allowable laminar area for a wall thickness of 1.2 inches may be estimated as 2.6 square inches. This value is greater than the area of the observed flaw. Following IHSI, the flaw could not be observed ultrasonically.

5.4.2 Weld 28B-4

Two lack of fusion-type flaws were observed following surface finish improvement of the weld overlay on this weld. The flaws appear to be in the first weld overlay layer. The laminar area of the combined flaws is less than that acceptable by Table IWB-3514-3 of ASME Section XI. If these flaws are treated as subsurface planar flaws, the flaws are acceptable by the criteria of Table IWB-3514-2 of ASME Section XI. It should also be noted that the overlay thickness above the flaws is greater than the design thickness, so the structural adequacy of the overlay is not reduced.

5.4.3 Weld 28A-12

Four lack of fusion-type flaws were found in the weld overlay on this weld following surface finish improvement. All of these flaws have at least the full design overlay thickness above them. Consequently, the integrity of the weld overlay repair is not reduced. Each flaw has a planar dimension of approximately 1/16", and each is circumferentially oriented. Two of the flaws appear to be in the first welded layer, and two appear to be in the next layer (see Table 5-4 for a complete flaw description). Although the flaws are axially separated, for evaluation purposes, they are treated here as one flaw. The composite length of the flaws is 14.4 inches, while the cross section is taken as 0.07 inches. The composite planar area is therefore 1.008 square inches. This area is acceptable by Table IWB-3514-3. If the composite flaw (with axial and radial dimensions taken as 0.07 inches) is treated as planar flaw, the composite flaw is acceptable by the criteria of Table IWB-3514-2.

5.4.4 Weld 24B-R-12

The weld overlay at this location was not applied as a repair, but rather as a method of improving the inspectability of the weld. This was necessary because the weld overlay on the adjacent weld was close enough to weld 24B-R-12 to prevent adequate UT crystal movement for proper inspection of this weld.

Inspection of the overlay on 24B-R-12 revealed two small flaws in the overlay material (Table 5-4). These flaws were treated as subsurface planar flaws, and were shown to be acceptable by the criteria of Table IWB-3514-2.

5.5 Summary

A total of 9 welds were determined to have IGSCC-like flaw indications which did not warrant application of a weld overlay repair. All of these welds were treated with the IHSI process, and were shown by fracture mechanics analyses to meet the criteria of ASME Section XI, IWB-3641-5 and NRC Generic Letter 84-11 for at least the next operating cycle.

In addition, non-IGSCC flaws were identified in four welds. The methods of ASME Section XI IWB-3500 were used to demonstrate that these flaws were acceptable without repair.

TABLE 5-1

Welds With Flaws Which Were Acceptable Without Repair Prior to 1985

Weld Number	1982 Result (if any)	1984 Result (if any)
22AM-1BC-1	Transverse: 12% x 0.5" max	Intermittent Circ.: Nom. 11% Spot: 18%
22BM-1BC-1	N/A	Intermittent Circ.: Max. 29%
28A-6	N/A	Axial: 16% x 0.5"
28B-16	N/A	Axial: 27% x 1"

TABLE 5-2

Disposition of Welds With Unrepaired Flaws
Prior to 1985

Weld Number	1985/86 Result	Disposition
22AM-1BC-1	Geometry[1]	IHSI
22BM-1BC-1	Geometry[1]	IHSI
28A-6	Axial: 0.3" x 29% (post-IHSI)	IHSI
28B-16	3 Circumferential Flaws: (separated by 90°) 1) 26.5" x 24% 2) 4" x 18% 3) 1.5" x 40%	Weld Overlay

---

[1] See discussion in Section 5.1.1 of text.

TABLE 5-3

Welds With Post-IHSI Flaw Indications
(1985/86)

Weld Number	Pre-IHSI Indication (if applicable)	Post-IHSI Indication
12AR-G-4	N/A	1) Circ.: 5.375" x 20%
12BR-A-4	1) Circ.: 2" x 22%	1) Circ.: 2.6" x 26%
12BR-C-5	Lamination in Safe-End Base Material: 0.4" long x 0.025" deep, 0.775" from O.D.	No flaw observable after IHSI
12BR-E-4	1) Circ.: 3.5" x 21% 2) Circ.: 2.0" x 25%	1) Circ.: 2.75" x 19% 2) Circ.: 2.0 x 14%
20B-D-4	N/A	1) Axial: 0.25" x 18% 2) Axial: 0.15" x 16%
28A-2	N/A	1) Circ.: 1" x 13% 2) Circ.: 5-1/4" x 15%
28A-4	N/A	7 Axial Flaws: 1) 0.2" x 9% 2) 1.05" x 11% 3) 1.35" x 10% 4) 1.3" x 8% 5) 1.35" x 10% 6) 1.25" x 10% 7) 1.35" x 13%
28B-8	N/A	1) Axial: 0.25" x 24% 2) Axial: 0.25" x 16%
28B-10	N/A	1) Circ.: 1-7/8" x 23% 2) Circ.: 1-3/8" x 20% 3) Circ.: 2-7/8" x 17% 4) Circ.: 1/2" x 15% 5) Axial 31% (associated with #1) 6) Axial 26% (associated with #3) all on elbow side

TABLE 5-4

NON-IGSCC FLAWS

WELD	FLAW DESCRIPTION	RESOLUTION
12BR-C-5	Lamination or Inclusion length = 0.4" throughwall = 0.025" depth from O.D. = 0.775" material thickness 1.2"	IHSI
28B-4	Weld Overlay Inner Pass Lack of Fusion 2 Indications: 1) 1.4" long depth from O.D. = 0.6" 2) 1.2" long depth from O.D. = 0.58"	Leave as is
28A-12	Four Indications in Weld Overlay 1) 8" long, 0.8" deep approx. 3.9" from upstream toe of overlay 2) 2" long, 0.55" deep 1.6" from upstream toe of overlay 3) 3" long, 0.76" deep 4.9" from upstream toe of overlay 4) 1.4" long, 0.6" deep 2.6" from upstream toe of overlay	Leave as is

Width on all 4 flaws in 28A-12 = 1/16"

Circumferential Locations:
1) 58.5"
2) 76.0"
3) 87.0"
4) 65.6"

TABLE 5-4
(continued)

WELD	FLAW DESCRIPTION	RESOLUTION
24B-R-12	Two Indications in Weld Overlay 1) 1.5" long, depth from O.D. = 0.4" 2) 1" long, depth from O.D. = 0.5 .45" from upstream toe of overlay.	Leave as is

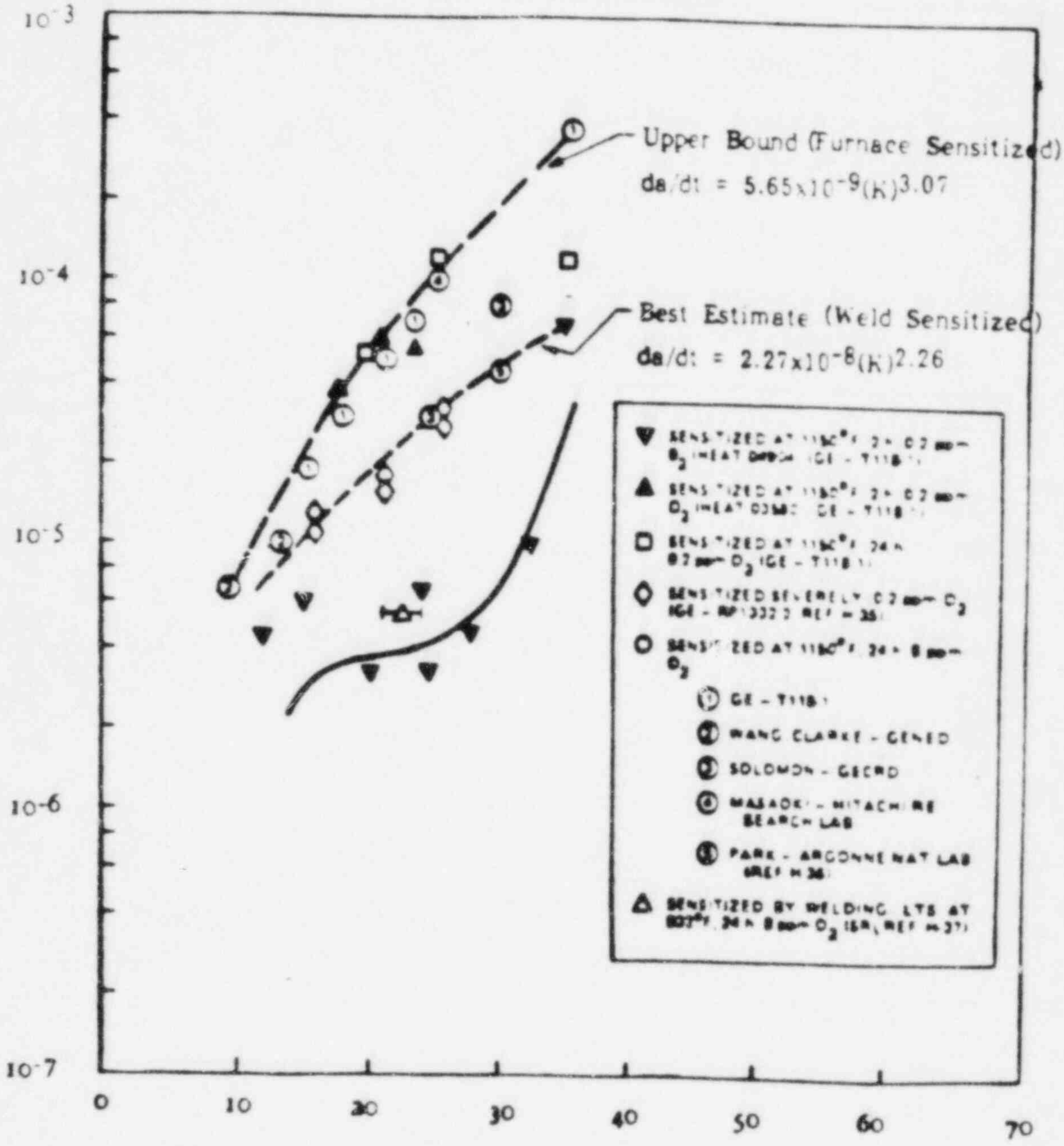

Figure 5-1. Stress Corrosion Crack Growth Data for Sensitized Stainless Steel in BWR Environment

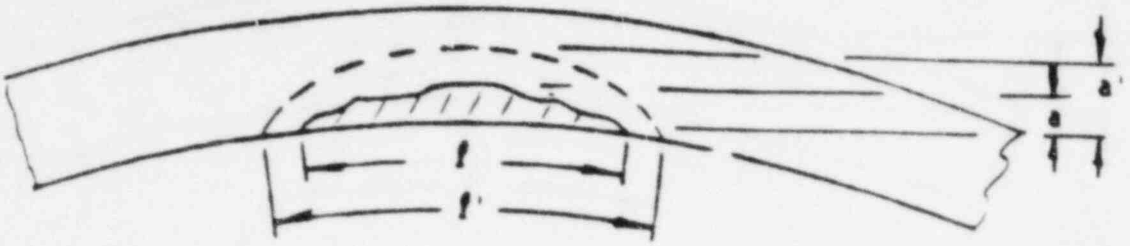

a) Self-Similar Assumption; $\ell' - \ell = 2(a' - a)$

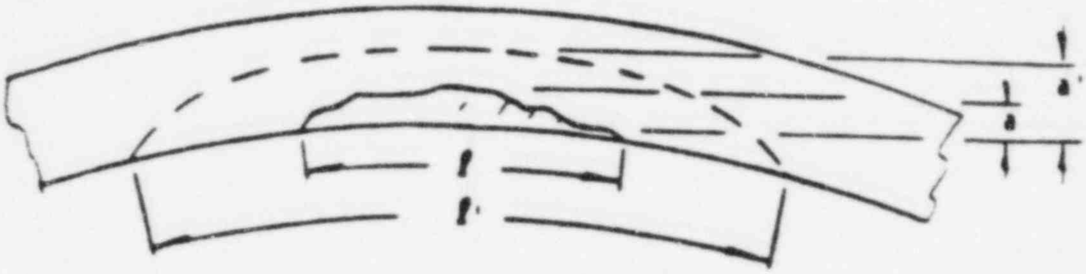

b) Constant Aspect Ratio Assumption; $\ell/a = \ell'/a'$

Figure 5-2. Common Assumptions Used to Estimate Circumferential Crack Growth

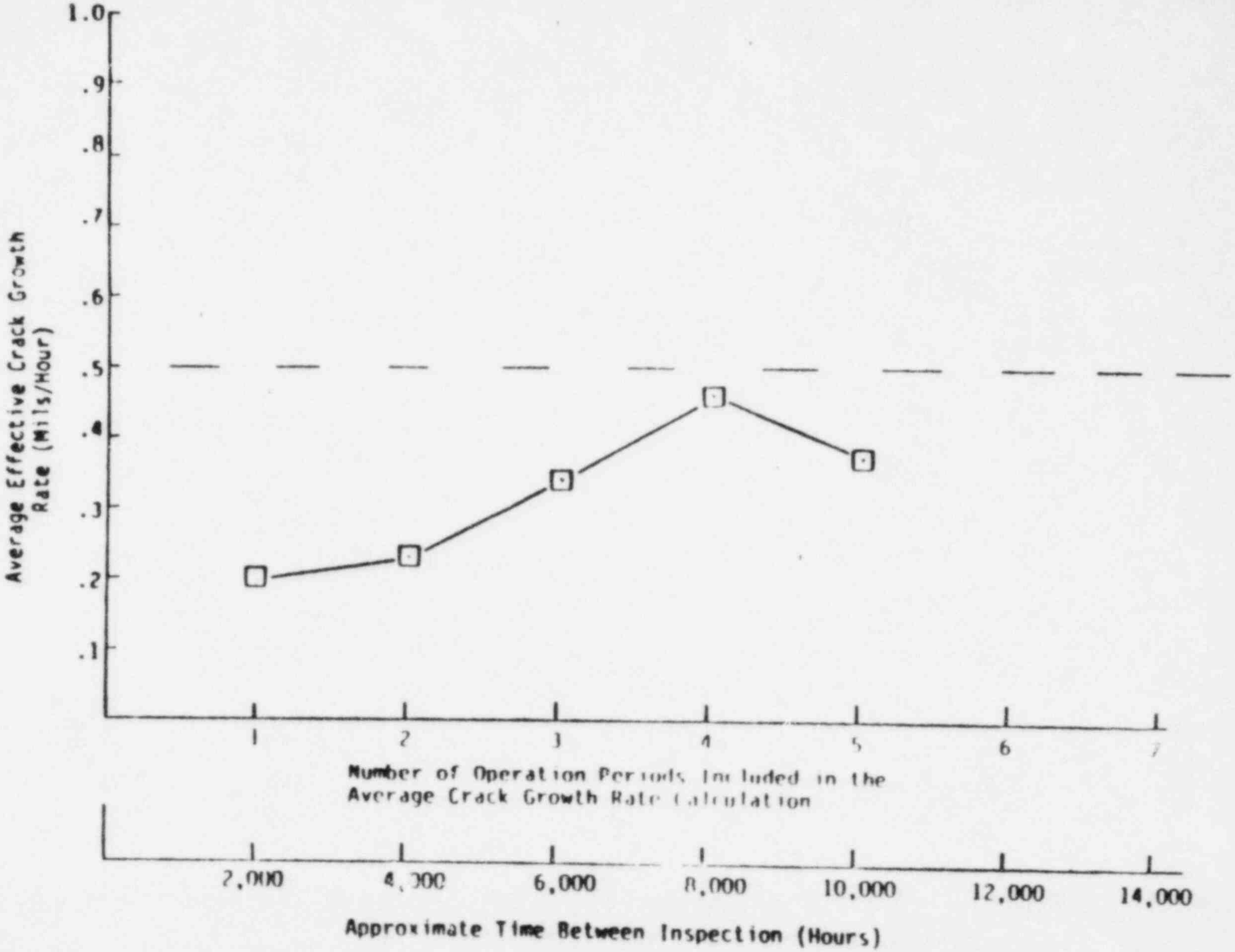

Figure 5-3. Average Effective Circumferential Crack Growth Rate As a Function of Operation Periods Used in Calculation of Time Between Inspections

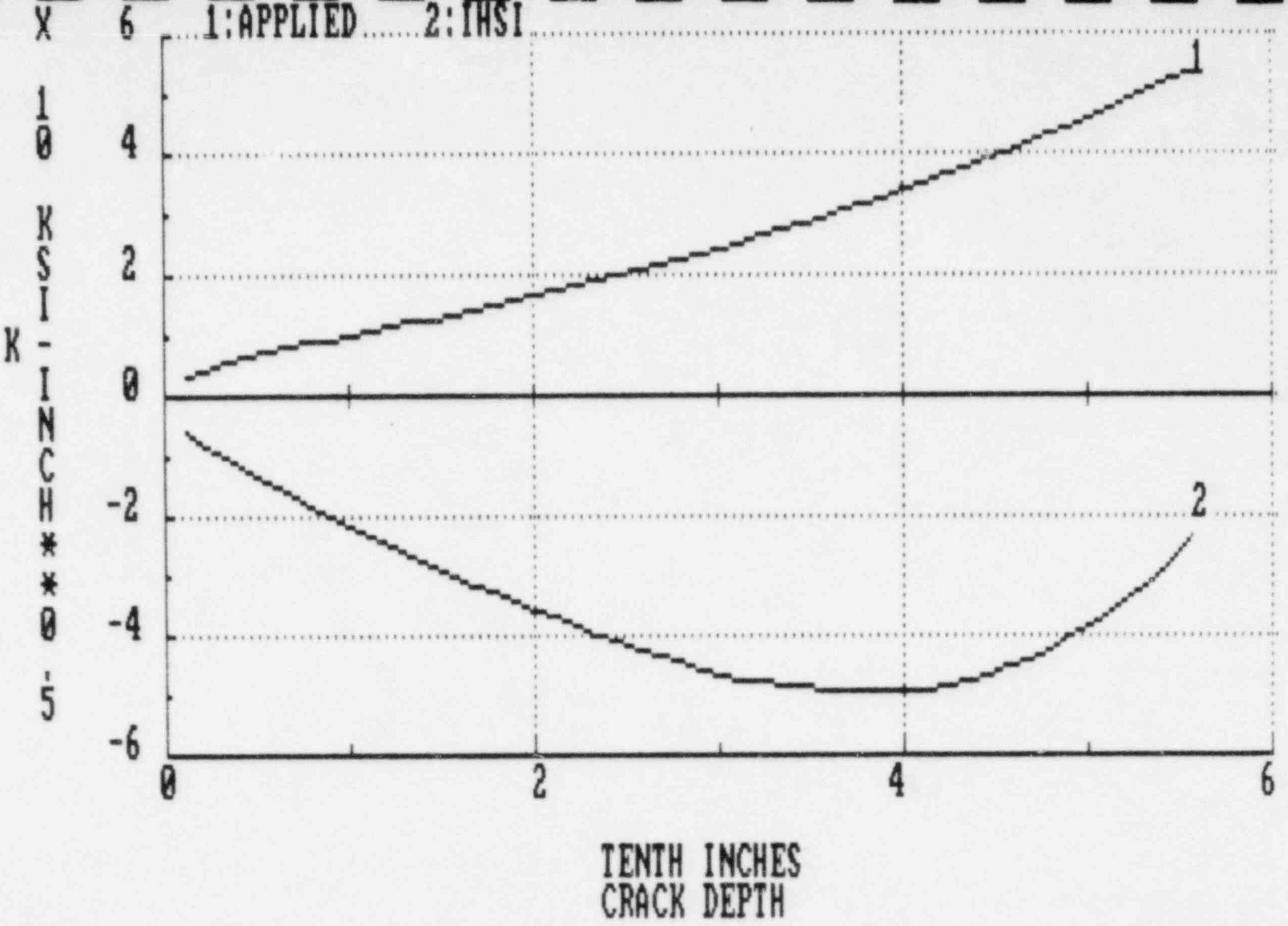

Figure 5-4. Stress Intensity vs. Crack Depth for Bounding 12" Pipe Location. IHSI and Applied Stress

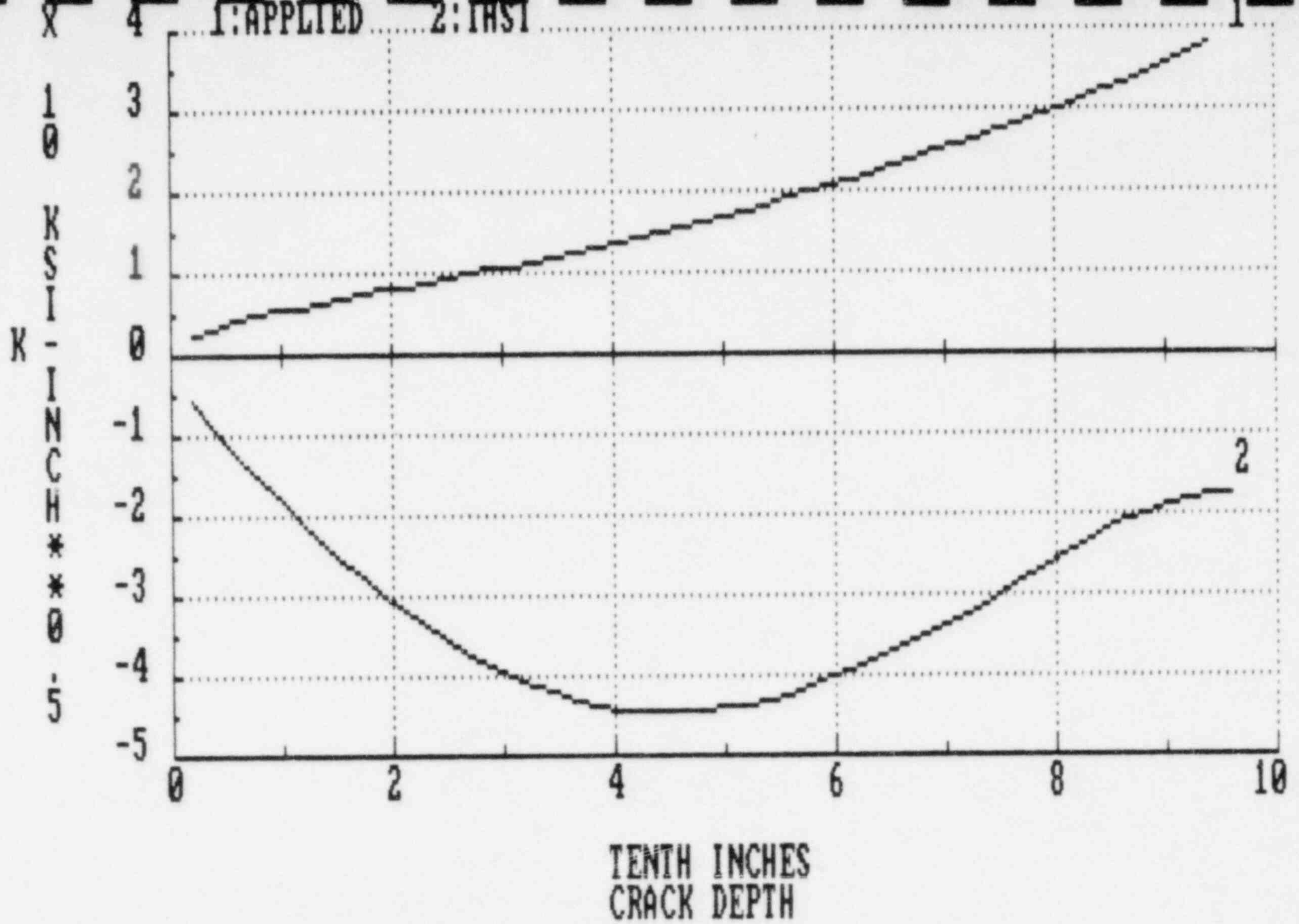

Figure 5-5. Stress Intensity vs. Crack Depth for Bounding 28" Pipe Location. IHSI and Applied Stress

6.0 EVALUATION OF WELD OVERLAY SHRINKAGE STRESSES

6.1 Background

6.1.1 Causes of Weld Overlay Shrinkage Stresses

The level of stresses resulting from weld overlay shrinkage are a direct result of the location of the weld overlay and the piping system geometry. Axial shrinkage produces tensile secondary stresses at locations co-linear with the overlay, and predominantly bending secondary stresses at locations which are separated and not co-linear with the welding location (e.g., locations separated by an elbow, see Figure 6-1). In addition, weld overlays can produce stresses at fixed points in parallel runs of piping if the two runs are tied together by a stiff run (see Figure 6-2). This latter situation is typical of 12" recirculation system risers. The highest stressed point in a recirculation system with several weld overlays is typically at a recirculation riser to inlet nozzle connection. Weld overlay shrinkage in a vertical run of such a riser produces bending on the horizontal run leading to the inlet nozzle. This bending stress is highest at the nozzle-to-pipe or pipe-to-safe end weld.

Three aspects of the weld overlay application determine the magnitude of weld overlay shrinkage which will be produced. The first of these is the pipe size. Larger pipes (with correspondingly thicker walls) are stiffer and shrink less than do smaller lines. Typically the amount of shrinkage measured in 28" lines is roughly 1/4 to 1/5 of that produced on 12" pipe for the same weld overlay design. Consequently, shrinkage stresses predicted in 28" pipe are also only a small fraction of the worst stresses predicted in 12" pipe.

The second factor which contributes to the magnitude of the observed weld overlay shrinkage is the length of the overlay. For the same pipe size, a longer overlay will produce greater axial shrinkage and (depending on system geometry) larger stresses than would a shorter overlay.

The final factor which has an effect on the shrinkage is the number of weld layers applied to produce a particular overlay thickness. Field measurements suggest that the bulk of the shrinkage occurs as a result of application of the first two welding layers. Subsequent layers have progressively less effect. This suggests that the magnitude of the shrinkage is related to the volume of metal cooling at any one time, compared to the amount (including original pipe wall) which has already solidified.

6.1.2 Effects of Weld Overlay Shrinkage

The stress produced by the shrinkage of weld overlays is a steady state secondary stress of a type which is not addressed by the ASME Code Section III. Consequently, such stresses will not contribute to a particular location violating Code stress limits. However, the stresses produced are not imaginary. They will have significant effects on both flawed and unflawed locations in the repaired system, and these effects need to be addressed.

Unflawed Locations

At unflawed locations, the stress imposed by shrinkage will combine with existing applied and residual stresses to determine susceptibility to crack initiation, e.g., by the IGSCC mechanism. In the case of weld locations which have not received residual stress mitigation (e.g., with IHSI) the pre-existing inside surface tensile residual stresses will combine with the tensile component of stress due to shrinkage to make the location very susceptible to crack initiation. Even if the location has been treated with IHSI, the superposition of the tensile stress due to shrinkage on the IHSI residual stress pattern will tend to reduce the effectiveness of IHSI in inhibiting crack initiation.

Flawed Locations

At flawed locations, similar effects to those on unflawed locations will be experienced. The tensile stress superimposed on the location's stress field will make the location more prone to further crack initiation. In addition, the shrinkage stress will act in concert with applied and residual stresses to promote further crack propagation and to increase the rate of that growth. Because of this effect, it is generally required that stresses due to weld overlay shrinkage be added to applied stresses in performing crack growth calculations to demonstrate acceptability of an existing flaw without repair.

6.2 Measurement of Weld Overlay Shrinkage

In order to predict the magnitude of the stresses resulting from weld overlay shrinkage, it is necessary to take measurements of the actual amount of shrinkage during the weld overlay application process. This was done manually. First, the design length of the weld overlay is "laid out" on the weld to be repaired. The centerline of the existing butt weld was determined, and the length of the design overlay in each direction (upstream and downstream of the weld centerline) was marked on the pipe using punch marks at several azimuthal locations. An additional set of marks was placed approximately 1/2" to 1" beyond each end of the design overlay length, typically at 4 azimuthal locations separated by 90°. This latter set of 8 punch markings (4 on each end of the overlay region) were used to determine shrinkage.

The distance between each azimuthal pair (upstream-downstream) of punch marks was measured using a vernier caliper (see Figure 6-3). The weld overlay was then applied between the inner set of markings, which define design length. Following the completion of overlay welding, the distance between the outside set of punch marks was again measured with vernier calipers. The difference between the before and after welding measurements for each azimuthal location was tabulated, and the four differences were averaged. The average value from these measurements are tabulated as the weld overlay axial shrinkage in Table 6-1, and were used as input into the analysis discussed below to determine shrinkage-induced stress at all locations in the affected system.

6.3 Analysis of Weld Overlay Shrinkage Stresses

6.3.1 Background

As pointed out earlier, the stresses produced by weld overlay shrinkage are not confined to the vicinity of the repair, but rather can affect remote locations. Consequently, it is necessary to consider the system as a whole, and to consider all overlay repairs, in determining the stresses which will result from overlay shrinkage.

The analytical approach used in this evaluation includes preparation of a finite element model of the entire piping system. A typical model is shown in Figure 6-4. The actual weld overlay shrinkage measured at the repair site are input at the nodes corresponding to repaired welds in the form of "cold elements", which simulate the mechanical shrinkage observed in the field through use of negative pseudo-thermal expansion. Mechanical anchors and rigid restraints are built into the model, but no other loads are included.

After preparation of the above model, the stresses at all points in the system are calculated elastically. Because the stress at welds is of concern (rather than within components), all stress indices are set equal to 1.0.

Typically, stresses calculated in the above manner for piping larger than 12" are rarely larger than 1 ksi. However, it is not unusual to see stresses in the 12" risers which are predicted to be in the vicinity of 15-20 ksi or larger. The highest stressed locations are almost always at the junction of riser to inlet nozzle.

There are several conservatisms in the above type of analysis. First of all, since the stress is elastically calculated, stresses may be overpredicted. Refining the approach to include consideration of the true material stress-strain behavior would give more reasonable results. Secondly, nozzles are typically modeled as rigid and the flexibility of elbows and other components may be underpredicted.

Use of realistic nozzle and component flexibilties produces lower predicted weld overlay shrinkage induced stresses, as is demonstrated in Section 6.3.2 below.

6.3.2 Modelling Details

A finite element computer program SAP86 [20] which is a pc-version of the well known SAPIV [21] was used to calculate the piping stresses due to weld overlay shrinkage at the recirculation system. As shown in Figures 6-5 & 6-6, two finite element models were developed: one each for loop A and loop B of the recirculation piping system. The actual weld overlay shrinkage measured at the repair site, as summarized in Table 6-1, were input at the nodes corresponding to repaired welds in the form of "cold elements", which simulate the mechanical shrinkage observed in the field through the use of negative pseudo-thermal expansion. Temperature difference at the cold elements were calculated by:

$$\Delta T = \frac{\delta}{\alpha L}$$

where ΔT is the temperature deviation from the reference temperature at the cold element, δ is the as-built weld overlay shrinkage, α is the coefficient of thermal expansion of the pipe material at operating temperature, and L is the length of the as-built weld overlay. Note that, in the finite models shown in Figures 6-5 and 6-6, the lengths of the cold elements were set equal to the as-built weld overlay lengths. Mechanical anchors and rigid restraints were built into the model, but no other loads were included. Since shrinkage stresses in the 28-inch pipe are normally small and are not sensitive to the boundary conditions, the 28-inch pipe to the reactor pressure vessel penetration was conservatively modeled as rigid. However, flexibilities at the riser to the reactor pressure vessel penetrations must be properly incorporated into the model to obtain realistic shrinkage stresses at the 12-inch pipes.

For a typical nozzle to vessel penetration as illustrated in Figure 6-7, the stiffnesses corresponding to F_z, M_x, and M_y can be calculated by Reference 22. The stiffnesses at the riser to pressure vessel penetration were calculated to be:

$$K_{F_z} = 4.951 \times 10^6 \text{ lb/in}$$

$$K_{M_x} = 0.965 \times 10^6 \text{ in-lbf/rad}$$

$$K_{M_y} = 1.351 \times 10^6 \text{ in-lbf/rad.}$$

The stiffnesses for the other three degrees of freedom at the riser to pressure vessel penetration were conservatively assumed to be 1×10^{10} lb/in or 1×10^{10} in-lb/rad. Actual values of these three stiffnesses are expected to be much smaller than 1×10^{10}, and thus, the piping stresses obtained from this analysis are expected to be higher than the actual values.

6.4 Results

Resulting shrinkage stresses at the recirculation system welds are summarized in Table 6-2 and 6-3. Note that, because the stress at welds is of concern (rather than within components), all stress indices were set equal to 1.0. From Table 6-2, it is seen that shrinkage stresses in the flawed unrepaired welds are quite small (<1.5 ksi). In fact, from Table 6-3 it is seen that the shrinkage stresses at most of the welds are small (less than 3 ksi) except at a few welds. The highest shrinkage stress is 9.13 ksi at the junction of the "H" riser to the cross of the ring header.

The effects of these shrinkage stresses have been included in the flaw evaluations discussed previously in Section 5 of this report. Because of the design basis assumption of a 360° through-wall flaw used for all overlay designs, as discussed in Section 4 of this report, the above shrinkage stresses will have no effect on the weld overlay designs. They are secondary stresses, and this assumption eliminates any low toughness concern which would require their inclusion in weld overlay design. Finally, because of the small magnitude of shrinkage stresses in most welds, and the application of IHSI, the effects of weld overlay shrinkage on uncracked welds is not considered significant.

TABLE 6-1

Summary of the As-Built Weld Overlay Shrinkage

Weld	WOL Length (in)	Shrinkage[1] (in)
28A-10	4.64	0.036
28A-12	5.00	0.066
22AM-1	6.33	0.014
22AM-4	6.75	0.000
12AR-F-2	3.82	0.146
12AR-F-3	4.19	0.276
12AR-F-4	4.53	0.335
12AR-G-3	4.52	0.259
12AR-H-2	3.81	0.141
12AR-H-3	4.47	0.348
12AR-H-4	4.41	0.391
12AR-J-3	4.19	0.256
12AR-K-2	4.76	0.228
12AR-K-3	4.28	0.365
28B-3	6.15	0.091
28B-4	5.97	0.058
28B-11	4.72	0.089
28B-16	5.00	0.046
22BM-1	7.78	0.013
22BM-4	6.64	0.039
12BR-B-3	4.00	0.329
12BR-C-2	4.07	0.156
12BR-C-3	3.72	0.344
12BR-C-4	4.13	0.317
12BR-D-2	4.32	0.332
12BR-D-3	4.25	0.330
12BR-E-2	3.98	0.158
12BR-E-3	4.08	0.287

---

[1] Sum of the 1985/86 shrinkage and the previous shrinkages measured in 1982 and 1984.

TABLE 6-2

Weld Overlay Shrinkage Stresses at Unrepaired, Flawed Locations (IHSI Only)

Weld #	Shrinkage Stress (ksi)
12AR-G-4	1.082
12BR-A-4	0.244
12BR-C-5	0.255
12BR-E-4	0.416
28A-2	0.156
28A-4	0.147
28A-6	0.358
28B-8	0.565
28B-10	1.419

TABLE 6-3

WELD	MEMBRANE (KSI)	BENDING (KSI)	TOTAL (KSI)
28A-1	0.007	0.149	0.156
28A-2	0.007	0.149	0.156
28A-3	0.007	0.081	0.088
28A-4	0.022	0.125	0.147
28A-5	0.022	0.046	0.068
28A-5A	0.022	0.336	0.358
28A-6	0.022	0.336	0.358
28A-7	.000	0.204	0.205
28A-8	.000	0.440	0.440
28A-9	.000	0.516	0.516
28A-10	0.022	0.705	0.727
28A-11	0.008	0.398	0.406
28A-12	0.008	0.216	0.224
28A-13	0.008	0.356	0.364
28A-14	0.051	0.695	0.746
28A-15	0.051	0.434	0.485
28A-16	0.053	0.419	0.471
28A-17	0.074	0.897	0.970
22AM-1	0.000	0.000	0.000
22AM-2	-0.048	1.909	1.860
22AM-3	-0.039	1.434	1.394
22AM-4	0.000	0.000	0.000
12AR-F-1	0.172	5.301	5.473
12AR-F-2	0.172	2.293	2.465
12AR-F-3	0.134	1.870	2.004
12AR-F-4	0.134	0.519	0.653
12AR-F-5	0.134	0.045	0.179
12AR-G-1	-0.243	3.340	3.097
12AR-G-2	-0.243	3.243	3.000
12AR-G-3	-0.127	2.488	2.362
12AR-G-4	-0.127	1.209	1.082
12AR-G-5	-0.127	0.069	-0.058
12AR-H-1	0.326	8.806	9.132
12AR-H-2	0.339	4.014	4.354
12AR-H-3	0.246	3.415	3.661
12AR-H-4	0.246	1.700	1.946
12AR-H-5	0.246	0.016	0.261
12AR-J-1	-0.218	2.054	1.835
12AR-J-2	-0.218	3.140	2.922
12AR-J-3	-0.091	2.235	2.144
12AR-J-4	-0.091	1.069	0.978
12AR-J-5	-0.091	0.096	0.004
12AR-K-1	0.189	4.242	4.431
12AR-K-2	0.189	2.644	2.833
12AR-K-3	0.120	2.026	2.147
12AR-K-4	0.120	0.986	1.106
12AR-K-5	0.120	0.052	0.172

TABLE 6-3
(continued)

WELD	MEMBRANE (KSI)	BENDING (KSI)	TOTAL (KSI)
28B-1	0.019	0.779	0.797
28B-2	0.019	0.779	0.797
28B-3	0.019	0.204	0.222
28B-4	0.136	0.665	0.801
28B-5	0.136	0.429	0.565
28B-6	0.136	0.429	0.565
28B-7	0.136	1.624	1.760
28B-8	0.019	0.480	0.499
28B-9	0.019	0.942	0.961
28B-10	0.019	1.398	1.417
28B-11	-0.136	2.624	2.488
28B-12	0.003	1.523	1.527
28B-13	0.003	1.050	1.053
28B-14	0.003	0.375	0.378
28B-15	0.133	1.809	1.942
28B-16	0.133	1.175	1.307
28B-17	0.134	1.195	1.329
28B-18	0.077	0.812	0.889
22BM-1	0.000	0.000	0.000
22BM-2	-0.042	2.649	2.607
22BM-3	-0.030	0.513	0.484
22BM-4	0.000	0.000	0.000
12BR-A-1	-0.044	3.852	3.808
12BR-A-2	-0.044	0.858	0.814
12BR-A-3	-0.041	0.967	0.927
12BR-A-4	-0.041	0.285	0.244
12BR-A-5	-0.041	0.035	-0.006
12BR-B-1	-0.006	3.099	3.093
12BR-B-2	-0.006	0.465	0.458
12BR-B-3	0.027	0.607	0.634
12BR-B-4	0.027	0.298	0.325
12BR-B-5	0.027	0.050	0.078
12BR-C-1	0.342	7.972	8.315
12BR-C-2	0.355	4.325	4.679
12BR-C-3	0.236	3.574	3.810
12BR-C-4	0.236	1.739	1.976
12BR-C-5	0.236	0.019	0.255
12BR-D-1	0.300	1.872	2.171
12BR-D-2	0.300	4.331	4.631
12BR-D-3	0.111	3.117	3.228
12BR-D-4	0.111	1.536	1.647
12BR-D-5	0.111	0.049	0.160
12BR-E-1	-0.004	3.522	3.518
12BR-E-2	-0.004	1.197	1.193
12BR-E-3	-0.018	0.899	0.881
12BR-E-4	-0.018	0.434	0.416
12BR-E-5	-0.018	0.049	0.031

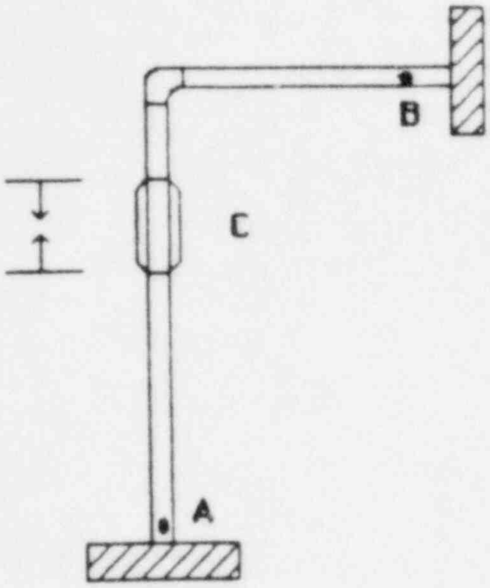

WELD OVERLAY SHRINKAGE AT C PRODUCES
TENSILE STRESS AT A
BENDING STRESS AT B

Figure 6-1. Remote Effects of Weld Overlay Shrinkage

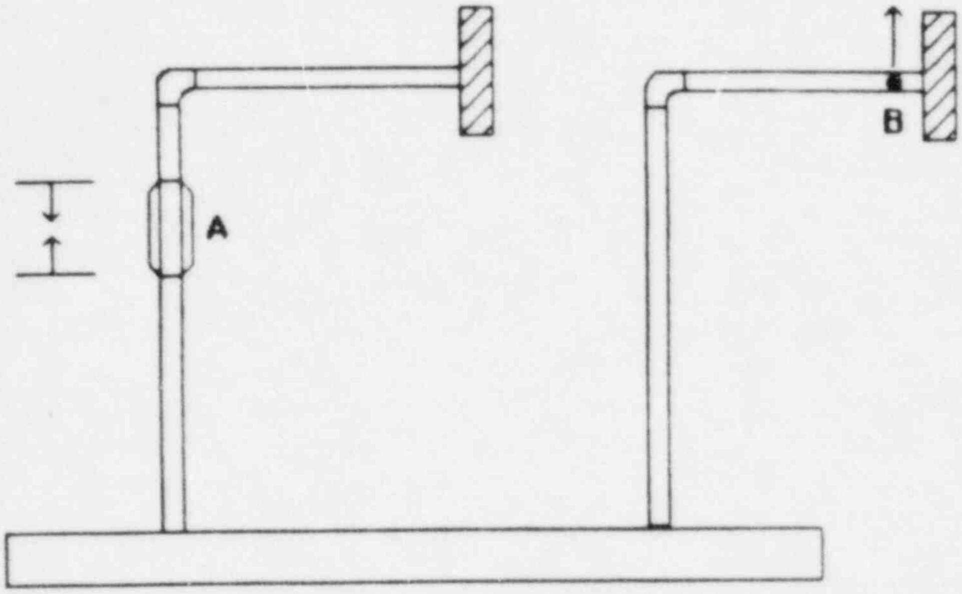

WELD SHRINKAGE AT A PRODUCES UPWARD BENDING AT B

Figure 6-2. Effects of Weld Overlay Shrinkage On Parallel Piping

Figure 6-3. Measurement of Weld Overlay Shrinkage

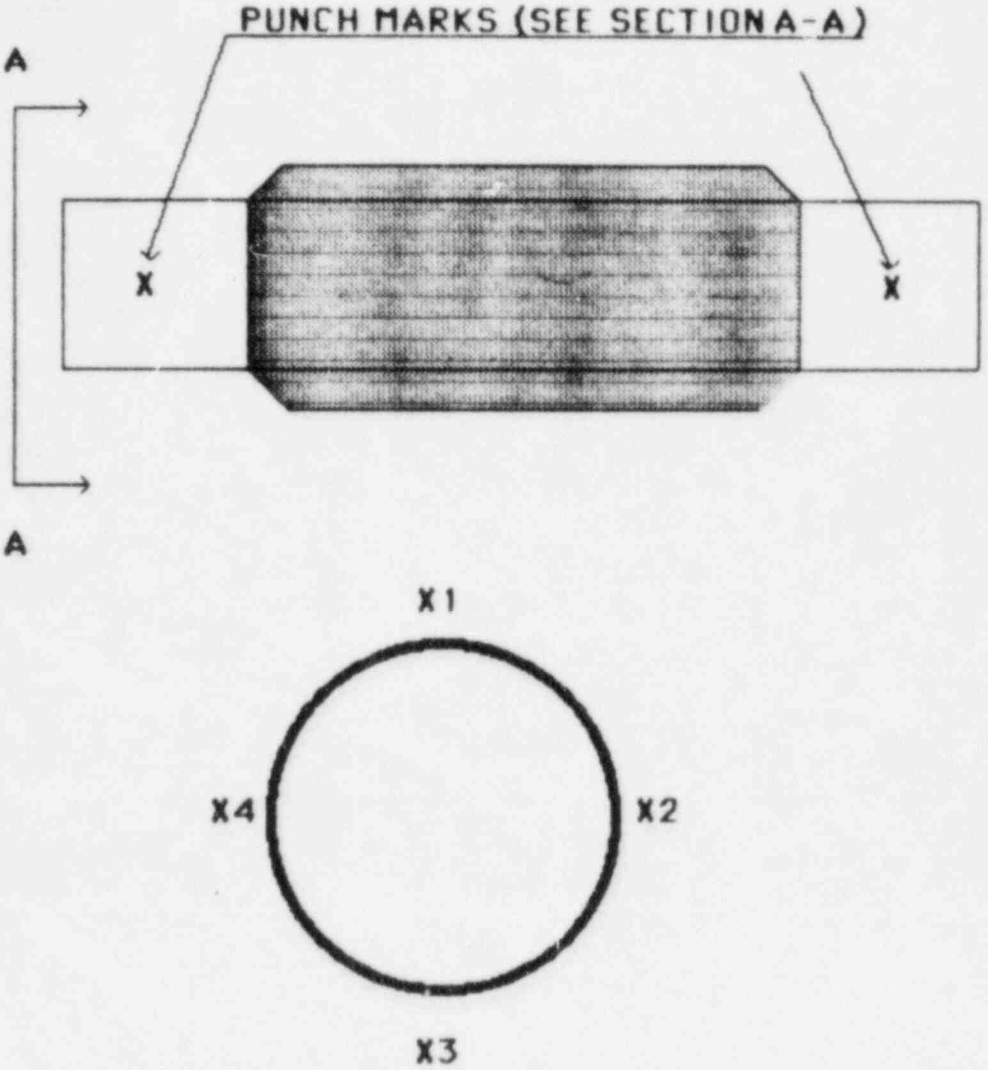

SECTION A-A
PUNCH MARKS AT 4 AZIMUTHAL LOCATIONS
(90° APART)

1. PLACE PUNCH MARKS BEFORE BEGINNING WELDING.
2. MEASURE DISTANCE BETWEEN EACH PAIR (UPSTREAM/DOWNSTREAM) OF MARKS BEFORE AND AFTER WELDING

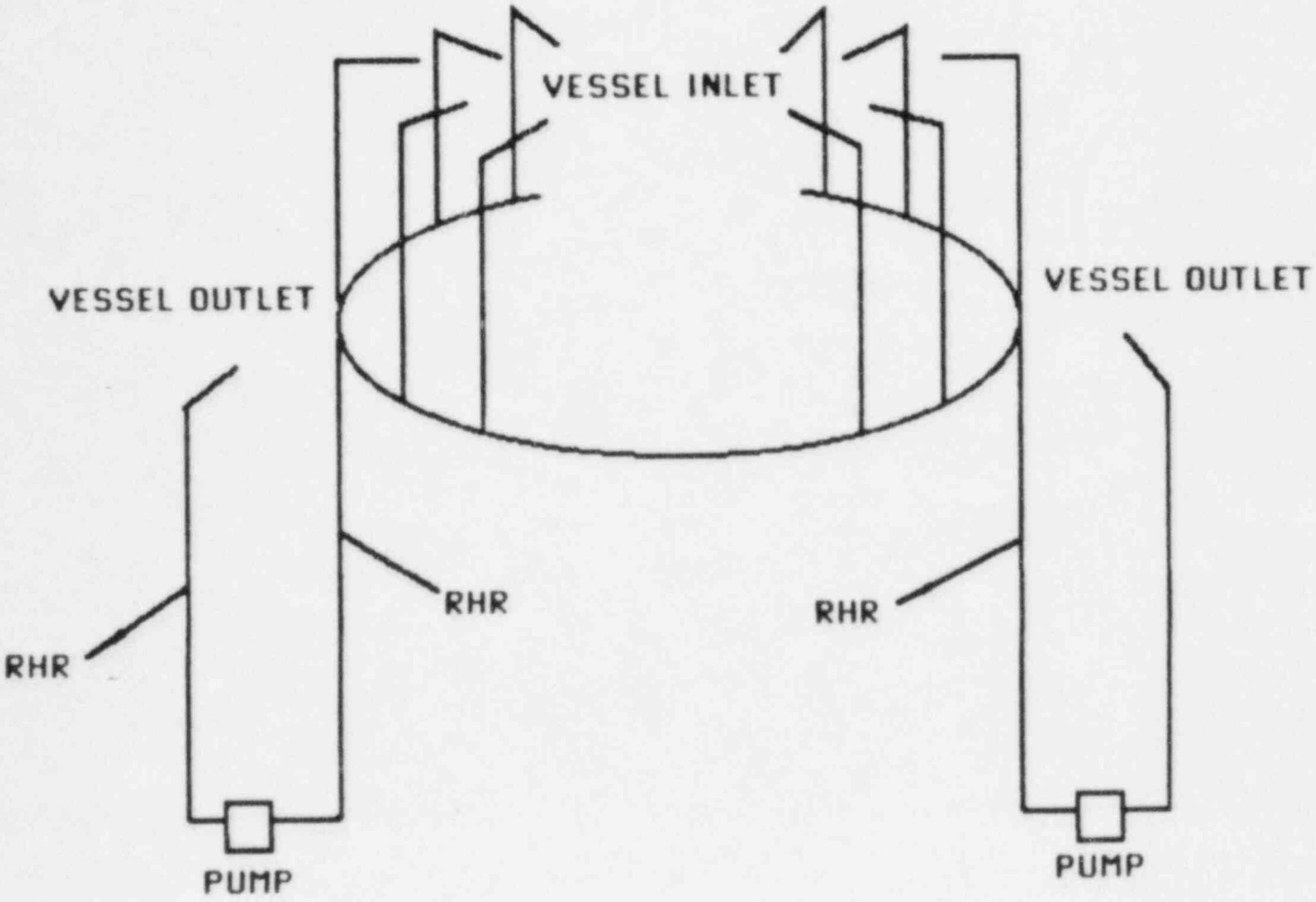

Figure 6-4. Typical Schematic Model of BWR Recirculation System

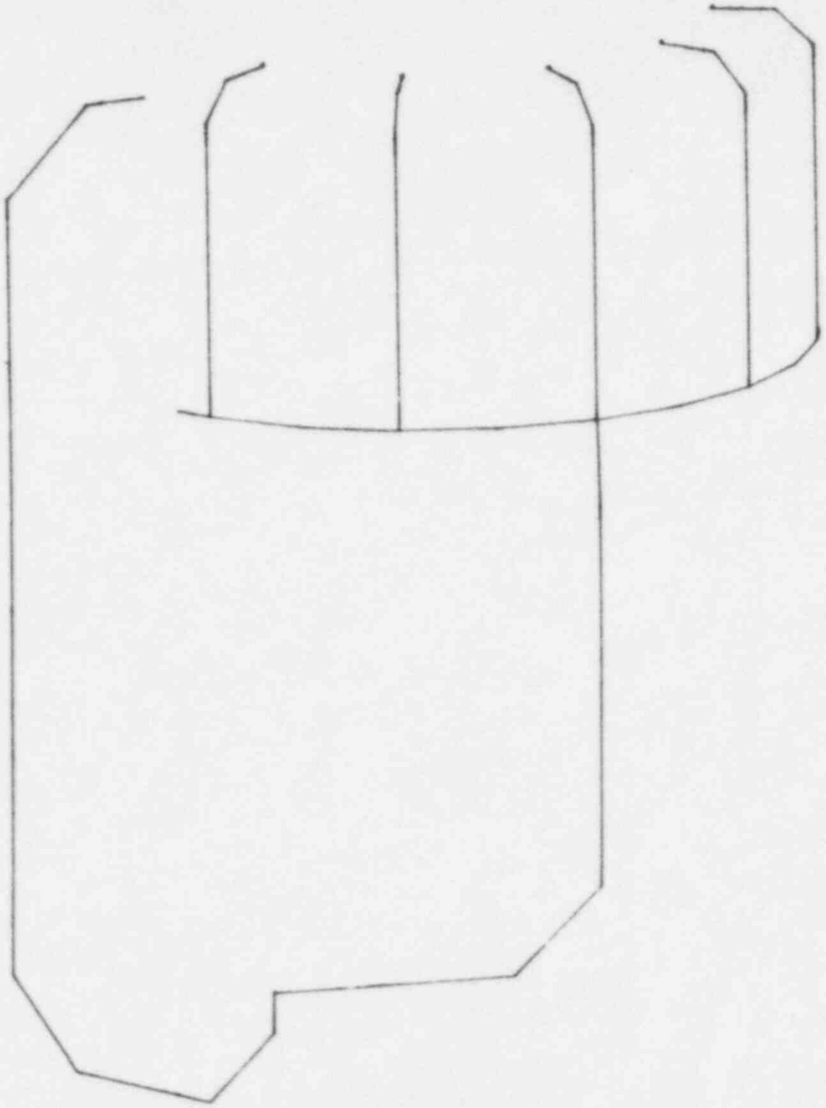

Figure 6-5. Finite Element Model of the Recirculation System Piping (Loop A)

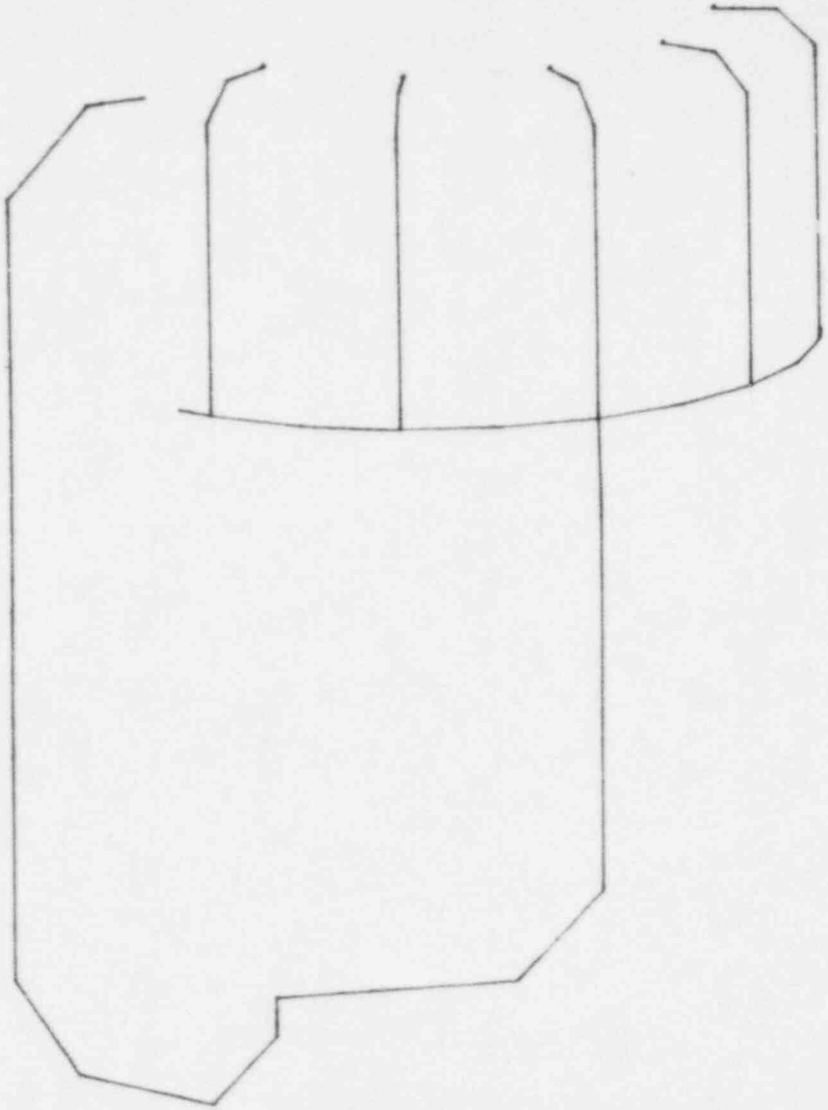

Figure 6-6. Finite Element Model of the Recirculation System Piping (Loop B)

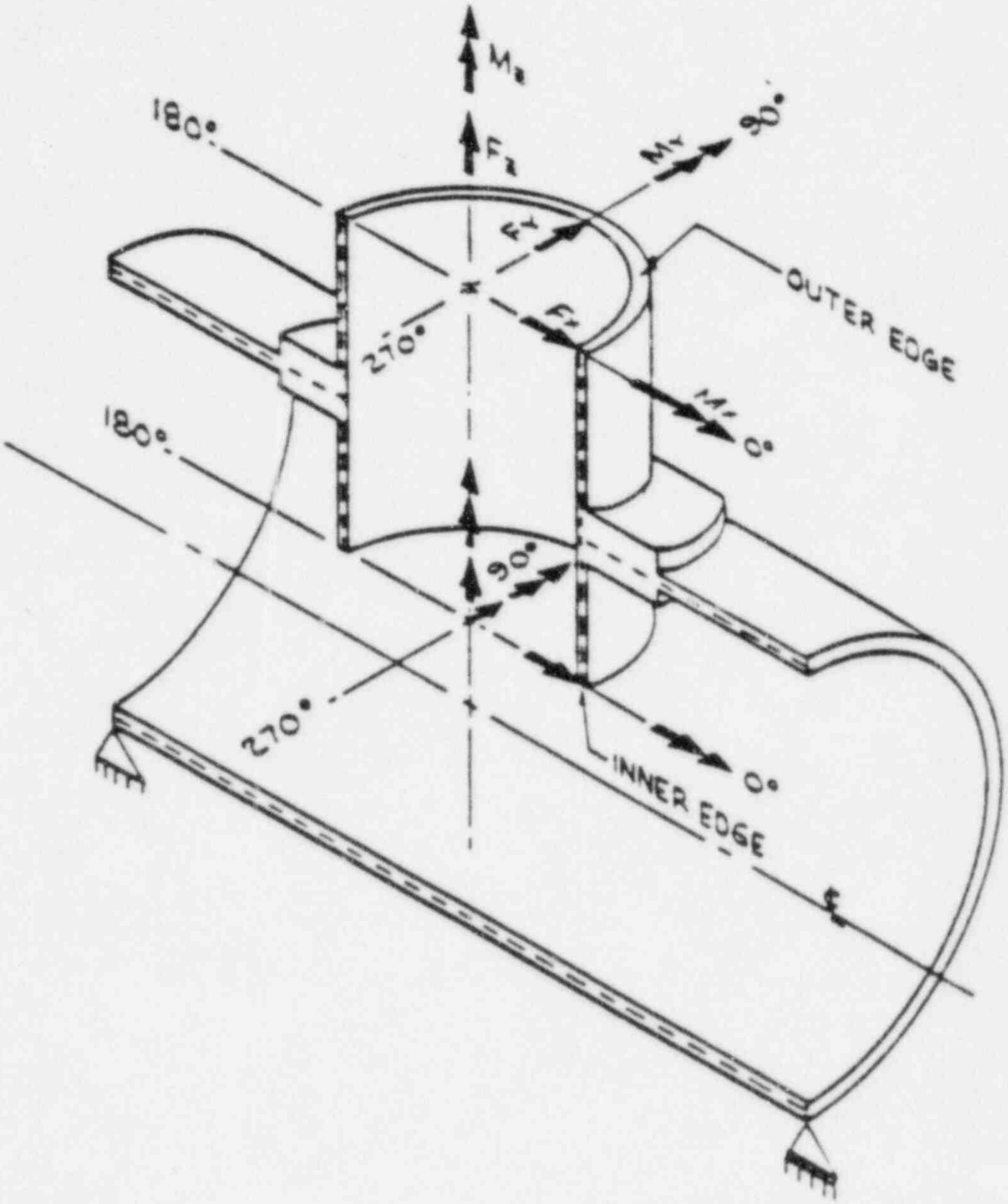

Figure 6-7. Definition of Local Coordinates and Loads at Riser-to-Reactor Pressure Vessel Penetration

7.0 SUMMARY AND CONCLUSIONS

7.1 Summary of Hatch Status After 1985/86 Outage

The 1985/86 maintenance/refueling outage at Georgia Power Company's Plant E.I. Hatch Unit 1 is the third outage at this unit during which activities were directed at the detection and repair of intergranular stress corrosion cracking (IGSCC) flaw indications in the recirculation, reactor water cleanup, and residual heat removal stainless steel systems. During this outage, Georgia Power Company identified 12 welds which required weld overlay application to repair observed flaw indications. During the 1982 and 1984 outages, a total of 23 weld overlays were applied to repair similar flaw indications. In addition, during 1985/86 one unflawed weld (24B-R-12) was weld overlayed to improve inspectability of this weld. Consequently, a total of 36 piping system welds are weld overlay repaired at Hatch Unit 1 as of the end of the 1985/86 outage. The weld overlay activity at Hatch Unit 1 during this outage is summarized below:

1. All previously applied weld overlays were remeasured, and the as-built overlays were evaluated for conformance with current criteria. For circumferential flaw indications, the design basis flaw was taken to be 360° long and 100% through original pipe wall. Two previously applied weld overlays were designed on the basis of a through-wall axial flaw. Where necessary, weld overlay thickness was increased to meet this design basis.

2. All weld overlays designed during 1985/86 were based upon an assumed 360° long, 100% through-wall flaw.

3. No credit for the thickness of the first welding layer was taken for any weld overlay. For previously applied weld overlays, this thickness was assumed to be 0.1". For overlays applied during 1985/86, the actual first layer thickness was deducted from the reported as-built thickness.

4. The surface finish of all weld overlays was improved by grinding or by wash pass application to enhance inspectability of the weld overlay and the underlying pipe wall.

5. Accessible welds without overlays in the recirculation, RHR, and RWCU systems (inside containment) were treated by Induction Heating Stress Improvement (IHSI) to mitigate the IGSCC susceptibility of these welds. All treated welds were ultrasonicaly examined following IHSI. Mitigated welds included the 12 inch recirculation safe-end to inlet nozzle welds and 28" safe-end to nozzle outlet welds.

6. Following IHSI, a total of 9 welds were identified which contained IGSCC-like flaws requiring no repair other than IHSI. These flaws were shown to be acceptable using fracture mechanics analyses based upon the criteria of NRC Generic Letter 84-11 and ASME Section XI.

7. Four welds were determined to have flaws unrelated to IGSCC. These welds were shown to be acceptable by the methods of ASME Section XI.

7.2 Summary of Conformance With Regulatory Requirements

The inspection program performed on the systems in questions met or exceeded the requirements of NRC Generic Letter 84-11, as discussed in Reference 1. The design basis for new overlay design and re-evaluation of previously applied weld overlays (discussed above) was very conservative, and met or exceeded any published regulatory requirements, including those of NRC Generic Letter 84-11. The flawed welds which were determined to require no overlay repair were treated with the IHSI process to inhibit further crack initiation or growth. The criteria used for flaw evaluation expressly address the concern of flux shielded weld material low toughness, and meet the requirements of the latest Addendum to ASME Section XI (Winter 1985) and NRC Generic Letter 84-11.

7.3 Weld Overlay Surface Improvement

Georgia Power has improved the surface finish of all weld overlays at Hatch Unit 1. This effort makes recently developed ultrasonic inspection techniques usable at Hatch, and allows inspection of the weld overlay and the underlying pipe wall. This will allow monitoring of existing flaw growth (if any), and detection of any new flaws. Consequently, the adequacy and integrity of the weld overlay can be continually monitored.

The surface finish improvement effort and its associated inspection enhancement, together with the upgrade of previously applied overlays to current standards, are significant steps taken by Georgia Power in support of the long term viability of the weld overlay repairs at Hatch Unit 1.

7.4 Conclusions

The weld overlay repairs applied to IGSCC-affected systems at Hatch Unit 1 were designed and applied conservatively and in accordance with all regulatory requirements.

Flaws which were shown to be acceptable without repair were treated with the IHSI process. Circumferential flaws were evaluated in accordance with the latest ASME Section XI Addendum (Winter, 1985) which explicitly addresses the concern of low weld metal toughness. The allowable flaw sizes were factored by 2/3 as required by NRC Generic Letter 84-11. These flaws were demonstrated not to violate allowable depths for at least the next operating cycle.

The balance of the accessible welds in the affected systems were treated by IHSI, thus minimizing the potential for new IGSCC flaw initiation.

8.0 REFERENCES

1. Letter from L. T. Gucwa (GPC) to John F. Stolz (NRC-NRR), "Pipe Crack Inspection/Mitigation Program 1985 Maintenance/Refueling Outage", dated July 1, 1985.

2. U.S. Nuclear Regulatory Commission Generic Letter 84-11, "Inspection of BWR Stainless Steel Piping", April 19, 1984.

3. ASME Boiler and Pressure Vessel Code, Section XI 1983 Edition, with Addenda through Winter 1985.

4. U.S. Nuclear Regulatory Commission, NUREG-1061, "Report of the USNRC Piping Review Committee",

    a. Volume 1, "Investigation and Evaluation of Stress Corrosion Cracking in Piping of Boiling Water Reactor Plants" Second Draft, April, 1984.

    b. Volume 3, "Evaluation of Potential for Pipe Breaks" November, 1984.

5. Letter from John F. Stolz (NRC) to J. T. Beckham (GPC) dated August 1, 1985.

6. Letter from John A. Zwolinski (NRC) to Dennis L. Farrar (Commonwealth Edison Company) dated January 7, 1986, "Inspection and Repair of Reactor Coolant System Piping - Quad Cities Unit 2" and attached Safety Evaluation Report.

7. EPRI NP-2423-LD, "Stress Corrosion Cracking of Type 304 Stainless Steel in High Purity Water: A Compilation of Crack Growth Rates" June, 1982.

8. General Electric Company, "Results of Seismic Evaluation, As-Built Recirculation Piping Including Replacement Actuator for F031 Discharge Valve", Design Memo 170-113, dated September 26, 1984.

9. Structural Integrity Associates Computer Program, pc-CRACK, Version 1.1 dated February, 1986.

10. EPRI NP-2662-LD "Computational Residual Stress Analysis for Induction Heating of Welded BWR Pipes" December, 1982.

11. Hughes, N.R. and Giannuzzi, A.J., "Evaluation of Near-Term BWR Piping Remedies," Vol. 1, EPRI NP-1222 November, 1979.

12. Structural Integrity Associates, "Technical Justification for Continued Operation of Hatch Unit 1 with Existing Recirculation and RHR System Piping" Report No. SIR-85-010, Rev. 1, dated June, 1985.

13. Southern Company Services Indication Notification Forms I86H1010 dated January 11, 1986 and I86H1015, dated January 21, 1986 submitted to Georgia Power Company.

14. Telecon between USNRC, Georgia Power Company, and Structural Integrity Associates, dated February 6, 1986.

15. Buchalet, C.B., and Bamford, W.H., ASTM 8th National Symposium on Fracture Mechanics, 1974, ASTM STP-590, pp. 385-402, 1975.

16. "Guidelines for Flaw Evaluation and Remedial Actions for Stainless Steel Piping Susceptible to IGSCC", Final Report for EPRI Project T-303-1, Report No. SIR-84-005, April 13, 1984.

17. Beckford, R.L., et al, "Nondestructive Evaluation Instrument Surveillance Test on 26-inch Pipe", EPRI NP-3393, January, 1984.

18. EPRI NP-81-4-LD, "Residual Stress Improvement by Means of Induction Heating", March, 1981.

19. ASME Section XI Meeting Minutes, May 25, 1984.

20. SAP86 User's Manual, Number Cruncher Microsystems, Inc. Version 1.04, 1984.

21. Bathe, K.J., Wilson, E.L., Peterson, F.E., "SAP IV, A Structural Analysis Program for Static and Dynamic Response of Linear Systems" Report No. EERC 73-11, University of California at Berkeley, CA, 1973.

22. Shelltech Associates, "Evaluation of Reinforced Openings in Large Steel Pressure Vessels", Final Report to the PVRC Subcommittee on Reinforced Openings and External Loadings" Stanford, CA, 1980.

APPENDIX A

Weld Overlay Design Sketches
Plant E. I. Hatch Unit 1
1985/86 Maintenance/Refueling Outage

NOTES:

1. Some sketches refer to wash pass application for surface finish improvement. This was not practical in the field. Surface finish improvement was performed by grinding.

2. Some sketches include as-built dimension information. These dimensions are before surface finish improvement and are not final as-built dimensions.

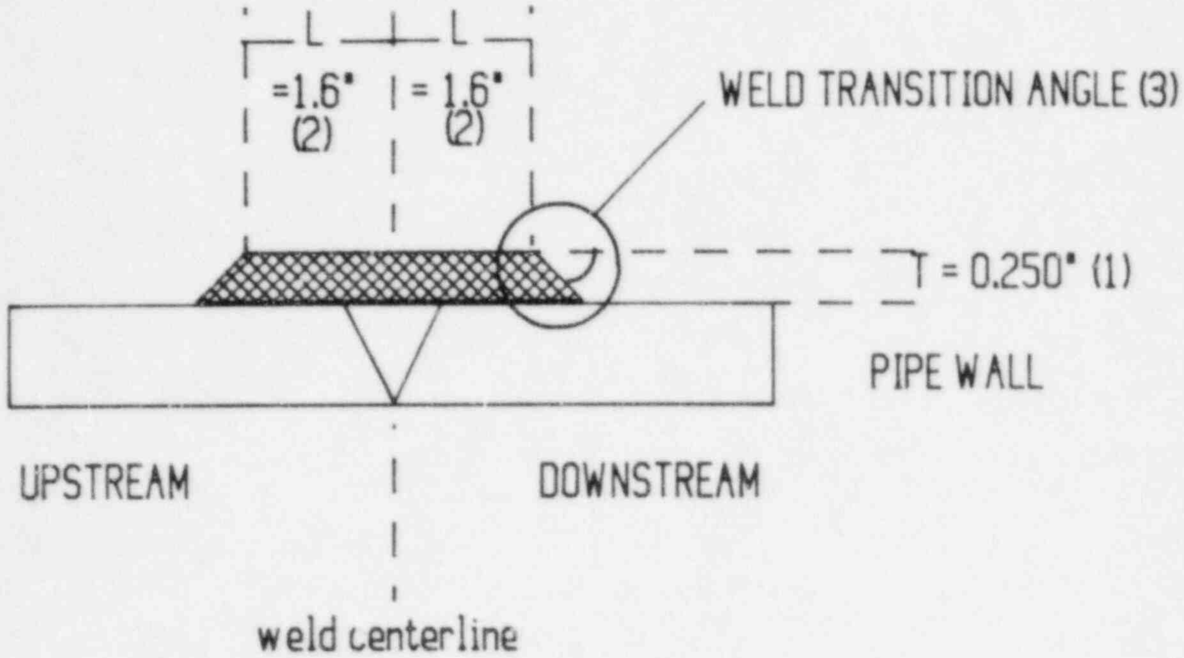

WELD OVERLAY DESIGN

(PLANT HATCH UNIT 1 DCR NUMBER 85-120)

DESIGN FOR WELD NUMBER 1B31-1RC-12AR-F-2
(WASH PASS TO BE APPLIED TO IMPROVE SURFACE FINISH)

NOTES:

1. AVERAGE AS-BUILT THICKNESS IS 0.47" (UPSTREAM) AND 0.51" (DOWNSTREAM), EXCLUSIVE OF FIRST LAYER THICKNESS (ASSUMED 0.1").
2. LENGTH IS SPECIFIED AS FULL THICKNESS LENGTH PRIOR TO WASH PASS APPLICATION.
3. AS-WELDED TRANSITION ANGLE IS ACCEPTABLE .

DESIGN NUMBER : GPCO-07-1 REVISION : 1 DATE : 12-23-85

PREPARED BY/ DATE H L Duster / 12-23-85

REVIEWED BY/ DATE T L Gulen / 12-23-85

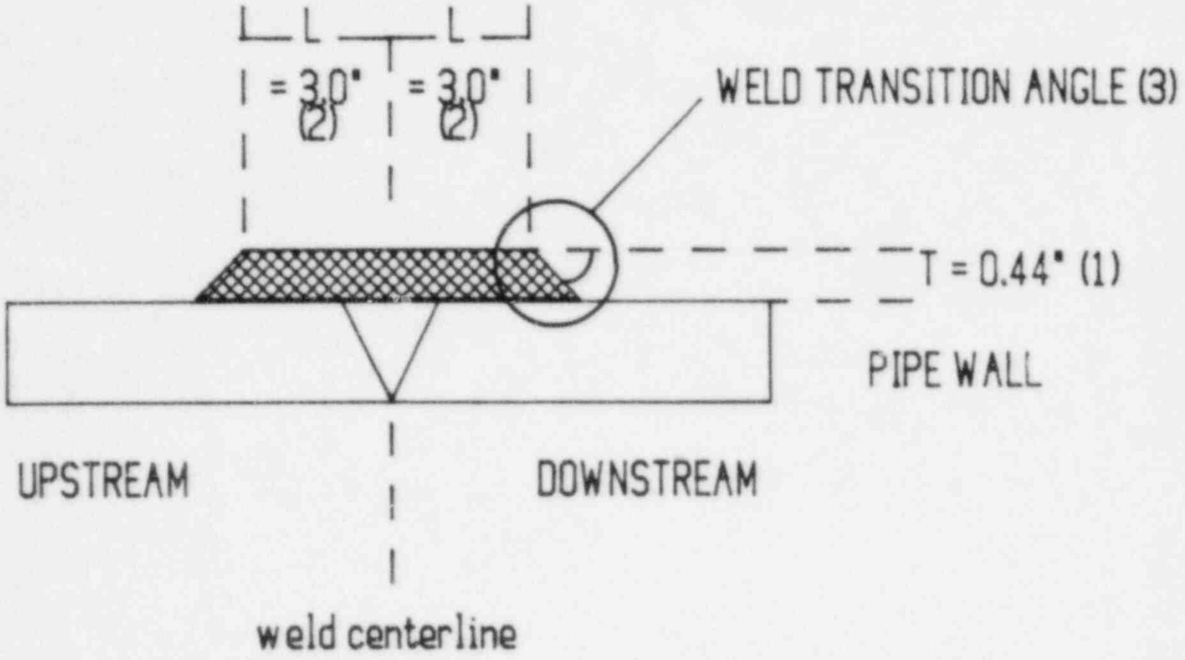

WELD OVERLAY DESIGN

(PLANT HATCH UNIT 1 DCR NUMBER 85-120)

DESIGN FOR WELD NUMBER 1B31-1RC-28B-3
(WASH PASS TO BE APPLIED TO IMPROVE SURFACE FINISH)

NOTES:

1. AVERAGE AS-BUILT THICKNESS IS 0.48" (UPSTREAM) AND 0.52" (DOWNSTREAM), EXCLUSIVE OF FIRST LAYER THICKNESS (ASSUMED 0.1").
2. LENGTH IS SPECIFIED AS FULL THICKNESS LENGTH PRIOR TO WASH PASS APPLICATION.
3. AS-WELDED TRANSITION ANGLE IS ACCEPTABLE.

DESIGN NUMBER: GPCO-07-2 REVISION: 1 DATE: 12-23-85

PREPARED BY/ DATE ______ / 12-23-85

REVIEWED BY/ DATE ______ / 12-23-85

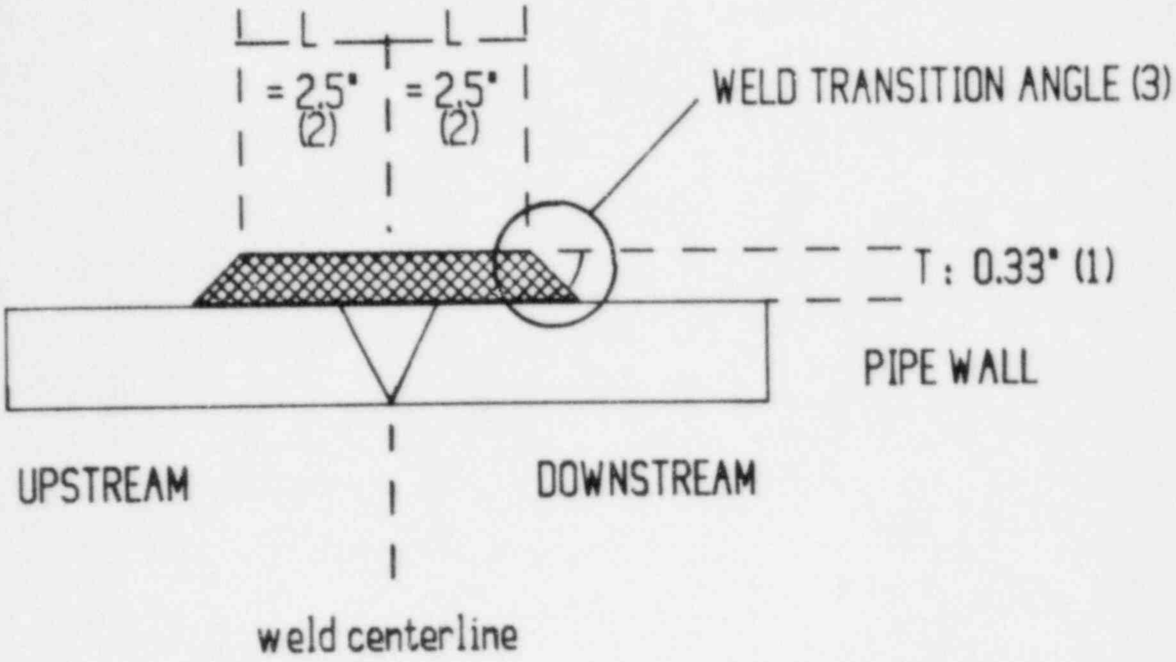

WELD OVERLAY DESIGN

(PLANT HATCH UNIT 1 DCR NUMBER 85-120)

DESIGN FOR WELD NUMBER 1E11-1RHR-20B-D-3
(WASH PASS TO BE APPLIED TO IMPROVE SURFACE FINISH)

NOTES:

1. AVERAGE AS-BUILT THICKNESS IS 0.38" (UPSTREAM) AND 0.35" (DOWNSTREAM), EXCLUSIVE OF FIRST LAYER THICKNESS (ASSUMED 0.1").
2. LENGTH IS SPECIFIED AS FULL THICKNESS LENGTH PRIOR TO WASH PASS APPLICATION.
3. AS-WELDED TRANSITION ANGLE IS ACCEPTABLE.

DESIGN NUMBER : GPCO-07-3 REVISION : 1 DATE : 12-23-85

PREPARED BY/ DATE ______ / 12-23-85

REVIEWED BY/ DATE ______ / 12-23-85

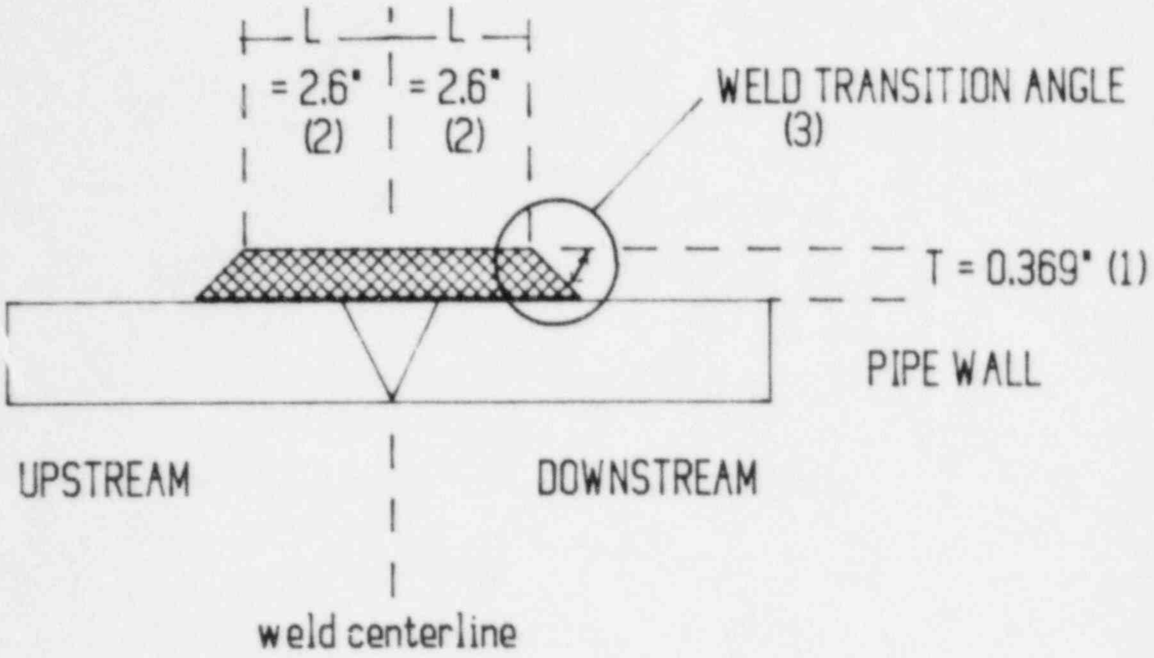

WELD OVERLAY DESIGN

(PLANT HATCH UNIT 1 DCR NUMBER 85-120)

DESIGN FOR WELD NUMBER : 1B31-1RC-22BM-1

NOTES:

1. DESIGN THICKNESS IS 0.369" EXCLUSIVE OF FIRST LAYER THICKNESS. AVERAGE AS-BUILT THICKNESS IS 0.208" (UPSTREAM) AND 0.245" (DOWNSTREAM), ASSUMING FIRST LAYER IS 0.1". REQUIRED ADDITIONAL THICKNESS IS 0.161".
2. LENGTH IS SPECIFIED AS MINIMUM FULL THICKNESS LENGTH.
3. MAXIMUM TRANSITION ANGLE IS 45 DEGREES.

DESIGN NUMBER : GPCO-07-4 REVISION : 0 DATE: 12-16-85

PREPARED BY/ DATE / 12-16-85

REVIEWED BY/ DATE / 12/16/85

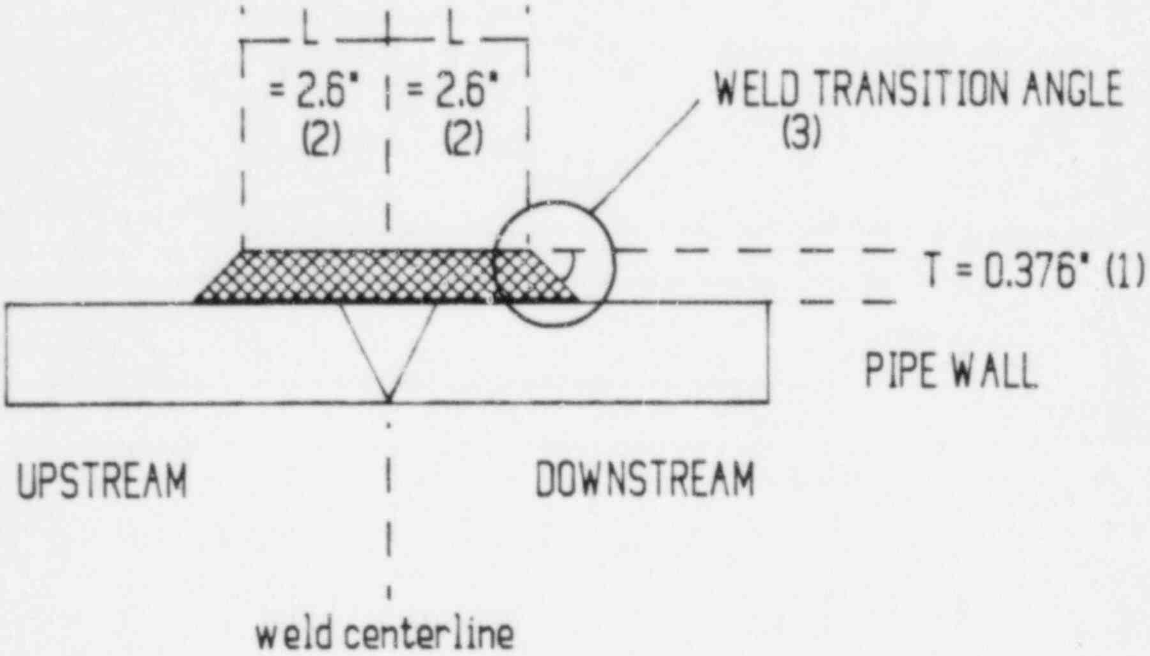

WELD OVERLAY DESIGN

(PLANT HATCH UNIT 1 DCR NUMBER 85-120)

DESIGN FOR WELD NUMBER : 1B31-1RC-22AM-4

NOTES:

1. DESIGN THICKNESS IS 0.376" EXCLUSIVE OF FIRST LAYER THICKNESS. AVERAGE AS-BUILT THICKNESS IS 0.220" (UPSTREAM) AND 0.195" (DOWNSTREAM), ASSUMING FIRST LAYER IS 0.1". REQUIRED ADDITIONAL THICKNESS IS 0.181".
2. LENGTH IS SPECIFIED AS MINIMUM FULL THICKNESS LENGTH.
3. MAXIMUM TRANSITION ANGLE IS 45 DEGREES.

DESIGN NUMBER : GPCO-07-5 REVISION : 0 DATE: 12-18-85

PREPARED BY/ DATE / 12-18-85

REVIEWED BY/ DATE / 12/19/85

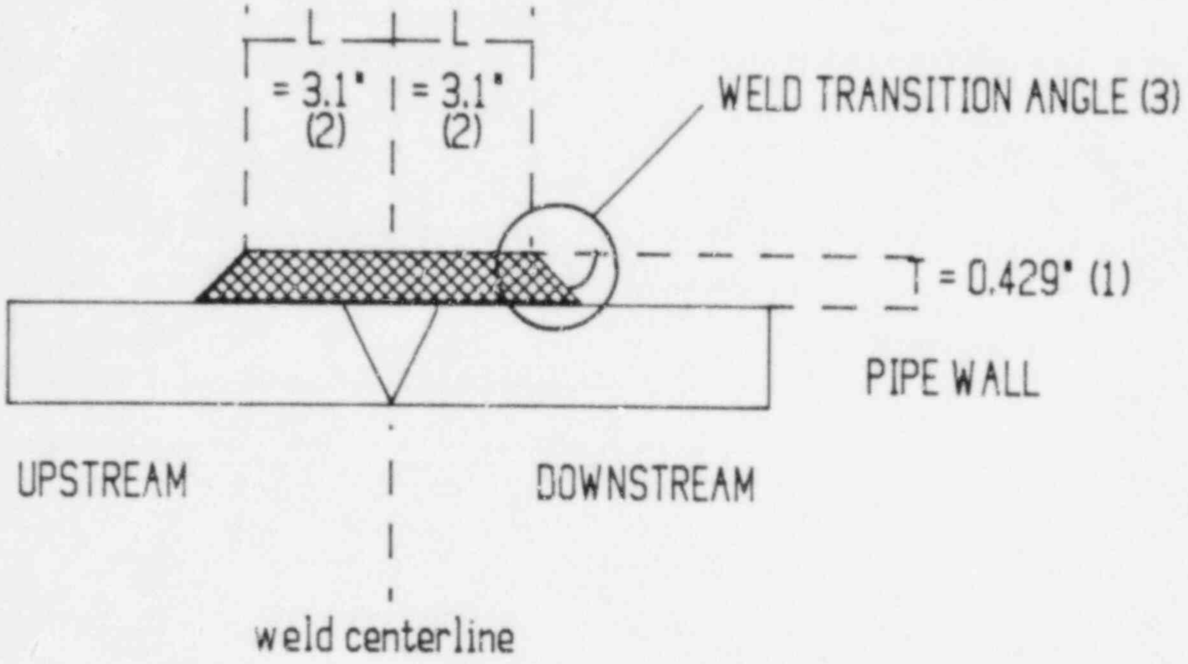

WELD OVERLAY DESIGN

(PLANT HATCH UNIT 1 DCR NUMBER 85-120)

DESIGN FOR WELD NUMBER 1B31-1RC-28B-4
(WASH PASS TO BE APPLIED TO IMPROVE SURFACE FINISH)

NOTES:

1. AVERAGE AS-BUILT THICKNESS IS 0.562" (UPSTREAM) AND 0.525" (DOWNSTREAM), EXCLUSIVE OF FIRST LAYER THICKNESS (ASSUMED 0.1").
2. LENGTH IS SPECIFIED AS FULL THICKNESS LENGTH PRIOR TO WASH PASS APPLICATION.
3. AS-WELDED TRANSITION ANGLE IS ACCEPTABLE.

DESIGN NUMBER : GPCO-07-6 REVISION : 0 DATE : 12-18-85

PREPARED BY/ DATE / 12/18/85

REVIEWED BY/ DATE / 12/19/85

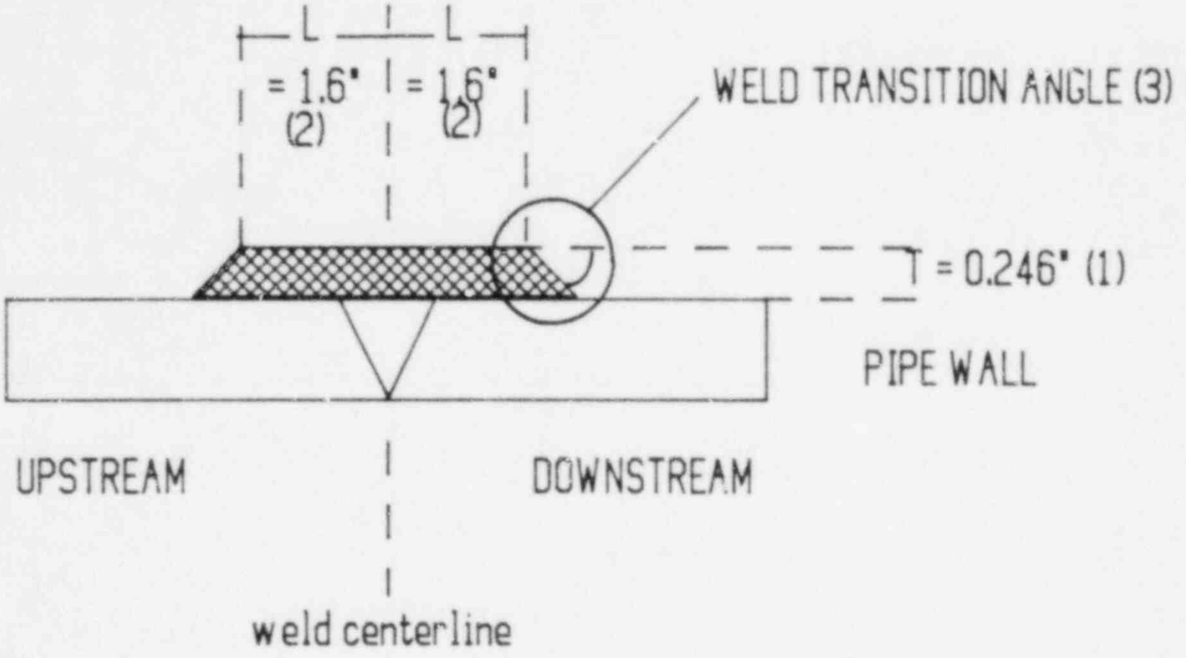

WELD OVERLAY DESIGN

(PLANT HATCH UNIT 1 DCR NUMBER 85-120)

DESIGN FOR WELD NUMBER 1B31-1RC-12AR-H-2
(WASH PASS TO BE APPLIED TO IMPROVE SURFACE FINISH)

NOTES:

1. AVERAGE AS-BUILT THICKNESS IS 0.435" (UPSTREAM) AND 0.41" (DOWNSTREAM), EXCLUSIVE OF FIRST LAYER THICKNESS (ASSUMED 0.1").
2. LENGTH IS SPECIFIED AS FULL THICKNESS LENGTH PRIOR TO WASH PASS APPLICATION.
3. AS-WELDED TRANSITION ANGLE IS ACCEPTABLE.

DESIGN NUMBER : GPCO-07-7 REVISION : 0 DATE : 12-18-85

PREPARED BY/ DATE H L Smith / 12/18/85

REVIEWED BY/ DATE / 12/19/85

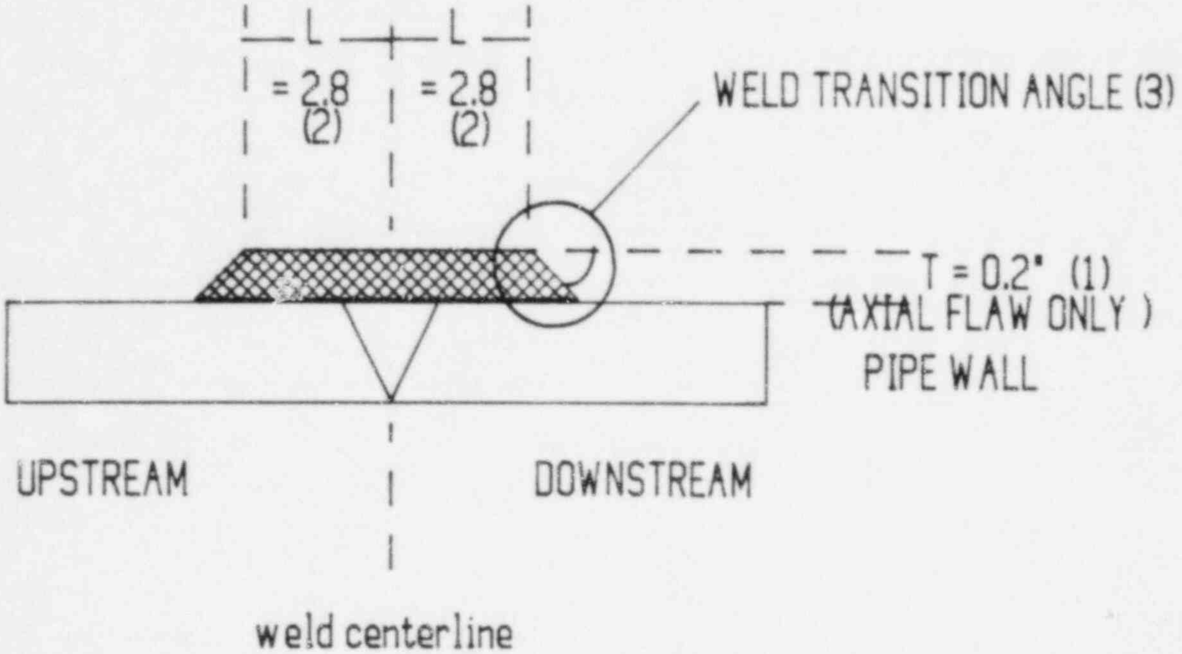

WELD OVERLAY DESIGN

(PLANT HATCH UNIT 1 DCR NUMBER 85-120)

DESIGN FOR WELD NUMBER 1E11-1RHR-24B-R-13
(WASH PASS TO BE APPLIED TO IMPROVE SURFACE FINISH)

NOTES:

1. AVERAGE AS-BUILT THICKNESS IS 0.285" (DOWNSTREAM), EXCLUSIVE OF FIRST LAYER THICKNESS (ASSUMED 0.1").
2. LENGTH IS SPECIFIED AS FULL THICKNESS LENGTH PRIOR TO WASH PASS APPLICATION.
3. AS-WELDED TRANSITION ANGLE IS ACCEPTABLE.

DESIGN NUMBER : GPCO-07-8 REVISION : 0 DATE : 12-18-85

PREPARED BY/ DATE H. L. Dyeste / 12/18/85

REVIEWED BY/ DATE / 12/19/85

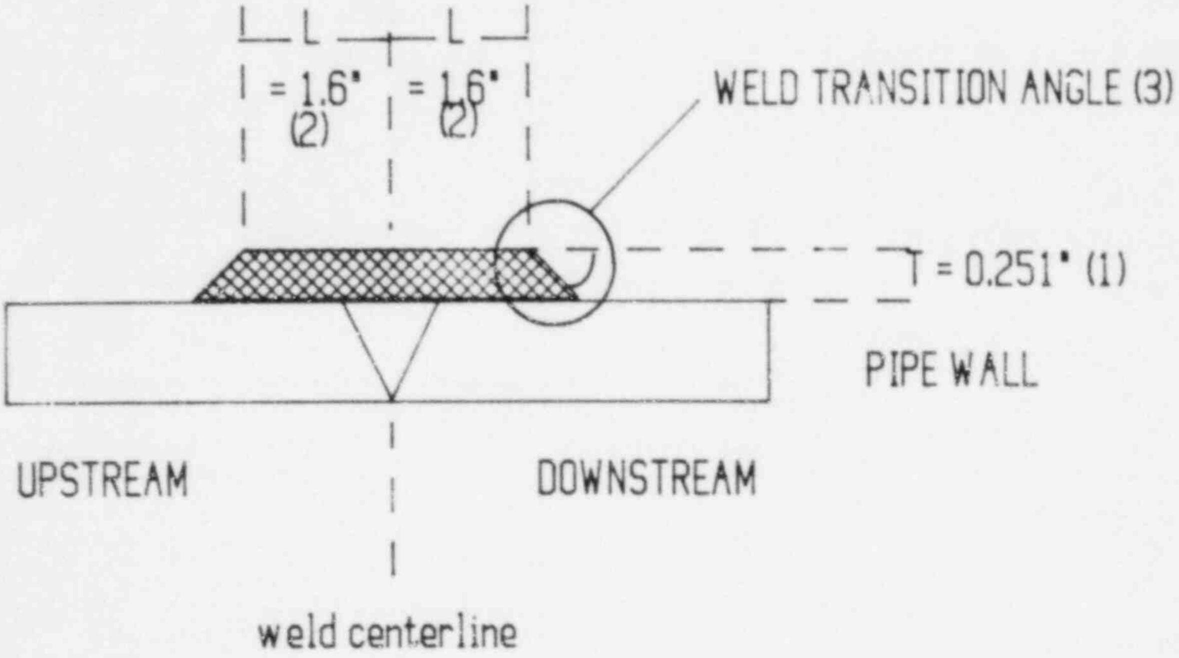

WELD OVERLAY DESIGN

(PLANT HATCH UNIT 1 DCR NUMBER 85-120)

DESIGN FOR WELD NUMBER 1B31-1RC-12AR-K-2
(WASH PASS TO BE APPLIED TO IMPROVE SURFACE FINISH)

NOTES:

1. AVERAGE AS-BUILT THICKNESS IS 0.308" (UPSTREAM) AND 0.31" (DOWNSTREAM), EXCLUSIVE OF FIRST LAYER THICKNESS (ASSUMED 0.1").
2. LENGTH IS SPECIFIED AS FULL THICKNESS LENGTH PRIOR TO WASH PASS APPLICATION.
3. AS-WELDED TRANSITION ANGLE IS ACCEPTABLE .

DESIGN NUMBER : GPCO-07-9 REVISION : 0 DATE : 12-18-85

PREPARED BY/ DATE 12/18/85

REVIEWED BY/ DATE 12/19/85

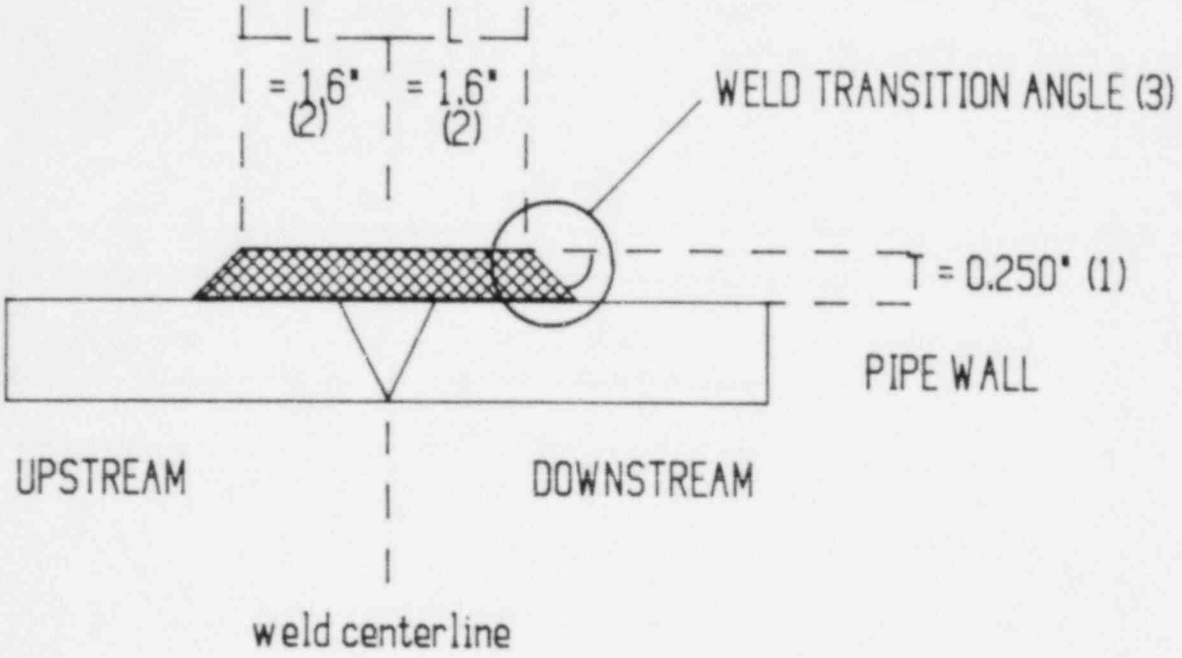

WELD OVERLAY DESIGN

(PLANT HATCH UNIT 1 DCR NUMBER 85-120)

DESIGN FOR WELD NUMBER 1B31-1RC-12AR-H-3
(WASH PASS TO BE APPLIED TO IMPROVE SURFACE FINISH)

NOTES:

1. AVERAGE AS-BUILT THICKNESS IS 0.332" (UPSTREAM) AND 0.385" (DOWNSTREAM), EXCLUSIVE OF FIRST LAYER THICKNESS (ASSUMED 0.1").
2. LENGTH IS SPECIFIED AS FULL THICKNESS LENGTH PRIOR TO WASH PASS APPLICATION.
3. AS-WELDED TRANSITION ANGLE IS ACCEPTABLE .

DESIGN NUMBER : GPCO-07-10 REVISION : 0 DATE : 12-18-85

PREPARED BY/ DATE / 12/18/85

REVIEWED BY/ DATE / 12/19/85

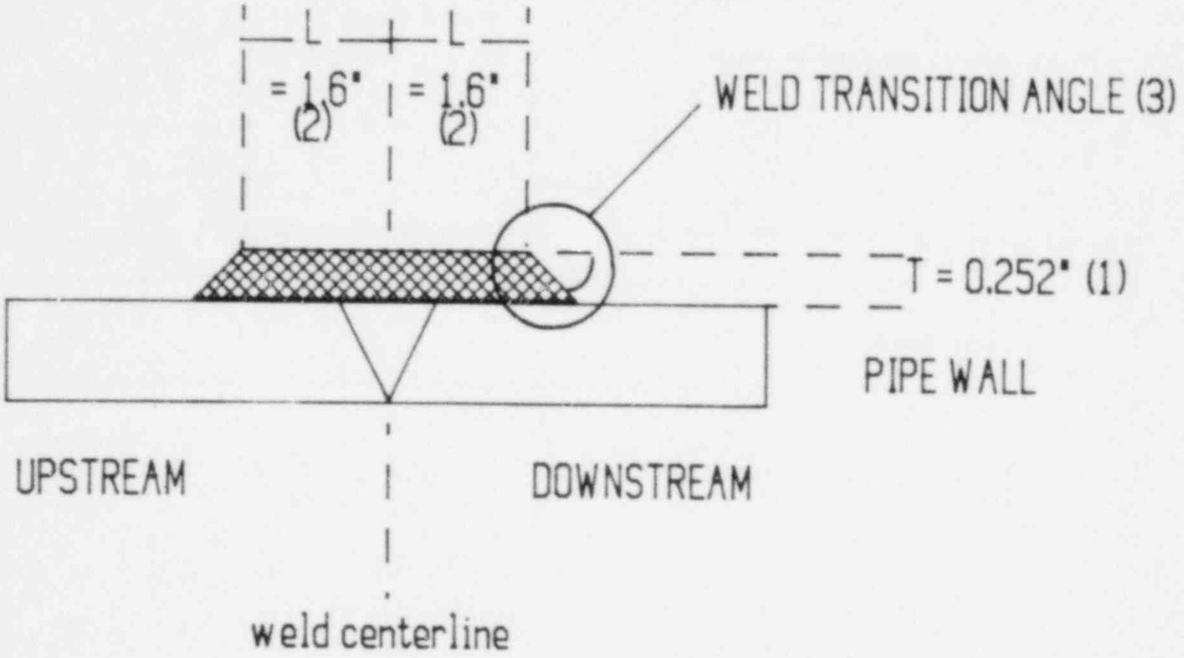

WELD OVERLAY DESIGN

(PLANT HATCH UNIT 1 DCR NUMBER 85-120)

DESIGN FOR WELD NUMBER 1B31-1RC-12BR-E-3
(WASH PASS TO BE APPLIED TO IMPROVE SURFACE FINISH)

NOTES:

1. AVERAGE AS-BUILT THICKNESS IS 0.252" (UPSTREAM) AND 0.265" (DOWNSTREAM), EXCLUSIVE OF FIRST LAYER THICKNESS (ASSUMED 0.1").
2. LENGTH IS SPECIFIED AS FULL THICKNESS LENGTH PRIOR TO WASH PASS APPLICATION.
3. AS-WELDED TRANSITION ANGLE IS ACCEPTABLE .

DESIGN NUMBER : GPCO-07-11 REVISION : 0 DATE : 12-18-85

PREPARED BY/ DATE / 12/18/85

REVIEWED BY/ DATE / 12/19/85

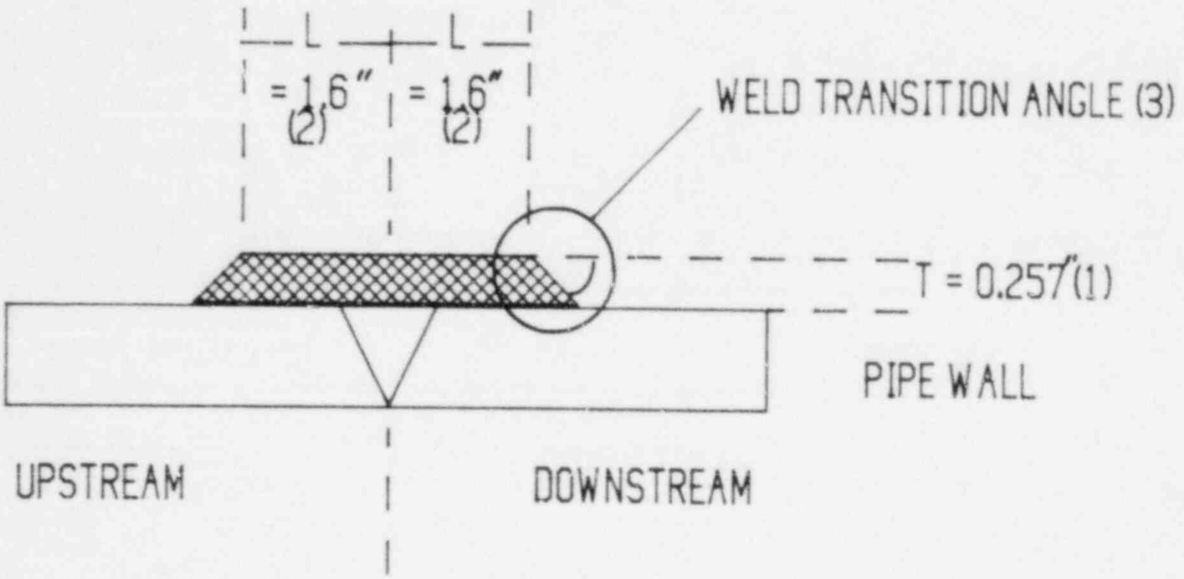

WELD OVERLAY DESIGN

(PLANT HATCH UNIT 1 DCR NUMBER 85-120)

DESIGN FOR WELD NUMBER 1B31-1RC-12BR-D-3
(WASH PASS TO BE APPLIED TO IMPROVE SURFACE FINISH)

NOTES:

1. AVERAGE AS-BUILT THICKNESS IS 0.350"(UPSTREAM) AND 0.320" (DOWNSTREAM), EXCLUSIVE OF FIRST LAYER THICKNESS (ASSUMED 0.1").
2. LENGTH IS SPECIFIED AS FULL THICKNESS LENGTH PRIOR TO WASH PASS APPLICATION.
3. AS-WELDED TRANSITION ANGLE IS ACCEPTABLE .

DESIGN NUMBER : GPCO-07-12 REVISION : 0 DATE : 12-18-85

PREPARED BY/ DATE H L Dusty / 12/18/85

REVIEWED BY/ DATE / 12/19/85

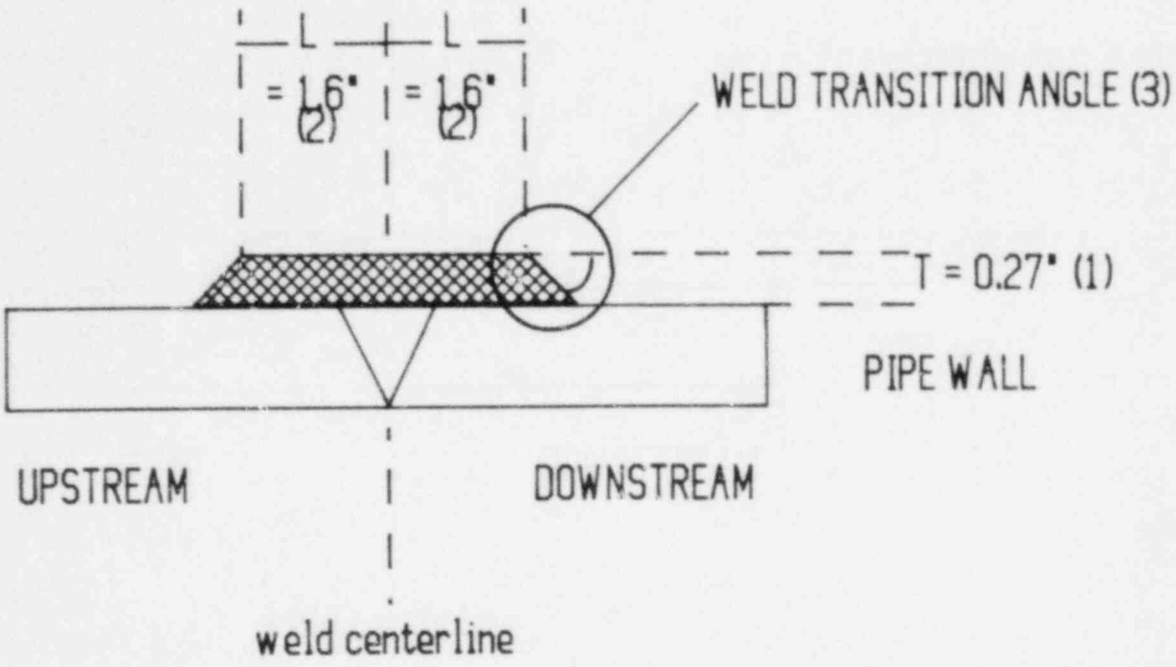

WELD OVERLAY DESIGN

(PLANT HATCH UNIT 1 DCR NUMBER 85-120)

DESIGN FOR WELD NUMBER 1B31-1RC-12AR-K-3
(WASH PASS TO BE APPLIED TO IMPROVE SURFACE FINISH)

NOTES:

1. AVERAGE AS-BUILT THICKNESS IS 0.352" (UPSTREAM) AND 0.350" (DOWNSTREAM), EXCLUSIVE OF FIRST LAYER THICKNESS (ASSUMED 0.1").
2. LENGTH IS SPECIFIED AS FULL THICKNESS LENGTH PRIOR TO WASH PASS APPLICATION.
3. AS-WELDED TRANSITION ANGLE IS ACCEPTABLE .

DESIGN NUMBER : GPCO-07-13 REVISION : 0 DATE : 12-19-85

PREPARED BY/ DATE / 12-20-85

REVIEWED BY/ DATE / 12/20/85

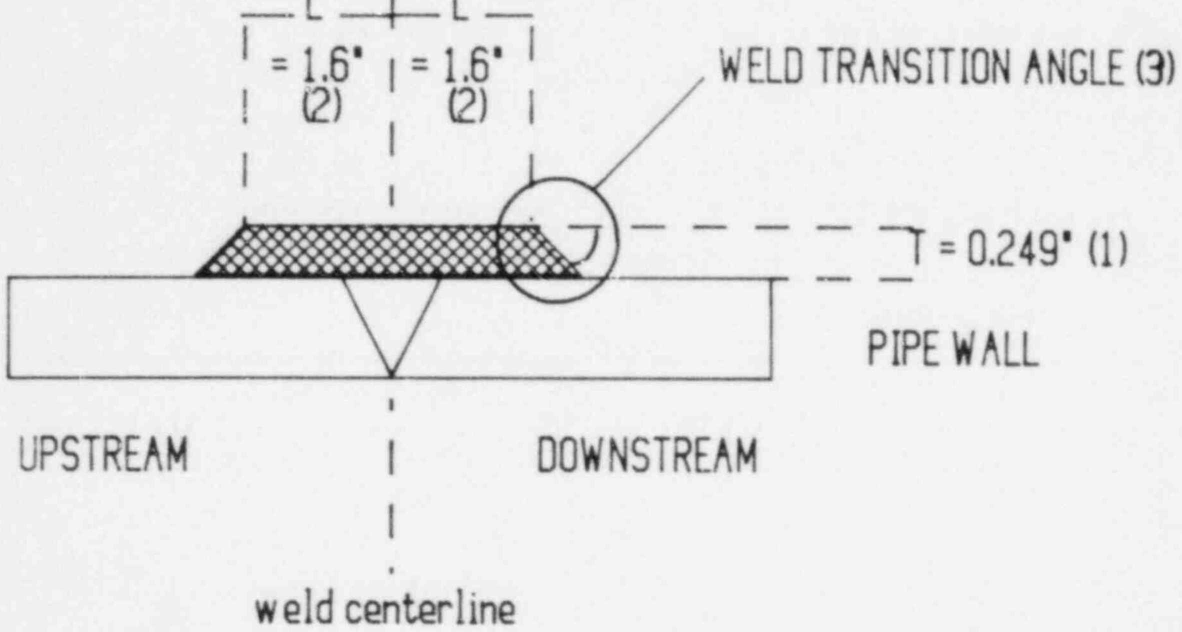

WELD OVERLAY DESIGN

(PLANT HATCH UNIT 1 DCR NUMBER 85-120)

DESIGN FOR WELD NUMBER 1B31-1RC-12BR-C-2
(LIGHT GRINDING OR WASH PASS TO BE APPLIED TO IMPROVE SURFACE FINISH)

NOTES:

1. AVERAGE AS-BUILT THICKNESS IS 0.455" (UPSTREAM) AND 0.445" (DOWNSTREAM), EXCLUSIVE OF FIRST LAYER THICKNESS (ASSUMED 0.1").
2. LENGTH IS SPECIFIED AS FULL THICKNESS LENGTH PRIOR TO WASH PASS APPLICATION.
3. AS-WELDED TRANSITION ANGLE IS ACCEPTABLE.

DESIGN NUMBER : GPCO-07-14 REVISION : 0 DATE : 12-19-85

PREPARED BY/ DATE H L Gustin / 12-20-85

REVIEWED BY/ DATE / 12/20/85

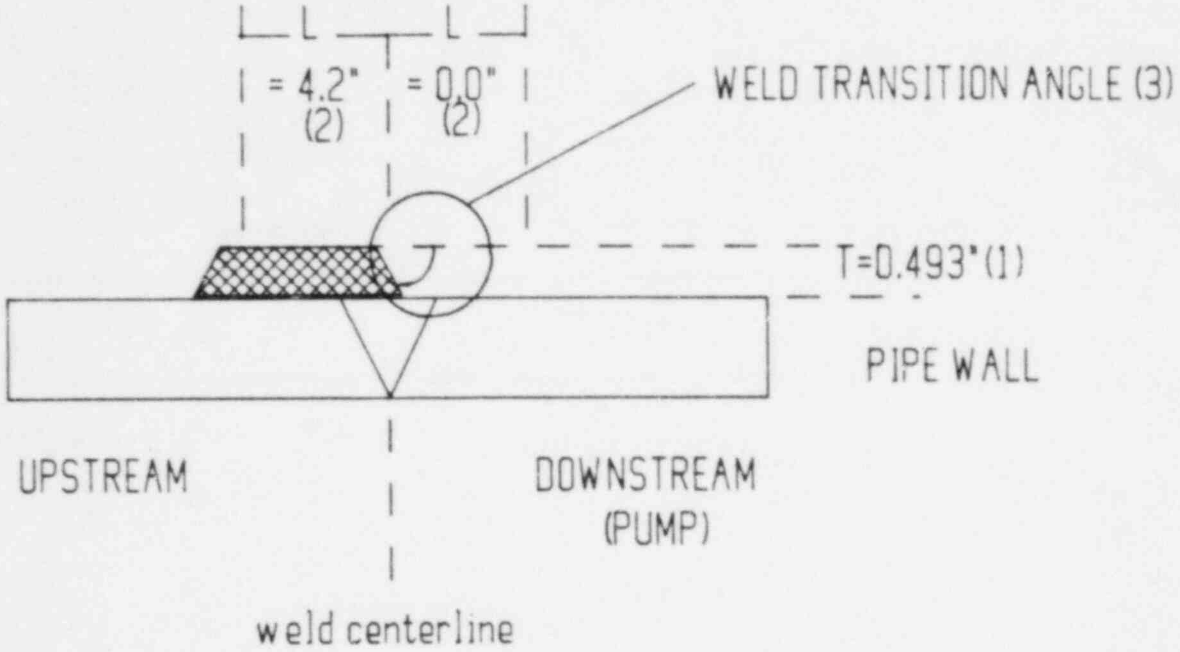

WELD OVERLAY DESIGN

(PLANT HATCH UNIT 1 DCR NUMBER 85-120)

DESIGN FOR WELD NUMBER 1B31-1RC-28B-11
DRAWING ISSUED FOR RECORD ONLY

NOTES:

1. AVERAGE AS-BUILT THICKNESS IS 0.558" (UPSTREAM) , EXCLUSIVE OF FIRST LAYER THICKNESS (ASSUMED 0.1").
2. LENGTH IS SPECIFIED AS FULL THICKNESS LENGTH .
3. AS-WELDED TRANSITION ANGLE IS ACCEPTABLE .

DESIGN NUMBER : GPCO-07-15 REVISION : 1 DATE : 4-10-86

PREPARED BY/ DATE H. L. Dustin 4-10-86

REVIEWED BY/ DATE 4/17/86

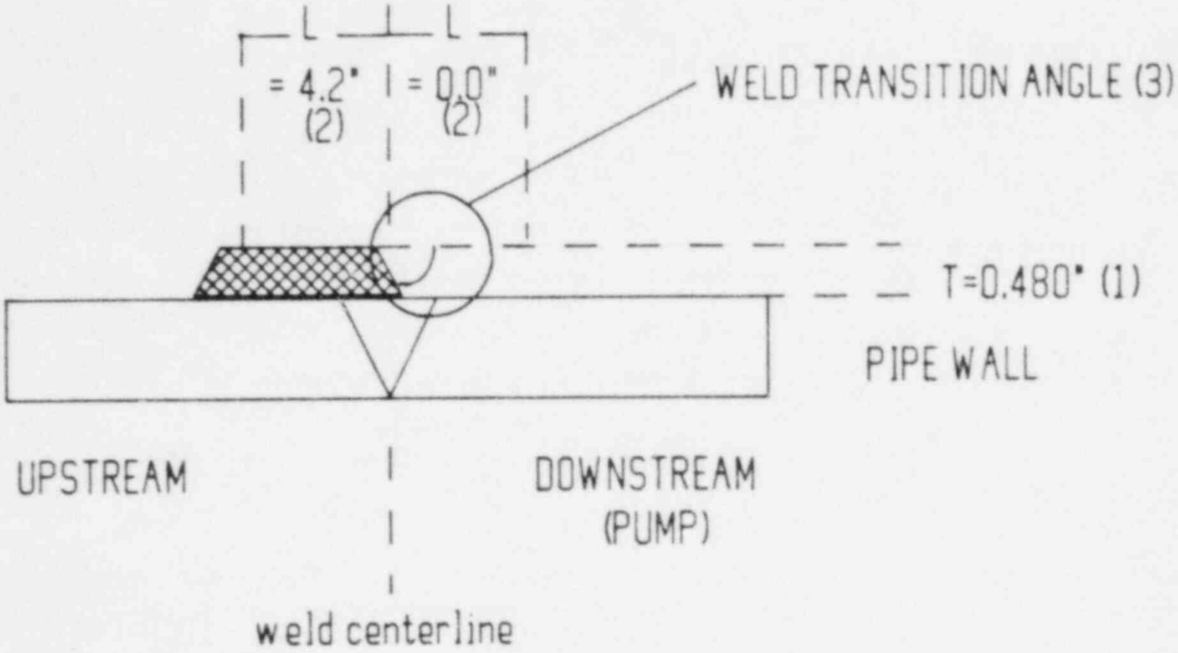

WELD OVERLAY DESIGN

(PLANT HATCH UNIT 1 DCR NUMBER 85-120)

DESIGN FOR WELD NUMBER 1B31-1RC-28A-10
DRAWING ISSUED FOR RECORD ONLY

NOTES:

1. AVERAGE AS-BUILT THICKNESS IS 0.395" (UPSTREAM) , EXCLUSIVE OF FIRST LAYER THICKNESS (ASSUMED 0.1").
2. LENGTH IS SPECIFIED AS FULL THICKNESS LENGTH .
3. AS-WELDED TRANSITION ANGLE IS ACCEPTABLE .

DESIGN NUMBER : GPCO-07-16 REVISION : 1 DATE : 4-10-86

PREPARED BY/ DATE / 4-10-86

REVIEWED BY/ DATE / 4/17/86

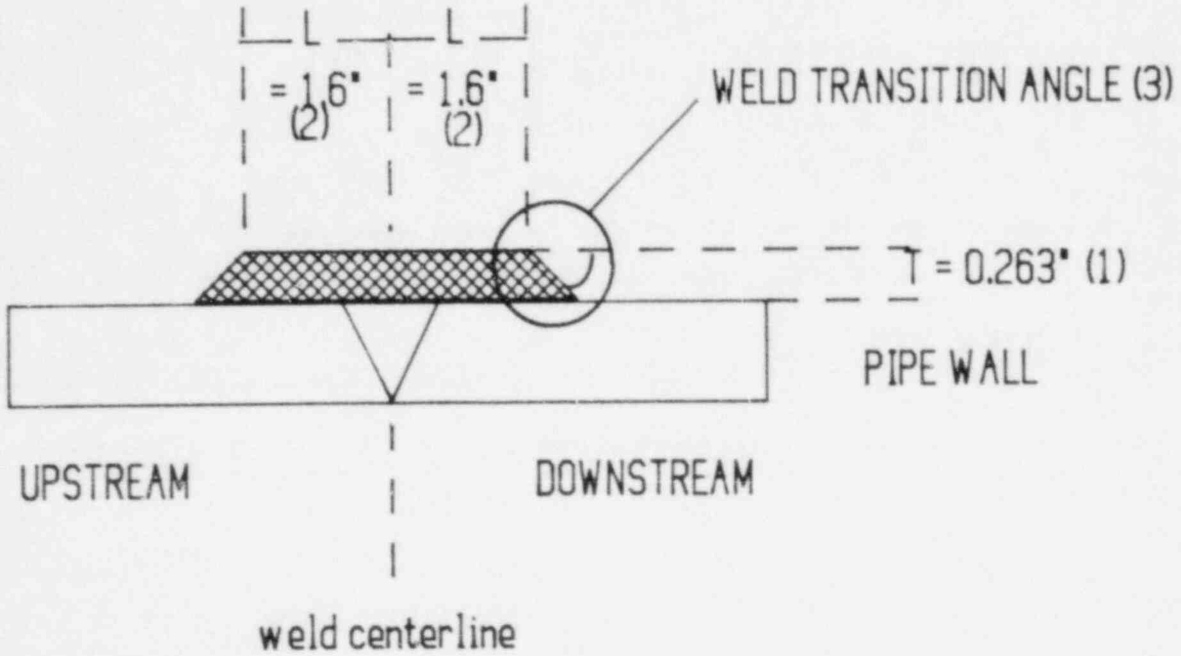

WELD OVERLAY DESIGN

(PLANT HATCH UNIT 1 DCR NUMBER 85-120)

DESIGN FOR WELD NUMBER 1B31-1RC-12AR-F-3
(WASH PASS TO BE APPLIED TO IMPROVE SURFACE FINISH)

NOTES:

1. AVERAGE AS-BUILT THICKNESS IS 0.238" (UPSTREAM) AND 0.212" (DOWNSTREAM), EXCLUSIVE OF FIRST LAYER THICKNESS (ASSUMED 0.1").
2. LENGTH IS SPECIFIED AS FULL THICKNESS LENGTH PRIOR TO WASH PASS APPLICATION.
3. MAXIMUM WELD TRANSITION ANGLE IS 45 DEGREES.

DESIGN NUMBER : GPCO-07-17 REVISION : 0 DATE : 12-20-85

PREPARED BY/ DATE ____ / 12-20-85

REVIEWED BY/ DATE ____ / 12/20/85

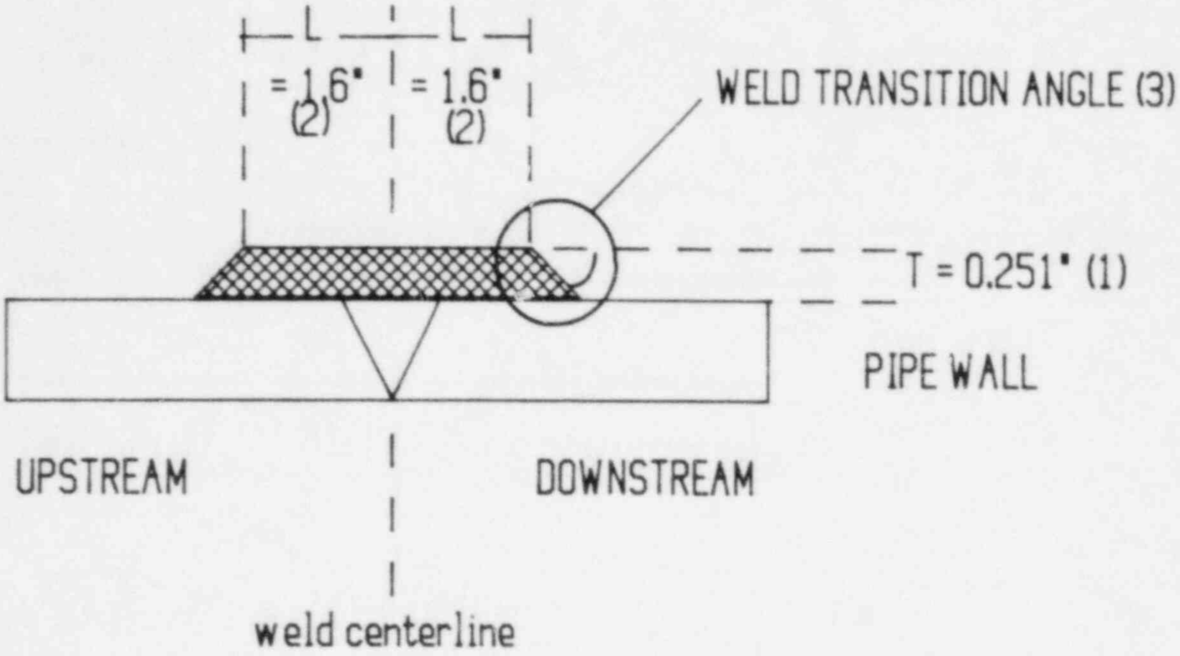

WELD OVERLAY DESIGN

(PLANT HATCH UNIT 1 DCR NUMBER 85-120)

DESIGN FOR WELD NUMBER 1B31-1RC-12BR-C-3
(WASH PASS TO BE APPLIED TO IMPROVE SURFACE FINISH)

NOTES:

1. AVERAGE AS-BUILT THICKNESS IS 0.190" (UPSTREAM) AND 0.212" (DOWNSTREAM), EXCLUSIVE OF FIRST LAYER THICKNESS (ASSUMED 0.1").
2. LENGTH IS SPECIFIED AS FULL THICKNESS LENGTH PRIOR TO WASH PASS APPLICATION.
3. MAXIMUM WELD TRANSITION ANGLE IS 45 DEGREES.

DESIGN NUMBER : GPCO-07-18   REVISION : 0   DATE : 12-20-85

PREPARED BY/ DATE / 12-20-85

REVIEWED BY/ DATE / 12/20/85

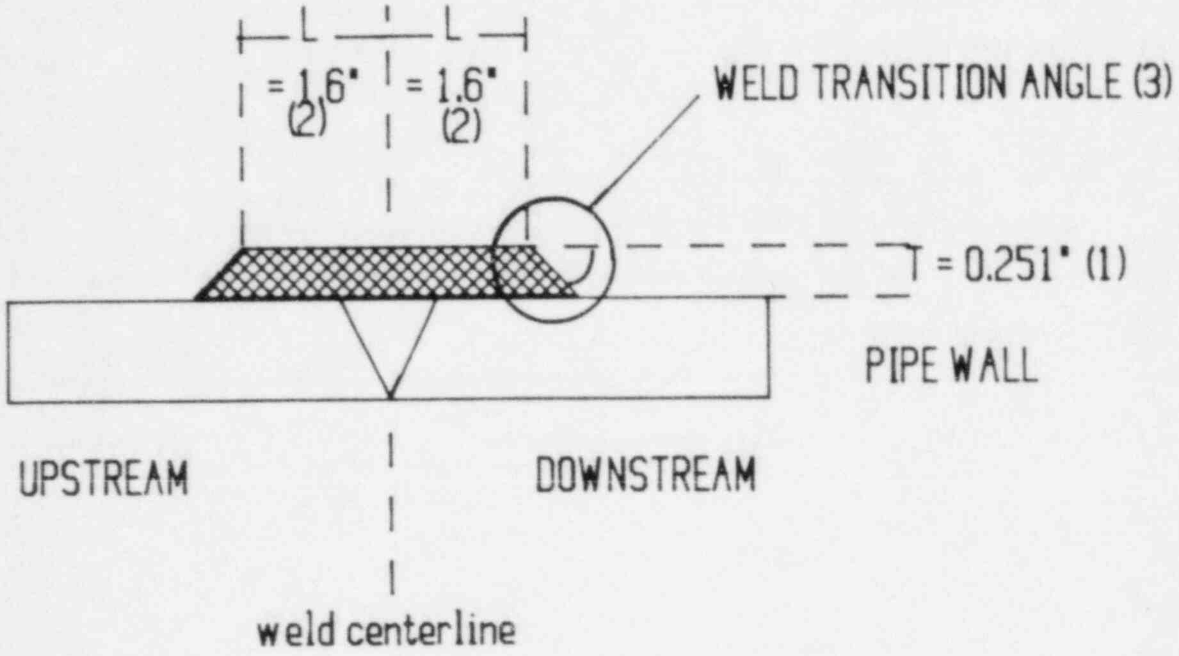

WELD OVERLAY DESIGN

(PLANT HATCH UNIT 1 DCR NUMBER 85-120)

DESIGN FOR WELD NUMBER 1B31-1RC-12BR-E-2
(WASH PASS TO BE APPLIED TO IMPROVE SURFACE FINISH)

NOTES:

1. AVERAGE AS-BUILT THICKNESS IS 0.250" (UPSTREAM) AND 0.375" (DOWNSTREAM), EXCLUSIVE OF FIRST LAYER THICKNESS (ASSUMED 0.1").
2. LENGTH IS SPECIFIED AS FULL THICKNESS LENGTH PRIOR TO WASH PASS APPLICATION.
3. MAXIMUM WELD TRANSITION ANGLE IS 45 DEGREES.

DESIGN NUMBER : GPCO-07-19 REVISION : 0 DATE : 12-20-85

PREPARED BY/ DATE / 12-20-85

REVIEWED BY/ DATE / 12/20/85

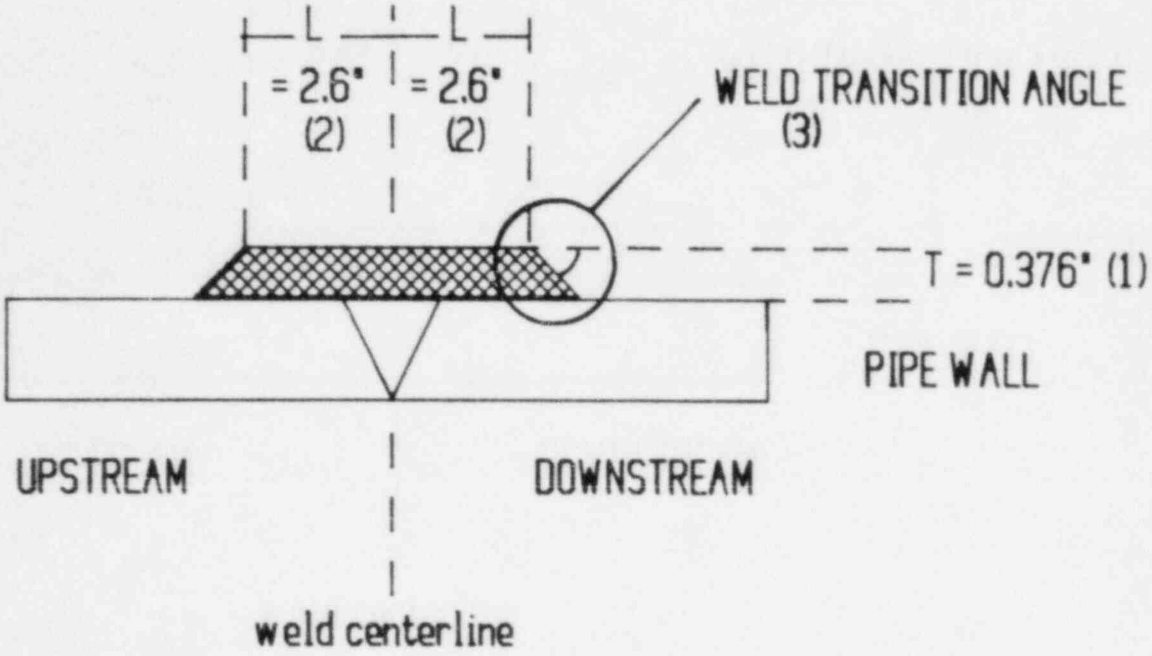

WELD OVERLAY DESIGN

(PLANT HATCH UNIT 1 DCR NUMBER 85-120)

DESIGN FOR WELD NUMBER : 1B31-1RC-22BM-4

NOTES:

1. DESIGN THICKNESS IS 0.376" EXCLUSIVE OF FIRST LAYER THICKNESS. AVERAGE AS-BUILT THICKNESS IS 0.300" (UPSTREAM) AND 0.240" (DOWNSTREAM), ASSUMING FIRST LAYER IS 0.1". REQUIRED ADDITIONAL THICKNESS IS 0.136".
2. LENGTH IS SPECIFIED AS MINIMUM FULL THICKNESS LENGTH.
3. MAXIMUM TRANSITION ANGLE IS 45 DEGREES.

DESIGN NUMBER : GPCO-07-20 REVISION : 0 DATE: 12-20-85

PREPARED BY/ DATE ______ / 12-20-85

REVIEWED BY/ DATE ______ / 12/20/85

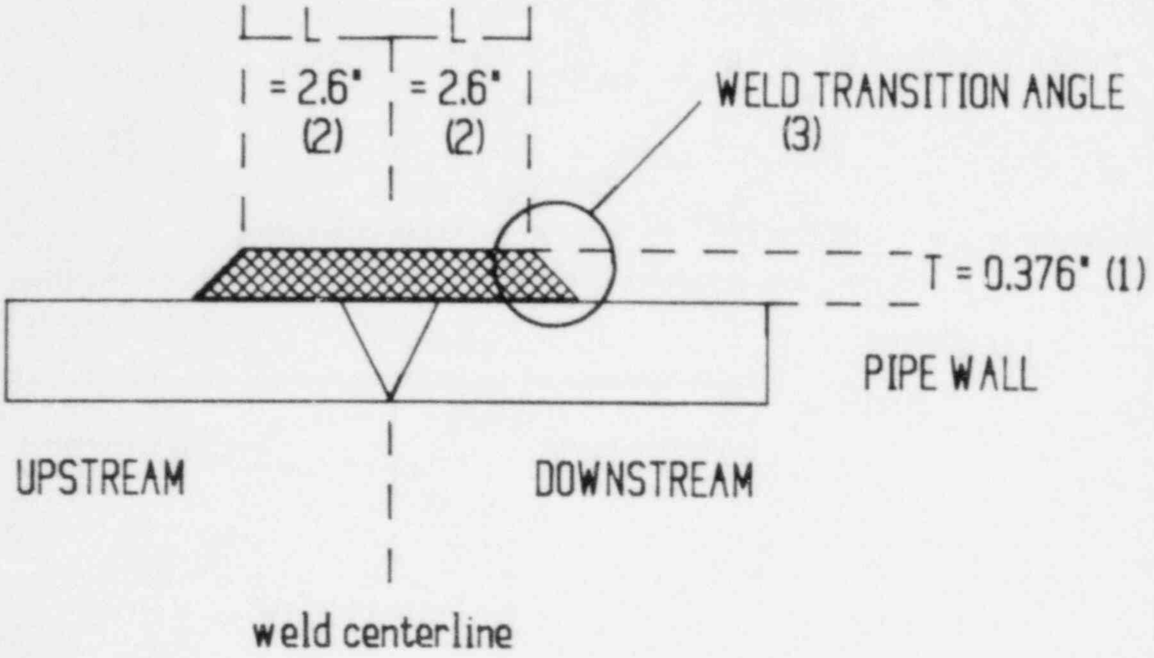

WELD OVERLAY DESIGN

(PLANT HATCH UNIT 1 DCR NUMBER 85-120)

DESIGN FOR WELD NUMBER : 1B31-1RC-22AM-1

NOTES:

1. DESIGN THICKNESS IS 0.376" EXCLUSIVE OF FIRST LAYER THICKNESS. AVERAGE AS-BUILT THICKNESS IS 0.190" (UPSTREAM) AND 0.150" (DOWNSTREAM), ASSUMING FIRST LAYER IS 0.1". REQUIRED ADDITIONAL THICKNESS IS 0.226".
2. LENGTH IS SPECIFIED AS MINIMUM FULL THICKNESS LENGTH.
3. MAXIMUM TRANSITION ANGLE IS 45 DEGREES.

DESIGN NUMBER : GPCO-07-21 REVISION : 0 DATE: 12-20-85

PREPARED BY/ DATE 12/20/85

REVIEWED BY/ DATE 12/20/85

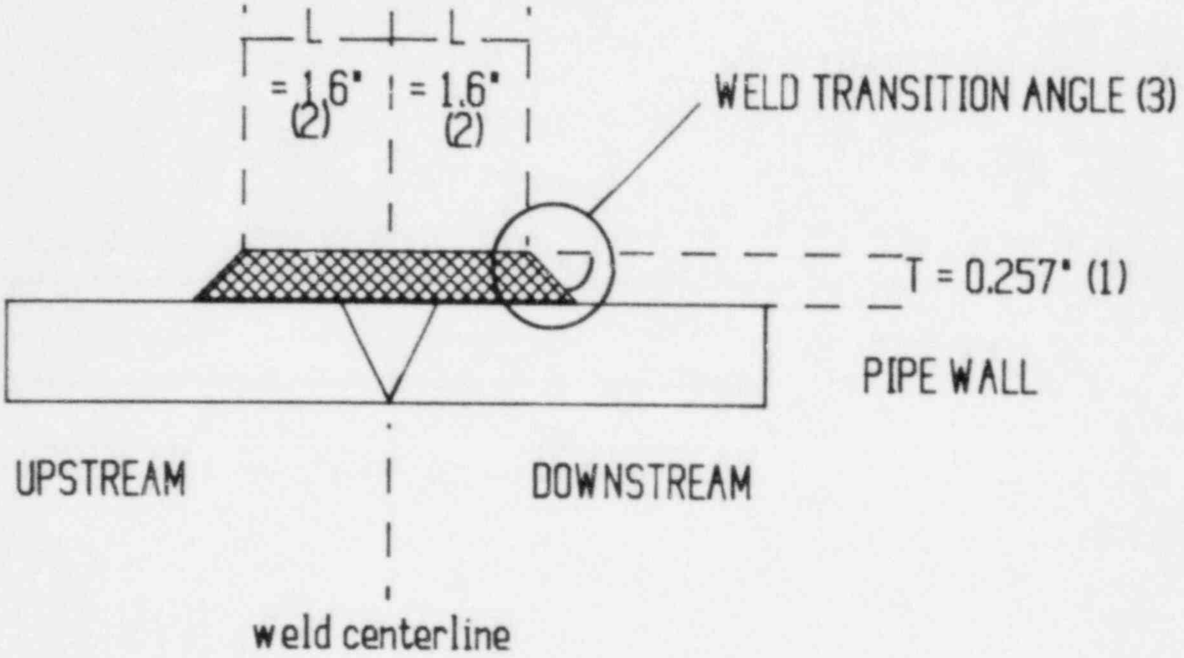

WELD OVERLAY DESIGN

(PLANT HATCH UNIT 1 DCR NUMBER 85-120)

DESIGN FOR WELD NUMBER 1B31-1RC-12AR-J-3
(WASH PASS TO BE APPLIED TO IMPROVE SURFACE FINISH)

NOTES:

1. AVERAGE AS-BUILT THICKNESS IS 0.298" (UPSTREAM) AND 0.185" (DOWNSTREAM), EXCLUSIVE OF FIRST LAYER THICKNESS (ASSUMED 0.1").
2. LENGTH IS SPECIFIED AS FULL THICKNESS LENGTH PRIOR TO WASH PASS APPLICATION.
3. MAXIMUM WELD TRANSITION ANGLE IS 45 DEGREES.

DESIGN NUMBER : GPCO-07-22 REVISION : 0 DATE : 12-20-85

PREPARED BY/ DATE / 12-20-85

REVIEWED BY/ DATE / 12/20/85

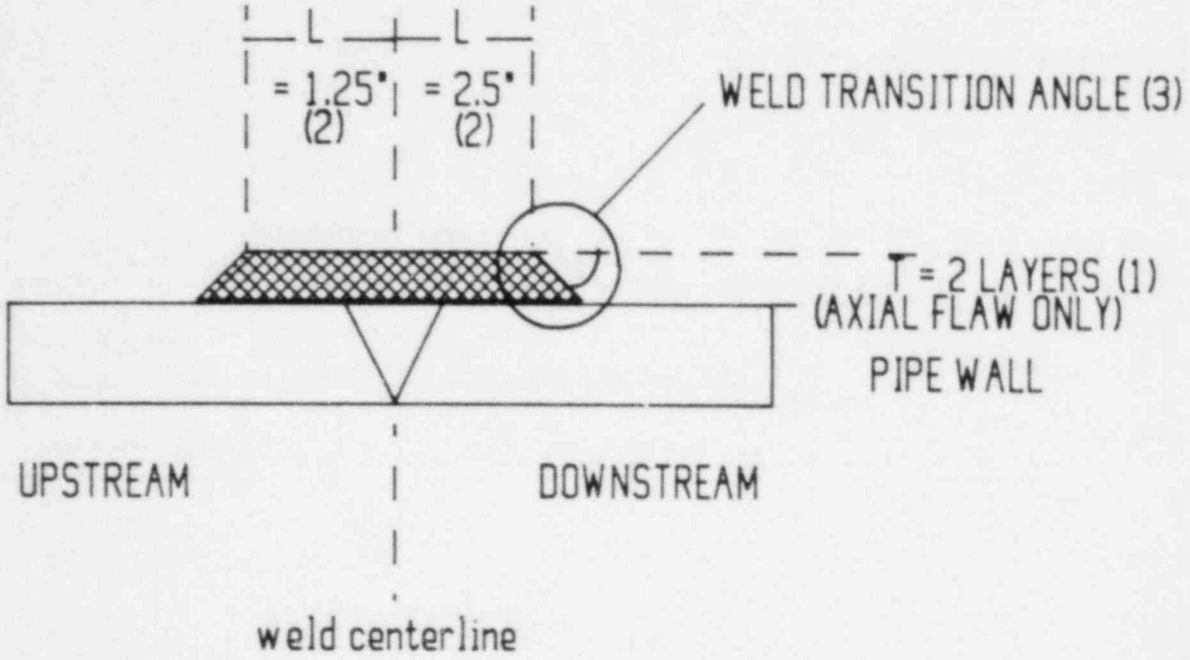

WELD OVERLAY DESIGN

(PLANT HATCH UNIT 1 DCR NUMBER 85-120)

DESIGN FOR WELD NUMBER 1E11-1RHR-24A-R-13

NOTES:

1. AVERAGE AS-BUILT THICKNESS IS 0.23" (DOWNSTREAM). TWO WELD OVERLAY LAYERS ARE REQUIRED FOR REPAIR OF AXIAL FLAW. NO ADDITIONAL THICKNESS IS REQUIRED.
2. LENGTH IS SPECIFIED AS FULL THICKNESS LENGTH PRIOR TO SURFACE FINISH IMPROVEMENT.
3. AS-WELDED TRANSITION ANGLE IS ACCEPTABLE.

DESIGN NUMBER : GPCO-07-23 REVISION : 1 DATE : 3-19-86

PREPARED BY/ DATE H L Gust / 3-20-86

REVIEWED BY/ DATE J.F. Copeland 3-27-86

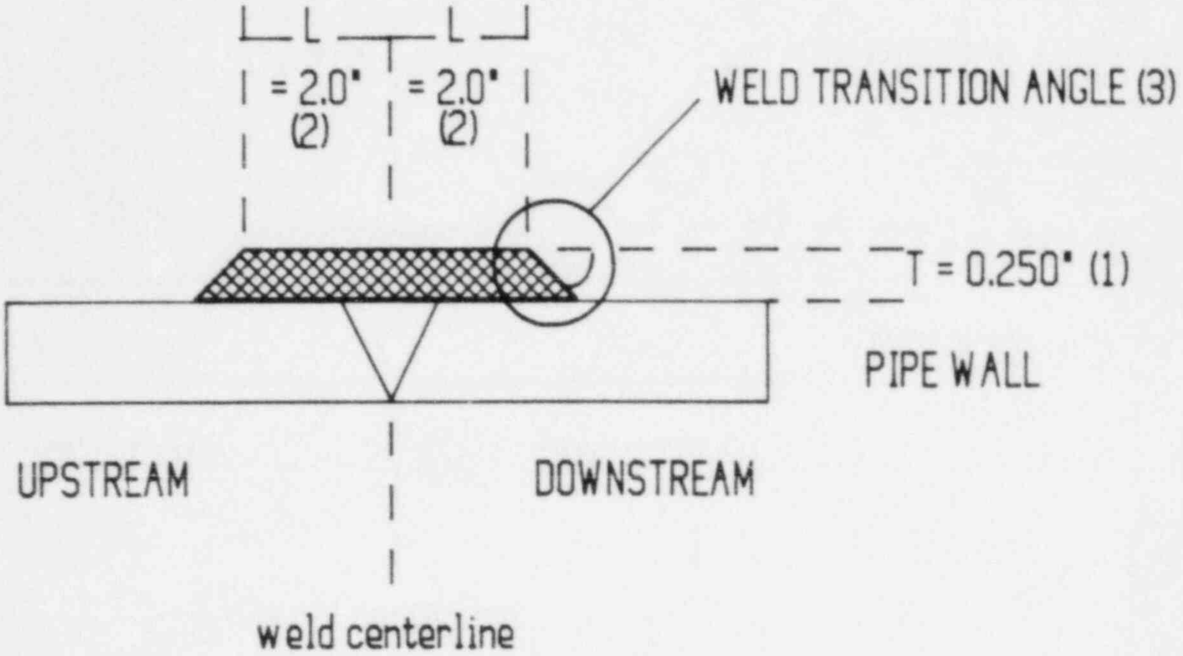

WELD OVERLAY DESIGN

(PLANT HATCH UNIT 1 DCR NUMBER 85-120)

DESIGN FOR WELD NUMBER 1B31-1RC-12AR-G-3

NOTES:

1. DESIGN THICKNESS IS 0.250" , EXCLUSIVE OF FIRST LAYER THICKNESS. A WASH PASS MAY BE APPLIED TO IMPROVE SURFACE FINISH, IF DESIRED.
2. LENGTH IS SPECIFIED AS FULL THICKNESS LENGTH .
3. MAXIMUM WELD TRANSITION ANGLE IS 45 DEGREES.

DESIGN NUMBER : GPCO-07-24 REVISION : 0 DATE : 12-23-85

PREPARED BY/ DATE HL Dustin / 12-23-85

REVIEWED BY/ DATE An-Yu Kuo / 12-26-85

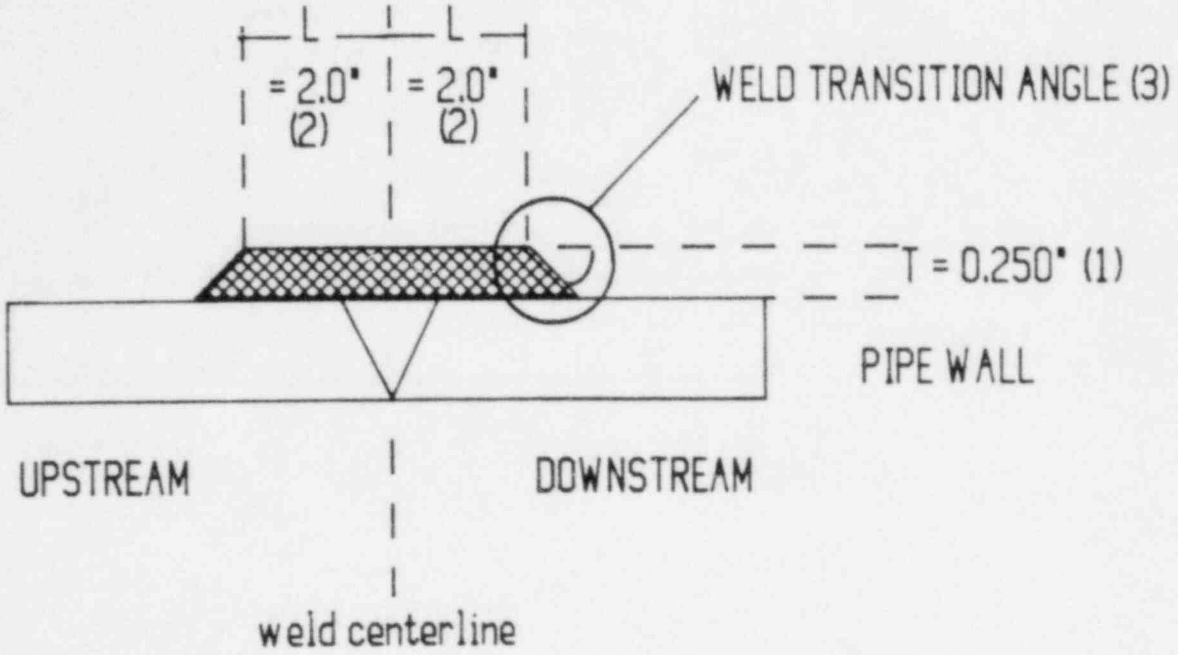

WELD OVERLAY DESIGN

(PLANT HATCH UNIT 1 DCR NUMBER 85-120)

DESIGN FOR WELD NUMBER 1B31-1RC-12BR-D-2

NOTES:

1. DESIGN THICKNESS IS 0.250" , EXCLUSIVE OF FIRST LAYER THICKNESS. A WASH PASS MAY BE APPLIED TO IMPROVE SURFACE FINISH, IF DESIRED.
2. LENGTH IS SPECIFIED AS FULL THICKNESS LENGTH .
3. MAXIMUM WELD TRANSITION ANGLE IS 45 DEGREES.

DESIGN NUMBER : GPCO-07-25   REVISION : 0   DATE : 12-23-85

PREPARED BY/ DATE HL Dustin / 12-23-85

REVIEWED BY/ DATE An-Yu Kuo / 12-26-85

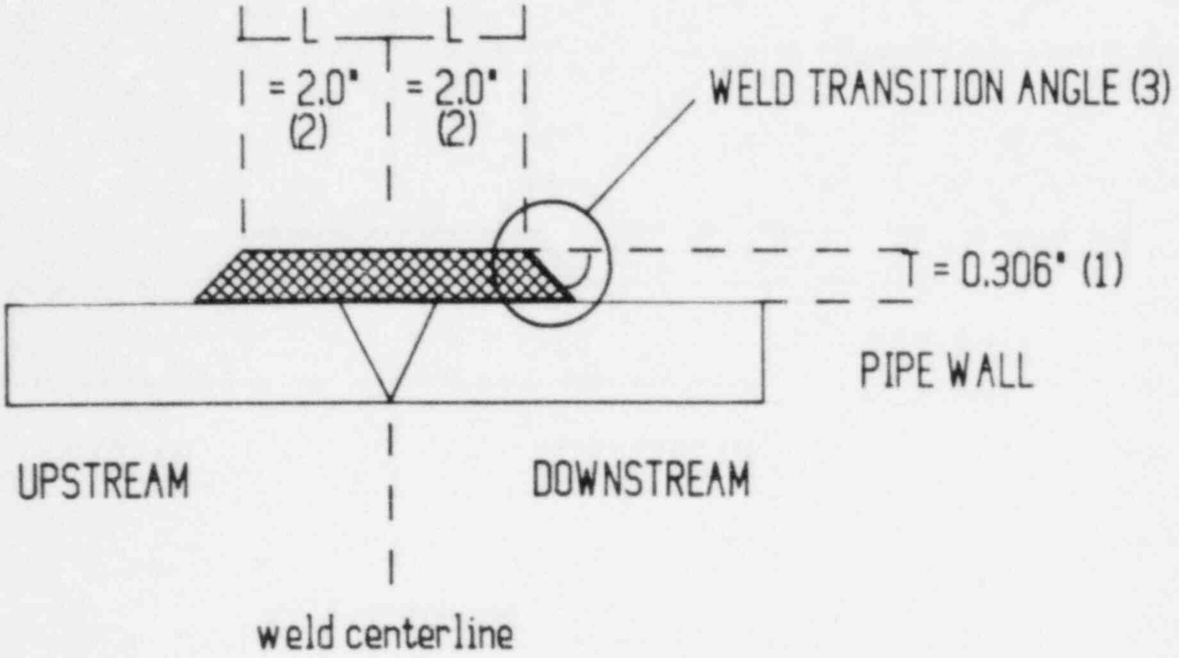

WELD OVERLAY DESIGN

(PLANT HATCH UNIT 1 DCR NUMBER 85-120)

DESIGN FOR WELD NUMBER 1B31-1RC-12AR-H-4

NOTES:

1. DESIGN THICKNESS IS 0.306" , EXCLUSIVE OF FIRST LAYER THICKNESS. A WASH PASS MAY BE APPLIED TO IMPROVE SURFACE FINISH, IF DESIRED.
2. LENGTH IS SPECIFIED AS FULL THICKNESS LENGTH .
3. MAXIMUM WELD TRANSITION ANGLE IS 45 DEGREES.

DESIGN NUMBER : GPCO-07-26 REVISION : 0 DATE : 12-27-85

PREPARED BY/ DATE N L Dust / 12-27-85

REVIEWED BY/ DATE J.F. Copeland / 12-27-85

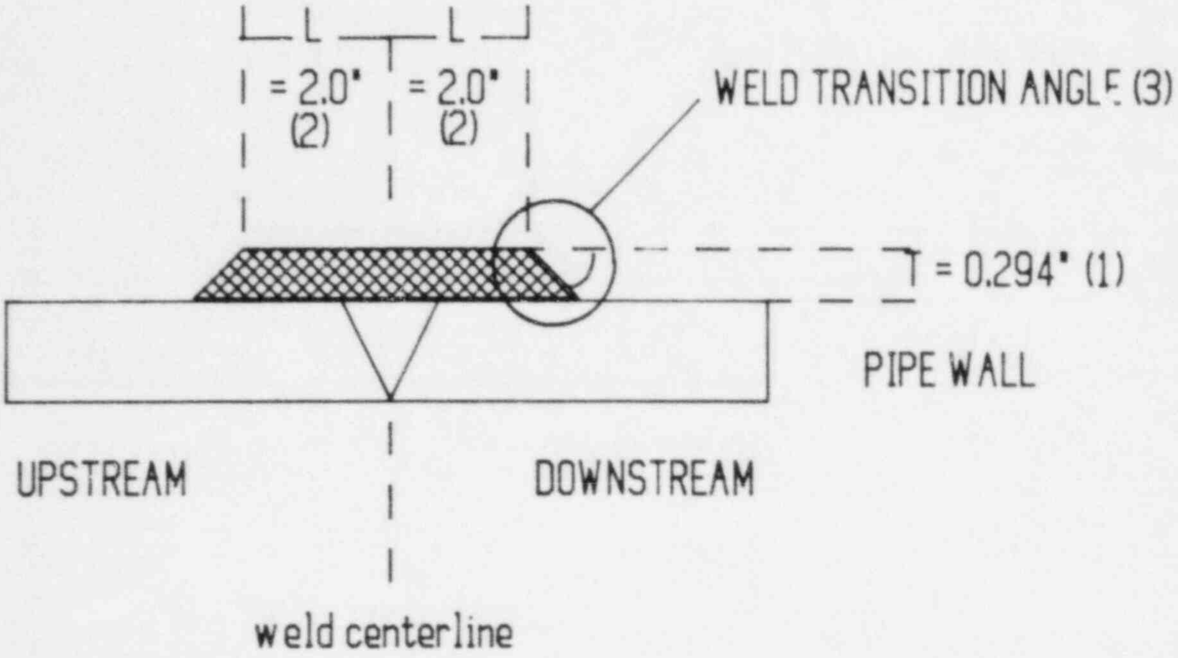

WELD OVERLAY DESIGN

(PLANT HATCH UNIT 1 DCR NUMBER 85-120)

DESIGN FOR WELD NUMBER 1B31-1RC-12BR-C-4

NOTES:

1. DESIGN THICKNESS IS 0.294" , EXCLUSIVE OF FIRST LAYER THICKNESS. A WASH PASS MAY BE APPLIED TO IMPROVE SURFACE FINISH, IF DESIRED.
2. LENGTH IS SPECIFIED AS FULL THICKNESS LENGTH .
3. MAXIMUM WELD TRANSITION ANGLE IS 45 DEGREES.

DESIGN NUMBER : GPCO-07-27 REVISION : 0 DATE : 12-27-85

PREPARED BY/ DATE W L Dustin / 12-27-85

REVIEWED BY/ DATE J. F. Copeland 12-27-85

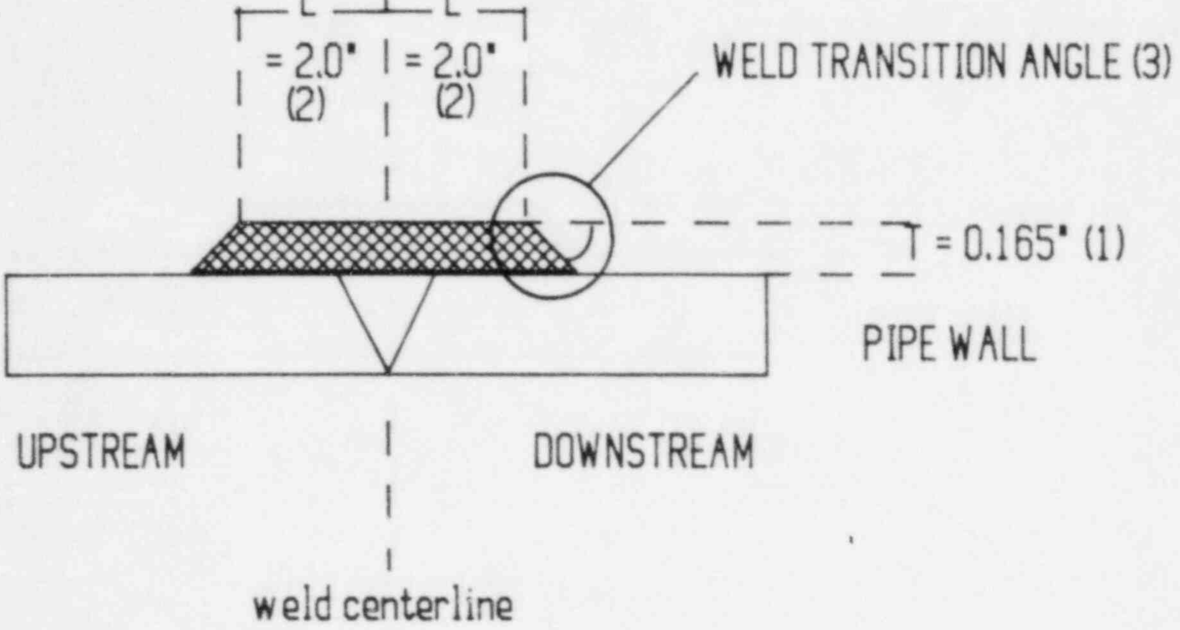

WELD OVERLAY DESIGN

(PLANT HATCH UNIT 1 DCR NUMBER 85-120)

DESIGN FOR WELD NUMBER G31-RWCU-6-D-18A

NOTES:

1. DESIGN THICKNESS IS 0.165" , EXCLUSIVE OF FIRST LAYER THICKNESS. A WASH PASS MAY BE APPLIED TO IMPROVE SURFACE FINISH, IF DESIRED.
2. LENGTH IS SPECIFIED AS FULL THICKNESS LENGTH .
3. MAXIMUM WELD TRANSITION ANGLE IS 45 DEGREES.

DESIGN NUMBER : GPCO-07-28   REVISION : 0   DATE : 12-30-85

PREPARED BY/ DATE H L Dust / 12-30-85

REVIEWED BY/ DATE J. F. Copeland / 12-30-85

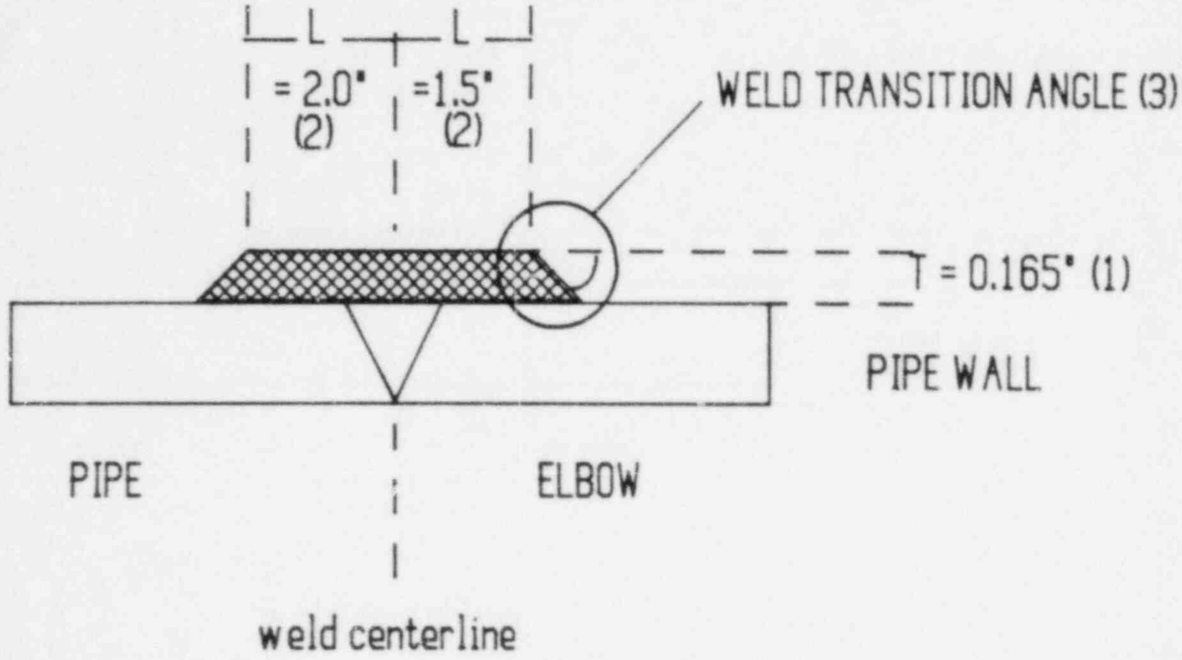

WELD OVERLAY DESIGN

(PLANT HATCH UNIT 1 DCR NUMBER 85-120)

DESIGN FOR WELD NUMBER G31-RWCU-6-D-18

NOTES:

1. DESIGN THICKNESS IS 0.165" , EXCLUSIVE OF FIRST LAYER THICKNESS. A WASH PASS MAY BE APPLIED TO IMPROVE SURFACE FINISH, IF DESIRED.
2. LENGTH IS SPECIFIED AS FULL THICKNESS LENGTH .
3. MAXIMUM WELD TRANSITION ANGLE IS 45 DEGREES.

DESIGN NUMBER : GPCO-07-29 REVISION : 0 DATE : 12-30-85

PREPARED BY/ DATE H L Smat / 12-30-85

REVIEWED BY/ DATE J. F. Copeland / 12-30-85

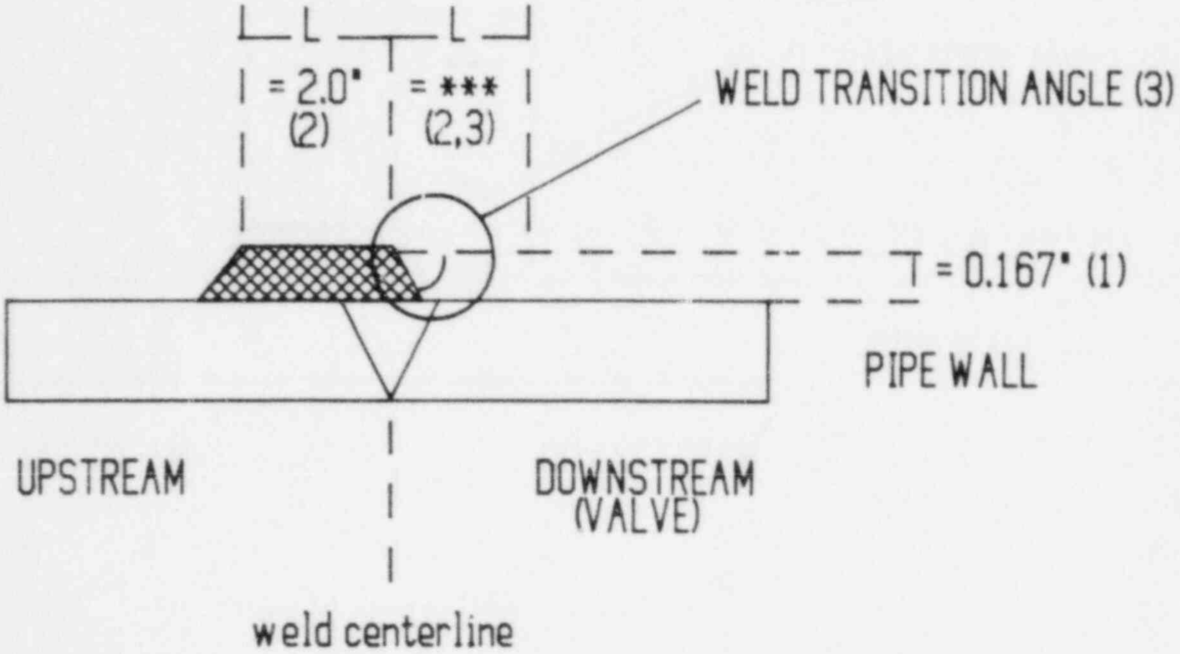

WELD OVERLAY DESIGN

(PLANT HATCH UNIT 1 DCR NUMBER 85-120)

DESIGN FOR WELD NUMBER G31-RWCU-6-D-4

NOTES:

1. DESIGN THICKNESS IS 0.167" , EXCLUSIVE OF FIRST LAYER THICKNESS. A WASH PASS MAY BE APPLIED TO IMPROVE SURFACE FINISH, IF DESIRED.
2. LENGTH IS SPECIFIED AS FULL THICKNESS LENGTH. OVERLAY IS ASYMMETRIC BECAUSE OF THE CAST VALVE BODY.
3. MAXIMUM WELD TRANSITION ANGLE IS 45 DEGREES ON UPSTREAM SIDE. ON VALVE SIDE, BLEND TRANSITION INTO THE BUTT WELD CROWN APPROXIMATELY 0.125" FROM VALVE TO WELD FUSION LINE.

DESIGN NUMBER : GPCO-07-30   REVISION : 1   DATE : 1-3-86

PREPARED BY/ DATE ______ / 1-3-86

REVIEWED BY/ DATE ______ / 1/3/86

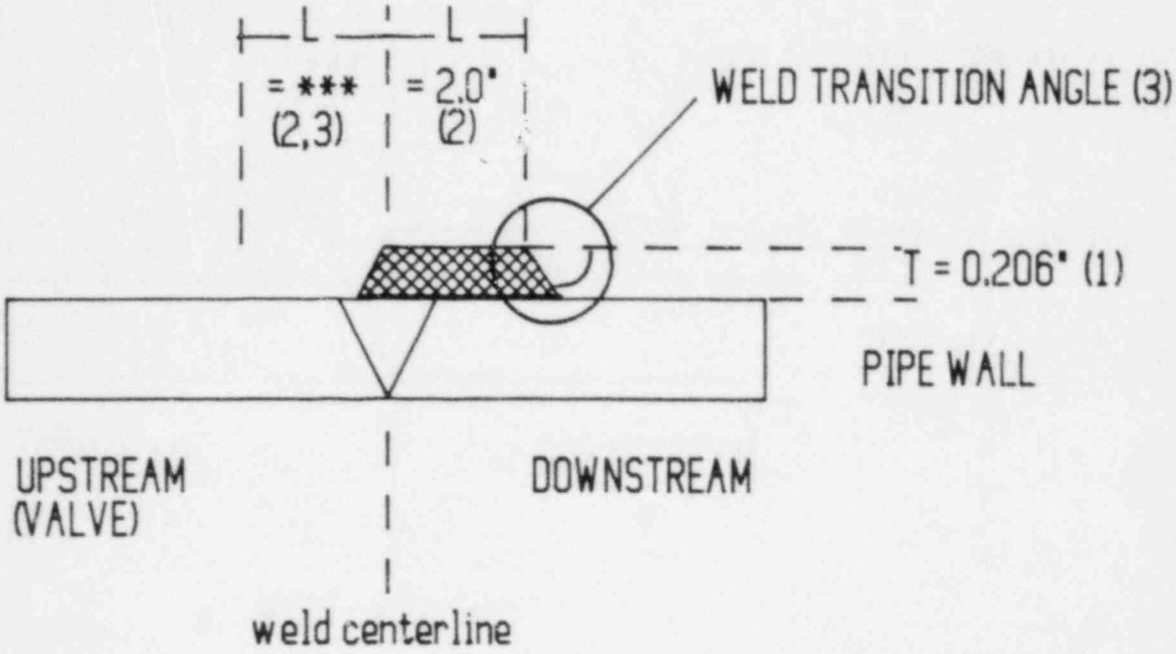

WELD OVERLAY DESIGN

(PLANT HATCH UNIT 1 DCR NUMBER 85-120)

DESIGN FOR WELD NUMBER G31-RWCU-6-D-5

NOTES:

1. DESIGN THICKNESS IS 0.206" , EXCLUSIVE OF FIRST LAYER THICKNESS. A WASH PASS MAY BE APPLIED TO IMPROVE SURFACE FINISH, IF DESIRED.
2. LENGTH IS SPECIFIED AS FULL THICKNESS LENGTH . OVERLAY IS ASYMMETRIC BECAUSE OF THE CAST VALVE BODY.
3. MAXIMUM WELD TRANSITION ANGLE IS 45 DEGREES ON DOWNSTREAM SIDE. ON VALVE SIDE, BLEND TRANSITION INTO THE BUTT WELD CROWN APPROXIMATELY 0.125" FROM VALVE TO WELD FUSION LINE.

DESIGN NUMBER : GPCO-07-31 REVISION : 1 DATE : 1-3-86

PREPARED BY/ DATE / 1-3-86

REVIEWED BY/ DATE / 1/3/86

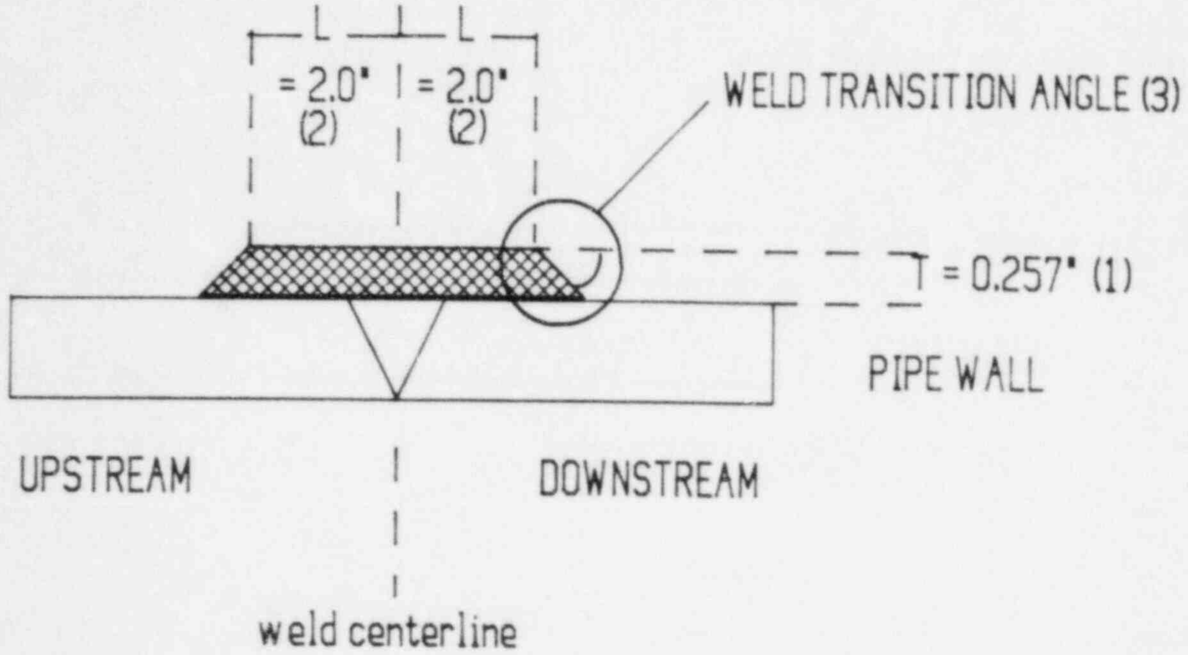

WELD OVERLAY DESIGN

(PLANT HATCH UNIT 1 DCR NUMBER 85-120)

DESIGN FOR WELD NUMBER 1B31-1RC-12AR-F-4

NOTES:

1. DESIGN THICKNESS IS 0.257", EXCLUSIVE OF FIRST LAYER THICKNESS. A WASH PASS MAY BE APPLIED TO IMPROVE SURFACE FINISH, IF DESIRED.
2. LENGTH IS SPECIFIED AS FULL THICKNESS LENGTH.
3. MAXIMUM WELD TRANSITION ANGLE IS 45 DEGREES.

DESIGN NUMBER : GPCO-07-32 REVISION : 0 DATE : 1-23-86

PREPARED BY/ DATE / 1-23-86

REVIEWED BY/ DATE / 1/23/86

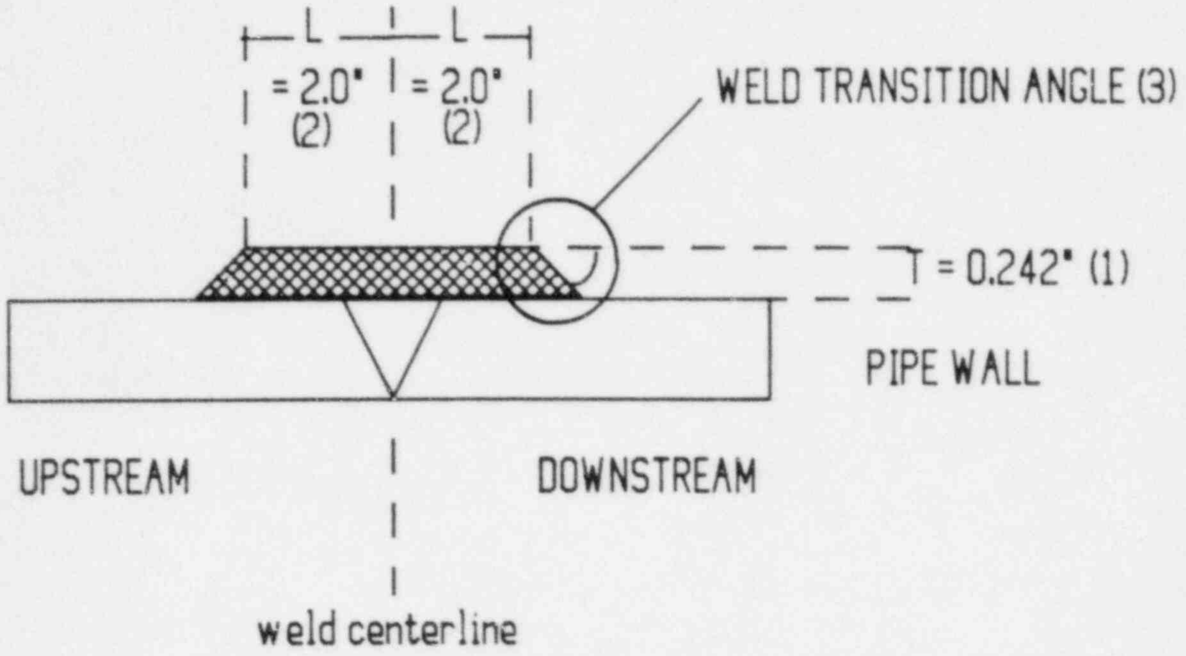

WELD OVERLAY DESIGN

(PLANT HATCH UNIT 1 DCR NUMBER 85-120)

DESIGN FOR WELD NUMBER 1B31-1RC-12BR-B-3

NOTES:

1. DESIGN THICKNESS IS 0.242" , EXCLUSIVE OF FIRST LAYER THICKNESS. A WASH PASS MAY BE APPLIED TO IMPROVE SURFACE FINISH, IF DESIRED.
2. LENGTH IS SPECIFIED AS FULL THICKNESS LENGTH .
3. MAXIMUM WELD TRANSITION ANGLE IS 45 DEGREES.

DESIGN NUMBER : GPCO-07-33 REVISION : 0 DATE : 1-23-86

PREPARED BY/ DATE ______ / 1-23-86

REVIEWED BY/ DATE ______ / 1/23/86

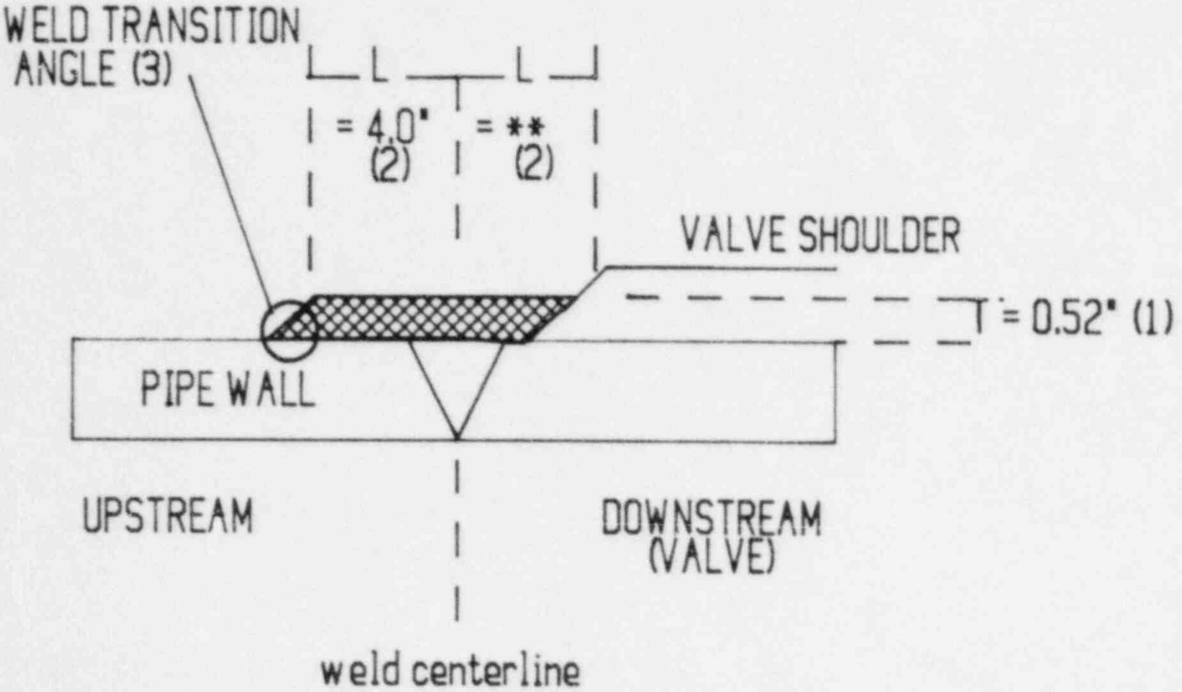

WELD OVERLAY DESIGN

(PLANT HATCH UNIT 1 DCR NUMBER 85-120)

DESIGN FOR WELD NUMBER 1B31-1RC-28A-12

NOTES:

1. DESIGN THICKNESS IS 0.52" , EXCLUSIVE OF FIRST LAYER THICKNESS .
2. LENGTH IS SPECIFIED AS FULL THICKNESS LENGTH ON THE PIPE SIDE OF THE BUTT WELD CENTERLINE. ON THE VALVE SIDE, BLEND THE OVERLAY INTO THE VALVE SHOULDER.
3. MAXIMUM TRANSITION ANGLE IS 45 DEGREES ON THE PIPE SIDE.

DESIGN NUMBER : GPCO-07-34 REVISION : 0 DATE : 1-29-86

PREPARED BY/ DATE / 1-24-86

REVIEWED BY/ DATE 1/29/86

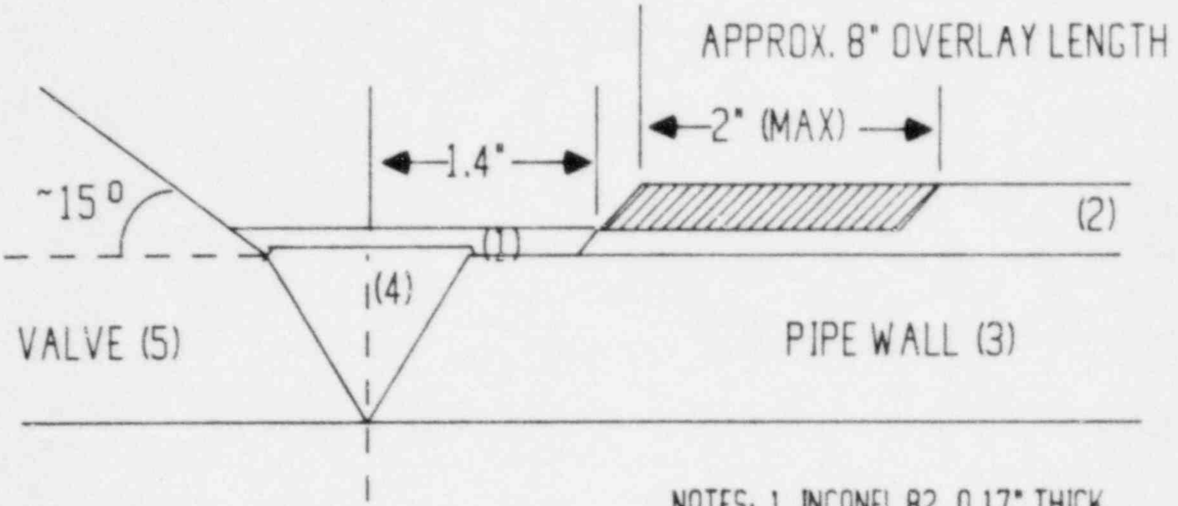

NOTES:
1. INCONEL 82, 0.17" THICK.
2. ER 308L SS, 0.39" THICK.
3. 304 SS, 1.0" THICK.
4. INCONEL 182.
5. CARBON STEEL VALVE BODY

WELD OVERLAY MODIFICATION DESIGN
(PLANT HATCH UNIT 1 DCR NUMBER 85-120)
DESIGN FOR WELDS 1E11-RHR-24B-R-12 & 24B-R-13

MODIFICATION DESCRIPTION:

THE INCONEL OVERLAY IS TO BE EXTENDED TO BLEND WITH THE VALVE TAPER. THE MATERIAL INDICATED BY SHADING ABOVE MAY BE REMOVED BY GRINDING IF NECESSARY TO IMPROVE INSPECTABILITY OF WELD 24B-R-12. THE FINAL SURFACE OF THE GROUND AREA IS TO BE FLUSH WITH THE SURFACE OF THE INCONEL OVERLAY. THE MAXIMUM LENGTH OF THE GROUND REGION IS 2.0". THE THICKNESS OF THE INCONEL OVERLAY IS NOT TO BE REDUCED. SURFACE EXAMINATION OF VALVE CASTING AFTER OVERLAY IS NOT REQUIRED.

DESIGN NUMBER: GPCO-07-35 REVISION: 2 DATE: 4-10-86

PREPARED BY/DATE ______ / 4-10-86

REVIEWED BY/DATE ______ / 4/17/86

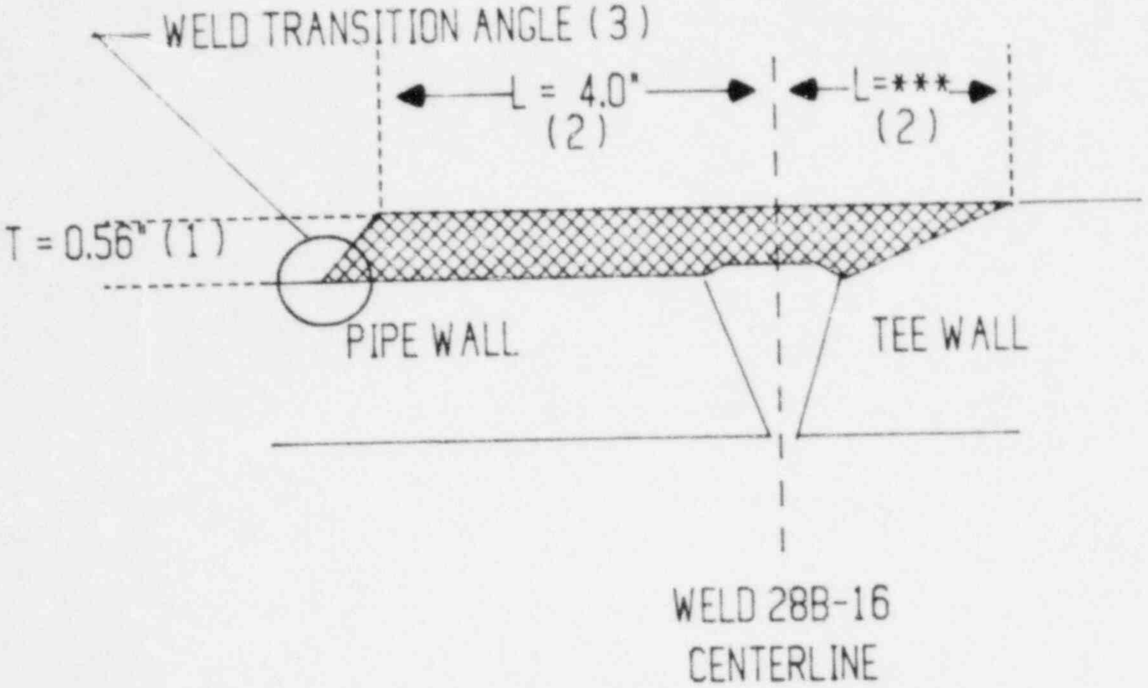

WELD OVERLAY DESIGN

PLANT HATCH UNIT 1 DCR NUMBER 85-120

DESIGN FOR WELD NUMBER 1B31-1RC-28B-16

NOTES:

1. DESIGN THICKNESS IS 0.56", EXCLUSIVE OF FIRST LAYER THICKNESS.
2. DESIGN LENGTH IS 4.0" ON THE PIPE SIDE. ON THE TEE SIDE, BLEND THE OVERLAY INTO THE TEE TAPER. LENGTH IS SPECIFIED AS FULL THICKNESS LENGTH.
3. MAXIMUM WELD TRANSITION ANGLE IS 45 DEGREES ON THE PIPE SIDE.

DESIGN NUMBER : GPCO-07-36 REVISION : 1 DATE : 2-24-86

PREPARED BY/DATE H L Dustin / 2-24-86

REVIEWED BY /DATE / 2/24/86

APPENDIX B

Flawed Pipe Evaluation Calculations
Plant E. I. Hatch Unit 1
1985/86 Maintenance/Refueling
Outage

```
                                   tm
                               pc-CRACK
                        (C) COPYRIGHT 1984, 1986
                 STRUCTURAL INTEGRITY ASSOCIATES, INC.
                      SAN JOSE, CA (408)978-8200
                              VERSION 1.1

                 STRESS CORROSION CRACK GROWTH ANALYSIS


GPC AXIAL FLAW CRACK GROWTH

INITIAL CRACK SIZE=  0.3700
WALL THICKNESS=  1.2000
MAX CRACK SIZE FOR SCCG=  0.9600

                  STRESS CORROSION CRACK GROWTH LAW(S)
   LAW ID         C          N      Kthres      K1C
  IGSCCBST 2.2700E-08     2.2600    0.0000   500.0000


            STRESS COEFFICIENTS
  CASE ID          C0         C1         C2         C3
  GPCAXIHS   -40.5572  -130.2653   373.9583  -175.3359
     AXIAL    14.0560     0.0000     0.0000     0.0000

          Kmax
  CASE ID     SCALE FACTOR
  GPCAXIHS      1.00
     AXIAL      1.00

                         TIME          PRINT
          TIME        INCREMENT      INCREMENT
        10000.0         100.0          100.0


CRACK MODEL:LONGITUDINAL CRACK IN CYLINDER(T/R=0.1)

  CRACK -------------------------STRESS INTENSITY FACTOR------------------------
  DEPTH       CASE       CASE
            GPCAXIHS     AXIAL


 0.0192      -10.97       3.67
 0.0384      -16.35       5.31
 0.0576      -20.99       6.64
 0.0768      -25.31       7.83
 0.0960      -29.43       8.94
 0.1152      -33.42       9.99
 0.1344      -37.48      11.05
 0.1536      -41.54      12.10
 0.1728      -45.55      13.15
 0.1920      -49.53      14.19
 0.2112      -53.47      15.23
 0.2304      -57.36      16.26
 0.2496      -61.34      17.34
```

Prepared by:
Checked by: 3/6/86
File No. 6PCO-07-338
Page 1 of 4

```
pc-CRACK  VERSION 1.3                                                   PAGE  2

  0.2688     -65.79      18.47
  0.2880     -69.40      19.61
  0.3072     -73.34      20.76
  0.3264     -77.21      21.92
  0.3456     -81.00      23.09
  0.3648     -84.94      24.34
  0.3840     -89.55      25.79
  0.4032     -94.10      27.27
  0.4224     -98.59      28.78
  0.4416    -103.00      30.30
  0.4608    -107.31      31.86
  0.4800    -111.53      33.43
  0.4992    -116.90      35.33
  0.5184    -122.24      37.26
  0.5376    -127.53      39.22
  0.5568    -132.76      41.22
  0.5760    -137.93      43.25
  0.5952    -143.03      45.31
  0.6144    -149.32      47.89
  0.6336    -155.94      50.69
  0.6528    -162.45      53.53
  0.6720    -168.85      56.42
  0.6912    -175.11      59.36
  0.7104    -181.24      62.35
  0.7296    -187.65      65.64
  0.7488    -194.27      69.23
  0.7680    -200.62      72.87
  0.7872    -206.69      76.58
  0.8064    -212.46      80.34
  0.8256    -217.92      84.16
  0.8448    -223.51      88.17
  0.8640    -230.18      92.64
  0.8832    -236.49      97.17
  0.9024    -242.45     101.77
  0.9216    -248.04     106.43
  0.9408    -253.24     111.16
  0.9600    -258.05     115.95


   TIME      KMAX         DA/DT          DA           A  A/THK
  100.0    -61.46     0.0000E+00      0.0000      0.3700 0.308

                           END OF pc-CRACK
```

Prepared by: HR Bust

Checked by: 3/6/86

File No. GPCO-07-338

Page 2 of 4

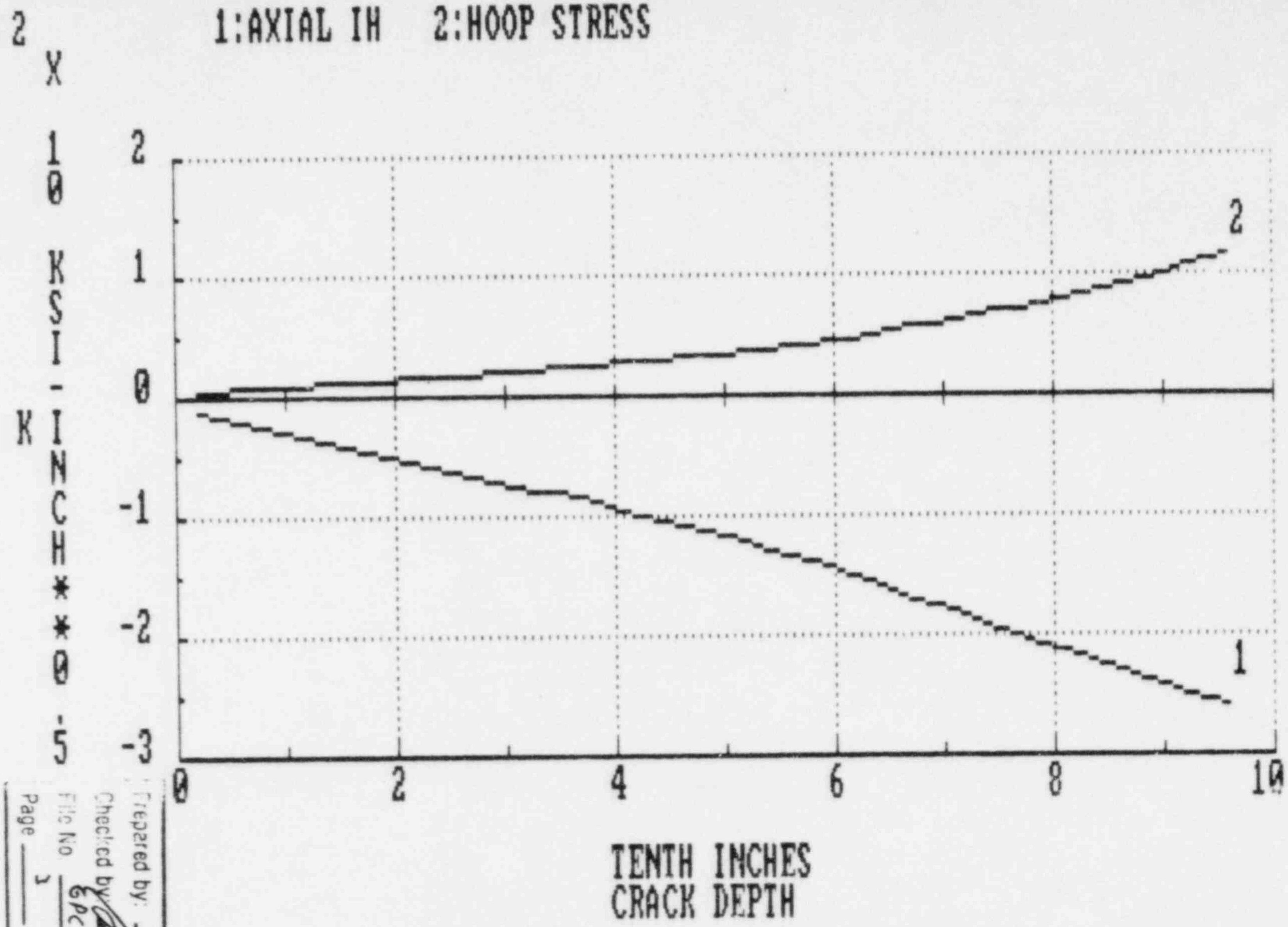

K VS A/T FOR AXIAL FLAW (IHSI + APPLIED)

Prepared by: HZ
Checked by: 3/6/88
File No. GPCO-07-378
Page 3 of 4

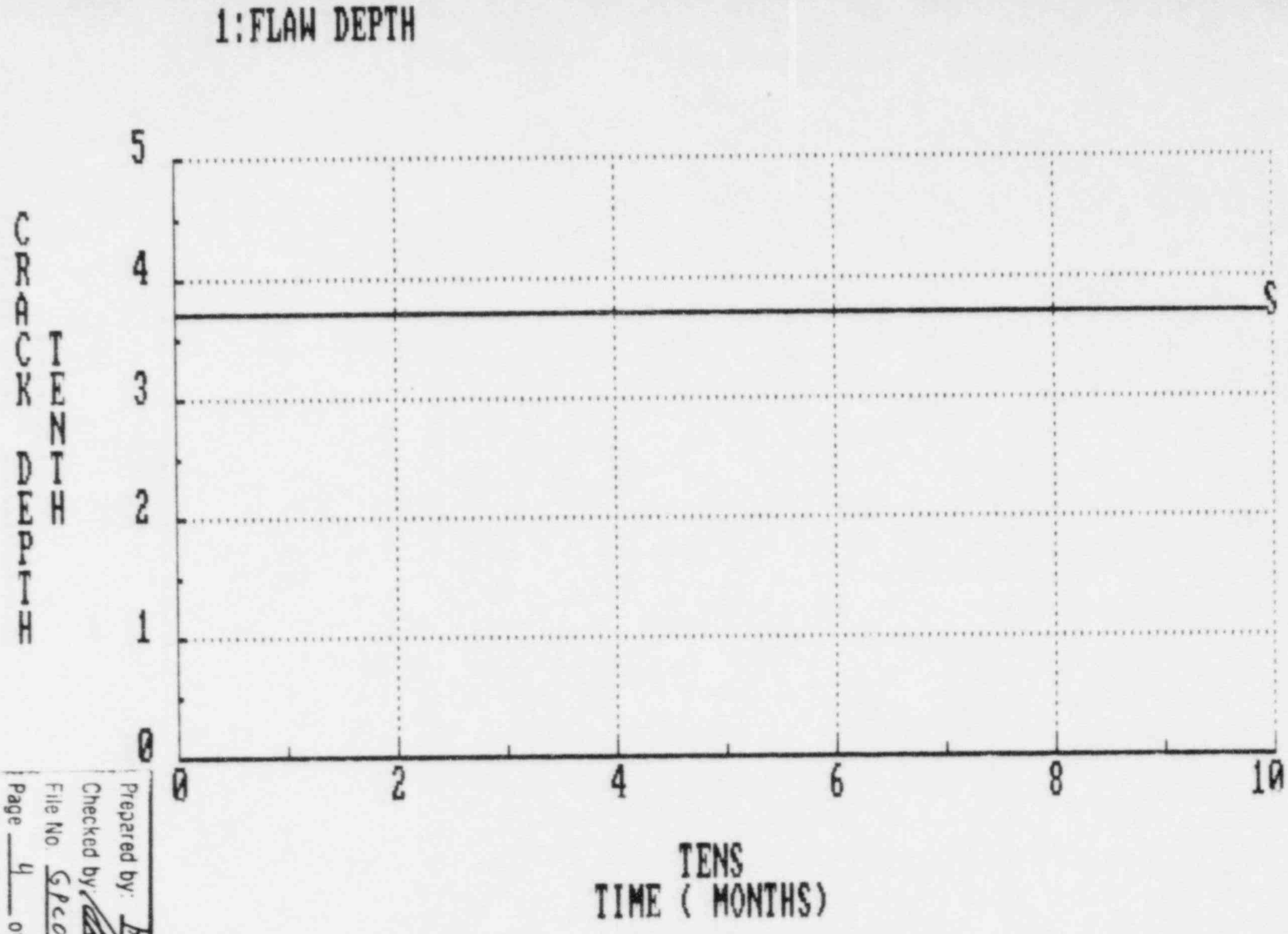

GPC AXIAL FLAW CRACK GROWTH

Prepared by:
Checked by: 3/6/86
File No. GPCO-07-378
Page 4 of 4

```
                                        tm
                                 pc-CRACK
                          (C) COPYRIGHT 1984, 1986
                 STRUCTURAL INTEGRITY ASSOCIATES, INC.
                       SAN JOSE, CA (408)978-8200
                               VERSION 1.1

            LINEAR ELASTIC FRACTURE MECHANICS EVALUATION


BOUNDING 28" IHSI + APPLIED STRESS

CRACK MODEL:CIRCUMFERENTIAL CRACK IN CYLINDER(T/R=0.1)

WALL THICKNESS=     1.2000

                              STRESS COEFFICIENTS
    CASE ID             C0           C1           C2           C3
    IHSI28F      -28.9337    -143.5489     467.8417    -261.8700
      BND28        9.0000       0.0000       0.0000       0.0000


   CRACK ------------------------STRESS INTENSITY FACTOR--------------------
   DEPTH          CASE          CASE
                IHSI28F        BND28

  0.0192         -8.30          2.45
  0.0384        -12.33          3.48
  0.0576        -15.75          4.28
  0.0768        -18.87          4.97
  0.0960        -21.78          5.58
  0.1152        -24.53          6.14
  0.1344        -27.28          6.70
  0.1536        -29.97          7.24
  0.1728        -32.56          7.77
  0.1920        -35.05          8.29
  0.2112        -37.43          8.79
  0.2304        -39.70          9.28
  0.2496        -41.97          9.79
  0.2688        -44.25         10.33
  0.2880        -46.41         10.86
  0.3072        -48.47         11.39
  0.3264        -50.40         11.93
  0.3456        -52.21         12.46
  0.3648        -53.99         13.02
  0.3840        -55.93         13.67
  0.4032        -57.74         14.33
  0.4224        -59.42         15.00
  0.4416        -60.96         15.67
  0.4608        -62.36         16.35
  0.4800        -63.61         17.04
  0.4992        -64.92         17.77
  0.5184        -66.09         18.51
  0.5376        -67.11         19.26
  0.5568        -67.99         20.02
```

Prepared by: NL
Checked by: 3/28/86
File No. GP60-07-359
Page 1 of 6

```
 0.5760     -68.72      20.78
 0.5952     -69.31      21.56
 0.6144     -69.97      22.39
 0.6336     -70.57      23.24
 0.6528     -71.03      24.11
 0.6720     -71.34      24.98
 0.6912     -71.52      25.87
 0.7104     -71.56      26.76
 0.7296     -71.39      27.70
 0.7488     -71.00      28.68
 0.7680     -70.45      29.68
 0.7872     -69.75      30.68
 0.8064     -68.92      31.70
 0.8256     -67.95      32.73
 0.8448     -66.90      33.79
 0.8640     -65.86      34.94
 0.8832     -64.66      36.10
 0.9024     -63.29      37.27
 0.9216     -61.77      38.46
 0.9408     -60.11      39.66
 0.9600     -58.32      40.87

                         END OF pc-CRACK
```

Prepared by: H L Smith
Checked by: 3/28/86
File No. GPCO-07-399
Page 2 of 6

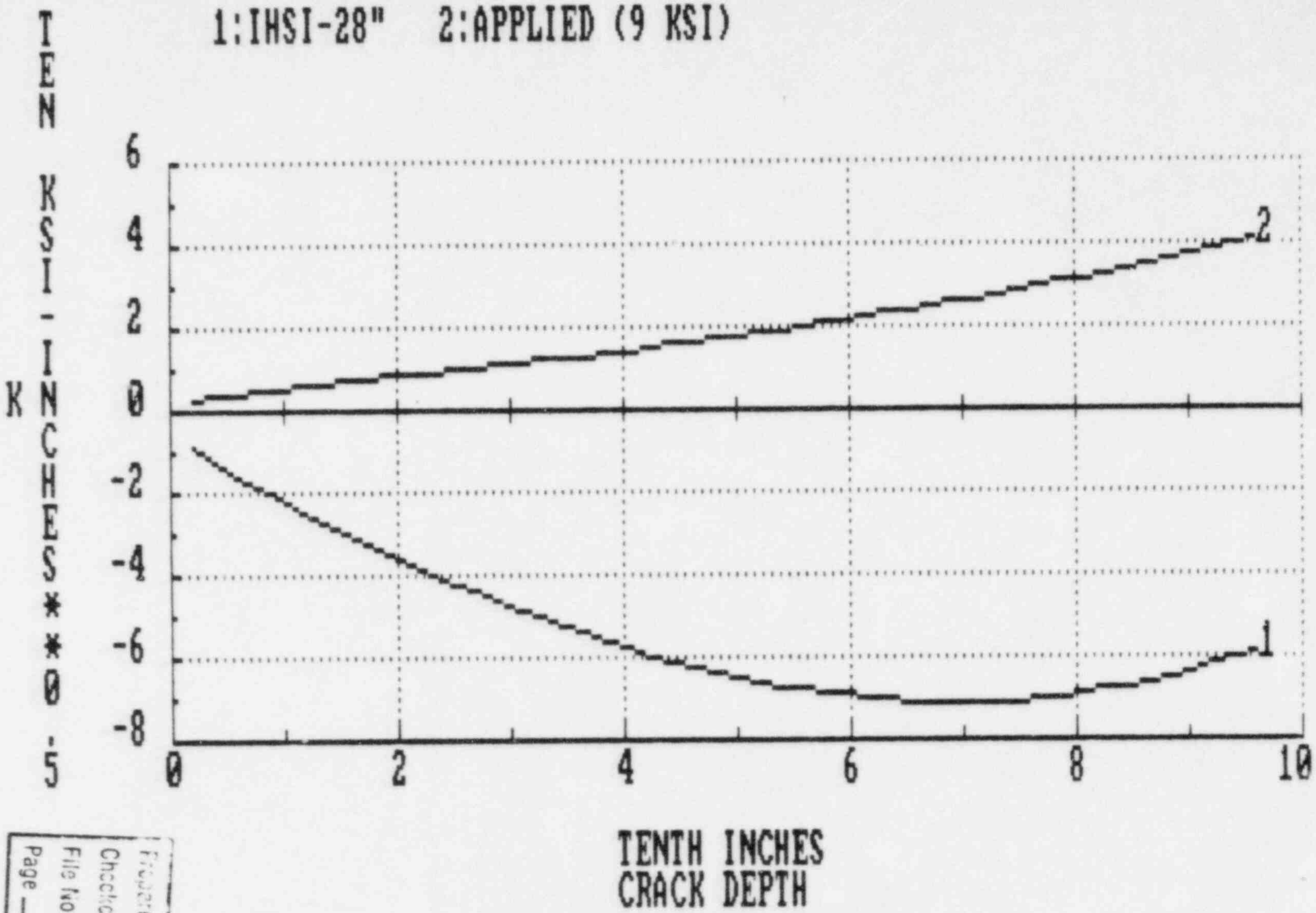

K VS A FOR 28" IHSI TREATED WELD

Prepared by: HZ
Checked by: 2/28/86
File No. GPCO-07-309
Page 3 of 6

```
                                          tm
                                    pc-CRACK
                           (C) COPYRIGHT 1984, 1986
                     STRUCTURAL INTEGRITY ASSOCIATES, INC.
                         SAN JOSE, CA (408)978-8200
                                  VERSION 1.1

                     STRESS CORROSION CRACK GROWTH ANALYSIS

BOUNDING 28" GROWTH IHSI + APPLIED STRESS(9 KSI)

INITIAL CRACK SIZE=  0.2500
WALL THICKNESS=  1.2000
MAX CRACK SIZE FOR SCCG=  0.9600

                      STRESS CORROSION CRACK GROWTH LAW(S)
    LAW ID        C              N       Kthres         K1C
   IGSCBST 2.2700E-08       2.2600      0.0000    500.0000


             STRESS COEFFICIENTS
   CASE ID            C0           C1           C2           C3
   IHSI28F     -28.9337    -143.5489     467.8417    -261.8700
     BND28       9.0000       0.0000       0.0000       0.0000

          Kmax
   CASE ID     SCALE FACTOR
   IHSI28F          1.00
     BND28          1.00

                                TIME              PRINT
            TIME             INCREMENT          INCREMENT
         30000.0               700.0              700.0


CRACK MODEL:CIRCUMFERENTIAL CRACK IN CYLINDER(T/R=0.1)

  CRACK -------------------------STRESS INTENSITY FACTOR-----------------------
  DEPTH          CASE          CASE
               IHSI28F         BND28

 0.0192          -8.30          2.45
 0.0384         -12.33          3.48
 0.0576         -15.75          4.28
 0.0768         -18.87          4.97
 0.0960         -21.78          5.58
 0.1152         -24.53          6.14
 0.1344         -27.28          6.70
 0.1536         -29.97          7.24
 0.1728         -32.56          7.77
 0.1920         -35.05          8.29
 0.2112         -37.43          8.79
 0.2304         -39.70          9.28
 0.2496         -41.97          9.79
```

Prepared by:

Checked by: 3/28/86

File No. GPCO-07-339

Page 4 of 5

```
  0.2688      -44.25       10.33
  0.2880      -46.41       10.86
  0.3072      -48.47       11.39
  0.3264      -50.40       11.93
  0.3456      -52.21       12.46
  0.3648      -53.99       13.02
  0.3840      -55.93       13.67
  0.4032      -57.74       14.33
  0.4224      -59.42       15.00
  0.4416      -60.96       15.67
  0.4608      -62.36       16.35
  0.4800      -63.61       17.04
  0.4992      -64.92       17.77
  0.5184      -66.09       18.51
  0.5376      -67.11       19.26
  0.5568      -67.99       20.02
  0.5760      -68.72       20.78
  0.5952      -69.31       21.56
  0.6144      -69.97       22.39
  0.6336      -70.57       23.24
  0.6528      -71.03       24.11
  0.6720      -71.34       24.98
  0.6912      -71.52       25.87
  0.7104      -71.56       26.76
  0.7296      -71.39       27.70
  0.7488      -71.00       28.68
  0.7680      -70.45       29.68
  0.7872      -69.75       30.68
  0.8064      -68.92       31.70
  0.8256      -67.95       32.73
  0.8448      -66.90       33.79
  0.8640      -65.86       34.94
  0.8832      -64.66       36.10
  0.9024      -63.29       37.27
  0.9216      -61.77       38.46
  0.9408      -60.11       39.66
  0.9600      -58.32       40.87



    TIME     KMAX          DA/DT          DA          A   A/THK
   700.0   -32.22     0.0000E+00      0.0000     0.2500  0.208

                          END OF pc-CRACK
```

Prepared by:
Checked by: 3/28/86
File No. GPC0-07-339
Page 5 of 6

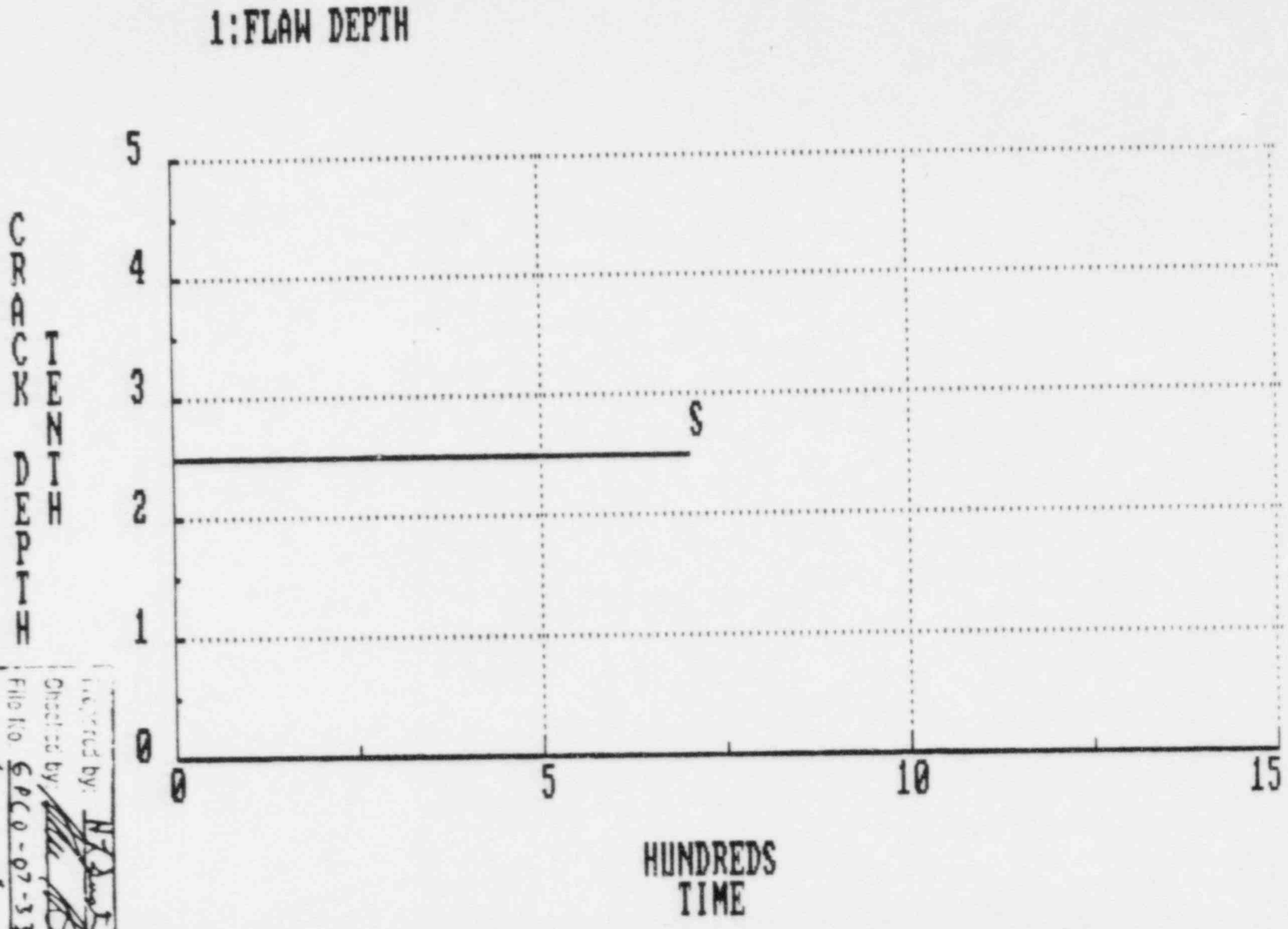

BOUNDING 28" CIRCUMFERENTIAL FLAW WITH IHSI

Prepared by:
Checked by: 2/98
File No. GPC0-07-33A
Page 6 of 6

```
                                        tm
                                   pc-CRACK
                          (C) COPYRIGHT 1984, 198
                    STRUCTURAL INTEGRITY ASSOCIATES, INC.
                         SAN JOSE, CA (408)978-8200
                                 VERSION 1.1

                LINEAR ELASTIC FRACTURE MECHANICS EVALUATION


BOUNDING 12" IHSI + APPLIED STRESS

CRACK MODEL:CIRCUMFERENTIAL CRACK IN CYLINDER(T/R=0.1)

WALL THICKNESS=    0.6930

                           STRESS COEFFICIENTS
     CASE ID          C0          C1          C2          C3
     IHSI10F    -30.7058   -212.1766   1411.8703  -1505.4352
      APPL12     16.0000      0.0000      0.0000      0.0000


  CRACK ----------------------STRESS INTENSITY FACTOR----------------------
  DEPTH         CASE        CASE
              IHSI10F      APPL12

  0.0111        -6.63        3.31
  0.0222        -9.75        4.71
  0.0333       -12.35        5.79
  0.0444       -14.69        6.71
  0.0554       -16.83        7.54
  0.0665       -18.83        8.30
  0.0776       -20.80        9.05
  0.0887       -22.71        9.79
  0.0998       -24.53       10.50
  0.1109       -26.25       11.19
  0.1220       -27.87       11.87
  0.1331       -29.40       12.54
  0.1441       -30.91       13.23
  0.1552       -32.41       13.95
  0.1663       -33.81       14.67
  0.1774       -35.11       15.39
  0.1885       -36.31       16.11
  0.1996       -37.41       16.83
  0.2107       -38.47       17.59
  0.2218       -39.65       18.47
  0.2328       -40.72       19.36
  0.2439       -41.69       20.26
  0.2550       -42.53       21.17
  0.2661       -43.27       22.09
  0.2772       -43.89       23.02
  0.2883       -44.54       24.01
  0.2994       -45.09       25.01
  0.3105       -45.57       26.02
  0.3216       -45.86       27.04
```

Prepared by:
Checked by: 3/28/86
File No. GPC0-07-840
Page 1 of 6

```
pc-CRACK   VERSION 1.1                                                          PAGE

  0.3326      -46.07       28.08
  0.3437      -46.18       29.12
  0.3548      -46.34       30.24
  0.3659      -46.44       31.40
  0.3770      -46.45       32.57
  0.3881      -46.35       33.75
  0.3992      -46.17       34.95
  0.4103      -45.89       36.15
  0.4213      -45.49       37.42
  0.4324      -44.96       38.75
  0.4435      -44.33       40.09
  0.4546      -43.63       41.45
  0.4657      -42.84       42.83
  0.4768      -41.99       44.21
  0.4879      -41.08       45.65
  0.4990      -40.10       47.20
  0.5100      -39.04       48.77
  0.5211      -37.89       50.35
  0.5322      -36.67       51.96
  0.5433      -35.40       53.57
  0.5544      -34.09       55.21

                              END OF pc-CRACK
```

Prepared by:

Checked by: 8/4/86

File No GPCO-07-340

Page 2 of 6

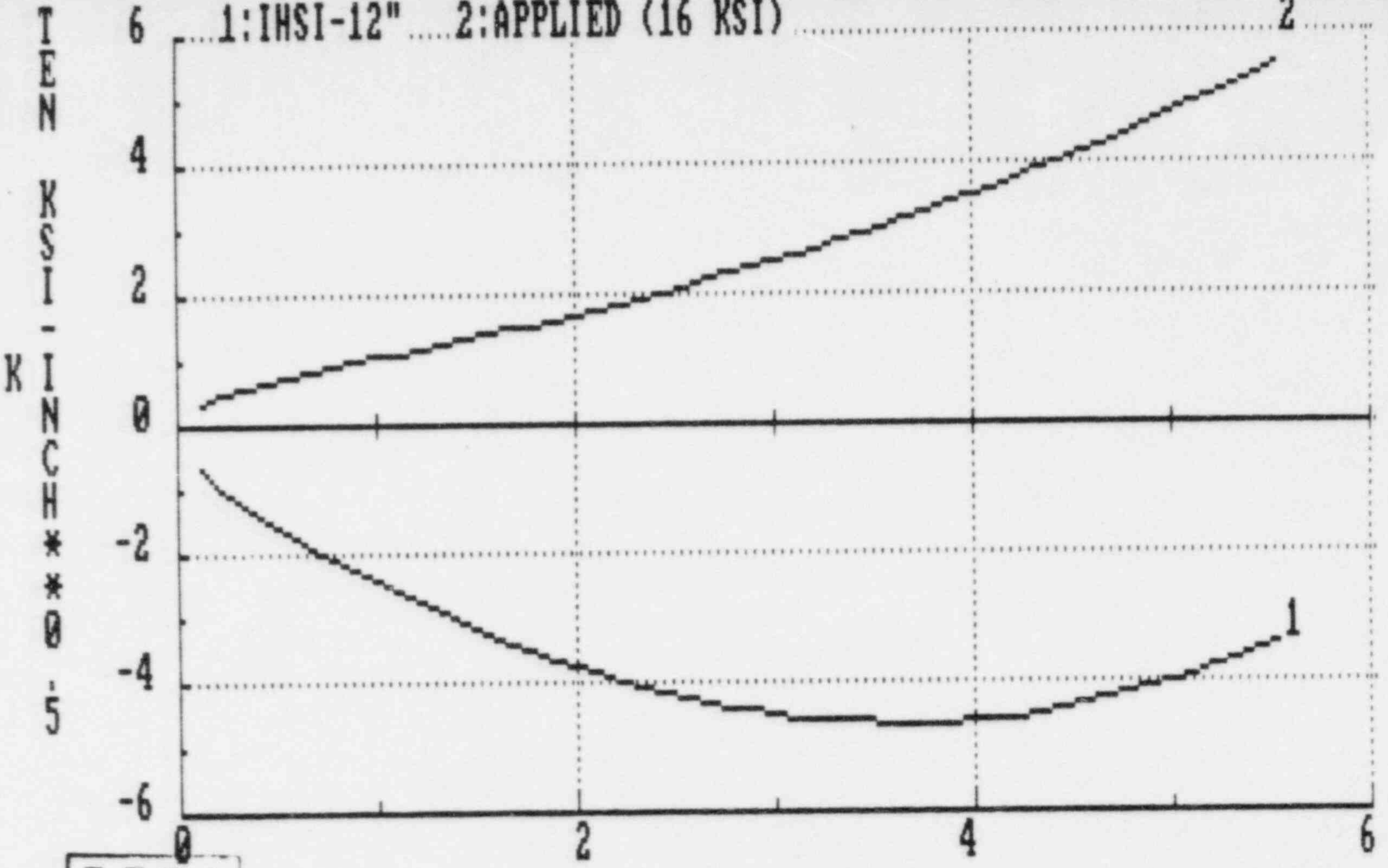

K VS A FOR 12" IHSI TREATED WELD

Prepared by:
Checked by: 8/24/82
File No. 6PCO-07-340
Page 3 of 5

```
                                        tm
                                  pc-CRACK
                        (C) COPYRIGHT 1984, 1985
                 STRUCTURAL INTEGRITY ASSOCIATES. INC.
                      SAN JOSE, CA (408)978-8200
                             VERSION 1.1

                 STRESS CORROSION CRACK GROWTH ANALYSIS

BOUNDING 12" CIRCUMFERENTIAL FLAW IHSI AND APPLIED STRESS

INITIAL CRACK SIZE=  0.2000
WALL THICKNESS=  0.6930
MAX CRACK SIZE FOR SCCG=  0.5544

                  STRESS CORROSION CRACK GROWTH LAW(S)
   LAW ID         C            N        Kthres        K1C
  IGSCBST 2.2700E-08       2.2600      0.0000    500.0000


          STRESS COEFFICIENTS
  CASE ID            C0           C1           C2          C3
  IHSI10F     -30.7058  -212.1766  1411.8703 -1505.4352
   APPL12      16.0000     0.0000     0.0000      0.0000

       Kmax
  CASE ID     SCALE FACTOR
  IHSI10F        1.00
   APPL12        1.00

                           TIME           PRINT
         TIME         INCREMENT       INCREMENT
      30000.0             700.0           700.0

CRACK MODEL:CIRCUMFERENTIAL CRACK IN CYLINDER(T/R=0.1)

 CRACK -------------------------STRESS INTENSITY FACTOR-----------------------
 DEPTH          CASE         CASE
              IHSI10F      APPL12

0.0111         -6.63         3.31
0.0222         -9.75         4.71
0.0333        -12.35         5.79
0.0444        -14.69         6.71
0.0554        -16.83         7.54
0.0665        -18.83         8.30
0.0776        -20.80         9.05
0.0887        -22.71         9.79
0.0998        -24.53        10.50
0.1109        -26.25        11.19
0.1220        -27.87        11.87
0.1331        -29.40        12.54
0.1441        -30.91        13.23
```

Prepared by:
Checked by: 3/8/86
File No. 6PCD-07-340
Page 4 of 5

```
  0.1552        -32.41        13.95
  0.1663        -33.81        14.67
  0.1774        -35.11        15.39
  0.1885        -36.31        16.11
  0.1996        -37.41        16.83
  0.2107        -38.47        17.59
  0.2218        -39.65        18.47
  0.2328        -40.72        19.36
  0.2439        -41.69        20.26
  0.2550        -42.53        21.17
  0.2661        -43.27        22.09
  0.2772        -43.89        23.02
  0.2883        -44.54        24.01
  0.2994        -45.09        25.01
  0.3105        -45.53        26.02
  0.3216        -45.86        27.04
  0.3326        -46.07        28.08
  0.3437        -46.18        29.12
  0.3548        -46.34        30.24
  0.3659        -46.44        31.40
  0.3770        -46.45        32.57
  0.3881        -46.35        33.75
  0.3992        -46.17        34.95
  0.4103        -45.89        36.15
  0.4213        -45.49        37.42
  0.4324        -44.96        38.75
  0.4435        -44.33        40.09
  0.4546        -43.63        41.45
  0.4657        -42.84        42.83
  0.4768        -41.99        44.21
  0.4879        -41.08        45.65
  0.4990        -40.10        47.20
  0.5100        -39.04        48.77
  0.5211        -37.89        50.35
  0.5322        -36.67        51.96
  0.5433        -35.40        53.57
  0.5544        -34.09        55.21



    TIME      KMAX         DA/DT          DA            A   A/THK
   700.0    -20.59    0.0000E+00      0.0000       0.2000 0.289

                             END OF pc-CRACK
```

Prepared by:
Checked by: 3/28/86
File No. GPC0-07-390
Page 5 of 6

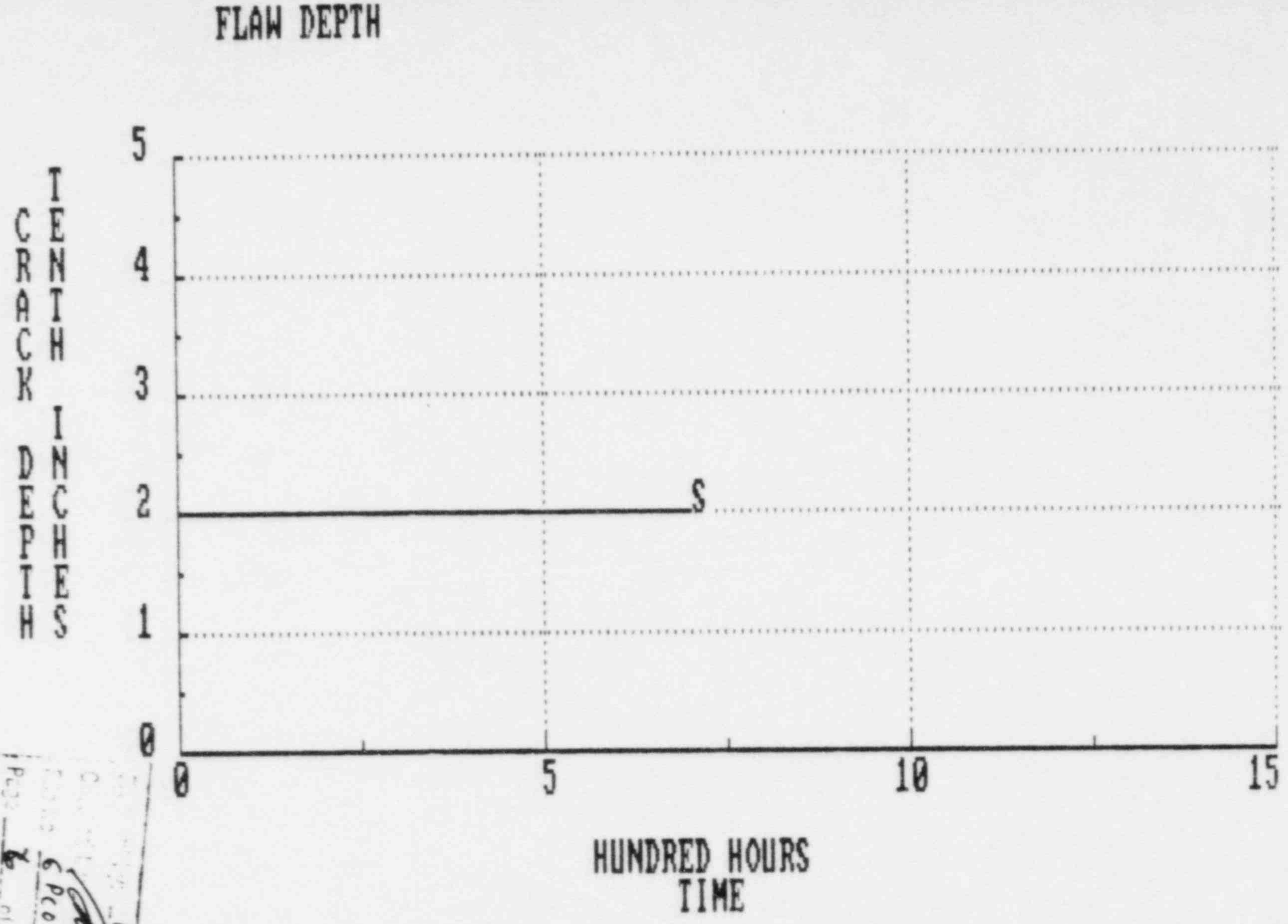

BOUNDING 12" CIRCUMFERENTIAL FLAW IHSI AND APPLIED STRESS

3/6/86
6PCO-07-300
Page 6 of 6

```
                              t#
                           pc-CRACK
                  (C) COPYRIGHT 1984, 1985
           STRUCTURAL INTEGRITY ASSOCIATES, INC.
              SAN JOSE, CA (408)978-8200
                        VERSION 1.1

              ALLOWABLE FLAW SIZE EVALUATION


ALLOWABLE FLAW SIZE FOR CIRCUMF. CRACK,FLUX WELD


28" CIRCUMFERENTIAL FLAW SAW

WALL THICKNESS=    1.2000
MEMBRANE STRESS= 7028.0000
BENDING STRESS= 3621.0000   } expansion stress included with bending for this case
EXPANSION STRESS=    0.0000
PIPE OUTSIDE DIAMETER=   28.0000
FLUX WELD TYPE-SMAW(1)/SAW(2)=2
STBESS RATIO=    0.7011
ALLOWABLE STRESS=16950.0000
FLOW STRESS=50850.0000
                              L/CIRCUM
               0.00   0.10   0.20   0.30   0.40   0.50
ALLOWABLE A/T 0.6000 0.6000 0.6000 0.5982 0.5082 0.4086

ALLOWABLE FLAW SIZE FOR CIRCUMF. CRACK,FLUX WELD


12" CIRCUMFERENTIAL FLAW SAW

WALL THICKNESS=    0.6930
MEMBRANE STRESS= 6667.0000
BENDING STRESS= 3269.0000
EXPANSION STRESS= 7424.0000
PIPE OUTSIDE DIAMETER=   12.7500
FLUX WELD TYPE-SMAW(1)/SAW(2)=2
STRESS RATIO=    0.8039
ALLOWABLE STRESS=16950.0000
FLOW STRESS=50850.0000
                              L/CIRCUM
               0.00   0.10   0.20   0.30   0.40   0.50
ALLOWABLE A/T 0.6000 0.6000 0.5931 0.4431 0.3546 0.2961

ALLOWABLE FLAW SIZE FOR CIRCUMF. CRACK,FLUX WELD


12" CIRCUMFERENTIAL FLAW SMAW

WALL THICKNESS=    0.6930
MEMBRANE STRESS= 6667.0000
BENDING STRESS= 3621.0000
```

Prepared by: HJ Gust
Checked by: 3/6/86
File No. GPCO-07-34
Page 1 of 2

```
pc-CRACK  VERSION 1.1                                        PAGE   2

EXPANSION STRESS= 7404.0000
PIPE OUTSIDE DIAMETER=   10.7500
FLUX WELD TYPE-SMAW(1)/SAW(2)=1
STRESS RATIO=    0.7651
ALLOWABLE STRESS=16950.0000
FLOW STRESS=50850.0000
                                   L/CIRCUM
                   0.00   0.10   0.20   0.30   0.40   0.50
ALLOWABLE A/T 0.6000 0.6000 0.6000 0.4989 0.4089 0.3349

                                END OF pc-CRACK
```

Prepared by: NZ Dust
Checked by: 3/6/86
File No. 6PCO-07-304
Page 2 of 2

STRUCTURAL
INTEGRITY
ASSOCIATES, INC.