EVALUATION COVER SHEET

EE-FP-0005 REV. A

EVALUATION OF CABLE TRAYS OUTSIDE OF THE CONGESTED CABLE AREA

Prepared by: David J. Bonadies — David J. Bonadies-Electrical Engr. — 9/7/88 DATE

Verified by: G.L. Schmalz, PE — 9/7/88 DATE

Approved by: W.G. Mehrdoff — DEPARTMENT MANAGER — 9/9/88 DATE

8809280296 880920
PDR ADOCK 05000267
F PNU

Public Service®

FORT ST. VRAIN NUCLEAR GENERATING STATION

PUBLIC SERVICE COMPANY OF COLORADO

CHECK LIST OF DESIGN VERIFICATION QUESTIONS FOR DESIGN REVIEW METHOD

~~EE-FP 0005~~
BY SCHMALZ
PAGE N/A

YES	NO	N/A		
☒	☐	☐	1.	Were the inputs correctly selected and incorporated into design?
☒	☐	☐	2.	Are assumptions necessary to perform the design activity adequately described and reasonable? Where necessary, are the assumptions identified for subsequent re-verifications when the detailed design activities are completed?
☐	☐	☒	3.	Are the appropriate quality and quality assurance requirements specified?
☒	☐	☐	4.	Are the applicable codes, standards and regulatory requirements including issue and addenda properly identified and are their requirements for design met?
☐	☐	☒	5.	Have applicable construction and operating experience been considered?
☐	☐	☒	6.	Have the design interface requirements been satisfied?
☐	☐	☒	7.	Was an appropriate design method used?
☒	☐	☐	8.	Is the output reasonable compared to inputs?
☐	☐	☒	9.	Are the specified parts, equipment, and processes suitable for the required application?
☐	☐	☒	10.	Are the specified materials compatible with each other and the design environmental conditions to which the material will be exposed?
☐	☐	☒	11.	Have adequate maintenance features and requirements been specified?
☐	☐	☒	12.	Are accessibility and other design provisions adequate for performance of needed maintenance and repair?
☐	☐	☒	13.	Has adequate accessibility been provided to perform the in-service inspection expected to be required during the plant life?
☐	☐	☒	14.	Has the design properly considered radiation exposure to the public and plant personnel?
☒	☐	☐	15.	Are the acceptance criteria incorporated in the design documents sufficient to allow verification that design requirements have been satisfactorily accomplished?
☐	☐	☒	16.	Have adequate pre-operational and subsequent periodic test requirements been appropriately specified?
☐	☐	☒	17.	Are adequate handling, storage, cleaning and shipping requirements specified?
☐	☐	☒	18.	Are adequate identification requirements specified?
☐	☐	☒	19.	Are requirements for record preparation review, approval, retention, etc., adequately specified?

NOTE: If the answer to any question is no, provide additional information and resolution below.

RESOLUTION OF DESIGN DEFICIENCIES
UNCOVERED DURING THE DESIGN VERIFICATION PROCESS

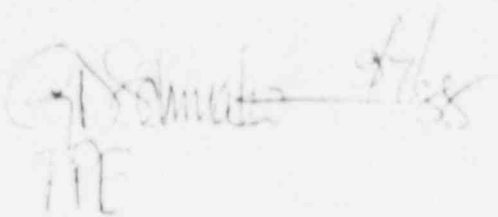

EVALUATION FORMAT

1.0 PURPOSE

2.0 SUMMARY

3.0 SCOPE

4.0 PROCEDURE

5.0 EVALUATION

6.0 CONCLUSION

7.0 REFERENCES

8.0 ATTACHMENTS

Evaluation of cable trays outside of the Congested Cable Area.

1.0 Purpose:

The purpose of this evaluation is to determine if there is a significant concentration of non IEEE-383 cables outside of the Congested Cable Area (which includes the Three Room Complex) which does not meet the requirements of Appendix A paragraph D.3(F) to BTP APCSB 9.5-1.

2.0 Summary:

No areas were found to exceed our criteria set forth in PSCo letter P-88200 dated June 13, 1988 to the NRC (NRC request #3). Since some areas were close to the maximum allowed, it is recommended that this study be completed biennially to ensure that no area exceeds our limits.

3.0 Scope:

Tray locations outside of the Congested Cable Area were reviewed to determine where significant concentrations of all types of cables exist. A significant concentration of cables is defined as being the equivalent of 3.5 standard 30" wide, fully loaded cable trays within a 20 ft. radius. These guidelines were set forth in PSCO letter P-88200 to the NRC dated June 13, 1988 (see NRC request #3). This evaluation is looking at all cables in trays including both IEEE-383 and non IEEE-383 cables.

4.0 Procedure:

Drawings E-88 rev P, E-89 rev R, and E-1948-1 rev A, were reviewed and marked up to show all 20 ft. radius areas of possible significant concentration of cables in cable trays. Highlighted on these drawings are all cable trays that presently are coated with flameastic (see attachments G, H and I). Trays that are coated with flameastic were not reviewed because they already are protected against fire propagation. See attachment F for the list of cable trays where flameastic has been applied. Drawings E-88 rev P, and E-89 rev R, for the Reactor and Turbine Buildings respectively have calculations completed to show the percent area fill for each 20 ft. radius area. Calculations are shown on attachment A. Attachment D was used in these calculations as it shows all cable trays that have tray fill calculated for the Reactor and Turbine Buildings.

Drawing E-1948-1 rev A shows cable trays for Building 10. Tray fill for these trays was done by hand. See attachment C which shows the calculations to find the percent area fill of each tray. The cable tabulation database (I-9301-700) and the tray file database were also used in these calculations. Each tray was found in the tray file database with all cables going thru that particular tray listed. Then each cable was found in the

cable tabulation database which listed the Bill Of Material (BOM) under which each cable was purchased. Attachment E lists by BOM number the area and diameter for each type of cable, used at FSV. By adding up all the areas of cables that run thru a specific tray and then dividing that number by the tray area, the percent area fill for each tray in Building 10, was calculated. (See attachment B).

At tray intersections the following criteria was used to evaluate the percent area fill. In areas were trays are physically together as one tray, even though they have different tray numbers along the routing, an average percent tray area fill was calculated within the 20 ft. radius. There are basically two types of intersections. Type 1 is called a T-type connection and considered to be two trays. At these connection points the following rules were used. The main run of tray had its percent fill calculated as an average percent fill for the tray even if it consisted of different tray numbers. Then the tray that intersected into the main run of trays had its tray fill added to the main run fill. See example below:

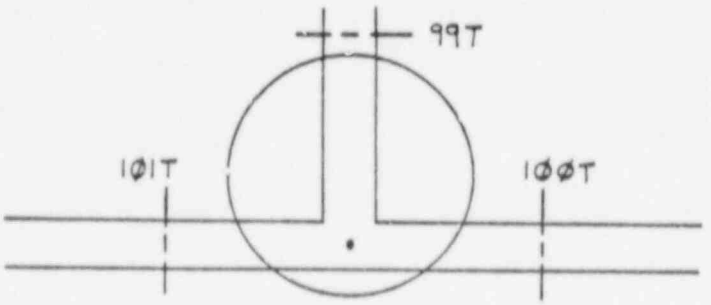

Trays 101T and 100T had their percent fill averaged and then tray 99T had its percent fill added to get a complete percent fill for this area.

The other type of intersection encountered was a H-type connection and was considered to be three trays. At these intersection points the same basic rules were used as for the T-type connection. Both main runs of tray had an average percent tray area fill calculated separately and then added together. Additionally the percent fill of the connecting tray was added. See example below:

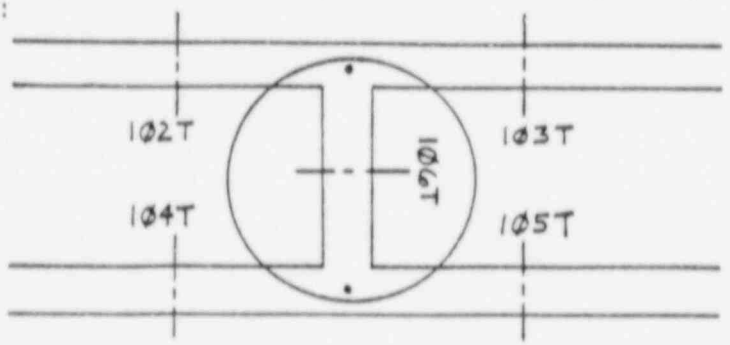

Trays 102T and 103T had their percent fill averaged. Trays 104T and 105T also had their fills averaged. Then tray 106T had its

percent fill added to the two other tray averages to get a total percent fill for this area.

Each area was considered to meet our criteria if its total percent area fill did not exceed 350%. It should be noted that this percent is based on a full tray being 40% full.

5.0 Evaluation:

No areas were found to exceed our criteria of 350% allowable tray fill for any 20 ft. radius area. Some areas were close to the maximum allowed. If a significant amount of cables are installed through these areas in the future it could put that area over the maximum 350% allowed fill level.

6.0 Conclusion:

Presently no further action is required. There are no 20 ft. radius areas presently that exceed the maximum fill for the area. This study should be completed biennially to ensure that no area exceeds our limits set forth in PSCO letter P-88200 (request #3).

7.0 References:

1) Cable Tabulation & Tray File Database (I-9301-700 Rev AB).

2) Drawing E-88 Rev P.

3) Drawing E-89 Rev R.

4) Drawing E-1948-1 Rev A.

5) Letter P-88200 dated June 13,1988 from PSCo to NRC.

8.0 Attachments:

A) Calculations for drawings E-88 rev P and E-89 rev R cable trays % fill (Reactor and Turbine Buildings).

B) Calculations for drawing E-1948-1 rev A cable trays % fill (Building 10).

C) Calculations for percent tray fill for individual Building 10 cable trays.

D) List of cable trays with tray fill calculated by the database.

E) Cable sizes listed by Bill Of Material.

F) List of trays coated with flameastic.

G) Drawing E-88, rev P.

H) Drawing E-89, rev R.

I) Drawing E-1948-1, rev A.

Public Service

FORT ST. VRAIN NUCLEAR GENERATING STATION
PUBLIC SERVICE COMPANY OF COLORADO
CALCULATION WORKSHEET

ATTACHMENT A

CALCULATION FOR		CALCULATION NUMBER
CABLE TRAYS % FILL FOR DRAWING E-89		EE-FP-0005
PREPARED BY D.J. Bordies	DATE 8/10/88	
REVIEWED BY	DATE	CALC. REV / PAGE 1 OF 23

DRAWING E-89 (BELOW ELEV 4811'-0")

AREA 1

TRAY	% FILL
126T →	31.79
126M →	17.91
126B →	4.95

TRAY	% FILL
127T →	41.16
127M →	19.74
127B →	4.63

TRAY	% FILL		AVG % FILL
131T →	37.57	=	36.84
131M →	24.03	=	20.56
131B →	5.28	=	4.95

TRAY	% FILL
R38 →	47.80

TRAY	% FILL
128T →	10.75
128M →	0.12

TRAY	% FILL
129T →	8.06
129M →	2.93

TRAY	% FILL		AVG % FILL
130T →	14.14	=	10.98
130M →	4.75	=	2.60

TOTAL % FILL FOR AREA 1 = 123.73

AREA 2

TRAY	% FILL
130T →	14.14
130M →	4.75

TRAY	% FILL
62T1 →	28.62
62M1 →	2.19
62B1 →	3.10

		AVG % FILL
=		21.38
=		3.47
=		3.10

TRAY	% FILL
131T →	37.57
131M →	24.03
131B →	5.28

TRAY	% FILL
132T →	40.14
132M →	29.75
132B →	11.36

TRAY	% FILL		AVG % FILL
83T →	41.16	=	39.62
83M →	31.66	=	28.48
83B →	12.33	=	9.66

TOTAL % FILL FOR AREA 2 = 105.71

AREA 3

TRAY	% FILL
88T →	46.90
88M →	29.25
88B →	9.98

TRAY	% FILL
91T →	46.43
91M →	27.67
91B →	8.91

TRAY	% FILL		AVG % FILL
94T →	39.34	=	44.22
94M →	25.62	=	27.51
94B →	6.55	=	8.48

TRAY	% FILL
89T →	8.20
89M →	12.70

TRAY	% FILL
72T2 →	57.97
72M2 →	21.91
72B2 →	5.51

TRAY	% FILL
90T →	52.80
90M →	18.41
90B →	2.35

TRAY	% FILL		AVG % FILL
93T →	65.79	=	58.85
93M →	19.90	=	21.74
—	—	=	3.93

TRAY	% FILL
92T →	21.20
92M →	3.21
92B →	2.35

TOTAL % FILL FOR AREA 3 = 212.39

CALCULATION FOR: CABLE TRAYS % FILL FOR DRAWING E-89
CALCULATION NUMBER: EE-FP-0005
PREPARED BY: DJ BONADIES DATE: 8/16/88
REVIEWED BY: DATE: CALC REV:

AREA 4

TRAY	%FILL
125T →	31.39
125M →	15.28
125B →	3.38

TRAY	%FILL
122T →	23.17
122M →	13.79
122B →	2.05

TRAY	%FILL
121T →	22.70
121M →	13.17
121B →	1.63

TRAY	%FILL	AVG %FILL
117T →	28.16	= 26.36
117M →	12.27	= 13.63
117B →	1.23	= 2.07

TRAY	%FILL
124T →	0.59

TRAY	%FILL
123T →	9.80

TRAY	%FILL
R35 →	16.95

TRAY	%FILL
R36 →	1.08

TOTAL % FILL FOR AREA 4 = 70.48

AREA 5

TRAY	%FILL
114T →	19.48
114M →	10.28
114B →	1.85

TRAY	%FILL
115T →	22.44
115M →	8.73
115B →	0.41

TRAY	%FILL	AVG %FILL
117T →	28.16	= 26.36
117M →	12.27	= 10.43
117B →	1.23	= 1.16

TRAY	%FILL
R32 →	2.60

TRAY	%FILL
R33 →	7.91

TRAY	%FILL
120T →	4.42

TRAY	%FILL
371T →	4.00

TRAY	%FILL
119T →	6.69

TRAY	%FILL	AVG %FILL
118T →	33.92	= 12.26

TRAY	%FILL
R34 →	38.69

TRAY	%FILL
393 →	2.77

TRAY	%FILL
116T →	6.74
116M →	0.25

TOTAL % FILL FOR AREA 5 = 109.17

AREA 6

TRAY	%FILL
99T →	32.21
99M →	19.58
99B →	4.02

TRAY	%FILL	AVG %FILL
110T →	21.96	= 27.09
110M →	18.83	= 19.21
110B →	3.55	= 3.79

TRAY	%FILL
112 →	36.67

TRAY	%FILL
113 →	23.28

TRAY	%FILL
R27 →	32.08

TRAY	%FILL
R28 →	17.94

TRAY	%FILL
R29 →	34.97

TRAY	%FILL
R30 →	55.86

TRAY	%FILL
R31 →	18.47

TOTAL % FILL FOR AREA 6 = 269.36

Public Service

FORT ST. VRAIN NUCLEAR GENERATING STATION

PUBLIC SERVICE COMPANY OF COLORADO

CALCULATION WORKSHEET

CALCULATION FOR: CABLE TRAYS %FILL FOR DRAWING E-89

CALCULATION NUMBER: EE-FP-0005

PREPARED BY: D. J. Bonadies DATE: 8/10/88

REVIEWED BY: DATE: CALC REV:

AREA 7

TRAY	%FILL
110T →	21.96
110M →	18.83
110B →	3.55

TRAY	%FILL
99T →	32.21
99M →	19.58
99B →	4.02

TRAY	%FILL
98T →	31.31
98M →	20.45
98B →	2.41

TRAY	%FILL		AVG %FILL
107T →	49.12	=	33.65
107M →	32.13	=	22.75
107B →	2.58	=	3.14

TRAY	%FILL
109T →	31.61
109M →	20.84

TRAY	%FILL
108T →	37.94
108M →	26.19

TRAY	%FILL
R25 →	73.35

TRAY	%FILL
R26 →	59.39

TRAY	%FILL
R27 →	32.68

TOTAL % FILL FOR AREA 7 = 340.94

AREA 8

TRAY	%FILL
99T →	32.21
99M →	19.58
99B →	4.02

TRAY	%FILL
98T →	31.31
98M →	20.45
98B →	2.41

TRAY	%FILL
107T →	49.12
107M →	32.13
107B →	2.58

TRAY	%FILL		AVG %FILL
95T →	50.72	=	40.84
95M →	32.11	=	26.07
95B →	5.83	=	3.71

TRAY	%FILL
109T →	31.61
109M →	20.84

TRAY	%FILL
108T →	37.94
108M →	26.19

TRAY	%FILL
R25 →	73.35

TRAY	%FILL
R26 →	59.39

TOTAL % FILL FOR AREA 8 = 319.94

Public Service

FORT ST. VRAIN NUCLEAR GENERATING STATION

PUBLIC SERVICE COMPANY OF COLORADO

CALCULATION WORKSHEET

CALCULATION FOR		CALCULATION NUMBER
CABLE TRAYS % FILL FOR DRAWING E-89		EE-FP-0005
PREPARED BY D.J. Bonadies	DATE 8/10/88	
REVIEWED BY	DATE	CALC. REV.

AREA 9

TRAY	% FILL	TRAY	% FILL	TRAY	% FILL	TRAY	% FILL		AVG % FILL
93T →	65.79	97T →	48.25	96T →	40.47	94T →	39.48	=	48.50
93M →	14.90	97M →	17.32	96M →	24.68	94M →	25.62	=	20.63
						94B →	6.55	=	6.55

TRAY	% FILL	TRAY	% FILL	TRAY	% FILL		AVG % FILL
102T →	9.09	101T →	8.[illegible]	100T →	63.60	=	27.10
102M →	6.70	101M →	[illegible]	100M →	8.48	=	7.78

TRAY	% FILL
95T →	50.72
95M →	32.11
95B →	5.83

TRAY	% FILL	TRAY	% FILL	TRAY	% FILL	TRAY	% FILL	TRAY	% FILL	TRAY	% FILL
103 →	13.05	104 →	29.59	105 →	39.07	R23 →	10.10	R24 →	31.05	R195 →	16.30

TOTAL % FILL FOR AREA 9 = 338.38

Public Service

FORT ST. VRAIN NUCLEAR GENERATING STATION

PUBLIC SERVICE COMPANY OF COLORADO

CALCULATION WORKSHEET

CALCULATION FOR		CALCULATION NUMBER
CABLE TRAYS % FILL FOR DRAWING E-89		EE-FP-0005
PREPARED BY D.J. Bonadies	DATE 8/10/88	
REVIEWED BY	DATE	CALC. REV.
		PAGE 5 OF 23

DRAWING E-89 (BELOW ELEV 4829'-0")

AREA 10

TRAY	% FILL
143T →	11.66
143M →	4.50
143B →	11.80

TRAY	% FILL
145T →	13.32
145M →	2.37
145B →	6.60

TRAY	% FILL
147T →	10.51
147M →	2.49
147B →	6.60

TRAY	% FILL		AVG % FILL
150T →	8.75	=	11.06
150M →	2.37	=	2.93
150B →	6.43	=	7.86

TRAY	% FILL
144T →	2.42
144M →	3.71
144B →	4.21

TRAY	% FILL
146T →	1.54
146M →	1.20
146B →	0.21

TRAY	% FILL
148T →	5.30
148M →	1.20
148B →	0.21

TRAY	% FILL		AVG % FILL
149T →	6.80	=	4.02
149M →	2.08	=	2.05
149B →	0.00	=	1.16

TRAY	% FILL
R35 →	16.95

TRAY	% FILL
R36 →	1.08

TOTAL % FILL FOR AREA 10 = 47.11

AREA 11

TRAY	% FILL
147T →	10.51
147M →	2.44
147B →	6.60

TRAY	% FILL
150T →	8.75
150M →	2.37
150B →	6.43

TRAY	% FILL
152T →	7.29
152M →	2.56
152B →	3.05

TRAY	% FILL		AVG % FILL
153T →	6.37	=	8.23
153M →	1.25	=	2.16
153B →	2.75	=	4.71

TRAY	% FILL
148T →	5.30
148M →	1.20
148B →	0.21

TRAY	% FILL		AVG % FILL
149T →	6.80	=	6.05
149M →	2.08	=	1.64
149B →	0.00	=	0.21

TRAY	% FILL
151T →	4.53
151M →	1.15

TRAY	% FILL
R32 →	2.66

TRAY	% FILL
R33 →	7.91

TRAY	% FILL
R42 →	5.05

TOTAL % FILL FOR AREA 11 = 44.24

Public Service

FORT ST. VRAIN NUCLEAR GENERATING STATION
PUBLIC SERVICE COMPANY OF COLORADO
CALCULATION WORKSHEET

CALCULATION FOR		CALCULATION NUMBER
CABLE TRAYS % FILL FOR DRAWING E-89		EE-FP-0005
PREPARED BY D.J. Bonadies	DATE 8/10/88	
REVIEWED BY	DATE	CALC. REV / PAGE 6 OF 23

AREA 12

TRAY	%FILL	TRAY	%FILL	TRAY	%FILL	TRAY	%FILL	TRAY	%FILL	AVG %FILL
155T →	5.00	156T →	8.28	157T →	8.28	158T →	9.58	161T →	15.35	= 9.30
155M →	1.77	156M →	1.77	157M →	1.77	158M →	6.34	161M →	7.89	= 3.91
155B →	1.27	156B →	1.27	157B →	0.88	158B →	1.16	161B →	0.75	= 1.07

TRAY	%FILL	TRAY	%FILL	TRAY	%FILL	TRAY	%FILL	TRAY	%FILL
162T →	6.16	160 →	38.67	159 →	12.78	R30 →	55.86	R31 →	18.47
162M →	21.30								
162B →	0.66								

TOTAL % FILL FOR AREA 12 = 168.18

AREA 13

TRAY	%FILL	TRAY	%FILL	TRAY	%FILL	TRAY	%FILL	AVG %FILL
167T →	26.25	166T →	9.83	165T →	12.70	164T →	12.70	= 17.87
167M →	3.74	166M →	10.82	165M →	12.17	164M →	11.88	= 9.65
167B →	9.16	166B →	6.30	165B →	5.94	164B →	5.38	= 5.45

TRAY	%FILL
168T →	9.29
168M →	4.79
168B →	0.48

TOTAL % FILL FOR AREA 13 = 47.53

AREA 14

TRAY	%FILL	TRAY	%FILL	TRAY	%FILL	AVG %FILL
166T →	19.83	165T →	12.70	164T →	12.70	= 15.08
166M →	10.82	165M →	12.17	164M →	11.88	= 11.62
166B →	6.30	165B →	5.94	164B →	5.38	= 5.87

TRAY	%FILL
168T →	9.29
168M →	4.79
168B →	0.48

TRAY	%FILL	TRAY	%FILL	TRAY	%FILL	AVG %FILL
173T →	34.97	171T →	32.21	172T →	33.54	= 33.57
173M →	19.67	171M →	16.11	172M →	14.78	= 16.85
173B →	1.18	171B →	0.70	172B →	0.70	= 0.86

TOTAL % FILL FOR AREA 14 = 98.41

Public Service

FORT ST. VRAIN NUCLEAR GENERATING STATION

PUBLIC SERVICE COMPANY OF COLORADO

CALCULATION WORKSHEET

CALCULATION FOR		CALCULATION NUMBER
CABLE TRAYS % FILL FOR DRAWING E-89		EE-FP-0005
PREPARED BY DJ Bordie	DATE 8/17/88	
REVIEWED BY	DATE	CALC REV / PAGE 7 OF 23

AREA 15

TRAY	% FILL
169T →	21.04
169M →	13.71
169B →	1.02

TRAY	% FILL
170T →	33.72
170M →	15.57
170B →	0.86

TRAY	% FILL
171T →	32.21
171M →	16.11
171B →	0.70

TRAY	% FILL
172T →	33.54
172M →	14.78
172B →	0.70

TRAY	% FILL	AVG % FILL
173T →	34.97 =	31.10
173M →	19.67 =	15.97
173B →	1.18 =	0.89

TRAY	% FILL
168T →	9.29
168M →	4.79
168B →	0.48

TRAY	% FILL
R43 →	4.91

TRAY	% FILL
R43A →	4.29

TRAY	% FILL
R23 →	10.10

TRAY	% FILL
R44 →	11.09

TOTAL % FILL FOR AREA 15 = 107.91

AREA 16

TRAY	% FILL
170T →	33.72
170M →	15.57
170B →	0.86

TRAY	% FILL
171T →	32.21
171M →	16.11
171B →	0.70

TRAY	% FILL
172T →	33.54
172M →	14.78
172B →	0.70

TRAY	% FILL
173T →	34.97
173M →	19.67
173B →	1.18

TRAY	% FILL	AVG % FILL
174T →	27.97 =	32.48
174M →	19.54 =	17.13
174B →	1.78 =	1.04

TRAY	% FILL
168T →	9.29
168M →	4.79
168B →	0.48

TRAY	% FILL
R23 →	10.10

TRAY	% FILL
R44 →	11.09

TRAY	% FILL
R45 →	44.39

TOTAL % FILL FOR AREA 16 = 132.78

AREA 17

TRAY	% FILL
174T →	27.97
174M →	19.54
174B →	1.78

TRAY	% FILL
175T →	45.50
175M →	23.95
175B →	2.30

TRAY	% FILL	AVG % FILL
176T →	47.20 =	40.22
176M →	28.98 =	24.16
176B →	2.55 =	2.21

TRAY	% FILL
R46 →	58.44

TRAY	% FILL
R21 →	14.52

TRAY	% FILL
R22 →	16.00

TRAY	% FILL
133T →	17.87
133M →	27.21
133B →	4.40

TRAY	% FILL	AVG % FILL
134T →	34.51 =	26.19
134M →	26.86 =	23.61
134B →	11.33 =	7.87

TOTAL % FILL FOR AREA 17 = 213.22

Public Service

FORT ST. VRAIN NUCLEAR GENERATING STATION
PUBLIC SERVICE COMPANY OF COLORADO
CALCULATION WORKSHEET

CALCULATION FOR: CABLE TRAYS % FILL FOR DRAWING E-89
CALCULATION NUMBER: EE-FP-0005
PREPARED BY: D.J. Bonaduce DATE: 8/10/88
REVIEWED BY: DATE: CALC REV:
PAGE 8 OF 23

DRAWING E-89 (BELOW ELEV 4864'-0")

AREA 18

TRAY	% FILL	TRAY	% FILL	AVG % FILL
178T →	4.25	366T →	13.82	= 9.04
178M →	12.82	366M →	3.11	= 7.97

TRAY	% FILL
177T →	16.48
177M →	15.54

TRAY	% FILL
R47 →	53.13

TRAY	% FILL
R48 →	38.29

TRAY	% FILL
R39 →	10.56

TRAY	% FILL
R49 →	15.91

TRAY	% FILL
R50 →	8.26

TRAY	% FILL
R191 →	20.43

TRAY	% FILL
R192 →	5.34

TOTAL % FILL FOR AREA 18 = 200.95

AREA 19

TRAY	% FILL	TRAY	% FILL	AVG % FILL
390T →	11.60	181T →	10.71	= 11.16
390M →	13.57	181M →	14.20	= 13.89

TRAY	% FILL
391T →	8.80
391M →	2.94

TRAY	% FILL	TRAY	% FILL	TRAY	% FILL	AVG % FILL
180T →	25.80	182T →	8.71	183T →	0.00	= 11.50
180M →	28.08	182M →	14.55	183M →	4.40	= 15.68
180B →	6.73	182B →	2.58	183B →	0.00	= 3.10

TRAY	% FILL
185T →	47.26
185M →	33.67
185B →	10.76

TRAY	% FILL
R39 →	10.56

TRAY	% FILL
R47 →	53.13

TRAY	% FILL
R48 →	38.29

TRAY	% FILL
R49 →	15.91

TRAY	% FILL
R50 →	8.26

TRAY	% FILL
R51 →	22.33

TRAY	% FILL
R52 →	13.56

TRAY	% FILL
R53 →	22.34

TRAY	% FILL
R54 →	2.21

TOTAL % FILL FOR AREA 19 = 345.35

Public Service

FORT ST. VRAIN NUCLEAR GENERATING STATION
PUBLIC SERVICE COMPANY OF COLORADO
CALCULATION WORKSHEET

CALCULATION FOR: CABLE TRAYS % FILL FOR DRAWING E-89
CALCULATION NUMBER: EE-FR-0005
PREPARED BY: D.J. Bonadies — DATE: 8/10/88
REVIEWED BY: — DATE: — CALC. REV.
PAGE 9 OF 23

DRAWING E-89 (BELOW ELEV 4904'-0")

AREA 20

TRAY	% FILL	TRAY	% FILL		AVG % FILL
188T →	4.5%	187T →	4.5%	=	4.5%
188M →	0.00%	187M →	1.51	=	0.76
188B →	3.4%	187B →	3.4%	=	3.4%

TRAY	% FILL
R52 →	13.56
R53 →	22.34
R54 →	2.21
R55 →	12.86
R56 →	21.26

TOTAL % FILL FOR AREA 20 = 80.89

AREA 21

TRAY	% FILL	TRAY	% FILL		AVG % FILL
190 →	11.71	191 →	8.2%	=	9.96

TRAY	% FILL
189 →	3.4%
R55 →	12.86
R56 →	21.26

TOTAL % FILL FOR AREA 21 = 47.48

Public Service

FORT ST. VRAIN NUCLEAR GENERATING STATION

PUBLIC SERVICE COMPANY OF COLORADO

CALCULATION WORKSHEET

CALCULATION FOR: CABLE TRAYS % FILL FOR DRAWING E-88			CALCULATION NUMBER: EE-FP-0005
PREPARED BY: D J Bonadies	DATE: 8/10/88		
REVIEWED BY:	DATE:	CALC. REV:	PAGE 10 OF 23

DRAWING E-88 (BELOW ELEV. 4881'-8")

AREA 22

TRAY	% FILL	TRAY	% FILL	TRAY	% FILL	AVG % FILL
200T	3.83	201T	1.04	203T	13.65	6.17
200M	10.89	201M	2.33	203M	12.49	8.57
200B	12.88	201B	6.66	203B	4.78	8.11

TRAY	% FILL
202T	0.00
202M	0.00
202B	2.50

TRAY	% FILL	TRAY	% FILL	TRAY	% FILL	TRAY	% FILL	TRAY	% FILL	TRAY	% FILL
R158	30.88	R159	21.44	R160	5.02	R161	2.38	R162	8.58	R163	11.41

TRAY	% FILL	TRAY	% FILL	TRAY	% FILL	TRAY	% FILL
379	13.09	380	7.06	381	8.53	382	9.81

TOTAL % AREA FILL FOR AREA 22 = 143.55

AREA 23

TRAY	% FILL	TRAY	% FILL	TRAY	% FILL	AVG % FILL
204T	18.03	205T	7.08	206T	23.48	16.20
204M	15.08	205M	13.21	206M	22.37	16.89
204M	23.51	205B	19.83	206B	20.95	21.43

TRAY	% FILL
208T	8.35
208M	5.78
208B	9.30

TRAY	% FILL	TRAY	% FILL	TRAY	% FILL	TRAY	% FILL	TRAY	% FILL
377	9.44	378	3.87	379	13.09	381	8.53	382	9.81

TRAY	% FILL	TRAY	% FILL
383	5.87	384	7.77

TOTAL % AREA FILL FOR AREA 23 = 136.33

AREA 24

TRAY	% FILL	TRAY	% FILL	TRAY	% FILL	AVG % FILL
204T	18.03	205T	7.08	206T	23.48	16.20
204M	15.08	205M	13.21	206M	22.37	16.89
204B	23.51	205B	19.83	206B	20.95	21.43

TRAY	% FILL
208T	8.35
208M	5.78
208B	9.30

TRAY	% FILL	TRAY	% FILL	TRAY	% FILL	TRAY	% FILL
R188	28.77	382	9.81	383	5.87	384	7.77

TOTAL % AREA FILL FOR AREA 24 = 130.17

Form (8) 344-24-4300

Public Service

FORT ST. VRAIN NUCLEAR GENERATING STATION
PUBLIC SERVICE COMPANY OF COLORADO
CALCULATION WORKSHEET

CALCULATION FOR			CALCULATION NUMBER
CABLE TRAYS & FILL FOR DRAWING E-88			EE-FP-0005
PREPARED BY J. Bonadies	DATE 8/10/88		
REVIEWED BY	DATE	CALC. REV.	PAGE 11 OF 23

AREA 25

TRAY	%FILL
198T →	5.10
198M →	13.21
198B →	7.53

TRAY	%FILL
207T →	23.78
207M →	22.81
207B →	20.81

TRAY	%FILL
206T →	23.48
206M →	22.37
206B →	20.45

TRAY	%FILL		AVG %FILL
205T →	7.08	=	14.86
205M →	13.21	=	17.90
205B →	19.63	=	17.28

TRAY	%FILL
377 →	9.44

TRAY	%FILL
378 →	3.87

TRAY	%FILL
379 →	13.09

TRAY	%FILL
380 →	7.06

TRAY	%FILL
381 →	8.53

TRAY	%FILL
382 →	9.81

TRAY	%FILL
383 →	5.87

TRAY	%FILL
384 →	7.77

TOTAL % FILL FOR AREA 25 = 115.48

AREA 26

TRAY	%FILL
200T →	3.83
200M →	10.89
200B →	12.88

TRAY	%FILL
199T →	6.43
199M →	12.58
199B →	10.91

	AVG %FILL
=	5.13
=	11.74
=	11.90

TRAY	%FILL
385M →	0.00
385B →	0.00

TRAY	%FILL
379 →	13.09

TRAY	%FILL
380 →	7.06

TRAY	%FILL
R161 →	2.37

TRAY	%FILL
R162 →	8.13

TRAY	%FILL
R163 →	11.41

TOTAL % FILL FOR AREA 26 = 71.29

AREA 27

TRAY	%FILL
199T →	6.43
199M →	12.58
199B →	10.91

TRAY	%FILL
198T →	5.10
198M →	13.21
198B →	7.53

TRAY	%FILL
207T →	23.78
207M →	22.81
207B →	20.81

	AVG %FILL
=	11.77
=	16.20
=	13.08

TRAY	%FILL
197T →	25.65
197M →	27.00
197B →	26.88

TRAY	%FILL
36A →	1.69

TRAY	%FILL
R193 →	7.20

TRAY	%FILL
377 →	9.44

TRAY	%FILL
378 →	3.87

TRAY	%FILL
379 →	13.09

TRAY	%FILL
380 →	7.06

TRAY	%FILL
385M →	9.00
385B →	0.00

TOTAL % FILL FOR AREA 27 = 169.43

Public Service

FORT ST. VRAIN NUCLEAR GENERATING STATION

PUBLIC SERVICE COMPANY OF COLORADO

CALCULATION WORKSHEET

CALCULATION FOR: CABLE TRAYS % FILL FOR DRAWING E-88

CALCULATION NUMBER: EE-FP-0005

PREPARED BY: D.J. Borades DATE: 8/10/88

REVIEWED BY: DATE: CALC. REV: PAGE: 12 OF 23

AREA 28

TRAY	% FILL
199T →	6.43
199M →	12.58
199B →	10.91

TRAY	% FILL
198T →	5.10
198M →	13.21
198B →	7.53

TRAY	% FILL
207T →	23.73
207M →	22.81
207B →	20.81

TRAY	% FILL
206T →	23.48
206M →	22.37
206B →	20.95

AVG % FILL
14.70
17.74
15.05

TRAY	% FILL
192T →	34.20
192M →	34.12
192B →	27.71

TRAY	% FILL
197T →	25.65
197M →	33.00
197B →	26.88

AVG % FILL
29.93
33.56
27.30

TRAY	% FILL
369 →	69
R193 →	70

TRAY	% FILL
370 →	4.80
377 →	9.44

TRAY	% FILL
186T →	7.60
186M →	8.70
186B →	2.17

TRAY	% FILL
R49 →	15.91

TRAY	% FILL
R50 →	8.26

TRAY	% FILL
R51 →	22.33

TRAY	% FILL
R52 →	13.56

TRAY	% FILL
378 →	3.87

TRAY	% FILL
379 →	13.09

TOTAL % FILL FOR AREA 28 = 257.40

Public Service

FORT ST. VRAIN NUCLEAR GENERATING STATION

PUBLIC SERVICE COMPANY OF COLORADO

CALCULATION WORKSHEET

CALCULATION FOR: CABLE TRAYS % FILL FOR DRAWING E-88

CALCULATION NUMBER: EE-FP-0005

PREPARED BY: DJ Bonadies | DATE: 8/10/88

REVIEWED BY: | DATE: | CALC. REV.

PAGE 13 OF 23

DRAWING E-88 (BELOW 4864'-0")

AREA 29

TRAY	%FILL
218T →	20.01
218M →	11.93
218B →	9.15

TRAY	%FILL
217T →	14.98
217M →	10.74
217B →	4.98

TRAY	%FILL
216T →	12.78
216M →	9.97
216B →	4.51

TRAY	%FILL
215T →	2.37
215M →	8.97
215B →	5.48

TRAY	%FILL
214T →	10.19
214M →	1.09
214B →	4.53

AVG % FILL
12.07
8.54
5.73

TRAY	%FILL
R181 →	2.47

TRAY	%FILL
R182 →	4.13

TRAY	%FILL
R183 →	10.05

TRAY	%FILL
R158 →	30.88

TRAY	%FILL
R159 →	21.44

TRAY	%FILL
R160 →	5.02

TOTAL % FILL FOR AREA 29 = 100.33

AREA 30

TRAY	%FILL
217T →	14.98
217M →	10.74
217B →	4.98

TRAY	%FILL
216T →	12.78
216M →	9.97
216B →	4.51

TRAY	%FILL
215T →	2.37
215M →	8.97
215B →	5.48

TRAY	%FILL
214T →	10.19
214M →	1.09
214B →	4.53

TRAY	%FILL
213T →	8.86
213M →	9.68
213B →	9.23

TRAY	%FILL		AVG % FILL
212T →	16.73	=	10.99
212M →	15.98	=	9.41
212B →	8.50	=	6.21

TRAY	%FILL
R158 →	30.88

TRAY	%FILL
R159 →	21.44

TRAY	%FILL
R160 →	5.02

TRAY	%FILL
R161 →	2.38

TRAY	%FILL
R164 →	21.80

TRAY	%FILL
R165 →	30.22

TRAY	%FILL
R166 →	14.77

TOTAL % FILL FOR AREA 30 = 153.12

AREA 31

TRAY	%FILL
214T →	10.19
214M →	1.09
214B →	4.53

TRAY	%FILL
213T →	8.86
213M →	9.68
213B →	9.23

TRAY	%FILL		AVG % FILL
212T →	16.73	=	11.93
212M →	15.98	=	8.92
212B →	8.50	=	7.42

TRAY	%FILL
388 →	41.50

TRAY	%FILL
R161 →	2.38

TRAY	%FILL
R164 →	21.80

TRAY	%FILL
R165 →	30.22

TRAY	%FILL
R166 →	14.77

TOTAL % FILL FOR AREA 31 = 138.94

Public Service

FORT ST. VRAIN NUCLEAR GENERATING STATION
PUBLIC SERVICE COMPANY OF COLORADO
CALCULATION WORKSHEET

CALCULATION FOR		CALCULATION NUMBER
CABLE TRAYS % FILL FOR DRAWING E-88		EE-FP-0005
PREPARED BY D.J Bonaldes	DATE 8/10/88	
REVIEWED BY	DATE	CALC REV / PAGE 14 OF 23

AREA 32

TRAY	% FILL
221T →	21.67
221M →	21.28
221B →	8.73

TRAY	% FILL	AVG % FILL
210T →	39.02	
210M →	29.63	
210B →	14.75	
	=	30.35
	=	25.46
	=	11.74

TRAY	% FILL
211T →	27.75
211M →	8.98
211B →	7.78

TRAY	% FILL
388 →	41.50

TOTAL % FILL FOR AREA 32 = 153.56

Public Service

FORT ST. VRAIN NUCLEAR GENERATING STATION
PUBLIC SERVICE COMPANY OF COLORADO
CALCULATION WORKSHEET

CALCULATION FOR: CABLE TRAYS % FILL FOR DRAWING E-88
CALCULATION NUMBER: EE-FP-0005
PREPARED BY: DJ Bonadies | DATE: 8/10/88
REVIEWED BY: | DATE: | CALC. REV.
PAGE 15 OF 23

DRAWING E-88 (BELOW ELEV. 4829'-0")

AREA 33

TRAY	% FILL	TRAY	% FILL	TRAY	% FILL	TRAY	% FILL	TRAY	% FILL	TRAY	% FILL	AVG % FILL
260T	3.26	259T	3.70	256T	3.3	255T	3.30	254T	2.00	253T	2.62	= 3.03
260M	4.50	259M	5.27	256M	5.87	255M	5.67	254M	6.88	253M	2.94	= 5.19
260B	7.63	259B	18.93	256B	18.68	255B	[illegible]	254B	23.50	253B	14.60	= 16.99

TRAY	% FILL	TRAY	% FILL	AVG % FILL
257T	5.30	258T	0.00	= 2.65
257M	0.26	258M	0.26	= 0.26
257B	10.50	258B	10.50	= 10.50

TRAY	% FILL	TRAY	% FILL	TRAY	% FILL
R181	2.47	R182	4.13	R183	10.05
R167	7.61	R168	11.05	R169	12.16

TOTAL % FILL FOR AREA 33 = 86.12

AREA 34

TRAY	% FILL	TRAY	% FILL	TRAY	% FILL	TRAY	% FILL	TRAY	% FILL	AVG % FILL
255T	3.30	254T	2.00	253T	2.62	252T	2.25	251T	2.08	= 2.45
255M	5.67	254M	6.88	253M	2.94	252M	9.07	251M	10.44	= 7.00
255B	18.60	254B	23.50	253B	14.60	252B	29.85	251B	20.54	= 21.42

TRAY	% FILL	TRAY	% FILL	AVG % FILL
257T	5.30	258T	0.00	= 2.65
257M	0.26	258M	0.26	= 0.26
257B	10.50	258B	10.50	= 10.50

TRAY	% FILL	TRAY	% FILL	TRAY	% FILL
R167	7.61	R168	11.05	R169	12.16
R170	33.44	R171	32.94	R172	35.22

TOTAL % FILL FOR AREA 34 = 181.73

AREA 35

TRAY	% FILL	TRAY	% FILL	TRAY	% FILL	AVG % FILL
262T	3.78	263T	2.13	249T	2.91	= 2.94
262M	8.78	263M	10.00	249M	12.05	= 10.28
262B	6.88	263B	8.47	249B	19.75	= 11.70

TRAY	% FILL	TRAY	% FILL	AVG % FILL
248T	4.17	247T	5.90	= 5.04
248M	16.16	247M	19.13	= 17.65
248B	18.86	247B	19.30	= 19.08

TOTAL % FILL FOR AREA 35 = 66.69

Public Service

FORT ST. VRAIN NUCLEAR GENERATING STATION
PUBLIC SERVICE COMPANY OF COLORADO
CALCULATION WORKSHEET

CALCULATION FOR		CALCULATION NUMBER
CABLE TRAYS % FILL FOR DRAWING E-88		EE-FP-0005
PREPARED BY DJ Ronalies	DATE 8/10/88	
REVIEWED BY	DATE	CALC REV / PAGE 16 OF 23

DRAWING E-88 (BELOW ELEV. 4816'-0")

AREA 36

TRAY	% FILL	TRAY	% FILL	TRAY	% FILL
R167 →	7.61	R168 →	11.08	R169 →	12.16
R170 →	33.44	R171 →	37.94	R172 →	35.22

TOTAL % FILL FOR AREA 36 = 137.45

AREA 37

TRAY	% FILL	TRAY	% FILL		AVG % FILL
264T →	2.53	265T →	4.15	=	3.34
264M →	4.86	265M →	5.40	=	5.13
264B →	1.25	265B →	1.25	=	1.25

TRAY	% FILL	TRAY	% FILL		AVG % FILL
271T →	14.69	270T →	15.50	=	15.10
271M →	0.73	270M →	1.48	=	1.11
271B →	0.88	270B →	0.88	=	0.88

TOTAL % FILL FOR AREA 37 = 26.81

Public Service

FORT ST. VRAIN NUCLEAR GENERATING STATION
PUBLIC SERVICE COMPANY OF COLORADO
CALCULATION WORKSHEET

CALCULATION FOR: CABLE TRAYS % FILL FOR DRAWING E-88
CALCULATION NUMBER: EE-FP-0005
PREPARED BY: D.J. Bonadies DATE: 8/10/88
REVIEWED BY: DATE: CALC. REV: PAGE: 17 OF 23

DRAWING E-88 (BELOW ELEV. 4791'-0" & 4801'-0")

AREA 38

TRAY % FILL	TRAY % FILL	AVG % FILL
291T → 30.94	292T → 30.22	= 30.58
291M → 15.31	292M → 14.91	= 15.11
293T → 19.59	295T → 9.03	= 14.31
293M → 9.46	295M → 1.38	= 5.42
293B → 12.25	295B → 9.00	= 10.63

TRAY % FILL R187 → 12.47	TRAY % FILL R186 → 30.30	TRAY % FILL R174 → 12.08	TRAY % FILL R173 → 29.38	TRAY % FILL R175 → 15.30
TRAY % FILL R176 → 7.75	TRAY % FILL R177 → 18.75	TRAY % FILL 294B → 9.00		

TOTAL % FILL FOR AREA 38 = 211.08

AREA 39

TRAY % FILL	TRAY % FILL	TRAY % FILL	TRAY % FILL	AVG % FILL
293T → 19.59	295T → 9.03	296T → 3.07	367T → 1.71	= 8.35
293M → 9.46	295M → 1.38	296M → 9.15	367M → 4.32	= 6.08
293B → 12.25	295B → 9.00	296B → 19.47	— —	= 13.57

TRAY % FILL R173 → 29.38	TRAY % FILL R174 → 12.08	TRAY % FILL R175 → 15.30	TRAY % FILL R176 → 7.75	TRAY % FILL R177 → 18.75
TRAY % FILL R178 → 40.25	TRAY % FILL R179 → 35.72	TRAY % FILL R180 → 28.75	TRAY % FILL 294B → 9.00	TRAY % FILL 297B → 11.80

TOTAL % FILL FOR AREA 39 = 235.98

AREA 40

TRAY % FILL 291T → 30.94, 291M → 15.31	TRAY % FILL R187 → 12.47	TRAY % FILL R186 → 30.30	TRAY % FILL R185 → 59.27	TRAY % FILL R184 → 41.91
TRAY % FILL 290T → 63.42, 290M → 52.17	TRAY % FILL 289B → 6.97			

TOTAL % FILL FOR AREA 40 = 312.71

Public Service

FORT ST. VRAIN NUCLEAR GENERATING STATION

PUBLIC SERVICE COMPANY OF COLORADO

CALCULATION WORKSHEET

CALCULATION FOR: CABLE TRAYS % FILL FOR DRAWING E-88			CALCULATION NUMBER: EE-FP-0005
PREPARED BY: DJ Bonadies	DATE: 8/10/88		
REVIEWED BY:	DATE:	CALC. REV:	PAGE 18 OF 23

AREA 41

TRAY	% FILL	TRAY	% FILL	TRAY	% FILL	TRAY	% FILL	TRAY	% FILL	AVG % FILL
289T	44.40	288T	48.25	287T	49.88	285T	50.53	284T	51.07	48.83
289M	38.40	288M	44.51	287M	48.28	285M	47.28	284M	48.63	45.42
289B	6.97	288B	9.38	287B	16.88	285B	15.83	284B	15.61	12.93

TRAY	% FILL	TRAY	% FILL
289B	6.97	286B	4.19

TOTAL % FILL FOR AREA 41 = 118.34

AREA 42

TRAY	% FILL	TRAY	% FILL	TRAY	% FILL	TRAY	% FILL
283T	51.07	R189	63.94	R190	61.48	368T	1.71
283M	48.36					368M	3.84

TRAY	% FILL	TRAY	% FILL	AVG % FILL
282T	50.80	281T	52.38	51.59
282M	52.13	281M	58.21	55.17

TOTAL % FILL FOR AREA 42 = 337.16

Public Service

FORT ST. VRAIN NUCLEAR GENERATING STATION
PUBLIC SERVICE COMPANY OF COLORADO
CALCULATION WORKSHEET

CALCULATION FOR: CABLE TRAYS % FILL FOR DRAWING E-88
CALCULATION NUMBER: EE-FP-0005
PREPARED BY: DJ Bonadies | DATE: 8/10/88
REVIEWED BY: | DATE: | CALC. REV.: | PAGE 19 OF 23

DRAWING E-88 (BELOW ELEV 4771'-0")

AREA 43

TRAY	% FILL	TRAY	% FILL	TRAY	% FILL	TRAY	% FILL	AVG % FILL
324T →	30.31	325T →	49.37	326T →	49.37	327T →	17.34	= 36.60
324M →	16.91	325M →	28.51	326M →	26.57	327M →	9.51	= 23.38

TRAY	% FILL	TRAY	% FILL	TRAY	% FILL	TRAY	% FILL
R184 →	41.91	R185 →	59.22	R186 →	30.30	R187 →	12.47

TOTAL % FILL FOR AREA 43 = 200.88

AREA 44

TRAY	% FILL	TRAY	% FILL	AVG % FILL
326T →	49.37	327T →	17.34	= 33.36
326M →	26.57	327M →	9.51	= 18.04

TRAY	% FILL	TRAY	% FILL	TRAY	% FILL	TRAY	% FILL
R186 →	30.30	R187 →	12.47	R175 →	15.30	R176 →	7.75

TRAY	% FILL
R177 →	18.75

TOTAL % FILL FOR AREA 44 = 135.97

AREA 45

TRAY	% FILL	TRAY	% FILL	TRAY	% FILL
R175 →	15.30	R176 →	7.75	R177 →	18.75

TRAY	% FILL	TRAY	% FILL	TRAY	% FILL
R178 →	40.25	R179 →	35.72	R180 →	28.75

TOTAL % FILL FOR AREA 45 = 146.52

Public Service

FORT ST. VRAIN NUCLEAR GENERATING STATION
PUBLIC SERVICE COMPANY OF COLORADO
CALCULATION WORKSHEET

CALCULATION FOR			CALCULATION NUMBER
CABLE TRAYS % FILL FOR DRAWING E-88			EE-FP-0005
PREPARED BY D.J. Bonadies	DATE 8/10/88		
REVIEWED BY	DATE	CALC. REV.	PAGE 20 OF 23

AREA 46

TRAY	% FILL
R178 →	40.25

TRAY	% FILL
R179 →	35.72

TRAY	% FILL
R180 →	28.75

TRAY	% FILL
323T →	27.25
323M →	10.42

TRAY	% FILL
319T →	1.84
319M →	4.28

TOTAL % FILL FOR AREA 46 = 148.51

AREA 47

TRAY	% FILL	TRAY	% FILL	TRAY	% FILL	AVG. % FILL
321T →	4.55	322T →	32.23	323T →	27.25	= 21.34
321M →	8.36	322M →	20.09	323M →	10.42	= 12.94

TRAY	% FILL	TRAY	% FILL	TRAY	% FILL	AVG. % FILL
319T →	1.84	313T →	2.71	312T →	26.54	= 10.36
319M →	4.38	—	—	—	—	4.38

TRAY	% FILL	TRAY	% FILL	TRAY	% FILL	AVG. % FILL
320T →	37.40	—	—	—	—	= 37.40
320M →	29.15	315M →	29.96	314M →	21.30	26.80

TRAY	% FILL	TRAY	% FILL	AVG. % FILL
313M →	14.55	306M →	14.55	= 14.55

TOTAL % FILL FOR AREA 47 = 127.77

Public Service

FORT ST. VRAIN NUCLEAR GENERATING STATION
PUBLIC SERVICE COMPANY OF COLORADO
CALCULATION WORKSHEET

CALCULATION FOR: CABLE TRAYS % FILL FOR DRAWING E-88
CALCULATION NUMBER: EE-FP-0005
PREPARED BY: D J Bonacker DATE: 8/10/88
REVIEWED BY: DATE: CALC. REV.
PAGE 21 OF 23

AREA 48

TRAY	% FILL	TRAY	% FILL	AVG % FILL
372 →	48.79	374 →	24.80	26.80

TRAY	% FILL	AVG % FILL
373 →	55.07	

TRAY	% FILL	AVG % FILL
R194 →	60.70	

TRAY	% FILL	TRAY	% FILL	TRAY	% FILL	TRAY	% FILL	AVG % FILL
320T →	37.40	—	—	—	—	—	—	= 37.40
320M →	29.15	315M →	29.96	314M →	21.30	313M →	27.41	= 26.96

TRAY	% FILL	TRAY	% FILL	TRAY	% FILL	AVG % FILL
319T →	1.84	318T →	2.71	312T →	26.54	= 10.36
319M →	4.38	—	—	—	—	= 4.38

TRAY	% FILL	TRAY	% FILL	AVG % FILL
317M →	14.55	316M →	14.55	= 14.55

TOTAL % FILL FOR AREA 48 = 236.22

AREA 49

TRAY	% FILL	TRAY	% FILL	TRAY	% FILL	TRAY	% FILL	TRAY	% FILL	AVG % FILL
318T →	2.71	312T →	26.54	309T →	34.63	308T →	28.27	313T →	1.94	= 18.82
—	—	—	—	309M →	13.86	308M →	7.52	313M →	27.41	16.24

TRAY	% FILL	TRAY	% FILL	TRAY	% FILL	AVG % FILL
320T →	37.40	—	—	—	—	37.40
320M →	29.15	315M →	29.96	314M →	21.30	26.80

TRAY	% FILL
310T →	16.37
310M →	5.51

TRAY	% FILL
316M →	14.55

TOTAL % FILL FOR AREA 49 = 135.69

Public Service

FORT ST. VRAIN NUCLEAR GENERATING STATION
PUBLIC SERVICE COMPANY OF COLORADO
CALCULATION WORKSHEET

CALCULATION FOR: CABLE TRAYS % FILL FOR DRAWING E-88
CALCULATION NUMBER: EE-FD-0005
PREPARED BY: D.S Barcdes DATE: 8/10/88
REVIEWED BY: DATE: CALC REV:
PAGE 22 OF 23

DRAWING E-88 (BELOW ELEV. 4759'-0")

AREA 50

TRAY	% FILL	TRAY	% FILL	TRAY	% FILL	TRAY	% FILL	AVG % FILL
344T →	3.91	346T →	6.61	347T →	28.44	352T →	26.74	= 16.43
344M →	1.71	346M →	3.62	347M →	8.12	352M →	26.57	= 10.01
344B →	18.16	346B →	2.89	347B →	26.06	352B →	41.06	= 20.54

TRAY	% FILL
345T →	10.40
345M →	4.55
345B →	18.94

TRAY	% FILL	TRAY	% FILL	TRAY	% FILL	AVG % FILL
349T →	1.36	350T →	7.80	351T →	4.11	= 4.42
349M →	3.01	350M →	0.82	351M →	3.09	= 2.31
349B →	6.55	350B →	20.63	351B →	15.33	= 14.17

TRAY	% FILL
348T →	7.28
348M →	3.86
348B →	22.33

TRAY	% FILL	TRAY	% FILL	TRAY	% FILL	TRAY	% FILL	TRAY	% FILL	TRAY	% FILL
R175 →	15.30	R176 →	7.75	R177 →	16.75	R178 →	40.25	R179 →	35.72	R180 →	28.75

TOTAL % FILL FOR AREA 50 = 281.76

AREA 51

TRAY	% FILL	TRAY	% FILL	TRAY	% FILL	TRAY	% FILL	TRAY	% FILL	TRAY	% FILL	AVG % FILL
341T →	1.28	342T →	7.65	343T →	4.24	344T →	3.91	346T →	6.61	347T →	28.44	= 8.69
341M →	1.36	342M →	13.32	343M →	3.64	344M →	1.71	346M →	3.62	347M →	8.12	= 5.30
341B →	6.16	342B →	30.00	343B →	11.64	344B →	18.16	346B →	2.89	348B →	20.06	= 16.15

TRAY	% FILL	TRAY	% FILL	TRAY	% FILL	TRAY	% FILL	TRAY	% FILL	AVG % FILL
337T →	7.25	338T →	1.63	349T →	1.36	350T →	7.80	351T →	4.11	= 4.43
337M →	21.89	338M →	4.03	349M →	3.01	350M →	0.82	351M →	3.09	= 6.41
337B →	44.52	338B →	8.72	349B →	6.55	350B →	20.63	351B →	15.33	= 19.15

TRAY	% FILL
339T →	6.38
339M →	6.84
339B →	36.83

TRAY	% FILL
348T →	7.28
348M →	3.86
348B →	22.33

TRAY	% FILL
345T →	10.40
345M →	4.55
345B →	18.94

TRAY	% FILL	TRAY	% FILL	TRAY	% FILL
R175 →	15.30	R176 →	7.75	R177 →	16.75

TOTAL % FILL FOR AREA 51 = 229.34

Public Service

FORT ST. VRAIN NUCLEAR GENERATING STATION
PUBLIC SERVICE COMPANY OF COLORADO
CALCULATION WORKSHEET

CALCULATION FOR: CABLE TRAYS % FILL FOR DRAWING E-88
CALCULATION NUMBER: EE-FP-0005
PREPARED BY: D J Bandies | DATE: 8/10/88
REVIEWED BY: | DATE: | CALC REV:
PAGE 23 OF 23

AREA 52

TRAY	% FILL	TRAY	% FILL	TRAY	% FILL	TRAY	% FILL	TRAY	% FILL	TRAY	% FILL	TRAY	% FILL	AVG % FILL
351T →	4.11	350T →	7.80	349T →	1.36	338T →	1.63	337T →	2.25	336T →	6.98	335T →	16.32 =	6.35
351M →	3.09	350M →	6.82	349M →	3.01	338M →	4.03	337M →	21.09	336M →	21.86	335M →	35.61 =	12.79
351B →	15.33	350B →	20.63	349B →	6.55	338B →	8.72	337B →	44.52	336B →	43.88	335B →	60.41 =	28.58

TRAY	% FILL	TRAY	% FILL	TRAY	% FILL	TRAY	% FILL	TRAY	% FILL	AVG % FILL
348T →	7.28	339T →	6.38	340T →	7.73	341T →	1.28	342T →	7.65 =	4.47
348M →	3.86	339M →	16.84	340M →	11.53	341M →	1.26	342M →	13.32 =	7.34
348B →	22.33	339B →	36.83	340B →	16.11	341B →	6.16	342B →	30.00 =	18.08

TOTAL % FILL FOR AREA 52 = 200.50

AREA 53

TRAY	% FILL	TRAY	% FILL	TRAY	% FILL	TRAY	% FILL	TRAY	% FILL	AVG % FILL
334T →	17.36	333T →	14.64	332T →	14.87	331T →	15.31	330T →	27.27 =	17.89
334M →	35.63	333M →	29.22	332M →	30.20	331M →	30.91	330M →	38.74 =	32.94
334B →	59.60	333B →	50.83	332B →	53.16	331B →	54.08	330B →	62.39 =	56.91

TRAY	% FILL	TRAY	% FILL	TRAY	% FILL	AVG % FILL
354T →	27.40	355T →	32.00	356T →	33.05 =	30.82
354M →	33.62	355M →	38.12	356M →	41.72 =	37.72
354B →	46.14	355B →	54.75	356B →	48.08 =	49.66

TOTAL % FILL FOR AREA 53 = 225.04

AREA 54

TRAY	% FILL	TRAY	% FILL	TRAY	% FILL	AVG % FILL
360T →	2.39	359T →	2.34	358T →	38.64 =	14.44
360M →	1.40	359M →	1.40	358M →	43.87 =	15.56
360B →	59.68	359B →	59.60	358B →	58.12 =	59.13

TRAY	% FILL
R194 →	60.71

TRAY	% FILL	TRAY	% FILL	TRAY	% FILL	AVG % FILL
357T →	33.85	356T →	33.05	355T →	22.00 =	32.97
357M →	41.78	356M →	41.72	355M →	38.12 =	40.44
357B →	57.77	356B →	48.08	355B →	54.75 =	53.53

TOTAL % FILL FOR AREA 54 = 276.77

Public Service

FORT ST. VRAIN NUCLEAR GENERATING STATION
PUBLIC SERVICE COMPANY OF COLORADO
CALCULATION WORKSHEET

ATTACHMENT B

CALCULATION FOR		CALCULATION NUMBER
CABLE TRAYS % FILL FOR DRAWING E-1948-1		EE-FP-0005
PREPARED BY DJ Bonadies	DATE 8/11/88	
REVIEWED BY	DATE	CALC REV / PAGE 1 OF 2

DRAWING E-1948-1 (BELOW ELEV 4800'-6")

AREA 55

TRAY	% FILL
R219	0.00
R218	1.90
R217	8.24
426	2.50
427	7.96
R208	0.00
R207	0.00
R206	0.00

TOTAL % FILL FOR AREA 55 = 20.60

AREA 56

TRAY	% FILL
R219	0.00
R218	1.90
R217	8.24

TRAY	% FILL	TRAY	% FILL	TRAY	% FILL	AVG % FILL
420	0.65	421	0.65	422	0.65	= 0.65
417	4.21	418	8.24	419	8.24	= 6.90
416	9.19	415	9.19	414	9.19	413 9.19 = 9.19

TRAY	% FILL	TRAY	% FILL	TRAY	% FILL	TRAY	% FILL	TRAY	% FILL	TRAY	% FILL	AVG % FILL
401T	7.69	402T	6.92	403T	7.69	404T	7.69	405T	7.69	409T	3.68	= 6.89
401M	1.04	402M	1.04	403M	1.04	404M	1.04	405M	1.04	409M	0.00	= 0.87
401B	5.07	402B	0.67	403B	0.67	404B	0.67	405B	0.00	409B	0.00	= 1.18

TRAY	% FILL	TRAY	% FILL	TRAY	% FILL	TRAY	% FILL	TRAY	% FILL
406	0.00	407	0.00	408	0.00	R203	0.00	R204	0.00
205	0.00								

TOTAL % FILL FOR AREA 56 = 35.82

Public Service

FORT ST. VRAIN NUCLEAR GENERATING STATION

PUBLIC SERVICE COMPANY OF COLORADO

CALCULATION WORKSHEET

CALCULATION FOR		CALCULATION NUMBER
CABLE TRAYS % FILL FOR DRAWING E-1948-1		EE-FP-0005
PREPARED BY D J Bonadies	DATE 8/11/88	
REVIEWED BY	DATE / CALC REV.	PAGE 2 OF 2

AREA 57

TRAY	%FILL	TRAY	%FILL	TRAY	%FILL	TRAY	%FILL	TRAY	%FILL	AVG %FILL
434	3.80	436T	3.80	437T	3.80	438T	3.80	439	2.64	= 3.57
435	5.09	436B	2.18	437B	2.18	438B	2.18	440	3.56	= 3.04

TRAY	%FILL	TRAY	%FILL	TRAY	%FILL	TRAY	%FILL	TRAY	%FILL	TRAY	%FILL
R211	1.78	R210	0.58	R209	0.00	R204	0.00	R201	0.00	R202	0.00

TOTAL %FILL FOR AREA 57 = 8.97

Public Service

FORT ST. VRAIN NUCLEAR GENERATING STATION
PUBLIC SERVICE COMPANY OF COLORADO
CALCULATION WORKSHEET

ATTACHMENT C

CALCULATION FOR		CALCULATION NUMBER
% TRAY FILL FOR TRAYS IN BUILDING 10 (E-1948-1)		EE-FP-0005
PREPARED BY D.S. Borgdes	DATE 8/11/88	
REVIEWED BY	DATE / CALC. REV	PAGE 1 OF 11

GENERAL CALCULATIONS FOR 18" & 9" TRAYS IN BUILDING 10

TRAY SIZE (W x H)	AREA x % FILL ALLOWED	AREA AVAILABLE
18" x 6"	108 in² x 40%	43.20 in²
9" x 6"	54 in² x 40%	21.60 in²

TRAY 402T → 18" TRAY

CABLE	BOM	AREA (in²)
3254	12-A-20A	.7014
5424	12-A-12	.7163
144	12-A-20A	.7014
1158	12-A-20A	.7014
1117	12-B-34	.1735

TOTAL AREA OF CABLES = 2.99 in²

TOTAL % AREA FILL OF TRAY

$$\%A = \frac{\text{TOTAL AREA CABLES}}{\text{AREA AVAIL OF TRAY}} = \frac{2.99}{43.20} = \boxed{6.92\%}$$

TRAY 402M → 18" TRAY

CABLE	BOM	AREA (in²)
28344	12-A-8	.1555
79	12-A-7	.1533
8379	12-B-27	.1385

TOTAL AREA OF CABLES = 0.45 in²

TOTAL % AREA FILL OF TRAY

$$\%A = \frac{\text{TOTAL AREA CABLES}}{\text{AREA AVAIL OF TRAY}} = \frac{0.45}{43.2} = \boxed{1.04\%}$$

TRAY 402B → 18" TRAY

CABLE	BOM	AREA (in²)
15412	12-C-39	.0962
15403	12-C-39	.0962
15406	12-C-39	.0962

TOTAL AREA OF CABLES = 0.29 in²

TOTAL % AREA FILL OF TRAY

$$\%A = \frac{\text{TOTAL AREA CABLES}}{\text{AREA AVAIL. OF TRAY}} = \frac{0.29}{43.2} = \boxed{0.67\%}$$

CALCULATION FOR			CALCULATION NUMBER
% TRAY FILL FOR TRAYS IN BUILDING 10 (E-1948-1)			EE-FP-0005
PREPARED BY DJ Bonadies	DATE 9/11/88		
REVIEWED BY	DATE	CALC. REV.	PAGE 2 OF 11

TRAY 403T → 18" TRAY

CABLE	BOM	AREA(in²)
3254	12-A-20A	.7014
5424	12-A-12	.7163
144	12-A-20A	.7014
1158	12-A-20A	.7014
3277	12-A-9	.3217
1117	12-B-34	.1735

TOTAL AREA OF CABLES = 3.32 in²

TOTAL % AREA FILL OF TRAY

$\%A = \frac{\text{TOTAL AREA CABLES}}{\text{AREA AVAIL OF TRAY}} = \frac{3.32}{43.20} =$ **7.69%**

TRAY 403M → 18" TRAY

TOTAL % AREA FILL OF TRAY

%A = SAME AS SHOWN FOR TRAY 402M = **1.04%**

TRAY 403B → 18" TRAY

TOTAL % AREA FILL OF TRAY

%A = SAME AS SHOWN FOR TRAY 402B = **0.67%**

TRAY 404T → 18" TRAY

TOTAL % AREA FILL OF TRAY

%A = SAME AS SHOWN FOR TRAY 403T = **7.69%**

TRAY 404M → 18" TRAY

TOTAL % AREA FILL OF TRAY

%A = SAME AS SHOWN FOR TRAY 402M = **1.04%**

TRAY 404B → 18" TRAY

TOTAL % AREA FILL OF TRAY

%A = NO CABLES IN TRAY = **0.00%**

Public Service

FORT ST. VRAIN NUCLEAR GENERATING STATION
PUBLIC SERVICE COMPANY OF COLORADO
CALCULATION WORKSHEET

CALCULATION FOR		CALCULATION NUMBER
% TRAY FILL FOR TRAYS IN BUILDING 10 (E-1948-1)		EE-FP-0005
PREPARED BY DJ Bonadies	DATE 8/11/89	
REVIEWED BY	DATE	CALC. REV. / PAGE 3 OF 11

TRAY 405T → 18" TRAY

TOTAL % AREA FILL OF TRAY

%A = SAME AS SHOWN FOR TRAY 403T = 7.69%

TRAY 405M → 18" TRAY

TOTAL % AREA FILL OF TRAY

%A = SAME AS SHOWN FOR TRAY 402M = 1.04%

TRAY 405B → 18" TRAY

TOTAL % AREA FILL OF TRAY

%A = NO CABLES IN TRAY = 0.00%

TRAY 406 → 18" TRAY

TOTAL % AREA FILL OF TRAY

%A = NO CABLES IN TRAY = 0.00%

TRAY 407 → 18" TRAY

TOTAL % AREA FILL OF TRAY

%A = NO CABLES IN TRAY = 0.00%

TRAY 408 → 18" TRAY

TOTAL % AREA FILL OF TRAY

%A = NO CABLES IN TRAY = 0.00%

TRAY 413 → 18" TRAY

CABLE	BOM	AREA (in^2)
5427	12-A-10	.4072
3276	12-A-9	.3217
1157	12-A-20A	.7014
143	12-A-20A	.7014
59	12-A-14A	.4301
61	12-A-13	1.4103

TOTAL AREA OF CABLES = 3.97 in^2

TOTAL % AREA FILL OF TRAY

$$\%A = \frac{\text{TOTAL AREA CABLES}}{\text{AREA AVAIL OF TRAY}} = \frac{3.97}{43.20} = 9.19\%$$

CALCULATION FOR			CALCULATION NUMBER
% TRAY FILL FOR TRAYS IN BUILDING Ø (E-1948-1)			EE-FP-ØØØ5
PREPARED BY DJ Bonavides	DATE 8/11/88		
REVIEWED BY	DATE	CALC. REV.	PAGE 4 OF 11

TRAY 414 → 18" TRAY

TOTAL % AREA FILL OF TRAY

%A = SAME AS SHOWN FOR TRAY 413 = 9.19%

TRAY 415 → 18" TRAY

TOTAL % AREA FILL OF TRAY

%A = SAME AS SHOWN FOR TRAY 413 = 9.19%

TRAY R203 → 18" TRAY

TOTAL % AREA FILL OF TRAY

%A = NO CABLES IN TRAY = Ø.Ø%

TRAY R204 → 18" TRAY

TOTAL % AREA FILL OF TRAY

%A = NO CABLES IN TRAY = Ø.Ø%

TRAY R205 → 18" TRAY

TOTAL % AREA FILL OF TRAY

%A = NO CABLES IN TRAY = Ø.Ø%

TRAY 417 → 18" TRAY

CABLE	BOM	AREA (in^2)
5427	12-A-10	.4072
61	12-A-13	1.4103

TOTAL AREA OF CABLES = 1.82 in^2

TOTAL % AREA FILL OF TRAY

$$\%A = \frac{\text{TOTAL AREA CABLES}}{\text{AREA AVAIL OF TRAY}} = \frac{1.82}{43.2} = 4.21\%$$

TRAY 416 → 18" TRAY

TOTAL % AREA FILL OF TRAY

%A = SAME AS SHOWN FOR TRAY 413 = 9.19%

Public Service®

FORT ST. VRAIN NUCLEAR GENERATING STATION
PUBLIC SERVICE COMPANY OF COLORADO
CALCULATION WORKSHEET

CALCULATION FOR			CALCULATION NUMBER
% TRAY FILL FOR TRAYS IN BUILDING 1Ø (E-1948-1)			EE-FP-ØØØ5
PREPARED BY DJ Bordies	DATE 8/11/88		
REVIEWED BY	DATE	CALC REV	PAGE 5 OF 11

TRAY 418 → 18" TRAY

CABLE	BOM	AREA (in²)
3276	12-A-9	.3217
1157	12-A-2ØA	.7Ø14
143	12-A-2ØA	.7Ø14
59	12-A-14A	.43Ø1
61	12-A-13	1.41Ø3

TOTAL AREA OF CABLES = 3.56 in²

TOTAL % AREA FILL OF TRAY

$\%A = \frac{\text{TOTAL AREA CABLES}}{\text{AREA AVAIL. OF TRAY}} = \frac{3.56}{43.2} =$ 8.24%

TRAY 419 → 18" TRAY

TOTAL % AREA FILL OF TRAY

%A = SAME AS SHOWN FOR TRAY 418 = 8.24%

TRAY 42Ø → 18" TRAY

CABLE	BOM	AREA (in²)
8393	12-B-27	.1385
8438	12-B-27	.1385

TOTAL AREA OF CABLES = Ø.28 in²

TOTAL % AREA FILL OF TRAY

$\%A = \frac{\text{TOTAL AREA CABLES}}{\text{AREA AVAIL OF TRAY}} = \frac{Ø.28}{43.2} =$ Ø.65%

TRAY 421 → 18" TRAY

TOTAL % AREA FILL OF TRAY

%A = SAME AS SHOWN FOR TRAY 42Ø = Ø.65%

TRAY 422 → 18" TRAY

TOTAL % AREA FILL OF TRAY

%A = SAME AS SHOWN FOR TRAY 42Ø = Ø.65%

TRAY R217 → 18" TRAY

TOTAL % AREA FILL OF TRAY

%A = SAME AS SHOWN FOR TRAY 418 = 8.24%

Public Service

FORT ST. VRAIN NUCLEAR GENERATING STATION
PUBLIC SERVICE COMPANY OF COLORADO
CALCULATION WORKSHEET

CALCULATION FOR			CALCULATION NUMBER
% TRAY FILL FOR TRAYS IN BUILDING 10 (E-1948-1)			EE-FP-0005
PREPARED BY DJ Bonadies	DATE 8/11/88		
REVIEWED BY	DATE	CALC. REV.	PAGE 6 OF 11

TRAY R218 → 18" TRAY

CABLE	BOM	AREA (in^2)
28343	12-A-8	.1555
8393	12-B-27	.1385
8378	12-B-27	.1385
54	12-B-29	.2463
8438	12-B-27	.1385

TOTAL AREA OF CABLES = 0.82 in^2

TOTAL % AREA FILL OF TRAY

$\%A = \frac{\text{TOTAL AREA CABLES}}{\text{AREA AVAIL OF TRAY}} = \frac{0.82}{43.2} =$ 1.90%

TRAY R219 → 18" TRAY

TOTAL % AREA FILL OF TRAY

%A = NO CABLES IN TRAY = 0.00%

TRAY 426 → 9" TRAY

CABLE	BOM	AREA (in^2)
28343	12-A-8	.1555
8378	12-B-27	.1385
54	12-B-29	.2463

TOTAL AREA OF CABLES = 0.54 in^2

TOTAL % AREA FILL OF TRAY

$\%A = \frac{\text{TOTAL AREA CABLES}}{\text{AREA AVAIL OF TRAY}} = \frac{0.54}{21.6} =$ 2.50%

TRAY 427 → 9" TRAY

CABLE	BOM	AREA (in^2)
3276	12-A-9	.3217
1157	12-A-20A	.7014
143	12-A-20A	.7014

TOTAL AREA OF CABLES = 1.72 in^2

TOTAL % AREA FILL OF TRAY

$\%A = \frac{\text{TOTAL AREA CABLES}}{\text{AREA AVAIL OF TRAY}} = \frac{1.72}{21.6} =$ 7.96%

TRAY 434 → 9" TRAY

CABLE	BOM	AREA (in^2)
28343	12-A-8	.1555
8393	12-B-27	.1385
8378	12-B-27	.1385
54	12-B-29	.2463
8438	12-B-27	.1385

TOTAL AREA OF CABLES = 0.82 in^2

TOTAL % AREA FILL OF TRAY

$\%A = \frac{\text{TOTAL AREA CABLES}}{\text{AREA AVAIL OF TRAY}} = \frac{0.82}{21.6} =$ 3.80%

Public Service

FORT ST. VRAIN NUCLEAR GENERATING STATION

PUBLIC SERVICE COMPANY OF COLORADO

CALCULATION WORKSHEET

CALCULATION FOR			CALCULATION NUMBER
% TRAY FILL FOR TRAYS IN BUILDING 10 (E-1948-1)			EE-FP-0005
PREPARED BY D E Bowles	DATE 8/11/88		
REVIEWED BY	DATE	CALC. REV.	PAGE 7 OF 11

TRAY 435 → 9" TRAY

CABLE	BOM	AREA (in²)
15400	12-B-27	.1385
15409	12-C-39	.0962
15415	12-C-39	.0962
10316	12-I-65B	.0547
10317		
10318		
10319		
10320		
10321		
10322		
10323		
10324		
10325		
10326		
10327		
15028		
15027		

TOTAL AREA OF CABLES = 1.10 in²

TOTAL % AREA FILL OF TRAY

$$\%A = \frac{\text{TOTAL AREA CABLES}}{\text{AREA AVAIL. OF TRAY}} = \frac{1.10}{21.6} = 5.09\%$$

TRAY 436T → 9" TRAY

CABLE	BOM	AREA (in²)
28343	12-A-8	.1555
8393	12-B-27	.1385
8378	12-B-27	.1385
54	12-B-29	.2463
8438	12-B-27	.1385

TOTAL AREA OF CABLES = 0.82 in²

TOTAL % AREA FILL OF TRAY

$$\%A = \frac{\text{TOTAL AREA CABLES}}{\text{AREA AVAIL. OF TRAY}} = 3.80\%$$

TRAY 436B → 9" TRAY

CABLE	BOM	AREA (in²)
862	12-C-38	.0908
869	12-C-38	.0908
871	12-C-38	.0908
873	12-C-38	.0908
15028	12-I-65B	.0547
15027	12-I-65B	.0547

TOTAL AREA OF CABLES = 0.47 in²

TOTAL % AREA FILL OF TRAY

$$\%A = \frac{\text{TOTAL AREA CABLES}}{\text{AREA AVAIL OF TRAY}} = \frac{0.47}{21.6} = 2.18\%$$

Public Service

FORT ST. VRAIN NUCLEAR GENERATING STATION
PUBLIC SERVICE COMPANY OF COLORADO
CALCULATION WORKSHEET

CALCULATION FOR		CALCULATION NUMBER
% TRAY FILL FOR TRAYS IN BUILDING 10 (E-1948-1)		EE-FP-0005
PREPARED BY DJ Beradies	DATE 8/11/88	
REVIEWED BY	DATE	CALC. REV. / PAGE 8 OF 11

TRAY 440 → 9" TRAY

CABLE	BOM	AREA (in²)
10316	12-I-65B	.0547
10317		
10318		
10319		
10320		
10321		
10322		
10323		
10324		
10325		
10326		
10327		
15028		
15027		

TOTAL AREA OF CABLES = 0.77 in²

TOTAL % AREA FILL OF TRAY

$\%A = \frac{\text{TOTAL AREA CABLES}}{\text{AREA AVAIL OF TRAY}} = \frac{0.77}{21.6} = 3.56\%$

TRAY R209 → 18" TRAY

TOTAL % AREA FILL OF TRAY

%A = NO CABLES IN TRAY = 0.00%

TRAY R210 → 18" TRAY

CABLE	BOM	AREA (in²)
54	12-B-29	.2463

TOTAL AREA OF CABLE = 0.25 in²

TOTAL % AREA FILL OF TRAY

$\%A = \frac{\text{TOTAL AREA CABLE}}{\text{AREA AVAIL OF TRAY}} = \frac{.25}{43.2} = 0.58\%$

TRAY R211 → 18" TRAY

CABLE	BOM	AREA (in²)
10316	12-I-65B	.0547
10317		
10318		
10319		
10320		
10321		
10322		
10323		
10324		
10325		
10326		
10327		
15028		
15027		

TOTAL AREA OF CABLES = 0.77 in²

TOTAL % AREA FILL OF TRAY

$\%A = \frac{\text{TOTAL AREA CABLE}}{\text{AREA AVAIL OF TRAY}} = \frac{0.77}{43.2} = 1.78\%$

Public Service

FORT ST. VRAIN NUCLEAR GENERATING STATION
PUBLIC SERVICE COMPANY OF COLORADO
CALCULATION WORKSHEET

CALCULATION FOR			CALCULATION NUMBER
% TRAY FILL FOR TRAYS IN BUILDING 10 (CE-1998-1)			EE-FP-0005
PREPARED BY D J Benedics	DATE 8/11/88		
REVIEWED BY	DATE	CALC REV	PAGE 9 OF 11

TRAY 437T → 9" TRAY

TOTAL % AREA FILL OF TRAY

%A = SAME AS SHOWN FOR TRAY 436T = 3.80%

TRAY 437B → 9" TRAY

TOTAL % AREA FILL OF TRAY

%A = SAME AS SHOWN FOR TRAY 436B = 2.18%

TRAY 438T → 9" TRAY

TOTAL % AREA FILL OF TRAY

%A = SAME AS SHOWN FOR TRAY 436T = 3.80%

TRAY 438B → 9" TRAY

TOTAL % AREA FILL OF TRAY

%A = SAME AS SHOWN FOR TRAY 436B = 2.18%

TRAY 439 → 9" TRAY

CABLE	BOM	AREA (in^2)
28343	12-A-8	.1555
8393	12-B-27	.1385
8378	12-B-27	.1385
8438	12-B-27	.1385

TOTAL AREA OF CABLES = $.57 in^2$

TOTAL % AREA FILL OF TRAY

$$\%A = \frac{\text{TOTAL AREA CABLES}}{\text{AREA AVAIL. OF TRAY}} = \frac{.57}{21.6} = 2.64\%$$

TRAY R2000 → 18" TRAY

TOTAL % AREA FILL OF TRAY

A% = NO CABLES IN TRAY = 0.00%

TRAY R2001 → 18" TRAY

TOTAL % AREA FILL OF TRAY

A% = NO CABLES IN TRAY = 0.00%

TRAY R2002 → 18" TRAY

TOTAL % AREA FILL OF TRAY

A% = NO CABLES IN TRAY = 0.00%

TRAY 206 → 18" TRAY

TOTAL % AREA FILL OF TRAY

A% = NO CABLES IN TRAY = Ø.ØØ%

TRAY 207 → 18" TRAY

TOTAL % AREA FILL OF TRAY

A% = NO CABLES IN TRAY = Ø.ØØ%

TRAY 208 → 18" TRAY

TOTAL % AREA FILL OF TRAY

A% = NO CABLES IN TRAY = Ø.ØØ%

TRAY 401T → 18" TRAY

TOTAL % AREA FILL OF TRAY

A% = SAME AS SHOWN FOR TRAY 403T = 7.69%

TRAY 401M → 18" TRAY

TOTAL % AREA FILL OF TRAY

A% = SAME AS SHOWN FOR TRAY 402M = 1.Ø4%

TRAY 401B → 18" TRAY

CABLE	BOM	AREA (in²)
15402	12-C-39	.0962
15406	↓	.0962
15658	12-C-38	.0908
15657	12-C-39	.0962
15659	↓	↓
15660	↓	↓
15647	12-C-48	.4915
15648	↓	.4915
853	12-C-38	.0908
854	↓	↓
856	↓	↓
852	↓	↓
864	↓	↓
865	↓	↓
876	↓	↓

TOTAL AREA OF CABLES = 2.19 in²

TOTAL % AREA FILL OF TRAY

A% = TOTAL AREA CABLES / AREA AVAIL. OF TRAY = 2.19 / 43.2 = 5.07%

Public Service

FORT ST. VRAIN NUCLEAR GENERATING STATION

PUBLIC SERVICE COMPANY OF COLORADO

CALCULATION WORKSHEET

CALCULATION FOR		CALCULATION NUMBER
% TRAY FILL FOR TRAYS IN BUILDING 10 (E-1948-1)		EE-FP-0005
PREPARED BY DJ Bonadies	DATE 8/11/88	
REVIEWED BY	DATE	CALC. REV. / PAGE 11 OF 11

TRAY 409T → 18" TRAY

CABLE	ECN	AREA(in²)
3259	12-A-24	.7014
5424	12-A-12	.7163
1117	12-B-14	.1735

TOTAL AREA OF CABLE = 1.59 in²

TOTAL % AREA FILL OF TRAY

$\%A = \frac{\text{TOTAL AREA CABLES}}{\text{AREA AVAIL OF TRAY}} = \frac{1.59}{43.2} = 3.68\%$

TRAY 409M → 18" TRAY

TOTAL % AREA FILL OF TRAY

%A = NO CABLES IN TRAY = 0.00%

TRAY 409B → 18" TRAY

TOTAL % AREA FILL OF TRAY

%A = NO CABLES IN TRAY = 0.00%

TRAY	BUS	LOOP	SER	LOC	AREA AVAILABLE	AREA FILLED	PERCENT FILLED	TRAY	BUS	LOOP	SER	LOC	AREA AVAILABLE	AREA FILLED	PERCENT FILLED
1B1	B1	L1	K	AX	30.00	1.51	005.03	12M1	B2	L1	C	AX	54.00	32.16	059.55
1B2	B2	L2	K	AX	30.00	12.59	041.96	12M2	B2	L2	C	AX	54.00	44.51	082.42
1M1	B2	L1	C	AX	18.00	11.04	061.44	12T1	B1	L1	C	AX	72.00	67.20	093.33
1M2	B2	L2	C	AX	88.20	63.72	072.24	12T2	B1	L2	C	AX	36.00	31.70	088.05
1T1	B1	L1	C	AX	42.00	11.69	027.83	13B1	B1	L1	K	AX	30.00	11.55	038.50
1T2	B1	L2	C	AX	42.00	21.34	050.80	13B2	B2	L2	K	AX	30.00	9.83	032.76
2B1	B1	L1	K	AX	60.00	18.90	031.50	13M1	B2	L1	C	AX	42.00	29.31	069.78
2M1	B2	L1	C	AX	87.00	38.08	043.77	13M2	B2	L2	C	AX	72.00	38.83	053.93
2T1	B1	L1	C	AX	87.00	41.88	048.13	13T1	B1	L1	C	AX	60.00	43.61	072.68
3B1	B1	L1	K	AX	30.00	13.06	043.53	13T2	B1	L2	C	AX	26.00	18.76	072.15
3B2	B2	L2	K	AX	30.00	10.59	035.30	14B1	B1	L1	K	AX	60.00	6.31	010.51
3M1	B2	L1	C	AX	42.00	24.73	058.88	14M1	B2	L1	C	AX	87.00	17.07	019.62
3M2	B2	L2	C	AX	45.60	37.98	083.28	14T1	B1	L1	C	AX	87.00	28.23	032.44
3T1	B1	L1	C	AX	42.00	21.75	051.78	15B1	B1	L1	K	AX	30.00	17.15	057.16
3T2	B1	L2	C	AX	42.00	15.71	037.40	15B2	B2	L2	K	AX	30.00	5.62	018.73
4B2	B2	L2	K	AX	72.00	17.26	023.97	15M1	B2	L1	C	AX	70.00	38.65	055.21
4M2	B2	L2	C	AX	87.00	70.97	081.57	15M2	B2	L2	C	AX	25.20	21.59	085.67
5B2	B2	L2	K	AX	60.00	7.58	012.63	15T1	B1	L1	C	AX	108.00	64.10	059.35
5M2	B2	L2	C	AX	87.00	42.80	049.19	15T2	B1	L2	C	AX	18.09	8.40	046.66
5T2	B1	L2	C	AX	87.00	54.64	062.80	16B1	B1	L1	K	AX	60.00	11.20	018.66
6B1	B1	L1	K	AX	30.00	8.79	029.30	16M1	B2	L1	C	AX	87.30	29.12	033.47
6B2	B2	L2	K	AX	30.00	23.22	079.73	16T1	B1	L1	C	AX	87.00	35.22	040.48
6M2	B2	L2	C	AX	108.00	85.28	079.88	17B1	B1	L1	K	AX	30.00	4.89	016.30
6T1	B1	L1	C	AX	18.00	3.24	018.00	17B2	B2	L2	K	AX	30.00	2.89	009.63
6T2	B1	L2	C	AX	86.40	66.25	076.67	17M1	B2	L1	C	AX	42.00	21.97	052.30
7B1	B1	L1	K	AX	30.00	3.24	010.80	17M2	B2	L2	C	AX	42.00	27.74	066.04
7B2	B2	L2	K	AX	48.00	7.39	015.39	17T1	B1	L1	C	AX	52.20	24.49	046.91
7M1	B2	L1	C	AX	87.00	9.16	010.52	17T2	B1	L2	C	AX	60.00	19.44	032.40
7T1	B1	L1	C	AX	87.00	54.24	062.34	18B2	B2	L2	K	AX	60.00	13.64	022.73
8B1	B1	L1	K	AX	14.40	4.42	030.69	18M2	B2	L2	C	AX	87.00	33.08	038.02
8B2	B2	L2	K	AX	60.00	26.35	043.91	18T2	B1	L2	C	AX	87.00	31.40	036.09
8M1	B2	L1	C	AX	21.60	9.32	043.14	19B1	B1	L1	K	AX	30.00	1.04	003.46
8M2	B2	L2	C	AX	88.20	88.93	106.82	19B2	B2	L2	K	AX	30.00	3.27	010.90
8T1	B1	L1	C	AX	78.60	54.76	070.20	20B1	B1	L1	K	AX	30.00	11.37	037.90
8T2	B1	L2	C	AX	102.00	62.31	061.08	20B2	B2	L2	K	AX	30.00	1.51	005.03
9B1	B1	L1	K	AX	60.00	13.38	022.30	20M1	B2	L1	C	AX	56.70	46.38	081.79
9M1	B2	L1	C	AX	87.00	38.55	044.31	20M2	B2	L2	C	AX	42.00	24.63	058.64
10B1	B1	L1	K	AX	33.00	27.13	082.21	20T1	B1	L1	C	AX	70.00	42.24	060.34
10B2	B2	L2	K	AX	39.00	10.40	026.66	20T2	B1	L2	C	AX	18.00	3.87	021.50
10M1	B2	L1	C	AX	60.00	41.92	069.86	21B1	B1	L1	K	AX	30.00	17.44	058.13
10M2	B2	L2	C	AX	26.00	21.65	083.26	21B2	B2	L2	K	AX	30.00	.00	0.00
10T1	B1	L1	C	AX	70.00	55.53	079.32	21M1	B2	L1	C	AX	70.00	29.23	041.75
10T2	B1	L2	C	AX	18.00	5.16	028.66	21M2	B2	L2	C	AX	18.00	2.32	012.88
11B1	B1	L1	K	AX	14.40	6.09	042.29	21T1	B1	L1	C	AX	87.30	59.27	067.89
11B2	B2	L2	K	AX	57.60	19.63	034.07	21T2	B1	L2	C	AX	18.00	2.27	012.61
11M1	B2	L1	C	AX	18.00	8.25	45.83	22B2	B2	L2	K	AX	60.00	.63	1.05
11M2	B2	L2	C	AX	70.00	29.40	042.00	22M2	B2	L2	C	AX	87.00	23.10	026.55
11T1	B1	L1	C	AX	70.00	50.46	072.09	22T2	B1	L2	C	AX	87.00	3.90	004.48
11T2	B1	L2	C	AX	18.00	8.37	046.50	23B2	B2	L2	K	AX	60.00	11.52	019.20
12B1	B1	L1	K	AX	30.00	18.49	061.63	23M2	B2	L2	C	AX	87.00	33.33	038.31
12B2	B2	L2	K	AX	30.00	13.66	045.53	23T2	B1	L2	C	AX	87.09	32.18	036.98

ATTACHMENT D

TRAY	BUS	LOOP	SER	LOC	AREA AVAILABLE	AREA FILLED	PERCENT FILLED	TRAY	BUS	LOOP	SER	LOC	AREA AVAILABLE	AREA FILLED	PERCENT FILLED
24B2	B2	L2	K	AX	60.00	11.07	018.45	37M1	B2	L1	C	AX	87.00	.29	000.33
24M2	B2	L2	C	AX	87.00	51.57	059.27	37T1	B1	L1	C	AX	87.00	.69	000.79
24T2	B1	L2	C	AX	87.00	19.88	022.85	38B1	B1	L1	K	AX	60.00	10.16	016.93
25B1	B1	L1	K	AX	60.00	1.38	002.30	39M1	B2	L1	C	AX	42.00	6.61	15.73
25B2	B2	L2	K	AX	60.00	6.37	010.61	39M2	B2	L2	C	AX	42.00	2.41	005.73
25M1	B2	L1	C	AX	87.00	10.25	011.78	39T1	B1	L1	C	AX	42.00	1.57	003.73
26B1	B1	L1	K	AX	30.00	2.73	009.10	39T2	B1	L2	C	AX	42.00	6.10	014.52
26B2	B2	L2	K	AX	30.00	6.86	022.86	40M1	B2	L1	C	AX	42.00	1.09	2.59
26M2	B2	L2	C	AX	87.00	30.45	035.00	40M2	B2	L2	C	AX	42.00	3.23	007.67
26T2	B1	L2	C	AX	87.00	15.37	017.66	40T2	B1	L2	C	AX	87.00	10.66	012.25
27B1	B1	L1	K	AX	30.00	6.64	022.13	41M2	B1	L1	C	AX	87.00	5.86	006.73
27B2	B2	L2	K	AX	30.00	8.57	028.56	41T2	B1	L2	C	AX	87.00	3.12	003.58
27M1	B2	L1	C	AX	42.00	.81	001.92	42B2	B2	L2	K	AX	60.00	5.81	009.68
27M2	B2	L2	C	AX	42.00	5.40	12.85	42M2	B2	L2	C	AX	87.00	13.21	015.18
27T2	B1	L2	C	AX	87.00	4.13	004.74	42T2	B1	L2	C	AX	87.00	19.44	022.34
28B1	B1	L1	K	AX	30.00	17.21	057.36	43B2	B2	L2	K	AX	60.00	5.96	009.93
28B2	B2	L2	K	AX	30.00	2.22	007.40	43M2	B1	L1	C	TB	87.00	24.64	028.32
28M1	B2	L1	C	AX	70.00	28.96	041 40	43T2	B1	L2	C	AX	87.00	16.04	018.43
28M2	B2	L2	C	AX	18.00	4.17	23.16	44B1	B1	L1	K	AX	60.00	6.00	010.00
28T1	B1	L1	C	AX	70.00	58.03	082.90	44M1	B2	L1	C	AX	87.00	28.34	032.57
28T2	B1	L2	C	AX	18.00	1.91	10.61	45B1	B1	L1	K	AX	30.00	12.14	040.46
29B1	B1	L1	K	AX	30.00	26	8.60	45B2	B2	L2	K	AX	30.00	16.21	054.03
29B2	B2	L2	K	AX	30.00	7.55	025.16	45T1	B1	L1	P	AX	42.00	2.50	005.95
29M2	B2	L2	C	AX	87.00	11.81	013.57	45T2	B2	L2	P	AX	42.00	14.70	035.00
29T1	B1	L1	C	AX	42.00	5.31	012.64	46B1	B1	L1	K	AX	30.00	4.42	014.73
29T2	B1	L2	C	AX	42.00	1.82	4.33	46B2	B2	L2	K	AX	30.00	25.61	085.36
30B1	B1	L1	K	AX	69.00	13.48	022.46	46T1	B1	L1	P	AX	18.00	7.80	043.33
30M1	B2	L1	C	AX	87.00	10.29	011.82	46T2	B2	L2	P	AX	82.80	49.02	059.20
30T1	B1	L1	C	AX	87.00	44.51	051.16	47B1	B1	L1	K	AX	30.00	5.01	016.70
31B1	B1	L1	K	AX	30.00	19.84	066.13	47B2	B2	L2	K	AX	30.00	8.83	029.43
31B2	B2	L2	K	AX	30.00	5.38	017.93	47M2	B2	L2	C	AX	87.00	63.76	073.28
31M1	B2	L1	C	AX	60.00	36.25	060.41	47T1	B1	L1	P	AX	42.00	14.25	033.92
31M2	B2	L2	C	AX	26.00	15.47	059.59	47T2	B2	L2	P	AX	42.00	4.07	9.69
31T1	B1	L1	C	AX	70.00	56.09	080.12	48B1	B1	L1	K	AX	30.00	19.89	066.30
31T2	B1	L2	C	AX	18.00	.95	5.27	48B2	B2	L2	K	AX	30.00	4.94	016.46
32M1	B2	L1	C	AX	87.00	21.97	025.25	48M1	B2	L1	C	AX	87.00	27.87	032.03
33B1	B1	L1	K	AX	31.00	28.00	090.32	48T1	B1	L1	P	AX	94.10	67.19	071.40
33B2	B2	L2	K	AX	30.00	3.16	010.53	48T2	B2	L2	P	AX	18.00	1.47	008.16
33M1	B2	L1	C	AX	89.10	56.85	063.80	49B1	B1	L1	K	AX	30.00	2.73	009.10
33M2	B2	L2	C	AX	18.00	9.37	52.05	49B2	B2	L2	K	AX	30.00	1.93	6.43
33T1	B1	L1	C	AX	119.00	82.15	069.03	49M1	B2	L1	C	AX	18.00	3.68	020.44
34B1	B1	L1	K	AX	36.00	27.17	071.50	49M2	B2	L2	C	AX	114.80	72.37	063.04
34B2	B2	L2	K	AX	36.00	1.46	004.05	49T1	B1	L1	P	AX	70.00	27.75	039.64
34M1	B2	L1	C	AX	75.00	51.90	069.20	49T2	B2	L2	P	AX	18.00	9.96	55.33
34M2	B2	L2	C	AX	18.00	7.77	043.16	50M2	B2	L2	C	AX	87.00	28.06	032.25
34T1	B1	L1	C	AX	117.00	109.61	093.85	50T2	B2	L2	P	AX	201.30	68.60	034.07
35I1	B1	L1	C	AX	87.00	31.92	036.68	51B2	B2	L2	K	AX	60.00	8.75	014.63
36B1	B1	L1	K	AX	60.00	14.73	024.55	51M2	B2	L2	C	AX	87.00	21.79	025.04
36M1	B2	L1	C	AX	87.00	7.81	008.97	51T2	B2	L2	P	AX	87.00	32.46	037.31
36T1	B1	L1	C	AX	87.00	2.82	003.24	52B2	B2	L2	K	AX	60.00	8.22	013.70
37B1	B1	L1	K	AX	60.00	6.59	010.98	52M2	B2	L2	C	AX	87.00	21.61	024.83

TRAY	BUS	LOOP	SER	LOC	AREA AVAILABLE	AREA FILLED	PERCENT FILLED
52T2	B2	L2	P	AX	87.00	56.65	064.88
53M1	B2	L1	C	AX	18.00	.00	0.00
53M2	B2	L2	C	AX	70.00	51.12	073.02
53T2	B2	L2	P	AX	87.00	36.30	041.72
54B1	B1	L1	K	AX	30.00	1.73	005.76
54B2	B2	L2	K	AX	30.00	2.02	6.73
54M1	B2	L1	C	AX	18.00	1.81	010.05
54M2	B2	L2	C	AX	114.80	70.27	061.21
54T1	B1	L1	P	AX	42.00	10.50	25.00
54T2	B2	L2	P	AX	42.00	12.44	29.61
55B1	B1	L1	K	AX	30.00	3.64	012.13
55B2	B2	L2	K	AX	30.00	1.93	6.43
55M1	B2	L1	C	AX	18.00	6.45	035.83
55M2	B2	L2	C	AX	144.00	78.91	054.79
55T1	B1	L1	P	AX	70.00	40.44	057.77
55T2	B2	L2	P	AX	18.00	3.01	16.72
56B1	B1	L1	K	AX	30.00	2.85	9.50
56B2	B2	L2	K	AX	30.00	1.82	006.06
56M1	B2	L1	C	AX	42.00	6.34	015.09
56M2	B2	L2	C	AX	42.00	6.59	015.69
56T1	B1	L1	P	AX	70.00	19.98	028.54
56T2	B2	L2	P	AX	18.00	2.19	12.16
57B1	B1	L1	K	AX	30.00	5.27	017.56
57B2	B2	L2	K	AX	30.00	9.12	030.40
57M1	B2	L1	C	AX	18.00	15.44	085.77
57M2	B2	L2	C	AX	70.00	27.50	039.28
57T1	B1	L1	P	AX	70.00	40.92	058.45
57T2	B2	L2	P	AX	18.00	5.21	28.94
58M1	B2	L1	C	AX	70.00	25.79	036.84
58M2	B2	L2	C	AX	18.00	.81	004.50
58T1	B1	L1	P	AX	126.00	90.62	071.92
59B1	B1	L1	K	AX	30.00	6.43	021.43
59B2	B2	L2	K	AX	30.00	8.32	027.73
60B1	B1	L1	K	AX	60.00	21.12	035.20
61B1	B1	L1	K	AX	30.00	16.02	053.40
61B2	B2	L2	K	AX	30.00	.00	0.06
61M1	B2	L1	C	AX	87.00	20.20	023.21
61T1	B1	L1	P	AX	87.00	53.93	061.98
62B1	B1	L1	K	TB	60.00	1.86	003.10
62M1	B2	L1	C	TB	87.00	1.91	002.19
62T1	B1	L1	P	TB	87.00	24.90	028.62
63B1	B1	L1	K	AX	39.00	13.58	045.26
63B2	B2	L2	K	AX	30.00	.00	0.00
63M1	B2	L1	C	AX	87.00	20.79	023.89
63T1	B1	L1	P	AX	87.00	48.55	055.80
64B1	B1	L1	K	AX	30.00	10.00	033.33
64B2	B2	L2	K	AX	30.00	.23	7.60
64M1	B2	L1	C	AX	87.00	20.73	023.82
64T1	B1	L1	P	AX	87.00	55.05	063.27
65B2	B2	L2	K	AX	60.00	.00	0.00
65M1	B2	L1	C	AX	87.00	3.55	004.08
65T1	B1	L1	P	AX	87.00	16.50	018.96
66B1	B1	L1	K	AX	30.00	3.25	010.83
66B2	B2	L2	K	AX	30.00	.58	1.93
66M1	B2	L1	C	AX	42.00	12.55	029.88
66M2	B2	L2	C	AX	42.00	5.95	014.16
66T1	B1	L1	P	AX	70.00	31.13	044.47
66T2	B2	L2	P	AX	18.00	3.75	020.83
67B1	B1	L1	K	AX	30.00	2.80	009.33
67B2	B2	L2	K	AX	30.00	3.79	012.63
67M1	B2	L1	C	AX	42.00	14.46	034.42
67M2	B2	L2	C	AX	42.00	15.99	038.07
67T1	B1	L1	P	AX	[illegible]	4.26	010.14
67T2	B2	L2	P	AX	[illegible]	4.80	011.42
68B1	B1	L1	K	AX	[illegible]	9.78	016.30
68M1	B2	L1	C	AX	[illegible]	14.53	016.70
68T1	B1	L1	P	AX	87.00	12.46	014.32
69B1	B1	L1	K	AX	30.00	2.92	9.73
69B2	B2	L2	K	AX	30.00	3.73	012.43
69M1	B2	L1	C	AX	18.00	.42	002.33
69M2	B2	L2	C	AX	70.00	40.53	057.90
69T1	B1	L1	P	AX	42.00	1.29	003.07
69T2	B2	L2	P	AX	42.00	9.38	022.33
70B2	B2	L2	K	AX	60.00	3.37	005.61
70M2	B2	L2	C	AX	87.00	41.85	048.10
70T2	B2	L2	P	AX	87.00	22.74	026.13
71B2	B2	L2	K	AX	60.00	6.23	010.38
71M2	B2	L2	C	AX	87.00	61.11	070.24
71T2	B2	L2	P	AX	128.10	75.25	058.74
72B2	B2	L2	K	TB	60.00	3.31	005.51
72M2	B2	L2	C	TB	87.00	27.77	031.91
72T2	B2	L2	P	TB	87.00	50.44	057.97
73B2	B2	L2	K	AX	60.00	3.27	005.45
73M2	B2	L2	C	AX	87.00	33.94	039.01
73T2	B2	L2	P	AX	87.00	30.27	034.79
74B2	B2	L2	K	AX	60.00	3.22	005.36
74M2	B2	L2	C	AX	87.00	32.68	037.56
74T2	B2	L2	P	AX	87.00	25.73	029.57
75B1	B1	L1	K	AX	30.00	9.78	032.60
75B2	B2	L2	K	AX	30.00	.00	0.00
75M1	B2	L1	C	AX	42.00	14.57	034.69
75M2	B2	L2	C	AX	42.00	.28	000.66
75T1	B1	L1	P	AX	42.00	12.91	030.73
75T2	B2	L2	P	AX	42.00	3.75	008.92
76B1	B1	L1	K	AX	60.00	7.96	013.26
77B1	B1	L1	K	AX	30.00	10.99	036.63
77B2	B2	L2	K	AX	30.00	.00	0.00
77M1	B2	L1	C	AX	87.00	15.22	017.49
77T1	B1	L1	P	AX	87.00	19.90	022.87
78T1	B1	L1	P	AX	87.00	50.02	057.49
79B1	B1	L1	K	AX	30.00	10.99	036.63
79B2	B2	L2	K	AX	30.00	.00	0.00

TRAY	BUS	LOOP	SER	LOC	AREA AVAILABLE	AREA FILLED	PERCENT FILLED	TRAY	BUS	LOOP	SER	LOC	AREA AVAILABLE	AREA FILLED	PERCENT FILLED
79M1	B2	L1	C	AX	87.00	18.35	021.09	98B	B2	L2	K	TB	60.00	1.45	002.41
79T1	B1	L1	[illegible]	AX	87.00	45.79	052.63	98M	B2	L2	C	TB	87.00	17.80	020.45
80M1	B2	L1	C	AX	87.00	12.25	014.08	98T	B2	L2	P	TB	87.00	27.24	031.31
81B1	B1	L1	K	AX	30.00	10.99	036.63	99B	B2	L2	K	TB	36.00	1.45	004.02
81B2	B2	L2	K	AX	30.00	.00	0.00	99M	B2	L2	C	TB	87.00	17.04	019.58
81M1	B2	L1	C	AX	87.00	23.06	026.50	99T	B2	L2	P	TB	87.00	28.03	032.21
81T1	B1	L1	P	AX	87.00	42.44	048.78	CR327	B1	L1	K	RX	.79	.20	025.31
82B1	B1	L1	[illegible]	AX	60.00	4.08	006.80	CR328	B2	L2	K	RX	.79	.20	025.31
82M1	B2	L1	[illegible]	AX	87.00	4.43	005.09	CR329	B2	L2	K	RX	.79	.20	025.31
82T1	B1	L1	[illegible]	AX	87.00	7.47	008.58	CR330	B1	L1	K	RX	.79	.20	025.31
83B	B2	L2	[illegible]	TB	60.00	7.40	012.33	CR331	B2	L2	K	TB	.79	.20	025.31
83M	B2	L2	C	TB	87.00	27.55	031.66	CR332	B1	L1	K	TB	.79	.20	025.31
83T	B2	L2	P	TB	87.00	35.81	041.16	CR333	B2	L2	K	BT	3.14	.30	009.55
84B	B2	L2	K	TB	60.00	6.46	010.76	CR334	B1	L1	K	BT	3.14	.30	009.55
84M	B2	L2	C	TB	87.00	26.46	030.41	CR336	B1	L1	K	AX	3.14	.30	009.55
84T	B2	L2	P	TB	87.00	40.96	047.08	CR367	B2	L2	K	RX	.79	.00	000.00
85B	B2	L2	K	TB	60.00	6.46	[illegible]0.76	R43A	B1	L1	P	TB	64.80	12.50	019.29
85M	B2	L2	C	TB	87.00	29.[illegible]	.67	R100	B1	L2	C	RX	60.00	16.19	026.98
85T	B2	L2	P	TB	87.00	41 [illegible]	.26	R101	B1	L2	P	RX	60.00	30.01	050.01
86B	B2	L2	K	TB	60.00	[illegible]	[illegible]0.76	R102	B2	L1	C	RX	60.00	7.56	12.60
86M	B2	L2	C	TB	87.00	2[illegible]	034.12	R103	B1	L1	P	RX	60.00	11.18	18.63
86T	B2	L2	P	TB	87.00	4[illegible]	050.17	R104	B2	L1	P	RX	60.00	9.8[illegible]	16.35
87B	B2	L2	K	TB	60.00	7.88	013.13	R105	B1	L1	K	RX	60.00	1.46	2.43
87M	B2	L2	C	TB	87.00	28.79	033.09	R106	B2	L2	C	RX	60.00	7.74	12.90
87T	B2	L2	P	[illegible]	87.00	43.91	050.47	R107	B1	L2	C	RX	60.00	16.34	027.23
88B	B2	L2	K	[illegible]	60.00	5.99	009.98	R108	B1	L2	P	RX	60.00	29.23	048.71
88M	B2	L2	C	[illegible]	87.00	25.45	029.25	R109	B2	L1	C	RX	60.00	10.48	017.46
88T	B2	L2	P	[illegible]	87.00	40.81	046.90	R110	B1	L1	P	RX	60.00	21.41	35.68
89M	B2	L2	C	[illegible]	87.00	11.05	012.70	R111	B2	L1	P	RX	60.00	26.22	43.70
89T	B2	L2	P	[illegible]	87.00	7.14	008.20	R112	B1	L1	K	RX	60.00	5.21	008.68
90B	B2	L2	K	[illegible]	60.00	1.41	002.35	R113	B1	L2	P	RX	60.00	28.39	047.31
90M	B2	L2	C	TB	87.00	16.02	018.41	R114	B1	L1	P	RX	72.00	38.29	053.18
90T	B2	L2	P	TB	87.00	45.94	052.80	R115	B1	L2	C	RX	60.00	17.04	028.40
91B	B2	L2	K	TB	60.00	5.35	008.91	R116	B1	L2	P	RX	60.00	28.64	047.73
91M	B2	L2	C	TB	[illegible]7.00	2[illegible].08	027.67	R117	B2	L1	C	RX	60.00	10.17	016.95
91T	B2	L2	P	TB	87.00	40.40	046.43	R118	B2	L2	C	RX	60.00	4.31	007.18
92B	B2	L2	K	TB	60.00	1.41	002.35	R119	B1	L2	C	RX	60.00	12.17	020.28
92M	B2	L2	C	TB	87.00	2.80	003.21	R120	B1	L2	P	RX	60.00	21.60	36.00
92T	B2	L2	P	TB	87.00	18.45	21.20	R121	B2	L1	C	RX	60.00	14.72	024.53
93M	B2	L2	C	TB	87.00	12.97	014.90	R122	B1	L1	P	RX	60.00	26.18	043.63
93T	B2	L2	P	TB	108.00	71.06	065.79	R123	B2	L1	P	RX	60.00	23.31	38.85
94B	B2	L2	K	TB	60.00	3.93	006.55	R124	B1	L1	K	RX	60.00	5.05	008.41
94M	B2	L2	C	TB	87.00	22.29	025.62	R125	B2	L2	C	RX	60.00	3.79	006.31
94T	B2	L2	P	TB	87.00	34.23	039.34	R126	B1	L2	C	RX	60.00	2.30	3.83
95B	B2	L2	K	TB	60.00	3.50	005.83	R127	B1	L2	P	RX	60.00	11.61	019.35
95M	B2	L2	C	TB	87.00	27.94	032.11	R128	B2	L1	C	RX	60.00	14.29	023.81
95T	B2	L2	P	TB	87.00	44.13	050.72	R129	B1	L1	P	RX	60.00	34.65	057.75
96M	B2	L2	C	TB	87.00	21.48	024.68	R130	B2	L1	P	RX	60.00	20.50	34.17
96T	B2	L2	P	TB	87.00	35.21	040.47	R131	B1	L1	K	RX	60.00	2.89	4.8[illegible]
97M	B2	L2	C	TB	87.00	15.07	017.32	R134	B1	L2	P	RX	60.00	11.16	018.60
97T	B2	L2	P	TB	87.00	41.98	048.25	R136	B1	L1	P	RX	60.00	27.81	046.35

TRAY	BUS	LOOP	SER	LOC	AREA AVAILABLE	AREA FILLED	PERCENT FILLED	TRAY	BUS	LOOP	SER	LOC	AREA AVAILABLE	AREA FILLED	PERCENT FILLED
R137	B2	L1	P	RX	60.00	16.04	26.73	R192	B1	L1	C	TB	23.00	1.23	005.34
R138	B1	L1	K	RX	60.00	3.[illegible]	005.10	R193	B1	L2	P	RX	36.00	.28	7.70
R141	B1	L2	C	RX	60.00	9.80	016.33	R194	B2	L2	K	RX	56.40	34.24	060.70
R143	B1	L1	P	RX	60.00	10.71	17.85	R195	B2	L2	P	TB	36.00	5.87	016.30
R145	B1	L1	K	RX	60.00	22.18	036.96	R196	B1	L1	P	TB	60.00	25.47	42.45
R146	B2	L1	P	RX	60.00	13.45	022.41	R197	B2	L2	P	TB	60.00	25.47	42.45
R147	B1	L1	C	RX	60.00	8.60	014.33	R198	B1	L1	P	RX	36.00	.00	0.00
R148	B2	L1	C	RX	60.00	27.66	046.10	R199	B2	L2	P	RX	60.00	.00	0.00
R149	B1	L2	P	RX	60.00	23.26	038.76	R1	B1	L1	K	AX	60.00	1.53	002.55
R150	B2	L2	C	RX	60.00	47.81	079.68	R10	B2	L2	C	AX	36.00	1.68	004.66
R151	B2	L2	P	RX	60.00	33.14	055.23	R11	B1	L1	C	AX	36.00	.25	000.69
R152	B2	L1	P	RX	60.00	12.09	020.15	R12	B1	L2	P	AX	36.00	1.77	004.91
R153	B1	L1	C	RX	60.00	7.26	012.10	R13	B1	L2	P	AX	36.00	.00	0.00
R154	B2	L1	C	RX	60.00	20.20	033.66	R14	B1	L1	P	AX	36.00	.72	2.00
R155	B1	L2	P	RX	60.00	10.77	17.95	R15	B1	L1	P	AX	36.00	1.77	004.91
R156	B2	L2	C	RX	60.00	28.66	047.76	R16	B2	L1	C	TB	60.00	22.48	037.46
R157	B2	L2	P	RX	60.00	23.62	039.36	R17	B1	L1	P	TB	91.20	59.71	065.47
R158	B1	L1	P	RX	36.00	11.12	030.88	R18	B1	L1	K	TB	60.00	9.76	016.26
R159	B1	L1	C	RX	36.00	7.72	21.44	R19	B2	L2	P	TB	36.00	9.57	026.58
R160	B1	L1	K	RX	36.00	1.81	5.02	R2	B2	L2	C	AX	60.00	53.23	088.71
R161	B2	L2	P	RX	36.00	.86	002.38	R2A	B1	L2	C	AX	28.80	.61	002.11
R162	B2	L2	C	RX	36.00	3.09	8.58	R20	B2	L2	C	TB	36.00	14.93	041.47
R163	B2	L2	K	RX	36.00	4.11	011.41	R21	B1	L1	P	TB	36.00	5.23	014.52
R164	B2	L2	P	RX	36.00	7.85	021.80	R22	B1	L1	C	TB	36.00	5.76	016.00
R165	B2	L2	C	RX	36.00	10.88	030.22	R23	B1	L1	P	TB	48 00	4.85	010.10
R166	B2	L2	K	RX	36.00	5.32	014.77	R24	B2	L2	P	TB	36.00	11.18	031.05
R167	B1	L1	P	RX	36.00	2.74	007.61	R25	B2	L2	P	TB	43.20	31.69	073.35
R168	B1	L1	[illegible]	RX	36.00	3.99	011.08	R26	B2	L2	P	TB	43.20	25.66	059.39
R169	B1	L1	K	RX	36.00	4.38	012.16	R27	B2	L2	P	TB	36.00	11.55	32.08
R170	B2	L2	P	RX	36.00	12.04	033.44	R28	B2	L2	P	TB	36.00	6.46	17.94
R171	B2	L2	C	RX	36.00	13.66	037.94	R29	B1	L1	P	TB	36.00	12.59	034.97
R172	B2	L2	K	RX	36.00	12.68	035.22	R3	B1	L1	P	AX	36.00	12.70	035.27
R173	B1	L1	P	RX	36.00	10.58	029.38	R30	B1	L1	P	TB	36.00	20.11	055.86
R174	B1	L1	P	RX	36.00	4.35	012.08	R31	B2	L2	P	TB	36.00	6.65	18.47
R175	B1	L1	P	RX	36.00	5.51	015.30	R32	B2	L2	C	TB	23.00	.60	2.60
R176	B1	L1	C	RX	36.00	2.79	007.75	R33	B2	L2	P	TB	23.00	1.82	7.91
R177	B1	L1	K	RX	36.00	6.75	018.75	R34	B2	L2	P	TB	36.00	13.93	038.69
R178	B2	L2	P	RX	36.00	14.49	040.25	R35	B1	L1	P	TB	60.00	10.17	016.95
R179	B2	L2	C	RX	36.00	12.86	035.72	R36	B2	L2	C	TB	60.00	.65	1.08
R180	B2	L2	K	RX	36.00	10.35	028.75	R37	B2	L2	P	TB	36.00	4.65	012.91
R181	B1	L1	P	RX	36.00	.89	002.47	R38	B2	L2	P	TB	36.00	17.21	047.80
R182	B1	L1	P	RX	36.00	1.49	4.13	R39	B1	L1	K	TB	23.00	2.43	010.56
R183	B1	L1	K	RX	36.00	3.62	010.05	R4	B2	L2	P	AX	36.00	4.03	11.19
R184	B1	L1	C	RX	36.00	15.09	041.91	R40	B1	L1	C	TB	23.00	16.26	070.69
R185	B1	L1	P	RX	36.00	21.32	059.22	R41	B1	L1	P	TB	23.00	14.71	063.95
R186	B1	L1	P	RX	36.00	10.91	030.30	R42	B1	L1	P	TB	36.00	1.82	5.05
R187	B1	L1	C	RX	36.00	4.49	012.47	R43	B1	L1	P	TB	48.00	2.36	4.91
R188	B1	L1	P	RX	36.00	10.36	028.77	R44	B1	L1	P	TB	64.80	7.19	11.09
R189	B1	L1	C	RX	36.00	23.02	063.94	R45	B1	L1	P	TB	36.00	15.98	44.38
R190	B1	L1	P	RX	43.20	26.56	061.48	R46	B1	L1	P	TB	43.20	25.25	058.44
R191	B1	L1	P	TB	23.00	4.70	20.43	R47	B1	L1	C	TB	23.00	12.22	053.13

TRAY	BUS	LOOP	SER	LOC	AREA AVAILABLE	AREA FILLED	PERCENT FILLED
R48	B1	L1	P	TB	28.80	11.03	038.29
R49	B1	L1	P	TB	23.00	3.66	15.91
R5	B3	L0	P	AX	36.00	25.46	070.72
R50	B1	L1	C	TB	23.00	1.90	008.26
R51	B1	L1	K	TB	3.00	.67	022.33
R52	B1	L1	P	TB	23.00	3.12	13.56
R53	B1	L1	C	TB	23.00	5.14	022.34
R54	B1	L1	K	TB	23.00	.51	002.21
R55	B1	L1	P	TB	23.00	2.96	12.86
R56	B1	L1	C	TB	23.00	4.89	021.26
R57	B1	L1	K	RX	60.00	24.13	040.21
R59	B1	L1	C	RX	60.00	48.62	081.03
R6	B2	L2	P	AX	43.20	37.47	086.73
R60	B2	L1	C	RX	60.00	30.55	050.91
R61	B1	L2	P	RX	60.00	25.00	041.66
R62	B2	L2	C	RX	60.00	32.32	053.86
R63	B2	L2	P	RX	72.00	48.06	066.75
R64	B2	L2	K	RX	60.00	26.10	043.50
R65	B1	L1	K	RX	60.00	14.01	023.35
R67	B1	L1	C	RX	60.00	49.13	081.88
R69	B1	L2	P	RX	60.00	35.58	059.30
R7	B1	L1	P	AX	70.00	51.08	072.97
R71	B2	L2	P	RX	72.00	45.62	063.36
R72	B2	L2	K	RX	60.00	15.42	025.70
R73	B1	L1	K	RX	60.00	12.07	020.11
R75	B1	L1	C	RX	60.00	27.36	045.60
R76	B1	L1	C	RX	60.00	30.49	050.81
R77	B1	L2	P	RX	60.00	26.38	.96
R79	B2	L2	P	RX	72.00	51.82	.97
R80	B2	L2	K	RX	60.00	15.02	025.03
R81	B1	L1	K	RX	60.00	6.59	010.98
R82	B2	L1	C	RX	60.00	31.87	053.11
R83	B1	L1	C	RX	60.00	21.64	036.06
R85	B1	L2	P	RX	60.00	30.35	50.58
R87	B2	L2	P	RX	60.00	18.94	31.56
R88	B2	L2	K	RX	60.00	7.14	011.90
R89	B1	L1	C	RX	60.00	12.44	020.73
R90	B1	L2	P	RX	60.00	28.96	48.26
R91	B2	L2	K	RX	60.00	2.72	4.53
R92	B2	L1	C	RX	60.00	5.00	8.33
R93	B1	L1	C	RX	60.00	12.44	020.73
R95	B1	L2	P	RX	60.00	29.54	049.23
R97	B2	L2	P	RX	60.00	15.31	25.51
R98	B2	L2	K	RX	60.00	6.10	010.16
R99	B2	L2	C	RX	60.00	7.88	13.13
100M	B2	L2	C	TB	87.00	7.38	008.48
100T	B2	L2	P	TB	87.00	55.34	063.60
101M	B2	L2	C	TB	87.00	7.10	008.16
101T	B2	L2	P	TB	87.00	7.49	008.60
102M	B2	L2	C	TB	87.00	5.83	006.70
102T	B2	L2	P	TB	52.00	4.73	009.09
103	B2	L2	P	TB	87.00	11.36	013.05
104	B2	L2	P	TB	52.00	15.39	029.59
105	B2	L2	P	TB	52.00	20.32	039.07
106	B2	L2	P	TB	52.00	6.04	011.61
107B	B2	L2	K	TB	60.00	1.55	002.58
107M	B2	L2	C	TB	87.00	27.96	032.13
107T	B2	L2	P	TB	87.00	42.74	049.12
108M	B2	L2	C	TB	52.00	13.62	026.19
108T	B2	L2	P	TB	52.00	19.73	037.94
109M	B2	L2	C	TB	52.00	10.84	020.84
109T	B2	L2	P	TB	52.00	16.44	031.61
110B	B2	L2	K	TB	36.00	1.28	003.55
110M	B2	L2	C	TB	87.00	16.39	18.83
110T	B2	L2	P	TB	87.00	19.11	021.96
111B	B2	L2	K	TB	60.00	1.11	001.85
111M	B2	L2	C	TB	87.00	8.83	010.14
111T	B2	L2	P	TB	87.00	16.66	19.14
112	B1	L1	P	TB	52.00	19.07	036.67
113	B2	L2	P	TB	52.00	12.11	023.28
114B	B2	L2	K	TB	60.00	1.11	001.85
114M	B2	L2	C	TB	87.00	8.95	010.28
114T	B2	L2	P	TB	87.00	16.95	19.48
115B	B2	L2	K	TB	60.00	.25	000.41
115M	B2	L2	C	TB	87.00	7.60	008.73
115T	B2	L2	P	TB	87.00	19.53	022.44
116M	B2	L2	C	TB	35.00	.09	000.25
116T	B2	L2	P	TB	35.00	2.36	006.74
117B	B2	L2	K	TB	60.00	.74	001.23
117M	B2	L2	C	TB	87.00	10.6	012.27
117T	B2	L2	P	TB	87.00	24.5[illegible]	028.16
118T	B2	L2	P	TB	52.00	17.64	033.92
119T	B2	L2	P	TB	52.00	3.48	006.69
120T	B2	L2	P	TB	52.00	2 30	004.42
121B	B2	L2	K	TB	60.00	.98	001.63
121M	B2	L2	C	TB	87.00	11.46	013.17
121T	B2	L2	P	TB	87.00	19.75	022.70
122B	B2	L2	K	TB	60.00	1.23	002.05
122M	B2	L2	C	TB	87.00	12.00	013.79
122T	B2	L2	P	TB	87.00	20.16	023.17
123T	B2	L2	P	TB	52.00	5.10	009.80
124T	B2	L2	P	TB	52.00	.31	000.59
125B	B2	L2	K	TB	60.00	2.03	003.38
125M	B2	L2	C	TB	87.00	13.30	015.28
125T	B2	L2	P	TB	87.00	27.31	031.39
126B	B2	L2	K	TB	60.00	2.97	004.95
126M	B2	L2	C	TB	87.00	15.59	017.91
126T	B2	L2	P	TB	87.00	27.66	031.79
127B	B2	L2	K	TB	60.00	2.78	004.63
127M	B2	L2	C	TB	87.00	17.18	019.74
127T	B2	L2	P	TB	87.00	35.81	041.16
128M	B1	L1	C	TB	87.00	.11	000.12

TRAY	BUS	LOOP	SER	LOC	AREA AVAILABLE	AREA FILLED	PERCENT FILLED
128T	B1	L1	P	TB	87.00	9.36	010.75
129M	B1	L1	C	TB	87.00	2.55	002.93
129T	B1	L1	P	TB	87.00	7.02	008.06
130B	B1	L1	K	TB	23.00	.86	003.73
130M	B1	L1	C	TB	87.00	4.14	004.75
130T	B1	L1	P	TB	87.00	12.31	014.14
131B	B2	L2	K	TB	60.00	3.17	005.28
131M	B2	L2	C	TB	87.00	20.91	024.03
131T	B2	L2	P	TB	87.00	32.69	037.57
132B	B2	L2	K	TB	60.00	6.82	011.36
132M	B2	L2	C	TB	87.00	25.89	029.75
132T	B2	L2	P	TB	87.00	34.93	040.14
133B	B2	L2	K	TB	60.00	2.64	004.40
133M	B1	L1	C	TB	87.00	23.68	027.21
133T	B1	L1	P	TB	87.00	15.55	017.87
134B	B1	L1	K	TB	60.00	6.80	011.33
134M	B1	L1	C	TB	87.00	17.40	020.00
134T	B1	L1	P	TB	87.00	30.03	034.51
135B	B1	L1	K	TB	60.00	9.29	015.48
135M	B1	L1	C	TB	87.00	16.96	019.49
135T	B1	L1	P	TB	87.00	48.15	055.34
136B	B1	L1	K	TB	60.00	8.89	014.81
136M	B1	L1	C	TB	87.00	15.37	017.66
136T	B1	L1	P	TB	87.00	46.79	053.78
137B	B1	L1	K	TB	60.00	10.28	017.13
137M	B1	L1	C	TB	87.00	10.49	012.05
137T	B1	L1	P	TB	87.00	19.68	022.62
138B	B1	L1	K	TB	60.00	4.28	007.13
138M	B1	L1	C	TB	87.00	5.62	006.45
138T	B1	L1	P	TB	87.00	25.18	028.94
139B	B1	L1	K	TB	60.00	10.69	017.81
139M	B1	L1	C	TB	87.00	9.49	010.90
139T	B1	L1	P	TB	87.00	18.06	020.75
140B	B1	L1	K	TB	60.00	9.58	015.96
140M	B1	L1	C	TB	87.00	8.28	009.51
140T	B1	L1	P	TB	87.00	14.60	016.78
141B	B1	L1	K	TB	60.00	8.62	014.36
141M	B1	L1	C	TB	87.00	6.39	007.34
141T	B1	L1	P	TB	87.00	10.99	12.63
142B	B1	L1	K	TB	60.00	7.50	012.50
142M	B1	L1	C	TB	87.00	5.58	6.41
142T	B1	L1	P	TB	87.00	11.57	13.29
143B	B1	L1	K	TB	60.00	7.08	011.80
143M	B1	L1	C	TB	87.00	3.92	004.50
143T	B1	L1	P	TB	87.00	10.15	11.66
144B	B1	L1	K	TB	23.00	.97	004.21
144M	B1	L1	C	TB	35.00	1.30	3.71
144T	B1	L1	P	TB	35.00	.85	2.42
145B	B1	L1	K	TB	60.00	3.96	006.60
145M	B1	L1	C	TB	87.00	2.07	2.37
145T	B1	L1	P	TB	87.00	11.59	13.32
146B	B1	L1	K	TB	23.00	.85	000.21
146M	B1	L1	C	TB	35.00	.42	1.20
146T	B1	L1	P	TB	35.00	.54	1.54
147B	B1	L1	K	TB	60.00	3.96	006.60
147M	B1	L1	C	TB	87.00	2.17	2.49
147T	B1	L1	P	TB	87.00	9.15	10.51
148B	B1	L1	K	TB	23.00	.05	000.21
148M	B1	L1	C	TB	35.00	.42	1.20
148T	B1	L1	P	TB	52.00	.8	5.30
149B	B1	L1	K	TB	23.00	.00	0.00
149M	B1	L1	C	TB	87.00	.25	2.80
149T	B1	L1	P	TB	87	.60	6.80
150B	B1	L1	K	TB	60.00	.86	006.43
150M	B1	L1	C	TB	87.00	.07	2.37
150T	B1	L1	P	TB	87	.62	8.75
151M	B1	L1	C	TB	52	.60	1.15
151T	B1	L1	P	TB	5	7.36	4.53
152B	B1	L1	K	TB	60.00	.3	003.05
152M	B1	L1	C	TB	87.00	.23	2.56
152T	B1	L1	P	TB	87.00	6.35	7.29
153B	B1	L1	K	TB	60.00	1.65	002.75
153M	B1	L1	C	TB	87.00	1.09	1.25
153T	B1	L1	P	TB	87.00	5.55	6.37
154B	B1	L1	K	TB	36.00	.36	001.00
154M	B1	L1	C	TB	87.00	.84	9.60
154T	B1	L1	P	TB	87.00	4.35	5.00
155B	B1	L1	K	TB	36.00	.46	001.27
155M	B1	L1	C	TB	87.00	1.54	1.77
155T	B1	L1	P	TB	87.00	4.35	5.00
156B	B1	L1	K	TB	36.00	.46	001.27
156M	B1	L1	C	TB	87.00	1.54	1.77
156T	B1	L1	P	TB	87.00	7.21	008.28
157B	B1	L1	K	TB	36.00	.32	000.88
157M	B1	L1	C	TB	87.00	1.54	1.77
157T	B1	L1	P	TB	87.00	7.21	008.28
158B	B1	L1	K	TB	36.00	.42	001.16
158M	B1	L1	C	TB	87.00	5.52	6.34
158T	B1	L1	P	TB	87.00	8.34	9.58
159	B2	L2	P	TB	52.00	6.65	12.78
160	B1	L1	P	TB	52.00	20.11	038.67
161B	B1	L1	K	TB	36.00	.27	000.75
161M	B1	L1	C	TB	87.00	6.87	7.89
161T	B1	L1	P	TB	87.00	13.36	15.35
162B	B1	L1	K	TB	36.00	.23	000.66
162M	B1	L1	C	TB	36.00	7.67	21.30
162T	B1	L1	P	TB	87.00	5.36	006.16
163B	B1	L1	K	TB	36.00	.76	002.11
163M	B1	L1	C	TB	87.00	8.31	9.55
163T	B1	L1	P	TB	87.00	6.08	006.98
164B	B1	L1	K	TB	36.00	1.94	005.38
164M	B1	L1	C	TB	87.00	10.34	011.88

TRAY	BUS	LOOP	SER	LOC	AREA AVAILABLE	AREA FILLED	PERCENT FILLED	TRAY	BUS	LOOP	SER	LOC	AREA AVAILABLE	AREA FILLED	PERCENT FILLED
164T	B1	L1	P	TB	87.00	11.05	012.70	183T	B1	L1	P	TB	35.00	.00	0.00
165B	B1	L1	K	TB	36.00	2.14	005.94	184M	B1	L1	C	TB	35.00	.00	0.00
165M	B1	L1	C	TB	87.00	10.59	012.17	184T	B1	L1	P	TB	35.00	.00	0.00
165T	B1	L1	P	TB	87.00	11.05	012.70	185B	B1	L1	K	TB	23.00	.93	004.04
166B	B1	L1	K	TB	36.00	2.27	006.30	185M	B1	L1	C	TB	35.00	5.50	15.71
166M	B1	L1	C	TB	87.00	9.42	010.82	185T	B1	L1	P	TB	35.00	4.16	011.88
166T	B1	L1	P	TB	87.00	17.26	019.83	186B	B2	L2	K	RX	23.00	.50	2.17
167B	B1	L1	K	TB	60.00	2.50	004.16	186M	B1	L1	C	RX	108.00	.95	8.70
167M	B1	L1	C	TB	87.00	3.26	003.74	186T	B1	L1	P	RX	108.00	8.21	7.60
167T	B1	L1	P	TB	87.00	22.84	026.25	187B	B1	L1	K	TB	23.00	.08	3.40
168B	B1	L1	K	TB	60.00	.29	000.48	187M	B1	L1	C	TB	35.00	.53	1.51
168M	B1	L1	C	TB	87.00	4.17	004.79	187T	B1	L1	P	TB	35.00	.16	4.50
168T	B1	L1	P	TB	87.00	8.09	009.29	188B	B1	L1	K	TB	23.00	.08	3.40
169B	B1	L1	K	TB	36.00	.37	001.02	188M	B1	L1	C	TB	35.00	.00	0.00
169M	B1	L1	C	TB	87.00	11.93	013.71	188T	B1	L1	P	TB	35.00	.16	4.50
169T	B1	L1	P	TB	87.00	18.31	21.04	189	B1	L1	P	TB	35.00	1.19	3.40
170B	B1	L1	K	TB	60.00	.52	000.86	190	B1	L1	P	TB	35.00	4.10	011.71
170M	B1	L1	C	TB	87.00	13.55	015.57	191	B1	L1	P	TB	35.00	2.87	008.20
170T	B1	L1	P	TB	87.00	29.34	033.72	192B	B2	L2	K	RX	60.00	16.63	027.71
171B	B1	L1	K	TB	60.00	.42	000.70	192M	B1	L2	C	RX	87.00	29.69	034.12
171M	B1	L1	C	TB	87.00	14.02	016.11	192T	B1	L2	P	RX	87.00	29.76	034.20
171T	B1	L1	P	TB	87.00	28.03	032.21	193B	B2	L2	K	RX	60.00	16.96	028.26
172B	B1	L1	K	TB	60.00	.42	000.70	193M	B1	L2	C	RX	87.00	30.05	034.54
172M	B1	L1	C	TB	87.00	12.86	014.78	193T	B1	L2	P	RX	87.00	32.34	037.17
172T	B1	L1	P	TB	87.00	29.18	033.54	194B	B2	L2	K	RX	60.00	17.91	029.85
173B	B1	L1	K	TB	60.00	.71	001.18	194M	B1	L2	C	RX	87.00	50.24	057.74
173M	B1	L1	C	TB	87.00	17.12	019.67	194T	B1	L2	P	RX	108.00	75.84	070.22
173T	B1	L1	P	TB	87.00	30.43	034.97	195B	B2	L2	K	RX	36.00	10.15	028.19
174B	B1	L1	K	TB	60.00	1.07	001.78	195M	B1	L2	C	RX	52.00	17.56	033.76
174M	B1	L1	C	TB	87.00	17.00	019.54	195T	B1	L2	P	RX	52.00	35.81	068.86
174T	B1	L1	P	TB	87.00	24.34	027.97	196B	B2	L2	K	RX	36.00	.84	002.33
175B	B1	L1	K	TB	60.00	1.38	002.30	196M	B1	L2	C	RX	52.00	4.51	8.67
175M	B1	L1	C	TB	87.00	20.84	023.95	196T	B1	L2	P	RX	52.00	10.77	20.71
175T	B1	L1	P	TB	87.00	39.59	045.50	197B	B2	L2	K	RX	60.00	16.13	026.88
176B	B1	L1	K	TB	60.00	1.53	002.55	197M	B1	L2	C	RX	87.00	28.71	033.00
176M	B1	L1	C	TB	87.00	25.22	028.98	197T	B1	L2	P	RX	87.00	22.32	025.65
176T	B1	L1	P	TB	87.00	41.07	047.20	198B	B2	L2	K	RX	60.00	4.52	007.53
177M	B1	L1	C	TB	35.00	5.44	015.54	198M	B1	L2	C	RX	87.00	11.50	13.21
177T	B1	L1	P	TB	35.00	5.77	016.48	198T	B1	L2	P	RX	87.00	4.44	005.10
178M	B1	L1	C	TB	35.00	4.49	012.82	199B	B2	L2	K	RX	60.00	6.55	010.91
178T	B1	L1	P	TB	35.00	1.49	4.25	199M	B1	L2	C	RX	87.00	10.95	12.58
180B	B1	L1	K	TB	23.00	1.55	006.73	199T	B1	L2	P	RX	87.00	5.60	006.43
180M	B1	L1	C	TB	35.00	9.83	28.08	200B	B2	L2	K	RX	60.00	7.73	012.88
180T	B1	L1	P	TB	35.00	9.03	025.80	200M	B1	L2	C	RX	87.00	9.48	10.89
181M	B2	L2	C	TB	35.00	4.97	14.20	200T	B1	L2	P	RX	87.00	3.34	003.83
181T	B2	L2	P	TB	35.00	3.75	010.71	201B	B2	L2	K	RX	60.00	4.09	006.66
182B	B1	L1	K	TB	36.00	.93	002.58	201M	B1	L1	C	RX	87.00	2.03	2.33
182M	B1	L1	C	TB	52.00	7.57	14.55	201T	B1	L1	P	RX	87.00	.91	1.04
182T	B1	L1	P	TB	52.00	4.53	008.71	202B	B2	L2	K	RX	60.00	1.50	2.50
183B	B1	L1	K	TB	23.00	.00	0.00	202M	B1	L1	C	RX	87.00	.00	0.00
183M	B1	L1	C	TB	35.00	1.54	4.40	202T	B1	L1	P	RX	87.00	.00	0.00

TRAY	BUS	LOOP	SER	LOC	AREA AVAILABLE	AREA FILLED	PERCENT FILLED	TRAY	BUS	LOOP	SER	LOC	AREA AVAILABLE	AREA FILLED	PERCENT FILLED
203B	B2	L2	K	RX	60.00	2.87	004.78	220B	B1	L1	K	RX	60.00	5.11	008.51
203M	B1	L1	C	RX	87.00	10.87	12.49	220M	B2	L1	C	RX	87.00	18.52	021.28
203T	B1	L1	P	RX	87.00	11.88	013.65	220T	B2	L1	P	RX	87.00	18.70	21.49
204B	B2	L2	K	RX	60.00	14.11	023.51	221B	B1	L1	K	RX	60.00	5.24	008.73
204M	B1	L1	C	RX	87.00	13.12	15.08	221M	B2	L1	C	RX	87.00	18.52	021.28
204T	B1	L1	P	RX	87.00	15.69	018.03	221T	B2	L1	P	RX	87.00	18.86	21.67
205B	B2	L2	K	RX	60.00	11.90	019.83	222	B1	L1	P	RX	52.00	30.92	059.46
205M	B1	L1	C	RX	87.00	11.50	13.21	223	B1	L1	P	RX	87.00	32.06	036.85
205T	B1	L1	P	RX	87.00	6.16	007.08	224	B1	L1	P	RX	87.00	8.84	10.16
206B	B2	L2	K	RX	60.00	12.57	020.95	225	B1	L1	P	RX	87.00	3.74	4.29
206M	B1	L1	C	RX	87.00	19.47	022.37	226	B1	L1	P	RX	52.00	3.33	6.40
206T	B1	L1	P	RX	87.00	20.43	23.48	227	B1	L1	P	RX	52.00	3.33	6.40
207B	B2	L2	K	RX	60.00	12.49	020.81	228	B1	L1	P	RX	52.00	3.53	6.78
207M	B1	L2	C	RX	87.00	19.85	022.81	229	B2	L1	P	RX	35.00	2.46	7.02
207T	B1	L2	P	RX	87.00	20.69	23.78	230	B2	L1	P	RX	35.00	3.75	10.71
208B	B2	L2	K	RX	60.00	.56	9.30	231	B2	L1	P	RX	35.00	2.70	7.71
208M	B1	L1	C	RX	87.00	5.03	005.78	232	B2	L1	P	RX	35.00	2.70	7.71
208T	B1	L1	P	RX	87.00	7.27	8.35	233	B2	L1	C	RX	35.00	.00	0.00
209B	B1	L1	K	RX	60.00	4.95	008.25	234	B2	L1	C	RX	35.00	.28	8.00
209M	B2	L1	C	RX	87.00	30.91	035.52	235	B2	L1	C	RX	52.00	1.10	2.11
209T	B2	L1	P	RX	87.00	35.29	40.56	236	B2	L1	C	RX	35.00	.81	2.31
210B	B1	L1	K	RX	60.00	8.85	014.75	237	B2	L1	C	RX	35.00	.28	8.00
210M	B2	L1	C	RX	87.00	25.78	029.63	238	B2	L1	C	RX	35.00	.28	8.00
210T	B2	L1	P	RX	87.00	33.95	39.02	239	B1	L1	C	RX	52.00	.00	0.00
211B	B1	L1	K	RX	60.00	4.67	007.78	240	B2	L1	C	RX	52.00	.29	5.50
211M	B2	L1	C	RX	87.00	7.82	008.98	241	B1	L1	K	RX	52.00	.00	0.00
211T	B2	L1	P	RX	87.00	24.15	027.75	243B	B2	L2	K	RX	36.00	.57	001.58
212B	B1	L1	K	RX	60.00	5.10	008.50	243M	B1	L2	C	RX	52.00	.15	000.28
212M	B2	L2	C	RX	87.00	13.91	015.98	243T	B1	L2	P	RX	52.00	.38	7.30
212T	B2	L2	P	RX	87.00	14.56	16.73	244B	B2	L2	K	RX	36.00	.57	001.58
213B	B1	L1	K	RX	60.00	5.54	009.23	244M	B1	L2	C	RX	52.00	.18	000.34
213M	B2	L2	C	RX	87.00	8.43	009.68	244T	B1	L2	P	RX	52.00	.38	7.30
213T	B2	L2	P	RX	87.00	7.71	8.86	245B	B2	L2	K	RX	36.00	.65	001.80
214B	B1	L1	K	RX	60.00	2.72	004.53	245M	B1	L2	C	RX	52.00	.36	000.69
214M	B2	L2	C	RX	87.00	.95	001.09	245T	B1	L2	P	RX	52.00	.38	7.30
214T	B2	L2	P	RX	87.00	8.87	010.19	246B	B2	L2	K	RX	60.00	11.21	018.68
215B	B1	L1	K	RX	60.00	3.29	005.48	246M	B1	L2	C	RX	87.00	42.26	048.57
215M	B1	L1	C	RX	87.00	7.81	8.97	246T	B1	L2	P	RX	87.00	29.25	033.62
215T	B1	L1	P	RX	87.00	2.07	2.37	247B	B2	L2	K	RX	60.00	11.58	019.30
216B	B1	L1	K	RX	60.00	2.71	004.51	247M	B1	L2	C	RX	87.00	16.65	019.13
216M	B1	L1	C	RX	87.00	8.68	9.97	247T	B1	L2	P	RX	87.00	5.14	005.90
216T	B1	L1	P	RX	87.00	11.12	012.78	248B	B2	L2	K	RX	60.00	11.32	018.86
217B	B1	L1	K	RX	60.00	2.99	004.98	248M	B1	L2	C	RX	87.00	14.06	016.16
217M	B1	L1	C	RX	87.00	9.35	10.74	248T	B1	L2	P	RX	87.00	3.63	004.17
217T	B1	L1	P	RX	87.00	13.04	014.98	249B	B2	L2	K	RX	48.00	9.48	019.75
218B	B1	L1	K	RX	60.00	5.49	009.15	249M	B1	L2	C	RX	70.00	8.44	012.05
218M	B2	L1	C	RX	87.00	10.38	011.93	249T	B1	L2	P	RX	70.00	2.04	002.91
218T	B2	L1	P	RX	87.00	17.41	20.01	250B	B2	L2	K	RX	48.00	9.50	019.79
219B	B1	L1	K	RX	60.00	4.80	008.00	250M	B2	L2	C	RX	70.00	7.73	011.04
219M	B2	L1	C	RX	87.00	12.30	014.13	250T	B2	L2	P	RX	70.00	1.78	002.54
219T	B2	L1	P	RX	87.00	18.38	21.12	251B	B2	L2	K	RX	48.00	9.86	020.54

TRAY	BUS	LOOP	SER	LOC	AREA AVAILABLE	AREA FILLED	PERCENT FILLED	TRAY	BUS	LOOP	SER	LOC	AREA AVAILABLE	AREA FILLED	PERCENT FILLED
251M	B2	L2	C	RX	70.00	7.31	010.44	268M	B1	L1	C	RX	87.00	16.31	018.74
251T	B2	L2	P	RX	70.00	1.46	002.08	268T	B1	L1	P	RX	87.00	26.18	30.09
252B	B2	L2	K	RX	48.00	14.33	029.85	269B	B2	L2	K	RX	36.00	.32	000.88
252M	B2	L2	C	RX	70.00	6.35	009.07	269M	B1	L1	C	RX	52.00	1.19	002.28
252T	B2	L2	P	RX	70.00	1.58	002.25	269T	B2	L2	P	RX	52.00	10.51	20.21
253B	B2	L2	K	RX	48.00	7.01	014.60	270B	B2	L2	K	RX	36.00	.32	000.88
253M	B2	L2	C	RX	70.00	2.06	2.94	270M	B1	L1	C	RX	52.00	.7.	001.48
253T	B2	L2	P	RX	70.00	1.84	002.62	270T	B2	L2	P	RX	52.00	8.06	15.50
254B	B1	L1	K	RX	48.00	11.28	023.50	271B	B2	L2	K	RX	36.00	.32	000.88
254M	B1	L1	C	RX	70.00	4.82	006.88	271M	B1	L1	C	RX	52.00	.38	000.73
254T	B1	L1	P	RX	70.00	.14	2.00	271T	B2	L2	P	RX	52.00	7.64	14.69
255B	B1	L1	K	RX	48.00	8.93	018.60	272	B1	L1	K	RX	87.00	.17	000.19
255M	B1	L1	C	RX	70.00	3.97	005.67	273	B2	L1	P	RX	87.00	20.98	24.11
255T	B1	L1	P	RX	70.00	2.31	003.30	274	B1	L1	P	RX	87.00	36.92	042.43
256B	B1	L1	K	RX	48.00	8.97	018.68	275	B2	L1	C	RX	87.00	14.29	016.42
256M	B1	L1	C	RX	70.00	4.11	005.87	276	B1	L2	C	RX	87.00	.73	8.30
256T	B1	L1	P	RX	70.00	2.31	003.30	277	B1	L2	C	RX	87.00	2.30	2.64
257B	B1	L1	K	RX	36.00	3.78	10.50	278	B2	L2	C	RX	87.00	3.16	003.63
257M	B1	L1	C	RX	52.00	.14	000.26	279B	B1	L1	K	RX	36.00	3.87	010.75
257T	B1	L1	P	RX	52.00	.28	5.30	280B	B1	L1	K	RX	36.00	6.25	017.36
258B	B1	L1	K	RX	36.00	3.78	10.50	280M	B1	L1	C	RX	52.00	31.05	059.71
258M	B1	L1	C	RX	52.00	.14	000.26	280T	B1	L1	P	RX	52.00	28.32	054.46
258T	B1	L1	P	RX	52.00	.00	0.00	281M	B1	L1	C	RX	52.00	30.27	058.21
259B	B1	L1	K	RX	48.00	9.09	018.93	281T	B1	L1	P	RX	52.00	27.24	052.38
259M	B1	L1	C	RX	70.00	3.69	005.27	282M	B1	L1	C	RX	52.00	27.11	052.13
259T	B1	L1	P	RX	70.00	2.59	003.70	282T	B1	L1	P	RX	52.00	26.42	050.80
260B	B2	L2	K	RX	36.00	2.75	007.63	283M	B1	L1	C	RX	52.00	25.15	048.36
260M	B1	L1	C	RX	52.00	2.34	004.50	283T	B1	L1	P	RX	52.00	26.56	051.07
260T	B1	L1	P	RX	52.00	1.70	3.26	284B	B1	L1	K	RX	36.00	5.62	015.61
261B	B2	L2	K	RX	36.00	2.16	006.00	284M	B1	L1	C	RX	52.00	25.29	048.63
261M	B1	L1	C	RX	52.00	2.42	004.65	284T	B1	L1	P	RX	52.00	26.56	051.07
261T	B1	L1	P	RX	52.00	1.70	3.26	285B	B1	L1	K	RX	36.00	5.70	015.83
262B	B2	L2	K	RX	36.00	2.48	006.88	285M	B1	L1	C	RX	52.00	24.59	047.28
262M	B1	L1	C	RX	52.00	4.57	008.78	285T	B1	L1	P	RX	52.00	26.28	050.53
262T	B1	L1	P	RX	52.00	1.97	3.78	286B	B1	L1	K	RX	36.00	1.51	4.19
263B	B2	L2	K	RX	36.00	3.05	008.47	287B	B1	L1	K	RX	36.00	6.08	016.88
263M	B1	L2	C	RX	52.00	5.20	10.00	287M	B1	L1	C	RX	52.00	25.11	048.28
263T	B1	L2	P	RX	52.00	1.11	2.13	287T	B1	L1	P	RX	52.00	25.94	049.88
264B	B1	L1	K	RX	36.00	.45	001.25	288B	B1	L1	K	RX	36.00	3.38	009.38
264M	B1	L1	C	RX	52.00	2.53	004.86	288M	B1	L1	C	RX	52.00	23.15	044.51
264T	B1	L1	P	RX	52.00	1.32	2.53	288T	B1	L1	P	RX	52.00	25.09	048.25
265B	B1	L1	K	RX	36.00	.45	001.25	289B	B1	L1	K	RX	36.00	2.51	6.97
265M	B1	L1	C	RX	52.00	2.81	005.40	289M	B1	L1	C	RX	52.00	19.97	038.40
265T	B1	L1	P	RX	52.00	2.16	4.15	289T	B1	L1	P	RX	52.00	23.09	044.40
266B	B1	L1	K	RX	36.00	.45	001.25	290M	B1	L1	C	RX	35.00	18.26	052.17
266M	B1	L1	C	RX	52.00	3.90	007.50	290T	B1	L1	P	RX	35.00	22.20	063.42
266T	B1	L1	P	RX	52.00	2.76	5.30	291M	B1	L1	C	RX	35.00	5.36	015.31
267B	B1	L1	K	RX	60.00	.54	000.90	291T	B1	L1	P	RX	35.00	10.83	030.94
267M	B1	L1	C	RX	87.00	4.19	004.81	292M	B1	L1	C	RX	35.00	5.22	014.91
267T	B1	L1	P	RX	87.00	3.17	3.64	292T	B1	L1	P	RX	35.00	10.58	030.22
268B	B1	L1	K	RX	60.00	.09	1.50	293B	B1	L1	K	RX	36.00	4.41	012.25

TRAY	BUS	LOOP	SER	LOC	AREA AVAILABLE	AREA FILLED	PERCENT FILLED	TRAY	BUS	LOOP	SER	LOC	AREA AVAILABLE	AREA FILLED	PERCENT FILLED
293M	B1	L1	C	RX	52.00	4.92	009.46	328T	B2	L2	P	RX	70.00	47.83	068.32
293T	B1	L1	P	RX	52.00	10.19	019.59	329B	B1	L1	K	RX	48.00	11.81	024.60
294B	B1	L1	K	RX	36.00	3.24	9.00	329M	B2	L2	C	RX	70.00	6.6.	9.52
295B	B1	L1	K	RX	36.00	3.24	009.00	329T	B2	L2	P	RX	70.00	10.53	15.04
295M	B1	L1	C	RX	52.00	.72	001.38	330B	B1	L1	K	RX	48.00	29.95	062.39
295T	B1	L1	P	RX	52.00	4.70	009.03	330M	B2	L1	C	RX	70.00	27.12	038.74
296B	B2	L2	K	RX	36.00	7.01	19.47	330T	B2	L1	P	RX	70.00	19.09	027.27
296M	B2	L2	C	RX	52.00	4.76	009.15	331B	B1	L1	K	RX	48.00	25.96	054.08
296T	B2	L2	P	RX	52.00	1.60	3.07	331M	B2	L1	C	RX	70.00	21.64	030.91
297B	B2	L2	K	RX	36.00	3.96	11.00	331T	B2	L1	P	RX	70.00	10.72	015.31
298	B1	L2	P	RX	35.00	2.86	8.17	332B	B1	L1	K	RX	48.00	25.52	053.16
299	B1	L2	P	RX	35.00	2.86	8.17	332M	B2	L1	C	RX	70.00	21.14	030.20
300	B1	L2	P	RX	35.00	1.58	4.51	332T	B2	L1	P	RX	70.00	10.41	014.87
301	B1	L1	K	RX	87.00	9.33	010.72	333B	B1	L1	K	RX	48.00	24.40	050.83
302	B2	L1	P	RX	87.00	18.13	20.83	333M	B2	L1	C	RX	70.00	20.46	029.22
303	B1	L1	P	RX	108.00	66.24	061.33	333T	B2	L1	P	RX	70.00	10.25	014.64
305	B1	L2	P	RX	87.00	13.82	015.88	334B	B1	L1	K	RX	48.00	28.61	059.60
308M	B1	L2	C	RX	87.00	6.55	007.52	334M	B2	L1	C	RX	52.00	18.53	035.63
308T	B1	L2	P	RX	87.00	24.60	028.27	334T	B2	L1	P	RX	52.00	9.03	017.36
309M	B1	L2	C	RX	35.00	4.83	013.80	335B	B1	L1	K	RX	36.00	21.75	060.41
309T	B1	L2	P	RX	87.00	30.13	034.63	335M	B2	L1	C	RX	52.00	18.52	035.61
310M	B1	L2	C	RX	35.00	1.93	005.51	335T	B2	L1	P	RX	52.00	7.97	015.32
310T	B1	L2	P	RX	35.00	5.73	016.37	336B	B1	L1	K	RX	36.00	15.80	043.88
312T	B1	L2	P	RX	87.00	23.09	026.54	336M	B2	L1	C	RX	52.00	11.37	021.86
313M	B2	L2	C	RX	87.00	23.85	027.41	336T	B2	L1	P	RX	52.00	3.63	006.98
313T	B2	L2	P	RX	108.00	2.10	001.94	337B	B1	L1	K	RX	36.00	16.03	044.52
314M	B2	L2	C	RX	108.00	23.01	1.30	337M	B2	L1	C	RX	52.00	10.97	021.09
315M	B2	L2	C	RX	52.00	15.58	029.96	337T	B2	L1	P	RX	52.00	3.77	007.25
316M	B2	L2	C	RX	52.00	7.57	014.55	338B	B1	L1	K	RX	36.00	3.14	008.72
317M	B2	L2	C	RX	52.00	7.57	014.55	338M	B2	L1	C	RX	52.00	2.10	004.03
318T	B1	L2	P	RX	52.00	1.41	002.71	338T	B2	L1	P	RX	52.00	.85	1.63
319M	B1	L2	C	RX	52.00	2.28	4.38	339B	B1	L1	K	RX	36.00	13.26	036.83
319T	B1	L2	P	RX	52.00	.96	001.84	339M	B2	L1	C	RX	52.00	8.76	016.84
320M	B2	L2	C	RX	52.00	15.16	029.15	339T	B2	L1	P	RX	52.00	3.32	006.38
320T	B1	L2	P	RX	52.00	19.45	037.40	340B	B1	L1	K	RX	36.00	3.64	010.11
321M	B2	L2	C	RX	52.00	4.32	008.30	340M	B2	L1	C	RX	52.00	6.00	011.53
321T	B1	L2	P	RX	52.00	2.37	004.55	340T	B2	L1	P	RX	52.00	4.02	7.73
322M	B2	L2	C	RX	52.00	10.45	020.09	341B	B1	L1	K	RX	36.00	2.22	006.16
322T	B1	L2	P	RX	52.00	16.76	32.23	341M	B2	L1	C	RX	52.00	.71	001.36
323M	B2	L2	C	RX	52.00	5.42	010.42	341T	B2	L1	P	RX	52.00	.67	1.28
323T	B1	L2	P	RX	52.00	14.17	027.25	342B	B1	L1	K	RX	36.00	10.80	030.00
324M	B1	L1	C	RX	35.00	5.92	016.91	342M	B2	L1	C	RX	52.00	6.93	013.32
324T	B1	L1	P	RX	35.00	10.61	030.31	342T	B2	L1	P	RX	52.00	3.98	007.65
325M	B1	L1	C	RX	35.00	9.98	028.51	343B	B1	L1	K	RX	48.00	9.43	019.64
325T	B1	L1	P	RX	35.00	17.28	049.37	343M	B1	L1	C	RX	70.00	2.55	3.64
326M	B1	L1	C	RX	35.00	9.30	026.57	343T	B1	L1	P	RX	70.00	2.97	4.24
326T	B1	L1	P	RX	35.00	17.28	049.37	344B	B1	L1	K	RX	48.00	8.72	018.16
327M	B1	L1	C	RX	35.00	3.33	009.51	344M	B1	L1	C	RX	70.00	1.20	1.71
327T	B1	L1	P	RX	35.00	6.07	017.34	344T	B1	L1	P	RX	70.00	2.74	3.91
328B	B2	L2	K	RX	48.00	32.64	068.00	345B	B1	L1	K	RX	36.00	6.82	018.94
328M	B2	L2	C	RX	70.00	33.27	047.52	345M	B1	L1	C	RX	52.00	2.37	004.55

TRAY	BUS	LOOP	SER	LOC	AREA AVAILABLE	AREA FILLED	PERCENT FILLED
345T	B1	L1	P	RX	52.00	5.41	010.40
346B	B1	L1	K	RX	48.00	1.39	002.89
346M	B1	L1	C	RX	70.00	2.54	003.62
346T	B1	L1	P	RX	70.00	4.63	006.61
347B	B2	L2	K	RX	48.00	9.63	020.06
347M	B2	L2	C	RX	70.00	5.69	008.12
347T	B2	L2	P	RX	70.00	19.91	028.44
348B	B2	L2	K	RX	36.00	8.04	022.33
348M	B2	L2	C	RX	52.00	2.01	003.86
348T	B2	L2	P	RX	52.00	3.79	007.28
349B	B2	L1	K	RX	36.00	2.36	6.55
349M	B2	L1	C	RX	52.00	1.57	003.01
349T	B2	L1	P	RX	52.00	.71	1.36
350B	B2	L2	K	RX	36.00	7.43	020.63
350M	B2	L1	C	RX	52.00	.43	000.82
350T	B2	L1	P	RX	52.00	.41	7.80
351B	B2	L2	K	RX	36.00	5.52	015.33
351M	B2	L2	C	RX	52.00	1.61	003.09
351T	B2	L2	P	RX	52.00	2.14	004.11
352B	B2	L2	K	RX	48.00	19.71	041.06
352M	B2	L2	C	RX	70.00	18.60	026.57
352T	B2	L2	P	RX	70.00	18.72	026.74
353B	B2	L2	K	RX	48.00	22.22	046.29
353M	B2	L2	C	RX	70.00	22.86	032.65
353T	B2	L2	P	RX	70.00	18.96	027.08
354B	B2	L2	K	RX	48.00	22.15	046.14
354M	B2	L2	C	RX	70.00	23.54	033.62
354T	B2	L2	P	RX	70.00	19.18	027.40
355B	B2	L2	K	RX	48.00	26.28	054.75
355M	B2	L2	C	RX	70.00	26.69	038.12
355T	B2	L2	P	RX	70.00	22.40	032.00
356B	B2	L2	K	RX	57.50	27.65	048.08
356M	B2	L2	C	RX	70.00	29.00	041.42
356T	B2	L2	P	RX	70.00	23.14	033.05
357B	B2	L2	K	RX	48.00	27.73	057.77
357M	B2	L2	C	RX	70.00	29.25	041.78
357T	B2	L2	P	RX	70.00	23.70	033.85
358B	B2	L2	K	RX	57.60	33.48	058.12
358M	B2	L2	C	RX	70.00	30.71	043.87
358T	B2	L2	P	RX	70.00	27.05	038.64
359B	B2	L2	K	RX	57.60	34.33	059.60
359M	B2	L2	C	RX	70.00	.98	1.40
359T	B2	L2	P	RX	70.00	1.64	2.34
360B	B2	L2	K	RX	57.60	34.38	059.68
360M	B2	L2	C	RX	70.00	.98	1.40
360T	B2	L2	P	RX	70.00	1.64	2.34
361	B1	L1	K	RX	35.00	.79	2.25
362	B1	L1	P	RX	52.00	9.48	018.23
363	B1	L1	P	RX	52.00	10.92	021.00
364	B1	L1	P	RX	52.00	2.58	004.96
365	B1	L1	P	RX	52.00	.88	1.69
366M	B1	L1	C	TB	35.00	1.09	003.11
366T	B1	L1	P	TB	35.00	4.84	13.82
367M	B2	L2	C	RX	52.00	2.25	4.32
367T	B2	L2	P	RX	52.00	.89	1.71
368M	B2	L2	C	RX	52.00	2.00	3.84
368T	B2	L2	P	RX	52.00	.89	1.71
369	B1	L2	P	RX	52.00	.88	1.69
370	B1	L2	P	RX	52.00	2.50	4.80
371T	B2	L2	P	TB	52.00	2.08	004.00
372	B2	L2	K	RX	72.00	35.13	048.79
373	B2	L2	K	RX	52.00	28.64	055.07
374	B2	L2	K	RX	52.00	12.90	024.80
375	B2	L2	P	RX	52.00	23.71	045.59
376	B2	L1	P	RX	52.00	2.31	004.44
377				RX	7.20	.68	9.44
378				RX	16.50	.64	3.87
379				RX	16.50	2.16	013.09
380				RX	15.00	1.06	7.06
381				RX	15.00	1.28	8.53
382				RX	16.50	1.62	9.81
383				RX	16.50	.97	5.87
384				RX	7.20	.56	7.77
385B	B2	L2		RX	60.00	.00	0.00
385M	B1	L2		RX	87.00	.00	0.00
386	B1	L1	P	TB	87.00	25.47	29.27
387	B2	L2	P	TB	87.00	25.47	29.27
388M	B2	L2	P	RX	52.00	21.58	041.50
389M	B2	L2	C	TB	35.00	5.15	14.71
389T	B2	L2	P	TB	[illegible].00	4.24	012.11
390M	B2	L2	C	TB	35.00	4.75	13.57
390T	B2	L2	[illegible]	TB	35.00	4.06	011.60
391M	B2	L2	[illegible]	TB	35.00	1.03	2.94
391T	B2	L2	P	TB	35.00	.31	8.80
392B	B1	L1	K	RX	78.00	2.58	3.30
392T	B2	L2	P	RX	108.00	.87	8.00
393	B2	L2	C	TB	64.80	1.80	2.77
400M	B2	L2	C	AX	43.20	.00	000.00

ATTACHMENT E

Public Service Company of Colorado
Specification 93-I-170
Cable sizes

(BOM) ITEM #	Diameter	Area	(BOM) ITEM #	Diameter	Area
(1)	.58	.2642	(15)	1.8	2.5588
(2)	.63	.3117	(15A)	2.32	4.2273
(3)	.968	.7359	(15B)	.845	.5608
(4)	.845	.5608	(16)	2.78	6.0699
(5)	.945	.7014	(17)	3.288	8.491
(6)	1.29	1.3070	(18)	3.115	7.6209
(7)	.449	.1533	(18A)	1.29	1.307
(7A)	.44	.1521	(19)	2.595	5.2889
(8)	.445	.1555	(20)	2.275	4.0649
(8A)	.5	.1963	(20A)	.945	.7014
(8B)	.55	.2376	(20B)	2.035	3.2525
(9)	.64	.3217	(21)	2.02	3.2047
(9A)	.715	.4015	(21A)	1.385	1.5066
(9B)	.27	.0573	(21B)	1.5	1.7671
(10)	.72	.4072	(21C)	1.76	2.4328
(10A)	.34	.0908	(21D)	1.24	1.2076
(11)	.825	.5346	(22)	1.07	.8992
(11A)	.39	.1195	(23)	.925	.672
(11B)	.45	.1590	(24)	.81	.5153
(12)	.955	.7163	(24A)	1.45	1.6513
(13)	1.34	1.4103	(24B)	1.62	2.0612
(13A)	.63	.3117	(25)	1.145	1.0306
(14)	1.57	1.9359	(25A)	1.244	1.2164
(14A)	.74	.4301	(25B)	.757	.4496

(BOM)	DIA	AREA		(BOM)	DIA	AREA
(26)	1.08	.9161	x	(44)	.34	.0908
(27)	.42	.1385	x	(45)	.57	.2552
(28)	.44	.1521	x	(46)	.693	.377
(29)	.56	.2463	x	(47)	.79	.4915
(30)	.6	.2827	x	(48)	.98	.7543
(31)	.7	.3848	x	(49)	.217	.037
(32)	.78	.4778	x	(49A)	.198	.0308
(33)	.215	.0363	x	(49B)	.217	.0369
(34)	.47	.1735	x	(49C)	.217	.0369
(35)	.49	.1886	x	(49D)	.393	.1212
(36)	.57	.2552	x	(49E)	.487	.1863
(36A)	.6	.2827	x	(50)	.393	.1213
(37)	.78	.4778	x	(50A)	.393	.1213
(37A)	.92	.6648	x	(50B)	.443	.1538
(38)	~~.25~~ .34	~~.0491~~ .0908	x	(51)	.487	.1863
(38A)	.25	.0491	x	(52)	.742	.4324
(39)	.35	.0962	x	(53)	.613	.2951
(39A)	~~.67~~ .59	~~.2552~~ .2734	x	(53A)	.136	.0145
(40)	.54	.2313	x	(53B)	.217	.0369
(40A)	.693	.377	x	(54)	1.0	.7854
(41)	.684	.3677	x	(54B)	.32	.0804
(41A)	.79	.4915	x	(55)	.745	.4359
(41B)	.74	.4915	x			
(42)	.47	.1735	x	(55A)	.18	.0254
(43)	.52	.2124	x	(56)	.373	.1091
			x			

(BOM)	DIA	AREA		(BOM)	DIA	AREA
(62)	1.33	1.3893	x	(74)	.62	.3019
(63)	.47	.1735	x	(75)	.765	.4596
(64)	.475	.1772	x	(76)	.83	.5411
(65)	.405	.1288	x	(77)	1.12	.9852
(65A)	.366	.1052	x	(77A)	.53	.2226
(65B)	.264	.0547	x	(77B)	.476	.1778
(65C)	.195	.0299	x	(77C)	.498	.1951
(65D)	.304	.0726	x	(77D)	.679	.3628
(65F)	.195	.0299	x			
(65G)	.245	.0471	x			
(65H)	.216	.0366	x			
(66)	.176	.0243	x	(77E)	.793	.4939
(66A)	.16	.0201	x	(78)	.105	.0087
(67)	.158	.0196	x	(79)	.56	.2463
(67A)	.126	.0125	x	(79A)	.416	.1359
(68)	.22	.0377	x	(80A)	.232	.0423
(68A)	.268	.0564	x	(80F)	.571	.2561
(68B)	.22	.0377	x			
(68C)	.18	.0254	x			
(68D)	.14	.0158	x			
(69)	.165	.0214	x			
(69A)	.13	.0133	x			
(69B)	.238	.0445	x			
(70)	.37	.1075	x			
(71)	.37	.1075	x			
(72)	.372	.1085	x			
72A	.167	.0219	x			
(73)	.545	.2333	x			

FORM 252-12-1

ATTACHMENT F

04/23/81

TRAYS COATED BY FLAMEASTIC

TRAY
3I
1S2
1M1
1M2
1T1
1T2
2S1
2M1
2T1
3S1
3S2
3M1
3M2
3T1
3T2
4S2
4M2
5S2
5M2
5T2
6S1
6S2
6M2
6T1
6T2
7S1
7S2
7M1
7T1
8S1
8S2
8M1
8M2
8T1
8T2
9S1
9M1
10S1
10S2
11S1
11S2
12S1
12S2
12M1
12M2
13S1
13S2
13M2
14M1
15M1
15M2
16M1
17M1
17M2
18M2
19T1
19T2
20T2
21T2
22T2
23T2
24T2
25T2
27T2
28T1
28T2
29T1
29T2
30S1
31S1
31S2
33S1
33S2
34S1
34S2
34M1
34M2
35M1
35M2
36M1
37M1
38M1
38M2
39M1
39T1
40S1
40S2
40M1
40M2
41M2
42M2
43M2
44M1
45T1
45T2
46T1
46T2
47T1
47T2
48T1
48T2
49T1
49T2
50T2
51T2
52T2
53T2
54T1
54T2
55T1
55T2
56T2
57T1
57T2
58T2
59T1
59T2
60S1
60S2
60M1
60M2
61M2
62M2
63M2
64M1
65M1
66M1
66M2
67M1
67M2
68M1
69M1
69M2
62V1
61T1
62T1
63T1
64T1
65T1
66T1
66T2
67T1
67T2
68T1
69T1
69T2
62T1
70S2
71S2
72S2
73S2
74S2
75S1
75S2
76S1
76S2
77S1
77S2
78S1
78S2
79S1
79S2
80S1

04/23/81

TRAYS COATED BY FLAMEASTIC

TRAY	TRAY	TRAY	TRAY
234	330M	R82	R145
235	330T	R83	R146
236	361	R86	R147
239	37B	R87	R148
240	37S	R88	R149
241	R1	R89	R150
245B	R2	R90	R151
245M	R2A	R91	R152
245T	R3	R92	R153
246B	R4	R93	R154
246M	R5	R95	R155
246T	R6	R97	R156
247B	R7	R98	R157
247M	R8	R99	TX1A
247T	R9	R100	TX1B
257B	R10	R101	TX2
257M	R11	R102	TX3
257T	R12	R103	TX4
268B	R13	R104	TX5
268M	R14	R105	TX6
268T	R15	R106	TX7
269B	R16	R107	TX8
269M	R11	R108	TX9
269T	R12	R109	TX10
272	R13	R110	TX11
273	R14	R111	TX12
274	R15	R112	WP9
275	R16	R113	WP10
276	R17	R114	WP11
277	R18	R115	WP12
278	R39	R116	WP13
279B	R40	R117	WP14
280B	R41	R118	WP15
280M	R57	R119	WP16
280T	R58	R120	WP1
301	R60	R121	WP2
302	R61	R122	WP3
303	R62	R123	WP4
305	R63	R124	WP5
308M	R64	R125	WP6
308T	R65	R126	WP7
309M	R67	R127	WP8
309T	R69	R128	WP5
3134	R71	R129	WP6
313T	R72	R130	WP3
328B	R73	R131	WP9
328M	R75	R134	WP20
328T	R76	R136	WP21
329B	R77	R137	WP22
329M	R79	R138	
329T	R80	R141	
330B	R81	R143	

OVERSIZE DOCUMENT PAGE PULLED

SEE APERTURE CARDS

NUMBER OF OVERSIZE PAGES FILMED ON APERTURE CARDS 3

APERTURE CARD/HARD COPY AVAILABLE FROM RECORD SERVICES BRANCH, TIDC
FTS 492-8989

Public Service™

Public Service
Company of Colorado
P.O. Box 840
Denver, CO 80201-0840

R.O. WILLIAMS, JR.
VICE PRESIDENT
NUCLEAR OPERATIONS

2420 W. 26th Avenue, Suite 100D, Denver, Colorado 80211

September 20, 1988
Fort St. Vrain
Unit No. 1
P-88327

U. S. Nuclear Regulatory Commission
ATTN: Document Control Desk
Washington, D.C. 20555

Docket No. 50-267

SUBJECT: NRC Review of FSV's Fire Protection Program Plan

REFERENCE: 1) PSC letter dated April 1, 1985, Lee to Johnson (P-85113)
2) PSC letter dated June 13, 1988, Williams to Document Control Desk (P-88200)

Gentlemen:

This letter documents and summarizes PSC's actions and commitments resulting from the August 31, 1988 meeting between the NRC and PSC representatives on the open items associated with the NRC review of the FSV Fire Protection Program Plan (FPPP). The three topics discussed were: (1) fire detection coverage (2) concentrated cable locations outside the defined congested cable areas, and (3) emergency lighting verification.

8809280284 880920
PDR ADOCK 05000267
F PNU

Prop Drawings
To: Reg Files
A006
1/1

Regarding fire detection coverage, PSC provided drawings which detail the present fire detection coverage at FSV and acknowledged that additional fire detectors will be installed to ensure coverage as previously committed in Reference 1. Furthermore, PSC committed to install additional fire detectors in areas not previously committed to, including areas such as the Fire Water Pump rooms and welding shop. It is anticipated that these modifications will be completed by start up after the 4th refueling outage. PSC will keep the NRC informed of any changes in the present schedule.

The analysis results of the concentrated cable locations outside the congested cable areas, using the methodology defined in Reference 2, were exhibited at the meeting. The analysis identified no locations where cable concentrations exceed the agreed upon limit of 350% of 40% filled cable trays within a 20 foot radius. Attachment 1 provides a copy of Engineering Evaluation EE-FP-0005 which documents tnese conclusions.

Verification testing results of the emergency lighting will be addressed in a follow-up letter (P-88343).

If you have any questions or comments, please contact Mr. M. H. Holmes at (303) 480-6960.

Very truly yours,

R. O. Williams, Jr.
Vice President
Nuclear Operations

ROW:LAV/pjb

Attachment

cc: Regional Administrator, Region IV
Attention: Mr. T. F. Westerman, Chief
Projects Section B

Mr. R. E. Farrell
Senior Resident Inspector
Fort St. Vrain