North Anna Power Station
Post Office Box 402
Mineral, Virginia 23117

ENCLOSURE 3

VIRGINIA POWER

February 22, 1988

Mr. James Moorman
Operator Licensing Section
Division of Reactor Safety
Region II
U.S. Nuclear Regulatory Commission
Suite 2900
101 Marietta St., N.W.
Atlanta, Georgia 30323

Dear Mr. Moorman:

In accordance with ES 201 of NUREG 1021 Virginia Electric and Power Company hereby makes official submittal of comments concerning the NRC examinations administered at the North Anna Power Station February 16 through 26, 1988.

Detailed question-by-question comments on the written examinations are attached.

Your consideration of these comments is requested.

Very truly yours,

E. Wayne Harrell
Station Manager

Attachment

pc: Mr. W. L. Stewart
Dr. T. M. Williams
Mr. L. L. Edmonds

NORTH ANNA POWER STATION
COMMENTS ON WRITTEN NRC EXAMINATIONS
ADMINISTERED ON FEBRUARY 16, 1988

A. Reactor Operator Examination

1. Question 1.15:

Comment: The answer key does not take into account the greater density of the RCS at temperatures below operating temperature. The greater density of the RCS requires more boric acid per ppm than at operating temperatures. Consequently, either the NOMOGRAPH CORRECTION FACTORS of Figure 1.3 should be applied or the equation

$$V_B = \frac{M}{8.33} \ln \left[\frac{12,950-C_i}{12,950-C_f}\right] \text{ expressed on Figure 1.1}$$

should be used. The nomographs of Figure 1.1 are accurate only at operating temperatures, and it is incorrect to use them unadjusted since they will underestimate the amount of boron required, which is a nonconservative error. In addition, the question does not specify at what temperature the -2200 pcm of reactivity is to exist. If it is 500°F, then the NOMOGRAPH CORRECTION FACTOR is 1.05 and approximately 1280 gallons of Boric acid would be required. If it is cold shutdown temperature of 100°F, then the correction factor is 1.47 and about 1800 gallons of Boric acid would be required. Also, not knowing temperature means that the student does not know what value to use for the mass of the RCS if he chooses to work the problem using the equation

$$V_B = \frac{M}{8.33} \ln \left[\frac{12,950-C_i}{12,950-C_f}\right].$$

An additional minor point is that the concentration in the Boric Acid Storage Tanks should be specified as 12,950 ppm. North Anna Technical Specifications allow the Boric Acid Storage Tank concentration to be between 12,950 ppm and 15,750 ppm. If the concentration is anything other than 12,950 ppm, then the nomographs of Figure 1.1 are inaccurate. Although, any error in this case is conservative.

Recommendation: Change answer key to include the use of NOMOGRAPH CORRECTION FACTORS and accept any NOMOGRAPH CORRECTION FACTOR as correct since the temperature is not specified. Also, count as correct the use of equation

$$V_B = \frac{M}{8.33} \ln \left[\frac{12,950-C_i}{12,950-C_f}\right]$$

and accept any assumed value for M, once again because the temperature is not specified.

Reference: Attachment (R1), Figure 1.1 and 1.3 of the NRC North Anna Reactor Operator Exam. North Anna Technical Specifications page 3/4 1 - 16.

2. Question 1.17:

Comment: The change in RCS Tave from 0% to 100% power at North Anna is 39.8°F, not 30.4°F.
Correct solution:

Tave:	(39.8°F)(.25)(-15)	= -149.25
Power:	(25)(-12)	= -300
Void:		= -25
Xenon:		= -50
Total:		= -524.25

Boron: $\frac{524.25}{-9} = -58.25$

58.25 ppm dilution.

Recommendation: Change answer key to correct solution.

Reference: Attachment (R2), North Anna Precautions, Limitations, and Setpoints Document, page 27.

3. Question 1.19:

Comment: The answer key is correct concerning the real subcooling margin. However, the Inadequate Core Cooling Monitor uses the five highest thermocouple readings as input for T_H, and this is the value used to calculate the subcooling margin displayed on the monitor in the control room. Typically, the five highest thermocouples read approximately 635°F; thus the indicated subcooling margin is typically less than the real subcooling margin, and is therefore conservative. The candidates may therefore have used 635°F as T_H instead of 618.8°F.

Recommendation: Have grader place emphasis on calculational method, rather than the correct answer.

Reference: Attachment (R3), Inadequate Core Cooling Monitor System Description, North Anna, Units 1 and 2, pages 9 and 10.

4. Question 1.21:

Comment: The definition of an ampere-hour is the charge equivalent of one ampere of current delivered for one hour. The statement concerning minimum cell voltage applies to battery ampere-hour ratings only. The question states only to define ampere-hour, not to define a battery ampere-hour rating.

Recommendation: Remove the clause "before cell voltage drops to a specific minimum value" from the answer key.

Reference: Attachment (R4), North Anna Training Guide NCRODP 90.3 Section 1 (page 1.17).

5. Question 2.01:

Comment: The 480 VAC vital bus should be referred to as a 480 V emergency bus vice vital bus.

Recommendation: Change NRC question bank to reflect correct terminology.

Reference: Attachment (R5), North Anna Training Text NCRODP 90.3, REV 1 Section 1, page 1.21.

6. Question 2.06b:

Comment: Component Cooling Water surge tank does not have a rupture disc.

Recommendation: Change answer to "False."

Reference: Attachment (R6 and R7), NCRODP 51, Component Cooling System description. Drawing 11715-FM-079A, Sheet 1 of 3.

7. Question 2.08:

Comment: Answer key (#1) refers to "Peak Centerline temperature" vice "Peak Clad temperature."

Recommendation: Change answer key #1 to read "Peak Clad temperature."

Reference: Attachment (R8 and R9), 10CFR50.46(b)(1), North Anna Training Text NCRODP 91.1, Section 1 page 1.8.

8. Question 2.09:

Comment: Question asked for diesel shutdown signals but did not specify Automatic only. Answer key does not address Emergency manual shutdown pushbuttons.

Recommendation: Change answer key to read:
Accept any two of the following:
1. Generator differential
2. Engine overspeed
3. Emergency Stop manual pushbuttons

Reference: Attachment (R10) North Anna Training Text NCRODP 90.4 Section 2, page 2.19, 2.24.

9. Question 2.10:

Comment: Answer key does not give equal credit for "master cycler counter." Master cycler has a manual step feature which should have to be restored if Rod Control Startup pushbuttons were mistakenly depressed during mode 1 operations.

Recommendation: Accept "Master cycler" as an equal point value answer.

Reference: Attachment (R11 and R12), North Anna Training text NCRODP 93.5, Section 2 Part d, Westinghouse Tech Manual, pages 2-10, 2-11, and 2-12.

10. Question 2.11:

Comment: Question asks for "Barriers." The intact barriers the Critical safety functions serve to protect do not include "distance." The use of distance on a transparency was utilized while discussing a barrier against radiation release.

Recommendation: Change the answer key as follows:

1. Fuel matrix or pellet
2. Fuel clad
3. RCS piping
4. Containment

Reference: Attachment (R13 and R14). North Anna Training text NCRODP 91.1 Section 1, pages 1.5 and 1.6. NCRODP 95.3 transparencies 2.2 and 2.6.

11. Question 2.12:

Comment: The flow restrictor described in the training text is not the same as found at other facilities. The flow restrictor at North Anna is the flow venturi vice a perforated plate found for example at Surry Power Station.

Recommendation: Delete the question or accept the following:

1. Limits blowdown following a Main Steam Line Break.
2. Provides a venturi for the measurement of steam flow.

Reference: Attachment (R15), North Anna Training text NCRODP 89.1, section 1 pages 1.8, 1.9, and 1.35.

12. Question 2.14:

Comment: The actual Safety injection signal may have been reset but a swapover will still occur if the SI Recirc Mode Signal is still present. This Recirc Mode Signal has a seperate set of reset pushbuttons.

Recommendation: Accept "SI recirc mode signal present" or "Safety injection signal present."

Reference: Attachment (R16), North Anna Training text NCRODP 91.1, Section 2 page 2.26.

13. Question 3.02:

Comment: None of the answers are correct.

Recommendation: Delete question.

Reference: Attachment (R17), North Anna Training text NCRODP 88.3, Section 1 page 1.6.

14. Question 3.04:

Comment: Question is potentially confusing as written. Rod Speed "Indication on the meter" will never go below 8 steps/min with rod control in "Auto" even though temperature mismatch is zero. The expected indication therefore is 8 steps/min and no signal to move the rods with a mismatch of 1 degree for example. Candidates may answer the question based on the fact the rods will not move with the mismatch thus answer zero as the answer key states.

Recommendation: Accept either zero or 8 steps/min for statements 2, 3, and 5.

Reference: Attachment (R18), North Anna Training text NCRODP 93.5, Part D - Automatic Rod Control Unit.

15. Question 3.07(b):

Comment: Coincidence is 2/3 vice 2/4.

Recommendation: Accept 2/3 coincidence instead of 2/4.

Reference: Attachment (R19 and R20), Technical Specification 3.3.1, page 3-2. Westinghouse logic NA-DW-5655033 page 5 of 16.

16. Question 3.08:

Comment: Answer key lists 2/4 power ranges greater than 10% power (P-10). Should be the logic for (P-7) which is 2/4 power ranges greater than 10% and 1/2 impulse pressures greater than 10%.

Recommendation: Change answer key as described above.

Reference: Attachment (R-21), Technical Specification 3.3.1 page 3.8.

17. Question 3.13:

Comment: Question asked for "Plant Parameter." Candidates may only answer "Reactor coolant system average temperature, Tavg," and not include auctioneered high tavg.

Recommendation: Do not penalize candidate if he did not include auctioneered high.

Reference: N/A

18. Question 3.14:

Comment: Answer key is written as follows:
"Steam dumps will remain closed until header setpoint is reached (1.0)."
"Dumps would cycle open (.5)."

To recognize the dumps would cycle open when in the steam pressure mode should be full credit vice the point distribution on the answer key.

Recommendation: Consider the above when grading.

Reference: N/A

19. Question 3.17:

Comment: Wording in Technical Specification bases is not the same as the Training text. They mean the same but the T.S. uses DNB vice DNBR.

Recommendation: Accept wording on the answer key or as stated in the technical specification bases.

Reference: Attachment (R22), Unit 1 Technical bases pages B 2-4 and B 2-5.

20. Question 4.15:

Comment: Answer key instructs operator to Open MOV 2350. MOV 2350 is the Unit 2 Emergency Borate Valve. MOV 1350 is the Unit 1 Emergency Borate Valve.

Answer key lists only 3 of the 4 actions needed to accomplish the step "Initiate Emergency Boration" for FRP S.1. Should also include "Check pressurizer pressure less than 2335 psig."

Recommendation: Accept MOV 2350 or MOV 1350 as the emergency borate valve. Include in the answer key "Check pressurizer pressure less than 2335 psig."

Reference: Attachment (R23), FRP S-1.

21. Question 4.17(b):

Comment: Answer on answer key is correct but in addition "to insure hot channel factors limits are maintained" is correct.

Recommendation: Accept above as a correct answer or answer specified in answer key.

Reference: Attachment (R24), Technical bases page B 3/4 2-4.

22. Question 4.18:

Comment: Question referred to "1-OP-1.5," which is a unit 1 OP. Answer refers to Unit 2 Technical Specification which has five bases where unit 1 has only three.

Recommendation: Accept 3 out of 5 bases asked for.

Reference: Attachment (R25), Unit 1 and Unit 2 Technical Specification bases for minimum temp for criticality.

B. Senior Reactor Operator Exam

1. Question 5.04:

Comment: The correct answer to this question is "c", not "d", as the attached completed PT-23 shows.

Recommendation: Change correct answer to "c."

Reference: Attachment (S1), North Anna Periodic Test 1-PT-23.

2. Question 5.19:

Comment: The change in RCS Tave from 0% to 100% power at North Anna is 39.8°F, not 30.4°F.
Correct solution:

Tave:	(39.8°F)(.25)(-15)	= -149.25
Power:	(25)(-12)	= -300
Void:		= -25
Xenon:		= -50
Total:		= -524.25

Boron: $\frac{524.25}{-9} = -58.25$

58.25 ppm dilution.

Recommendation: Change answer key to correct solution.

Reference: Attachment (S2), North Anna Precautions, Limitations, and Setpoints Document, page 27.

3. Question 5.21:

Comment: The answer key is correct concerning the real subcooling margin. However, the Inadequate Core Cooling Monitor uses the five highest thermocouple readings as input for T_H, and this is the value used to calculate the subcooling margin displayed on the monitor in the control room. Typically, the five highest thermocouples read approximately 635°F; thus the indicated subcooling margin is typically less than the real subcooling margin, and is therefore conservative. The candidates may therefore have used 635°F as T_H instead of 618.8°F.

Recommendation: Have grader place emphasis on calculational method, rather than the correct answer.

Reference: Attachment (S3), Inadequate Core Cooling Monitor System Description, North Anna, Units 1 and 2, pages 9 and 10.

4. Question 5.22:

Comment: The definition of an ampere-hour is the charge equivalent of one ampere of current delivered for one hour. The statement concerning minimum cell voltage applies to battery ampere-hour ratings only. The question states only to define ampere-hour, not to define a battery ampere-hour rating.

Recommendation: Remove the clause "before cell voltage drops to a specific minimum value" from the answer key.

Reference: Attachment (S4), North Anna Training Guide NCRODP 90.3 Section 1 (page 1.17).

5. Question 6.01:

Comment: Answer key (#1) refers to "Peak Centerline temperature" vice "Peak Clad temperature."

Recommendation: Change answer key #1 to read "Peak Clad temperature."

Reference: Attachment (S5 and S6), 10CFR50.46(b)(1), North Anna Training Text NCRODP 91.1, Section 1 page 1.8.

6. Question 6.05:

Comment: None of the answers are correct.

Recommendation: Delete question.

Reference: Attachment (S7), North Anna Training text NCRODP 88.3, Section 1 page 1.6.

7. Question 6.11:

Comment: Question is potentially confusing as written. Rod Speed "Indication on the meter" will never go below 8 steps/min with rod control in "Auto" even though temperature mismatch is zero. The expected indication therefore is 8 steps/min and no signal to move the rods with a mismatch of 1 degree for example. Candidates may answer the question based on the fact the rods will not move with the mismatch thus answer zero as the answer key states.

Recommendation: Accept either zero or 8 steps/min for statements 2, 3, and 5.

Reference: Attachment (S8), North Anna Training text NCRODP 93.5, Part D - Automatic Rod Control Unit.

8. Question 6.12:

Comment: Answer key does not give equal credit for "master cycler counter." Master cycler has a manual step feature which should have to be restored if Rod Control Startup pushbuttons were mistakenly depressed during mode 1 operations.

Recommendation: Accept "Master cycler" as an equal point value answer.

Reference: Attachment (S9 and S10), North Anna Training text NCRODP 93.5, Section 2 Part d. Westinghouse Tech manual pages 2-10, 2-11, and 2-12.

9. Question 6.13:

Comment: The flow restrictor described in the training text is not the same as found at other facilities. The flow restrictor at North Anna is the flow venturi vice a perforated plate found for example at Surry Power Station.

Recommendation: Delete the question or accept the following:
1. Limits blowdown following a Main Steam Line Break.
2. Provides a venturi for the measurement of steam flow.

Reference: Attachment (S11), North Anna Training text NCRODP 89.1, section 1 pages 1.8, 1.9, and 1.35.

10. Question 6.14:

Comment: Answer key lists 2/4 power ranges greater than 10% power (P-10). Should be the logic for (P-7) which is 2/4 power ranges greater than 10% and 1/2 impulse pressures greater than 10%.

Recommendation: Change answer key as described above.

Reference: Attachment (S-12), Technical Specification 3.3.1 page 3.8.

11. Question 6.19:

Comment: Answer key is written as follows:
"Steam dumps will remain closed until header setpoint is reached (1.0)."
"Dumps would cycle open (.5)."

To recognize the dumps would cycle open when in the steam pressure mode should be full credit vice the point distribution on the answer key.

Recommendation: Consider the above when grading.

Reference: N/A

12. Question 6.21:

Comment: Wording in Technical Specification bases is not the same as the Training text. They mean the same but the T.S. uses DNB vice DNBR.

Recommendation: Accept wording on the answer key or as stated in the technical specification bases.

Reference: Attachment (S13), Unit 1 Technical bases pages B 2-4 and B 2-5.

13. Question 7.05(b):

Comment: Answer on the answer key is correct. One week before the NRC exams, communications between the Procedures Coordinator (member of Westinghouse owners group) and the training department resulted in incorrect information being given to the license class on the actions to take when another red path FRP exists. The candidates were initially trained correctly and this was changed on week prior to the exam. This change was looked upon as a change by the Westinghouse owners group in use of the FRP's.

Recommendation: Accept either of the following answers:

1. The core cooling red path should be immediately addressed because it is of higher priority than the heat sink Red Path.
2. Stay in the RED Path FRP on heat sink until completion or the procedure allows you to exit, then enter the FRP RED Path of the higher priority.

Reference: Attachment (S14), Executive volume user's guide for Westinghouse EOPs. Attached is an attendance sheet verifying the correct information has subsequently been reviewed with the candidates to insure the correct response will be performed by all members of the license class.

14. Question 7.11:

Comment: Answer key does not have all the immediate actions of AP 4.3.

Recommendation: Add: If the reactor has tripped, go to EP-0, Rx trip or Safety Injection.

Reference: Attachment (S15), AP-4.3.

15. Question 7.12:

Comment: Answer key instructs operator to open MOV 2350. MOV 2350 is the Unit 2 emergency borate valve. MOV 1350 is the Unit 1 emergency borate valve.

Answer key lists only 3 of the 4 actions needed to accomplish the step "Initiate Emergency Boration" for FRP S.1. Should also include "Check pressurizer pressure less than 2335 psig."

Recommendation: Accept MOV 2350 or MOV 1350 as the emergency borate valve.
Include in the answer key "Check pressurizer pressure less than 2335 psig."

Reference: Attachment (S16), FRP S-1.

16. Question 8.01:

Comment: Most correct answer is (b). There is no relationship at North Anna concerning RHR and LHSI. Technical Specification 3.5.2 states with 1 LHSI pump ooc then restore inoperable subsystem to operable status within 72 hours or be in HOT SHUTDOWN within 12 hours. There is no answer to reflect this.

Recommendation: Accept (b) as most correct answer, the appropriate action statement, or delete question.

Reference: Attachment (S17), Technical Specification 3.5.2.

17. Question 8.19:

Comment: Question referred to "1-OP-1.5," which is a unit 1 OP. Answer refers to Unit 2 Technical Specification which has five bases where unit 1 has only three.

Recommendation: Accept 3 out of 5 bases asked for.

Reference: Attachment (S18), Unit 1 and Unit 2 Technical Specification bases for minimum temp for criticality.

18. Question 8.24(a):

Comment: Technical Specification limits were violated. At 1×10^{-8} amps the action statement was entered on one inoperable PORV. Thus were unable to enter Mode 1 due to provisions of 3.0.4, thus ramp to 75% violated provisions of Technical Specification.

Recommendation: Change answer key to "yes" and reason as stated above.

Reference: Attachment (S19), Technical Specification 3.4.3.2.

19. Question 8.26:

Comment: Question asked for actions to be taken for an inoperable fire barrier. The question was not specific as to which unit. However, the answer key required answers as detailed in Unit 2 Technical Specification. Actions required by Unit 1 are more conservative.

Recommendation: Since no reference was made to the unit, credit should be given for either Unit 1 or Unit 2 tech spec action statement.

Reference: Attachment (S20), Technical Specification 7.15 for unit 1 and unit 2.

References are attached as appropriate.

FIGURE 1-1

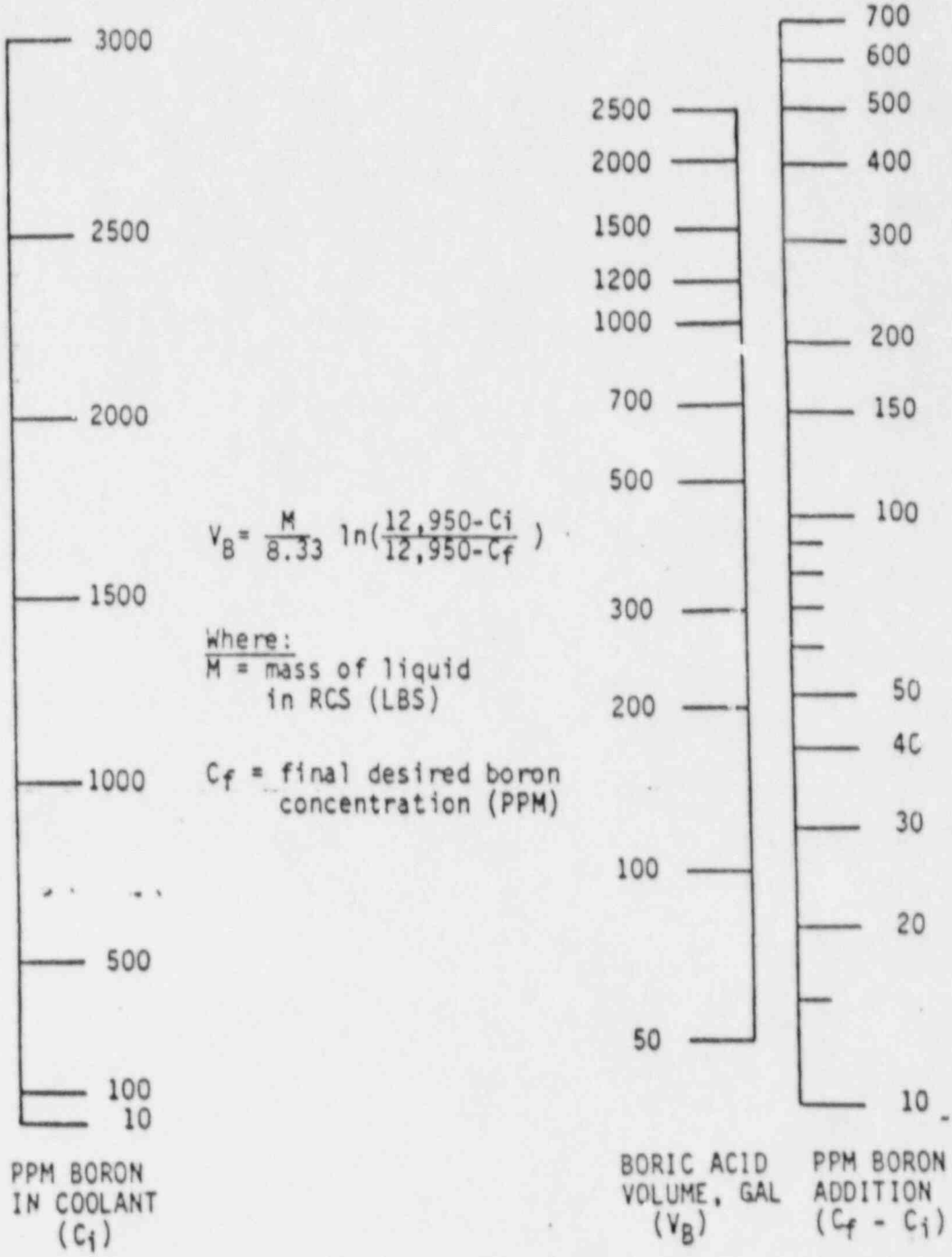

$$V_B = \frac{M}{8.33} \ln\left(\frac{12{,}950 - C_i}{12{,}950 - C_f}\right)$$

Where:
M = mass of liquid in RCS (LBS)

C_f = final desired boron concentration (PPM)

BORON ADDITION (Refer to following TABLE for correction factors)

APPROVED BY: _____
Chairman Station Nuclear Safety and Operating Committee

FIGURE 1-3

NOMOGRAPH CORRECTION FACTORS

Plant Conditions			Correction Factor (K) (See Note)
Pressure (psig)	T (AVG) (°F)	Pressurizer Level	
2235	547-570	Normal Operating	1.00
1600	500	No-Load	1.05
1200	450	No-Load	1.10
300	400	No-Load	1.16
400	350	No-Load	1.18
400	300	No-Load	1.20
400	300	Solid Water	1.35
400	200	No-Load	1.28
400	200	Solid Water	1.40
400	100	Solid Water	1.47

NOTE: CORRECTION FACTORS ARE APPLIED AS FOLLOWS:

(a) Boron Addition and Dilution Total Volume Nomographs

$$V_{(Corrected)} = K \times V_{(Nomograph)}$$

(b) Boron Addition and Dilution Rate Nomographs

$$\frac{dc}{dt}\,(Corrected) = \frac{1}{K} \times \frac{dc}{dt}\,(Nomograph)$$

APPROVED BY: John Allen
CHAIRMAN STATION NUCLEAR SAFETY
AND OPERATING COMMITTEE

REACTIVITY CONTROL SYSTEMS

BORATED WATER SOURCES - OPERATING

LIMITING CONDITION FOR OPERATION

3.1.2.8 Each of the following borated water sources shall be OPERABLE:

a. A boric acid storage system and associated heat tracing with:

1. A contained borated water volume of between 6000 and 16,280 gallons,

2. Between 12,950 and 15,750 ppm of boron, and

3. A minimum solution temperature of 115°F.

b. The refueling water storage tank with:

1. A contained borated water volume of between 475,058 and 487,000 gallons,

2. Between 2300 and 2400 ppm of boron, and

3. A solution temperature between 40°F and 50°F.

APPLICABILITY: MODES 1, 2, 3 and 4.

ACTION:

a. With the boric acid storage system inoperable, restore the storage system to OPERABLE status within 72 hours or be in at least HOT STANDBY within the next 6 hours and borated to a SHUTDOWN MARGIN equivalent to at least 1.77% $\Delta k/k$ at 200°F; restore the boric acid storage system to OPERABLE status within the next 7 days or be in COLD SHUTDOWN within the next 30 hours.

b. With the refueling water storage tank inoperable, restore the tank to OPERABLE status within one hour or be in at least HOT STANDBY within the next 6 hours and in COLD SHUTDOWN within the following 30 hours.

SURVEILLANCE REQUIREMENTS

4.1.2.8 Each borated water source shall be demonstrated OPERABLE:

II Control Systems

1. Reactor Control

A. Coolant Average Temperature (Program)

(TM-408F, TM-408G, PM-446)

		Setpoint For* Full Load T_{avg} = 586.8°F
1.	High limit	586.8°F
2.	Low limit	547°F
3.	Full power temperature	586.8°F
4.	Hot shutdown	547°F
5.	Temperature gain	0.398°F/% power level
6.	Lag time constant (TM-408C)	30 seconds (1)
7.	Lag time to PM-446 should be set to "OFF"	

B. Coolant Average Temperature (Measured)

(TM-408B, TM-408C)

1.	Lead time constant	20 seconds (1)
2.	Lag time constants	10, 1 seconds (1)

(1) These setpoints may be adjusted during start-up and subsequent operation to optimize control response.

combination of operating RCPs. Comparison of the measured drop with the normal, single-phase pressure drop provides an approximate indication of the relative void fraction, or density the circulating fluid. Dynamic head decreases approximately linearly as the void fraction of the reactor coolant increases. Increased void fraction is symptomatic of degraded core cooling. The dynamic-head range continuously monitors the relative void fraction of the coolant during forced flow conditions.

There are two redundant trains of RVLIS. Refer to figure ICCM.4.

Core Exit Temperature Monitoring (CETM)

The core exit thermocouples supply temperature inputs to the ICCM, which provides the following indications for core exit temperature monitoring (CETM):

- Individual temperature of each core exit thermocouple
- For each of the four core quadrants, the following values are calculated and displayed per train, based on the thermocouples in given quadrant:
  - Maximum temperature of any thermocouple in the quadrant
  - Average temperature of all thermocouples in the quadrant
  - Minimum temperature of any thermocouple in the quadrant
- Individual temperature of each of the five highest (hottest) thermocouples in the core, per train
- Average temperature of the five highest thermocouples per train

The core exit thermocouples are divided equally between CETM trains A and B. Twenty-five thermocouples are assigned to train A, and twenty-five to train B. All core exit temperatures displayed are compensated for reference junction temperature.

Subcooled Margin Monitor (SMM)

The subcooled margin monitor (SMM) provides the following indications:

- Saturation temperature for the existing RCS pressure
- Temperature margin to saturation based on core exit thermocouples

The SMM uses the following inputs to determine saturation temperature and to calculate the temperature margin to saturation:

- RCS loop pressure from wide-range pressure transmitters
- Average temperature of the five highest core exit thermocouples

The saturation temperature and the temperature margin are calculated separately by SMM trains A and B, using separate, redundant inputs.

Definition of Inadequate Core Cooling (Figures ICCM.5 and ICCM.6)

The following is a definition of inadequate core cooling (ICC) that has been given by the staff of the Nuclear Regulatory Commission (NRC):

> "The staff considers the core to be in a state of inadequate core cooling whenever the two-phase froth level falls below the top of the core and the core heatup is well in excess of conditions that have been predicted for calculated small break scenarios for which some uncovery with successful recovery from the accident have been predicted. Possible indicators of such a condition are core exit superheat temperature and/or the rate of coolant loss or level drop prior to core uncovery and the extent and duration of uncovery."[3]

This definition is essentially a description of the phenomenon of ICC. Westinghouse has adopted a definition that is more operationally and procedurally oriented. The NRC has agreed that the Westinghouse definition is more useful for purposes of evaluating instrumentation and implementing

(2) Cells are arranged in series to produce a total output voltage of 125 VDC.

(3) Each cell is contained in a sealed, heat resistant, shock-absorbent, clear plastic jar.

(4) Each cell has 11 positive and 12 negative plates.

(5) The positive plates hang from a bridge from the top of the cell. The negative plates are supported from the bottom. A microporous rubber separator is placed between each plate to prevent any physical contact.

c. Battery capacities are rated on an ampere-hour basis.

(1) an ampere-hour is the ability to deliver a certain number of amperes for a specific number of hours before the cell voltage drops to a specific minimum value.

(2) station batteries are rated at 206.25 amps for an eight-hour period or 1650 amp-hours.

d. Battery voltage is monitored as the same voltage displayed for the 125 VDC bus discussed earlier.

e. Design Change DC-85-29-1 replaced Unit 1 batteries 1-I, 1-II and 1-III with Exide "2 GN 23" cells.

Display Transparency NCRODP-90.3/T-1.1: Vital Power One-Line Diagram.

Point out sola transformers

These voltage regulating transformers are fed directly from the 480 VAC emergency buses and supply 118 VAC to the vital 120 VAC buses in the event of an inverter failure.

a. Vital buses 1-I and 1-II can be powered from MCC 1H1-4 through two, parallel, 10 kVA transformers.

b. Vital buses 1-III and 1-IV can be powered from MCC 1J1-1 through a single 15 kVA transformer.

c. Because of power requirements only one vital bus per train may be placed on the transformers at a time.

d. The SOLA transformers are located in the Emergency Switchgear Rooms.

There is another transformer fed directly from the 1H1-4 bus which supplies a semi-vital bus to various radiation process monitoring equipment.

7. 120 VAC Vital Distribution Panels

Display Transparency NCRODP-90.3/T-1.1: Vital Power One-Line Diagram.

be described in this module. Operation of the Unit 2 subsystem is identical to that of Unit 1. The piping associated with the CC System, constructed of carbon steel, is protected by several relief valves throughout the system. These relief valves are all set to lift at 150 psig, with the exception of the relief valves for the RCP thermal barrier which relieves at 1500 psig. The operation of the major control valves, pumps, and instrumentation is presented in Section III of this module.

Major Components

The following paragraphs describe the construction and operation of the major components associated with the CC system. All of the major components are located in the Auxiliary Building. Figures 51-2, 51-3, and 51-4 illustrate the relationship of the components within the system.

~~Component cooling surge tank.~~ The component cooling water surge tank provides the net positive suction head for the CC pumps. The tank is located approximately 50 feet higher than the pumps suction, ensuring that an adequate head exists at the pumps suction to prevent pump cavitation. The surge tank allows for thermal expansion and contraction in the system and serves as a source of makeup water to the system. Should a leak develop in the system, the volume of water in the surge tank allows time for the operator to locate and stop the leak prior to a loss of component cooling.

The tank is 10.6 feet high and 7.5 feet in diameter, constructed of 0.375-inch thick carbon steel. It holds approximately 3120 gallons, while normal operating volume is approximately 2150 gallons. The tank is maintained approximately 62 percent full, allowing sufficient room for expansion and contraction of the CC water. It is vented to the vent and drain system. Designed for a pressure of 40 psig and a

temperature of 150°F, the surge tank normally operates at atmospheric pressure and at a temperature of near 90°F.

Makeup water to the tank is provided by the main Condensate system via the bypass valve around LCV-100. The bypass valve is used vice LCV-100 due to water hammer in the makeup piping when LCV-100 opens. The water hammer results from the relatively high discharge pressure of the condensate pumps. When in operation, LCV-100 is controlled by a signal generated by level controller LC-100 which senses changes in surge tank level. Level control is discussed in Section III of this module. The makeup water enters the tank through a 2.5-inch nozzle located approximately 7 feet from the bottom of the tank (approximately 10.5 feet above the fourth floor of the Auxiliary Building). An 18-inch manhole on the side of the tank allows internal inspection. The tank is also equipped with a vent line, a recirculation line from the discharge of the CC pumps and heat exchangers, a surge line to the suction of the CC pumps, and a funnel for adding chemicals to the system. Access to the chemical additional funnel is by a ladder mounted next to the surge tank. The chemistry of the CC System is maintained by the addition of potassium chromate, potassium dichromate, and potassium hydroxide. These chemicals minimize general corrosion of the CC System components and piping. The CC surge tank is located in a large cubicle on the north side of the fourth floor of the Auxiliary Building.

The surge tank is connected to the suction of both Unit 1 and 2 CC pumps by 4-inch headers. Manual isolation valves are provided for surge tank isolation if required.

Component cooling pumps. The component cooling pumps provide the motive force for circulating cooling water through the CC heat exchangers, individual system loads, and back to the pumps suction. Normally, two pumps (one per reactor unit) supply the required

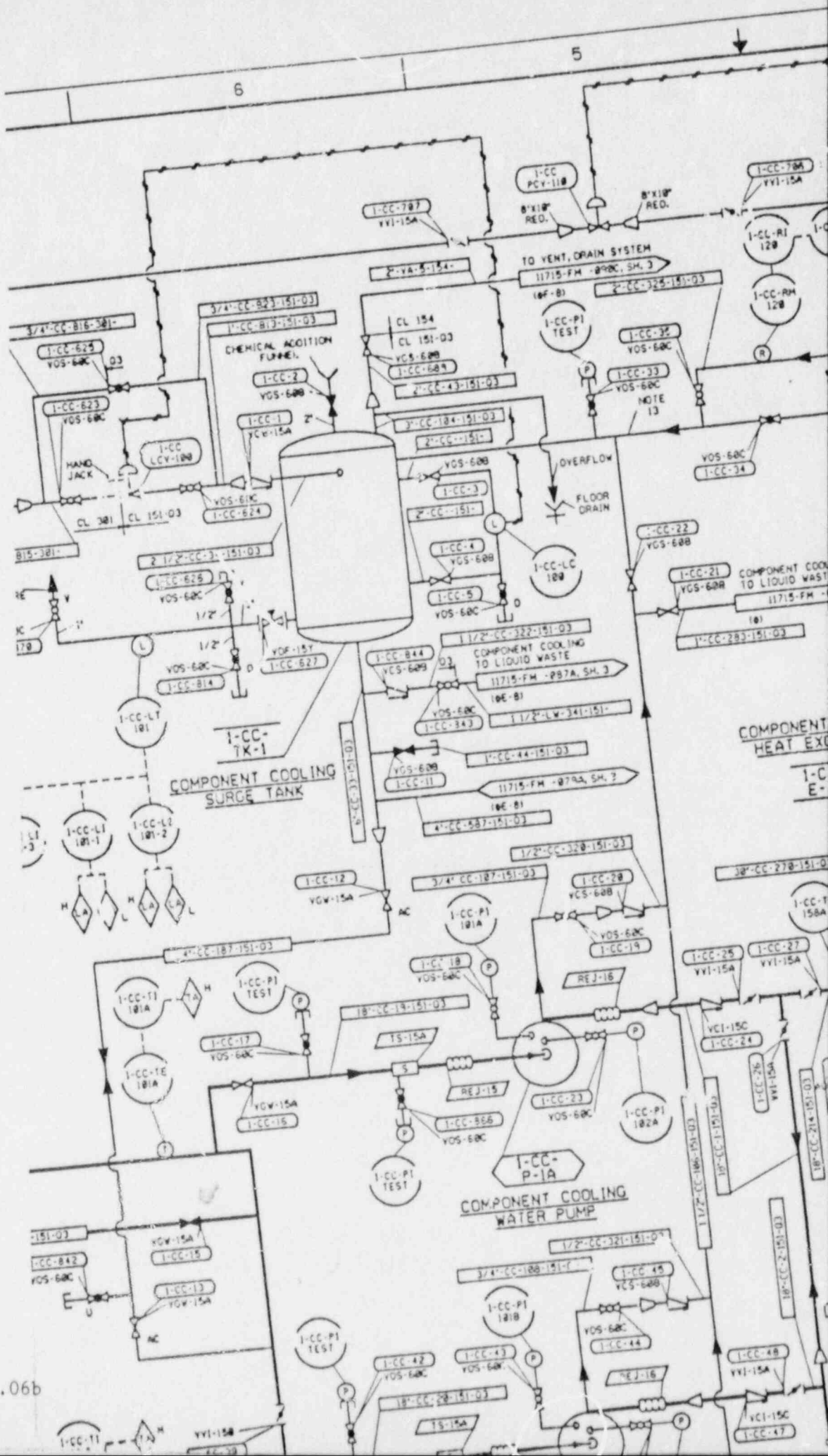

Attachment (R7) Question 2.06b

period referred to in paragraph (a)(2)(ii) of this section for good cause. Any such request shall have been submitted not less than 45 days prior to expiration of the six-month period, and shall have been accompanied by affidavits showing precisely why the evaluation is not complete and the minimum time believed necessary to complete it. The Director of Regulation of the Atomic Energy Commission shall have caused notice of such a request to be published promptly in the FEDERAL REGISTER; such notice shall have provided for the submission of comments by interested persons within a time period established by the Director of Regulation. If, upon reviewing the foregoing submissions, the Director of Regulation concluded that good cause had been shown for an extension, he may have extended the six-month period for the shortest additional time which in his judgment will be necessary to enable the licensee to furnish the submissions required by paragraph (a)(2)(ii) of this section. Requests for extensions of the six-month period submitted under this subparagraph will have been ruled upon by the Director of Regulation prior to expiration of that period.

(iv) Upon submission of the evaluation required by paragraph (a)(2)(ii) of this section (or under paragraph (a)(2)(iii), if the six-month period is extended) the facility shall continue or commence operation only within the limits of both the proposed technical specifications or license amendments submitted in accordance with this paragraph (a)(2) and all technical specifications or license conditions previously imposed by the Atomic Energy Commission, including the requirements of the Interim Policy Statement (June 29, 1971, 36 FR 12248) as amended December 18, 1971, 36 FR 24082).

(v) Further restrictions on reactor operation will be imposed if it is found that the evaluations submitted under paragraphs (a)(2) (ii) and (iii) of this section are not consistent with paragraph (a)(1) of this section and as a result such restrictions are required to protect the public health and safety.

(vi) Exemptions from the operating requirements of paragraph (a)(2)(iv) of this section may be granted for good cause. Requests for such exemption shall be submitted not less than 45 days prior to the date upon which the plant would otherwise be required to operate in accordance with the procedures of said paragraph (a)(2)(iv) of this section. Any such request shall be filed with the Secretary of the Commission, who shall cause notice of its receipt to be published promptly in the FEDERAL REGISTER; such notice shall provide for the submission of comments by interested persons within 14 days following FEDERAL REGISTER publication. The Director of Nuclear Reactor Regulation shall submit his views as to any requested exemption within five days following expiration of the comment period.

(vii) Any request for an exemption submitted under paragraph (a)(2)(vi) of this section must show, with appropriate affidavits and technical submissions, that it would be in the public interest to allow the licensee a specified additional period of time within which to alter the operation of the facility in the manner required by paragraph (a)(2)(iv) of this section. The request shall also include a discussion of the alternatives available for establishing compliance with the rule.

(3) Construction permits may have been issued after December 28, 1973 but before December 28, 1974 subject to any applicable conditions or restrictions imposed pursuant to other regulations in this chapter and the Interim Acceptance Criteria for Emergency Core Cooling Systems published on June 29, 1971 (36 FR 12248) as amended (Dec. 18, 1971, 36 FR 24082): *Provided, however,* that no operating license shall be issued for facilities constructed in accordance with construction permits issued pursuant to this paragraph, unless the Commission determines, among other things that the proposed facility meets the requirements of paragraph (a)(1) of this section.

(b)(1) *Peak cladding temperature.* The calculated maximum fuel element cladding temperature shall not exceed 2200° F.

(2) *Maximum cladding oxidation.* The calculated total oxidation of the cladding shall nowhere exceed 0.17

times the total clad
before oxidation. As us
paragraph total oxidat
total thickness of cladd
would be locally conver
all the oxygen absorbed
ed with the cladding lo
verted to stoichiometric
oxide. If cladding ruptu
to occur, the inside s
cladding shall be inclu
dation, beginning at
time of rupture. Clad
before oxidation means
tance from inside to ou
ding, after any calcula
swelling has occurred
nificant oxidation. Whe
ed conditions of transie
temperature lead to a
cladding swelling, wit
cladding rupture, the u
ding thickness shall be
cladding cross-sectional
a horizontal plane at t
the rupture, if it occur
vation of the highest cl
ature if no rupture is
occur, divided by the s
ference at that elevatio
cladding the circumfe
include the rupture ope
(3) *Maximum hydrog*
The calculated total am
gen generated from the
tion of the cladding
steam shall not exceed
hypothetical amount
generated if all of th
cladding cylinders su
fuel, excluding the clad
ing the plenum volume
(4) *Coolable geome*
changes in core geom
such that the core rem
to cooling.
(5) *Long-term cooling*
culated successful initi
the ECCS, the calculat
ature shall be mainta
ceptably low value a
shall be removed for
period of time require
lived radioactivity rem
core.
(c) As used in this s
of-coolant accidents (L
pothetical accidents th
from the loss of react

List the following five design criteria on the board as you cover them, and stress the relationship of the listed items to identifying the released material so we can address the 10-CFR-100 limits

a. Peak Clad temperature shall not exceed 2200°F.

b. Maximum Cladding Oxidation at any given point shall not exceed 0.17 (17%) of the total cladding thickness prior to the oxidation.

c. Maximum Hydrogen Generation from chemical reaction, of the clad, shall not exceed 0.01 (1%) of the amount generated if all the clad were to be oxidated.

d. A "Coolable Geometry" of the core must be maintained.

e. Long Term Cooling must be maintainable so we can remove the core decay heat.

The meeting of the above five criteria will define the maximum core damage, and so, the radioactive release of fission products to the coolant, and the containment atmosphere during accidents. This data will be used as the source term for the required calculations to meet the siting criteria of 10-CFR-100.

Start from SDR. Review shipping relays-NCRODP-90.4/H-2.1.

a. Any engine protective shutdown, energizes the shutdown relay (SDR). A shutdown relay (SDR) contact closes, energizing the emergency stop relay (5E) and (T5E). Any switchgear action causing the lock-out relay (device 87X) contact to close, also energizes the emergency stop relay (5E) and (T5E).

Show how overspeed and generator differential are the only two emer. stops besides the Emer. P.B. Stops.

b. The emergency stop relay (T5E) contacts close to energize the stopping relays (5 and 5A) and the governor shutdown solenoid (GOV). (moves fuel racks to no fuel position). GOV dumps oil to governor sump.

c. The emergency stop relay (5E) contact open to interrupt the starting control circuits. (See sheet 1).

d. Simultaneous operation of the two (2) emergency stop switches, in the generator control panel, (control room or CRE panel) will energize the shutdown relay (SDR) also. The MCR emergency stop pushbuttons are not effective on "1H" and "2H" EDG if the control room isolation switch is ON. The CRE emergency stop pushbuttons are always effective.

Differential lockout reset must be done on the EDG isolation panel for 1H and 2H diesels located in the EDG room (T-2.7).

7. Alarms and Shutdowns

a. The following troubles will cause engine shutdown and start lock-out, with the cause annunciated, under any operating mode:

(1) Generator Differential (144 amps between phases)

(2) Engine Overspeed

NOTE: This is an engine mechanical device, independent of the governor, that must be reset manually at the engine.

b. The following troubles will cause engine shutdown and start lock-out, with the cause annunciated, except when there has been an emergency start in which case there is a trouble annunciation only:

(1) Low Lube Oil Pressure (17 PSIA)

(2) Crankcase Pressure (+2") add numbers or manometer together

(3) Lube Oil Temperature High* (230°F)

(4) Coolant Temperature High* (205°F)

(5) Start Failure (7 Sec, 9 Sec)

a) During the retrieval of a dropped rod, power is interrupted to the lift coils of all mechanisms in the affected bank, with the exception of the lift coil associated with the dropped rod. This action permits withdrawal of only the dropped rod.

d- Two **Startup Pushbuttons** are provided for resetting indicators and control circuits in the Rod Control System. The two buttons are connected in series, so that both must be depressed to reset the Rod Control System. This ensures that the system is not inadvertently reset while the reactor is at power. Specifically, the following items are reset:

1- group step counters,

2- logic cabinet master cycler,

3- slave cycler counters,

4- bank overlap unit counter,

5- internal alarm and memory circuits, and

6-. pulse-to-analog (P/A) converters in the rod position cabinets.

e- An **Alarm Reset Pushbutton** is also provided for resetting the internal alarms associated with the Rod Control System.

1- The plant annunciator alarms associated with the Rod Control System are not cleared by this pushbutton.

2. **Rod Control System indications**. The indications associated with the Rod Control System include the following:

command for reduced stationary coil current is transmitted to the Power Cabinet as long as the slave cycler is inactive.

Each decoder printed circuit card is designed so that the decoded counts (and thus the mechanism timing) can easily be changed. A change in timing is accomplished by connecting the cathodes of the diodes in each AND gate set to the true and false counter input lines that will give the desired decodes. For complete procedural details concerning timing changes, refer to section 3.

2.3 MASTER CYCLER.

2.3.1 General Description.

Figure 2-11 shows a block diagram of the fast pulse control, the fast pulse generator, the first pulse control and decoder, the master cycler counter and counter advance, and the master cycler selector. The circuits are on counter printed circuit card A104, master cycler logic printed circuit card A105, master cycler selector printed circuit card A106, and supervisory logic 1 printed circuit card A108.

The master cycler performs two basic functions: (1) it selects for movement the group (or groups) in the selected bank (or banks); and (2), it provides fast response when motion is first commanded. The groups in a bank must be selected at equal intervals of time; furthermore, when motion is reversed, the group last moved must be the first group to move in the opposite direction. The latter constraint is necessary to prevent group misalignment. In other words, the groups of a bank must always be within one step of each other. During out motion, the groups of a 3-group bank are moved in the sequence 1-2-3-1-2-3-, and during in motion, the groups are moved in the sequence 3-2-1-3-2-1-. When a change in direction command has been accepted, the first group to move again is the one last moved. The following is a typical example of movement sequences interrupted by direction changes: 1-2-3-1-2 (change direction) 2-1-3-2-1 (change direction) 1-2-3-1-, and so on.

To satisfy the requirement for equal intervals of time between group selection, four states of a 3-bit binary counter are decoded to produce the slave cycler GO pulses. The counter is reversible and triggers on the trailing edge of a negative clock pulse. When out motion is requested, the direction signal (UP) is ONE, UPMCX clocks are sent to the counter, and it counts up through counts 0 to 5; when in motion is requested, UP is ZERO, DPMCX clocks are sent to the counter, and it counts down through counts 5 to 0. Both clock are inverted replicas of the master cycler clock pulse (PMC) from the fast pulse generator.

The PMC clock is an inverted replica of the pulser pulse (PPULSX) except when fast response is called for after a rod motion command has been accepted at the input buffer. For fast response, the fast pulse control signal (RPGX) goes to ZERO, enabling the fast pulse generator. The fast pulse generator then produces a sequence of high speed pulses. The high speed pulses have a repetition rate equal to one-half the oscillator pulse (OPULSE)

rate. When the first master cycler GO pulse is produced, the trailing edge of the companion GO not pulse (GOX) resets the FPGX signal to ONE and only the normal rate PMC clocks are left to clock the counter. Without the fast response feature, a two-group-per-bank plant could have up to a 5-second delay (at a group step rate of 6 steps per minute) before motion begins following a motion command.

Four states of the counter are decoded to produce the P0X, P2X, P3X and P4X pulse outputs shown in figure 2-11. To satisfy the requirement of equal intervals of time between group GO pulses, regardless of plant configuration, the master cycler selector configuration can be altered with jumpers to produce the desired GO pulse pattern. Table 2-2 shows the relationship between the counter states and the group GO pulses. As an example of interpretation, suppose a plant has only two groups per bank. For that case, the table shows that the group 1 GO pulse is produced by the P0 decoder and the group 2 GO pulse is produced by the P3 decoder. Note that there is an equal period of time between the two pulses.

Table 2-2. Relationship Between Master Cycler Counter States and Group GO Pulses

Number of Groups Per Bank	Counter States P0	P1	P2	P3	P4	P5
1	X	N. D.				N. D.
2	X	N. D.		X		N. D.
3	X	N. D.	X		X	N. D.
	Group 1		Group 2		Group 3	

N. D. = Not Decoded
X = GO pulse generated for given group

The control bank selection signals (CA, CB, CC, CD) from the bank overlap decoder and the shutdown bank A and B selection signals from the memory buffer (SA, SB) determine which slave cycler (or cyclers) receives a GO pulse when a particular decode occurs. The P0 pulse and a P+ pulse are sent to the bank overlap control unit. The P+ pulse signifies that the last group in a bank has been selected for motion when the motion is out; the P0 pulse signifies that the last group in a bank has been selected for motion when the motion is in. These pulses are required for incrementing or decrementing the reversible bank overlap counter (refer to paragraph 2.4). Note that the true identity of the P+ pulse depends on the plant configuration. Referring to table 2-2, it should be evident that the P+ pulse corresponds to either state P4 or state P3.

The first pulse control circuit keeps the groups in alignment when a change in direction is commanded. It does this by cancelling the first pulse to the decoder while allowing the counter to count the pulse. For example, in a 3-group bank, if groups 1 and 2 have moved

out and the counter is at state 4 when in motion is called for, the first pulse control inhibits the strobe pulse to the decoder so that P4X is not produced. However, the trailing edge of the clock clocks the counter back to state 3. If P4X were not inhibited, the group 3 slave cycler would operate, with the consequence that group 3 would move in one step and then would be separated by 2 steps from groups 1 and 2.

The PMC pulse rate varies from 0.6 to 7.2 pulses per second. Since the counter divides by 6, the rate of a specific decode, such as P0, varies from 0.1 to 1.2 pulses per second. Thus, the step rate of a bank can vary between 6 and 72 steps per minute. For maintenance purposes, a counter advance circuit is provided so that the counter can be manually operated via MASTER CYCLER +1 pushbutton A2S2. The pushbutton has effect only when the FPINHX and UP signals are both ONE. Lamps on card A105 give a visual indication of the set states of the three counter bits (MCQ1, MCQ2, and MCQ4, which correspond to 2^0, 2^1, 2^2, respectively).

2.3.2 Master Cycler Counter.

The master cycler counter consists of three trailing edge trigger flip-flops and associated gates mounted on counter printed circuit card A104. Since this card is a general-purpose type, it will not be discussed here. Refer to paragraph 2.11 for general discussion of the counter card and specific comments on the master cycler counter application.

2.3.3 Counter Advance.

The counter advance circuit consists of a transistor pulse shaper and a control gate mounted on master cycler logic card A105. The following discussion will be with reference to sheet 3 of the logic flow diagram, figure 4-65. For complete circuit details, refer to the master cycler logic card schematic, figure 4-48.

Whenever MASTER CYCLER +1 pushbutton A3S2 is momentarily pressed, -15 volts is applied to pin 17 of A105. The application of negative voltage drives transistor Q1 to cut-off, with the result that the output of gate Z3D drops to ZERO. When the pushbutton is released, the gate output goes back to ONE. Within the counter card, the output of Z3D (+1MCX) is NAND'ed with UPMCX. Thus, the trailing edge of +1MCX clocks the counter to the next up state if UPMCX is at ONE. If FPINHX is at ZERO, gate Z3D is inhibited and the pushbutton has no effect.

2.3.4 Fast Pulse Generator.

The fast pulse generator consists of a rising edge trigger flip-flop and some control gates mounted on supervisory logic 1 card A108. The following discussion will be with reference to sheet 3 of the logic flow diagram, figure 4-65. For complete circuit details, refer to the supervisory logic 1 card schematic, figure 4-59.

Presentation

A. Design objective of the ESF systems.

1. The central objective of the Engineered Safety Features (ESF) systems is to protect the public by controlling and limiting the release of fission products and radiation to the environment to within specifications set by federal regulations.

   a. One method used to achieve this is to design the core in conjunction with the Reactor Protective system (RPS) to insure fuel rod integrity. This is done with the core's nuclear and thermal design and the design of the Reactor Protection System, which will trip the reactor and actuate the Safeguards systems.

   b. If in spite of the above the Fuel Cladding is damaged, the Reactor Coolant System is design to contain the fission products.

   c. If the reactor coolant system is ruptured, releasing the fission products to the containment atmosphere, the Containment building itself will act as the third barrier to the release of the fission products to the environment.

List the three (3) separate boundaries for fission product release on the board:

a. Fuel Clad
b. Reactor Coolant System
c. Containment Building

2. The release of radioactive materials to the environment during a accident is governed by 10-CFR-100 (Site evaluation factors) which defines the following terms, in terms of dose exposure to the general public:

a. Exclusion Area
b. Low Population Zone
c. Population Center

List the three (3) siting terms above on the board and use them as reference points as you discuss the criteria

a. The Exclusion Area is defined as "an area of sufficient size that an individual located at any point on its boundary for two (2) hours immediately following onset of the postulated accident and its fission product release would not receive a whole body dose in excess of twenty five (25) rem or a dose to the thyroid in excess of three hundred (300) rem". The licensee must have the authority to prevent access or remove

T2.2

"DEFENSE IN DEPTH" (MULTIPLE BARRIERS)

- Fuel Matrix, Fuel Clad
- Reactor Coolant System
- Containment
- Distance

TP 2.6

SAFETY FUNCTION RELATIONS TO BARRIERS

Barriers	Safety Functions
• Fuel Matrix • Fuel Clad	Subcriticality Core Cooling Inventory
• Reactor Coolant System Boundary	Heat Sink Integrity Inventory
• Containment	Containment

MAIN STEAM SYSTEM

SECTION I: MAIN STEAM

Lesson Plan

Introduction

This lesson plan is designed to familiarize the student with the construction and operation of that system which provides a flow path for the transfer of the heat energy contained in the steam in the steam generators to the main turbine and other secondary loads. Sections included in brackets [ ] are not testable, but for information only.

Section Objectives

Upon completion of this section, the trainee will be able to:

A. Explain the mechanics of shrink and swell.

B. Describe the location, function and control of the major components of the Main Steam System. Include steam generators, flow limiters, safeties, trip valves, NRVs, bypass valves, decay heat release valve, PORVs.

C. Describe the location and function of the main steam instrumentation.

D. Describe the operation of the Main Steam System.

E. Describe the systems which interface with the Main Steam System affect the Main Steam Syster or are affected by it.

- Boric acid soaks are used at both stations. The boric acid forms boro-silicates which fill the cracks and exclude sludge and scale.

3. The acid intrusion event of the fall of 1984 chemically shocked a large amount of deposits of the steam generator and feedwater piping. This was a benefit from an accident and not a normal way to clean the steam generators. Subsequent problems include high sulfate levels in the S/Gs. This can be a limiting factor at high power levels.

3. High Point Vents

   a. Are located on the main steam piping inside containment and elsewhere on the system.

4. Flow Restrictor

   a. This is a venturi located in the vertical run of pipe just before it exits containment.

   b. It supplies the required ΔP for flow measurement.

d. This is not the equivalent of the perforated plate in the steam line which they have at Surry.

5. Safety Valves

Display T-1.5 Safety Valve

---

a. There are five (5) code safety valves on each header with a total relieving capacityof 4,275,420 lbm/hr. This is greater than 100% of steam generating capacity.

b. They have staggered setpoints: 1085, 1095, 1110, 1120, 1135 psig.

c. One stuck open valve will not pass more than 1.02×10^6 lbm/hr at 1100 psia.

d. To reset a stuck safety, manually lift and reset with operating lever.

6. Atmospheric Steam Dumps or Power Operated Relief Valves (PCV-MS-101A,B,C).

a. One on each steam header, connected to the riser which feeds the safeties.

b. Setpoint is controlled by the operator manipulating a controller on the main board or the aux shutdown panel.

2. Steam generator

   a. Construction

   b. Flow

   c. Tube denting

3. High Point Vents

4. Flow Restrictor

   a. Located in vertical run of piping on containment

   b. Limits blowdown rates of S/G upon MSLB

   c. Also used as ΔP for flow indication

   d. Not the same as at Surry.

5. Safety Valves

   a. 5 safeties with total capacity of 4,275,420 lbm/hr

   b. Staggered setpoint

6. Atmosphere Steam Dumps or S/G PORVs (PCV-MS-101A,B,C)

   a. One per S/G header

   b. Operator can control the setpoint

Fourth - MOV-1860 A&B open, closes MOV-1862 A&B (LHSIP RWST Suction).

This shift will occur automatically if the following are present:

- SI Recirc Mode signal is present, which is from SI (Lock in Relay). Reset using SI Recirc Mode reset buttons on Safeguard Panels A and B.

Ensure that the trainees understand that if the SI signal is reset from the benchboard that the automatic swapover to the containment sump will STILL OCCUR, which can cause unplanned shifting during a refueling, and may destroy the LHSI Pumps.

---

(2) At least one of the respective pumps recirc isolation MOVs have closed.

(3) RWST Lo-Lo level (on 2 of 4 channels at 25.3%).

b. The opening of the sump suction MOVs 1860 A and B furnish a permissive signal to the normal RWST suction MOV 1862 A and B close on that pumps.

c. The LHSI pumps are provided with minimum flow bypass lines that recirc back to the RWST and prevent overheating of the pump when operating at shutoff head. Each pump recirc line is provided with two in series MOVs (MOV-885A & C for SI-P-1A, and MOV-1885B & D for SI-P-1B) that will

(b) To open

1) Pushbutton to open, must hold in open position until vlv is full open.

2) Orifice isol vlvs closed (1200s)

(c) To close

1) Pushbutton to open

2) Orifice isol vlvs closed (1200s)

(d) Interlock with orifice isol vlvs (1200s) prevents shocking the Regen HX and orifices. Also, to keep the Regen and associated piping pressurized to prevent flashing.

(e) 460s can be operated from the Control Room or the auxiliary shutdown panel. 460s DO NOT have local/remote switches.

1) Reason: The 460s cannot be operated without the 1200s being closed, and the 1200s have local/remote switches.

(4) Location

(a) A loop room, pump cubicle

Show T-2.3 (Functional block diagram of the Automatic Rod control Unit) in your description of the following.

D. **Automatic Rod Control Unit** - The purpose of the unit is to automatically position the control rods within the core to maintain T_{avg} constant, for a given reactor power level. The output signal of the automatic control unit is sent via the mode selector switch to the logic cabinet in the Rod Control System, which positions the control bank rods accordingly.

1. The unit consists of **two (2) basic error channels**, which are used to produce **rod speed and rod direction signals** in automatic rod control. The two channels used to generate the error signals for rod speed and direction are:

   a- $\mathbf{T_{error}}$ - the difference between the highest primary coolant average temperature (T_{avg}) and a programmed reference average temperature (T_{ref}).

      1- The average temperature of each reactor coolant loop is determined by averaging T_h and T_c in the individual loops. The three average temperature signals are sent to an auctioneering unit where the highest of the three signals is determined.

         a) The auctioneered high T_{avg} is sent to a lead/lag unit which partially compensates for the signal delay which occurs between the reactor core and the sensing elements, that are immersed into the RTD Bypass lines.

Ask the trainees what other term the above signal delay is identified by, in the plant.

Answer: Loop Transient Time

---

b) The output of the lead/lag unit is then filtered for noise reduction.

2- The reference temperature (T_{ref}) is generated from the **selectable** main turbine first stage pressure (P-446 or 447), which is directly proportional to turbine load.

Show transparency T-2.4 (T_{ref} with respect to turbine load).

3- The difference between actual T_{avg} and T_{ref} is obtained in a temperature summing network. The output (temperature error) of the temperature summing network is directed to another summing network, which produces a total error signal.

b- **Power Mismatch** is the difference between **turbine load**, **selectable** main turbine first stage pressure (P-446 or 447), and **nuclear power**, sensed by the ex-core nuclear instrumentation channel N-44 **only**.

1- The power mismatch circuit provides anticipatory (fast) response to changes in load because it receives an input signal from the ex-core nuclear instrumentation (Power Range Channel N-44), and selectable turbine first stage pressure.

Ask the trainees: "why do we go to the trouble to have a power mismatch circuit", vice using the temperature error circuit to generate the needed rod motion.

Answer: The Power Mismatch unit will generate rod motion right away, without waiting for the loop transient time required for the temperature error signal.

2- The deviation and **derivative** (rate of change) between the two input signals is determined in the power mismatch unit. The output error signal is proportional to the rate of change of the difference between the two input signals.

a) If the difference between the two signals is constant, no additional error signal is generated.

b) If no additional error is generated the signal will decay based on a 40 sec. time constant.

Show T-2.5 While describing the Non-linear gain, and Variable gain units. (This information comes from the PLS book page 29)

3- The output signal of the power mismatch unit is passed to a **non-linear gain unit**, which will vary the magnitude of the output error signal in proportion to the amount of the error signal present.

a) A given reactivity addition at a lower power level has a lesser effect on the rate of change of power level than does the same reactivity addition at a higher power level.

To illustrate this, assume a given reactivity addition causes a one decade per minute startup rate. If the reactor is at one percent power initially, power level would be 10 percent after one minute. The rate of change of power is **9 percent per minute**. If the reactor had been at 10 percent power initially, then power level would be 100 percent after one minute, which corresponds to a rate of change of **90 percent per minute**.

4- To compensate for this characteristic, a **variable gain unit** is provided which imposes high gain on the error signals at low power levels and low gain at high power levels. The magnitude of the **gain is a function of first stage turbine pressure, not the error signal**.

a) The gain is a constant 2 : 1 if the unit is <50% power, and drops off (nonlinear) as the unit goes from 50% to 100% load.

Show T-2.6 (Control Rod Speed Vs Temperature Error Signal) during the following discussions.

---

2. The error signals generated by the power mismatch circuit and the temperature comparison circuits are combined in a summing network to produce a total error signal.

a- This total error signal is used in the rod control program to control rod speed and direction.

1- When T_{avg} varies from T_{ref} by more than 1.5_F, the rod control program sends a signal to the rod control system logic cabinet to begin rod motion.

2- The speed of the control rods is a function of the difference between T_{avg} and T_{ref}.

a) When the difference is greater than 1.5_F, but less than 3_F, the rod speed is fixed at 8 steps per minute (spm).

b) Between 3_F and 5_F the rod speed linearly increases from 8 spm to 72 spm.

c) The rod speed is fixed at 72 spm above a difference of 5_F.

1) A **T_{avg} / T_{ref} DEVIATION** alarm (window 1B-A7) will actuate when High Auctioneered T_{avg} differs from T_{ref} by more than ± 5_F. The alarm requires immediate attention, and could be indicative of:

(a) continuous rod motion,

(b) large change in steam demand,

(c) steam generator level control problem,

(d) channel test, or failure.

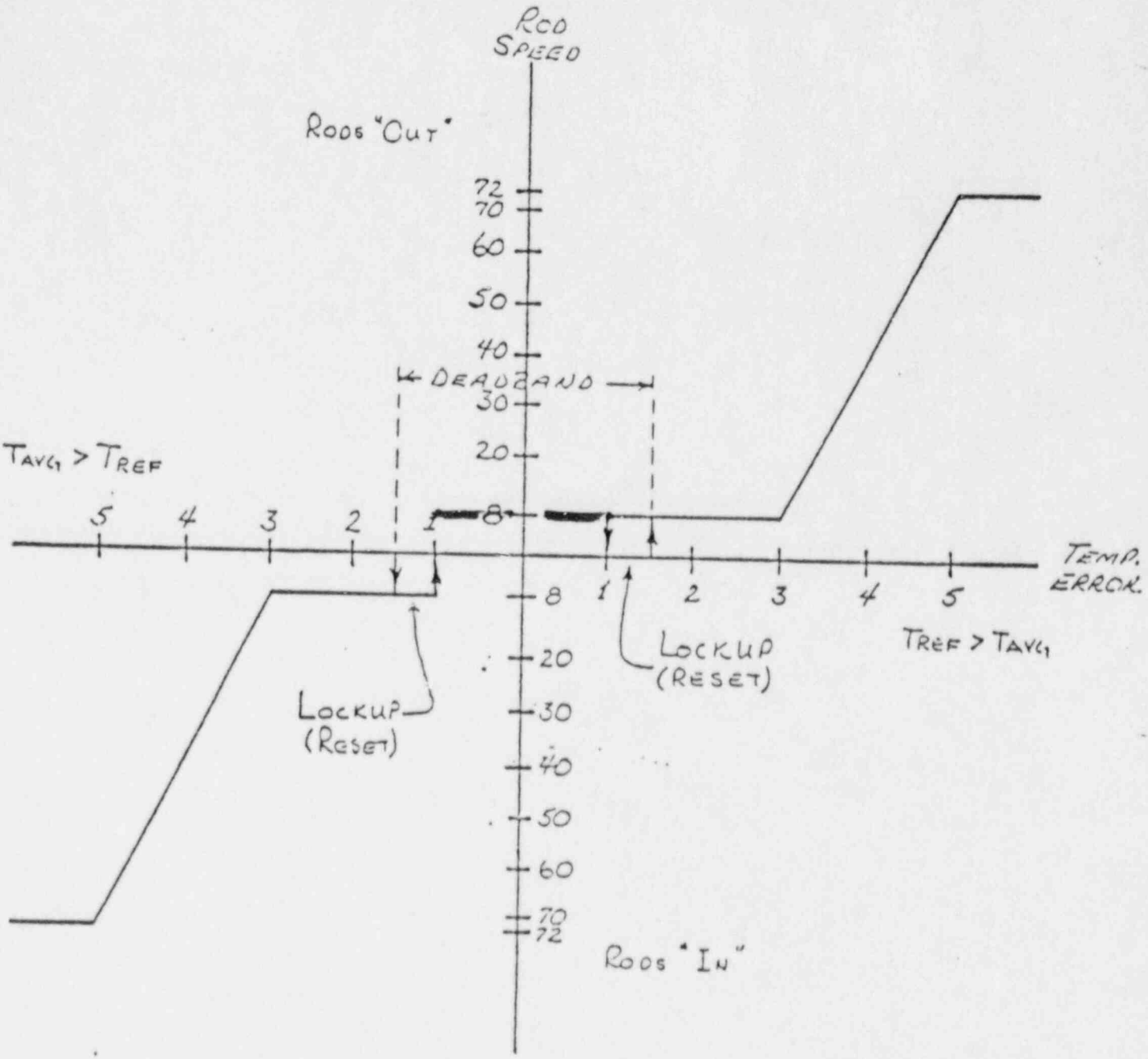

CONTROL ROD SPEED VS TEMPERATURE ERROR
(AUTOMATIC ROD CONTROL)

TABLE 3.3-1

REACTOR TRIP SYSTEM INSTRUMENTATION

FUNCTIONAL UNIT	TOTAL NO. OF CHANNELS	CHANNELS TO TRIP	MINIMUM CHANNELS OPERABLE	APPLICABLE MODES	ACTION
1. Manual Reactor Trip	2	1	2	1, 2 and *	12
2. Power Range, Neutron Flux	4	2	3	1, 2	2#
3. Power Range, Neutron Flux High Positive Rate	4	2	3	1, 2	2#
4. Power Range, Neutron Flux High Negative Rate	4	2	3	1, 2	2#
5. Intermediate Range, Neutron Flux	2	1	2	1, 2 and *	3
6. Source Range, Neutron Flux					
A. Startup	2	1	2	2##	4
B. Shutdown	2	1	2	3*, 4* and 5*	15
C. Shutdown	2	0	1	3, 4 and 5	5
7. Overtemperature ΔT					
Three Loop Operation	3	2	2	1, 2	7#
Two Loop Operation	3	1**	2	1, 2	9

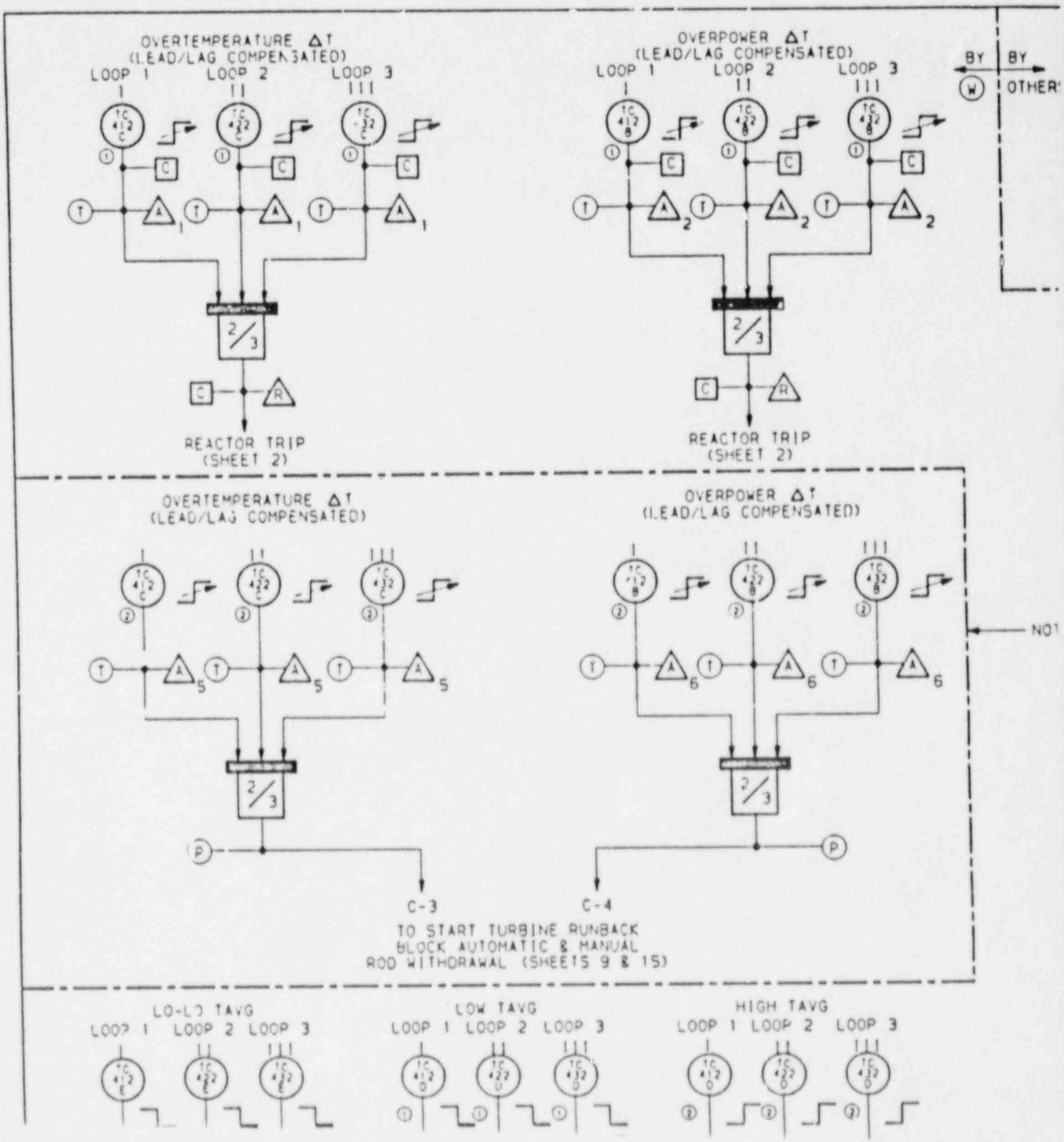

Attachment (R20) Question 3.07b

TABLE 3.3-1 (Continued)

REACTOR TRIP SYSTEM INTERLOCKS

DESIGNATION	CONDITION	SETPOINT	ALLOWABLE VALUES	FUNCTION
P-6	1 of 2 Intermediate range above setpoint (increasing power level)	1×10^{-10}	$<3 \times 10^{-10}$	Allows manual block of source range reactor trip
	2 of 2 Intermediate range below setpoint (decreasing power level)	5×10^{-11}	$>3 \times 10^{-11}$	Defeats the block of source range reactor trip
P-10	2 of 4 Power range above setpoint (increasing power level)	10%	<11%	Allows manual block of power range (low setpoint) and intermediate range reactor trips and intermediate range rod stop. Blocks source range reactor trip.
	3 of 4 Power range below setpoint (decreasing power level)	8%	>7%	Defeats the block of power range (low setpoint) and intermediate range reactor trips and intermediate range rod stop. Input to P-7.
P-7	2 of 4 Power range above setpoint or 1 of 2 Turbine Impulse chamber pressure above setpoint	10% Pressure equivalent to 10% rated turbine power	<11% <11%	Allows reactor trip on: Low flow or reactor coolant pump breakers open in more than one loop, Undervoltage (RCP busses) Underfrequency (RCP busses), Turbine Trip, Pressurizer low pressure, and Pressurizer high level.

(Power level increasing)

The Power Range Negative Rate Trip provides protection for control rod drop accidents. At high power, a rod drop accident could cause local flux peaking which could cause an unconservative local DNBR to exist. The Power Range Negative Rate Trip will prevent this from occurring by tripping the reactor. No credit is taken for operation of the Power Range Negative Rate Trip for those control rod drop accidents for which the DNBR's will be greater than the applicable design limit DNBR value for each fuel type.

Intermediate and Source Range, Nuclear Flux

The Source and Intermediate Range, Nuclear Flux trips provide reactor core protection during shutdown (Modes 3, 4 and 5) when the reactor trip system breakers are in the closed position. The Source and Intermediate Range trips in addition to the Power Range trips provide core protection during reactor startup (Mode 2). Reactor startup is prohibited unless the Source, Intermediate and Power Range trips are operable in accordance with Specification 3.3.1.1. The Source Range Channels will initiate a reactor trip at about 10^{+5} counts per second unless manually blocked when P-6 becomes active. The Intermediate Range Channels will initiate a reactor trip at a current level proportional to approximately 25 percent of RATED THERMAL POWER unless manually blocked when P-10 becomes active. In the accident analyses, bounding transient results are based on reactivity excursions from an initially critical condition, where the source range trip is assumed to be blocked. Accidents initiated from a subcritical condition would produce less severe results since the source range trip would provide core protection at a lower power level. No credit was taken for operation of the trip associated with the Intermediate Range Channels in the accident analyses; however, their functional capability at the specified trip settings is required by this specification to enhance the overall reliability of the Reactor Protection System.

Overtemperature ΔT

The Overtemperature ΔT trip provides core protection to prevent DNB for all combinations of pressure, power, coolant temperature, and axial power distribution, provided that the transient is slow with respect to piping transient delays from the core to the temperature detectors (about 4 seconds), and pressure is within the range between the High and Low Pressure reactor trips. This setpoint includes corrections for changes in density and heat capacity of water with temperature and dynamic compensation for piping delays from the core to the loop temperature detectors. With normal axial power distribution, this reactor trip limit is always below the core safety limit as shown in Figure 2.1-1. If axial peaks are greater than design, as indicated by the difference between top and bottom power range nuclear detectors, the reactor trip is automatically reduced according to the notations in Table 2.2-1.

LIMITING SAFETY SYSTEM SETTINGS

BASES

Operation with a reactor coolant loop out of service below the 3 loop P-8 set point does not require reactor protection system set point modification because the P-8 set point and associated trip will prevent DNB during 2 loop operation exclusive of the Overtemperature ΔT set point. Two loop operation above the 3 loop P-8 set point is permissible after resetting the K1, K2 and K3 inputs to the Overtemperature ΔT channels and raising the P-8 set point to its 2 loop value. In this mode of operation, the P-8 interlock and trip functions as a High Neutron Flux trip at the reduced power level.

Overpower ΔT

The Overpower ΔT reactor trip provides assurance of fuel integrity, e.g., no melting, under all possible overpower conditions, limits the required range for Overtemperature ΔT protection, and provides a backup to the High Neutron Flux trip. No credit was taken for operation of this trip in the accident analyses; however, its functional capability at the specified trip setting is required by this specification to enhance the overall reliability of the Reactor Protection System.

Pressurizer Pressure

The Pressurizer High and Low Pressure trips are provided to limit the pressure range in which reactor operation is permitted. The High Pressure trip is backed up by the pressurizer code safety valves for RCS overpressure protection, and is therefore set lower than the set pressure for these valves (2485 psig). The Low Pressure trip provides protection by tripping the reactor in the event of a loss of reactor coolant pressure. The low pressure trip is blocked below P-7.

Pressurizer Water Level

The Pressurizer High Water Level trip ensures protection against Reactor Coolant System overpressurization by limiting the water level to a volume sufficient to retain a steam bubble and to prevent water relief

STEP	ACTION/EXPECTED RESPONSE	RESPONSE NOT OBTAINED
[4.] _____	INITIATE EMERGENCY BORATION OF RCS:	
	a) Verify at least one Charging/SI pump - RUNNING	a) Start Charging/SI pumps as necessary.
	b) Emergency borate: 1) Place BATP in FAST speed 2) Open MOV-1350	
	c) Verify neutron flux - RAPIDLY DECREASING	c) Inject the BIT: 1) Open RWST suction isolation valves: * MOV-1115B * MOV-1115D 2) Close VCT suction isolation valves: * MOV-1115C * MOV-1115E 3) Close BIT recirc isolation valves: * TV-1884A * TV-1884B * TV-1884C 4) Open BIT outlet isolation valves: * MOV-1867C * MOV-1867D 5) Open BIT inlet isolation valves: * MOV-1867A * MOV-1867B

(STEP 4 CONTINUED ON NEXT PAGE)

STEP	ACTION/EXPECTED RESPONSE	RESPONSE NOT OBTAINED
[4.]	INITIATE EMERGENCY BORATION OR RCS (CONTINUED):	
	d) Check PRZR pressure - LESS THAN 2335 PSIG	d) Verify PRZR PORVs and block valves open. IF NOT, THEN open PRZR PORVs and block valves as necessary until PRZR pressure less than 2335 psig.
5. _____	CHECK IF THE FOLLOWING TRIPS HAVE OCCURRED:	
	a) Reactor trip	a) Dispatch an operator to locally perform Attachment 2.
	b) Turbine trip	b) Dispatch an operator to locally perform Attachment 1.
6. _____	VERIFY AFW FLOW - GREATER THAN 680 GPM	Manually start pumps and align valves as necessary.
7. _____	VERIFY ALL DILUTION PATHS ISOLATED:	
	a) Place blender control to - OFF	
	b) Close FCV-1114A	b) Locally close 1-CH-217.
8. _____	CHECK FOR REACTIVITY INSERTION FROM UNCONTROLLED RCS COOLDOWN: RCS temperatures - DECREASING IN AN UNCONTROLLED MANNER OR ANY SG pressure - DECREASING IN AN UNCONTROLLED MANNER	Perform the following: a) Stop any uncontrolled cooldown. b) GO TO Step 12.

3/4.2.2 and 3/4.2.3 HEAT FLUX AND NUCLEAR ENTHALPY HOT CHANNEL FACTORS- $F_Q(Z)$ and $F^N_{\Delta H}$

The limits on heat flux and nuclear enthalpy hot channel factors ensure that 1) the design limits on peak local power density and minimum DNBR are not exceeded and 2) in the event of a LOCA the peak fuel clad temperature will not exceed the 2200°F ECCS acceptance criteria limit.

Each of these hot channel factors are measurable but will normally only be determined periodically as specified in Specifications 4.2.2 and 4.2.3. This periodic surveillance is sufficient to insure that the hot channel factor limits are maintained provided:

a. Control rod in a single group move together with no individual rod insertion differing by more than ± 12 steps from the group demand position.

b. Control rod groups are sequenced with overlapping groups as described in Specification 3.1.3.6.

c. The control rod insertion limits of Specifications 3.1.3.5 and 3.1.3.6 are maintained.

d. The axial power distribution, expressed in terms of AXIAL FLUX DIFFERENCE, is maintained within the limits.

The relaxation in $F^N_{\Delta H}$ as a function of THERMAL POWER allows changes in the radial power shape for all permissible rod insertion limits. $F^N_{\Delta H}$ will be maintained within its limits provided conditions a thru d above, are maintained.

When an F_Q measurement is taken, both experimental error and manufacturing tolerance must be allowed for. 5% is the appropriate allowance for a full core map taken with the incore detector flux mapping system and 3% is the appropriate allowance for manufacturing tolerance.

The specified limit for $F^N_{\Delta H}$ contains a 4% error allowance. Normal operation will result in a measured $F^N_{\Delta H} \leq 1.49$. The 4% allowance is based on the following considerations:

3/4.1.1.4 MODERATOR TEMPERATURE COEFFICIENT (MTC) (Continued)

conditions other than those explicitly stated will require extrapolation to those conditions in order to permit an accurate comparison.

The most negative MTC value equivalent to the most positive moderator density coefficient (MDC), was obtained by incrementally correcting the MDC used in the FSAR analyses to nominal operating conditions. These corrections involved subtracting the incremental change in the MDC associated with a core condition of all rods inserted (most positive MDC) to an all rods withdrawn condition and, a conversion for the rate of change of moderator density with temperature at RATED THERMAL POWER conditions. This value of the MDC was then transformed into the limiting MTC value -4.4×10^{-4} $\Delta k/k/°F$. The MTC value of -3.3×10^{-4} $\Delta k/k/°F$ represents a conservative value (with corrections for burnup and soluble boron) at a core condition of 300 ppm equilibrium boron concentration and is obtained by making these corrections to the limiting MTC value -4.4×10^{-4} $\Delta k/k/°F$.

Once the equilibrium boron concentration falls below about 60 ppm, dilution operations take an extended amount of time and reliable MTC measurements become more difficult to obtain due to the potential for fluctuating core conditions over the test interval. For this reason, MTC measurements may be suspended provided the measured MTC value at an equilibrium full power boron concentration $\leq$ 60 ppm is less negative than -4.0×10^{-4} delta k/k/°F. The difference between this value and the limiting MTC value of -4.4×10^{-4} delta k/k/°F conservatively bounds the maximum credible change in MTC between the 60 ppm equilibrium boron concentration (all rods withdrawn, RATED THERMAL POWER conditions) and the licensed end-of-cycle, including the effect of rods, boron concentration, burnup, and end-of-cycle coastdown.

The surveillance requirements for measurement of the MTC at the beginning and near the end of each fuel cycle are adequate to confirm that the MTC remains within its limits since this coefficient changes slowly due principally to the reduction in RCS boron concentration associated with fuel burnup.

3/4.1.1.5 MINIMUM TEMPERATURE FOR CRITICALITY

This specification ensures that the reactor will not be made critical with the Reactor Coolant System average temperature less than 541°F. This limitation is required to ensure 1) the moderator temperature coefficient is within its analyzed temperature range, 2) the protective instrumentation is within its normal operating range, and 3) the P-12 interlock is above its setpoint.

3/4.1.2 BORATION SYSTEMS

The boron injection system ensures that negative reactivity control is available during each mode of facility operation. The components required to perform this function include 1) borated water sources, 2) charging pumps, 3) separate flow paths, 4) boric acid transfer pumps, 5) associated heat tracing systems, and 6) an emergency power supply from OPERABLE diesel generators.

3/4.1.1.4 MODERATOR TEMPERATURE COEFFICIENT (MTC)

The limitations on MTC are provided to ensure that the value of this coefficient remains within the limiting conditions assumed for this parameter in the FSAR accident and transient analyses.

The MTC values of this specification are applicable to a specific set of plant conditions; accordingly, verification of MTC values at conditions other than those explicitly stated will require extrapolation to those conditions in order to permit an accurate comparison.

The most negative MTC value equivalent to the most positive moderator density coefficient (MDC), was obtained by incrementally correcting the MDC used in the FSAR analyses to nominal operating conditions. These corrections involved subtracting the incremental change in the MDC associated with a core condition of all rods inserted (most positive MDC) to an all rods withdrawn condition and, a conversion for the rate of change of moderator density with temperature at RATED THERMAL POWER conditions. This value of the MDC was then transformed into the limiting MTC value -4.4×10^{-4} delta k/k/°F. The MTC value of -3.3×10^{-4} delta k/k/°F represents a conservative value (with corrections for burnup and soluble boron) at a core condition of 300 ppm equilibrium boron concentration and is obtained by making these corrections to the limiting MTC value -4.4×10^{-4} delta k/k/°F.

Once the equilibrium boron concentration falls below about 60 ppm, dilution operations take an extended amount of time and reliable MTC measurements become more difficult to obtain due to the potential for fluctuating core conditions over the test interval. For this reason, MTC measurements may be suspended provided the measured MTC value at an equilibrium full power boron concentration ≤60 ppm is less negative than -4.0×10^{-4} delta k/k/°F. The difference between this value and the limiting MTC value of 4.4×10^{-4} delta k/k/°F conservatively bounds the maximum credible change in MTC between the 60 ppm equilibrium boron concentration (all rods withdrawn, RATED THERMAL POWER conditions) and the licensed end of cycle, including the effect of rods, boron concentration, burnup, and end-of-cycle coastdown.

The surveillance requirements for measurement of the MTC at the beginning and near the end of each fuel cycle are adequate to confirm that the MTC remains within its limits since this coefficient changes slowly due principally to the reduction in RCS boron concentration associated with fuel burnup.

3/4.1.1.5 MINIMUM TEMPERATURE FOR CRITICALITY

This specification ensures that the reactor will not be made critical with the Reactor Coolant System average temperature less than 541°F . This limitation is required to ensure 1) the moderator temperature coefficient is within its analyzed temperature range, 2) the protective instrumentation is within its normal operating range, 3) the P-12 interlock is above its setpoint, 4) the pressurizer is capable of being in an OPERABLE status with a steam bubble, and 5) the reactor pressure vessel is above its minimum RT_{NDT} temperature.

PERIODIC TEST CRITIQUE
NORTH ANNA POWER STATION
VIRGINIA POWER

SAFETY RELATED

Periodic Test No: 1 — 1-PT-23
To be Performed By: 2 — OPERATOR
Unit No: 3 — 1

Test Title: 4
QUADRANT POWER TILT RATIO

Test Frequency: 5
AT LEAST ONCE PER 7 DAYS OR SPECIAL (WHEN THE ALARM IS INOPERABLE)

Unit Conditions Requiring Test: 6
MODE 1 ABOVE 50% OF RATED THERMAL POWER

Test Performed By: 7 Date Started: 8A Date Completed: 8B

Test Results (To be completed by performer of test and Cognizant Supervisor(s)): 9

1. /___/Satisfactory /___/Unsatisfactory /___/Partial Procedure

2. The following problem(s) was encountered (use back of sheet for additional space):

3. Corrective action taken or initiated:

4. Work Order No.: Dated:

Forward To Cognizant Supervisor

Test Reviewed and Approved By Cognizant Supervisor(s) or Designee: 10

REACTOR ENGINEER Date:

Date:

Comments:

NOT A CONTROLLED DOCUMENT

Forward To Performance Engineer

Comment(s) of Performance Engineer: 11 Stamp: 12

NOT NECESSARILY THE LATEST REVISION

Attachment (S1) Question 5.04

VIRGINIA POWER

PERIODIC TEST PROCEDURE FOR NORTH ANNA POWER STATION UNIT NO.: 1

TITLE: QUADRANT POWER TILT RATIO

REFERENCES:

1. T.S. 3.2.4, 4.2.4.1.a, b, 3.3.3.2, 4.3.3.2, 3.3.1.1
2. 1-OP-57, Incore Movable Detector System
3. P250 Operator's Console Reference Manual, TP044-P
4. Calculational basis for PT-23, Approved 03-13-86

REVISION RECORD:

REV. NO.	PAGE(S)	DATE	APPROVED (CHAIRMAN, SNS&OC)
14	ENTIRE	01-08-87	ECS2

RECOMMEND APPROVAL:

SUPERINTENDENT TECHNICAL SERVICES

APPROVED BY: E. L. Smith Jr.
CHAIRMAN STATION NUCLEAR SAFETY AND OPERATING COMMITTEE

DATE: 01-08-87

Initials

1.0 Purpose

1.1 To monitor the core quadrant power tilt ratio.

2.0 Initial Conditions

_____ 2.1 All excore detectors are operable. If one excore detector is inoperable, perform 1-PT-23.1 or 1-PT-21.1 concurrently.

_____ 2.2 Plant is at a stable electrical load and at a power level of > 50% of Rated Thermal Power.

_____ 2.3 Notify the Shift Supervisor on duty of the impending test.

3.0 Precautions and Limitations

_____ 3.1 This test must be run at least once per 12 hours during steady state operation when the alarm is inoperable.

_____ 3.2 If one Power Range Channel is inoperable and Thermal Power is greater than 75%, this test must be run once per 12 hours concurrently with 1-PT-23.1 or 1-PT-21.1.

4.0 Instructions

NOTE 1: If plant process computer is operable, complete Section 4.1. If plant process computer is inoperable, N/A and initial Section 4.1 and complete Section 4.2.

NOTE 2: If an excore detector is inoperable, a valid computer calculated QPTR can be generated by removing the inoperable detector computer points from scan and entering a zero into those points.

4.1 Computer Calculated QPTR

NOTE: The computer QPTR report will be printed on utility printer (MW05) following Step 4.1.4.

_____ 4.1.1 Push Demand Log.

_____ 4.1.2 Enter 1 into Value 1.

_____ 4.1.3 Enter 3 into Value 3

Initials

4.0 Instructions (cont)

_____ 4.1.4 Push Start/Add.

_____ 4.1.5 Remove the QPTR report from the printer.

_____ 4.1.6 Verify the QPTR report currents with the operable excore detector meters. If report currents and meters agree within ± 3 μ amps, sign-off the "Current Verified By" section of the QPTR report. If report currents and meters do not agree within ±3 μ amps, abort this method, N/A and initial the remaining steps in Section 4.1 and proceed with Section 4.2.

_____ 4.1.7 Verify the expected 100% currents (which are posted on the core status board) with QPTR 100% currents. If they agree sign-off the QPTR report for expected 100% currents. If they do not agree, abort this method, N/A and initial the remaining steps in Section 4.1 and proceed with Section 4.2.

_____ 4.1.8 If any error messages are printed on the QPTR report, abort this method, N/A and initial the remaining steps in Section 4.1 and proceed with Section 4.2.

_____ 4.1.9 Attach the QPTR report to this procedure and sign the "Completed By" Section of Attachment 6.1, page 2 of 2.

_____ 4.1.10 N/A and initial Section 4.2 and any inapplicable Sections of Attachment 6.1.

4.2 Manually calculated QPTR

_____ 4.2.1 From the core status board, record the value for 100% power for each excore detector (expected reading for 100% power) on the attached data sheet.

_____ 4.2.2 Record the excore detector readings and Rx Power on the attached data sheet.

Initials

4.0 Instructions (cont)

NOTE: Data from any inoperable excore detector should not be included in QPTR calculations since its erroneous readings will cause an error in the calculated QPTR.

_______ 4.2.3 Calculate the maximum quadrant power tilt ratio as per the attached data sheet.

_______ 4.2.4 Complete an independent verification of calculations (to be performed by someone not previously involved in this test).

_______ 4.2.5 Notify the Reactor Engineer or the on-duty STA that the computer calculated QPTR is not functional.

_______ 4.3 If the conditions stated in step 3.2 exist, obtain the quadrant power tilt ratio using the incore movable detector system. Utilize 1-PT-23.1 or 1-PT-21.1 to obtain a flux map.

_______ 4.4 Notify the Shift Supervisor on duty that this test has been completed.

_______ 4.5 If quadrant power tilt ratio exceeds 1.015, notify the Reactor Engineer.

5.0 Acceptance Criteria

* *

CAUTION: If the below acceptance criteria cannot be satisfied, refer to ACTION statement of T.S. 3.2.4.

* *

_______ 5.1 The quadrant tilt ratios are less than or equal to 1.02.

6.0 Attachment

6.1 Data Sheet

U = Upper
L = Lower
ΣI_U = Sum of Normalized Upper Detector Readings
ΣI_L = Sum of Normalized Lower Detector Readings
Maximum I_U = Highest Normalized Detector Reading Upper
Maximum I_L = Highest Normalized Detector Reading Lower

DATA SHEET 1

EXCORE DETECTOR READINGS
(RECORD ALL READING TO 3 PLACES)

UPPER		LOWER	
N41U -	159.7	N41L -	166.0
N42U -	out of service	N42L -	out of service
N43U -	139.5	N43L -	145.1
N44U -	147.1	N44L -	150.3

EXPECTED EXCORE DETECTOR READINGS
AT 100% POWER
(DATA SHEET POSTED ON VERTICAL BOARD)
(RECORD EXACTLY AS POSTED)

UPPER		LOWER	
$N41U_{100}$ -	266.6	$N41L_{100}$ -	278.6
$N42U_{100}$ -	252.7	$N42L_{100}$ -	236.7
$N43U_{100}$ -	262.9	$N43L_{100}$ -	270.0
$N44U_{100}$ -	254.3	$N44L_{100}$ -	252.3

Normalize the detector readings by dividing by the Expected Excore reading at 100% power
(CARRY OUT TO FOUR DECIMAL PLACES. (EX. 0.9931))

$\frac{N41U}{N41U_{100}} = \frac{159.7}{266.6} =$ .5990

$\frac{N41L}{N41L_{100}} = \frac{166.0}{278.6} =$ .5958

$\frac{N42U}{N42U_{100}} =$ NA $=$ NA

$\frac{N42L}{N42L_{100}} =$ NA $=$ NA

$\frac{N43U}{N43U_{100}} = \frac{139.5}{262.9} =$ .5306

$\frac{N43L}{N43L_{100}} = \frac{145.1}{270.0} =$ .5374

$\frac{N44U}{N44U_{100}} = \frac{147.1}{254.3} =$ .5785

$\frac{N44L}{N44L_{100}} = \frac{150.3}{252.3} =$ .5957

$\Sigma I_u =$ 1.7081

$\Sigma I_L =$ 1.7287

(CARRY ALL CALCULATIONS TO FOUR DECIMAL PLACES)

$$\text{AVERAGE } I_U = \frac{\Sigma I_U}{\text{\# DETECTORS IN USE}} = \frac{1.7081}{3} = .5694$$

$$\text{AVERAGE } I_L = \frac{\Sigma I_L}{\text{\# DETECTORS IN USE}} = \frac{1.7289}{3} = .5763$$

$$\text{UPPER TILT RATIO} = \frac{\text{MAXIMUM } I_U}{\text{AVERAGE } I_U} = \frac{.5990}{.5694} = 1.0520$$

$$\text{LOWER TILT RATIO} = \frac{\text{MAXIMUM } I_L}{\text{AVERAGE } I_L} = \frac{.5958}{.5763} = 1.0338$$

QUADRANT POWER TILT RATIO = 1.052
(Larger of the upper and lower tilt ratio rounded to three decimal places. (EX - 1.006))

COMPLETED BY: _____

DATE: _____

TIME: _____

Rx POWER: _____

INDEPENDENT REVIEWER: _____
(of calculations)

CONTROL ROOM USAGE OF CRITICAL SAFETY FUNCTION STATUS TREES (continued)

The six Critical Safety Function Status Trees are listed below and are always evaluated in sequence.

F-0.1	SUBCRITICALITY	(S)	
F-0.2	CORE COOLING	(C)	
F-0.3	HEAT SINK	(H)	* F-0.4 for Revision 0.00
F-0.4	INTEGRITY	(P)	* F-0.3 for Revision 0.00
F-0.5	CONTAINMENT	(Z)	
F-0.6	INVENTORY	(I)	

If identical priorities are found on different trees during monitoring, the required action priority is determined utilizing the following sequence.

The user begins monitoring with the SUBCRITICALITY tree. Entry is at the arrow at the left-hand side of the tree. Questions are answered based on plant conditions at that time, and the appropriate branch line is followed to the next question. An individual Status Tree evaluation is complete when the user arrives at the coded terminus. With the exceptions noted below, the color and instructions of the terminus are noted and the user continues to the next tree in sequence, again entering at the left-hand arrow.

If any RED terminus is encountered. the user is to direct the operator to immediately stop any procedure in progress, and to perform the Function Restoration Procedure required by the terminus.

If during the performance of any RED-condition Function Restoration Procedure, a RED condition (terminus) of higher priority arises, then the higher priority condition should be addressed first, and the lower priority RED-condition procedure suspended.

If any ORANGE terminus is encountered, the user is expected to monitor all of the remaining trees, and then, if no RED is encountered or no HIGHER priority ORANGE is encountered, then direct the operator to immediately stop any procedure in progress, and to perform the Function Restoration Procedure required by the terminus.

If during the performance of an ORANGE-condition Function Restoration Procedure, any RED condition (terminus) or higher ORANGE condition (terminus) arises, then the RED condition or higher priority ORANGE condition is to be addressed first, and the original ORANGE-condition procedure suspended.

Once a Function Restoration Procedure is entered due to a RED or ORANGE condition, then that procedure is to be performed to its completion, UNLESS preempted by some higher priority condition. It is expected that the actions in the Function Restoration Procedure will clear the RED or ORANGE condition before all of the operator actions are completed. HOWEVER, the Function Restoration Procedure should be performed to the point of the defined transition to a specific procedure or to the "procedure and step in effect" endpoint.

Critical Safety Function Status Tree monitoring should be continuous as long as any ORANGE or RED condition is present. If no condition more serious than YELLOW is encountered, then monitoring frequency may be reduced to 10-20 minutes, unless some significant change in plant status occurs.

NORTH ANNA POWER STATION

LECTURE ATTENDANCE RECORD

Program: RO/SRO 87-1 License Class

Instructor Guide Title: NA Number: NA

Subject/Lesson Plans: Control Room usage of critical Safety Function STATUS TREES

Date: 2/18/88 Duration: 15 minutes

Lecturer: CRUST /

ATTENDEES:

Name (Last, First, M.I.)	Signature	Employer/Dept./SSN
1. Epperson, Kenneth R	K Epperson	Va Pwr / ENGR / 239-11-2146
2. Roth, James R.	[illegible]	VA Pwr / NSE / 181-46-5981
3. Crossman, James W.	Jim Crossman	VA Pwr / ops / 230-84-7259
4. Kirlver, Bryce L	Bryce L Kirlver	VA Pwr / NOD / 489-52-5921
5. Sible, Stephen M.	[illegible]	VA Pwr / ops / 225020621
6. [illegible]	[illegible]	[illegible]
7. Lloyd, Howard J.	[illegible]	VaPwr / ops / 138-44-9663
8. Crum, Gregory L	[illegible]	VAPWR / ops / 224-90-8718
9. Shelton, Timothy L	[illegible]	VAPwr / ops / 226-94-1865
10. [illegible]	[illegible]	[illegible]
11. Williams, James R.	[illegible]	VA Pwr / TENG / 363-50-7545
12. Allen, Michael H.	[illegible]	VA Pwr / Tng / 293-02-8909
13. Brown, Bradley J.	[illegible]	VAPwr / ops / 536644241
14. Davies, James R	[illegible]	VaPwr / ops / 414-92-7000
15. Mason, Lewis R	[illegible]	VAPwr ops 231-70-4453
16. Tarr, Mark F	[illegible]	VAPwr / ops / 205469208
17. [illegible]	[illegible]	[illegible]
18. Flowers, George H.	[illegible]	VA Pwr / NSE / 231-54-0870
19. Mosher, Jeffrey T.	[illegible]	VA Pwr / [illegible] / 065-40-2762
20. Robertson, David W	[illegible]	VAPower / Engr / 175-46-9411

(Continued on back)

4.0 Immediate Operator Actions

4.1 IF the Reactor has tripped, THEN go to 1-EP-0, REACTOR TRIP OR SAFETY INJECTION.

4.2 IF N-44 has failed, place rods in "Manual" AND feedwater bypass FCV's to "Manual".

4.3 Suspend power increases AND rod withdrawal.

Completed By: _____

Date: _____

EMERGENCY CORE COOLING SYSTEMS

ECCS SUBSYSTEMS - T_{avg} GREATER THAN 350°F

LIMITING CONDITION FOR OPERATION

3.5.2 Two independent ECCS subsystems shall be OPERABLE with each subsystem comprised of:

a. One OPERABLE centrifugal charging pump,

b. One OPERABLE low head safety injection pump,

c. An OPERABLE flow path capable of transferring fluid to the Reactor Coolant System when taking suction from the refueling water storage tank on a safety injection signal or from the containment sump when suction is transferred during the recirculation phase of operation.

APPLICABILITY: MODES 1, 2 and 3.

ACTION:

a. With one ECCS subsystem inoperable, restore the inoperable subsystem to OPERABLE status within 72 hours or be in HOT SHUTDOWN within the next 12 hours.

b. In the event the ECCS is actuated and injects water into the Reactor Coolant System, a Special Report shall be prepared and submitted to the Commission pursuant to Specification 6.9.2 within 90 days describing the circumstances of the actuation and the total accumlated actuation cycles to date. The current value of the usage factor for each affected safety injection nozzle shall be provided in this Special Report whenever its value exceeds 0.70.

c. The provisions of Specification 3.0.4 are not applicable to Specifications 3.5.2.a and 3.5.2.b for one hour following heatup above 340°F or prior to cooldown below 340°F.

SURVEILLANCE REQUIREMENTS

4.5.2 Each ECCS subsystem shall be demonstrated OPERABLE:

a. At least once per 12 hours by verifying that the following valves are in the indicated positions with power to the valve operators removed:

REACTOR COOLANT SYSTEM

RELIEF VALVES

LIMITING CONDITION FOR OPERATION

3.4.3.2 Two power relief valves (PORVs) and their associated block valves shall be OPERABLE.

APPLICABILITY: MODES 1, 2, and 3.

ACTION:

a. With one or more PORV(s) inoperable, within 1 hour either restore the PORV(s) to OPERABLE status or close the associated block valve(s) and remove power from the block valve(s); otherwise, be in at least HOT STANDBY within the next 6 hours and in COLD SHUTDOWN within the following 30 hours.

b. With one or more block valve(s) inoperable, within 1 hour either restore the block valve(s) to OPERABLE status or close the block valve(s) and remove power from the block valve(s); otherwise, be in at least HOT STANDBY within the next 6 hours and in COLD SHUTDOWN within the following 30 hours.

SURVEILLANCE REQUIREMENTS

4.4.3.2.1 Each PORV shall be demonstrated OPERABLE:

a. At least once per 31 days by performance of a CHANNEL FUNCTIONAL TEST, excluding valve operation, and

b. At least once per 18 months by performance of a CHANNEL CALIBRATION.

4.4.3.2.2 Each block valve shall be demonstrated OPERABLE at least once per 92 days by operating the valve trough one complete cycle of full travel.

PLANT SYSTEMS

3/4.7.15 PENETRATION FIRE BARRIERS

LIMITING CONDITIONS FOR OPERATION

3.7.15 All penetration fire barriers protecting safety related areas shall be functional.

APPLICABILITY: At all times.

ACTION:

a. With one or more of the above required penetration fire barriers non-functional, establish a continuous fire watch on at least one side of the affected penetration within 1 hour.

b. The provisions of Specifications 3.0.3 and 3.0.4 are not applicable.

SURVEILLANCE REQUIREMENTS

2

4.7.15 Each of the above required penetration fire barriers shall be verified to be functional by a visual inspection:

a. At least once per 18 months, and

b. Prior to declaring a penetration fire barrier functional following repairs or maintenance.

PLANT SYSTEMS

3/4.7.15 PENETRATION FIRE BARRIERS

LIMITING CONDITIONS FOR OPERATION

3.7.15 All fire barrier penetrations (including cable penetration barriers, firedoors and fire dampers), in fire zone boundaries, protecting safety related areas shall be functional.

APPLICABILITY: At all times.

ACTION:

a. With one or more of the above required fire barrier penetrations non-functional, within one hour, either establish a continuous fire watch on at least one side of the affected penetration, or verify the OPERABILITY of fire detectors on at least one side of the non-functional fire barrier and establish an hourly fire watch patrol. Restore the non-functional fire barrier penetration(s) to functional status within 7 days or prepare and submit a Special Report to the Commission pursuant to Specification 6.9.2 within the next 30 days outlining the action taken, the cause of the non-functional penetration and plans and schedule for restoring the fire barrier penetration(s) to functional status.

b. The provisions of Specifications 3.0.3 and 3.0.4 are not applicable.

SURVEILLANCE REQUIREMENTS

4.7.1E Each of the above required penetration fire barriers shall be verified to be functional:

a. At least once per 18 months, by a visual inspection, and

b. Prior to declaring a penetration fire barrier functional following repairs or maintenance by a visual inspection of the affected penetration fire barrier(s).

ENCLOSURE 4

SIMULATION FACILITY FIDELITY REPORT

Facility Licensee: Virginia Electric and Power Company

Facility Licensee Docket No.: 50-338 and 50-339

Facility Licensee No.: NPF-4 and NPF-7

Operating Tests administered at: North Anna Power Station

Operating Tests Given On: February 17-25, 1988

During the conduct of the simulator portion of the operating tests identified above, the following apparent performance and/or human factors discrepancies were observed:

1. The boration model does not model in real time. The plant is very slow to react to boration.

2. Spurious starts of charging pumps and opening of the BIT inlet.

3. The following spurious alarms were experienced.

    a. Turbine supervisory panel
    b. Radiation monitors
    c. Fire panel
    d. Containment pressure

4. The procedures file cabinets did not always contain all of the procedures required by the candidates during the scenarios.