NUCLEAR ENGINEERING SCIENCES DEPARTMENT
Nuclear Reactor Facility
University of Florida

W.G. Vernetson, Director
NUCLEAR REACTOR BUILDING
Gainesville, Florida 32611
Phone (904) 392-1429 - Telex 56330

April 25, 1988
Report 2
Safety Channel 1 Circuit Failure

Nuclear Regulatory Commission
Suite 2900
101 Marietta Street, N.W.
Atlanta, Georgia 30323

Attention: J. Nelson Grace
Regional Administrator, Region II

Re: University of Florida Training Reactor
Facility License: R-56, Docket No. 50-83

Gentlemen:

Pursuant to the reporting requirements of paragraph 6.6.2(3)(c) of the UFTR Technical Specifications, a description of a potential abnormal occurrence as defined in the UFTR Technical Specifications, Chapter 1 is described in this interim 14-day report to include NRC notification, occurrence scenario, corrective action and evaluation as well as current status of the system. The potential promptly reportable occurrence involved the recurrence of failure of the Safety Channel #1 circuit to provide proper power indication for several seconds on April 9, 1988 after the return to normal operations on April 1, 1988 following the previous failures on March 15 and 16, 1988 (the latter during a test prior to return to normal operations) per previous interim report dated March 28, 1988 (see Attachment I).

NRC Notification

The Executive Committee of the Reactor Safety Review Subcommittee reviewed this latest occurrence on April 11, 1988 and concluded that it is a potential abnormal occurrence as defined in UFTR Technical Specifications, Chapter 1 following NRC notification as per Section 6.6.2 of the UFTR Tech Specs earlier on the same day. This notification was carried out by both telephone to Mr. Paul Burnett and a following telecopy on April 11, 1988 (see Attachment II). This interim report represents the 14 day followup report for this event as required in UFTR Tech Specs, Paragraph 6.6.2(3)(c). In addition to several discussions to update Mr. Burnett on 11 April 1988, later conversations with Mr. Robert Carroll of Projects have kept Region II apprised of reactor status.

IE22

Initial Event Scenario

At 1209 on April 9, 1988, with a Reactor Operations Laboratory class (ENU-5176L) in progress with power increasing at ~75% power, Safety Channel 1 failed to the bottom meter stop. G.W. Fogle, reactor operator at the controls, noted that the indications on Safety Channel 2, the log pen recorder, the wide range indicator and other indicators were all normal and commenced a reactor shutdown while notifying the SRO on call who concurred. As power reduction began, Safety Channel 1 returned to normal indication as with the previous failures on March 15 and March 16, 1988. Again the subjective evaluation was that the return was not instantaneous, but the meter returned to normal indication relatively slowly over several seconds (i.e., not as if switched on, but rather as if recovering from an electrical transient). The shutdown was completed with all instruments responding normally at 1210 with the reactor secured at 1214.

Corrective Action

For the first two occurrences the reactor had been put on administrative shutdown per Attachment III and the full RSRS had met on March 22, 1988 with this event as one item on its agenda. All agreed the situation was being addressed properly although the exact cause of the event had not yet been identified. Via a series of troubleshooting and corrective maintenance activities, the problem was isolated to the fission chamber, preamp or connections shown in Attachment IV which is Figure 1-8 of the UFTR Safety Analysis Report. There was a strong possibility that cleaning connectors on these components had corrected the problem per conversations with one vendor and concurred with by two UFTR personnel familiar with such instrumentation behavior. As a result, the UFTR was returned to normal operation on 1 April 1988 following completion of an approved special test procedure. The memorandum authorizing UFTR return to normal operations on 1 April 1988 is enclosed as Attachment V. It should be noted that failed noise suppression feedback capacitors have been replaced in both Safety Channels (originally thought to be the cause of SC-1 failure) but these are not at fault currently and, in failed state have negligible impact on circuit operations because this is a DC amplifier where the feedback coefficient is set by a precision resistor. Such a failure could have occurred anytime since console installation.

The immediate indications this time were the same as for the previous occurrences - namely, that an intermittent fault had developed in the circuitry for Safety Channel 1 (part of the wide range drawer) but not in any other section of the wide range drawer. With the reactor secured, Maintenance Log Page #88-14 was initiated to investigate the problem. Although another series of checks was performed, again no cause could be identified.

The recurrence of the Safety Channel 1 failure on April 9, 1988, following about a week of normal operation including 9.65 hours of operation above 50 kw indicates that the Safety Channel 1 fault is intermittent and not isolatable by the usual test methods of investigation. Therefore, a new program was developed to isolate and correct the cause of the failure; each potential problem is to be dealt with in a systematic manner followed by a retest and special monitoring period prior to restoring the reactor to normal unrestricted operation. Corrective actions as well as actions to expedite fault isolation will be taken during each of three major steps in the maintenance program. Therefore, the following program is being implemented to isolate and correct the fault in Safety Channel 1 with the reactor to be restored to normal operations whenever the test program is successful for each of the following three (3) steps:

1. Attempt to isolate the intermittent failure as external to the console by interchanging SC-1 and SC-2 linear amplifier circuits and change out connectors on the wide range drawer and on the preamplifer cables to the wide range drawer. A crimp type connector will be used to replace one clamp type connector.

2. Replace the preamplifier with one equivalent to that presently in use at the UFTR according to the vendor except that the replacement item uses one cable connection for the pulsed and the current instruments while the currently installed preamplifier uses two. This will require a 10 CFR 50.59 evaluation to bring both signal lines to a single connector, but is not expected to present any significant difficulties technically or administratively.

3. Replace the fission chamber and its cables/cable connections. The fission chamber (previously, model RSN-314-L2552) is a standard item, but not stocked by the current vendor General Electric which requires 30 to 60 days lead time. Efforts are currently underway to obtain a detector from another source within the Department of Energy which holds promise.

Evaluation

Except during the transient, the functions of indication and trip were not inhibited or changed; that is, there was only a temporary loss of indication and trip function in Safety Channel #1. The impact of this failure on system operation is minimized because it occurs for only a few seconds.

This Safety Channel #1 Circuit failure is potentially a promptly reportable occurrence per UFTR Technical Specifications, Section 6.6.2 delineating requirements for Special Reports where Paragraph (3)(c) states certain safety system failures are promptly reportable. Specifically, a special report is needed for a "reactor safety system malfunction that renders the reactor safety system incapable of performing its intended safety function, unless the malfunction or condition is discovered during maintenance tests or periods of reactor shutdowns" or involves components or systems in addition to these required by Tech Specs.

Similarly one definition of Abnormal Occurrences for the UFTR in Tech Specs Section 1.0 is "a malfunction of a safety system component or other component or system malfunction that could, or threatens to, render the (safety) system incapable of performing its intended safety function." Since Reactor Safety System is also defined in Tech Specs Section 1.0 to be "a combination of measuring channels and associated circuitry that forms the automatic protective action to be initiated, or provides information which requires the initiation of manual protective action," the initial and later occurrences of this event may not be strictly required to be promptly reported.

Basically, this event was considered to have no direct impact on safety and not to impact the health and safety of the public. However, the event was reported promptly on April 11, 1988 and later supported by the RSRS recommendation on the same day since there was at least a partial failure of the safety system. Nevertheless, safety implications are negligible since Safety Channel #2 was always operable and Safety Channel #1 has only been lost for a few seconds.

Current Status

A special test procedure contained here as Attachment VI was used to control restart. Except for an occasion when a monitoring connector slipped off necessitating a shutdown to reconnect the device, the original monitored restart on 31 March 1988 was uneventful with all systems responding properly with no recurrence of the Safety Channel circuit failure. After removing the monitoring instrumentation and performing a daily checkout during which a spurious noise-induced period trip signal due to wires laying on the preamp was corrected by securing the wires, a final run at full power with no special monitoring instrumentation was conducted as the final requirement prior to return to normal operations. All systems functioned normally for this run also so with concurrence by the RSRS (previously granted per the test procedure but reverified) and with NRC Region II verbal notification via telephone conversation with Paul Burnett, the UFTR was returned to normal operations with the problem considered corrected by the various maintenance activities to check and clean all connections. The recurrence on April 9 negated this declaration as the UFTR was returned to administration shutdown per the memorandum in Attachment VII.

At this point, a modified form of the special test procedure used to return the reactor to normal operation on 1 April 1988 is being implemented at each of the three program steps listed above under Corrective Action. This procedure was prepared for RSRS review and approval to allow declaring the UFTR operable pending successful completion of all normal checks and permits restart in steps following various maintenance activities as a test to verify proper operation of Safety Channel #1 by continuously visually monitoring voltage levels in the linear channel section of the preamplifier with respect to ground, the current drawn by detector operation from high voltage supply and the high voltage power supply output voltage. This procedure again provides compensation for possible recurrence of the Safety Channel failure by having a second competent individual present in the control room to monitor the safety channel continuously during the entire restart program which includes holds at

1 kw for 10 minutes, 10 kw for 10 minutes, 50 kw for 1 hour, 75 kw for 10 minutes and 100 kw for 1 hour with monitoring devices in place. Voltage measurements were the measurement of choice to prevent monitoring from affecting the operation of the system; the voltage measurements were made by devices with large input impedances and were verified not to draw significant current from the monitored points. In general, current measurements must be made in such a way as to minimize the potential for altering the signal parameters; to minimize the potential for such effects, the input to the high voltage filter in the preamplifier was selected as the current monitoring point. Subsequently, if successful, the reactor will be declared ready to return to normal operations; however, a second competent individual will be required in the control room for all operations until 10 hours operation above 50 kw has been completed at which point the corrective action will be considered successful and the reactor declared ready for return to normal operations with normal personnel requirements sufficient for further operations. During this 10 hours with an extra monitoring individual, normal experimental and training usage of the UFTR has been approved.

At this point the UFTR is prepared to conduct the restart under Step 1 on Page Three. Based on the successful results of this test restart, the problem will be demonstrated to be corrected if the failure does not recur. Further information will be supplied and Region II will be kept updated on the successful completion or failure at each major step in the program and prior to restart each time with a final report supplied on successful completion of the test program.

Sincerely,

William G. Vernetson

William G. Vernetson
Director of Nuclear Facilities

WGV/ps

Attachments

cc: P.M. Whaley
Reactor Safety Review Subcommittee

ATTACHMENT III

UFTR TECH SPEC QUOTES

1.0 DEFINITIONS*

Abnormal Occurrences: An abnormal occurrence is any one of the following:

(3) A malfunction of a safety system component or other compoennt or system malfunction that could, or threatens to, render the system incapable of performing its intended safety function.

Reactor Safety System: The reactor safety system is that combination of measuring channels and associated circuitry that forms the automatic protective action to be initiated, or provides information which requires the initiation of manual protective action.

6.6.2 Special Reports

There shall be a report not later than the following working day by telephone and confirmed in writing by telegraph or similar conveyance to the Commission, to be followed by a written report that describes the circumstances of the event within 14 days of any of the following:

(3) Any of the following:

(c) A reactor safety system component malfunction that renders the reactor safety system incapable of performing its intended safety function, unless the malfunction or condition is discovered during maintenance tests or periods of reactor shutdowns (Note: Where components or systems are provided in addition to those required by the Technical Specifications, the failure of the extra components or systems is not considered reportable provided that the minimum number of components or systems specified or required perform their intended reactor safety function).

NUCLEAR ENGINEERING SCIENCES DEPARTMENT
Nuclear Reactor Facility
University of Florida

W.G. Vernetson, Director
NUCLEAR REACTOR BUILDING
Gainesville, Florida 32611
Phone (904) 392-1429 - Telex 56330

ATTACHMENT IV

March 18, 1988

MEMORANDUM

TO: Reactor Staff

FROM: W.G. Vernetson, Director of Nuclear Facilities

SUBJECT: Administrative Shutdown of the UFTR

Because of the Safety Channel #1 Circuit Failure problem, the UFTR is placed on Administrative Shutdown until further notice.

This administrative shutdown precludes all reactor operations for which the reactor would be declared operable until further notice for which RSRS approval will be required. Performing weekly and daily checkouts as far as possible as well as normal maintenance activities are allowed.

The only other activities allowed during this administrative shutdown are routine administrative work (updating training records, etc.), tours of the facilities (no operations) as well as housekeeping and maintenance activities. Major maintenance is also possible provided approved by proper levels.

WGV/ps

cc: P.M. Whaley

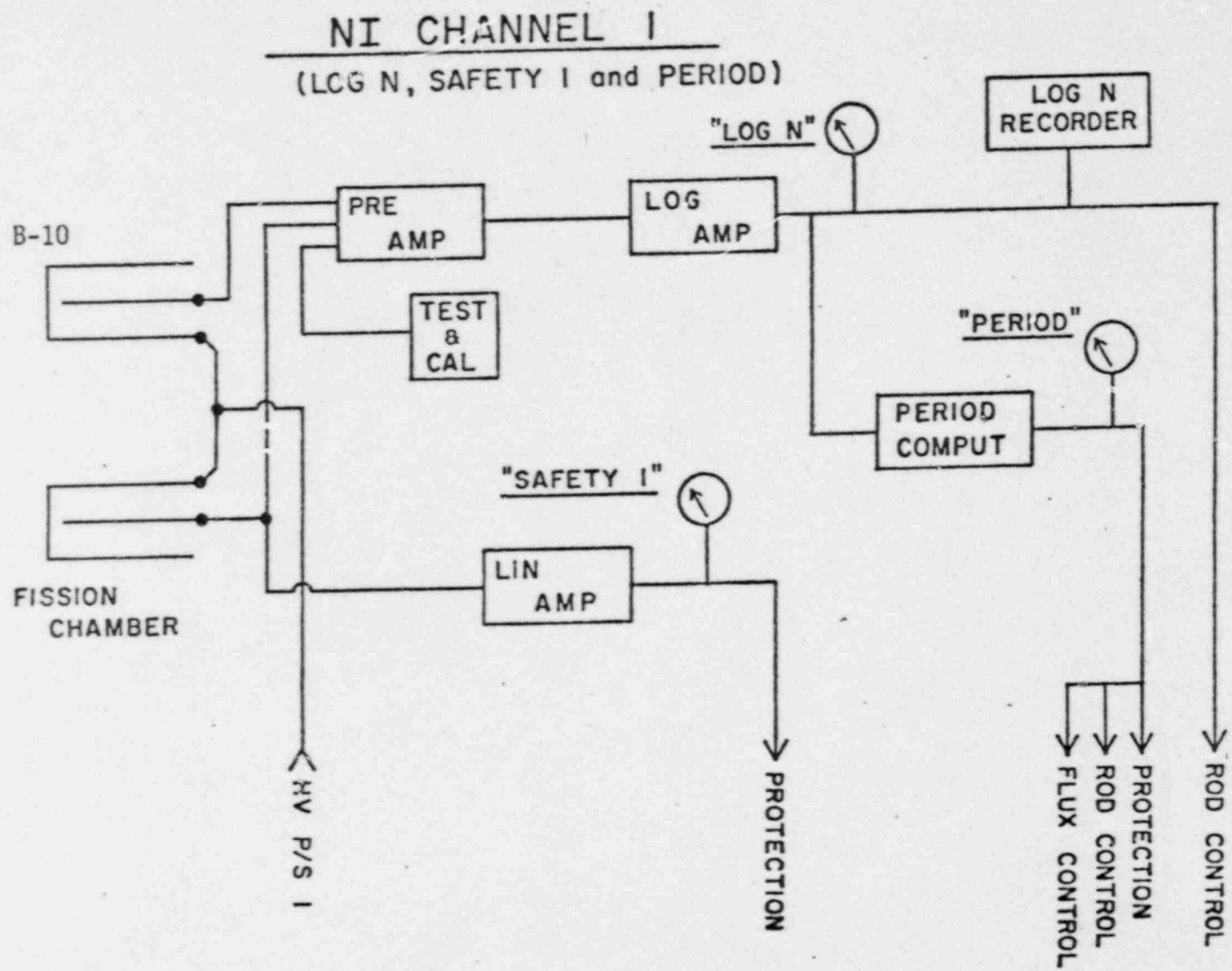

Figure 1-8. NI CHANNEL 1: UFTR Nuclear Instrumentation Channel 1 Diagram (Log N, Safety #1 and Period Channels).

ATTACHMENT III

NUCLEAR ENGINEERING SCIENCES DEPARTMENT
Nuclear Reactor Facility
University of Florida

W.G. Vernetson, Director
NUCLEAR REACTOR BUILDING
Gainesville, Florida 32611
Phone (904) 392-1429 - Telex 56330

March 18, 1988

MEMORANDUM

TO: Reactor Staff

FROM: W.G. Vernetson, Director of Nuclear Facilities

SUBJECT: Administrative Shutdown of the UFTR

Because of the Safety Channel #1 Circuit Failure problem, the UFTR is placed on Administrative Shutdown until further notice.

This administrative shutdown precludes all reactor operations for which the reactor would be declared operable until further notice for which RSRS approval will be required. Performing weekly and daily checkouts as far as possible as well as normal maintenance activities are allowed.

The only other activities allowed during this administrative shutdown are routine administrative work (updating training records, etc.), tours of the facilities (no operations) as well as housekeeping and maintenance activities. Major maintenance is also possible provided approved by proper levels.

WGV/ps

cc: P.M. Whaley

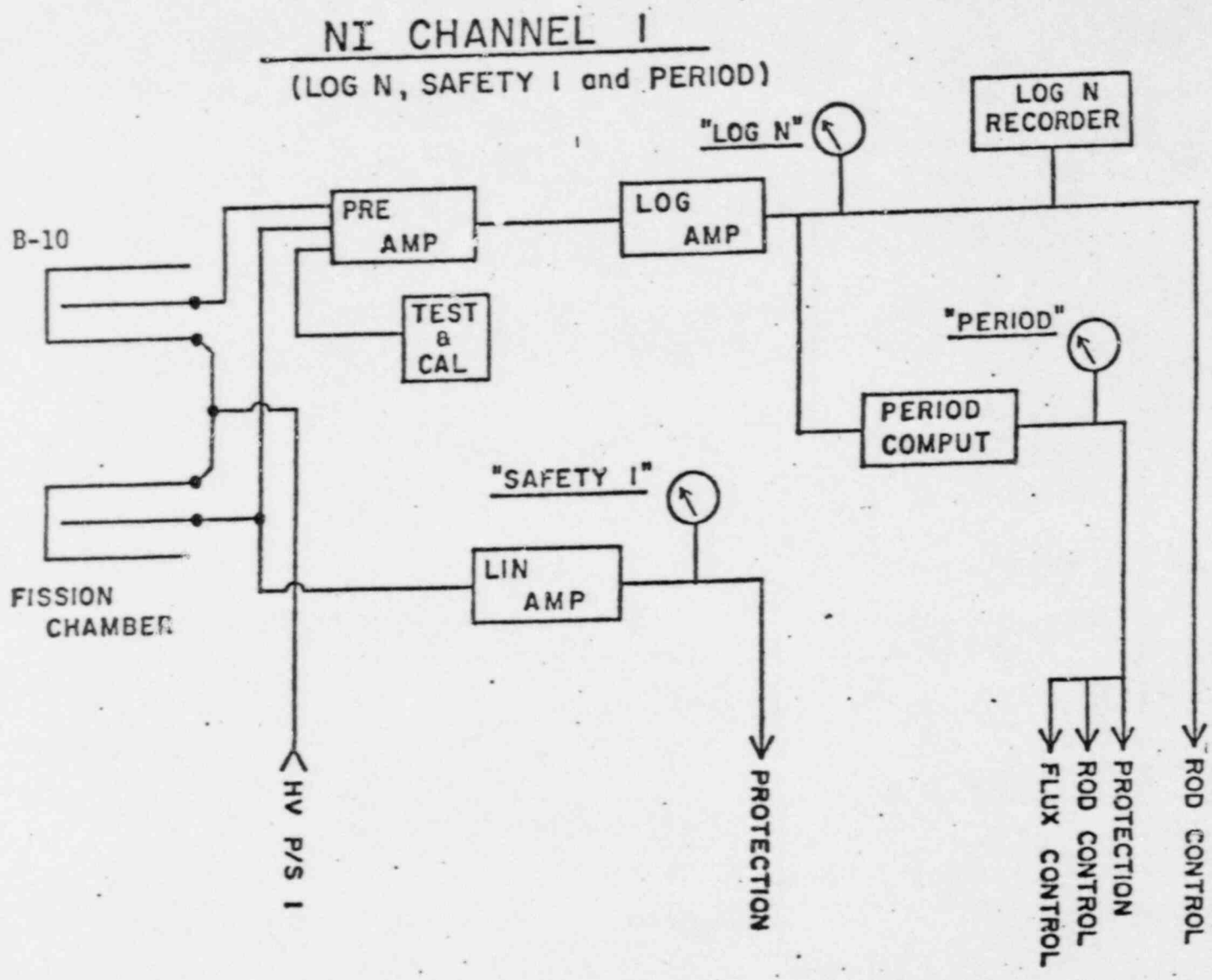

Figure 1-8. NI CHANNEL 1: UFTR Nuclear Instrumentation Channel 1 Diagram (Log N, Safety #1 and Period Channels).

ATTACHMENT V

NUCLEAR ENGINEERING SCIENCES DEPARTMENT
Nuclear Reactor Facility
University of Florida

W.G. Vernetson, Director
NUCLEAR REACTOR BUILDING
Gainesville, Florida 32611
Phone (904) 392-1429 - Telex 56330

April 1, 1988

MEMORANDUM

TO: P.M. Whaley

FROM: W.G. Vernetson WGV

SUBJECT: UFTR Return to Normal Operations

Based upon the successful completion of the test procedure on March 31, 1988 to address the UFTR Safety Channel #1 Circuit Failure and concurrences by the RSRS Executive Committee members and NRC Region II (Paul Burnett), the UFTR is hereby authorized to commence normal operations at 0930 a.m., April 1, 1988.

WGV/ps

cc: RSRS
Reactor Staff

UFTR FORM SOP-0.5D

Special Test Control Coversheet

I. Title/Designation of Test Procedure: Verification Proper Operation Safety Channel I preamp & Detector

II. Reason for Generating Test Procedure: Retest following Maintenance on Safety Channel I

NOTE: If test procedure is generated due to a failure, occurrence of failure must be recorded in operations log.

III. Results of Unreviewed Safety Question Evaluation (UFTR Form SOP-0.4A): Evaluation - Yes Determination - No

IV. Test Procedure Evaluation Categories:

A. Functional Evaluation
B. Compliance With Codes, Standards, and Regulations
C. Specification of Acceptance Criteria

V. Test Procedure Review and Approval:

	Functional Evaluation	Compliance	Specification of Acceptance Crit.		
A.	okay, Sat	SAT	SAT	Originator	3/24/88 Date
B.	SAT	SAT	SAT	Rx. Manager	3/24/88 Date
C.	Satisfactory	Satisfactory - per Techspecs	all okay	Fac. Director	3/28/88 Date
D.	OK	OK	OK	RSRS Chairman	3/22/88 Date

3/28/88

MEMO

TO : RSRS

FROM : P. M. Whaley

SUBJECT : Proposed Retest for Safety Channel 1

The proposed test to verify proper operation of Safety Channel 1 reactor power level indicator is attached.

SAFETY CHANNEL 1 OPERATIONAL RETEST PROGRAM

I. INTRODUCTION

This procedure is intended to verify proper operation of Safety Channel 1 by monitoring voltage levels in the preamplifier with respect to ground, the current drawn by detector operation from high votage supply and the high voltage power supply output voltage while the UFTR is operated at power levels up to full power for an extended run to demonstrate correction of the Safety Channel 1 failure problem or, in the event of recurrence, to enable isolation of the fault. Voltage measurements are the measurement of choice to prevent monitoring from affecting the operation of the system; the voltage measurements will be made by devices with large input impedances and will not draw significant current from the monitored points. In general, current measurements have to be made with care so that there is no potential for significantly altering the signal parameters; to minimize the potential for such effects, the input to the high voltage filter in the preamplifier has been selected as the current monitoring point.

The detector high voltage is set so that the B10 and the fission chambers are being operated on the plateau; at 750 VDC, the fission chamber voltage is two to three times the voltage at which the plateau region initiates; the important consideration in selection of the plateau voltage is the B10 detector. The B10 detector is operational only at very low reactor power levels. The plateau voltage level assures that any minor changes in voltage (bias for the detector) will not have measurable impact on the operation the power level detector instruments. The high voltage DC bias will be checked to assure the operation of the ammeter does not change the detector bias to more than 1 %. Testing will be performed to verify that the monitoring devices do not alter the power level indications (a means of shorting the ammeter out of the circuit will be supplied to assure that significant signal changes do not occur with the use of the ammeter). Preliminary checks prove that Safety Channel 1 power indication on the Control Console (and that detector bias) is unaffected by the ammeter.

The monitored points selected for voltage measurements include the current mode preamplifier input (labeled F-HV-R jack on the preamplifier, labeled as jack J7 connector E6 on the attached drawing) and the spare high voltage power supply jack on the back of the wide range drawer in the UFTR control console. The current monitoring device will be inserted in the circuit at the connector labeled J6 on the attached diagram. The first two monitoring points require only that connectors be inserted at the monitoring points for connection to 1) a dual trace oscilloscope, and 2) a digital multimeter/voltmeter; the third monitoring point (current from the high voltage power supply) will require a shielded enclosure with a set of leads to be connected to an ammeter interposed in the input line. Using these monitoring devices, it is expected that the preamplifier, the current electrode of the fission chamber and the high voltage power supply can be verified to be operating properly with failure by one or the other able to be isolated for proper replacement if necessary.

II. Install and test the monitoring system

A. Deenergize the wide range drawer.

B. Install the test connectors

1. Oscilloscope connectors to current signal line

a. Remove the F-HV-R jack (signal input, Safety Channel 1 instrument).

b. Insert T connector on the F-HV-R jack (signal input, Safety Channel 1 instrument)

2. Ammeter connection in the high voltage power supply line

a. Remove the HV jack (high voltage supply) from the preamplifier

b. Place a shielded enclosure (with connectors for an external meter in series with the HV supply line) on the male (preamplifier plug J6, HV) plug attached to the preamplifier.

3. Console high voltage power supply monitor

a. Remove the SPARE HV plug cover from the back of the wide range drawer

b. Connect a jack with a short coaxial lead to the SPARE HV plug

c. Connect a digital voltmeter across the center pin of the cable to the cable shield.

C. Test the monitors

1. Attach an oscilloscope to the T connector on the fission chamber (current mode electrode) detector-preamplifier connection, and an ammeter to the jacks in the connector enclosure in the high voltage power supply line.

NOTE : The high voltage connection from the preamplifier to the fission chamber should be disconnected as per previous installation instructions.

2. Attach a voltage divider network with a variable rheostat in the network from the center pin of the preamplifier high voltage supply connection (labeled F on the preamplifier) to the center pin of the current mode input connector (labeled F-HV-R on the preamplifier).

3. Connect the high voltage connector from the control console to the preamplifier.

4. Connect a voltmeter to the spare high voltage jack via coaxial cable at the control console.

5. Energize the wide range drawer.

6. Adjust the variable rheostat to vary indicated Safety Channel power level while monitoring :

   a. oscilloscope for monitoring the signal level with the ammeter in the circuit and with the ammeter short circuited out of the circuit.

   b. oscilloscope for low noise component and stability with the ammeter in the circuit and with the ammeter short circuited out of the circuit.

   c. ammeter to verify proper indication of current flow.

   d. control console indications to verify no detectable change in the power level indicators as the ammeter is in-circuit and when the ammeter is short-circuited out of the circuit.

   e. power supply high voltage monitor to determine voltage droop or stability under current loading.

D. Prepare system for operational response tests

1. Deenergize the wide range drawer.

2. Remove the voltage divider network.

3. Connect the input and output preamplifier cables to the T connectors.

4. Energize the wide range drawer.

NOTE : The following step shall not be performed until the reactor is declared operable.

5. Perform a Daily Preoperational Checkout.

III. Safety Channel 1 response check

NOTE : Monitoring all control console and test indicators as indicated in the following steps is intended to mean : monitor all control room indications as per normal operating procedures with special attention given to the power level monitors as well as monitoring locally (i. e. at the preamplifier) the high voltage supply current monitor, the traces on the dual trace oscilloscope and monitoring the high voltage power supply at the control console. In particular, a second licensed reactor operator will be stationed at the control console with specific responsibility for continuously monitoring Sacfety Channel 1.

The monitored high voltage current value is expected to remain stable at stable power levels except for transients as the fission chamber current stabilizes at higher power levels. If the current rises or falls while reactor power level is stable, the reactor operator is to be immediately informed so that he may assess the need for a reactor shutdown. If the reactor power level falls while the current monitor is rising or remaining steady, the indication is that the fission chamber low voltage electrode circuit is allowing current flow directly to ground, indicating a failure in the fission chamber or detector cables.

If the current flow drops while the monitored voltages in the low voltage electrode circuit also drop, the indication is that the high voltage supply (probably the filter network, resistor R5 or resistor R3 increased in resistance) is not operating properly, and not allowing enough current to operate the Safety Channel 1 circuit. If the high voltage monitor at the control console is stable while these conditions are occurring, the problem is isolated to the preamplifier.

A. Perform a reactor startup to 1 watt per SOP A.2

B. Increase power to 1 kW per SOP A.3

C. Hold power at 1 kW in automatic flux control for 10 minutes, monitoring all control console and test indicators.

D. Increase power to 10 kW in automatic flux control per SOP-A.3, monitoring all control console and test indicators.

E. Hold power at 10 kW in automatic flux control for 10 minutes, monitoring all control console and test indicators.

F. Increase power to 50 kW in automatic flux control per SOP-A.3, monitoring all control console and test indicators.

G. Hold power at 50 kW in automatic flux control for 1 hour, monitoring all control console and test indicators.

H. Increase power to 75 kW in automatic flux control per SOP-A.3, monitoring all control console and test indicators.

I. Hold at 75 kW in automatic flux control for 10 minutes, monitoring all control console and test indicators.

J. Increase power to 100 kW in automatic flux control per SOP-A.3, monitoring all control console and test indicators.

K. Hold power at 100 kW in automatic flux control for 1 hour, monitoring all control console and test indicators.

L. Perform a reactor shutdown per SOP-A.4

IV. Secure from the test

A. Prerequisites :

1. Stack monitor must be less than 10 cps.

2. Wide range monitor must be on the extended range of operation.

3. Primary coolant temperature must be stablized below 80 degrees F.

B. Remove the test connections

1. Deenergize the wide range drawer.

2. Disconnect and remove the T connector from the preamplifier.

3. Remove the high voltage current monitor enclosure from the preamplifier.

4. Connect the signal return/high voltage return cables.

5. Remove the jack from the SPARE HV terminal at the wide range drawer and replace the dust cover.

C. Energize the wide range drawer.

D. Assuming the Safety Channel 1 test indicates proper operation, test Safety Channel 1 in the normal configuration as follows :

1. Perform a Daily Preoperational Checkout.

2. Perform a reactor startup per SOP-A.2.

3. Increase power to 100 kW per SOP-A.3.

a. Monitor all instrumentation as per standard operating procedures, with special attention given to the indications of Safety Channel 1 :

b. If Safety Channel 1 fails, conduct an unscheduled shutdown and initiate failure analysis and corrective action.

4. Establish automatic control at 100 kW per SOP-A.3, and hold for 20 minutes.

a. Monitor all instrumentation as per standard operating procedures, with special attention given to the indications of Safety Channel 1 :

b. If Safety Channel 1 fails, conduct an unscheduled shutdown and initiate failure analysis and corrective action.

5. Perform a reactor shutdown per SOP-A.4.

6. Evaluate the results of this test and approve a return to normal operations.

ORIGINATOR	3/28/88 DATE
REVIEW	3/28/88 DATE
REVIEW	3/28/88 DATE

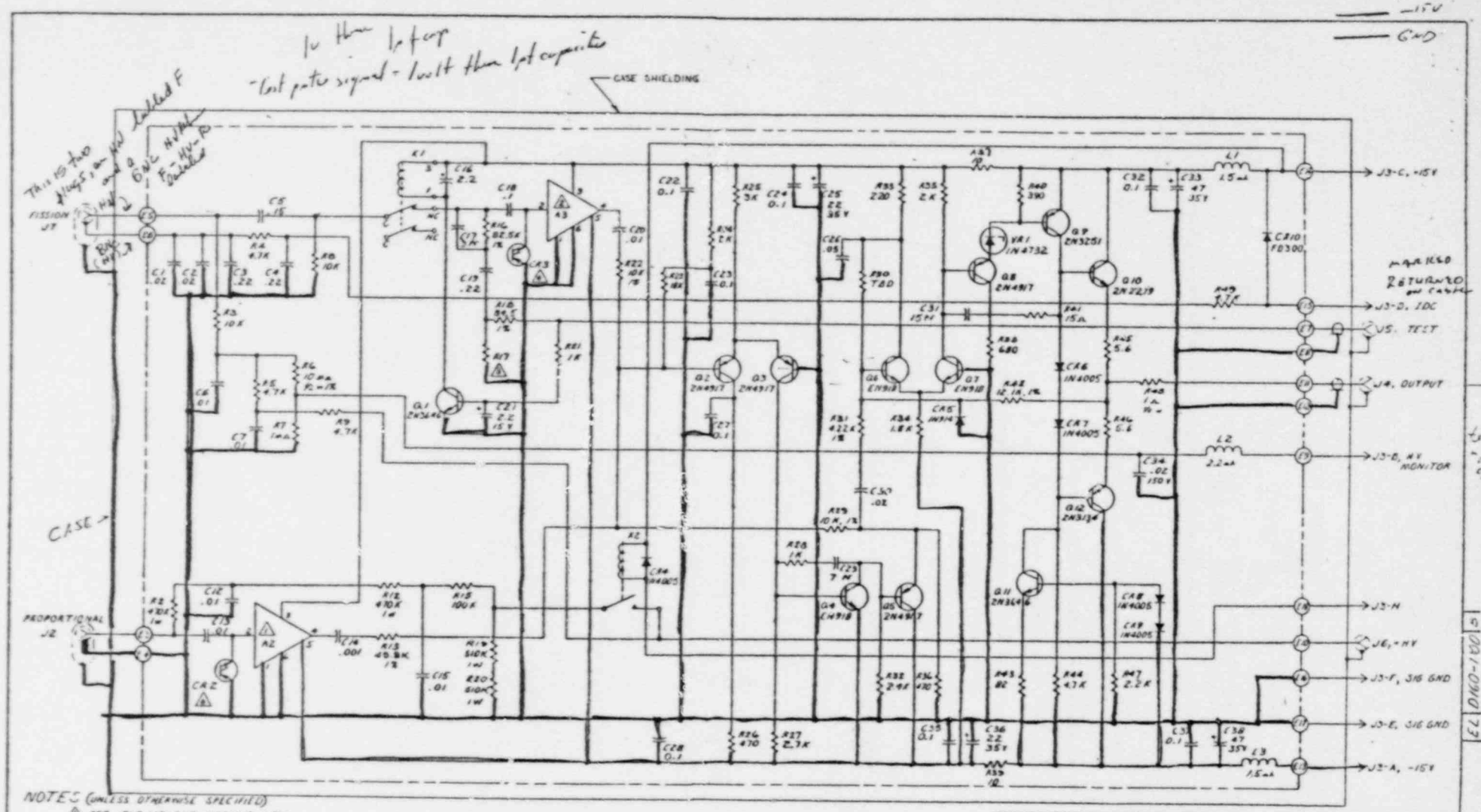

NOTES (UNLESS OTHERWISE SPECIFIED)

1. REF. ELD 160-0110 MODULE ASSY.
2. REF. ELD 136-0200 MODULE ASSY.
3. R17 TO BE 6.4 TO 9.6 Ω. 1/4 W, PART NO. VRD25-8R00 VARIZISTOR.
4. CAPACITANCE IS IN MFDS.
5. RESISTANCE IS IN OHMS, ALL RESISTORS ARE 1/4 W, 5%.
6. CR2 & CR3 ARE 4E20 SHOCKLEY DIODES.

B		PER ECO NO. 2018		–	–		
A		FABRICATION	LYS				

LIST OF MATERIAL

ELD160-0110-2

SCHEMATIC-
PREAMPLIFIER,
MODEL PA-65

Gulf General Atomic

EL D160-1100 B

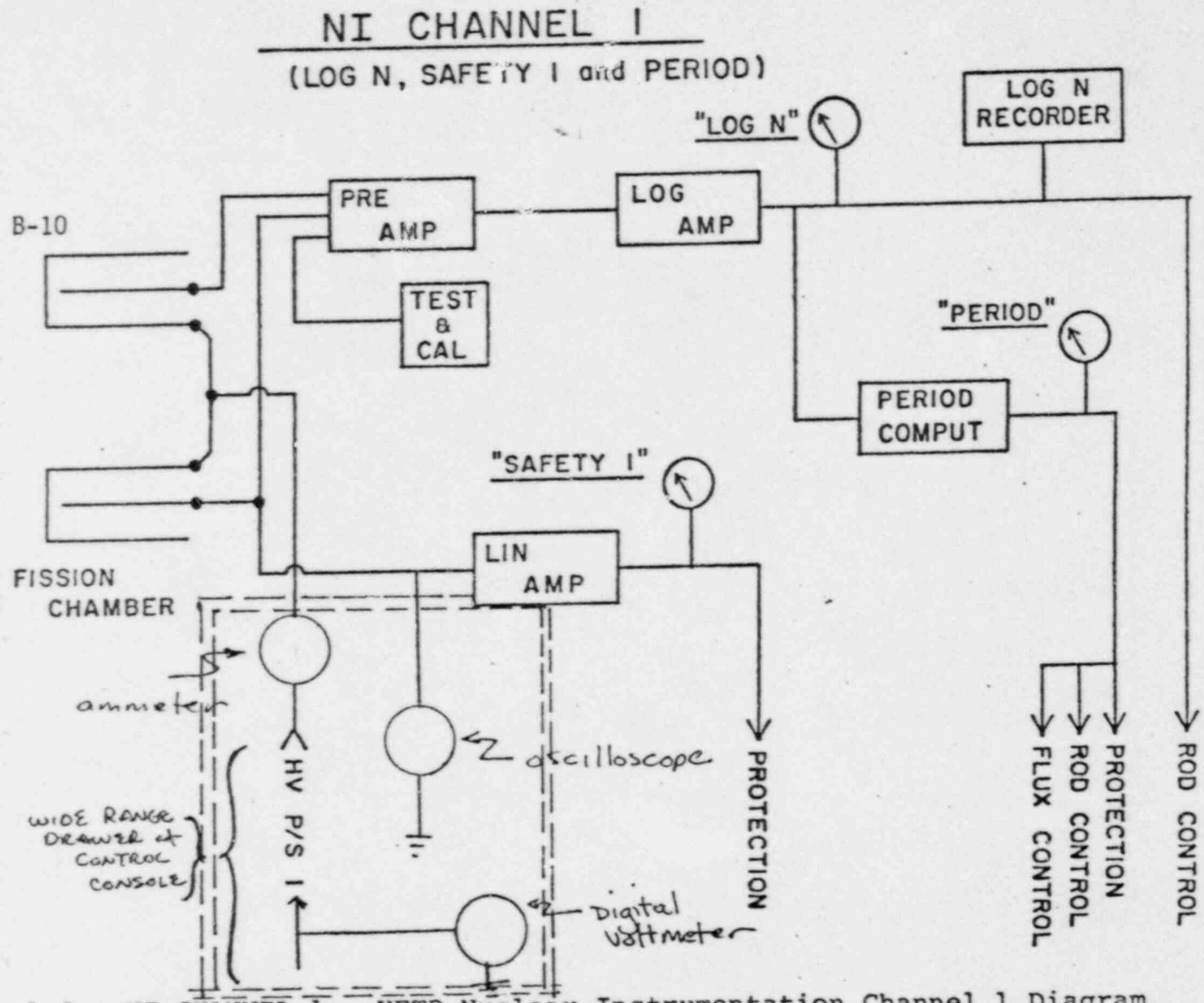

Figure 1-8. NI CHANNEL 1: UFTR Nuclear Instrumentation Channel 1 Diagram (Log N, Safety #1 and Period Channels).

UFTR FORM SOP-0.4A
UNREVIEWED SAFETY QUESTION
EVALUATION AND DETERMINATION

Title: Monitoring Safety Channel 1 Signals Number: 88-6

I. Responses to Questions Required for 10 CFR 50.59 Evaluation (See Section 7.3).

	Response	Basis for Response
7.3.1.	yes	inserts test equipment in wide range drawer, SCI
7.3.2.	no	no impact
7.3.3.	yes	tests not previously performed

Reactor Manager — Date: 3/26/88

	Response	Basis for Response
7.3.1.	Yes	test equipment is introduced into Safety Channel 1 of the wide range drawer.
7.3.2.	No	no impact on procedures located by the SAR
7.3.3.	Yes	this is a test not specifically described in the SAR and not previously performed.

Facility Director — Date: 3/28/88

	Response	Basis for Response
7.3.1.	yes	test equipment is introduced
7.3.2.	No	No impact
7.3.3.	yes	not previously described or performed

RSRS Chairman — Date: 3/28/88

II. Responses to Questions Required for 10 CFR 50.59 Determination (See Section 7.4):

	Response	Basis for Response
7.4.1.	no	no impact on accidents previously evaluated
7.4.2.	no	no new accidents
7.4.3.	no	no reduction in safety margins

Reactor Manager — Date: 3/26/88

	Response	Basis for Response
7.4.1.	No	no increase in probability of or consequences of accidents or malfunctions evaluated in SAR
7.4.2.	No	No new accidents
7.4.3.	No	no reduction in safety margin per tech spec bases

Facility Director — Date: 3/28/88

	Response	Basis for Response
7.4.1.	No	No impact
7.4.2.	No	No new accident scenarios
7.4.3.	No	No reduction in safety margin

RSRS Chairman — Date: 3/28/88

UFTR FORM SOP-0.4A

7.0 INSTRUCTIONS

7.1 Requirements for a 10 CFR 50.59 Evaluation and Determination are contained in the documented responses to two sets of questions as delineated on Form SOP-0.4A to determine whether a proposed action involves an unreviewed safety question.

7.2 Answers to all questions require addressing the basis for the response whether positive or negative. Note that all questions must be answered as affirmative or negative; if any doubt exists, the answer shall be affirmative.

7.3 Questions to be answered for making the 10 CFR 50.59 Evaluation are:

7.3.1 Does the proposed action represent a change in the UFTR as described by the Safety Analysis Report? (Altering the UFTR facilities, systems, or components enumerated, described, or diagrammed in the UFTR Safety Analysis Report)

7.3.2 Does the proposed action represent a change in the procedures described by the Safety Analysis Report? (Access and Key Control in the Reactor Cell, Standard Operating Procedures, Test and Maintenance Procedures, Security Procedures)

7.3.3 Does the proposed action represent a test or other experiment not described in the Safety Analysis Report and not previously performed? (A new experiment, new surveillance)

7.4 Questions to be answered in making the 10 CFR 50.59 Determination are:

7.4.1 Does the proposed action pose an increase in either the probability of or the severity of an accident or malfunction previously evaluated in the Safety Analysis Report? (Failures and malfunctions of components and systems important to safety, nuclear excursions during operation, nuclear excursions during fuel loading, safety-control blade system malfunctions, loss of coolant accident, fission product releases)

7.4.2 Does the proposed action pose the creation of a previously unidentified accident?

7.4.3 Does the proposed action result in the reduction of a safety margin as defined in the bases for the UFTR Technical Specifications?

7.5 If all answers to the 10 CFR 50.59 Evaluation in Section 7.3 are negative, then the 10 CFR 50.59 Determination is negative. A positive (yes) response to any of the questions in Section 7.3 requires that Section 7.4 be completed; a positive (yes) response to any of the 10 CFR 50.59 Determination questions in Section 7.4 then indicates that the proposed action does present an unreviewed safety question.

7.6 If a proposed action is determined to involve an unreviewed safety question or a change in the Technical Specifications, then the proposed action cannot be approved and cannot be carried out as proposed without NRC permission. In this case, the Licensee shall submit an application for amendment of the license pursuant to 10 CFR 50.90, "Application for Amendment of License or Construction Permit"

UFTR Form SOP-O.4B

Supporting Material
For 10 CFR 50.59 Determination

I. Technical References

A. Safety Analysis Report References..... Chapters 1.2, 1.7 Fig 1-8, 1-7

B. Technical Specification References..... Sections 2.2, 3.3.2, 3.3.4, 4.1 (2)
5.5.2(1), 5.5.2(2)

C. Standard Operating Procedure References.... SOP A.1, A.2, A.3, A.4, A.5
SOP C.1, C.2

D. UFTR Drawing References..... E.L. J2.06-0010

E. Technical Literature References..... INSTRUMENTATION SYSTEM, UFTR General Atomics, INC

F. Other References..... N/A

NOTE: If a technical reference is not applicable for the 50.59 Determination, then not applicable (N/A) should be indicated.

II: Items/Issues Considered for Evaluation/Determination:

A. No significant potential for altering signal with ammeter

B. Failure of Ammeter at worst will duplicate failure symptoms

C. Failure of oscilloscope, voltmeter will not affect operation of RX

D. See record of discussion by RSRS

E.

F.

G.

H.

NOTE: Attachments should be referenced for ease of evaluation.

ATTACHMENT I

NUCLEAR ENGINEERING SCIENCES DEPARTMENT
Nuclear Reactor Facility
University of Florida

W.G. Vernetson, Director
NUCLEAR REACTOR BUILDING
Gainesville, Florida 32611
Phone (904) 392-1429 - Telex 56330

March 28, 1988

Nuclear Regulatory Commission
Suite 2900
101 Marietta Street, N.W.
Atlanta, Georgia 30323

Attention: J. Nelson Grace
Regional Administrator, Region II

Re: University of Florida Training Reactor
Facility License: R-56, Docket No. 50-83

Gentlemen:

Pursuant to the reporting requirements of paragraph 6.6.2(3)(c) of the UFTR Technical Specifications, a description of a potential abnormal occurrence as defined in the UFTR Technical Specifications, Chapter 1 is described in this interim 14-day report to include NRC notification, occurrence scenario and current solution status. The potential promptly reportable occurrence involved the failure of Safety Channel #1 circuit to provide proper power indication for several seconds on two occasions, the second during a test run.

NRC Notification

The Executive Committee of the Reactor Safety Review Subcommittee reviewed this occurrence on March 15, 1988 and concluded that it is a potential abnormal occurrence as defined in UFTR Technical Specifications, Chapter 1. The RSRS then instructed NRC notification as per Section 6.6.2 of the UFTR Tech Specs. This notification was carried out by both telephone to Mr. Paul Frederickson and a following telecopy on March 15, 1988 (see Attachment I). Subsequent to replacement of the failed feedback noise controlling capacitor in the Safety Channel #1 with successful checkout, the same occurrence (~4 second loss of indication on Safety Channel #1) recurred. This event was again reported via telephone conversation with Mr. Stephen Vias and a following telecopy on March 16, 1988 (see Attachment II). In addition to the discussion to update Mr. Frederickson on 18 March 1988, this interim report represents the 14 day followup report for this event as required in UFTR Tech Specs, Paragraph 6.6.2(3)(c).

Initial Event Scenario

At 1437 on March 14, 1988, with a Reactor Operations Laboratory class (ENU-5176L) in progress at 50% power, Safety Channel 1 failed to the bottom meter stop. P.M. Whaley, operator at the controls, noted the indication on Safety Channel 2, the log pen recorder, and the wide range indicator were normal and directed a reactor shutdown. Before the shutdown could be started, Safety Channel 1 returned to normal indication. The subjective evaluation was that the return was not instantaneous, but the meter returned to normal indication relatively slowly (i.e., not as if switched on, but rather as if recovering from an electrical transient). The shutdown was completed with all instruments responding normally at 1438.

8804080192 4pp

Corrective Action

The immediate indications were that an intermittent fault had developed in the circuitry for Safety Channel 1 (part of the wide range drawer) but not in any other section of the wide range drawer. With the reactor secured, Maintenance Log Page #88-9 was initiated to investigate the problem. The wide range drawer was de-energized and the linear channel circuit board removed for visual inspection. All components and connections were verified in good condition. Discussion of the failure mode indicated a possible failure of a capacitor, possibly an intermittent short circuit which was followed by a recharging of the capacitor. A capacitor in the feedback loop (in parallel to the primary feedback/current limiting resistor) was identified as the most likely component failure. The capacitor was removed and failed a bench test; the capacitor had open-circuited. The probable cause was now evaluated to be a short circuited capacitor that burned open from high current, resulting in first maximum feedback from the short then normal feedback from the feedback resistor as supported by the initial downscale indication followed by return to normal noted by SRO Whaley. The component was replaced with a substitute of different manufacturer under 10 CFR 50.59 Evaluation #88-4 with identical specifications intended to restore the circuit to normal operation.

Evaluation

Except during the transient, the functions of indication and trip were not inhibited or changed (except for situations where high circuit noise might cause erratic meter indications); that is, there was only a temporary loss of indication and trip function in Safety Channel #1. Since this capacitor is a noise suppression device in a DC circuit, the impact of this failure on system operation is minimized because this is a DC amplifier where the feedback coefficient is set by a precision resistor.

This Safety Channel #1 Circuit failure is potentially a promptly reportable occurrence per UFTR Technical Specifications, Section 6.6.2 delineating requirements for Special Reports where Paragraph (3)(c) states certain safety system failures are promptly reportable. Specifically, a special report is needed for a "reactor safety system malfunction that renders the reactor safety system incapable of performing its intended safety function, unless the malfunction or condition is discovered during maintenance tests or periods of reactor shutdowns" or involves components or systems in addition to these required by Tech Specs (see Attachment III for quotes of applicable Tech Spec Sections).

Similarly one definition of Abnormal Occurrences for the UFTR in Tech Specs Section 1.0 is "a malfunction of a safety system component or other component or system malfunction that could, or threatens to, render the (safety) system incapable of performing its intended safety function." Since Reactor Safety System is also defined in Tech Specs Section 1.0 to be "a combination of measuring channels and associated circuitry that forms the automatic protective action to be initiated, or provides information which requires the initiation of manual protective action," this initial event was thought not to be strictly required to be promptly reported; that is, since the failed feedback capacitor only serves to reduce noise in the circuit, it is not really needed for the safety function of Safety Channel #1 which was recovered within a few seconds of the failure.

Basically, this event was considered to have no direct impact on safety and not to impact the health and safety of the public. However, reporting was recommended since there was at least a partial failure of the safety system. Nevertheless, safety implications are negligible since Safety Channel #2 was always operable and Safety Channel #1 was only lost for a few seconds after which it would have been subject only to more noise. After replacement of the failed capacitor, meeting the two requirements of a successful daily checkout and a 15 minute or longer power run was considered sufficient to assure proper operation and approval for return to normal operation.

Updated Event Scenario

Following a successful daily checkout, a 15 minute run at 100 kw was set as the final criterion prior to return to normal operations. Five minutes into this run, the failure indication on Safety Channel 1 recurred; initial checks indicated the capacitor was not failed this time so work has continued with a new prompt report filed with NRC on 16 March 1988 per communication with the RSRS Executive Committee.

Corrective Action/Evaluation

The reactor has been put on administrative shutdown per Attachment IV and the RSRS met on March 22, 1988 with this event as one item on its agenda. All agree the situation is being addressed properly although the exact cause of the event has not yet been identified. Via a series of troubleshooting maintenance activities, the problem has been isolated to the fission chamber, preamp or connections shown in Attachment V which is Figure 1-8 of the UFTR Safety Analysis Report. There is a strong possibility that cleaning connectors on these components may have corrected the problem per conversation with one vendor.

At this point a procedure is being prepared for RSRS review and approval to allow declaring the UFTR operable pending successful completion of all normal checks and proposing to permit restart as a test to verify proper operation of Safety Channel #1 by monitoring voltage levels in the linear channel section of the preamplifier with respect to ground, the current drawn by detector operation from high voltage supply and the high voltage power supply output voltage. Voltage measurements are the measurement of choice to prevent monitoring from affecting the operation of the system; the voltage measurements will be made by devices with large input impedances and will not draw significant current from the monitored points. In general, current measurements must be made in such a way as to minimize the potential for altering the signal parameters; to minimize the potential for such effects, the input to the high voltage filter in the preamplifier has been selected as the current monitoring point.

Based on the results of this test restart, the problem is expected to be demonstrated to be corrected or to be isolated to one of the components indicated in the Safety Channel #1 circuitry. Further information will be supplied and Region II will be notified prior to commencing the restart test.

Sincerely,

William G. Vernetson

William G. Vernetson
Director of Nuclear Facilities

WGV/ps

Attachments

cc: P.M. Whaley
Reactor Safety Review Subcommittee

NUCLEAR ENGINEERING SCIENCES DEPARTMENT
Nuclear Reactor Facility
University of Florida

W.G. Vernetson, Director
NUCLEAR REACTOR BUILDING
Gainesville, Florida 32611
Phone (904) 392-1429 • Telex 55330

ATTACHMENT I

March 15, 1988
Safety Channel #1 Circuit Failure

Nuclear Regulatory Commission
Suite 2900
101 Marietta Street, N.W.
Atlanta, GA 30323

Attention: J. Nelson Grace
Regional Administrator, Region II

Re: University of Florida Training Reactor
Facility License: R-56, Docket No. 50-83

As per telephone conversation on 15 March 1988 with Mr. Paul Fredericksen, relative to failure of Safety Channel #1 Circuit for the UFTR, the Reactor Safety Review Subcommittee (RSRS) Executive Committee has reviewed this event and concluded this occurrence is potentially reportable occurrence per UFTR Technical Specifications, Section 6.6.2 delineating requirements for special reports. Paragraph (3)(c) indicates certain safety system failures are promptly reportable. The RSRS Executive Committee has instructed NRC notification as per Section 6.6.2 of the UFTR Tech Specs though the event may not be required to be promptly reportable depending on interpretation of the Tech Specs. Since the failed component was only a feedback noise controlling capacitor, its replacement has restored Safety Channel #1 to normal with RSRS permission granted to restart dependent only on a successful daily checkout.

William G. Vernetson
Director of Nuclear Facilities
15 March 1988

WGV/ps

cc: P.M. Whaley
RSRS

8803250325 1p.

NUCLEAR ENGINEERING SCIENCES DEPARTMENT
Nuclear Reactor Facility
University of Florida

W.G. Vernetson, Director
NUCLEAR REACTOR BUILDING
Gainesville, Florida 32611
Phone (904) 392-1429 · Telex 841330

ATTACHMENT II

March 16, 1988
Safety Channel #1 Circuit Failure - 2

Nuclear Regulatory Commission
Suite 2900
101 Marietta Street, N.W.
Atlanta, GA 30323

Attention: J. Nelson Grace
Regional Administrator, Region II

Re: University of Florida Training Reactor
Facility License: R-56, Docket No. 50-83

As per telephone conversation on 16 March 1988 with Mr. Stephen Vias, relative to failure of Safety Channel #1 Circuit for the UFTR, the event described in our letter of 15 March 1988 recurred during a power run conducted as a final requirement set prior to returning to normal operations. Although a failed feedback noise controlling capacitor had been replaced, its replacement has not restored Safety Channel #1 to normal so that further checks and repairs are required.

The RSRS Executive Committee has instructed NRC notification as per Section 6.6.2 of the UFTR Tech Specs though the event may still not be required to be promptly reportable depending on interpretation of the Tech Specs.

Further information will be provided prior to approving return to normal operations.

William G. Vernetson
Director of Nuclear Facilities
16 March 1988

WGV/ps

cc: P.M. Whaley
RSRS

8804310034 1p