ROOT CAUSE ANALYSIS

For The Guide Rail/Lev-R-Lock Interaction Problem For MSIVs

June 19,1988

San Onofre Nuclear Generation Station

Southern California Edison

INTERIM ROOT CAUSE ANALYSIS FOR THE LEV-R-LOCK ARM AND GUIDE RAIL INTERACTION PROBLEM FOR SONGS's MSIVs

Principal Investigators:

C. Chiu (SCE)

M. A. Herschthal (SCE)

Contributors:

N. Quigley (SCE)

J. Brinkley (WKM)

E. Rabinowicz (MIT)

J. Johnson (WKM)

M. S. Kalsi (Kalsi)

V. Herrera (SCE)

CONTENTS

	Page
PROBLEM STATEMENT	1
MSIV OPERATION	1
FAILURE MECHANISM	11
LP&L's ANALYSIS AND INSPECTION RESULTS	12
SONGS' INSPECTION AND ROOT CAUSE ANALYSIS	13
POSSIBLE AREA THAT BROKEN CAPSCREWS AND GUIDE RAILS CAN RESIDE	14
INSPECTION RESULTS	16
DYNAMIC IMPACT ANALYSIS	17
ANALYSIS RESULTS	20
FAILURE SCENARIO OF THE BROKEN CAPSCREW IN SONGS-3 MSIV 3HV-8205	22
FACTORS CONTRIBUTING TO GUIDE RAIL FAILURES	23
OPERABILITY ASSESSMENT FOR SONGS' MSIVs	29
SAFETY EVALUATION	37
CONCLUSIONS AND RECOMMENDED ACTIONS	43

LIST OF FIGURES

1 MISV Configuration

2a MSIV Internals configuration (Valve Closed)

2b MSIV Internals Configuration (Valve Open)

3 Gate and Segment Assembly Detail

4 MSIV Hydraulic Actuation System

5 Dynamic Impact Analysis Results

6 Location Impact Analysis Results

7 Typical Overload Fracture Surface Patterns

8 Capscrew Misalignment

9 Impact Energy Versus Chamfer Angle

A-1 Lev-R-Lock Assembly

A-2 Forces and Angles Used in Dynamic Impact Analysis

A-3 Schematic Configuration of the Valve Actuator

PROBLEM STATEMENT

On May 9, 1988, Southern California Edison was informed by Louisiana Power and Light (LP&L) that the two Main Steam Isolation Valves (MSIVs) installed at the Waterford-3 Nuclear Steam Station have suffered internal damage. The valves are manufactured by the Flow Control division of WKM. The MSIVs currently installed at San Onofre Nuclear Generating Station (SONGS) 2 and 3 are of the same type as the damaged LP&L MSIVs. A root cause analysis was initiated to determine the failure mechanisms and to determine if the SONGS MSIVs are subject to similar failures. The results are reported here. To aid the discussions in following sections, the valve configuration for a typical MSIV is shown in Figure 1. The details of the lev-r-lock arm and guide rail configuration are shown in Figures 2 and 3.

MSIV OPERATION

The Main Steam Isolation Valves (MSIVs), plant tag 2(3)HV-8204 and 2(3)HV-8205, are located outside Containment downstream of the Main Steam Safety Valves and the Atmospheric Dump Valves. The valves are manufactured by the W-K-M Flow Control Division of Cooper Industries. The valves are ANSI Class 900 lb. model D-2 OPG Pow-R-Seal with a Gas Spring Operator. This model is a double disk wedged gate valve design. The upstream gate is called the Segment. The downstream gate is called the Gate. The gate and segment fit into the valve body. The back sides of gate and segment are mated at a 15 degree angle with vertical. The contact surfaces between the gate and segment are known as the back angles.

A lev-r-lock arm assembly is attached to the gate. A journal is laid on the back side of the gate. Two journal retainers are bolted to the gate such that the lev-r-lock arm assembly can swing freely (refer to Figure 3). An arm is rigidly attached to each end of the journal. A shoe is attached to the end of the arm by a dowel pin which allows the shoe to rotate approximately 45 degrees. An ear protrudes approximately 2.5 inches from the outside diameter of the journal. It runs the length of the journal between the two retaining plates. When the gate and segment are mated, the ear fits into a slot in the back of the segment. This mechanism results in lev-r-lock arm rotation anytime there is relative motion of the gate and segment in the up/down direction.

The valve body cavity is isolated from the flow stream when the gate and segment are seated open or closed (this condition is called "lev-r-locked" and will be explained later). Two valve seats are pressed into pockets machined into the conduit ends of the valve body. The guide assembly fits over the valve seats. The guide assembly is made up of a gate seat skirt assembly and a segment seat skirt assembly. Each skirt assembly is made up of a skirt plate, two rails, and 18 5/8"-11 flaired socket head cap screws. Nine capscrews affix each of the two rails to each skirt plate. A 45 degree chamfer is machined onto the end of each guide rail to provide mechanical advantage during impact between the guide rails and the lev-r-lock shoes during the "unlev-r-locking" process (which is explained later).

A square block is formed on the end of the valve stem. The block fits into a slot in the top of the gate. The stem is free to move laterally in the slot relative to the position of the gate and can move approximately 1" up or down in the slot relative to the position of the gate.

The stem position of the MSIVs is controlled by a hydraulic system which exerts lifting pressure on the bottom of the 24 inch diameter piston actuator (Refer to Figure 4). Nitrogen in a closed space above the piston provides the primary closing force along with the weight of the piston/wedge assembly to close the valve. The actuator piston cylinder is known as the Dome. For these valves to close and perform their safety function, parallel dual solenoid pilot operated dump valves, powered from separate Class 1E DC power sources, open and dump the hydraulic oil from the bottom of the piston actuator to a hydraulic reservoir. The dump valves are manufactured by Paul-Munroe Enertech.

The solenoids are operated remotely by control room handswitches, locally by test panel handswitches, or automatically deenergized by Engineered Safety Feature Actuation System. Solenoid valves HY-8204 (or HY-8205) AX and AY are part of dump valve FCV-8204A (or FCV-8205A) and are powered "A" Train power supply and operated by the "A" Train main control room handswitch. Solenoid valves HY-8204 (or HY-8205) BX and BY are part of dump valve FCV-8204B (or FCV-8205B) and are powered from "B" Train power supply and operated by the "B" Train main control room handswitch.

Once a Main Steam Isolation Signal (MSIS) or Containment Isolation Actuation Signal (CIAS) are initiated, the MSIVs close and cannot be opened until the ESF signals are reset. There is no remote override capability provided to open an MSIV closed by a MSIS or CIAS.

The hydraulic reservoir, two hydraulic pumps, filter, instrumentation and interconnecting piping is contained on a skid known as the Hydraulic Power Unit (HPU).

When the MSIV is in the closed position (refer to Figure 2a), the dump valve solenoids are deenergized, the hydraulic fluid pressure in the actuator is 0 psig, and the Nitrogen dome pressure is about 1150 psig. A part of the segment known as the segment stop is resting on top of the conduit in the valve body. The gate is firmly wedged between the upper back angle and its adjacent valve seat due to Nitrogen dome pressure of 1150 psig or 5.20×10^5 lbf being exerted on top of the piston. The segment is firmly wedged between the upper back angle and its adjacent valve seat.

The lev-r-lock arm is swung forward (upstream) due to the relative position of the gate and segment. The shoes are tucked underneath the segment skirt rails about an inch under the bottom surface of the rails. The valve is said to be "lev-r-locked closed".

To open the MSIV, both OPEN pushbuttons on the two main control room handswitches on main control board CR52 must be depressed. This energizes the four solenoids and shuts the pilot valves and main poppets of the two dump valves. Both hydraulic fluid pumps begin to pump hydraulic fluid from the HPU reservoir to the dome cavity under the actuator piston. Hydraulic fluid pressure increases causing the piston, stem, gate and segment assembly to move upward.

The first movement of the stem is in the gate slot. With the valve fully closed, the bottom of the stem is in contact with the bottom surface of the gate slot. As the stem moves up, it unloads the downward force applied to the bottom of gate slot, moves approximately an inch, and then contacts the top surface of the slot. The gate then begins to move up. If friction forces between the gate and segment upper back angles are less than the friction forces between the seats, the gate and segment will slide along the lower back angles, that is the gate moves up relative to the segment. The relative motion between the gate and segment causes

the lev-r-lock arm to swing towards the downstream, or gate skirt. The gate and segment is said to become "unlev-r-locked" (,or collapsed) that is, the shoes are located between the skirt rails, the combined thickness of the gate and segment are at their minimum and can move freely up and down within the valve body cavity between the valve seats.

If the back angle friction forces are larger than the friction forces between the seats, then the gate and segment will move up as a single unit until the shoes contacts the bottom of the segment rails. The end of the rails are chamfered to provide mechanical advantage to swing the lev-r-lock arm and reduce the contact stresses during the impact. The lev-r-lock arm is forced between the skirt rails due to the continued upward motion of the gate and segment assembly. The valve is then "unlev-r-locked" (,or collapsed). Normally, the valve is unlev-r-locked as soon as the gate begins to move.

Subsequent motion of the gate and segment is made with the shoes contacting the gate skirt rails. This is caused by the weight of the segment "hanging" on the ear of the lev-r-lock arm journal. The gate and segment are maintained in the collapsed position by virtue of trapping the lev-r-lock arm shoes between the gate and segment skirt rails.

The hydraulic pressure in the actuator below the piston increases as the valve is opened. Movement of the piston decreases the volume of the enclosed nitrogen space above the piston thereby increasing the gas pressure.

Position indication is provided by a trip collar affixed to stem actuating open and closed limit switches. When the valve begins movement in the open direction, the trip collar will clear the lower limit switches and illuminate the "open" backlight on the two main control room handswitches on CR52. This indicates that

the valve is in mid-position.

Pumping continues and the piston assembly rises until the hydraulic pressure reaches 2750+/-50 psig. Pressure switch PSH-8204D (PSH-8205D) actuates and secures one of the hydraulic pumps. The other pump continues to operate until piston assembly travel completion. When the hydraulic pressure reaches 2900+/-50 psig, the valves is completely open and the pressure switch PSH-8404E (PSH-8205E) secures the second hydraulic fluid pump. The nitrogen dome pressure with the valve fully open is approximately 2400 psig exerting 1.08×10^6 lbf.

When the valve is nearly full open, the trip collar actuates the two upper limit switches. This results in the "close" backlight extinguishing on each of the two main control room handswitches.

When the valve is nearly full open, the top of the segment stop contacts the bottom of the valve bonnet causing the segment to stop moving. Continued gate motion causes it to moves up relative to the segment. This motion causes the lev-r-lock arm to swing towards the gate skirt. When the valve is in this position, the shoes are above the top of the gate skirt rails. This motion also results in contact between the gate and segment along the lower back angle. As the gate continues to move upward, the sliding along the lower back angle expands the gate and segment until the open seats of the gate and segment firmly contact the seats in the valve body. At this point, the hydraulic pressure is approximately 2900+/-50 psig and the second hydraulic pump is secured. Also, the valve is said to be "lev-r-locked open" when it is in this position.

<u>When the MSIV is in the open position</u> (refer to Figure 2b), the dump valve solenoids are energized, the hydraulic fluid pressure in the actuator is approximately 2900 psig, and the Nitrogen dome pressure is about 2400 psig. The

top of the segment stop is in contact with the bottom of the valve bonnet. The gate is firmly wedged between the upper back angle and its adjacent valve seat. Due to the net upward force being exerted on the bottom of the piston. The segment is firmly wedged between the upper back angle and its adjacent valve seat.

To close the MSIV, either one of the two CLOSE pushbuttons is depressed on panel CR52, or a closed signal is initiated by the Plant Protection System (MSIS or CIAS). This deenergizes the two solenoids of one dump valve, causing the pilot valves and main poppets to open (or four solenoids of both dump valves in the case of an ESFAS). In addition, the hydraulic pumps are electrically prevented from starting. Nitrogen pressure above the piston as well as the weight of the piston/wedge assembly, forces the hydraulic fluid from below the piston to the HPU reservoir, through the open dump valve(s).

The gate, segment, stem, and piston assembly is accelerated very rapidly. The first movement of the stem is again in the gate slot. With the valve fully open, the top of the stem block is in contact with the top of the gate slot. As the stem moves down, it unloads the upward force applied to the top of gate slot, moves approximately an inch, and then contacts the bottom surface of the slot. The gate then begins to move down. If friction forces and acceleration between the gate and segment lower back angle is less than the friction forces between the seats, the gate and segment will begin to slide along the lower back angle, that is the gate moves down relative to the segment. The relative motion between the gate and segment causes the lev-r-lock arm to swing towards the upstream, or segment skirt. The gate and segment is said to become "unlev-r-locked" (, or collapsed) that is, the shoes are located between the skirt rails, the combined thickness of the gate and segment are at their minimum and can move freely up and

down within the valve body cavity between the valve seats.

If the back angle friction forces and the acceleration of the gate are larger than the friction forces between the seats, then the gate and segment will move down as a single unit until the shoes contacts the top of the gate rails. The lev-r-lock arm is forced between the skirt rails due to the continued increasing net downward force being applied to the piston and the gate and segment assembly. The valve is then "unlev-r-locked" (,or collapsed). Normally, the valve is unlev-r-locked as soon as the gate begins to move, and the shoes will contact the gate rails with a glancing blow.

The hydraulic pressure in the actuator below the piston decreases as the valve closes and hydraulic fluid flows back to the HPU reservoir. Movement of the piston increases the volume of the enclosed nitrogen space above the piston thereby decreasing the gas pressure.

The trip collar operates the limit switches to indicate the position of the valve in the main control room as the stem moves.

When the valve is nearly full closed, the bottom of the segment stop contacts the top of the valve conduit and stops moving. The gate then moves down relative to the segment. This motion causes the lev-r-lock arm to swing towards the segment skirt. When the valve is in this position, the shoes are swung below the bottom of the segment skirt rails. This motion also results in contact between the gate and segment along the upper back angle. As the gate continues to move downward, sliding motion along the upper back angle expands the gate and segment until the closed seats of the gate and segment firmly contact the seats in the valve body. At this point, the hydraulic pressure is approximately 850 psig. Also, the valve is said to be "lev-r-lock'd closed" when it is in this position. Hydraulic fluid

will continue to drain from the actuator to the HPU reservoir until the hydraulic pressures equalize.

The valve close stroke time at San Onofre is required to be less than 6.9 seconds per technical specifications. The stroke time is normally between 4 to 5 seconds. This is fast enough such that the Nitrogen gas expansion is almost a adiabatic process. Once the MSIV is fully closed, the nitrogen dome pressure is approximately 900 psig and increases with time back to 1150 psig.
The second dump valve solenoids remain energized if only one CLOSE handswitch pushbutton was depressed, or if only one Train of MSIS or CIAS has actuated resulting in MSIV closure.

The MSIV is tested by either a full stroke test or a partial stroke test. Both tests are part of the inservice test program specified by Section XI of the American Society of Mechanical Engineers (ASME) Boiler and Pressure Vessel Code. The full stroke test is performed only during plant shutdowns to ensure that the closing time of the valve is less than the stroke time assumed in the safety analysis.

The partial stroke test is performed quarterly during normal plant operation. This test is performed by valving in the Test Accumulator , S2(3)1301MV046(7), and using the local test panels, L-672A & B and L-673A & B. A Test Switch for each solenoid is located inside the panels and are three position. The switches can be positioned to MSIV STROKE TEST, SOLENOID TEST, and the spring return position NORMAL.

The test is performed by first selecting a dump valve. Next the "Y" solenoid is verified energized by selecting the appropriate Test Switch to the SOLENOID TEST position. A white light illuminates if the solenoid is energized. This test

ensures that the "Y" solenoid is energized and will prevent the MSIV from closing when the "X" solenoid is stroke tested. Note that both the "X" and "Y" solenoids must be deenergized to close the MSIV. Next, tubing between the selected dump valve and the Test Accumulator is valved in such that hydraulic fluid will flow into the accumulator once it passes the "X" pilot valve but before the "Y" pilot valve (refer to Figure 4). The "X" solenoid is then deenergized by selecting the appropriate Test Switch to the MSIV STROKE TEST position. Hydraulic fluid flows into the accumulator from the valve actuator until the pressures in the actuator and the accumulator equalize. The hydraulic pumps will automatically start when the pressure switches measure low actuator hydraulic pressure The valve will stroke to approximately 90% open before the hydraulic pumps begin to open the valve to the full open position. The "X" solenoid is then reenergized by releasing the Test Switch and spring returning to the NORMAL position.

The Test Switch is then selected to the SOLENOID TEST to verify that the "X" solenoid is energized before testing the "Y" solenoid. The appropriate Test Switch is then selected to MSIV STROKE TEST and "Y" solenoid operation is verified by observing accumulator pressure decay as the hydraulic fluid is vented to the HPU reservoir through the open "Y" solenoid. The Test Switch is then released and spring returns to the NORMAL position completing the partial stroke test.

Normal Operation: The MSIV is fully open. Minor hydraulic fluid leakage and temperature changes will reduce the hydraulic pressure under the piston. If the pressure falls to 2700+/-50 psig, pressure switch PSH-8204E (PSH-8205E) will start one hydraulic pump and restore the actuator hydraulic pressure to 2900+/-50 psig. The hydraulic pump auto-start circuitry is designed to alternate between the two pumps to maintain proper actuator pressure in this manner.

Abnormal Operation: Excessive hydraulic fluid leakage, either externally out of the system, or internally from the actuator back into the HPU reservoir will eventually result in a control room receiving the MSIV Trouble Alarm. The larger the leak from the actuator, the more frequent the hydraulic fluid pump starts in an effort to maintain hydraulic system pressure within the designed band.

If the first hydraulic pump fails to start on low pressure then the second pump is started by pressure switch PSH-8204D (PSH-8205D) when hydraulic actuator pressure falls below 2650+/-50 psig. If the pressure drops below 2550+/-50 psig, then the MSIV Trouble annunciator is alarmed in the control room.

External leakage is characterized by Fyrquel puddling on the floor and an eventual low HPU reservoir level. Low level switch LSL-8204 (LSL-8205) will alarm the MSIV Trouble annunciator when the reservoir level is too low.

Internal leakage is the most difficult to identify. Internal leakage is defined as the leakage of Fyrquel out of the pressurized space in the actuator with the valve in the open position back to the HPU reservoir. Fyrquel increases temperature when it expands. Therefore the temperature of the piping, tubing, and or other component(s) that leaks, as well as the HPU reservoir will increase in temperature. The MSIV Trouble Annunciator may alarm if the reservoir temperature increases above the 140 degrees F.

Note that the MSIV remains open even though one solenoid has failed. The design of the Paul-Munroe dump valves requires both solenoids at one dump valve to fail for the MSIV to close. This provides redundancy to protect against spurious MSIV closures and resulting plant trips.

FAILURE MECHANISM

The LP&L MSIVs were inspected when debris from the MSIVs were discovered in the high pressure turbine stop valve strainers during maintenance. The gate guide rails were found dislodged from the gate skirt of the B-LP&L MSIV. The other skirts had several severed capscrews, which connect the guide rails to the skirt plates.

The failure mechanism for the sheared guide rail of the B-MSIV at Waterford-3 is hypothesized based on the inspection of the damaged parts. The root cause analysis performed by LP&L (Reference 1) concluded that the dislodgement of the guide rail and failed capscrews was a direct result of impact from the shoe of the moving lev-r-lock arm assembly (Figures 2a and 2b) during valve closing and opening.

During valve closing, the lev-r-lock arm assembly, which is moving downward together with the gate, segment, stem, and piston, impacts the top of the guide rail. At this point, a chamfer at the top of the guide rail tends to force the lev-r-lock arm to swing to the center of the valve, thereby causing the journal ear to lift the segment and move towards the gate. This action collapses the gate and segment, and allows them to continue to move downward without contacting the seats during the closing cycle.

LP&L'S ANALYSIS and INSPECTION RESULTS

Based on LP&L's inspection and root cause analysis, the following findings are considered significant and relevant to the root cause analysis performed for the MSIVs at SONGS.

1) There are two MSIVs at Waterford-3. The "B"-MSIV was found with both gate skirt guide rails completely severed with all eighteen capscrews sheared. One dislodged guide rail was found in a High Pressure Turbine stop valve strainer. The other rail was lodged in the bottom of the valve. The skirts in the B-MSIV and both skirts in the "A"-MSIV were found with all guide rails in place, but with several broken capscrews. A small gap was observed between the guide rails and the skirt plates.

2) The "B"-MSIV valve with a dislodged guide rail has stroked between 0.9 to 2.5 seconds. The other valve, which has broken capscrews, but no dislodged guide rails, has stroked between 2.15 to 3.0 seconds.

3) A detailed analysis on the impact force, performed by Kalsi Engineering and WKM (Reference 2), shows that the impact force will decrease if the friction coefficient between the shoe of the lev-r-lock arm and the guide rail chamfer guide rail decreases, or the face of the chamfer is more vertically oriented. <u>In addition, their analysis shows that the forces and impact energy exerted on the rails dramatically increases with decreasing stroke time.</u> This conclusion is confirmed by SCE's dynamic impact analysis results documented in this report.

4) Based on Kalsi Engineering's analysis, LP&L has taken corrective actions to overlay the chamfer of the guide rail with stellite and to decrease the slant of the chamfer from 45° to 30° relative to the vertical axis. Also, the sharp edges of the chamfer are rounded to avoid localized metal rollover at the edge of the chamfer. The lev-r-lock arm shoes have also been contoured to reduce the impact energy deposition.

SONGS INSPECTION and ROOT CAUSE ANALYSIS

Based on the inspection results on Waterford-3's MSIVs, it appeared that there is a correlation between damage severity and stroke time. Note that the valve which had a dislodged guide rail has stroked closed at least once in 0.9 second. The "A" valve, which exhibited broken capscrews only and no dislodged guide rails, apparently had less damage than the "B" valve with a dislodged guide rails and historically strokes about 1.0 second longer than the valve with dislodged guide rails.

To understand if SONGS' MSIVs could be damaged by the failure mechanism experienced by the Waterford-3's MSIVs, the difference between SONGS' MSIVs and Waterford-3's MSIVs was studied. The study concludes that the only difference is that the SONGS' MSIVs stroke consistently slower than Waterford-3's MSIVs. The smallest stroke time for SONGS' MSIVs is about 3.0 seconds, whereas the smallest stroke time for Waterford-3 is 0.9 second.

Since the level of damage on the two Waterford-3 valves seems to be inversely proportional to their stroke time, and since SONGS' MSIVs stroke consistently slower, the failure mechanism experienced by Waterford-3's MSIVs may not be totally applicable to SONGS' MSIVs. To determine whether or not SONGS' MSIVs are subject to the observed failure mechanism, three courses of action were pursued. First is to review the past inspection results for those areas in which broken capscrews could reside. Two was to inspect the body cavity of the SONGS-3 MSIVs (SONGS-3 is currently in a refueling outage) by use of a fiber optic scope to inspect for capscrews or evidence of other damage. Third was to perform a dynamic impact analysis. The results of these three actions are reported in the following three sections.

POSSIBLE AREAS THAT BROKEN CAPSCREWS AND GUIDE RAILS CAN RESIDE

There are four areas that the broken capscrews and guide rails could reside. They are stated as follows:

(1) Bottom of the MSIV body cavity

(2) Steam line and high pressure stop valve strainers

(3) Moisture Separater Reheater (MSR) live steam line and MSR steam header

(4) Steam bypass control (SBCS) valve disc stack

The physical layout of the steam line has been reviewed. Also, the areas where Waterford-3 have found broken capscrews and guide rails are also reviewed. Based on the results of the review, it appears that the most likely places for broken capscrews and guide rails to reside are the bottom of the MSIV body cavity and the strainers of the high pressure turbine stop valves. In fact, all broken capscrews (estimated to be about 30) except one and all broken guide rails for Waterford-3 MSIVs were found in these two areas. Other than these two areas, the MSR live steam line could also be a flow path. However, it is a less probable flow path than the main steam line in that the MSR line is much smaller and the velocity in the line is lower than the steam line. Nevertheless, even if the loose parts were to travel to MSR, they would encounter a tube sheet and settle in the MSR.

The flow path of steam bypass line will open only during a load rejection event. There are four SBCS valves, each of them has a disc stack made up of many discs with small flow holes, on each steam dump bypass line. If the broken parts were

to enter this line, they would probably be carried by the high steam velocity to the SBCS valves and would settle in the vicinity of the disc stack.

In the past refueling outages and during the current Unit 3 outage, the following areas have been opened and inspected. No broken capscrews or guide rails were found in these areas.

	Unit 2 Inspection	Unit 3 Inspection
HP stop valve Strainers	yes (1987)	yes (1988)
MSR Steam Header	yes (1987)	yes (1988)
SBCS Valves	yes (three of four)	yes (all four)
MSIV Cavity (by borescope)	No	Yes* (both valves)

* discussed in next section.

INSPECTION RESULTS

The key findings of the borescope inspection on the Unit 3 MSIV cavities are summarized below.

(1) One broken capscrew was found in the cavity of SONGS-3 MSIV 3HV-8205. The two guide rails (one of two segment skirt rails and one of two gate skirt rails) were in place. The rails were found firmly attached to the skirt plates. They did not exhibit any separation that was observed on the LP&L MSIVs. Only four capscrews could be inspected in place. They were found to exhibit no signs of elongation, deformation, or looseness.

(2) No broken capscrews were found in the body cavity of SONGS-3 MSIV 3HV-8204. The two guide rails that could be inspected (again, one of two segment skirt rails and one of two gate skirt rails) were also in place.

(3) The chamfers of both the upstream and downstream guide rails for both SONGS-3 MSIV were inspected for impact marks. Only the chamfer on the downstream, or gate guide rail in MSIV 3HV-8205 has galling marks. The top edge of the chamfers have been rounded by impact and some metal has been rolled over. This metal roll-over and a relatively high contact stress during impact could be responsible for the observed galling marks.

(4) The shoes of the lever-lock arms for both valves were inspected for impact or galling marks. No visible galling marks were observed for the surfces that were observed.

DYNAMIC IMPACT ANALYSIS

Based on the Unit 3 MSIV cavity inspection results and the past inspections done on the MSRs, turbine stop valves, and SBCS valves, it appears that the number of broken capscrews (1 or more for SONGS and about 30 for Waterford-3) is much fewer than were found at Waterford-3. As such, it is reasonable to assume that the severity of damage for SONGS MSIVs is less than Waterford-3's MSIVs. A dynamic impact analysis is performed to explain the difference. Also, the analysis could serve the following two purposes:

(1) to determine if the guide rail impact energy and force is a function of stroke time.

(2) to determine if the impact force and energy experienced by SONGS' MSIVs are sufficient to make them inoperable.

The analysis was performed by modeling the dynamic behavior of the MSIV with the stroke time as a variable. This dynamic analysis models the valve traveling mechanism and the impact dynamics by the first-principle mass, momentum, energy, and force-balance equations. These first-principle equations are documented in Appendix A. The valve traveling mechanism can be modelled by the following calculational steps.

(1) Once a hydraulic dump valve is opened, the hydraulic fluid begins to flow to the reservoir. The hydraulic fluid flow rate depends on the hydraulic pressure in the actuator dome, the flow coefficient of the dump valve, and the dump piping.

(2) Once the hydraulic pressure decreases to a level somewhat lower than the nitrogen pressure in the actuator dome, the valve starts to close.

(3) As the valve moves downward, the N_2 pressure in the actuator dome decreases because of increasing dome volume. This new N_2 pressure is determined for use in step (5).

(4) By knowing the hydraulic fluid flow rate from the actuator at a given time, the valve stem velocity, acceleration, and position are determined.

(5) With decreasing N_2 pressure from (2) and the valve stem acceleration from (4), a new hydraulic fluid pressure for next time step is determined.

(6) The new hydraulic fluid pressure is used to determine, again, a new hydraulic fluid flow rate. This step is a repeat of step (1).

By performing iterative calculations from step (1) to step (6), the valve travel velocity, stroke time, and other critical parameters can be determined. The stroke time can be changed by modifying the flow coefficient for the hydraulic dump valve, the line friction factors, and packing friction coefficients.

The algorithm above is valid for valve travel during the close cycle except during the time period (on the order of a fraction of a millisecond) when the lev-r-lock arm shoes impacts the guide rail. During this time period, the following additional calculation steps are performed.

(a) When the lev-r-lock arm impacts the guide rail, the shoe of the lev-r-lock arm accelerates radially with a pivot point at the arm journal. This acceleration can be initially estimated by "guessing" the stem velocity after impact and by knowing the relationship between the angular velocity of the shoe and the stem velocity.

(b) Once the angular velocity of the lev-r-lock arm is determined from (a), the reaction force between the gate guide rail and lev-r-lock arm shoes, normal to the chamfer face, can be determined by balancing the moments around the journal of the lev-r-lock arm.

(c) The vertical component of the reaction force and the resultant friction force acting on the moving mass of the gate and segment tend to reduce the stem velocity, subsequently decreasing the hydraulic fluid pressure. This tendency can be determined by including the vertical component of the reaction forces in the calculation to determine the hydraulic fluid

pressure in the next time step.

(d) As stated in step (1), this new hydraulic fluid pressure results in a new hydraulic fluid flow rate.

(e) The new hydraulic fluid flow rate is used to determine the final stem velocity after impact. This velocity is compared with initial guess in step (a). If they are different, iterate steps (a) to (e) until the "guessed" velocity after impact equals the "calculated" velocity after impact.

The calculations above determine the reaction force and impact energy due to impact and the final stem travel velocity after impact. The vertical component of the normal force plus the vertical component of the resultant friction force should equal the shear force experienced by the capscrews. Also, the energy dissipated during impact,

i.e., $(\frac{1}{2}mV_i^2 - \frac{1}{2}mV_f^2)$, ($V_f$ = velocity after impact, V_i = velocity before impact m = mass of the moving parts), should equal the energy dissipated during the shearing process.

Since the total impact time between the lev-r-lock arm and the guide rail is very small, the shear force derived in step (e) should not be used to determine if it is large enough to shear any capscrews. This is because even though the instantaneous shear force is larger than the shear strength of a bolt (or a few bolts), and the total energy deposited in the process of deforming the bolt in such a short time period may not be sufficient to break a bolt. As such, the total dissipated energy during impact (impact energy) should be used to estimate how many capscrews can be broken due to the impact of the lev-r-lock arm shoe with the guide rail.

The analysis is performed assuming only one gate glide rail, nine cap screws, and one shoe is available to absorb the impact energy.

ANALYSIS RESULTS

The results of the dynamic impact analysis described above are shown in Figure 5. This Figure shows the impact energy as a function of total valve stroke time and the friction coefficient between the shoe of lev-r-lock arm and the guide rail chamfer. As can be seen in the Figure, the impact energy increases as the stroke time decreases. Also, the impact energy decreases as the friction coefficient decreases but is much less sensitive then stroke time.

To illustrate the difference between Waterford-3's and SONGS' MSIVs, the worst-case impact energy for the Waterford-3 MSIV with a dislodged guide rail (associated with the 0.9 second stroke time) and the worst-case impact energy for the SONGS' MSIVs (associated with 3.0 second stroke time) are illustrated in Figure 5. Comparing these two impact energies, the impact energy for the Waterford-3 worst-case is a factor of 12 higher than the SONGS' worst-case. Note that the friction factor between the chamfer and the lev-r-lock arm in this dynamic impact analysis varies from 0.1 to 0.5. Based on data done by Westinghouse in the early 1950s (Reference 3), the friction factor for a galled sliding surface of stainless steel varies from 0.3 to 0.5, depending on the temperature of the condensed water on the chamfer during the sliding process. The best estimate value for the friction coefficient is 0.35.

Based on the results of the analysis, the impact energy for the SONGS MSIVs' ranges between 210 lb*f*-in to 80 lb*f*-in for a stroke time between 3.0 seconds and 5.0 seconds. The impact energy required to shear one bolt is determined in Appendix B to be approximately 105 lb*f*-in. Also, when the bolt is grossly

misalinged, the impact energy to fracture a bolt is 92 lbf-in (as determined in Appendix C). These results show that as long as there are two to three capscrews in place to hold the guide rail, the required energy to break them will be greater than the impact energy as a result of lev-r-lock arm and guide rail interaction. In other words, they will not fail.

Examining the worst-case for Waterford-3's MSIVs, the impact energy is 2600 lbf-in. when the valve strokes at about 1.0 second. This energy is sufficient to shear all nine capscrews at once.

FAILURE SCENARIO OF THE BROKEN CAPSCREW IN SONGS-3 MSIV 3HV-8205

Many failure scenarios were constructed to explain why more broken capscrews were not found in SONGS-3 3HV-8205 valve cavity (Waterford-3 have found more than 18 capscrews in the cavity of the "B" valve). Among them, only one failure scenario is likely. This failure scenario is consistent with the observations made by LP&L (Reference 1), with the dynamic impact analysis performed by SONGS, and with the operational history of the SONGS' MSIVs.

Based on the visual inspections of the Waterford MSIVs, it was found that the capscrew holes in the guide rail and the corresponding capscrew threadded holes in the skirt plates were misaligned, probably due to a fabrication error. This misalignment situation could also be present in SONGS-3 MSIV 3HV-8205. As a result of this misalignment, the capscrew with the worst alignment experiences the majority of the impact energy.

The failure scenario for the MSIV 3HV-8205 broken capscrew is hypothesized as follows:

> "As a result of excessive fabrication tolerance, one or two capscrews on the guide rail was installed with a large misalignment between its guide rail hole and the socket. The remaining capscrews could also have misaligned holes. However, a large portion of these remaing bolts were misaligned by the same amount. As a result, when the valves stroked at 3.0 seconds, the worst misaligned capscrews were sheared off. After the shearing these capscrews, the impact energy imparted to the capscrews during any subsequent stroke will be shared by a large portion of the remaining capscrews. As a result, the impact energy will be dissipated by elastic deformation of the guide rail and its capscrews, without shearing or fracturing any more capscrews."

FACTORS CONTRIBUTING TO GUIDE RAIL FAILURE

Based on the inspection of Waterford-3 MSIV's, several possible contributing factors that could reduce the margin to acceptible MSIV operation have been identified. These factors together with the supporting evidence (if any), are listed below:

(1) Overtorquing the Capscrews

The evidence, which leads to the belief that some capscrews have been overtorqued, is that two or three broken capscrew were found to be caused by tensile failure, rather than by shear overload. The fracture face is at the knee of the bolt head whereas the remaining failed bolts fractured at the bolt thread roots.

(2) Galvanic Corrosion

Two capscrews, were found with some corrosion at bolt thread roots by scanning electron microscopic examination. The corrosion is in the form of pits. The depth of the pits is estimated by LP&L metallurgists to be less than 7 mils.

(3) Misalignment of Guide Rail Holes with the Capscrew Threaded Holes in the Skirt Plates

Some of the guide rail holes and their corresponding threaded holes are found misaligned. The maximum misalignment is determined by LP&L to be 34 mils.

(4) Cracks at Thread Roots

There are a few cracks found at the thread roots of the fractured and intact capscrews. There is no determination as to the origin and cause of these cracks by LP&L or WKM.

(5) Capscrew of Alloy Steel 1040

One capscrew was found to be Alloy Steel 1040, rather than Alloy Steel 4130 per the design requirement.

All of the above mentioned contributing factors are mentioned in the LP&L and WKM failure analysis. However, the relative contribution of each factor to the final failures of Waterford-3 MSIV's has not been fully discussed and determined in WKM and Kalsi Engineering's reports. To determine which factor is more important than others and how much role it has in the failure mechanism of Waterford-3's MSIV's, each factor is discussed separately in the following sections.

Overtorquing of the Capscrews

There are two or three broken capscrew that fractured in tensile overload. The fracture location is shown in Figure 6. Based on the Scanning Electron Microscope examination of the fracture face by Mr. Perez, LP&L's metallurgist, the fibrous dimples do not show signs of conical (or rotational) pattern. Instead, they appear to be in the direction parallel to the bolt's major axis. Based on the fact that this broken capscrew did not fail by shear overload, it is hypothesized by WKM's metallurgist that the broken capscrew was fractured by overtorquing. This hypothesis is judged to be less than or equal to the hypothesis that is discussed in detail below.

Next, the supporting and refuting evidence for the overtorquing hypotheses is examined. The supporting evidence for this hypothesis is that the failure mode is tensile overload, rather than shear overload. The refuting evidence for this hypothesis is three-fold. They are described as follows:

(1) The dimple pattern is not conical, as one would expect from overtorquing overload failure. A tensile overload, however, will make the dimples oriented parallel to the bolt axis. Figure 7 shows a diagnosis chart for a typical overload failure. A tensile overload, as suggested by the dimple orientation observed on a few broken capscrews, could be a result of misalignment. This contributing factor will be discussed later.

(2) SCE has done some overtorque testing, lubricated with machine oil, on 3/8" socket head capscrew. The results show that the socket will be rounded off and deformed (stripped) before overtorquing occurs. This result is expected in that many machine designers are using socket heads purposely to prevent overtorquing.

(3) The torque applied to these bolts, according to WKM, is less approximately 150 ft-lb*f*. A torque test done by WKM shows that at 150 ft-lb*f*, the capscrews will not even experience yielding condition. This result is further supported by a SCE test that shows the fracture torque for a 5/8" socket capscrew is approximately 310 lb*f*-ft and the yielding torque is greater than 185 lb*f*-ft.

In summary, there is no direct evidence to support the overtorque scenario whereas overtorque tests done by WKM and SCE show that the probable maximum preload stress experienced by the capscrew is yielding stress.

Galvanic Corrosion

Based on the LP&Ls metallurgical analysis, corrosion pits were found at the thread roots which have appeared as crack like indications. The pits were found most severe in the area without thread engagement. Based on the visual inspection, the deepest pit is estimated to be 7 mils by LP&L's metallurgist. Also, one capscrew has a crack which appears to propagate from a corrosion pit. LP&L believes that this corrosion is accelerated by galvanic corrosion.

SCE has reviewed the LP&L data and analyzed the secondary plant chemistry conditions (O_2 level, temperature, and pH) for both Waterford-3 and SONGS 2 and 3. The following observations are made:

(1) There is essentially little difference between the secondary water chemistry conditions of SONGS and Waterford-3. Both of them have been operated within the EPRI chemistry guidelines.

(2) Under the chemistry conditions stipulated by EPRI's chemistry guidelines, the steel is passivated and the general corrosion rate is minimum (References 4 and 5). As a result, the galvanic corrosion rate will be also very low (Reference 6). Note that for a carbon steel - stainless steel coupling, the carbon steel corrosion rate is accelerated relatively to its general corrosion rate by a factor 3 (Reference 6). Since the general corrosion rate is low, the galvanic corrosion rate must also be low.

(3) When MSIV's are exposed to moist air during storage or overhaul, the steel is no longer passivated. As a result, both the general corrosion and the galvanic corrosion will be greatly accelerated. Based on the data documented in Reference 7, the corrosion rate under this condition will be

about 1,000 times higher than that under the passivated condition during plant operation as described in (2).

Based on the above observations, it appears that the corrosion pitting experienced by Waterford-3 capscrews may have developed during storage or overhaul. It is very possible that these corrosion pits also exist in the capscrews of SONGS MSIVs. As such, the effect of these pits on overload shear and low cycle fatigue strength of the capscrews has to be considered. This adverse effect can be conservatively accounted for by reducing the shear area of a capscrew with a thread diameter 10 mils smaller. This adverse effect reduces the capscrew shear strength (in terms of shear energy) by about 4%.

Misalignment

Based on the rail and skirt drawings of Waterford-3 MSIVs, the misalignment between the guide rail hole and socket ranges from zero to 34.2 mils. Most of the misalignments are below 20 mils and only three out of 18 capscrews in the B-MSIV gate guide rails are above 20 mils.

The effect of misalignment of capscrew failures is two-fold. They are discussed separately below.

(1) The misalignment of bolts will make the impact load uneven distributed by the capscrews. As such, the worst misaligned capscrews (as shown in Figure 8) will take a larger portion of the impact energy and are more likely to fail.

(2) The misaligned capscrews will have a higher preload stress at the bolt head. As a result, the impact energy needed to fracture them is lower.

Based on the analysis in Appendix C, the misalignment of a bolt will reduce the fracture energy from 105 lb_f-in for shear fracture to 92 lb_f-in for tensile fracture at the bolt head. This will cause capscrew to be failed at the bolt head upon impact.

In summary, the misaligned capscrews will tend to fail by tensile fracture at the knee of the bolt head and tend to absorb a large portion of the impact load. As such, they are expected to fail first before those capscrews that are well aligned. The reduction in tensile fracture strength has been factored into the dynamic impact analysis results.

Cracks at Thread Roots

Several cracks were found at the thread roots of a few Waterford-3 MSIV fractured and cracked capscrews. There are two possible causes of these observed cracks. One is pre-existing cracks and the other is cracks caused by overload or repetitive impact with a impact force greater than the fatigue strength.

Even if the cracks pre-existed, the reduction in the load bearing area is insignificant and the dynamic impact results remain unaffected. Note that for low cycle fatigue failure the dominant parameter is the load bearing area rather than the surface integrity.

Capscrew Material

Based on the LP&L examination, one capscrew was found to be Alloy Steel 1040, rather than 4130 as per design. The fracture toughness of 4130 is higher than that of 1040 (Reference 10). Since only one capscrew was found with inferior material, it appears that this problem is not prevalent. To factor this into

our analysis, we can conservatively assume that there is one capscrew of inferior material in each of the guide rails. Also, we can hypothesize that this capscrew will fail upon the first impact. After its failure, each guide rail still has eight capscrews to hold it in place Since the impact energy can only shear two to three capscrews, it is reasonable to conclude that even with one defective capscrew, the guide rail is still likely to survive the damage resulting from the interaction between the lev-r-lock arm and the guide rail.

OPERABILITY ASSESSMENT FOR SONGS' MSIVs

Based on the dynamic impact analysis described above and the following supporting facts, all MSIVs for both SONGS-2 and SONGS-3 are judged operable. The results of the analysis and the supporting facts are summarized as follows:

(1) All MSIVs have consistently stroked slower than 3.0 seconds. The associated impact energy is not enough to shear any capscrew unless it is grossly misaligned.

(2) The SONGS-3 MSIVs 3HV-8204 and 3HV-8205 have each experienced more than one hundred stroke cycles, many more cycles than the Waterford MSIVs. The valve internals were inspected and only one broken capscrew was found, and all of the guide rails and shoes that were inspected were in satisfactory condition. These facts suggest that the damaging mechanism is overload shear, not fatigue or corrosion fracture. Since the failure mechanism is a one-time overload shear, more broken capscrews in the future are not likely. Note that the above fact is also supported by the fractography inspection results for the Waterford-3's MSIV broken capscrews.

(3) If a capscrew (or in worst case, a guide rail) breaks, it will most likely fall to the bottom of the valve cavity. As such, it will not interfere with the valve closing action. However, it is possible that the broken debris can be carried into the flow steam to the turbine stop valves or other equipment as previously discussed.

Worst Case Analysis: Operability with Failed Guide Rails

The following Section is extracted from Kalsi Engineering, Inc. report, "Preliminary Root Cause analysis of MSIV Gate Guide Failure," document No. 1560C, dated May 9, 1988.

Summary

The following includes analysis details of the postulated worst-case conditions which all guide rails have failed, and the flow through the MSIV is in the normal direction. The results from several computer runs using the actuator closing time simulation program which was modified for the additional frictional drag due to an abnormal condition of the upstream valve seat floating out of its seat pocket (this assumption is an acute conservatism) and bearing down against the segment show the following closing times:

Condition	Closing Time
No flow, lev-r-lock/guide rail functional	2.3 sec.
Flow in normal direction, lev-r-lock/ guide rail functional	2.5 sec.
Flow in normal direction, lv-r-lock/ guide rail failed	2.8 to 3.2 sec.

With failed guide rails and flow in the reverse direction through the MSIV and making conservative assumptions regarding the coefficient of friction, the results show that it will take 3.35 seconds for the gate to travel 29.5 inches, before the gate stops. Note that this mode of abnormal operation will be possible during reverse flow during the main steam line break event and with failed segment guide rails. To date there have been no documented cases of failed segment guide rails in this MSIV model. The 29.5 inches is more than the 28.25 inches required to block off the flow port area in the seat, but less than 31.25 inches required to stroke the gate completely.

Introduction:

This section addresses the analysis performed to determine the closing time of the MSIV under worst-case nonfunctioning guide rails. Several load cases were analyzed to determine the effect of coefficient of friction on closing time. the coefficient of friction was varied from 0.2 to 0.25 at the gate-to-seat interface and from 0.25 to 0.3 at the gate and segment back angles. the coefficients of friction should bound the expected coefficients for the mating surfaces of Stellite overlay versus Stellite overlay for the gate to seat interface and 17-4PH stainless steel to 17-4PH stainless steel for the gate and segment back angles.

The system operating conditions are:

Normal operation Pressure: 1085 psig

Normal operating Temperature: 554°F

System Flow Rate at full power: 7.5×10^6 lbm/hr

Design operating Pressure: 900 psig

Design operating Temperature: 523°F

System Flow rate at 105% power: 7.9×10^6 lbm/hr

For this analysis only the design operating conditions and flow at 105% are considered. All closing times calculated using a Nitrogen dome pressure of 2410 psi which will produce W-K-M's recommended nitrogen charge pressure of 2500 psig at 100°F. This nitrogen charging pressure, 2410 psi, corresponds to the required charging pressure at 80°F (reference Kalsi Engineering Report 1522 to W-K-M dated June 19, 1987).

Gate and Segment Description

The W-K-M MSIV gate valve is of a double-wedge, through-conduit design that expands and wedges the segment piece and gate piece against their respective seats at each end of the gate stroke. During travel to either opened or closed position, the segment and gate are held in place relative to each other by lever locks that ride against guide rails attached to the segment and gate skirts. When functioning properly the gate assembly can be used bi-directionally with essentially the same thrust and time required to actuate from the fully opened to the fully closed position. When malfunctioning (that is, the segment and gate are not held in place), premature expansion of the gate occurs resulting in increased frictional resistance at the seat interfaces.

Because this valve has to perform a safety related function just in the closing direction, only the effect of malfunctioning in the close direction will be evaluated. Upon closing, two things can happen which will affect the resistance to closing by premature wedging in the mid-travel position when the lever locks fail to maintain the relative position between the segment piece and the gate piece: (1) the upstream valve seat can float out of its seat pocket and bear against the segment and cause wedging to occur, and (2) pressure applied to the gate side can force the segment against its seat and the frictional resistance at the segment seat causes wedging to occur. These two abnormal conditions are

compared against the most desirable condition where pressure acts from the segment side and the lever lock is operating properly, thus preventing premature wedging to occur.

Under Load Case 1 two distinct forces act to resist the gate movement. the upstream seat moves and bears against the segment and causes wedging to occur between the segment and the gate, plus the gate is forced against the downstream seat by the pressure. Under Load Case 2 only the resistance at the segment and its seat is used to determine the total frictional resistance.

For all load cases involving pressure, the differential pressure acting against the upstream seat and the gate assembly was varied linearly as a function of the gate stroke. At the fully opened position the differential pressure was set to 0 psi, and at the fully closed position the differential pressure was set to 1085 psi. Comparison of the loads produced by this pressure distribution against that produced by conventional drag equations shows that the approach used in our analyses gives higher normal loads, thus a more conservative solution.

Analysis Results of Valve Operability under Degraded Condition

The following conclusions are broken down into the expected valve operating conditions. The results of the coefficients of friction combinations presented here are those most expected to exist with the complete matrix of coefficients of friction analyzed.

Case 1: Normal Condition with Pressure in Valve Body

Pressure of 1085 psi acting from the segment side and the lever lock operating properly. This condition is the basis for comparison of the remainder of the results.

- The calculated time to close the valve (31.25 inches of stroke) was 2.54 seconds with a coefficient of friction of 0.25 at the gate-to-seat interface.

Case 2: Normal Condition with No Pressure in Valve Body

No pressure in the body and the lever lock operating properly. This condition shows the effect of friction on the closing time.

- The calculated time to close the valve (31.25 inches of stroke) was 2.26 seconds with a coefficient of friction of 0.25 at the gate-to-seat interface.

Case 3: Abnormal Condition

Pressure of 1085 psi acting from the segment side, the lever lock not operating properly, and the upstream seat floating out and bearing against the segment. This condition causes wedging to occur between the gate and segment.

- The calculated time to close the valve was 2.58 seconds with a coefficient of friction of 0.25 between the seats and gate assembly and a coefficient of friction of 0.30 at the gate and segment back angles.

Case 4: The Worst Case

Pressure of 1085 psi acting from the gate side, the lever lock not operating properly. This condition is the most severe possible with regard to the valve closing speed.

- Using a coefficient of friction of 0.25 between the seats and gate assembly and a coefficient of friction of 0.3 at the gate and segment back angles, the valve will not stroke the complete distance of 32.25 inches. the gate, though, will travel 29.5 inches in 3.35 seconds before stopping. At 29.5 inches of travel the bore of the valve should be completely blocked off since a travel equal to the bore (28.25 inches) is the minimum required for full coverage.

- Using a coefficient of friction of 0.20 between the seats and gate assembly and a coefficient of friction of 0.30 at the gate and segment back angles will permit the valve to stroke the complete distance of 32.25 inches.

Analysis Procedure

The analysis procedure used to solve for the closing time is the same as that used in the previous calculations performed and documented under Kalsi Engineering Report 1522 to W-K-M dated June 19, 1987. The program was modified to include resistance of the piston seals in the actuator and to include the effects of both internal body pressure and differential pressure rating across the gate.

Solving for a combination of friction coefficients at the seats and gate and segment back angles yields the following results under different operating conditions.

Pressure	$\mu 1$	$\mu 2$	Closing Time	Comments
0	0.25	0.30	2.26 sec	Normal operation
1085	0.25	0.30	2.54 sec	Normal operation

1085	0.25	0.25	3.21 sec	Floating upstream seat
1085	0.25	0.30	2.58 sec	Floating upstream seat
1085	0.25	0.30	---	Reverse Flow, Gate traveled 29.5" in 3.347 sec
1085	0.20	0.30	2.80 sec	Reverse Flow
1085	025	0.25	---	Reverse Flow, Gate traveled only 27.6"

Although some of the results under reverse flow show that the gate will not stroke the complete distance, it does show that under realistic coefficients of friction the gate should travel a sufficient distance to block off the port. It is expected that the coefficient of friction at the seats will be a maximum of 0.25 since it is a dynamic interface and that the coefficient of friction at the back angles will be at least 0.30 because the mating materials (17-4PH vs. 17-4PH) are not considered good sliding materials and are acting in a static mode. the gate inertia has not been taken into account in these analyses.

The MSIVs at SONGS close normally in 4 to 5 seconds. This analysis, when applied to the SONGS' MSIV stroke time, still maintains the valves operable with a maximum stroke time of 6.1 seconds. The safety analysis assumes a 6.9 second stroke time.

Analysis has been performed to show that a sheared rail will not prevent the MSIV from closing. There are two orientations the rail could take in the MSIV cavity.

(1) The rail could be horizontally lodged in the bottom of valve.

(2) The rail could be vertically lodged in the valve between the gate and segment assembly and the bottom of the valve.

The closing thrust of the MSIV is determined to be 4.1×10^5 lb_f. The force needed to bend a rail oriented as described in (1) is less than 1.0×10^5 lb_f and the force required to buckle the rail oriented as described in (2) is 2.1×10^5 lb_f.

Therefore, the MSIV closure will not be affected if a guide rail shears.

SAFETY EVALUATION

A. The probability of occurrence of an accident or malfunction of any equipment previously evaluated in the FSA will not be increased:

The operation and design basis of the MSIVs are discussed in Final Safety Analysis Report (FSAR) Section 10.3.2.2.C. The limiting event in which the valve must operate is the Main Steam Line Break, Feedwater Line Break and Tube Rupture Events. These events are analyzed in FSAR Sections 15.1.3, 15.2.3 and 15.6.3, respectively. The automatic valve response that is required in this analyses is described in FSAR Section 6.2.4.3.

It has been shown in this analysis that the MSIVs will still be able to perform its design closing function in response to a CIAS and/or MSIS to

mitigate the consequences of the events described above. That is close within 6.9 seconds, with or without guide rails.

B. The consequences of an accident previously evaluated in the FSA will not be increased:

Since the MSIVs will not increase the probability of feedwater line break, steam line break, and tube rupture, the probability of occurrences for these three affected events will not increase.

If capscrews (in addition to the on capscrew head discovered in the body cavity of 3HV-8205) or other debris does in fact fall, it has been shown that it will probably fail in the bottom of the body cavity. There are two possible consequences of this debris that must be addressed:

(1) Preventing the valve from closing:

It has been shown that a sheared rail will not prevent the MSIV from closing unless it may somehow get wedged between the gate and segment hole and the valve conduit seat. This scenario is extremely improbable. For the debris to be swept in the flow stream, the valve must be stroked under flow. The design and operation of the MSIV is such that the body cavity is not normally exposed to turbulent steam flow conditions. This is because:

a) The MSIV gate and segment is designed such that the body cavity is isolated from the conduit/main steam flow stream by the open seats and the lev-r-lock feature in the open direction.

b) The MSIV is closed under flow conditions only when a CIAS or MSIS actuation closes the valve or when the valve is stroked to 90 per cent open for a very brief period of time (about 15 seconds) once every three months of continuous operation. It is unlikely that the guide rail would get lodged between the hole in the gate and segment and the valve conduit seats as the valve strokes closed in less than 5 seconds. When the valve is stroked 10% closed, the steam velocity in the cavity as well as the size of the gate and segment hole expose to the valve cavity makes it highly improbable that debris could be swept up.

As previously mentioned, a guide rail was found in the high pressure turbine stop valve strainer at LP&L. This debris was swept from the valve cavity into the flowstream probably during an abnormal incident which occurred in December, 1987. During this incident, the "B" MSIV malfunctioned and stroked to approximately 20% open (nearly full closed) and then began to slowly open during full power operation. This exposed the valve cavity to high steam velocities for an extended period of time (on the order of minutes) which provided ample conditions for the debris to be swept into the flowstream.

This incident occurred over two years after the time it has been postulated that the rails were sheared. The analysis presented in this report supports the theory that the rails were sheared when the valve was stroked at 0.9 seconds in 1985. That is over two years when the transient existed which provided opportunity for debris to be swept up into the valve. If these assumptions are true, the valve was capable of performing its designed closing function with sheared rails as demonstrated by several successful inservice test stroke times and that

a rail remained in the bottom of the valve without adversely affecting its performance.

Even in the worst case scenario, which is a very remote possibility, that a rail does in fact get lodged between the gate-and-segment assembly and valve conduit, approximately 90% of the flow area for the affected MSIV will still be isolated. The unaffected MSIV will still be able to close per design. This scenario is still well bounded by the existing array of MSLB analyses. Section 15.1.3.1.D, "Assumptions considered as to the worst single active component failure" includes the following statement:

> "1. Single Features Which Might Prevent Closure of the Main Steam Isolation Valves or the Main Feedwater Isolation Valves After MSIS
>
> The design features of these valves and their actuation systems reduce the probability of failure to close to a level which precludes consideration of failure to close during a main steam line break. Nevertheless, should either MSIV fail, isolation of the intact steam generator is provided by the downstream main steam system piping and valves. All branch lines downstream of the MSIVs to and including the turbine stop valves have valves which are either normally closed or which close on a turbine trip."

(2) Possible Damage Caused by Missiles Swept Up During the Event

There is no equipment downstream of the MSIVs which is important to safety that could be affected by debris generated missiles. Therefore,

only the reverse flow condition must be considered under this condition: The location and the routing of the main steam line in containment is such that no equipment necessary for safe shutdown of the plant could be damaged.

For the feedwater line break event, the MSIS is generated from low steam generator pressure at 212.7 seconds into the event. MSIVs are closed to stop the blowdown of the intact steam generator, via the steam line, feedring and the broken feedwater line. Even in the worst case that a rail does in fact get lodged between the gate-and-segment and the valve conduit, one out of two MSIVs will still be closed and stop the blowdown. As such, the consequences of this event are bounded by the analysis stated in the FSAR.

For the steam generator tube rupture event, the MSIV is assumed to be closed at 30 minutes into the event to start plant cooldown. At the same time, the atmospheric dump valves to the unaffected steam generator are opened for RCS cooldown. The purpose of closing the MSIVs is to use the atmospheric dump valve to the unaffected steam generator for plant cooldown. In the worst case scenario, even if an MSIV to a steam generator is partially open, the controlled plant cooldown can still be realized by using the atmospheric dump valve of the unaffected steam generator and the affected steam generator is isolated by the one closed MSIV, turbine stop valves and SBCS valves. As such, the consequences of this event are bounded by the FSAR analysis as stated in Section 15.6.3.

C. The possibility of an accident which is different than any already evaluated in the FSA will not be created because:

CONCLUSION AND RECOMMENDED ACTIONS

Based on the dynamic impact analysis and inspection results on Unit 3 MSIVs, it is concluded that the SONGS MSIVs which stroke slower than 3.0 seconds are not subject to the guide rail dislodgement failure as experienced by Waterford-3. As such, no immediate actions need to be taken.

As a long-term measure, a study should be performed to evaluate the necessity of reducing the angle of the chamfer for the downstream guide rail from 45° to 30° (making the face of the chamfer more vertically oriented). By doing this, the impact energy can be reduced from 160 lbf-in to 40 lbf-in. Figure 4 shows the beneficial effect of this modification.

A study will be performed to evaluate the following design enhancements implemented at LP&L:

a) Changing the chamfer from 45° to 30°. Figure 9 illustrates the reduction in impact energy as a result of this modification.

b) Machining a radius in place of a sharp transition of the edges of the chamfers.

c) Changing the profile of the contact areas of the shoes to minimize the impact energy.

d) Stellite overlay the shoes and chamfers to minimize the friction coefficients thereby reducing the impact energy.

e) The analysis demonstrated that the stroke time is most sensitive to a change in dump valve flow coefficient. The figures presented in this paper were developed assuming only one dump valve opens to initiate the close cycle. Both dump valves will open if a Train A <u>and</u> B CIAS or MSIS are initiated simultaneously. A valve which strokes in 3.0 seconds with one dump valve will stroke in 2.5 seconds if both dump valves are opened. An orifice plate could be placed in the common dump piping to limit the hydraulic fluid flow rate and limit the valve stroke time to ensure it does not stroke too fast resulting in excessive impact energies.

b) Machining a radius in place of a sharp transition of the edges of the chamfers.

c) Changing the profile of the contact areas of the shoes to minimize the impact energy.

d) Stellite overlay the shoes and chamfers to minimize the friction coefficients thereby reducing the impact energy.

e) The analysis demonstrated that the stroke time is most sensitive to a change in dump valve flow coefficient. The figures presented in this paper were developed assuming only one dump valve opens to initiate the close cycle. Both dump valves will open if a Train A <u>and</u> B CIAS or MSIS are initiated simultaneously. A valve which strokes in 3.0 seconds with one dump valve will stroke in 2.5 seconds if both dump valves are opened. An orifice plate could be placed in the common dump piping to limit the hydraulic fluid flow rate and limit the valve stroke time to ensure it does not stroke too fast resulting in excessive impact energies.

APPENDIX A

Fundamental Equations Used in the Dynamic impact Analysis

The first principle equations used in the dynamic impact analysis are documented here. Figure A-1 describes the Lev-r-lock arm assembly. Figure A-2 illustrates the forces and angles used in the analysis. Figure A-3 illustrates the force balance and configuration of the actuator.

Conservation of Momentum Equation for Hydraulic Fluid

The following equation is derived based on the conservation of momentum in hydraulic fluid during the valve close cycle. It relates the velocity of hydraulic fluid leaving the actuator to the hydraulic fluid pressure in the actuator.

$$V_{h,i} = \left[\frac{P_{h,i} - P_{res}}{\rho \left[(K_1 + K_2) / 2*g + (A_1^2 * 1.863/C_v^2) \right]} \right]^{\frac{1}{2}} \qquad (A.1)$$

where:

$V_{h,i}$ = velocity of hydraulic fluid leaving actuator in time step i. (in/sec)

$P_{h,i}$ = Hydraulic fluid pressure in actuator in time step i. (lbf/in^2)

P_{res} = Hydraulic fluid reservoir pressure (5 lbf/in)

ρ = Hydraulic fluid density (0.04276 lbf/in^2)

K_1 = Hydraulic fluid pressure loss coefficient due to fluid flow in pipe fittings

K_2 = Hydraulic fluid pressure loss coefficient due to fluid flow in straight pipe

g = Acceleration due to gravity (386 in/s^2)

C_v = Hydraulic dump valve flow coefficient

A_1 = Inside area of hydraulic dump piping in segment #1 (in^2)

Conservation of Mass Equation for Hydraulic Fluid

$$\Delta m_{h,i} = \rho * V_{h,i} * A_1 * \Delta t_i \qquad (A.2)$$

Where: $\Delta m_{h,i}$ = Hydraulic fluid mass which left actuator in time step i (lbf)

Δt_i = Time increment (sec.)

Conservation of Actuator Volume Between Hydraulic Fluid and N_2

$$\Delta V_{n,i} = m_{h,i} / \rho \qquad (A.3)$$

Where: $\Delta V_{n,i}$ = Change in nitrogen gas space volume in actuator, in time step i. (in^3)

Volume Change During Each Time Step

$$V_{n,i} = \Delta V_{n,i} + V_{n,i-1} \qquad (A.4)$$

Where: $V_{n,i}$ = Total nitrogen gas space volume in actuator, in time step i, (in^3)

$V_{n,i-1}$ = Total nitrogen gas space volume in actuator, in time step i-1, (in^3)

Gas Isentropic Expansion Law

$$P_{n,i} = P_{n,o} * \left(\frac{V_{n,o}}{V_{n,i}}\right)^K \qquad (A.5)$$

Where: $P_{n,i}$ = Nitrogen gas space pressure in actuator, in time step i, (lbf/in^2)

$P_{n,o}$ = Nitrogen gas space pressure in actuator, in time step o with valve full open (lbf/in^3)

$V_{n,o}$ = Nitrogen gas space pressure in actuator, in time step o with valve full open ($13,731.in^3$)

K = Adiabatic gas coefficient for nitrogen Cp/Cv = 1.4

Conservation of Hydraulic Fluid Volume

$$\Delta X_i = \Delta V_{n,i} / (\Pi \times R_{pis}^2) \qquad (A.6)$$

Where: ΔX_i = Change in stem position in time step i, (in)

R_{pis} = Actuator piston radius, (12 in.)

Relationship Between Stem Position and Stem Velocity

$$V_i = \Delta X_i / \Delta t_i \qquad (A.7)$$

Where: V_i = Stem velocity in time step i. (in/sec)

Relationship Between Stem Velocity and Stem Acceleration

$$A_i = (V_i - V_{i-1})/\Delta t_i \qquad (A.8)$$

Where: A_i = stem acceleration in time step i. (in/s^2)

Relationship Between Lev-r-lock arm Angular Velocity and the Stem Velocity

$$\omega_i = V_i/[\cos\theta_i - \sin\theta_i \tan\beta] * L_1 \qquad (A.9)$$

Where: ω_i = Angular velocity of the lever lock arm in time step i (rad/sec)

θ = Angle of the lever lock arm with vertical in time step, i (rad)

β = Chamfer angle of the guide rail (rad)

L_1 = Length of lever lock arm from center of journal pin to contact point (in)

Relationship Between Angular Acceleration and Angular Velocity

$$\alpha_i = (\omega_i - \omega_{i-1})/\Delta t_i \qquad \text{(A•10)}$$

Where: α_i = Angular acceleration of the lev-r-lock arm, (rad/s^2)

W_i-1 = Angular velocity of the lev-r-lock arm in time step i-1.

Torque Balance Equation Around the Hinge of the Lev-r-lock arm

$$F_{N,i} = \frac{I\alpha_i + M_{seg}L_2}{[\sin(90° - \theta_i - \beta) - \mu\cos(90° - \theta_i - \beta)]L_1} \qquad \text{(A•11)}$$

Where: $F_{N,i}$ = Normal Force of guide rail against lev-r-lock arm shoe in time step i (lb*f*)

I = Mass moment of inertia if lev-r-lock arm and shoe assembly (lb*f* - sec^2)

M_{seg} = Weight of the segment, (2500 lb*f*)

L_2 = Moment arm of the lev-r-lock arm ear to the journal arm axis

μ = Coefficient of sliding friction between lev-r-lock are shoe and chamfer

Relationship Between Vertical Component of Reaction Force (Shear Force) and Normal Force

$$F_{R,i} = (F_{N,i} + \mu F_{N,i})\cos(90° - \beta)$$

Where: $F_{R,i}$ = Shear force on bolts due to impact of lever lock arm shoe on chamfer in time step, i (lb*f*).

Axial Force Balance Equation During Impact (A•12)

$$P_{h,i} = \frac{\frac{M}{g} Ai - P_{n,i} * A_{pis,n} + \mu_{pis} P_{n,i} A_{pp} * 0.5 + P_{st} * (\mu_{pac} * A_{pac} * 0.5 + A_{st}) - M + F_{R,i}}{(-A_{pis,n} - \mu_{pac} * A_{pac} * 0.5 - \mu_{pis} A_{pp})}$$

Where:

M	=	Weight of segment, gate, piston and stem (6200 lbf)
$A_{pis,n}$	=	Area of the actuator piston in the nitrogen gas space (452.4 in^2)
μ_{pis}	=	Coefficient of friction of the poly-pac piston seal (0.2)
A_{pp}	=	Area of the poly-pac seal (in^2)
P_{st}	=	System steam pressure (lbf/in^2)
A_{pac}	=	Area of the actuator and valve stem packing (in^2)
A_{st}	=	Area of the stem (12.6 in^2)
$A_{pis,h}$	=	Area of the actuator piston in the hydraulic space (439.8 in^2)

* assumed to be 0 psig.

APPENDIX B

Energy Required to Shear One Capscrew

The deformation energy required to shear one capscrew can be derived from the following strain energy formula:

$$E_{shear} = \int_V \tfrac{1}{2}\sigma_u E_u \, dV \qquad (B\bullet1)$$

Where: σ_u = ultimate shear stress (84 Ksi)

E_u = ultimate shear strain (10% based on data in Reference 1)

V = deformed volume

The total deformation volume is conventionally set to be the area of the capscrew times one quarter of the bolt diameter. As such, Equation (B•1) becomes:

$$E_{shear} = \tfrac{1}{2}\sigma_u \bullet E_u \bullet A_B \bullet D_B/4$$

$$= \tfrac{1}{2}82 \text{ Ksi} \times 0.1 \times 0.19 \times 0.155 \text{ in}^3 \qquad (B\bullet2)$$

$$= 123 \text{ lbf-in}$$

Note that the area of the bolt is calculated with a 10 mils radius reduction to account for the effect of corrosion. To account for the multiaxial stress effect on shear fracture, a 15% conservatism is applied.

$$Eshear = 123 \text{ lbf-in} \times 0.85$$

$$= 105 \text{ lbf-in} \qquad (B\bullet3)$$

APPENDIX C

Fracture Energy for a Misaligned Capscrew

Using the bending moment equation (Reference 8), we can relate the bending moment, M, to the misalignment, y, as follows:

$$M = \frac{2yEI}{L^2} \qquad (C\cdot1)$$

$l \simeq 0.6"$ (length of bolt in a cantilever beam condition)

$y \simeq .034$ (maximum misalignment)

$E = 30 \times 10^6$ psi

$I = 0.003243$ in^4

The maximum tensile force induced by misalignment at the knee of the bolt head can be calculated by the following formula:

$$\sigma = \frac{Mr}{I} \qquad (C\cdot2)$$

r - radius of the bolt = 0.254"

Inserting (C•1) into (C•2), we obtain:

$$\sigma = \frac{2yEr}{L^2}$$

$$= \frac{2 \times 0.034 \times 30 \times 10^6 \times 0.254}{(0.6)^2}$$

$$= 1.44 \times 10^6 \text{ psi} \qquad (C\cdot3)$$

This stress is calculated by the linear eleastic method. In reality, since it is beyond the yield stress, the plastic stress analysis has to be performed. A good approximation (Reference 8) is to convert the calculated elastic stress into strain. Then, using the stress-stain curve documented in Reference 9, the stress can be determined by the plastic stress that corresponds to the calculated strain.

$$\text{strain} = 1.44 \times 10^6 \text{ psi} \times 10^3 \text{ Ksi}$$
$$= 4.8\% \qquad \text{(C•4)}$$

Using the stress-strain curve for stainless steel 1040, the plastic stress is determined to be 70 Ksi.

The total fracture energy for a misaligned bolt is calculated by the following formula:

$$E_M = \iint_V \int_{4.8\%}^{10\%} \sigma \; d\xi \bullet dV \qquad \text{(C•5)}$$

V = deformed volume

σ_f = tensile stress at the bolt head knee

ξ = plastic strain, 10% is assumed to be ultimate strain

The ratio of the fracture energy for a misaligned bolt versus an aligned bolt can be conservatively determined by the following formula:

$$\frac{E_M}{E_A} = \frac{\iint \int_{4.8\%}^{10\%} \sigma d\xi dV}{\iint \int_{0\%}^{10\%} \sigma d\xi dV} \simeq 50\% \qquad \text{(C•6)}$$

assuming a constant σ.

In summary, for a worst misaligned capscrew, the fracture energy for tensile failure will decrease by 50%.

Assuming that the tensile fracture stress-strain curve for the bolt is approximately 1.75 times greater than (based on WKM data) the shear fracture stress-strain curve, shear or tensile fracture energy should have the same proportionality.

Knowing the shear fracture energy is 105 lb_f-in, the tensil fracture energy for a misaligned capscrew can be calculated as follows:

$$E_{tensile} = 105\ lb_f\text{-in} \times 1.75 \times 0.5$$
$$= 92\ lb_f\text{-in} \qquad (C.7)$$

This value is less than 105 lb_f-in. As such, a misaligned bolt will tend to fail by tensile fracture, rather than by shear fracture, at the bolt head region.

References

1) "Preliminary Root Cause Analysis of MSIV Gate Guide Failure", Document No. 1560C, Louisiana Power & Light, May 9, 1988

2) "Failure Analysis of the 40" x 30" Class 900 Nuclear Gate Valve for Louisiana Power and Light," by Tri C. Lee, E.O. 25504-001, W-K-M, Flow control of the Cooper Industries.

3) Personal conversation between C. Chiu and Professor Ernest Rabinowicz (M.I.T.), May 28, 1988

4) "PWR Secondary Water chemistry Guidelines," EPRI NP-5056 SR, March 1987

5) J. R. Armantano et al, "Standby Chemistry of Pressure Boilers," Proceedings of 25th Annual Water conference, P111-124, Pittsburg (1964)

6) "Metals Handbook" Ninth Edition, Volume 13 on "Corrosion", ASM International (1987)

7) A. John Sedriks, "Corrosion of Stainless Steels," John Wiley & Sons, Inc. (1979)

8) Roark and Young, "Formulas for Stress and Strain," McGraw-Hill, Inc. (1975)

9) Howard E. Boyer, "Atlas of Stress-Strain Curves," ASM International (1987)

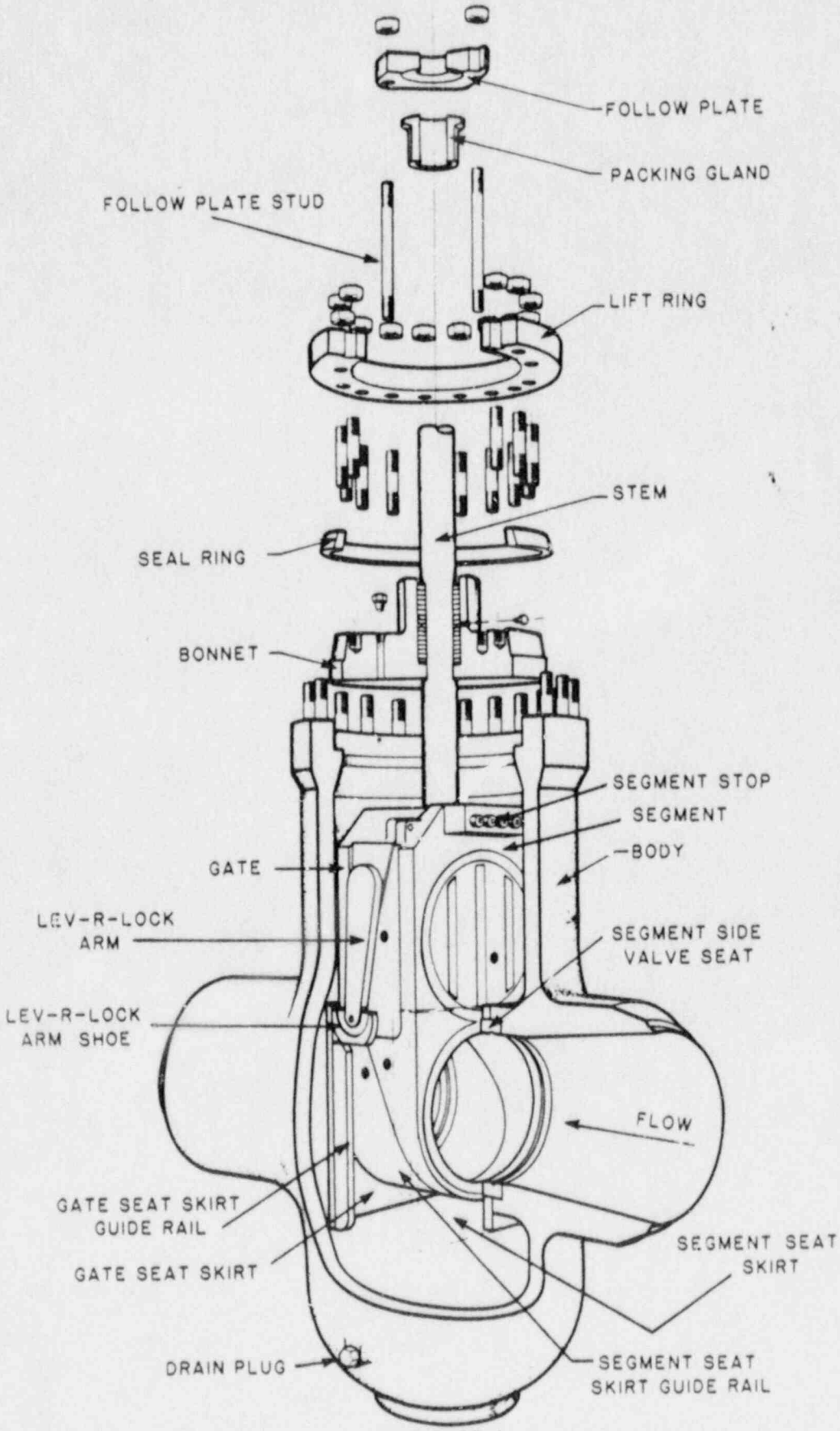

FIGURE 1

Configuration of Main Steam Isolation Valve

MSIV INTERNAL CONFIGURATION (VALVE CLOSED)

FIGURE 2A

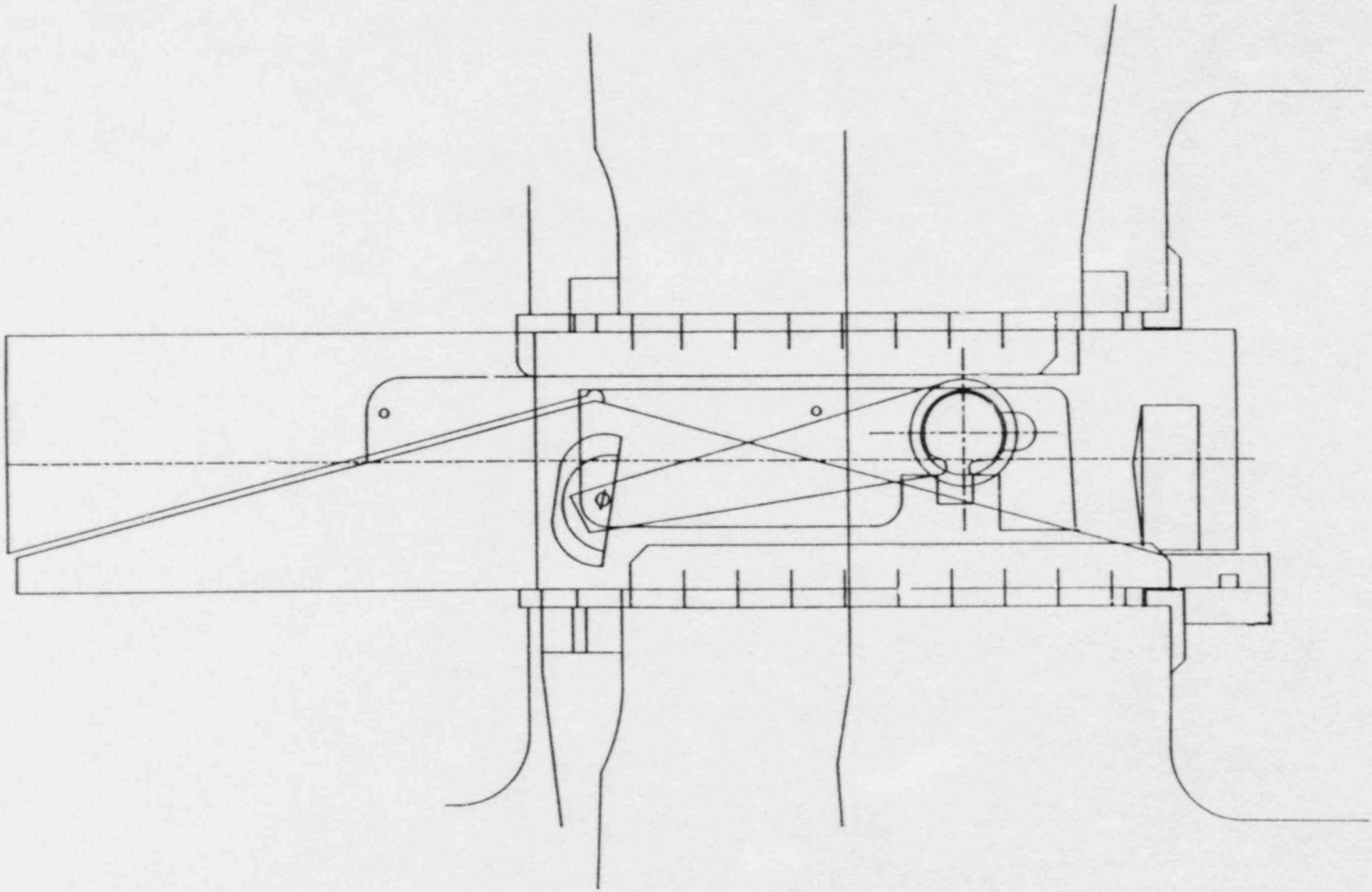

MSIV INTERNAL CONFIGURATION (VALVE OPEN)

FIGURE 2B

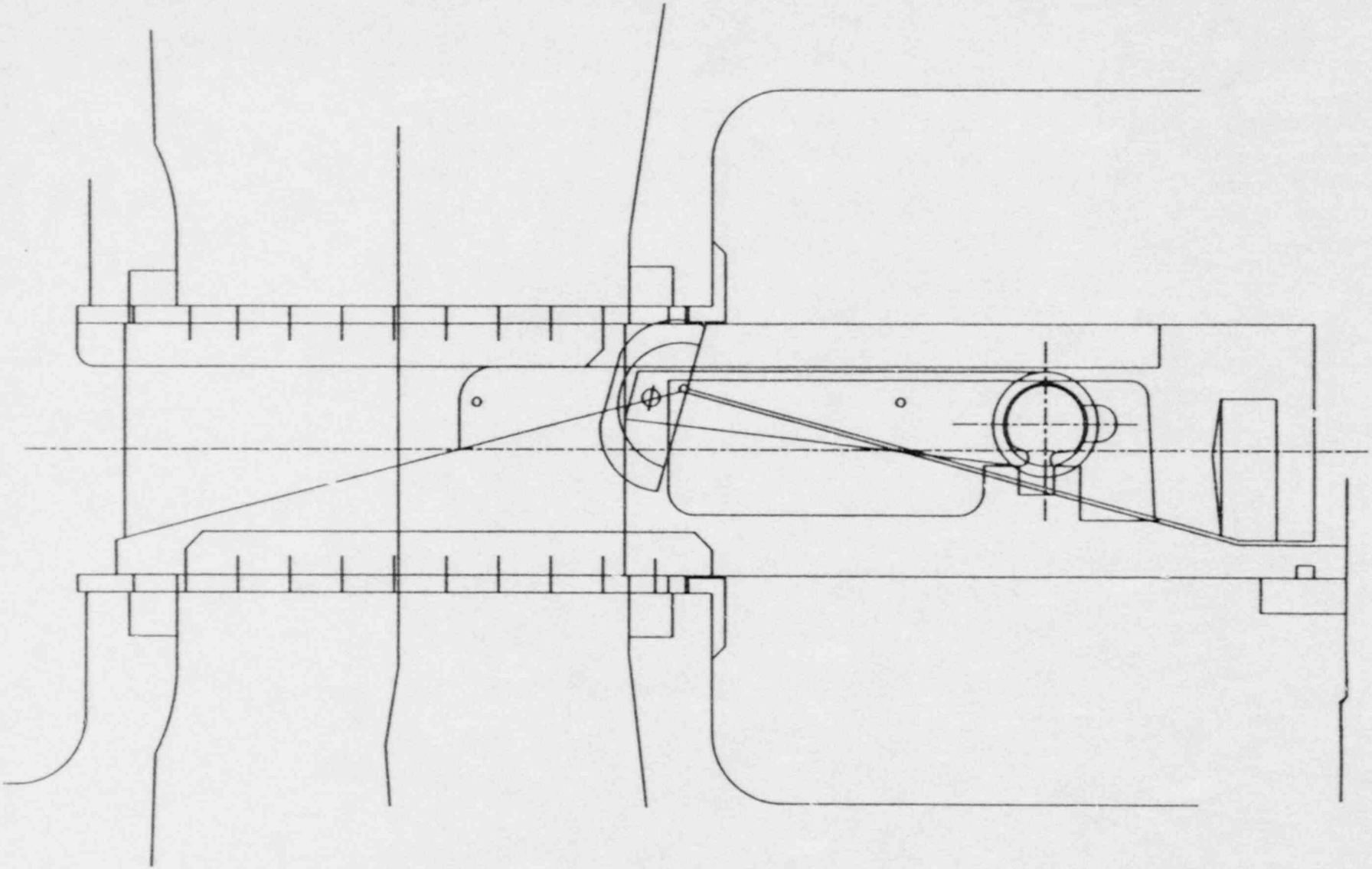

FIGURE 3 GATE AND SEGMENT ASSEMBLY DETAIL

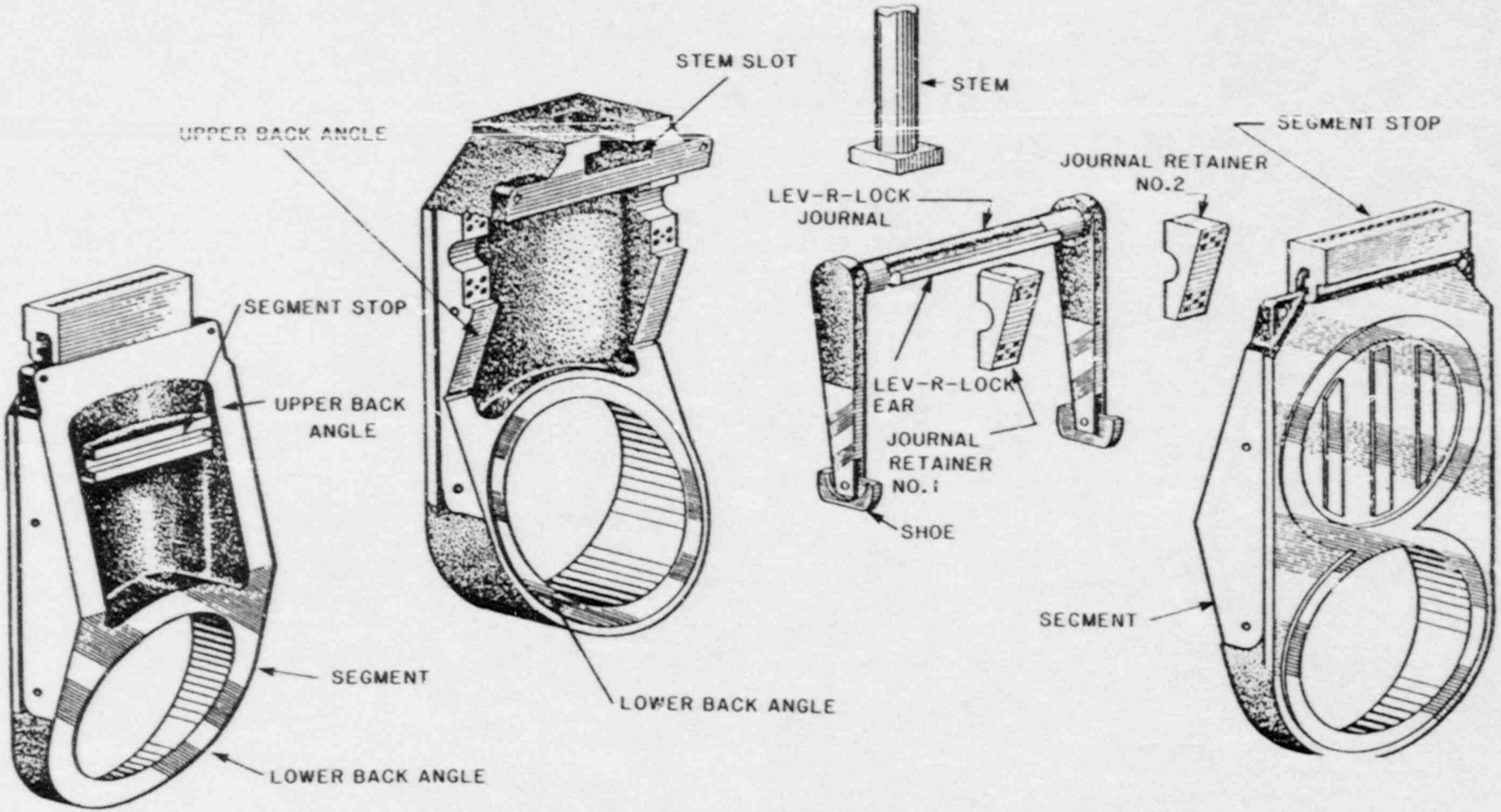

REVERSE SEGMENT - SHOWN ROTATED 180 DEGREES

FIGURE 4
MAIN STEAM ISOLATION VALVE
HYDRAULIC ACTUATION SYSTEM

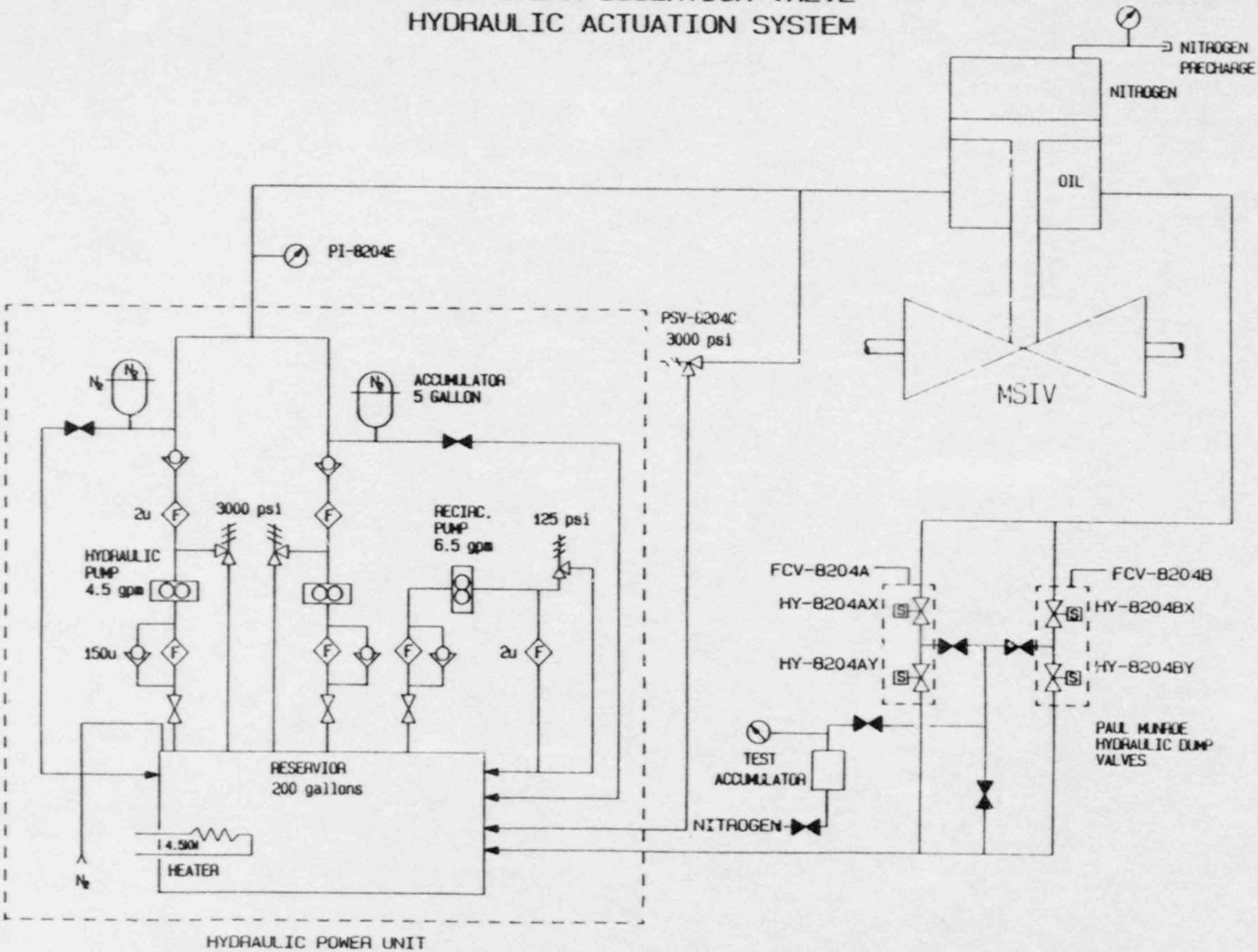

FIGURE 5

MSIV STROKE TIME vs. RAIL IMPACT ENERGY

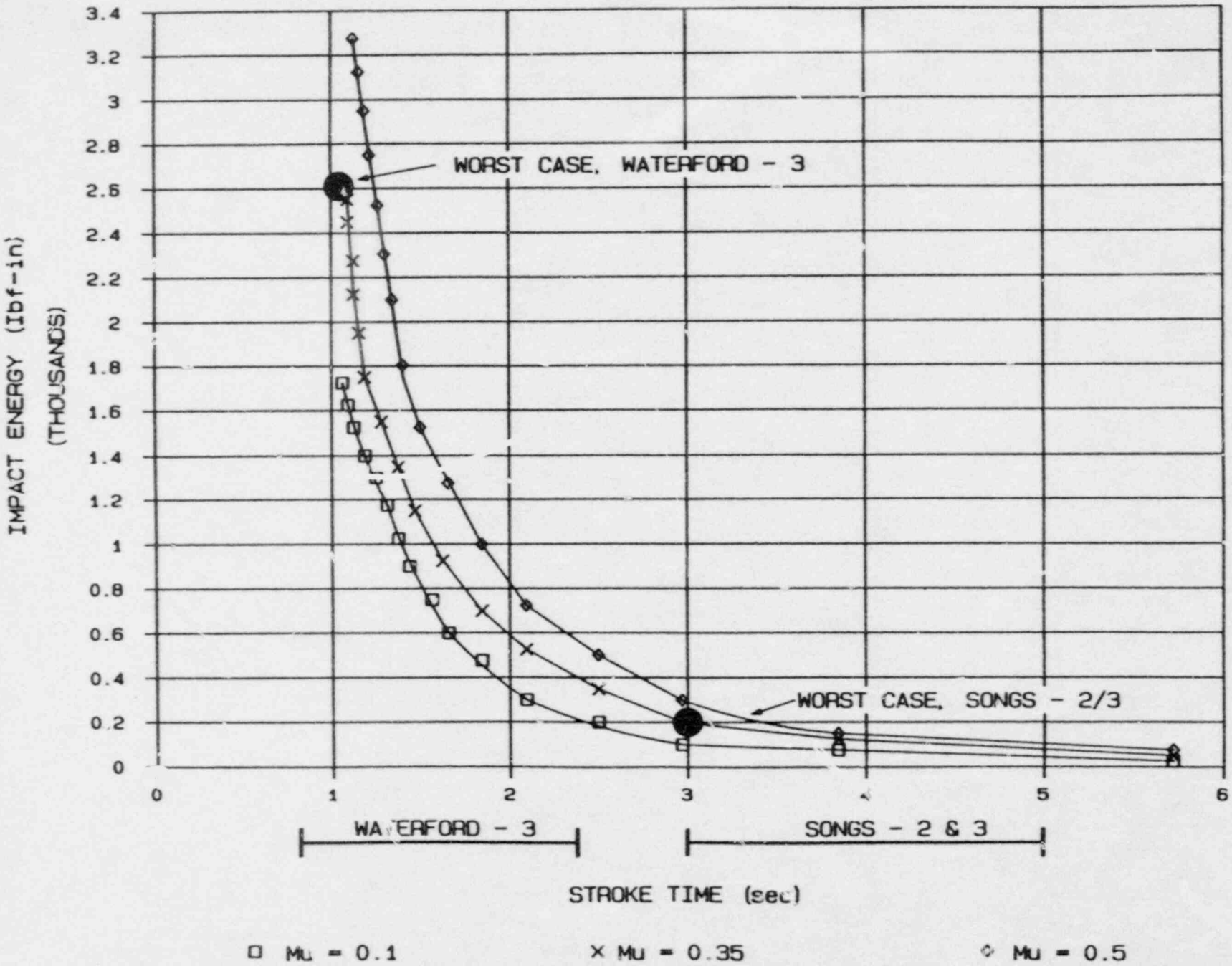

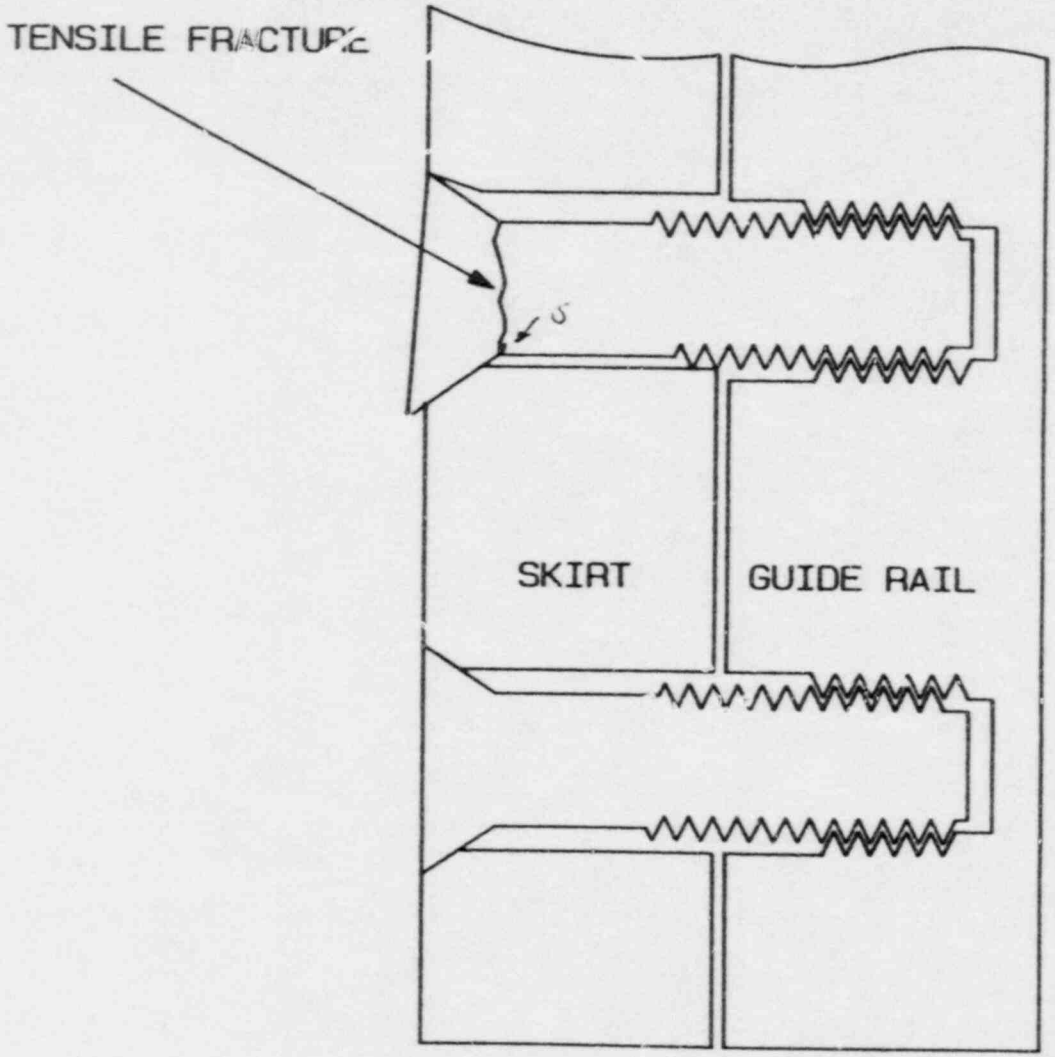

FIGURE 6

LOCATION OF TENSILE FRACTURE AT THE BOLT HEAD

7051

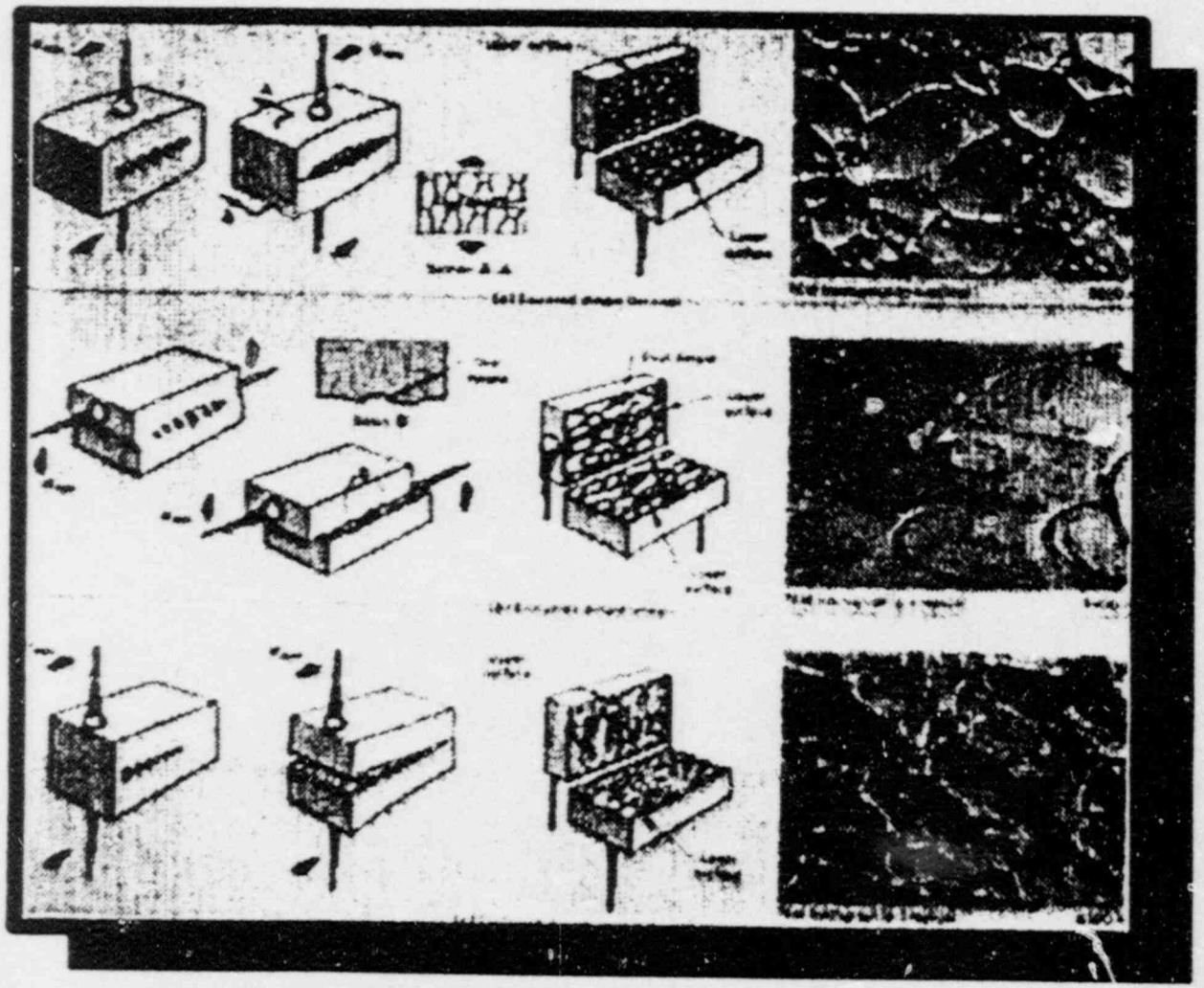

Figure 7 Relation Between the Shape of Dimples and the External Force (Source: Metals Handbook, 8th Ed., Vol 10., ASM, 1974)

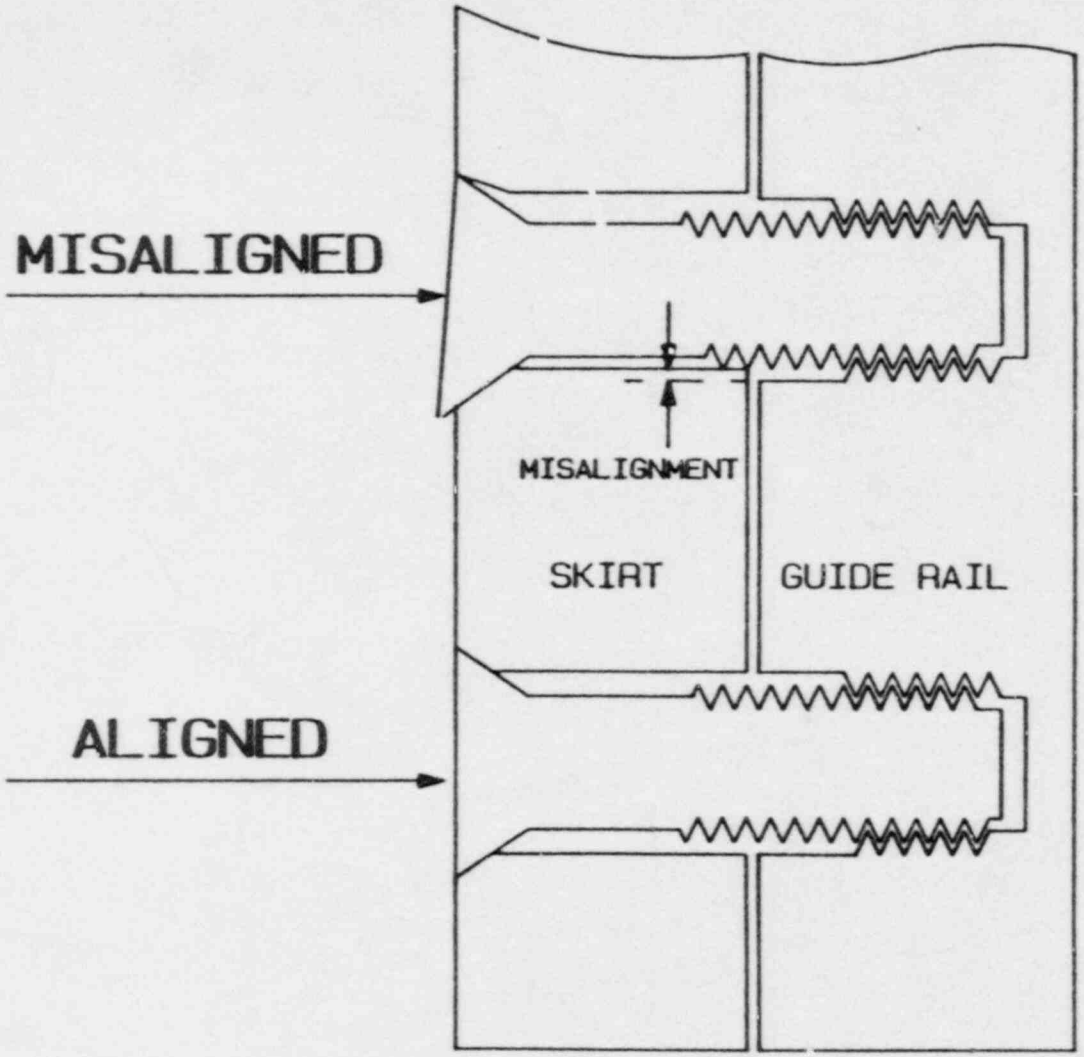

FIGURE 8

ILLUSTRATION OF A MISALIGNED CAPSCREW

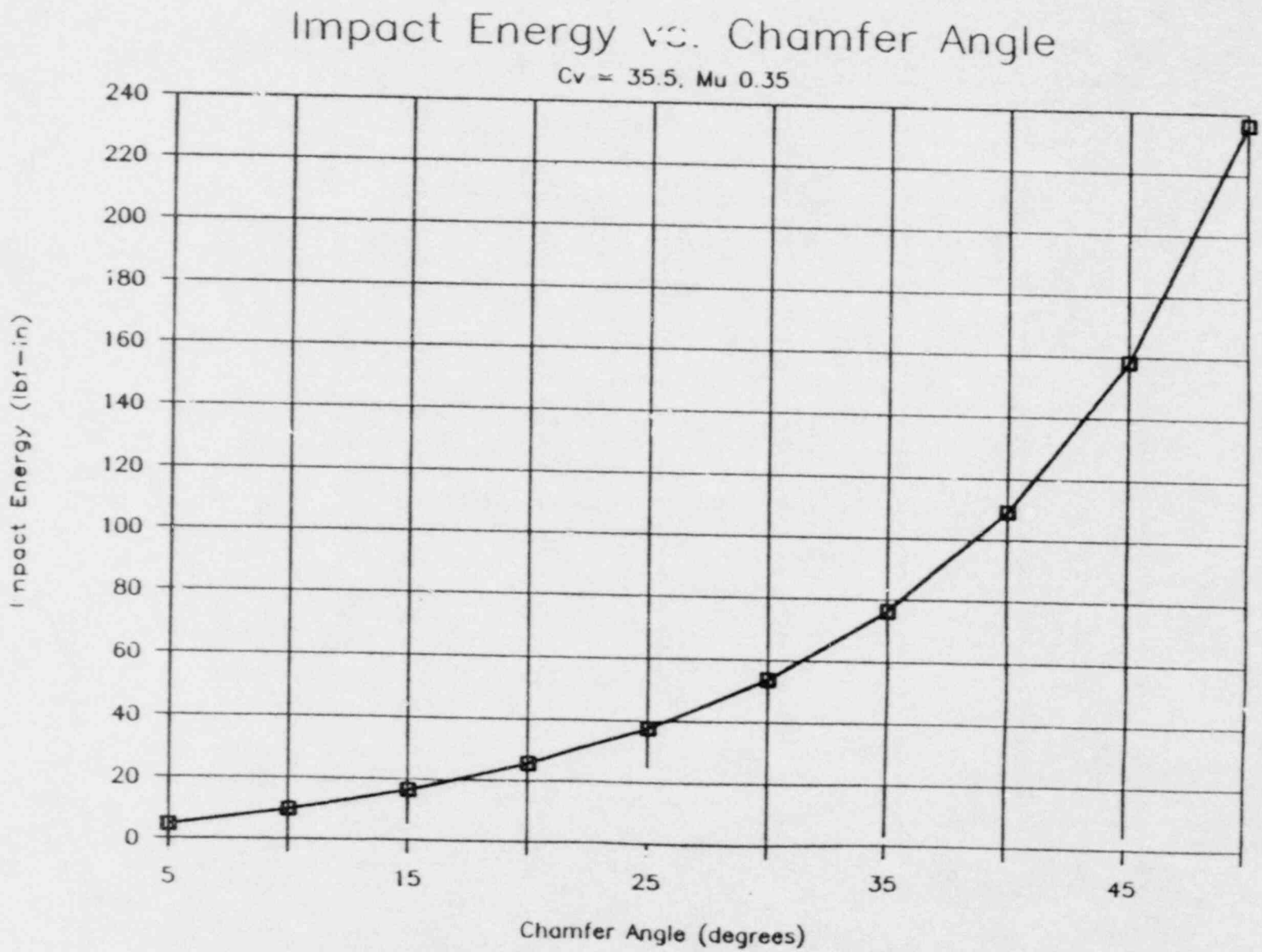
Impact Energy vs. Chamfer Angle
Cv = 35.5, Mu 0.35
Impact Energy (lbf-in)
240
220
200
180
160
140
120
100
80
60
40
20
0
5
15
25
35
45
Chamfer Angle (degrees)

Figure 9

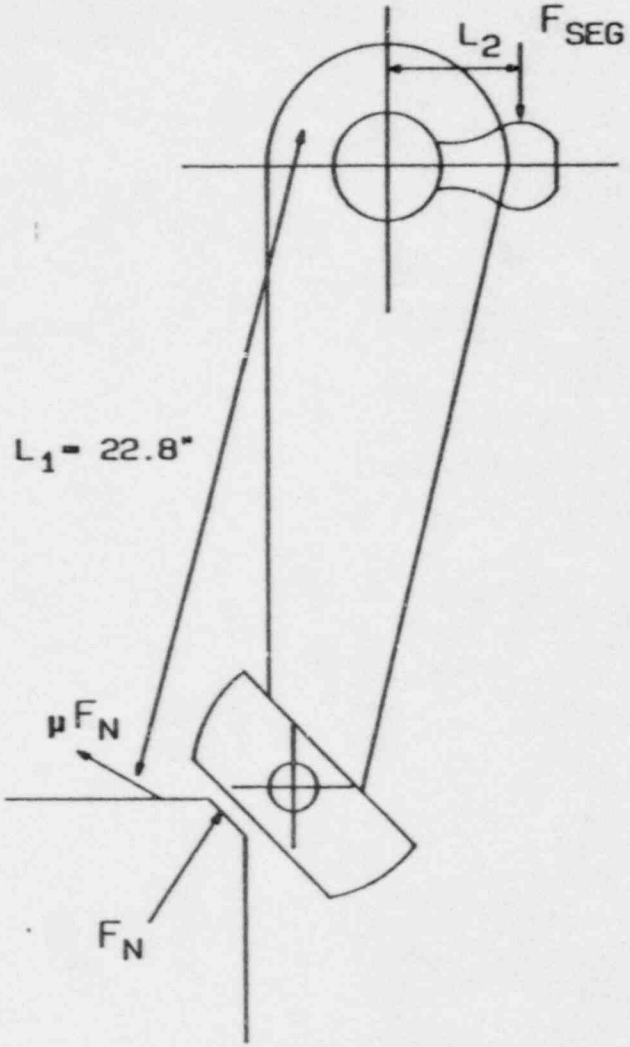

FIGURE A - 1

LEV - R - LOC ARM ASSEMBLY

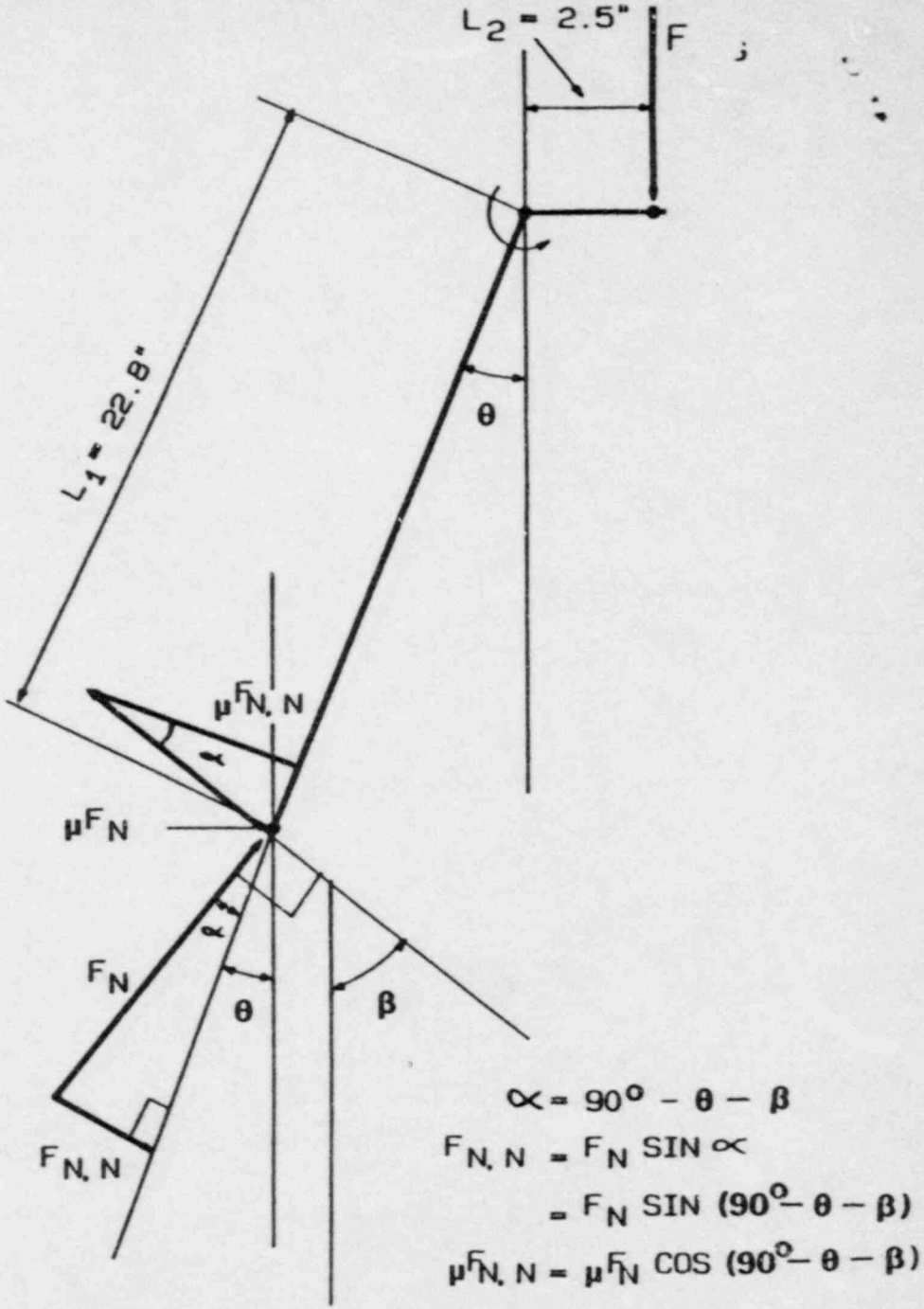

FIGURE A - 2

FORCES AND ANGLES USED IN DYNAMIC IMPACT ANALYSIS

F_R = REACTION (SHEAR) FORCE

P_{N_2} = NITROGEN GAS SPACE PRESSURE

F_{N_2} = NITROGEN PRESSURE FORCE

F_{pp} = PISTON SEAL FRICTION FORCE

F_H = HYDRAULIC PRESSURE FORCE

P_H = HYDRAULIC PRESSURE

F_{PH} = ACTUATOR PACKING FRICTION FORCE

F_S = SYSTEM PRESSURE FORCE

F_{PV} = VALVE STEM PACKING FRICTION FORCE

$F_{m/gs}$ = WEIGHT OF GATE/SEGMENT/ STEM AND PISTON

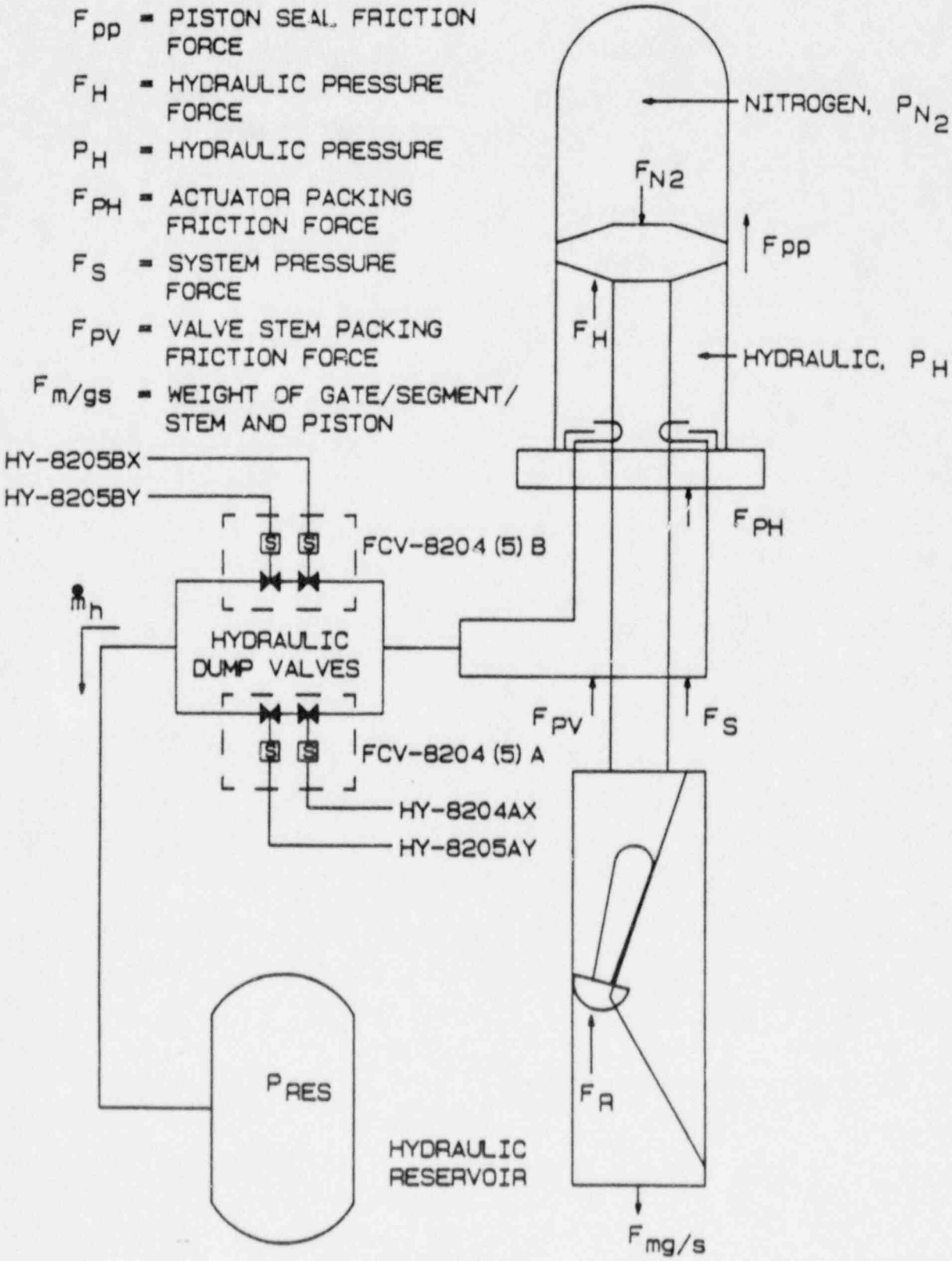

FIGURE A -3 SCHEMATIC CONFIGURATION OF THE VALVE ACTUATOR