B.21 LER Number 344/92-020

Event Description: Reactor Trip and Turbine-Driven Auxiliary Feedwater Pump Failure To Start

Date of Event: July 22, 1992

Plant: Trojan

B.21.1 Summary

Trojan was operating at 100% power on July 22, 1992 when erratic controller performance on one main feedwater (MFW) pump and controller failure on the other MFW pump resulted in a reactor trip on low-low steam generator (SG) level. The controller for the auxiliary feedwater (AFW) pump turbine also failed, rendering one of two safety-grade AFW pumps inoperable. The conditional core damage probability estimated for this event is 5.9×10^{-6}. The relative significance of this event compared to other postulated events at Trojan is shown in Fig. B.44

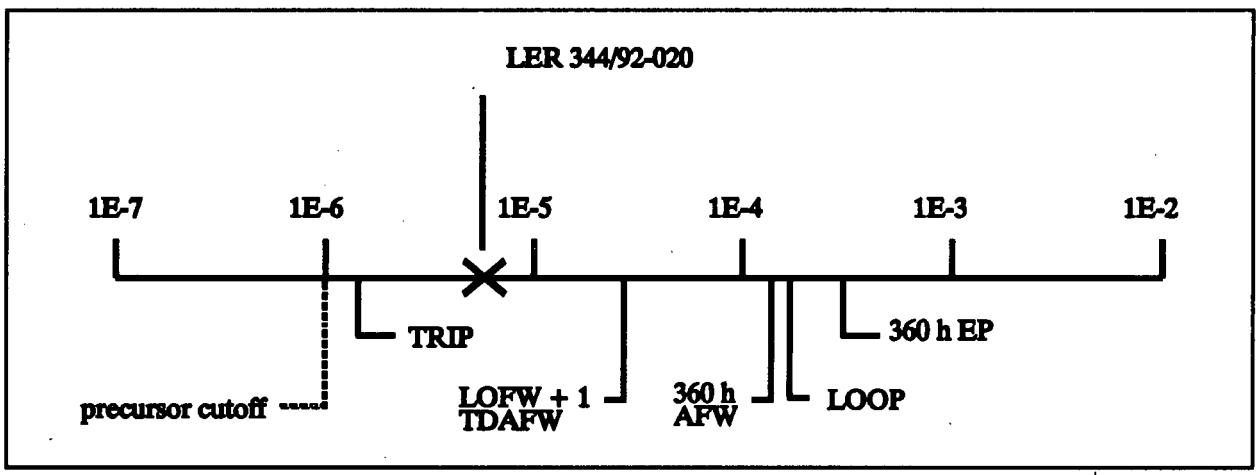

Fig. B.44. Relative event significance of LER 344/92-020 compared with other potential events at Trojan.

B.21.2 Event Description

Approximately two weeks prior to the plant trip, operators noted that the automatic controller for the A MFW pump was oscillating and placed the controller in manual. About two days prior to the plant trip, operators observed that the B MFW pump was supplying 20,500 gpm while the A MFW pump was supplying 10,000 gpm. While attempting to balance flows between the pumps, they experienced difficulty with the B pump controller and placed that controller in manual as well. On July 22, 1992 Trojan was operating at 100% power, while troubleshooting the B MFW pump control circuitry the pump

suddenly slowed to minimum speed. Operators tripped the pump, initiating a turbine runback, but the reactor tripped a short time later on low-low SG level. The turbine-driven A AFW pump auto-started but tripped on overspeed. Subsequent attempts to restart the pump were unsuccessful. The diesel-driven B AFW pump started correctly and provided cooling water to the SGs.

The cause of the A MFW pump controller failure was diagnosed as a defective electronic component in the controller module. The B MFW pump controller failed because of a misadjusted power supply. The A AFW pump failed because a defective ramp generator signal converter permitted the pump to overspeed and trip on each start attempt.

B.21.3 Additional Event-Related Information

Trojan is equipped with two 100% capacity safety-related AFW pumps, each capable of supplying 880 gpm to any of the four SGs. One pump is powered by a steam turbine, and the other is powered by a diesel engine. A third, nonsafety-related electric-motor-driven pump is available for use during plant startups and shutdowns. This pump is operable from the control room and could have been used to provide flow to the SGs if both safety-related AFW pumps had failed.

B.21.4 Modeling Assumptions

This event was modeled as a reactor trip with loss of feedwater and one AFW pump unavailable. Since the A MFW pump was locally operable, a nonrecovery probability of 0.34 (This is ASP recovery class R2, see section A.1.3 of this report for more information.) was assumed for the MFW system. The non-safety related AFW pump also was assumed capable of providing SG cooling following a manual start. One AFW pump was modeled as being failed; however, for calculational convenience, only the two pumps which remained operable are depicted in the model.

An additional method for plant cooldown exists at Trojan which is not directly incorporated into the ASP model. Trojan Emergency Operating Procedures (EOPs) include steps to reduce the main steam pressure using the main steam line PORVs and supply the SGs with the condensate pumps after having attempted primary side feed-and-bleed operations. However, limited information has been obtained regarding the plant thermal hydraulics and the reactor physics associated with this evolution. Also, operator performance during this process is difficult to assess since the operators are required to perform actions outside the control room to accomplish this cooldown. Therefore, implementation of this strategy could involve time constraints and substantial operator burden. Nevertheless, since the EOPs exist and training is conducted on those EOPs it was determined that this was a viable alternative. However, since this method is not currently incorporated in the ASP model for Trojan, its impact was calculated by adjusting the AFW non-recovery probability from 0.34 to 0.12.

B.21.5 Analysis Results

The conditional probability of subsequent core damage estimated for this event is 5.9×10^{-6}. The dominant core damage sequences, highlighted on the following event tree in Fig. B.45, involve failure of all sources of SG makeup and failure of feed-and-bleed cooling.

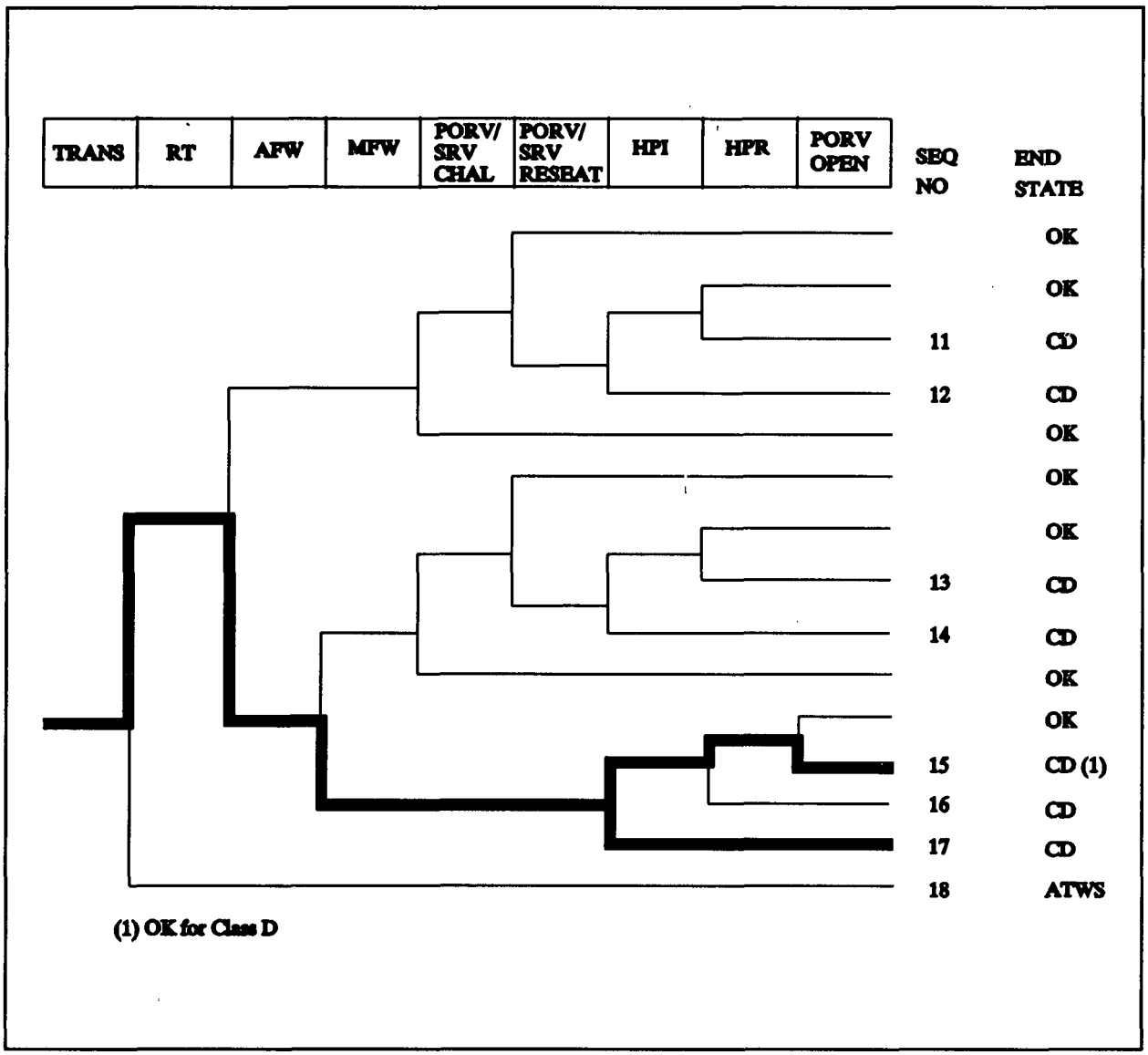

Fig. B.45. Dominant core damage sequences for LER 344/92-020

CONDITIONAL CORE DAMAGE PROBABILITY CALCULATIONS

Event Identifier: 344/92-020
Event Description: Reactor Trip and AFW Pump Failure to Start
Event Date: 7/22/92
Plant: Trojan

INITIATING EVENT

NON-RECOVERABLE INITIATING EVENT PROBABILITIES

TRANS 1.0E+00

SEQUENCE CONDITIONAL PROBABILITY SUMS

End State/Initiator	Probability
CD	
TRANS	5.9E-06
Total	5.9E-06
ATWS	
TRANS	3.4E-05
Total	3.4E-05

SEQUENCE CONDITIONAL PROBABILITIES (PROBABILITY ORDER)

	Sequence	End State	Prob	N Rec**
17	trans -rt AFW MFW hpi(f/b)	CD	2.9E-06	3.4E-02
15	trans -rt AFW MFW -hpi(f/b) -hpr/-hpi porv.open	CD	2.7E-06	4.1E-02
16	trans -rt AFW MFW -hpi(f/b) hpr/-hpi	CD	3.0E-07	4.1E-02
18	trans rt	ATWS	3.4E-05	1.2E-01

** non-recovery credit for edited case

SEQUENCE CONDITIONAL PROBABILITIES (SEQUENCE ORDER)

	Sequence	End State	Prob	N Rec**
15	trans -rt AFW MFW -hpi(f/b) -hpr/-hpi porv.open	CD	2.7E-06	4.1E-02
16	trans -rt AFW MFW -hpi(f/b) hpr/-hpi	CD	3.0E-07	4.1E-02
17	trans -rt AFW MFW hpi(f/b)	CD	2.9E-06	3.4E-02
18	trans rt	ATWS	3.4E-05	1.2E-01

** non-recovery credit for edited case

SEQUENCE MODEL: c:\asp\models\pwrbseal.cmp
BRANCH MODEL: c:\asp\models\trojan.sl1
PROBABILITY FILE: c:\asp\models\pwr_bsl1.pro

No Recovery Limit

Event Identifier: 344/92-020

BRANCH FREQUENCIES/PROBABILITIES

Branch	System	Non-Recov	Opr Fail
trans	5.6E-04	1.0E+00	
loop	1.6E-05	3.6E-01	
loca	2.4E-06	4.3E-01	
rt	2.8E-04	1.2E-01	
rt/loop	0.0E+00	1.0E+00	
emerg.power	2.9E-03	8.0E-01	
AFW	2.5E-03 > 6.5E-03	3.4E-01 > 1.2E-01[1]	
Branch Model: 1.OF.2			
Train 1 Cond Prob:	5.0E-02		
Train 2 Cond Prob:	5.0E-02 > 1.3E-01		
afw/emerg.power	2.5E-03	3.4E-01	
MFW	1.0E+00 > 1.0E+00	7.0E-02 > 3.4E-01	
Branch Model: 1.OF.1			
Train 1 Cond Prob:	1.0E+00		
porv.or.srv.chall	4.0E-02	1.0E+00	
porv.or.srv.reseat	2.0E-02	1.1E-02	
porv.or.srv.reseat/emerg.power	2.0E-02	1.0E+00	
seal.loca	2.3E-01	1.0E+00	
ep.rec(sl)	5.9E-01	1.0E+00	
ep.rec	6.1E-02	1.0E+00	
hpi	1.0E-03	8.4E-01	
hpi(f/b)	1.0E-03	8.4E-01	1.0E-02
hpr/-hpi	1.5E-04	1.0E+00	1.0E-03
porv.open	1.0E-02	1.0E+00	4.0E-04

* branch model file
** forced

Notes:
1. Secondary side depressurization and cooldown credited by adjusting the AFW nonrecovery probability. See modeling assumptions section for a description of this modification.

Event Identifier: 344/92-020