James A. FitzPat ck
Nuclear Power Plant
P.O. Box 41
Lycoming, New York 13093

315-342-3840

NewYorkPower Authority

Michael J. Colomb
Plant Manager

January 17, 1997
JAFP-97-0017

United States Nuclear Regulatory Commission
Attn: Document Control Desk
Mail Station P1-137
Washington, D.C. 20555

Subject: Docket No. 50-333
LICENSEE EVENT REPORT: LER-96-015

Design Error Allows Bypass Flow Path Around Offgas Isolation Valve

Dear Sir:

This report is submitted in accordance with 10 CFR 50.73 (a) (2) (v).

There are no commitments contained in this report.

Questions concerning this report may be addressed to Mr. David Burch at (315) 349-6311.

Very truly yours,

MICHAEL J. COLOMB

MJC:DEB:las
Enclosure

cc: USNRC, Region 1
USNRC Resident Inspector
INPO Records Center

1/1
IE22

270009

NRC FORM 366 (4-95) U.S. NUCLEAR REGULATORY COMMISSION

APPROVED BY OMB NO. 3150-0104
EXPIRES 04/30/98

ESTIMATED BURDEN PER RESPONSE TO COMPLY WITH THIS MANDATORY INFORMATION COLLECTION REQUEST: 50.0 HRS. REPORTED LESSONS LEARNED ARE INCORPORATED INTO THE LICENSING PROCESS AND FED BACK TO INDUSTRY. FORWARD COMMENTS REGARDING BURDEN ESTIMATE TO THE INFORMATION AND RECORDS MANAGEMENT BRANCH (T-6 F33), U.S. NUCLEAR REGULATORY COMMISSION, WASHINGTON, DC 20555-0001, AND TO THE PAPERWORK REDUCTION PROJECT (3150-0104), OFFICE OF MANAGEMENT AND BUDGET, WASHINGTON, DC 20503.

LICENSEE EVENT REPORT (LER)

(See reverse for required number of digits/characters for each block)

FACILITY NAME (1)	DOCKET NUMBER (2)	PAGE (3)
James A. FitzPatrick Nuclear Power Plant	05000333	01 OF 05

TITLE (4)

Design Error Allows Bypass Flow Path Around Offgas Isolation Valve

EVENT DATE (5)			LER NUMBER (6)			REPORT DATE (7)			OTHER FACILITIES INVOLVED (8)	
MONTH	DAY	YEAR	YEAR	SEQUENTIAL NUMBER	REVISION NUMBER	MONTH	DAY	YEAR	FACILITY NAME	DOCKET NUMBER
									N/A	05000
12	18	96	96	-- 015 --	00	01	17	97	N/A	05000

OPERATING MODE (9)	N
POWER LEVEL (10)	000

THIS REPORT IS SUBMITTED PURSUANT TO THE REQUIREMENTS OF 10 CFR §: (Check one or more) (11)

	20.2201(b)		20.2203(a)(2)(v)		50.73(a)(2)(i)		50.73(a)(2)(viii)
	20.2203(a)(1)		20.2203(a)(3)(i)		50.73(a)(2)(ii)		50.73(a)(2)(x)
	20.2203(a)(2)(i)		20.2203(a)(3)(ii)		50.73(a)(2)(iii)		73.71
	20.2203(a)(2)(ii)		20.2203(a)(4)		50.73(a)(2)(iv)		OTHER
	20.2203(a)(2)(iii)		50.36(c)(1)	X	50.73(a)(2)(v)		Specify in Abstract below or in NRC Form 366A
	20.2203(a)(2)(iv)		50.36(c)(2)		50.73(a)(2)(vii)		

LICENSEE CONTACT FOR THIS LER (12)

NAME	TELEPHONE NUMBER (Include Area Code)
Mr. David Burch, Senior Licensing Engineer	(315) 349-6311

COMPLETE ONE LINE FOR EACH COMPONENT FAILURE DESCRIBED IN THIS REPORT (13)

CAUSE	SYSTEM	COMPONENT	MANUFACTURER	REPORTABLE TO NPRDS		CAUSE	SYSTEM	COMPONENT	MANUFACTURER	REPORTABLE TO NPRDS

SUPPLEMENTAL REPORT EXPECTED (14)				EXPECTED SUBMISSION DATE (15)	MONTH	DAY	YEAR
	YES (If yes, complete EXPECTED SUBMISSION DATE).	X	NO				

ABSTRACT (Limit to 1400 spaces, i.e., approximately 15 single-spaced typewritten lines) (16)

During power ascension following refuel outage 12 in December, 1996, it was determined that a design deficiency existed in that steam jet air ejector effluent could bypass the 30 minute holdup volume and offgas filters when the system flow path downstream of the offgas drip pot was obstructed. While the reactor was shutdown on December 18, 1996, it was determined that this was a reportable condition.

The offgas piping design error was corrected by installation of a permanent modification which installed a check valve in the common drain line to prevent reverse flow from the steam jet air ejector discharge.

EIIS Codes are in []

EVENT DESCRIPTION

(Refer to Figure 1 for a simplified system flow diagram)

At 12:00 on December 18, 1996, it was determined that the original design of an interconnection between the condenser air removal system [SH] and the offgas system [WF] could have prevented the fulfillment of the safety function of a system required to control the release of radioactive material or mitigate the consequences of an accident. This determination was based on the observation that pressurization of the offgas 30 minute holdup volume would have cleared the water which effectively seals the condenser air removal pump / steam packing exhauster (CARP/SPE) discharge line from the offgas system by maintenance of level in the offgas drip pot and CARP/SPE discharge common drain from the drip pot and drain line, providing a flow path for offgas to bypass the offgas HEPA filters, 01-107F-1A/B, 30 minute holdup volume and offgas outlet isolation valve, 01-107AOV-100.

The offgas system is isolated by closure of 01-107AOV-100 in response to high radiation in the effluent. Closure of this valve will result in pressurization of the 30 minute holdup volume due to continued steam jet air ejector operation removing non-condensibles from the condenser [SG]. Pressurization of the 30 minute holdup volume may have resulted in offgas flow bypassing the 30 minute holdup volume and offgas HEPA filters (01-107F-1A/B) through the flowpath described above.

This condition was discovered during reactor startup from refuel outage 12 in December, 1996, when it was observed that high offgas system flow persisted in the absence of flow through the offgas HEPA filters (as indicated by filter differential pressure). It was subsequently determined that 01-107AOV-100 was inadvertently closed, and that offgas was being discharged through backflow through the CARP/SPE drain line and discharge piping.

EVENT CAUSE

The cause of the event was an error in the original plant design (cause code B) which created a potential discharge path from the offgas drip pot to the main stack through the common drain line from the steam packing exhauster and condenser air removal discharge pipe (1.75 minute holdup volume) to the drip pot. As designed, this line had no provision to prevent offgas backflow if the drip pot was pressurized sufficiently to clear the loop seal in the drip pot / drain line.

EVENT ANALYSIS

The only accident analysis which assumes offgas isolation is the control rod drop accident without main steam isolation valve closure and the augmented offgas treatment system out of service. In this sequence, isolation of the normal offgas flowpath is assumed to make the radiological consequences equivalent to the case when the MSIVs close, since the result will be a ground level release directly from the condenser and turbine building. As a result of the design error, the release path could be through the main stack as continued steam jet air ejector flow to remove condenser air in-leakage following the reactor scram pressurized the thirty minute holdup pipe and uncovered the bypass flow path through the offgas drip pot to the steam packing exhauster discharge line.

The design error is of low safety consequence, since the probability of a control rod drop accident which results in fuel damage (assuming analysis of the accident energy deposition using licensing basis models) is of the order 1E-12 per reactor year (as documented in the NRC safety evaluation accepting NEDE-24011-P-A, "General Electric Standard Application for Reactor Fuel," Revision 8, Amendment 17). Licensing basis analyses of the control rod drop accident are also extremely conservative since they do not credit moderator feedback (as documented in BNL-NUREG-28109, "Thermal-Hydraulic Effects on Center Rod Drop Accidents in a Boiling Water Reactor").

Response to offgas radioactivity transients is directed by annunciator response procedures which include the direction to monitor offgas and stack radiation levels, and to enter abnormal operating procedure, AOP-3, "High Activity in Reactor Coolant or Off-Gas," if appropriate. AOP-3 provides the direction to ensure 01-107AOV-100 is closed if the Off-Gas Rad Timer, 17-157 times out. If the valve is not closed (which would be inferred from the observation of continued elevated stack radiation monitor readings, direction is provided to close condenser isolation valves, 38AOV-113A/B (which will isolate the bypass leakage path).

This condition alone could have prevented the fulfillment of the safety function of a system required to control the release of radioactive material or mitigate the consequences of an accident which is being reported in accordance with 10 CFR 50.73(a)(2)(v).

CORRECTIVE ACTIONS

The following corrective action are planned or have been performed to prevent recurrence of a similar event.

1. Modification M1-96-103 was installed on December 17, 1996 and tested satisfactorily on December 18, 1996. This modification installed a check valve in the drain line from the common steam packing exhauster / condenser air removal pump discharge line to the offgas drip pot which will prevent reverse flow of the steam jet air ejector effluent in the event the thirty minute holdup volume is pressurized.

2. A calculation will be performed to evaluate the consequences of a control rod drop accident given the original configuration of the offgas system by March 19, 1997 (Corporate Radiological Engineering).

3. A revision to this LER documenting the results of corrective action 2 will be prepared, if necessary, by April 15, 1997 (Licensing).

ADDITIONAL INFORMATION

A. Failed Component Identification: None

Previous LERs in which design errors resulted in deficient system flow paths were:

91-031 Design Deficiency of the Emergency Service Water System Return Piping from the Emergency Diesel Generator Jacket Water Coolers

93-002 Identification of Relay Room Ventilation System Single Failure Non-Compliance

A design had been installed which did not maintain adequate separation between redundant safety-related ventilation systems and the non-safety-related carbon dioxide fire protection system.

FACILITY NAME (1)	DOCKET	LER NUMBER (6)			PAGE (3)
		YEAR	SEQUENTIAL NUMBER	REVISION NUMBER	
James A. FitzPatrick Nuclear Power Plant	05000333	96 --	015 --	00	05 OF 05

TEXT *(If more space is required, use additional copies of NRC Form 366A)* (17)

FIGURE 1

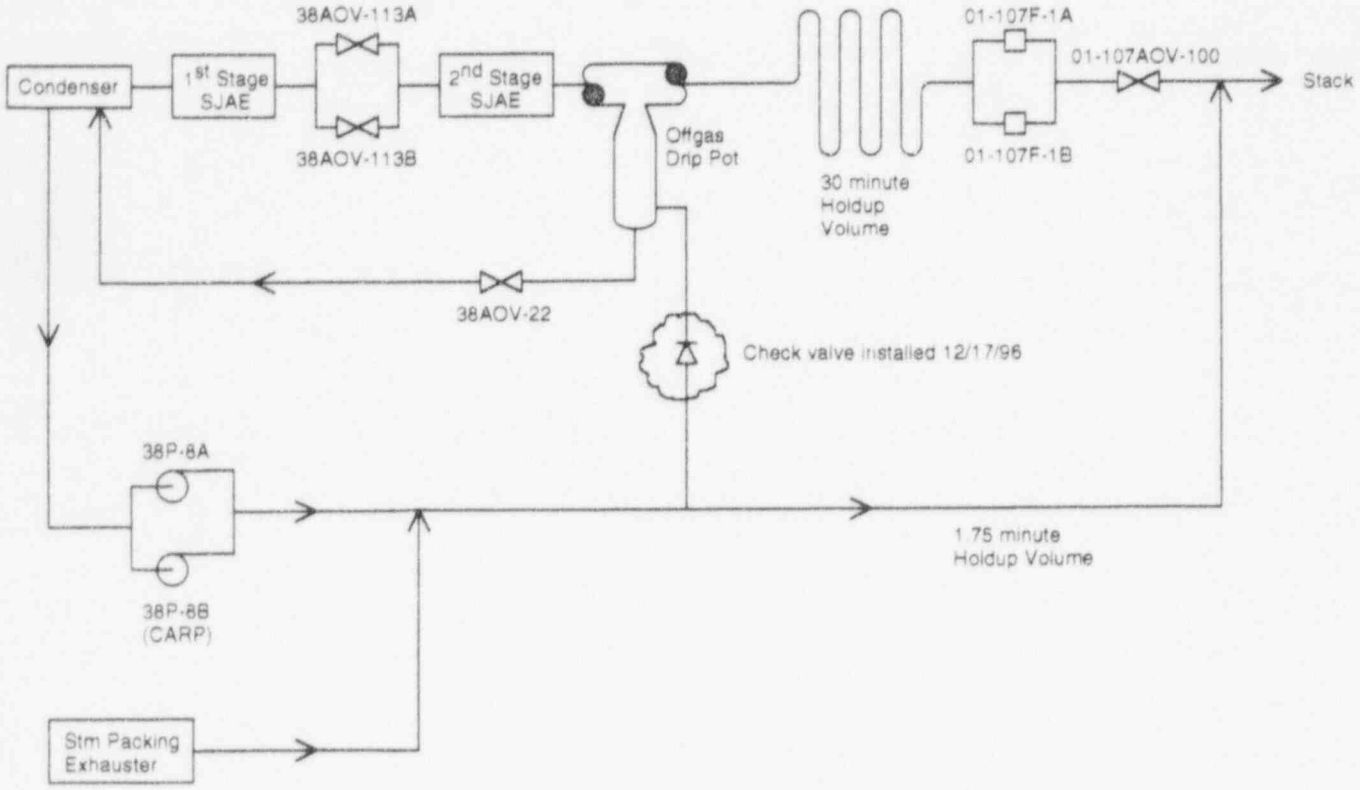

Simplified Offgas System Flow Diagram