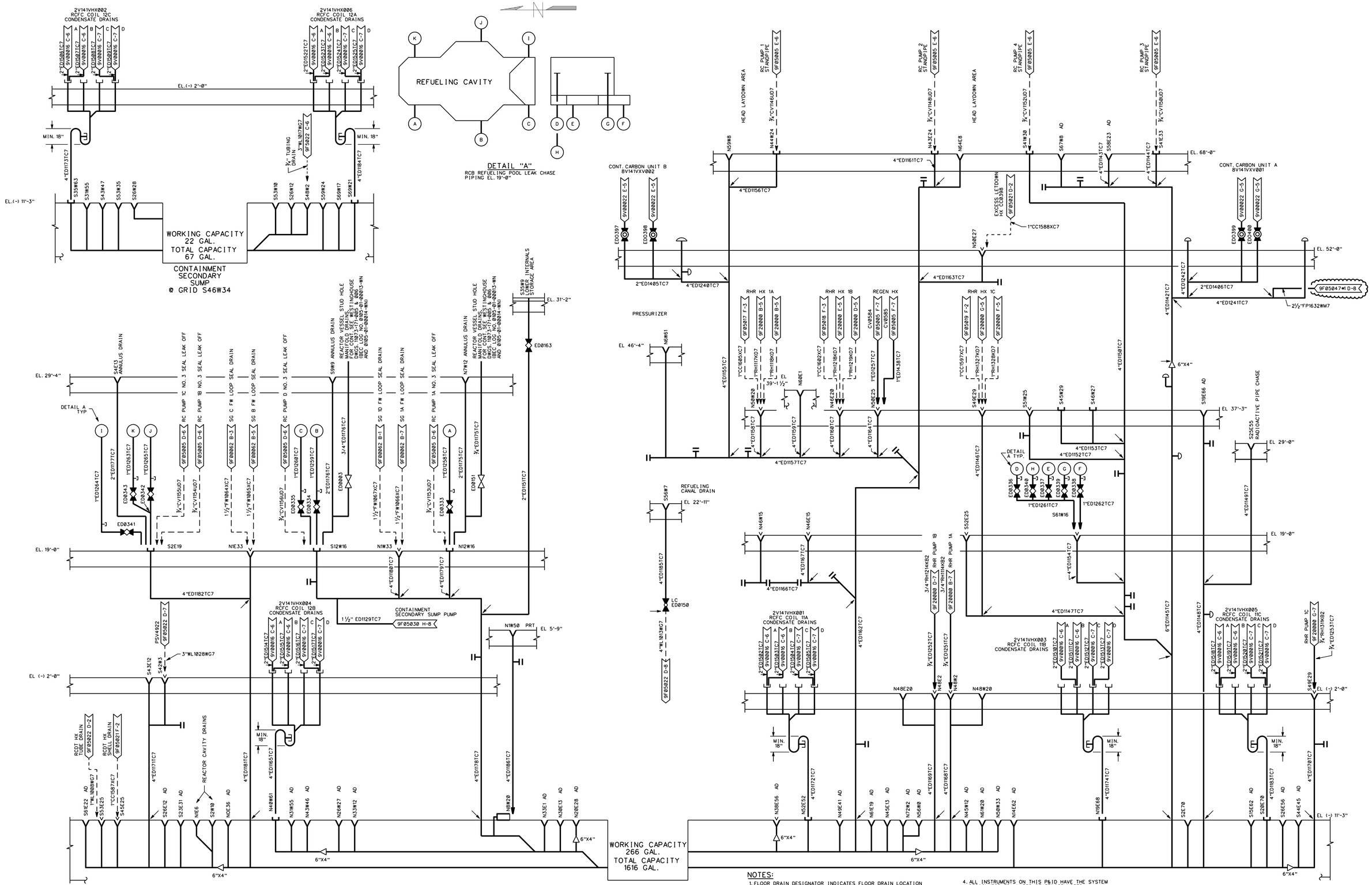

NOTES:

1. FLOOR DRAIN DESIGNATOR INDICATES FLOOR DRAIN LOCATION AS FOLLOWS: S19E66 MEANS THAT THE FLOORDRAIN IS LOCATED 19 FEET SOUTH OF THE REACTOR CENTER LINE AND 66 FEET EAST OF THE REACTOR CENTER LINE.
2. THE FOLLOWING UNIQUE SYMBOLS ARE USED ON THIS DRAWING.
   - FLOOR DRAIN, FD-10, FD-12
   - FLOOR DRAIN, FD-14
   - FLOOR DRAIN, FD-11
   - HUB DRAIN, HD-2
   - CLEANOUT, CO-5

   FOR AN EXPLANATION OF DRAIN FIXTURE TYPES, SEE REFERENCE 3.
3. AD DENOTES AREA DRAIN.
4. ALL INSTRUMENTS ON THIS P&ID HAVE THE SYSTEM DESIGNATOR ED UNLESS OTHERWISE NOTED.
5. ALL INSTRUMENTS ON THIS P&ID HAVE SEPARATION GROUP N UNLESS OTHERWISE NOTED.
6. THE FOLLOWING DENOTES CONCRETE FLOOR SLAB BOUNDARIES:
7. THE CLEANOUT DESIGN WILL BE FINALIZED LATER BASED ON THE PHYSICAL DESIGN AND DESIGN CRITERIA 5Q019NQ1015.
8. DELETED.
9. REFER TO DRAWINGS 9A310F00001 & 9A310F00002 FOR IDENTIFICATION NUMBER DETAILS.
10. THIS DRAWING AND 5Q069F90011 SUPERCEDE DRAWINGS 7Q061F5031 REV. H & 7Q062F5031 REV. E.
11. THIS DRAWING IS ONE OF TEN RVDS P&ID'S. SEE REFERENCE 2 FOR THE OTHER P&ID'S.

REFERENCES:

1. FOR PIPING AND INSTRUMENT SYMBOLS SEE DRAWING 9A310F00001 AND 9A310F00002.
2. OTHER RVDS P&ID'S ARE 5Q069F05030, 9Q069F05036, 5Q069F90011, 7Q069F90012, 7Q069F90013, 7Q069F90014, 7Q069F90015, 7Q069F90016 AND 9Q069F90026.
3. FLOOR DRAIN TYPES ARE SHOWN ON PLUMBING DRAWING 8C069B00093.

NO.	APPROVAL DATE	REVISION	ORIG	CKR	RE	DV	SE
14	2-20-20	REVISED TO CORRECT FLAG IDENTIFICATION AT COORD. F-1.	N/A	N/A	N/A		
0-13	10-18-83	ISSUED FOR CONSTRUCTION.	SIGNATURES ON FILE				

NO.	APPROVAL DATE	REVISION	ORIG	CKR	RE	DV	SE

SOUTH TEXAS PROJECT
NUCLEAR OPERATING COMPANY

PRIORITY	CADD FILE NO.	FSUG. NO.	STI. NO.
1	7Q069F90010#1.DGN	D070928	34988199

PIPING AND INSTRUMENTATION DIAGRAM
RADIOACTIVE VENT AND DRAIN SYSTEM
RCB GRAVITY DRAINS

SCALE	DWG. NO.	SHT.	REV.
NONE	7Q069F90010#1		14

ESSED. DGN

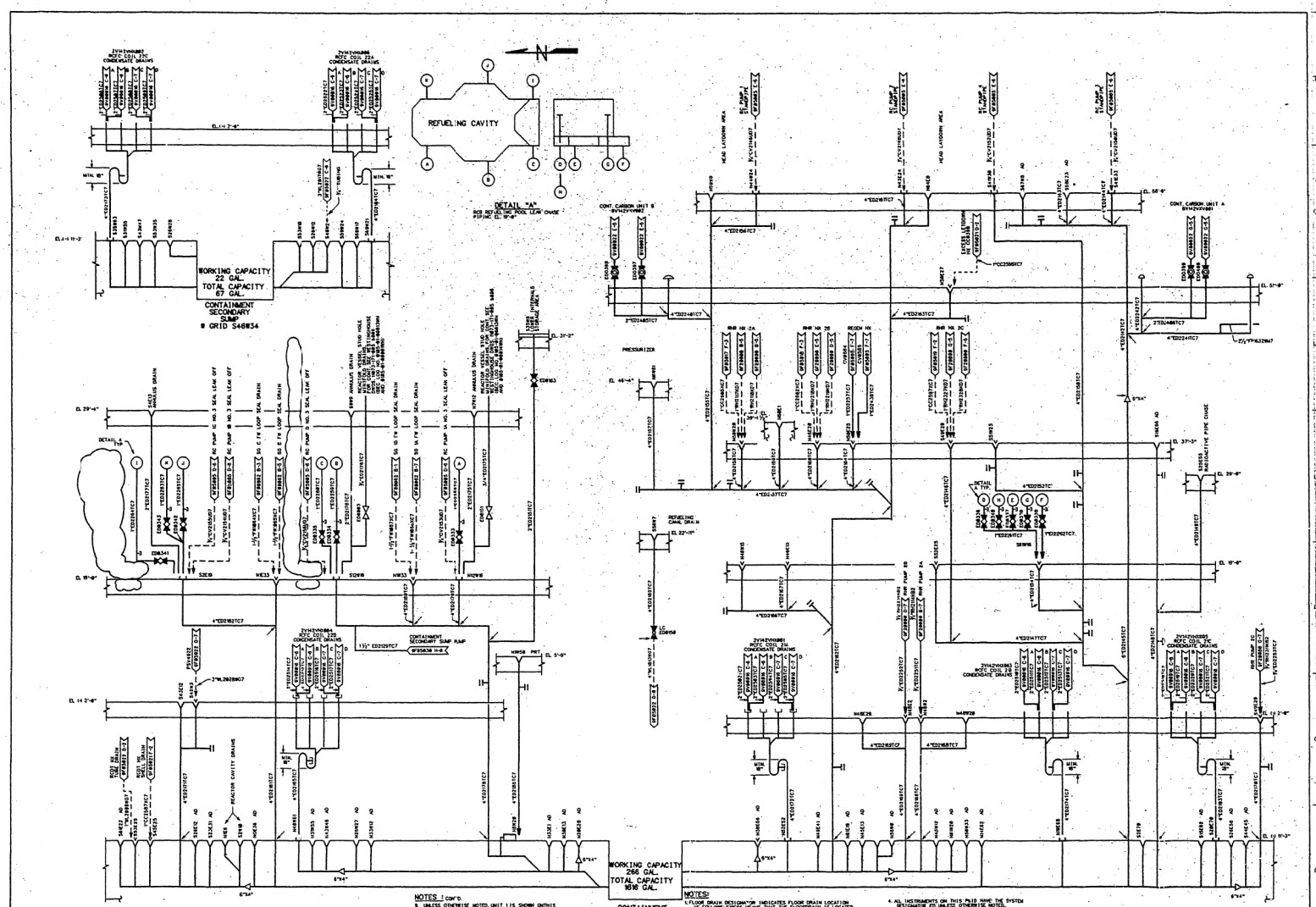

NOTES : CON'T.

9. UNLESS OTHERWISE NOTED, UNIT 1 IS SHOWN ON THIS P&ID FOR APPLICATION OF THE P&ID TO UNIT 2. USE UNIT 2 IDENTIFICATION NUMBERS FOR PIPING, VALVES, INSTRUMENTS, EQUIPMENT, ETC. REFER TO DRAWING 7Q069F5631 FOR UNIT 2 NUMBERS FOR IDENTIFICATION NUMBER DETAILS.

10. THIS DRAWING AND 7Q069F9001 SUPERCEDE DRAWINGS 7Q069F5631 REV. H & 7Q069F5631 REV. E.

11. THIS DRAWING IS ONE OF TEN. RCDS P&ID'S. SEE REFERENCE 2 FOR THE OTHER P&ID'S.

NOTES:

1. FLOOR DRAIN DESIGNATOR INDICATES FLOOR DRAIN LOCATION IS FOLLOWS: FIRST NUMBER INDICATES THE FLOOR DRAIN IS LOCATED WITH RESPECT TO THE REACTOR CENTER LINE AND 50 FEET EAST OF THE REACTOR CENTER LINE.

2. THE FOLLOWING UNIQUE SYMBOLS ARE USED ON THIS DRAWING.
   - FLOOR DRAIN, FD-14
   - FLOOR DRAIN, FD-41
   - HUB DRAIN, HD-2
   - CLEANOUT, CO-5

   FOR AN EXPLANATION OF DRAIN FIXTURE TYPES, SEE REFERENCE 3.

3. AC DENOTES AREA DRAIN.

4. ALL INSTRUMENTS ON THIS P&ID HAVE THE SYSTEM designator 50 UNLESS OTHERWISE NOTED.

5. ALL INSTRUMENTS ON THIS P&ID HAVE SEPARATION GROUP 'N' UNLESS OTHERWISE NOTED.

6. THE FOLLOWING DENOTES CONCRETE FLOOR SLAB BOUNDARIES:

7. THE CLEANOUT DESIGN WILL BE FINALIZED LATER BASED ON THE PHYSICAL DESIGN AND DESIGN CRITERIA DURING PHASE.

8. DELETED.

REFERENCES:

1. FOR PIPING AND INSTRUMENT SYMBOLS SEE DRAWING 5A13M9A001 AND 5A13M9A002.
2. OTHER RCDS P&ID'S ARE 7Q069F9001A, 7Q069F9001B, 7Q069F9001C, 7Q069F9001D, 7Q069F9001E, 7Q069F9001F, 7Q069F9001G, 7Q069F9001H, 7Q069F9001I, 7Q069F9001J & 7Q069F9001K.
3. FLOOR DRAIN TYPES ARE SHOWN ON PLUMBING DRAWING 5C06G0001.

SEQ.	NO.	ISSUE DATE	REVISION	DRIG	CKR	RE	DV	SE	NO.	ISSUE DATE	REVISION	DRIG	CKR	RE	DV	SE
11		02-/-97	INCORP. DCN 9784284.	VJM			N/A	N/A								
9-18		2-31-93	ISSUED FOR CONSTRUCTION.	SIGNATURES ON FILE												

SOUTH TEXAS PROJECT
NUCLEAR OPERATING COMPANY

PRIORITY	RMSECM NO.	DOC.CTL.NO.	CADD FILE NO.
1	7Q069F9001#2	D070928	FJA7H.111

PIPING AND INSTRUMENTATION DIAGRAM
RADIOACTIVE VENT AND DRAIN SYSTEM
RCB GRAVITY DRAINS

SCALE	DWG NO.	REV.
NONE	7Q069F9001#2	11

2RCB6

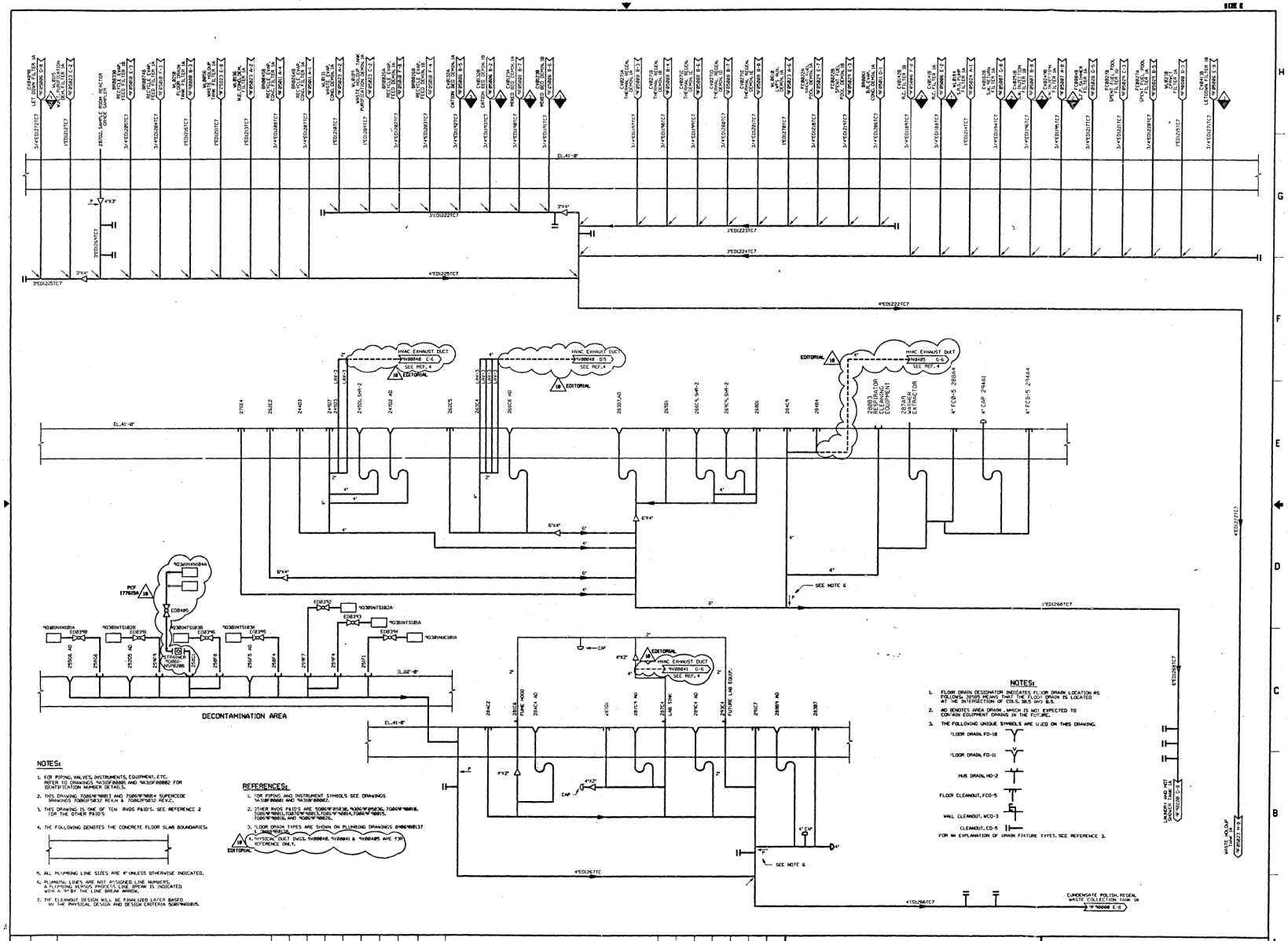

NOTES:

1. FOR PIPING, VALVES, INSTRUMENTS, EQUIPMENT, ETC. REFER TO DRAWINGS 9A30DF00001 AND 9A30DF00002 FOR IDENTIFICATION NUMBER DETAILS.
2. THIS DRAWING 70869F90813 AND 70869F90814 SUPERCEDE DRAWINGS 70869F5812 REV.A & 70869F5812 REV.C.
3. THIS DRAWING IS ONE OF TEN RVDS PAID'S. SEE REFERENCE 2 FOR THE OTHER PAID'S
4. THE FOLLOWING DENOTES THE CONCRETE FLOOR SLAB BOUNDARIES:
5. ALL PLUMBING LINE SIZES ARE 4" UNLESS OTHERWISE INDICATED.
6. PLUMBING LINE'S ARE NOT ASSIGNED LINE NUMBERS. A PLUMBING REVISION PROCESS LINE BREAK IS INDICATED WITH A "P" BY THE LINE BREAK ARROW.
7. THE CLEANOUT DESIGN WILL BE FINALIZED LATER BASED ON THE PHYSICAL DESIGN AND DESIGN CRITERIA 90819M01815.

REFERENCES:

1. FOR PIPING AND INSTRUMENT SYMBOLS SEE DRAWINGS 9A30DF00001 AND 9A30DF00002.
2. OTHER RVDS PAID'S ARE 70869F90830, 70869F90836, 70869F90818, 70869F90811, 70869F90813, 70869F90814, 70869F90815, 70869F90816, AND 70869F90826.
3. FLOOR DRAIN TYPES ARE SHOWN ON PLUMBING DRAWINGS 8H869M0137 AND 9H869L0.
4. PHYSICAL DUCT DWGS. 9Y00040, 9Y00041 & 9Y00485 ARE FOR REFERENCE ONLY.

NOTES:

1. FLOOR DRAIN DESIGNATOR INDICATES FLOOR DRAIN LOCATION AS FOLLOWS: 28305 DENOTES THE FLOOR DRAIN IS LOCATED AT THE INTERSECTION OF COLS. 3&5 AND B&5.
2. AD DENOTES AREA DRAIN, WHICH IS NOT EXPECTED TO CONTAIN EQUIPMENT DRAINS IN THE FUTURE.
3. THE FOLLOWING UNIQUE SYMBOLS ARE USED ON THIS DRAWING.

FLOOR DRAIN, FD-18
FLOOR DRAIN, FD-11
HUB DRAIN, HD-2
FLOOR CLEANOUT, FCO-5
WALL CLEANOUT, WCO-3
CLEANOUT, CO-5

FOR AN EXPLANATION OF DRAIN FIXTURE TYPES, SEE REFERENCE 3.

NO.	DATE	HL&P REVISION	BY	CHR	RE	DV	NA	SE	PE	NO.	DATE	HL&P REVISION	BY	CHR	RE	DV	NA	SE	PE
18	[illegible]	INCORP. PCF 177615A & EDITORIAL CHANGES (CHANGED HVAC EXHAUST DUCT LINES TO REF. LINES)	KS	[illegible]															
9	12-19-89	HL&P ASSUMES DESIGN CHANGE CONTROL, INCORP. MDCN 88-266-1.	SIGNATURES ON FILE																
8-8	10-26-83	ISSUED FOR CONTRUCTION	SIGNATURES ON FILE																

HOUSTON LIGHTING & POWER COMPANY
SOUTH TEXAS PROJECT ELECTRIC GENERATING STATION

PIPING & INSTRUMENTATION DIAGRAM
RADIOACTIVE VENT AND DRAIN SYSTEM
MAB SEGREGATED GRAVITY DRAINS

SCALE	DRAWING NO.	REV.
NONE	70869F90812 #1	18

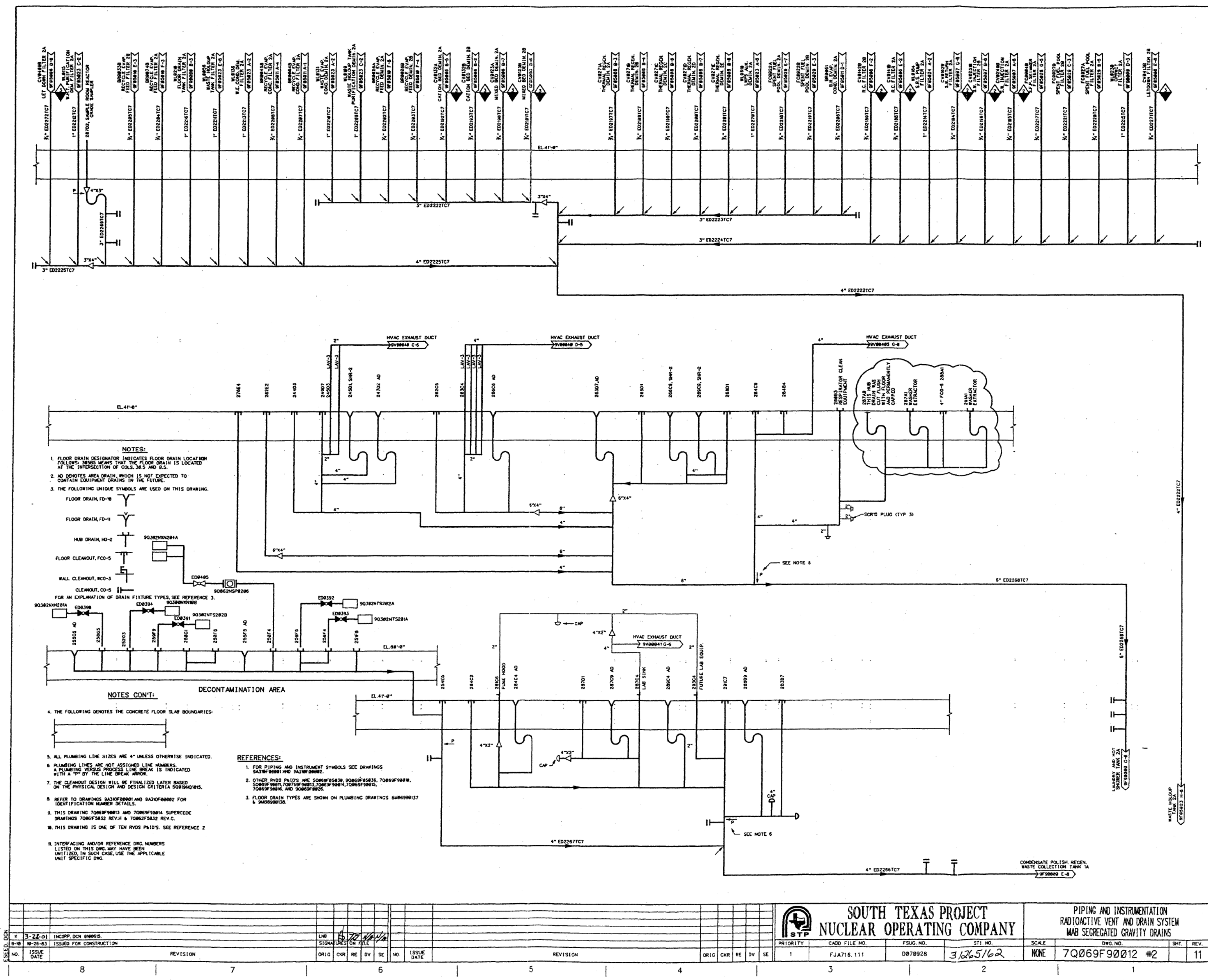

Printed by lino ON Friday March 23 2001 AT 12:00:35 PM CST

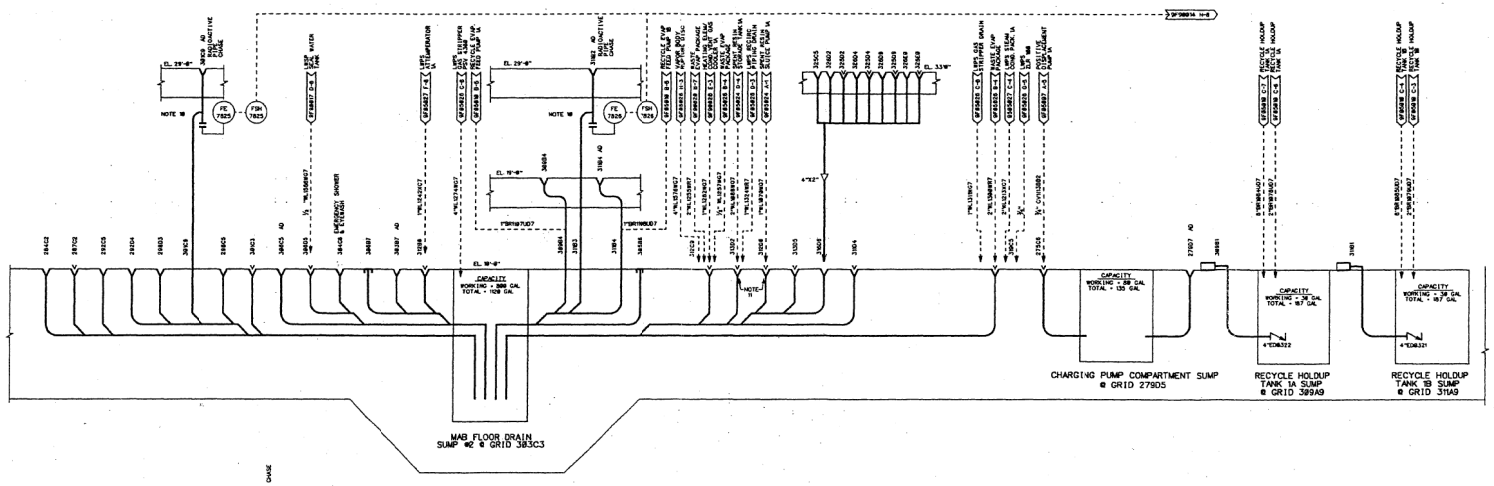

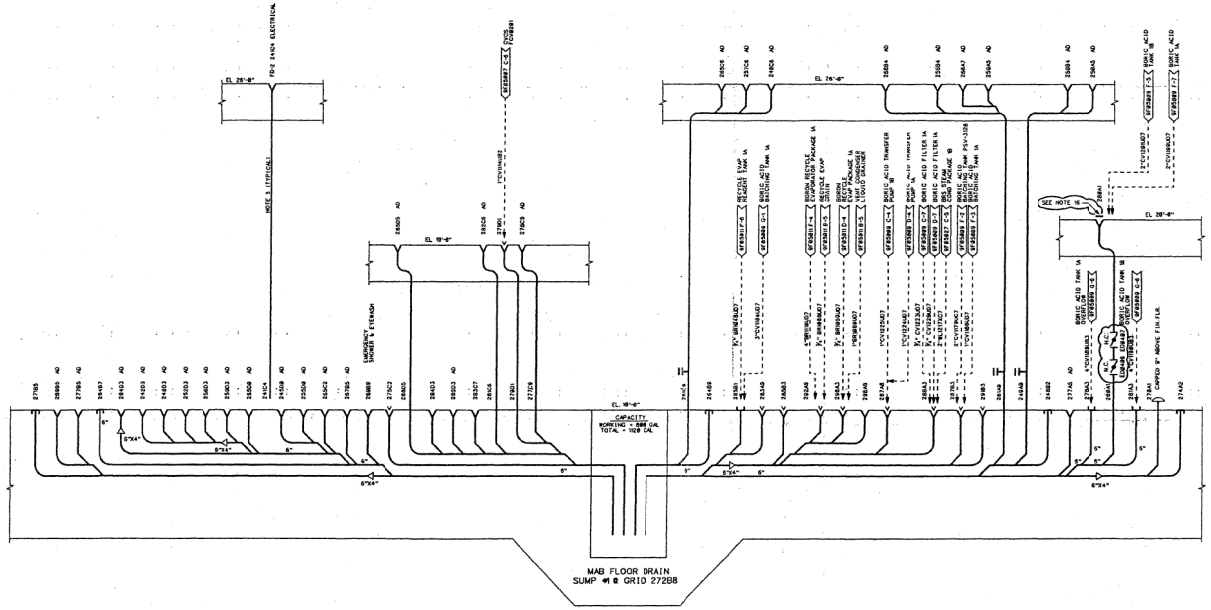

REFERENCES:

1. FOR PIPING & INSTRUMENT SYMBOLS SEE DRAWINGS 5A30F80001 AND 5A30F80002.
2. OTHER RYDS P&ID'S ARE 2Q060F85030, 9Q060F85035, 7Q060F90016, 7Q060F90017, 7Q060F90012, 7Q060F90014, 7Q060F90015, 7Q060F90016, AND 9Q060F85020.
3. FLOOR DRAIN TYPES ARE SHOWN ON PLUMBING DRAWINGS 6A0959F137 AND 6A0858F138.

NOTES:

1. FLOOR DRAIN DESIGNATOR INDICATES FLOOR DRAIN LOCATION AS FOLLOWS: 383C3 MEANS THAT THE FLOOR DRAIN IS LOCATED AT THE INTERSECTION OF COLS 38'S AND B'S.
2. AD DENOTES AREA DRAIN , WHICH IS NOT EXPECTED TO CONTAIN EQUIPMENT DRAINS IN THE FUTURE.
3. THE FOLLOWING UNIQUE SYMBOLS ARE USED ON THIS DRAWING:

FLOOR DRAIN, FD-18 FD-2 (WHEN SPECIFIED) — FD-10, CAPPED

FLOOR DRAIN, FD-11

HUB DRAIN, HD-2

FLOOR CLEANOUT, FCO-5

CLEANOUT, CB-5

FLOOR DRAIN, FD-14

FOR AN EXPLANATION OF DRAIN FIXTURE TYPES, SEE REFERENCE 3.

4. THE SUMP PUMPS, INSTRUMENTATION & PUMPED LINES TO THE LWPS ARE SHOWN ON P&ID 5F85028.
5. UNLESS BY PLUMBING, ALL DRAIN LINES SHOWN ARE 4" EXCEPT THOSE NOTED. NO LINE NUMBERS WILL BE ASSIGNED TO PLUMBING LINES.
6. THE FOLLOWING DENOTES THE CONCRETE FLOOR SLAB BOUNDARIES:
7. ALL INSTRUMENTS ON THIS P&ID HAVE SYSTEM DESIGNATOR ED UNLESS OTHERWISE NOTED.
8. ALL INSTRUMENTS ON THIS P&ID HAVE SEPARATION GROUP N UNLESS OTHERWISE NOTED.
9. FE7805 AND FE7806 ARE CONDUCTIVITY DETECTING FLOW ELEMENTS.
10. FOR PHYSICAL DESIGN OF INSTRUMENT TAP SEE DETAIL A-A OF 6A0959F128.
11. INSTALL 8# MESH SCREEN IN THE FLOOR DRAIN FIXTURE AS SHOWN IN DETAIL A OF 6A0858B133.
12. THE CLEANOUT DESIGN WILL BE FINALIZED LATER BASED ON THE PHYSICAL DESIGN AND DESIGN CRITERIA 5Q0MMCM015.
13. UNLESS OTHERWISE NOTED, UNIT 1 IS SHOWN ON THIS P&ID.
14. THIS DRAWING,7Q060F90012 AND 7Q060F90014, SUPERCEDE DRAWINGS 7Q060F5431 REV H & 7Q062F5432 REV. C.
15. THIS DRAWING IS ONE OF TEN RYDS P&ID'S. SEE REFERENCE 2 FOR OTHER P&ID'S.
16. ASSUMPTION IN THE CALCULATIONS MC-6143 & MC-6783 THAT THE FLOOR DRAIN IN BORIC ACID TANK ROOM IS SEALED/CAPPED IS SATISFIED BY THE NORMALLY CLOSED DOUBLE ISOLATION VALVES EDM4AB & EDM4BT. CURRENTLY INSTALLED DRAIN COVER SHOULD BE LEFT IN PLACE.

NO.	ISSUE DATE	REVISION	ORIG	CKR	RE	DV	SE	NO.	ISSUE DATE	REVISION	ORIG	CKR	RE	DV	SE
6	8-17-99	INCORP. DCN 9982682.	VJM												
0-5	10-26-83	ISSUED FOR CONSTRUCTION.	SIGNATURES ON FILE												

SEED DGN

SOUTH TEXAS PROJECT
NUCLEAR OPERATING COMPANY

PIPING & INSTRUMENTATION DIAGRAM
RADIOACTIVE VENT AND DRAIN SYSTEM
DRAINS TO MAB SUMPS #1, #2, CHARGING PUMP COMPARTMENT SUMP & RECYCLE HOLDUP TANK SUMPS

PRIORITY	CADD FILE NO.	FSAR NO.	STI NO.	SCALE	DWG. NO.	SHT.	REV.
1	FJA175.861	Q070928	3093686	NONE	7Q069F90013#1		6

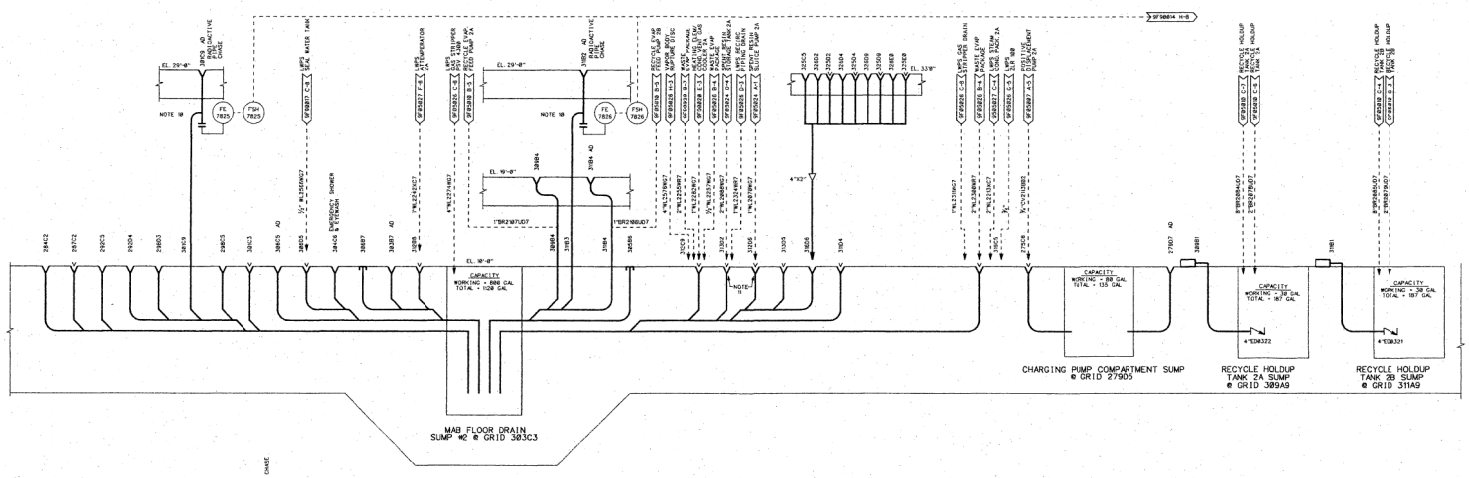

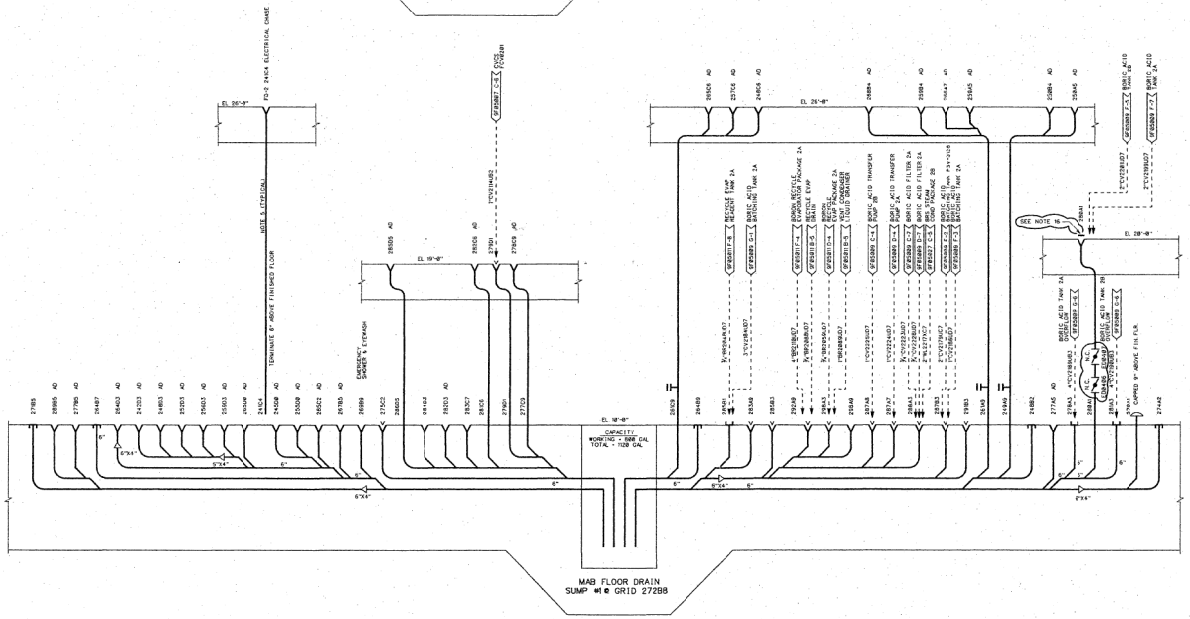

REFERENCES:

1. FOR PIPING & INSTRUMENT SYMBOLS SEE DRAWING 9A31RF00001 AND 9A30RF00002.
2. OTHER RVDS P&ID'S ARE 9Q069F85036, 7Q069F9009A, 9Q069F9004A, 7Q069F9001Z, 7Q069F9001A, 7Q069F9001D, 7Q069F9001N & 9Q069F90026.
3. FLOOR DRAIN TYPES ARE SHOWN ON PLUMBING DRAWINGS 9A8R00027 AND 9A8R00015.

NOTES:

1. FLOOR DRAIN DESIGNATOR INDICATES FLOOR DRAIN LOCATION AS FOLLOWS: 3R303 MEANS THAT THE FLOOR DRAIN IS LOCATED AT THE INTERSECTION OF COLS. 303 AND B.5.
2. AD DENOTES AREA DRAIN WHICH IS NOT EXPECTED TO CONTAIN EQUIPMENT DRAINS IN THE FUTURE.
3. THE FOLLOWING UNIQUE SYMBOLS ARE USED ON TH S DRAWING:

FLOOR DRAIN, FD-10 FD-2 (WHEN SPECIFIED)

FD-10, CAPPED

FLOOR DRAIN, FD-11

HUB DRAIN, HD-2

FLOOR CLEANOUT, FCO-5

CLEANOUT, CO-5

FLOOR DRAIN, FD-14
FOR AN EXPLANATION OF DRAIN FIXTURE TYPES, SEE REFERENCE 3.

4. THE SUMP PUMPS, INSTRUMENTATION & PUMPED LINES TO THE LMPS ARE SHOWN ON P&ID 9F85038.
5. WATER PT PLUMBING ALL DRAIN LINES SHOWN ARE 4" EXCEPT THOSE NOTED NO LINE NUMBERS WILL BE ASSIGNED TO PLUMBING LINES.
6. THE FOLLOWING DENOTES THE CONCRETE FLOOR SLAB BOUNDARIES:
7. ALL INSTRUMENTS ON THIS P&ID HAVE SYSTEM DESIGNATOR ED UNLESS OTHERWISE NOTED.
8. ALL INSTRUMENTS ON THIS P&ID HAVE SEPARATION GROUP N UNLESS OTHERWISE NOTED.
9. FE7825 AND FE7826 ARE CONDUCTIVITY DETECTING FLOW ELEMENTS.
10. FOR PHYSICAL DESIGN OF INSTRUMENT TAP SEE DETAIL A-A OF 9A8D00026.
11. INSTALL 88 MESH SCREEN IN THE FLOOR DRAIN FIXTURE AS SHOWN IN DETAIL A OF 9A8D00035.
12. THE CLEANOUT DESIGN WILL BE FINALIZED LATER BASED ON THE PHYSICAL DESIGN AND DESIGN CRITERIA 9Q069M0015.
13. DELETED.
14. THIS DRAWING 7Q069F90012 AND 7Q069F9004A SUPERCEDE DRAWINGS 7Q069W3032 REV H & 7Q069Z5032 REV. C.
15. THIS DRAWING IS ONE OF TEN RVDS P&ID'S. SEE REFERENCE 2 FOR OTHER P&ID'S.
16. ASSUMPTION IN THE CALCULATIONS MC-6163 & MC-9783 THAT THE FLOOR DRAIN IN BORIC ACID TANK ROOM IS SEALED/CAPPED IS SATISFIED BY THE NORMALLY CLOSED DOUBLE ISOLATION VALVES EB4B6 & EB4B7. CURRENTLY INSTALLED DRAIN COVER SHOULD BE LEFT IN PLACE.

NO.	ISSUE DATE	REVISION	ORIG	CKR	RE	DV	SE	NO.	ISSUE DATE	REVISION	ORIG	CKR	RE	DV	SE
6	12/19/97	INCORP DCN 9902682	VJM												
0-5	10-26-83	ISSUED FOR CONSTRUCTION.	SIGNATURES ON FILE												

SEEED DCN

SOUTH TEXAS PROJECT
NUCLEAR OPERATING COMPANY

PRIORITY	CADD FILE NO.	FSUG. NO.	STI. NO.
1	FJA575.861	D070928	3093982

PIPING & INSTRUMENTATION DIAGRAM
RADIOACTIVE VENT AND DRAIN SYSTEM
DRAINS TO MAB SUMPS #1, #2, CHARGING PUMP COMPARTMENT SUMP & RECYCLE HOLDUP TANK SUMPS

SCALE	DWG. NO.	SHT.	REV.
NONE	7Q069F90013#2		6

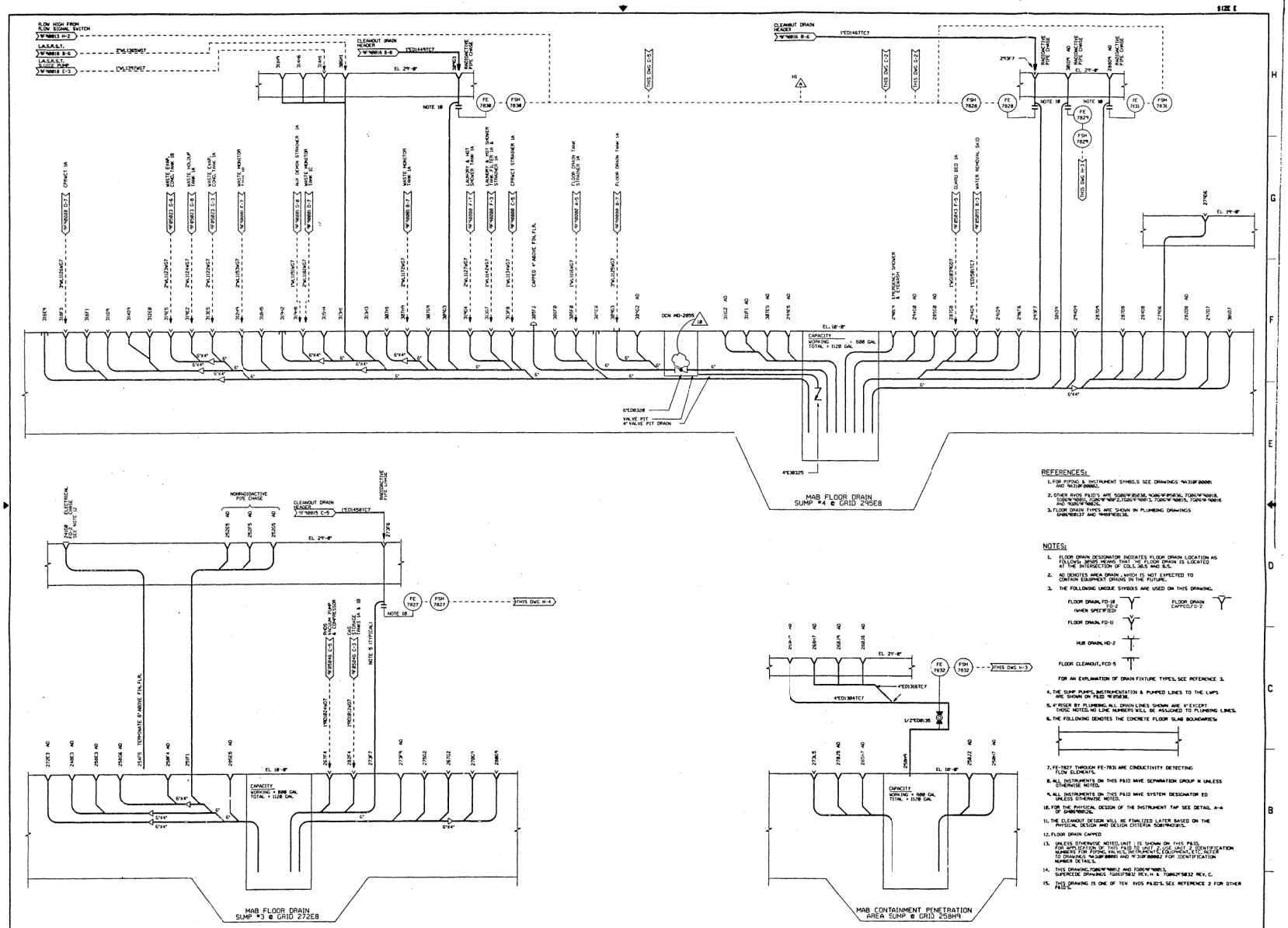

REFERENCES:

1. FOR PIPING & INSTRUMENT SYMBOLS SEE DRAWINGS 4A31BF00001 AND 4A31BF00002.
2. OTHER RVDS P&ID'S ARE 7006AF00030, 7006AF00036, 7006AF00018, 7006AF00011, 7006AF00012, 7006AF00013, 7006AF00015, 7006AF00016 AND 7006AF00025.
3. FLOOR DRAIN TYPES ARE SHOWN ON PLUMBING DRAWINGS 6A86R00137 AND 7M85R00136.

NOTES:

1. FLOOR DRAIN DESIGNATOR INDICATES FLOOR DRAIN LOCATION AS FOLLOWS: 3B05 MEANS THAT THE FLOOR DRAIN IS LOCATED AT THE INTERSECTION OF COLS. 3B.5 AND B.5.
2. AD DENOTES AREA DRAIN, WHICH IS NOT EXPECTED TO CONTAIN EQUIPMENT DRAINS IN THE FUTURE.
3. THE FOLLOWING UNIQUE SYMBOLS ARE USED ON THIS DRAWING.

FLOOR DRAIN, FD-18 FD-2 (WHEN SPECIFIED) — FLOOR DRAIN CAPPED, FD-2

FLOOR DRAIN, FD-11

HUB DRAIN, HD-2

FLOOR CLEANOUT, FCO-5

FOR AN EXPLANATION OF DRAIN FIXTURE TYPES, SEE REFERENCE 3.

4. THE SUMP PUMPS, INSTRUMENTATION & PUMPED LINES TO THE LWPS ARE SHOWN ON P&ID 4F00030.
5. 4" RISER BY PLUMBING. ALL DRAIN LINES SHOWN ARE 4" EXCEPT THOSE NOTED. NO LINE NUMBERS WILL BE ASSIGNED TO PLUMBING LINES.
6. THE FOLLOWING DENOTES THE CONCRETE FLOOR SLAB BOUNDARIES:
7. FE-7827 THROUGH FE-7831 ARE CONDUCTIVITY DETECTING FLOW ELEMENTS.
8. ALL INSTRUMENTS ON THIS P&ID HAVE SEPARATION GROUP N UNLESS OTHERWISE NOTED.
9. ALL INSTRUMENTS ON THIS P&ID HAVE SYSTEM DESIGNATOR ED UNLESS OTHERWISE NOTED.
10. FOR THE PHYSICAL DESIGN OF THE INSTRUMENT TAP SEE DETAIL A-4 OF 6A86R00136.
11. THE CLEANOUT DESIGN WILL BE FINALIZED LATER BASED ON THE PHYSICAL DESIGN AND DESIGN CRITERIA 5C87R00015.
12. FLOOR DRAIN CAPPED
13. UNLESS OTHERWISE NOTED, UNIT 1 IS SHOWN ON THIS P&ID. FOR APPLICATION OF THIS P&ID TO UNIT 2 USE UNIT 2 IDENTIFICATION NUMBERS FOR PIPING, VALVES, INSTRUMENTS, EQUIPMENT, ETC. REFER TO DRAWINGS 4A31BF00001 AND 4A31BF00002 FOR IDENTIFICATION NUMBER DETAILS.
14. THIS DRAWING, 7006AF00012 AND 7006AF00013, SUPERCEDE DRAWINGS 7QB01F5832 REV. H & 7QB02F5832 REV. C.
15. THIS DRAWING IS ONE OF TEN RVDS P&ID'S. SEE REFERENCE 2 FOR OTHER P&ID'S.

NO.	ISSUE DATE	HL&P REVISION	BY	CKR	PE	DV	NA	SE	PE	NO.	ISSUE DATE	HL&P REVISION	BY	CKR	PE	DV	NA	SE	PE
10	10-2-95	INCORP DCN MO-2855	JFH	KB 10/5/95	—	—	10/5/95												
9	8-11-89	HL&P ASSUMES DESIGN CHANGE CONTROL & INC. DCN MO-534.	SIGNATURES ON FILE																
8-8	12-19-83	ISSUED FOR CONSTRUCTION	SIGNATURES ON FILE																

HOUSTON LIGHTING & POWER COMPANY
SOUTH TEXAS PROJECT ELECTRIC GENERATING STATION

PIPING & INSTRUMENTATION DIAGRAM
RADIOACTIVE VENT AND DRAIN SYSTEM
DRAINS TO MAB SUMPS #3, #4, AND
MAB CONTAINMENT PENETRATION AREA SUMP

SCALE	DRAWING NO.	REV
NONE	7006AF00014 #1	10

SIZE E

F1617E.1B1

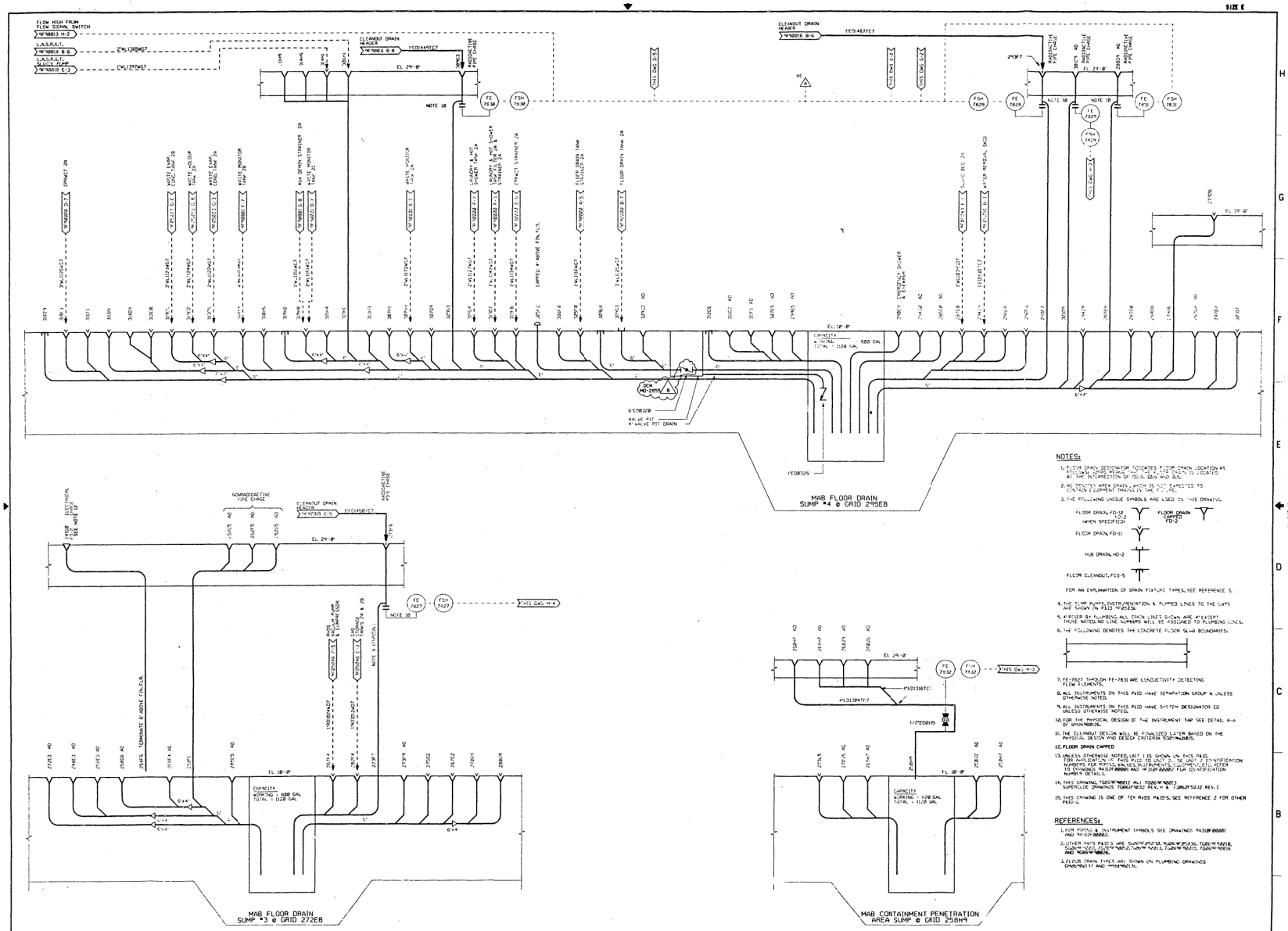
MAB FLOOR DRAIN
SUMP #4 @ GRID 295E8
MAB FLOOR DRAIN
SUMP #3 @ GRID 272E8
MAB CONTAINMENT PENETRATION
AREA SUMP @ GRID 258H9
CLEANOUT DRAIN HEADER
FLOW HIGH FROM FLOW SIGNAL SWITCH
L.A.S.R.S.T.
L.A.S.R.S.T. SUMP PUMP
EL 24'-8"
EL 18'-8"
NOTE 10
CAPACITY
WORKING = 920 GAL
TOTAL = 1120 GAL
VALVE PIT
4" HOSE PIT DRAIN
NONRADIOACTIVE PIPE CHASE
RADIOACTIVE PIPE CHASE
ELECTRICAL PIPE CHASE
FLOOR DRAIN TANK
WASTE MONITOR TANK
WASTE EVAP. CONC. TANK
WASTE HOLDUP TANK
HUB DRAIN STRAINER
EMERGENCY SHOWER & EYEWASH
WATER REMOVAL SKID
CAPPED 4" HOSE FIN. FLR.
TERMINATE 6" HOSE FIN. FLR.
SEE NOTE 12
SEE NOTE 13
SEE NOTE 14
SEE NOTE 15
NOTES:
1. FLOOR DRAIN DESIGNATOR INDICATES FLOOR DRAIN LOCATION AS FOLLOWS: WHERE MEANS THAT THE FLOOR DRAIN IS LOCATED AT THE INTERSECTION OF GRIDS BOX AND BOS.
2. AE DENOTES AREA DRAIN, WHICH IS NOT EXPECTED TO CONTAIN EQUIPMENT DRAINS IN THE FUTURE.
3. THE FOLLOWING UNIQUE SYMBOLS ARE USED ON THIS DRAWING.
FLOOR DRAIN, FD-12 (FD-12 WHEN SPECIFIED)
FLOOR DRAIN CAPPED FD-2
FLOOR DRAIN FD-11
HUB DRAIN, HD-2
FLOOR CLEANOUT, FCO-5
FOR AN EXPLANATION OF DRAIN FIXTURE TYPES, SEE REFERENCE 3.
4. THE SUMP PUMPS, INSTRUMENTATION & PUMPED LINES TO THE LWPS ARE SHOWN ON P&ID 7086E8.
5. 4" HOSE BY PLUMBING ALL DRAIN LINES SHOWN ARE 4" EXCEPT THOSE NOTED. NO LINE NUMBERS WILL BE ASSIGNED TO PLUMBING LINES.
6. THE FOLLOWING DENOTES THE CONCRETE FLOOR SLAB BOUNDARIES:
7. FE-7827 THROUGH FE-7831 ARE CONDUCTIVITY DETECTING FLOW ELEMENTS.
8. ALL INSTRUMENTS ON THIS P&ID HAVE SEPARATION GROUP N UNLESS OTHERWISE NOTED.
9. ALL INSTRUMENTS ON THIS P&ID HAVE SYSTEM DESIGNATOR ED UNLESS OTHERWISE NOTED.
10. FOR THE PHYSICAL DESIGN OF THE INSTRUMENT TAP SEE DETAIL A-4 OF 7086F9B016.
11. THE CLEANOUT DESIGN WILL BE FINALIZED LATER BASED ON THE PHYSICAL DESIGN AND DESIGN CRITERIA 9287-9A2B15.
12. FLOOR DRAIN CAPPED
13. UNLESS OTHERWISE NOTED, UNIT 1 IS SHOWN ON THIS P&ID. FOR APPLICATION OF THIS P&ID TO UNIT 2, SEE UNIT 2 IDENTIFICATION NUMBERS FOR PIPING, VALVES, INSTRUMENTS, EQUIPMENT, ETC. REFER TO DRAWINGS 7086F9B001 AND 7086F9A002 FOR IDENTIFICATION NUMBERS DETAILS.
14. THIS DRAWING, 7086F9B012 (ALL 7086F9B013) SUPERSEDES DRAWINGS 7086F9B32 REV. H & 7086F9B32 REV. C
15. THIS DRAWING IS ONE OF TEN RVDS P&ID'S. SEE REFERENCE 2 FOR OTHER P&ID'S.
REFERENCES:
1. FOR PIPING & INSTRUMENT SYMBOLS SEE DRAWINGS 9A310F00001 AND 9A310F00002.
2. OTHER RVDS P&ID'S ARE 7086F9B032, 7086F9B033, 7086F9B018, 7086F9B021, 7086F9B022, 7086F9B023, 7086F9B025, 7086F9B028 AND 7086F9B026.
3. FLOOR DRAIN TYPES ARE SHOWN ON PLUMBING DRAWINGS 9A067B0137 AND 9A067B0138.
HOUSTON LIGHTING & POWER COMPANY
SOUTH TEXAS PROJECT ELECTRIC GENERATING STATION
PIPING & INSTRUMENTATION DIAGRAM
RADIOACTIVE VENT AND DRAIN SYSTEM
DRAINS TO MAB SUMPS #3, #4, AND
MAB CONTAINMENT PENETRATION AREA SUMP
SCALE: NONE
DRAWING NO.: 7086F9B014 #2
REV: 8
NO. | ISSUE DATE | MLAP REVISION | BY | CKR | RE | DV | NA | SZ | PE
SIZE E
FJA576.001

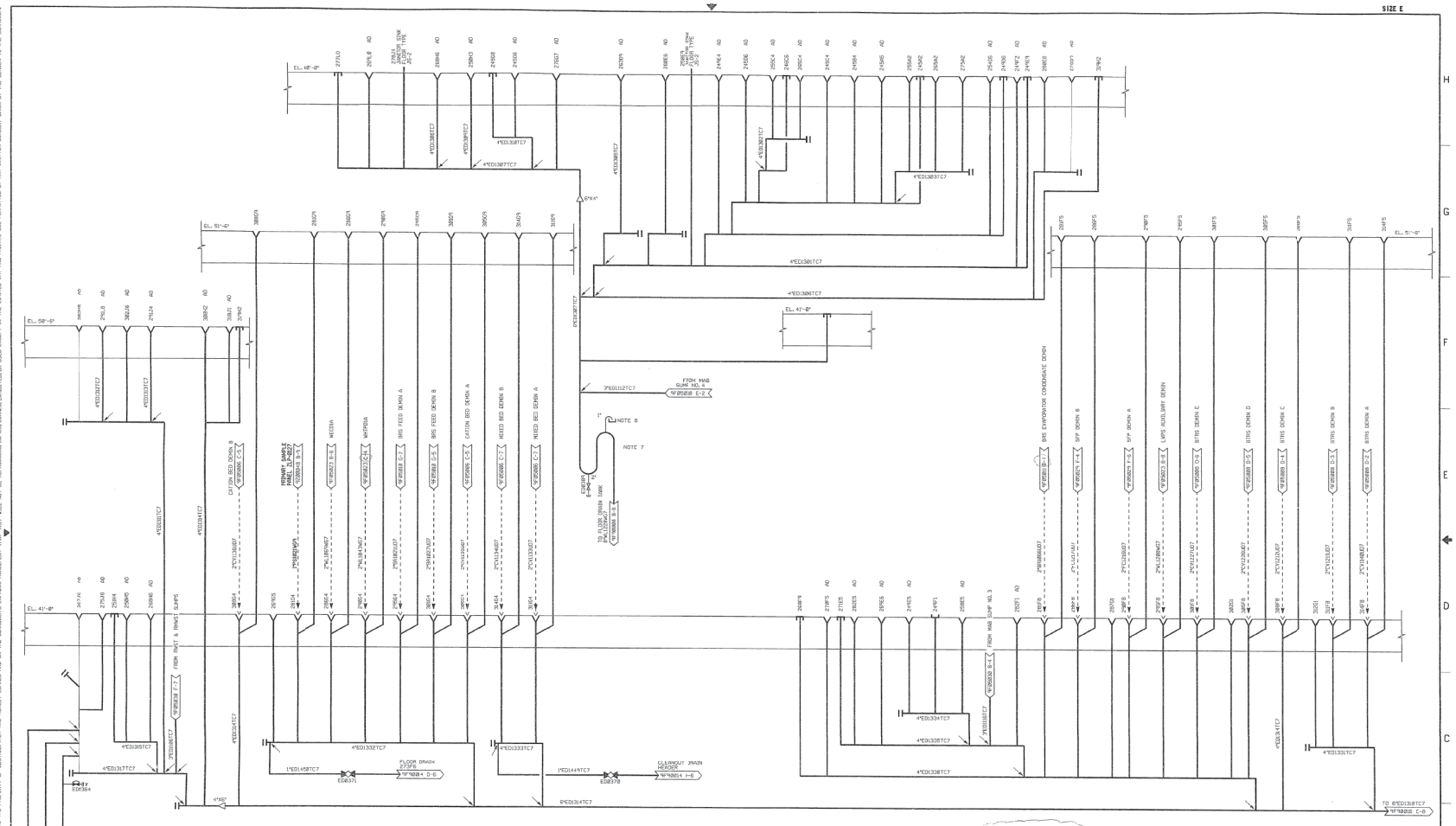

(10) THIS DRAWING IS APPLICABLE TO UNIT 1 & UNIT 2. THE COMPONENTS AND PIPING OF THE RVDS OF UNIT 2 ARE IDENTICAL TO THOSE SHOWN IN THIS DRAWING, BUT THE TPNO NUMBERS WILL BE FOR UNIT 2.

(10) THIS DRAWING & 70B69F90013 REPLACES DRAWING 70B69F90012 REVISION 8

(11) THIS DRAWING IS ONE OF TWO RVDS DRAWINGS SEE REFERENCE 2 FOR THE OTHER PAID'S.

REFERENCES

1. FOR PIPING & INSTRUMENT SYMBOLS SEE DRAWING "N10JBF00001 & "N10JBF00002.
2. OTHER RVDS PAID'S ARE "70B69F90010,70B69F90012,70B69F90013 70B69F90014,70B69F90015,71B69F90016,70B69F90017 & 70B69F90018 & 70B69F90026.
3. FLOOR DRAIN TYPES ARE SHOWN ON PLUMBING DRAWING SMB69B0033.

NOTES

1. FLOOR DRAIN DESIGNATOR INDICATES FLOOR DRAIN LOCATION AS FOLLOWS: 38B6S MEANS THAT THE FLOOR DRAIN IS LOCATED AT THE INTERSECTION OF COLS. 38.0 & B.5.
2. THE MAB CONTAINMENT PENETRATION AREA SUMP IS SHOWN ON DRAWING 70C69F9004 WHEN ISSUED
3. CLEANOUTS ARE INDICATED BY THE BLIND FLANGE SYMBOLS SEE DESIGN CRITERIA R0B1-R0B15 FOR ADDITIONAL INFORMATION.

4. THE FOLLOWING UNIQUE SYMBOLS ARE USED ON THIS DRAWING:

FLOOR DRAIN , FD-10

FLOOR DRAIN , FD-11

HUB DRAIN , HD-2

FLOOR CLEANOUT, FCO-5

FOR AN EXPLANATION OF DRAIN FIXTURE TYPES,SEE REFERENCE 3.

5. AD DENOTES AREA DRAIN ,WHICH IS NOT EXPECTED TO CONTAIN EQUIPMENT DRAINS IN THE FUTURE.
6. THE FOLLOWING DENOTES THE CONCRETE FLOOR SLAB BOUNDARIES:
7. THE LOOP SEAL IN LINE 6"ED1387TC7 IS 31 1/2" HIGH.
8. THREADED CAP TO BE INSTALLED ONLY WHEN FLOOR DRAIN ONE DIRECTLY TO THE L.P.CONDENSATE POLISHING REGENERATION WASTE COLLECTION TANK.

7 REV / MJL HL&P 11/6/87 DATE 14926001

8 REV / AKG HL&P 11/10/87 DATE 14926001

REV	CHIEF ENGR	CLIENT	NO.	REVISION	RE	CKR	GL	EGS	PE	DATE
	N/A	N/A	4	INCORP FCR BH000527, SUPERSEDED BY DWG 70B69F90015 #1 & 70B69F90015 #2.		SIGNATURES ON FILE				5-6-87
	N/A	N/A	3	INCORP DCN ELFCR8M00314 & PER REV. REPORT		SIGNATURES ON FILE				11-22-86
	N/A	N/A	2	INCORPORATED DCN 6		SIGNATURES ON FILE				10-24-85
	N/A	N/A	1	INCORPORATED DCN 1 TO 4		SIGNATURES ON FILE				2-11-85
	N/A	N/A	0	ISSUED FOR CONST. & REVISED PER REV. REPORT		SIGNATURES ON FILE				3-12-83

REV	CHIEF ENGR	CLIENT	NO.	REVISION	RE	CKR	GL	EGS	PE	DATE
8	N/A	N/A	8	INCORP REVISION REPORT	MAB	GBF	MJL	EGS	PEO	1-6-88
7	N/A	N/A	7	ISSUED FOR CADD CONVERSION	JF	MJL	MJL	EGS	PEO	8-10-87
6	N/A	N/A	6	INCORP FCR SH00387 (FROM "N"SERIES)		SIGNATURES ON FILE				5-15-87
5	N/A	N/A	5	ISSUED FOR UNITIZATION, SUPERSEDING DWG 70B69F90015.		SIGNATURES ON FILE				5-6-87

BECHTEL ENERGY CORPORATION
HOUSTON, TEXAS

HOUSTON LIGHTING & POWER CO.
SOUTH TEXAS PROJECT

PIPING & INSTRUMENTATION DIAGRAM
RADIOACTIVE VENT & DRAIN SYSTEM
MAB FLOOR DRAINS EL. 41'-0" AND ABOVE

SCALE	JOB NO.	DRAWING NO.	REV.
NONE	14926	70B69F90015 #1	8

THIS DRAWING AND THE DESIGN IT COVERS ARE THE PROPERTY OF BECHTEL. THEY ARE MERELY LOANED AND ON THE BORROWER'S EXPRESS AGREEMENT THAT THEY WILL NOT BE REPRODUCED, COPIED, LOANED, EXHIBITED, OR USED EXCEPT IN THE LIMITED WAY AND PURPOSE PERMITTED BY ANY WRITTEN CONSENT GIVEN BY THE LENDER TO THE BORROWER.

I certify that the image contained on this frame was made in the normal and regular course of business, on the date stated below, and that the image is a true and correct copy of the original document.
Signature Tuesday, January 19 1988

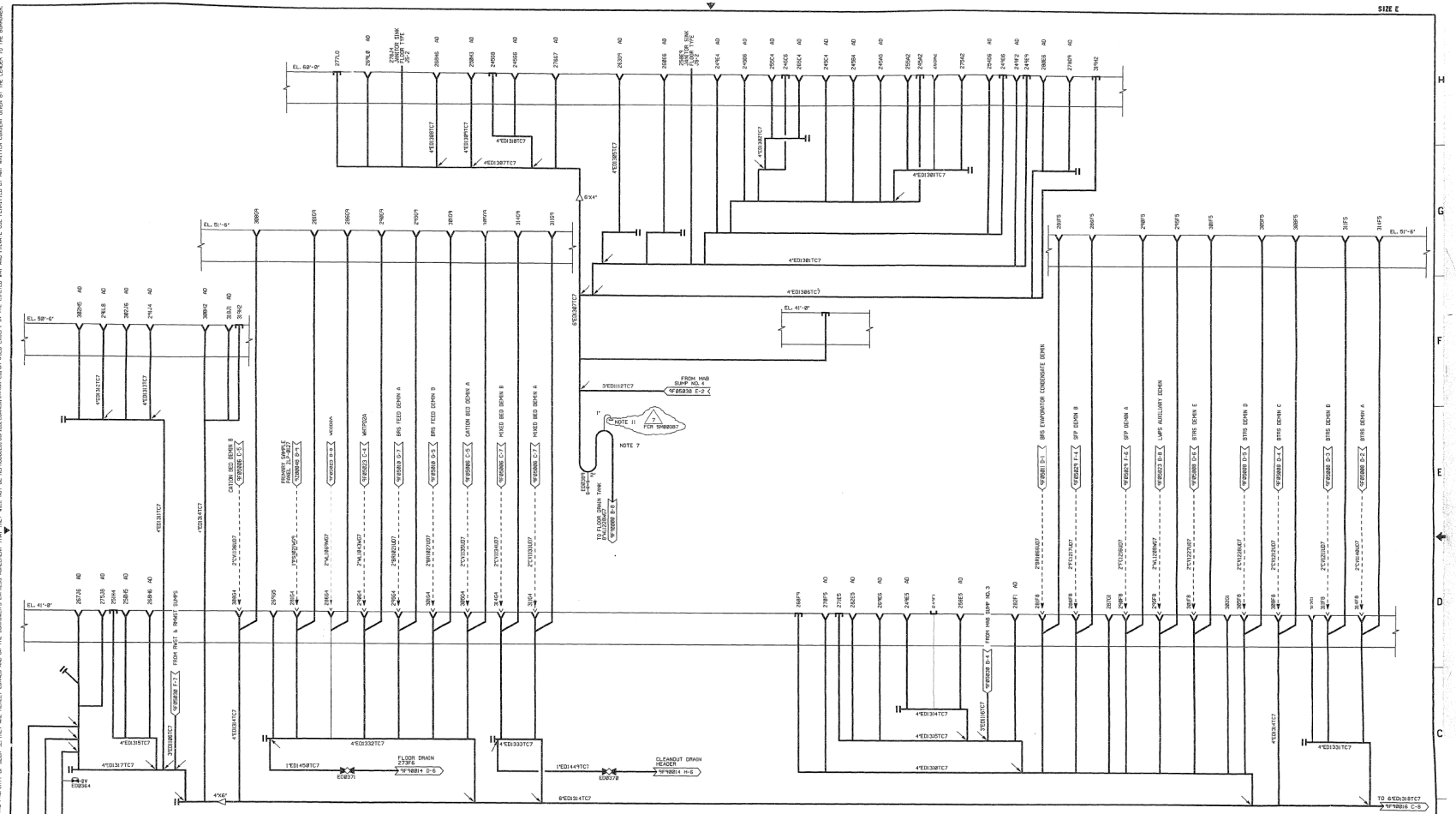

NOTES

1. FLOOR DRAIN DESIGNATOR INDICATES FLOOR DRAIN LOCATION AS FOLLOWS:
   EXAMPLE: THE FLOOR DRAIN IS LOCATED AT THE INTERSECTION OF 12A.5 3E.5 & 8.5.
2. THE MAB CONTAINMENT PENETRATION AREA SUMP IS SHOWN ON DRAWING 7D8N9F9B014 WHEN ISSUED .
3. CLEANOUTS ARE INDICATED BY THE BLIND FLANGE SYMBOLS SEE DESIGN CRITERIA SG0N9G0B15 FOR ADDITIONAL INFORMATION.
4. THE FOLLOWING UNIQUE SYMBOLS ARE USED ON THIS DRAWING.

   FLOOR DRAIN , FD-18
   FLOOR DRAIN , FD-11
   HUB DRAIN , HD-2
   FLOOR CLEANOUT. FCO-5

   FOR AN EXPLANATION OF DRAIN FIXTURE TYPES,SEE REFERENCE 3.
5. AD DENOTES AREA DRAIN ,WHICH IS NOT EXPECTED TO CONTAIN EQUIPMENT DRAINS IN THE FUTURE.
6. THE FOLLOWING DENOTES THE CONCRETE FLOOR SLAB BOUNDARIES.
7. THE LOOP SEAL IN LINE 6"ED13B7TC7 IS 31 1/2" HIGH.
8. THIS DRAWING IS APPLICABLE TO UNIT 1 & THAT OF THE COMPONENTS AND PIPING OF THE ROOS OF UNIT 2 ARE IDENTICAL TO THOSE SHOWN IN THIS DRAWING,BUT THE TPNO NUMBERS WILL BE FOR UNIT 2.
9. THIS DRAWING & 7D8N9F9B013 REPLACES DRAWING 7D8N9F9B052 REVISED 2.
10. THIS DRAWING IS ONE OF TEN RVDS DRAWINGS SEE REFERENCE 2 FOR THE OTHER RVDS.
11. THREADED CAP TO BE INSTALLED ONLY WHEN FLOOR DRAIN ARE DIRECTED TO THE L-MLS CONDENSATE POLISHING REGENERATION WASTE COLLECTION TANK.

FOR SH00307

REFERENCES

1. FOR PIPING & INSTRUMENT SYMBOLS SEE DRAWING 9A3B1F8088 & 9A3B1F8092.
2. OTHER RVDS PLIDS ARE 7D8N9F9B08,9D8N9F9B01, 7D8N9F9B02,7D8N9F9B03,7D8N9F9B04, 7D8N9F9B05, 7D8N9F9B06, 9D8N9F9B18 &7D8N9F9B36.
3. FLOOR DRAIN TYPES ARE SHOWN ON PLUMBING DRAWING 6N8N9B137.

30:1

I certify that the image contained on this frame was made in the normal and regular course of business on the date stated below and that it is an accurate reproduction of the original record photographed.
Date 12-2-93
Operator Supervisor

NO.	ISSUE DATE	HL&P REVISION	BY	CKR	RE	DV	NA	SE	PE	NO.	ISSUE DATE	HL&P REVISION	BY	CKR	RE	DV	NA	SE	PE
7	12-2-93	HL&P ASSUMES DESIGN CHANGE CONTROL & INCORP. FCR SH00307 (MOD.)	KG	RWB															
8-6	8-12-83	ISSUED FOR CONST. & REVISED PER REV. REPORT	SIGNATURES ON FILE																

BECHTEL ENERGY CORPORATION
HOUSTON, TEXAS

HOUSTON LIGHTING & POWER CO.
SOUTH TEXAS PROJECT

PIPING & INSTRUMENTATION DIAGRAM
RADIOACTIVE VENT & DRAIN SYSTEM
MAB FLOOR DRAINS EL. 41'-0" AND ABOVE

SCALE	JOB NO.	DRAWING NO.	REV.
NONE	14926	7D8N9F9B015 *2	7

THIS DRAWING AND THE DESIGN IT CONVEYS ARE THE PROPERTY OF BECHTEL. THEY ARE MERELY LOANED AND ON THE BORROWER'S EXPRESS AGREEMENT THAT THEY WILL NOT BE REPRODUCED, COPIED, LOANED, EXHIBITED, OR USED EXCEPT IN THE LIMITED WAY AND PRIVATE USE PERMITTED BY ANY WRITTEN CONSENT GIVEN BY THE LENDER TO THE BORROWER.

E.MORT 10/17/89 PHE SYS 2

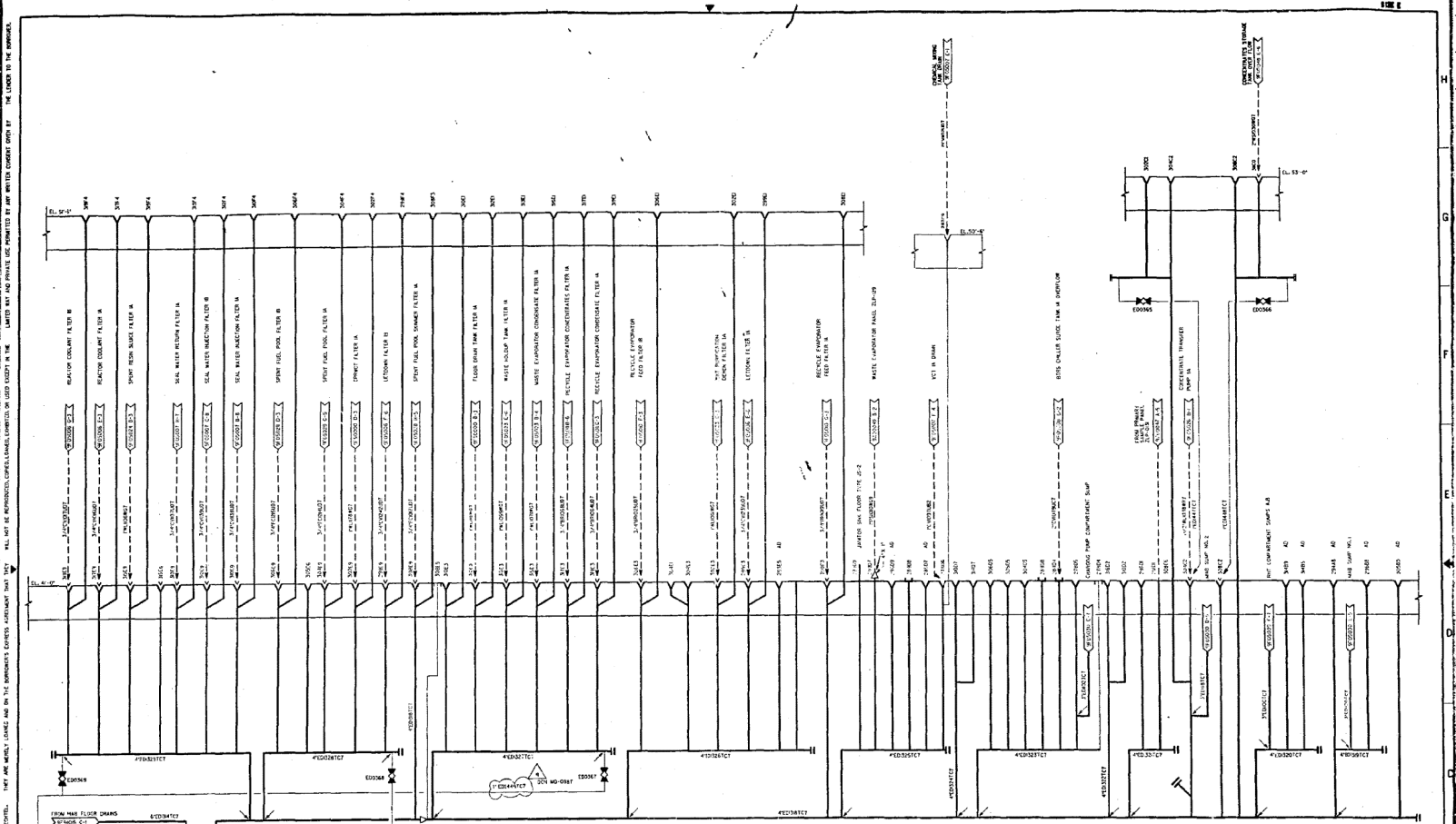

30.1

NOTES (CONT.)

7. THE LOOP SEAL ON FEDO38TCT IS 3'-1/2" HIGH. THE LOOP SEAL ON FEDO38TCT IS 19 1/2" HIGH.
8. THREADED CAP TO BE INSTALLED ON 1" MALE FLOOR DRAINS ARE DIRECTED TO THE LMPS CONDENSATE POLISHING REGENERATION WASTE COLLECTION TANK.
9. THIS DRAWING IS APPLICABLE TO UNIT 1A. ONLY ALL THE COMPONENTS AND PIPING OF THE PORTION OF THE DRAWING ARE COMMON. THE PIPING NUMBERS ARE DIFFERENT BUT THE TPNO NUMBERS WILL BE FOR UNIT 2.
10. THIS DRAWING & TOKE9F0006 SUPERCEDE DRAWING 70G9F0015, REVISION 0L.
11. THIS DRAWING IS ONE OF TEN HVAC DRAWINGS SEE REFERENCE 2 FOR THE OTHER FLOYS.

REFERENCES

1. FOR PIPING & INSTRUMENT SYMBOLS SEE DRAWING 7A9GF0001A, 7A9GF0003A.
2. OTHER HVAC FLOYS ARE: 70G9F0015, 70G9F0016, 70G9F0017, 70G9F0018, 70G9F0019, 70G9F0020, 70G9F0021, 70G9F0022, 70G9F0023, 70G9F0024, 70G9F0025, 70G9F0026.
3. FLOOR DRAIN TYPES ARE SHOWN ON PLUMBING DRAWING 6MC6F0007.

NOTES

1. FLOOR DRAIN DESIGNATION INDICATES FLOOR DRAIN LOCATION AS FOLLOWS:
   2DMB MEANS THAT THE FLOOR DRAIN IS LOCATED IN THE MAB COMPARTMENT OF THE FUEL BLDG. PLAN.
2. THE MAB CONTAINMENT PENETRATION AREA SUMP WILL BE TEMPORARILY CONNECTED TO THE FLOOR DRAIN SYSTEM.
3. CLEANOUTS ARE INDICATED BY THE BLIND FLANGE SYMBOL. SEE DESIGN CRITERIA 5000MGO0S FOR ADDITIONAL INFORMATION.
4. THE FOLLOWING UNIQUE SYMBOLS ARE USED ON THIS DRAWING

FLOOR DRAIN, FD-10

FLOOR DRAIN, FD-4

HUB DRAIN, HD-2

FLOOR CLEANOUT, FCO-4

FOR AN EXPLANATION OF DRAIN FIXTURE TYPES, SEE REFERENCE 3.

5. AD DENOTES AREA DRAIN WHICH IS NOT EXPECTED TO CONTAIN SIGNIFICANT DRAINING THE FLOOR.
6. THE FOLLOWING DENOTES THE CONCRETE FLOOR SLAB BOUNDARIES:

NO.	ISSUE DATE	HL&P REVISION	BY	CHK	RE	DV	NA	SE	PE	NO.	ISSUE DATE	HL&P REVISION	BY	CHK	RE	DV	NA	SE	PE

BECHTEL ENERGY CORPORATION
HOUSTON, TEXAS

HOUSTON LIGHTING & POWER CO.
SOUTH TEXAS PROJECT

PIPING AND INSTRUMENTATION DIAGRAM
RADIOACTIVE VENT AND DRAIN SYSTEM
MAB FLOOR DRAINS EL. 41'-0" AND ABOVE

SCALE	JOB NO.	DRAWING NO.	REV.
NONE	14926	70G9F9001G #1	9

F.T.0178 DGN

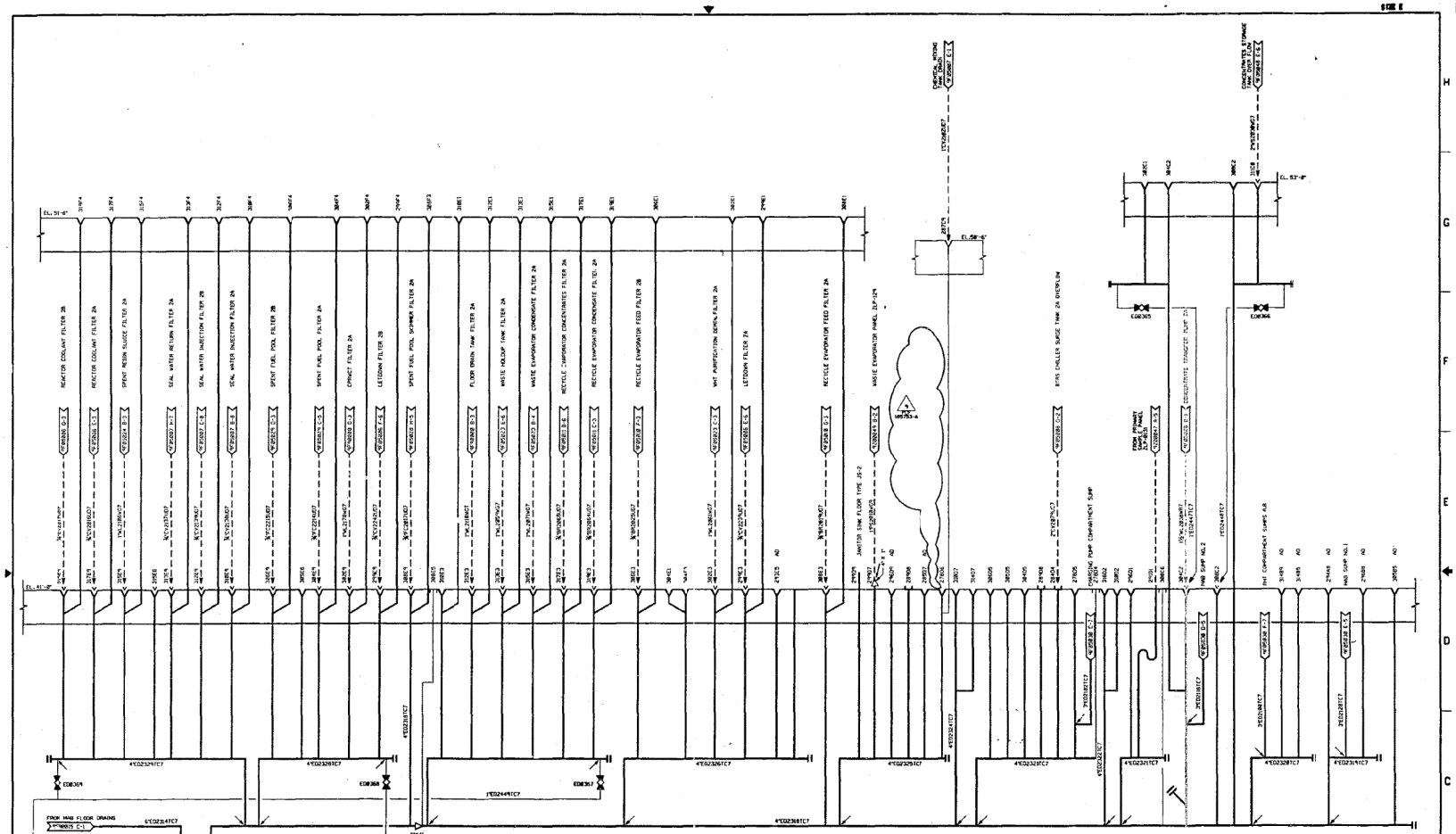

NOTES (CONT)

7. THE LOOP SEAL ON 4"EQ2324TC7 IS 24 1/2" HIGH. THE LOOP SEAL ON 4"EQ2324TC7 IS 24 1/2" HIGH.
8. DELETED.
9. THIS DRAWING & 7086PF9815 SUPERCEDE DRAWING 7086PF9815, REVISION 6.
10. THIS DRAWING IS ONE OF TEN P&ID DRAWINGS SEE REFERENCE 2 FOR THE OTHER P&ID'S.
11. THREADED CAP TO BE INSTALLED ONLY WHEN FLOOR DRAINS ARE DIRECTED TO THE L.A.R.S. CONDENSATE POLISHING REGENERATION WASTE COLLECTION TANK.

REFERENCES

1. FOR PIPING & INSTRUMENT SYMBOLS SEE DRAWING 7086PF8981 & 7086PF8982.
2. OTHER P&ID PLOTS ARE 7086PF9808,7086PF9809,7086PF9810, 7086PF9811, 7086PF9812, 7086PF9813, 7086PF9814, 7086PF9815 & 7086PF9816.
3. FLOOR DRAIN TYPES ARE SHOWN ON PLUMBING DRAWING 7086PF8837.

NOTES

1. FLOOR DRAIN DESIGNATOR INDICATES FLOOR DRAIN LOCATION AS FOLLOWS: SPACE MEANS THAT THE FLOOR DRAIN IS LOCATED AT THE INTERSECTION OF COLS. 3B/5 & B.5.
2. THE MAB CONTAINMENT PENETRATION AREA SUMP WILL BE SHOWN ON DRAWING 7086PF9814 WHEN ISSUED.
3. CLEANOUTS ARE INDICATED BY THE BLIND FLANGE SYMBOLS. SEE DESIGN CRITERIA 5C8196-0185 FOR ADDITIONAL INFORMATION.
4. THE FOLLOWING UNIQUE SYMBOLS ARE USED ON THIS DRAWING:

FLOOR DRAIN, FD-10

FLOOR DRAIN, FD-11

HUB DRAIN, HD-2

FLOOR CLEANOUT FCO-5

FOR AN EXPLANATION OF DRAIN FIXTURE TYPES, SEE REFERENCE 3.

5. NO DENOTES AREA DRAIN, WHICH IS NOT EXPECTED TO CONTAIN EQUIPMENT DRAINS OR IS FUTURE.
6. THE FOLLOWING DENOTES THE CONCRETE FLOOR SLAB BOUNDARIES:

NO.	ISSUE DATE	HL&P REVISION	BY	CHK	RE	DV	NA	SE	PE
9	[illegible]	INITIAL REF 1&2/93 & AND EDITORIAL CHANGES FOR UNITIZATION.	[illegible]						
8	[illegible]	HL&P REVISION DESIGN CHANGE CONTROL & INCORP. FCR 5B0187 (MOD.)	SIGNATURES ON FILE						
6-7	[illegible]	ISSUED FOR CONSTRUCTION & INCORP. REDRAWOUT	SIGNATURES ON FILE						

NO.	ISSUE DATE	HL&P REVISION	BY	CHK	RE	DV	NA	SE	PE

HOUSTON LIGHTING & POWER COMPANY
SOUTH TEXAS PROJECT ELECTRIC GENERATING STATION

PIPING AND INSTRUMENTATION DIAGRAM
RADIOACTIVE VENT AND DRAIN SYSTEM
MAB FLOOR DRAINS EL. 41'-8" AND ABOVE

SCALE	DRAWING NO.	REV.
NONE	7086PF9816 *2	9

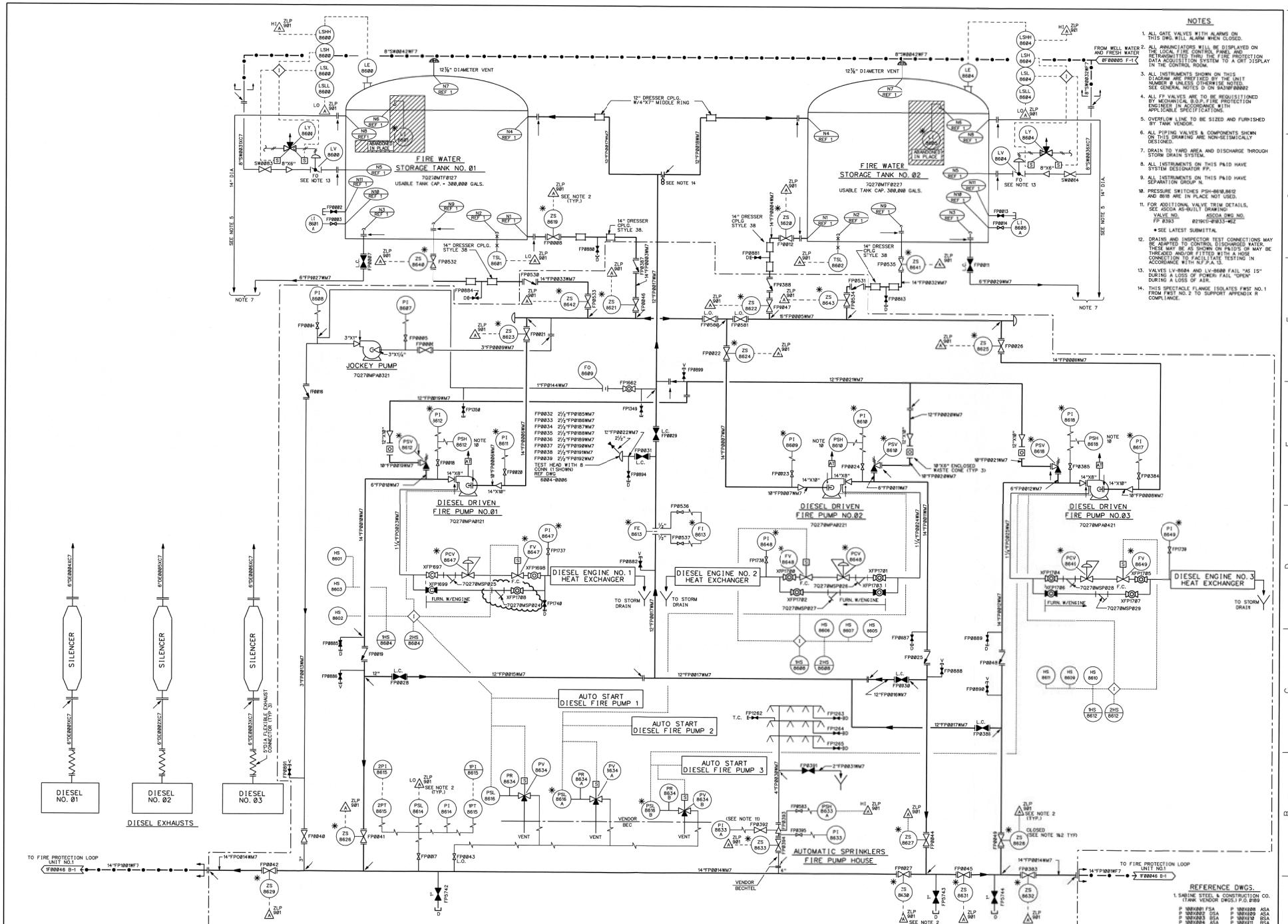

NO.	APPROVAL DATE	REVISION	ORIG	CKR	RE	DV	SE
22		INCORP. DCN 1501517.	JSH	N/A	N/A	N/A	N/A
0-21	8-3-82	ISSUED FOR CONSTRUCTION.	SIGNATURES ON FILE				

ESSED. DGN

SOUTH TEXAS PROJECT NUCLEAR OPERATING COMPANY

PIPING AND INSTRUMENTATION FIRE PROTECTION STORAGE AND PUMPS

PRIORITY	CADD FILE NO.	FSUG. NO.	STI. NO.	SCALE	DWG. NO.	SHT	REV.
1	7Q270F00006.DGN	D070928	34328844	NONE	7Q270F00006		22

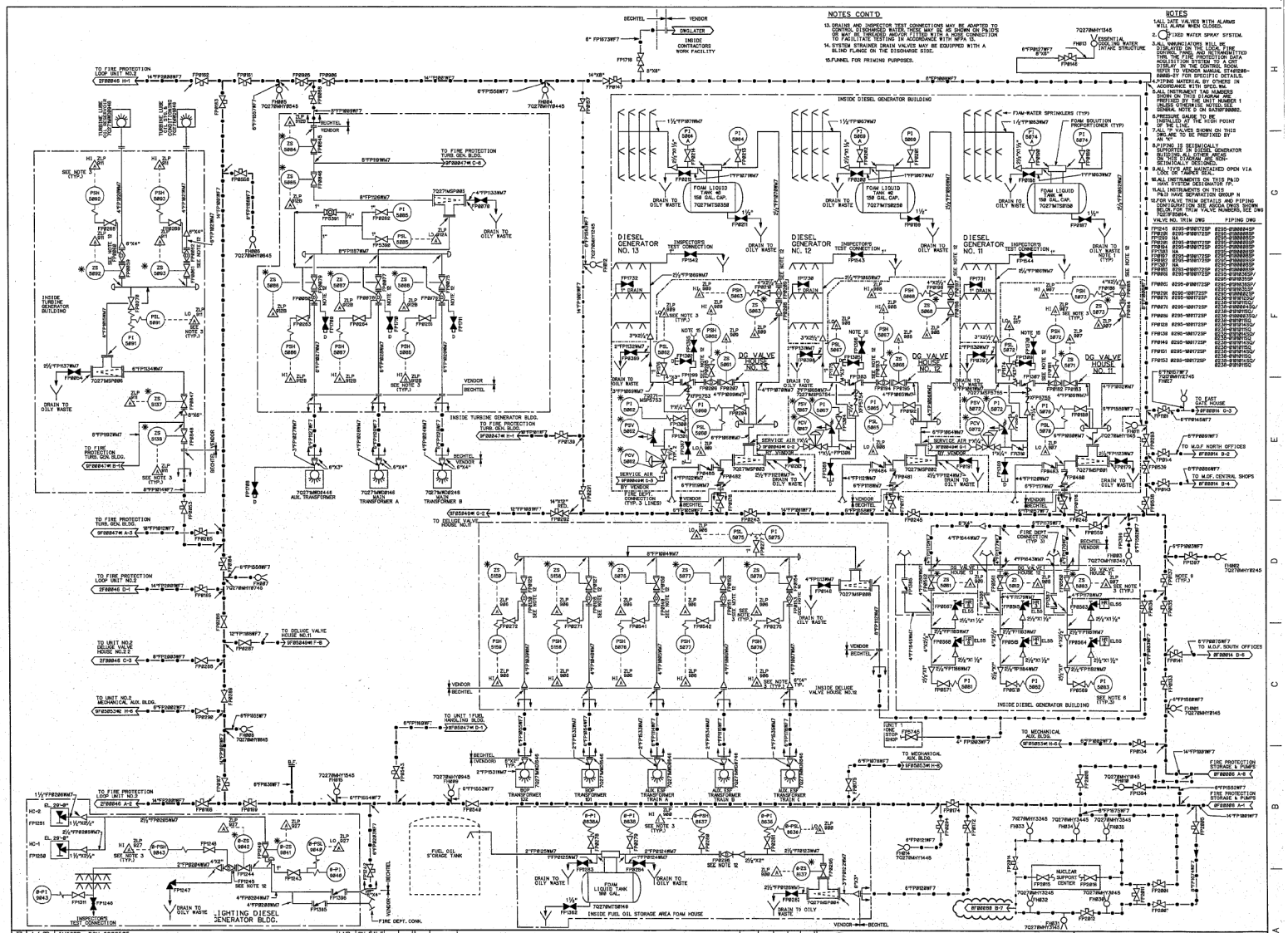
NOTES CONT'D
13. DRAINS AND INSPECTOR TEST CONNECTIONS MAY BE ADAPTED TO CONTROL DISCHARGED WATER. THESE MAY BE AS SHOWN OR PIPED OR MAY BE THREADED AND/OR FITTED WITH A HOSE CONNECTION TO FACILITATE TESTING IN ACCORDANCE WITH NFPA 14.
14. SYSTEM STRAINER DRAIN VALVES MAY BE EQUIPPED WITH A BLIND FLANGE ON THE DISCHARGE SIDE.
15. FUNNEL FOR PRIMING PURPOSES.
NOTES
1. ALL GATE VALVES WITH ALARMS WILL ALARM WHEN CLOSED.
2. CLOSED WATER SPRAY SYSTEM.
3. ALL ANNUNCIATORS WILL BE DISPLAYED ON THE LOCAL FIRE CONTROL PANEL AND RETRANSMITTED THRU THE FIRE PROTECTION DATA SYSTEM. ALL ALARMS WILL BE DISPLAY IN THE CONTROL ROOM. REFER TO VENDOR MANUAL STA6288-00002-SY FOR SPECIFIC DETAILS.
4. PIPING MATERIAL BY OTHERS IN ACCORDANCE WITH SPEC. NM.
5. ALL INSTRUMENT TAG NUMBERS PREFIXED BY 1 ARE SYSTEMS PROTOCOL BY THE UNIT NUMBER 1 UNLESS OTHERWISE NOTED. SEE 2SA6KA, NOTE 2 ON SA3XF00002.
6. PRESSURE GAUGE TO BE INSTALLED AT THE HIGH POINT OF THE SYSTEM.
7. ALL TP VALVES SHOWN ON THIS DWG ARE TO BE PROTEKO BY AN "A".
8. PIPING IS DEFINITIONALLY SUPPORTED IN DIESEL GENERATOR BUILDING. SEE 2SA6KA, NOTE 2 ON SA3XF00002. ALL NON-SEISMICALLY DESIGNED.
9. ALL TVS ARE MAINTAINED OPEN VIA LOCK OR PADLOCK SEAL.
10. ALL INSTRUMENTS ON THIS PAID SHALL HAVE SEPARATION GROUP P.
11. ALL INSTRUMENTS ON THIS PAID SHALL HAVE SEPARATION GROUP N.
12. FOR VALVE TRIM DETAILS AND PIPING CONFIGURATION SEE ASSA DWGS SHOWN BELOW FOR TRIM VALVE NUMBERS, SEE DWG 7Q271F00844.
VALVE NO. TRIM DWG PIPING DWG
FP2245 8295-9W0172SP 8295-9W0844SP
FP2330 8295-9W0172SP 8295-9W0844SP
FP2331 8295-9W0172SP 8295-9W0844SP
FP2332 8295-9W0172SP 8295-9W0844SP
FP2333 8295-9W0172SP 8295-9W0844SP
FP2334 8295-9W0172SP 8295-9W0844SP
FP2335 8295-9W0172SP 8295-9W0844SP
FP2336 8295-9W0172SP 8295-9W0844SP
FP2337 8295-9W0172SP 8295-9W0844SP
FP2338 8295-9W0172SP 8295-9W0844SP
FP2339 8295-9W0172SP 8295-9W0844SP
FP2340 8295-9W0172SP 8295-9W0844SP
FP8061 8295-9W0172SP 8295-9W0844SP
FP8062 8295-9W0172SP 8295-9W0844SP
FP8063 8295-9W0172SP 8295-9W0844SP
FP8064 8295-9W0172SP 8295-9W0844SP
FP8065 8295-9W0172SP 8295-9W0844SP
FP8066 8295-9W0172SP 8295-9W0844SP
FP8067 8295-9W0172SP 8295-9W0844SP
FP8068 8295-9W0172SP 8295-9W0844SP
FP8069 8295-9W0172SP 8295-9W0844SP
FP8070 8295-9W0172SP 8295-9W0844SP
FP8071 8295-9W0172SP 8295-9W0844SP
FP8072 8295-9W0172SP 8295-9W0844SP
FP8073 8295-9W0172SP 8295-9W0844SP
FP8074 8295-9W0172SP 8295-9W0844SP
FP8075 8295-9W0172SP 8295-9W0844SP
FP8076 8295-9W0172SP 8295-9W0844SP
FP8077 8295-9W0172SP 8295-9W0844SP
FP8078 8295-9W0172SP 8295-9W0844SP
FP8079 8295-9W0172SP 8295-9W0844SP
FP8080 8295-9W0172SP 8295-9W0844SP
FP8081 8295-9W0172SP 8295-9W0844SP
FP8082 8295-9W0172SP 8295-9W0844SP
FP8083 8295-9W0172SP 8295-9W0844SP
FP8084 8295-9W0172SP 8295-9W0844SP
FP8085 8295-9W0172SP 8295-9W0844SP
FP8086 8295-9W0172SP 8295-9W0844SP
FP8087 8295-9W0172SP 8295-9W0844SP
FP8088 8295-9W0172SP 8295-9W0844SP
FP8089 8295-9W0172SP 8295-9W0844SP
FP8090 8295-9W0172SP 8295-9W0844SP
FP8091 8295-9W0172SP 8295-9W0844SP
FP8092 8295-9W0172SP 8295-9W0844SP
FP8093 8295-9W0172SP 8295-9W0844SP
FP8094 8295-9W0172SP 8295-9W0844SP
FP8095 8295-9W0172SP 8295-9W0844SP
FP8096 8295-9W0172SP 8295-9W0844SP
FP8097 8295-9W0172SP 8295-9W0844SP
FP8098 8295-9W0172SP 8295-9W0844SP
FP8099 8295-9W0172SP 8295-9W0844SP
FP8100 8295-9W0172SP 8295-9W0844SP
FP8101 8295-9W0172SP 8295-9W0844SP
FP8102 8295-9W0172SP 8295-9W0844SP
FP8103 8295-9W0172SP 8295-9W0844SP
FP8104 8295-9W0172SP 8295-9W0844SP
FP8105 8295-9W0172SP 8295-9W0844SP
FP8106 8295-9W0172SP 8295-9W0844SP
FP8107 8295-9W0172SP 8295-9W0844SP
FP8108 8295-9W0172SP 8295-9W0844SP
FP8109 8295-9W0172SP 8295-9W0844SP
FP8110 8295-9W0172SP 8295-9W0844SP
FP8111 8295-9W0172SP 8295-9W0844SP
FP8112 8295-9W0172SP 8295-9W0844SP
INSIDE DIESEL GENERATOR BUILDING
DIESEL GENERATOR NO. 13
DIESEL GENERATOR NO. 12
DIESEL GENERATOR NO. 11
DG VALVE HOUSE NO. 13
DG VALVE HOUSE NO. 12
DG VALVE HOUSE NO. 11
INSIDE TURBINE GENERATOR BUILDING
INSIDE DELUGE VALVE HOUSE NO.1&2
LIGHTING DIESEL GENERATOR BLDG.
FUEL OIL STORAGE TANK
INSIDE FUEL OIL STORAGE AREA FOAM HOUSE
NUCLEAR SUPPORT CENTER
TO FIRE PROTECTION LOOP UNIT NO.2
TO FIRE PROTECTION TURB. GEN. BLDG.
TO DELUGE VALVE HOUSE NO.1&2
TO UNIT NO.2 MECHANICAL AUX. BLDG.
TO UNIT NO.1 MECHANICAL AUX. BLDG.
TO UNIT FUEL HANDLING BLDG.
TO EAST GATE HOUSE
TO M.O.F. NORTH OFFICES
TO M.O.F. CENTRAL SHOPS
TO M.O.F. SOUTH OFFICES
FIRE PROTECTION STORAGE & PUMPS
INSIDE CONTRACTORS WORK FACILITY
ESSENTIAL COOLING WATER INTAKE STRUCTURE
AUX. TRANSFORMER
MAIN TRANSFORMER A
MAIN TRANSFORMER B
AUX. ESF TRANSFORMER
VENDOR
BECHTEL
DRAIN TO OILY WASTE
SERVICE AIR
FIRE DEPT. CONN.
SOUTH TEXAS PROJECT
NUCLEAR OPERATING COMPANY
PIPING AND INSTRUMENTATION DIAGRAM
FIRE PROTECTION LOOP
7Q271F00046.DGN
D070928
3376364
NONE
7Q271F00046
39
37 4-4-08 INCORP. DCN 8808505. LNB ON FILE
36 5-15-06 REVISED PER CR#06-5319-1. JSH ON FILE
35 4-22-04 INCORP. DCN 8408747 KS ON FILE
34 12-29-03 REVISED PER CR 02-19385. LNB ON FILE
33 02-11-02 INCORP. DCN 8208348. VJM ON FILE
32-33 12-18-96 ISSUED FOR CONSTRUCTION 15 SIGNATURES ON FILE
30 9-26-13 ISSUED PER NDCC 11-4858-2. LNB JSH ON FILE
30 11-20-08 INCORP. DCN 8802284.
ISSUED FOR
NO. ISSUE DATE REVISION ORIG CHK RE DV SE
PRIORITY 1

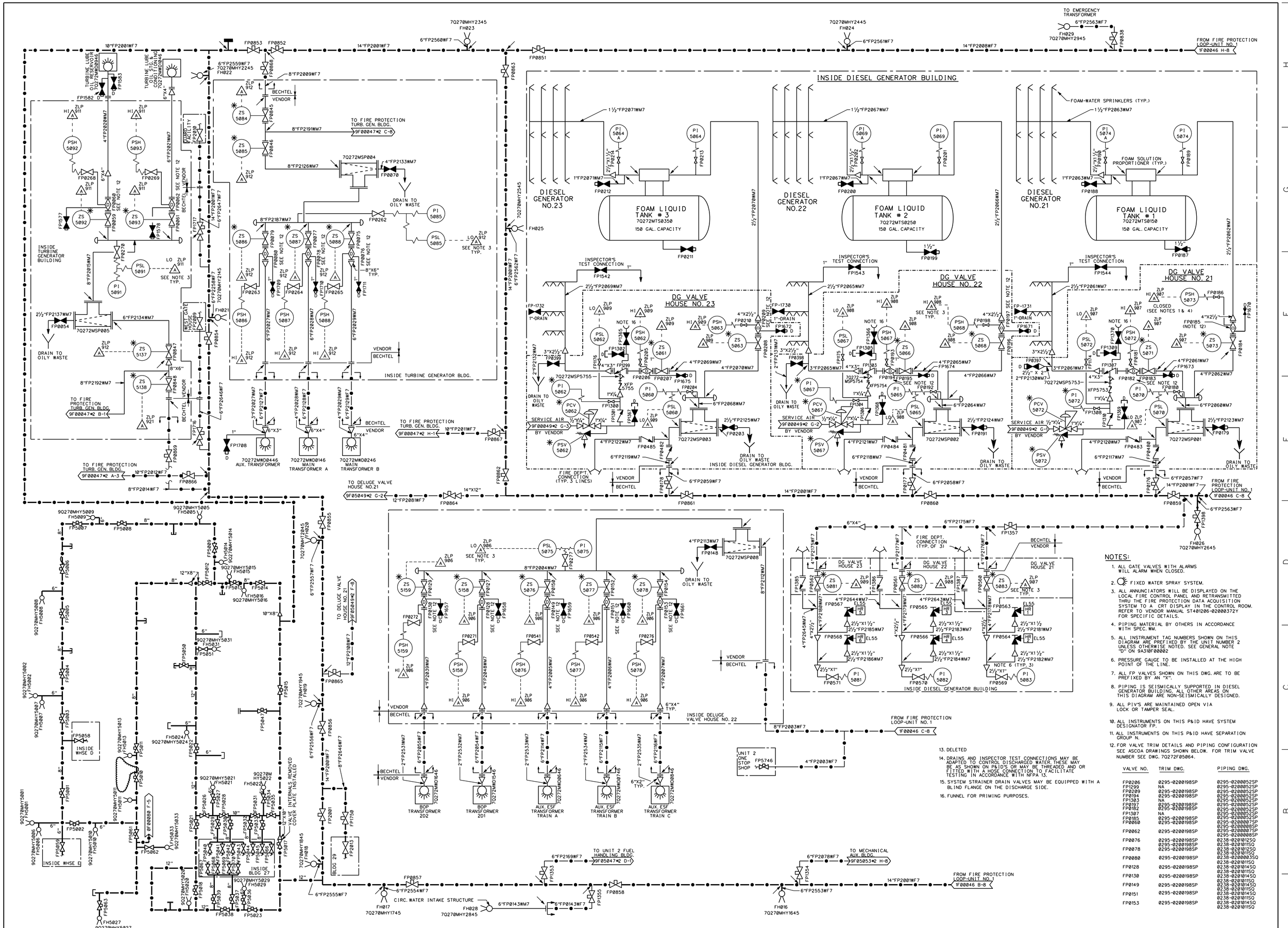

NOTES:

1. ALL GATE VALVES WITH ALARMS WILL ALARM WHEN CLOSED.
2. FIXED WATER SPRAY SYSTEM.
3. ALL ANNUNCIATORS WILL BE DISPLAYED ON THE LOCAL FIRE CONTROL PANEL AND RETRANSMITTED THRU THE FIRE PROTECTION DATA ACQUISITION SYSTEM TO A CRT DISPLAY IN THE CONTROL ROOM. REFER TO VENDOR MANUAL ST401206-02000372Y FOR SPECIFIC DETAILS.
4. PIPING MATERIAL BY OTHERS IN ACCORDANCE WITH SPEC. WM.
5. ALL INSTRUMENT TAG NUMBERS SHOWN ON THIS DIAGRAM ARE PREFIXED BY THE UNIT NUMBER 2 UNLESS OTHERWISE NOTED. SEE GENERAL NOTE "D" ON 9A310F00002
6. PRESSURE GAUGE TO BE INSTALLED AT THE HIGH POINT OF THE LINE.
7. ALL FP VALVES SHOWN ON THIS DWG. ARE TO BE PREFIXED BY AN "X".
8. PIPING IS SEISMICALLY SUPPORTED IN DIESEL GENERATOR BUILDING. ALL OTHER AREAS ON THIS DIAGRAM ARE NON-SEISMICALLY DESIGNED.
9. ALL PIV'S ARE MAINTAINED OPEN VIA LOCK OR TAMPER SEAL.
10. ALL INSTRUMENTS ON THIS P&ID HAVE SYSTEM DESIGNATOR FP.
11. ALL INSTRUMENTS ON THIS P&ID HAVE SEPARATION GROUP N.
12. FOR VALVE TRIM DETAILS AND PIPING CONFIGURATION SEE ASCOA DRAWINGS SHOWN BELOW. FOR TRIM VALVE NUMBER SEE DWG. 7Q272F05064.

VALVE NO.	TRIM DWG.	PIPING DWG.
FP0206	0295-0200198SP	0295-0200052SP
FP1299	NA	0295-0200052SP
FP0209	0295-0200198SP	0295-0200052SP
FP0194	0295-0200198SP	0295-0200052SP
FP1303	NA	0295-0200052SP
FP0197	0295-0200198SP	0295-0200052SP
FP0182	0295-0200198SP	0295-0200052SP
FP1307	NA	0295-0200052SP
FP0185	0295-0200198SP	0295-0200052SP
FP0060	0295-0200198SP	0295-0200007SP 0295-0200008SP
FP0062	0295-0200198SP	0295-0200007SP 0295-0200008SP
FP0076	0295-0200198SP	0238-0201012SQ
FP0078	0295-0200198SP 0295-0200198SP	0238-0201011SQ 0238-0201012SQ
FP0080	0295-0200198SP	0238-0201011SQ 0238-0200003SQ
FP0128	0295-0200198SP	0238-0201011SQ 0238-0201014SQ
FP0130	0295-0200198SP	0238-0201011SQ 0238-0201014SQ
FP0149	0295-0200198SP	0238-0201011SQ 0238-0201014SQ
FP0151	0295-0200198SP	0238-0201011SQ 0238-0201014SQ
FP0153	0295-0200198SP	0238-0201011SQ 0238-0201014SQ 0238-0201011SQ

13. DELETED
14. DRAINS AND INSPECTOR TEST CONNECTIONS MAY BE ADAPTED TO CONTROL DISCHARGED WATER. THESE MAY BE AS SHOWN ON P&ID'S OR MAY BE THREADED AND OR FITTED WITH A HOSE CONNECTION TO FACILITATE TESTING IN ACCORDANCE WITH NFPA 13.
15. SYSTEM STRAINER DRAIN VALVES MAY BE EQUIPPED WITH A BLIND FLANGE ON THE DISCHARGE SIDE.
16. FUNNEL FOR PRIMING PURPOSES.

NO.	APPROVAL DATE	REVISION	ORIG	CKR	RE	DV	SE
45	11-1-18	INCORP. NDCN 17-15388-3-1.	SIGNATURES ON FILE				
0-44	8-3-83	ISSUED FOR CONSTRUCTION.	N/A	N/A	N/A		

ESEED.DGN

SOUTH TEXAS PROJECT NUCLEAR OPERATING COMPANY

PIPING AND INSTRUMENTATION DIAGRAM FIRE PROTECTION LOOP

PRIORITY	CADD FILE NO.	FSUG. NO.	STI. NO.	SCALE	DWG. NO.	SHT.	REV.
1	7Q272F00046.DGN	D070928	34753157	NONE	7Q272F00046		45

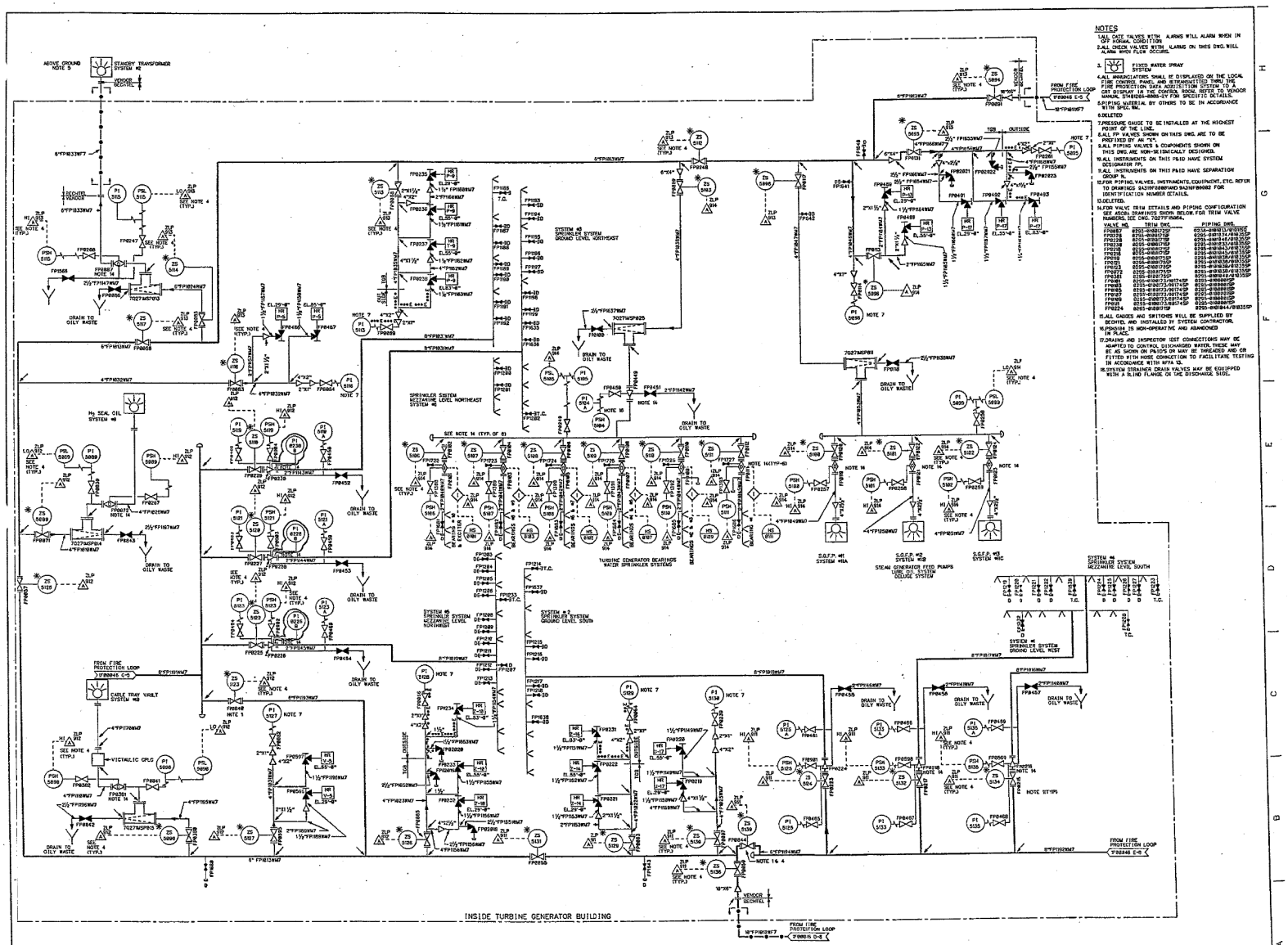

NOTES

1. ALL VALVE VALVES WITH ALARMS WILL ALARM WHEN IN THE ABNORMAL CONDITION
2. ALL DRAIN VALVES WITH ALARMS ON THIS DWG. WILL ALARM WHEN FLOW OCCURS.
3. FIXED WATER SPRAY SYSTEM
4. ALL ANNUNCIATORS SHALL BE DISPLAYED ON THE LOCAL FIRE CONTROL PANEL AND RETRANSMITTED THRU THE FIRE PROTECTION DATA ACQUISITION SYSTEM TO A CRT DISPLAY IN THE CONTROL ROOM. REFER TO VENDOR MANUAL S4A0026-0000-EY FOR SPECIFIC DETAILS.
5. PIPING MATERIAL BY OTHERS TO BE IN ACCORDANCE WITH SPEC. 9M.
6. DELETED
7. PRESSURE GAUGE TO BE INSTALLED AT THE HIGHEST POINT OF THE LINE.
8. ALL FP VALVES SHOWN ON THIS DWG. ARE TO BE PROVIDED BY AN "X".
9. ALL PIPING VALVES & COMPONENTS SHOWN ON THIS DWG ARE NON-SEISMICALLY DESIGNED.
10. ALL INSTRUMENTS ON THIS P&ID HAVE SYSTEM DESIGNATOR FP.
11. ALL INSTRUMENTS ON THIS P&ID HAVE SEPARATION GROUP N.
12. FOR PIPING, VALVES, INSTRUMENTS, EQUIPMENT, ETC. REFER TO DRAWINGS 9A319F000BAND 9A319F00002 FOR IDENTIFICATION NUMBER DETAILS.
13. DELETED.
14. FOR VALVE TRIM DETAILS AND PIPING CONFIGURATION SEE ASCAL DRAWINGS SHOWN BELOW. FOR TRIM VALVE NUMBERS, SEE DWG. 7027F00NFA.

VALVE NO.	TRIM DWG.	PIPING DWG.
FP0821	8235-0H0137SP	8295-0H0134/0H0135P
FP0822	8235-0H0137SP	8295-0H0134/0H0135P
FP0823	8235-0H0137SP	8295-0H0134/0H0135P
FP0824	8235-0H0137SP	8295-0H0134/0H0135P
FP0825	8235-0H0137SP	8295-0H0134/0H0135P
FP0826	8235-0H0137SP	8295-0H0134/0H0135P
FP0827	8235-0H0137SP	8295-0H0134/0H0135P
FP0828	8235-0H0137SP	8295-0H0134/0H0135P
FP0829	8235-0H0137SP	8295-0H0134/0H0135P
FP0830	8235-0H0137SP	8295-0H0134/0H0135P
FP0831	8235-0H0137SP	8295-0H0134/0H0135P
FP0832	8235-0H0137SP	8295-0H0134/0H0135P
FP0833	8235-0H0137SP	8295-0H0134/0H0135P
FP0834	8235-0H0137SP	8295-0H0134/0H0135P
FP0835	8235-0H0137SP	8295-0H0134/0H0135P
FP0836	8235-0H0137SP	8295-0H0134/0H0135P
FP0837	8235-0H0137SP	8295-0H0134/0H0135P
FP0838	8235-0H0137SP	8295-0H0134/0H0135P
FP0839	8235-0H0137SP	8295-0H0134/0H0135P
FP0840	8235-0H0137SP	8295-0H0134/0H0135P
FP0841	8235-0H0137SP	8295-0H0134/0H0135P
FP0842	8235-0H0137SP	8295-0H0134/0H0135P
FP0843	8235-0H0137SP	8295-0H0134/0H0135P
FP0844	8235-0H0137SP	8295-0H0134/0H0135P
FP0845	8235-0H0137SP	8295-0H0134/0H0135P
FP0846	8235-0H0137SP	8295-0H0134/0H0135P
FP0847	8235-0H0137SP	8295-0H0134/0H0135P
FP0848	8235-0H0137SP	8295-0H0134/0H0135P
FP0849	8235-0H0137SP	8295-0H0134/0H0135P
FP0850	8235-0H0137SP	8295-0H0134/0H0135P
FP0851	8235-0H0137SP	8295-0H0134/0H0135P
FP0852	8235-0H0137SP	8295-0H0134/0H0135P
FP0853	8235-0H0137SP	8295-0H0134/0H0135P
FP0854	8235-0H0137SP	8295-0H0134/0H0135P
FP0855	8235-0H0137SP	8295-0H0134/0H0135P
FP0856	8235-0H0137SP	8295-0H0134/0H0135P
FP0857	8235-0H0137SP	8295-0H0134/0H0135P
FP0858	8235-0H0137SP	8295-0H0134/0H0135P
FP0859	8235-0H0137SP	8295-0H0134/0H0135P
FP0860	8235-0H0137SP	8295-0H0134/0H0135P
FP0861	8235-0H0137SP	8295-0H0134/0H0135P
FP0862	8235-0H0137SP	8295-0H0134/0H0135P
FP0863	8235-0H0137SP	8295-0H0134/0H0135P
FP0864	8235-0H0137SP	8295-0H0134/0H0135P
FP0865	8235-0H0137SP	8295-0H0134/0H0135P
FP0866	8235-0H0137SP	8295-0H0134/0H0135P
FP0867	8235-0H0137SP	8295-0H0134/0H0135P
FP0868	8235-0H0137SP	8295-0H0134/0H0135P
FP0869	8235-0H0137SP	8295-0H0134/0H0135P
FP0870	8235-0H0137SP	8295-0H0134/0H0135P
FP0871	8235-0H0137SP	8295-0H0134/0H0135P
FP0872	8235-0H0137SP	8295-0H0134/0H0135P
FP0873	8235-0H0137SP	8295-0H0134/0H0135P
FP0874	8235-0H0137SP	8295-0H0134/0H0135P
FP0875	8235-0H0137SP	8295-0H0134/0H0135P
FP0876	8235-0H0137SP	8295-0H0134/0H0135P
FP0877	8235-0H0137SP	8295-0H0134/0H0135P
FP0878	8235-0H0137SP	8295-0H0134/0H0135P
FP0879	8235-0H0137SP	8295-0H0134/0H0135P
FP0880	8235-0H0137SP	8295-0H0134/0H0135P
FP0881	8235-0H0137SP	8295-0H0134/0H0135P
FP0882	8235-0H0137SP	8295-0H0134/0H0135P
FP0883	8235-0H0137SP	8295-0H0134/0H0135P
FP0884	8235-0H0137SP	8295-0H0134/0H0135P
FP0885	8235-0H0137SP	8295-0H0134/0H0135P
FP0886	8235-0H0137SP	8295-0H0134/0H0135P
FP0887	8235-0H0137SP	8295-0H0134/0H0135P
FP0888	8235-0H0137SP	8295-0H0134/0H0135P
FP0889	8235-0H0137SP	8295-0H0134/0H0135P
FP0890	8235-0H0137SP	8295-0H0134/0H0135P
FP0891	8235-0H0137SP	8295-0H0134/0H0135P
FP0892	8235-0H0137SP	8295-0H0134/0H0135P
FP0893	8235-0H0137SP	8295-0H0134/0H0135P
FP0894	8235-0H0137SP	8295-0H0134/0H0135P
FP0895	8235-0H0137SP	8295-0H0134/0H0135P
FP0896	8235-0H0137SP	8295-0H0134/0H0135P
FP0897	8235-0H0137SP	8295-0H0134/0H0135P
FP0898	8235-0H0137SP	8295-0H0134/0H0135P
FP0899	8235-0H0137SP	8295-0H0134/0H0135P
FP0900	8235-0H0137SP	8295-0H0134/0H0135P
FP0901	8235-0H0137SP	8295-0H0134/0H0135P
FP0902	8235-0H0137SP	8295-0H0134/0H0135P
FP0903	8235-0H0137SP	8295-0H0134/0H0135P
FP0904	8235-0H0137SP	8295-0H0134/0H0135P
FP0905	8235-0H0137SP	8295-0H0134/0H0135P
FP0906	8235-0H0137SP	8295-0H0134/0H0135P
FP0907	8235-0H0137SP	8295-0H0134/0H0135P
FP0908	8235-0H0137SP	8295-0H0134/0H0135P
FP0909	8235-0H0137SP	8295-0H0134/0H0135P
FP0910	8235-0H0137SP	8295-0H0134/0H0135P
FP0911	8235-0H0137SP	8295-0H0134/0H0135P
FP0912	8235-0H0137SP	8295-0H0134/0H0135P
FP0913	8235-0H0137SP	8295-0H0134/0H0135P
FP0914	8235-0H0137SP	8295-0H0134/0H0135P
FP0915	8235-0H0137SP	8295-0H0134/0H0135P
FP0916	8235-0H0137SP	8295-0H0134/0H0135P
FP0917	8235-0H0137SP	8295-0H0134/0H0135P
FP0918	8235-0H0137SP	8295-0H0134/0H0135P
FP0919	8235-0H0137SP	8295-0H0134/0H0135P
FP0920	8235-0H0137SP	8295-0H0134/0H0135P
FP0921	8235-0H0137SP	8295-0H0134/0H0135P
FP0922	8235-0H0137SP	8295-0H0134/0H0135P
FP0923	8235-0H0137SP	8295-0H0134/0H0135P
FP0924	8295-0H0137SP	8295-0H0144/0H0135P

15. ALL GAUGES AND SWITCHES WILL BE SUPPLIED BY VENDOR AND INSTALLED BY SYSTEM CONTRACTOR.
16. FP0N0184 IS NON-OPERATIVE AND ABANDONED IN PLACE.
17. DRAINS AND INSPECTOR TEST CONNECTIONS MAY BE ADAPTED TO CONTROL DISCHARGED WATER. THESE MAY BE AS SHOWN ON PLATES OR MAY BE THREADED AND OR FITTED WITH HOSE CONNECTION TO FACILITATE TESTING IN ACCORDANCE WITH NFPA 13.
18. SYSTEM STRAINER DRAIN VALVES MAY BE EQUIPPED WITH A BLIND FLANGE OR THE DISCHARGE SIDE.

REV.	DATE	REVISION	ORIG	CKR	RE	DV	SE
28	6-15-96	INCORP. DCN 8683695	JSH ON FILE				
5	4-22-96	INCORP. MDCN 9182328	SIGNATURES ON FILE				
9	6-21-95	EDITORIAL	SIGNATURES ON FILE				
7	1-4-95	INCORP. DCN MD02925	SIGNATURES ON FILE				
6	1-31-94	INCORP. PCF 1798538	SIGNATURES ON FILE				
0-15	8-3-83	ISSUED FOR CONSTRUCTION	SIGNATURES ON FILE				
21	6-6-9	INCORP. DCN 8408151	KS				

NO.	ISSUE DATE	REVISION	ORIG	CKR	RE	DV	SE

SOUTH TEXAS PROJECT
NUCLEAR OPERATING COMPANY

PIPING AND INSTRUMENTATION
FIRE PROTECTION
TURBINE GENERATOR BUILDING

PRIORITY	CADD FILE NO.	FSVG. NO.	STI. NO.	SCALE	DWG NO.	SHT.	REV.
1	FJA1 49. 211	D078928	3172609	NONE	7027SF00047		21

8 7 6 5 4 3 2 1

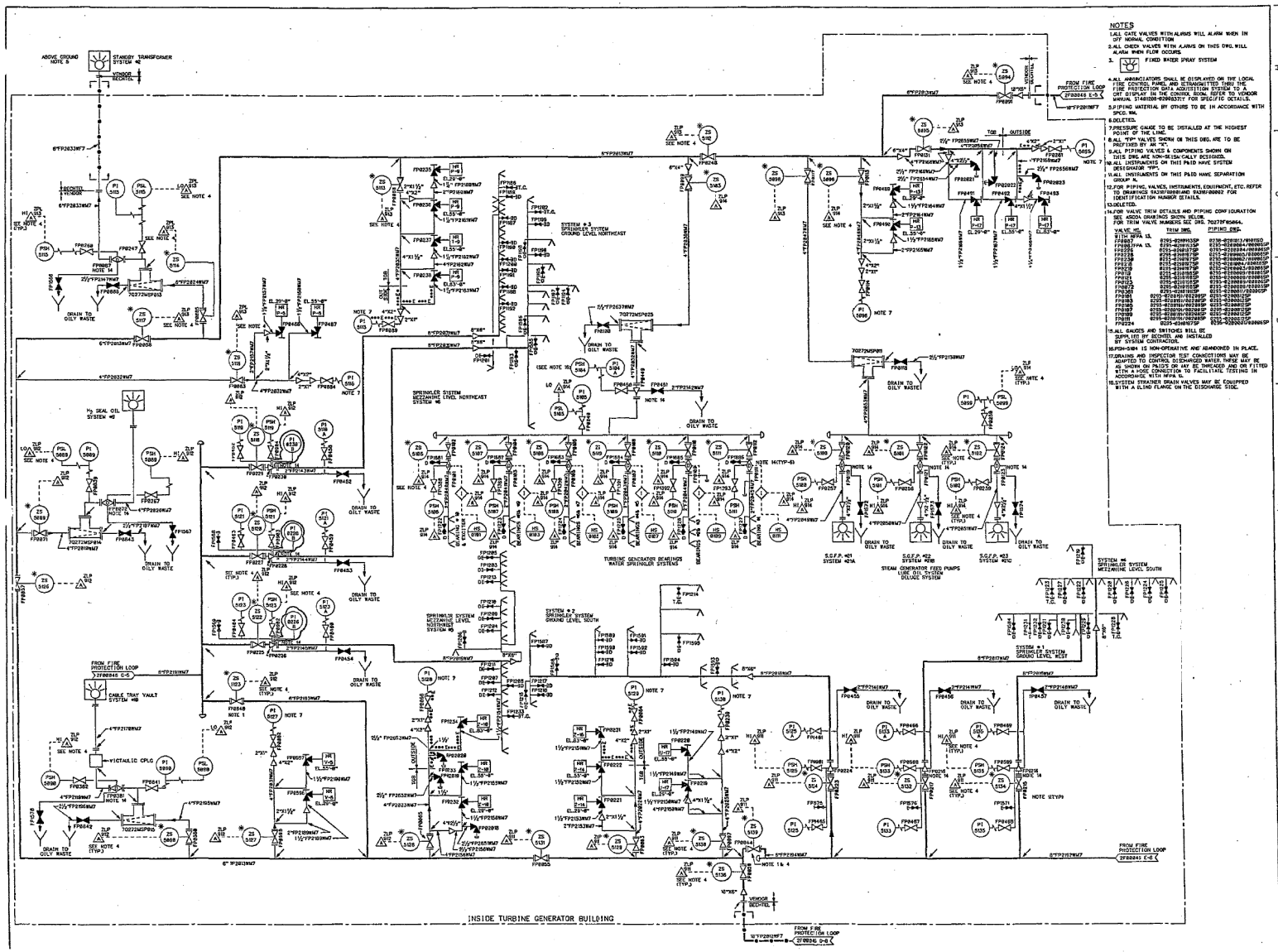

NOTES

1. ALL GATE VALVES WITH ALARMS WILL ALARM WHEN IN OFF NORMAL CONDITION
2. ALL CHECK VALVES WITH ALARMS ON THIS DWG. WILL ALARM WHEN FLOW OCCURS.
3. FIXED WATER SPRAY SYSTEM
4. ALL ANNUNCIATORS SHALL BE DISPLAYED ON THE LOCAL FIRE CONTROL PANEL AND TRANSMITTED THRU THE FIRE PROTECTION DATA ACQUISITION SYSTEM TO A CRT DISPLAY IN THE CONTROL ROOM. REFER TO VENDOR MANUAL S7A0100-6000537: FOR SPECIFIC DETAILS.
5. PIPING MATERIAL BY OTHERS TO BE IN ACCORDANCE WITH SPCG. 9M.
6. DELETED.
7. PRESSURE GAUGE TO BE INSTALLED AT THE HIGHEST POINT OF THE LINE.
8. ALL "TP" VALVES SHOWN ON THIS DWG. ARE TO BE PROTAGED BY AN "X".
9. ALL PIPING VALVES & COMPONENTS SHOWN ON THIS DWG. ARE NON-SEISMICALLY DESIGNED.
10. ALL INSTRUMENTS ON THIS P&ID HAVE SYSTEM DESIGNATION 1FP.
11. ALL INSTRUMENTS ON THIS P&ID HAVE SEPARATION GROUP N.
12. FOR PIPING, VALVES, INSTRUMENTS, EQUIPMENT, ETC. REFER TO DRAWINGS 9A38F80B0LANG 9A38F80B02 FOR IDENTIFICATION MARKER DETAILS.
13. DELETED.
14. FOR VALVE TRIM DETAILS AND PIPING CONFIGURATION SEE ASCOA DRAWINGS SHOWN BELOW. FOR TRIM VALVE MARKERS SEE DWG. 7Q279F805464.

VALVE NO.	TRIM DWG.	PIPING DWG.
WITH NFPA 13.		
FP0883	8285-8288N33SP	8238-8288N13/8288N8SP
FP0882/FPA 13.	8285-8288N15SP	8235-8288N4/8288N8SP
FP0235	8285-8288N17SP	8235-8288N4/8288N8SP
FP0236	8285-8288N19SP	8235-8288N4/8288N8SP
FP0238	8285-8288N21SP	8235-8288N2/8288N8SP
FP0239	8285-8288N23SP	8235-8288N2/8288N8SP
FP0240	8285-8288N25SP	8235-8288N4/8288N8SP
FP0242	8285-8288N27SP	8235-8288N4/8288N8SP
FP0243	8285-8288N29SP	8235-8288N4/8288N8SP
FP0244	8285-8288N31SP	8235-8288N4/8288N8SP
FP0245	8285-8288N33SP	8235-8288N4/8288N8SP
FP0872	8285-8288N35SP	8235-8288N2/8288N8SP
FP0873	8285-8288N37SP	8235-8288N2/8288N8SP
FP1305	8285-8288N39SP	8235-8288N2/8288N8SP
FP0885	8285-8288N41/8288N7SP	8235-8288N2/8288N8SP
FP0886	8285-8288N43/8288N7SP	8235-8288N2/8288N8SP
FP1306	8285-8288N45/8288N7SP	8235-8288N2/8288N8SP
FP0887	8285-8288N47/8288N7SP	8235-8288N2/8288N8SP
FP0888	8285-8288N49/8288N7SP	8235-8288N2/8288N8SP
FP0889	8285-8288N51/8288N7SP	8235-8288N2/8288N8SP
FP1307	8285-8288N53/8288N7SP	8235-8288N2/8288N8SP
FP0224	8285-8288N55SP	8235-8288N2/8288N8SP

15. ALL GASKETS AND BOLTONGS WILL BE PROVIDED BY SECTION 9M INSTALLED BY SYSTEM CONTRACTOR.
16. FCV-5184 IS NON-OPERATIVE AND ABANDONED IN PLACE.
17. DRAINS AND INSPECTOR TEST CONNECTIONS MAY BE ADAPTED TO CONTROL DISCHARGED WATER. THESE MAY BE AS SHOWN ON P&IDS OR MAY BE THREADED AND OR FITTED WITH A CAP OR PLUG. FOR FACILITATE TESTING IN ACCORDANCE WITH NFPA 13.
18. SYSTEM STRAINER DRAIN VALVES MAY BE EQUIPPED WITH A BLIND FLANGE ON THE DISCHARGE SIDE.

REV.	DATE	REVISION	ORIG	CKR	RE	DV	SE
21	4-2-4	INCORP. DCN 0400161	KS				
20	4-17-03	REVISED PER CR 03-13782.	VJM	ON FILE			
19	12-5-97	INCORP. DCN 9604805.	VJM	ON FILE			
0-15	8-3-83	ISSUED FOR CONSTRUCTION.	SIGNATURES ON FILE				

ISSUED UNDER DCN

SOUTH TEXAS PROJECT
NUCLEAR OPERATING COMPANY

PRIORITY	CADD FILE NO.	FSUG. NO.	STI. NO.
1	FJA549.211	D07892B	3172610 0

PIPING AND INSTRUMENTATION DIAGRAM
FIRE PROTECTION
TURBINE GENERATOR BUILDING

SCALE	DRG. NO.	SHT.	REV.
NONE	7Q279F00047#2		21

bmills 04/08/2004 10:21:19

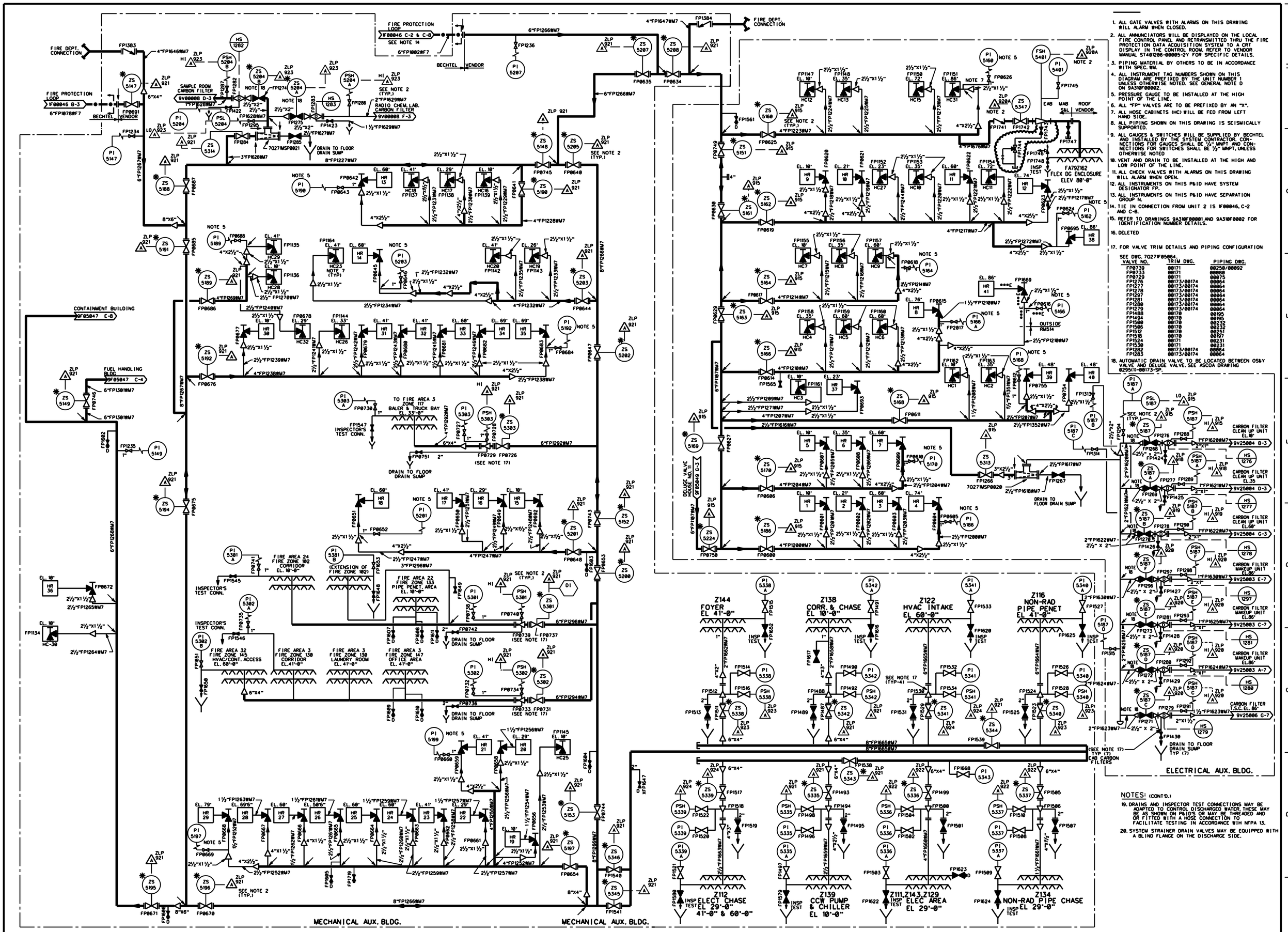

1. ALL GATE VALVES WITH ALARMS ON THIS DRAWING WILL ALARM WHEN CLOSED.
2. ALL ANNUNCIATORS WILL BE DISPLAYED ON THE LOCAL FIRE CONTROL PANEL AND RETRANSMITTED THRU THE FIRE PROTECTION DATA ACQUISITION SYSTEM TO A CRT DISPLAY IN THE CONTROL ROOM. REFER TO VENDOR MANUAL ST40I206-00005-2Y FOR SPECIFIC DETAILS.
3. PIPING MATERIAL BY OTHERS TO BE IN ACCORDANCE WITH SPEC. WM.
4. ALL INSTRUMENT TAG NUMBERS SHOWN ON THIS DIAGRAM ARE PREFIXED BY THE UNIT NUMBER 1 UNLESS OTHERWISE NOTED. SEE GENERAL NOTE D ON 9A310F00002.
5. PRESSURE GAUGE TO BE INSTALLED AT THE HIGH POINT OF THE LINE.
6. ALL "FP" VALVES ARE TO BE PREFIXED BY AN "X".
7. ALL HOSE CABINETS (HC) WILL BE FED FROM LEFT HAND SIDE.
8. ALL PIPING SHOWN ON THIS DRAWING IS SEISMICALLY SUPPORTED.
9. ALL GAUGES & SWITCHES WILL BE SUPPLIED BY BECHTEL AND INSTALLED BY THE SYSTEM CONTRACTOR. CONNECTIONS FOR GAUGES SHALL BE 1/4" MNPT AND CONNECTIONS FOR SWITCHES SHALL BE 1/2" MNPT, UNLESS OTHERWISE NOTED
10. VENT AND DRAIN TO BE INSTALLED AT THE HIGH AND LOW POINT OF THE LINE.
11. ALL CHECK VALVES WITH ALARMS ON THIS DRAWING WILL ALARM WHEN OPEN.
12. ALL INSTRUMENTS ON THIS P&ID HAVE SYSTEM DESIGNATOR FP.
13. ALL INSTRUMENTS ON THIS P&ID HAVE SEPARATION GROUP N.
14. TIE IN CONNECTION FROM UNIT 2 IS 1F00046, C-2 AND C-8.
15. REFER TO DRAWINGS 9A310F00001 AND 9A310F0002 FOR IDENTIFICATION NUMBER DETAILS.
16. DELETED
17. FOR VALVE TRIM DETAILS AND PIPING CONFIGURATION SEE DWG. 7Q279F05054.

VALVE NO.	TRIM DWG.	PIPING DWG.
FP0739	00171	00250/00092
FP0733	00171	00008
FP0729	00171	00075
FP1276	00173/00174	00064
FP1277	00173/00174	00064
FP1278	00173/00174	00064
FP1297	00173/00174	00064
FP1281	00173/00174	00064
FP1280	00173/00174	00064
FP1279	00173/00174	00064
FP1488	00178	00195
FP1494	00178	00195
FP1500	00178	00232
FP1506	00178	00232
FP1512	00178	00251
FP1518	00178	00197
FP1524	00171	00231
FP1530	00171	00231
FP1282	00173/00174	00064
FP1283	00173/00174	00064

18. AUTOMATIC DRAIN VALVE TO BE LOCATED BETWEEN OS&Y VALVE AND DELUGE VALVE. SEE ASCOA DRAWING 8295(1)-00173-SP.

NOTES: (CONT'D.)

19. DRAINS AND INSPECTOR TEST CONNECTIONS MAY BE ADAPTED TO CONTROL DISCHARGED WATER. THESE MAY BE AS SHOWN ON P&IDS OR MAY BE THREADED AND OR FITTED WITH A HOSE CONNECTION TO FACILITATE TESTING IN ACCORDANCE WITH NFPA 13.
20. SYSTEM STRAINER DRAIN VALVES MAY BE EQUIPPED WITH A BLIND FLANGE ON THE DISCHARGE SIDE.

NO.	APPROVAL DATE	REVISION	ORIG	CKR	RE	DV	SE
29	11-11-19	INCORP. DCN 1901396.	N/A	N/A	N/A		
0-28	2-14-82	ISSUED FOR CONSTRUCTION.	SIGNATURES ON FILE				

ESEED_DGN

SOUTH TEXAS PROJECT
NUCLEAR OPERATING COMPANY

PIPING AND INSTRUMENTATION DIAGRAM
MECHANICAL ELECTRICAL AUX. BLDG.
FIRE PROTECTION

PRIORITY	CADD FILE NO.	FSUG. NO.	STI. NO.	SCALE	DWG. NO.	SHT.	REV.
1	7Q279F05053#1.DGN	D070928	34947732	NONE	7Q279F05053#1		29

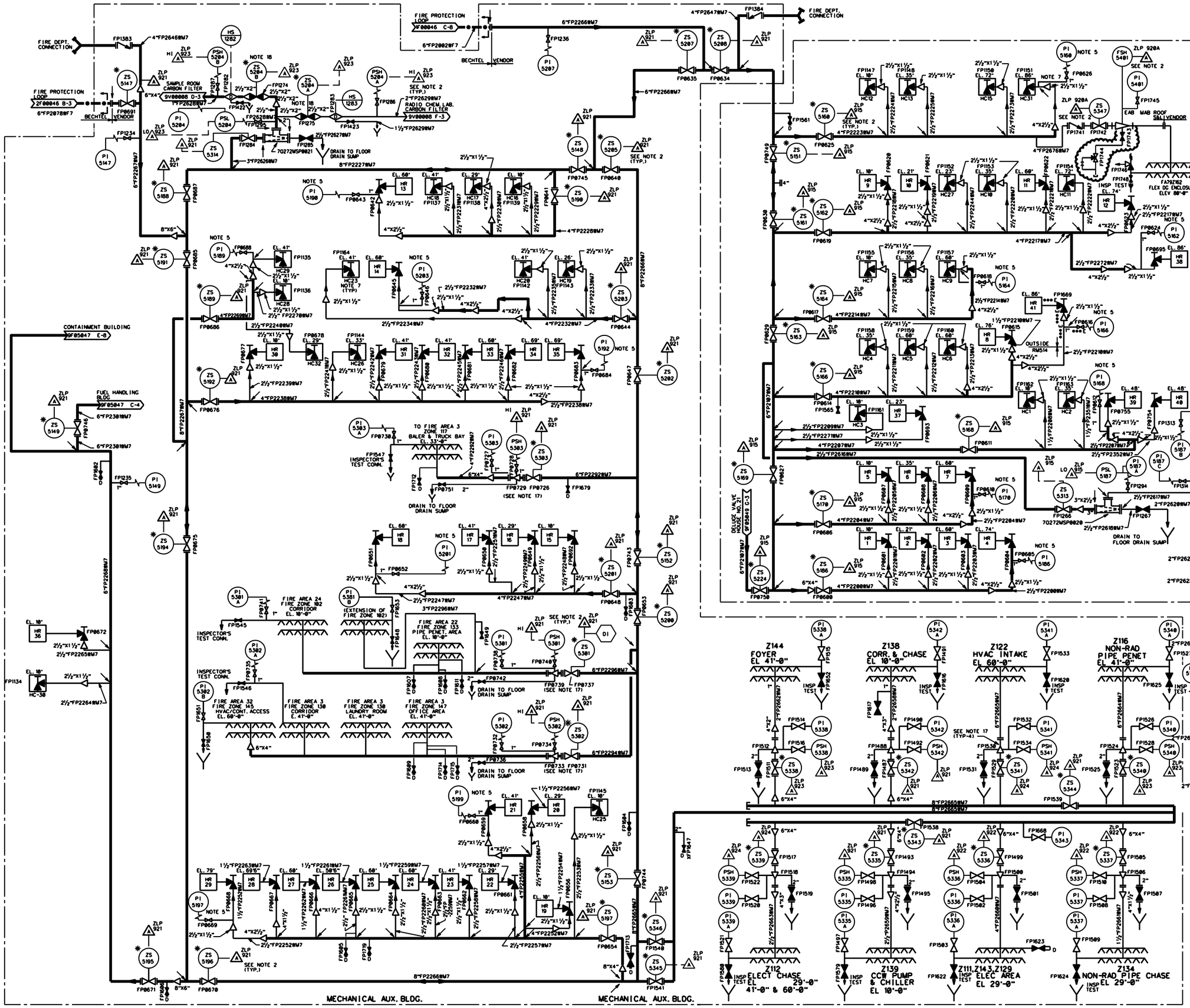

NOTES:

1. ALL GATE VALVES WITH ALARMS ON THIS DRAWING WILL ALARM WHEN CLOSED.
2. ALL ANNUNCIATORS WILL BE DISPLAYED ON THE LOCAL FIRE CONTROL PANEL AND RETRANSMITTED THRU THE FIRE PROTECTION DATA ACQUISITION SYSTEM TO A CRT DISPLAY IN THE CONTROL ROOM. REF. TO V/M ST-401206-(B2)-00037-2Y FOR SPECIFIC DETAILS.
3. PIPING MATERIAL BY OTHERS TO BE IN ACCORDANCE WITH SPEC. "BM".
4. ALL INSTRUMENT TAG NUMBERS SHOWN ON THIS DIAGRAM ARE PREFIXED BY THE UNIT NUMBER 2 UNLESS OTHERWISE NOTED. SEE GENERAL NOTE D ON 9A310F00002.
5. PRESSURE GAUGE TO BE INSTALLED AT THE HIGH POINT OF THE LINE.
6. ALL "FP" VALVES ARE TO BE PREFIXED BY AN "X".
7. ALL HOSE CABINETS (HC) WILL BE FED FROM LEFT HAND SIDE.
8. ALL PIPING SHOWN ON THIS DRAWING IS SEISMICALLY SUPPORTED.
9. ALL GAUGES & SWITCHES WILL BE SUPPLIED BY BECHTEL AND INSTALLED BY THE SYSTEM CONTRACTOR. CONNECTIONS FOR GAUGES SHALL BE ½" MNPT AND CONNECTIONS FOR SWITCHES SHALL BE ½" MNPT, UNLESS OTHERWISE NOTED.
10. VENT AND DRAIN TO BE INSTALLED AT THE HIGH AND LOW POINT OF THE LINE.
11. ALL CHECK VALVES WITH ALARMS ON THIS DRAWING WILL ALARM WHEN OPEN.
12. ALL INSTRUMENTS ON THIS P&ID HAVE SYSTEM DESIGNATOR "FP".
13. ALL INSTRUMENTS ON THIS P&ID HAVE SEPARATION GROUP N.
14. DELETED
15. REFER TO DRAWINGS 9A310F00001 AND 9A310F0002 FOR IDENTIFICATION NUMBER DETAILS.
16. DELETED
17. FOR VALVE TRIM DETAILS AND PIPING CONFIGURATION SEE ASCOA DRAWINGS SHOWN BELOW. FOR TRIM VALVE NUMBERS, SEE DWG. 70272F05064.

VALVE NO.	TRIM DWG.	PIPING DWG.
FP0739	00197	00136/00248
FP0733	00197	00124
FP0729	00197	00119
FP1276	00199/00200	00188
FP1277	00199/00200	00188
FP1278	00199/00200	00188
FP1297	00199/00200	00188
FP1281	00199/00200	00188
FP1280	00199/00200	00188
FP1279	00199/00200	00188
FP1488	00196	00213
FP1494	00196	00213
FP1500	00196	00240
FP1506	00196	00240
FP1512	00196	00249
FP1518	00196	00215
FP1524	00197	00239
FP1530	00197	00231
FP1282	00199/00200	00188
FP1283	00199/00200	00188

18. AUTOMATIC DRAIN VALVE TO BE LOCATED BETWEEN OS&Y VALVE AND DELUGE VALVE. SEE ASCOA DRAWING 9295(1)-00173-SP.

NOTES: (CONT'D.)

19. DRAINS AND INSPECTOR TEST CONNECTIONS MAY BE ADAPTED TO CONTROL DISCHARGED WATER. THESE MAY BE AS SHOWN ON P&ID'S OR MAY BE THREADED AND OR FITTED WITH A HOSE CONNECTION TO FACILITATE TESTING IN ACCORDANCE WITH NFPA 13.
20. SYSTEM STRAINER DRAIN VALVES MAY BE EQUIPPED WITH A BLIND FLANGE ON THE DISCHARGE SIDE.

REF. VENDOR DWG NO.

0295(2)-00022 FSP
0295(2)-00124 ESP
0295(2)-00119 DSP
0295(2)-00019 FSP

NO.	APPROVAL DATE	REVISION	ORIG	CKR	RE	DV	SE
24	11-11-19	INCORP. DCN 1901397.	N/A	N/A	N/A		
0-23	2-14-82	ISSUED FOR CONSTRUCTION	SIGNATURES ON FILE				

PRIORITY	CADD FILE NO.	FSUG. NO.	STI. NO.
1	7Q279F05053#2.DGN	D070928	34947748

SOUTH TEXAS PROJECT
NUCLEAR OPERATING COMPANY

PIPING AND INSTRUMENTATION DIAGRAM
MECHANICAL ELECTRICAL AUX. BLDG.
FIRE PROTECTION

SCALE	DWG. NO.	SHT.	REV.
NONE	7Q279F05053#2		24

ESEED.DGN

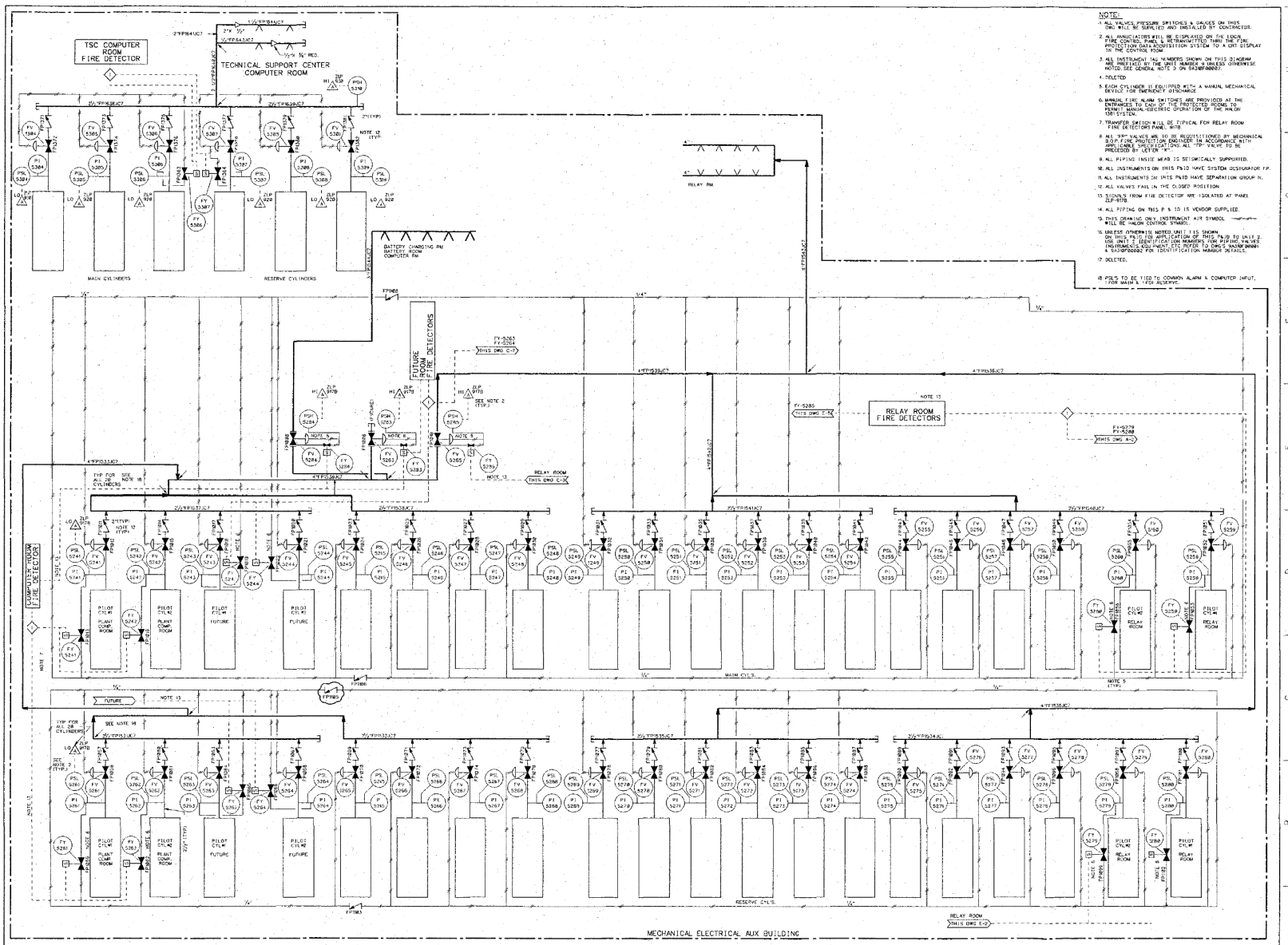

NOTE:

1. ALL VALVES, PRESSURE SWITCHES & GAUGES ON THIS DWG WILL BE SUPPLIED AND INSTALLED BY CONTRACTOR.
2. ALL ANNUNCIATORS WILL BE DISPLAYED ON THE LOCAL FIRE PROTECTION DATA ACQUISITION SYSTEM TO A CRT DISPLAY IN THE CONTROL ROOM.
3. ALL INSTRUMENT TAG NUMBERS SHOWN ON THIS DIAGRAM ARE PREFIXED BY THE UNIT NUMBER 1 UNLESS OTHERWISE NOTED. SEE GENERAL NOTE 3 ON 6A3NF000003.
4. DELETED.
5. EACH CYLINDER IS EQUIPPED WITH A MANUAL MECHANICAL DEVICE FOR EMERGENCY DISCHARGE.
6. MANUAL FIRE ALARM SWITCHES ARE PROVIDED AT THE ENTRANCES TO EACH OF THE PROTECTED ROOMS TO INITIATE MANUAL ELECTRIC OPERATION OF THE HALON 1301 SYSTEM.
7. TRANSFER SWITCH WILL BE TYPICAL FOR RELAY ROOM FIRE DETECTORS PANEL 9178.
8. ALL "RP" VALVES ARE TO BE REPOSITIONED BY MECHANICAL B.O.P. FIRE PROTECTION ENGINEER IN ACCORDANCE WITH APPLICABLE SPECIFICATIONS. ALL "RP" VALVE TO BE PROCEDED BY LETER "R".
9. ALL PIPING INSIDE MEAB IS SEISMICALLY SUPPORTED.
10. ALL INSTRUMENTS ON THIS P&ID HAVE SYSTEM DESIGNATOR FP.
11. ALL INSTRUMENTS IN THIS P&ID HAVE SEPARATION GROUP N.
12. ALL VALVES FAIL IN THE CLOSED POSITION.
13. SIGNALS FROM FIRE DETECTOR ARE ISOLATED AT PANEL ZLP-9178.
14. ALL PIPING ON THIS P & ID IS VENDOR SUPPLIED.
15. THIS DRAWING ONLY INSTRUMENT AIR SYMBOL WILL BE HALON CONTROL SYMBOL.
16. UNLESS OTHERWISE NOTED, UNIT 1 IS SHOWN ON THIS P&ID FOR APPLICATION OF THIS P&ID TO UNIT 2 USE UNIT 2 IDENTIFICATION NUMBERS FOR PIPING, VALVES, INSTRUMENTS, EQUIPMENT, ETC. REFER TO DWGS 6A3NF000001 & 6A3NF000002 FOR IDENTIFICATION NUMBER DETAILS.
17. DELETED.
18. PSLS TO BE TIED TO COMMON ALARM & COMPUTER INPUT, 1 FOR MAIN & 1 FOR RESERVE.

REV. NO.	ISSUE DATE	REVISION	ORIG	CKR	RE	DV	SE
13	6-18-00	INCORP. DCN 9903587					
0-12	9-16-82	ISSUED FOR CONSTRUCTION					

NF SIGNATURES OF FILE

NO.	ISSUE DATE	REVISION	ORIG	CKR	RE	DV	SE

STP

SOUTH TEXAS PROJECT
NUCLEAR OPERATING COMPANY

PIPING AND INSTRUMENTATION DIAGRAM
MECH. & ELECT. AUX. BUILD. AND ADMIN. BLDG.
FIRE PROTECTION SYSTEM
(HALON)

PRIORITY	CADD FILE NO.	FSUG NO.	STI NO.	SCALE	DWG NO.	SHT.	REV.
1	FJA285 131	0870928	31116655	NONE	7Q279F05056#1	-	13

8 7 6 5 4 3 2 1

01:48:34 PM CDT Monday May 15 2000 mflores

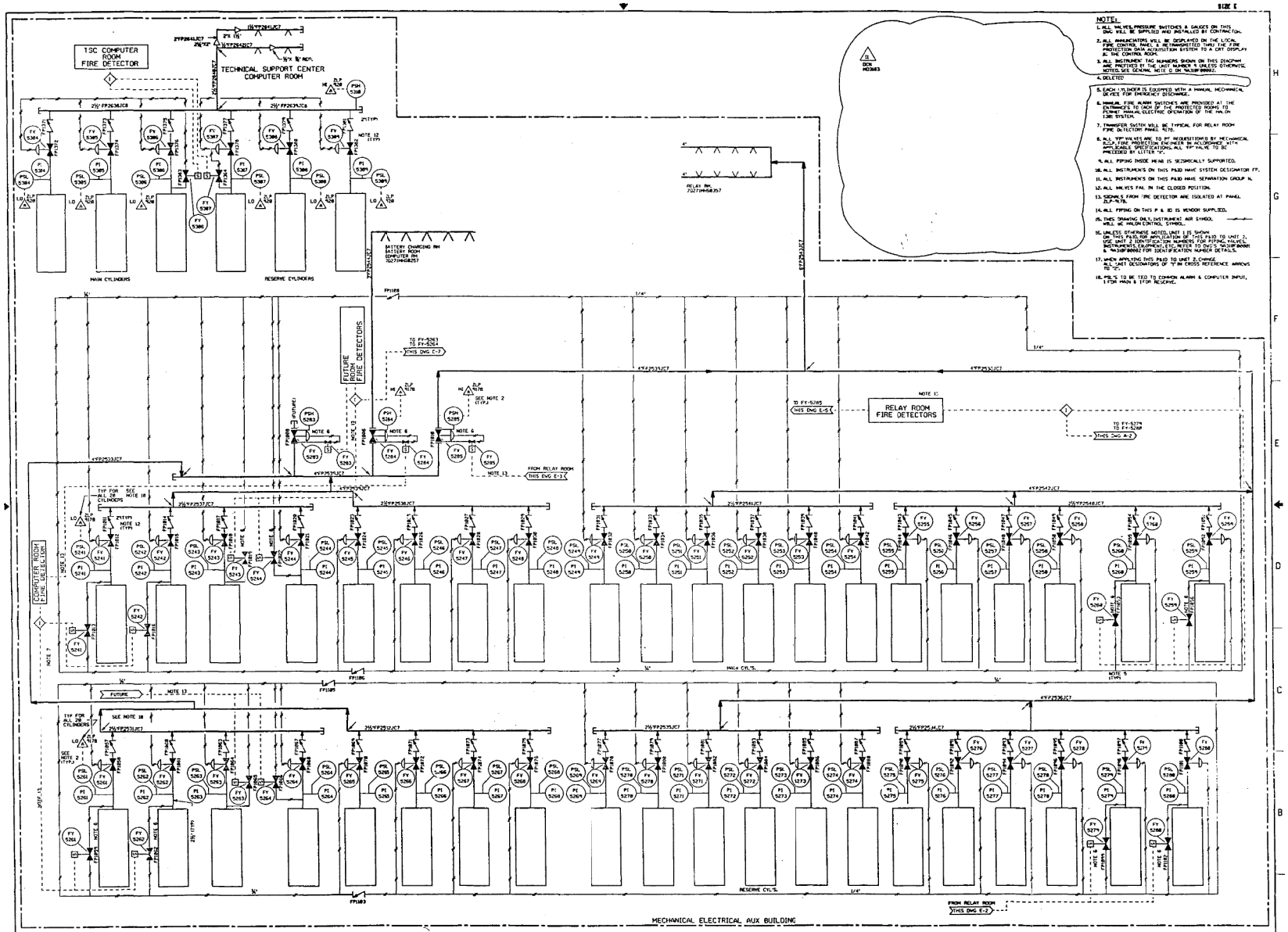

NOTE:

1. ALL VALVES, PRESSURE SWITCHES & GAUGES ON THIS DWG WILL BE SUPPLIED AND INSTALLED BY CONTRACTOR.
2. ALL ANNUNCIATORS WILL BE DISPLAYED ON THE LOCAL FIRE CONTROL PANEL & BE ANNUNCIATED THRU THE FIRE PROTECTION DATA ACQUISITION SYSTEM TO A CRT DISPLAY IN THE CONTROL ROOM.
3. ALL INSTRUMENT TAG NUMBERS SHOWN ON THIS DIAGRAM ARE PREFIXED BY THE UNIT NUMBER 5 UNLESS OTHERWISE NOTED. SEE GENERAL NOTE 0 ON 7027PM0002.
4. DELETED
5. EACH CYLINDER IS EQUIPPED WITH A MANUAL MECHANICAL DEVICE FOR EMERGENCY DISCHARGE.
6. MANUAL FIRE ALARM SWITCHES ARE PROVIDED AT THE ENTRANCES TO EACH OF THE PROTECTED ROOMS TO PERMIT MANUAL ELECTRIC OPERATION OF THE HALON 1301 SYSTEM.
7. TRANSFER SWITCH WILL BE TYPICAL FOR RELAY ROOM FIRE DETECTORS PANEL 5278.
8. ALL FP VALVES ARE TO BE REPOSITIONED BY MECHANICAL BLDG. FIRE PROTECTION ENGINEER IN ACCORDANCE WITH APPLICABLE SPECIFICATIONS. ALL FP VALVE TO BE PREFIXED BY LETTER "V".
9. ALL PIPING INSIDE HEAB IS SEISMICALLY SUPPORTED.
10. ALL INSTRUMENTS ON THIS P&ID HAVE SYSTEM DESIGNATOR FP.
11. ALL INSTRUMENTS ON THIS P&ID HAVE SEPARATION GROUP N.
12. ALL VALVES FAIL IN THE CLOSED POSITION.
13. SIGNALS FROM FIRE DETECTOR ARE ISOLATED AT PANEL ZLP-5278.
14. ALL PIPING ON THIS P & ID IS VENDOR SUPPLIED.
15. THIS DRAWING ONLY INSTRUMENT AIR SYMBOL WILL BE HALON CONTROL SYMBOL.
16. UNLESS OTHERWISE NOTED, UNIT 1/2 SHOWN ON THIS P&ID IS APPLICABLE TO UNIT 1 AND PAID TO UNIT 2. USE THE 1 & 2 CONVERSION NUMBERS FOR PIPING, VALVES, INSTRUMENTS, EQUIPMENT, ETC. REFER TO DWGS. 7A13PM0001 & 7A13PM0002 FOR IDENTIFICATION NUMBER DETAILS.
17. WHEN APPLYING THIS P&ID TO UNIT 2, CHANGE ALL UNIT DESIGNATORS OF "1" IN CROSS REFERENCE ARROWS TO "2".
18. PSL'S TO BE TIED TO COMMON ALARM & COMPUTER INPUT, 1 FOR MAIN & 1 FOR RESERVE.

NO.	ISSUE DATE	HL&P REVISION	BY	CHK	RC	DV	NA	SE	PE	NO.	ISSUE DATE	HL&P REVISION	BY	CHK	RC	DV	NA	SE	PE
11	7-17-94	HL&P ASS. DES. CHG. CTL. AND INCORP. DCN M03083	LOD	[illegible]															
8-18	1-16-82	ISSUED FOR CONSTRUCTION	SIGNATURES ON FILE																

HOUSTON LIGHTING & POWER COMPANY
SOUTH TEXAS PROJECT ELECTRIC GENERATING STATION

PIPING AND INSTRUMENTATION DIAGRAM
MECH. & ELECT. AUX. BLDG. AND ADMIN. BLDG.
FIRE PROTECTION SYSTEM
(HALON)

SCALE	DRAWING NO.	REV.
NONE	7027PF05056 *2	11

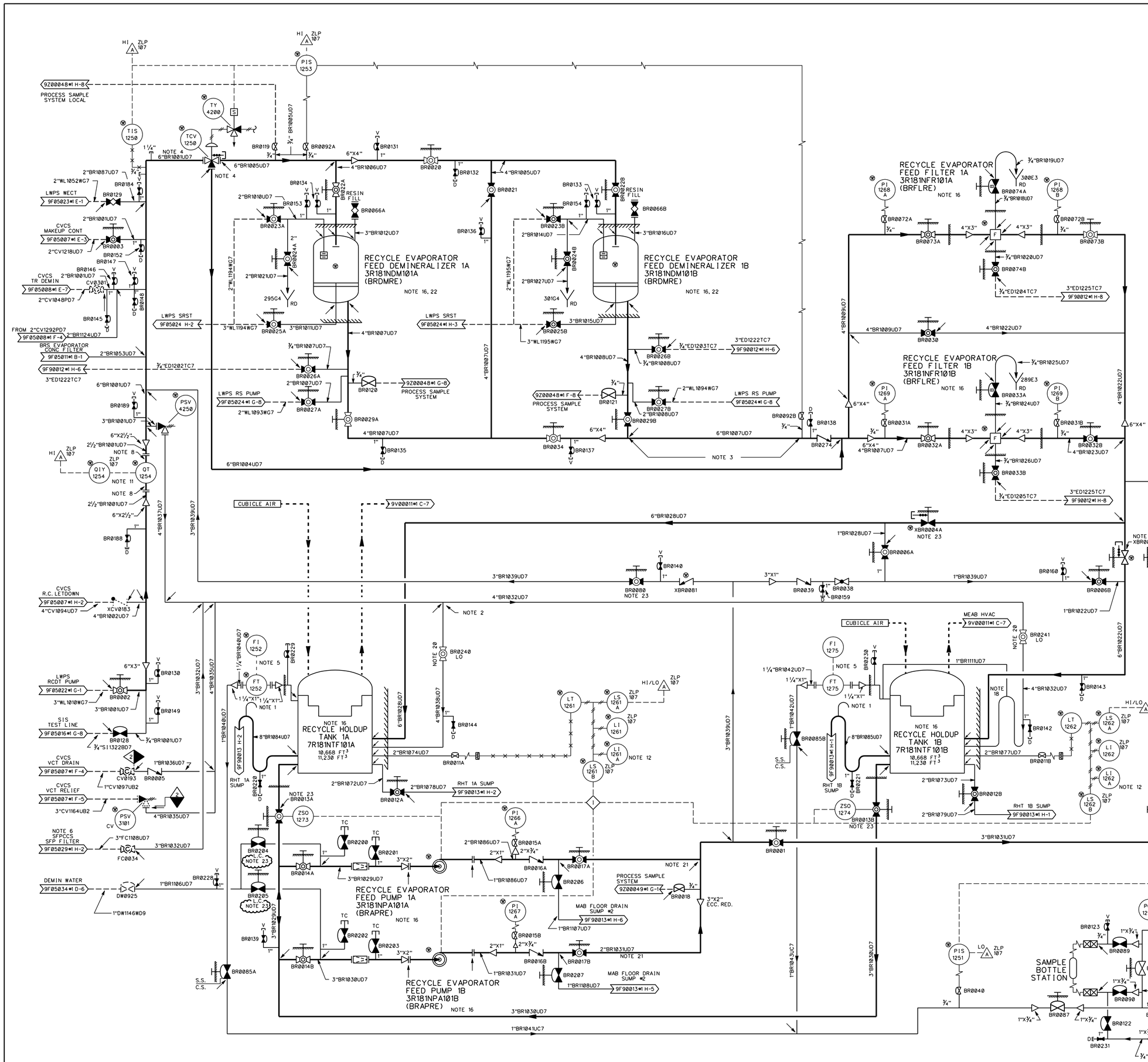

NOTES:

1. EXTEND LOWER LOOP 20 INCHES BELOW OVERFLOW CONNECTION. EXTEND UPPER LOOP 6 INCHES BELOW DIAPHRAGM FLANGE. LOCATE SYPHON BREAK VENT ON TOP OF UPPER LOOP.
2. HIGH POINT OF PIPE CROSS CONNECTION BETWEEN RHT TO BE 12 INCHES OR MORE BELOW DIAPHRAGM FLANGE.
3. LOCATE THESE CONNECTIONS AS CLOSE TOGETHER AS POSSIBLE.
4. ORIENT 3-WAY VALVE SO IT FAILS WITH FLOW TO RECYCLE EVAPORATOR FILTER.
5. LOCATE AT HIGH POINT TO ALLOW LIQUID CONDENSATE TO FLOW BACK TO RHT.
6. MUST BE ROUTED THRU SFPCCS DEMINERALIZER AND FILTER.
7. DELETED.
8. STANDARD FLOW MEASURING PIPE RUNS UPSTREAM AND DOWNSTREAM REQUIRED BETWEEN 6-INCH AND 2-½-INCH TRANSITION PIECES.
9. DELETED
10. DELETED.
11. QT1254 IS LOCATED ON VERTICAL PIPE RUN WITH UPWARD FLOW.
12. RHT LEVEL INDICATION MUST BE VISIBLE FROM RECYCLE EVAPORATOR FEED PUMP LOCAL CONTROL.
13. THE SYSTEM DESIGNATOR OF ALL INSTRUMENTS ON THIS P&ID IS BR UNLESS NOTED OTHERWISE.
14. THE SEPARATION GROUP OF ALL INSTRUMENTS ON THIS P&ID IS N.
15. ALL VENTS AND DRAINS ARE 1 INCH NOMINAL DIAMETER PIPES UNLESS NOTED OTHERWISE.
16. THE QUALITY CLASSIFICATION OF THE BORON RECYCLE SYSTEM HAS BEEN CHANGED FROM 5 TO 7. HOWEVER, THE TPNS NUMBERS OF COMPONENTS PROCURED BEFORE THE RECLASSIFICATION SHALL NOT BE CHANGED.
17. NON-SEISMIC CATEGORY I COMPONENTS INSTALLED INSIDE A SEISMIC CATEGORY I BUILDING OR IN THE VICINITY OF A SEISMIC CATEGORY I COMPONENT, SHALL BE EVALUATED ACCORDING TO THE CRITERIA IN REFERENCE 4.
18. EXTEND UPPER LOOP 12 INCHES BELOW DIAPHRAGM FLANGE. LOCATE SYPHON BREAK VENT ON TOP OF UPPER LOOP. TIE-IN VENT TO TANK VENT. EXTEND UPPER LOOP OF SYPHON BREAK VENT LINE AT LEAST 6 INCHES ABOVE DIAPHRAGM FLANGE.
19. USE MINIMUM 5D PIPING BENDS ON ALL LINES CARRYING SPENT RESINS.
20. CLOSE PSV DISCHARGE LINE ISOLATION DURING MAINTENANCE ON TANK. AFTER MAINTENANCE, OPEN ISOLATION VALVE. ONLY ONE TANK TO BE OUT OF SERVICE (FOR MAINTENANCE) AT ANY TIME. PRIOR TO CLOSING ISOLATION VALVE, CONFIRM THAT OTHER ISOLATION VALVE IS FULLY OPEN
21. WHEN A RECYCLE EVAPORATOR FEED PUMP IS PUMPING THROUGH THE PATH OTHER THAN TO THE RECYCLE EVAPORATOR, THE RESPECTIVE DISCHARGE VALVE (BR0017B) SHOULD BE THROTTLED TO LIMIT THE FLOW TO 100 GPM.
22. RECYCLE EVAPORATOR FEED DEMINERALIZER'S SHOULD BE OPERATED IN PARALLEL OPERATION, EITHER ONE OR BOTH MAY BE IN SERVICE AS REQUIRED.
23. THESE VALVES MAY NEED TO BE LOCKED CLOSED IN MODE 5B AND MODE 6 TO PREVENT UNBORATED WATER FROM REACHING THE RCS. REF. CALC NC07090.

REFERENCES:

1. DRAWING 9A310F00001 AND 9A310F00002.
2. WESTINGHOUSE DRAWING 1207E18 SUBMITTAL 6 SHEET 1 OF 2.
3. BORON RECYCLE SYSTEM P&ID, DRAWING 7R189F05011#1.
4. DESIGN CRITERIA, SYSTEMS INTERACTION, SEISMIC II/I, TPNS NO. 7A369NQ1003.

DRAWING APPLICABILITY NOTES:

1. DELETED.
2. DELETED.
3. DELETED.
4. THIS DRAWING IS SHEET 1 OF 2 OF THE BORON RECYCLE SYSTEM P&ID SET. SEE REFERENCE 3 OF SHEET 2.

NO.	APPROVAL DATE	REVISION	ORIG	CKR	RE	DV	SE
25	6-6-18	REVISED PER CR 13-551-14.	N/A	N/A	N/A		
0-24	8-13-82	ISSUED FOR CONSTRUCTION.	SIGNATURES ON FILE				

NO.	APPROVAL DATE	REVISION	ORIG	CKR	RE	DV	SE

SOUTH TEXAS PROJECT
NUCLEAR OPERATING COMPANY

PIPING & INSTRUMENTATION DIAGRAM
BORON RECYCLE SYSTEM

PRIORITY	CADD FILE NO.	FSUG. NO.	STI. NO.	SCALE	DWG. NO.	SHT.	REV.
1	7R189F05010#1.DGN	D070928	34677527	NONE	7R189F05010#1		25

ESEED_DGN

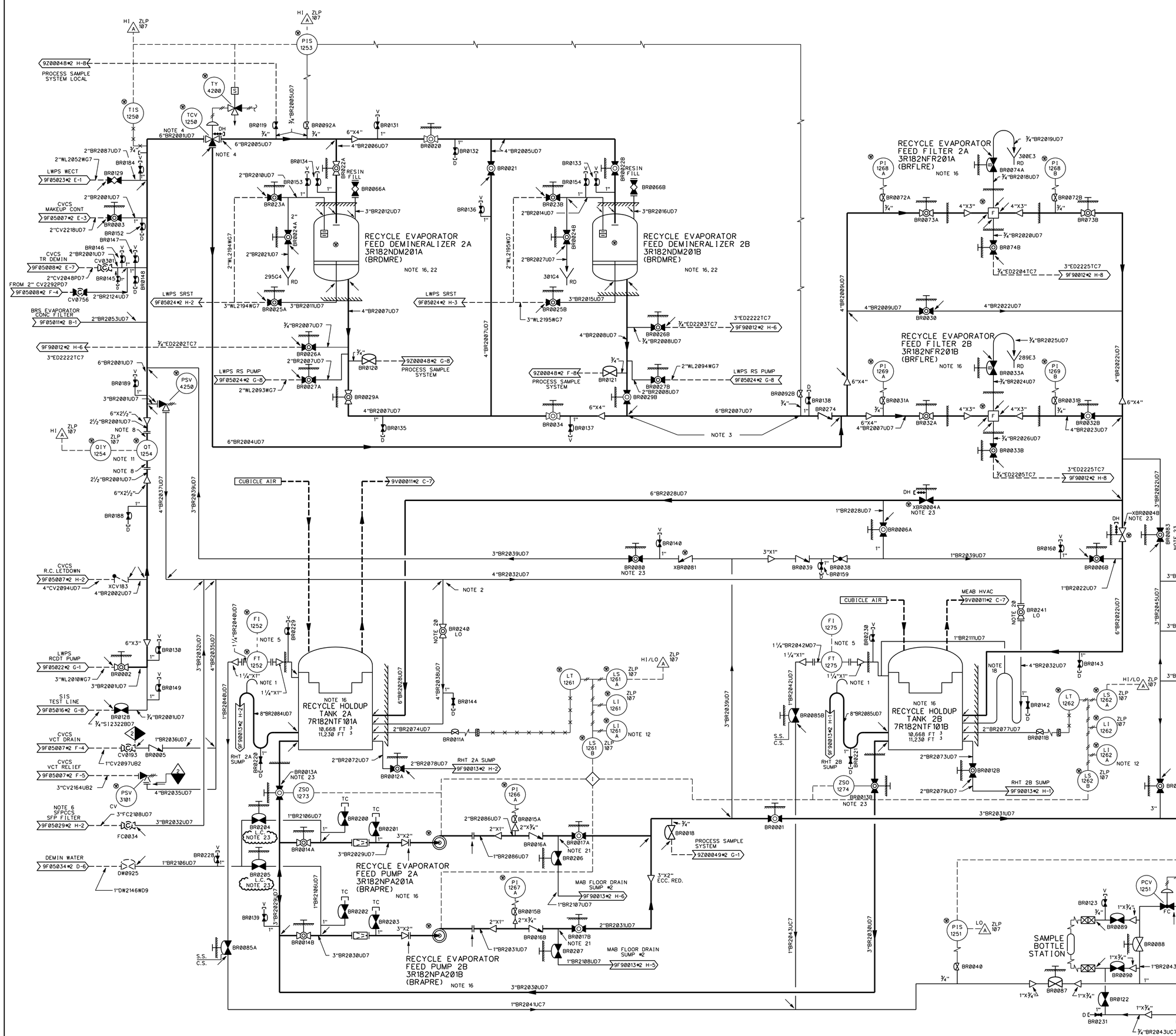

NOTES:

1. EXTEND LOWER LOOP 20 INCHES BELOW OVERFLOW CONNECTION. EXTEND UPPER LOOP 6 INCHES BELOW DIAPHRAGM FLANGE. LOCATE SYPHON BREAK VENT ON TOP OF UPPER LOOP.
2. HIGH POINT OF PIPE CROSS CONNECTION BETWEEN RHT TO BE 12 INCHES OR MORE BELOW DIAPHRAGM FLANGE.
3. LOCATE THESE CONNECTIONS AS CLOSE TOGETHER AS POSSIBLE.
4. ORIENT 3-WAY VALVE SO IT FAILS WITH FLOW TO RECYCLE EVAPORATOR FILTER.
5. LOCATE AT HIGH POINT TO ALLOW LIQUID CONDENSATE TO FLOW BACK TO RHT.
6. MUST BE ROUTED THRU SFPCCS DEMINERALIZER AND FILTER.
7. DELETED
8. STANDARD FLOW MEASURING PIPE RUNS UPSTREAM AND DOWNSTREAM REQUIRED BETWEEN 6-INCH AND 2-1/2-INCH TRANSITION PIECES.
9. ALL INSTRUMENT TAG NUMBERS SHOWN ON THIS P&ID ARE PREFIXED BY THE UNIT NUMBER 2 UNLESS NOTED OTHERWISE. SEE GENERAL NOTE D ON DRAWING 9A310F00002.
10. DELETED.
11. QT1254 IS LOCATED ON VERTICAL PIPE RUN WITH UPWARD FLOW.
12. RHT LEVEL INDICATION MUST BE VISIBLE FROM RECYCLE EVAPORATOR FEED PUMP LOCAL CONTROL.
13. THE SYSTEM DESIGNATOR OF ALL INSTRUMENTS ON THIS P&ID IS BR UNLESS NOTED OTHERWISE.
14. THE SEPARATION GROUP OF ALL INSTRUMENTS ON THIS P&ID IS N.
15. ALL VENTS AND DRAINS ARE 1 INCH NOMINAL DIAMETER PIPES UNLESS NOTED OTHERWISE.
16. THE QUALITY CLASSIFICATION OF THE BORON RECYCLE SYSTEM HAS BEEN CHANGED FROM 5 TO 7. HOWEVER, THE TPNS NUMBERS OF COMPONENTS PROCURED BEFORE THE RECLASSIFICATION SHALL NOT BE CHANGED.
17. NON-SEISMIC CATEGORY I COMPONENTS INSTALLED INSIDE A SEISMIC CATEGORY I BUILDING OR IN THE VICINITY OF A SEISMIC CATEGORY I COMPONENT, SHALL BE EVALUATED ACCORDING TO THE CRITERIA IN REFERENCE 4.
18. EXTEND UPPER LOOP 12 INCHES BELOW DIAPHRAGM FLANGE. LOCATE SYPHON BREAK VENT ON TOP OF UPPER LOOP. TIE-IN VENT TO TANK VENT. EXTEND UPPER LOOP OF SYPHON BREAK VENT LINE AT LEAST 6 INCHES ABOVE DIAPHRAGM FLANGE.
19. USE MINIMUM 5D PIPING BENDS ON ALL LINES CARRYING SPENT RESINS.
20. CLOSE PSV DISCHARGE LINE ISOLATION DURING MAINTENANCE ON THE TANK. AFTER MAINTENANCE, OPEN ISOLATION VALVE. ONLY ONE TANK TO BE OUT OF SERVICE (FOR MAINTENANCE) AT ANY TIME. PRIOR TO CLOSING ISOLATION VALVE, CONFIRM THAT OTHER ISOLATION VALVE IS LOCKED FULL OPEN.
21. WHEN A RECYCLE EVAPORATOR FEED PUMP IS PUMPING THROUGH THE PATH OTHER THAN TO THE RECYCLE EVAPORATOR, THE RESPECTIVE DISCHARGE VALVE (BR 0017A OR 0017B) SHOULD BE THROTTLED TO LIMIT THE FLOW TO 100 GPM.
22. RECYCLE EVAPORATOR FEED DEMINERALIZER'S SHOULD BE OPERATED IN PARALLEL OPERATION, EITHER ONE OR BOTH MAY BE IN SERVICE AS REQUIRED.
23. THESE VALVES MAY NEED TO BE LOCKED CLOSED IN MODE 5B AND MODE 6 TO PREVENT UNBORATED WATER FROM REACHING THE RCS. REF. CALC NC07090.

REFERENCES:

1. DRAWING 9A310F00001 AND 9A310F00002.
2. WESTINGHOUSE DRAWING 1207E18 SUBMITTAL 6 SHEET 1 OF 2.
3. BORON RECYCLE SYSTEM P&ID, DRAWING 7R189F05011#2.
4. DESIGN CRITERIA, SYSTEMS INTERACTION, SEISMIC I/I, TPNS NO. 7A369NQ1003.

DRAWING APPLICABILITY NOTES:

1. DELETED
2. DELETED
3. DELETED.
4. THIS DRAWING IS SHEET 1 OF 2 OF THE BORON RECYCLE SYSTEM P&ID SET. SEE REFERENCE 3 OF SHEET 2.

NO.	APPROVAL DATE	REVISION	ORIG	CKR	RE	DV	SE
19	6-6-18	REVISED PER CR 13-551-14.	N/A	N/A	N/A		
0-18	8-13-82	ISSUED FOR CONSTRUCTION.	SIGNATURES ON FILE				

NO.	APPROVAL DATE	REVISION	ORIG	CKR	RE	DV	SE

SOUTH TEXAS PROJECT
NUCLEAR OPERATING COMPANY

PIPING AND INSTRUMENTATION DIAGRAM
BORON RECYCLE SYSTEM

PRIORITY	CADD FILE NO.	FSUG. NO.	STI. NO.	SCALE	DWG. NO.	SHT.	REV.
1	7R189F05010#2.DGN	D070928	34677538	NONE	7R189F05010#2		19

ESEED_DGN

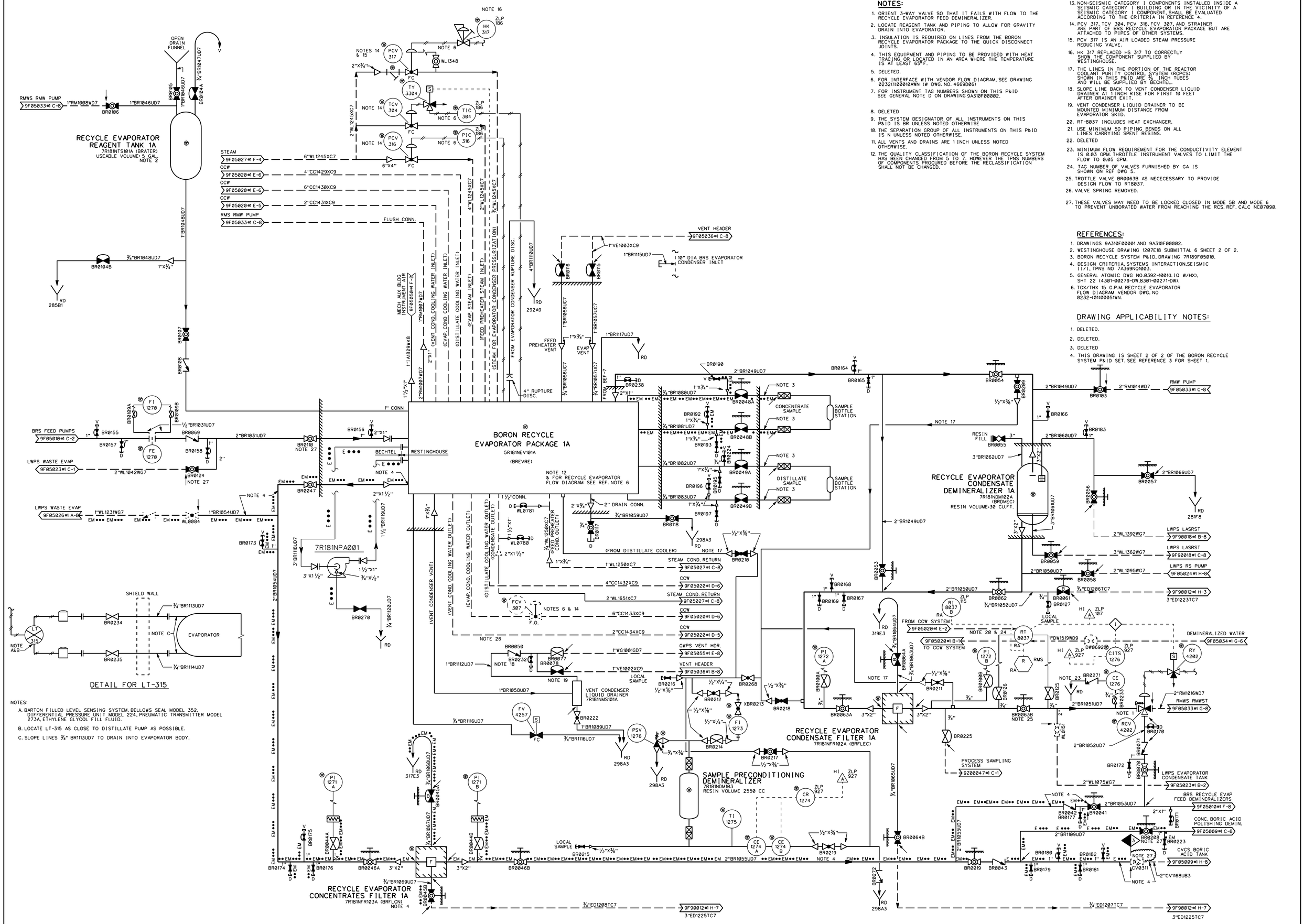

NOTES:

1. ORIENT 3-WAY VALVE SO THAT IT FAILS WITH FLOW TO THE RECYCLE EVAPORATOR FEED DEMINERALIZER.
2. LOCATE REAGENT TANK AND PIPING TO ALLOW FOR GRAVITY DRAIN INTO EVAPORATOR.
3. INSULATION IS REQUIRED ON LINES FROM THE BORON RECYCLE EVAPORATOR PACKAGE TO THE QUICK DISCONNECT JOINTS.
4. THIS EQUIPMENT AND PIPING TO BE PROVIDED WITH HEAT TRACING OR LOCATED IN AN AREA WHERE THE TEMPERATURE IS AT LEAST 65°F.
5. DELETED.
6. FOR INTERFACE WITH VENDOR FLOW DIAGRAM, SEE DRAWING 0232(1)00010AWN (W DWG. NO. 4669D06)
7. FOR INSTRUMENT TAG NUMBERS SHOWN ON THIS P&ID SEE GENERAL NOTE D ON DRAWING 9A310F00002.
8. DELETED
9. THE SYSTEM DESIGNATOR OF ALL INSTRUMENTS ON THIS P&ID IS BR UNLESS NOTED OTHERWISE
10. THE SEPARATION GROUP OF ALL INSTRUMENTS ON THIS P&ID IS N UNLESS NOTED OTHERWISE.
11. ALL VENTS AND DRAINS ARE 1 INCH UNLESS NOTED OTHERWISE.
12. THE QUALITY CLASSIFICATION OF THE BORON RECYCLE SYSTEM HAS BEEN CHANGED FROM 5 TO 7. HOWEVER THE TPNS NUMBERS OF COMPONENTS PROCURED BEFORE THE RECLASSIFICATION SHALL NOT BE CHANGED.
13. NON-SEISMIC CATEGORY I COMPONENTS INSTALLED INSIDE A SEISMIC CATEGORY I BUILDING OR IN THE VICINITY OF A SEISMIC CATEGORY I COMPONENT, SHALL BE EVALUATED ACCORDING TO THE CRITERIA IN REFERENCE 4.
14. PCV 317, TCV 304, PCV 316, FCV 307, AND STRAINER ARE PART OF BRS RECYCLE EVAPORATOR PACKAGE BUT ARE ATTACHED TO PIPES OF OTHER SYSTEMS.
15. PCV 317 IS AN AIR LOADED STEAM PRESSURE REDUCING VALVE.
16. HK 317 REPLACED HS 317 TO CORRECTLY SHOW THE COMPONENT SUPPLIED BY WESTINGHOUSE.
17. THE LINES IN THE PORTION OF THE REACTOR COOLANT PURITY CONTROL SYSTEM (RCPCS) SHOWN IN THIS P&ID ARE ⅜ INCH TUBES AND WILL BE SUPPLIED BY BECHTEL.
18. SLOPE LINE BACK TO VENT CONDENSER LIQUID DRAINER AT 1 INCH RISE FOR FIRST 10 FEET AFTER DRAINER EXIT.
19. VENT CONDENSER LIQUID DRAINER TO BE MOUNTED MINIMUM DISTANCE FROM EVAPORATOR SKID.
20. RT-8037 INCLUDES HEAT EXCHANGER.
21. USE MINIMUM 5D PIPING BENDS ON ALL LINES CARRYING SPENT RESINS.
22. DELETED
23. MINIMUM FLOW REQUIREMENT FOR THE CONDUCTIVITY ELEMENT IS 0.03 GPM. THROTTLE INSTRUMENT VALVES TO LIMIT THE FLOW TO 0.05 GPM.
24. TAG NUMBER OF VALVES FURNISHED BY GA IS SHOWN ON REF DWG 5.
25. TROTTLE VALVE BR0063B AS NECECESSARY TO PROVIDE DESIGN FLOW TO RT8037.
26. VALVE SPRING REMOVED.
27. THESE VALVES MAY NEED TO BE LOCKED CLOSED IN MODE 5B AND MODE 6 TO PREVENT UNBORATED WATER FROM REACHING THE RCS. REF. CALC NC07090.

REFERENCES:

1. DRAWINGS 9A310F00001 AND 9A310F00002.
2. WESTINGHOUSE DRAWING 1207E18 SUBMITTAL 6 SHEET 2 OF 2.
3. BORON RECYCLE SYSTEM P&I D, DRAWING 7R189F05010.
4. DESIGN CRITERIA, SYSTEMS INTERACTION, SEISMIC II/I, TPNS NO 7A369NQ1003.
5. GENERAL ATOMIC DWG NO.0392-1001(LIQ W/HX), SHT 22 (4301-00279-DW, 8301-00271-DW).
6. TGX/THX 15 G.P.M. RECYCLE EVAPORATOR FLOW DIAGRAM VENDOR DWG. NO 0232-(01)00051WN.

DRAWING APPLICABILITY NOTES:

1. DELETED.
2. DELETED.
3. DELETED
4. THIS DRAWING IS SHEET 2 OF 2 OF THE BORON RECYCLE SYSTEM P&ID SET. SEE REFERENCE 3 FOR SHEET 1.

NO.	APPROVAL DATE	REVISION	ORIG	CKR	RE	DV	SE
21	6-6-18	REVISED PER CR 13-551-14.	N/A	N/A	N/A		
0-20	8-13-82	ISSUED FOR CONSTRUCTION. SIGNATURES ON FILE					

PRIORITY	CADD FILE NO.	FSUG. NO.	STI. NO.
1	7R189F05011#1.DGN	D070928	34677575

SOUTH TEXAS PROJECT
NUCLEAR OPERATING COMPANY

PIPING AND INSTRUMENTATION DIAGRAM
BORON RECYCLE SYSTEM

SCALE	DWG. NO.	SHT.	REV.
NONE	7R189F05011#1		21

ESEED_DGN

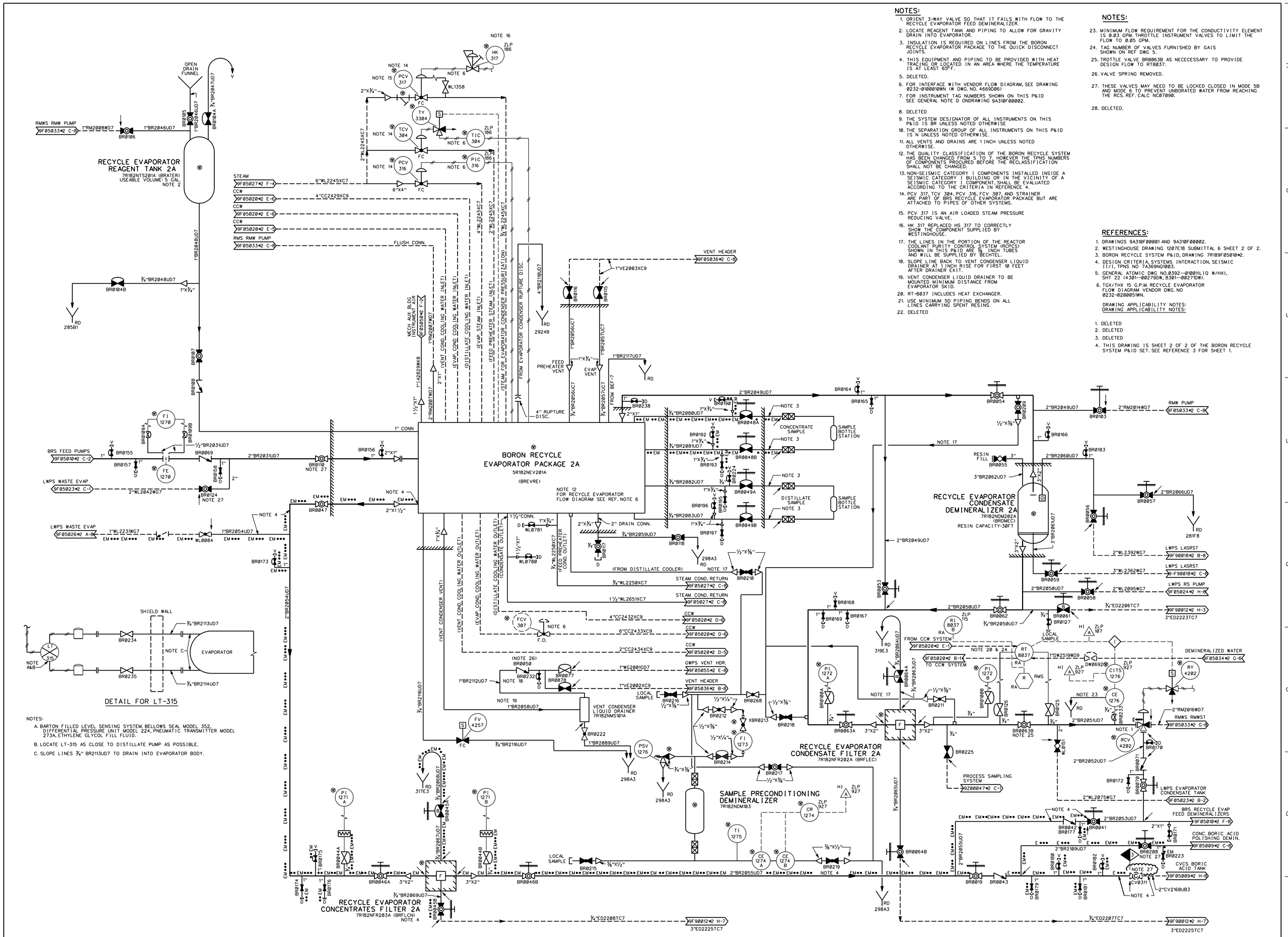

NOTES:

1. ORIENT 3-WAY VALVE SO THAT IT FAILS WITH FLOW TO THE RECYCLE EVAPORATOR FEED DEMINERALIZER.
2. LOCATE REAGENT TANK AND PIPING TO ALLOW FOR GRAVITY DRAIN INTO EVAPORATOR.
3. INSULATION IS REQUIRED ON LINES FROM THE BORON RECYCLE EVAPORATOR PACKAGE TO THE QUICK DISCONNECT JOINTS.
4. THIS EQUIPMENT AND PIPING TO BE PROVIDED WITH HEAT TRACING OR LOCATED IN AN AREA WHERE THE TEMPERATURE IS AT LEAST 65°F.
5. DELETED.
6. FOR INTERFACE WITH VENDOR FLOW DIAGRAM, SEE DRAWING 0232-0100010WN (W DWG. NO. 4669D06)
7. FOR INSTRUMENT TAG NUMBERS SHOWN ON THIS P&ID SEE GENERAL NOTE D ONDRAWING 9A310F00002.
8. DELETED
9. THE SYSTEM DESIGNATOR OF ALL INSTRUMENTS ON THIS P&ID IS BR UNLESS NOTED OTHERWISE
10. THE SEPARATION GROUP OF ALL INSTRUMENTS ON THIS P&ID IS N UNLESS NOTED OTHERWISE.
11. ALL VENTS AND DRAINS ARE 1 INCH UNLESS NOTED OTHERWISE.
12. THE QUALITY CLASSIFICATION OF THE BORON RECYCLE SYSTEM HAS BEEN CHANGED FROM 5 TO 7. HOWEVER THE TPNS NUMBERS OF COMPONENTS PROCURED BEFORE THE RECLASSIFICATION SHALL NOT BE CHANGED.
13. NON-SEISMIC CATEGORY I COMPONENTS INSTALLED INSIDE A SEISMIC CATEGORY I BUILDING OR IN THE VICINITY OF A SEISMIC CATEGORY I COMPONENT, SHALL BE EVALUATED ACCORDING TO THE CRITERIA IN REFERENCE 4.
14. PCV 317, TCV 304, PCV 316, FCV 307, AND STRAINER ARE PART OF BRS RECYCLE EVAPORATOR PACKAGE BUT ARE ATTACHED TO PIPES OF OTHER SYSTEMS.
15. PCV 317 IS AN AIR LOADED STEAM PRESSURE REDUCING VALVE.
16. HK 317 REPLACED HS 317 TO CORRECTLY SHOW THE COMPONENT SUPPLIED BY WESTINGHOUSE.
17. THE LINES IN THE PORTION OF THE REACTOR COOLANT PURITY CONTROL SYSTEM (RCPCS) SHOWN IN THIS P&ID ARE ⅜ INCH TUBES AND WILL BE SUPPLIED BY BECHTEL.
18. SLOPE LINE BACK TO VENT CONDENSER LIQUID DRAINER AT 1 INCH RISE FOR FIRST 10 FEET AFTER DRAINER EXIT.
19. VENT CONDENSER LIQUID DRAINER TO BE MOUNTED MINIMUM DISTANCE FROM EVAPORATOR SKID.
20. RT-8037 INCLUDES HEAT EXCHANGER.
21. USE MINIMUM 5D PIPING BENDS ON ALL LINES CARRYING SPENT RESINS.
22. DELETED

NOTES:

23. MINIMUM FLOW REQUIREMENT FOR THE CONDUCTIVITY ELEMENT IS 0.03 GPM. THROTTLE INSTRUMENT VALVES TO LIMIT THE FLOW TO 0.05 GPM.
24. TAG NUMBER OF VALVES FURNISHED BY GAIS SHOWN ON REF DWG 5.
25. TROTTLE VALVE BR0063B AS NECECESSARY TO PROVIDE DESIGN FLOW TO RT8037.
26. VALVE SPRING REMOVED.
27. THESE VALVES MAY NEED TO BE LOCKED CLOSED IN MODE 5B AND MODE 6 TO PREVENT UNBORATED WATER FROM REACHING THE RCS. REF. CALC NC07090.
28. DELETED.

REFERENCES:

1. DRAWINGS 9A310F00001 AND 9A310F00002.
2. WESTINGHOUSE DRAWING 1207E18 SUBMITTAL 6 SHEET 2 OF 2.
3. BORON RECYCLE SYSTEM P&ID, DRAWING 7R189F05010#2.
4. DESIGN CRITERIA, SYSTEMS INTERACTION, SEISMIC II/I, TPNS NO 7A369NO1003.
5. GENERAL ATOMIC DWG NO.0392--01001(LIQ W/HX), SHT 22 (4301--00279DW, 8301--00271DW).
6. TGX/THX 15 G.P.M. RECYCLE EVAPORATOR FLOW DIAGRAM VENDOR DWG. NO 0232-0200051WN.

DRAWING APPLICABILITY NOTES:
DRAWING APPLICABILITY NOTES:

1. DELETED
2. DELETED
3. DELETED
4. THIS DRAWING IS SHEET 2 OF 2 OF THE BORON RECYCLE SYSTEM P&ID SET. SEE REFERENCE 3 FOR SHEET 1.

NO.	APPROVAL DATE	REVISION	ORIG	CKR	RE	DV	SE
20	6-6-18	REVISED PER CR 13-551-14.	N/A	N/A	N/A		
0-19	8/13/82	ISSUED FOR CONSTRUCTION.	SIGNATURES ON FILE				

NO.	APPROVAL DATE	REVISION	ORIG	CKR	RE	DV	SE

SOUTH TEXAS PROJECT
NUCLEAR OPERATING COMPANY

PIPING AND INSTRUMENTATION DIAGRAM
BORON RECYCLE SYSTEM

PRIORITY	CADD FILE NO.	FSUG. NO.	STI. NO.	SCALE	DWG. NO.	SHT.	REV.
1	7R189F05011#2.DGN	D070928	34677588	NONE	7R189F05011#2		20

ESEED_DGN

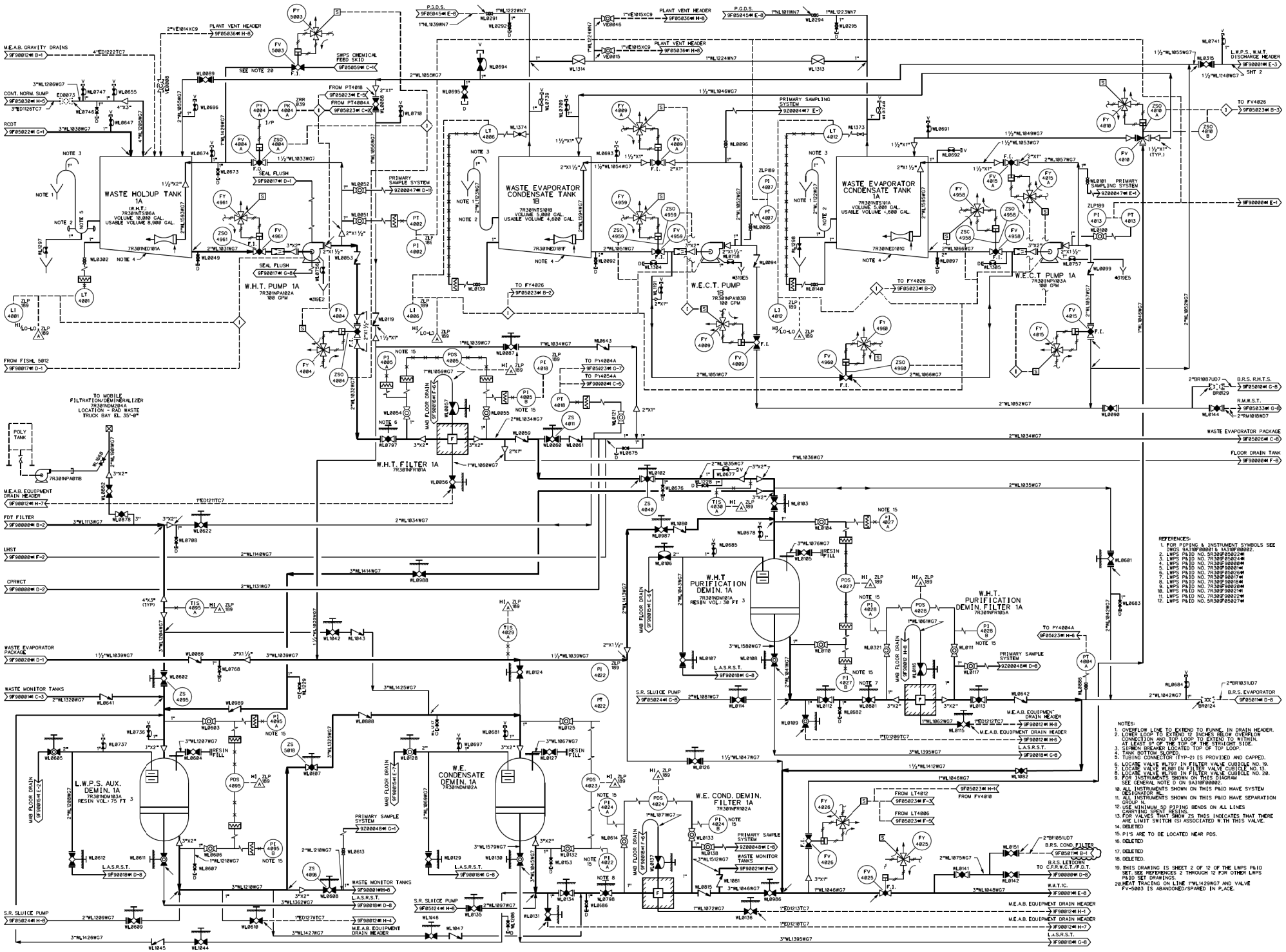

NO.	APPROVAL DATE	REVISION	ORIG	CKR	RE	DV	SE
29	9-26-17	REVISED PER CR 17-21328.			N/A	N/A	N/A
28	9-27-11	REVISED PER CR 11-17612.	VJM	ON FILE			
27	1-21-04	REVISED PER CR # 03-18168-2.	JSH	ON FILE			
26	12-5-00	INCORP. DCN 9902998.	JSH	ON FILE			
0-25	9-28-82	ISSUED FOR CONSTRUCTION.	SIGNATURES ON FILE				

SHEET 1 OF 1

SOUTH TEXAS PROJECT
NUCLEAR OPERATING COMPANY

PIPING AND INSTRUMENTATION DIAGRAM
LIQUID WASTE PROCESSING SYSTEM

PRIORITY	CADD FILE NO.	FSUG. NO.	STI. NO.	SCALE	DWG. NO.	SHT.	REV.
1	7R309F05023#1.DGN	D070928	34547644	NONE	7R309F05023#1		29

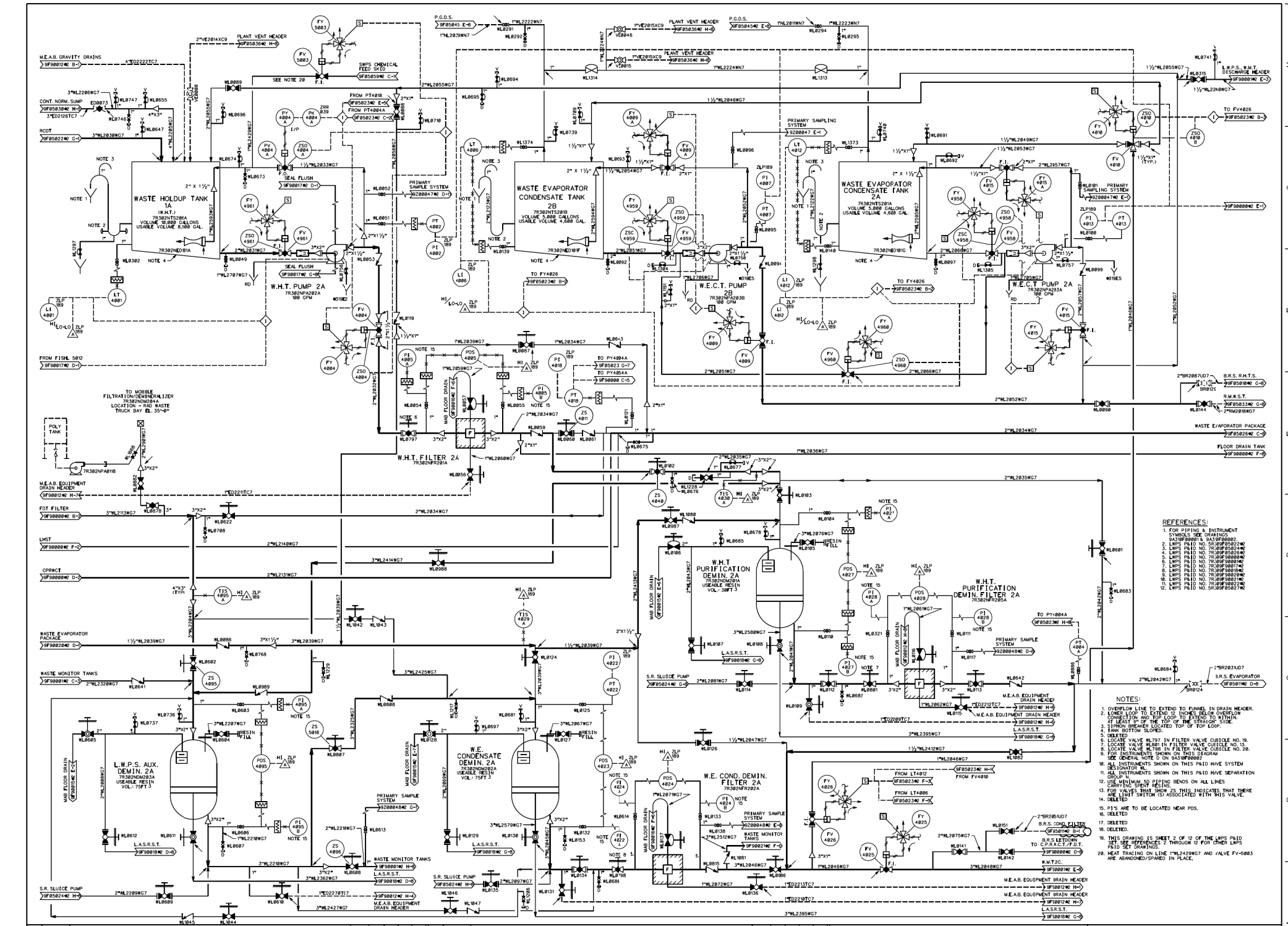

REFERENCES:

1. FOR PIPING & INSTRUMENT SYMBOLS SEE DRAWINGS 9A310F00001& 9A310F00002.
2. LWPS P&ID NO. 5R309F05022#2
3. LWPS P&ID NO. 5R309F05023#2
4. LWPS P&ID NO. 5R309F05026#2
5. LWPS P&ID NO. 5R309F05000#2
6. LWPS P&ID NO. 5R309F05001#2
7. LWPS P&ID NO. 5R309F05007#2
8. LWPS P&ID NO. 5R309F05010#2
9. LWPS P&ID NO. 5R309F05020#2
10. LWPS P&ID NO. 5R309F05021#2
11. LWPS P&ID NO. 5R309F05022#2
12. LWPS P&ID NO. 5R309F05027#2

NOTES:

1. OVERFLOW LINE TO EXTEND TO FUNNEL IN DRAIN HEADER.
2. LOWER LOOP TO EXTEND 12 INCHES BELOW OVERFLOW CONNECTION AND TOP LOOP TO EXTEND TO WITHIN AT LEAST 2" OF THE TOP OF THE STRAIGHT SIDE.
3. SIPHON BREAKER LOCATED TOP OF TOP LOOP.
4. TANK BOTTOM SLOPED.
5. DELETED
6. LOCATE VALVE WL797 IN FILTER VALVE CUBICLE NO. 19.
7. LOCATE VALVE WL881 IN FILTER VALVE CUECLE NO. 13.
8. LOCATE VALVE WL798 IN FILTER VALVE CUBICLE NO. 20.
9. FOR INSTRUMENTS SHOWN ON THIS DIAGRAM SEE GENERAL NOTE D ON 9A310F00002.
10. ALL INSTRUMENTS SHOWN ON THIS P&ID HAVE SYSTEM DESIGNATOR WL.
11. ALL INSTRUMENTS SHOWN ON THIS P&ID HAVE SEPARATION GROUP N.
12. USE MINIMUM 50 PIPING BENDS ON ALL LINES CARRYING SPENT RESINS.
13. FOR VALVES THAT SHOW ZS THIS INDICATES THAT THERE ARE LIMIT SWITCH (S) ASSOCIATED WITH THIS VALVE.
14. DELETED
15. PI'S ARE TO BE LOCATED NEAR PDS.
16. DELETED
17. DELETED
18. DELETED.
19. THIS DRAWING IS SHEET 2 OF 12 OF THE LWPS P&ID SET. SEE REFERENCES 2 THROUGH 12 FOR OTHER LWPS P&ID SET DRAWINGS.
20. HEAT TRACING ON LINE 1"WL2429WG7 AND VALVE FV-5003 ARE ABANDONED/SPARED IN PLACE.

NO.	APPROVAL DATE	REVISION	ORIG	CKR	RE	DV	SE
25	9-26-17	REVISED PER CR 17-2132B.			N/A	N/A	N/A
24	9-27-11	REVISED PER CR 11-17612.	VJM	ON FILE			
23	1-21-04	REVISED PER CR # 03-18168-2.	JSH	ON FILE			
22	12-5-00	INCORP. DCN 99031B2.	JSH	ON FILE			
0-21	9-28-82	ISSUED FOR CONSTRUCTION.	SIGNATURES ON FILE				

SOUTH TEXAS PROJECT
NUCLEAR OPERATING COMPANY

PIPING AND INSTRUMENTATION DIAGRAM
LIQUID WASTE PROCESSING SYSTEM

PRIORITY	CADD FILE NO.	FSUG. NO.	STI. NO.	SCALE	DWG. NO.	SHT.	REV.
1	7R309F05023#2.DGN	D070928	34547670	NONE	7R309F05023#2		25

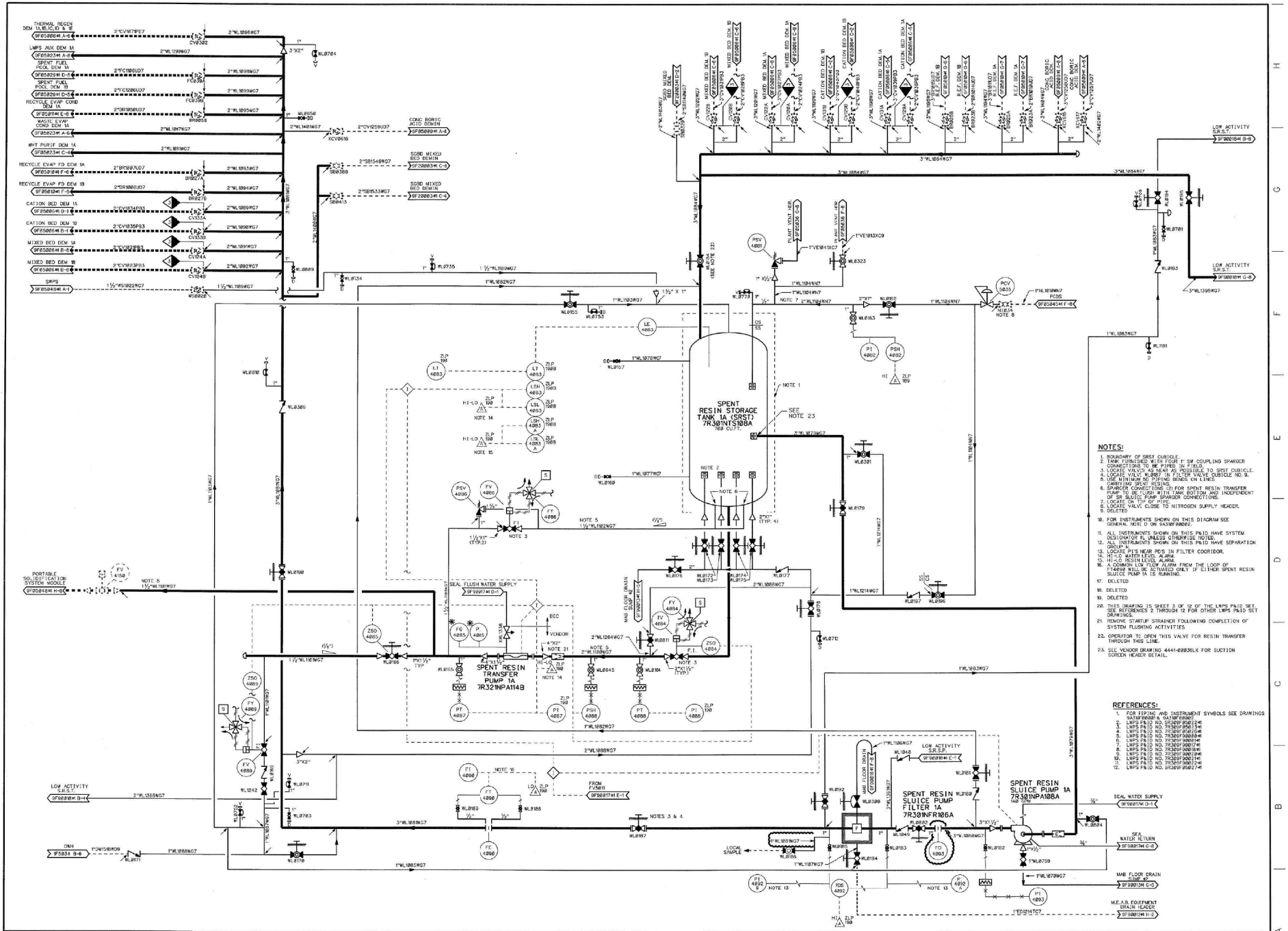

NO.	ISSUE DATE	REVISION	ORIG	CKR	RE	DV	SE
18	3-12-09	REVISED PER CR 09-3678	JGL				
17	1-12-98	INCORP. DCN 9702744.	VJM	ON FILE			
02-16	9-28-82	ISSUED FOR CONSTRUCTION.	SIGNATURES ON FILE				

SOUTH TEXAS PROJECT NUCLEAR OPERATING COMPANY

PRIORITY	CADD FILE NO.	FSLIG. NO.	STI. NO.
1	FJA196.1B1	D070928	32445334

PIPING AND INSTRUMENTATION DIAGRAM
LIQUID WASTE PROCESSING SYSTEM

SCALE	DWG. NO.	SHT.	REV.
NONE	7R309F05024#1		18

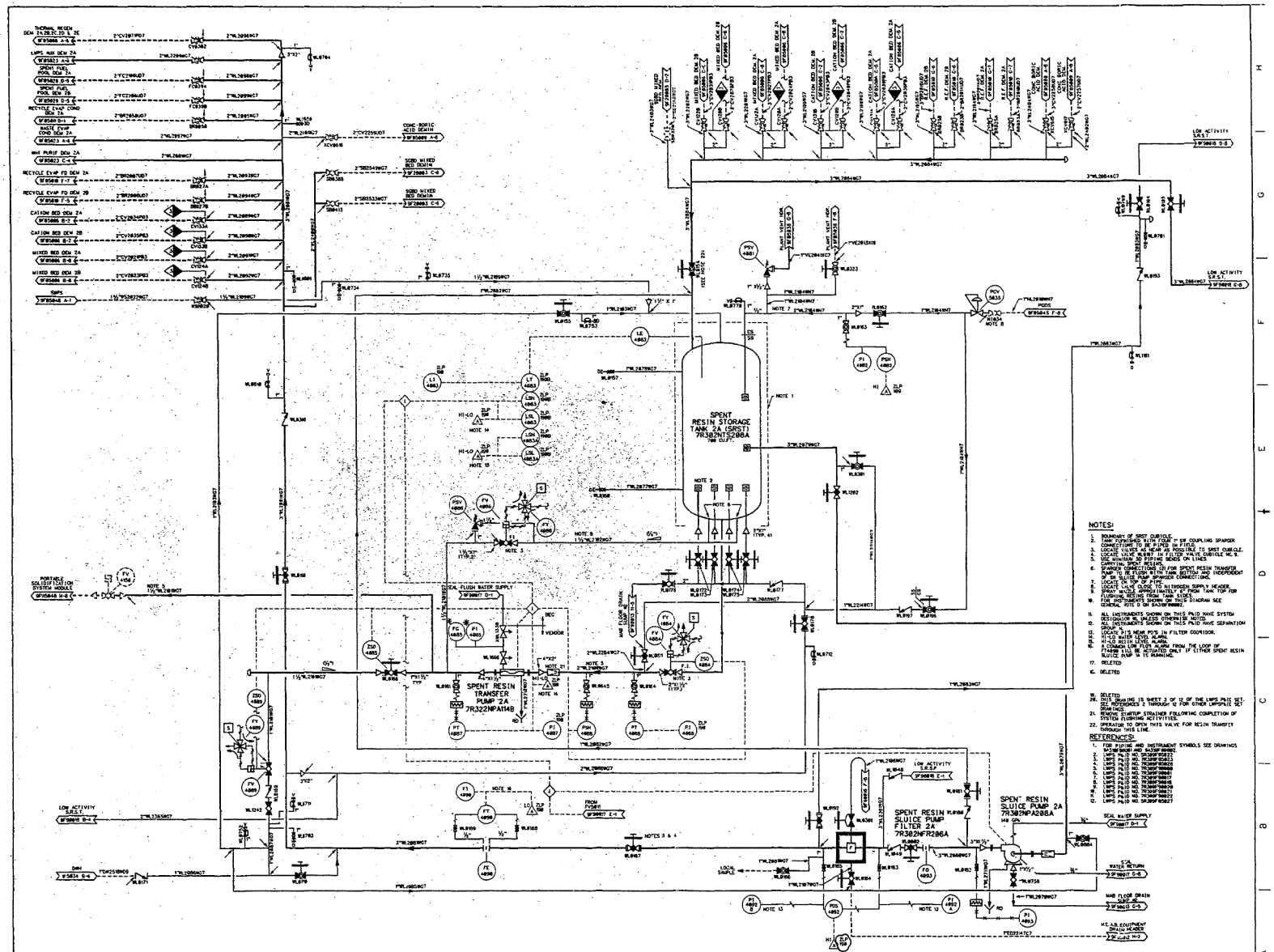

REV. NO.	ISSUE DATE	REVISION	BY	CKR	RE	DV	NA	SE	PE	NO.	ISSUE DATE	REVISION	BY	CKR	RE	DV	NA	SE	PE
14	3-5-96	INCORP. DCN 958434	SIGNATURES ON FILE																
13	3-18-94	ISSUED FOR UNITIZATION (EDITORIAL)	SIGNATURES ON FILE																
12	10-29-93	INCORP. DCN MD-2538	SIGNATURES ON FILE																
11	8-13-93	INCORP. DCN MD-2862	SIGNATURES ON FILE							14	7-3-97	EDITORIAL CHANGE, REF. CR# 97-0138-L CORRECT INSTR. PANEL NUMBER	KS						
10	11-11-92	HLWP ASSUMES DESIGN CHANGE CONTROL & INC. DCN JD-81541	SIGNATURES ON FILE							13	12-7-96	EDITORIAL CHANGES TO 400 NOTE 22 AND SHOW VALVE WL8154 IS NORMALLY CLOSED	SIGNATURES ON FILE						
8-9	9-28-82	ISSUED FOR CONSTRUCTION	SIGNATURES ON FILE																

HOUSTON LIGHTING & POWER COMPANY
SOUTH TEXAS PROJECT ELECTRIC GENERATING STATION

PIPING AND INSTRUMENTATION DIAGRAM
LIQUID WASTE PROCESSING SYSTEM

SCALE	DWG. NO.	REV.
NONE	7R309F05024 #2	16

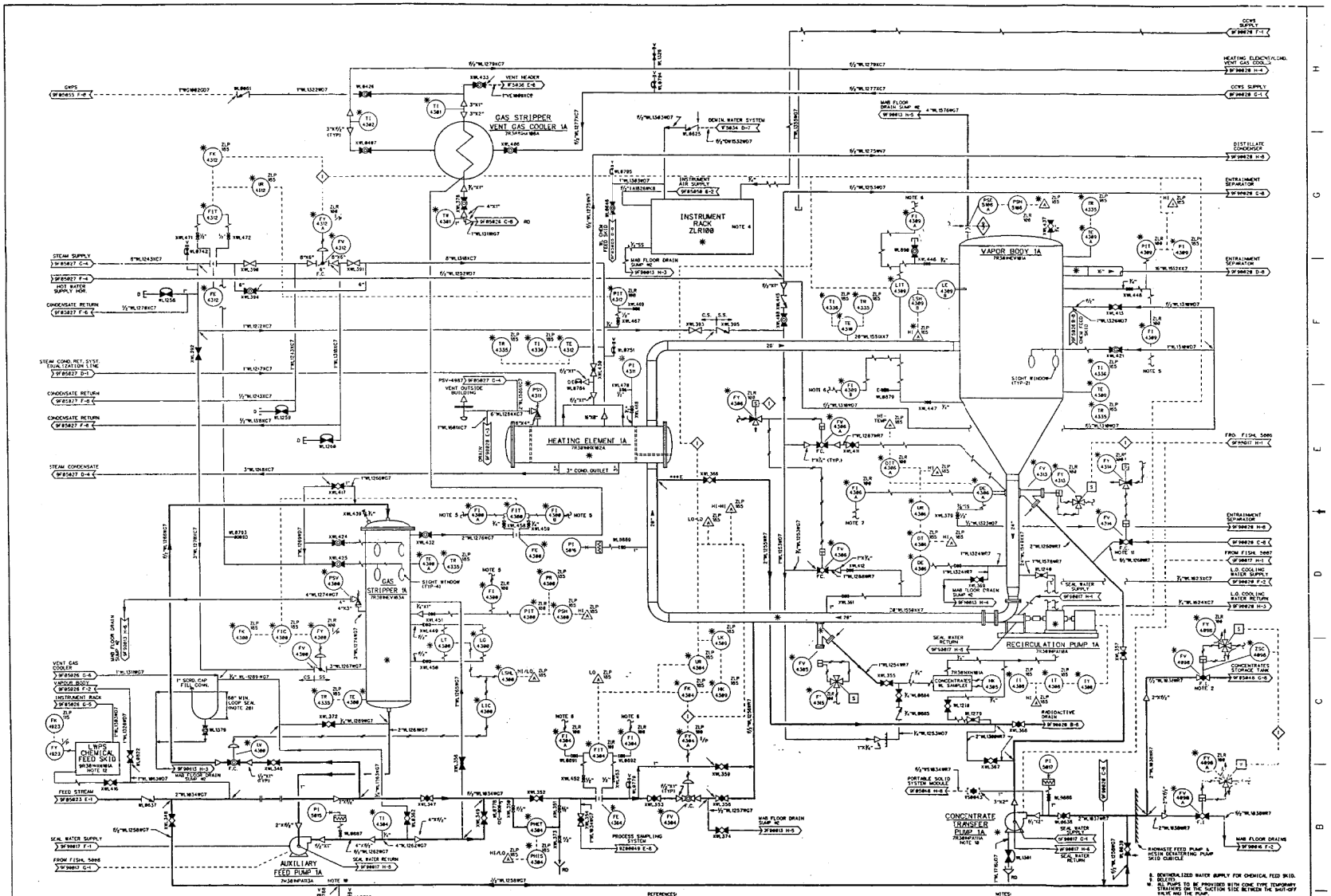

REV.	DATE	REVISION	BY	CHK	RE	DV	NA	SE	PE	NO.	DATE	REVISION	BY	CHK	RE	DV	NA	SE	PE
16	12-4-91	INCORP. DCN MO-2866	SIGNATURES ON FILE																
15	5-3-91	INCORP. ECN'S 89-M-8125A & 89-M-8125F	SIGNATURES ON FILE																
14	5-31-90	INCORP. DCN MO-1136	SIGNATURES ON FILE																
13	7-16-88	INCORP. HDCN 1 (CCP 1-2-FST-85871 AND DCN MO-94	SIGNATURES ON FILE							19		INCORP. DCN 9502336	KS						
12	11-7-86	HLRP ASSUMES DESIGN CHANGE CONTROL & INCORP. NFCR 8608665	SIGNATURES ON FILE							18	3-14-93	INCORP. DCN MO-2565	SIGNATURES ON FILE						
8-11	8-26-83	ISSUED FOR CONSTRUCTION	SIGNATURES ON FILE							17	1-14-92	INCORP. DCN MO-2231	SIGNATURES ON FILE						
ISSUE DATE																			

HOUSTON LIGHTING & POWER COMPANY
SOUTH TEXAS PROJECT ELECTRIC GENERATING STATION

PIPING AND INSTRUMENTATION DIAGRAM
LIQUID WASTE PROCESSING SYSTEM
WASTE EVAPORATOR PACKAGE

SCALE	DWG. NO.	REV.
NONE	7R309F05026	19

PRIORITY — DC NO. — FJAM62.191

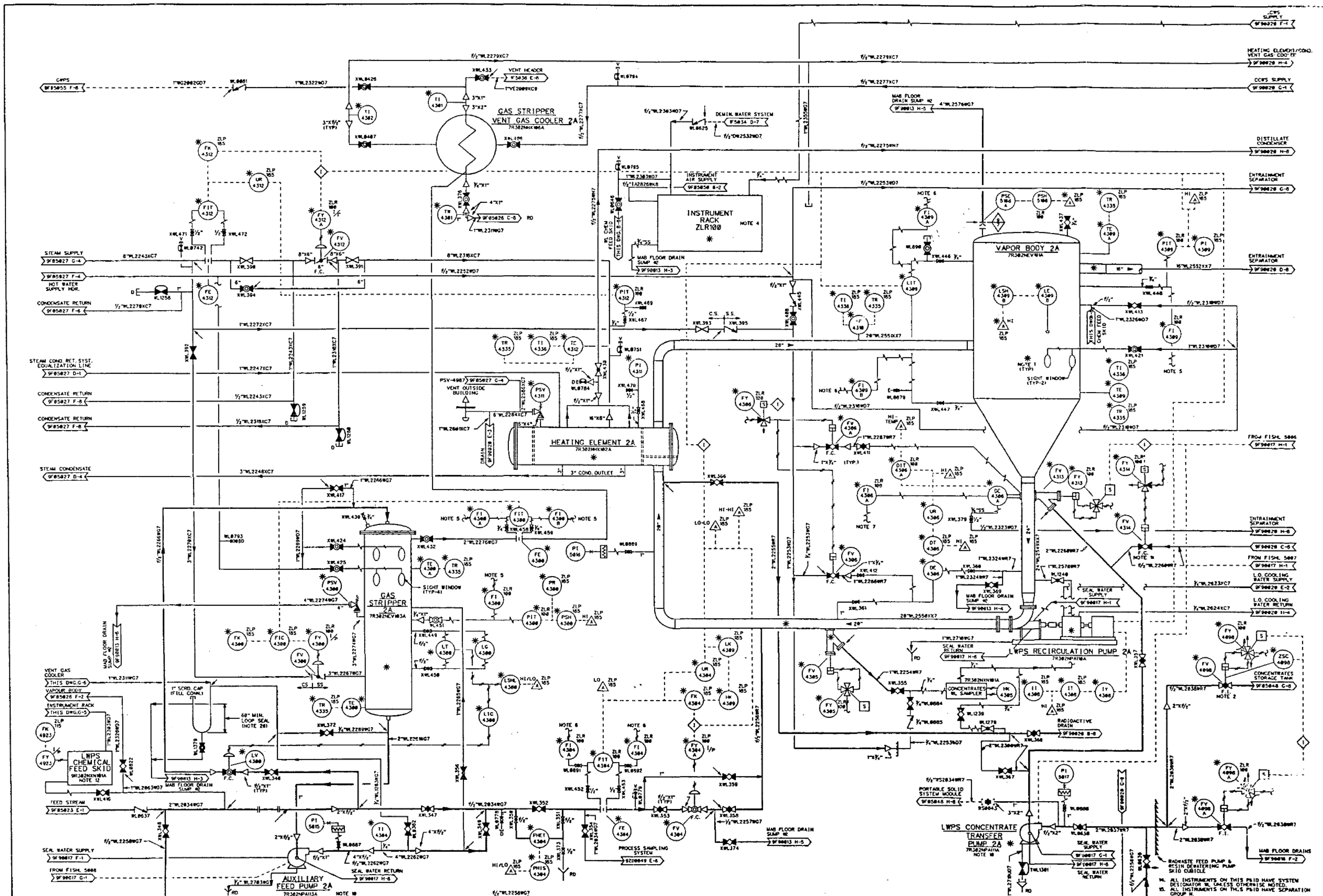

REFERENCES:
1. FOR PIPING AND INSTRUMENT SYMBOLS SEE DWGS. 9A310F00001 & 9A310F00002.
2. LWPS P&ID NO. 5R309F05022
3. LWPS P&ID NO. 7R309F05023
4. LWPS P&ID NO. 7R309F05024
5. LWPS P&ID NO. 7R309F90009
6. LWPS P&ID NO. 7R309F90001
7. LWPS P&ID NO. 7R308F90017
8. LWPS P&ID NO. 7R309F90018
9. LWPS P&ID NO. 7R309F90020
10. LWPS P&ID NO. 7R309F90021
11. LWPS P&ID NO. 7R309F90022
12. LWPS P&ID NO. 5R309F05027
13. HOURLY PROCESS FLOWSHEET, 6021-01131-HP

NOTES:
1. HORTON PROCESSING DESIGNS, INC. SCOPE OF SUPPLY: COMPONENTS DESIGNATED WITH * SYMBOL.
2. LOCATE VALVE FV-4090 ABOVE C.S.T. (CLOSE TO TANK AS POSSIBLE).
3. MOTOR CONTROL CENTER.
4. FOR RACK MOUNTED INSTRUMENTS SEE HPD DWG. NO. 102 AND 750, BECHTEL LOC NO'S. 4021/6021-01137 HP AND 4021/6021-01153 HP.
5. INSTRUMENT AIR SUPPLY FROM ZLR100 FOR PURGE.
6. DEMINERALIZED WATER SUPPLY FROM ZLR100 FOR PURGE.
7. CCWS SUPPLY FROM INSTRUMENT RACK TO OE-4306A FOR COOLING.
8. DEMINERALIZED WATER SUPPLY FOR CHEMICAL FEED SKID.
9. DELETED.
10. ALL PUMPS TO BE PROVIDED WITH CONE TYPE TEMPORARY STRAINERS ON THE SUCTION SIDE BETWEEN THE SHUT-OFF VALVE AND THE PUMP.
11. LOCATE VALVES FV4314 AS CLOSE TO FV4313 AS PRACTICABLE.
12. FOR CHEMICAL FEED SKID DETAILS SEE VENDOR DRAWING R309X541AKK.
13. DELETED
14. ALL INSTRUMENTS ON THIS P&ID HAVE SYSTEM DESIGNATOR WL UNLESS OTHERWISE NOTED.
15. ALL INSTRUMENTS ON THIS P&ID HAVE SEPARATION GROUP N.
16. ALL HEAT TRACING WILL BE BY BECHTEL.
17. DELETED
18. DELETED
19. THIS DRAWING IS SHT. 4 OF 12 OF THE LWPS P&ID SET. SEE REFERENCES 2 THROUGH 12 FOR OTHER LWPS P&ID SET DWGS.
20. 60" LOOP SEAL REQUIRED. SEE REFERENCE NO. 13 FOR GAS COOLER DRAIN PRESSURE.
21. HEAT TRACING ON LINES AND COMPONENTS FOR "WL" & "WS" SYSTEMS ARE ABANDONED/SPARED IN PLACE. (ONLY ACTIVE HEAT TRACE IS ON 1"BR2054UD7 AT LOCATION COORDINATES A-7/8)

DCN 9502338 (16)

NO.	ISSUE DATE	REVISION	BY	CKR	RE	DV	NA	SE	PE
15	3-4-93	INCORP DCN MD-2665	SIGNATURES ON FILE						
14	11-19-91	INCORP. DCN MD-2088	SIGNATURES ON FILE						
13	5-3-91	INC. ECN'S 89-M-0126A & 89-M-0126F	SIGNATURES ON FILE						
12	8-31-90	INCORP. DCN MD-1136	SIGNATURES ON FILE						
11	7-18-90	HL&P ASSUMES DESIGN CHANGE CONTROL & INC. DCN MD-94	SIGNATURES ON FILE						
0-10	9-28-82	ISSUED FOR CONSTRUCTION	SIGNATURES ON FILE						

NO.	ISSUE DATE	REVISION	BY	CKR	RE	DV	NA	SE	PE
16	8-8-95	INCORP. DCN 9502338	KS	[illegible]					

HOUSTON LIGHTING & POWER COMPANY
SOUTH TEXAS PROJECT ELECTRIC GENERATING STATION

PIPING AND INSTRUMENTATION DIAGRAM
LIQUID WASTE PROCESSING SYSTEM
WASTE EVAPORATOR PACKAGE

SCALE	DWG. NO.	REV.
NONE	7R309F05026 #2	16

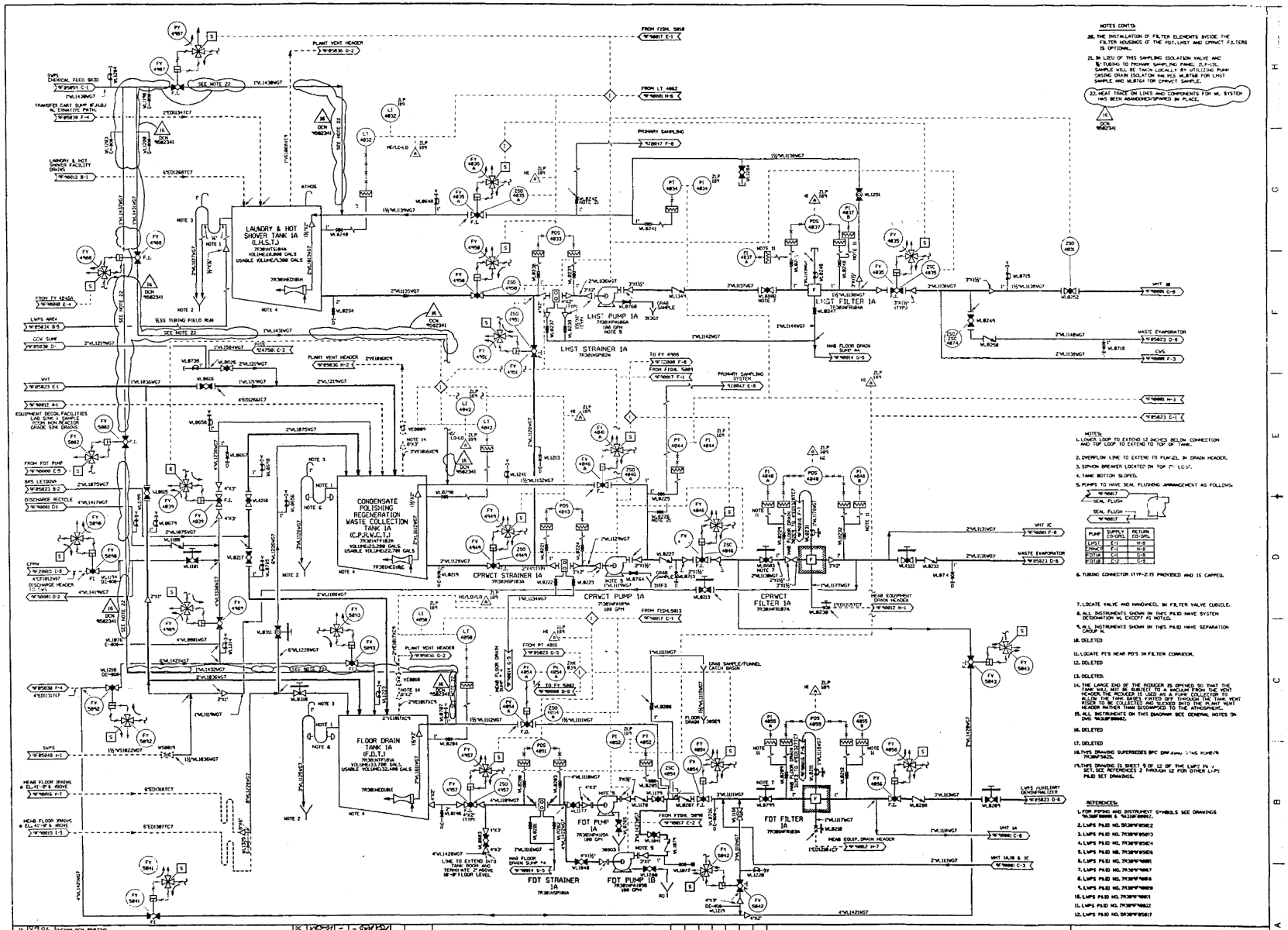

NOTES CONT'D:

20. THE INSTALLATION OF FILTER ELEMENTS INSIDE THE FILTER HOUSINGS OF THE FDT, LHST AND CPRWCT FILTERS IS OPTIONAL.

21. IN LIEU OF THIS SAMPLING ISOLATION VALVE AND 3/8" TUBING TO PRIMARY SAMPLING PANEL 2LP-131, SAMPLE WILL BE TAKEN LOCALLY BY UTILIZING PUMP CASING DRAIN ISOLATION VALVES WL8768 FOR LHST SAMPLE AND WL8764 FOR CPRWCT SAMPLE.

22. HEAT TRACE ON LINES AND COMPONENTS FOR WL SYSTEM HAS BEEN ABANDONED/SPARED IN PLACE.

NOTES:

1. LOWER LOOP TO EXTEND 12 INCHES BELOW CONNECTION AND TOP LOOP TO EXTEND TO TOP OF TANK.
2. OVERFLOW LINE TO EXTEND TO PLAN 2L IN DRAIN HEADER.
3. SIPHON BREAKER LOCATED ON TOP 2" LGS.
4. TANK BOTTOM SLOPED.
5. PUMPS TO HAVE SEAL FLUSHING ARRANGEMENT AS FOLLOWS:

PUMP	SUPPLY CO-ORD.	RETURN CO-ORD.
LHST	F-1	H-8
CPRWCT	F-1	H-8
FDT1A	C-1	C-8
FDT1B	C-2	C-8

6. TUBING CONNECTOR (TYP-2) IS PROVIDED AND IS CAPPED.
7. LOCATE VALVE AND HANDWHEEL IN FILTER VALVE CUBICLE.
8. ALL INSTRUMENTS SHOWN ON THIS P&ID HAVE SYSTEM DESIGNATION WL EXCEPT AS NOTED.
9. ALL INSTRUMENTS SHOWN ON THIS P&ID HAVE SEPARATION GROUP W.
10. DELETED
11. LOCATE PI'S NEAR PO'S IN FILTER CORRIDOR.
12. DELETED
13. DELETED.
14. THE LANCE END OF THE REDUCER IS OPENED SO THAT THE TANK WILL NOT BE SUBJECT TO A VACUUM FROM THE VENT HEADER. THE REDUCER IS USED AS A FUNNEL COLLECTOR TO ALLOW THE TANK GASES VENTED OFF THROUGH THE TANK VENT NOZZLE TO BE COLLECTED AND SUCKED INTO THE PLANT VENT HEADER RATHER THAN DISCHARGED TO THE ATMOSPHERE.
15. ALL INSTRUMENTS ON THIS DIAGRAM SEE GENERAL NOTES ON DWG 7R30BF90002.
16. DELETED
17. DELETED
18. THIS DRAWING SUPERSEDES BPC DWG [illegible] 7R30BF94[illegible].
19. THIS DRAWING IS SHEET 9 OF 12 OF THE LWPS P&I SET. SEE REFERENCES 2 THROUGH 12 FOR OTHER LWPS P&ID SET DRAWINGS.

REFERENCES:

1. FOR PIPING AND INSTRUMENT SYMBOLS SEE DRAWINGS 7R30BF90001 & 7R30BF90002.
2. LWPS P&ID NO. 7R30BF95812
3. LWPS P&ID NO. 7R30BF95813
4. LWPS P&ID NO. 7R30BF95824
5. LWPS P&ID NO. 7R30BF95826
6. LWPS P&ID NO. 7R30BF90801
7. LWPS P&ID NO. 7R30BF90807
8. LWPS P&ID NO. 7R30BF90804
9. LWPS P&ID NO. 7R30BF90809
10. LWPS P&ID NO. 7R30BF90801
11. LWPS P&ID NO. 7R30BF90822
12. LWPS P&ID NO. 7R30BF95817

NO.	ISSUE DATE	REVISION	BY	CKR	RE	DV	NA	SE	PE
16	9-7-94	INCORP. DCN 9582341							
15	7-18-94	INCORP. PCF 177625A							
14	10-21-93	INCORP. DCN MD-2938							
13	6-25-93	INCORP. DCN MD-2882							
12	8-13-92	HEAT ASSUMES DESIGN CHANGE CONTROL & INCORP. DCN MD-1116							
8-11	5-13-83	ISS. FOR CONSTR. INCORP. DCN L23/7R30BF95815 & REV. NO.1							

SIGNATURES ON FILE

HOUSTON LIGHTING & POWER COMPANY
SOUTH TEXAS PROJECT ELECTRIC GENERATING STATION

PIPING & INSTRUMENTATION DIAGRAM
LIQUID WASTE PROCESSING SYSTEM

SCALE	DWG. NO.	REV.
NONE	7R30BF90000 #1	16

PRIORITY | DOC. NO. 3087027A

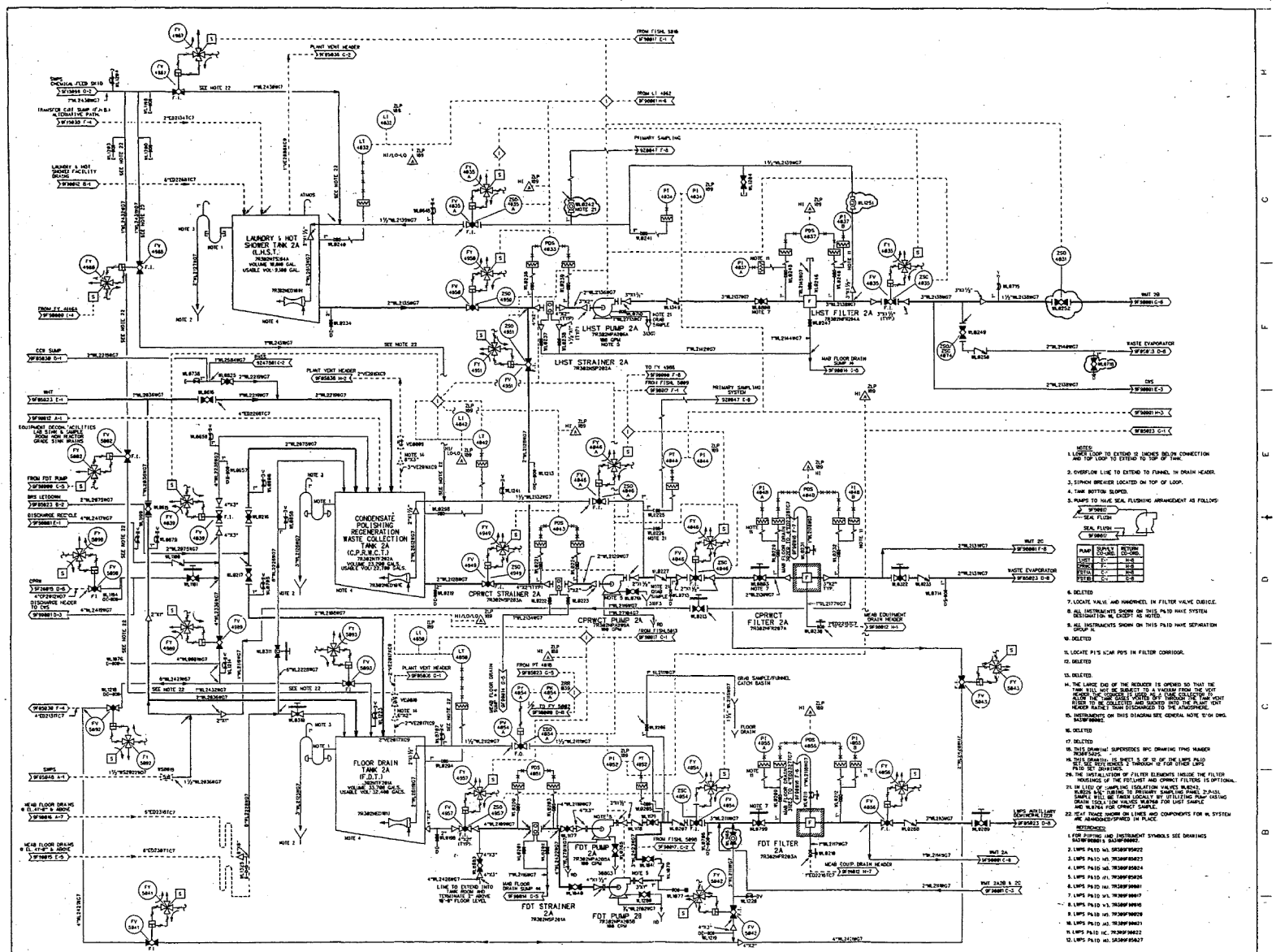

NO.	ISSUE DATE	REVISION	BY	CKR	RE	DV	NA	SE	PE
15	4-28-94	INCORP. PCF = 17761A	SIGNATURES ON FILE						
14	3-22-94	ISSUED FOR UNITIZATION (EDITORIAL)	SIGNATURES ON FILE						
13	8-22-93	INCORP. DCN MD-2838	SIGNATURES ON FILE						
12	6-23-93	INCORP. DCN MD-2882	SIGNATURES ON FILE						
11	8-03-90	HL&P ASSUMES DESIGN CHANGE CONTROL & INC. DCN MD-1196	SIGNATURES ON FILE						
10-10	5-13-83	SSS FOR CONSTR. INCORP. DCN 1,2,3 (7R309F85825) & REV RPT	SIGNATURES ON FILE						

NO.	ISSUE DATE	REVISION	BY	CKR	RE	DV	NA	SE	PE
18	3-8-94	EDITORIAL AS-BUILT TO SHOW CORRECT VALVE POSITIONS (LOCATIONS C-5, G-3, F-2 & A-4).	VJM						
17	8/26-94	INCORP. DCN 9684751	SIGNATURES ON FILE						
16	8/18/93	INCORP. DCN 9582316 EDITORIAL	SIGNATURES ON FILE						

HOUSTON LIGHTING & POWER COMPANY
SOUTH TEXAS PROJECT ELECTRIC GENERATING STATION

PIPING & INSTRUMENTATION DIAGRAM
LIQUID WASTE PROCESSING SYSTEM

SCALE	DWG. NO.	REV.
NONE	7R309F90000 #2	18

FORM NO. 1 PRIORITY DC NO. FJA711 R1

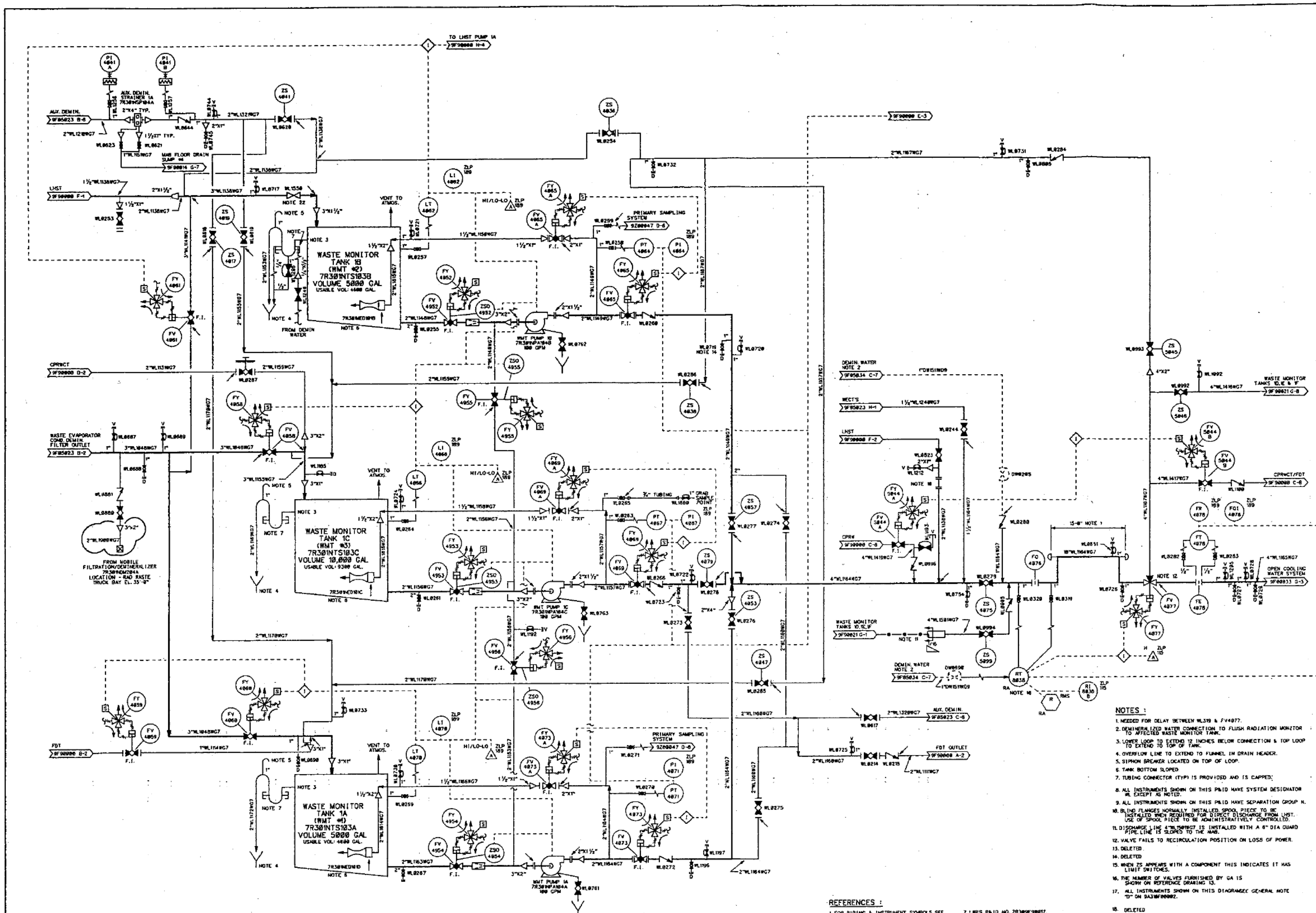

NOTES :

1. NEEDED FOR DELAY BETWEEN WL319 & FV4077.
2. DEMINERALIZED WATER CONNECTION TO FLUSH RADIATION MONITOR TO AFFECTED WASTE MONITOR TANK.
3. LOWER LOOP TO EXTEND 12 INCHES BELOW CONNECTION & TOP LOOP TO EXTEND TO TOP OF TANK.
4. OVERFLOW LINE TO EXTEND TO FUNNEL IN DRAIN HEADER.
5. SIPHON BREAKER LOCATED ON TOP OF LOOP.
6. TANK BOTTOM SLOPED.
7. TUBING CONNECTOR (TYP) IS PROVIDED AND IS CAPPED.
8. ALL INSTRUMENTS SHOWN ON THIS P&ID HAVE SYSTEM DESIGNATOR WL EXCEPT AS NOTED.
9. ALL INSTRUMENTS SHOWN ON THIS P&ID HAVE SEPARATION GROUP N.
10. BLIND FLANGES NORMALLY INSTALLED. SPOOL PIECE TO BE INSTALLED WHEN REQUIRED FOR DIRECT DISCHARGE FROM LHST. USE OF SPOOL PIECE TO BE ADMINISTRATIVELY CONTROLLED.
11. DISCHARGE LINE 4"WL1501WG7 IS INSTALLED WITH A 6" DIA GUARD PIPE. LINE IS SLOPED TO THE MAB.
12. VALVE FAILS TO RECIRCULATION POSITION ON LOSS OF POWER.
13. DELETED.
14. DELETED
15. WHEN ZS APPEARS WITH A COMPONENT THIS INDICATES IT HAS LIMIT SWITCHES.
16. THE NUMBER OF VALVES FURNISHED BY GA IS SHOWN ON REFERENCE DRAWING 13.
17. ALL INSTRUMENTS SHOWN ON THIS DIAGRAM SEE GENERAL NOTE "D" ON 9A310F00002.
18. DELETED
19. DELETED
20. THIS DRAWING SUPERSEDES BPC DRAWING TPNS NUMBER 7R309F05025 REV 0.
21. THIS DRAWING IS SHEET 5 OF 11 OF THE LWPS P&ID SET. SEE REFERENCE 2 THROUGH 11 FOR OTHER LWPS P&ID SET DRAWINGS.
22. VALVE EQUIPPED WITH CHAIN OPERATED HANDWHEEL

REFERENCES :

1. FOR PIPING & INSTRUMENT SYMBOLS SEE DRAWINGS 9A310F00001 & 9A310F00002.
2. LWPS P&ID NO. 5R309F05022.
3. LWPS P&ID NO. 7R309F05023.
4. LWPS P&ID NO. 7R309F05024.
5. LWPS P&ID NO. 7R309F05026.
6. LWPS P&ID NO. 7R309F90000.
7. LWPS P&ID NO. 7R309F90017.
8. LWPS P&ID NO. 7R309F90018.
9. LWPS P&ID NO. 7R309F90020.
10. LWPS P&ID NO. 7R309F90021.
11. LWPS P&ID NO. 7R309F90022.
12. LWPS P&ID NO. 5R309F05027.
13. GENERAL ATOMIC DWG NO. 0392-1001(LIQ)SHT.24 (4301-002010W, 0301-002730W).

NO.	ISSUE DATE	REVISION	ORIG	CKR	RE	DV	SE
15	12-5-00	INCORP. DCN 9902999.	JSH	VJM	[illegible]	[illegible]	[illegible]
0-14	4-27-83	ISSUED FOR CONSTRUCTION.	SIGNATURES ON FILE				

SOUTH TEXAS PROJECT
NUCLEAR OPERATING COMPANY

PIPING & INSTRUMENTATION DIAGRAM
LIQUID WASTE PROCESSING SYSTEM

PRIORITY	CADD FILE NO.	FSUG. NO.	STI. NO.	SCALE	DWG. NO.	SHT.	REV.
1	FJA174.151	0070928	31211375	NONE	7R309F90001#1	-	15

Printed by jlopes ON Thursday November 30 2000 AT 04:19:55 PM CST

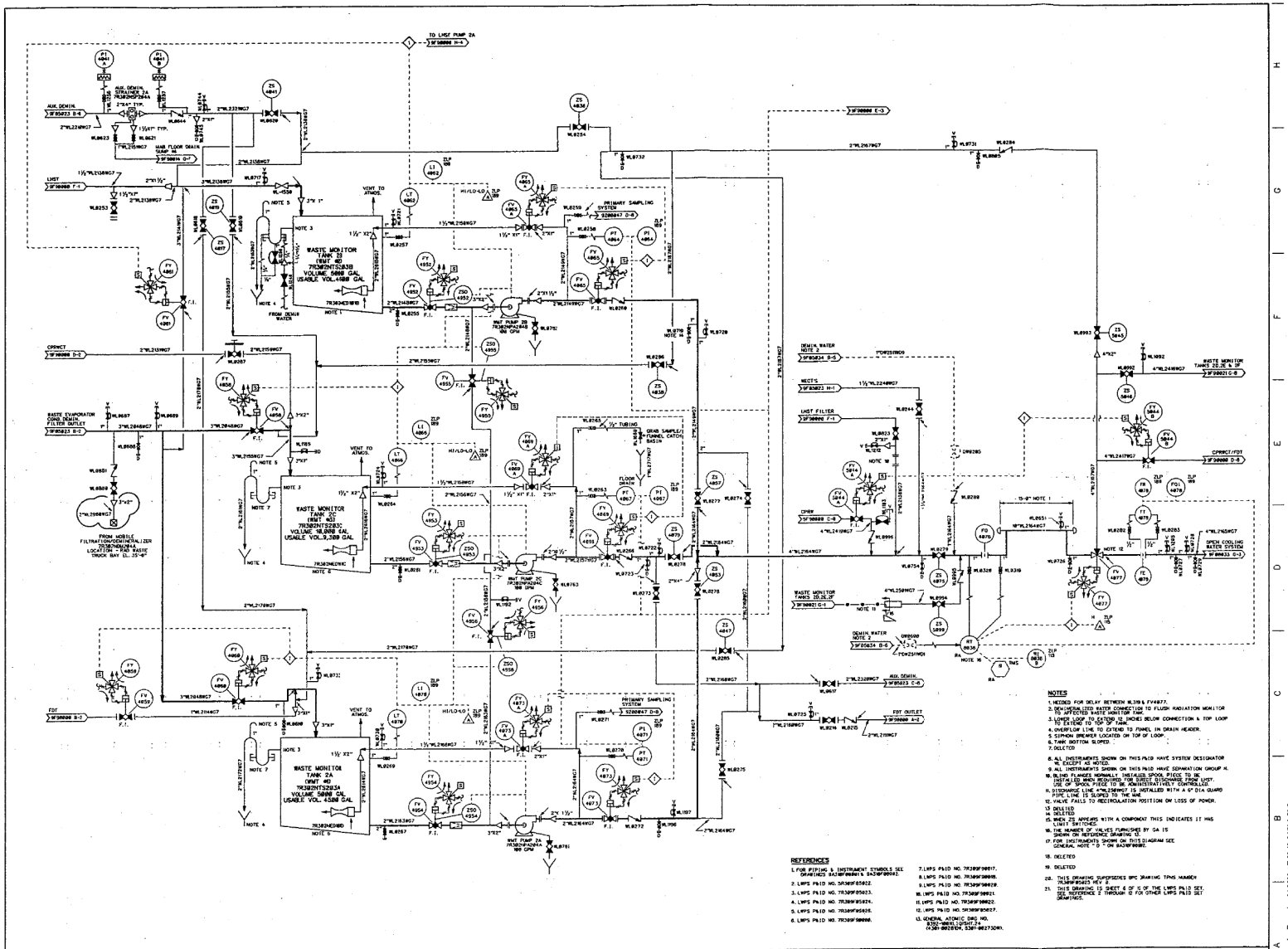

REV.	DCN	DATE	REVISION
15	12-5-00		INCORP. DCN 09831B3
14	4-27-93		ISSUED FOR CONSTRUCTION

SIGNATURES ON FILE

SOUTH TEXAS PROJECT NUCLEAR OPERATING COMPANY

PIPING & INSTRUMENTATION DIAGRAM LIQUID WASTE PROCESSING SYSTEM

PRIORITY	CADD FILE NO.	FSAR NO.	STI NO.	SCALE	DWG NO.	SHT.	REV.
1	FJA574.151	D878925	3121397	NONE	7R30F90001#2		15

Printed by jhopes ON Monday December 04 2000 AT 02:17:56 PM CST

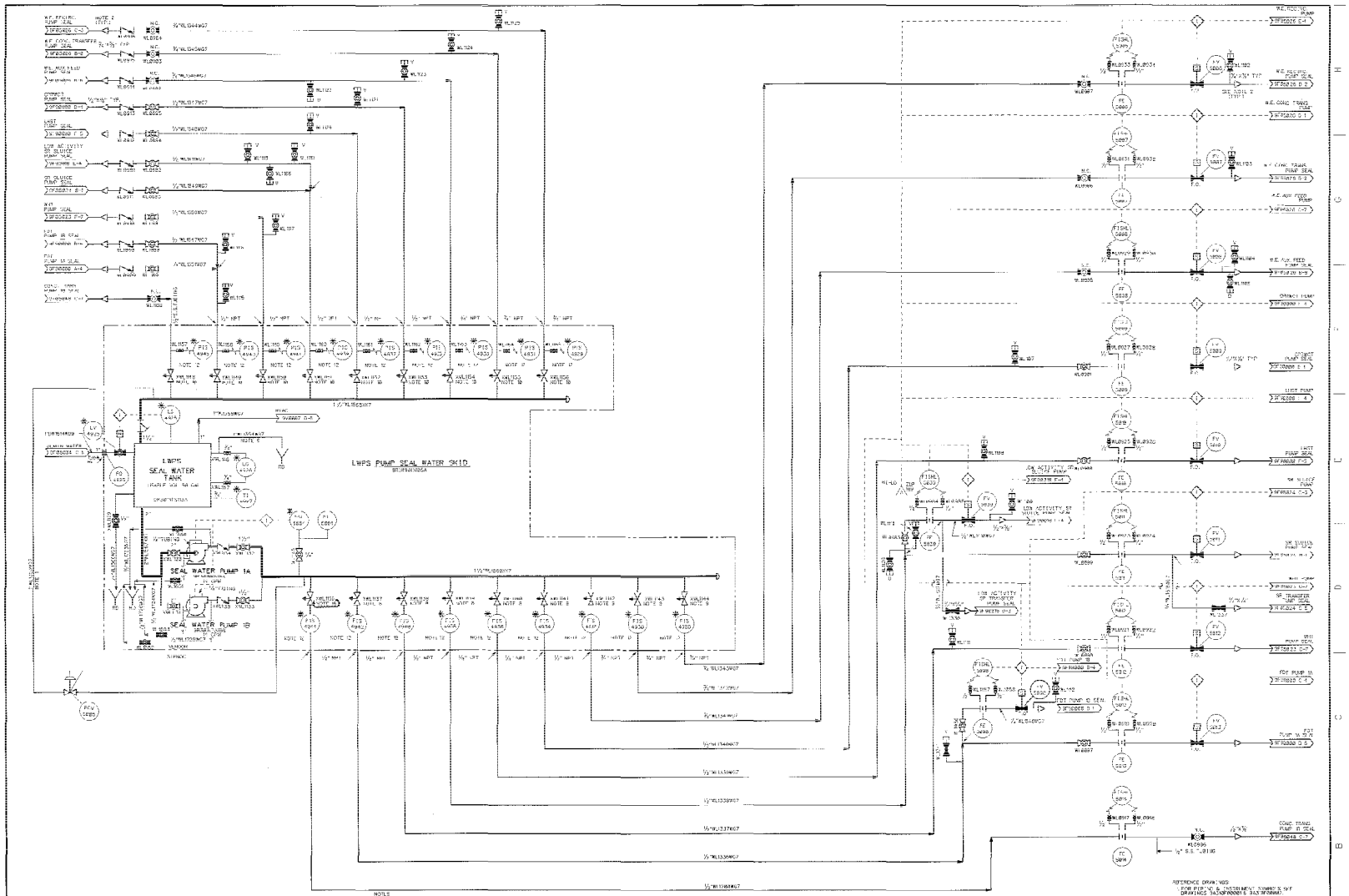

NOTES

1. OVERFLOW LINE #1WL1534WQ7, PRESSURE RELIEF LINE #1WL1535WQ7, VENT LINE #1WL1355WQ7 SUPPLIED BY VENDOR.
2. REDUCERS AT PUMP SEAL
3. ALL INSTRUMENTS ON THIS P&ID (WHT SYSTEM DESIGNATOR "WL") AND OPERATION (TAGS "W").
4. ALL INSTRUMENTS ON THIS DRAWING ARE PROVIDED BY THE UNIT NO 1 SEC GENERAL NOTES 8 ON 6A73F00002.
5. DELETED
6. TOP OF LOOP TO BE 1' BELOW TOP OF TANK.
7. DELETED.
8. WL 1137, 1138, 1139 AND OR 1143 NEEDS TO BE THROTTLED TO PROVIDE 1 GPM SEAL WATER TO EACH DESIGNATED LWPS PUMP.
9. WL 1142, 1143 & 1144 NEED TO BE THROTTLED TO PROVIDE 1 GPM SEAL WATER TO EACH DESIGNATED LWPS PUMP.
10. WL 1121 THROUGH WL1156 NEEDS TO BE THROTTLED TO OBTAIN THE PROPER WATER PRESSURE AS REQUIRED FOR EACH DESIGNATED PUMP.
11. DELETED
12. THE SWITCH FUNCTIONS ON THESE INSTRUMENTS HAVE BEEN DELETED
13. DELETED
14. DELETED
15. THIS DRAWING IS SHEET 7 OF 12 OF "1-LWPS P&ID SET" SEE REFERENCES 3 THROUGH 12 FOR OTHER LWPS P&ID SET DRAWINGS.
16. WL 1136 IS A THROTTLED VALVE.

REFERENCE DRAWINGS
FOR PIPING & INSTRUMENT SYMBOLS & SPF DRAWINGS 6A73F00001 & 6A73F00002.
1. LWPS P&ID 7R30F85022.
2. LWPS P&ID 7R30F85023.
3. LWPS P&ID 7R30F85024.
4. LWPS P&ID 7R30F85029.
5. LWPS P&ID 7R30F96306.
6. LWPS P&ID 7R30F90081.
7. LWPS P&ID 7R30F90016.
8. LWPS P&ID 7R30F90018.
9. LWPS P&ID 7R30F90021.
10. LWPS P&ID 7R30F90022.
11. LWPS P&ID 7R30F85027.
12. VENDOR DRAWING 2370-00085-001, 0170-00006-001

NO.	ISSUE DATE	REVISION	DRFC	CHK	RE	DV	SE	NO.	ISSUE DATE	REVISION	ORIG	CHK	RE	DV	SE
16	02-1-04	REVISED PER CR + 94-1522-1													
15	6-24-03	INCORP. DCN 0301042.													
14	3-9-02	INCORP. DCN 0202024.													
0-13	7-12-83	ISSUED FOR CONSTRUCTION.													

DRAWN BY: JSH 8/23/83
WUZ ON FILE
LNR ON FILE
SIGNATURES ON FILE

SOUTH TEXAS PROJECT
NUCLEAR OPERATING COMPANY

PIPING AND INSTRUMENTATION DIAGRAM
LWPS PUMP SEAL WATER SYSTEM

PRIORITY	CARD FILE NO.	FSAR NO.	SHT. NO.	SCALE	DWG NO.	SHT.	REV.
1	1-J4217.16	D078028	318/719	NONE	7R30F90017#1	—	16

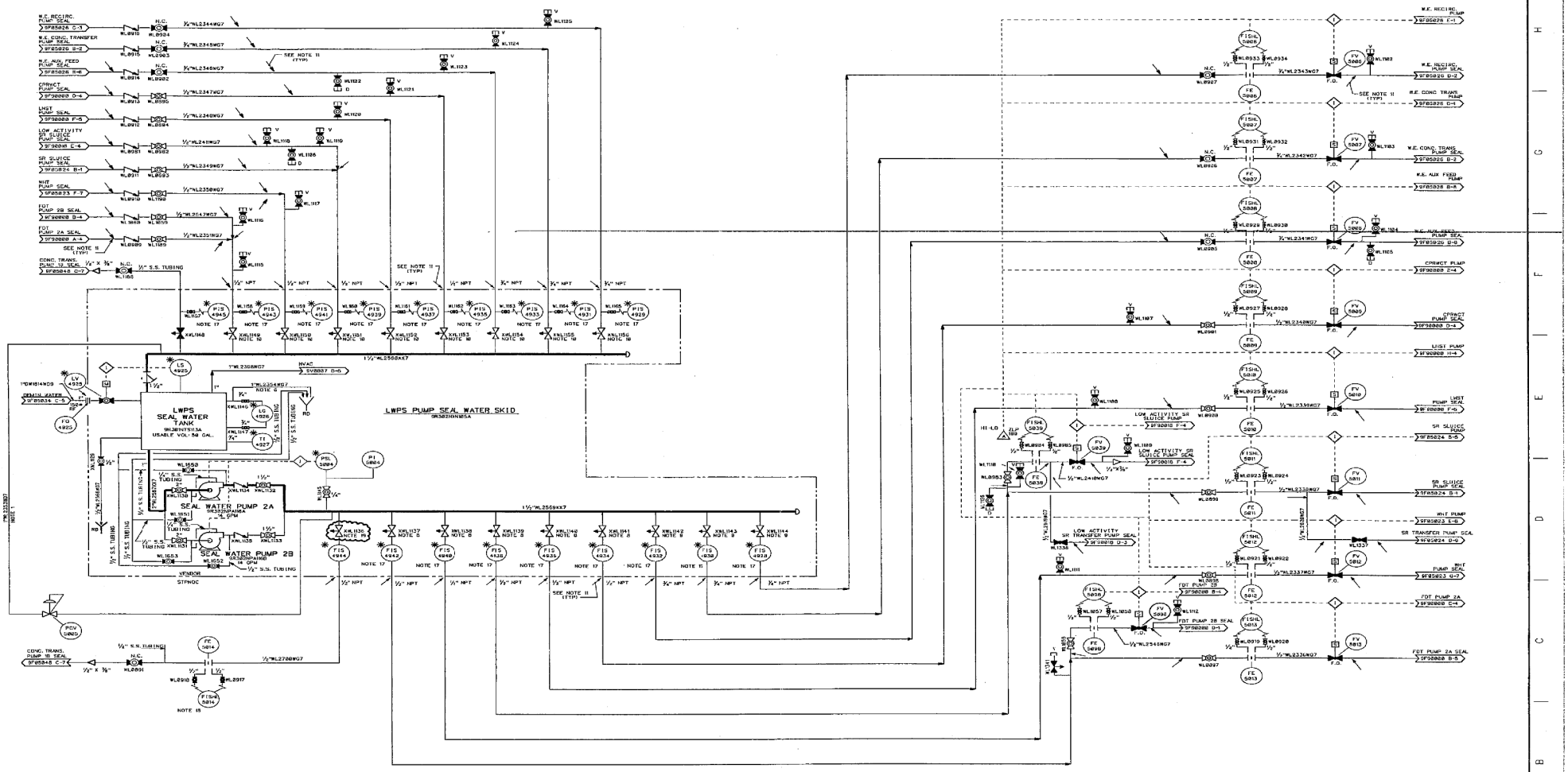

NOTES:

1. DELETED.
2. DELETED.
3. ALL INSTRUMENTS ON THIS P&ID HAVE SYSTEM DESIGNATOR "WL" AND SEPARATION GROUP "N".
4. ALL INSTRUMENTS ON THIS DRAWING ARE PREFIXED BY: 1. UNIT NO. 2. SEE GENERAL NOTE 8 ON DRAWING 9.
5. DELETED.
6. TOP OF LOOP TO BE 1" BELOW TOP OF TANK.
7. DELETED.
8. XWL 1137, 1138, 1139, 1140 OR 1141NCDS TO BE THROTTLED TO PROVIDE 3 GPM SEAL WATER TO EACH DESIGNATED LWPS PUMP.
9. XWL 1142, 1143 & 1144 NEEDS TO BE THROTTLED TO PROVIDE 2.5 GPM SEAL WATER TO EACH DESIGNATED LWPS PUMP.
10. XWL 1145 THROUGH XWL 1154 NEEDS TO BE THROTTLED TO CONTROL SEAL WATER BACK PRESSURE AS REQUIRED FOR EACH DESIGNATED PUMP.
11. THE SYSTEM CHANGE ARROW IS USED TO INDICATE ON THIS DRAWING A SYSTEM TUBING CONNECTION WITH ANOTHER SYSTEM DRAWING.
12. ALL TUBING SHALL BE 3/4" x .065" STAINLESS STEEL, UNLESS OTHERWISE INDICATED.
13. DELETED.
14. DELETED.
15. DELETED.
16. THIS DRAWING IS SHEET 8 OF 12 OF THE LWPS P&ID SET SEE REFERENCES 2 THROUGH 12 FOR OTHER LWPS P&ID SET DRAWINGS.
17. THE SWITCH FUNCTIONS ON THESE INSTRUMENTS HAVE BEEN DELETED.
18. FLOW MEASUREMENT DEVICE FISHL-5814 SPARED IN PLACE.
19. XWL 1136 IS A THROTTLED VALVE.

REFERENCE DRAWINGS:

1. FOR PIPING & INSTRUMENT SYMBOLS SEE DRAWINGS 9A38F060001 & 9A38F060002.
2. LWPS P&ID 7R309F905822.
3. LWPS P&ID 7R309F905823.
4. LWPS P&ID 7R309F905824.
5. LWPS P&ID 7R309F905825.
6. LWPS P&ID 7R309F905826.
7. LWPS P&ID 7R309F905827.
8. LWPS P&ID 7R309F905828.
9. LWPS P&ID 7R309F905829.
10. LWPS P&ID 7R309F905821.
11. LWPS P&ID 7R309F905822.
12. LWPS P&ID 5R309F905827.
13. VENDOR DRAWING 8378-00020AKX.
14. VENDOR DRAWING 8378-00085-BKX, 8378-00086-BKX

REV. NO.	ISSUE DATE	REVISION	ORIG	CHK	RE	DV	SE	NO.	ISSUE DATE	REVISION	ORIG	CHK	RE	DV	SE
14	12-1-04	REVISED PER CR # 84-4522-1.	JSH												
13	6-24-93	INCORP. DCN 0381843.	VUM	GN	FILE										
12	10-21-88	INCORP. DCN 0083621	JGL	GN	FILE										
2-11	7-12-83	ISSUED FOR CONSTRUCTION.	SIGNATURES ON FILE.												

SOUTH TEXAS PROJECT NUCLEAR OPERATING COMPANY

PRIORITY	CADD FILE NO.	PSUC. NO.	STI. NO.
1	FJA717.141	D078928	3121793

PIPING & INSTRUMENTATION DIAGRAM
LWPS PUMP SEAL WATER SYSTEM

SCALE	DWG. NO.	SHT	REV.
NONE	7R309F900174#2	-	14

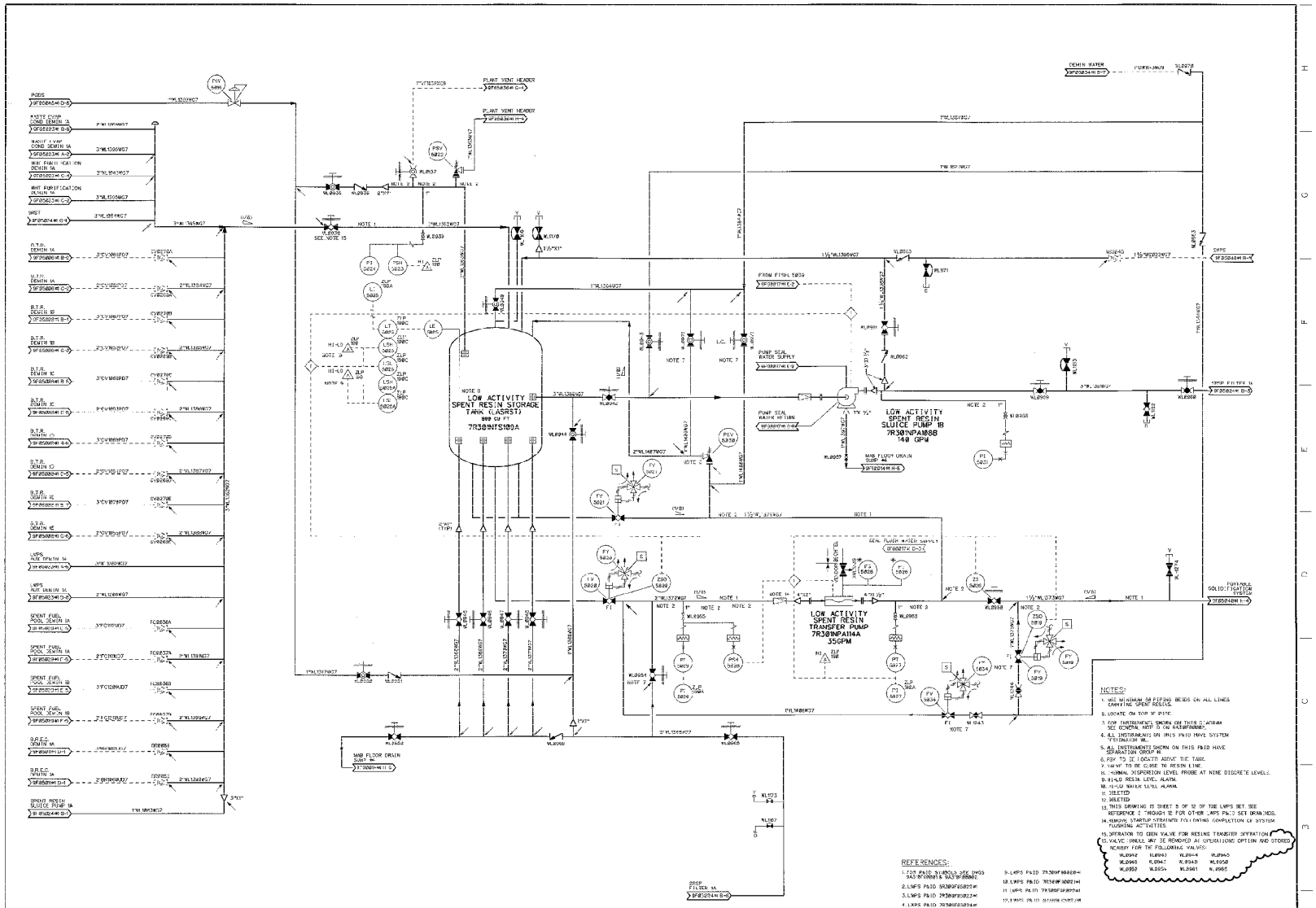

REV. NO.	ISSUE DATE	REVISION	ORIG	CHK	RI	SV	CE	NO.	ISSUE DATE	REVISION	ORIG	CHK	RE	DV	SL
12	2-12-99	REVISED PER DCN 99-0037	JGL	ON FILE											
11	11-11-98	EDITORIAL CHANGE TO CHANGE WL0935 VALVE POSITION AND ADD NOTE 15.	JSH	ON FILE											
10	11-24-03	INCORP. DCN NO 2836 AND EDITORIAL	SIGNATURES ON FILE												
9	5-29-98	INCORP. DCN NO-512	SIGNATURES ON FILE												
8	1-9-89	WL87 ASSUMES DESIGN CHANGE CONTROL & INCORP. HFCR'S BM01655 AND BM01687	SIGNATURES ON FILE												
7	3-2-84	ISSUED FOR CONSTRUCTION	SIGNATURES ON FILE					13	11-13-05	INCORP. DCN 2008736	JSH	MAB	CDV	TSG	AMM

PRIORITY	CADD FILE NO.	FSUG. NO.	STT. NO.
1	FLAT FILE 3.01	JB.0928	3a4460880

SOUTH TEXAS PROJECT
NUCLEAR OPERATING COMPANY

PIPING & INSTRUMENTATION DIAGRAM
LIQUID WASTE PROCESSING SYSTEM

SCALE	DWG. NO.	SHT.	REV.
NONE	7R30F900018#1		13

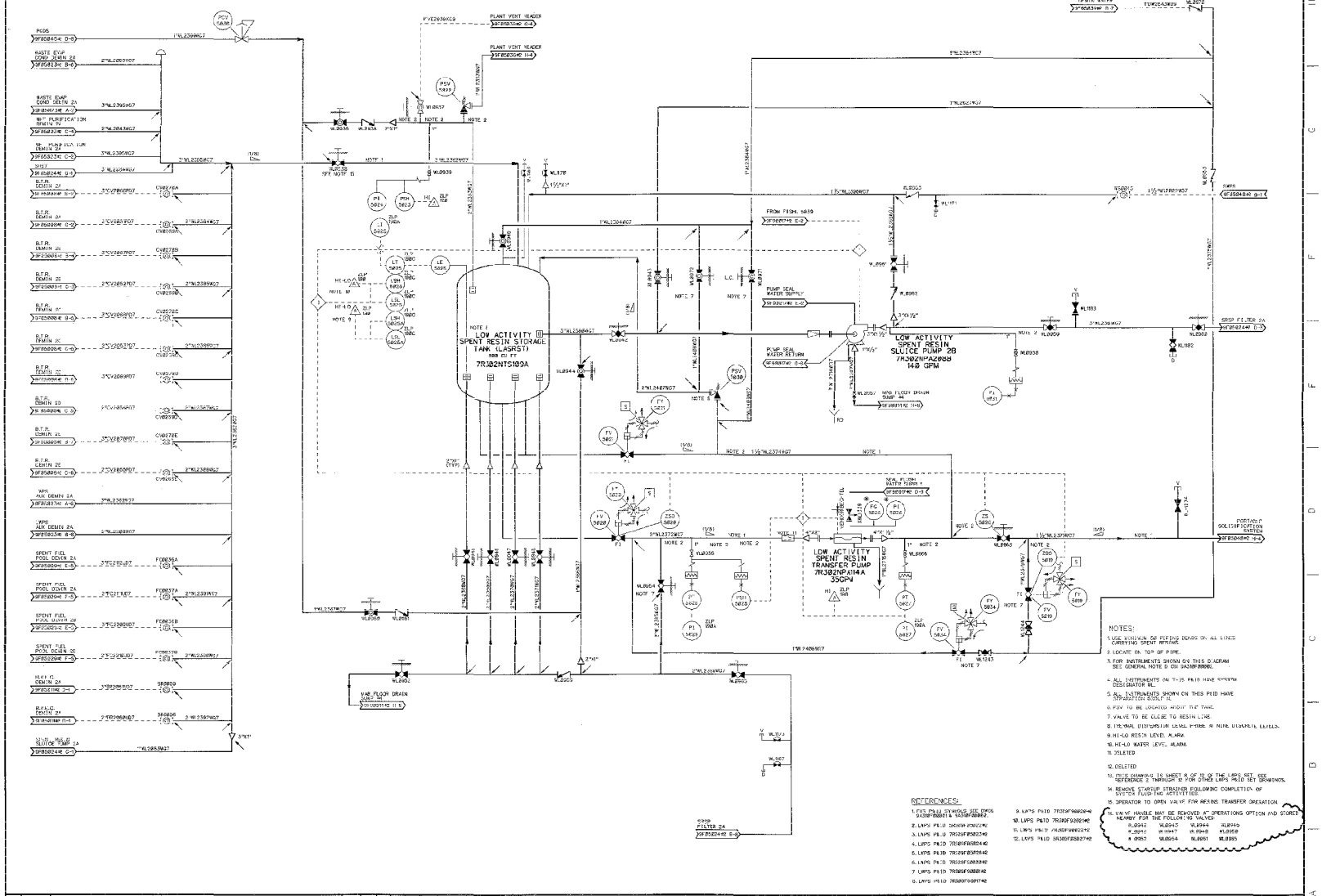

NOTES:

1. USE MINIMUM OF FITTING BENDS ON ALL LINES CARRYING SPENT RESINS.
2. LOCATE ON TOP OF PIPE.
3. FOR INSTRUMENTS SHOWN ON THIS DIAGRAM SEE GENERAL NOTE D ON 9A39NF00001.
4. ALL INSTRUMENTS ON T-15 PAID HAVE SYSTEM DESIGNATOR WL.
5. ALL INSTRUMENTS SHOWN ON THIS PAID HAVE SEPARATION BUBBLE R.
6. PSV TO BE LOCATED ABOVE THE TANK.
7. VALVE TO BE CLOSE TO RESIN LINE.
8. TYPICAL DISCHARGE LEVEL PROBE IN NONE DISCRETE LEVELS.
9. HI-LO RESIN LEVEL ALARM.
10. HI-LO WATER LEVEL ALARM.
11. DELETED
12. DELETED
13. THIS DRAWING IS SHEET 8 OF 10 OF THE LWPS SET. SEE REFERENCE 2 THROUGH 12 FOR OTHER LWPS PAID SET DRAWINGS.
14. REMOVE STARTUP STRAINER FOLLOWING COMPLETION OF SYSTEM FLUSHING ACTIVITIES.
15. OPERATOR TO OPEN VALVE FOR RESINS TRANSFER OPERATION.
16. VALVE HANDLE MAY BE REMOVED AT OPERATIONS OPTION AND STORED NEARBY FOR THE FOLLOWING VALVES:
    R_0942 WL0945 WL0944 WL0949
    R_0942 WL0947 WL0948 WL0958
    R_0952 WL0954 WL0951 WL0955

REFERENCES:

1. LWPS P&ID DRAWINGS SEE DWGS 9A39NF00001, 9A39NF00002.
2. LWPS P&ID 7R309F0200202
3. LWPS P&ID 7R309F0200302
4. LWPS P&ID 7R309F0200402
5. LWPS P&ID 7R309F0200502
6. LWPS P&ID 7R309F0200602
7. LWPS P&ID 7R309F0200102
8. LWPS P&ID 7R309F0200702
9. LWPS P&ID 7R309F0200802
10. LWPS P&ID 7R309F0200902
11. LWPS P&ID 7R309F0200202
12. LWPS P&ID 7R309F0200702

REV	DATE	REVISION	ORIG	CKR	RE	DV	SE	NO.	ISSUE DATE	REVISION	ORIG	CKR	RE	DV	SE
12	2-12-98	REVISED PER CR 98-1537	JGL	ON FILE											
11	11-14-96	EDITORIAL CHANGES TO CHANGE WL0938 VALVE POSITION AND ADD NOTE 15.	JSH	ON FILE											
10	2-7-94	ISSUED FOR INITIATION (EDITORIAL)	SIGNATURES ON FILE												
9	11-3-93	INCORP. DCN MD-2638 AND EDITORIAL	SIGNATURES ON FILE												
8	5-19-93	HLP ASSUMES DESIGN CHANGE CONTROL & INCORP. DCN MD-513	SIGNATURES ON FILE												
7	5-3-93	ISSUED FOR CONSTRUCTION	SIGNATURES ON FILE					13	4-15-93	INCORP. DCN MD9A1537	JSH	JGL	RE	DV	SE

NO.	195.6 DATE

STP

SOUTH TEXAS PROJECT
NUCLEAR OPERATING COMPANY

TM UNIT	CAD FILE NO.	TRAIN NO.	SYS. NO.
1	FJAC7E.131	0070908	3247pCD.11

PIPING & INSTRUMENTATION DIAGRAM
LIQUID WASTE PROCESSING SYSTEM

SCALE	DWG. NO.	SH.	REV.
NONE	7R309F9001842		13

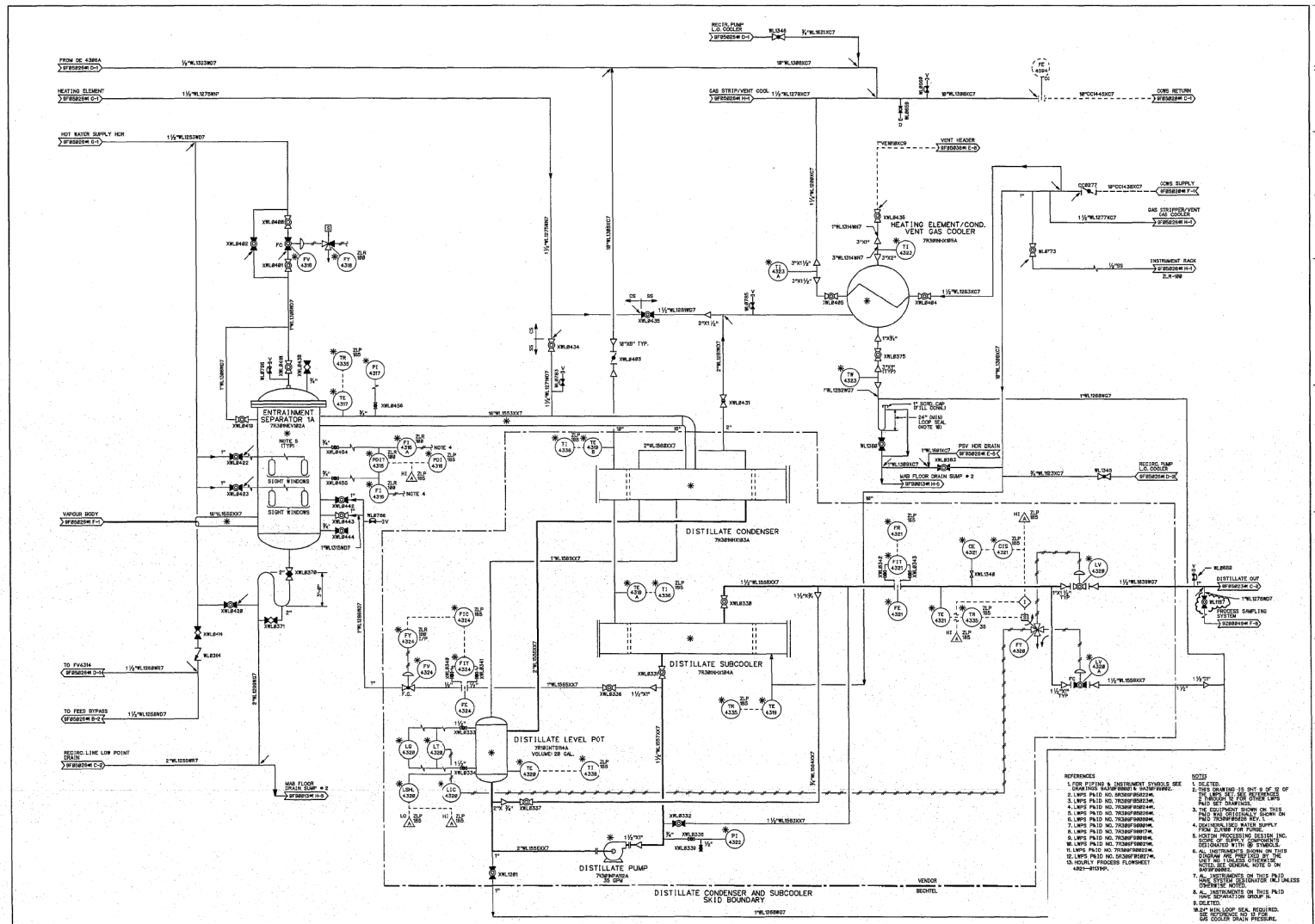

NO.	ISSUE DATE	REVISION	ORIG	CKR	RE	DV	SE	NO.	ISSUE DATE	REVISION	ORIG	CKR	RE	DV	SE
12	6-19-13	REVISED PER CR ACTION 12-0381-2	JSH	SIGNATURES ON FILE											
11	6-27-96	INCORP. DCN 8B01669.	JSH	ON FILE											
10	5-9-91	INCORP. ECN 89-M-0125B, 89-M-0125G & EDITORIAL (DRAFTING ERROR)	NF	ON FILE											
9	12-6-88	H&P ASSUMES DESIGN CHANGE CONTROL. INCORP. HFCR SM00583 AND DCN M00025	SIGNATURES ON FILE												
8	8-24/26/84	ISSUED FOR CONSTRUCTION	SIGNATURES ON FILE												

SUPERSEDES

SOUTH TEXAS PROJECT NUCLEAR OPERATING COMPANY

PRIORITY	CADD FILE NO.	FSUG. NO.	STI. NO.
1	7R309F90020M1.DGN	D078028	33744337

PIPING & INSTRUMENTATION DIAGRAM
LIQUID WASTE PROCESSING SYSTEM
WASTE EVAPORATOR PACKAGE

SCALE	DWG. NO.	SHT.	REV.
NONE	7R309F90020M1		12

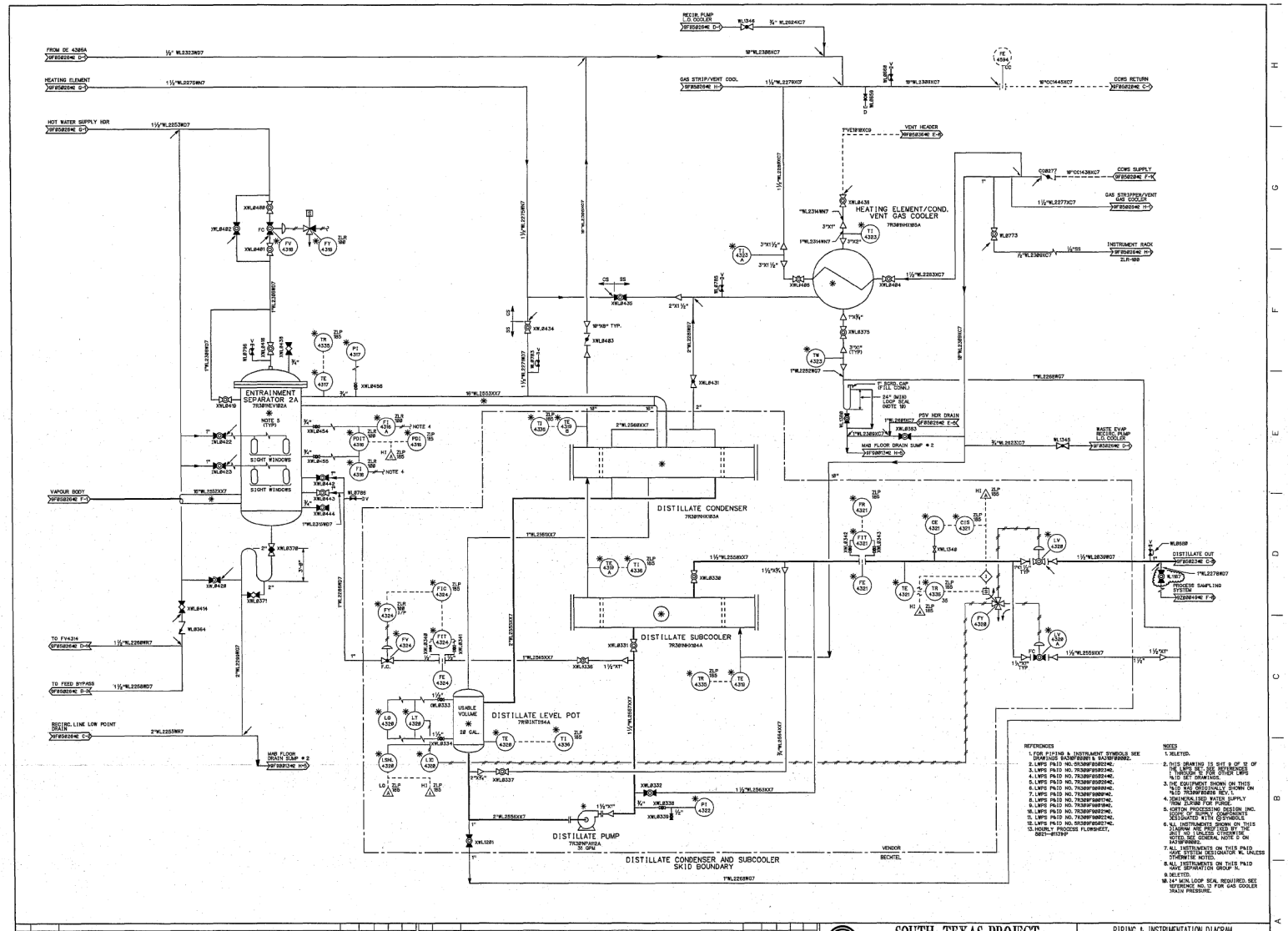

NO.	ISSUE DATE	REVISION	ORIG	CKR	RE	DV	SE
10	2-19-13	REVISED PER CR ACTION 12-10381-2.	JSH	SL	N/A	N/A	N/A
9	8-27-96	INCORP. DCN 880679.	JSH	ON FILE			
8	5-3-91	HL&P ASSUMES DESIGN CHANGE CONTROL & INC. ECN'S 89-M-01268, 89-M-01269	KS	ON FILE			
	8-7-4/28/89	ISSUED FOR CONSTRUCTION	SIGNATURES ON FILE				

NO.	ISSUE DATE	REVISION	ORIG	CKR	RE	DV	SE

SOUTH TEXAS PROJECT
NUCLEAR OPERATING COMPANY

PIPING & INSTRUMENTATION DIAGRAM
LIQUID WASTE PROCESSING SYSTEM
WASTE EVAPORATOR PACKAGE

PRIORITY	CADD FILE NO.	FDWG NO.	STI NO.	SCALE	DWG NO.	SHT.	REV.
1	7R309F90022#2.DGN	D078925	3344348	NONE	7R309F90020#2		10

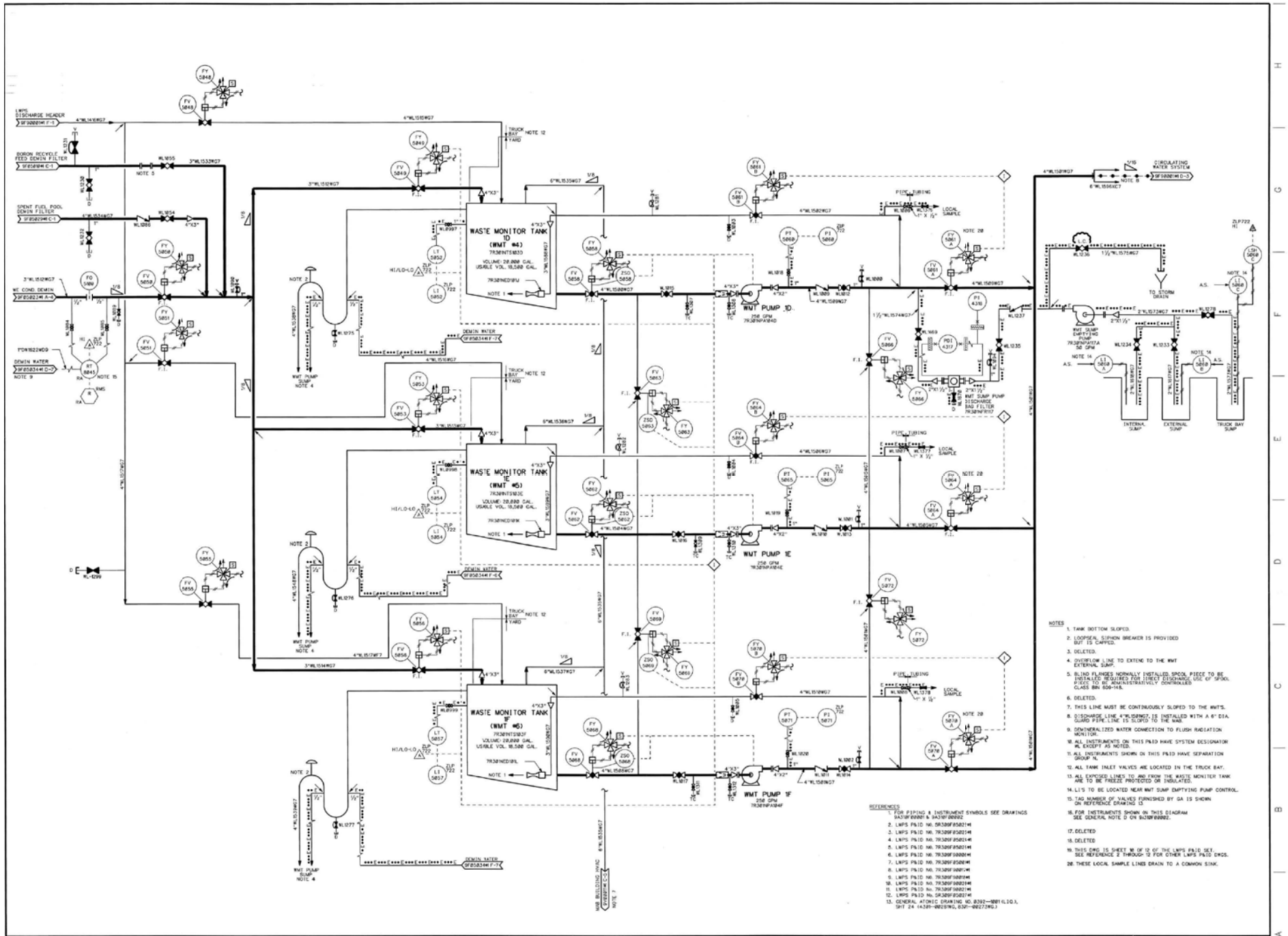

NOTES

1. TANK BOTTOM SLOPED.
2. LOOPSEAL SIPHON BREAKER IS PROVIDED BUT IS CAPPED.
3. DELETED.
4. OVERFLOW LINE TO EXTEND TO THE WMT EXTERNAL SUMP.
5. BLIND FLANGES NORMALLY INSTALLED. SPOOL PIECE TO BE INSTALLED REQUIRED FOR DIRECT DISCHARGE. USE OF SPOOL PIECE IS TO BE ADMINISTRATIVELY CONTROLLED. CLASS BBN 609-1AB.
6. DELETED.
7. THIS LINE MUST BE CONTINUOUSLY SLOPED TO THE WMT'S.
8. DISCHARGE LINE 4"WL1589NG7, IS INSTALLED WITH A 6" DIA. GUARD PIPE. LINE IS SLOPED TO THE MAB.
9. DEMINERALIZED WATER CONNECTION TO FLUSH RADIATION MONITOR.
10. ALL INSTRUMENTS ON THIS P&ID HAVE SYSTEM DESIGNATOR WL EXCEPT AS NOTED.
11. ALL INSTRUMENTS SHOWN IN THIS P&ID HAVE SEPARATION GROUP "A".
12. ALL TANK INLET VALVES ARE LOCATED IN THE TRUCK BAY.
13. ALL EXPOSED LINES TO AND FROM THE WASTE MONITER TANK ARE TO BE FREEZE PROTECTED OR INSULATED.
14. LI'S TO BE LOCATED NEAR WMT SUMP EMPTYING PUMP CONTROL.
15. TAG NUMBER OF VALVES FURNISHED BY GA IS SHOWN ON REFERENCE DRAWING 13.
16. FOR INSTRUMENTS SHOWN ON THIS DIAGRAM SEE GENERAL NOTE D ON 9J30F00002.
17. DELETED
18. DELETED
19. THIS DWG IS SHEET 16 OF 12 OF THE LWPS P&ID SET. SEE REFERENCE 2 THROUGH 12 FOR OTHER LWPS P&ID DWGS.
20. THESE LOCAL SAMPLE LINES DRAIN TO A COMMON SINK.

REFERENCES

1. FOR PIPING & INSTRUMENT SYMBOLS SEE DRAWINGS 9A30F00001 & 9A30F00002
2. LWPS P&ID NO. 9R30F05021#1
3. LWPS P&ID NO. 7R30F05021#1
4. LWPS P&ID NO. 7R30F05021#2
5. LWPS P&ID NO. 7R30F05021#3
6. LWPS P&ID NO. 7R30F00001#1
7. LWPS P&ID NO. 7R30F00001#2
8. LWPS P&ID NO. 7R30F00001#3
9. LWPS P&ID NO. 7R30F00001#4
10. LWPS P&ID NO. 7R30F00001#5
11. LWPS P&ID NO. 7R30F00001#6
12. LWPS P&ID No. 9R30F05021#1
13. GENERAL ATOMIC DRAWING NO. 8392-1001 G.1(0.), SHT 24 (4391-0025WG, 8391-0027JWG.)

NO	ISSUE DATE	REVISION	ORIG	CKR	RE	DV	SE
22	7-9-09	REVISED PER CR 09-10114.	JCL				
21	12-5-07	REVISED PER CR 07-2151.	VJM	ON FILE			
20	11-19-02	REVISED PER CR#02-16081.	LNB	ON FILE			
19	4-26-94	ISSUED FOR CONSTRUCTION.	SIGNATURES ON FILE				

SUPERSEDES

NO.	ISSUE DATE	REVISION	ORIG	CKR	RE	DV	SE

SOUTH TEXAS PROJECT
NUCLEAR OPERATING COMPANY

PRIORITY	CADD FILE NO.	FSUG. NO.	STI. NO.
1	FJA181.221	D870908	3250307 5

PIPING AND INSTRUMENTATION DIAGRAM
LIQUID WASTE PROCESSING SYSTEM

SCALE	DWG. NO.	SHT.	REV.
NONE	7R309F90021#1		22

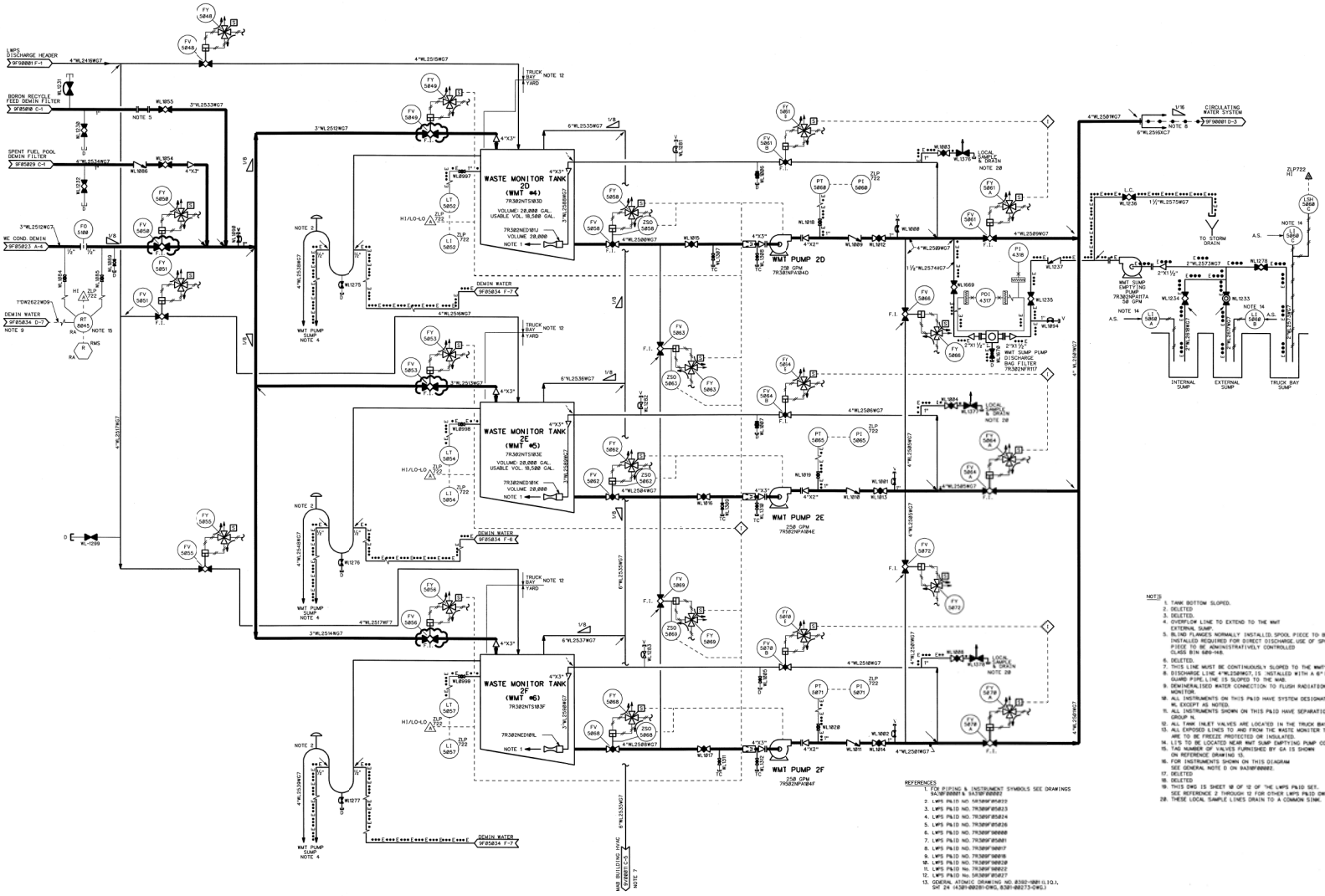

NOTES

1. TANK BOTTOM SLOPED.
2. DELETED.
3. DELETED.
4. OVERFLOW LINE TO EXTEND TO THE WMT EXTERNAL SUMP.
5. BLIND FLANGES NORMALLY INSTALLED. SPOOL PIECE TO BE INSTALLED REQUIRED FOR DIRECT DISCHARGE USE OF SPOOL PIECE TO BE ADMINISTRATIVELY CONTROLLED CLASS BIN 589-148.
6. DELETED.
7. THIS LINE MUST BE CONTINUOUSLY SLOPED TO THE WMT'S.
8. DISCHARGE LINE 4"WL2589WG7, IS INSTALLED WITH A 6" DIA. GUARD PIPE. LINE IS SLOPED TO THE MAB.
9. DEMINERALIZED WATER CONNECTION TO FLUSH RADIATION MONITOR.
10. ALL INSTRUMENTS ON THIS P&ID HAVE SYSTEM DESIGNATOR WL EXCEPT AS NOTED.
11. ALL INSTRUMENTS SHOWN ON THIS P&ID HAVE SEPARATION GROUP N.
12. ALL TANK INLET VALVES ARE LOCATED IN THE TRUCK BAY.
13. ALL EXPOSED LINES TO AND FROM THE WASTE MONITER TANK ARE TO BE FREEZE PROTECTED OR INSULATED.
14. L1'S TO BE LOCATED NEAR WMT SUMP EMPTYING PUMP CONTROL.
15. TAG NUMBER OF VALVES FURNISHED BY GA IS SHOWN ON REFERENCE DRAWING 13.
16. FOR INSTRUMENTS SHOWN ON THIS DIAGRAM SEE GENERAL NOTE 0 ON 9A3N9F00002.
17. DELETED
18. DELETED
19. THIS DWG IS SHEET 18 OF 12 OF THE LWPS P&ID SET. SEE REFERENCE 2 THROUGH 12 FOR OTHER LWPS P&ID DWGS.
20. THESE LOCAL SAMPLE LINES DRAIN TO A COMMON SINK.

REFERENCES

1. FOR PIPING & INSTRUMENT SYMBOLS SEE DRAWINGS 9A3N9F00001 & 9A3N9F00002
2. LWPS P&ID NO. 5N309F05022
3. LWPS P&ID NO. 7R309F05023
4. LWPS P&ID NO. 7R309F05024
5. LWPS P&ID NO. 7R309F05026
6. LWPS P&ID NO. 7R309F00000
7. LWPS P&ID NO. 7R309F05001
8. LWPS P&ID NO. 7R309F00017
9. LWPS P&ID NO. 7R309F00018
10. LWPS P&ID NO. 7R309F00020
11. LWPS P&ID No. 7R309F00022
12. LWPS P&ID No. 5R309F05027
13. GENERAL ATOMIC DRAWING NO. 8302-1001 (LIQ.), SHT 24 (4301-00201-DWG, 8301-00273-DWG.)

NO.	ISSUE DATE	REVISION	ORIG	CKR	RE	DV	SE	NO.	ISSUE DATE	REVISION	ORIG	CKR	RE	DV	SE
19	12-5-07	REVISED PER CR #07-2151.	VJM												
18	3-28-06	REVISED PER CR # 06-1685-1.	JSH	ON FILE											
17	11-19-02	REVISED PER CR # 02-16081.	LNB	ON FILE											
0-16	4-26-84	ISSUED FOR CONSTRUCTION.	SIGNATURES ON FILE												

ISSUED FOR CONSTRUCTION

SOUTH TEXAS PROJECT
NUCLEAR OPERATING COMPANY

PRIORITY	CADD FILE NO.	FSUG. NO.	STI. NO.
1	FJA581.191	D070928	32235789

PIPING AND INSTRUMENTATION DIAGRAM
LIQUID WASTE PROCESSING SYSTEM

SCALE	DWG. NO.	SHT.	REV.
NONE	7R309F90021#2		19

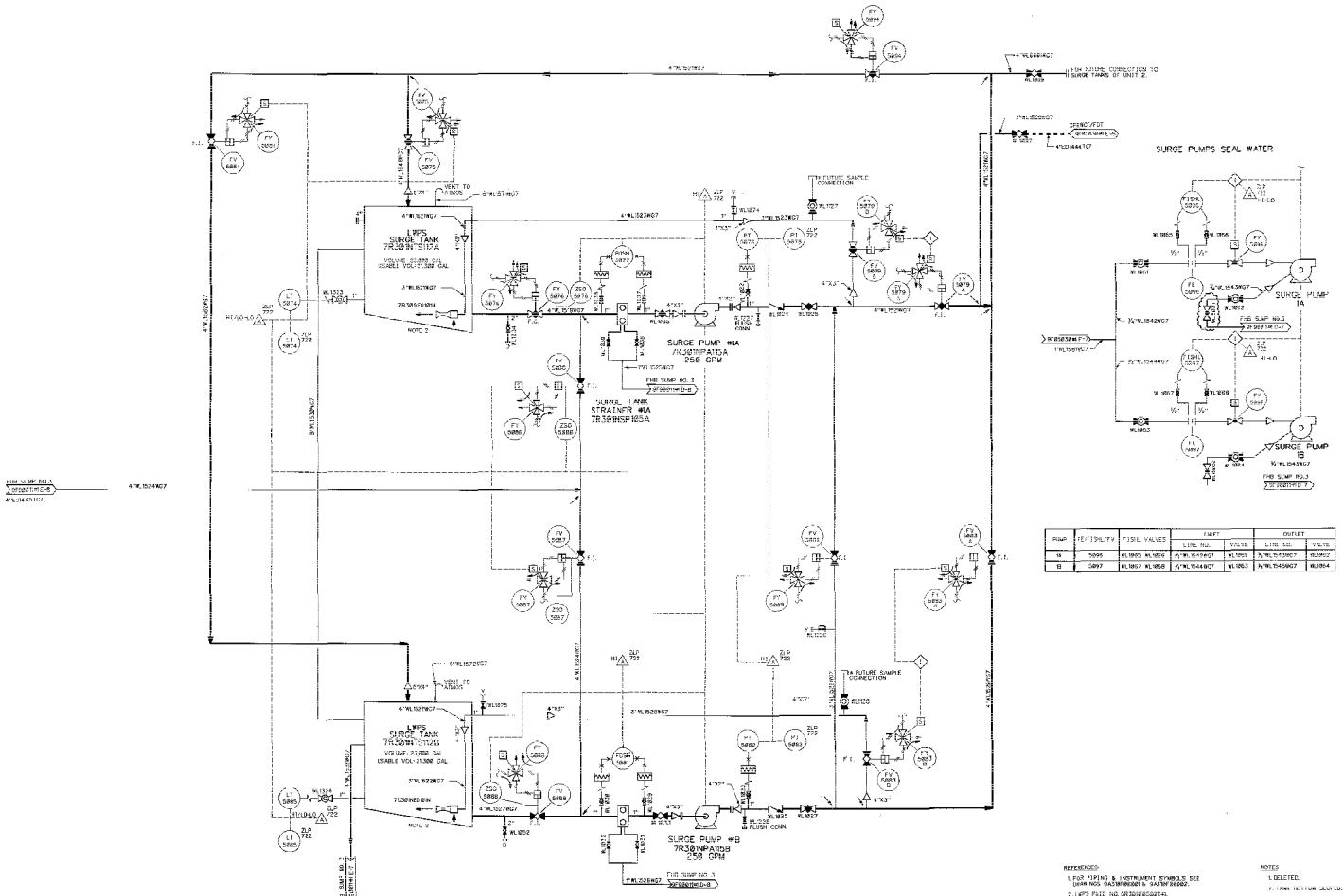

PUMP	TE/TISH/TV	FISH VALVES	INLET		OUTLET	
			LINE NO.	VALVE	LINE NO.	VALVE
1A	5896	WL1865 WL1866	3/4"WL1543WG7	WL1861	3/4"WL1543WG7	WL1862
1B	5897	WL1867 WL1868	3/4"WL1544WG7	WL1863	3/4"WL1545WG7	WL1864

REFERENCES:

1. P&ID PIPING & INSTRUMENT SYMBOLS SEE DRAW NOS. 6A39F8000 & 6A39F8002.
2. LWPS P&ID NO. 7R30WF0502F4.
3. LWPS P&ID NO. 7R30WF0502F4H.
4. LWPS P&ID NO. 7R30WF0502F4.
5. LWPS P&ID NO. 7R30WF0502F4.
6. LWPS P&ID NO. 7R30WF0502F4H.
7. LWPS P&ID NO. 7R30WF0502F4.
8. LWPS P&ID NO. 7R30WF0502F4.
9. LWPS P&ID NO. 7R30WF0502F4H.
10. LWPS P&ID NO. 7R30WF0502F4H.
11. LWPS P&ID NO. 7R30WF0502F4.
11. LWPS P&ID NO. 5R30WF0502F4.

NOTES:

1. DELETED.
2. TANK BOTTOM CLOSED.
3. ALL INSTRUMENTS SHOWN ON THIS P&ID HAVE SYSTEM INTEGRATION IN FSAR(FT) AS NOTED.
4. ALL INSTRUMENTS SHOWN ON THIS P&ID HAVE SEPARATION GROUP 4.
5. THIS P&ID IS SHEET 11 OF 12 OF THE LWPS P&ID SET. SEE REFERENCES 2 THROUGH 11 FOR OTHER LWPS P&ID SET DRAWINGS.
6. DELETED.
7. FOR INSTRUMENTS Below the Tank (3) SEIMIC SEE GENERAL NOTE 3 ON 6A39F8000.
8. DELETED
9. DELETED

NO.	ISSUE DATE	REVISION	DRIG	CKR	RE	DV	SE	NO.	ISSUE DATE	REVISION	DRIG	CKR	RE	DV	SE
13	01-03-94	INCORP. DCN 5888745.													
12	11-8-93	INCORP. DCN 5888745.	VJM	ON FILE											
11	3-12-97	EDITORIAL AS-BUILT TO CORRECT VALVE POSITIONS.	VJM	ON FILE											
		(LOCATIONS G-3, F-2 & F-2).													
10	11-3-93	(LAT. REF. DCN. 6A6-STL. AND INCORP. DCN NE-0038 AND EDITORIAL.	SIGNATURES ON FILE												
8-9	4-26-84	ISSUED FOR CONSTRUCTION.	SIGNATURES ON FILE												

SOUTH TEXAS PROJECT
NUCLEAR OPERATING COMPANY

PIPING AND INSTRUMENTATION DIAGRAM
LIQUID WASTE PROCESSING SYSTEM

PRIORITY	CADD FILE NO.	FSAR NO.	STI. NO.	SCALE	DWG. NO.	SHT.	REV.
1	FJA218.131	D078929	3238D6922	NONE	7R30F90022#1		13

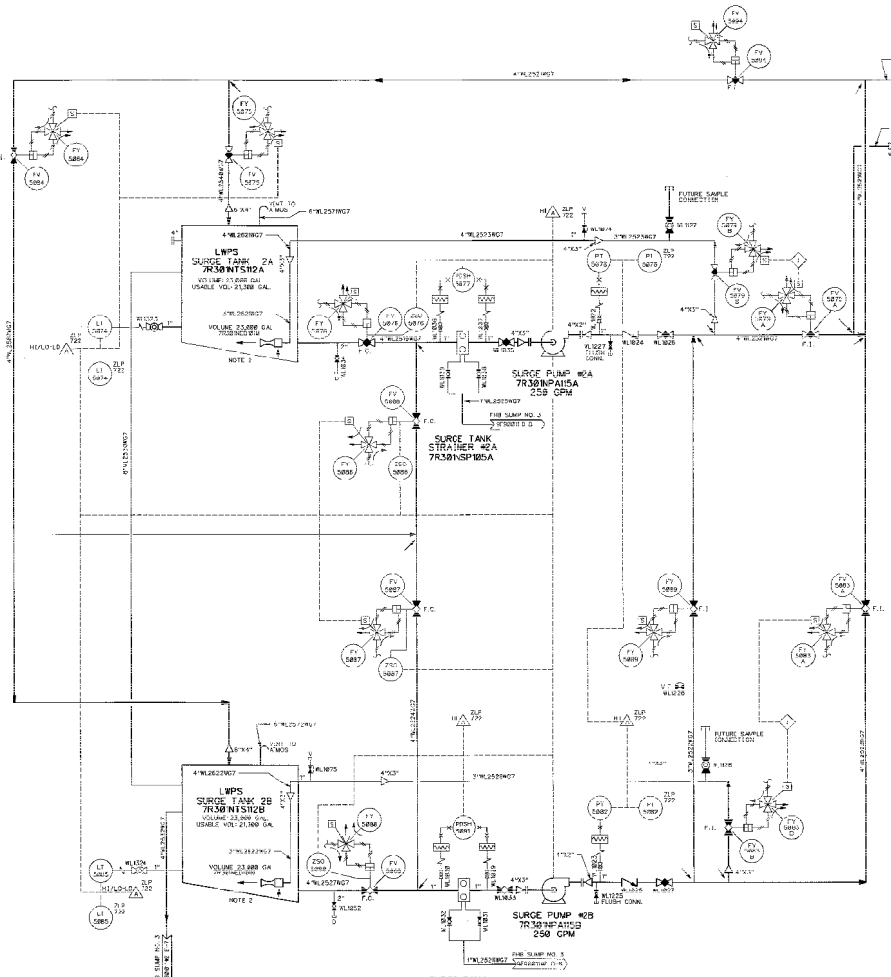

Pump	FE/FISHL/FV	FISHL VALVES	INLET		OUTLET	
			LINE NO.	VALVE	LINE NO.	VALVE
2A	5896	WL1865 WL1866	¾"WL2428WG7	WL1861	¾"WL2439WG7	WL1862
2B	5897	WL1867 WL1868	¾"WL2448WG7	WL1863	¾"WL2459WG7	WL1864

NOTES:

1. DELETED.
2. LWPS SURGE TANKS.
3. ALL INSTRUMENTS SHOWN ON THIS P&ID HAVE SYSTEM DESIGNATOR W. EXCEPT AS NOTED.
4. ALL INSTRUMENTS SHOWN ON THIS P&ID HAVE SEPARATION GROUP N.
5. THIS P&ID IS SHEET 11 OF 11 OF THE LWPS P&ID SET. SEE REFERENCES 2. THROUGH 7. FOR OTHER LWPS P&ID SET DRAWINGS.
6. DELETED.
7. ALL INSTRUMENTS SHOWN ON THIS DIAGRAM ARE INDICATORS OF THE UNIT NO. 1 PARTS COMPARTMENT. NOTED SEE GENERAL NOTE 1 ON MASTER INDEX.
8. DELETED.
9. THE LIQUID WASTE PROCESSING SYSTEM (LWPS) OF UNIT 1 IS IDENTICAL TO THE LWPS OF UNIT 2. THE COMPONENTS OF UNIT 2 ARE IDENTICAL TO THOSE OF UNIT 1 SHOWN ON THIS DIAGRAM EXCEPT THAT THE TAG NUMBERS WILL BE FOR UNIT 2.

REFERENCES:

1. FOR PIPING & INSTRUMENT SYMBOLS SEE MASTER DWG. 7R30F9000010, 7R30F9000012.
2. LWPS P&ID NO. 7R30F9502240.
3. LWPS P&ID NO. 7R30F9502340.
4. LWPS P&ID NO. 7R30F9502440.
5. LWPS P&ID NO. 7R30F9502540.
6. LWPS P&ID NO. 7R30F9502640.
7. LWPS P&ID NO. 7R30F9502740.
8. LWPS P&ID NO. 7R30F9502740.
9. LWPS P&ID NO. 7R30F9502840.
10. LWPS P&ID NO. 7R30F9502040.
11. LWPS P&ID NO. 7R30F9502140.
12. LWPS P&ID NO. 7R30F9502740.

REV NO.	ISSUE DATE	REVISION	ORIG	CKR	RE	DV	SE	NO.	ISSUE DATE	REVISION	ORIG	CKR	RE	DV	SE
12	04-19-11	INCORP. DCN 0802297.	VUN												
11	11-9-10	INCORP. DCN 0802414.	VUN	ON FILE											
10	2-3-90	REVISED PER CR# 89-09 15.	VGH	ON FILE											
09	4-26-84	ISSUED FOR CONSTRUCTION.	SIGNATURES ON FILE												

SOUTH TEXAS PROJECT
NUCLEAR OPERATING COMPANY

PIPING AND INSTRUMENTATION DIAGRAM
LIQUID WASTE PROCESSING SYSTEM

PRIORITY	CADD FILE NO.	FSUG. NO.	STI. NO.	SCALE	DWG. NO.	SHT.	REV.
1	FJA718.121	D070928	3380649.30	NONE	7R30F90022#2		12

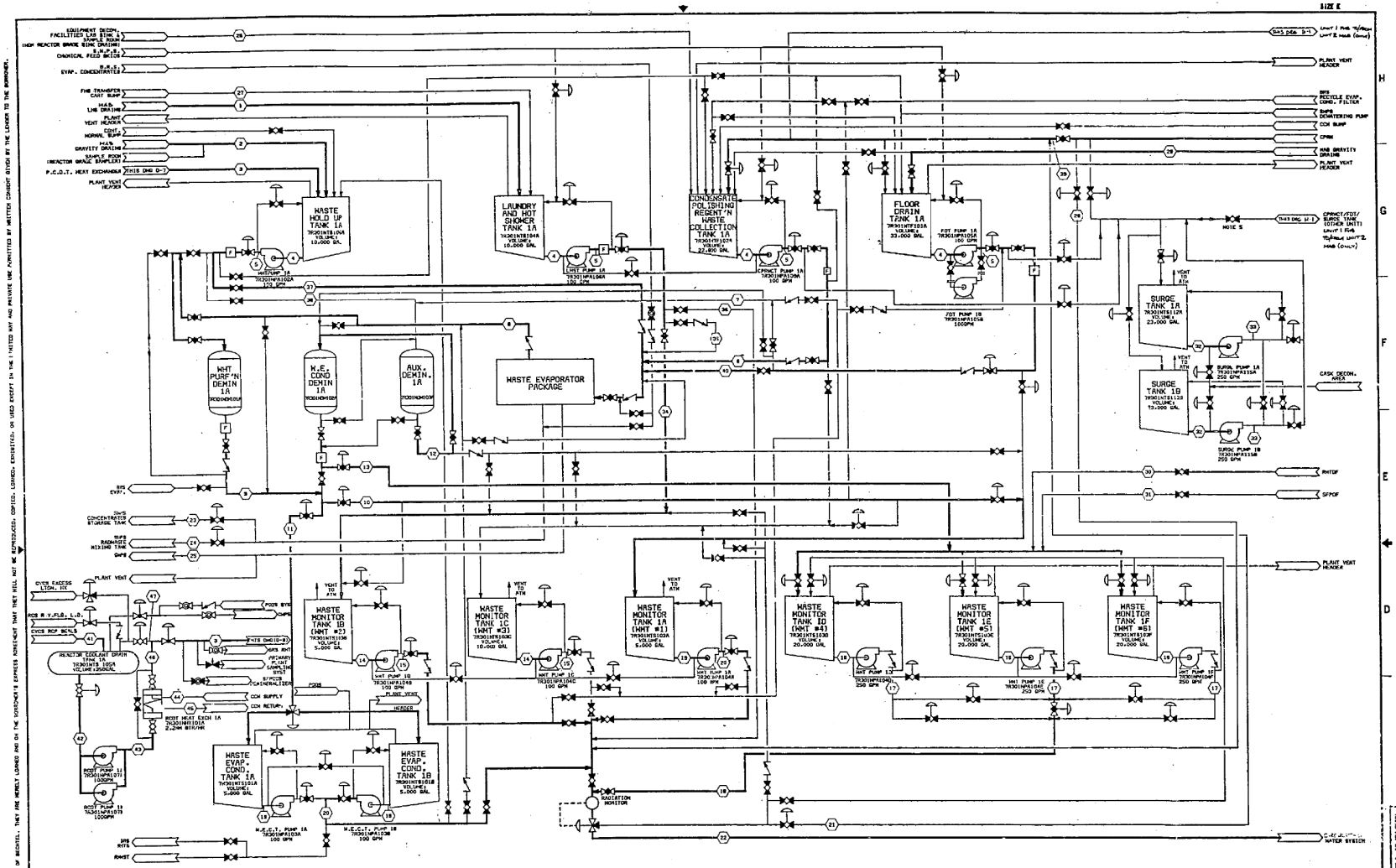

MODE	PARAMETER \ STREAM NO.	1	2	3	4	5	6	7	8	9	10	11	12	13	14	15	16	17	18	19	20
PARALLEL PROCESSING OF FOT BY OR MINERALIZER AND CPHCT BY EVAPORATOR.	FLOW GPM			2,250 (NOTE 3)	100	100	50	100	30	30	30	30	150	100	100	100	250	250	250	100	100
	FLOW GPD			7,300 (MAX)	1,200 (MAX)			18,200 (MAX)	80,580 (MAX)	18,200 (MAX)	18,200 (MAX)		80,580 (MAX)	80,580 (MAX)	2,300 (MAX)	1,300 (MAX)	80,580 (MAX)	80,580 (MAX)	80,580 (MAX)	18,200 (MAX)	18,200 (MAX)
NORMAL OPERATION	TEMPERATURE (°F)	170 (MAX)	120 (MAX)	120	85	85	85	85	120	120	120	121	85	85	85	85	85	85	85	85	85
	PRESSURE (PSIG)	(NOTE 1)	(NOTE 1)	120	5	52	82	82	16	48	48	48	72	52	5	52	8	66	66	5	82

MODE	PARAMETER \ STREAM NO.	21	22	23	24	25	26	27	28	29	30	31	32	33	34	35	36	37	38	39	40
PARALLEL PROCESSING OF FOT BY OR MINERALIZER AND CPHCT BY EVAPORATOR.	FLOW GPM	250	100/250	50 (NOTE 4)	50 (NOTE 4)	43 (NOTE 3)		50 (NOTE 4)	250 (NOTE 4)		100 (NOTE 4)	250 (NOTE 4)	250	250	100	30	100	30	100	250 (NOTE 4)	
	FLOW GPD	18,200 (MAX)					7,000 (MAX)		27,400 TO 30 19,800	34,080					3,300 (MAX)	3,300 (MAX)	2,300 (MAX)			3,300 TO 20 11,400 (MAX)	
NORMAL OPERATION	TEMPERATURE (°F)	85	85	85	218	219	130	95	130	95	115		95	95	95	95	95	95	95	130	95
	PRESSURE (PSIG)	82	82	64	64	2	(NOTE 1)		60	(NOTE 1)		51	10	53	82	82	82	82	62	60	82

MODE	PARAMETER \ STREAM NO.	41	42	43	44	45	46	47	48	49
PARALLEL PROCESSING OF FOT BY OR MINERALIZER AND CPHCT BY EVAPORATOR.	FLOW GPM	3,193 (NOTE 3)	44.024 (NOTE 3)	44.024 (NOTE 3)	10.060 (NOTE 3)	10.060 (NOTE 3)	44.024 (NOTE 3)	43.631 (NOTE 3)		
	FLOW GPD									
NORMAL OPERATION	TEMPERATURE (°F)	90	170	170	105	175	130	130		
	PRESSURE (PSIG)		25 (MAX)	110			95	95		

NOTES:

1. GRAVITY FLOW
2. THE TEMPERATURE OF THE CONTENTS IN ALL TANKS IS TAKEN AT 85° WHICH IS THE AVERAGE TEMPERATURE IN THE REAR AND FWB (TMAX+104°F, TMIN+50°F)
3. LB/HR
4. INTERMITTENT
5. COMMON VALVE FOR BOTH UNITS

THE DATA SHOWN ON THIS FLOW DIAGRAM ARE FOR DESIGN PURPOSES ONLY AND WHILE USEFUL AS GUIDES IN OPERATION, DO NOT REPRESENT EXACT OR GUARANTEED OPERATING CONDITIONS.

CHIEF ENGR	CLIENT NO.	REVISION	RE	CKR	GL	EGB	PE	DATE
	2	ISSUED FOR CONSTRUCTION						4-11-87

CHIEF ENGR	CLIENT NO.	REVISION	RE	CKR	GL	EGB	PE	DATE

BECHTEL ENERGY CORPORATION
HOUSTON, TEXAS

HOUSTON LIGHTING & POWER CO.
SOUTH TEXAS PROJECT

FLOW DIAGRAM
LIQUID WASTE PROCESSING SYSTEM

SCALE	JOB NO.	DRAWING NO.	REV.
NONE	14926	7R309F90023	0

THIS DRAWING MUST BE WITH THE FOLLOWING DOCUMENTS

DCN'S	FCN'S

THIS DRAWING AND THE VERSION IT COVERS ARE THE PROPERTY OF BECHTEL. THEY ARE MERELY LOANED AND ON THE BORROWER'S EXPRESS AGREEMENT THAT THEY WILL NOT BE REPRODUCED, COPIED, LOANED, EXHIBITED, OR USED EXCEPT IN THE LIMITED WAY AND PRIVATE USE AUTHORIZED BY WRITTEN CONSENT GIVEN BY THE LENDER TO THE BORROWER.

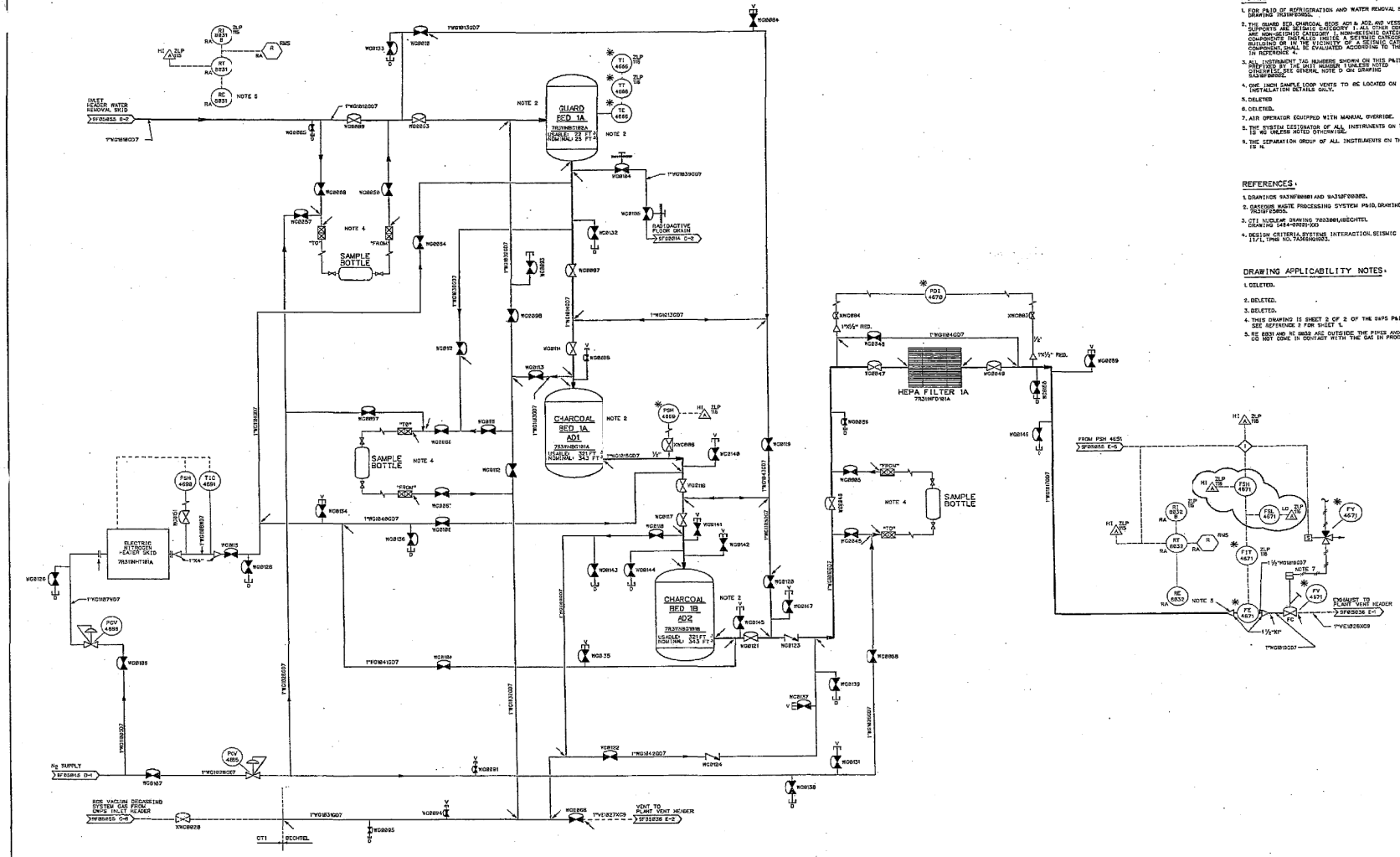

NOTES:

1. FOR P&ID OF REFRIGERATION AND WATER REMOVAL SKIDS SEE DRAWING 7R319F0500AL.
2. THE GUARD BED, CHARCOAL BEDS AD1 & AD2, AND VESSEL SUPPORTS ARE SEISMIC CATEGORY I. ALL OTHER COMPONENTS AND NON-SEISMIC CATEGORY I, NON-SEISMIC CATEGORY I COMPONENTS INSTALLED INSIDE A SEISMIC CATEGORY I BUILDING OR IN THE EXCITER ROOM, SEISMIC CATEGORY I. THEY WERE EVALUATED ACCORDING TO THE CRITERIA IN REFERENCE 4.
3. ALL INSTRUMENT TAG NUMBERS SHOWN ON THIS P&ID ARE PREFIXED BY THE UNIT NUMBER 1 UNLESS NOTED OTHERWISE. SEE GENERAL NOTE D ON DRAWING 6A3NF0000C.
4. ONE INCH SAMPLE LOOP VENTS TO BE LOCATED ON I&C INSTALLATION DETAILS ONLY.
5. DELETED
6. DELETED.
7. AIR OPERATOR EQUIPPED WITH MANUAL OVERRIDE.
8. THE SYSTEM DESIGNATOR OF ALL INSTRUMENTS ON THIS P&ID IS WG UNLESS NOTED OTHERWISE.
9. THE SEPARATION GROUP OF ALL INSTRUMENTS ON THIS P&ID IS 4.

REFERENCES:

1. DRAWINGS 9A3NF0000I AND 9A3NF0000J.
2. GASEOUS WASTE PROCESSING SYSTEM P&ID, DRAWING 7R319F0504A.
3. CTI NUCLEAR DRAWING 7R3J001,USECHTEL DRAWING 5454-00025-X00
4. DESIGN CRITERIA,SYSTEMS INTERACTION,SEISMIC (I/I), TPNO NO.7A3SN0003.

DRAWING APPLICABILITY NOTES:

1. DELETED.
2. DELETED.
3. DELETED.
4. THIS DRAWING IS SHEET 2 OF 2 OF THE GWPS P&ID SET. SEE REFERENCE 2 FOR SHEET 1.
5. RE 6831 AND RC 6832 ARE OUTSIDE THE PIPES AND DO NOT COME IN CONTACT WITH THE GAS IN PROCESS.

NO.	ISSUE DATE	REVISION	ORIG	CKR	RE	DV	SE
15	6-24-03	INCORP. DCN 0301323.	VJM				
14	12-1-98	INCORP. DCN 9803007.	ASH	ON FILE			
2-13	9-28-82	ISSUED FOR CONSTRUCTION.	SIGNATURES ON FILE				

NO.	ISSUE DATE	REVISION	ORIG	CKR	RE	DV	SE

SOUTH TEXAS PROJECT
NUCLEAR OPERATING COMPANY

PRIORITY	CADD FILE NO.	FSUG. NO.	STI. NO.
1	FJA164.121	D870928	31620377

PIPING AND INSTRUMENTATION DIAGRAM
GASEOUS WASTE PROCESSING SYSTEM

SCALE	DWG. NO.	SHT.	REV.
NONE	7R319F0504H		15

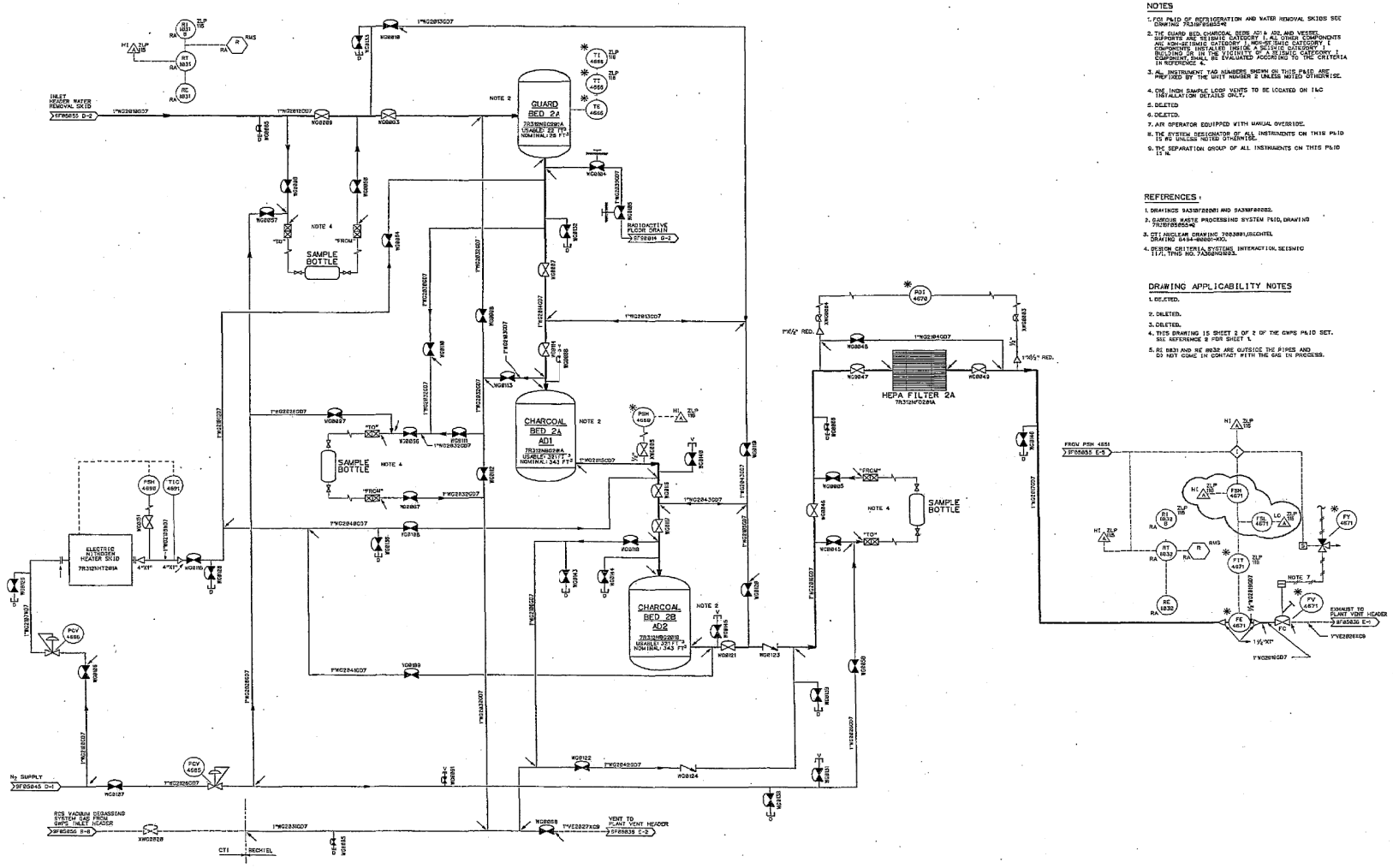

NOTES

1. FOR P&ID OF REFRIGERATION AND WATER REMOVAL SKIDS SEE DRAWING 7R319F0585C#2
2. THE GUARD BED, CHARCOAL BEDS AD1 & AD2, AND VESSEL SUPPORTS ARE SEISMIC CATEGORY I. ALL OTHER COMPONENTS ARE NON-SEISMIC CATEGORY I. NON-SEISMIC CATEGORY I COMPONENTS LOCATED OUTSIDE OF THE CONTROL BUILDING OR IN THE UTILITY & SEISMIC CATEGORY I COMPONENT, SHALL BE EVALUATED ACCORDING TO THE CRITERIA IN REFERENCE 4.
3. ALL INSTRUMENT TAG NUMBERS SHOWN ON THIS P&ID ARE PREFIXED BY THE UNIT NUMBER 2 UNLESS NOTED OTHERWISE.
4. ONE INCH SAMPLE LOOP VENTS TO BE LOCATED ON I&C INSTALLATION DETAILS ONLY.
5. DELETED
6. DELETED.
7. AIR OPERATOR EQUIPPED WITH MANUAL OVERRIDE.
8. THE SYSTEM DESIGNATOR OF ALL INSTRUMENTS ON THIS P&ID IS WG UNLESS NOTED OTHERWISE.
9. THE SEPARATION GROUP OF ALL INSTRUMENTS ON THIS P&ID IS N.

REFERENCES:

1. DRAWINGS 9A319F22001 AND 9A319F22002.
2. GASEOUS WASTE PROCESSING SYSTEM P&ID, DRAWING 7R319F0585C#2
3. CTI AND S&M DRAWING 7R319F01,BECHTEL DRAWING 9A94-M0001-XXX.
4. DESIGN CRITERIA, SYSTEMS, INTERACTION, SEISMIC I/V/L TYPE NO. 7A319F0023.

DRAWING APPLICABILITY NOTES

1. DELETED.
2. DELETED.
3. DELETED.
4. THIS DRAWING IS SHEET 2 OF 2 OF THE GWPS P&ID SET. SEE REFERENCE 2 FOR SHEET 1.
5. RE 0831 AND RE 0832 ARE OUTSIDE THE PIPES AND DO NOT COME IN CONTACT WITH THE GAS IN PROCESS.

NO.	ISSUE DATE	REVISION	ORIG	CKR	RE	DV	SE
15	2-24-03	INCORP. DCN 9381324.	VJM				
14	1-6-99	INCORP. DCN 9804582.	LDD	ON FILE			
13	12-1-98	INCORP. DCN 9803998.	SIGNATURES ON FILE				
1-12	9-30-82	ISSUED FOR CONSTRUCTION.	SIGNATURES ON FILE				

ISSUED FOR:

NO.	ISSUE DATE	REVISION	ORIG	CKR	RE	DV	SE

SOUTH TEXAS PROJECT
NUCLEAR OPERATING COMPANY

PRIORITY	CADD FILE NO.	FSAR NO.	STI NO.
1	FJASE4.151	D07002B	3162-2376

PIPING AND INSTRUMENTATION DIAGRAM
GASEOUS WASTE PROCESSING SYSTEM

SCALE	DWG. NO.	SHT.	REV.
NONE	7R319F05043#2		15

CTI BECHTEL

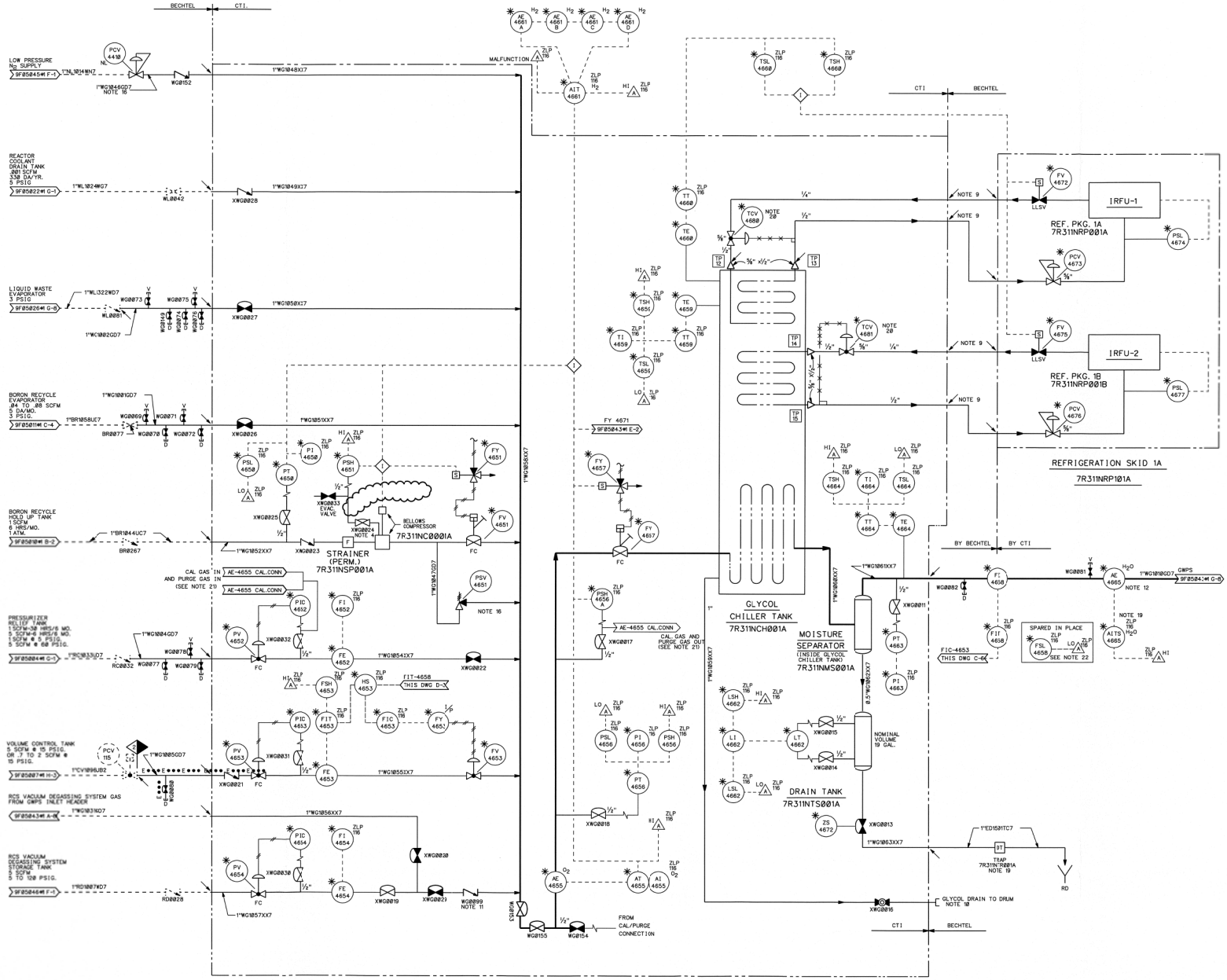

NOTES:

1. ALL PIPING TO BE 1 INCH I.P.S. SCH. 40S STAINLESS STEEL UNLESS OTHERWISE SPECIFIED.
2. INSTRUMENT ROOT CONNECTIONS ARE ½ INCH NOMINAL DIAMETER.
3. ALL INTERCONNECTING PIPING, EXCEPT THAT SHOWN WITHIN THE INLET HEADER-WATER REMOVAL SKID, TO BE SUPPLIED BY BECHTEL.
4. PRESSURE SWITCH TIED TO LEAK OFF TAP ON COMPRESSOR HOUSING TO DETECT FAILURE OF PRIMARY BELLOWS.
5. ALL OTHER INLETS TO BE ISOLATED WHEN EITHER THE PRESSURIZER RELIEF TANK VENT, THE RCS VACUUM DEGASSING SYSTEM TANK VENT OR THE VOLUME CONTROL TANK VENT DURING SHUTDOWN OPERATION ARE BEING FED.
6. DELETED
7. ALL COMPONENTS ON THIS DRAWING ARE NON-NUCLEAR SAFETY AND NON-SEISMIC CATEGORY I. NON-SEISMIC CATEGORY I COMPONENTS INSTALLED INSIDE A SEISMIC CATEGORY I BUILDING OR IN THE VICINITY OF A SEISMIC CATEGORY I COMPONENT SHALL BE EVALUATED ACCORDING TO THE CRITERIA IN REFERENCE 4.
8. DELETED
9. TUBING BETWEEN SKIDS SHALL BE REFRIGERATION TYPE TUBING EITHER TYPE "K" OR TYPE "L" COPPER TUBING IS ACCEPTABLE. TUBING FITTINGS TO BE SOLDER TYPE FITTINGS EXCEPT CONNECTIONS AT GLYCOL CHILLER TANK WHERE VENDER SUPPLIED COMPRESSION FITTINGS AND THE CONNECTIONS TO VALVES TCV-4680 AND TCV-4681, WHERE FLARED FITTINGS ARE REQUIRED.
10. QUICK DISCONNECT FITTING FOR DRAINAGE WITH HOSE.
11. CHECK VALVE TO BE FIELD-INSTALLED IN VENDOR'S PIPING.
12. VENDOR-SUPPLIED INSTRUMENT TO BE INSTALLED IN BECHTEL PIPING.
13. ALL INSTRUMENT TAG NUMBERS SHOWN ON THIS P&ID ARE PREFIXED BY THE UNIT NUMBER 1 UNLESS NOTED OTHERWISE. SEE GENERAL NOTE D ON DRAWING 9A319F00002.
14. DELETED.
15. DELETED.
16. PSV 4651/PCV 4410, AND ASSOCIATED 1-INCH LINES WILL BE SUPPLIED BY BECHTEL AND FIELD INSTALLED.
17. THE SYSTEM DESIGNATOR OF ALL INSTRUMENTS ON THIS P&ID IS WG.
18. THE SEPARATION GROUP OF ALL INSTRUMENTS ON THIS P&ID IS N.
19. ABBREVIATIONS INSIDE INSTRUMENT BUBBLES ARE RETAINED TO BE CONSISTENT WITH VENDOR DOCUMENTS.
20. VALVES TCV-4680 AND TCV-4681 ARE SUPPLIED WITH THE REFRIGERATION SKID FOR INSTALLATION BY THE FIELD. THESE VALVES AND THIER TEMPERATURE BULBS ARE "D BE INSTALLED AS CLOSE TO THE GLYCOL CHILLER TANK AS IS PRACTICAL.
21. TEST CONNECTIONS PROVIDED ON CTI NUCLEAR SKID FOR PERIODIC CALIBRATION OF OXYGEN MONITOR PROBE AE-4655. SEE DRAWING 6464-000100X FOR TEST CONNECTION DETAILS.
22. FSL-4658, HAS BEEN SPARED IN PLACE. USE FE-4671, FIT-4671, FSH-4671 AND FSL-4671 ON 7R319F05043 FOR FLOW ALARMS TO VENT HEADER.

REFERENCES:

1. DRAWINGS 9A319F00001 AND 9A319F00002.
2. GASEOUS WASTE PROCESSING SYSTEM P&ID, DRAWING 7R319F05043#.
3. CTI NUCLEAR DRAWING 7003001 (BECHTEL DRAWING 6464-000100X).
4. DESIGN CRITERIA SYSTEMS INTERACTION, SEISMIC II/I, TPNS NO. 7A3600N2003.

DRAWING APPLICABILITY NOTES:

1. DELETED
2. DELETED.
3. DELETED.
4. THIS DRAWING IS SHEET 1 OF 2 OF THE GMPS P&ID SET. SEE REFERENCE 2 FOR SHEET 2.

NO.	APPROVAL DATE	REVISION	ORIG	CKR	RE	DV	SE
24	7-6-16	INCORP. DCN 1601322.	JSH	VJP	N/A	N/A	N/A
0-23	9-30-82	ISSUED FOR CONSTRUCTION.	SIGNATURES ON FILE				

NO.	APPROVAL DATE	REVISION	ORIG	CKR	RE	DV	SE

SOUTH TEXAS PROJECT NUCLEAR OPERATING COMPANY

PIPING AND INSTRUMENTATION DIAGRAM
GASEOUS WASTE PROCESSING SYSTEM

PRIORITY	CADD FILE NO.	FSUG. NO.	STI. NO.	SCALE	DWG. NO.	SHT.	REV.
1	7R319F05055#.DGN	D070928	3437.3153	NONE	7R319F05055#1		24

ESEED_DGN

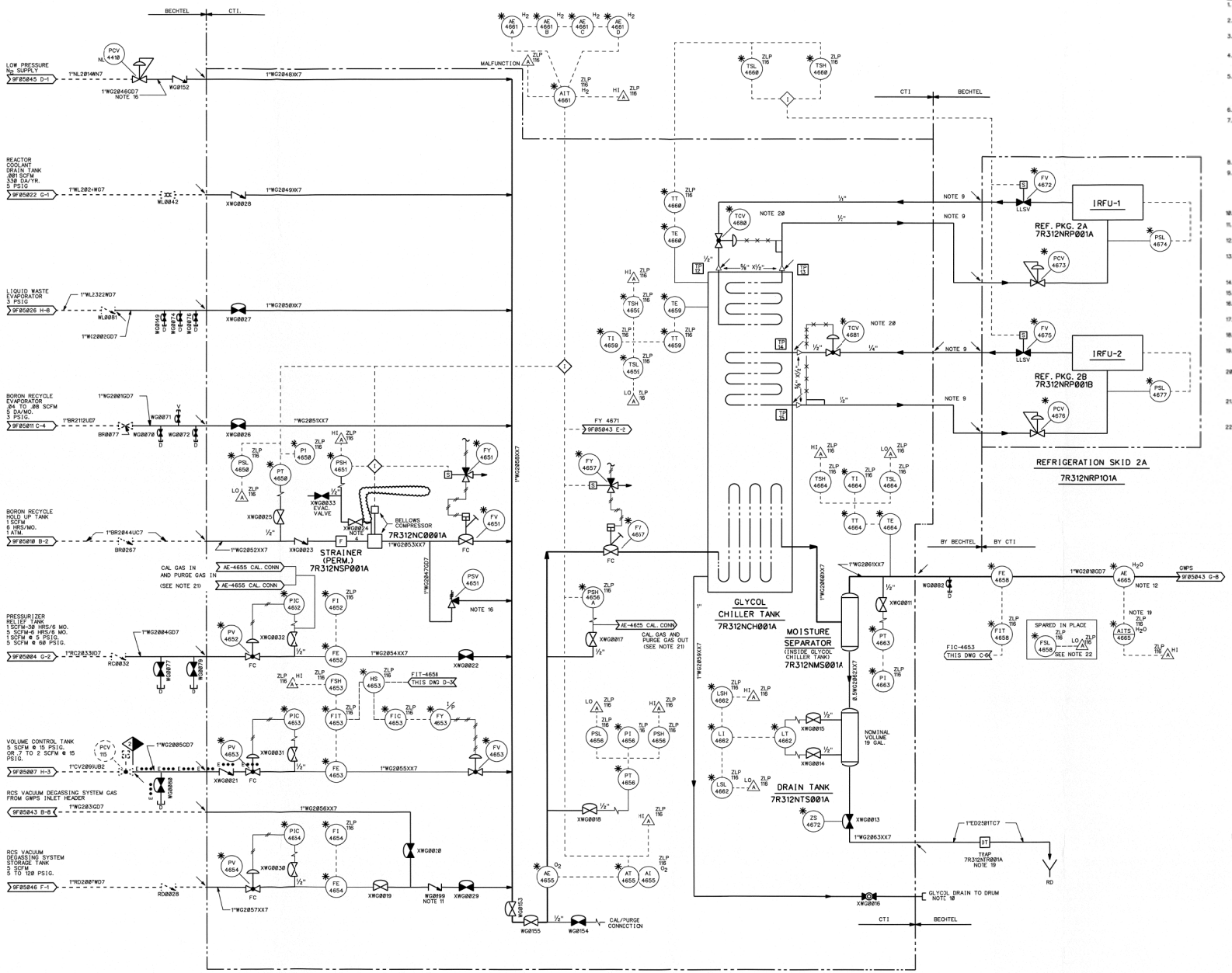

NOTES:

1. ALL PIPING TO BE 1 INCH I.P.S. SCH 40S STAINLESS STEEL UNLESS OTHERWISE SPECIFIED.
2. INSTRUMENT ROOT CONNECTIONS ARE ½ INCH NOMINAL DIAMETER.
3. ALL INTERCONNECTING PIPING, EXCEPT THAT SHOWN WITHIN THE INLET HEADER-WATER REMOVAL SKID, TO BE SUPPLIED BY BECHTEL.
4. PRESSURE SWITCH TIED TO LEAK OFF TAP ON COMPRESSOR HOUSING TO DETECT FAILURE OF PRIMARY BELLOWS.
5. ALL OTHER INLETS TO BE ISOLATED WHEN EITHER THE PRESSURIZER RELIEF TANK VENT, THE RCS VACUUM DEGASSING SYSTEM TANK VENT OR, THE VOLUME CONTROL TANK VENT DURING SHUTDOWN OPERATION ARE BEING FED.
6. DELETED
7. ALL COMPONENTS ON THIS DRAWING ARE NON-NUCLEAR SAFETY AND NON-SEISMIC CATEGORY I. NON-SEISMIC CATEGORY I COMPONENTS INSTALLED INSIDE A SEISMIC CATEGORY I BUILDING OR IN THE VICINITY OF A SEISMIC CATEGORY I COMPONENT SHALL BE EVALUATED ACCORDING TO THE CRITERIA IN REFERENCE 4.
8. DELETED.
9. TUBING BETWEEN SKIDS SHALL BE REFRIGERATION TYPE TUBING . TUBING FITTING TO BE SOLDER TYPE FITTING EXCEPT CONNECTION AT GLYCOL CHILLER TANK WHERE VENDOR SUPPLIED COMPRESSION FITTINGS AND CONNECTIONS TO VALVES TCV-4680 AND TCV-4681 WHERE FLARED FITTINGS ARE REQUIRED.
10. QUICK DISCONNECT FITTING FOR DRAINAGE WITH HOSE.
11. CHECK VALVE TO BE FIELD-INSTALLED IN VENDORS PIPING.
12. VENDOR-SUPPLIED INSTRUMENT TO BE INSTALLED IN BECHTEL PIPING.
13. DELETED.
14. DELETED.
15. DELETED.
16. PSV 4651/PCV 4418, AND ASSOCIATED 1-INCH LINES WILL BE SUPPLIED BY BECHTEL AND FIELD INSTALLED.
17. THE SYSTEM DESIGNATOR OF ALL INSTRUMENTS ON THIS P&ID IS WG.
18. THE SEPARATION GROUP OF ALL INSTRUMENTS ON THIS P&ID IS N.
19. ABBREVIATIONS INSIDE INSTRUMENT BUBBLES ARE RETAINED TO BE CONSISTENT WITH VENDOR DOCUMENTS.
20. VALVES TCV-4680 AND TCV-4681 ARE SUPPLIED WITH THE REFRIGERATION SKID FOR INSTALLATION BY THE FIELD. THESE VALVES AND THEIR TEMPERATURE BULBS ARE TO BE INSTALLED AS CLOSE TO THE GLYCOL CHILLER TANK AS IS PRACTICAL.
21. TEST CONNECTIONS TO CTI NUCLEAR SKID FOR PERIODIC CALIBRATION OF OXYGEN MONITOR PROBE AE-4655. SEE DRAWING 14926-6464-000180XX FOR TEST CONNECTION DETAILS.
22. FSL-4658 HAS BEEN SPARED IN PLACE. USE FE-4671, FIT-4671, FSH-4671 & FSL-4671 ON 7R319F05043#2 FOR FLOW ALARMS TO VENT HEADER.

REFERENCES:

1. DRAWINGS 9A318F00001 AND 9A318F00002.
2. GASEOUS WASTE PROCESSING SYSTEM P&ID, DRAWING 7R319F05043#2
3. CTI NUCLEAR DRAWING 7003001, REV. 0 (BECHTEL DRAWING 6464-00001-XX)
4. DESIGN CRITERIA SYSTEMS INTERACTION, SEISMIC I/I, TPNS NO. 7A3000N0003.

DRAWING APPLICABILITY NOTES:

1. DELETED
2. DELETED
3. DELETED.
4. THIS DRAWING IS SHEET 1 OF 2 OF THE GWPS P&ID SET. SEE REFERENCE 2 FOR SHEET 2.

NO.	APPROVAL DATE	REVISION	ORIG	CKR	RE	DV	SE
21	9-16-16	INCORP. DCN 1601323.	JSH	N/A	N/A	N/A	
0-20	9-30-82	ISSUED FOR CONSTRUCTION.	SIGNATURES ON FILE				

ESFED DCN

SOUTH TEXAS PROJECT NUCLEAR OPERATING COMPANY

PIPING AND INSTRUMENTATION DIAGRAM GASEOUS WASTE PROCESSING SYSTEM

PRIORITY	CADD FILE NO.	FSUG. NO.	STI. NO.	SCALE	DWG. NO.	SHT.	REV.
1	7R319F05055#2.DGN	D070928	34373754	NONE	7R319F05055#2		21

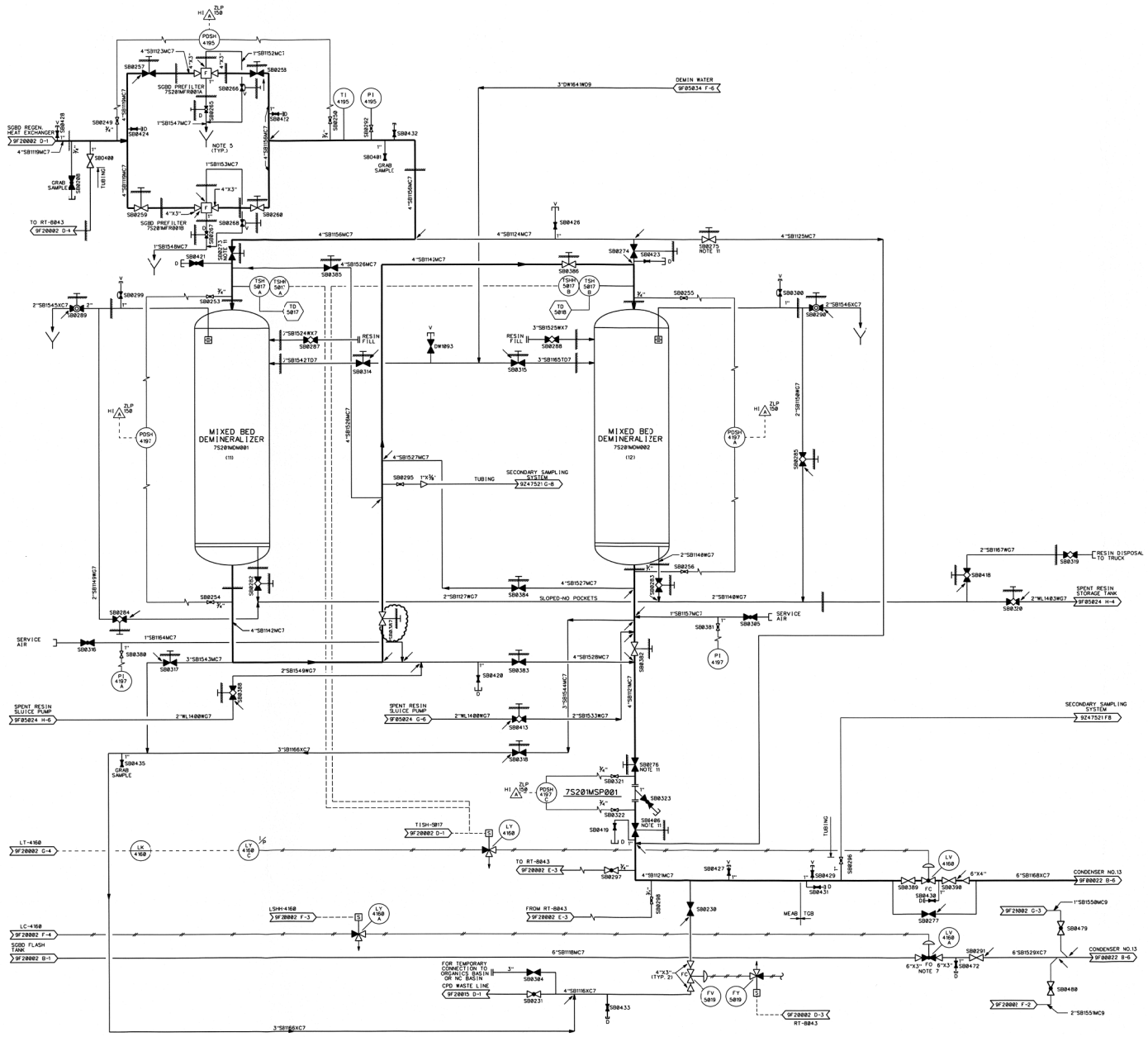

NOTES

1. FOR PIPING AND INSTRUMENTATION SYMBOLS. SEE DRAWINGS 9F00001 AND 9F00002.
2. ALL INSTRUMENTS SHOWN ON THIS DIAGRAM HAVE SYSTEM DESIGNATOR "SB" UNLESS OTHERWISE NOTED.
3. DELETED
4. ALL INSTRUMENTS SHOWN ON THIS DIAGRAM HAVE SEPARATION GROUP N.
5. ALL DRAINS TO BE ROUTED TO LIQUID WASTE PROCESSING SYSTEM.
6. THIS DRAWING SUPERSEDES B&R DRAWING 1-F-0838.
7. THE CONTROL VALVE SHALL BE LOCATED CLOSE TO THE CONDENSER PIPING FROM THIS VALVE TO THE CONDENSER SHALL BE STRAIGHT WITHOUT ANY ELBOWS
8. DELETED
9. THE INSTALLATION OF FILTER ELEMENTS INSIDE THE SGBD PREFILTER ASSEMBLY IS OPTIONAL. ALL MICRON SIZES ARE ACCEPTABLE. A DUMMY PREFILTER (TOP OF PREFILTER ELEMENT) MUST BE USED FOR PROPER SEALING OF THE FILTER ASSEMBLY WHEN PREFILTER ELEMENT IS NOT INSTALLED.
10. THE DEMINERALIZER MODES OF OPERATION:
    + DEMINERALIZERS ARE IN SERVICE (OPERATING TEMPERATURE 120°F).
    + BLOWDOWN BYPASSES THE DEMINERALIZERS (OPERATING TEMPERATURE 170°F).
11. SB0273, SB0274, SB0275, SB0276, AND SB0406 VALVE POSITIONS SHOWN ON THIS DIAGRAM ARE IN THE DEMINERALIZER BYPASS MODE OF OPERATION.

NO.	APPROVAL DATE	REVISION	ORIG	CKR	RE	DV	SE
20	6-22-16	REVISED PER CR 14-17876.	JSH				
0-19	2-24-83	ISSUED FOR CONSTRUCTION.	SIGNATURES ON FILE				

NO.	APPROVAL DATE	REVISION	ORIG	CKR	RE	DV	SE

SOUTH TEXAS PROJECT
NUCLEAR OPERATING COMPANY

PIPING AND INSTRUMENTATION DIAGRAM
STEAM GENERATOR BLOWDOWN SYSTEM

PRIORITY	CADD FILE NO.	FSUG. NO.	STI. NO.	SCALE	DWG. NO.	SHT.	REV.
1	7S209F20003#1.DGN	D070928	3483371880	NONE	7S209F20003#1		20

ESEED DGN

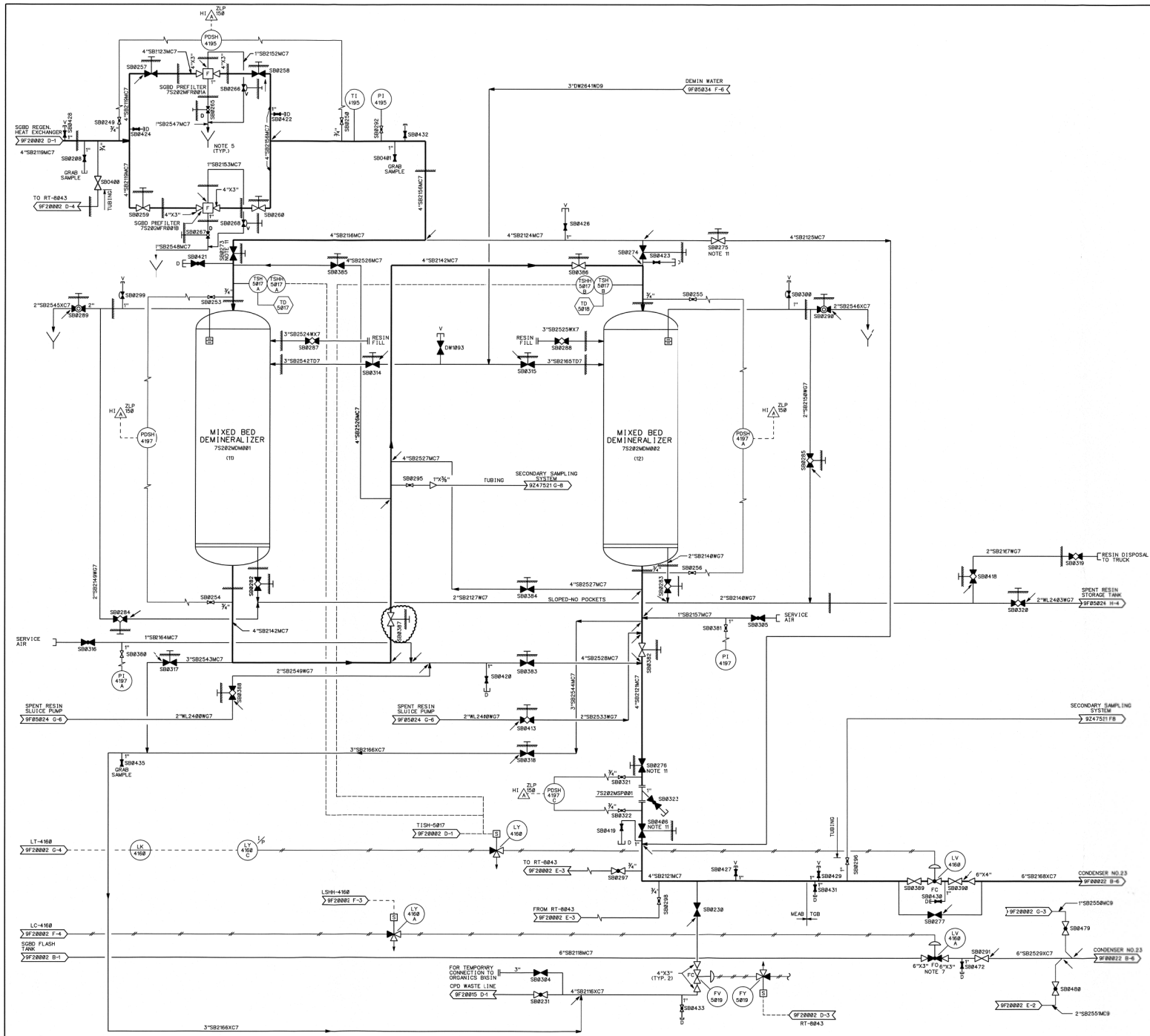

NOTES

1. FOR PIPING AND INSTRUMENTATION SYMBOLS. SEE DRAWINGS 9F20001 AND 9F20002.
2. ALL INSTRUMENTS SHOWN ON THIS DIAGRAM HAVE SYSTEM DESIGNATOR "SB" UNLESS OTHERWISE NOTED.
3. FOR PIPING, VALVES, INSTRUMENTS, EQUIPMENT ETC. REFER TO DRAWINGS 9A310F20001 AND 9A310F20002 FOR IDENTIFICATION NUMBER DETAILS.
4. ALL INSTRUMENTS SHOWN ON THIS DIAGRAM HAVE SEPARATION GROUP N.
5. ALL DRAINS TO BE ROUTEDTO LIQUID WASTE PROCESSING SYSTEM.
6. THIS DRAWING SUPERSEDES B&R DRAWING 1-F-0038 & 2-F-0038.
7. THE CONTROL VALVE SHALL BE LOCATED CLOSE TO THE CONDENSER.PIPING FROM THIS VALVE TO THE CONDENSER SHALL BE STRAIGHT WITHOUT ANY ELBOWS
8. DELETED
9. THE INSTALLATION OF FILTER ELEMENTS INSIDE THE SGBD PREFILTER ASSEMBLY IS OPTIONAL. ALL MICRON SIZES ARE ACCEPTABLE. A DUMMY PREFILTER (TOP OF PREFILTER ELEMENT) MUST BE USED FOR PROPER SEALING OF THE FILTER ASSEMBLY WHEN PREFILTER ELEMENT IS NOT INSTALLED.
10. THE DEMINERALIZER MODES OF OPERATION:
    - DEMINERALIZERS ARE IN SERVICE (OPERATING TEMPERATURE 120°F).
    - BLOWDOWN BYPASSES THE DEMINERALIZERS (NORMAL OPERATING TEMPERATURE 170°F).
11. SB0273, SB0274, SB0275, SB0276, AND SB0486 VALVE POSITIONS SHOWN ON THIS DIAGRAM ARE IN THE DEMINERALIZER BYPASS MODE OF OPERATION.

NO.	APPROVAL DATE	REVISION	ORIG	CKR	RE	DV	SE
18	2-22-16	REVISED PER CR 14-17876.	JSH				
0-17	2-24-83	ISSUED FOR CONSTRUCTION.	SIGNATURES ON FILE	N/A	N/A	N/A	

NO.	APPROVAL DATE	REVISION	ORIG	CKR	RE	DV	SE

SOUTH TEXAS PROJECT NUCLEAR OPERATING COMPANY

PIPING AND INSTRUMENTATION DIAGRAM STEAM GENERATOR BLOWDOWN SYSTEM

PRIORITY	CADD FILE NO.	FSUG. NO.	STI. NO.	SCALE	DWG. NO.	SHT.	REV.
1	7S209F20003#2.DGN	D070928	3438185	NONE	7S209F20003#2		18

ESSED DGN

TABLE I
THROTTLE AND GOVERNOR VALVES (1L SHOWN)

DESCRIPTION	VALVE NO.	FILTER NO.	SERVO VALVES	ISOL. VALVE	1¼" CHECK VALVE	1" CHECK VALVE	GV/TV TEST VALVE	ZSC	ZSO	ZSC	ZT
THROTTLE VALVE 1L	XMS0501	7T081MFR004A	XEH0013	XEH0047	XEH0030	XEH0032	7T081TEH6002	6322	6322	6328	6322
THROTTLE VALVE 3L	XMS0502	7T081MFR004C	XEH0014	XEH0171	XEH0107	XEH0113	7T081TEH6003	6322A	6322A	6328A	6322A
THROTTLE VALVE 2R	XMS0458	7T081MFR004B	XEH0015	XEH0172	XEH0108	XEH0114	7T081TEH6004	6322B	6322B	6328B	6322B
THROTTLE VALVE 4R	XMS0457	7T081MFR004D	XEH0016	XEH0173	XEH0109	XEH0115	7T081TEH6005	6322C	6322C	6328C	6322C
GOVERNOR VALVE 1L	XMS0461	7T081MFR005A	XEH0017	XEH0078	XEH0031	XEH0033	7T081TEH6006	6323	6323		6323
GOVERNOR VALVE 3L	XMS0462	7T081MFR005C	XEH0018	XEH0174	XEH0110	XEH0116	7T081TEH6007	6323A	6323A		6323A
GOVERNOR VALVE 2R	XMS0459	7T081MFR005B	XEH0019	XEH0175	XEH0111	XEH0117	7T081TEH6008	6323B	6323B		6323B
GOVERNOR VALVE 4R	XMS0460	7T081MFR005D	XEH0020	XEH0176	XEH0112	XEH0118	7T081TEH6009	6323C	6323C		6323C

TABLE V - ERF POINTS

DESCRIPTION	ZSC-	ERF POINT
THROTTLE VALVE 1L	6322	EHZD-6322
THROTTLE VALVE 3L	6322A	EHZD-6322A
THROTTLE VALVE 2R	6322B	EHZD-6322B
THROTTLE VALVE 4R	6322C	EHZD-6322C
RH STOP VALVE 1L	6324	EHZD-6324
RH STOP VALVE 2L	6324A	EHZD-6324A
RH STOP VALVE 3L	6324B	EHZD-6324B
RH STOP VALVE 1R	6324C	EHZD-6324C
RH STOP VALVE 2R	6324D	EHZD-6324D
RH STOP VALVE 3R	6324E	EHZD-6324E

TABLE II
REHEAT STOP AND INTERCEPTOR VALVES (1L SHOWN)

DESCRIPTION	VALVE NO.	ISOL VLV	CHK VLV	CHK VLV	FV	ZSC	ZSO
R-H STOP VALVE 1R	XES0157	XEH0025	XEH0021	XEH0023	6324C	6324C	6324C
R-H STOP VALVE 2R	XES0161	XEH0119	XEH0129	XEH0139	6324D	6324D	6324D
R-H STOP VALVE 3R	XES0165	XEH0120	XEH0130	XEH0140	6324E	6324E	6324E
R-H STOP VALVE 1L	XES0154	XEH0121	XEH0131	XEH0141	6324	6324	6324
R-H STOP VALVE 2L	XES0158	XEH0122	XEH0132	XEH0142	6324A	6324A	6324A
R-H STOP VALVE 3L	XES0162	XEH0123	XEH0133	XEH0143	6324B	6324B	6324B
INTERCEPTOR VALVE 1R	XES0156	XEH0026	XEH0022	XEH0024	6325C	6325C	6325C
INTERCEPTOR VALVE 2R	XES0160	XEH0124	XEH0134	XEH0144	6325D	6325D	6325D
INTERCEPTOR VALVE 3R	XES0164	XEH0125	XEH0135	XEH0145	6325E	6325E	6325E
INTERCEPTOR VALVE 1L	XES0155	XEH0126	XEH0136	XEH0146	6325	6325	6325
INTERCEPTOR VALVE 2L	XES0159	XEH0127	XEH0137	XEH0147	6325A	6325A	6325A
INTERCEPTOR VALVE 3L	XES0163	XEH0128	XEH0138	XEH0148	6325B	6325B	6325B

TABLE IV - ACCUMULATOR INSTRUMENT TAG NUMBERS

	SGFPT #11	SGFPT #12	SGFPT #13
PI	7463	7464	7465
PI	7463A	7464A	7465A
PSL	7463D	7464D	7465D
PSL	7463E	7464E	7465E
PV	7463	7464	7465
PV	7463A	7464A	7465A

TABLE III
S.G.F.P.T. EHC SYSTEM TAG NOS
(SGFPT # 11 SHOWN)

DESCRIPTION	SGFPT # 11	SGFPT # 12	SGFPT # 13
ISOL VLV U/S	XEH0102	XEH0149	XEH0157
ISOL VLV D/S	XEH0098	XEH0150	XEH0158
ACCUMULATOR 11	7T081MRC003A	7T081MRC004A	7T081MRC005A
ISOL VLV	XEH0096	XEH0151	XEH0159
DRAIN VLV	XEH0097	XEH0152	XEH0160
PI ROOT VLV	XEH0095	XEH0153	XEH0161
ACCUMULATOR 12	7T081MRC003B	7T081MRC004B	7T081MRC005B
ISOL VLV	XEH0100	XEH0154	XEH0162
DRAIN VLV	XEH0101	XEH0155	XEH0163
PI ROOT VLV	XEH0099	XEH0156	XEH0164
LP STOP VLV	(SEE P&ID 9F00018#1)		
SERVO VLV	XEH0001	XEH0005	XEH0009
DUMP VLV	XEH0165	XEH0167	XEH0169
HP STOP VLV	(SEE P&ID 9F00018#1)		
SERVO VLV	XEH0002	XEH0006	XEH0010
DUMP VLV	XEH0166	XEH0168	XEH0170
LP GOV VLV	(SEE P&ID 9F00018#1)		
SERVO VLV	XEH0003	XEH0007	XEH0011
FILTER	7T081MSP002A	7T081MSP002B	7T081MSP002C
HP GOV VLV	(SEE P & ID 9F00018)		
SERVO VLV	XEH0004	XEH0008	XEH0012
FILTER	7T081MSP003A	7T081MSP003B	7T081MSP003C
ISOL VLV D/S BY-PASS	XEH0180	XEH0181	XEH0182
INTERFACE TRIP VLV DISCH	XEH0103	XEH0177	XEH0178
INTERFACE TRIP VLV DISCH BY-PASS	XEH0179	XEH0183	XEH0184

TABLE VI GV/TV FLEX HOSE TPNS

VALVE TPNS	HOSE TPNS	SERVICE
7S101X-MS-0461	7S101MJX001D	GV-1 H.P. SUPPLY
7S101X-MS-0461	7S101MJX001B	GV-1 TRIP
7S101X-MS-0461	7S101MJX001C	GV-1 RETURN
7S101X-MS-0459	7S101MJX002D	GV-2 H.P. SUPPLY
7S101X-MS-0459	7S101MJX002B	GV-2 TRIP
7S101X-MS-0459	7S101MJX002C	GV-2 RETURN
7S101X-MS-0462	7S101MJX003A	GV-3 H.P. SUPPLY
7S101X-MS-0462	7S101MJX003B	GV-3 TRIP
7S101X-MS-0462	7S101MJX003C	GV-3 RETURN
7S101X-MS-0460	7S101MJX004A	GV-4 H.P. SUPPLY
7S101X-MS-0460	7S101MJX004B	GV-4 TRIP
7S101X-MS-0460	7S101MJX004C	GV-4 RETURN
7S101X-MS-0501	7S101MJX005A	TV-1 H.P. SUPPLY
7S101X-MS-0501	7S101MJX005B	TV-1 TRIP
7S101X-MS-0501	7S101MJX005C	TV-1 RETURN
7S101X-MS-0458	7S101MJX006A	TV-2 H.P. SUPPLY
7S101X-MS-0458	7S101MJX006B	TV-2 TRIP
7S101X-MS-0458	7S101MJX006C	TV-2 RETURN
7S101X-MS-0502	7S101MJX007A	TV-3 H.P. SUPPLY
7S101X-MS-0502	7S101MJX007B	TV-3 TRIP
7S101X-MS-0502	7S101MJX007C	TV-3 RETURN
7S101X-MS-0457	7S101MJX008A	TV-4 H.P. SUPPLY
7S101X-MS-0457	7S101MJX008B	TV-4 TRIP
7S101X-MS-0457	7S101MJX008C	TV-4 RETURN

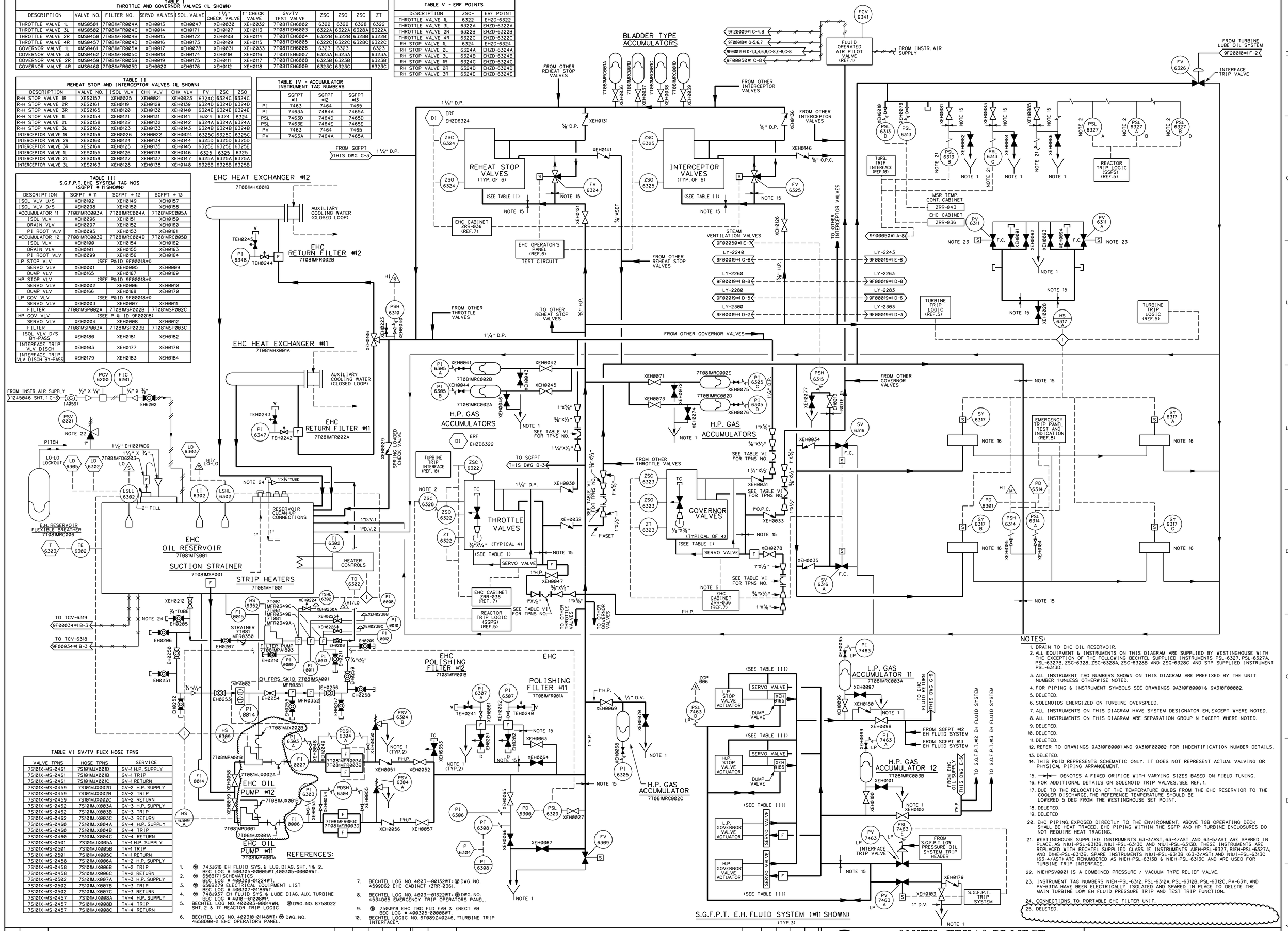

NOTES:

1. DRAIN TO EHC OIL RESERVOIR.
2. ALL EQUIPMENT & INSTRUMENTS ON THIS DIAGRAM ARE SUPPLIED BY WESTINGHOUSE WITH THE EXCEPTION OF THE FOLLOWING BECHTEL SUPPLIED INSTRUMENTS PSL-6327, PSL-6327A, PSL-6327B, ZSC-6328, ZSC-6328A, ZSC-6328B AND ZSC-6328C AND STP SUPPLIED INSTRUMENT PSL-6313D.
3. ALL INSTRUMENT TAG NUMBERS SHOWN ON THIS DIAGRAM ARE PREFIXED BY THE UNIT NUMBER 1UNLESS OTHERWISE NOTED.
4. FOR PIPING & INSTRUMENT SYMBOLS SEE DRAWINGS 9A310F00001 & 9A310F00002.
5. DELETED.
6. SOLENOIDS ENERGIZED ON TURBINE OVERSPEED.
7. ALL INSTRUMENTS ON THIS DIAGRAM HAVE SYSTEM DESIGNATOR EH, EXCEPT WHERE NOTED.
8. ALL INSTRUMENTS ON THIS DIAGRAM ARE SEPARATION GROUP N EXCEPT WHERE NOTED.
9. DELETED.
10. DELETED.
11. DELETED.
12. REFER TO DRAWINGS 9A310F00001 AND 9A310F00002 FOR INDENTIFICATION NUMBER DETAILS.
13. DELETED.
14. THIS P&ID REPRESENTS SCHEMATIC ONLY. IT DOES NOT REPRESENT ACTUAL VALVING OR PHYSICAL PIPING ARRANGEMENT.
15. —⊢⊣— DENOTES A FIXED ORIFICE WITH VARYING SIZES BASED ON FIELD TUNING.
16. FOR ADDITIONAL DETAILS ON SOLENOID TRIP VALVES, SEE REF. 1.
17. DUE TO THE RELOCATION OF THE TEMPERATURE BULBS FROM THE EHC RESERVIOR TO THE COOLER DISCHARGE, THE REFERENCE TEMPERATURE SHOULD BE LOWERED 5 DEG FROM THE WESTINGHOUSE SET POINT.
18. DELETED.
19. DELETED
20. EHC PIPING, EXPOSED DIRECTLY TO THE ENVIRONMENT, ABOVE TGB OPERATING DECK SHALL BE HEAT TRACED. EHC PIPING WITHIN THE SGFP AND HP TURBINE ENCLOSURES DO NOT REQUIRE HEAT TRACING.
21. WESTINGHOUSE SUPPLIED INSTRUMENTS 63-3/AST, 63-4/AST AND 63-5/AST ARE SPARED IN PLACE, AS N1U1-PSL-6313B, N1U1-PSL-6313C AND N1U1-PSL-6313D. THESE INSTRUMENTS ARE REPLACED WITH BECHTEL SUPPLIED CLASS 1E INSTRUMENTS A1EH-PSL-6327, B1EH-PSL-6327A, AND D1HE-PSL-6313B. SPARE INSTRUMENTS N1U1-PSL-6313B (63-3/AST) AND N1U1-PSL-6313C (63-4/AST) ARE RENUMBERED AS N1EH-PSL-6313B & N1EH-PSL-6313C AND ARE USED FOR TURBINE TRIP INTERFACE.
22. N1EHPSV0001 IS A COMBINED PRESSURE / VACUUM TYPE RELIEF VALVE.
23. INSTRUMENT TAG NUMBERS N1EH-PSL-6312, PSL-6312A, PSL-6312B, PSL-6312C, PV-6311, AND PV-6311A HAVE BEEN ELECTRICALLY ISOLATED AND SPARED IN PLACE TO DELETE THE MAIN TURBINE LOW EH FLUID PRESSURE TRIP AND TEST TRIP FUNCTION.
24. CONNECTIONS TO PORTABLE EHC FILTER UNIT.
25. DELETED.

REFERENCES:

1. Ⓜ 743J616 EH FLUID SYS. & LUB. DIAG. SHT. 1 & 2. BEC LOG # 400305-00005WT, 400305-00006WT.
2. Ⓜ 6568171 SCHEMATICS BEC LOG # 400308-01224WT.
3. Ⓜ 6568279 ELECTRICAL EQUIPMENT LIST BEC LOG # 400307-01186WT.
4. Ⓜ 748J937 EH FLUID SYS. & LUBE DIAG. AUX. TURBINE BEC LOG # 4010--01008WP.
5. BECHTEL LOG NO. 400003-00014WN. Ⓜ DWG. NO. 8758D22 SHT. 2 & 17 REACTOR TRIP LOGIC
6. BECHTEL LOG NO. 400310-01148WT: Ⓜ DWG. NO. 4658D90-2 EHC OPERATORS PANEL.
7. BECHTEL LOG NO. 4003--00132WT: Ⓜ DWG. NO. 4599D62 EHC CABINET (ZRR-036).
8. BECHTEL LOG NO. 4003--01322WT: Ⓜ DWG. NO. 4534D05 EMERGENCY TRIP OPERATORS PANEL.
9. Ⓜ 750J919 EHC TBG FLD FAB & ERECT AB BEC LOG # 400305-00008WT.
10. BECHTEL LOGIC NO. 6T089Z40246, "TURBINE TRIP INTERFACE".

NO.	APPROVAL DATE	REVISION	ORIG	CKR	RE	DV	SE
51	8-22-18	INCORP. DCN 1800265.	N/A	N/A	N/A		
0-50	11-11-82	ISSUED FOR CONSTRUCTION.	SIGNATURES ON FILE				

SOUTH TEXAS PROJECT NUCLEAR OPERATING COMPANY

PIPING AND INSTRUMENTATION DIAGRAM ELECTRO HYDRAULIC FLUID SYSTEM

PRIORITY	CADD FILE NO.	FSUG. NO.	STI. NO.	SCALE	DWG. NO.	SHT.	REV.
1	7T089F10001#1.DGN	D070928	34710817	NONE	7T089F10001#1		51

TABLE I
THROTTLE AND GOVERNOR VALVES (1L SHOWN)

DESCRIPTION	VALVE NO.	FILTER NO.	SERVO VALVES	ISOL. VALVE	1-1/4" CHECK VALVE	1" CHECK VALVE	GV/TV TEST VALVE	ZSC	ZSO	ZSC	ZT
THROTTLE VALVE 1L	XMS0501	7T082MFR004A	XEH0013	XEH0047	XEH0030	XEH0032	7T082TEH6002	6322	6322	6328	6322
THROTTLE VALVE 3L	XMS0502	7T082MFR004C	XEH0014	XEH0171	XEH0107	XEH0113	7T082TEH6003	6322A	6322A	6328A	6322A
THROTTLE VALVE 2R	XMS0458	7T082MFR004B	XEH0015	XEH0172	XEH0108	XEH0114	7T082TEH6004	6322B	6322B	6328B	6322B
THROTTLE VALVE 4R	XMS0457	7T082MFR004D	XEH0016	XEH0173	XEH0109	XEH0115	7T082TEH6005	6322C	6322C	6328C	6322C
GOVERNOR VALVE 1L	XMS0461	7T082MFR005A	XEH0017	XEH0078	XEH0031	XEH0033	7T082TEH6006	6323	6323		6323
GOVERNOR VALVE 3L	XMS0462	7T082MFR005C	XEH0018	XEH0174	XEH0110	XEH0116	7T082TEH6007	6323A	6323A		6323A
GOVERNOR VALVE 2R	XMS0459	7T082MFR005B	XEH0019	XEH0175	XEH0111	XEH0117	7T082TEH6008	6323B	6323B		6323B
GOVERNOR VALVE 4R	XMS0460	7T082MFR005D	XEH0020	XEH0176	XEH0112	XEH0118	7T082TEH6009	6323C	6323C		6323C

TABLE II
REHEAT STOP AND INTERCEPTOR VALVES (1L SHOWN)

DESCRIPTION	VALVE NO.	ISOL VLV	CHK VLV	CHK VLV	FV	ZSC	ZSO
R-H STOP VALVE 1R	XES0157	XEH0025	XEH0021	XEH0023	6324C	6324C	6324C
R-H STOP VALVE 2R	XES0161	XEH0119	XEH0129	XEH0139	6324D	6324D	6324D
R-H STOP VALVE 3R	XES0165	XEH0120	XEH0130	XEH0140	6324E	6324E	6324E
R-H STOP VALVE 1L	XES0154	XEH0121	XEH0131	XEH0141	6324	6324	6324
R-H STOP VALVE 2L	XES0158	XEH0122	XEH0132	XEH0142	6324A	6324A	6324A
R-H STOP VALVE 3L	XES0162	XEH0123	XEH0133	XEH0143	6324B	6324B	6324B
INTERCEPTOR VALVE 1R	XES0156	XEH0026	XEH0022	XEH0024	6325C	6325C	6325C
INTERCEPTOR VALVE 2R	XES0160	XEH0124	XEH0134	XEH0144	6325D	6325D	6325D
INTERCEPTOR VALVE 3R	XES0164	XEH0125	XEH0135	XEH0145	6325E	6325E	6325E
INTERCEPTOR VALVE 1L	XES0155	XEH0126	XEH0136	XEH0146	6325	6325	6325
INTERCEPTOR VALVE 2L	XES0159	XEH0127	XEH0137	XEH0147	6325A	6325A	6325A
INTERCEPTOR VALVE 3L	XES0163	XEH0128	XEH0138	XEH0148	6325B	6325B	6325B

TABLE III
S.G.F.P.T. EHC SYSTEM TAG NOS
(SGFPT # 21 SHOWN)

DESCRIPTION	SGFPT # 21	SGFPT # 22	SGFPT # 23
ISOL VLV U/S	XEH0102	XEH0149	XEH0157
ISOL VLV D/S	XEH0098	XEH0150	XEH0158
ACCUMULATOR 21	7T082MRC003A	7T082MRC004A	7T082MRC005A
ISOL VLV	XEH0096	XEH0151	XEH0159
DRAIN VLV	XEH0097	XEH0152	XEH0160
PI ROOT VLV	XEH0095	XEH0153	XEH0161
ACCUMULATOR 22	7T082MRC003B	7T082MRC004B	7T082MRC005B
ISOL VLV	XEH0100	XEH0154	XEH0162
DRAIN VLV	XEH0101	XEH0155	XEH0163
PI ROOT VLV	XEH0099	XEH0156	XEH0164
LP STOP VLV	(SEE P&ID 9F00018#2)		
SERVO VLV	XEH0001	XEH0085	XEH0009
DUMP VLV	XEH0165	XEH0167	XEH0169
HP STOP VLV	(SEE P&ID 9F00018#2)		
SERVO VLV	XEH0002	XEH0006	XEH0010
DUMP VLV	XEH0166	XEH0168	XEH0170
LP GOV VLV	(SEE P&ID 9F00018#2)		
SERVO VLV	XEH0003	XEH0007	XEH0011
FILTER	7T082MSP002A	7T082MSP002B	7T082MSP002C
HP GOV VLV	(SEE P&ID 9F00018#2)		
SERVO VLV	XEH0004	XEH0008	XEH0012
FILTER	7T082MSP003A	7T082MSP003B	7T082MSP003C
ISOL VLV D/S BY-PASS	XEH0180	XEH0181	XEH0182
INTERFACE TRIP VLV DISCH	XEH0103	XEH0177	XEH0178
INTERFACE TRIP VLV DISCH BY-PASS	XEH0179	XEH0183	XEH0184

TABLE IV - ACCUMULATOR INSTRUMENT TAG NUMBERS

	SGFPT #21	SGFPT #22	SGFPT #23
PI	7463	7464	7465
PI	7463A	7464A	7465A
PSL	7463D	7464D	7465D
PSL	7463E	7464E	7465E
PV	7463	7464	7465
PV	7463A	7464A	7465A

TABLE V - ERF POINTS

DESCRIPTION	ZSC-	ERF POINT
THROTTLE VALVE 1L	6322	EHZD-6322
THROTTLE VALVE 3L	6322A	EHZD-6322A
THROTTLE VALVE 2R	6322B	EHZD-6322B
THROTTLE VALVE 4R	6322C	EHZD-6322C
RH STOP VALVE 1L	6324	EHZD-6324
RH STOP VALVE 2L	6324A	EHZD-6324A
RH STOP VALVE 3L	6324B	EHZD-6324B
RH STOP VALVE 1R	6324C	EHZD-6324C
RH STOP VALVE 2R	6324D	EHZD-6324D
RH STOP VALVE 3R	6324E	EHZD-6324E

TABLE VI GV/TV FLEX HOSE TPNS

VALVE TPNS	HOSE TPNS	SERVICE
7S102X-MS-0461	7S102MJX001A	GV-1 H.P. SUPPLY
7S102X-MS-0461	7S102MJX001B	GV-1 TRIP
7S102X-MS-0461	7S102MJX001C	GV-1 RETURN
7S102X-MS-0459	7S102MJX002A	GV-2 H.P. SUPPLY
7S102X-MS-0459	7S102MJX002B	GV-2 TRIP
7S102X-MS-0459	7S102MJX002C	GV-2 RETURN
7S102X-MS-0462	7S102MJX003A	GV-3 H.P. SUPPLY
7S102X-MS-0462	7S102MJX003B	GV-3 TRIP
7S102X-MS-0462	7S102MJX003C	GV-3 RETURN
7S102X-MS-0460	7S102MJX004A	GV-4 H.P. SUPPLY
7S102X-MS-0460	7S102MJX004B	GV-4 TRIP
7S102X-MS-0460	7S102MJX004C	GV-4 RETURN
7S102X-MS-0501	7S102MJX005A	TV-1 H.P. SUPPLY
7S102X-MS-0501	7S102MJX005B	TV-1 TRIP
7S102X-MS-0501	7S102MJX005C	TV-1 RETURN
7S102X-MS-0458	7S102MJX006A	TV-2 H.P. SUPPLY
7S102X-MS-0458	7S102MJX006B	TV-2 TRIP
7S102X-MS-0458	7S102MJX006C	TV-2 RETURN
7S102X-MS-0502	7S102MJX007A	TV-3 H.P. SUPPLY
7S102X-MS-0502	7S102MJX007B	TV-3 TRIP
7S102X-MS-0502	7S102MJX007C	TV-3 RETURN
7S102X-MS-0457	7S102MJX008A	TV-4 H.P. SUPPLY
7S102X-MS-0457	7S102MJX008B	TV-4 TRIP
7S102X-MS-0457	7S102MJX008C	TV-4 RETURN

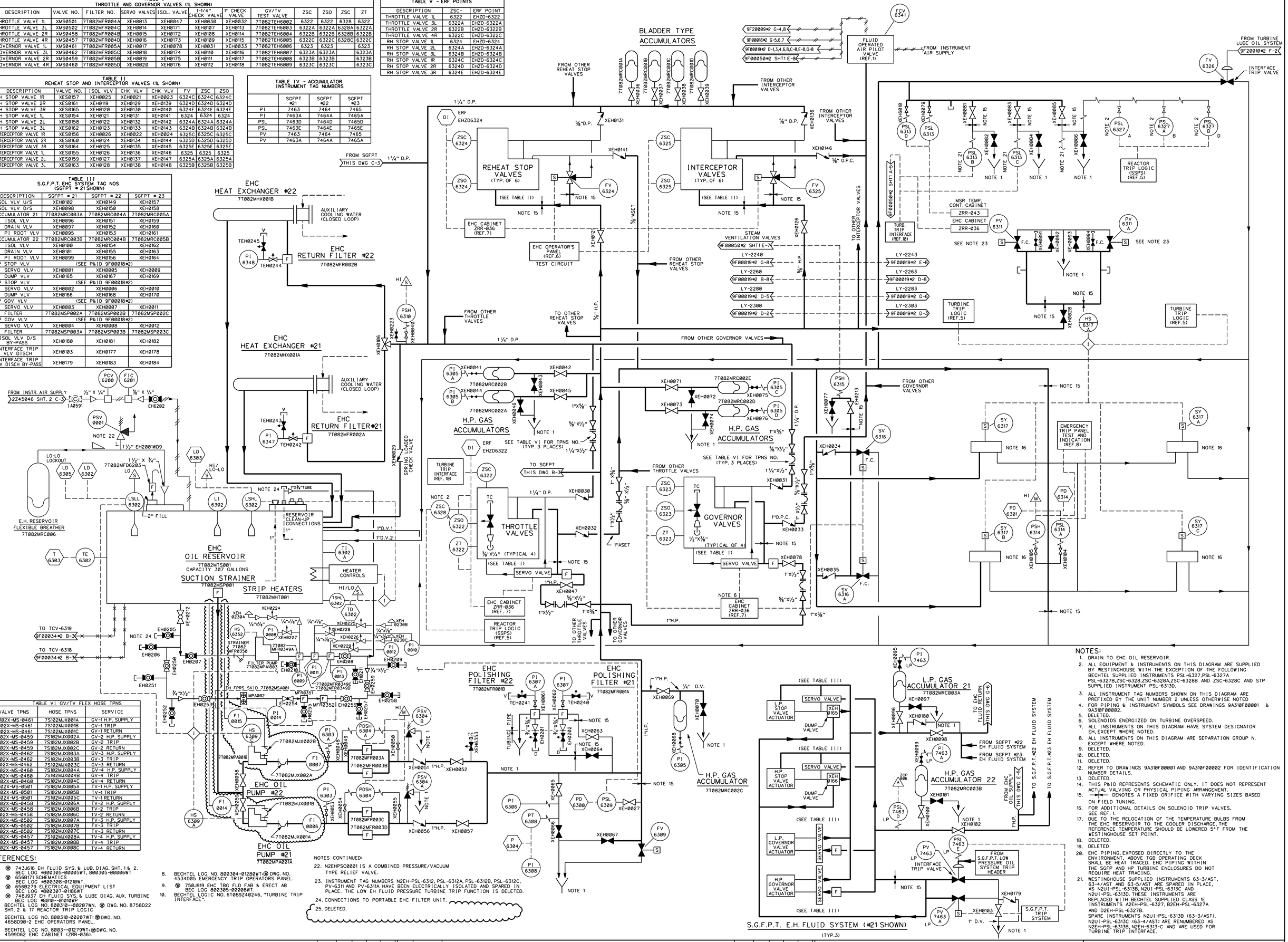

REFERENCES:

1. Ⓦ 743J616 EH FLUID SYS. & LUB. DIAG. SHT. 1 & 2. BEC LOG #800305-00005WT, 800305-00006WT
2. Ⓦ 656B171 SCHEMATICS BEC LOG #800308-01210WT.
3. Ⓦ 656B279 ELECTRICAL EQUIPMENT LIST BEC LOG #800307-01186WT
4. Ⓦ 748J937 EH FLUID SYS. & LUBE DIAG. AUX. TURBINE BEC LOG #8018--01010WP
5. BECHTEL LOG NO. 800310--00207WN, Ⓦ DWG. NO. 8758D22 SHT. 2 & 17 REACTOR TRIP LOGIC
6. BECHTEL LOG NO. 800310-00207WT; Ⓦ DWG. NO. 4658D90-2 EHC OPERATORS PANEL.
7. BECHTEL LOG NO. 8003--01279WT; Ⓦ DWG. NO. 4599D62 EHC CABINET (ZRR-036).
8. BECHTEL LOG NO. 800304-01280WT; Ⓦ DWG. NO. 4534D05 EMERGENCY TRIP OPERATORS PANEL.
9. Ⓦ 759J919 D/C TBG FLD FAB & ERECT AB BEC LOG 800305-00008WT.
10. BECHTEL LOGIC NO. 6T089Z40246, "TURBINE TRIP INTERFACE".

NOTES CONTINUED:

22. N2EHPSC0001 IS A COMBINED PRESSURE/VACUUM TYPE RELIEF VALVE.
23. INSTRUMENT TAG NUMBERS N2EH-PSL-6312, PSL-6312A, PSL-6312B, PSL-6312C, PV-6311 AND PV-6311A HAVE BEEN ELECTRICALLY ISOLATED AND SPARED IN PLACE. THE LOW EH FLUID PRESSURE TURBINE TRIP FUNCTION IS DELETED.
24. CONNECTIONS TO PORTABLE EHC FILTER UNIT.
25. DELETED.

NOTES:

1. DRAIN TO EHC OIL RESERVOIR.
2. ALL EQUIPMENT & INSTRUMENTS ON THIS DIAGRAM ARE SUPPLIED BY WESTINGHOUSE WITH THE EXCEPTION OF THE FOLLOWING BECHTEL SUPPLIED INSTRUMENTS PSL-6327,PSL-6327A PSL-6327B,ZSC-6328,ZSC-6328A,ZSC-6328B AND ZSC-6328C AND STP SUPPLIED INSTRUMENT PSL-6313D.
3. ALL INSTRUMENT TAG NUMBERS SHOWN ON THIS DIAGRAM ARE PREFIXED BY THE UNIT NUMBER 2 UNLESS OTHERWISE NOTED
4. FOR PIPING & INSTRUMENT SYMBOLS SEE DRAWINGS 9A310F00001 & 9A310F00002.
5. DELETED.
6. SOLENOIDS ENERGIZED ON TURBINE OVERSPEED.
7. ALL INSTRUMENTS ON THIS DIAGRAM HAVE SYSTEM DESIGNATOR EH, EXCEPT WHERE NOTED.
8. ALL INSTRUMENTS ON THIS DIAGRAM ARE SEPARATION GROUP N. EXCEPT WHERE NOTED.
9. DELETED.
10. DELETED.
11. DELETED.
12. REFER TO DRAWINGS 9A310F00001 AND 9A310F00002 FOR IDENTIFICATION NUMBER DETAILS.
13. DELETED.
14. THIS P&ID REPRESENTS SCHEMATIC ONLY. IT DOES NOT REPRESENT ACTUAL VALVING OR PHYSICAL PIPING ARRANGEMENT.
15. ⊣⊢ DENOTES A FIXED ORIFICE WITH VARYING SIZES BASED ON FIELD TUNING.
16. FOR ADDITIONAL DETAILS ON SOLENOID TRIP VALVES, SEE REF. 1.
17. DUE TO THE RELOCATION OF THE TEMPERATURE BULBS FROM THE EHC RESERVOIR TO THE COOLER DISCHARGE, THE REFERENCE TEMPERATURE SHOULD BE LOWERED 5°F FROM THE WESTINGHOUSE SET POINT.
18. DELETED.
19. DELETED
20. EHC PIPING, EXPOSED DIRECTLY TO THE ENVIRONMENT, ABOVE TGB OPERATING DECK SHALL BE HEAT TRACED. EHC PIPING WITHIN THE SGFP AND HP TURBINE ENCLOSURES DO NOT REQUIRE HEAT TRACING.
21. WESTINGHOUSE SUPPLIED INSTRUMENTS 63-3/AST, 63-4/AST AND 63-5/AST ARE SPARED IN PLACE, AS N2U1-PSL-6313B, N2U1-PSL-6313C AND N2U1-PSL-6313D. THESE INSTRUMENTS ARE REPLACED WITH BECHTEL SUPPLIED CLASS 1E INSTRUMENTS A2EH-PSL-6327, B2EH-PSL-6327A AND D2EH-PSL-6327B.
SPARE INSTRUMENTS N2U1-PSL-6313B (63-3/AST), N2U1-PSL-6313C (63-4/AST) ARE RENUMBERED AS N2EH-PSL-6313B, N2EH-6313-C AND ARE USED FOR TURBINE TRIP INTERFACE.

NO.	APPROVAL DATE	REVISION	ORIG	CKR	RE	DV	SE
52	9-11-19	INCORP. DCN 1700322.	N/A	N/A	N/A		
0-51	11-11-82	ISSUED FOR CONSTRUCTION.	SIGNATURES ON FILE				

SOUTH TEXAS PROJECT NUCLEAR OPERATING COMPANY

PIPING AND INSTRUMENT DIAGRAM ELECTRO HYDRAULIC FLUID SYSTEM

PRIORITY	CADD FILE NO.	FSUG. NO.	STI. NO.	SCALE	DWG. NO.	SHT.	REV.
1	7T089F10001#2.DGN	D070928	34908068	NONE	7T089F10001#2		52

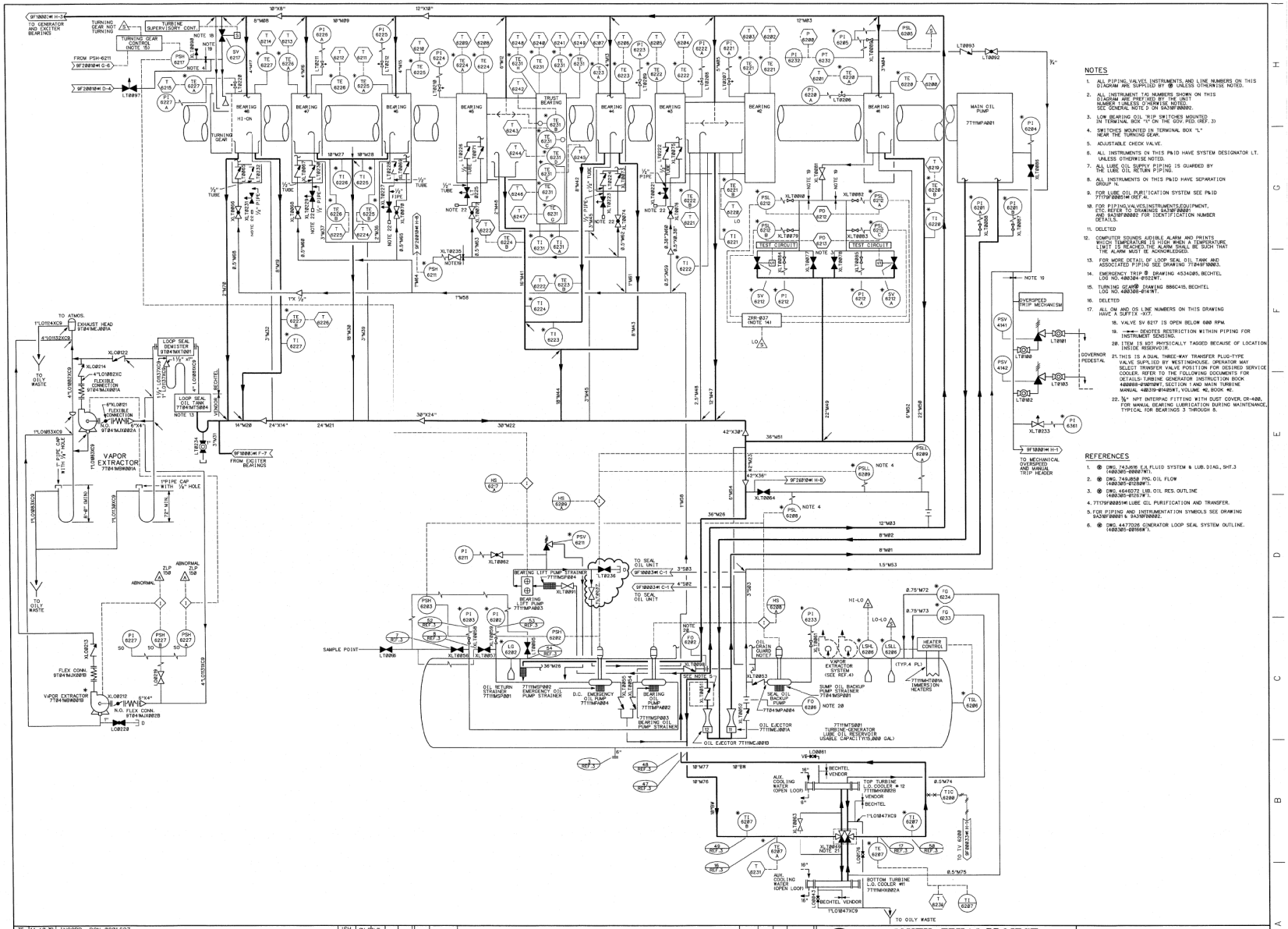

NOTES

1. ALL PIPING, VALVES, INSTRUMENTS, AND LINE NUMBERS ON THIS DIAGRAM ARE SUPPLIED BY ⓑ UNLESS OTHERWISE NOTED.
2. ALL INSTRUMENT TAG NUMBERS SHOWN ON THIS DIAGRAM ARE PREFIXED BY THE UNIT NUMBER UNLESS OTHERWISE NOTED. SEE GENERAL NOTE 3 ON 9A3N0F00002.
3. LOW BEARING OIL TRIP SWITCHES MOUNTED IN TERMINAL BOX "I" ON THE GSV. PED. (REF. 3)
4. SWITCHES MOUNTED IN TERMINAL BOX "L" NEAR THE TURNING GEAR.
5. ADJUSTABLE CHECK VALVE.
6. ALL INSTRUMENTS ON THIS P&ID HAVE SYSTEM DESIGNATOR LT. UNLESS OTHERWISE NOTED.
7. ALL LUBE OIL SUPPLY PIPING IS GUARDED BY THE LUBE OIL RETURN PIPING.
8. ALL INSTRUMENTS ON THIS P&ID HAVE SEPARATION GROUP "A".
9. FOR LUBE OIL PURIFICATION SYSTEM SEE P&ID 7T11F20001#1 (REF.4).
10. FOR PIPING,VALVES,INSTRUMENTS,EQUIPMENT, ETC. REFER TO DRAWINGS 9A3N0F00001 AND 9A3N0F00002 FOR IDENTIFICATION NUMBER DETAILS.
11. DELETED
12. COMPUTER SOUNDS AUDIBLE ALARM AND PRINTS WHICH TEMPERATURE STATION WHEN A TEMPERATURE LIMIT IS REACHED.THE ALARM SHALL BE SUCH THAT THE ALARM MUST BE ACKNOWLEDGED.
13. FOR MORE DETAIL OF LOOP SEAL OIL TANK AND ASSOCIATED PIPING SEE DRAWING 7T04F10003.
14. EMERGENCY TRIP B DRAWING 4534080, BECHTEL LOG NO. 480304-0522W1.
15. TURNING GEAR DRAWING B66C415, BECHTEL LOG NO. 480305-0141W1.
16. DELETED
17. ALL ON AND OS LINE NUMBERS ON THIS DRAWING HAVE A SUFFIX -XX7.
18. VALVE SV 6217 IS OPEN BELOW 600 RPM.
19. ⊸⊸ DENOTES RESTRICTION WITHIN PIPING FOR INSTRUMENT SENSING.
20. ITEM IS NOT PHYSICALLY TAGGED BECAUSE OF LOCATION INSIDE RESERVOIR.
21. THIS IS A DUAL THREE-WAY TRANSFER PLUG-TYPE VALVE SUPPLIED BY WESTINGHOUSE. OPERATOR MAY SELECT TRANSFER VALVE POSITION FOR DESIRED SERVICE COOLER. REFER TO THE FOLLOWING DOCUMENTS FOR DETAILS:TURBINE GENERATOR INSTRUCTION BOOK 480000-0100W07,SECTION I AND MAIN TURBINE MANUAL 480319-0140W1,VOLUME #2,BOOK #2.
22. ¾" NPT INTERPAC FITTING WITH DUST COVER, CR-400, FOR MANUAL BEARING LUBRICATION DURING MAINTENANCE, TYPICAL FOR BEARINGS 3 THROUGH 8.

REFERENCES

1. ⊗ DWG.7A3J030 E.H.FLUID SYSTEM & LUB.DIAG.,SHT.3 (480305-0080W1).
2. ⊗ DWG.7A3J050 PFG.OIL FLOW (480305-0120W1).
3. ⊗ DWG. 4640072 LUB.OIL RES.OUTLINE (480305-0120W1).
4. 7T11F20001#1 LUBE OIL PURIFICATION AND TRANSFER.
5. FOR PIPING AND INSTRUMENTATION SYMBOLS SEE DRAWING 9A3N0F00001 & 9A3N0F00002.
6. ⊗ DWG. 4477006 GENERATOR LOOP SEAL SYSTEM OUTLINE. (480305-0080W1).

NO.	ISSUE DATE	REVISION	ORIG	CKR	RE	DV	SE	NO.	ISSUE DATE	REVISION	ORIG	CKR	RE	DV	SE
35	11-10-05	INCORP. DCN 0001697.	JSH	ON FILE											
34	9-24-05	INCORP. DCN 0001883.	JSH	ON FILE											
33	11-8-07	REVISED PER CR 07-84-140	KS	ON FILE											
32	10-27-06	INCORP. DCN 0600321.	JSH	ON FILE											
31	5-23-06	REVISED PER CR 00-8380-1 AND INCORP. DCN 0000319.	LNB	ON FILE				37	6-23-14	INCORP.DCN 1400347.	VJM	N/A	N/A	N/A	N/A
30-30	05-20-03	ISSUED FOR CONSTRUCTION.	SIGNATURES ON FILE					36	7-15-10	REVISED PER CR 09-10845.	VJM	ON FILE			

FIXED DCN

PRIORITY	CADD FILE NO.	FSUG. NO.	STI. NO.
1	7T119F20010#1.DGN	D070928	3389302

SOUTH TEXAS PROJECT
NUCLEAR OPERATING COMPANY

PIPING AND INSTRUMENTATION DIAGRAM
LUBE OIL DIAGRAM

SCALE	DWG. NO.	SHT.	REV.
NONE	7T119F20010#1		37

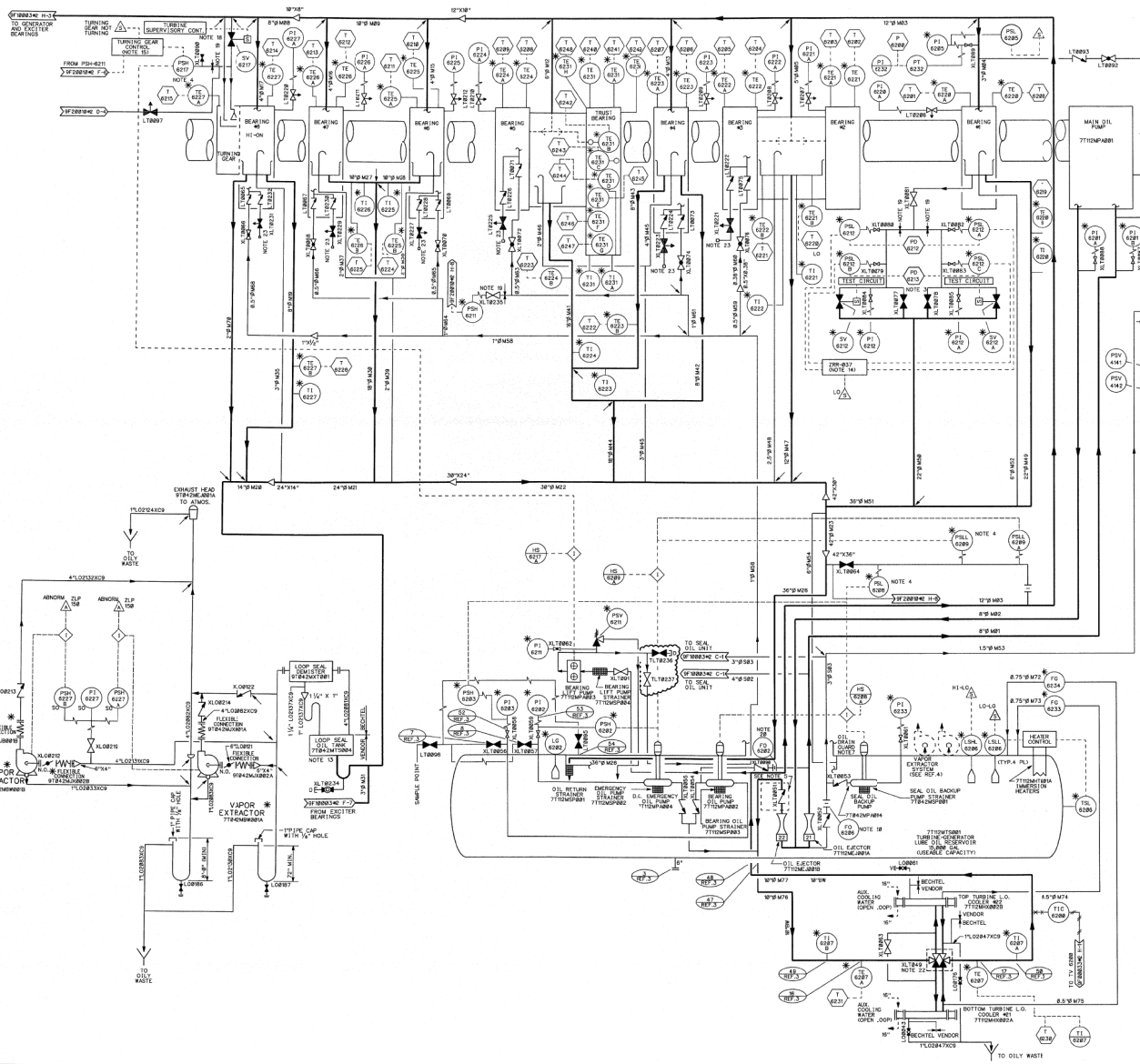

NOTES

1. ALL PIPING, VALVES, INSTRUMENTS AND LINE NUMBERS ON THIS DIAGRAM ARE SUPPLIED BY Ⓢ UNLESS OTHERWISE NOTED.
2. ALL INSTRUMENT TAG NUMBERS SHOWN ON THIS DIAGRAM ARE PREFIXED BY THE UNIT NUMBER 2 UNLESS OTHERWISE NOTED. SEE GENERAL NOTE D ON 9A39F00002.
3. LOW BEARING OIL TRIP SWITCHES MOUNTED IN TERMINAL BOX "A" ON THE GOV. PED. (REF. 3)
4. SWITCHES MOUNTED IN TERMINAL BOX "L" NEAR THE TURNING GEAR.
5. ADJUSTABLE CHECK VALVE.
6. ALL INSTRUMENTS ON THIS P&ID HAVE SYSTEM DESIGNATOR LT. UNLESS OTHERWISE NOTED
7. ALL LUBE OIL SUPPLY PIPING IS GUARDED BY THE LUBE OIL RETURN PIPING.
8. ALL INSTRUMENTS ON THIS P&ID HAVE SEPARATION GROUP 'N.
9. FOR LUBE OIL PURIFICATION SYSTEM SEE P&ID 7T119F000514E (REF.4).
10. REFER TO DRAWINGS 9A39F00001 AND 9A39F00002 FOR IDENTIFICATION NUMBER DETAILS.
11. DELETED
12. COMPUTER SOUNDS AUDIBLE ALARM AND PRINTS WHICH TEMPERATURE IS HIGH WHEN A TEMPERATURE LIMIT IS REACHED. THE ALARM SHALL BE SUCH THAT THE ALARM MUST BE ACKNOWLEDGED.
13. FOR MORE DETAIL OF LOOP SEAL OIL TANK AND ASSOCIATED PIPING SEE DRAWING 7T842F000340.
14. EMERGENCY TRIP Ⓢ DRAWING 4579039, BECHTEL LOG NO. 880328-#157A1
15. TURNING GEAR Ⓢ DRAWING 886C415, BECHTEL LOG NO. 880328-#157A1.
16. DELETED
17. ALL OM AND OS LINE NUMBERS ON THIS DRAWING HAVE A SUFFIX -XX7.
18. VALVE SV 6217 IS OPEN BELOW 800 RPM.
19. ⊸⊸ DENOTES RESTRICTION WITHIN PIPING FOR INSTRUMENT SENSING.
20. ITEM IS NOT PHYSICALLY TAGGED BECAUSE OF LOCATION INSIDE RESERVOIR.
21. DELETED
22. THIS IS A DUAL THREE-WAY TRANSFER PLUG-TYPE VALVE SUPPLIED BY Ⓢ. OPERATOR MAY SELECT TRANSFER VALVE POSITION FOR DESIRED SERVICE COOLER. REFER TO THE FOLLOWING DOCUMENTS FOR DETAILS: TURBINE-GENERATOR INSTRUCTION BOOK VTD-4128-0010.
23. ¾" NPT ENTERPAC FITTING WITH DUST COVER, CR-400, FOR MANUAL BEARING LUBRICATION DURING MAINTENANCE, TYPICAL FOR BEARINGS 3 THROUGH 8.

REFERENCES

1. Ⓢ DWG. 743J816 EH FLUID SYSTEM & LUB. DIAG., SHT.3 (880325-#0007WT).
2. Ⓢ DWG. 743J858 PPC 31L FLOW (880325-#0010WT).
3. Ⓢ DWG. 4545072 LUB.31L RES. OUTLINE (880325-#124WT).
4. 7T119F000514E LUBE OIL PURIFICATION AND TRANSFER.
5. FOR PIPING AND INSTRUMENTATION SYMBOLS SEE DRAWING 9A39F00001 & 9A39F00002.
6. Ⓢ DWG. 4477226 GENERATOR LOOP SEAL SYSTEM OUTLINE. (880325-#0136WT).

NO.	ISSUE DATE	REVISION	ORIG	CKR	RE	CV	SE
31	7-15-92	REVISED PER CR 89-19045.	VJM	ON FILE			
30	11-12-88	INCORP. DCN 8801698.	JSH	ON FILE			
29	9-24-88	INCORP. DCN 8801884.	JSH	ON FILE			
28	3-8-87	INCORP. DCN 8601388.	JSH	ON FILE			
27	12-7-98	INCORP. DCN 9801391	JGL	ON FILE			
26	5-20-83	ISSUED FOR CONSTRUCTION.	SIGNATURES ON FILE				
32	2/6/01	INCORP. DCN 1402283.	JGL		N/A	N/A	N/A

SEEED DCN

SOUTH TEXAS PROJECT NUCLEAR OPERATING COMPANY

PIPING AND INSTRUMENTATION DIAGRAM
LUBE OIL DIAGRAM

PRIORITY	CADD FILE NO.	FSWG NO.	STI. NO.	SCALE	DWG. NO.	SHT.	REV.
1	7T119F200101#2.DGN	D070928	3H6-0-93/13	NONE	7T119F200101#2		32

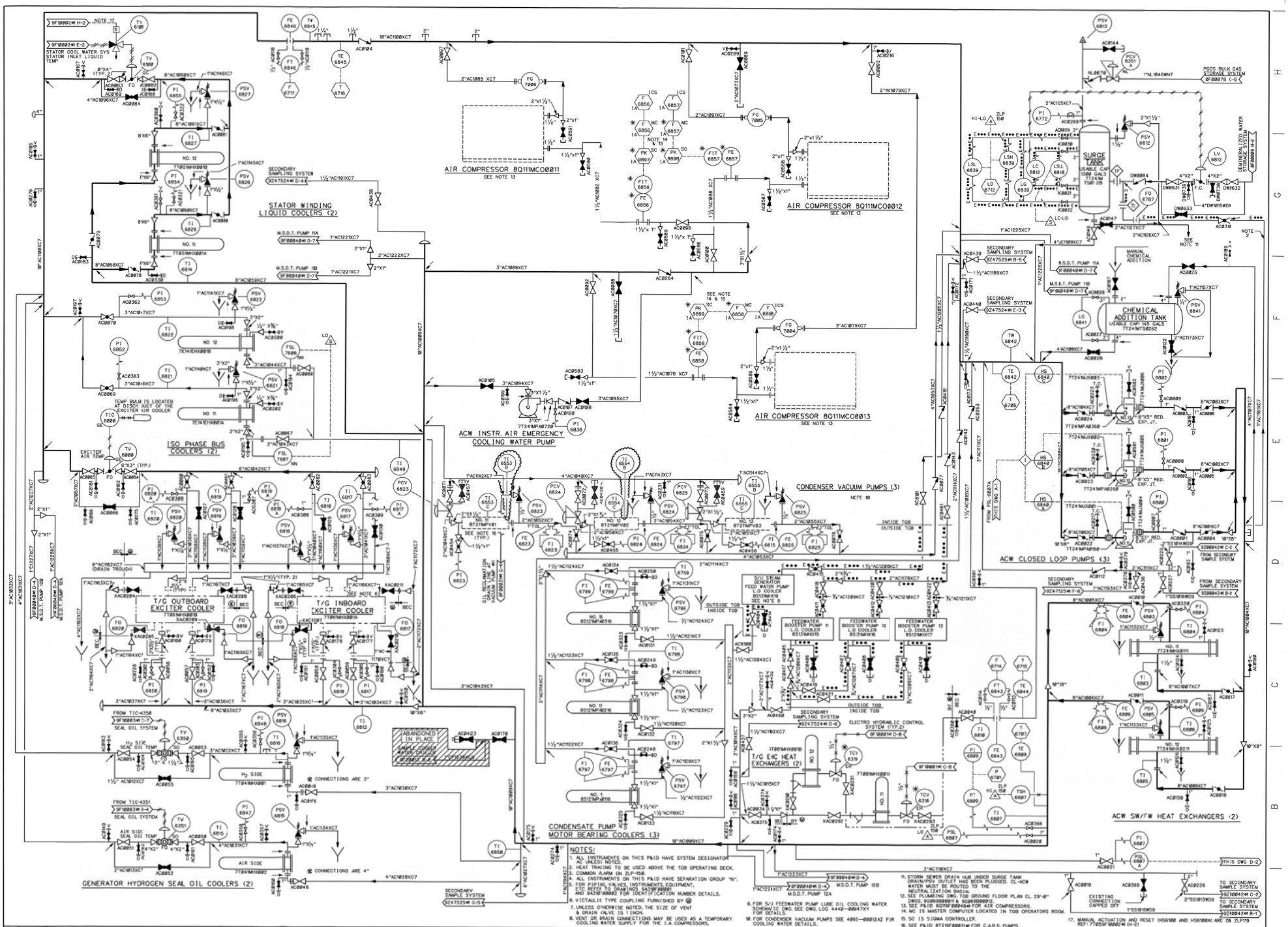

NOTES:

1. ALL INSTRUMENTS ON THIS P&ID HAVE SYSTEM DESIGNATOR AC UNLESS NOTED.
2. HEAT TRACING TO BE USED ABOVE THE TGB OPERATING DECK.
3. COMMON ALARM ON ZLP-150.
4. ALL INSTRUMENTS ON THIS P&ID HAVE SEPARATION GROUP "N".
5. FOR PIPING, VALVES, INSTRUMENTS, EQUIPMENT, ETC REFER TO DRAWINGS 9A3NF00001 AND 9A3NF00002 FOR IDENTIFICATION NUMBER DETAILS.
6. VICTAULIC TYPE COUPLING FURNISHED BY ⓦ.
7. UNLESS OTHERWISE NOTED, THE SIZE OF VENT & DRAIN VALVE IS 1 INCH.
8. VENT OR DRAIN CONNECTIONS MAY BE USED AS A TEMPORARY COOLING WATER SUPPLY FOR THE I.A. COMPRESSORS.
9. FOR S/U FEEDWATER PUMP LUBE OIL COOLING WATER SCHEMATIC DWG. SEE DWG. LOG 4442-00047XY
10. FOR CONDENSER VACUUM PUMPS SEE 4861-00012AZ FOR COOLING WATER DETAILS.
11. STORM SEWER DRAIN HUB UNDER SURGE TANK DRAIN/PSV OUTLET HAS BEEN PLUGGED. CL-ACW WATER MUST BE ROUTED TO THE NEUTRALIZATION BASIN.
12. SEE PLUMBING DWG. TGB GROUND FLOOR PLAN EL. 29'-0" DWGS. 9Q869R00011 & 9Q869R00012.
13. SEE P&ID 8Q110F00045#1 FOR AIR COMPRESSORS.
14. MC IS MASTER COMPUTER LOCATED IN TGB OPERATORS ROOM.
15. SC IS SIGMA CONTROLLER.
16. SEE P&ID 8T210F00031#1 FOR C.A.R.S. PUMPS.
17. MANUAL ACTUATION AND RESET (HS6100 AND HS6100A) ARE ON ZLP119

NO.	ISSUE DATE	REVISION	ORIG	CKR	RE	DV	SE
47	3-26-12	INCORP. DCN 1002372.	JSH	ON FILE			
46	9-13-11	INCORP. DCN'S 8901185 AND 1002333.	LNB	ON FILE			
45	4-25-11	INCORP. DCN'S 1002181 AND 1002168.	JGL	ON FILE			
44	10-7-09	REVISED PER CR 09-14566-2	KS	ON FILE			
43	1-29-08	INCORP. DCN 0800268.	JSH	ON FILE			
9-42	9-16-82	ISSUED FOR CONSTRUCTION.	SIGNATURES ON FILE				

NO.	ISSUE DATE	REVISION	ORIG	CKR	RE	DV	SE
49	5-7-16	REVISED PER CR 16-2237.	VJM	N/A	N/A	N/A	N/A
48	9-16-15	INCORP. DCN 1301209.	VJM	ON FILE			

ESEED_DGN

SOUTH TEXAS PROJECT
NUCLEAR OPERATING COMPANY

PRIORITY	CADD FILE NO.	FSUG. NO.	STI. NO.
1	7T249F00034#1.DGN	D070928	3192888 23

PIPING AND INSTRUMENTATION DIAGRAM
CLOSED LOOP AUXILIARY COOLING WATER SYSTEM

SCALE	DWG. NO.	SHT.	REV.
NONE	7T249F00034#1		49

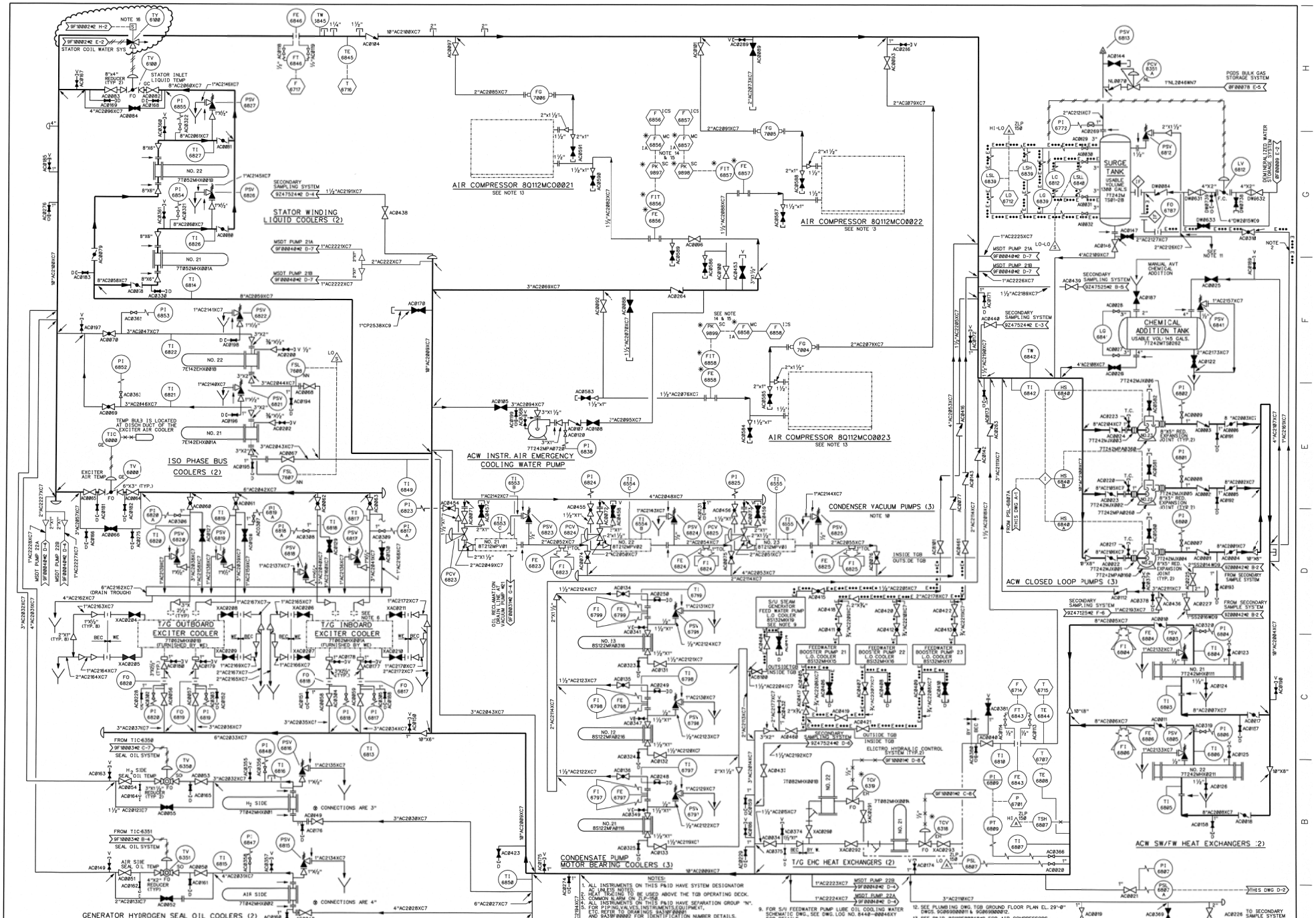

NO.	APPROVAL DATE	REVISION	ORIG	CKR	RE	DV	SE	NO.	APPROVAL DATE	REVISION	ORIG	CKR	RE	DV	SE
46	9/12/16	INCORP. DCN 1301907.	VJM	N/A	N/A	N/A	N/A								
2-45	9-16-82	ISSUED FOR CONSTRUCTION.	SIGNATURES ON FILE												

ESEED DGN

SOUTH TEXAS PROJECT
NUCLEAR OPERATING COMPANY

PIPING AND INSTRUMENT DIAGRAM
CLOSED LOOP AUXILIARY COOLING WATER SYSTEM

PRIORITY	CADD FILE NO.	FSUG. NO.	STI. NO.	SCALE	DWG. NO.	SHT.	REV.
1	7T249F00034#2.DGN	D070928	3439001H	NONE	7T249F00034#2		46

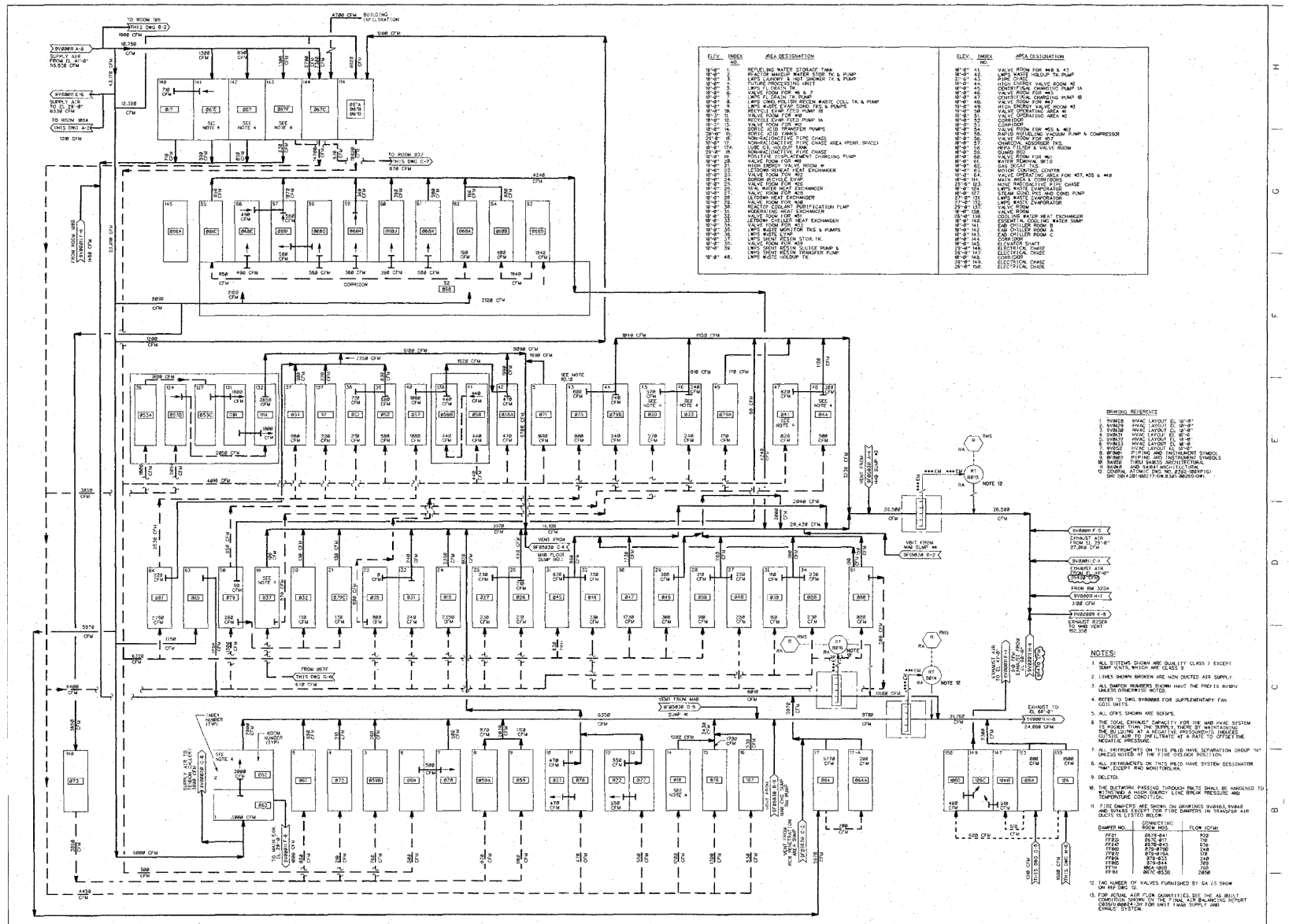

ELEV.	INDEX NO.	AREA DESIGNATION
16'-6"	1.	REFUELING WATER STORAGE TANK
16'-6"	2.	LWPS CLEANED & NOT CLEANED TK & PUMP
16'-6"	3.	LWPS DRAINED & NOT DRAINED TK & PUMP
16'-6"	4.	FUTURE PROCESSING UNIT
10'-6"	5.	LWPS FLOOR DRAIN TK
10'-6"	6.	VALVE ROOM FOR #5 & 7
10'-6"	7.	LWPS FLOOR DRAIN PUMP
10'-6"	8.	LWPS CLEANED & NOT CLEANED WASTE COLL TK & PUMP
10'-6"	9.	LWPS WASTE EVAP COND TKS & PUMPS
16'-6"	10.	RECYCLE EVAP FEED PUMP 1B
16'-3"	11.	VALVE ROOM FOR #10
16'-6"	12.	RECYCLE EVAP FEED PUMP 1A
16'-6"	13.	VALVE ROOM FOR #9
16'-6"	14.	LETDOWN HEAT EXCHANGER PUMPS
29'-6"	15.	BORIC ACID TANKS
25'-6"	16.	NON-RADIOACTIVE PIPE CHASE
16'-6"	17.	NON-RADIOACTIVE PIPE CHASE AREA (PENT. SPACE)
16'-6"	17A.	LUBE OIL HOLDUP TANK
10'-6"	18.	NON-RADIOACTIVE PIPE CHASE
10'-6"	19.	RCP/VCT/CVCS EQUIPMENT CHARGING PUMP
16'-6"	20.	VALVE ROOM FOR #8
16'-6"	21.	HIGH ENERGY VALVE ROOM #1
16'-6"	22.	LETDOWN REHEAT HEAT EXCHANGER
10'-6"	23.	VALVE ROOM FOR #12
10'-6"	24.	BORON RECYCLE SYS.
10'-6"	25.	VALVE ROOM FOR #26
10'-6"	26.	SEAL WATER HEAT EXCHANGER
10'-6"	27.	VALVE ROOM FOR #28
10'-6"	28.	LETDOWN HEAT EXCHANGER
10'-6"	29.	VALVE ROOM FOR #48
10'-6"	30.	RCP/VCT/CVCS EQUIPMENT CHARGING PUMP
10'-6"	31.	MODERATOR HEAT EXCHANGER
10'-6"	32.	VALVE ROOM FOR #31
10'-6"	33.	LETDOWN CHILLER HEAT EXCHANGER
10'-6"	34.	VALVE ROOM FOR #33
10'-6"	35.	LWPS WASTE MONITOR TKS & PUMPS
10'-6"	36.	LWPS WASTE SYS.
10'-6"	37.	LWPS WASTE RESIN STOR. TK.
10'-6"	38.	VALVE ROOM FOR #39
10'-6"	39.	LWPS SPENT RESIN SLUICE PUMP &
		LWPS SPENT RESIN TRANSFER PUMP
16'-6"	40.	LWPS WASTE HOLDUP TK.

ELEV.	INDEX NO.	AREA DESIGNATION
16'-6"	41.	VALVE ROOM FOR #45 & 47
21'-6"	42.	HIGH ENERGY VALVE ROOM #2
21'-6"	43.	PIPE CHASE HOLDUP TK. PUMP
16'-6"	44.	HIGH ENERGY VALVE ROOM #2
16'-6"	45.	CENTRIFUGAL CHARGING PUMP 1A
16'-6"	46.	VALVE ROOM FOR #44
16'-6"	47.	CENTRIFUGAL CHARGING PUMP 1B
16'-6"	48.	VALVE ROOM FOR #47
16'-6"	49.	HIGH ENERGY VALVE ROOM #3
16'-6"	50.	VALVE OPERATING AREA #1
16'-6"	51.	VALVE OPERATING AREA #2
16'-6"	52.	CORRIDOR
16'-6"	53.	CORRIDOR
16'-6"	54.	VALVE ROOM FOR #55 & #62
16'-6"	55.	RAPID REFUELING VACUUM PUMP & COMPRESSOR
16'-6"	56.	VALVE ROOM FOR #57
16'-6"	57.	CHARCOAL ADSORBER TKS.
16'-6"	58.	HEPA FILTER & VALVE ROOM
16'-6"	59.	GUARD ROOM
16'-6"	60.	VALVE ROOM FOR #6
16'-6"	61.	WATER REMOVAL SKID
16'-6"	62.	GAS SCUT TKS.
16'-6"	63.	MOTOR CONTROL CENTER
16'-6"	64.	VALVE OPERATING AREA FOR #37,#38 & #48
16'-6"	65.	MAIN AREA & CORRIDORS
16'-6"	66.	LWPS WASTE EVAPORATOR CHASE
16'-6"	67.	LWPS WASTE EVAPORATOR
16'-6"	67.	STEAM COND PKG AND COND PUMP
27'-6"	68.	LWPS WASTE EVAPORATOR
27'-6"	69.	LWPS ROOM EVAPORATOR
27'-6"	70.	VALVE ROOM
27'-6"	71.	VALVE ROOM
26'-6"	72.	COOLING WATER HEAT EXCHANGER
16'-6"	140.	ESSENTIAL COOLING WATER SUMP
16'-6"	141.	EAB CHILLER ROOM B
16'-6"	142.	EAB CHILLER ROOM A
16'-6"	143.	EAB CHILLER ROOM C
16'-6"	144.	CORRIDOR
16'-6"	145.	ELEVATOR SHAFT
29'-6"	146.	ELECTRICAL CHASE
29'-6"	147.	ELECTRICAL CHASE
16'-6"	148.	CORRIDOR
29'-6"	149.	ELECTRICAL CHASE
26'-6"	150.	ELECTRICAL CHASE

DRAWING REFERENCE

1. 9V0813 HVAC LAYOUT EL 10'-6"
2. 9V0829 HVAC LAYOUT EL 16'-6"
3. 9V0830 HVAC LAYOUT EL 29'-6"
4. 9V0831 HVAC LAYOUT EL 16'-6"
5. 9V0832 HVAC LAYOUT EL 10'-6"
6. 9V0833 HVAC LAYOUT EL 16'-6"
7. 9F0801 PIPING AND INSTRUMENT SYMBOLS
8. 9F0802 PIPING AND INSTRUMENT SYMBOLS
9. 9A0010 THRU 9A0033 ARCHITECTURAL
10. 9A0040 AND 9A0041 ARCHITECTURAL
11. GENERAL ATOMIC DWG NO. 8330-1909(F)G SHT 2GA-3010-0027-7-0A.8.3A1-9020S-0H1

NOTES:

1. ALL SYSTEMS SHOWN ARE QUALITY CLASS 7 EXCEPT SUMP VENTS WHICH ARE CLASS 9
2. LINES SHOWN BROKEN ARE NON DUCTED AIR SUPPLY.
3. ALL DAMPER NUMBERS SHOWN HAVE THE PREFIX 9V0809 UNLESS OTHERWISE NOTED.
4. REFER TO DWG. 9V0808B FOR SUPPLEMENTARY FAN COIL UNITS.
5. ALL CFM'S SHOWN ARE SCFMS.
6. THE TOTAL EXHAUST CAPACITY FOR THE MAB HVAC SYSTEM IS HIGHER THAN THE SUPPLY, THERE BY MAINTAINING THE BUILDING AT A NEGATIVE PRESSURE THUS INDUCES OUTSIDE AIR TO INFILTRATE AT A RATE TO OFFSET THE NEGATIVE PRESSURE.
7. ALL INSTRUMENTS ON THIS P&ID HAVE SEPARATION GROUP "N" UNLESS NOTED AT THE FIVE O'CLOCK POSITION.
8. ALL INSTRUMENTS ON THIS P&ID HAVE SYSTEM DESIGNATOR "HAM", EXCEPT RAD MONITORS,RA.
9. DELETED.
10. THE DUCTWORK PASSING THROUGH RM.TG SHALL BE HARDENED TO WITHSTAND A HIGH ENERGY LINE BREAK PRESSURE AND TEMPERATURE CONDITION.
11. FIRE DAMPERS ARE SHOWN ON DRAWINGS 9V0843, 9V0845 AND 9V0846 EXCEPT FOR FIRE DAMPERS IN TRANSFER AIR DUCTS IS LISTED BELOW.

DAMPER NO.	CONNECTING ROOM NOS.	FLOW (CFM)
FF21	8678-041	820
FF22	8678-051	700
FF26	8678-045	610
FF28	879-8786	240
FF29	878-8786A	170
FF30	879-823	240
FF35	879-844	300
FF36	8678-051	700
FF37	8676-8538	2050

12. TAG NUMBER OF VALVES FURNISHED BY GA IS SHOW ON REF DWG 12.
13. FOR ACTUAL AIR FLOW QUANTITIES SEE THE AS BUILT CONDITION SHOWN ON THE FINAL AIR BALANCING REPORT 0000V-M0824-3F FOR UNIT 1 MAB SUPPLY AND EXHAUS SYSTEM.

REV. NO.	ISSUE DATE	REVISION	ORIG	CKR	RE	DV	SE	NO	ISSUE DATE	REVISION	ORIG	CKR	RE	DV	SE
12	10/11/94	INCORP. DCN 9702757.													
8-11-92		ISSUED FOR CONSTRUCTION.													

LNB
SIGNATURES ON FILE

SOUTH TEXAS PROJECT
NUCLEAR OPERATING COMPANY

PRIORITY	CADD FILE NO.	FSUC NO.	SIT. NO.
1	FJA235.121	0878928	3096194

PIPING & INSTRUMENTATION DIAGRAM
MECHANICAL AUXILIARY BUILDING
HVAC FLOW DIAGRAM

SCALE	DWG NO.	SHT.	REV
NONE	7V109V00007#1	---	12

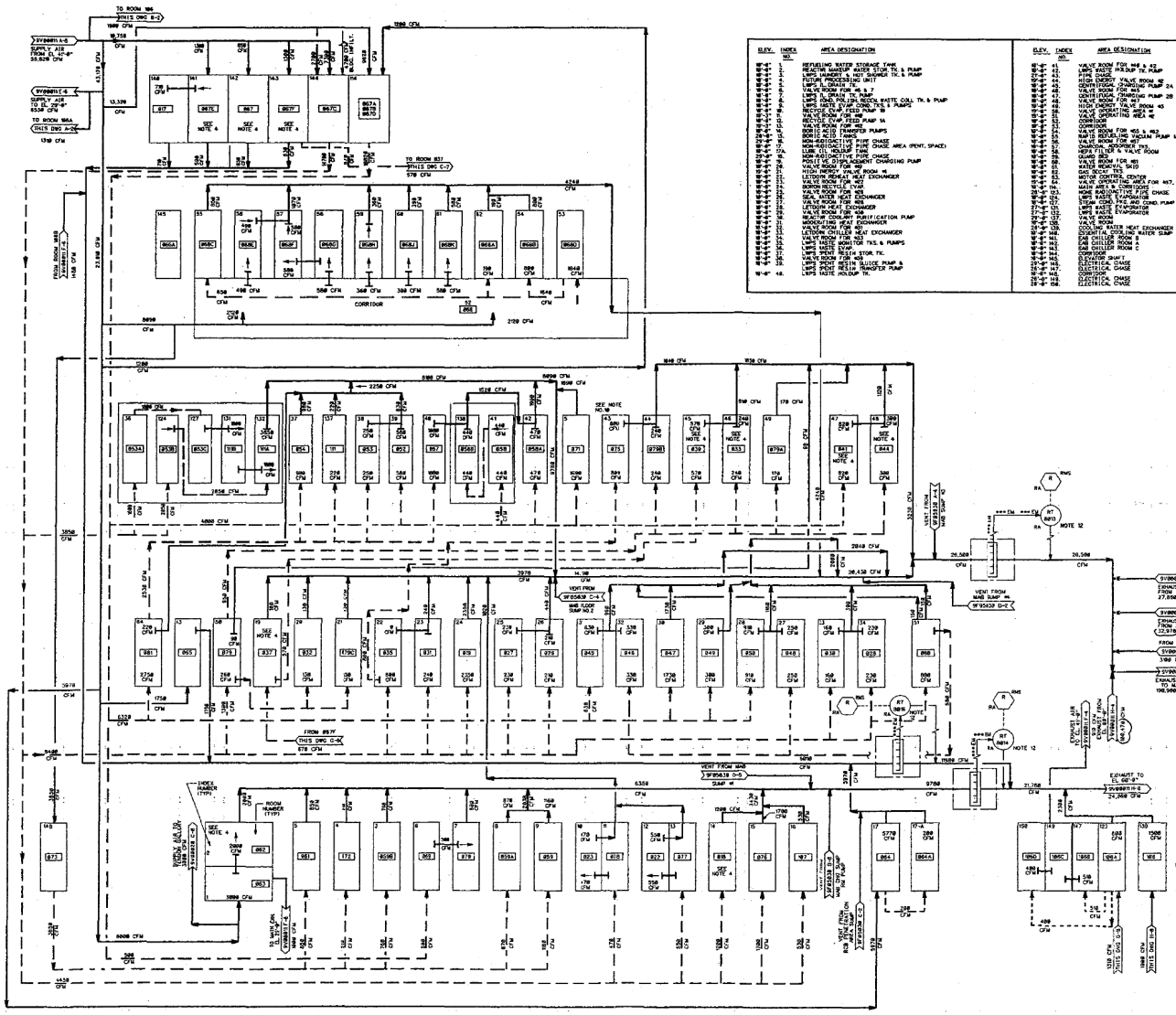

ELEV.	INDEX NO.	AREA DESIGNATION
18'-6"	1.	REFUELING WATER STORAGE TANK
18'-6"	2.	SEISMIC UNIBOLT & SEISMIC STOP TK. & PUMP
18'-6"	3.	SEISMIC UNIBOLT & SEISMIC STOP TK.
18'-6"	4.	FUTURE PROCESSING UNIT
18'-6"	5.	LWMS SL DRAIN TK.
18'-6"	6.	VALVE ROOM FOR MS 5,7
18'-6"	7.	LWMS SPENT RESIN TANK
18'-6"	8.	LWMS DRAIN PUMP, LWMS WASTE COLL TK. & PUMP
18'-6"	9.	LWMS WASTE EVAP COND. TKS. & PUMPS
18'-6"	10.	RECYCLE EVAP. FEED PUMP 1B
18'-6"	11.	RECYCLE EVAP. FEED PUMP 1A
18'-6"	12.	VALVE ROOM FOR CHG. PUMP 1A
18'-6"	13.	VALVE ROOM FOR 1B
18'-6"	14.	BORIC ACID TRANSFER PUMPS
18'-6"	15.	BORIC ACID TANKS
18'-6"	16.	NON-RADIOACTIVE PIPE CHASE
18'-6"	17.	NON-RADIOACTIVE PIPE CHASE AREA (VENT. SPACE)
18'-6"	17A.	LUBE OIL HOLDUP TANK
18'-6"	18.	NON-RADIOACTIVE PIPE CHASE
18'-6"	19.	PDSIT VS. DISPLACEMENT CHARGING PUMP
18'-6"	20.	VALVE ROOM FOR 1A
18'-6"	21.	HIGH ENERGY VALVE ROOM #1
18'-6"	22.	LETDOWN REHEAT HEAT EXCHANGER
18'-6"	23.	VALVE ROOM FOR #2
18'-6"	24.	BORON RECYCLE TANK
18'-6"	25.	VALVE ROOM FOR #3
18'-6"	26.	SEAL WATER HEAT EXCHANGER
18'-6"	27.	VALVE ROOM FOR #6B
18'-6"	28.	LETDOWN HEAT EXCHANGER
18'-6"	29.	VALVE ROOM FOR #6A
18'-6"	30.	CHARGING PUMP MINIFLOW PURIFICATION PUMP
18'-6"	31.	MODERATING HEAT EXCHANGER
18'-6"	32.	VALVE ROOM FOR #5
18'-6"	33.	LETDOWN CHILLER HEAT EXCHANGER
18'-6"	34.	VALVE ROOM FOR #33
18'-6"	35.	LWMS WASTE EVAP. TKS. & PUMPS
18'-6"	36.	LWMS WASTE SONAR TK.
18'-6"	37.	LWMS SPENT RESIN STOR. TK.
18'-6"	38.	VALVE ROOM FOR #38
18'-6"	39.	LWMS SPENT RESIN SLUICE PUMP & LWMS SPENT RESIN TRANSFER PUMP
18'-6"	40.	LWMS WASTE HOLDUP TK.

ELEV.	INDEX NO.	AREA DESIGNATION
18'-6"	41.	VALVE ROOM FOR #4B & #2
18'-6"	42.	LWMS WASTE HOLDUP TK. PUMP
18'-6"	43.	CORRIDOR
18'-6"	44.	HIGH ENERGY VALVE ROOM #5
18'-6"	45.	CENTRIFUGAL CHARGING PUMP 2A
18'-6"	46.	VALVE ROOM FOR #4A
18'-6"	47.	CENTRIFUGAL CHARGING PUMP 2B
18'-6"	48.	VALVE ROOM FOR #3
18'-6"	49.	HIGH ENERGY VALVE ROOM #3
18'-6"	50.	VALVE OPERATING AREA #1
18'-6"	51.	VALVE OPERATING AREA #2
18'-6"	52.	CORRIDOR
18'-6"	53.	CORRIDOR
18'-6"	54.	VALVE ROOM FOR #55 & #52
18'-6"	55.	RAPID REFUELING VACUUM PUMP & COMPRESSOR
18'-6"	56.	VALVE ROOM FOR #7
18'-6"	57.	VALVE ROOM FOR #1 & #2
18'-6"	58.	HEPA FILTER & VALVE ROOM
18'-6"	59.	GLASS BOX
18'-6"	60.	VALVE ROOM FOR #63
18'-6"	61.	BATTERY ROOM 2A-1
18'-6"	62.	BATTERY ROOM 1A-1
18'-6"	63.	MOTOR CONTROL CENTER
18'-6"	64.	VALVE OPERATING AREA FOR #47, #58 & #48
18'-6"	64A.	MAIN AREA & CORRIDORS
18'-6"	65.	VGRS WASTE EVAPORATOR CHASE
18'-6"	66.	VGRS WASTE EVAPORATOR
18'-6"	67.	STEAM COND. PKG AND COND. PUMP
27'-6"	131.	LWMS WASTE EVAPORATOR
27'-6"	132.	LWMS WASTE EVAPORATOR
27'-6"	133.	VALVE ROOM
27'-6"	134.	VALVE ROOM
27'-6"	135.	COOLING WATER HEAT EXCHANGER
27'-6"	136.	ESSENTIAL COOLING WATER SUMP
27'-6"	137.	GAS CHILLER ROOM A
27'-6"	138.	GAS CHILLER ROOM B
27'-6"	139.	GAS CHILLER ROOM C
27'-6"	140.	CORRIDOR
27'-6"	141.	ELEVATOR SHAFT
27'-6"	142.	ELECTRICAL CHASE
27'-6"	143.	ELECTRICAL CHASE
27'-6"	144.	CORRIDOR
27'-6"	145.	ELECTRICAL CHASE
27'-6"	146.	ELECTRICAL CHASE

DRAWING REFERENCE

1. SV0020 HVAC LAYOUT EL 18'-6"
2. SV0030 HVAC LAYOUT EL 27'-6"
3. SV0031 HVAC LAYOUT EL 8'-6"
4. SV0032 HVAC LAYOUT EL 1'-6"
5. SV0033 HVAC LAYOUT EL 18'-6"
6. SF0500 TUBE LAYOUT
7. SF0501 TUBE LAYOUT AND MOUNTING SYMBOL
8. SF0502 TUBE LAYOUT AND MOUNTING SYMBOLS
9. SA0030 THRU SA0035 ARCHITECTURAL
10. SA0040 AND SA0041 ARCHITECTURAL
11. GENERAL ATOMIC DWG NO. 8392-HB0810, SHT. 2A-13H-88277-2W,83H-88269-0W1.

NOTES:

1. ALL SYSTEMS SHOWN ARE QUALITY CLASS 7 EXCEPT SGAF VENTS, WHICH ARE CLASS 8.
2. LINES SHOWN BROKEN ARE NON DUCTED AIR SUPPLY.
3. ALL DAMPER NUMBERS SHOWN HAVE THE PREFIX SV0XXX UNLESS OTHERWISE NOTED.
4. REFER TO SV0 SV0000S FOR SUPPLEMENTARY FAN COIL UNITS.
5. ALL CFM'S SHOWN ARE SCFM'S.
6. THE TOTAL EXHAUST CAPACITY FOR THE MAB HVAC SYSTEM IS HIGHER THAN THE SUPPLY, THERE BY MAINTAINING THE BUILDING AT A NEGATIVE PRESSUREWIS INDUCES OUTSIDE AIR TO INFILTRATE AT A RATE TO OFFSETHE NEGATIVE PRESSURE.
7. ALL INSTRUMENTS ON THIS P&ID HAVE SEPARATORGROUP "N" UNLESS NOTED AT THE FIRE CYLOCK POSITION.
8. ALL INSTRUMENTS ON THIS P&ID HAVE SYSTEM DESIGNATOR "HVA", EXCEPT RAD MONITORS,AL.
9. DELETED.
10. THE DUCTWORK INSIDE THROUGH PAIS SHALL BE WARRED TO WITHSTAND A HIGH ENERGY LINE BREAK PRESSURE AND TEMPERATURE CONDITION.
11. FIRE DAMPERS ARE SHOWN ON DRAWINGS SV0483, SV0484 AND SV0485 EXCEPT FOR FIRE DAMPERS IN TRANSFER AIR DUCTS AS LISTED BELOW:

DAMPER NO.	CONNECTING ROOM NOS.	FLOW (CFM)
FF80	8675-841	828
FF829	8675-817	778
FF841	8676-845	2148
FF871	8675-843	1248
FF872	876-876A	778
FF884	873-833	1248
FF893	873-845	2148
FF11A	86A-818	778
FF86	8672-863M	2828

12. TAG NUMBER OF VALVES FURNISHED BY GA IS SHOWN ON REF DWG 2.
13. FOR ACTUAL AIR FLOW QUANTITIES, SEE THE AS-BUILT CONDITION SHOWN ON THE FINAL AIR BALANCING REPORT C835 121-00812-3H FOR UNIT 2.

NO.	ISSUE DATE	REVISION	ORIG	CKR	RE	DV	SE
12	12-12-94	INCORP. DCN 00035088.	VJN	JBL	EA	JJK	JJB
0-11	11-29-82	ISSUED FOR CONSTRUCTION.	SIGNATURES ON FILE				

SEEED DCN

NO.	ISSUE DATE	REVISION	ORIG	CKR	RE	DV	SE

SOUTH TEXAS PROJECT
NUCLEAR OPERATING COMPANY

PRIORITY	CADD FILE NO.	FSAR NO.	STI. NO.
1	FJA735.121	CB70928	3132b108

PIPING & INSTRUMENTATION DIAGRAM
MECHANICAL AUXILIARY BUILDING
HVAC FLOW DIAGRAM

SCALE	DWG. NO.	SHT.	REV.
NONE	7V109V00007#2		12

Printed by vmadlen ON Wednesday July 11 2001 AT 03:58:02 PM CDT

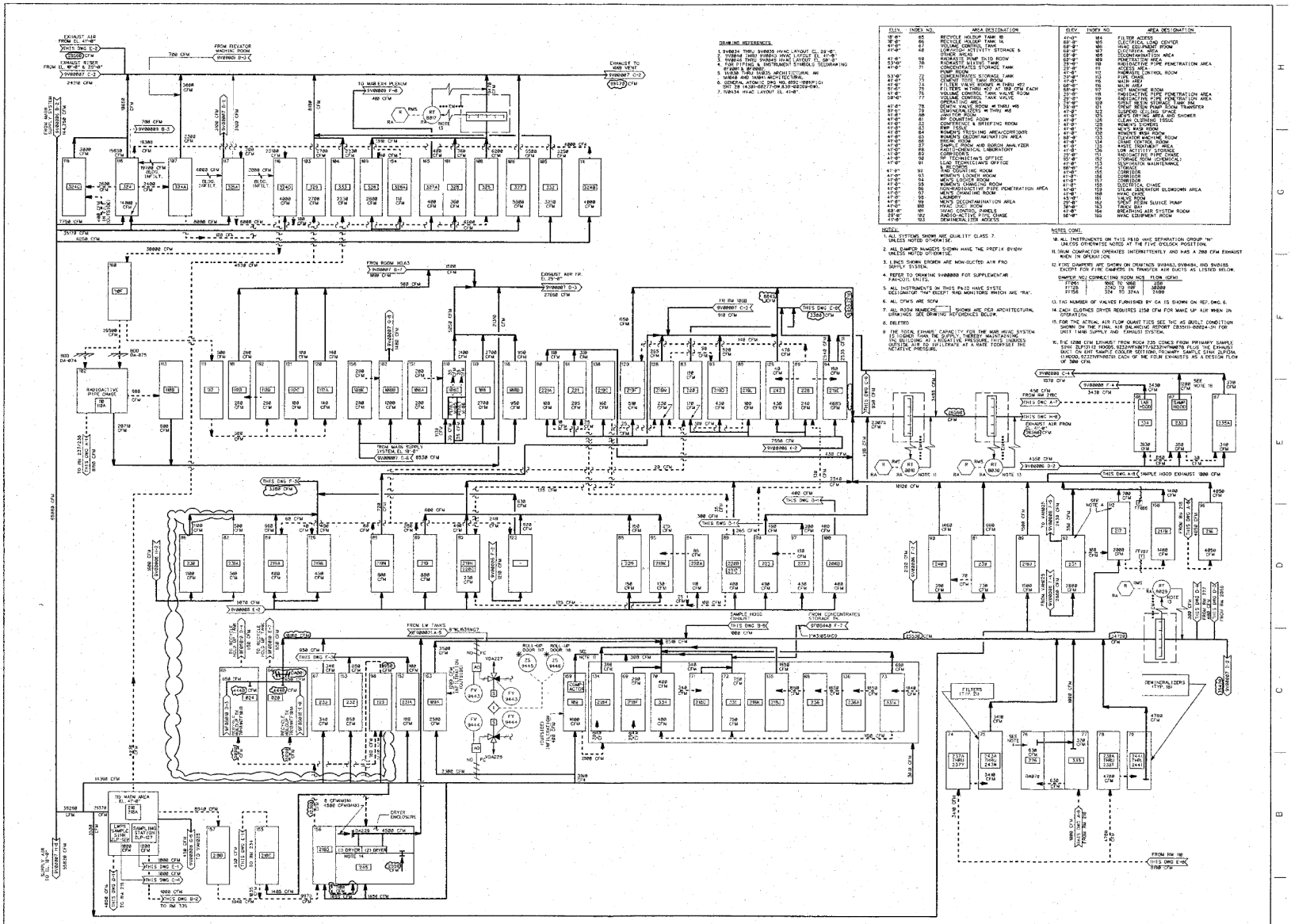

DRAWING REFERENCES:

1. 9V8834 THRU 9V8839 HVAC LAYOUT EL. 29'-6"
2. 9V8844 THRU 9V8842 HVAC LAYOUT EL. 41'-9"
3. 9V8846 THRU 9V8848 HVAC LAYOUT EL. 66'-3"
4. FOR PITING & INSTRUMENT SYMBOLS TELEMARKING BY 9V8001 & 9V8002
5. FOR PIPE CHASE, ARCHITECTURAL AND WALLS AND WASH ARCHITECTURAL
6. GENERAL ATOMIC DWG NO. 8892-1B8NF1G1 SHT 28 14381-8D177-DW 8J0-9B209-0W.
7. 9V8434 HVAC LAYOUT EL. 41'-9"

ELEV.	INDEX NO.	AREA DESIGNATION
18'-6"	65	RECYCLE HOLDUP TANK 1B
41'-9"	66	RECYCLE HOLDUP TANK 1A
41'-9"	67	VOLUME CONTROL TANK
41'-9"	68	LOW-LEVEL ACTIVITY STORAGE & OTHER AREAS
41'-9"	69	RADWASTE BUMP SKID ROOM
41'-9"	70	RADWASTE PUMP ROOM
41'-9"	71	CONCENTRATES STORAGE TANK PUMP ROOM
53'-6"	72	CONCENTRATES STORAGE TANK
41'-9"	73	CEMENT MIXER TANK ROOM
41'-9"	74	FILTERS #THRU #27 & #30 THRU #37
41'-9"	75	FILTERS #THRU #27 AT 950 CFM EACH
41'-9"	76	VOLUME CONTROL TANK VALVE ROOM
24'-6"	77	VOLUME CONTROL TANK VALVE ROOM
41'-9"	78	DEMINERALIZERS #1 THRU #5
41'-9"	79	DEMINERALIZERS #6 THRU #10
41'-9"	80	DEMINERALIZERS #11 THRU #15
41'-9"	81	JANITOR ROOM
41'-9"	82	CHEMICAL & SAMPLING ROOM
41'-9"	83	EQUIPMENT & SAMPLING ROOM
41'-9"	84	EMP TOILET
41'-9"	85	WOMEN'S TRISHING AREA/CORRIDOR
41'-9"	86	WOMEN'S DECONTAMINATION AREA
41'-9"	87	MEN'S TRISHING AREA
41'-9"	88	SAMPLE ROOM AIR BORON ANALYZER
41'-9"	89	RADIO-CHEMICAL LABORATORY
41'-9"	90	CORRIDORS
41'-9"	91	RP TECHNICIAN'S OFFICE
41'-9"	92	RP TECHNICIAN'S OFFICE
41'-9"	93	LAB TECH
41'-9"	94	2ND DOUATING ROOM
41'-9"	95	WOMEN'S LOUNGE ROOM
41'-9"	96	MEN'S LOUNGE ROOM
41'-9"	97	CORRIDOR/SHIELDING ROOM
41'-9"	98	CORRIDOR/SHIELDING PIPE PENETRATION AREA
41'-9"	99	MEN'S DRESSING ROOM
41'-9"	100	LAUNDRY
41'-9"	101	MEN'S DECONTAMINATION AREA
41'-9"	102	MEN'S TRISHING AREA
66'-9"	103	HVAC CONTROL PANELS
29'-6"	104	RADIO-ACTIVE PIPE CHASE
41'-9"	105	DEMINERALIZER ACCESS

ELEV.	INDEX NO.	AREA DESIGNATION
41'-9"	106	FILTER ACCESS
66'-9"	107	ELECTRICAL LOAD CENTER
66'-9"	108	HVAC EQUIPMENT ROOM
66'-9"	109	HVAC CHASE
66'-9"	110	DECONTAMINATION AREA
66'-9"	111	PENETRATION AREA
66'-9"	112	RADIOACTIVE PIPE PENETRATION AREA
66'-9"	113	PORTA-CABIN
41'-9"	114	PROCESS CONTROL ROOM
41'-9"	115	PIPE CHASE
41'-9"	116	MAIN AREA
41'-9"	117	MAIN AREA
41'-9"	118	HOT MACHINE ROOM
29'-6"	119	RADIOACTIVE PIPE PENETRATION AREA
29'-6"	120	RADIOACTIVE PIPE PENETRATION AREA
29'-6"	121	SPENT RESIN STORAGE TANK RM.
29'-6"	122	SPENT RESIN STORAGE/SHIPPING TRANSFER
41'-9"	123	SUSPENDED CEILING SPACE
41'-9"	124	MEN'S DRYING AREA AND SHOWER
41'-9"	125	CLEAN CLOTHING ISSUE
41'-9"	126	WOMEN'S SCRUBS
41'-9"	127	MEN'S SCRUBS
41'-9"	128	WOMEN'S WASH ROOM
66'-9"	129	ELEVATOR MACHINE ROOM
41'-9"	130	SMART CONTROL ROOM
41'-9"	131	UNITS ACTIVITY STORAGE
41'-9"	132	LOW-LEVEL ACTIVITY STORAGE
41'-9"	133	RADIOACTIVE PIPE CHASE
29'-6"	134	STORAGE ROOM (CHEMICAL)
41'-9"	135	SUPERVISOR MAINTENANCE
41'-9"	136	CORRIDOR
41'-9"	137	CORRIDOR
41'-9"	138	CORRIDOR
41'-9"	139	CORRIDOR
41'-9"	140	CORRIDOR
41'-9"	141	DECONTAMINATION CHASE
41'-9"	142	STEAM GENERATOR BLOWDOWN AREA
41'-9"	143	HVAC CHASE
41'-9"	144	VALVE ROOM
29'-6"	145	SPENT RESIN SLUICE PUMP
29'-6"	146	HVAC CHASE
41'-9"	147	BREAKING AIR SYSTEM ROOM
66'-9"	148	HVAC EQUIPMENT ROOM

NOTES:

1. ALL SYSTEMS SHOWN ARE QUALITY CLASS 7.
2. ALL DAMPER NUMBERS SHOWN HAVE THE PREFIX 9V8101 UNLESS NOTED OTHERWISE.
3. LINES SHOWN BROWN ARE NON-DUCTED AIR FRO SUPPLY SYSTEM.
4. REFER TO DRAWING 9V8000B FOR SUPPLEMENTAR FAN-COIL UNITS.
5. ALL INSTRUMENTS ON THIS P&ID HAVE SYSTE DESIGNATOR "RM" EXCEPT RAD MONITORS WHICH ARE "RA".
6. ALL CFM'S ARE SCFM
7. ALL ROOM NUMBERS SHOWN ARE PER ARCHITECTURAL DRAWINGS. SEE DRAWING REFDRICKES BELOW.
8. DELETED
9. THE TOTAL EXHAUST CAPACITY FOR THE MAR HVAC SYSTEM IS HIGHER THAN THE SUPPLY, THEREBY MAINTAINING THE BUILDING AT A NEGATIVE PRESSURE THRU INDUCED AIR TO INFILTRATE AT A RATE TOOFSET THE NEGATIVE PRESSURE.

NOTES CONT.

10. ALL INSTRUMENTS ON THIS P&ID HVAC SEPARATION GROUP "N" UNLESS OTHERWISE NOTED AT THE FIVE DYELOCK POSITION.
11. DRUM COMPACTOR OPERATES INTERMITTENTLY AND HAS A 200 CFM EXHAUST WHEN IN OPERATION.
12. FIRE DAMPERS ARE SHOWN ON DRAWINGS 9V8483, 9V8484, AND 9V8485 EXCEPT FOR FIRE DAMPERS IN TRANSFER AIR DUCTS AS LISTED BELOW.

DAMPER NO.	CONNECTING ROOM NOS.	FLOW (CFM)
FF061	9008 TO 9008	200
FF126	2342 TO 1BP	18000
FF158	324 TO 324A	2400

13. TAG NUMBER OF VALVES FURNISHED BY CA IS SHOWN ON REF. DWG. 6.
14. EACH CLOTHES DRYER REQUIRES 1250 CFM FOR MAKE UP AIR WHEN IN OPERATION.
15. FOR THE ACTUAL AIR FLOW QUANTIES SEE THE AS BUILT CONDITION SHOWN ON THE FINAL AIR BALANCING REPORT CB5510-0B024-3N FOR UNIT 1 MAR SUPPLY AND EXHAUST SYSTEM.
16. THE 1200 CFM EXHAUST FROM ROOM 235 COMES FROM PRIMARY SAMPLE SINK ZLP1213 HOODS 9232HFN0177/9232HFN0178 PLUS THE EXHAUST DUCT ON EHT SAMPLE COOLER SOT1DWG. PRIMARY SAMPLE SINK ZLP1214 (1.HOOD 9232HFN0179) EACH OF THE FOUR EXHAUSTS AS A DESIGN FLOW OF 1000 CFM.

REV. NO.	DATE	REVISION	DRIG	CKR	RE	DV	SE
14	10/01/99	INCORP. DCN 9702756.					
13	11-29-82	ISSUED FOR CONSTRUCTION.					

LNB SIGNATURES ON FILE

SOUTH TEXAS PROJECT
NUCLEAR OPERATING COMPANY

PRIORITY	CADD FILE NO.	FSUG NO.	STI-NO	SCALE	DWG. NO.	SHT.	REV
1	FJA259.141	D870928	2ag10101	NONE	7V1009V000011ad	—	14

PIPING & INSTRUMENTATION DIAGRAM
MECHANICAL AUXILIARY BUILDING
HVAC FLOW DIAGRAM

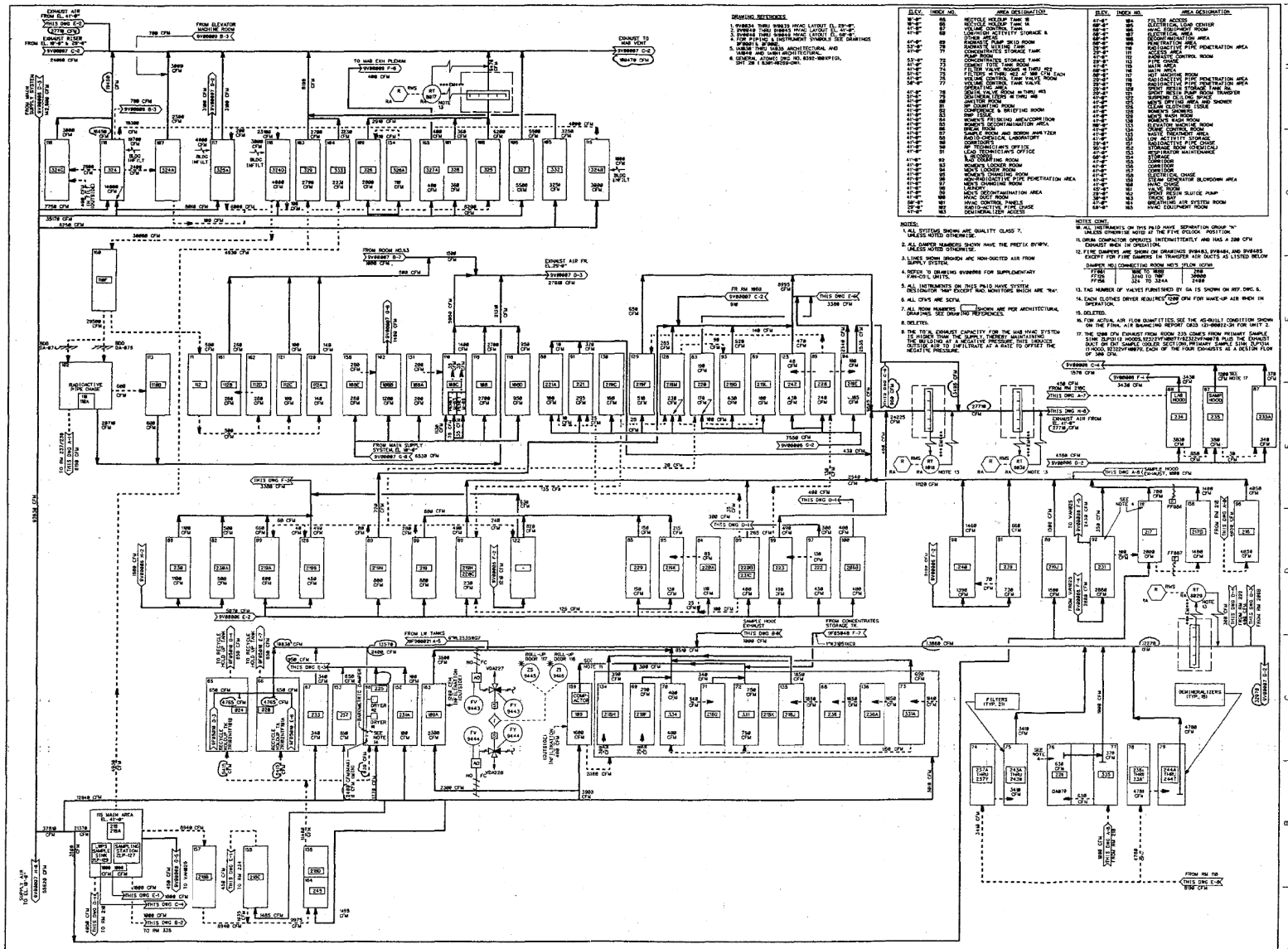

DRAWING REFERENCES

1. 5V08634 THRU 5V08735 HVAC LAYOUT EL 23'-9"
2. 2V08948 THRU 2V08953 HVAC LAYOUT EL 29'-9"
3. 2V08946 THRU 2V08948 HVAC LAYOUT EL 29'-9"
4. FOR PIPING & INSTRUMENT SYMBOLS SEE DRAWINGS 5V08815 & 5V08816.
5. FOR ROOM NAMES SEE 5V8635 ARCHITECTURAL AND 5V8636 AND 5V8637 ARCHITECTURAL.
6. GENERAL ATOMIC DWG NO. 8392-1B8KFEGD, SHT 2B (5JM1-8E22-0M).

ELEV.	INDEX NO.	AREA DESIGNATION
19'-6"	69	RECYCLE HOLDUP TANK B
19'-6"	68	RECYCLE HOLDUP TANK A
19'-6"	67	VOLUME CONTROL TANK
19'-6"	66	LOW-MEDIUM ACTIVITY STORAGE & PROCESSING
19'-6"	65	RADWASTE PUMP SKID ROOM
33'-6"	76	RADWASTE BITUMINE TANK
33'-6"	75	CONCENTRATES STORAGE TANK
	74	COMPACTOR
33'-6"	73	CONCENTRATES STORAGE TANK
41'-6"	72	CEMENT TOTE TANK ROOM
41'-6"	71	FILTER VALVE ROOMS 48 THRU 52
41'-6"	70	FILTERS 48 THRU 52 AT 300 CFM EACH
33'-6"	75	VOLUME CONTROL TANK VALVE ROOM
33'-6"	77	VOLUME CONTROL TANK VALVE OPERATING ROOM
41'-6"	78	DEMINERALIZER VALVE ROOM 46 THRU 49
41'-6"	79	DEMINERALIZERS 46 THRU 49
41'-6"	80	LAUNDRY ROOM
41'-6"	81	LAUNDRY COUNTING ROOM
41'-6"	82	CONFERENCE & BRIEFING ROOM
41'-6"	83	RWP TOOLS
41'-6"	84	WOMEN'S DRESSING AREA/CORRIDOR
41'-6"	85	WOMEN'S DECONTAMINATION AREA
41'-6"	86	SHOWER ROOM
41'-6"	87	SAMPLE ROOM AND BORON ANALYZER
41'-6"	88	RADIO-CHEMICAL LABORATORY
41'-6"	89	SAMPLE ROOM
41'-6"	90	SUPERVISOR'S OFFICE
41'-6"	91	LEAD TECHNICIAN'S OFFICE
41'-6"	92	LAB COUNTER
41'-6"	93	LAB COUNTING ROOM
41'-6"	94	MEN'S DRESSING ROOM
41'-6"	95	MEN'S LOCKER ROOM
41'-6"	96	WOMEN'S CHANGING ROOM
41'-6"	97	NON-RADIOACTIVE PIPE PENETRATION AREA
41'-6"	98	MEN'S CHANGING ROOM
41'-6"	99	LAUNDRY
41'-6"	100	MEN'S DECONTAMINATION AREA
41'-6"	101	HVAC DUCT ROOM
58'-6"	102	HVAC CONTROL PANELS
58'-6"	103	RADIO-ACTIVE PIPE CHASE
58'-6"	104	DECHEMICAL ICE ACCESS
58'-6"	105	FILTER ACCESS
58'-6"	106	ELECTRICAL LOAD CENTER
58'-6"	107	HVAC EQUIPMENT ROOM
58'-6"	108	ELECTRICAL AREA
58'-6"	109	ELECTRICAL LOAD CENTER
58'-6"	110	HOT MACHINE ROOM
58'-6"	111	RADIOACTIVE PIPE PENETRATION AREA
58'-6"	112	RADIOACTIVE PIPE PENETRATION AREA
58'-6"	113	SPENT RESIN STORAGE TANK B4
58'-6"	114	SPENT RESIN STORAGE TANK B4
58'-6"	115	SPENT RESIN PUMP ROOM TRANSFER
58'-6"	116	SUSPENDED CEILING SPACE
58'-6"	117	MEN'S DRESSING AREA AND SHOWER
58'-6"	118	MEN'S DRESSING AREA
58'-6"	119	SAMPLE ROOM AND BORON ANALYZER
58'-6"	120	WOMEN'S GARDEN
58'-6"	121	WOMEN'S BADGE ROOM
58'-6"	122	WOMEN'S WASH ROOM
58'-6"	123	ELEVATOR MACHINE ROOM
58'-6"	124	HOT MACHINE ROOM
58'-6"	125	WASTE TREATMENT AREA
58'-6"	126	LOW ACTIVITY STORAGE
58'-6"	127	MEDIUM ACTIVITY STORAGE
58'-6"	128	SUSPENDED CEILING SPACE
58'-6"	129	SEDIMENTATION TANK
58'-6"	130	SEDIMENTATION MAINTENANCE
58'-6"	131	STORAGE
58'-6"	132	CORRIDOR
58'-6"	133	CORRIDOR
58'-6"	134	CORRIDOR
58'-6"	135	CORRIDOR
58'-6"	136	ELECTRICAL CHASE
58'-6"	137	STEAM GENERATOR BLOWDOWN AREA
58'-6"	138	HVAC CHASE
58'-6"	139	HVAC CHASE
58'-6"	140	SPENT RESIN SLUICE PUMP
58'-6"	141	TRUCK BAY
58'-6"	142	BREATHING AIR SYSTEM ROOM
58'-6"	143	HVAC EQUIPMENT ROOM

NOTES:

1. ALL SYSTEMS SHOWN ARE QUALITY CLASS 7, UNLESS NOTED OTHERWISE.
2. ALL DAMPER NUMBERS SHOWN HAVE THE PREFIX 5V08991, UNLESS NOTED OTHERWISE.
3. LINES SHOWN SHOWN ARE NON-DUCTED AIR FROM SUPPLY SYSTEM.
4. REFER TO DRAWING 5V08992 FOR SUPPLEMENTARY FAN-COIL UNITS.
5. ALL INSTRUMENTS ON THIS P&ID HAVE SYSTEM DESIGNATOR "HVF" EXCEPT RAD MONITORS WHICH ARE "RAY".
6. ALL CFM'S ARE SCFM.
7. ALL ROOM NAMES SHOWN ARE PER ARCHITECTURAL DRAWING. SEE DRAWING REFERENCES.
8. DELETED.
9. THE TOTAL EXHAUST CAPACITY FOR THE HAB HVAC SYSTEM IS HIGHER THAN THE SUPPLY, THEREBY MAINTAINING THE BUILDING AT A NEGATIVE PRESSURE. THIS INDUCES OUTSIDE AIR TO INFILTRATE AT A RATE TO OFFSET THE NEGATIVE PRESSURE.

NOTES CONT.

10. ALL INSTRUMENTS ON THIS P&ID HAVE SEPARATION GROUP "N" UNLESS OTHERWISE NOTED AT THE FIVE O'CLOCK POSITION.
11. DRUM COMPACTOR OPERATES INTERMITTENTLY AND HAS A 200 CFM EXHAUST WHEN IN OPERATION.
12. FIRE DAMPERS ARE SHOWN ON DRAWINGS 5V08983, 5V08984, AND 5V08985 EXCEPT FOR FIRE DAMPERS IN TRANSFER AIR DUCTS AS LISTED BELOW

DAMPER NO.	CONNECTING ROOM NOS.	FLOW (CFM)
FF861	306 TO 308	2968
FF26	324D TO 326	30900
FF56	324 TO 324A	2489

13. TAG NUMBER OF VALVES FURNISHED BY GA IS SHOWN ON REF. DWG. 6.
14. EACH CLOTHES DRYER REQUIRES 1000 CFM FOR MAKE-UP AIR WHEN IN OPERATION.
15. DELETED.
16. FOR ACTUAL AIR FLOW QUANTITIES, SEE THE AS-BUILT CONDITION SHOWN ON THE FINAL AIR BALANCING REPORT C833 (21-00022-3H FOR UNIT 2.
17. THE 2088 CFM EXHAUST FROM ROOM 335 COMES FROM PRIMARY SAMPLE SYSTEM (5V08911, 5V08912, 5V08913, 5V08914, 5V08915) PLUS THE EXHAUST DUCT OF CNT SAMPLE COOLER SECTION, PRIMARY SAMPLE SYM. ELEVATION (5V0000, 5E22-2VF1M8970). EACH OF THE FOUR CHANGES AS A DESIGN FLOW OF 500 CFM.

REV. NO.	ISSUE DATE	REVISION	ORIG	CKR	RE	DV	SE	NO.	ISSUE DATE	REVISION	ORIG	CKR	RE	DV	SE
15	7-12-01	INCORP. DCN 8803589.	VIN SIGNATURES ON FILE												
0-14	11-26-92	ISSUED FOR CONSTRUCTION.													

SEEED DCN

SOUTH TEXAS PROJECT
NUCLEAR OPERATING COMPANY

PRIORITY	CADD FILE NO.	PSUG. NO.	STI NO.
1	FJA739.151	D878928	3131895//

PIPING & INSTRUMENTATION DIAGRAM
MECHANICAL AUXILIARY BUILDING
HVAC FLOW DIAGRAM

SCALE	DWG. NO.	SHT.	REV.
NONE	7V109V0001#2		15

Printed by vmaden ON Wednesday July 11 2001 AT 11:38:49 AM CDT

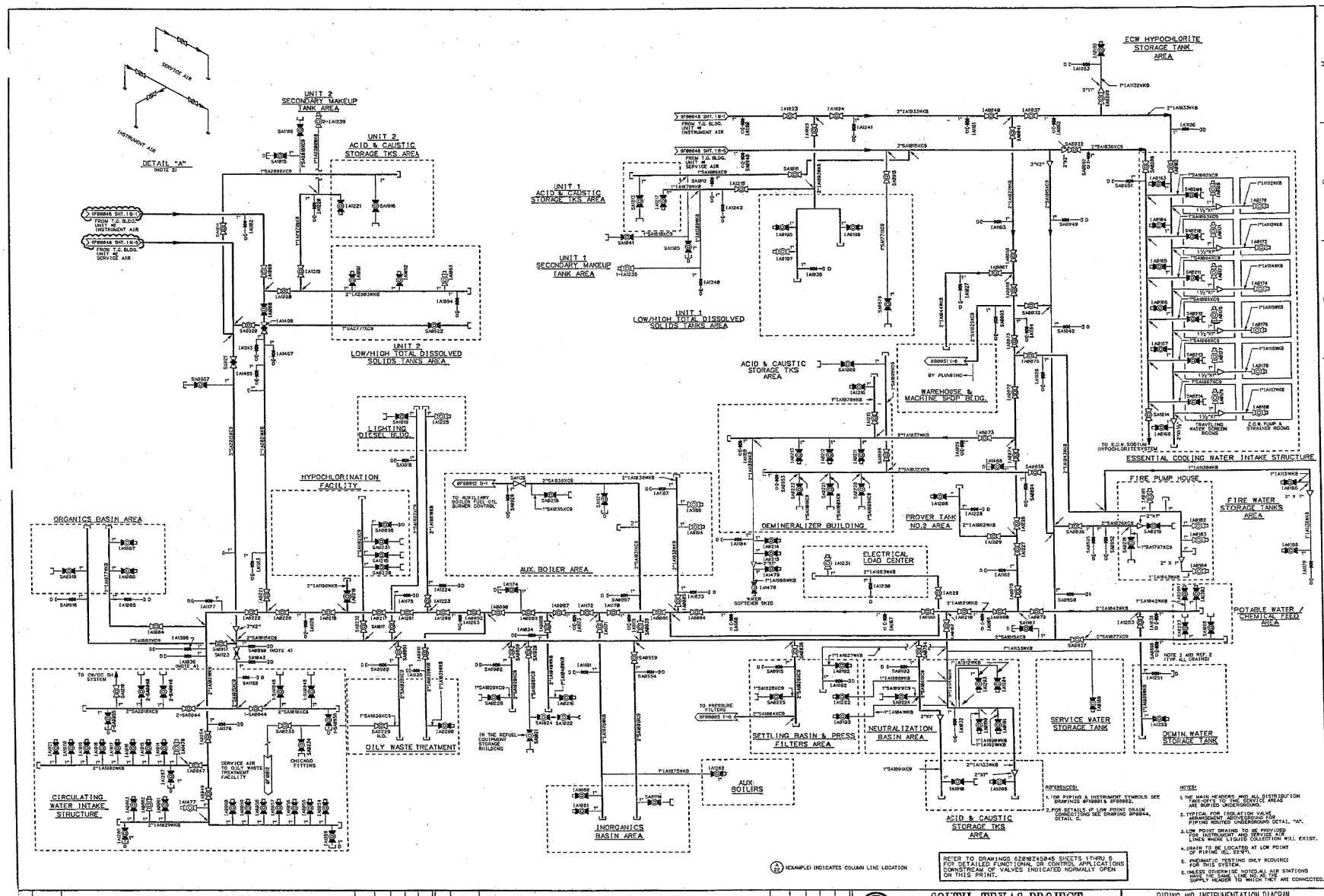

ISSUED DCN NO.	ISSUE DATE	REVISION	ORIG	CKR	RE	DV	SE
28	1-15-04	INCORP. DCN 8308408 & REVISED PER CR# 01-380-1.	JSH				
27	12-10-03	INCORP. DCN 8301287.	JSH	ON FILE			
26	2-28-02	REVISED PER CR 02-2510-4.	VJM	ON FILE			
25	9-25-92	ISSUED FOR CONSTRUCTION	SIGNATURES ON FILE				

NO.	ISSUE DATE	REVISION	ORIG	CKR	RE	DV	SE

SOUTH TEXAS PROJECT
NUCLEAR OPERATING COMPANY

PRIORITY	CADD FILE NO.	PSNG. NO.	STI. NO.	SCALE	DWG. NO.	SHT.	REV.
1	FJA812.281	0070928	31687619	NONE	8Q110F00003	-	28

PIPING AND INSTRUMENTATION DIAGRAM
INSTRUMENT & SERVICE AIR
YARD DISTRIBUTION

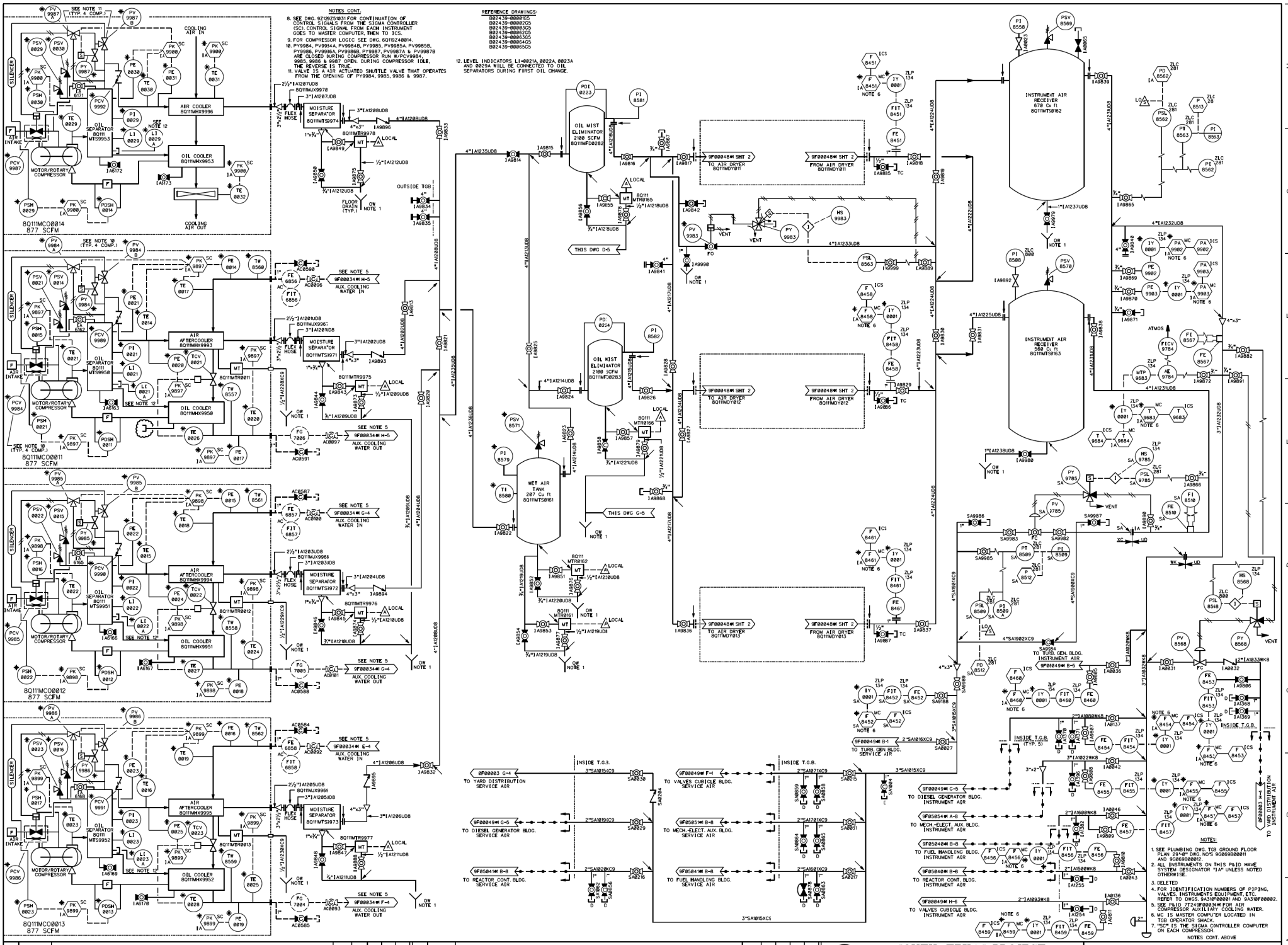

NO.	APPROVAL DATE	REVISION	ORIG	CKR	RE	DV	SE	NO.	APPROVAL DATE	REVISION	ORIG	CKR	RE	DV	SE
17	10-18-17	INCORP. DCN 1601579.													
16	04-28-16	REVISED PER CR# 16-5379.	JGL	ON FILE											
0-15	11-29-95	ISSUED FOR CONSTRUCTION.	SIGNATURES ON FILE												

SOUTH TEXAS PROJECT
NUCLEAR OPERATING COMPANY

PIPING & INSTRUMENTATION DIAGRAM
INSTRUMENT AIR/SERVICE AIR
COMPRESSORS & DISTRIBUTION

PRIORITY	CADD FILE NO.	FSUG. NO.	STI. NO.	SCALE	DWG. NO.	SHT.	REV.
1	8Q119F00048#SHT1.DGN	D070928	34554277	NONE	8Q119F00048#1	1	17

E:\SEED_US\09

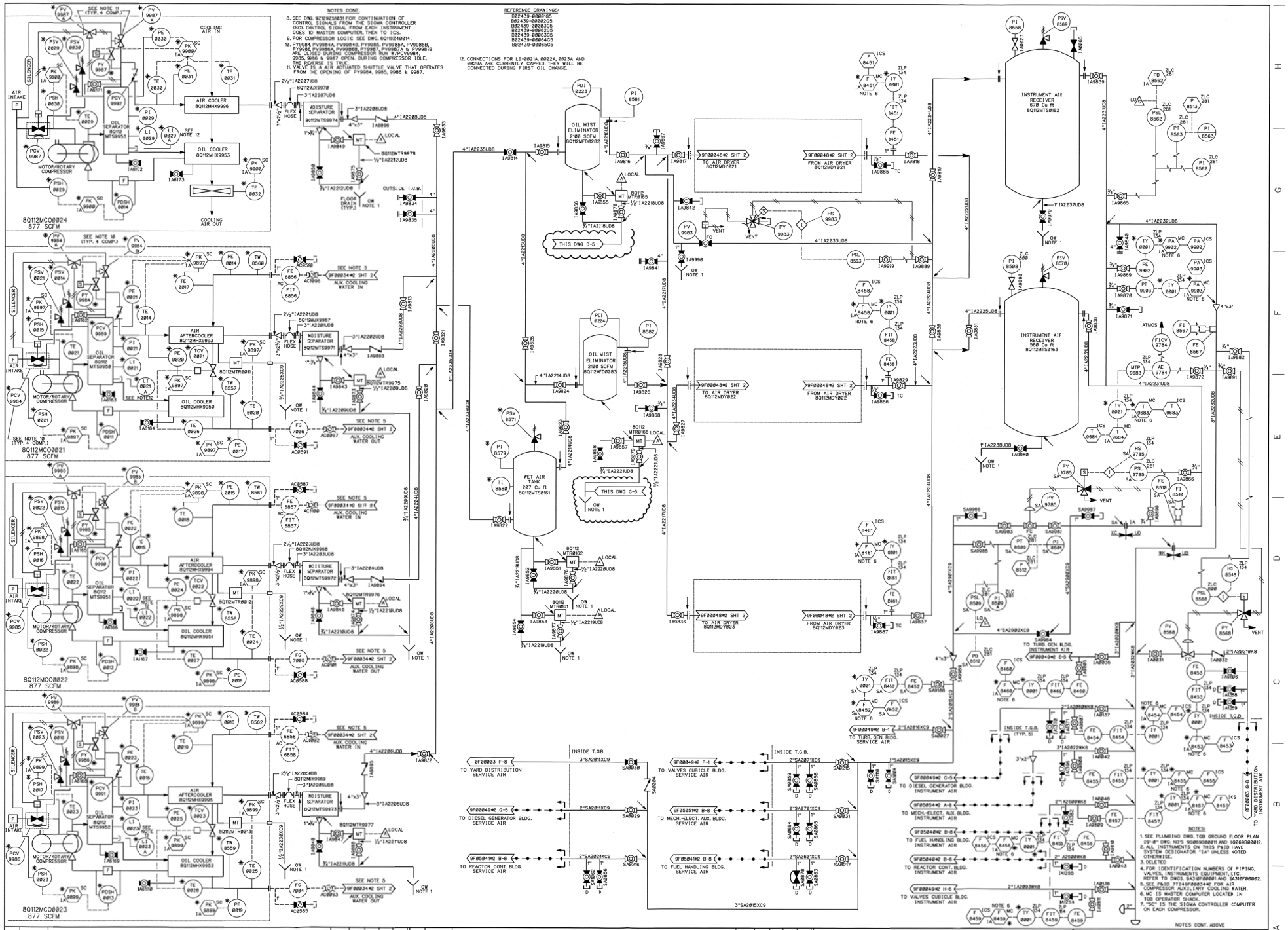

NO.	ISSUE DATE	REVISION	ORIG	CKR	RE	DV	SE
15	4-28-96	REVISED PER CR 96-5379	JGL		N/A	N/A	N/A
0-14	7-22-96	ISSUED FOR CONSTRUCTION.	SIGNATURES ON FILE				

ESCED DGN

NO.	ISSUE DATE	REVISION	ORIG	CKR	RE	DV	SE

SOUTH TEXAS PROJECT
NUCLEAR OPERATING COMPANY

PIPING & INSTRUMENTATION DIAGRAM
INSTRUMENT AIR/SERVICE AIR
COMPRESSORS & DISTRIBUTION

PRIORITY	CADD FILE NO.	FSUG. NO.	STI. NO.	SCALE	DWG. NO.	SHT.	REV.
1	8Q119F00048#2SHT1.DGN	D070928	3434320	NONE	8Q119F00048#2	1	15

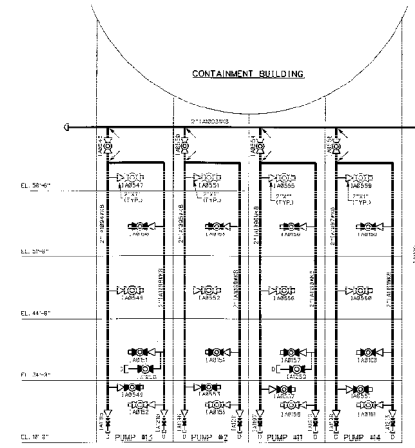

INSTRUMENT AIR
VALVES CUBICLE BLDG.

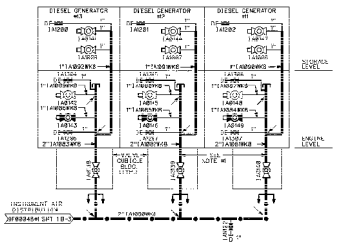

INSTRUMENT AIR
DIESEL GENERATOR BLDG.

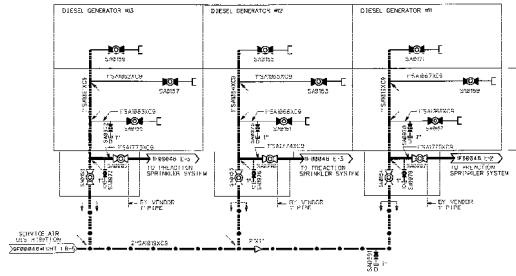

SERVICE AIR
DIESEL GENERATOR BLDG.

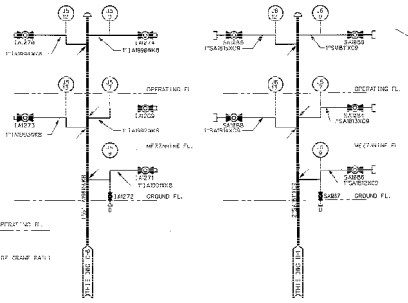

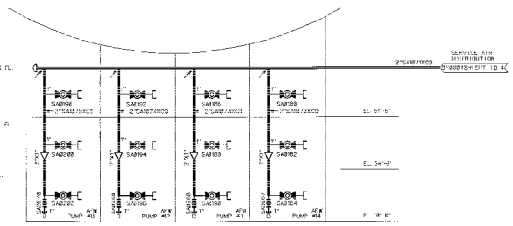

SERVICE AIR
VALVES CUBICLE BLDG.

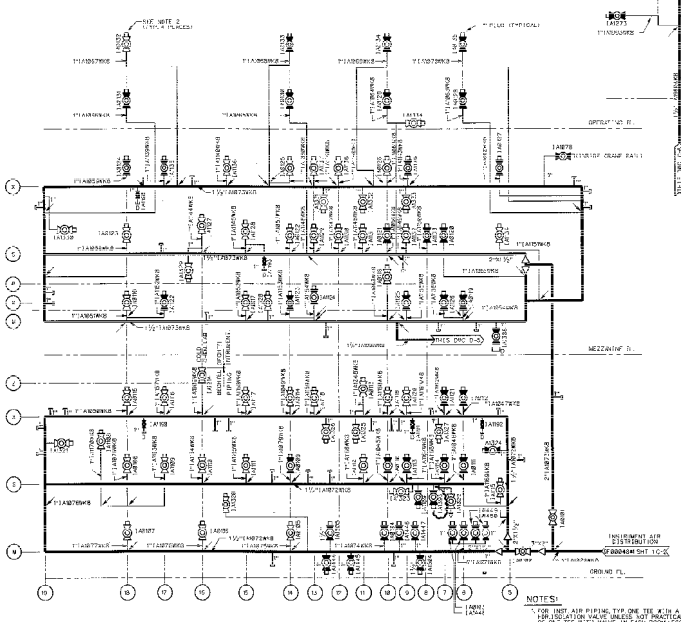

INSTRUMENT AIR
TURBINE GENERATOR BLDG.
(SEE NOTE 4)

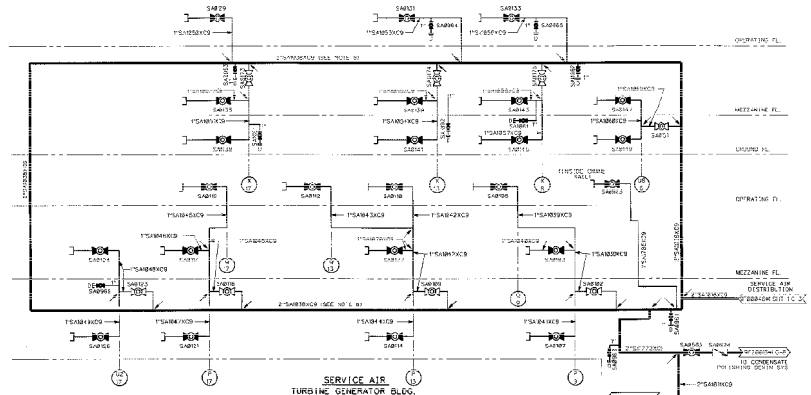

SERVICE AIR
TURBINE GENERATOR BLDG.
(SEE NOTE 4)

NOTES:

1. FOR INST. AIR PIPING, TYP. ONE TEE AT IN A PLUG EVERY 20 FT. AFTER HER DISCIPLINE VALVE UNLESS NOT PRACTICAL FOR NOT A PLUMBING. TO USE STRAIGHTVALVE IN EACH ROOM ABE 50 FT. OR LARGER. TWO TEES WITH VALVES IN EACH ROOM ABE 50 FT. OR LARGER.
2. LOCATE INST. AIR HEADER ISOLATION VALVES ON T-G OPERATING FLOOR AROUND TURBINE GENERATOR AS REQUIRED.
3. LOW POINT DRAIN CONNECTIONS TO BE PROVIDED AS SHOWN.
4. COLUMN LINE AUTOMATIC DESIGNATIONS ARE FOR PHYSICAL LOCATION OF VALVES ONLY.
5. PNEUMATIC TESTING ONLY REQUIRED FOR THIS SYSTEM.
6. THE SERVICE AIR LOOP HEADER AT THE TURBINE GEN BLDG. IS LOCATED APPROXIMATELY 28 FOOT ABOVE THE GROUND FLOOR.
7. VOLTAGE OTHERWISE UNLESS OTHERWISE SHOWN THIS P & ID. UNITS 1 AND 2 ARE 480 VOLTS, UNITS 3 & 4 IS 10 VOLTS. UNIT 1 & 2 IDENTIFICATION NUMBERS CONTAIN DC VALVES, UNITS 3 & 4 IDENTIFICATION NUMBERS CONTAIN DC VALVES. (REFERENCE DRAWING 1 & 2 FOR DRAWINGS 2A3N8B0001 AND 2A3N8B0002 FOR IDENTIFICATION NUMBER DC VALS.

REFERENCES

1. FOR PIPING AND INSTRUMENT SYMBOLS SEE DRAWINGS 2A3N8B0001 AND 2A3N8B0002.

REFER TO DRAWINGS 6011243643 AND 6011243646 SHEET 1 AND 2 FOR DETAILED FUNCTIONAL OR CONTROL APPLICATIONS DOWNSTREAM OF VALVES INDICATED NORMALLY OPEN ON THIS PRINT.

(A) (EXAMPLE) INDICATES COLUMN LINE LOCATION

REV.	ISSUE DATE	REVISION	ORIG	DWN	RT	SV	SC	NO.	ISSUE DATE	REVISION	DTIG	CHT	HL	LV	SL
19	12-20-93	REVISED ITEM 3 ON SHEET 1.	VJM												
18	4-22-96	INCORP. DCN 8400746	KS	ON FILE											
17	7-2-95	INCORP. DCN 8201201.	JSH	ON FILE											
16	5-22-95	INCORP. DCN 8300793.	LNB	ON FILE											
15	5-30-91	REVISED PER CR 91-5117-3.	VJM												
0-14	9-6-91	ISSUED FOR CONSTRUCTION.	SIGNATURES ON FILE												

SOUTH TEXAS PROJECT
NUCLEAR OPERATING COMPANY

PIPING & INSTRUMENTATION DIAGRAM
SERVICE AIR & INSTRUMENT AIR
TURBINE GENERATOR BLDG. & DIESEL GENERATOR BLDG.

PRIORITY	CADD FILE NO.	FSLI NO.	STI NO.	SCALE	DWG. NO.	SHT.	REV.
1	1JA070.191	0A0F0K00	3860518	NONE	6011SF000494		19

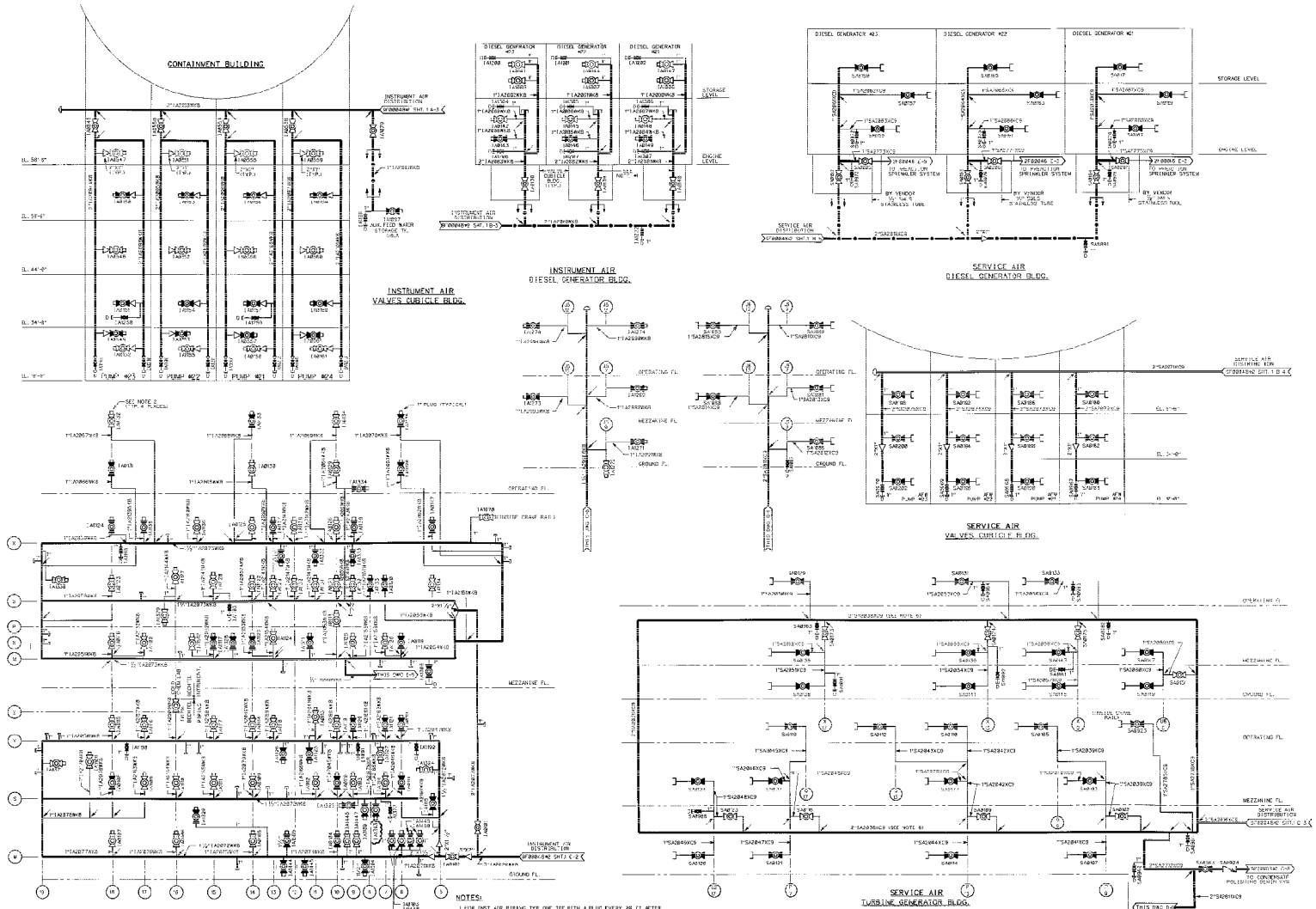

NOTES:

1. FOR INST. AIR PIPING, TFP ONE TEE WITH A PLUG EVERY 20 FT. AFTER HPI ISOLATION VALVE UNLESS NOT PRACTICAL FOR INST. A.T.M. OR ONE TEE WITH A PLUG IN EACH ROOM LOOP, WITH ONE TEE PER AND TWO TEES WITH VALVES IN EACH ROOM FOR 50 FT OR LARGER.
2. LOCATE INST. AIR HEADER ISOLATION VALVES ON T.G OPERATING FLOOR AROUND TURBINE GENERATOR AS REQUIRED.
3. LOW POINT DRAIN CONNECTIONS TO BE PROVIDED AS SHOWN.
4. COLUMN LINE ALPHANUMERIC DESIGNATIONS ARE FOR PHYSICAL LOCATION OF VALVES ONLY.
5. PNEUMATIC TESTING ONLY REQUIRED FOR THIS SYSTEM.
6. THE SERVICE AIR LOOP HEADER AT THE TURBINE GEN BLDG. IS LOCATED APPROXIMATELY 20 FEET ABOVE THE GROUND FLOOR.
7. FOR PIPING, VALVES, INSTRUMENTS, EQUIPMENT, ETC. REFER TO DRAWINGS 6A08F08001 AND 6A08F08002 FOR IDENTIFICATION NUMBER DETAILS.

REFERENCES

1. FOR PIPING AND INSTRUMENT DIAGRAMS SEE DRAWINGS 6A08F08001 AND 6A08F08002.

REFER TO DRAWINGS 6208Z45843 AND 6208Z45846 SHEETS (TYPICAL) FOR DETAILED FUNCTIONAL OR CONTROL APPLICATIONS DOWNSTREAM OF VALVES INDICATED NORMALLY OPEN ON THIS PRINT.

(A) EXAMPLE: INDICATES COLUMN LINE LOCATION

NO.	ISSUE DATE	REVISION	DRN	CKD	EL	QY	SL	RV	ISSUE DATE	REVISION	DRN	CKD	EL	QY	SL
18	11-06-90	REVISED HLR CR 18-1251	VPM												
17	4-22-04	INCORP. DCN 8420744	KS	ON FILE											
16	1-12-04	INCORP. DCN 8320716	JS	ON FILE											
15	5-22-03	INCORP. DCN 8300784	LNB	ON FILE											
14	3-16-02	REVISED TER CR = 02-7150.	JS	ON FILE											
0-13	9-6-83	ISSUED FOR CONSTRUCTION	SIGNATURES ON FILE												

SOUTH TEXAS PROJECT
NUCLEAR OPERATING COMPANY

PRIORITY	CADD FILE NO.	FSLG. NO.	STI. NO.
1	FJA476.181	9078928	3a6-5181

PIPING & INSTRUMENTATION DIAGRAM
SERVICE AIR & INSTRUMENT AIR
TURBINE GENERATOR BLDG. & DIESEL GENERATOR BLDG.

SCALE	DWG. NO.	SHT.	REV.
NONE	8Q119F00049H2		18

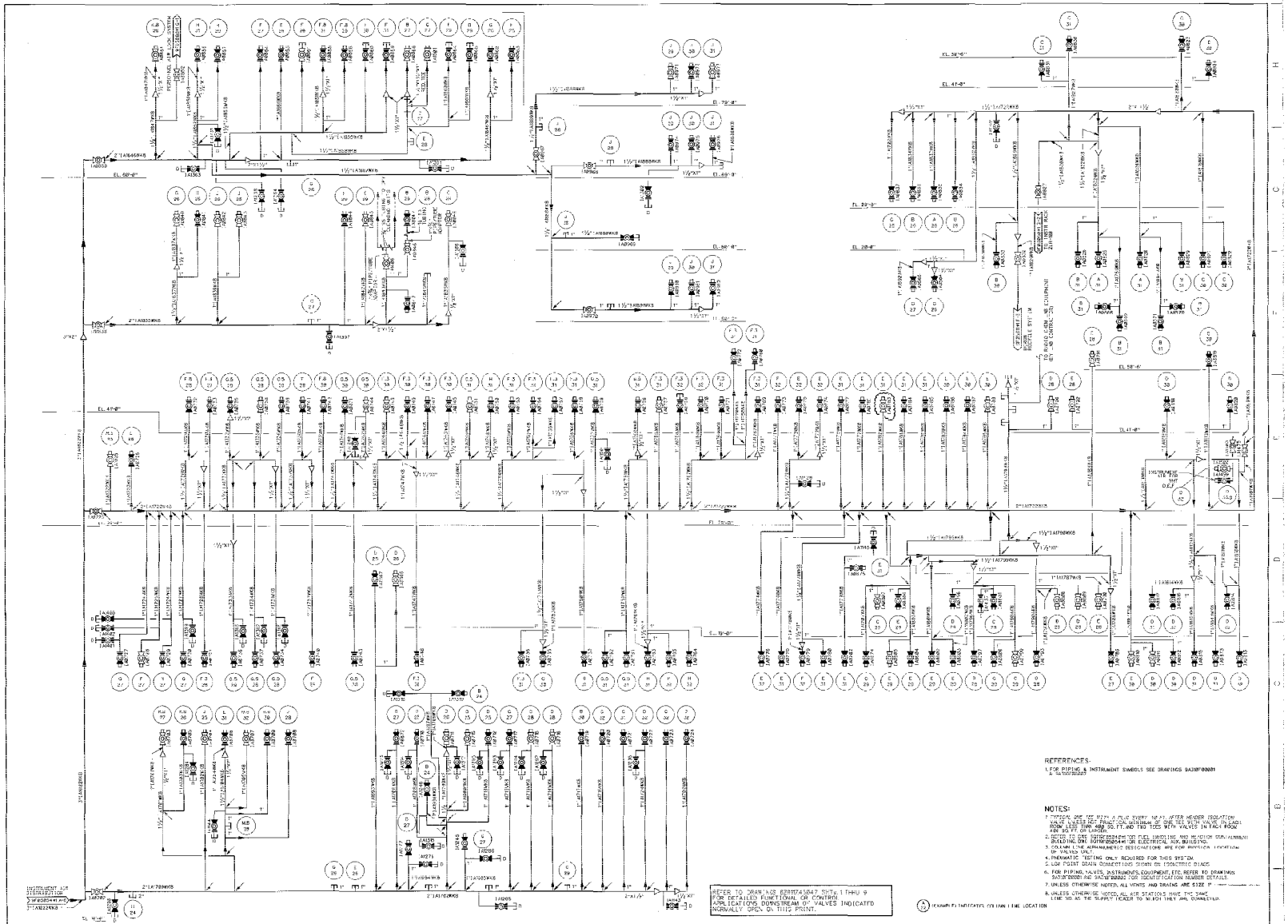

REFERENCES:

1. FOR PIPING & INSTRUMENT SYMBOLS SEE DRAWINGS 6A30F00001 & 6A30F00007

NOTES:

1. VALVES ARE TEST PER 27Y1 A CYCLE EVERY 18 M'S AFTER MOVED ISOLATION. VALVE LEAKS NOT PRACTICAL DUE DISTANCE OF CABLE TO TEST VALVE IN CABLE ROOM LESS THAN 400 SQ.FT AND TWO TIES WITH VALVES IN EACH ROOM 400 SQ.FT OR LARGER.
2. REFER TO DWG 6Q119F0204#1 FOR FUEL HANDLING AND REACTOR CONTAINMENT BUILDING, DWG 6Q119F0204#1 FOR ELECTRICAL AUX. BUILDING.
3. COLUMN LINE ALPHA-NUMERIC DESIGNATIONS ARE FOR APPROX. LOCATION OF VALVES ONLY.
4. PNEUMATIC TESTING ONLY REQUIRED FOR THIS SYSTEM.
5. LOW POINT DRAIN CONNECTIONS SHOWN ON ISOMETRIC DIAGS.
6. FOR PIPING, VALVES, INSTRUMENTS, EQUIPMENT, ETC. REFER TO DRAWINGS 6A30F00001 AND 6A30F00007 FOR IDENTIFICATION NUMBER DETAILS.
7. UNLESS OTHERWISE NOTED, ALL VENTS AND DRAINS ARE SIZE 1".
8. UNLESS OTHERWISE NOTED, ALL AIR STATIONS HAVE THE SAME LINE SIZE AS THE SUPPLY HEADER TO WHICH THEY ARE CONNECTED.

REFER TO DRAWINGS 6Q119F4504#7 SHTs. 1 THRU 9 FOR DETAILED FUNCTIONAL OR CONTROL APPLICATIONS DOWNSTREAM OF VALVES INDICATED NORMALLY OPEN ON THIS PRINT.

(A) EXAMPLE INDICATES FOR UNA LINE LOCATION

NO.	DATE	REVISION	ORIG	CKR	RC	DV	SE	NO	ISSUE DATE	REVISION	ORIG	CKR	RC	DV	SE
18	10-23-98	REVISED PER CR 98-13571.	TJU	JM	DR	JGL	MG								
17	6-30-98	REVISED PER CR#98-11749.	JGL	ON FILE											
16	3-6-98	REVISED PER CR#97-9633.	JSH	ON FILE											
15	12-11-97	INCORP. DCN 6791580.	JSH	ON FILE											
14	05-28-97	REVISED PER CR 97-5117-3	VJM	ON FILE											
0-13	3-15-97	ISSUED FOR CONSTRUCTION.	SIGNATURES ON FILE												

SEQ. NO. 15594

SOUTH TEXAS PROJECT
NUCLEAR OPERATING COMPANY

PIPING & INSTRUMENTATION DIAGRAM
MECHANICAL AUX. BUILDING
INSTRUMENT AIR

PRIORITY	CADD FILE NO.	FSAR NO.	STI NO	SCALE	DWG. NO.	SHT.	REV.
1	FJA028.181	09/9920	3276613	NONE	6Q119F0505Ø#1		18

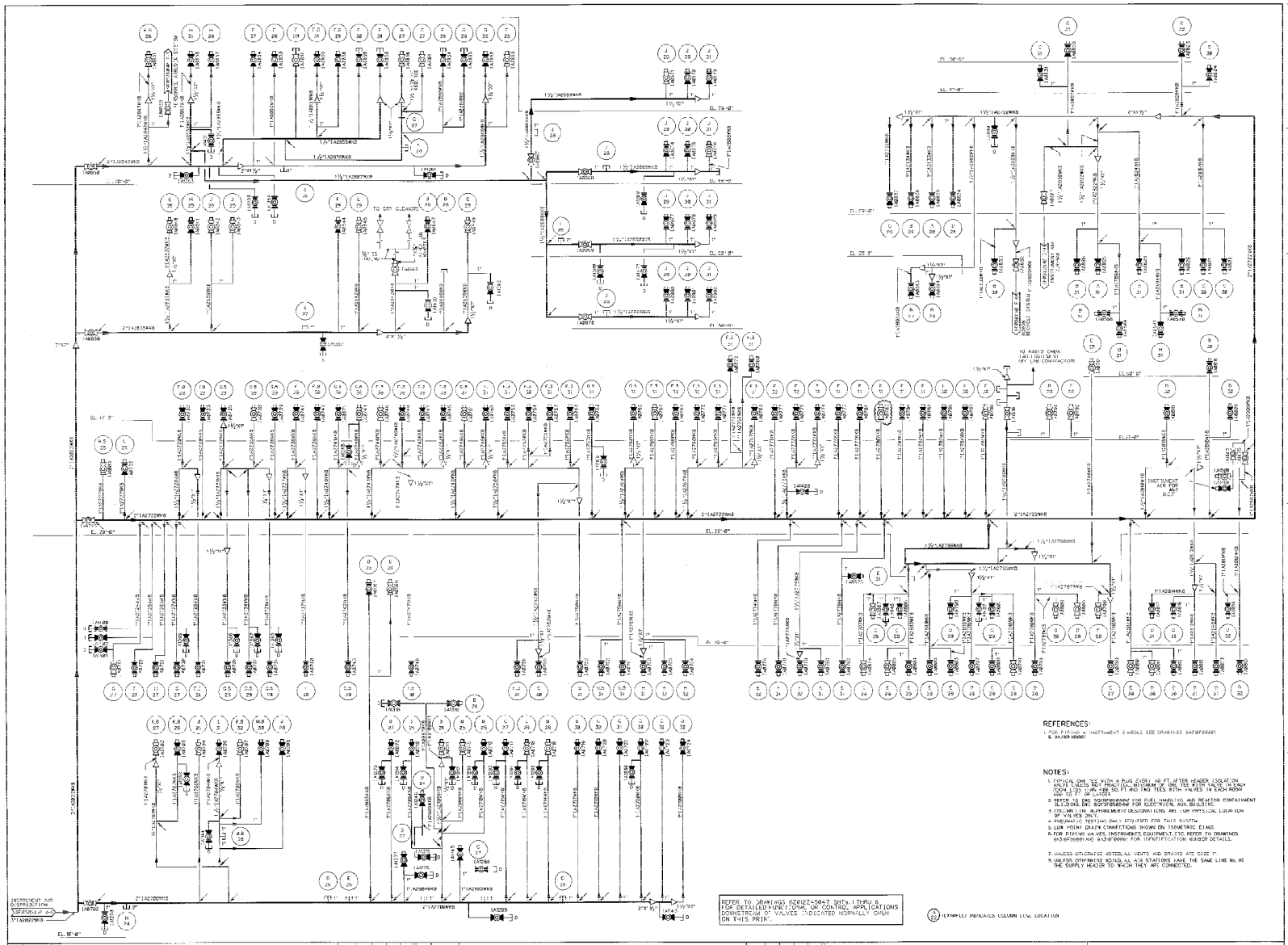

REFERENCES:

1. FOR PIPING & INSTRUMENT SYMBOLS SEE DRAWING 6X36F66661 & 6X36F66662

NOTES:

1. TYPICAL ONE TEE WITH A PLUG EVERY 100 FT. AFTER HEADER ISOLATION VALVE UNLESS NOT PRACTICAL. MINIMUM OF ONE TEE WITH VALVE IN EACH ROOM LESS (LWR 488 SQ.FT AND TWO TEES WITH VALVES IN EACH ROOM 400 SQ.FT OR LARGER.
2. REFER TO END ADJUSTMENTS FOR ELEC-HANDLING AND REACTOR CONTAINMENT BUILDING AND ADJUSTMENTS FOR ELECTRICAL AUX BUILDING.
3. COLUMN LINE ALPHANUMERIC DESIGNATIONS ARE FOR PHYSICAL LOCATION OF VALVES ONLY.
4. PNEUMATIC TESTING CONNECTIONS FOR THIS SYSTEM.
5. LOW POINT DRAIN CONNECTIONS SHOWN ON ISOMETRIC DIAGS.
6. FOR PIPING AND VDS, INSTRUMENTS, EQUIPMENT, ETC. REFER TO DRAWINGS 6X36F66661 AND 6X36F66662 FOR IDENTIFICATION NUMBER DETAILS.
7. UNLESS OTHERWISE NOTED, ALL VENTS AND DRAINS ARE SIZE 1".
8. UNLESS OTHERWISE NOTED, ALL AIR STATIONS HAVE THE SAME LINE No. AS THE SUPPLY HEADER TO WHICH THEY ARE CONNECTED.

REFER TO DRAWINGS 6Z0127-5047 SHTS. 1 THRU 6 FOR DETAILED FUNCTIONAL OR CONTROL APPLICATIONS DOWNSTREAM OF VALVES INDICATED NORMALLY OPEN ON THIS PRINT.

(22) (EXAMPLE) INDICATES COLUMN LINE LOCATION

NO.	ISSUE DATE	REVISION	ORIG	CKR	RE	DV	SE	NO.	ISSUE DATE	REVISION	ORIG	CKR	RE	DV	SE
11	10-14-10	REVISED PER CR 10-13874.	VJM												
10	6-30-10	REVISED PER CR 10-11749.	JGL	ON FILE											
9	6-28-01	REVISED PER CR 01-9117-3.	VJM	ON FILE											
0-8	0-02-82	ISSUED FOR CONSTRUCTION.	SIGNATURES ON FILE												

DESIGN DIV.

SOUTH TEXAS PROJECT
NUCLEAR OPERATING COMPANY

PIPING & INSTRUMENTATION DIAGRAM
MECHANICAL AUX. BUILDING
INSTRUMENT AIR

PRIORITY	CADD FILE NO.	FSUG. NO.	STI. NO.	SCALE	DWG. NO.	SHT.	REV.
1	FJA428.1:1	D078925	3271667.92	NONE	8Q119F05050#2		11

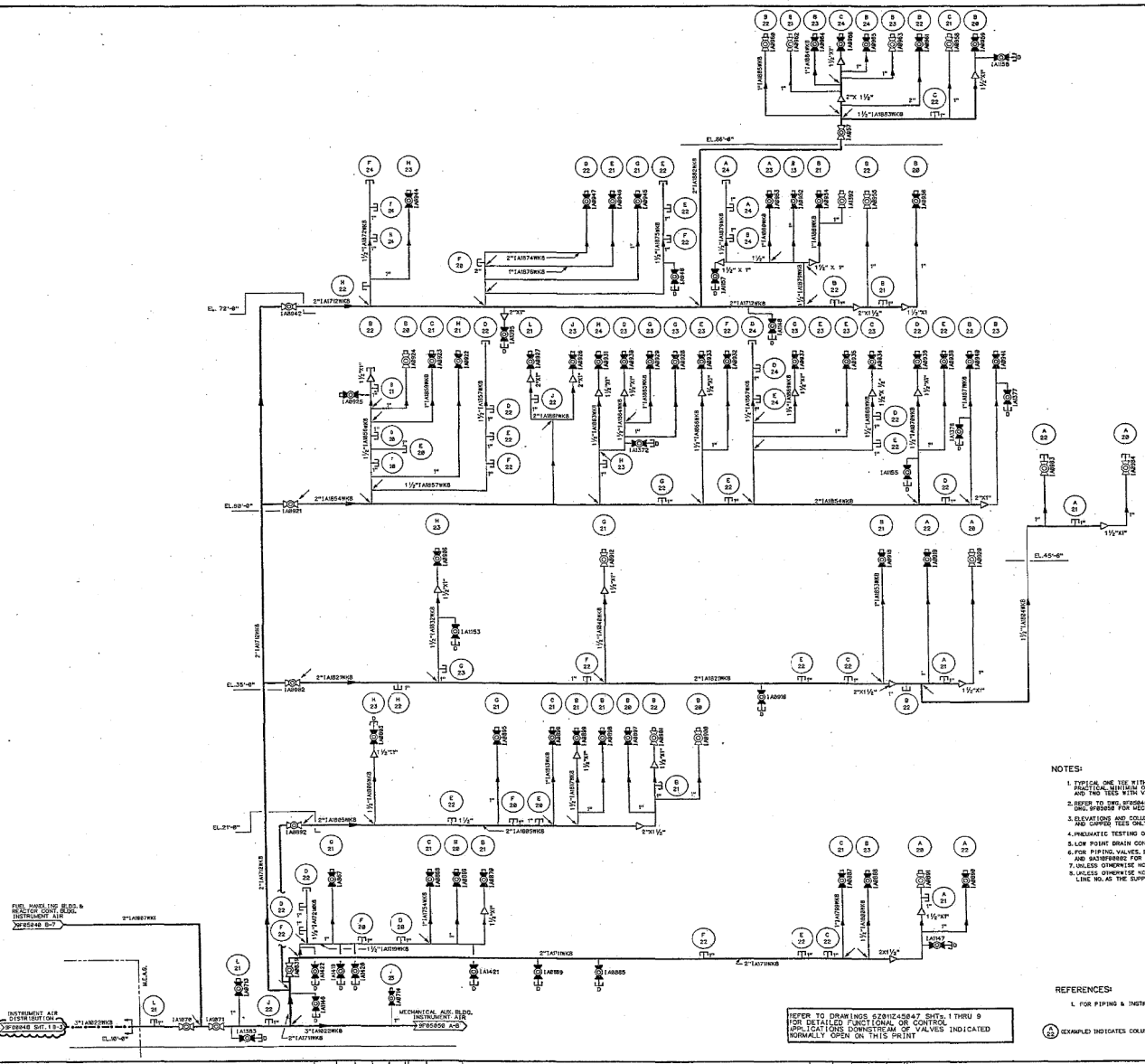

NOTES:

1. TYPICAL ONE TEE WITH A PLUG EVERY 48 FT. AFTER HEADER ISOLATION VALVE UNLESS NOT PRACTICAL. MINIMUM OF ONE TEE WITH VALVE IN EACH ROOM LESS THAN 400 SQFT. AND TWO TEES WITH VALVES IN EACH ROOM 400 SQFT. OR LARGER.
2. REFER TO DWG. 6F00048 FOR FUEL HANDLING AND REACTOR CONTAINMENT BUILDING DWG. 9F00058 FOR MECH. AUX. BLDG.
3. ELEVATIONS AND COLUMN LINE ALPHANUMERIC DESIGNATIONS FOR PHYSICAL LOCATION OF VALVES AND CAPPED TEES ONLY.
4. PNEUMATIC TESTING ONLY REQUIRED FOR THIS SYSTEM.
5. LOW POINT DRAIN CONNECTIONS SHOWN ON ISOMETRIC DIAGRAMS.
6. FOR PIPING, VALVES, INSTRUMENTS, EQUIPMENT, ETC. REFER TO DRAWINGS 9A3WF00001 AND 9A3WF00002 FOR IDENTIFICATION NUMBER DETAILS.
7. UNLESS OTHERWISE NOTED, ALL VENTS AND DRAINS ARE SIZE 1".
8. UNLESS OTHERWISE NOTED, ALL AIR STATIONS HAVE THE SAME LINE NO. AS THE SUPPLY HEADER TO WHICH THEY ARE CONNECTED.

REFERENCES:

1. FOR PIPING & INSTRUMENT SYMBOLS SEE DRAWINGS 6F00001 & 6F00002.

(A 22) EXAMPLED INDICATES COLUMN LINE LOCATION

REFER TO DRAWINGS 6Z01Z45047 SHTS. 1 THRU 9 FOR DETAILED FUNCTIONAL OR CONTROL APPLICATIONS DOWNSTREAM OF VALVES INDICATED NORMALLY OPEN ON THIS PRINT

REV. NO.	ISSUE DATE	REVISION	ORIG	CKR	RE	DV	SE
14	12-18-03	INCORPR. DCN 0301282.					
3	6-26-01	REVISED PER CR 01-5117-3.					
2-12	9-14-92	ISSUED FOR CONSTRUCTION.					

JSH VJM FK JAW
VJM ON FILE
SIGNATURES ON FILE

NO.	ISSUE DATE	REVISION	ORIG	CKR	RE	DV	SE

SOUTH TEXAS PROJECT
NUCLEAR OPERATING COMPANY

PIPING & INSTRUMENTATION DIAGRAM
ELECTRICAL AUXILIARY BUILDING
INSTRUMENT AIR

PRIORITY	CADD FILE NO.	FSUG. NO.	STI. NO.	SCALE	DWG. NO.	SHT.	REV.
1	FJA026.141	D070928	3168112	NONE	8Q119F05054 #1		14

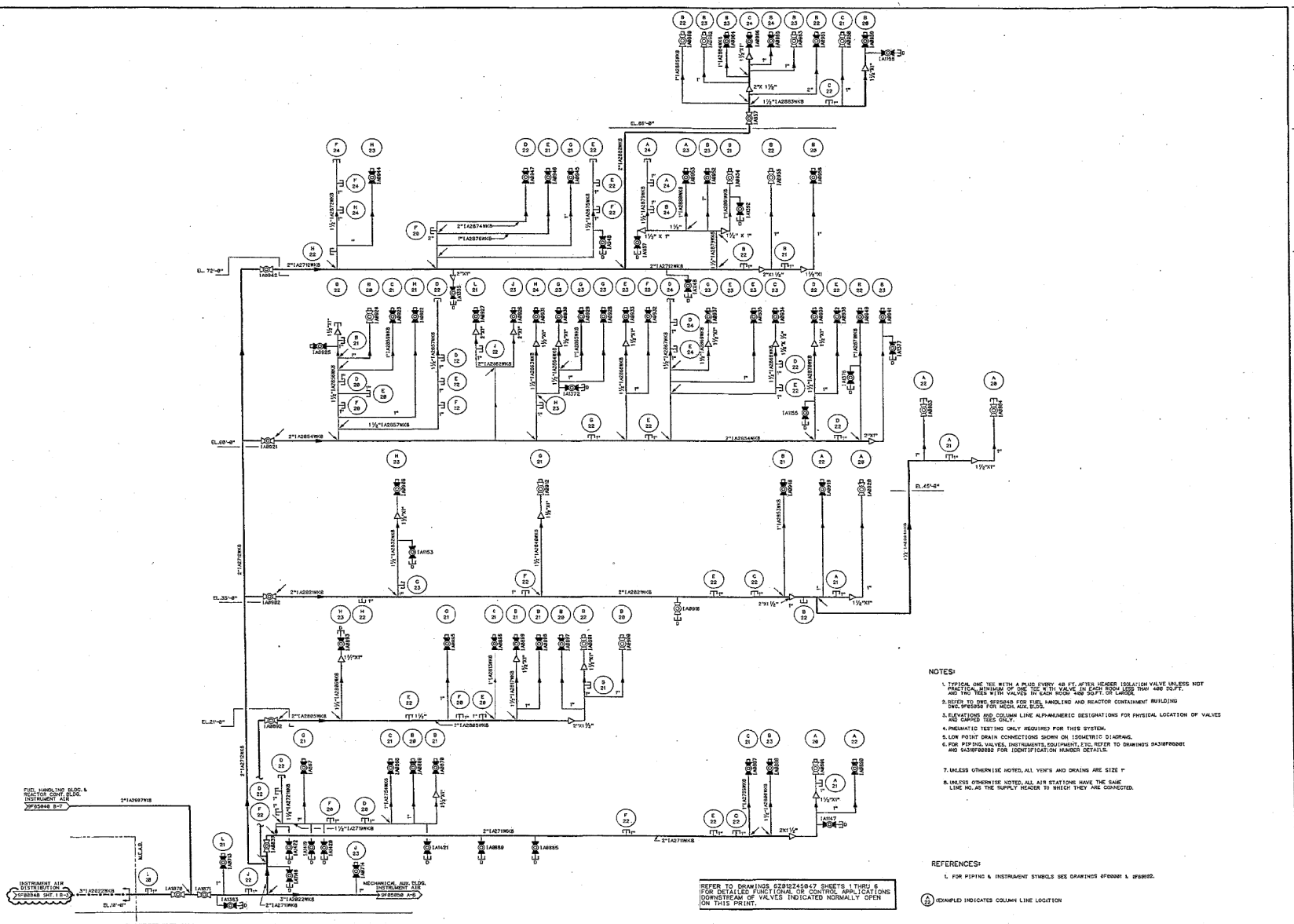

NOTES:

1. TYPICAL ONE TEE WITH A PLUG EVERY 48 FT. AFTER HEADER ISOLATION VALVE UNLESS NOT PRACTICAL, MINIMUM OF ONE TEE W.TH VALVE IN EACH ROOM LESS THAN 400 SQ.FT. AND TWO TEES WITH VALVES IN EACH ROOM 400 SQ.FT. OR LARGER.
2. REFER TO DWG. 9F05048 FOR FUEL HANDLING AND REACTOR CONTAINMENT BUILDING DWG. 9F05050 FOR MECH. AUX. BLDG.
3. ELEVATIONS AND COLUMN LINE ALPH-NUMERIC DESIGNATIONS FOR PHYSICAL LOCATION OF VALVES AND CAPPED TEES ONLY.
4. PNEUMATIC TESTING ONLY REQUIRED FOR THIS SYSTEM.
5. LOW POINT DRAIN CONNECTIONS SHOWN ON ISOMETRIC DIAGRAMS.
6. FOR PIPING, VALVES, INSTRUMENTS, EQUIPMENT, ETC. REFER TO DRAWINGS 9A31BF00001 AND 9A31BF00002 FOR IDENTIFICATION NUMBER DETAILS.
7. UNLESS OTHERWISE NOTED, ALL VENTS AND DRAINS ARE SIZE 1"
8. UNLESS OTHERWISE NOTED, ALL AIR STATIONS HAVE THE SAME LINE NO. AS THE SUPPLY HEADER TO WHICH THEY ARE CONNECTED.

REFERENCES:

1. FOR PIPING & INSTRUMENT SYMBOLS SEE DRAWINGS 9F00001 & 9F00002.

(A 22) (EXAMPLE) INDICATES COLUMN LINE LOCATION

REFER TO DRAWINGS 6Z01Z45047 SHEETS 1 THRU 6 FOR DETAILED FUNCTIONAL OR CONTROL APPLICATIONS DOWNSTREAM OF VALVES INDICATED NORMALLY OPEN ON THIS PRINT.

NO.	ISSUE DATE	REVISION	ORIG	CKR	RE	DV	SE
10	1-12-09	INCORP. DCN 030403.	JSH	JSH			
9	6-28-01	REVISED PER CR 01-5117-3.	VJM	ON FILE			
1-8	9-14-92	ISSUED FOR CONSTRUCTION.	SIGNATURES ON FILE				

NO.	ISSUE DATE	REVISION	ORIG	CKR	RE	DV	SE

SOUTH TEXAS PROJECT
NUCLEAR OPERATING COMPANY

PRIORITY	CADD FILE NO.	PSDG. NO.	STI. NO.
1	FJA426.101	0876928	31687270

PIPING & INSTRUMENTATION DIAGRAM
ELECTRICAL AUXILIARY BUILDING
INSTRUMENT AIR

SCALE	DWG. NO.	SHT.	REV.
NONE	8Q119F05054#2	-	10

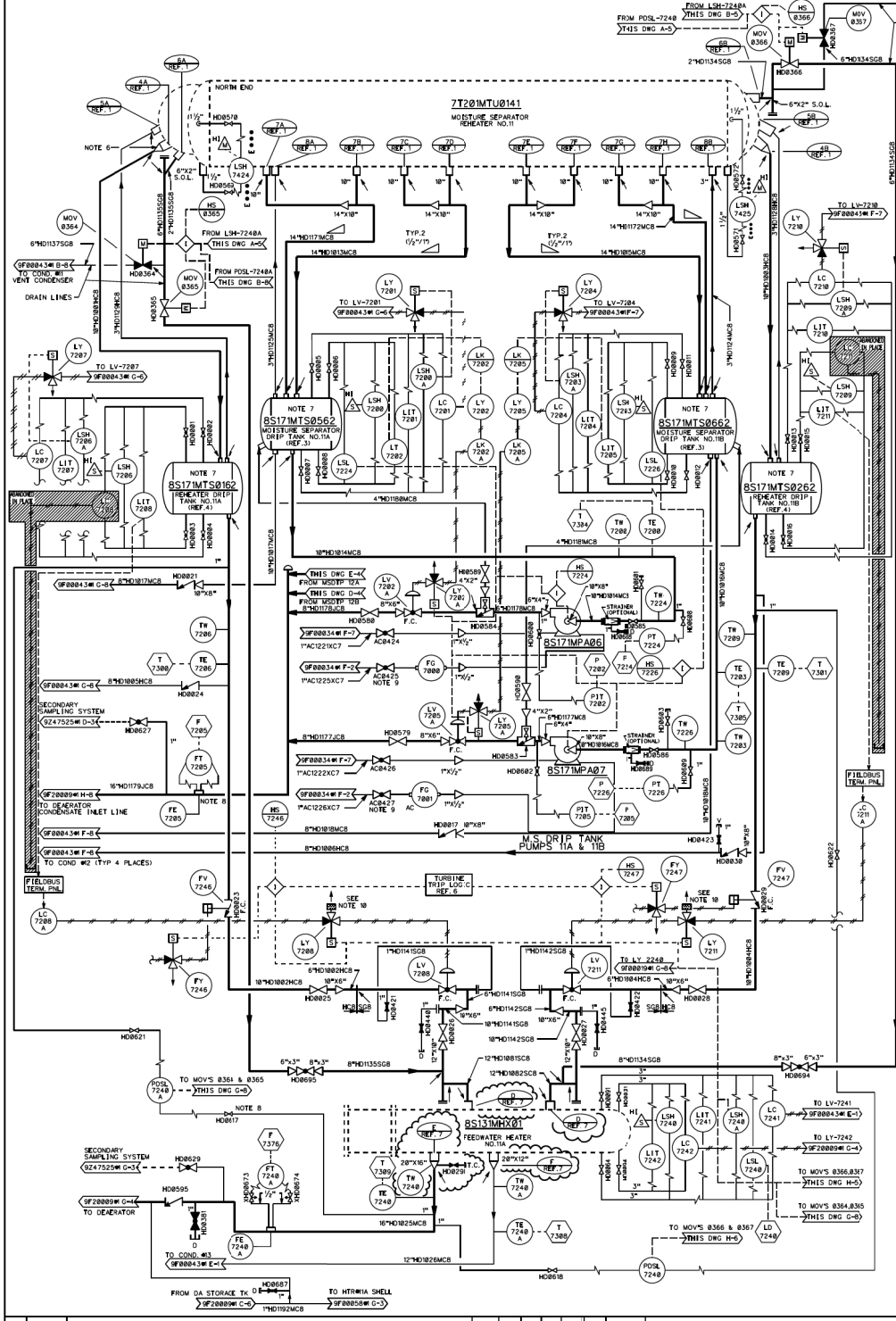

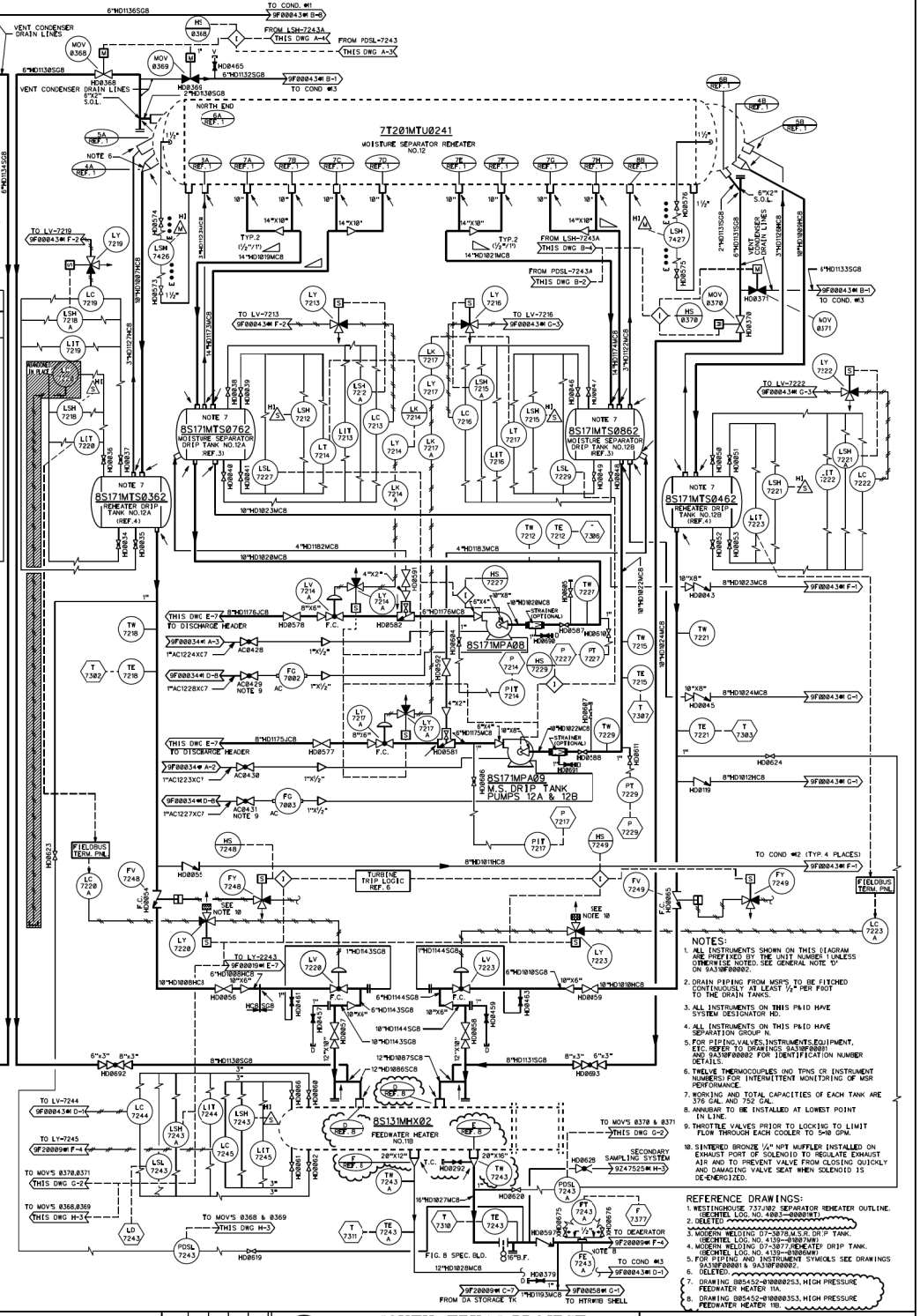

NOTES:

1. ALL INSTRUMENTS SHOWN ON THIS DIAGRAM ARE PREFIXED BY THE UNIT NUMBER (UNLESS OTHERWISE NOTED). SEE GENERAL NOTE "D" ON 9A310F00002.
2. DRAIN PIPING FROM MSRS TO BE FITCHED CONTINUOUSLY AT LEAST 1/4" PER FOOT TO THE DRAIN TANKS.
3. ALL INSTRUMENTS ON THIS P&ID HAVE SYSTEM DESIGNATOR HD.
4. ALL INSTRUMENTS ON THIS P&ID HAVE SEPARATION GROUP N.
5. FOR PIPING,VALVES,INSTRUMENTS,EQUIPMENT, ETC. REFER TO DRAWINGS 9A310F00001 AND 9A310F00002 FOR IDENTIFICATION NUMBER DETAILS.
6. TWELVE THERMOCOUPLES (NO TPNS OR INSTRUMENT NUMBERS) FOR INTERMITTENT MONITORING OF MSR PERFORMANCE.
7. WORKING AND TOTAL CAPACITIES OF EACH TANK ARE 376 GAL. AND 752 GAL.
8. ANNUBAR TO BE INSTALLED AT LOWEST POINT IN LINE.
9. THROTTLE VALVES PRIOR TO LOCKING TO LIMIT FLOW THROUGH EACH COOLER TO 5-10 GPM.
10. SINTERED BRONZE 1/4" NPT MUFFLER INSTALLED ON EXHAUST PORT OF SOLENOID TO REGULATE EXHAUST AIR AND TO PREVENT VALVE FROM CLOSING QUICKLY AND DAMAGING VALVE SEAT WHEN SOLENOID IS DE-ENERGIZED.

REFERENCE DRAWINGS:

1. WESTINGHOUSE 737J102 SEPARATOR REHEATER OUTLINE. (BECHTEL LOG. NO. 4083-000011T).
2. DELETED
3. MODERN WELDING D7-5878,M.S.R.DR.P TANK. (BECHTEL LOG. NO. 4139-010074W).
4. MODERN WELDING D7-5877,REHEATER DRIP TANK. (BECHTEL LOG. NO. 4139-010066W).
5. FOR PIPING AND INSTRUMENT SYMBOLS SEE DRAWINGS 9A310F00001 & 9A310F00002.
6. DELETED
7. DRAWING B05452-010000253,HIGH PRESSURE FEEDWATER HEATER 11A.
8. DRAWING B05452-010000353,HIGH PRESSURE FEEDWATER HEATER 11B.

NO.	APPROVAL DATE	REVISION	ORIG	CKR	RE	DV	SE	NO.	APPROVAL DATE	REVISION	ORIG	CKR	RE	DV	SE
42	4/13/17	INCORP. DCN 1401025.			N/A	N/A	N/A								
0-41	9-16-83	ISSUED FOR CONSTRUCTION.	SIGNATURES ON FILE												

SOUTH TEXAS PROJECT
NUCLEAR OPERATING COMPANY

PRIORITY	CADD FILE NO.	FSUG. NO.	STI. NO.	SCALE	DWG. NO.	SHT.	REV.
1	8S179F00040#1.DGN	D070928	34480795	NONE	8S179F00040#1		42

PIPING AND INSTRUMENTATION DIAGRAM
HEATER DRIPS

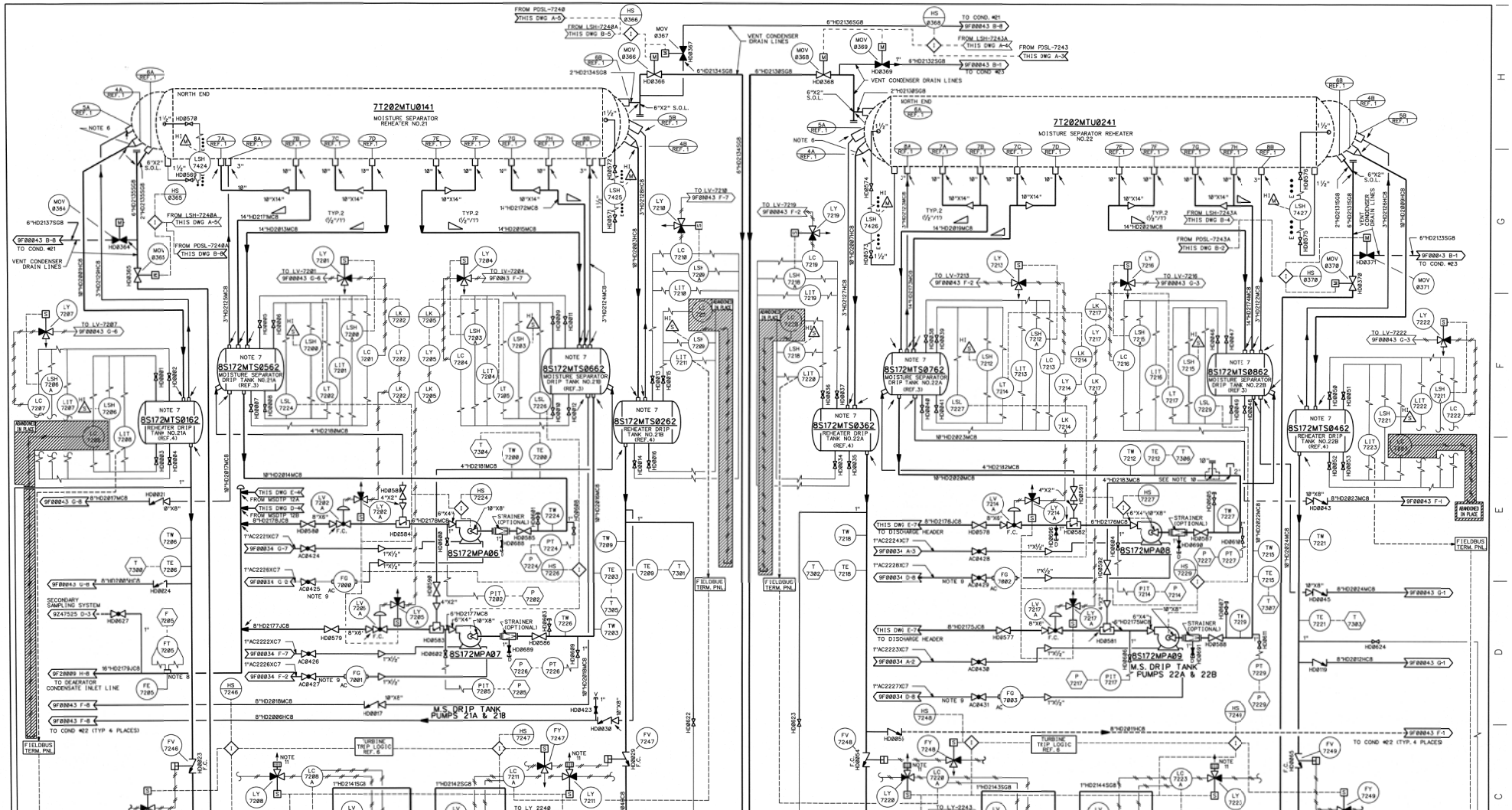

NOTES:

1. DELETED.
2. DRAIN PIPING FROM MSRT TO BE PITCHED CONTINUOUSLY AT LEAST ½" PER FOOT TO THE DRAIN TANKS.
3. ALL INSTRUMENTS ON THIS P&ID HAVE SYSTEM DESIGNATOR HD.
4. ALL INSTRUMENTS ON THIS P&ID HAVE SEPARATION GROUP N.
5. FOR PIPING,VALVES,INSTRUMENTS,EQUIPMENT, ETC. REFER TO DRAWINGS 9A319F0000 AND 9A319F0002 FOR IDENTIFICATION NUMBER DETAILS.
6. TWELVE THERMOCOUPLES (NO TPNS OR INSTRUMENT NUMBERS) FOR INTERMITTANT MONITORING OF MSR PERFORMANCE.
7. WORKING AND TOTAL CAPACITIES OF EACH TANK ARE 376 GAL. AND 752 GAL.
8. ANNUBAR TO BE INSTALLED AT LOWEST POINT IN LINE.
9. THROTTLE VALVES PRIOR TO LOOKING TO LIMIT FLOW THROUGH EACH COOLER TO 5-10 GPM.
10. 10" REINFORCEMENT TEE AND 600# FLANGE ASSEMBLY IS FOR USE IN INSTALLING "STOPPEL" EQUIPMENT TO PROVIDE LINE SHUTOFF. (REF. DCP 01-10207-18)
11. SINTERED BRONZE ½" NPT MUFFLER INSTALLED ON EXHAUST PORT OF SOLENOID TO REGULATE EXHAUST AIR AND TO PREVENT VALVE FROM CLOSING QUICKLY AND DAMAGING VALVE SEAT WHEN SOLENOID IS DE-ENERGIZED.

REFERENCE DRAWINGS:

1. WESTINGHOUSE 737J102 SEPARATOR REHEATER OUTLINE. (9A03-0000MT)
2. DELETED
3. MODERN WELDING 07-3887 M.S.P. DRIP TANK. (9A319-0000MT)
4. MODERN WELDING 07-3886 M.S.P. DRIP TANK. (9A319-0000MT)
5. FOR PIPING AND INSTRUMENT SYMBOLS SEE DRAWINGS 9A319F0001 & 9A319F0002.
6. DELETED.

NO.	APPROVAL DATE	REVISION	ORIG	CKR	RE	DV	SE
34	9/13/16	INCORP. DCN 150175.	VJM		N/A	N/A	N/A
33	11-19-15	REVISE PER CR 15-15398.	NF	ON FILE			
0-32	4-13-88	ISSUED FOR CONSTRUCTION.	SIGNATURES ON FILE				

ISSUED DCN

NO.	APPROVAL DATE	REVISION	ORIG	CKR	RE	DV	SE

SOUTH TEXAS PROJECT
NUCLEAR OPERATING COMPANY

PIPING & INSTRUMENTATION DIAGRAM
HEATER DRIPS

PRIORITY	CADD FILE NO.	FSUG. NO.	STI. NO.	SCALE	DWG. NO.	SHT.	REV.
1	8S179F00040#2.DGN	D070928	3A370020	NONE	8S179F00040#2		34

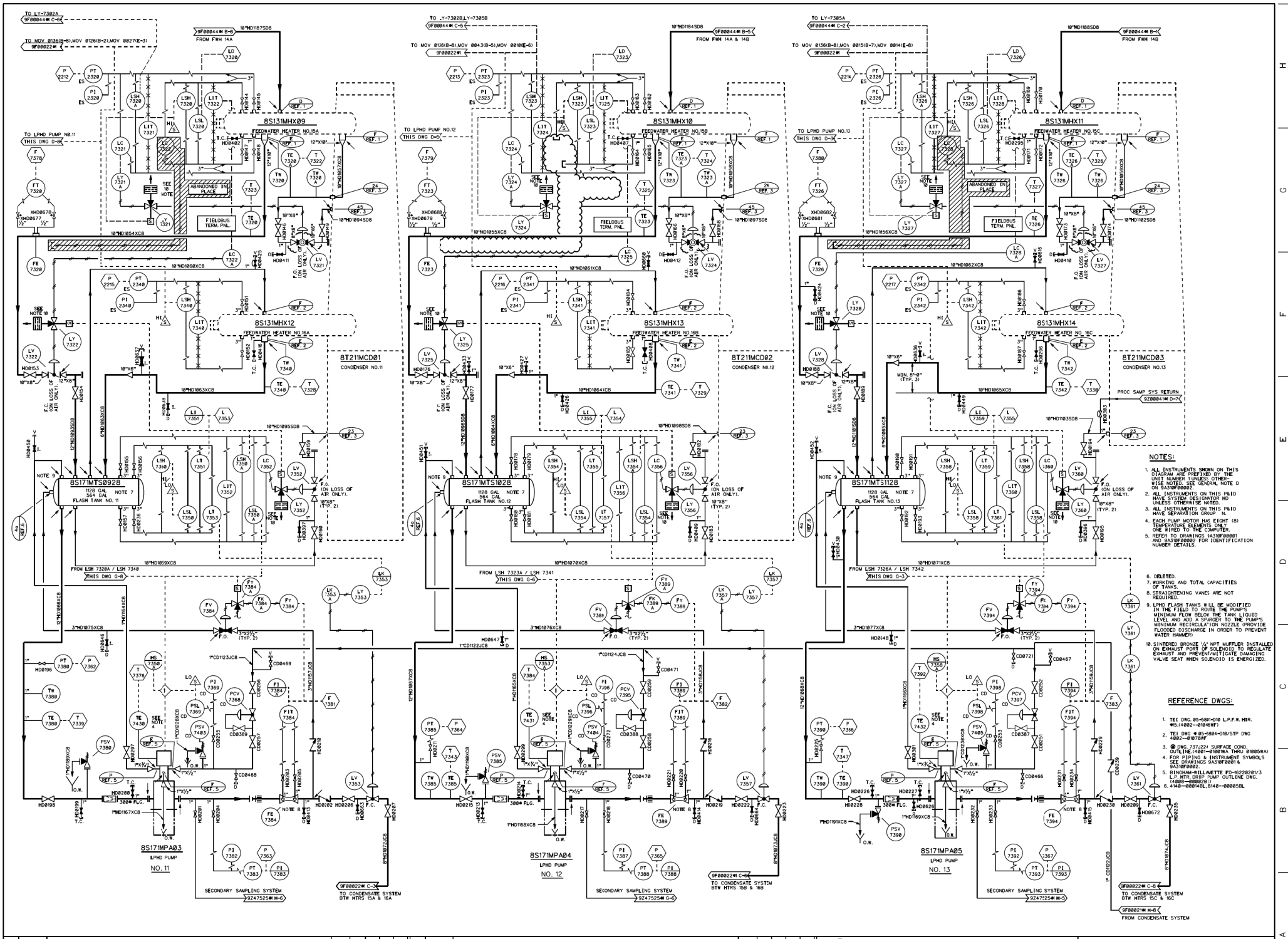

NO.	APPROVAL DATE	REVISION	ORIG	CKR	RE	DV	SE	NO.	APPROVAL DATE	REVISION	ORIG	CKR	RE	DV	SE
24	5-17-17	INCORP. DCN 1700407.			N/A	N/A	N/A								
0-23	09/22/82	ISSUED FOR CONSTRUCTION	SIGNATURES ON FILE												

SOUTH TEXAS PROJECT
NUCLEAR OPERATING COMPANY

PIPING & INSTRUMENTATION DIAGRAM
HEATER DRIPS

PRIORITY	CADD FILE NO.	FSUG. NO.	STI. NO.	SCALE	DWG. NO.	SHT.	REV.
1	8S179F00042#1.DGN	D070928	3449574	NONE	8S179F00042#1		24

E:\SEED_DGN

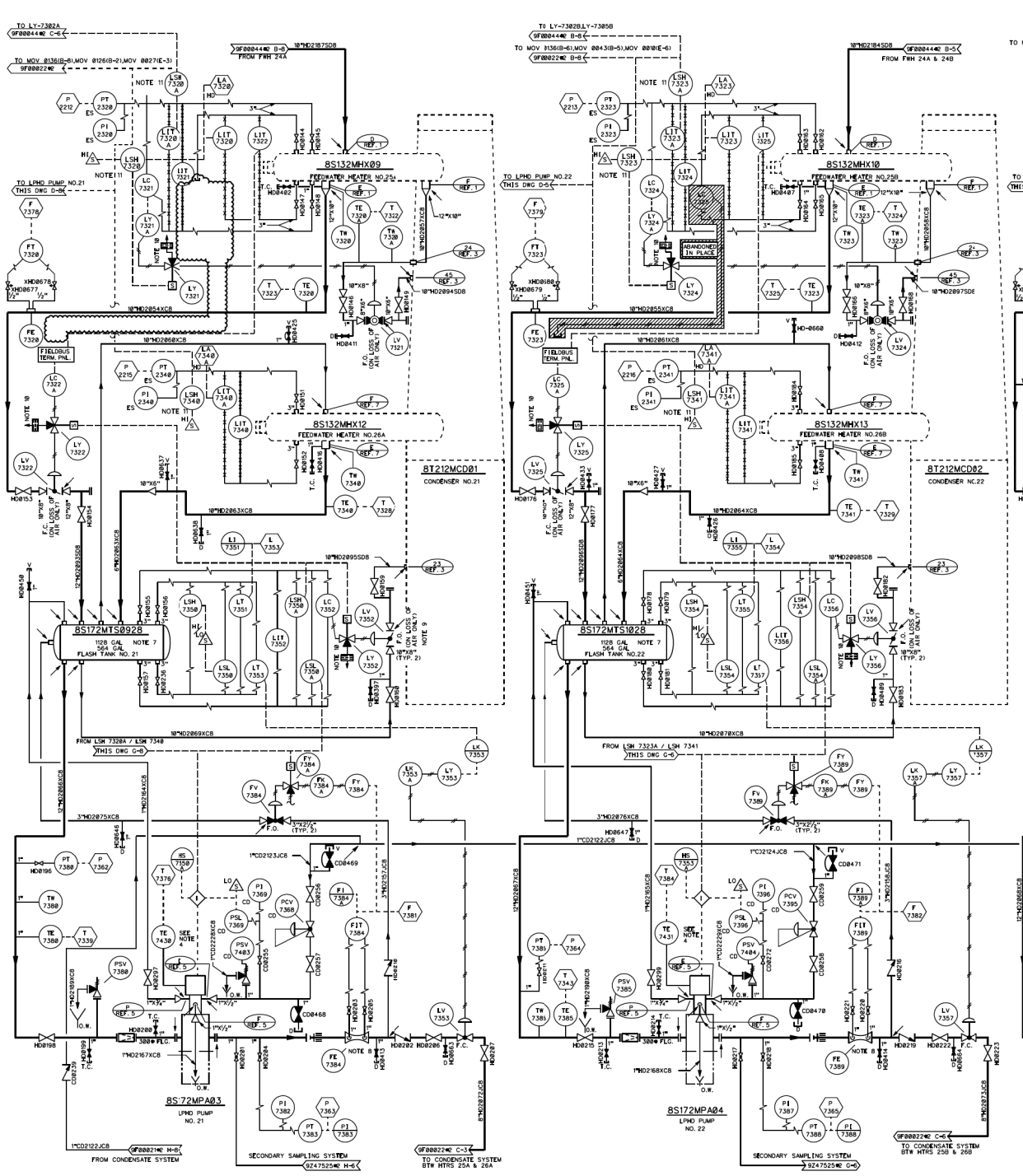

NOTES:

1. ALL INSTRUMENTS SHOWN ON THIS DIAGRAM ARE PREFIXED BY THE UNIT NUMBER 2 UNLESS OTHERWISE NOTED. SEE GENERAL NOTE D ON 9A319F00002.
2. ALL INSTRUMENTS ON THIS P&ID HAVE SYSTEM DESIGNATOR HD UNLESS OTHERWISE NOTED.
3. ALL INSTRUMENTS ON THIS P&ID HAVE SEPARATION GROUP N.
4. EACH PUMP MOTOR HAS EIGHT (8) TEMPERATURE ELEMENTS ONLY ONE WIRED TO THE COMPUTER.
5. DELETED.
6. DELETED.
7. WORKING AND TOTAL CAPACITIES OF TANKS.
8. STRAIGHTENING VANES ARE NOT REQUIRED.
9. VALVE NO. HDLV7352 CAN BE INSTALLED IN THE REVERSE DIRECTION TO FLOW.
10. SINTERED BRONZE ¼" NPT MUFFLER INSTALLED ON EXHAUST PORT OF SOLENOID TO REGULATE EXHAUST AND PREVENT DAMAGING VALVE SEAT WHEN SOLENOID IS ENERGIZED.
11. LSH7320, LSH7320A, LSH7310, LSH7323, LSH7323A, LSH7341, LSH7326, LSH7326A AND LSH7342 ARE LOCATED IN PANEL 923623LC1060. SEE DWG. 92482251039.

REFERENCE DWGS:

1. ⊗ DWG.4127053 L.P.F.W. HTR.#25 (8002-0001WF)
2. DELETED.
3. ⊗ DWG.737.020 SURFACE COND. OUTLINE (8001-0100IWA THRU 0105WA)
4. FOR PIPING & INSTRUMENT SYMBOLS SEE DRAWINGS 9A319F00001 & 9A319F00002.
5. BINGHAM-WILLAMETTE PD-6522010V3 L.P. HTR. DRIP PUMP OUTLINE DWG.
6. TEI DWG.85-5881-018 L.P.F.W. HTR. #25 (8002-0101059WF).
7. TEI DWG.85-5814-010 (8002-0201089WF).

NO.	APPROVAL DATE	REVISION	ORIG	CKR	RE	DV	SE	NO.	APPROVAL DATE	REVISION	ORIG	CKR	RE	DV	SE
22	12-1-16	INCORP. DCN 1601639 AND REVISED PER CR 16-14649.	LNB	N/A	N/A	N/A	N/A								
0-21	09/22/82	ISSUED FOR CONSTRUCTION.	SIGNATURES ON FILE												

SOUTH TEXAS PROJECT NUCLEAR OPERATING COMPANY

PIPING & INSTRUMENTATION DIAGRAM HEATER DRIPS

PRIORITY	CADD FILE NO.	FSUG. NO.	STI. NO.	SCALE	DWG. NO.	SHT.	REV.
1	8S179F00042#2.DGN	D070928	34418257	NONE	8S179F00042#2		22

ENGED JOB

SIZE E

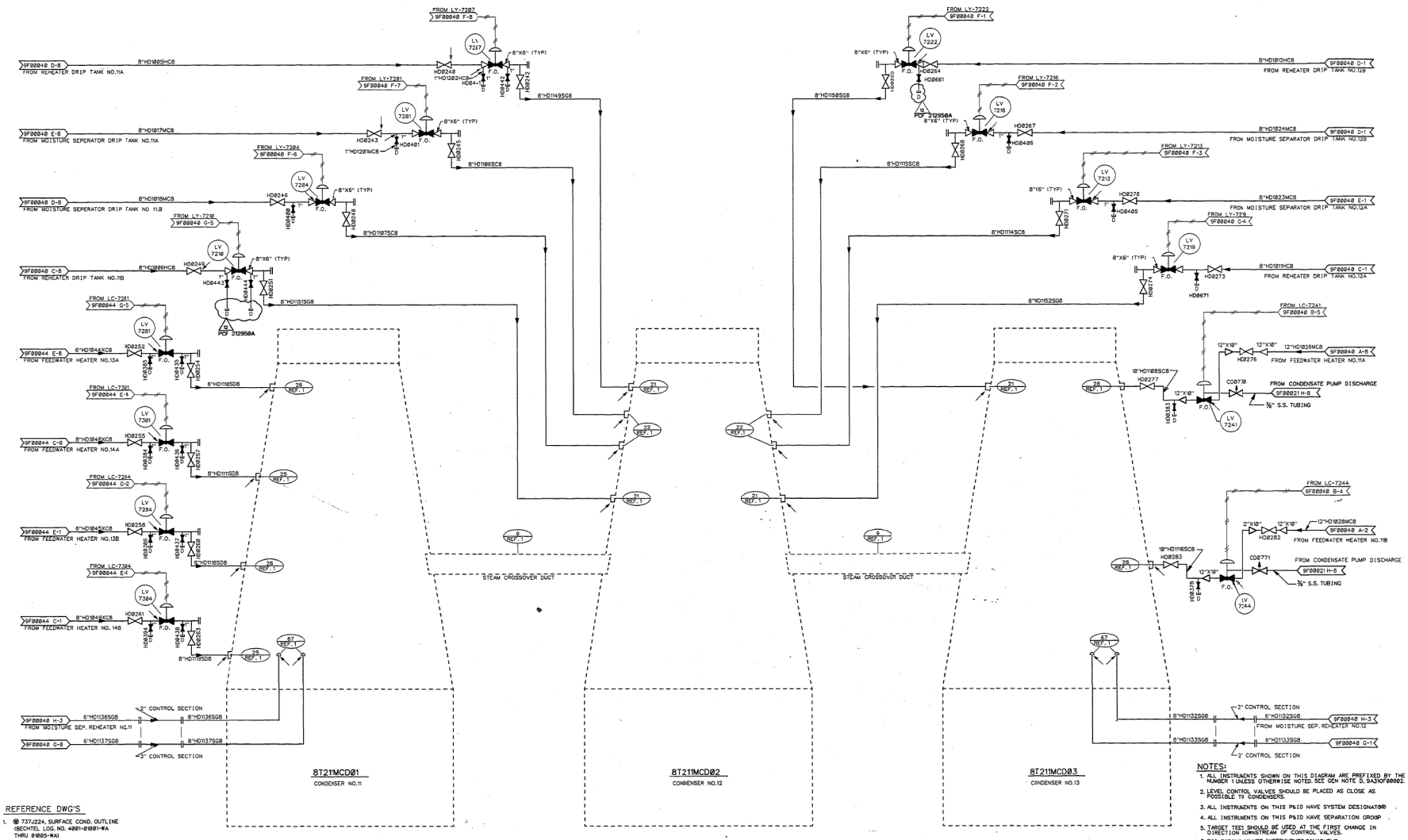

REFERENCE DWG'S

1. ⊗ 737J224, SURFACE COND. OUTLINE (BECHTEL LOG. NO. 4001-01001-WA THRU 01005-WA)
2. FOR PIPING & INSTRUMENT SYMBOLS SEE DRAWINGS 9A319F00001 & 9A319F00002

NOTES:

1. ALL INSTRUMENTS SHOWN ON THIS DIAGRAM ARE PREFIXED BY THE UNIT NUMBER 1 UNLESS OTHERWISE NOTED. SEE GEN NOTE D, 9A319F00002.
2. LEVEL CONTROL VALVES SHOULD BE PLACED AS CLOSE AS POSSIBLE TO CONDENSERS.
3. ALL INSTRUMENTS ON THIS P&ID HAVE SYSTEM DESIGNATOR 0.
4. ALL INSTRUMENTS ON THIS P&ID HAVE SEPARATION GROUP .
5. TARGET TEES SHOULD BE USED AT THE FIRST CHANGE IN DIRECTION DOWNSTREAM OF CONTROL VALVES.
6. FOR PIPING,VALVES,INSTRUMENTS,EQUIPMENT, ETC.REFER TO DRAWINGS 9A319F00001 AND 9A319F00002 FOR IDENTIFICATION DETAILS.
7. DELETED.

THIS DRAWING SUPERCEDES B&R DRAWING 8S173F0043-C AND CHANGES THE UNIT DESIGNATOR OF DRAWING 8S179F0043-0.

NO.	ISSUE DATE	HL&P REVISION	BY	CKR	RE	DV	NA	SE	PE
12	8-15-94	INCORP. PCF 212950A	JSH						
11	10-08-91	INCORP. DCN MD-2857	SIGNATURES ON FILE						
10	3-21-89	INCORP. DCN + MD-17	SIGNATURES ON FILE						
9	10-10-88	HL&P ASSUMES DESIGN CHANGE CONTROL & INCORP. MDCN# 88-225-01	SIGNATURES ON FILE						
8-0	9/28/82	ISSUED FOR CONSTRUCTION	SIGNATURES ON FILE						

NO.	ISSUE DATE	HL&P REVISION	BY	CKR	RE	DV	NA	SE	PE

HOUSTON LIGHTING & POWER COMPANY
SOUTH TEXAS PROJECT ELECTRIC GENERATING STATION

PIPING AND INSTRUMENTATION DIAGRAM
HEATER DRIPS

SCALE	DRAWING NO.	REV.
NONE	8S179F00043 *1	12

JSH D070928 FJA069.121

STP 1631 (05/91)
I certify that the image contained on this frame was made in the normal and regular course of business on the date stated below and that it is an accurate reproduction of the document submitted to micrografics
DATE 8-15-94
CERTIFIED BY Carol Smith

30:1

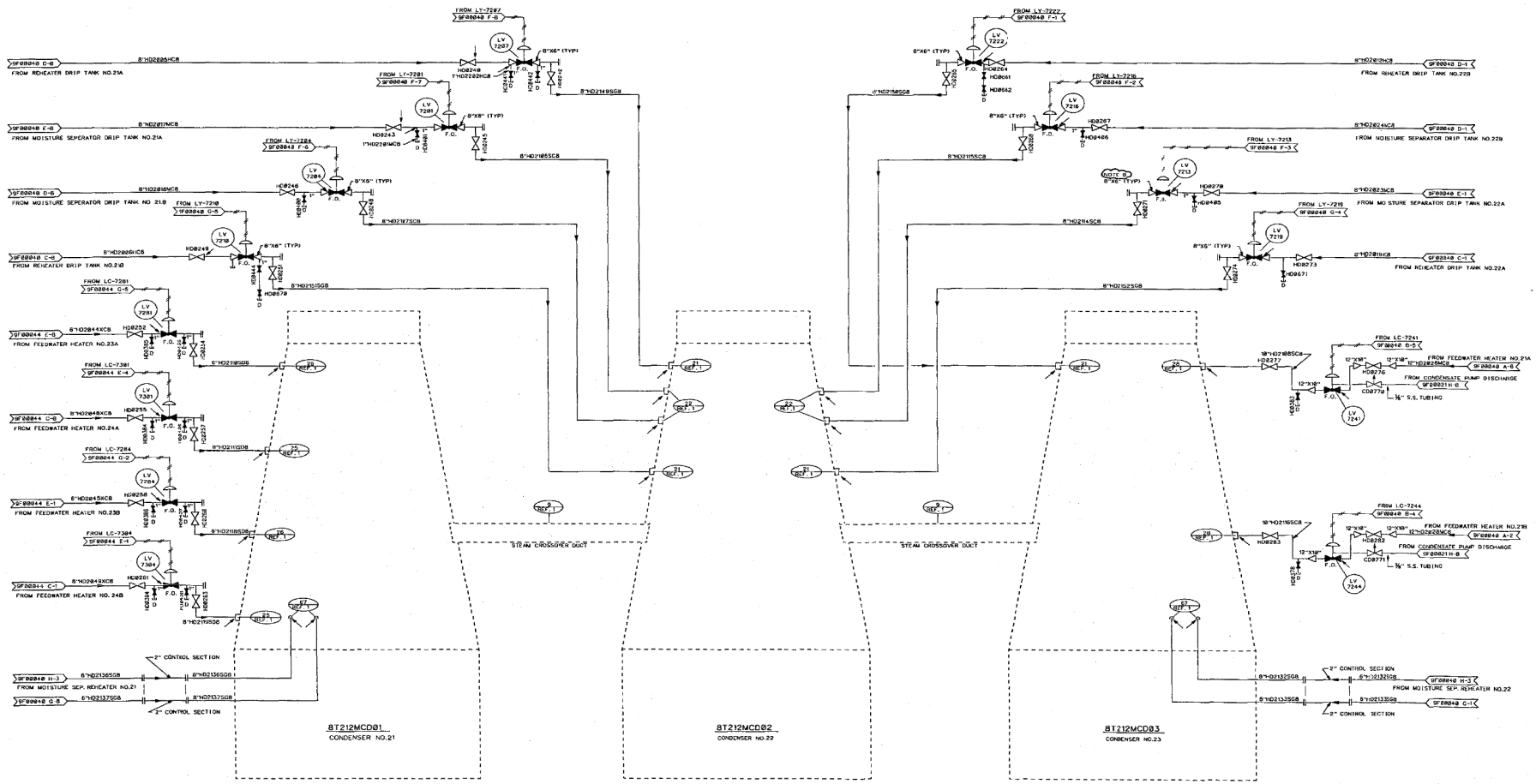

REFERENCE DWG'S
1. @ 7370208, SURFACE COND. OUTLINE BECHTEL LOG No. 0001-01001-WA THRU 01005-WA)
2. FOR PIPING & INSTRUMENT SYMBOLS SEE DRAWINGS 9A310F00001 & 9A310F00002

NOTES:
1. ALL INSTRUMENTS SHOWN ON THIS D.ADRAM ARE PREFIXED BY THE UNIT NUMBER 2 UNLESS OTHERWISE NOTED.SEE GEN NOTE D, 9A310F00002.
2. LEVEL CONTROL VALVES SHOULD BE PLACED AS CLOSE AS POSSIBLE TO CONDENSERS.
3. ALL INSTRUMENTS ON THIS P&ID HAVE SYSTEM HD DESIGNATOR.
4. ALL INSTRUMENTS ON THIS P&ID HAVE SEPARATION N GROUP.
5. TARGET TEES SHOULD BE USED AT THE FIRST CHANGE IN DIRECTION DOWNSTREAM OF CONTROL VALVES.
6. DELETED.
7. DELETED.
8. THE FOLLOWING LINES HAVE BEEN PARTIALLY REPLACED WITH STAINLESS STEEL COMPONENTS AS PART OF EROSION / CORROSION REPLACEMENT PROGRAM: 8" HD-214

NO.	ISSUE DATE	REVISION	ORIG	CKR	RE	DV	SE
15	11-19-96	INCORP. DCN 0500218.	LNB	CKR	KE	JA	MJA
14	6-30-04	INC. PCF 300372-A, EDITORIAL CORRECTION, AND EDITORIAL CHANGES FOR UNITIZATION.	SIGNATURES ON FILE				
0-13	9/28/82	ISSUED FOR CONSTRUCTION					

NO.	ISSUE DATE	REVISION	ORIG	CKR	RE	DV	SE

SOUTH TEXAS PROJECT
NUCLEAR OPERATING COMPANY

PRIORITY	CADD FILE NO.	PSWG. NO.	STI. NO.	SCALE	DWG. NO.	SHT.	REV.
1	FJA469.151	D070928	3195744	NONE	8S179F00043#2		15

PIPING AND INSTRUMENTATION DIAGRAM
HEATER DRIPS

ESSED DCN

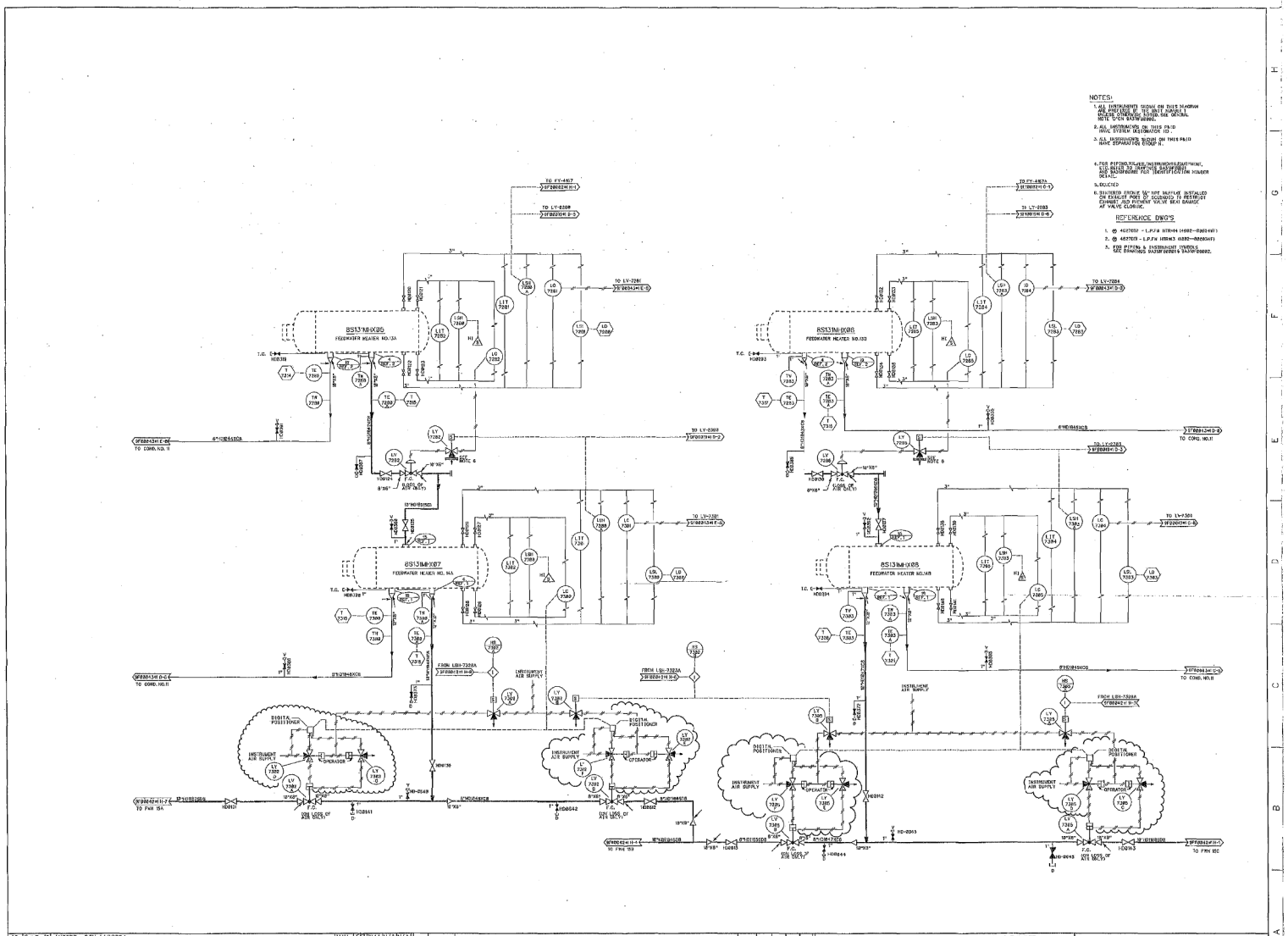

REV. NO.	ISSUE DATE	REVISION	ORIG	CKR	RE	DV	SE	REV. NO.	ISSUE DATE	REVISION	ORIG	CKR	RE	DV	SE
16	12-22-92	INCORP. DCN 1102954.	VJM	N/A	N/A	N/A	N/A								
15	11-30-91	INCORP. DCN 1101468.	LND	ON FILE											
14	11-14-90	INCORP. DCN's 8S90703 & 8S91372.	JSH	ON FILE											
13	8-12-82	REVISED PER CCR 82-11078-1.	JSH	ON FILE											
12	9-26-81	INCORP. DCN 8180291.	SIGNATURES ON FILE												
0-11	9-22-82	ISSUED FOR CONSTRUCTION.	SIGNATURES ON FILE												

SOUTH TEXAS PROJECT
NUCLEAR OPERATING COMPANY

PIPING & INSTRUMENTATION DIAGRAM
HEATER DRIPS

PROJECT	CADD FILE NO.	DWG. NO.	SFI. NO.	SCALE	DWG. NO.	SHT.	REV.
1	F/A130.161	D87828	333661300	NONE	8S179F00044H1		16

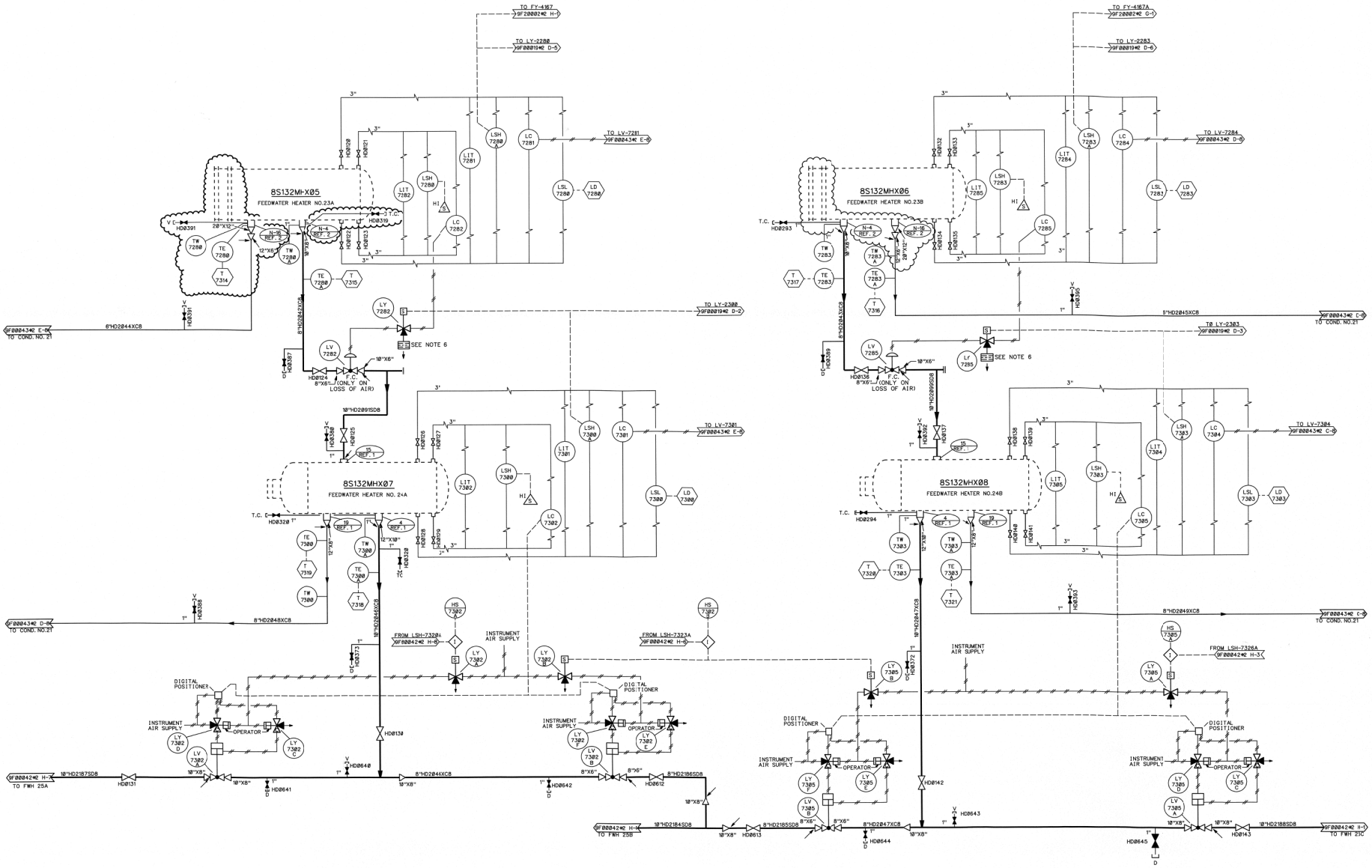

REFERENCE DWG'S

1. (M) 4821D52 - L.P.F.W. HTR#24 (8002-0001WF)
2. SPX DWG.NO. WUH/700.12168B/1/1, L.P.F.W. HTRS 23A & 23B (GB0179-0000107)
3. FOR PIPING & INSTRUMENT SYMBOLS SEE DRWINGS 9A310F00001 & 9A310F00002.

NOTES:

1. ALL INSTRUMENTS SHOWN ON THIS DIAGRAM ARE PREFIXED BY THE UNIT NUMBER 2 UNLESS OTHERWISE NOTED. SEE GENERAL NOTE 'D' ON 9A310F00002.
2. ALL INSTRUMENTS ON THIS P&ID HAVE SYSTEM DESIGNATOR HD.
3. ALL INSTRUMENTS SHOWN ON THIS P&ID HAVE SEPARATION GROUP N.
4. FOR PIPING, VALVES, INSTRUMENTS, EQUIPMENTS, ETC. REFER TO DRAWINGS 6A310F00001 AND 9A310F00002 FOR IDENTIFICATION NUMBER DETAIL.
5. DELETED.
6. SINTERED BRONZE 1/4" NPT MUFFLER INSTALLED ON EXHAUST PORT OF SOLENOID TO RESTRICT EXHAUST AND PREVENT VALVE SEAT DAMAGE AT VALVE CLOSURE.

NO.	ISSUE DATE	REVISION	ORIG	CKR	RE	DV	SE
15	6-15-10	INCORP. DCN 1001301.	JSH	ON FILE			
14	3-18-10	INCORP. DCN 0901236.	JSH	ON FILE			
13	4-30-07	INCORP. DCN's 0500769 AND 0600767.	VJM	ON FILE			
12	8-12-02	REVISED PER CR# 02-11078-1.	JSH	ON FILE			
11	2-22-01	INCORP. DCN 0002095.	SIGNATURES ON FILE				
8-10	9-22-82	ISSUED FOR CONSTRUCTION.	SIGNATURES ON FILE				

NO.	ISSUE DATE	REVISION	ORIG	CKR	RE	DV	SE
18	3/4/15	INCORP. DCN 1300357.	LNB	ON FILE	N/A	N/A	N/A
17	12-14-11	INCORP. DCN 1101892.	JGL	ON FILE			
16	8-19-10	REVISED PER CR 10-17528.	LNB	ON FILE			

ESEED_DCN

SOUTH TEXAS PROJECT
NUCLEAR OPERATING COMPANY

PIPING & INSTRUMENTATION DIAGRAM
HEATER DRIPS

PRIORITY	CADD FILE NO.	FSUG. NO.	STI. NO.	SCALE	DWG. NO.	SHT.	REV.
1	8S179F00044#2.DGN	D070928	3407,3440	NONE	8S179F00044#2		18

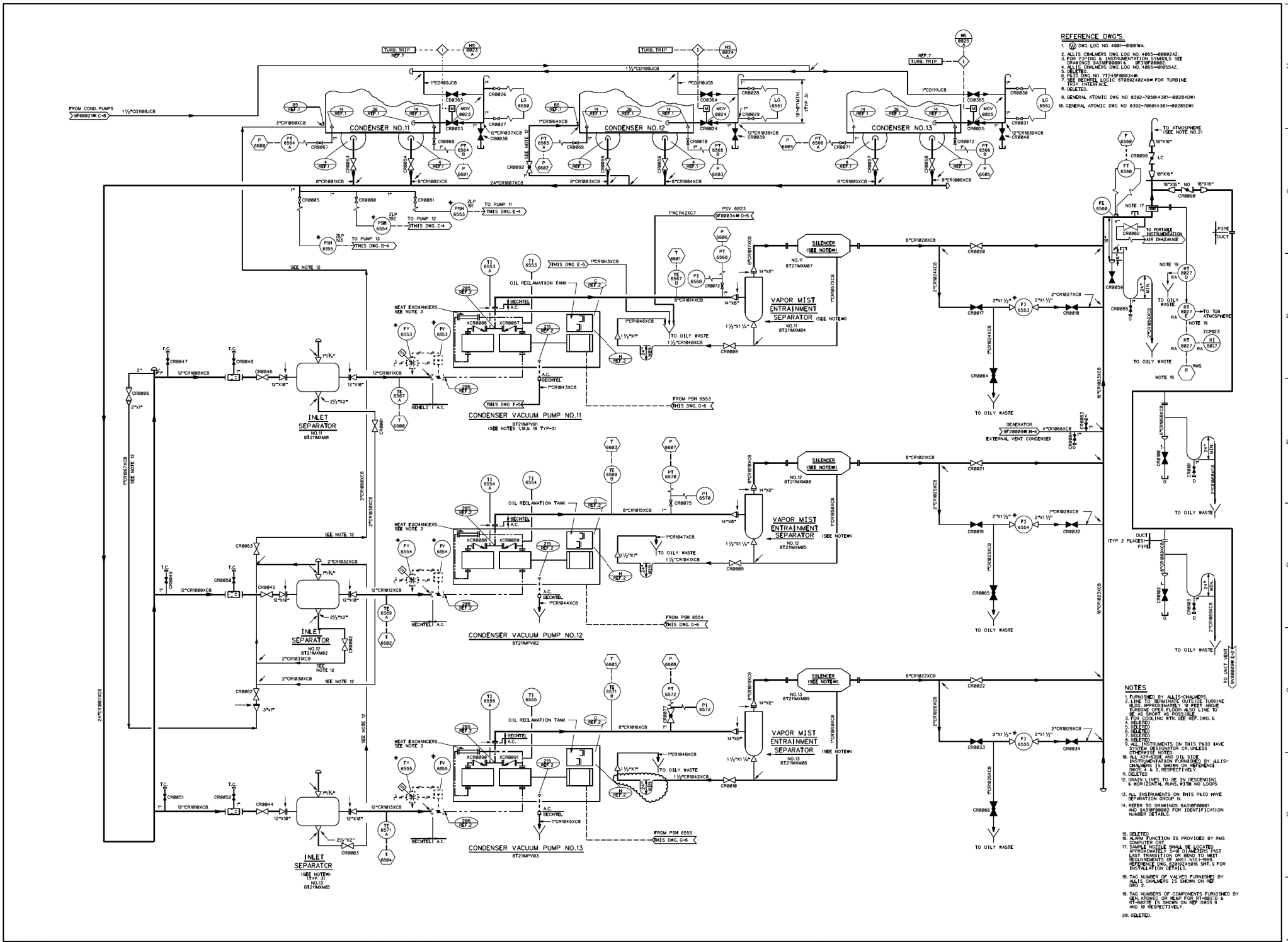

NO.	APPROVAL DATE	REVISION	ORIG	CKR	RE	DV	SE
26	9-19-17	INCORP. DCN 1501726.	VSM	JM	N/A	N/A	N/A
25	1-16-17	INCORP. DCN 1502227.	VSM	ON FILE			
24	4-14-16	INCORP. DCN's 1501603 & 1501709.	VSM	ON FILE			
0-23	8-5-82	ISSUED FOR CONSTRUCTION.	SIGNATURES ON FILE				

SEE REV. LIST

NO.	APPROVAL DATE	REVISION	ORIG	CKR	RE	DV	SE

SOUTH TEXAS PROJECT NUCLEAR OPERATING COMPANY

PRIORITY	CADD FILE NO.	FSUG. NO.	STI. NO.
1	8T219F00031#1.DGN	D070928	34545071

PIPING AND INSTRUMENTATION DIAGRAM
CONDENSER AIR REMOVAL

SCALE	DWG. NO.	SHT.	REV.
NONE	8T219F00031#1		26

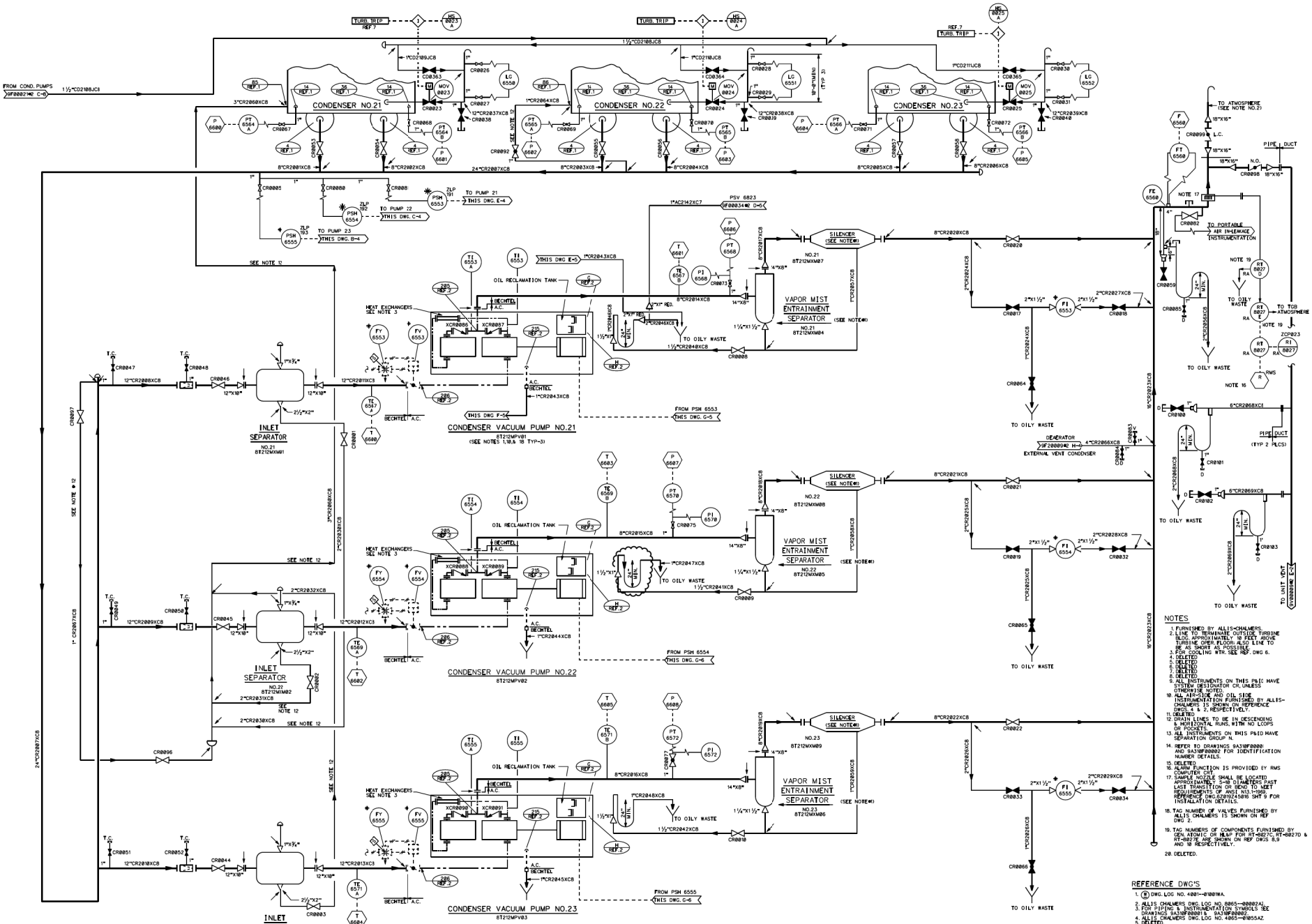

NOTES

1. FURNISHED BY ALLIS-CHALMERS.
2. LINE TO TERMINATE OUTSIDE TURBINE BLDG. APPROXIMATELY 10 FEET ABOVE TURBINE OPER. FLOOR. ALSO LINE TO BE AS SHORT AS POSSIBLE.
3. FOR COOLING WTR. SEE REF. DWG 6.
4. DELETED
5. DELETED
6. DELETED
7. DELETED
8. DELETED
9. ALL INSTRUMENTS ON THIS P&ID HAVE ALL-IN-DESIGNATOR CR, UNLESS OTHERWISE NOTED.
10. ALL INTERFACE AND OILLINE INSTRUMENTATION FURNISHED BY ALLIS-CHALMERS IS SHOWN ON REFERENCE DWGS. 4 & 2, RESPECTIVELY.
11. DELETED
12. DRAIN LINES TO BE IN DESCENDING & HORIZONTAL RUNS, WITH NO LOOPS OR POCKETS.
13. ALL INSTRUMENTS ON THIS P&ID HAVE SEPARATION GROUP N.
14. REFER TO DRAWINGS 9A31QF0000 AND 9A31QF0002 FOR IDENTIFICATION NUMBER DETAILS.
15. DELETED
16. ALARM FUNCTION IS PROVIDED BY RMS COMPUTER CRT.
17. SAMPLE NOZZLE SHALL BE LOCATED APPROXIMATELY 5-10 DIAMETERS PAST LAST TRANSITION OR BEND TO MEET REQUIREMENTS OF ANSI N13.1-1969. REFERENCE DWG.6Z01Q245016 SHT 9 FOR INSTALLATION DETAILS.
18. TAG NUMBER OF VALVES FURNISHED BY ALLIS CHALMERS IS SHOWN ON REF DWG 2.
19. TAG NUMBERS OF COMPONENTS FURNISHED BY GEN. ATOMIC OR M&F FOR RT-8027C, RT-8027D & RT-8027E ARE SHOWN ON REF DWGS 8,9 AND 10 RESPECTIVELY.
20. DELETED.

REFERENCE DWG'S

1. (B) DWG. LOG NO. 4001-01001WA.
2. ALLIS CHALMERS DWG. LOG NO. 0865-00002AJ.
3. FOR PIPING & INSTRUMENTATION SYMBOLS SEE DRAWINGS 9A31QF0001 & 9A31QF0002.
4. ALLIS CHALMERS DWG. LOG NO. 4005-01055AZ.
5. DELETED.
6. P&ID DWG. NO. 7T249F00034.
7. SEE BECHTEL LOGIC 6T0092Z0246 FOR TURBINE TRIP INTERFACE
8. GENERAL ATOMIC DWG NO 0392-7030 (8301-00275DW).
9. GENERAL ATOMIC DWG NO 0392-7050 (8301-00276DW).
10. GENERAL ATOMIC DWG NO 0392-7060 (8301-00277DW).

NO.	APPROVAL DATE	REVISION	ORIG	CKR	RE	DV	SE	NO.	APPROVAL DATE	REVISION	ORIG	CKR	RE	DV	SE
28	9-19-17	INCORP. DCN 1501708.	VJM	GPK	N/A	N/A	N/A								
27	4-24-17	INCORP. 1502555.	VJM	ON FILE											
26	5-3-16	INCORP. DCN 1501810.	VJM	ON FILE											
25	4-21-16	INCORP. DCN 1501648.	VJM	ON FILE											
0-24	8/5/82	ISSUED FOR CONSTRUCTION	SIGNATURES ON FILE												

SOUTH TEXAS PROJECT NUCLEAR OPERATING COMPANY

PIPING AND INSTRUMENTATION DIAGRAM
CONDENSER AIR REMOVAL

PRIORITY	CADD FILE NO.	FSUG. NO.	STI. NO.	SCALE	DWG. NO.	SHT.	REV.
1	8T219F00031#2.DGN	D070928	34545092	NONE	8T219F00031#2		28

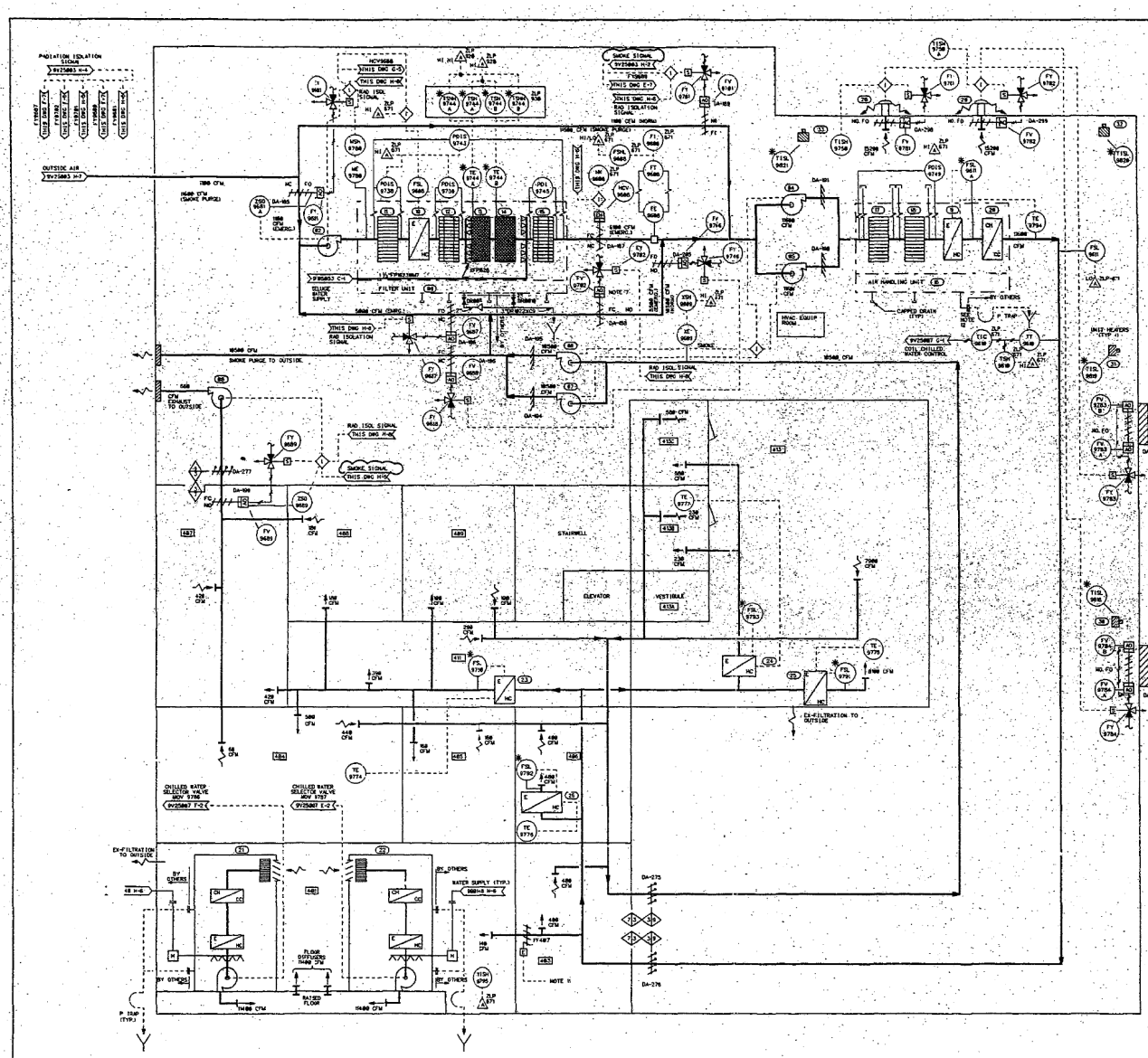

EQUIPMENT NUMBERING INDEX

REV NO.	EQUIPMENT NUMBER	DESCRIPTION
82	9-V-H-1-V-FU-314	MAKE-UP AIR FAN
84	1-V-H-1-V-FU-015	SUPPLY FAN (HA)
85	9-V-H-1-V-FU-016	SUPPLY FAN (HB)
86	9-V-H-1-V-FU-017	RETURN FAN (HA)
87	9-V-H-1-V-FU-018	RETURN FAN (HB)
88	9-V-H-1-V-FU-019	EXHAUST FAN
89	9-V-H-2-V-AH-001	AIR HANDLING UNIT FILTER UNIT CARBON
10	9-V-H-2-V-AH-017	UNIT (2) HEATING COIL
11	9-V-H-2-V-FU-005	UNIT (2) PRE-FILTER
12	9-V-H-2-V-FU-006	UNIT (2) HEPA FILTER
13	9-V-H-2-V-FC-005	UNIT (2) CARBON FILTER
14	9-V-H-2-V-FC-006	UNIT (2) CARBON FILTER
15	9-V-H-2-V-FU-007	UNIT (2) HEPA FILTER
16	1-V-H-2-V-AH-003	AIR HANDLING UNIT
17	1-V-H-2-V-FU-003	UNIT (2) PRE-FILTER
18	1-V-H-2-V-FU-004	UNIT (2) HEPA FILTER
19	1-V-H-2-V-HU-015	UNIT (2) HUMIDIFIER
20	9-V-H-2-V-HU-019	UNIT (2) COOLING COIL
21	9-V-H-2-V-AH-004	AIR HANDLING UNIT (1HA)
22	1-V-H-2-V-AH-005	AIR HANDLING UNIT (1HB)
23	9-V-H-2-V-HU-013	REHEAT COIL
24	1-V-H-2-V-HU-014	REHEAT COIL
25	9-V-H-2-V-HU-015	REHEAT COIL
26	1-V-H-2-V-HU-016	REHEAT COIL
27		
28	9-V-H-2-V-FU-022	HVAC EQUIP RM SUPPLY FAN
29	1-V-H-2-V-FU-023	HVAC EQUIP RM SUPPLY FAN
30	9-V-25-1-V-HT-145	UNIT HEATER
31	1-V-25-1-V-HT-146	UNIT HEATER
32	1-V-25-1-V-HT-147	UNIT HEATER
33	9-V-25-1-V-HT-148	UNIT HEATER
34		
35		
36		
37		

ROOM NUMBER INDEX

ROOM NO.	F.E.V.		ROOM DESCRIPTION
482	71'-9"		COMPUTER ROOM
483	72'-9"		STORAGE ROOM
484	72'-9"		BREAK ROOM
485	72'-9"		RECORD STORAGE ROOM
486	72'-9"		CONFERENCE ROOM
487	72'-9"		MENS TOILET
488	72'-9"		WOMENS TOILET
489	72'-9"		STORAGE TANKS
41E	72'-9"		HALLWAY
413	72'-9"		OPERATING ROOM
415A	72'-9"		VESTIBULE
415B	72'-9"		ARC ROOM
415C	72'-9"		COMMUNICATION ROOM
-	84'-9"		TSC HVAC EQUIP ROOM

NOTES

1. ALL SYSTEMS SHOWN ARE NON-SAFETY CLASS B AND NON-SEISMIC CATEGORY, EXCEPT FOR TORNADO DAMPERS (SHOWN ARE SEISMIC CLASS I) AND DUCTWORK (SHOWN ARE SEISMIC CLASS I) WHICH SUPPORT PARTS THE ARE DESIGNED TO MEET QUALITY CLASS I REQUIREMENTS.
2. DELETED.
3. ALL DAMPER NUMBERS SHOWN HAVE THE PREFIX 2-V-H-1-V EXCEPT FOR TORNADO DAMPERS WHICH HAVE THE PREFIX 2-V-H-1-V.
4. ROOM NUMBERS ARE AS SHOWN ON ARCHITECTURAL DRAWINGS.
5. DELETED.
6. ALL INSTRUMENTS ON THIS P&ID HAVE SYSTEM DESIGNATOR "H".
7. RETURN DAMPER DA-188 REMAINS PARTLY OPEN IN FAIL MODE AS REQUIRED FOR AIR FLOW BALANCING.
8. DAMPERS DA-295, 296 & 300 ARE BUBBLE TIGHT DAMPERS.
9. ALL INSTRUMENTS ON THIS P&ID HAVE OPERATION OPEN, NORMALLY OTHERWISE NOTED AT FIVE O'CLOCK POSITION.
10. ALL AIR FLOW CFM'S SHOWN ARE AT STANDARD CONDITIONS (SCFM).
11. HALON SIGNAL FROM FIRE PROTECTION PANEL ZLP-620 CLOSES DAMPER ON HALON INJECTION.
12. START UP FD PROVIDES CONDENSATE 2" DRAIN LINE FOR AIR HANDLING UNIT (ACT NO. 6) WITH A P-TRAP AT LEAST 3 INCH DEEP AND ROUTED TO NEAREST FLOOR DRAIN.
13. ADMINON TAG NOS FCV 5747 & 5748 IN PLACE OF CLOSING INSTRUMENT ISOLATION VALVES.
14. FOR TSC HVAC SYSTEM ACTUAL AIR FLOW QUANTITIES SEE THE ACTUAL CONDITION SHOWN ON THE FINAL AIR BALANCING REPORT CN2091-9507-01.

REFERENCE DRAWINGS

8-F-0001	P&ID SYMBOLS
8-F-0002	P&ID SYMBOLS
9N2324L.D	ARCHITECTURAL DWGS

NOT TO BE INCORPORATED ASSIGNMENT LIST		
TYPE	NUMBER	LOCATION/DWG COORD.
FCR	8N00005	NA

REV NO.	DATE	REVISION	ORIG	CKR	RE	DV	SE	NO.	DATE	REVISION	ORIG	CKR	RE	DV	SE
15	8-11-98	INCORP. DCN 980887	VJM												
14	1-21-98	INCORP. DCN 978491	SIGNATURES ON FILE												
13-13	12-16-92	ISSUED FOR CONSTRUCTION	SIGNATURES ON FILE												

SEED RON

SOUTH TEXAS PROJECT NUCLEAR OPERATING COMPANY

PRIORITY	RNSECH NO.	DOC CTL NO.	CADD FILE NO.
1	8V119V25006#1	D878928	8V119V25006#1

PIPING & INSTRUMENTATION DIAGRAM - HVAC
TECHNICAL SUPPORT CENTER
HVAC SYSTEM & AIR DISTRIBUTION

SCALE	DWG. NO.	REV.
NONE	8V119V25006#1	15

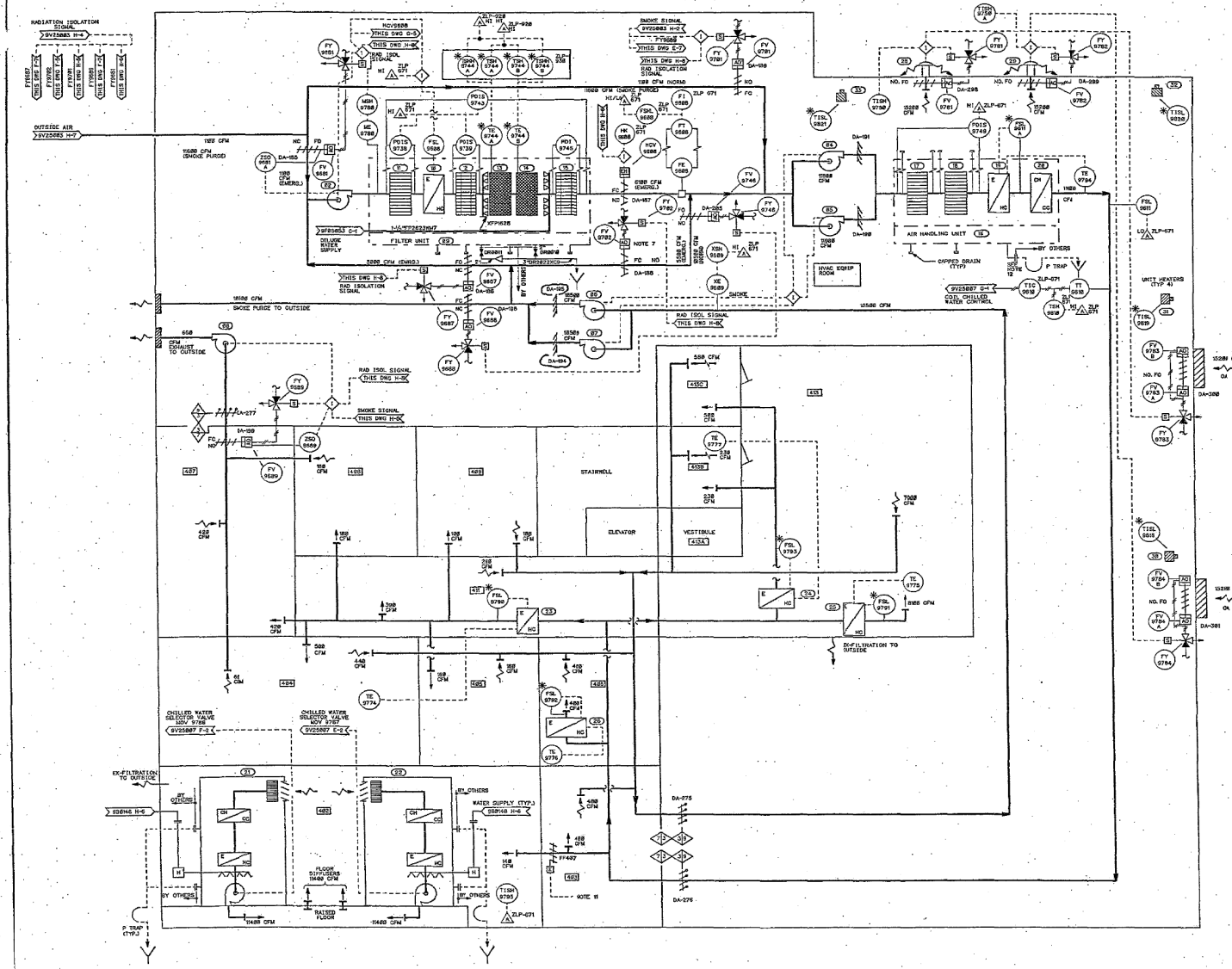

EQUIPMENT NUMBERING INDEX

KEY NO.	EQUIPMENT NUMBER	DESCRIPTION
02	9-V-11-2-V-FN-014	MAKE-UP AIR FAN
04	9-V-11-2-V-FN-015	SUPPLY FAN (21A)
05	9-V-11-2-V-FN-016	SUPPLY FAN (21B)
06	9-V-11-2-V-FN-017	RETURN FAN (21A)
07	9-V-11-2-V-FN-018	RETURN FAN (21B)
08	9-V-11-2-V-FN-019	EXHAUST FAN
09	9-V-11-2-V-VV-001	MAKE-UP AIR CARBON FILTER UNIT
10	9-V-11-2-V-HK-017	UNIT (10) HEATING COIL
11	9-V-11-2-V-FD-005	UNIT (10) PREFILTER
12	9-V-11-2-V-FD-006	UNIT (10) PRE-FILTER
13	9-V-11-2-V-FC-005	UNIT (10) CARBON FILTER
14	9-V-11-2-V-FC-006	UNIT (10) CARBON FILTER
15	9-V-11-2-V-FD-007	UNIT (10) AFA FILTER
16	9-V-11-2-V-AH-003	AIR HANDLING UNIT
17	9-V-11-2-V-FD-003	UNIT (11) PREFILTER
18	9-V-11-2-V-FD-004	UNIT (11) HIGH EFF. FILTER
19	9-V-11-2-V-HK-018	UNIT (11) HEATING COIL
20	9-V-11-2-V-HK-019	UNIT (11) COOLING COIL
21	9-V-11-2-V-AH-004	AIR HANDLING UNIT (21A) COMP. ROOM
22	9-V-11-2-V-AH-005	AIR HANDLING UNIT (21B) COMP. ROOM
23	9-V-11-2-V-HK-013	REHEAT COIL
24	9-V-11-2-V-HK-014	REHEAT COIL
25	9-V-11-2-V-HK-015	REHEAT COIL
26	9-V-11-2-V-HK-016	REHEAT COIL
27		
28	9-V-11-2-V-FN-022	HVAC EQUIP ROOM EXH. FAN
29	9-V-11-2-V-FN-023	HVAC EQUIP ROOM EXH. FAN
30	9-V-35-2-V-HT-145	UNIT HEATER
31	9-V-35-2-V-HT-146	UNIT HEATER
32	9-V-35-2-V-HT-147	UNIT HEATER
33	9-V-33-2-V-HT-148	UNIT HEATER
34		
35		
36		
37		

ROOM NUMBER INDEX

ROOM NO.	ELEV.			ROOM DESCRIPTION
402	72'-8"			COMPUTER ROOM
403	72'-8"			STORAGE ROOM
404	72'-8"			BREAK ROOM
405	72'-8"			RECORD STORAGE ROOM
406	72'-8"			CONFERENCE ROOM
407	72'-8"			MENS TOILET
408	72'-8"			WOMENS TOILET
409	72'-8"			STORAGE TANKS
411	72'-8"			HALLWAY
413	72'-8"			OPERATIONS ROOM
413A	72'-8"			VESTIBULE
413B	72'-8"			MRC ROOM
413C	72'-8"			COMMUNICATION ROOM
-	66'-8"			TSC HVAC EQUIP ROOM

NOTES

1. ALL SYSTEMS SHOWN ARE NON SAFETY CLASS 9 AND NON SEISMIC CATEGORY EXCEPT FOR TORNADO DAMPERS WHICH ARE SAFETY CLASS 3 AND SEISMIC CATEGORY I. ALL NHS DUCTWORK & HVAC EQUIP. SUPPORTS INSIDE TSC ARE DESIGNED TO MEET QUALITY CLASS 7 REQUIREMENTS.
2. DELETED.
3. ALL DAMPER NUMBERS SHOWN HAVE THE PREFIX 9-V-11-2-V, EXCEPT FOR TORNADO DAMPERS WHICH HAVE THE PREFIX 3-V-11-2-V.
4. ROOM NUMBERS ARE AS SHOWN ON ARCHITECTURAL DRAWINGS.
5. DELETED.
6. ALL INSTRUMENTS ON THIS P&ID HAVE SYSTEM DESIGNATOR "HE".
7. RETURN DAMPER DA-185 REMAINS PARTLY OPEN IN FC MODE.
8. DAMPERS DA-189 188 & 189 ARE SUBMAL FLIGHT DAMPERS
9. ALL INSTRUMENTS ON THIS P&ID HAVE SYSTEM DESIGNATOR "HE" UNLESS OTHERWISE NOTED AS FIRE & CLOCK POSITION .
10. ALL AIR FLOW CFM'S SHOWN ARE AT STANDARD CONDITIONS (SCFM).
11. HALON SIGNAL FROM FIRE PROTECTION PANEL ICP-026 CLOSES DAMPER ON HALON INJECTION.
12. START UP TO PROVIDE CONDENSATE DRAIN LINE FROM AIR HANDLING UNIT (21A) & (21B) WITH P-TRAP, VENT LEAK, 6 INCH DEEP AND ROUTED TO NEAREST FLOOR DRAIN.
13. ABANDON TAG NOS FCV 9742 & 9748 IN PLACE BY CLOSING INSTRUMENT ISOLATION VALVE.
14. FOR ACTUAL AIR FLOW QUANTITIES, SEE THE AS-BUILT CONDITION SHOWN ON THE FINAL AIR BALANCING REPORT CSSS (2)-0889-3L.

REFERENCE DRAWINGS

9-F-08881	P&ID SYMBOLS
9-F-08883	P&ID SYMBOLS
9M1324935	ARCHITECTURAL DWGS

NOT TO BE INCORPORATED AMENDMENT LIST		
TYPE	NUMBER	LOCATION/DWG COORD.
FCR	89-2928	NA

REV.	DATE	REVISION	ORIG	CKR	RE	DV	SE	NO.	ISSUED DATE	REVISION	ORIG	CKR	RE	DV	SE
16	12-4-03	REVISED PER CR 82-12254-2	JGL												
0-15	12-16-82	ISSUED FOR CONSTRUCTION.	SIGNATURES ON FILE												

SOUTH TEXAS PROJECT
NUCLEAR OPERATING COMPANY

PIPING & INSTRUMENTATION DIAGRAM -HVAC
TECHNICAL SUPPORT CENTER
HVAC SYSTEM & AIR DISTRIBUTION

PRIORITY	CADD FILE NO.	FSUG. NO.	STI. NO.	SCALE	DWG. NO.	REV.
1	FJA727.151	D078928	31530692	NONE	8V119V25006 #2	16

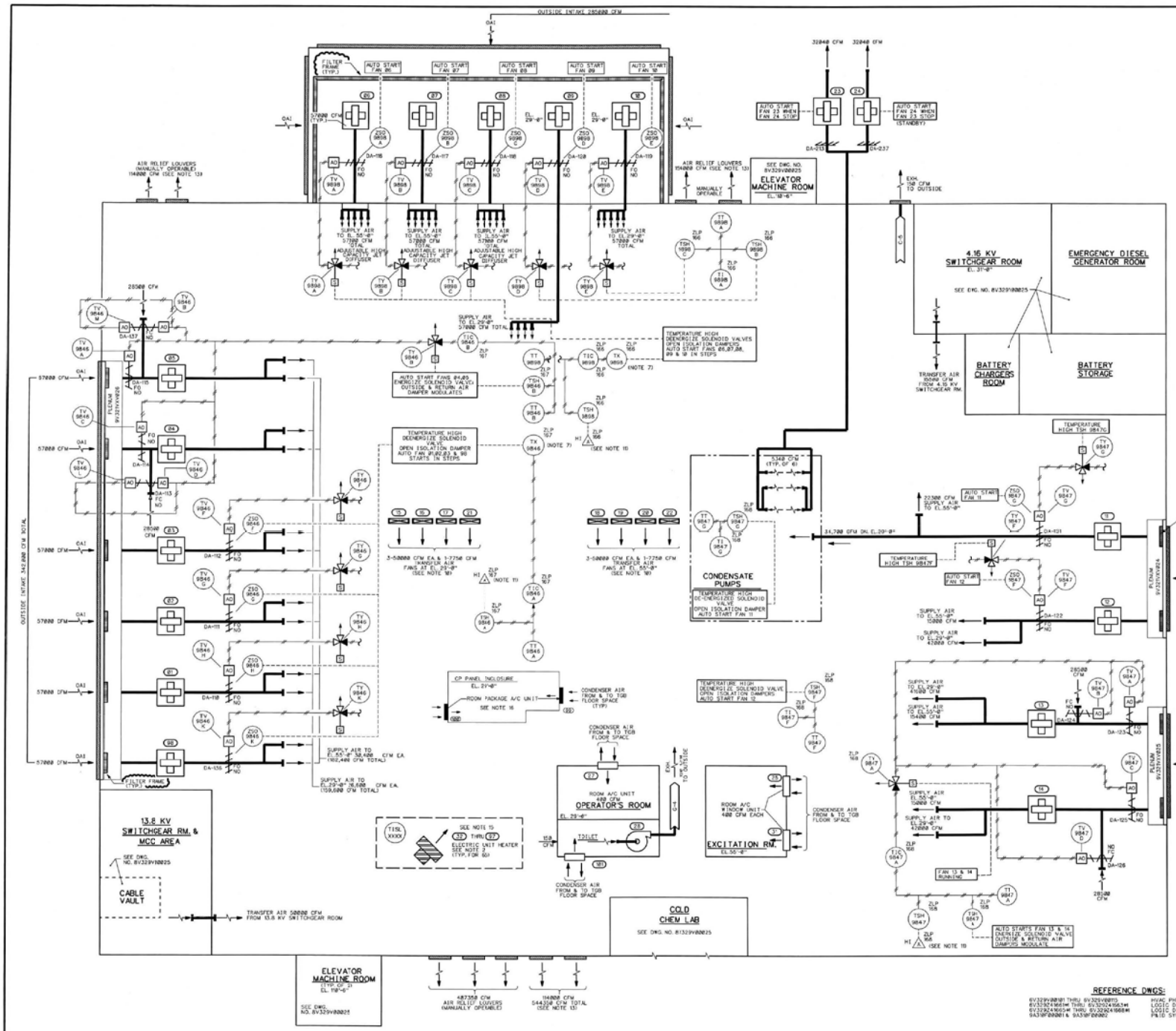

THERMOSTAT TPNS	KEY NO.	EQUIPMENT NUMBER (NOTE 18)	DESCRIPTION OF EQUIPMENT
	61	8V321VFN024	T.G. HVAC SUPPLY FAN (11A)
	62	8V321VFN025	(11B)
	63	8V321VFN026	(11C)
	64	8V321VFN027	(11D)
	65	8V321VFN028	(11H)
	66	8V321VFN029	(11F)
	67	8V321VFN027	(11D)
	68	8V321VFN028	(11E)
	69	8V321VFN032	(11A)
	10	8V321VFN033	(11B)
	11	8V321VFN030	(11K)
	12	8V321VFN031	(11L)
	13	8V321VFN009	(11)
	14	8V321VFN010	(11J)
	15	8V321VFN011	T.G. HVAC TRANSFER FAN (11A)
	16	8V321VFN012	(11B)
	17	8V321VFN013	(11C)
	18	8V321VFN014	(11D)
	19	8V321VFN015	(11E)
	20	8V321VFN016	(11F)
	21	8V321VFN015	(11G)
	22	8V321VFN016	(11H)
	23	8V321VFN037	T.G. HVAC EXH. VENT. FAN
	24	8V321VFN038	T.G. HVAC EXH. VENT. FAN (STANDBY)
	25	8V321VRP007	EXCITATION RM A/C WINDOW UNIT (11A)
	26	DELETED	(11H NOT USED)
	27	8V321VRP004	OPERATOR RM. A/C WINDOW UNIT
	28	8V321VFN018	OPERATOR RM. CENTRIFUGAL EXH. FAN
	29	DELETED	
	30	DELETED	
	31	8V321VRP007	EXCITATION RM A/C WINDOW UNIT (11C)
NBHTTSHL6724	32	8V321VHT055	ELECTRIC UNIT HEATER
THRU	THRU	THRU	
9938	37	VHT059	
9939	43	VHT065	
9940	49	VHT069	
9944	53	VHT073	
THRU	THRU	THRU	
9958	97	VHT117	
	98	8V321VFN034	T.G. HVAC SUPPLY FAN (11P)
NBHTTSHL6724	99	8V321VRP010	CP PANEL ROOM PACKAGE A/C UNIT
NBHTTSHL6724	100	8V321VRP011	CP PANEL ROOM PACKAGE A/C UNIT
	101	8V321VRP014	TOILET AIR CONDITIONER

NOTES:

1. ALL HVAC EQUIPMENT IS LOCATED ON EL.55'-8" UNLESS OTHERWISE NOTED ON DWG.
2. ELECTRIC UNIT HEATERS HAVE SEPARATELY FURNISHED THERMOSTATS SET AT 50°F. TYPICAL FOR 60 ELECTRIC UNIT HEATERS AS SHOWN ON DWGS 8V329VHN001 THRU 8V329VHN009. SEE SCHEDULE FOR THERMOSTAT TPNS.
3. ALL DAMPERS NUMBERS SHOWN HAVE THE PREFIX 8V321V.
4. ALL AIR INTAKE, AIR RELIEF & EXHAUST LOUVERS ARE WEATHERPROOF, WITH 1/2" BIRDSCREEN.
5. ALL INSTRUMENTS ON THIS P&ID HAVE SYSTEM DESIGNATOR "HT".
6. ALL INSTRUMENTS ON THIS P&ID HAVE SEPARATION GROUP "N".
7. STEP CONTROL SEQUENCERS TX9846 & TX9898 SHALL BE PROGRAMMED TO START NORTHSIDE & EASTSIDE FANS AS INDICATED.
8. HAND SWITCHES ARE SHOWN ON REFERENCED LOGIC DIAGRAMS.
9. ALL SYSTEMS SHOWN ARE NNS & NON SEISMIC.
10. TRANSFER FANS #05 THRU #02 ARE STARTED MANUALLY.
11. TGB HVAC GENERAL TROUBLE ALARM IS REMOTELY LOCATED ON PANEL ZLP-658 .
12. DELETED
13. CFM QUANTITIES SHOWN ARE FOR LOUVER SIZING & NOT FOR AIR BALANCING.
14. FOR UNIT 1 ACTUAL AS BUILT CFM'S REFER TO AIR BALANCE TEST AND BALANCE REPORT UNDER BECHTEL LOG NO. 14926-C(2)(2)-00024-Y5.
15. KEY NO. 35,36, 48 THRU 47, 50,51,52 ARE NOT INCLUDED.
16. FIELD TO ROUTE A/C UNIT DRAINS TO NEARBY FLOOR DRAIN VIA PVC.

REFERENCE DWGS:

8V329V00101 THRU 8V329V00115	HVAC PHYSICAL LAYOUT
6V323Q14661M THRU 6V323Q14663M	LOGIC DIAGRAM
6V329Q14603M THRU 6V329Q14668M	LOGIC DIAGRAM
9A330F00001 & 9A330F00002	P&ID SYMBOLS

NO.	ISSUE DATE	REVISION	ORIG	CKR	RE	DV	SE
16	2-5-08	INCORP. DCN 8V0028 07C2.06 5	JSH				
15	05-15-02	INCORP. DCN # 8103845.	JSH				
12-14	10-12-82	ISSUED FOR CONSTRUCTION.	SIGNATURES ON FILE				

NO.	ISSUE DATE	REVISION	ORIG	CKR	RE	DV	SE

SOUTH TEXAS PROJECT
NUCLEAR OPERATING COMPANY

PRIORITY	CADD FILE NO.	FSUG. NO.	STI. NO.
1	FJA252.161	0070928	3226027.15

PIPING & INSTRUMENTATION DIAGRAM - HVAC
TURBINE GENERATOR BUILDING
SUPPLY SUBSYSTEM

SCALE	DWG. NO.	SHT.	REV.
NONE	8V329V00023#1	-	16

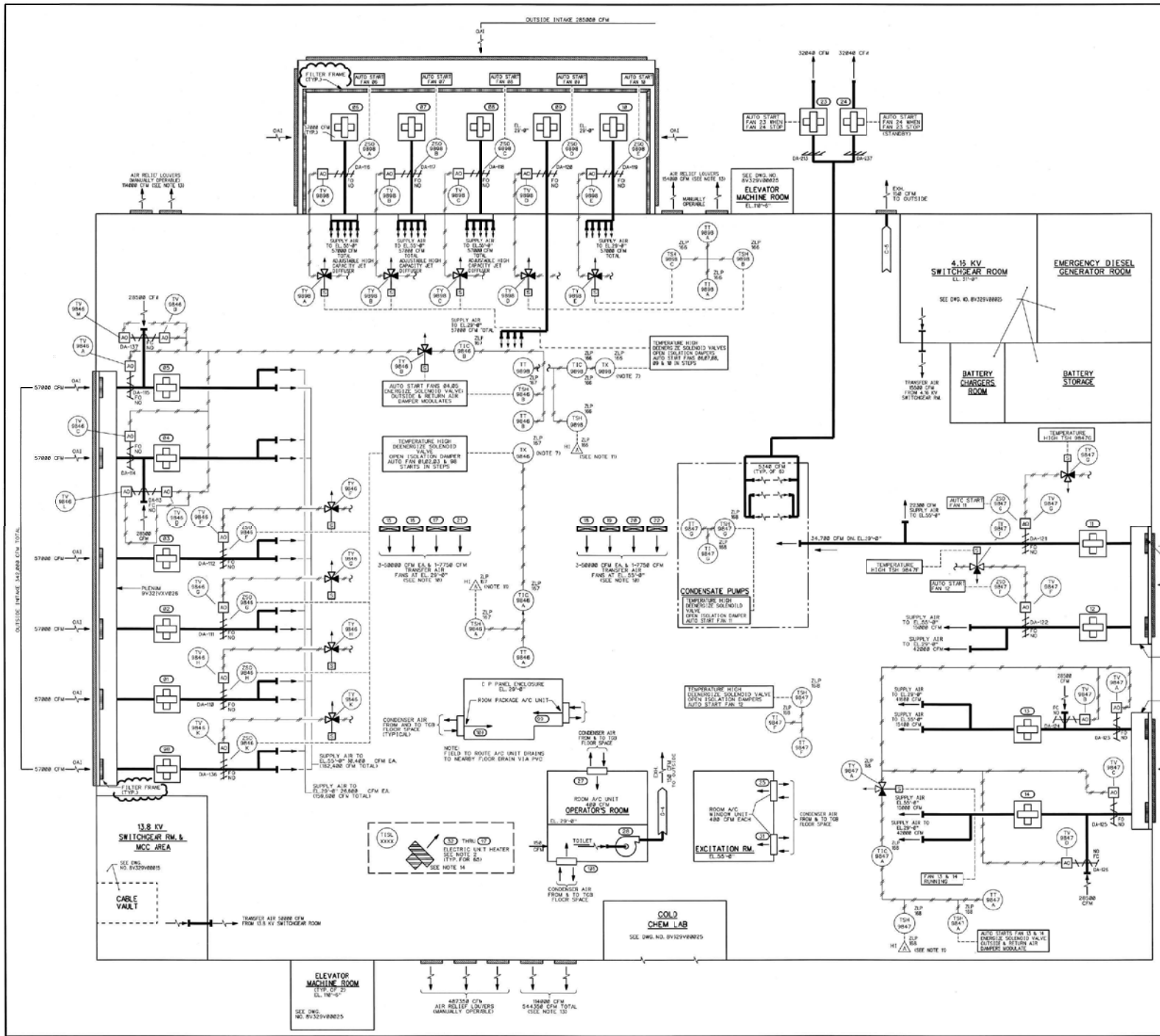

THERMOSTAT TYPE	KEY NO.	EQUIPMENT NUMBER (NOTE 9)	DESCRIPTION OF EQUIPMENT
	81	8V322VFN824	T.G. HVAC SUPPLY FAN (11A)
	82	8V322VFN825	(11B)
	83	8V322VFN826	(11C)
	84	8V322VFN827	(11D)
	85	8V322VFN828	(11H)
	86	8V322VFN829	(11F)
	87	8V322VFN831	(11G)
	88	8V322VFN832	(11E)
	89	8V322VFN833	(11N)
	90	8V322VFN834	(11P)
	91	8V322VFN835	(11K)
	92	8V322VFN836	(11M)
	93	8V322VFN837	T.G. HVAC EXH. VENT. FAN
	94	8V322VFN838	T.G. HVAC EXH. VENT. FAN (STANDBY)
	95	9V322VFP882	EXCITATION RM. A/C WINDOW UNIT (11A)
	96	DELETED	ITEM NOT USED
	97	9V322VFP884	OPERATOR RM. A/C WINDOW UNIT
	98	9V322VFN918	OPERATOR RM. CENTRIFUGAL EXH. FAN
	99	DELETED	
	100	DELETED	
	101	9V322VFP887	EXCITATION RM. A/C WINDOW UNIT (11C)
N2HTTS5,6824	102	8V352VH853	ELECTRIC UNIT HEATER
THRU THRU	THRU	THRU	
9938	39	VHT811	
9939	48	VHT858	
9942	49	VHT859	
9944	53	VHT813	
THRU THRU	THRU	THRU	
9985	97	VHT817	
	98	8V322VFN834	T.G. HVAC SUPPLY FAN (11P)
N2HTTS6,6784	99	9V322VFP919	C P PANEL ROOM PACKAGE A/C UNIT
N2HTTS6,6784	100	9V322VFP918	C P PANEL ROOM PACKAGE A/C UNIT
	101	9V322VFP914	TOILET AIR CONDITIONER

NOTES:

1. ALL HVAC EQUIPMENT IS LOCATED ON EL.55'-0" UNLESS OTHERWISE NOTED ON DWG.
2. ELECTRIC UNIT HEATERS HAVE SEPARATELY FURNISHED THERMOSTATS SET AT 58° F. TYPICAL FOR 65 ELECTRIC UNIT HEATERS AS SHOWN ON DWGS 8V329V00#81 THRU 8V329V00#86. SEE SCHEDULE FOR THERMOSTAT TYPE.
3. ALL DAMPERS NUMBERS SHOWN HAVE THE PREFIX 8V322V.
4. ALL AIR INTAKE, AIR RELIEF & EXHAUST LOUVERS ARE WEATHERPROOF, WITH 1/2" BIRDSCREEN.
5. ALL INSTRUMENTS ON THIS P&ID HAVE SYSTEM DESIGNATOR "HT".
6. ALL INSTRUMENTS ON THIS P&ID HAVE SEPARATION GROUP "N".
7. STEP CONTROL SEQUENCERS TX9846 & TX9898 SHALL BE PROGRAMMED TO START NORTHSIDE & EASTSIDE FANS AS INDICATED.
8. HAND SWITCHES ARE SHOWN ON REFERENCED LOGIC DIAGRAMS
9. ALL SYSTEMS SHOWN ARE NNS & NON SEISMIC.
10. TRANSFER FANS #15 THRU #22 ARE STARTED MANUALLY.
11. TGB HVAC GENERAL TROUBLE ALARM IS REMOTELY LOCATED ON PANEL ZLP-156.
12. FOR UNIT 2 EQUIPMENT # PREFIX WILL BE X-XXX-2-V-XXXXX.
13. CFM QUANTITIES SHOWN ARE FOR LOUVER SIZING & NOT FOR AIR BALANCING.
14. KEY No. 35,36,40 THRU 47,50,51& 52 ARE NOT INCLUDED.

NOTES CONT'D:

15. FOR ACTUAL AIR FLOW QUANTITIES , SEE THE AS-BUILT CONDITION SHOWN ON THE FINAL AIR BALANCING REPORT 2HT24-ST0014 FOR UNIT 2

REFERENCE DWGS:

8V329V00001 THRU 8V329V00075	HVAC PHYSICAL LAYOUT
6V329241661#2 THRU 6V329241663#2	LOGIC DIAGRAM
6V329241664#2 THRU 6V329241674#2	LOGIC DIAGRAM
6V329242532#2 AND 7V329242532#2	LOGIC DIAGRAM
9A30F00011 & 9A30F00002	P&ID SYMBOLS

NO.	ISSUE DATE	REVISION	ORIG	CKR	RE	DV	SE	NO.	ISSUE DATE	REVISION	ORIG	CKR	RE	DV	SE
15	2-5-08	INCORP. DCN 0702069.	JSH												
14	05-15-02	INCORP. DCN 0103046.	JSH	ON FILE											
13	10-12-82	ISSUED FOR CONSTRUCTION.	SIGNATURES ON FILE												

ISSUED FOR

SOUTH TEXAS PROJECT NUCLEAR OPERATING COMPANY

PRIORITY	CADD FILE NO.	FSUG. NO.	STI. NO.
1	FJA750.151	D070928	322626715

PIPING & INSTRUMENTATION DIAGRAM - HVAC
TURBINE GENERATOR BUILDING
SUPPLY SUBSYSTEM

SCALE	DWG. NO.	SHT.	REV.
NONE	8V329V00023#2	-	15

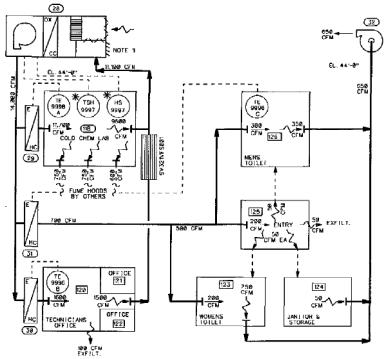

COLD CHEMISTRY LAB

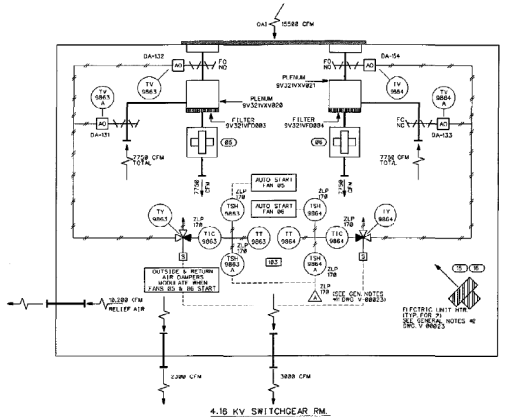

4.16 KV SWITCHGEAR RM.

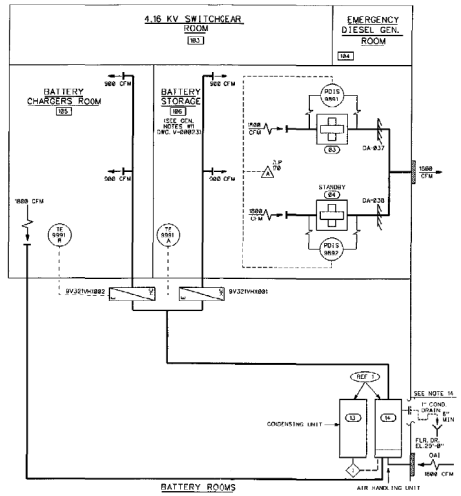

BATTERY ROOMS

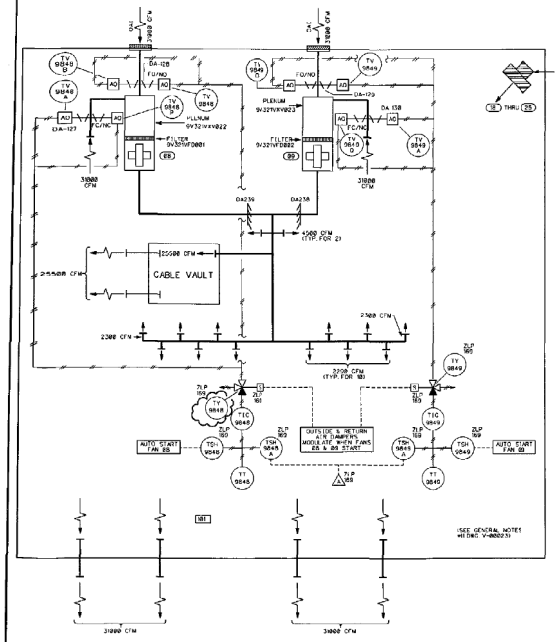

13.8 KV SWITCHGEAR ROOM AND CABLE VAULT

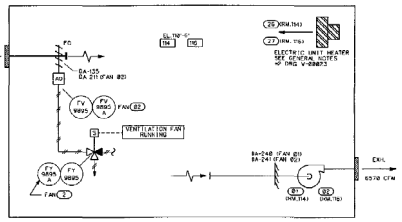

ELEVATOR MACHINE ROOM (TYPICAL FOR TWO)

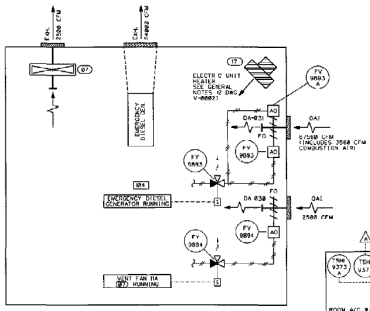

EMERGENCY DIESEL GENERATOR ROOM

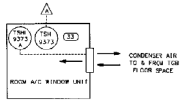

E.H. CONTROL CABINET ENCLOSURE

EL 55'-8"

REFERENCE DWGS:
VTD-017 0079/0100

KEY NO	THERMOSTAT TAG	EQUIPMENT NUMBER (NOTE 2)	DESCRIPTION OF EQUIPMENT
81		8-V32-V-V-H801	ELEVATOR MACHINE RM FAN FAN (RM 1161 (11A)
82		8-V32-V-V-H802	ELEVATOR MACHINE RM EXH FAN (RM1161 (11B)
83		8-V32-V-V-H803	BATTERY ROOM VENT FAN (11A)
84		8-V32-V-V-F0804	BATTERY ROOM VENT FAN (11B) STANDBY
85		8-V32-V-V-H805	4.16 KV SWITCHGEAR ROOM VENT FAN (11A)
86		8-V32-V-V-H806	4.16 KV SWITCHGEAR ROOM VENT FAN (11B)
87		8-V32-V-V-F0807	MCP EMERGENCY DG ROOM VENT FAN (11A)
88		8-V32-V-V-H808	13.8 KV SWGR RM & CABLE VAULT VENT FAN(11A)
89		8-V32-V-F0809	13.8 KV SWGR RM & CABLE VAULT VENT FAN(11B)
10		DELETED	
11		DELETED	
12		DELETED	
13		8-V32-V-V-V001	AIR COOLED CONDENSING UNIT (BATT RM)
14		8-V32-V-V-V002	AIR HANDLING UNIT (BATT. RM.)
15	NHT-T15-9941	8-V35-V-V-H870	ELECTRIC UNIT HEATER
16	9942	8-V35-V-V-H871	ELECTRIC UNIT HEATER
17	9943	8-V35-V-V-H872	ELECTRIC UNIT HEATER
18	9931	8-V35-V-V-H868	ELECTRIC UNIT HEATER
(NHU)	(NHU)	(NHU)	ELECTRIC UNIT HEATER
20	9938	8-V35-V-V-H867	ELECTRIC UNIT HEATER
26	9932	8-V35-V-V-H861	ELECTRIC UNIT HEATER (ROOM 114)
27	9933	8-V35-V-V-H862	ELECTRIC UNIT HEATER (ROOM 114)
28		8-V32-V-V-H888	COLD CHEM LAB AREA PACKAGE A/C UNIT
29		8-V32-V-V-H883	ELECTRIC DUCT HEATER
30		8-V32-V-V-H884	ELECTRIC DUCT HEATER
31		8-V32-V-V-H885	ELECTRIC DUCT HEATER
32		8-V33-V-V-F0841	TOILET & JAN TOR STORAGE EXHAUST FAN
33	NHT-TSH-0373	8-V32-X-V-RP888	EH CONTROL CABINET A/C WINDOW UNIT
34		8-V37-V-V-RP889-A	EH CONTROL CABINET A/C WINDOW UNIT

NOTES:

1. ALL HVAC EQUIPMENT IS LOCATED ON EL.29'-8" UNLESS OTHERWISE NOTED ON DRAW NG.
2. SEE GENERAL NOTES 2 THRU 12 SHOWN ON DWG. 8-V-32-V-00023.
3. DELETED.
4. DELETED.
5. DELETED.
6. DELETED.
7. * SUPPLIED BY EQUIPMENT MANUFACTURER.
8. DELETED.
9. AIR FLOW QUANTITIES (CFMS) SHOWN ON THIS DRAWING ARE DESIGNED CFMS FOR ACTUAL FLOW CFMS REFER TO TESTING & BALANCING DATA SHEETS/AIR FLOW DIAGRAMS, REVIEWED AND STAMPED BY ENGINEERING.
10. DELETED.
11. OPENINGS IN A/C UNIT HOUSING FOR POWER EXHAUSTER DISCHARGE MAY BE BLANKED OFF IF NON-TIDEN MODE (POWER EXHAUSTER) OPERATION IS OPTIONAL.
12. REFER TO AIR BALANCE REPORT UNDER SECAT(L) LOG NO. 14GNM-C835-H-00023-VS FOR COLD CHEM LAB ACTUAL AS-BUILT AIR QUANTITIES/FLOWS.
13. SEE FOLLOWING FINAL AIR BALANCE REPORTS FOR AS-BUILT AIR FLOW QUANTITIES (CFMS):
    TGB BATTERY & CHARGER ROOMS C835-01-0000VS
    TGB 4.16KV SWGR ROOM: C835-01-0000AVS
    C835-01-0000FVS
    TGB 13.8KV SWGR ROOM: C835-01-0000BVS
    TGB DIESEL GENERATOR ROOM: C835-01-0000TVS
14. THE CONDENSATE DRAIN LINE IS OF COPPER. COPPER DRAIN LINE IS TO BE FIELD ROUTED TO THE FLOOR DRAIN.
15. DELETED.

ISSUE NO.	ISSUE DATE	REVISION	DRIG	CKR	RF	DV	SE	NO.	ISSUE DATE	REVISION	DRIG	CKR	RF	DV	SE
22	5-24-01	INCORP. DCN 0501398	KS	JSH	[illegible]	[illegible]	[illegible]								
21	8-6-03	INCORP. DCN 0101597	JSH ON FILE												
20	8-1-00	INCORP. DCN 0002702.	SIGNATURES ON FILE												
19	3-22-00	INCORP. DCN 9703348.	SIGNATURES ON FILE												
0-1.88	12 13-95	ISSUED FOR CONSTRUCTION.	SIGNATURES ON FILE												

SOUTH TEXAS PROJECT
NUCLEAR OPERATING COMPANY

PIPING & INSTRUMENTATION DIAGRAM HVAC
TURBINE GENERATOR BUILDING
SUPPLY SUBSTATION

PRIORITY	CADD FILE NO.	FILE NO.	STI. NO.	SCALE	DWG NO.	SHT	REV
1	FJA251.221	D070028	31930016	NONE	8V329V00025#1		22

8 7 6 5 4 3 2 1

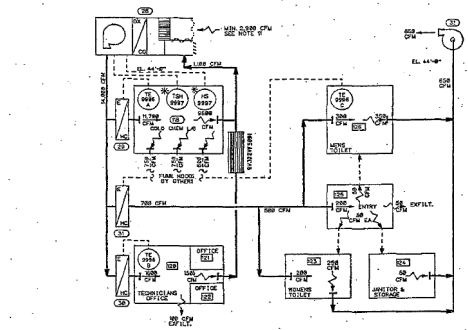

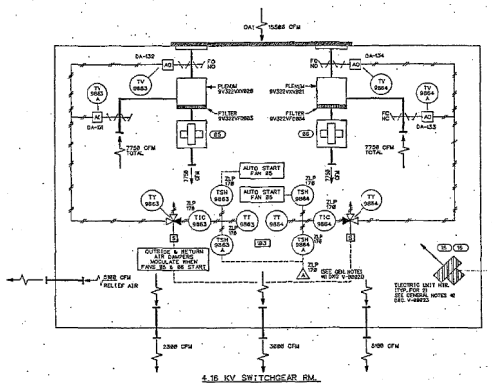

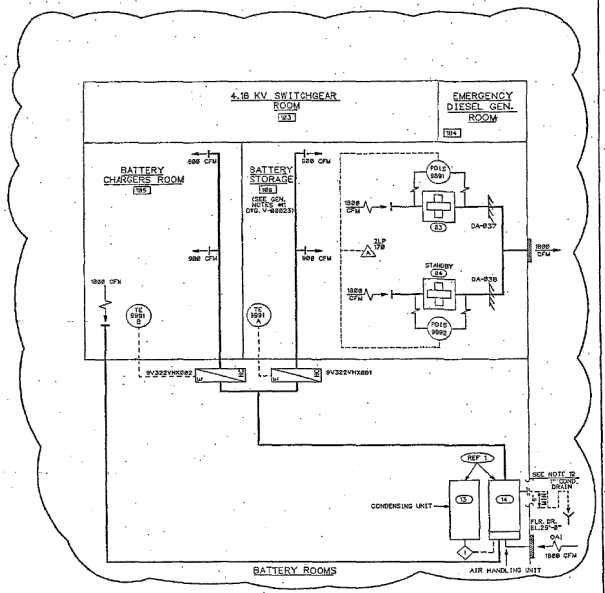

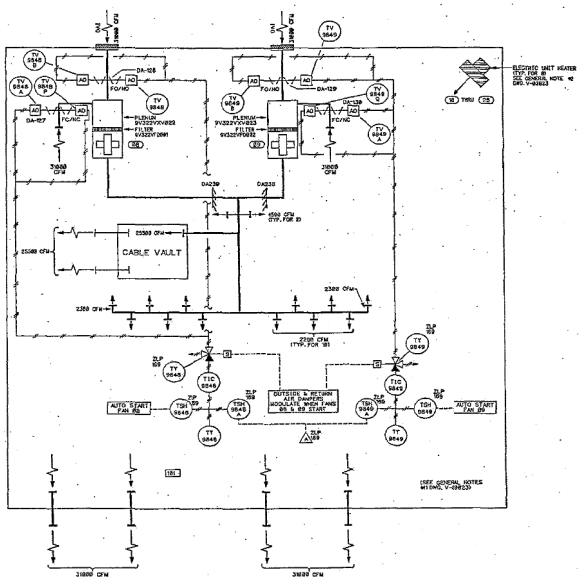

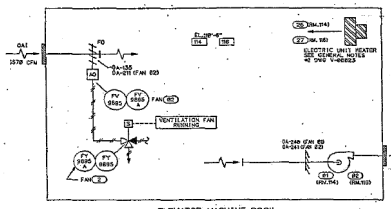

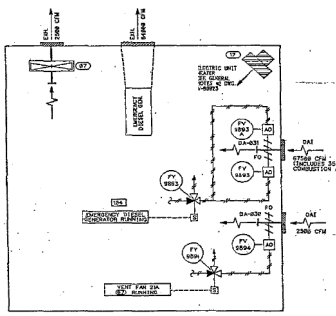

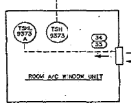

E.H. CONTROL CABINET ENCLOSURE
NO. 55-49

KEY NO.	THERMOSTAT TAG	EQUIPMENT MARK (NOTE 3)	DESCRIPTION OF EQUIPMENT
01		1-V31-2-V-M101	ELEVATOR MACHINE RM COOLING UNIT (EUH)
02		2-V31-2-V-M101	ELEVATOR MACHINE RM COOLING FAN (RU,VS1 (2)18)
03		1-V31-2-V-M102	BATTERY ROOM VENT. FAN (EAF)
04		2-V31-2-V-M104	BATTERY ROOM VENT. FAN (2B)(STANDBY)
05		1-V31-2-V-M105	4.16 KV SWITCHGEAR ROOM VENT. FAN (EAF)
06		2-V31-2-V-M105	4.16 KV SWITCHGEAR ROOM VENT. FAN (2B)
07		1-V31-2-V-M107	SOR EMERGENCY DG ROOM VENT FAN (EAF)
08		1-V31-2-V-M039	13.8KV SWGR.RM.& CABLE VAULT VENT. FAN (EAF)
09		2-V31-2-V-M040	13.8KV SWGR.RM.& CABLE VAULT VENT. FAN (2B)
10		SPLIT DX	
11		DELETED	
12		SPLIT DX	
13		2-V31-2-V-XV087	AIR COOLED CONDENSING UNIT (BATT.RM.)
14		2-V31-2-V-XV082	AIR HANDLING UNIT (BATT.RM.)
15	NIGHT TSH 9941	1-V33-2-V-H1076	ELECTRIC UNIT HEATER
16		9942	2-V33-2-V-H1071	ELECTRIC UNIT HEATER
17		9943	2-V33-2-V-H1072	ELECTRIC UNIT HEATER
18		9931	2-V33-2-V-H1069	ELECTRIC UNIT HEATER
19	THRU	THRU	THRU	ELECTRIC UNIT HEATER
20		9935	2-V33-2-V-H1067	ELECTRIC UNIT HEATER
21		9932	2-V33-2-V-H1061	ELECTRIC UNIT HEATER (ROOM 1H)
22		9933	2-V33-2-V-H1062	ELECTRIC UNIT HEATER (ROOM 1B)
23			2-V33-2-V-HP088	COLD CHAM.LAB.AREA PACKAGE A/C UNIT
24			2-V33-2-V-H1033	ELECTRIC DUCT HEATER
25			2-V33-2-V-H1064	ELECTRIC DUCT HEATER
26			2-V33-2-V-H1065	ELECTRIC DUCT HEATER
27			2-V33-2-V-H041	TOILET & JANITOR STORAGE EXHAUST FAN
28	NIGHT TSH 9273		2-V33-2-V-HP085	E H CONTROL CABINET A/C WINDOW UNIT
29			2-V33-2-V-HP085A	E H CONTROL CABINET A/C WINDOW UNIT

REFERENCE DWGS.: V10-C147-0079/0098

NOTES:

1. ALL HVAC EQUIPMENT IS LOCATED ON EL.29'-0" UNLESS OTHERWISE NOTED ON DRAWING.
2. SEE GENERAL NOTES 2 THRU 12 SHOWN ON DWG. V-08023-V08023.
3. DELETED.
4. DELETED.
5. DELETED.
6. DELETED.
7. * SUPPLIED BY EQUIPMENT MANUFACTURER.
8. DELETED.
9. AIR FLOW QUANTITIES (CFMS) SHOWN ON THIS DRAWING ARE DESIGN CALCULATION ACTUAL FLOW CFMS. REFER TO TESTING & BALANCING DATA SPREADSHEETS, FLOW DIAGRAMS, REVIEWED AND STAMPED BY ENGINEERING.
10. DELETED.
11. OPENINGS IN THE A/C UNIT HOUSING FOR POWER EXHAUSTER DISCHARGE MAY BE BLANKED OFF. ECONOMIZER MODE (POWER EXHAUSTER) OPERATION IS OPTIONAL.
12. THE CONDENSATE DRAIN LINE IS OF PVC. PVC DRAIN PIPE IS TO BE FIELD ROUTED TO THE FLOOR DRAIN.
13. FOR ACTUAL AIR FLOW QUANTITIES, SEE THE AS-BUILT CONDITION SHOWN ON THE FINAL AIR BALANCING REPORT (3231Z1-000021V5, 000321V1,000441V5,000921V5,000921V1 & 0H106-01V05
14. DELETED.

REV. NO.	DATE	REVISION	ORIG	CKR	RE	DV	SE
20	6-13-02	INCORP. DCN 8192818.	JSH	JCL	[illegible]	[illegible]	
19	8-1-00	INCORP. DCN 8002753.	SIGNATURES ON FILE				
18	6-6-00	INCORP. DCN 9703554.	SIGNATURES ON FILE				
0-17	10-12-92	ISSUED FOR CONSTRUCTION.	SIGNATURES ON FILE				

ISSUE DATE	REVISION	ORIG	CKR	RE	DV	SE

SPEED CON

SOUTH TEXAS PROJECT
NUCLEAR OPERATING COMPANY

PIPING & INSTRUMENTATION DIAGRAM - HVAC
TURBINE GENERATOR BUILDING
SUPPLY SUBSYSTEM

PRIORITY	CADD FILE NO.	FSUG. NO.	STI. NO.	SCALE	DWG. NO.	SHT.	REV.
1	FJA751.201	D070928	31430719	NONE	8V329V00025#2	-	20

EQUIPMENT

SINGLE FLOW — DOUBLE FLOW — TURBINES

ROTARY — RECIPROCATING

PROGRESSIVE CAVITY — DUPLEX PISTON — POSITIVE DISPLACEMENT PUMPS

VERTICAL CENTRIFUGAL PUMPS

SUMP OR DRY PIT — WET PIT — CANNED — END SUCTION — IN-LINE

HORIZONTAL CENTRIFUGAL PUMP

SUBMERSIBLE SUMP PUMP

CANNED MOTOR PUMP

VACUUM PUMP

AIR COMPRESSOR

DIAPHRAGM COMPRESSOR

BLOWER

HEAT EXCHANGER U-TUBE

HEAT EXCHANGER STRAIGHT TUBE

COOLER W/SEPARATOR

TANKS

CONE ROOF — DOME ROOF — FLOATING TOP — FLAT TOP (SHOWN WITH INTERNAL DIAPHRAGM)

WORKING AND TOTAL CAPACITIES SHOULD BE INDICATED FOR TANKS AND PRESSURE VESSELS

PRESSURE VESSELS, VERTICAL (SHOWN) OR HORIZONTAL (TANKS, RECEIVERS, DRYERS, SEPARATORS, DEMINERALIZERS, ETC.)

PRESSURIZED GAS BOTTLE

ACCUMULATOR

AGITATOR, MIXER OR BLENDER

VENT STACK FOR MAIN STEAM RELIEF VALVES

STEAM GENERATOR

PROCESS PIPING

MAIN PROCESS LINE AIR FLOW LINE

SECONDARY PROCESS LINE

REDUCER

PIPE CAP

SCREWED CAP

BREATHER CAP

HOSE CONNECTION NOTE 3 AND 6

QUICK DISCONNECT COUPLING

REMOVABLE SPOOL

FLEXIBLE CONNECTION

FLANGE CONNECTION (PIPING OR EQUIP)

IF-INSULATED FLANGE (SHOWN) DU-DIELECTRIC UNION

BLIND FLANGE

LOOP SEAL (TRAP)

(5/8) DOWNWARD SLOPE (1" PER 6' SHOWN)

(5/8) UPWARD SLOPE (1" PER 6' SHOWN)

ATMOSPHERIC VENT

BURIED PIPE

HEAT TRACING/FREEZE PROTECTION
E - ELECTRICALLY TRACED (SHOWN)
S - STEAM TRACED

HEAT TRACING/MAINTAINED PROCESS TEMPERATURE
E - ELECTRICALLY TRACED (SHOWN)
S - STEAM TRACED

BY OTHERS

DRAIN LEG

FLOW ORIFICE FIXED

RUPTURE DIAPHRAGM

THERMAL SLEEVE

LINE VALVES

GATE VALVE (OPEN)

GATE VALVE (CLOSED)

GATE VALVE (DOUBLE DISC OPEN)

GATE VALVE (DOUBLE DISC CLOSED)

GLOBE VALVE (OPEN)

GLOBE VALVE (CLOSED)

ANGLE VALVE (OPEN)

ANGLE VALVE (CLOSED)

NEEDLE VALVE (OPEN)

NEEDLE VALVE (CLOSED)

PLUG VALVE (OPEN)

PLUG VALVE (CLOSED)

3-WAY PLUG VALVE (NORMALLY CLOSED PORT SHOWN BLACKENED)

BUTTERFLY VALVE

BALL VALVE (OPEN)

BALL VALVE (CLOSED)

AUTORECIRC VALVE

LINE VALVES (CONT.)

CHECK VALVE

STOP CHECK VALVE

ANGLE STOP CHECK VALVE

XV — POWER-ASSISTED NONRETURN VALVE

BACKFLOW PREVENTER

FOOT VALVE

FLOW LIMITING (OR EXCESS FLOW) VALVE

HOSE VALVE GATE

HOSE VALVE GLOBE

4-WAY VALVE

3-WAY VALVE (CLOSED PORT SHOWN BLACKENED)

QUICK OPENING VALVE

SAUNDERS OR DIAPHRAGM VALVE

BELLOWS SEAL VALVE

PACKLESS METAL DIAPHRAGM VALVE

CAPPED STEM VALVE

PINCH VALVE

FLOAT VALVE

RUPTURE DISC

SAFETY OR RELIEF VALVE (INLET PORT SHOWN BLACKENED)

ELECTROMATIC RELIEF VALVE

DIFFERENTIAL PRESSURE RELIEF VALVE (INLET PORTS SHOWN BLACKENED)

AIR SAFETY VALVE

VACUUM RELIEF VALVE

COMBINATION VACUUM & PRESSURE RELIEF VALVE

AUTO AIR RELIEF VALVE

HAND TEST VALVE (INLET PORT SHOWN BLACKENED)

OPERATOR
G-GEAR (SHOWN)
A-AIR WRENCH
CH-CHAIN
S-SPECIAL TYPE

LINE VALVE STATUS SYMBOLS

DH — STEM LEAK-OFF (DH - DRAIN HEADER)

NORMALLY OPEN (ALL VALVES EXCEPT BUTTERFLY)

NORMALLY CLOSED (ALL VALVES EXCEPT BUTTERFLY)

NO — BUTTERFLY VALVE (SHOWN) OR DELUGE VALVE
NO - NORMALLY OPEN (SHOWN) (NOTE 5)
NC - NORMALLY CLOSED

LO — LOCKED OPEN AT VALVE

LC — LOCKED CLOSED AT VALVE

CLIP — LOCKED IN PLACE AT VALVE

LOCKED — LOCKED, POSITION CONTROLLED BY PROCEDURE

LINE VALVE/DAMPER FAILURE MODES

FO — TYPICAL VALVE (GATE SHOWN)
FO - FAIL OPEN (SHOWN)
FC - FAIL CLOSED
FL - FAIL LOCKED (POSITION DOES NOT CHANGE)
FI - FAIL INDETERMINATE

MISCELLANEOUS

SPECTACLE BLIND

CIRCULAR OR HAMMER BLIND

BLIND FLANGE WITH SPACER

WASTE CONE

EXHAUST HEAD

FLEXIBLE HOSE

EXPANSION JOINT

SINGLE BASKET STRAINER

TWIN BASKET STRAINER

WYE TYPE STRAINER

TEMPORARY STARTUP STRAINER

TEE TYPE STRAINER

SCREEN TYPE STRAINER

FILTER

PUD — PULSATION DAMPENER

INLET SILENCER

EXHAUST SILENCER

SS — SUCTION STABILIZER

ST — TRAP
ST - STEAM TRAP (SHOWN)
AT - AIR TRAP
DT - DRAIN TRAP
RT - RESIN TRAP
MT - MOISTURE TRAP

RESIN SCREEN

BIRD SCREEN

FLAME ARRESTER

V — AUTOMATIC VENT

V VENT VALVE (SHOWN WITH CAP)
D DRAIN VALVE
TC TEST CONNECTION VALVE
TV TEST VENT VALVE

OPEN DRAIN (SHOWN)
RD - RADIOACTIVE DRAIN TO DRAIN HEADER
ND - NONRADIOACTIVE DRAIN
AR - ACID WASTE
NW - NORMAL WASTE
OW - OILY WASTE
SW - SANITARY WASTE

HUB DRAIN

SCREW TYPE CLEANOUT

FLANGE TYPE CLEANOUT

WALL CLEANOUT

EJECTOR OR EDUCTOR OR ATTEMPERATOR

M — STATIC MIXER

IMMERSION HEATER (STEAM OR ELECTRICAL)

SPRAY NOZZLE HEADER

SPARGER

DIFFUSER

M-XX — MECHANICAL ROD PENETRATION

MUFFLER

ARROW INDICATES LINE NUMBER CHANGE, LINE SYSTEM CHANGE, OR LINE MATERIAL SPEC CHANGE.

XX REF X — IDENTIFICATION OF PIPING CONNECTION AT EQUIPMENT OR VENDOR SUPPLIED PIPING

RADIATION SHIELDING

MISCELLANEOUS (CONT.)

CVCS RCP 3 — LINE ORIGIN OR DESTINATION
W#05005 C-6 — LINE BREAK OR RESUMPTION POINT
DWG. (TYP) ZONE (TYP) CROSS REFERENCE

DESIGNATION FOR PIPING APPEARING ON OTHER P & IDS.

EXAMPLE OF ABOVE: 6"XXXXXXXXX — FV XXXX — 1"XXXXXXXXX — CVCS RCP 3 W#05005 C-6

FURNISHED WITH WESTINGHOUSE NSSS EQUIPMENT (INCLUDING INSTRUMENTATION)

FURNISHED WITH VENDOR'S EQUIPMENT

BECHTEL-VENDOR INTERFACE

VENDOR — BECHTEL

BUILDING BOUNDARY

ANS SAFETY CLASSIFICATIONS

SAFETY CLASS 1

SAFETY CLASS 2

SAFETY CLASS 3

BOUNDARY BETWEEN CLASS 1 AND 2

CLASS 1 CONTINUES

BOUNDARY BETWEEN SAFETY CLASS AND NON-SAFETY CLASS (IN CONGESTED AREA ROTATE AS APPLICABLE)

BOUNDARY BETWEEN DEMA AND NON-SAFETY CLASS

BOUNDARY BETWEEN DEMA AND SAFETY CLASS

N1C002 — N-S INDICATOR SEE NOTE 8 (EXAMPLE)

FIRE PROTECTION EQUIPMENT

PSH — ALARM CHECK VALVE

SPRINKLER

FIRE HYDRANT

HR — FIRE HOSE REEL

HC — FIRE HOSE CABINET

FIRE PROTECTION STRAINER

DELUGE VALVE

POST INDICATOR VALVE

ANGLE VALVE / ZURN PRESSURTROL VALVE

VICTAULIC COUPLING OR DRESSER COUPLING

FIRE DEPT. CONN. SPRINKLERS ON STAND PIPE

WS — WATER SPRAY FIXED NOZZLE

MISC. ABBREVIATIONS

IRC	INSIDE REACTOR CONTAINMENT
ORC	OUTSIDE REACTOR CONTAINMENT
NNS	NON-NUCLEAR SAFETY
IMB	INSIDE MISSILE BARRIER
OMB	OUTSIDE MISSILE BARRIER
IVC	ISOLATION VALVE CUBICLE

PIPING IDENTIFICATION

THE TOTAL PROJECT NUMBER FOR A TYPICAL PIPE IS:

16" MS 1Ø1GA 2

NOMINAL PIPE SIZE — SYSTEM DESIGNATOR — UNIT INDICATOR NO. — QUALITY CLASS — PIPE SPECIFICATION — LINE NUMBER

PREFERRED VALVE IDENTIFICATION

THE TOTAL PROJECT NUMBER FOR A TYPICAL VALVE IS:

LOCATION NO. — VALVE NO.

3 B 2Ø J I CC Ø013 A

TRAIN IDENTIFIER (OPTIONAL)
SERIALIZED NUMBER
SYSTEM DESIGNATOR
ACTIVITY DESIGNATOR
UNIT INDICATOR
SITE SUBCATEGORY
SITE GENERAL CATEGORY
QUALITY CLASSIFICATION * *

ONLY THE VALVE NO. IS TO BE SHOWN ON P&I'S EXCEPT WHEN THE ACTIVITY DESIGNATOR IS A "X", IN WHICH CASE THE ACTIVITY DESIGNATOR IS ALSO SHOWN. WHEN THE ACTIVITY DESIGNATOR IS A "X", SHOWING THE ACTIVITY DESIGNATOR ON P&I'S IS OPTIONAL.

* * QUALITY CLASSIFICATION DESIGNATOR MAY NOT REPRESENT THE ACTUAL INSTALLED QUALITY CLASS. REFER TO MASTER EQUIPMENT DATABASE FOR THE INSTALLED QUALITY CLASSIFICATION.

NOTE: SEE TPNS SPECIFICATION 9APN0S1N001 TABLE V1 FOR ALTERNATE NUMBERING METHOD.

EQUIPMENT IDENTIFICATION

THE TOTAL PROJECT NUMBER FOR A TYPICAL PIECE OF EQUIPMENT IS:

1R 12 IN SG 1Ø1D

TRAIN IDENTIFIER (OPTIONAL)
SERIALIZED DESIGNATOR (NOTE)
COMPONENT DETAIL
ACTIVITY DESIGNATOR
UNIT INDICATOR
SITE SUBCATEGORY
SITE GENERAL CATEGORY
QUALITY CLASSIFICATION * *

NOTE:
REFER TO THE MED TO RESOLVE TPNS NUMBER DISCREPANCIES BETWEEN TAG AND P&ID, IF REQUIRED.

* * QUALITY CLASSIFICATION DESIGNATOR MAY NOT REPRESENT THE ACTUAL INSTALLED QUALITY CLASS. REFER TO MASTER EQUIPMENT DATABASE FOR THE INSTALLED QUALITY CLASSIFICATION.

P & ID IDENTIFICATION

THE TOTAL PROJECT NUMBER FOR A TYPICAL P&ID IS:

3R2Ø9F Ø5Ø17

SERIALIZED NUMBER
ACTIVITY DESIGNATOR
UNIT INDICATOR (NOTE 4)
SITE SUBCATEGORY
SITE GENERAL CATEGORY
QUALITY CLASSIFICATION

IDENTIFICATION NUMBER NOTES

1. SEE CRITERIA FOR PIPING DESIGN, SL019PS0004, FOR DEFINITION AND APPLICATION OF SYSTEM DESIGNATOR AND PIPE SPECIFICATION.
2. SEE STP PROJECT ENGINEERING PROCEDURE EDP-4.43 FOR DEFINITION AND APPLICATION OF COMPONENT DETAIL, ACTIVITY DESIGNATOR, SITE SUBCATEGORY, SITE GENERAL CATEGORY, AND QUALITY CLASSIFICATION.
3. UNIT INDICATORS ARE AS FOLLOWS:
   0-SHARED COMPONENT (COMMON TO BOTH UNITS)
   1-APPLICABLE TO UNIT 1 ONLY
   2-APPLICABLE TO UNIT 2 ONLY
   9-APPLICABLE TO BOTH UNITS
4. AN ALTERNATIVE TO A UNIT 1 OR 2 INDICATOR IN THIS LOCATION IS THE ADDITION OF A SUBSCRIPT TO THE END OF THE EXISTING P&ID NUMBER (SUCH AS 4₁ FOR UNIT 1 AND 4₂ FOR UNIT 2).

GENERAL NOTES:

1. VENT AND DRAIN MAY OR MAY NOT BE SHOWN ON P&ID'S, UNLESS OTHERWISE INDICATED ON THE P&ID'S. VENT AND DRAIN SIZES ARE IN ACCORDANCE WITH SPECIFICATION SL019PS0004, PARA 2.3.7.2. VENTS AND DRAINS FOR LINE SIZES 1-INCH AND LARGER WILL BE 1-INCH. LINE SIZE VENTS AND DRAINS WILL BE USED FOR ¾ INCH AND SMALLER LINES.
2. INSTRUMENT LINE SIZES ARE NOT ALWAYS PROVIDED ON THE P&ID'S. THE MASTER EQUIPMENT DATABASE (SA470N0000) PROVIDES INSTRUMENT DETAIL DRAWING NUMBERS WHICH CAN BE USED TO FIND PHYSICAL DIMENSIONS AND INSTRUMENT ROOT VALVE SIZES.
3. A SCREWED CAP IS PERMITTED IN PLACE OF A QUICK DISCONNECT HOSE CONNECTION TO ALLEVIATE NUISANCE LEAKAGE OF VALVE PRIOR TO ITS REPAIR.
4. IN ORDER TO DETERMINE EQUIPMENT TPNS TAG NUMBERS FOR UNIT 2 EQUIPMENT REFER TO THE MASTER EQUIPMENT DATABASE (SA470N0000)
5. WHERE VALVE POSITION DESIGNATORS DO NOT APPEAR ON P&ID'S FOR BUTTERFLY VALVES, THE POSITION OF THE VALVES IS SET BY OPERATIONS TO PERMIT PROPER SYSTEM OPERATION.
6. HOSE CONNECTIONS IN THE SA SYSTEM (AND OTHER NON FLAMMABLE GAS SYSTEMS) MAY HAVE A BLANK END FITTING INSTALLED. THE BLANK END FITTING FORMS A GASKETED PRESSURE BOUNDARY WHEN INSTALLED. IF THERE IS NO LEAKAGE WITH THE BLANK END FITTING INSTALLED ON A HOSE CONNECTION WITH AN ISOLATION VALVE WITH A SEAT LEAK BY, VALVE REPAIR IS NOT REQUIRED. THE BLANK END FITTING SHOULD BE LOCKED IN PLACE WITH A CLIP. THE BLANK END FITTING AND CLIP SHOULD BE ATTACHED TO THE PIPE WITH A LANYARD. IN SEISMIC AREAS THE CLIP SHALL BE USED AND THE CLIP AND BLANK END FITTING SHALL BE ATTACHED TO THE PIPE WITH A LANYARD.
7. HIGH POINT VENT VALVES, LOW POINT DRAIN VALVES AND CALIBRATION/TEST MANIFOLD VALVES ARE INSTALLED IN INSTRUMENT IMPULSE LINES BETWEEN THE PROCESS ROOT VALVE AND THE INSTRUMENT. THESE MANUALLY OPERATED INSTRUMENT VALVES ARE INSTALLED IN ACCORDANCE WITH GENERIC DETAILS AND CONSTRUCTION SPECIFICATIONS TO FACILITATE INSTRUMENTATION MAINTENANCE ACTIVITIES. THE VALVES ARE GENERALLY NOT ASSIGNED TPNS NUMBERS AND ARE NOT SHOWN ON P&ID DRAWINGS.
8. TYPICAL NUMBER IDENTIFICATION:
   1st CHARACTER - N (NO CERTIFICATION HOLDER)
   2nd CHARACTER - UNIT DESIGNATOR
   3rd & 4th CHARACTER - SYSTEM
   5th & 6th CHARACTER - SEQUENCE NUMBER

NO.	ISSUE DATE	REVISION	ORIG	CKR	RE	DV	SE
26	11-13-09	ISSUED PER DCP 09-6850-2	KS	MW	CKR	RE	DV
25	3-29-07	REVISED PER CR 07-84-15.	VJM	ON FILE			
24	9-28-06	INCORP. DCN 060102	VJM	ON FILE			
23	3-29-06	REVISED PER CR # 06-3912-2.	JSH	ON FILE			
22	7-8-02	REVISED PER CR 02-7112-3	JGL	ON FILE			
0-21	6-23-82	ISSUED FOR CONSTRUCTION	SIGNATURES ON FILE				

SUPERSEDES DCN

NO.	ISSUE DATE	REVISION	ORIG	CKR	RE	DV	SE

SOUTH TEXAS PROJECT
NUCLEAR OPERATING COMPANY

PIPING AND INSTRUMENTATION DIAGRAM
STANDARD ABBREVIATIONS AND SYMBOLS

PRIORITY	CADD FILE NO.	FSUG. NO.	STI. NO.	SCALE	DWG. NO.	SHT.	REV.
1	FJA034.261	D070926	32458549	NONE	9A310F00001		26

8 7 6 5 4 3 2 1

A B C D E F G H

c:\cgr\fja034.261 3/12/2009 9:00:53 PM

HVAC LINES

DUCTED AIR FLOW

NONDUCTED AIR FLOW

FLOW (CFM) — AIR FLOW TO SPACE

FLOW (CFM) — AIR FLOW FROM SPACE

TRANSFER AIR

HVAC EQUIPMENT OR SPECIALTIES

BACK DRAFT DAMPER (B.D.D.)

FIRE DAMPER F-FUSIBLE LINK (SHOWN) E-ELECTRO-THERMO LINK

OPPOSED BLADE DAMPER (O.B.D.)

PARALLEL BLADE DAMPER (P.B.D.)

EXHAUST AIR TORNADO DAMPER

SUPPLY AIR TORNADO DAMPER

BUTTERFLY TYPE DAMPER

NO - NORMALLY OPEN (SHOWN)
NC - NORMALLY CLOSED

FLOW INTERRUPTER E-ELECTRO THERMAL LINK(SHOWN) F-FUSIBLE LINK

CHECK DAMPER

FLUID SIDE — HVAC HEAT EXCHANGER — REFRIGERANT SIDE

OAI — OUTSIDE AIR INTAKE LOUVER

DISCHARGE LOUVER

PRE-FILTER/ HIGH-EFFICIENCY FILTER

HEPA FILTER

CARBON FILTER

TP — AIRFLOW MEASURING STATION WITH TEST PORT

MB — MIXING BOX-WITH HOT AND COLD DUCT MODULATING DAMPERS, OPERATING PROPORTIONALLY OPPOSITE TO EACH OTHER. DAMPERS SHALL FAIL OPEN IN THE COLD DUCT AND FAIL CLOSE IN THE HOT DUCT (H, C, FC, FO)

REFRIGERATION COMPRESSOR

PACKAGED AIR CONDITIONING (A.C.) UNIT

H — HUMIDIFIER

FSL — THERMAL DISPERSION TYPE

E — HALON ISOLATION DAMPER
E-ELECTRO THERMAL LINK(ETL)

CENTRIFUGAL FAN

VANEAXIAL OR TUBEAXIAL FAN

PROPELLER FAN

CFM	CUBIC FEET PER MINUTE
SCFM	STANDARD CUBIC FEET PER MINUTE
SA	SUPPLY AIR
RA	RETURN AIR
EA	EXHAUST AIR
AHU	AIR HANDLING UNIT
CDU	CONDENSING UNIT

LLSV — REFRIG. LIQUID LINE SOLENOID VALVE SHOWN IN DE-ENERGIZED POSITION

REFRIG. LIQUID LINE SIGHT GLASS

THERMOSTATIC EXPANSION VALVE WITH SENSING BULB

UNIT HEATER (ELECTRIC)

A/B — (A) E-ELECTRIC CH-CHILLED WATER DX-DIRECT EXPANSION ECW-ESSENTIAL COOLING WATER CCW-COMPONENT COOLING WATER (B) HC-HEATING COIL CC-COOLING COIL

ROOF EXHAUSTER

XE — SMOKE DETECTOR

DS — SOUND ATTENUATOR OR SILENCER

AIR SAMPLING STATION

XXX — ROOM NUMBER

XX — EQUIPMENT KEY NUMBER

SIGNALS AND LINES

INSTRUMENT AIR SUPPLY OR PNEUMATIC SIGNAL
IN-INSTRUMENT NITROGEN SUPPLY OR PNEUMATIC SIGNAL

INSTRUMENT CAPILLARY TUBING (FILLED SYSTEM)

ELECTRICAL LINE

HYDRAULIC SIGNAL LINE

IMPULSE LINE TO INSTRUMENT

ELECTROMAGNETIC OR SONIC (WITHOUT WIRING OR TUBING)

INSTRUMENT IDENTIFICATION

NY Z — LOCALLY MOUNTED INSTRUMENT

.6" DIAMETER FOR ALL INSTRUMENT BALLOONS

NY Z — CONTROL ROOM PANEL MOUNTED INSTRUMENT

ZLP XXX / NY Z — LOCAL PANEL INDICATORS/RECORDER

NOMENCLATURE FOR Y, Z, AND N
- Y = FUNCTIONAL IDENTIFICATION
- Z = LOOP IDENTIFICATION
- N = UNIT NUMBER (SEE NOTE (D) BELOW)

AAA / CD 3479B / SY W — COMPUTER INPUT POINT (.5" FLAT TO FLAT HEXAGON)

SY- SYSTEM DESIGNATOR (IF DIFFERENT FROM DRAWING OR IF NEEDED FOR UNDERSTANDING)

AAA - COMPUTER SYSTEM IDENTIFICATION
- (BLANK) - PLANT COMPUTER OR QUALIFIED DISPLAY PROCESSING SYSTEM. QUALIFIED DISPLAY PROCESSING SYSTEM (QDPS) IS REPRESENTED BY A LINE THRU MIDDLE OF HEXAGON
- RMS - RADIATION MONITORING SYSTEM COMPUTER
- ERF - EMERGENCY RESPONSE FACILITIES DATA ACQUISITION AND DISPLAY SYSTEM (ERF DADS)
- CDMS - CHEMISTRY DATA MANAGEMENT SYSTEM.

CD- C PROCESS FUNCTION / D COMPUTER POINT TYPE } REFER TO APPROPRIATE I/O LIST FOR EXPLANATION (EXCEPT RMS SYSTEM)

3479B- LOOP NUMBER (4 OR 5 CHARACTERS)

NOTES:
1. BREAK HEXAGON IF LOOP NUMBER EXTENDS OUTSIDE HEXAGON (EXCEPT RMS SYSTEM)
2. FOR CDMS, COMPUTER POINT NUMBER IS IDENTIFIED.

W- INDICATES SEPARATION GROUP OR TRAIN (A,B,C,D OR N) ON QDPS POINTS ONLY (EXCEPT RMS SYSTEM)

ZLP XXX / A — LOCAL ANNUNCIATION SINGLE INPUT - THE DESIGNATIONS HI, HI-HI, HI-LO, LO, LO-LO, EMPTY, OPEN, CLOSED, ETC. SHALL BE PLACED ADJACENT TO THE SYMBOL AND AT THE 10 O'CLOCK POSITION TO IDENTIFY THE TYPE OF ANNUNCIATION. THERE WILL BE NO COMPUTER LOGGING OF LOCAL ANNUNCIATOR POINTS.

ZLP XXX / N — LOCAL ANNUNCIATION MULTIPLE INPUTS - THE DESIGNATIONS HI, HI-HI, HI-LO, LO, LO-LO, EMPTY, OPEN, CLOSED, ETC. SHALL BE PLACED ADJACENT TO THE SYMBOL AND AT THE 10 O'CLOCK POSITION TO IDENTIFY THE TYPE OF ANNUNCIATION. THERE WILL BE NO COMPUTER LOGGING OF LOCAL ANNUNCIATOR POINTS.

S — MAIN PLANT ANNUNICATOR AND COMPUTER INTERFACE FOR SINGLE INPUT - THE DESIGNATIONS HI-HI, HI, HI-LO, LO, LO-LO, EMPTY, TRBL, ETC. SHALL BE PLACED ADJACENT TO THE SYMBOL AND AT THE 10 O'CLOCK POSITION TO IDENTIFY THE TYPE OF ANNUNCIATION. EVERY ANNUNCIATION WILL BE LOGGED IN A COMPUTER.

M — MAIN PLANT ANNUNICATOR AND COMPUTER INTERFACE FOR MULTIPLE INPUTS - THE DESIGNATIONS HI-HI, HI, HI-LO, LO, LO-LO, EMPTY, TRBL, ETC. SHALL BE PLACED ADJACENT TO THE SYMBOL AND AT THE 10 O'CLOCK POSITION TO IDENTIFY THE TYPE OF ANNUNCIATION. EVERY ANNUNCIATION WILL BE LOGGED IN A COMPUTER.

INSTRUMENT IDENTIFICATION TABLE

1	2	3	4	5	6	7	8	9	10	11	12	13	14
N	1	A	A	P	D	I	S	H	3	1	0	0	A

1 -SEPARATION GROUP
2 -UNIT NUMBER
3 - } SYSTEM DESIGNATOR
4 -
5 - } INSTRUMENT FUNCTION CODE
6 -
7 -
8 -
9 -
10- } STRING NUMBER
11-
12-
13-
14-SUFFIX (IF NEEDED: SEE NOTE (F))

GENERAL NOTES:

(A) EACH STRING OF INSTRUMENTATION WILL HAVE A UNIQUE STRING NUMBER (A STRING IS DEFINED AS TWO OR MORE INSTRUMENTS TIED TOGETHER NOT BY THE PROCESS, TO MONITOR OR CONTROL A SINGLE POINT.)

(B) SINGLE ELEMENT INSTRUMENTS MONITORING THE SAME PROCESS POINT WILL HAVE A COMMON STRING NUMBER.

(C) INSTRUMENTS MONITORING A COMMON PIECE OF EQUIPMENT SUCH AS A PUMP, HEATER, COOLER ETC. CAN HAVE A COMMON STRING NUMBER. IT IS PERMISSIBLE TO SEPARATE SINGLE ELEMENT INSTRUMENTS MONITORING A COMMON PIECE OF EQUIPMENT AS TO SUCTION, DISCHARGE INLET, OR OUTLET IF IT IS CLEARER TO DO SO.

(D) UNIT NUMBERS NEED NOT BE SHOWN IN EACH INSTRUMENT BALLOON. IF NOT SHOWN THE P&ID SHALL CONTAIN THIS NOTE:

NOTE: ALL INSTRUMENT TAG NUMBERS SHOWN ON THIS DIAGRAM ARE PREFIXED BY THE UNIT NUMBER _____ UNLESS OTHERWISE NOTED

UNIT NUMBER ASSIGNMENTS
- 1 - UNIT 1
- 2 - UNIT 2
- Ø - SHARED SYSTEM

(E) LOCAL PANEL MOUNTED INSTRUMENTS AND ANNUNCIATOR POINTS WILL BE IDENTIFIED WITH THE PROPER LOCAL PANEL NUMBER. MAIN CONTROL ROOM ANNUNCIATOR POINTS WILL NOT BE IDENTIFIED AS TO THE ACTUAL CONTROL PANEL LOCATION.

(F) WHEN THERE ARE TWO OR MORE INSTRUMENTS WITH THE SAME FUNCTIONAL IDENTIFICATION ON ONE STRING THE ADDITIONAL INSTRUMENTS WILL BE GIVEN A SUFFIX A, B, C, ETC.

(G) TEXT LOCATIONS AROUND INSTRUMENT BALLOONS SHALL BE STANDARDIZED AS SHOWN IN THE SKETCH BELOW.

J-3, J-8, J-7, J-1, J-2, J-5, J-4, J-6

J-1	ISA CODE (INSTRUMENT TYPE)
J-2	STRING NUMBER
J-3	VENDOR DESIGNATOR
J-4	SYSTEM DESIGNATOR
J-5	FUNCTION (EG)Ø
J-6	SEPARATION GROUP
J-7	ASME TEST SYMBOL(⊥ OR ± : SEE NOTE (I))
J-8	PANEL NO.

EXAMPLE:

* / 1LI 3100 / AS N / ZLP 123

1	- UNIT 1 (SEE NOTE (D))
LI	- LEVEL INDICATOR
3100A	- STRING NO.
*	- FURNISHED WITH VENDOR EQUIPMENT
AS	- AUXILIARY STEAM SYSTEM (SEE NOTE (H))
N	- SEPARATION GROUP N
ZLP 123	- PANEL NO. 123

WRITTEN: N1AS LI 3100A

(H) SYSTEM DESIGNATOR NEED NOT BE SHOWN OUTSIDE EACH BALLOON IF THE INSTRUMENT BELONGS TO THE MAJOR SYSTEM REPRESENTED ON THE P&ID. ALL P&ID'S WILL CONTAIN THIS NOTE:

ALL INSTRUMENTS ON THIS P&ID HAVE SYSTEM DESIGNATOR __ __ UNLESS OTHERWISE NOTED.

(I) ⊥ = INSTRUMENT FOR ASME TEST ONLY.
± = INSTRUMENT FOR ASME TEST PLUS NORMAL USE.

(J) SEPARATION GROUP NEED NOT BE SHOWN OUTSIDE EACH BALLOON IF THE INSTRUMENT BELONGS TO THE MAJOR SEPARATION GROUP REPRESENTED ON THE P&ID. ALL P&ID'S WILL CONTAIN THIS NOTE:

ALL INSTRUMENTS ON THIS P&ID HAVE SEPARATION GROUP DESIGNATOR _____ UNLESS OTHERWISE NOTED.

INSTRUMENT FUNCTIONS ABBREVIATIONS

LETTER	FIRST LETTER	SUCCEEDING LETTERS (4)
	VARIABLE	READOUT, PASSIVE FUNCTION, OUTPUT FUNCTION, OR MODIFIER
A	ANALYSIS (1)	ALARM
B	BURNER FLAME	
C	CONDUCTIVITY	CONTROL OR CONTROLLER
D	DENSITY	DIFFERENTIAL
E	VOLTAGE	ELEMENT
F	FLOW RATE	RATIO
G	GAGING	GLASS (UNCALIBRATED)
H	HAND (MANUAL)	HIGH
I	CURRENT	INDICATOR
J	POWER	SCANNER
K	TIME	CONTROL STATION
L	LEVEL	LOW OR LIGHT
M	MOISTURE	MIDDLE (INTERMEDIATE)
N	NUCLEAR	
O		ORIFICE (RESTRICTION)
P	PRESSURE	POINT (TEST CONNECTION)
Q	QUANTITY	INTEGRATED OR TOTALIZE
R	RADIATION	RECORDER OR PRINT OR RECEIVER
S	SPEED OR FREQUENCY	SWITCH OR SAFETY
T	TEMPERATURE	TRANSMITTER
U	MULTIVARIABLE	MULTIFUNCTION
V	VISCOSITY	VALVE DAMPER OR LOUVER
W	WEIGHT	WELL
X	UNCLASSIFIED (2)	UNCLASSIFIED
Y	VIBRATION	RELAY OR COMPUTE (3)
Z	POSITION	ACTUATOR OR DRIVE UNIT

NOTES FOR INSTRUMENT ABBREVIATIONS

(1) THE CHEMICAL FORMULA OR ANALYSIS BEING MEASURED TO BE DEFINED OUTSIDE THE TAGGING BALLOON AT THE J-5 POSITION.

(2) TYPE OF MEASUREMENT TO BE DEFINED OUTSIDE OF TAGGING BALLOON AT THE J-5 POSITION OR BY SELF DEFINED SYMBOL.

(3) TYPE OF RELAY OR FUNCTION TO BE DEFINED OUTSIDE OF TAGGING BALLOON AT THE J-5 POSITION.

TYPICAL FUNCTIONS AS FOLLOWS:

- A/F - ANALOG TO FREQUENCY
- F/A - FREQUENCY TO ANALOG
- E/P - ELECTRIC TO PNEUMATIC
- I/P - CURRENT TO PNEUMATIC
- P/E - PNEUMATIC TO ELECTRIC
- P/I - PNEUMATIC TO CURRENT
- A/D - ANALOG TO DIGITAL
- D/A - DIGITAL TO ANALOG
- √ - SQUARE ROOT FUNCTION
- (X) - NON-LINEAR FUNCTION OR CHARACTERIZER
- > - HI SELECT
- < - LO SELECT

(4) MORE THAN ONE FUNCTION LETTER MAY SUCCEED THE MEASURED VARIABLE WHEN THE DEVICE PERFORMS MORE THAN ONE FUNCTION. EXAMPLES:
LSHL - LEVEL SWITCH HIGH LOW
PIC - PRESSURE INDICATOR CONTROLLER

(5) CRT WILL DEPICT- COMPUTER DISPLAY TERMINAL.
CRH WILL DEPICT- COMPUTER KEYBOARD.
PLC WILL DEPICT- PROGRAMMABLE LOGIC CONTROLLER.

(6) SEE INSTRUMENT INDEX FOR LISTING OF INSTRUMENT TAG NUMBERS.

VALVES/DAMPERS-OPERATORS

M — ROTARY MOTOR

S — SOLENOID (SOLENOID OPERATED VALVES WILL BE SHOWN IN THE DE-ENERGIZED POSITION)

S / R — SOLENOID WITH MANUAL RESET

M — ELECTRIC DAMPER OPERATOR

PNEUMATIC CYLINDER (SINGLE-ACTING WITH OR WITHOUT POSITIONER)

PNEUMATIC PISTON DAMPER OPERATOR

PNEUMATIC DIAPHRAGM (WITH OR WITHOUT POSITIONER)

PNEUMATIC CYLINDER (DOUBLE-ACTING WITH OR WITHOUT POSITIONER)

PNEUMATIC DIAPHRAGM (PRESSURE-BALANCED)

EH — ELECTROHYDRAULIC DAMPER OPERATOR

MANUAL (SHOWN WITH EXTENSION STEM THRU RADIATION SHIELD WALL; MANUAL OPERATOR MAY BE MOUNTED AT TOP, SIDE, OR BOTTOM OF ACTUATED DEVICE AS APPLICABLE)

MANUAL OVERRIDE OF AUTOMATIC OPERATOR

PV — PNEUMATIC VANE OPERATOR

SELF-ACTUATED DEVICES-PRESSURE

PRESSURE REDUCING REGULATOR (SELF-CONTAINED)

BACK PRESSURE REGULATOR (SELF-CONTAINED)

PROCESS ACTUATED DIAPHRAGM OPERATOR VALVE

SPECIAL CONDITIONS

MOV XXXX / M — ALL MOTOR OPERATED VALVES WILL BE TAGGED AS "MOV".

PUSHBUTTON (PB)

SPRING CHECK VALVE OR MIN. PRESSURE CHECK VALVE

SHARED VIDEO DISPLAY AND CONTROL OR OPERATOR INTERFACE FOR SETPOINTS AND CONTROL.

NOT ACCESSIBLE TO OPERATOR: SHARED BLIND CONTROLLER, COMPUTATIONAL, OR COMMUNICATION LINK.

I/O: INPUT OR OUTPUT — FIELD MOUNTED PLC OR SLC

LADDER LOGIC ADDRESS

INSTRUMENT SPECIALTIES

DIAPHRAGM SEAL

TO XXXXX DRAWING NO. / FROM XXXXX DRAWING NO. / I — INTERLOCK

SENSORS-TEMPERATURE

TE — TEMPERATURE ELEMENT AND WELL

TW — TEMPERATURE WELL (TEST) WITH NO TEMPERATURE ELEMENT

TE — TEMPERATURE ELEMENT WITH NO WELL

SENSORS-FLOW

FE — FLOW NOZZLE OR VENTURI

FE — ORIFICE PLATE WITH FLANGE OR CORNER TAPS

FE — IN-LINE TURBINE OR PROPELLER TYPE OR VORTEX SHEDDING METER

FE — IN-LINE FLOW INSTRUMENT MAGNETIC, DISPLACEMENT, MASS, LAMINAR, ETC.

FE — DUCT MOUNTED PITOT TUBE

FG — IN-LINE MOUNTED SIGHT FLOW GAUGE

FE — ANNUBAR (REGULAR)

FE — ANNUBAR (FLANGED)

STRAIGHTENING VANES

FE — FLANGED-IN FLOW NOZZLE

FO — DRILLED OR MULTI-STAGE ORIFICE

FE — SONIC FLOWMETER "DOPPLER" OR "TRANSIT TIME"

SENSORS-LEVEL

BUBBLER

SONIC

CAPACITANCE

RADAR

FLOAT

ESFAS ACTUATED DEVICES (TYPICAL)

ESF-C / M — ESF-B / S — ESF-A

ALL COMPONENTS SHOWN ON THE FLOW DIAGRAM WHICH RECEIVE A SIGNAL FROM THE ENGINEERED SAFETY FEATURES ACTUATION SYSTEM (ESFAS) SHALL BE INDICATED AS SHOWN ALSO IDENTIFYING WHICH TRAIN THE SIGNAL IS FROM A, B, OR C.

P C C	PROCESS CONTROL CABINET — THE PROCESS CONTROL CABINETS ARE SUPPLIED BY WESTINGHOUSE AND CONSIST OF THE REACTOR PROTECTION SYSTEM (RPS) CABINETS AND THE CONTROL GRADE INSTRUMENT CABINETS.
M A C	MISCELLANEOUS ANALOG CABINET
AMSAC	ATWS MITIGATION SYSTEM ACTUATION CIRCUITRY

NO.	APPROVAL DATE	REVISION	ORIG	CKR	RE	DV	SE
20	4-21-16	INCORP. DCN 160022.	JSH	VJM	N/A	N/A	N/A
19	1-12-16	REVISED PER CR 15-23391.	NF	ON FILE			
Ø-18	6-23-82	ISSUED FOR CONSTRUCTION.	SIGNATURES ON FILE				

ESEED. DGN

SOUTH TEXAS PROJECT NUCLEAR OPERATING COMPANY

PIPING & INSTRUMENTATION DIAGRAM
STANDARD ABBREVIATIONS & SYMBOLS

PRIORITY	CADD FILE NO.	FSUG. NO.	STI. NO.	SCALE	DWG. NO.	SHT.	REV.
1	9A310F00002.DGN	D070928	3310225	NONE	9A310F00002		20

Information Withheld in Accordance with 10 CFR 2.390

NO.	HLP REVISION	BY	RS	NA	SA	PE	DATE
3	INCORP. REV. 89-C-00989-3			NA			
2	HLP ANNOTATED FROM CHANGE CLASSIFICATION, INCORP. ECN 1PC-CONTROL						1-7-91
1				RA			6/17/85

CHIEF ENGR

NO.	REVISION	DFT	DSR	DL	EOB	PER	DATE

BECHTEL ENERGY CORPORATION
HOUSTON, TEXAS

HOUSTON LIGHTING & POWER CO.
SOUTH TEXAS PROJECT

RADIATION ZONES
REACTOR CONTAINMENT BUILDING
PLAN AT EL. (-12'-0"

SCALE	JOB NO.	DRAWING NO.	REV
1/8"=1'	14926	9C12-9-A81100	3

Information Withheld in Accordance with 10 CFR 2.390

NO.	ISSUE DATE	REVISION	BY	CKR	RE	DV	NA	SE	PE
4	10-12-93	INC ECN #90-C-0031-4							
0-3	4-27-93	ISSUED FOR CONSTRUCTION							

SIGNATURES IN FILE

HOUSTON LIGHTING & POWER COMPANY
SOUTH TEXAS PROJECT ELECTRIC GENERATING STATION

RADIATION ZONES
REACTOR CONTAINMENT BUILDING
PLAN AT EL.(-)11'-3"

SCALE	DWG. NO.	REV.
1/8"=1	9C12-9-A81101	4

9-A-81102

9-A-81102

Information Withheld in Accordance with 10 CFR 2.390

NO.	HLEP REVISION	BY	CK	DN	NA	SL	PE	DATE
3	HLEP REVISES DESIGN CHANGE CONTROL INC				N/A			2-22-91
2	REVISED TO REFLECT PRESENT-DAY RWT							05-30-89
1	ADDED RAD MONITOR & NOTE							05-31-88
0	INITIAL ISSUE							6/17/83

CHIEF ENGR N/A

NO.	REVISION	DFT	CKR	SL	ENG	PEN	DATE

BECHTEL ENERGY CORPORATION
HOUSTON, TEXAS

HOUSTON LIGHTING & POWER CO.
SOUTH TEXAS PROJECT

RADIATION ZONES
REACTOR CONTAINMENT BUILDING
PLAN AT EL. 19'0"

SCALE	JOB NO.	DRAWING NO.	REV
1/8"=1'	14926	9C12-9-A81102	3

Information Withheld in Accordance with 10 CFR 2.390

NO.	HLP REVISION	BY	CHD	CK	MA	SE	FE	DATE
4	[illegible]	[illegible]	[illegible]	[illegible]	[illegible]	[illegible]	[illegible]	3-7-94
3	[illegible]	[illegible]	[illegible]	[illegible]	[illegible]	[illegible]	[illegible]	7-7-90
2	[illegible]	[illegible]	[illegible]	[illegible]	[illegible]	[illegible]	[illegible]	12-26-87
1	ADDED AND REVISED NOTES.	[illegible]	[illegible]	[illegible]	[illegible]	[illegible]	[illegible]	10-31-85
0	INITIAL ISSUE.	KL	JP	T.A.	DET	[illegible]	[illegible]	6/17/83

NO.	REVISION	DFT	CKR	GL	EOR	PER	DATE

CHIEF ENGR N/A

BECHTEL ENERGY CORPORATION
HOUSTON, TEXAS

HOUSTON LIGHTING & POWER CO.
SOUTH TEXAS PROJECT

RADIATION ZONES
REACTOR CONTAINMENT BUILDING
PLAN AT EL. 37'-3"

SCALE	JOB NO.	DRAWING NO.	REV
1/8"=1'	14926	9012-9-A81103	4

9-A-81104

9-A-81104

Information Withheld in Accordance with 10 CFR 2.390

NO.	REVISION	DFT	CKR	GL	ENG	PEM	DATE
1	ADDED RAD MONITOR	[illegible]	[illegible]	RA	[illegible]	[illegible]	05-31-85
0	INITIAL ISSUE	AL	[illegible]	RA	BET [illegible]	[illegible]	6/17/83

N/A

BECHTEL ENERGY CORPORATION
HOUSTON, TEXAS

HOUSTON LIGHTING & POWER CO.
SOUTH TEXAS PROJECT

RADIATION ZONES
REACTOR CONTAINMENT BUILDING
PLAN AT EL. 52'-0"

SCALE	JOB NO.	DRAWING NO.	REV
1/8"=1'	14926	9C12-9-A81104	1

Information Withheld in Accordance with 10 CFR 2.390

NO.	ISSUE DATE	REVISION	BY	CKR	RE	DV	NA	SE	PE
3	7-14-95	EDITORIAL CHANGE TO REMOVE EXTRA RAD. MONITOR 16899. (F-4) REF. CR 96-15548-4.	VJM	[illegible]	MRN	—	—	[illegible]	—
0-2	6-17-83	ISSUED FOR CONSTRUCTION.							

SIGNATURES ON FILE

NO.	ISSUE DATE	REVISION	BY	CKR	RE	DV	NA	SE	PE

HOUSTON LIGHTING & POWER COMPANY
SOUTH TEXAS PROJECT ELECTRIC GENERATING STATION

RADIATION ZONES
REACTOR CONTAINMENT BUILDING
PLAN AT EL. 68' -0"

SCALE	DWG. NO.	REV.
1/8" =1'	9C129A81105	3

RWSECM. NO. 9C129A81105 | PRIORITY 2 | DC. NO. 0076928 | A1843. C1T A1843. B3T

Information Withheld in Accordance with 10 CFR 2.390

NO.	ISSUE DATE	REVISION	BY	CKR	RE	DV	NA	SE	PE
3	3-2-7-27-83	INC. ECN 4981-C-R0014 ISSUED FOR CONSTRUCTION							

NO.	ISSUE DATE	REVISION	BY	CKR	RE	DV	NA	SE	PE
			INC. SIGNATURES ON FILE						

HOUSTON LIGHTING & POWER COMPANY
SOUTH TEXAS PROJECT ELECTRIC GENERATING STATION

POST ACCIDENT RADIATION ZONES
REACTOR CONTAINMENT BUILDING
PLAN AT EL.(-)11'-0"

SCALE	DWG. NO.	REV.
1/8"=1	9C12-9-A81116	3

Information Withheld in Accordance with 10 CFR 2.390

NO.	H&P REVISION			MA	SE	PE	DATE
2	INCORP. ECN 89-C-0089-N; DCN CD-1125						
1	H&P ASSUMES DESIGN CHANGE CONTROL (INC. ECN 89-C-0088)			N/A			
0	INITIAL ISSUE						

CHIEF ENGR

NO.	REVISION	DFT	CKR	GL	SDM	PDM	DATE

BECHTEL ENERGY CORPORATION
HOUSTON, TEXAS

HOUSTON LIGHTING & POWER CO.
SOUTH TEXAS PROJECT

POST ACCIDENT RADIATION ZONES
REACTOR CONTAINMENT BUILDING
PLAN AT EL.(-)12'-0"

SCALE	JOB NO.	DRAWING NO.	REV
1/8"=1'	14926	9C12-9-A81117	2

Information Withheld in Accordance with 10 CFR 2.390

NO.	HLLP REVISION	BY	CK	DV	VA	SE	PE	DATE
2	[illegible]	[illegible]	[illegible]	[illegible]	N/A	[illegible]	[illegible]	[illegible]
1	HLLP ASSUMES DESIGN CHANGE CONTROL & INC. ECN 89-E-0068 & K	[illegible]	[illegible]	[illegible]	N/A	[illegible]	[illegible]	11/27/90
0	INITIAL ISSUE	[illegible]	[illegible]	[illegible]	[illegible]	[illegible]	[illegible]	[illegible]

CHIEF ENGR

NO.	REVISION	DFT	DCR	BL	EGR	PCH	DATE

BECHTEL ENERGY CORPORATION
HOUSTON, TEXAS

HOUSTON LIGHTING & POWER CO.
SOUTH TEXAS PROJECT

POST ACCIDENT RADIATION ZONES
REACTOR CONTAINMENT BUILDING
PLAN AT EL.19'0"

SCALE	JOB NO.	DRAWING NO.	REV
1/8"=1'	14926	9C12-9-A81118	2

Information Withheld in Accordance with 10 CFR 2.390

NO.	HLAP REVISION	BY	CH	HA	SL	PS	DATE
2	INCORP. ECN BPC-0069-P			AR			
1	REFLECTS DESIGN CHANGE CONTRA. INCORP. ECN BPC-0068-P			HLD			
0	INITIAL ISSUE						

CHIEF ENGR

NO.	REVISION	DFT	DSR	GL	EOR	PCR	DATE

BECHTEL ENERGY CORPORATION
HOUSTON, TEXAS

HOUSTON LIGHTING & POWER CO.
SOUTH TEXAS PROJECT

POST ACCIDENT RADIATION ZONES
REACTOR CONTAINMENT BUILDING
PLAN AT EL. 37'-3"

SCALE	JOB NO.	DRAWING NO.	REV
1/8"=1'	14926	9C12-9-A81119	2

9A81120

Information Withheld in Accordance with 10 CFR 2.390

NO.	REVISION	DFT	CKR	GL	ENG	PCR	DATE
C	ARTWL ISSUE						

CHIEF ENGR

BECHTEL ENERGY CORPORATION
HOUSTON, TEXAS

HOUSTON LIGHTING & POWER CO.
SOUTH TEXAS PROJECT

POST ACCIDENT RADIATION ZONES
REACTOR CONTAINMENT BUILDING
PLAN AT EL. 52'-0"

SCALE	JOB NO.	DRAWING NO.	REV
1/8"=1'	14926	9C12-9-A81120	0

THIS DRAWING MUST BE WORKED WITH THE FOLLOWING DOCUMENTS

DCN'S	FCN'S	

Information Withheld in Accordance with 10 CFR 2.390

NO.	REVISION	DFT	CKR	SL	EDG	PCH	DATE	NO.	REVISION	DFT	CKR	SL	EDG	PCH	DATE
0	INITIAL ISSUE														

CHIEF ENGR

BECHTEL ENERGY CORPORATION
HOUSTON, TEXAS

HOUSTON LIGHTING & POWER CO.
SOUTH TEXAS PROJECT

POST ACCIDENT RADIATION ZONES
REACTOR CONTAINMENT BUILDING
PLAN AT EL. 68'-0"

SCALE	JOB NO.	DRAWING NO.	REV
1/8"=1'	14926	9C12-9-A81121	0

9-A-81112

9-A-81112

Information Withheld in Accordance with 10 CFR 2.390

NO.	HL&P REVISION	BY	PA	NA	PSL	PE	DATE
6	HLP COMMENTS DESIGN CHANGE CHANGE AND BY CHECKED						
1	ADDED RAD MONITORS & REVISED ZONE AREAS						05-21-85
0	INITIAL ISSUE						4/17/85

CHIEF ENGR

NO.	REVISION	DFT	CKR	GL	SMR	PEM	DATE

BECHTEL ENERGY CORPORATION
HOUSTON, TEXAS

HOUSTON LIGHTING & POWER CO.
SOUTH TEXAS PROJECT

RADIATION ZONES
FUEL HANDLING BUILDING
PLAN AT EL. (-)29'-0" AND 4'-0"

SCALE	JOB NO.	DRAWING NO.	REV
1/8"=1'	14926	9F12-9-A81112	2

Information Withheld in Accordance with 10 CFR 2.390

DWG. CHG. NO.	ISSUE DATE	REVISION	BY	CKR	RE	DV	NA	SE	PE
5	11-7-94	INCORP ECN 98ONN01-BD	DC						
4	8/18/94	INCORP ECN88E3651, CADD CONVERSION	SIGNATURES ON FILE						
0-4	6-17-93	ISSUED FOR CONSTRUCTION	SIGNATURES ON FILE						

NO.	ISSUE DATE	REVISION	BY	CKR	RE	DV	NA	SE	PE

HOUSTON LIGHTING & POWER COMPANY
SOUTH TEXAS PROJECT ELECTRIC GENERATING STATION

RADIATION ZONES
FUEL HANDLING BUILDING
PLAN AT EL. 21'-11" AND 38'-8"

SCALE	DWG. NO.	REV.
NONE	9F129AB1113	5

Information Withheld in Accordance with 10 CFR 2.390

NO.	ISSUE DATE	REVISION	ORIG	CKR	RE	DV	SE
7	6-23-05	INCORP. DCN 9803587.	VJM	VS	RH	NG	PA
6	11-7-96	INC. ECN 9QC0001-BE.	DC	ON FILE			
5	10-6-94	INC. ECN 88E0365.	SIGNATURES ON FILE				
2-4	5-17-83	ISSUED FOR CONSTRUCTION.	SIGNATURES ON FILE				

NO.	ISSUE DATE	REVISION	ORIG	CKR	RE	DV	SE

SOUTH TEXAS PROJECT
NUCLEAR OPERATING COMPANY

PRIORITY	CADD FILE NO.	PSUG. NO.	STI. NO.
2	A0647. CIT A0647. 071	D070928	3190138

RADIATION ZONES
FUEL HANDLING BUILDING
PLAN AT EL. 53'-3"

SCALE	DWG. NO.	SHT.	REV.
NONE	9F129A81114		7

SCREEN DCN

Information Withheld in Accordance with 10 CFR 2.390

NO.	REVISION	BY	CHK	DATE
E	HLSP REVISED DRAIN CHANGE CONTROL AND INC SCAFFOLD			11/12/90
D	ADDED RAD. MONITORS & ADDED AND REV ZONE AREA			05-31-88
C	INITIAL ISSUE			4/17/86

CHIEF ENGR N/A

BECHTEL ENERGY CORPORATION
HOUSTON, TEXAS

HOUSTON LIGHTING & POWER CO.
SOUTH TEXAS PROJECT

RADIATION ZONES
FUEL HANDLING BUILDING
PLAN AT EL. 68'-0"

SCALE	JOB NO.	DRAWING NO.	REV
1/8"=1'	14926	9F12-9-A81115	2

Information Withheld in Accordance with 10 CFR 2.390

NO.	REVISION	DRT	CKD				DATE
N/A	1 GENERAL REVISION						
0	INITIAL USE	SIGNATURES		BY	FILE		7-27-83

CHIEF ENGR

BECHTEL ENERGY CORPORATION
HOUSTON, TEXAS
HOUSTON LIGHTING & POWER CO.

POST ACCIDENT RADIATION ZONES
FUEL HANDLING BUILDING
PLAN AT EL. (-)29'-0" AND 4'-0"

SCALE	JOB NO.	DRAWING NO.	REV

This drawing and the design it covers are the property of BECHTEL. They are merely loaned and on the borrower's express agreement that they will not be reproduced, copied, loaned, exhibited, or used except in the limited way and private use permitted by any written consent given by the lender to the borrower.

Information Withheld in Accordance with 10 CFR 2.390

NO.	ISSUE DATE	REVISION	BY	CKR	RE	DV	NA	SE	PE	NO.	ISSUE DATE	REVISION	BY	CKR	RE	DV	NA	SE	PE
3	11-14-90	INCORP ECN 98C0001-BF																	
0-2	7-27-83	INITIAL USE																	

DOC. RCN

DC SIGNATURES ON FILE

HOUSTON LIGHTING & POWER COMPANY
SOUTH TEXAS PROJECT ELECTRIC GENERATING STATION

POST ACCIDENT RADIATION ZONES
FUEL HANDLING BUILDING
PLAN AT EL. 21'-11" AND 36'-0"

SCALE	DWG. NO.	REV.
NONE	9F129A81131	3

8 7 6 5 4 3 2

RMS DC. NO. 9F129A81131 PRIORITY 2 CHECKSUM 0670528 A1023.031 A1023.CIT

Information Withheld in Accordance with 10 CFR 2.390

NO.	REVISION	DFT	CKR	GL	EGI	PEM	DATE
N/A	ORIGINAL REVISION						10-15-85
1	UNIT 2						7-11-91

CHIEF ENGR

BECHTEL ENERGY CORPORATION
HOUSTON, TEXAS

HOUSTON LIGHTING & POWER CO.
SOUTH TEXAS PROJECT

POST ACCIDENT RADIATION ZONES
FUEL HANDLING BUILDING
PLAN AT EL. 53'-3"

SCALE	JOB NO.	DRAWING NO.	REV
1/8"=1'	14926	9F12-9-A81132	1

This drawing and the design it covers are the property of BECHTEL. They are merely loaned and as the borrower's express agreement that they will not be reproduced, copied, loaned, exhibited or used except in the limited way and private use permitted by any written consent given by the lender to the borrower.

Information Withheld in Accordance with 10 CFR 2.390

CHIEF ENGR		NO.	MAP REVISION	BY	RE	NA	SC	PE	DATE	NO.	REVISION	DFT	CKR	GL	EGS	PEM	DATE		
	N/A	7	ALL GROUNDS DESIGN CHANGE JOB 2UN 1						2-17-91										
		6	REVISED SCALE																
		5	GENERAL REVISION						10-15-83										

BECHTEL ENERGY CORPORATION
HOUSTON, TEXAS

HOUSTON LIGHTING & POWER CO.
SOUTH TEXAS PROJECT

POST ACCIDENT RADIATION ZONES
FUEL HANDLING BUILDING
PLAN AT EL. 68'-0"

SCALE	JOB NO.	DRAWING NO.	REV
1/8"=1'	14926	9F12-9-A81133	2

701

Information Withheld in Accordance with 10 CFR 2.390

NO.	ISSUE DATE	REVISION	ORIG	CKR	RE	DV	SE
2	4/4/01	REVISED PER CR# 01-7454.	JSH				
8-1	9-17-83	ISSUED FOR CONSTRUCTION.	SIGNATURES ON FILE				

NO.	ISSUE DATE	REVISION	ORIG	CKR	RE	DV	SE

SOUTH TEXAS PROJECT
NUCLEAR OPERATING COMPANY

PRIORITY	CADD FILE NO.	FSUG. NO.	STI. NO.
2	A1855.821 A1855.CIT	D870928	3123997

RADIATION ZONES
MECHANICAL AND ELECTRICAL AUX. BUILDING
PLAN AT EL. 19'-0"

SCALE	ORIG. NO.	SHT.	REV.
1/32" = 1'	9M129A81106	-	2

Printed by jhopes ON Monday May 07 2001 AT 02:34:49 PM CDT

Information Withheld in Accordance with 10 CFR 2.390

CHIEF ENGR		NO.	REVISION	DFT	DSN	GL	EOB	PEM	DATE	NO.	REVISION	DFT	DSN	GL	EOB	PEM	DATE				

BECHTEL ENERGY CORPORATION
HOUSTON, TEXAS

HOUSTON LIGHTING & POWER CO.
SOUTH TEXAS PROJECT

RADIATION ZONES
MECHANICAL AND ELECTRICAL AUX. BUILDING
MISCL. PARTIAL PLANS AT ELEVS. 19'-0" & 41'-0"

SCALE	JOB NO.	DRAWING NO.	REV
1/8"=1	14926	9M12-9-A81107	0

Information Withheld in Accordance with 10 CFR 2.390

NO.	REVISION	DFT	CKR	DL	ENG	PER	DATE
3	INCORP ECN 87-C-0083-M						
2	DEEP POWER, SIGNAL CHANGE, CONTROL & MOTOR ROOM, & GENERAL						
1	ADDED RAD. MONITORS & REV ZONE AREAS.						
0	INITIAL ISSUE						

CHIEF ENGR N/A

BECHTEL ENERGY CORPORATION
HOUSTON, TEXAS

HOUSTON LIGHTING & POWER CO.
SOUTH TEXAS PROJECT

RADIATION ZONES
MECHANICAL AND ELECTRICAL AUX. BUILDING
PLAN AT ELEVS. 23'-0" AND 29'-0"

SCALE	JOB NO.	DRAWING NO.	REV
3/32"=1'	14926	9M12-9-A81108	3

Information Withheld in Accordance with 10 CFR 2.390

NO.	ISSUE DATE	REVISION	ORIG	CKR	RE	DV	SE
8	2-11-02	REVISED PER CR# 97-11027.	JSH				
	2-14-02						
0-7	6-17-83	ISSUED FOR CONSTRUCTION.	SIGNATURES ON FILE				

NO.	ISSUE DATE	REVISION	ORIG	CKR	RE	DV	SE

SOUTH TEXAS PROJECT
NUCLEAR OPERATING COMPANY

RADIATION ZONES
MECHANICAL AND ELECTRICAL AUX. BUILDING
PLAN AT ELEVS. 35'-0" AND 41'-0"

PRIORITY	CADD FILE NO.	FSUG. NO.	STI. NO.	SCALE	DWG. NO.	SHT.	REV.
2	A0038.081 A0038.CIT	D070928	31408092	3/32"=1'	9M129A81109#1	-	8

Information Withheld in Accordance with 10 CFR 2.390

NO.	ISSUE DATE	REVISION	ORIG	CKR	RE	DV	SE
6	2-14-02	REVISED PER CR# 97-19584	JSH	RS	RE	—	—
0-5	12-16-93	ISSUED FOR CONSTRUCTION.	SIGNATURES ON FILE				

NO.	ISSUE DATE	REVISION	ORIG	CKR	RE	DV	SE

SOUTH TEXAS PROJECT
NUCLEAR OPERATING COMPANY

PRIORITY	CADD FILE NO.	FSUG. NO.	STI. NO.	SCALE	DWG. NO.	SHT.	REV.
2	A0039.661 A0039.CIT	D070928	31408093	3/16 = 1'	9M129A81109#2	--	6

RADIATION ZONES
MECHANICAL AND ELECTRICAL AUX. BUILDING
PLAN AT ELEVS. 35'-0" AND 41'-0"

SEED DGN

Information Withheld in Accordance with 10 CFR 2.390

NO.	ISSUE DATE	REVISION	ORIG	CKR	RE	DV	SE
4	3-12-08	INCORP. NDCN 01-13106-7-2 & 01-13106-08-02.	JSH				
0-3	6-17-83	ISSUED FOR CONSTRUCTION.	SIGNATURES ON FILE				

NO.	ISSUE DATE	REVISION	ORIG	CKR	RE	DV	SE

SOUTH TEXAS PROJECT
NUCLEAR OPERATING COMPANY

PRIORITY	CADD FILE NO.	FSUG. NO.	STI. NO.
2	A1042.341 A1042.CIT	D070928	32279745

RADIATION ZONES
MECHANICAL AND ELECTRICAL AUX. BUILDING
PLAN AT EL. 68'-0"

SCALE	DWG. NO.	SHT.	REV.
1/32" = 1'	9M129A81110		4

9-A-81111

9-A-81111

Information Withheld in Accordance with 10 CFR 2.390

NO.	REVISION	DFT	CKR	SL	EDR	PEM	DATE
1	REVISED ZONE AREA.	[illegible]	[illegible]	[illegible]	[illegible]	[illegible]	05-31-93
0	INITIAL ISSUE	[illegible]	[illegible]	[illegible]	[illegible]	[illegible]	1/11/93

CHIEF ENGR [illegible]

BECHTEL ENERGY CORPORATION
HOUSTON, TEXAS

HOUSTON LIGHTING & POWER CO.
SOUTH TEXAS PROJECT

RADIATION ZONES
MECHANICAL AND ELECTRICAL AUX. BUILDING
ROOF PLAN

SCALE	JOB NO.	DRAWING NO.	REV
3/32"=1'	14926	9M12-9-A81111	1

Information Withheld in Accordance with 10 CFR 2.390

HOUSTON LIGHTING & POWER COMPANY

SOUTH TEXAS PROJECT ELECTRIC GENERATING STATION

POST ACCIDENT RADIATION ZONES
MECHANICAL AND ELECTRICAL AUX. BLDG.
PLAN AT EL. 19'-0"

SCALE: NONE

DWG. NO. 9M129A81122

REV. 5

PRIORITY 1

NO.	ISSUE DATE	REVISION	BY	CKR	RE	DV	NA	SE	PE
5	10-20-81	INCORP. AMND. DCN 889456							
4	9-14-81	INCORP. AMND. DCN 881456							
3	7-27-81	ISSUED FOR CONSTRUCTION							

SIGNATURES ON FILE

SIGNATURES ON FILE

NO.	ISSUE DATE	REVISION	BY	CKR	RE	DV	NA	SE	PE
5									
4									
3									

Information Withheld in Accordance with 10 CFR 2.390

NO.	ISSUE DATE	REVISION	BY	CKR	RE	DV	NA	SE	PE
5	5-11-94	INCORP. DCN 9503556	JSH						
4	11-28-93	INC. DCN CO-288	SIGNATURES ON FILE						
3	7-27-93	ISSUED FOR CONSTRUCTION	SIGNATURES ON FILE						

NO.	ISSUE DATE	REVISION	BY	CKR	RE	DV	NA	SE	PE

HOUSTON LIGHTING & POWER COMPANY
SOUTH TEXAS PROJECT ELECTRIC GENERATING STATION

POST ACCIDENT RADIATION ZONES
MECHANICAL & ELECTRICAL AUX. BLDG.
PLAN EL. 23'-0" & 29'-0"

SCALE	DWG. NO.	REV.
NONE	9M12-9-A-81123	5

PRIORITY 2 | DOC. NO. 0070926 | A0056.C1T A0056.L051

Information Withheld in Accordance with 10 CFR 2.390

SOUTH TEXAS PROJECT
NUCLEAR OPERATING COMPANY

FIRST ACCIDENT RADIATION ZONES
MECHANICAL AND ELECTRICAL AUX BUILDING
PLAN AT EL. 35'-0" AND 47'-0"

DWG. NO. 9M79A8124

REV. 9

Information Withheld in Accordance with 10 CFR 2.390

NO.	ISSUE DATE	REVISION	ORIG	CKR	RE	CV	SE
3	6-17-08	INCORP. NDCN's 01-13106-7-3 AND 01-13106-8-3.	LNB				
0-2	7-27-83	ISSUED FOR CONSTRUCTION.	SIGNATURES ON FILE				

NO.	ISSUE DATE	REVISION	ORIG	CKR	RL	DV	SE

SOUTH TEXAS PROJECT
NUCLEAR OPERATING COMPANY

PRIORITY	CADD FILE NO.	FSLIG. NO.	STI. NO.
2	A1072.031 A1072.CIT	D070928	32328301

POST ACCIDENT RADIATION ZONES
MECHANICAL AND ELECTRICAL AUX. BUILDING
PLAN AT EL.60'-0"

SCALE	DWG. NO.	SHT.	REV.
1/16 = 1'	9M129A81125		3

Information Withheld in Accordance with 10 CFR 2.390

NO.	REVISION	DFT	CKR	GL	EOS	PEM	DATE
N/A	1 GENERAL REVISION	[illegible]	[illegible]	[illegible]	[illegible]	[illegible]	10-18-85
	0 INITIAL ISS.	[illegible]	[illegible]	[illegible]	[illegible]	[illegible]	1-21-85

CHIEF ENGR

BECHTEL ENERGY CORPORATION
HOUSTON, TEXAS

HOUSTON LIGHTING & POWER CO.
SOUTH TEXAS PROJECT

POST ACCIDENT RADIATION ZONES
MECHANICAL AND ELECTRICAL AUX. BUILDING
ROOF PLAN

SCALE	JOB NO.	DRAWING NO.	REV
3/32"=1'	14926	9M12-9-A81126	1

This drawing and the design it covers are the property of BECHTEL. They are merely loaned and as the borrower's express agreement that they will not be reproduced, copied, loaned, exhibited or used except in the limited way and private use permitted by any written consent given by the lender to the borrower.

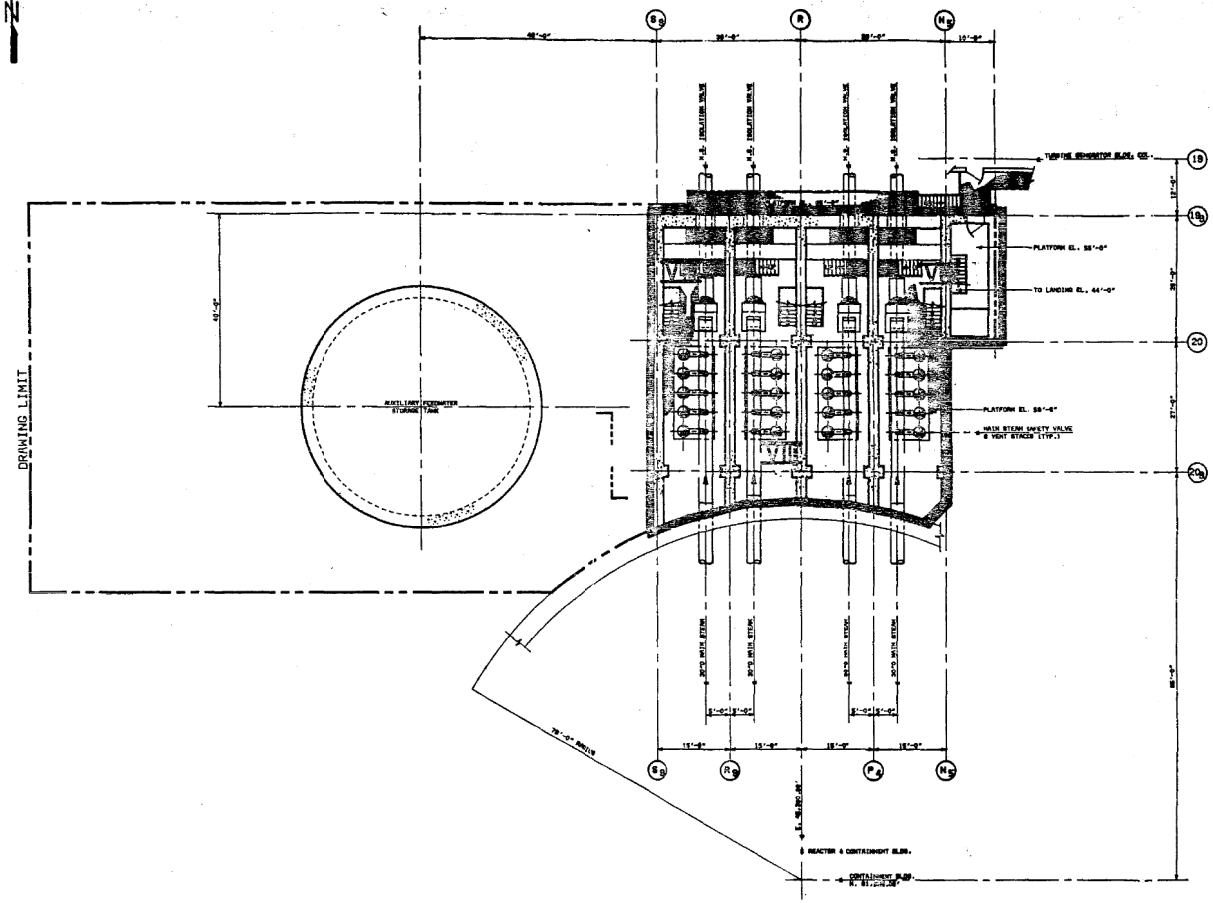

NOTES:

1. THE POST LOCA RADIATION DOSE RATE AT THE MAIN STEAM HOWDER OPERATED RELIEF VALVES IMMEDIATELY AFTER THE ACCIDENT IS 2.00 CRM PER HOUR (REF. RADIATION DOSE RATES AT THESE LOCATIONS AT LATER TIMES CAN BE FOUND IN CALCULATION NUMBER 9C-A004.

POST ACCIDENT RADIATION ZONES			
ZONE NUMBERS	MIN. DOSE RATE (MREM/HR)	ZONE NUMBERS	MAX. DOSE RATE (MREM/HR)
I	< .015	VI	< 5,000
II	< .1	VII	< 50,000
III	< 5	VIII	<500,000
IV	< 50	IX	≥500,000
V	< 500		

NO.	REVISION	BY	DATE
1	UPDATED DESIGN CHANGES (SAFETY, FIREWALL DCAN CO-195)		
0	INITIAL ISSUE		

BECHTEL ENERGY CORPORATION
HOUSTON, TEXAS

HOUSTON LIGHTING & POWER CO.
SOUTH TEXAS PROJECT

POST ACCIDENT RADIATION ZONES
ISOLATION VALVES CUBICLE
PLAN EL. 58'-6"

SCALE	JOB NO.	DRAWING NO.	REV.
1/8=1'-0"	14926	9M12-9-A81127	2

9A-81128

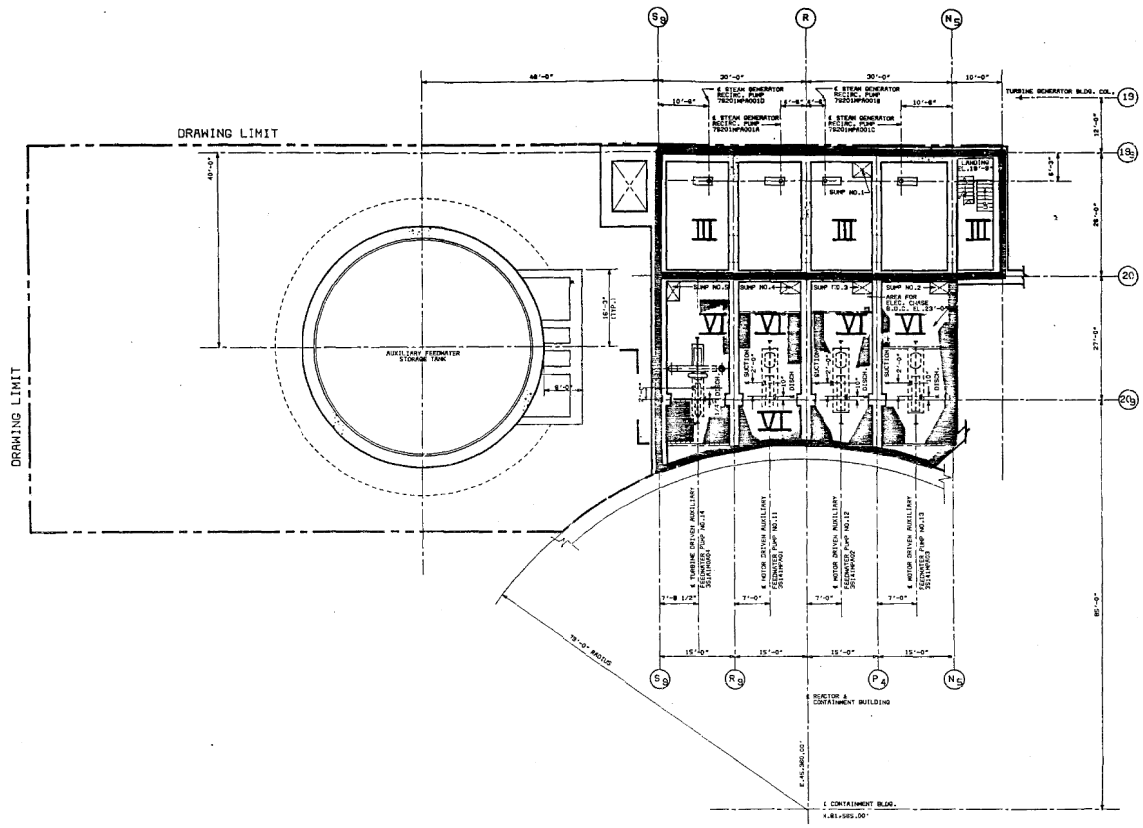

NOTES

1. THE POST LOCA RADIATION DOSE RATE AT THE STEAM GENERATOR BLOWDOWN ISOLATION VALVES IMMEDIATELY AFTER THE ACCIDENT IS LESS THAN 4 REM PER HOUR. RADIATION DOSE RATES AT THESE LOCATIONS AT LATER TIMES CAN BE FOUND IN CALCULATION NUMBER NC9034.

2 DCN CD-52

POST ACCIDENT RADIATION ZONES			
ZONE NUMBERS	MAX. DOSE RATE (R/HR.)	ZONE NUMBERS	MAX. DOSE RATE (R/HR.)
I	< .015	VI	< 5,000
II	< .1	VII	< 50,000
III	< 5	VIII	<500,000
IV	< 50	IX	≥500,000
V	< 500		

NO.	REVISION	BY	CK	DATE
2	HCLP ASSUMES DESIGN CHANGES CONTROL 1 INC. DCN CD-52			11/27/90
1	CHANGED LINES TO REFLECT AIR ACCESS			1 5 87
0	INITIAL ISSUE			

CHIEF ENGR

BECHTEL ENERGY CORPORATION
HOUSTON, TEXAS

HOUSTON LIGHTING & POWER CO.
SOUTH TEXAS PROJECT

POST ACCIDENT RADIATION ZONES
ISOLATION VALVES CUBICLE
PLAN EL.10'-0"

SCALE	JOB NO.	DRAWING NO.	REV
1/8"=1'	14926	9M12-9- A81128	2

9H+81129

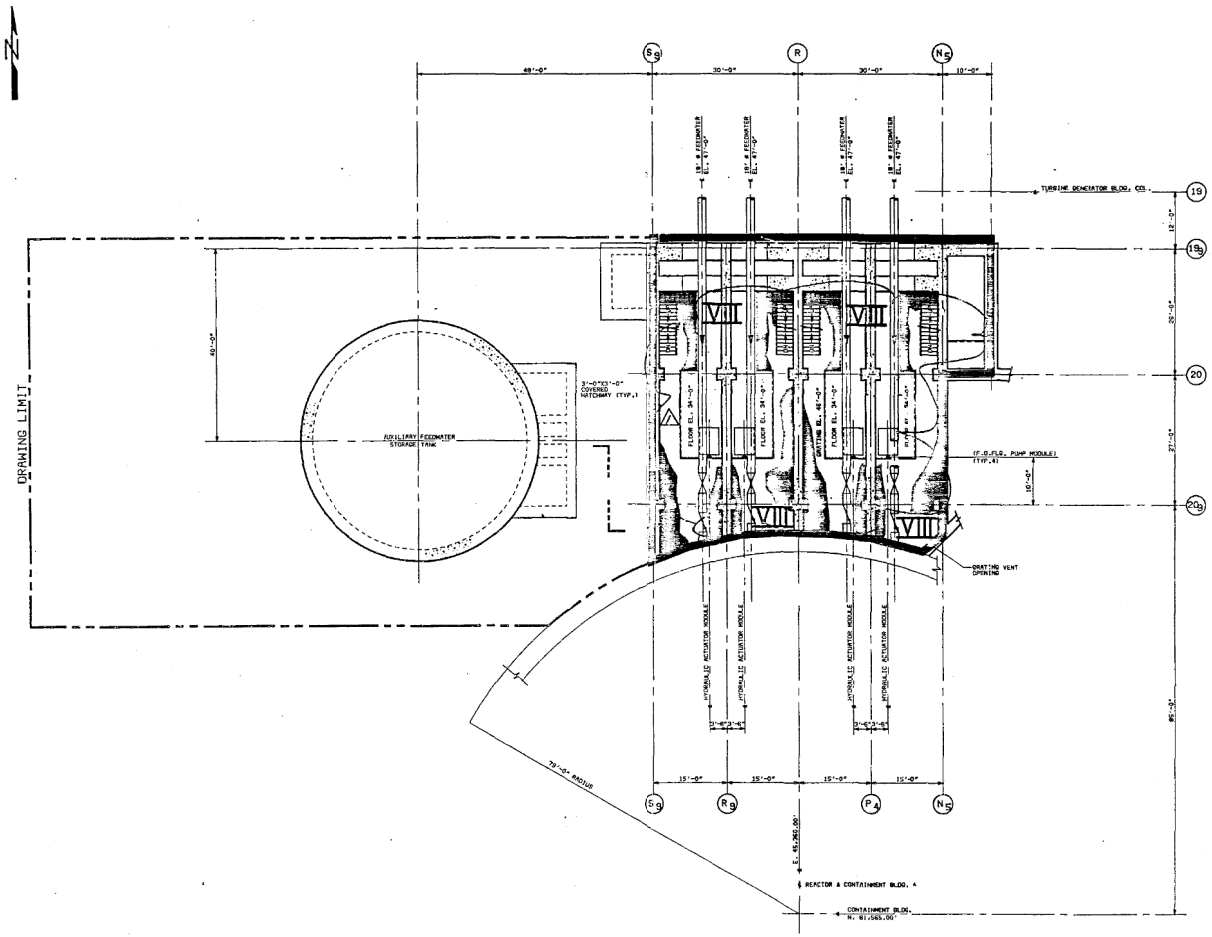

POST ACCIDENT RADIATION ZONES			
ZONE NUMBERS	MAX. DOSE RATE (R/HR.)	ZONE NUMBERS	MAX. DOSE RATE (R/HR.)
I	< .015	VI	< 5,000
II	< .1	VII	< 50,000
III	< 5	VIII	<500,000
IV	< 50	IX	≥500,000
V	< 500		

CHIEF ENGR		NO.	REVISION	DFT	CKR	BL	EDG	PEK	DATE	NO.	REVISION	DFT	CKR	BL	EDG	PEK	DATE

BECHTEL ENERGY CORPORATION
HOUSTON, TEXAS

HOUSTON LIGHTING & POWER CO.
SOUTH TEXAS PROJECT

POST ACCIDENT RADIATION ZONES
ISOLATION VALVES CUBICLE
PLAN EL. 34'-0"

SCALE	JOB NO.	DRAWING NO.	REV
1/8=1'-0"	14926	9M12-9-A81129	

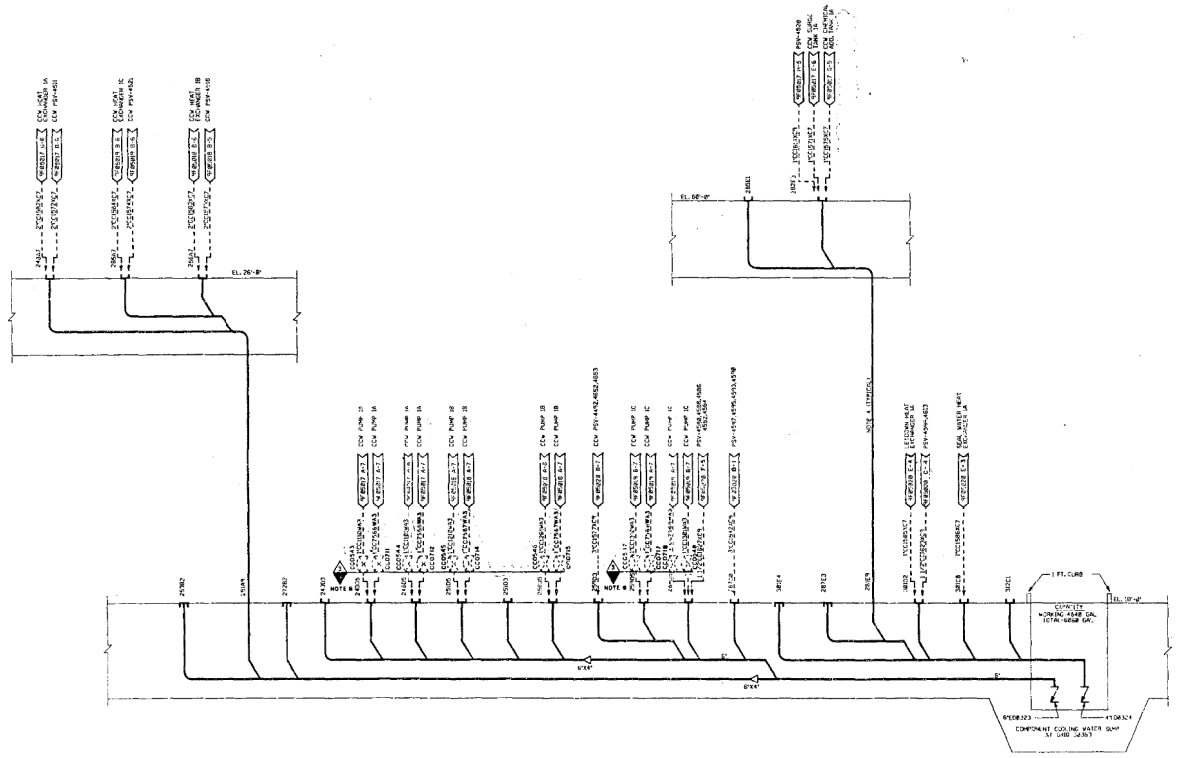

REFERENCES:

1. FOR PIPING & INSTRUMENT SYMBOLS SEE DRAWINGS 7A320W86B81 AND 7A321W86B92.
2. OTHER HVAC PAID'S ARE: 7C08W86P0815, 7C09W86P0036, 7C08W86P0816, 7C08W86P0817, 7C08W86P0818, 7C08W86P0819, 7C08W86P0820, 7C08W86P0821, 7C08W86P0822, 7C08W86P0823, 7C08W86P0824, 7C08W86P0825 AND 7C08W86P0826.
3. FLOOR DRAIN TYPES ARE SHOWN ON PLUMBING DRAWINGS 9M86768E37 AND 9M86768E38.
4. UNLESS OTHERWISE NOTED, UNIT 1 IS SHOWN ON THIS PAID. FOR APPLICATION OF THIS PAID TO UNIT 2, USE UNIT 2 IDENTIFICATION NUMBERS FOR PIPING, VALVES, INSTRUMENTS, EQUIPMENT, ETC. REFER TO DRAWING 7A310W86N01 AND 7A310W86N02 FOR IDENTIFICATION NUMBER DETAILS.
5. THIS DRAWING IS ONE OF TEN HVAC PAID'S. SEE REFERENCE 2 FOR OTHER PAID'S.
6. FIELD TRIM TO SUIT.

NOTES:

1. FLOOR DRAIN DESIGNATOR INDICATES FLOOR DRAIN LOCATION. XX COLUMN LETTER MEANS THAT THE FLOOR DRAIN IS LOCATED AT THE INTERSECTION OF COLS. JKD AND KLS.
2. THE FOLLOWING UNIQUE SYMBOLS ARE USED ON THIS DRAWING:

HUB DRAIN, HD-3

FLOOR CLEANOUT, FCP-3

FOR AN EXPLANATION OF DRAIN FIXTURE TYPES, SEE REFERENCE 3.

3. THE SUMP PUMPS, INSTRUMENTATION & PUMPED LINES TO LMPS ARE SHOWN ON PAID 4P86768.
4. 4" PIPER BY PLUMBING ALL DRAIN LINES SHOWN ARE 4" EXCEPT THOSE NOTED. NO LINE NUMBERS WILL BE ASSIGNED TO PLUMBING LINES.
5. THE FOLLOWING DENOTES THE CONCRETE FLOOR SLAB BOUNDARIES.

REV	BY	DATE
9	HKB 12/10/87	

CHIEF ENGR	CLIENT	NO.	REVISION	RE	CKR	DL	EGB	PE	DATE
		2	ISSUED FOR CADD CONVERSION & INCORP REV. ABOVE						1-6-88
			[illegible]						5-15-87
			[illegible]						5-15-87
			[illegible]						2-26-87

CHIEF ENGR	CLIENT	NO.	REVISION	RE	CKR	DL	EGB	PE	DATE

BECHTEL ENERGY CORPORATION
HOUSTON, TEXAS

HOUSTON LIGHTING & POWER CO.
SOUTH TEXAS PROJECT

PIPING AND INSTRUMENTATION DIAGRAM
RADIOACTIVE VENT AND DRAIN SYSTEM
MAB COMPONENT COOLING WATER GRAVITY DRAINS

SCALE	JOB NO.	DRAWING NO.	REV.
NONE	14928	9D269F90026 *1	3

SIZE E

THIS DRAWING AND THE DESIGN IT COVERS ARE THE PROPERTY OF BECHTEL. THEY ARE MERELY LOANED AND ON THE BORROWING EXPRESS AGREEMENT THAT THEY WILL NOT BE REPRODUCED, COPIED, LOANED, EXHIBITED OR USED EXCEPT IN THE LIMITED WAY AND PRIVATE USE PERMITTED BY ANY WRITTEN CONSENT GIVEN BY THE LENDER TO THE BORROWER.

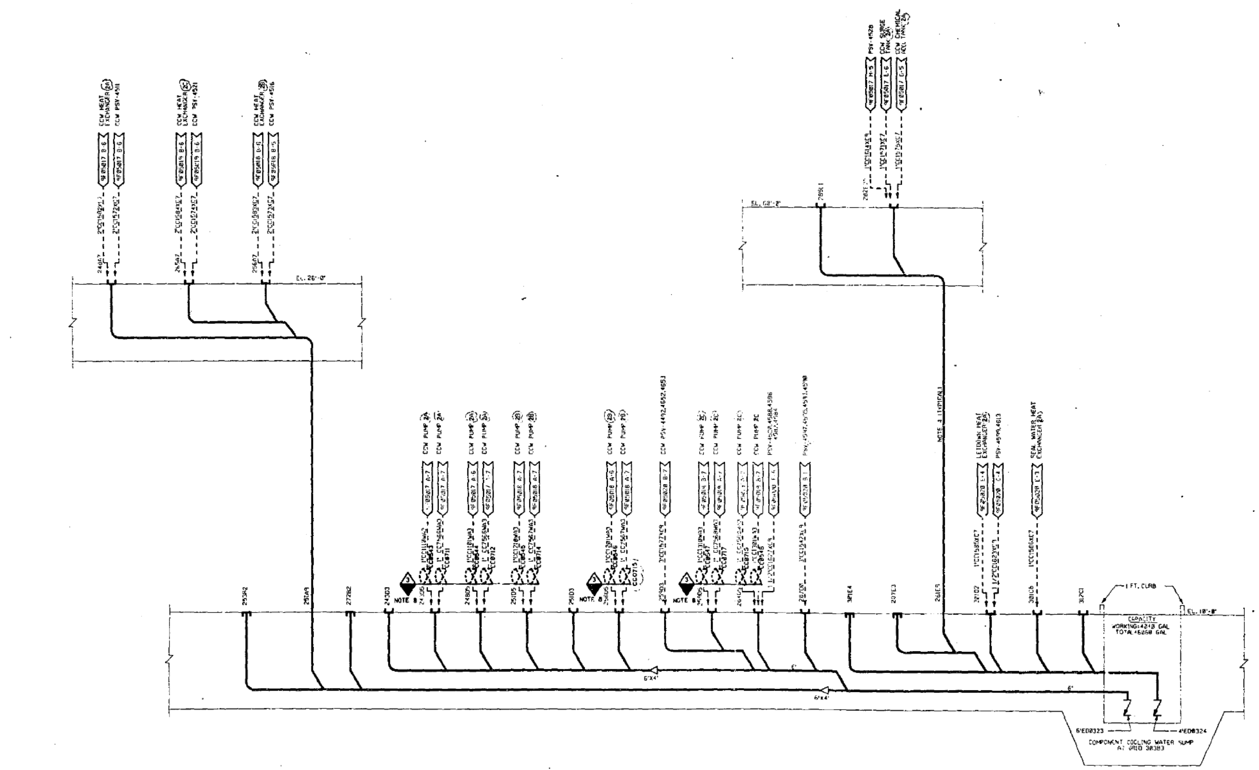

REFERENCES:

1. FOR PIPING & INSTRUMENT SYMBOLS SEE DRAWINGS 9A310F00001 AND 9A310F00002.
2. OTHER RVDS P&ID'S ARE 5Q069F05030, 9Q069F05036, 7Q069F90010, 5Q069F90011, 7Q069F90012, 7Q069F90013, 7Q069F90014, 7Q069F90015 AND 9Q069F05016.
3. FLOOR DRAIN TYPES ARE SHOWN ON PLUMBING DRAWINGS 6M069B0137 AND 9M069B0138.

NOTES:

1. FLOOR DRAIN DESIGNATOR INDICATES FLOOR DRAIN LOCATION AS FOLLOWS: 30EB5 MEANS THAT THE FLOOR DRAIN IS LOCATED AT THE INTERSECTION OF COLS. 30.5 AND B.5.
2. THE FOLLOWING UNIQUE SYMBOLS ARE USED ON THIS DRAWING.

   HUB DRAIN, HD-3

   FLOOR CLEANOUT, FCO-3

   FOR AN EXPLANATION OF DRAIN FIXTURE TYPES, SEE REFERENCE 3.
3. THE SUMP PUMPS, INSTRUMENTATION & PUMPED LINES TO LWPS ARE SHOWN ON P&ID 9F05030.
4. 4" RISER BY PLUMBING. ALL DRAIN LINES SHOWN ARE 4" EXCEPT THOSE NOTED. NO LINE NUMBERS WILL BE ASSIGNED TO PLUMBING LINES.
5. THE FOLLOWING DENOTES THE CONCRETE FLOOR SLAB BOUNDARIES
6. UNLESS OTHERWISE NOTED, UNIT 1 IS SHOWN ON THIS P&ID. FOR APPLICATION OF THIS P&ID TO UNIT 2, USE UNIT 2 IDENTIFICATION NUMBERS FOR PIPING, VALVES, INSTRUMENTS, EQUIPMENT, ETC. REFER TO DRAWINGS 9A310F00001 AND 9F310F00002 FOR IDENTIFICATION NUMBER DETAILS.
7. THIS DRAWING IS ONE OF TEN RVDS P&ID'S. SEE REFERENCE 2 FOR OTHER P&ID'S.
8. FIELD TRIM TO SUIT.

CHIEF ENGR	CLIENT	NO.	REVISION	RE	CKR	QL	EDS	PE	DATE
		3	[illegible] ISSUED FOR CARD CONV. SERVICE DESC.						
									5-15-87
									5-15-87
									12-26-83

BECHTEL ENERGY CORPORATION
HOUSTON, TEXAS

HOUSTON LIGHTING & POWER CO.
SOUTH TEXAS PROJECT

PIPING AND INSTRUMENT DIAGRAM
RADIOACTIVE VENT AND DRAIN SYSTEM
MAB COMPONENT COOLING WATER GRAVITY DRAINS

SCALE	JOB NO.	DRAWING NO.	REV.
NONE	14926	9Q069F90026 #2	3

THIS DRAWING AND THE DESIGN IT COVERS ARE THE PROPERTY OF BECHTEL. THEY ARE MERELY LOANED AND ON THE BORROWER'S EXPRESS AGREEMENT THAT THEY WILL NOT BE REPRODUCED, COPIED, LOANED, EXHIBITED, OR USED EXCEPT IN THE LIMITED WAY AND PRIVATE USE PERMITTED BY ANY WRITTEN CONSENT GIVEN BY THE LENDER TO THE BORROWER.

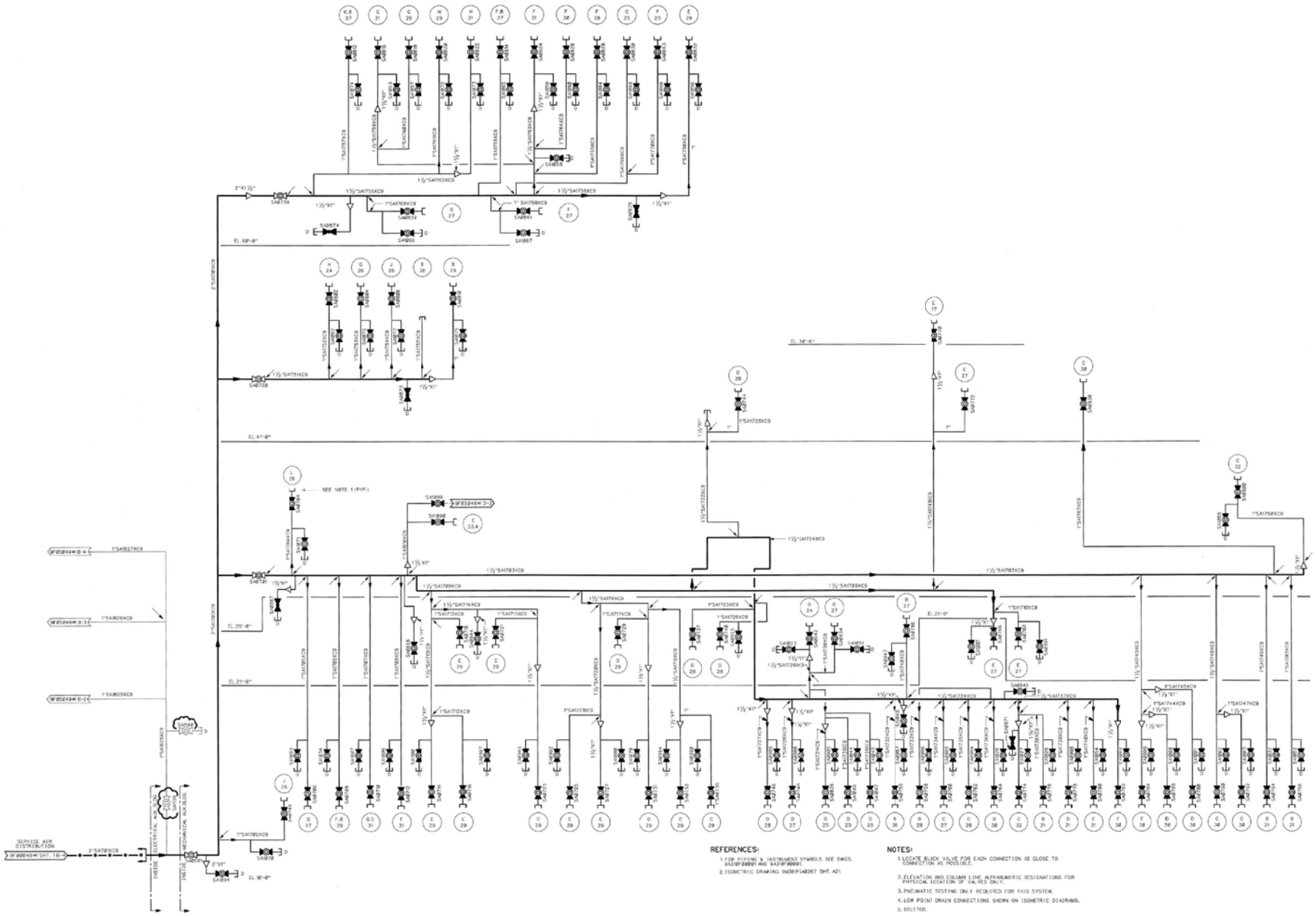

REFERENCES:

1. FOR PIPING & INSTRUMENT SYMBOLS SEE DWGS. 9A30F00001 AND 9A30F00001.
2. ISOMETRIC DRAWING 9M09F1A0267 SHT. A21.

NOTES:

1. LOCATE BLOCK VALVE FOR EACH CONNECTION AS CLOSE TO CONNECTION AS POSSIBLE.
2. ELEVATION AND COLUMN LINE ALPHANUMERIC DESIGNATIONS FOR PHYSICAL LOCATION OF VALVES ONLY.
3. PNEUMATIC TESTING ONLY REQUIRED FOR THIS SYSTEM.
4. LOW POINT DRAIN CONNECTIONS SHOWN ON ISOMETRIC DIAGRAMS.
5. DELETED.
6. UNLESS OTHERWISE NOTED, ALL VENTS AND DRAINS ARE SIZE 1"

NO.	ISSUE DATE	REVISION	ORIG	CKR	RE	DV	SE	NO.	ISSUE DATE	REVISION	ORIG	CKR	RE	DV	SE
12	5-20-09	REVISED PER CR 09-84-71.	VJM												
11	12-9-03	INCORP. DCN 0301283.	JSH	ON FILE											
10	12-5-00	INCORP. DCN 9902997.	JSH	ON FILE											
09	9-20-92	ISSUED FOR CONSTRUCTION.	SIGNATURES ON FILE												

FSEQ. TON

SOUTH TEXAS PROJECT NUCLEAR OPERATING COMPANY

PRIORITY	CADD FILE NO.	FSUG. NO.	STI. NO.
1	FJA029.121	D070028	32475392

PIPING & INSTRUMENTATION DIAGRAM
MECHANICAL & ELECTRICAL AUX. BUILDING
SERVICE AIR

SCALE	DWG. NO.	SHT.	REV.
NONE	9Q109F05051#1		12

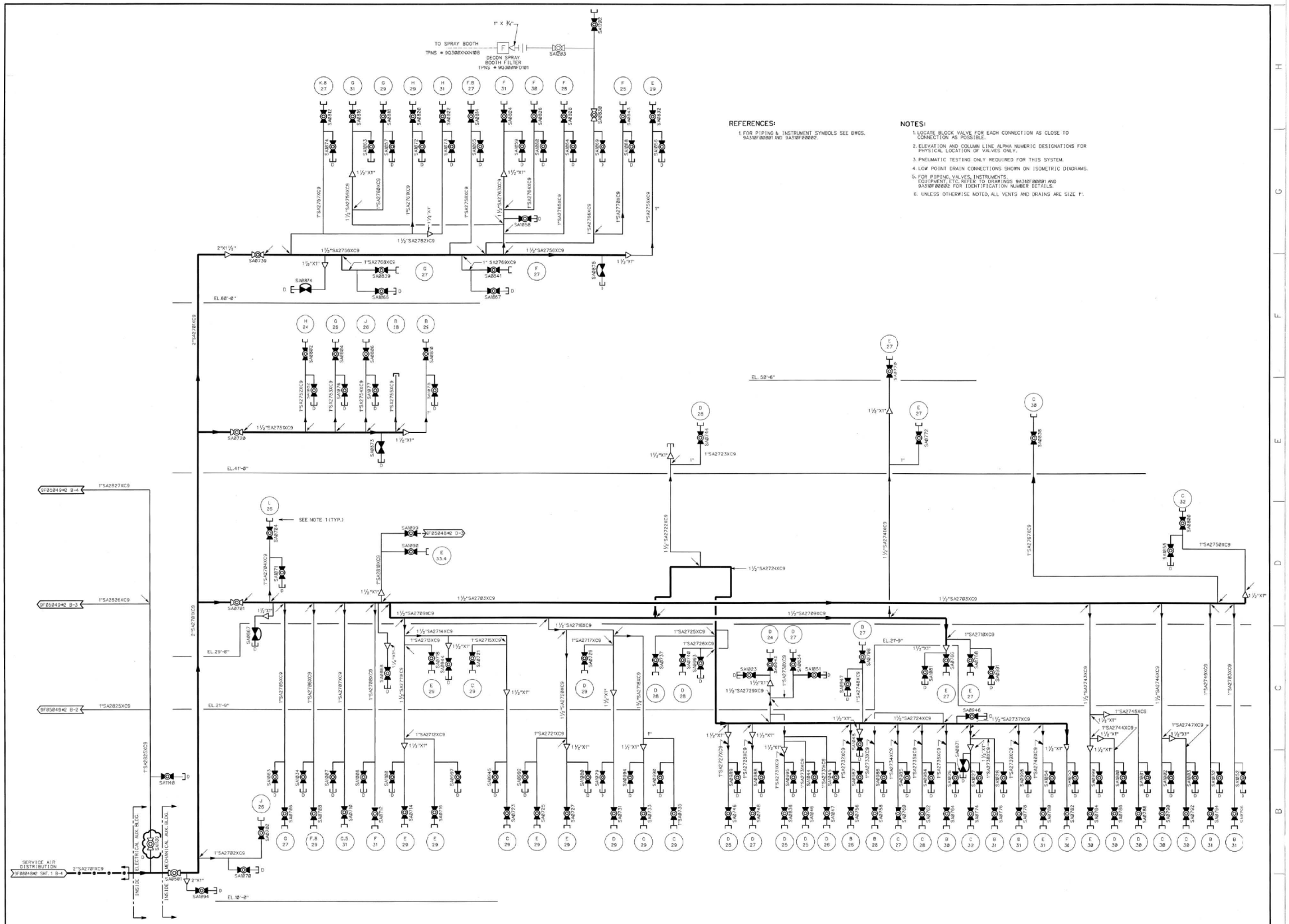

REFERENCES:

1. FOR PIPING & INSTRUMENT SYMBOLS SEE DWGS. 9A3I0F0000I AND 9A3I0F0000Z.

NOTES:

1. LOCATE BLOCK VALVE FOR EACH CONNECTION AS CLOSE TO CONNECTION AS POSSIBLE.
2. ELEVATION AND COLUMN LINE ALPHA NUMERIC DESIGNATIONS FOR PHYSICAL LOCATION OF VALVES ONLY.
3. PNEUMATIC TESTING ONLY REQUIRED FOR THIS SYSTEM.
4. LOW POINT DRAIN CONNECTIONS SHOWN ON ISOMETRIC DIAGRAMS.
5. FOR PIPING, VALVES, INSTRUMENTS, EQUIPMENT, ETC. REFER TO DRAWINGS 9A3I0F0000I AND 9A3I0F0000Z FOR IDENTIFICATION NUMBER DETAILS.
6. UNLESS OTHERWISE NOTED, ALL VENTS AND DRAINS ARE SIZE 1".

NO.	ISSUE DATE	REVISION	ORIG	CKR	RE	DV	SE
12	6-2-09	REVISED PER CR 09-84-75.	VJM				
11	1-12-04	INCORP. DCN 0300404.	JSH	ON FILE			
10	12-5-00	INCORP. DCN 99031181.	JSH	ON FILE			
8-9	9-20-82	ISSUED FOR CONSTRUCTION.	SIGNATURES ON FILE				

NO.	ISSUE DATE	REVISION	ORIG	CKR	RE	DV	SE

SEED DCN

SOUTH TEXAS PROJECT
NUCLEAR OPERATING COMPANY

PRIORITY	CADD FILE NO.	FSUG. NO.	STI. NO.
1	FJA429.121	D070928	3282605

PIPING & INSTRUMENTATION DIAGRAM
MECHANICAL & ELECTRICAL AUX. BUILDING
SERVICE AIR

SCALE	DWG. NO.	SHT.	REV.
NONE	9Q109F05051#2		12

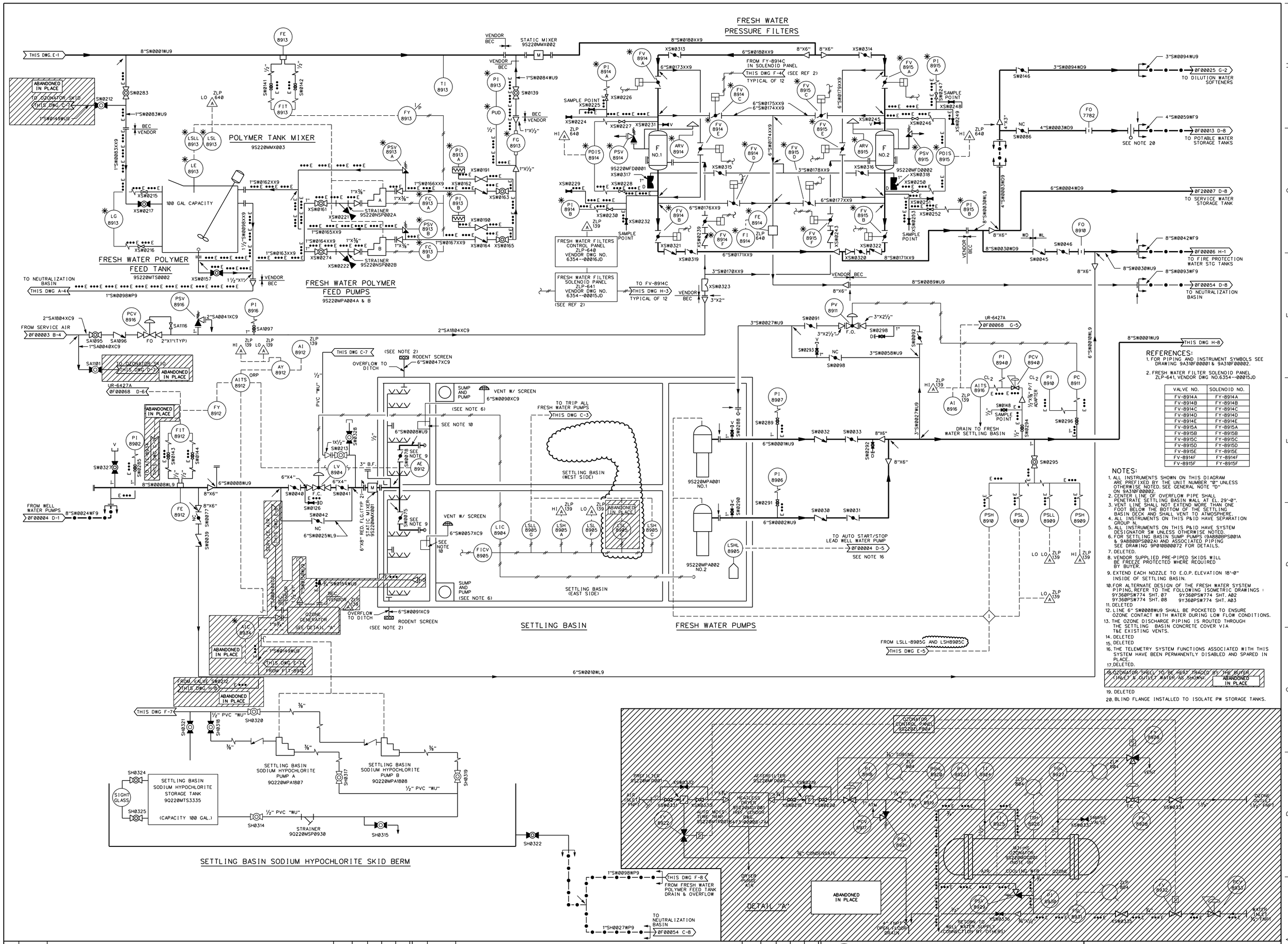

VALVE NO.	SOLENOID NO.
FV-8914A	FY-8914A
FV-8914B	FY-8914B
FV-8914C	FY-8914C
FV-8914D	FY-8914D
FV-8914E	FY-8914E
FV-8915A	FY-8915A
FV-8915B	FY-8915B
FV-8915C	FY-8915C
FV-8915D	FY-8915D
FV-8915E	FY-8915E
FV-8914F	FY-8914F
FV-8915F	FY-8915F

NO.	APPROVAL DATE	REVISION	ORIG	CKR	RE	DV	SE
51	3-11-19	INCORP. DCN 1900166.	SIGNATURES ON FILE				
0-50	11-23-87	ISSUED FOR CONSTRUCTION.	N/A	N/A	N/A		

SOUTH TEXAS PROJECT NUCLEAR OPERATING COMPANY

PIPING AND INSTRUMENTATION DIAGRAM FRESH WATER SUPPLY

PRIORITY	CADD FILE NO.	FSUG. NO.	STI. NO.	SCALE	DWG. NO.	SHT.	REV.
1	9Q220F00005.DGN	D070928	34817806	NONE	9Q220F00005		51

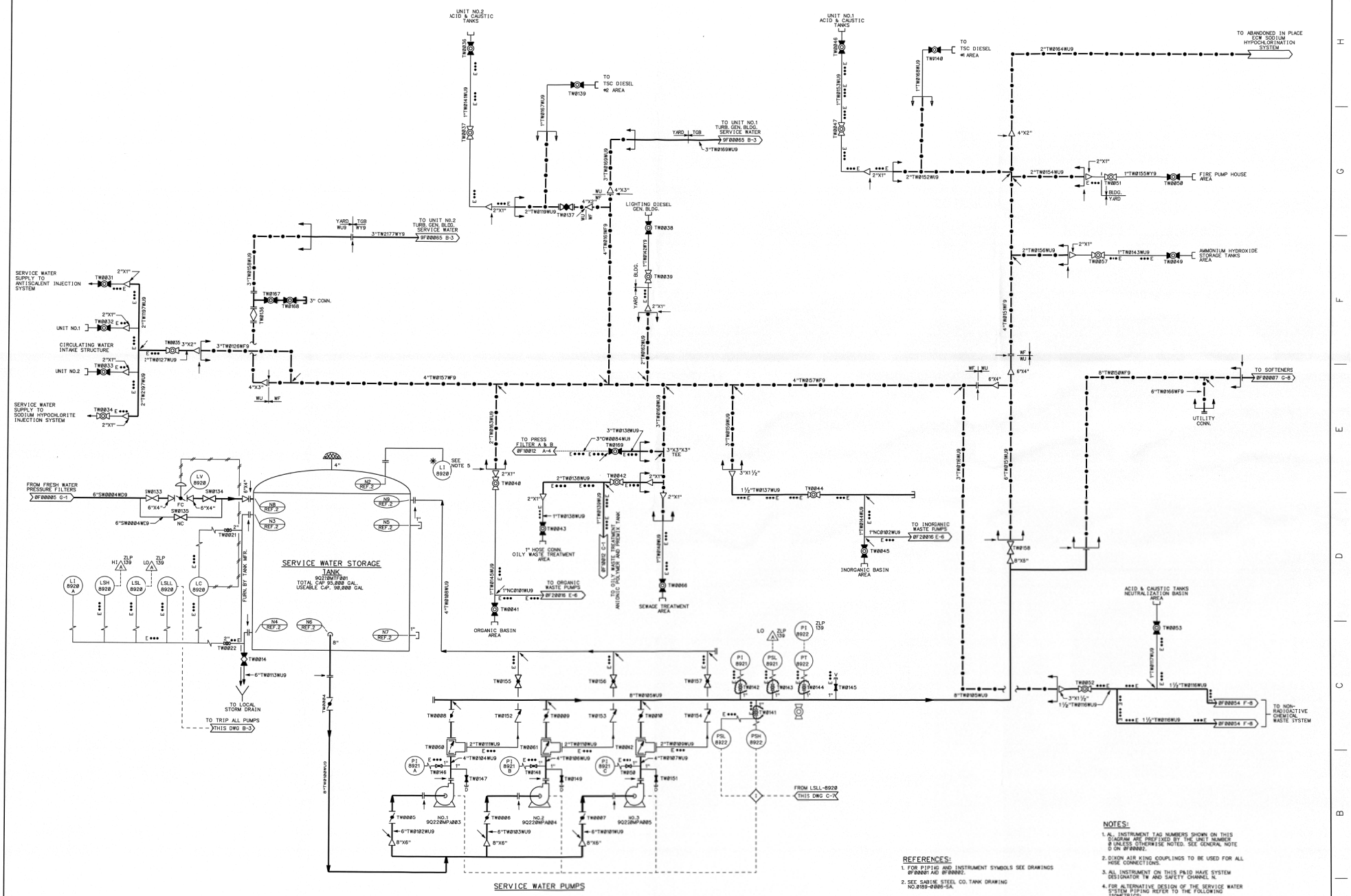

NOTES:

1. AL, INSTRUMENT TAG NUMBERS SHOWN ON THIS DIAGRAM ARE PREFIXED BY THE UNIT NUMBER 9 UNLESS OTHERWISE NOTED. SEE GENERAL NOTE D ON 9F00002.
2. DIXON AIR KING COUPLINGS TO BE USED FOR ALL HOSE CONNECTIONS.
3. ALL INSTRUMENT ON THIS P&ID HAVE SYSTEM DESIGNATOR TW AND SAFETY CHANNEL N.
4. FOR ALTERNATIVE DESIGN OF THE SERVICE WATER SYSTEM PIPING REFER TO THE FOLLOWING ISOMETRICS: 9Y36BPTW780-04 & 9Y36BPTW780-A03.
5. LIVEL INDICATOR LI-8920 AND ITS ASSOCIATED PIPING & HARDWARES ARE NOT USED AND ABANDONED IN PLACE PER DCP 95-9029-3.

REFERENCES:

1. FOR PIPING AND INSTRUMENT SYMBOLS SEE DRAWINGS 9F00001 AND 9F00002.
2. SEE SABINE STEEL CO. TANK DRAWING NO.0169-0006-SA.

NO.	ISSUE DATE	REVISION	ORIG	CKR	RE	DV	SE
31	6-27-96	INCORP. DCN 1581263.	NF	7/16	N/A	N/A	N/A
8-30	6-7-83	ISSUED FOR CONSTRUCTION.	SIGNATURES ON FILE				

ISSUED DCN

NO.	ISSUE DATE	REVISION	ORIG	CKR	RE	DV	SE

SOUTH TEXAS PROJECT
NUCLEAR OPERATING COMPANY

PIPING & INSTRUMENTATION DIAGRAM
SERVICE WATER SYSTEM

PRIORITY	CADD FILE NO.	FSUG. NO.	STI. NO.	SCALE	DWG. NO.	SHT.	REV.
1	9Q220F20007.DGN	D070928	3415548	NONE	9Q220F20007		31

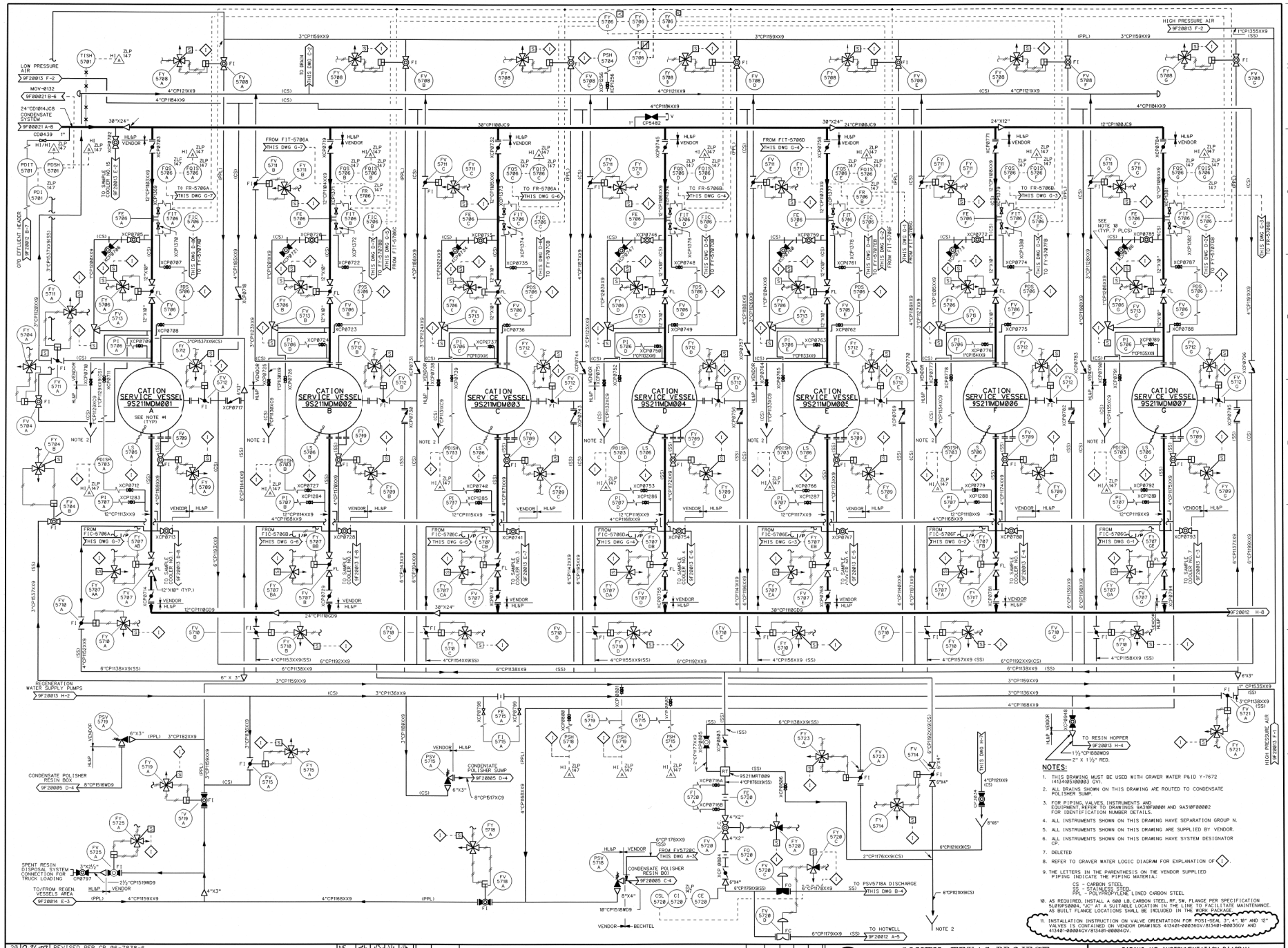

NOTES:

1. THIS DRAWING MUST BE USED WITH GRAVER WATER P&ID Y-7672 (413410S0000D3 CVI.
2. ALL DRAINS SHOWN ON THIS DRAWING ARE ROUTED TO CONDENSATE POLISHER SUMP.
3. FOR PIPING, VALVES, INSTRUMENTS AND EQUIPMENT, REFER TO DRAWINGS 9A30F00001 AND 9A30F00002 FOR IDENTIFICATION NUMBER DETAILS.
4. ALL INSTRUMENTS SHOWN ON THIS DRAWING HAVE SEPARATION GROUP N.
5. ALL INSTRUMENTS SHOWN ON THIS DRAWING ARE SUPPLIED BY VENDOR.
6. ALL INSTRUMENTS SHOWN ON THIS DRAWING HAVE SYSTEM DESIGNATOR CP.
7. DELETED
8. REFER TO GRAVER WATER LOGIC DIAGRAM FOR EXPLANATION OF 1
9. THE LETTERS IN THE PARENTHESIS ON THE VENDOR SUPPLIED PIPING INDICATE THE PIPING MATERIAL:
   CS – CARBON STEEL
   SS – STAINLESS STEEL
   PPL – POLYPROPYLENE LINED CARBON STEEL
10. AS REQUIRED, INSTALL A 600 LB, CARBON STEEL, RF, SW, FLANGE PER SPECIFICATION SL010P52004. "JC" AT A SUITABLE LOCATION IN THE LINE TO FACILITATE MAINTENANCE. AS BUILT FLANGE LOCATIONS SHALL BE INCLUDED IN THE WORK PACKAGE.
11. INSTALLATION INSTRUCTION ON VALVE ORIENTATION FOR POSI-SEAL, 3", 4", 10" AND 12" VALVES IS CONTAINED ON VENDOR DRAWINGS 413481-00036GV/813481-00036GV AND 413481-00004GV/813481-00004GV.

NO.	ISSUE DATE	REVISION	ORIG	CKR	RE	DV	SE
20	7-26-07	REVISED PER CR 06-7838-6.	NF				
19	2-9-06	REVISED PER DCP # 05-15745-19.	JSH	ON FILE			
18	2-9-05	INCORP. DCN 0401980.	VJM	ON FILE			
17	10-16-03	REVISED PER CR 03-14747-1.	KS	ON FILE			
16	5/22/00	INCORP. DCN 97-02679.	JGL	ON FILE			
0-15	7/16/83	ISSUED FOR CONSTRUCTION.	SIGNATURES ON FILE				

NO.	ISSUE DATE	REVISION	ORIG	CKR	RE	DV	SE

ESEED DCN

SOUTH TEXAS PROJECT NUCLEAR OPERATING COMPANY

PIPING AND INSTRUMENTATION DIAGRAM
CONDENSATE POLISHING CATION DEMINERALIZER SYSTEM

PRIORITY	CADD FILE NO.	FSUG.NO.	STI. NO.	SCALE	DWG. NO.	SHT.	REV.
1	FJA116.200	D070328	32188706	NONE	9S219F20011 #1		20

8 7 6 5 4 3 2 1

A B C D E F G H

ediowa 07/19/2007 16:17:02

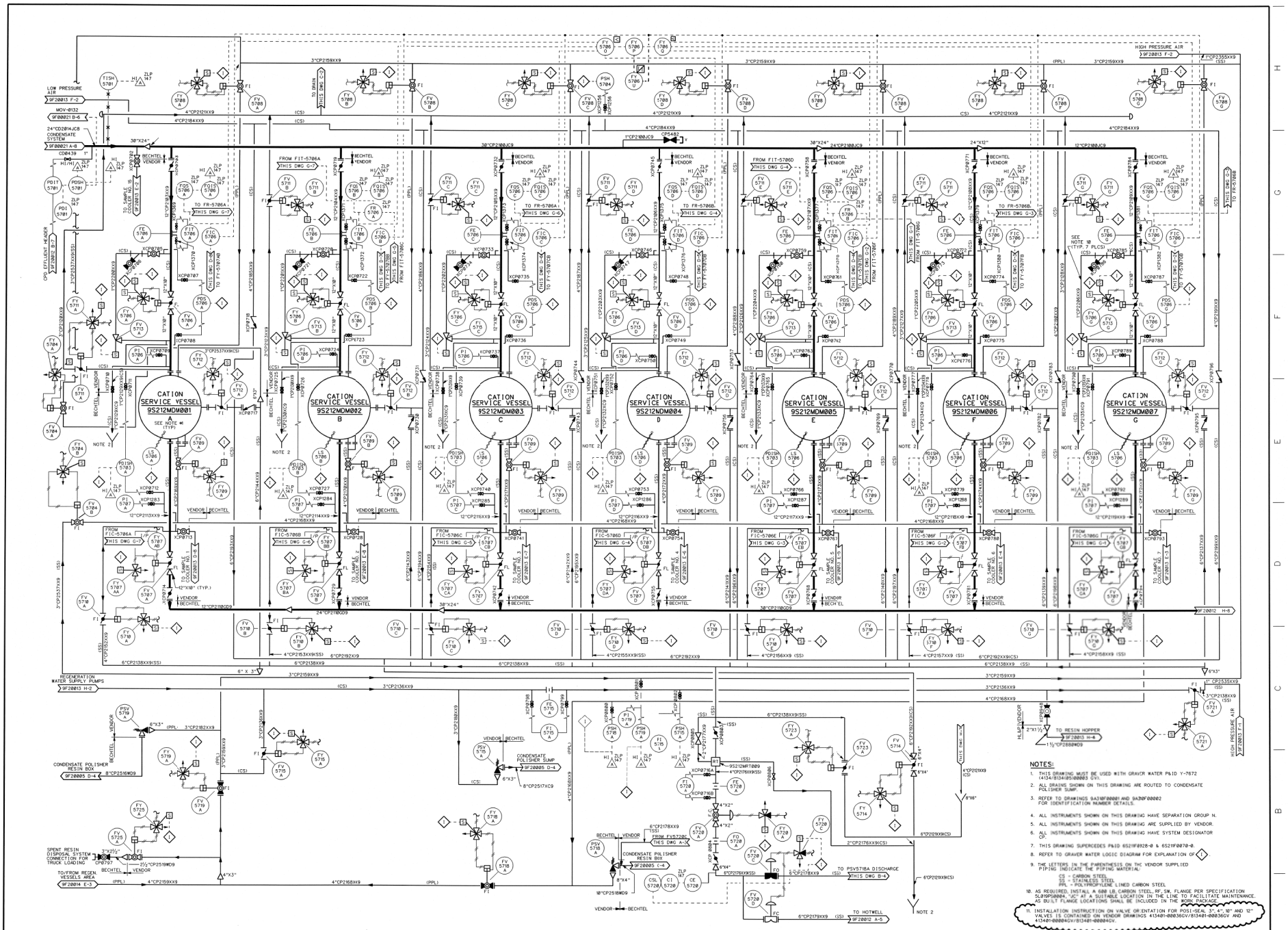

NOTES:

1. THIS DRAWING MUST BE USED WITH GRAVER WATER P&ID Y-7672 (4134/8134085000003 CV).
2. ALL DRAINS SHOWN ON THIS DRAWING ARE ROUTED TO CONDENSATE POLISHER SUMP.
3. REFER TO DRAWINGS 9A310F00001 AND 9A310F00002 FOR IDENTIFICATION NUMBER DETAILS.
4. ALL INSTRUMENTS SHOWN ON THIS DRAWING HAVE SEPARATION GROUP N.
5. ALL INSTRUMENTS SHOWN ON THIS DRAWING ARE SUPPLIED BY VENDOR.
6. ALL INSTRUMENTS SHOWN ON THIS DRAWING HAVE SYSTEM DESIGNATOR CP.
7. THIS DRAWING SUPERCEDES P&ID 6521F0028-0 & 6521F0070-0.
8. REFER TO GRAVER WATER LOGIC DIAGRAM FOR EXPLANATION OF (1).
9. THE LETTERS IN THE PARENTHESIS ON THE VENDOR SUPPLIED PIPING INDICATE THE PIPING MATERIAL.
   CS - CARBON STEEL
   SS - STAINLESS STEEL
   PPL - POLYPROPYLENE LINED CARBON STEEL
10. AS REQUIRED, INSTALL A 600 LB. CARBON STEEL, RF, SW, FLANGE PER SPECIFICATION SL8195P0004, "JC" AT A SUITABLE LOCATION IN THE LINE TO FACILITATE MAINTENANCE. AS BUILT FLANGE LOCATIONS SHALL BE INCLUDED IN THE WORK PACKAGE.
11. INSTALLATION INSTRUCTION ON VALVE ORIENTATION FOR POSI-SEAL 3", 4", 8" AND 12" VALVES IS CONTAINED ON VENDOR DRAWINGS 413401-000356GV/813401-000356GV AND 413401-000004GV/813401-000004GV.

NO.	ISSUE DATE	REVISION	ORIG	CKR	RE	DV	SE
17	12-6-07	REVISED PER CR 06-7838-6.	NF				
16	2-9-06	REVISED PER DCP# 05-15745-19.	JSH	ON FILE			
15	10-11-05	INCORP. DCN 8401983.	LNB	ON FILE			
14	10-16-03	REVISED PER CR 03-14747-1	KS	ON FILE			
13	11/21/02	INCORP. DCN 9702958.	VJM	ON FILE			
0-12	7-16-83	ISSUED FOR CONSTRUCTION.	SIGNATURES ON FILE				

ESKED UPN

NO.	ISSUE DATE	REVISION	ORIG	CKR	RE	DV	SE

SOUTH TEXAS PROJECT NUCLEAR OPERATING COMPANY

PIPING AND INSTRUMENTATION DIAGRAM
CONDENSATE POLISHING CATION DEMINERALIZER SYSTEM

PRIORITY	CADD FILE NO.	FSUG.NO.	STI. NO.	SCALE	DWG. NO.	SHT.	REV.
1	FJA516.171	D070328	32188707	NONE	9S219F20011#2		17

8 7 6 5 4 3 2 1

A B C D E F G H

mdicen 07/19/2007 16:15:21

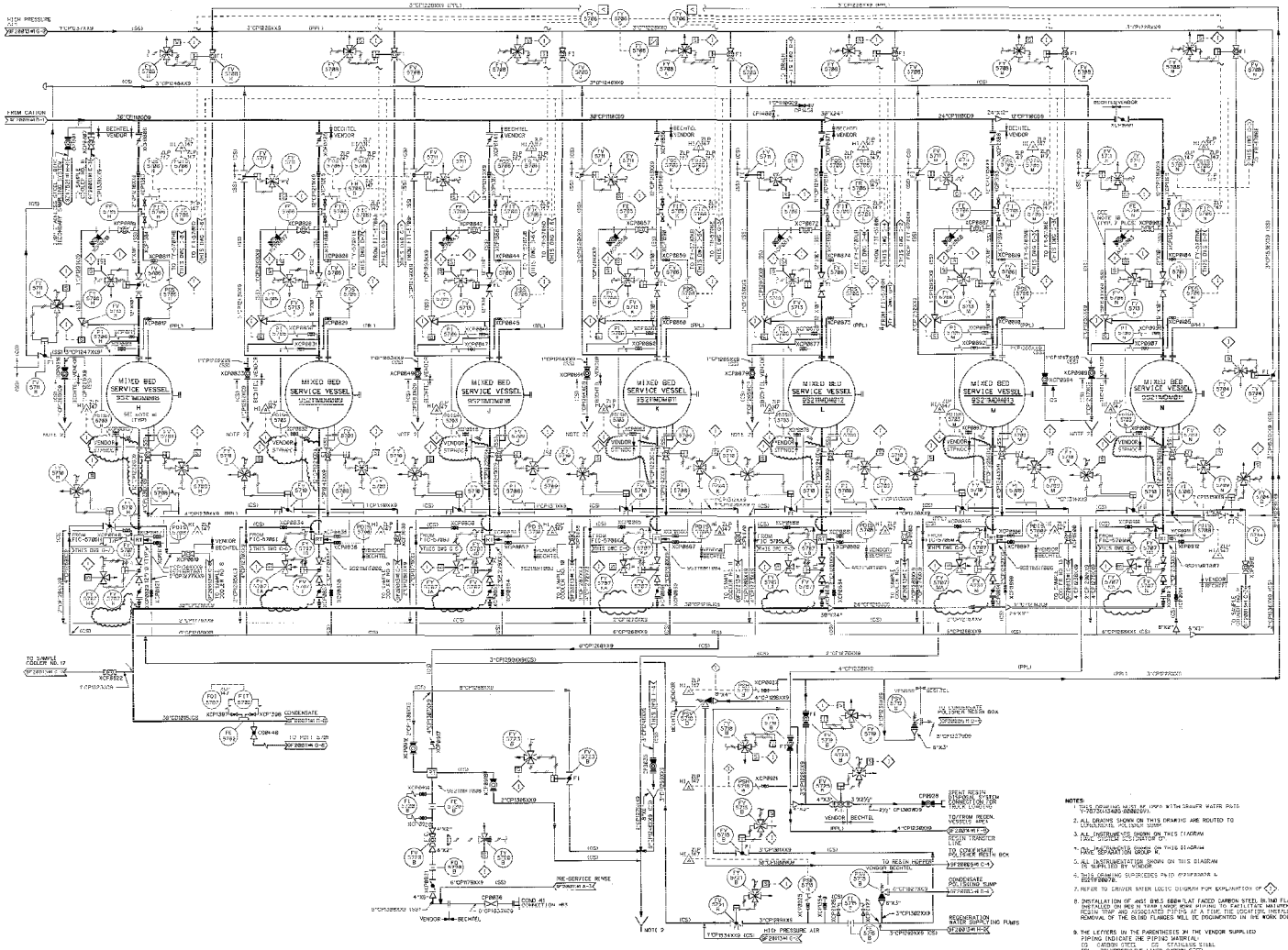

NOTES:

1. THESE DRAWINGS MUST BE READ WITH SEAWATER WATER PATH 1-9S219-D3-0480-0000-001.
2. ALL DRAINS SHOWN ON THIS DRAWING ARE ROUTED TO CONDENSATE POLISHER 1000F.
3. ALL INSTRUMENTS SHOWN ON THIS DIAGRAM FALL UNDER DESIGNATION 'D'.
4. ALL INSTRUMENTS SHOWN ON THIS DIAGRAM ARE SEPARATION GROUP 'N'.
5. ALL INSTRUMENTATION SHOWN ON THIS DIAGRAM IS SUPPLIED BY VENDOR.
6. THIS DRAWING SUPERSEDES PAID 4F2F2B0078 & 4F2F2B0079.
7. REFER TO CROSS WATER LOGIC DIAGRAM FOR EXPLANATION OF ◇.
8. INSTALLATION OF ANSI B16.5 6000#FLAT FACED CARBON STEEL BLIND FLANGES MAY BE INSTALLED ON PRE-INTERLINGE WORK PIPING TO FACILITATE MAINTENANCE ON PWE RESIN TRAP AND ASSOCIATED PIPING AT A TIME. THE LOCATION, INSTALLATION, AND REMOVAL OF THE BLIND FLANGES WILL BE DOCUMENTED IN THE WORK DOCUMENT.
9. THE LETTERS IN THE PARENTHESIS IN THE VENDOR SUPPLIED PIPING INDICATE THE PIPING MATERIAL:
   CS - CARBON STEEL SS - STAINLESS STEEL
   RPL - POLYPROPYLENE LINED CARBON STEEL
10. AS REQUIRED, INSTALL A ANSI B16.5 STAINLESS STEEL OR CARBON STEEL FLANGE PER SPECIFICATION 9S219PF0001-001 AT A SUITABLE LOCATION ON THE LINE TO FACILITATE MAINTENANCE. AS BUILT FLANGE LOCATIONS SHALL BE INCLUDED IN THE WORK PACKAGE.
11. INSTALLATION INSPECTION ON VALVE ORIENTATION FOR POW-SEAL 3", 4", 10" AND 12" VALVES IS CONTAINED ON VENDOR DRAWINGS 4F2A2F-A0B0270-V AND 4-2A2F-A0B0270-V.

REV. NO.	ISSUE DATE	REVISION	DRIG	CKR	RE	DV	SE	NR.	ISSUE DATE	REVISION	DRIG	CKR	RE	DV	SE
18	01-23-03	INCORP. DCN 0B0244.	LNB	ON FILE											
17	7-26-07	REVISED PER DCP 09-7835-0.	NF	ON FILE											
16	2-29-06	REVISED PER DCP 09-19745-19.	JSH	ON FILE											
15	5-2-03	INCORP. DCN 0B2484.	VJM	ON FILE											
14	5-4-00	INCORP. DCN 0B0124.	SIGNATURES ON FILE							INCORP. DCN 0B0249.	JSH				
13	7-18-83	ISSUED FOR CONSTRUCTION.	SIGNATURES ON FILE						6.15.78	INCORP. DCN 0B0250.	JSH	ON FILE			

SOUTH TEXAS PROJECT
NUCLEAR OPERATING COMPANY

PIPING AND INSTRUMENTATION DIAGRAM
CONDENSATE POLISHING MIXED-BED
DEMINERALIZER SYSTEM

PRIORITY	DWG. FILE NO.	FSAR NO.	STI. NO.	SCALE	DWG. NO.	SHT.	REV.
1	FJA114.201	D070928	3279/657	NONE	9S219F20012#1		20

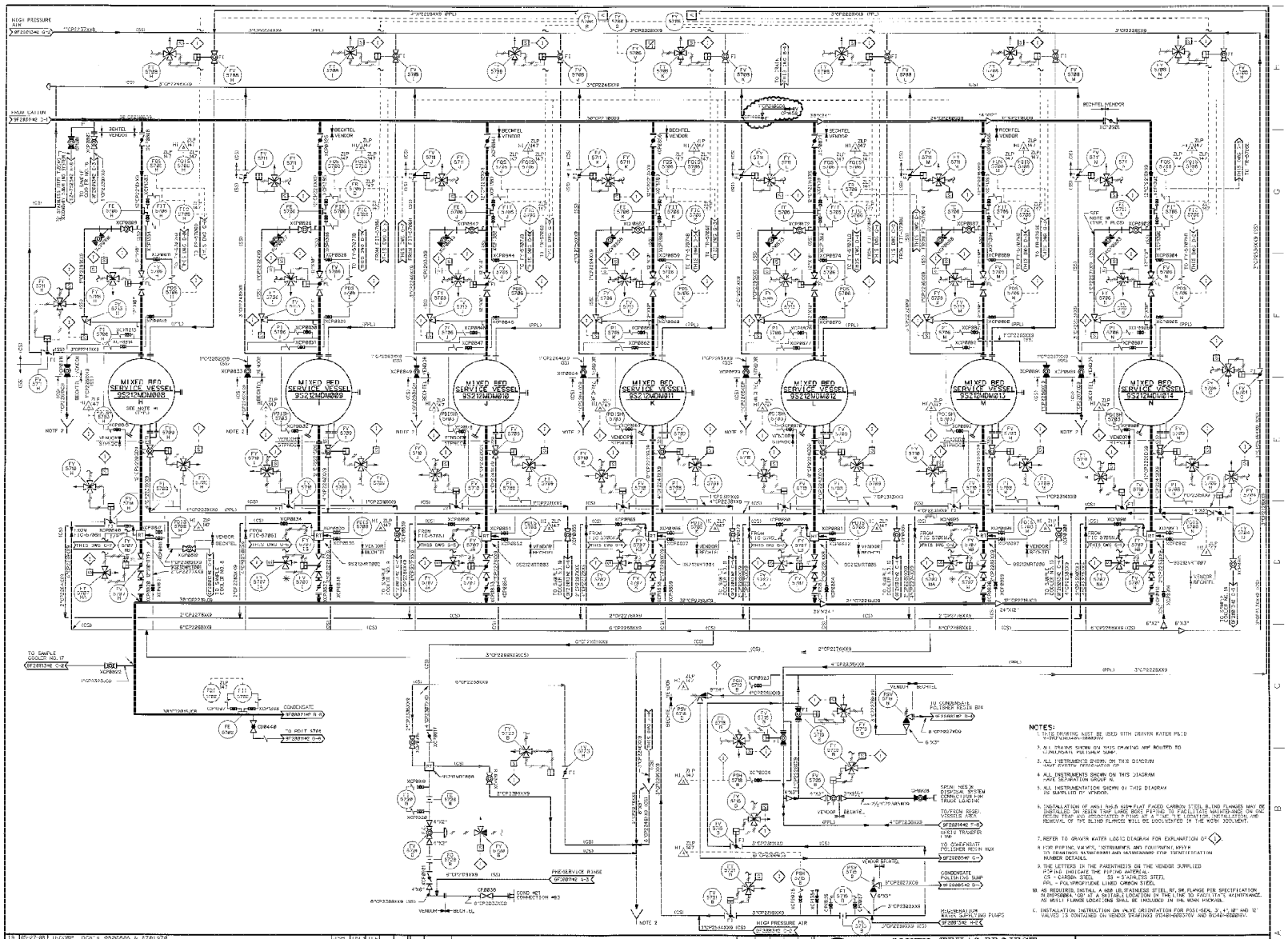

REV.	ISSUE DATE	REVISION	DRN	CKR	RE	JV	SE	REV.	ISSUE DATE	REVISION	DRN	CKR	RE	JV	SL
19	05-27-08	INCORP. DCN's 8920686 & 8701978.	JSM	ON FILE											
18	02-26-08	INCORP. DCN 8808245.	NR	ON FILE											
17	12-26-07	REVISED PER CR 98 7030 5.	VF	ON FILE											
16	2-20-06	REVISED PER DUP # 89-1/89-19.	JSM	ON FILE											
15	11-14-02	INCORP. DCN 9708457	VJM	ON FILE				21	6-15-10	INCORP. DCN 8808245.	JSH	JSH	JSH	JSH	JSH
14	7-10-02	ISSUED FOR CONSTRUCTION.	21GAT	RES	GR	FSF		20	5-4-10	INCORP. DCN 8808245.	JDL	ON FILE			

SOUTH TEXAS PROJECT
NUCLEAR OPERATING COMPANY

PIPING AND INSTRUMENTATION DIAGRAM
CONDENSATE POLISHING MIXED-BED DEMINERALIZER

PROJECT	CADD FILE NO.	FSAR NO.	STI NO.	SCALE	DWG. NO.	SHT.	REV.
1	FJA514.0-1	D8708928	32671026	NONE	9S219F20012 #2		21

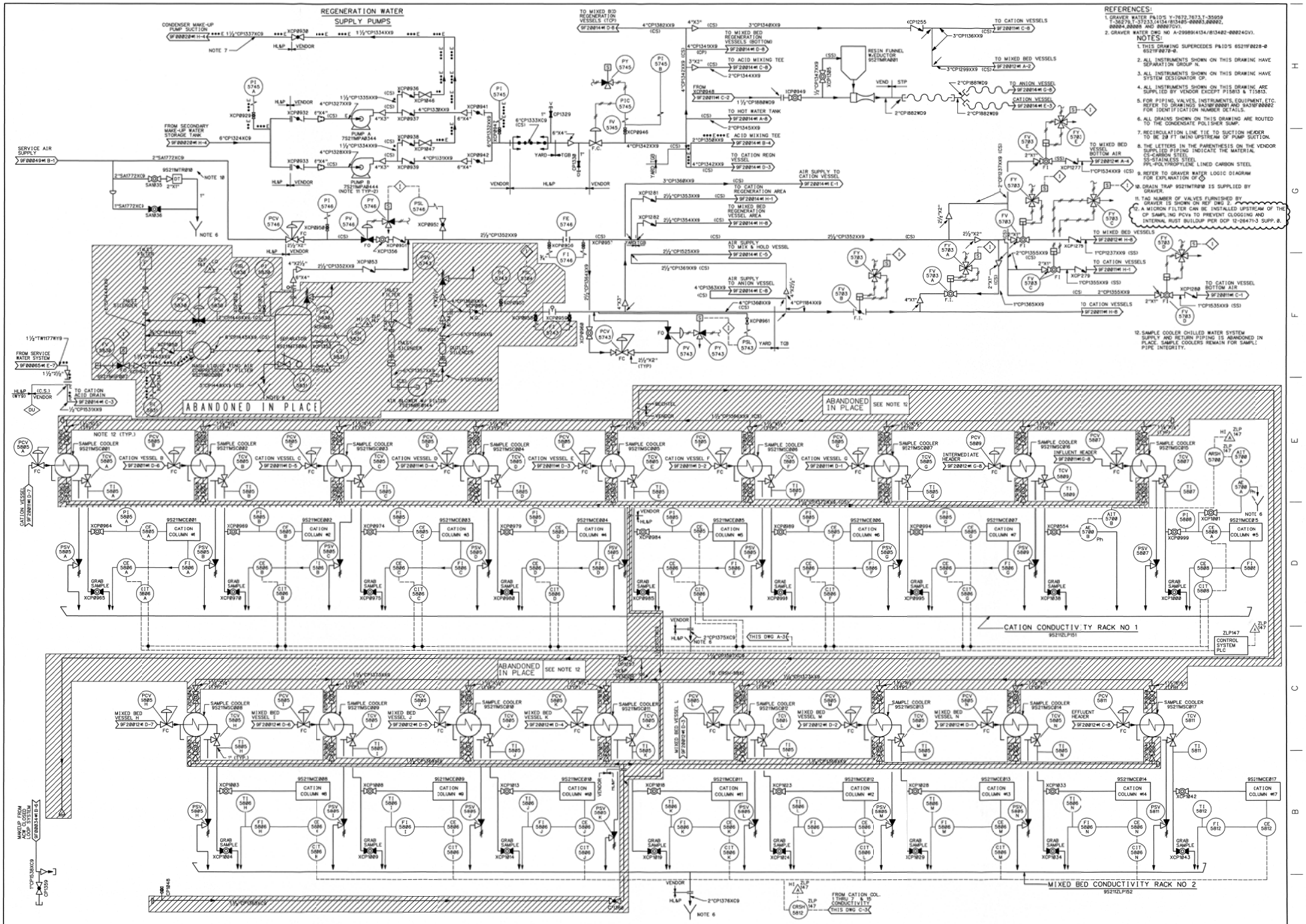

NO.	APPROVAL DATE	REVISION	ORIG	CHKR	RE	DV	SE	NO.	APPROVAL DATE	REVISION	ORIG	CHKR	RE	DV	SE
26	6-30-16	INCORP. DCN 1600324.	JSH												
0-25	7-18-83	ISSUED FOR CONSTRUCTION.	SIGNATURES ON FILE												

SEEDED DGN

SOUTH TEXAS PROJECT NUCLEAR OPERATING COMPANY

PRIORITY	CADD FILE NO.	FSUG. NO.	STI. NO.
1	9S219F20013#1.DGN	D070928	3434 2127

PIPING AND INSTRUMENTATION DIAGRAM
CONDENSATE POLISHING DEMINERALIZER
AIR-WATER SUPPLY AND SAMPLING SYSTEM

SCALE	DWG. NO.	SHT.	REV.
NONE	9S219F20013#1		26

8 7 6 5 4 3 2 1

T-MOD# / WAN # T1-12-26471 SUPP **0**

TEMPORARY DOCUMENT CHANGE NOTICE (TDCN)

TDCN NO. T1-12-26471-12-1 **UNIT NO.** 1

DOC NO. 9S219F20013#1 **SHEET NO.** N / A **REV NO.** 26

PRI 1 DOC **YES** X **NO**

DIST. REV NO. ____ (For DC use only)

FSUG NO. Z3103

Mike Momsen / 5/1/17
PREPARER (print/sign) / DATE
(JPR 9534)

Dominic Solis / 5/1/17
VERIFIER (print/sign) / DATE
(JPR 9534)

BEFORE:

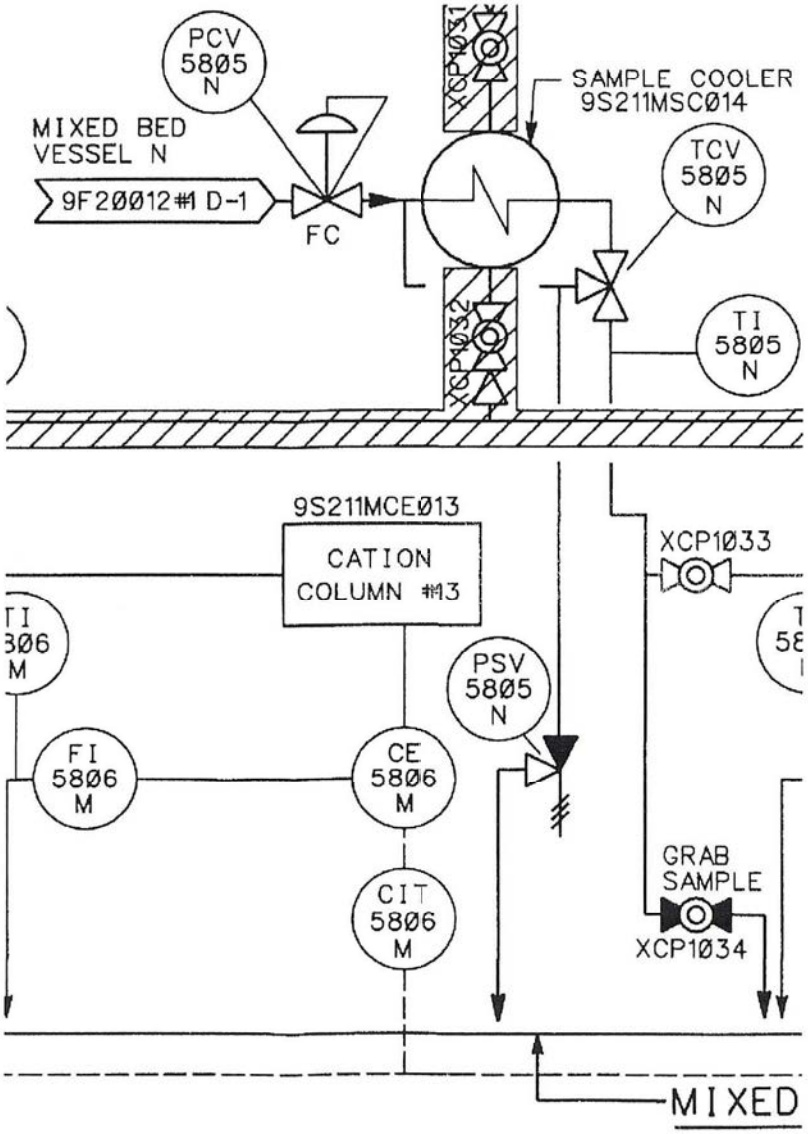

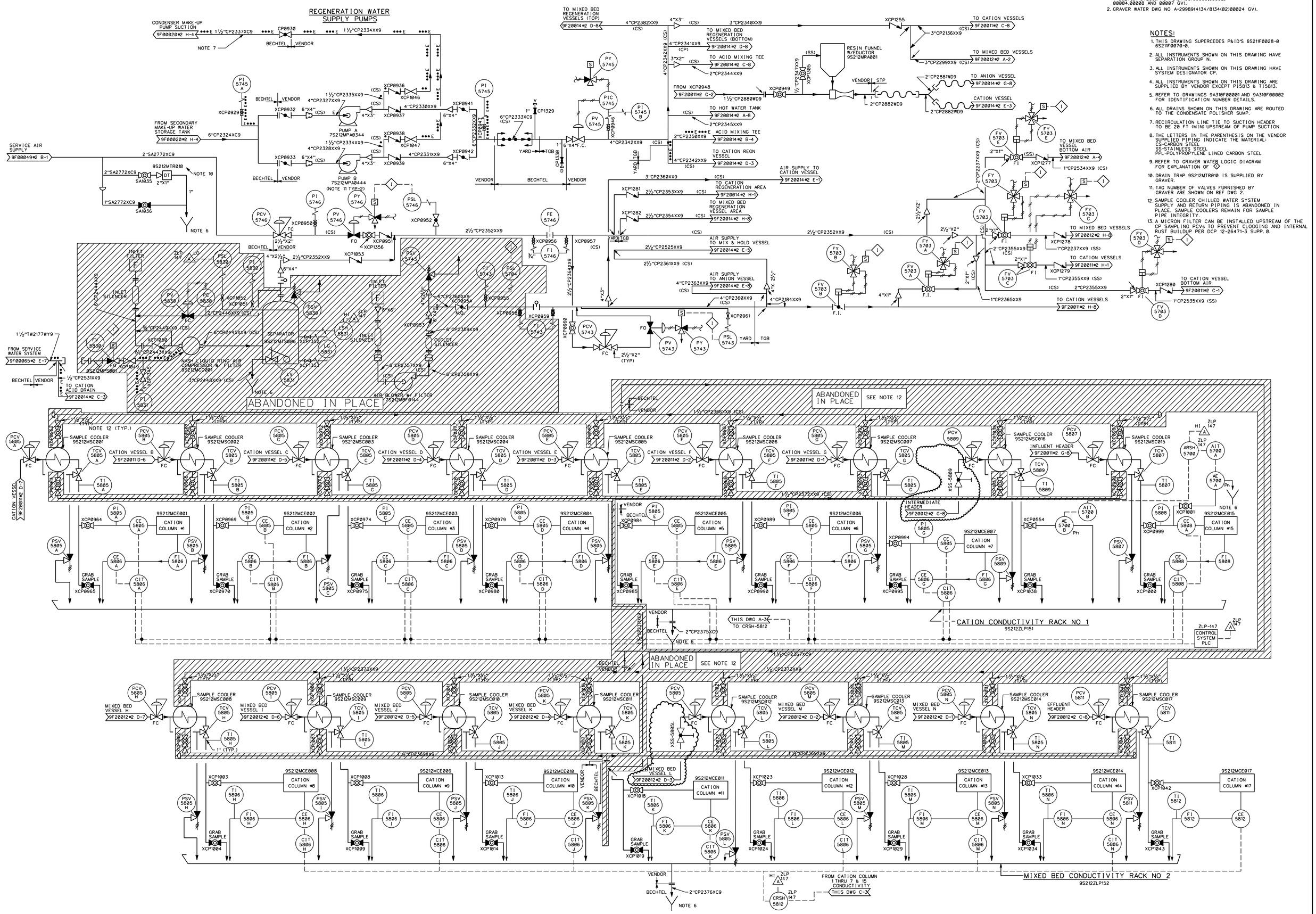

REFERENCES:

1. GRAVER WATER P&ID'S Y-7672,7673,T-35959 T-36279,T-37233,(4134/8134(05)00003,00002, 00004,00008 AND 00007 GV).
2. GRAVER WATER DWG NO A-29989(4134/8134(02)00024 GV).

NOTES:

1. THIS DRAWING SUPERCEDES P&ID'S 6S211F0028-0 6S211F0070-0.
2. ALL INSTRUMENTS SHOWN ON THIS DRAWING HAVE SEPARATION GROUP N.
3. ALL INSTRUMENTS SHOWN ON THIS DRAWING HAVE SYSTEM DESIGNATOR CP.
4. ALL INSTRUMENTS SHOWN ON THIS DRAWING ARE SUPPLIED BY VENDOR EXCEPT P15813 & T15813.
5. REFER TO DRAWINGS 9A310F00001 AND 9A310F00002 FOR IDENTIFICATION NUMBER DETAILS.
6. ALL DRAINS SHOWN ON THIS DRAWING ARE ROUTED TO THE CONDENSATE POLISHER SUMP.
7. RECIRCULATION LINE TIE TO SUCTION HEADER TO BE 20 FT (MIN) UPSTREAM OF PUMP SUCTION.
8. THE LETTERS IN THE PARENTHESIS ON THE VENDOR SUPPLIED PIPING INDICATE THE MATERIAL: CS-CARBON STEEL SS-STAINLESS STEEL PPL-POLYPROPYLENE LINED CARBON STEEL
9. REFER TO GRAVER WATER LOGIC DIAGRAM FOR EXPLANATION OF ◇
10. DRAIN TRAP 9S212MTR010 IS SUPPLIED BY GRAVER.
11. TAG NUMBER OF VALVES FURNISHED BY GRAVER ARE SHOWN ON REF DWG 2.
12. SAMPLE COOLER CHILLED WATER SYSTEM SUPPLY AND RETURN PIPING IS ABANDONED IN PLACE. SAMPLE COOLERS REMAIN FOR SAMPLE PIPE INTEGRITY.
13. A MICRON FILTER CAN BE INSTALLED UPSTREAM OF THE CP SAMPLING PCVs TO PREVENT CLOGGING AND INTERNAL RUST BUILDUP PER DCP 12-26471-3 SUPP. 0.

NO.	APPROVAL DATE	REVISION	ORIG	CKR	RE	DV	SE
22	2-12-20	INCORP. DCN'S 1900934 AND 1900930.	N/A	N/A	N/A		
0-21	7-18-83	ISSUED FOR CONSTRUCTION.	SIGNATURES ON FILE				

SOUTH TEXAS PROJECT
NUCLEAR OPERATING COMPANY

PIPING AND INSTRUMENTATION DIAGRAM
CONDENSATE POLISHING
DEMINERALIZER AIR-WATER SUPPLY AND SAMPLING SYSTEM

PRIORITY	CADD FILE NO.	FSUG. NO.	STI. NO.	SCALE	DWG. NO.	SHT.	REV.
1	9S219F20013#2.DGN	D070928	34982704	NONE	9S219F20013#2		22

ESEED.DGN

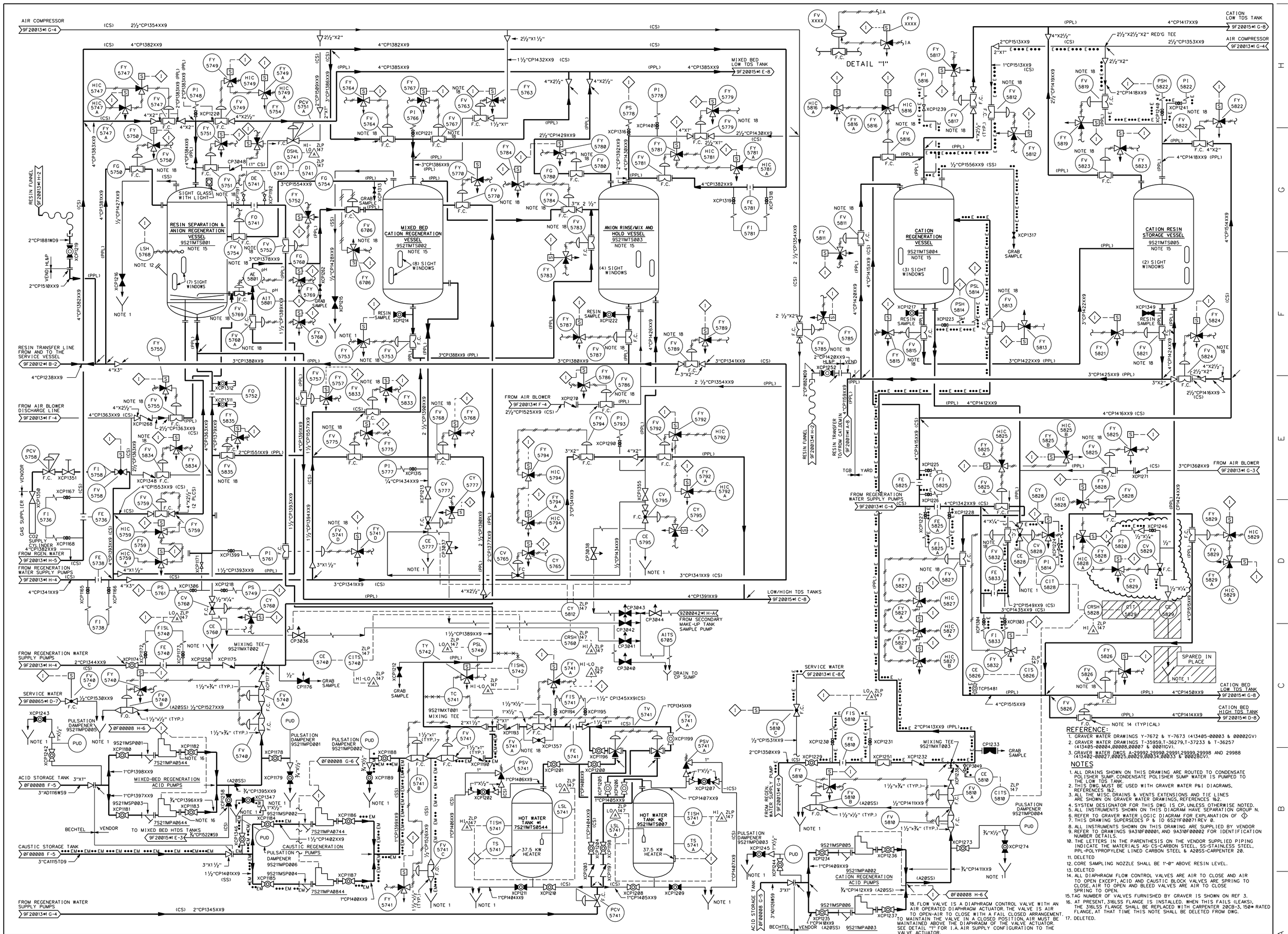

REFERENCE:

1. GRAVER WATER DRAWINGS Y-7672 & Y-7673 (413405-00003 & 00002GV)
2. GRAVER WATER DRAWINGS T-35959,T-36279,T-37233 & T-36257 (413405-00004,00008,00007 & 00011GV).
3. GRAVER WATER DWGS A-29992,29990,29991,29999,29998 AND 29988 (413402-00027,00025,00029,00034,00033 & 000280V).

NOTES

1. ALL DRAINS SHOWN ON THIS DRAWING ARE ROUTED TO CONDENSATE POLISHER SUMP. CONDENSATE POLISHER SUMP WATER IS PUMPED TO THE LOW TDS TANK.
2. THIS DWG. MUST BE USED WITH GRAVER WATER P&I DIAGRAMS, REFERENCES 1&2.
3. ALL THE MISC. DRAINS & VENTS EXTENSIONS AND TIE LINES ARE SHOWN ON GRAVER WATER DRAWINGS, REFERENCES 1&2.
4. SYSTEM DESIGNATOR FOR THIS DWG IS CP, UNLESS OTHERWISE NOTED.
5. ALL INSTRUMENTS SHOWN ON THIS DIAGRAM HAVE SEPARATION GROUP N.
6. REFER TO GRAVER WATER LOGIC DIAGRAM FOR EXPLANATION OF ◇.
7. THIS DRAWING SUPERSEDES P & ID 6S211F00071REV 0.
8. ALL INSTRUMENTS SHOWN ON THIS DRAWING ARE SUPPLIED BY VENDOR
9. REFER TO DRAWINGS 9A310F00001, AND 9A310F00002 FOR IDENTIFICATION NUMBER DETAILS.
10. THE LETTERS IN THE PARENTHESIS ON THE VENDOR SUPPLIED PIPING INDICATE THE MATERIALS AS:-CS-CARBON STEEL, SS-STAINLESS STEEL, PPL-POLYPROPYLENE LINED CARBON STEEL & A20SS-CARPENTER 20.
11. DELETED
12. CORE SAMPLING NOZZLE SHALL BE 1'-0" ABOVE RESIN LEVEL.
13. DELETED
14. ALL DIAPHRAGM FLOW CONTROL VALVES ARE AIR TO CLOSE AND AIR TO OPEN EXCEPT, ACID AND CAUSTIC BLOCK VALVES ARE SPRING TO CLOSE, AIR TO OPEN AND BLEED VALVES ARE AIR TO CLOSE SPRING TO OPEN.
15. TAG NUMBER OF VALVES FURNISHED BY GRAVER IS SHOWN ON REF 3.
16. AT PRESENT, 316LSS FLANGE IS INSTALLED. WHEN THIS FAILS (LEAKS), THE 316LSS FLANGE SHALL BE REPLACED WITH CARPENTER 20CB-3, 150# RATED FLANGE, AT THAT TIME THIS NOTE SHALL BE DELETED FROM DWG.
17. DELETED.
18. FLOW VALVE IS A DIAPHRAGM CONTROL VALVE WITH AN AIR OPERATED DIAPHRAGM ACTUATOR. THE VALVE IS AIR TO OPEN-AIR TO CLOSE WITH A FAIL CLOSED ARRANGEMENT. TO MAINTAIN THE VALVE IN A CLOSED POSITION, AIR MUST BE MAINTAINED ABOVE THE DIAPHRAGM OF THE VALVE ACTUATOR. SEE DETAIL "1" FOR I.A. AIR SUPPLY CONFIGURATION TO THE VALVE ACTUATOR.

NO.	APPROVAL DATE	REVISION	ORIG	CKR	RE	DV	SE
40	7-17-19	INCORP. DCN 1801210.	SIGNATURES ON FILE		N/A	N/A	N/A
0-39	7-18-83	ISSUED FOR CONSTRUCTION.					

SOUTH TEXAS PROJECT
NUCLEAR OPERATING COMPANY

PIPING AND INSTRUMENTATION DIAGRAM
CONDENSATE POLISHING
DEMINERALIZER REGENERATION SYSTEM

PRIORITY	CADD FILE NO.	FSUG. NO.	STI. NO.	SCALE	DWG. NO.	SHT.	REV.
1	9S219F20014#1.DGN	D070928	34880878	NONE	9S219F20014#1		40

ESEED_DGN

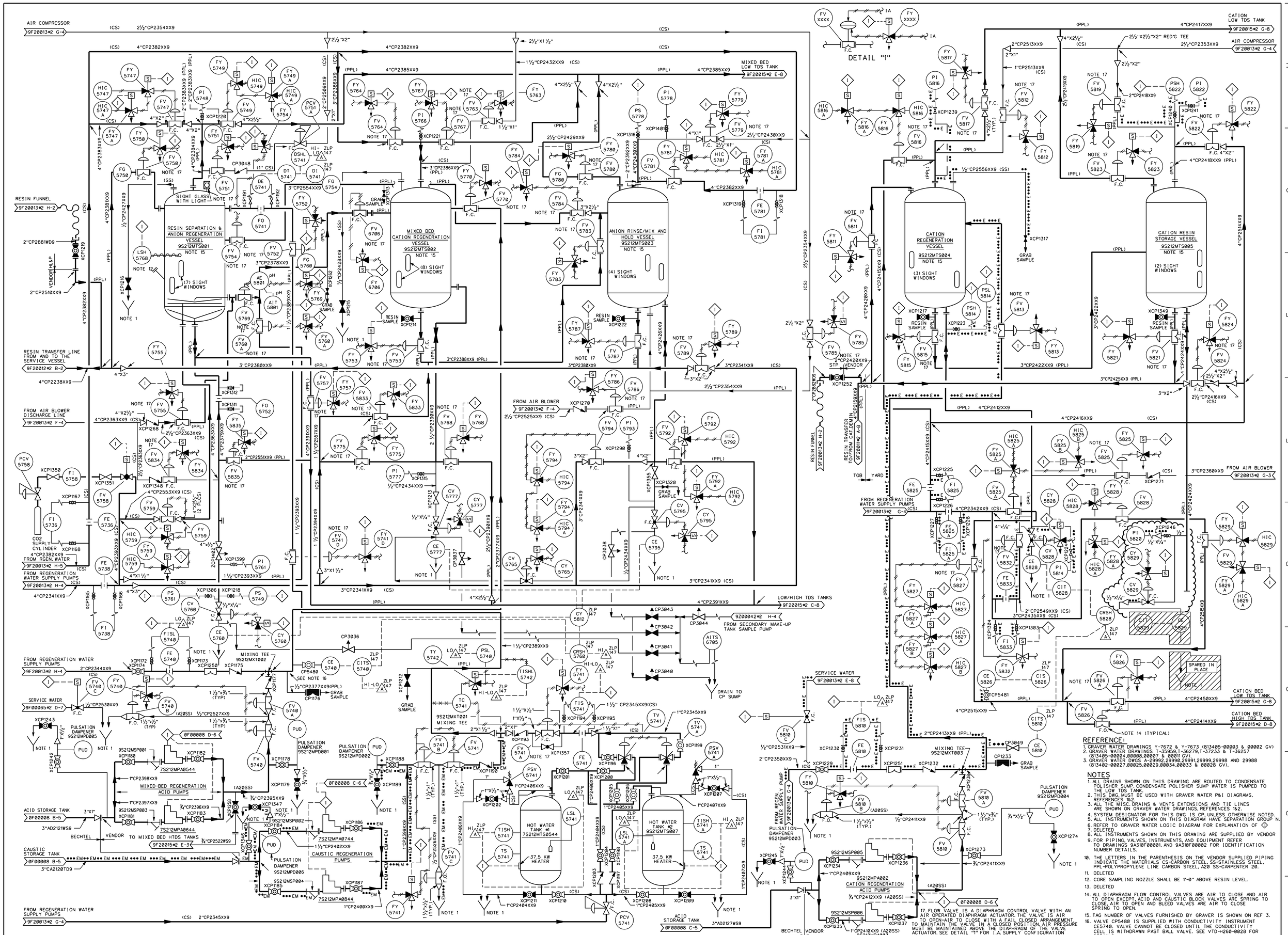

REFERENCE:

1. GRAVER WATER DRAWINGS Y-7672 & Y-7673 (813405-00003 & 00002 GV)
2. GRAVER WATER DRAWINGS T-35959,T-36279,T-37233 & T-36257 (813405-00004,00008,00007 & 00011 GV).
3. GRAVER WATER DWGS A-29992,29990,29991,29999,29998 AND 29988 (813402-00027,00025,00029,00034,00033 & 00028 GV).

NOTES

1. ALL DRAINS SHOWN ON THIS DRAWING ARE ROUTED TO CONDENSATE POLISHER SUMP.CONDENSATE POLISHER SUMP WATER IS PUMPED TO THE LOW TDS TANK.
2. THIS DWG.MUST BE USED WITH GRAVER WATER P&I DIAGRAMS, REFERENCES 1&2.
3. ALL THE MISC. DRAINS & VENTS EXTENSIONS AND TIE LINES ARE SHOWN ON GRAVER WATER DRAWINGS,REFERENCES 1&2.
4. SYSTEM DESIGNATOR FOR THIS DWG IS CP,UNLESS OTHERWISE NOTED.
5. ALL INSTRUMENTS SHOWN ON THIS DIAGRAM HAVE SEPARATION GROUP N.
6. REFER TO GRAVER WATER LOGIC DIAGRAM FOR EXPLANATION OF ◇
7. DELETED
8. ALL INSTRUMENTS SHOWN ON THIS DRAWING ARE SUPPLIED BY VENDOR
9. FOR PIPING, VALVES, INSTRUMENTS, AND EQUIPMENT REFER TO DRAWINGS 9A310F00001, AND 9A310F00002 FOR IDENTIFICATION NUMBER DETAILS.
10. THE LETTERS IN THE PARENTHESIS ON THE VENDOR SUPPLIED PIPING INDICATE THE MATERIALS CS-CARBON STEEL, SS-STAINLESS STEEL, PPL-POLYPROPYLENE LINE CARBON STEEL, A20 SS-CARPENTER 20.
11. DELETED
12. CORE SAMPLING NOZZLE SHALL BE 1'-0" ABOVE RESIN LEVEL.
13. DELETED
14. ALL DIAPHRAGM FLOW CONTROL VALVES ARE AIR TO CLOSE AND AIR TO OPEN EXCEPT, ACID AND CAUSTIC BLOCK VALVES ARE SPRING TO CLOSE,AIR TO OPEN AND BLEED VALVES ARE AIR TO CLOSE SPRING TO OPEN.
15. TAG NUMBER OF VALVES FURNISHED BY GRAVER IS SHOWN ON REF 3.
16. VALVE CP5480 IS SUPPLIED WITH CONDUCTIVITY INSTRUMENT CE5740. VALVE CANNOT BE CLOSED UNTIL THE CONDUCTIVITY CELL IS WITHDRAWN PAST BALL VALVE. SEE VTD-H260-0028 FOR DETAILS.
17. FLOW VALVE IS A DIAPHRAGM CONTROL VALVE WITH AN AIR OPERATED DIAPHRAGM ACTUATOR. THE VALVE IS AIR TO OPEN-AIR TO CLOSE WITH A FAIL CLOSED ARRANGEMENT. TO MAINTAIN THE VALVE IN A CLOSED POSITION, AIR PRESSURE MUST BE MAINTAINED ABOVE THE DIAPHRAGM OF THE VALVE ACTUATOR. SEE DETAIL "1" FOR I.A.SUPPLY CONFIGURATION TO THE VALVE ACTUATOR.

NO.	APPROVAL DATE	REVISION	ORIG	CKR	RE	DV	SE
37	7-22-19	INCORP. DCN 1801211.	N/A	N/A	N/A		
0-36	7-18-83	ISSUED FOR CONSTRUCTION.	SIGNATURES ON FILE				

NO.	APPROVAL DATE	REVISION	ORIG	CKR	RE	DV	SE

SOUTH TEXAS PROJECT
NUCLEAR OPERATING COMPANY

PRIORITY	CADD FILE NO.	FSUG. NO.	STI. NO.
1	9S219F20014#2.DGN	D070928	34880879

PIPING AND INSTRUMENTATION DIAGRAM
CONDENSATE POLISHING
DEMINERALIZER REGENERATION SYSTEM

SCALE	DWG. NO.	SHT.	REV.
NONE	9S219F20014#2		37

ESEED_DGN

ISSUE

34511698S	0PGP03-ZO-0003	Rev. 30	
Temporary Modifications			
Form 7	Temporary Document Change Notice (TDCN)		Page 1 of 1

T-MOD/WAN# T1-17-17892-2 SUPP 0

TEMPORARY DOCUMENT CHANGE NOTICE (TDCN)

TDCN NO. T1-17-17892-2-1 **UNIT NO.** 1
DOC NO. 9S219F20015#1 **SHEET NO.** N/A **REV NO.** 29
PRI 1 DOC **YES** X **NO** ____

DIST. REV NO. ____ (For DC use only)

FSUG NO. Z3103 **Page 1 of 1**

Micole Berg/ Micole Berg 6/28/17
PREPARER (print/sign) / DATE
(JPR 9534)

Mike Momsen/ Mike Momsen 6/28/17
VERIFIER (print/sign) / DATE
(JPR 9543)

Before:

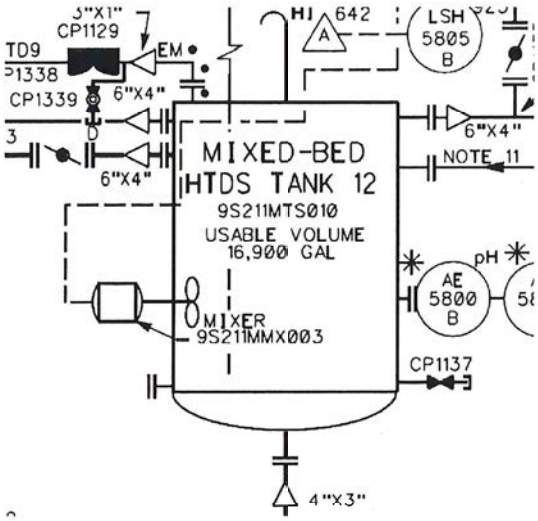

After:

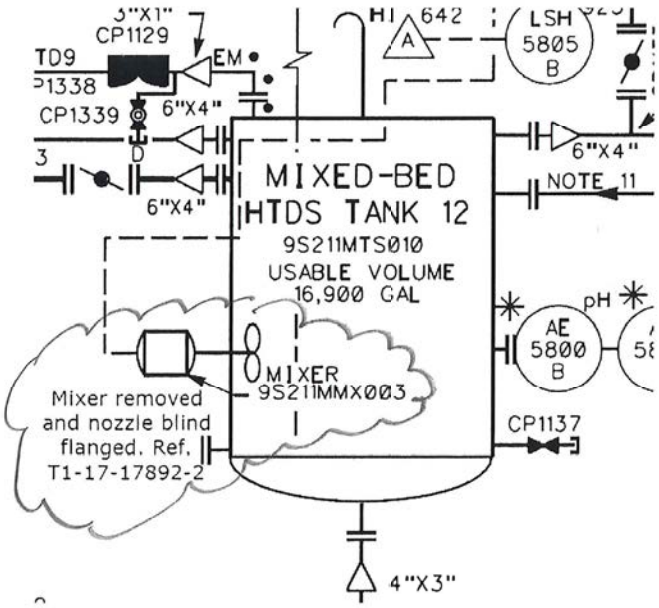

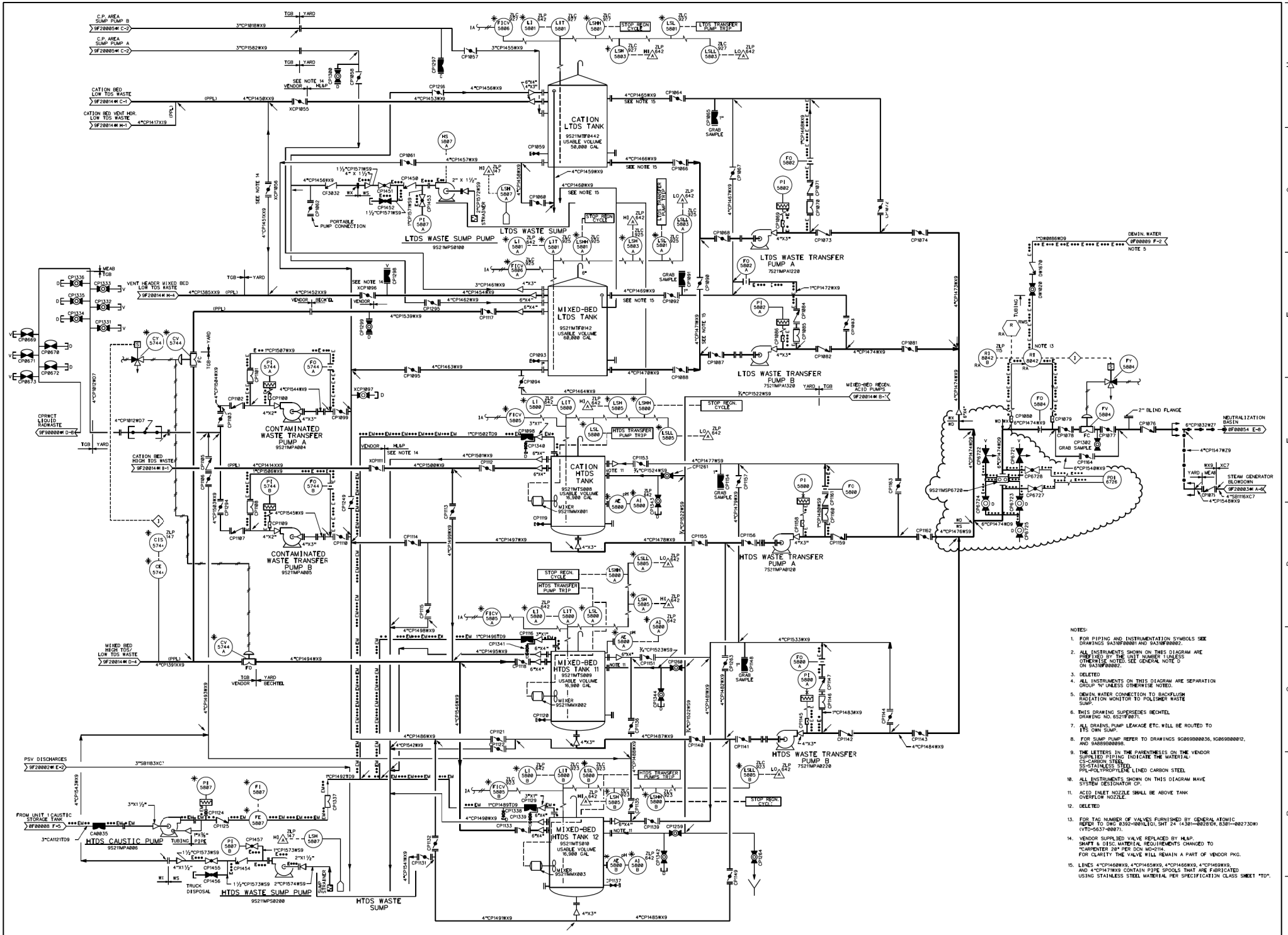

NOTES:

1. FOR PIPING AND INSTRUMENTATION SYMBOLS SEE DRAWINGS 9A310F00001 AND 9A310F00002.
2. ALL INSTRUMENTS SHOWN ON THIS DIAGRAM ARE PROVIDED BY THE UNIT NUMBER 1 UNLESS OTHERWISE NOTED. SEE GENERAL NOTE D ON 9A310F00002.
3. DELETED
4. ALL INSTRUMENTS ON THIS DIAGRAM ARE SEPARATION GROUP "N" UNLESS OTHERWISE NOTED.
5. DEMIN. WATER CONNECTION TO BACKFLUSH RADIATION MONITOR TO POLISHER WASTE SUMP.
6. THIS DRAWING SUPERSEDES BECHTEL DRAWING NO. 6521F0071.
7. ALL DRAINS, PUMP LEAKAGE ETC. WILL BE ROUTED TO ITS OWN SUMP.
8. FOR SUMP PUMP REFER TO DRAWINGS 9G869000036, 9G869000012, AND 9A869000098.
9. THE LETTERS IN THE PARENTHESIS ON THE VENDOR SUPPLIED PIPING INDICATE THE MATERIAL: CS-CARBON STEEL, SS-STAINLESS STEEL, PPL-POLYPROPYLENE LINED CARBON STEEL
10. ALL INSTRUMENTS SHOWN ON THIS DIAGRAM HAVE SYSTEM DESIGNATOR CP.
11. ACID INLET NOZZLE SHALL BE ABOVE TANK OVERFLOW NOZZLE.
12. DELETED
13. FOR TAG NUMBER OF VALVES FURNISHED BY GENERAL ATOMIC REFER TO DWG 6392-00P01(LO), SHT 24 (4301-0028DW, 6301-00273DW) (VTD-6637-0007).
14. VENDOR SUPPLIED VALVE REPLACED BY HL&P. SHAFT & DISC MATERIAL REQUIREMENTS CHANGED TO "CARPENTER 20" PER DCN MD-0214. FOR CLARITY THE VALVE WILL REMAIN A PART OF VENDOR PKG.
15. LINES 4"CP1460WX9, 4"CP1465WX9, 4"CP1466WX9, 4"CP1469WX9, AND 4"CP1471WX9 CONTAIN PIPE SPOOLS THAT ARE FABRICATED USING STAINLESS STEEL MATERIAL PER SPECIFICATION CLASS SHEET "TD".

NO.	APPROVAL DATE	REVISION	ORIG	CKR	RE	DV	SE	NO.	APPROVAL DATE	REVISION	ORIG	CKR	RE	DV	SE
29	3-27-17	INCORP. DCN 1600016.	VJM	JSH	N/A	N/A	N/A								
28	6-22-16	REVISED PER CR 16-7495.	VJM	ON FILE											
27	3-13-14	INCORP. DCN 1400248.	VJM	ON FILE											
26	9-15-08	INCORP. DCN 0801301.	JSH	ON FILE											
25	01-14-02	INCORP. DCN 0102918.	VJM	ON FILE											
0-24	7-18-83	ISSUED FOR CONSTRUCTION.	SIGNATURES ON FILE												

SOUTH TEXAS PROJECT
NUCLEAR OPERATING COMPANY

PIPING & INSTRUMENTATION DIAGRAM
CONDENSATE POLISHING WASTE
DISPOSAL SYSTEM

PRIORITY	CADD FILE NO.	FSUG. NO.	STI. NO.	SCALE	DWG. NO.	SHT.	REV.
1	9S219F20015#1.DGN	D070928	34468179	NONE	9S219F20015#1		29

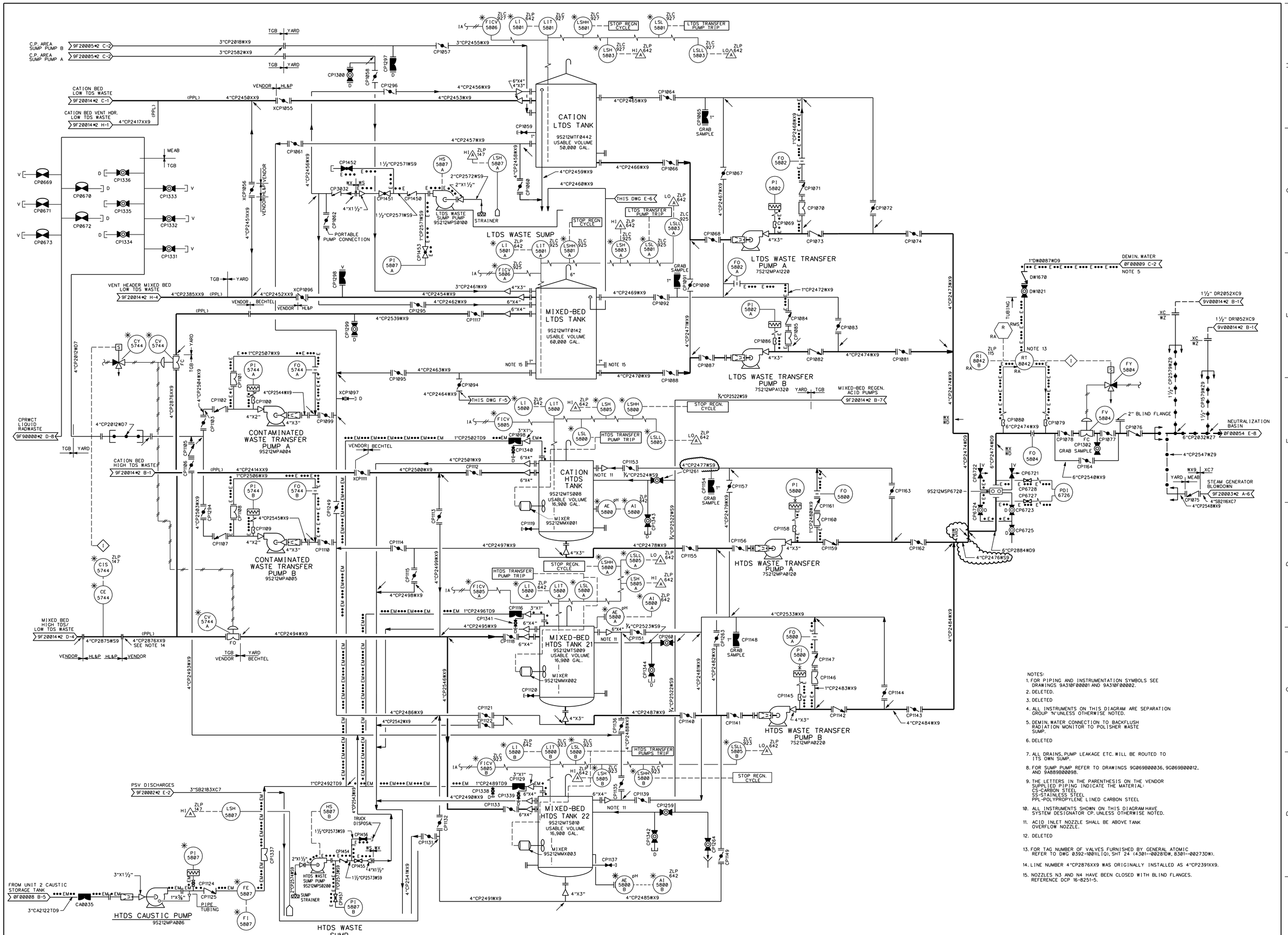

NOTES:

1. FOR PIPING AND INSTRUMENTATION SYMBOLS SEE DRAWINGS 9A310F00001 AND 9A310F00002.
2. DELETED.
3. DELETED
4. ALL INSTRUMENTS ON THIS DIAGRAM ARE SEPARATION GROUP 'N' UNLESS OTHERWISE NOTED.
5. DEMIN. WATER CONNECTION TO BACKFLUSH RADIATION MONITOR TO POLISHER WASTE SUMP.
6. DELETED
7. ALL DRAINS, PUMP LEAKAGE ETC. WILL BE ROUTED TO ITS OWN SUMP.
8. FOR SUMP PUMP REFER TO DRAWINGS 9G069B00036, 9G069B00012, AND 9A889B00098.
9. THE LETTERS IN THE PARENTHESIS ON THE VENDOR SUPPLIED PIPING INDICATE THE MATERIAL:
   CS-CARBON STEEL
   SS-STAINLESS STEEL
   PPL-POLYPROPYLENE LINED CARBON STEEL
10. ALL INSTRUMENTS SHOWN ON THIS DIAGRAM HAVE SYSTEM DESIGNATOR CP UNLESS OTHERWISE NOTED.
11. ACID INLET NOZZLE SHALL BE ABOVE TANK OVERFLOW NOZZLE.
12. DELETED
13. FOR TAG NUMBER OF VALVES FURNISHED BY GENERAL ATOMIC REFER TO DWG 0392-1001(LIQ), SHT 24 (4301--00281DW, 8301--00273DW).
14. LINE NUMBER 4"CP2876XX9 WAS ORIGINALLY INSTALLED AS 4"CP2391XX9.
15. NOZZLES N3 AND N4 HAVE BEEN CLOSED WITH BLIND FLANGES. REFERENCE DCP 16-8251-5.

NO.	APPROVAL DATE	REVISION	ORIG	CKR	RE	DV	SE
32	5-14-19	INCORP. DCN 1800538.			N/A	N/A	N/A
0-31	7-18-83	ISSUED FOR CONSTRUCTION.	SIGNATURES ON FILE				

NO.	APPROVAL DATE	REVISION	ORIG	CKR	RE	DV	SE

SOUTH TEXAS PROJECT
NUCLEAR OPERATING COMPANY

PIPING & INSTRUMENTATION DIAGRAM
CONDENSATE POLISHING WASTE
DISPOSAL SYSTEM

PRIORITY	CADD FILE NO.	FSUG. NO.	STI. NO.	SCALE	DWG. NO.	SHT.	REV.
1	9S219F20015#2.DGN	D070928	34845821	NONE	9S219F20015#2		32

ESEED.DGN

DRAWING NUMBER 0-H-1104 | DRAWING NUMBER | DRAWING NUMBER | DRAWING NUMBER 0-H-1104 | DRAWING NUMBER

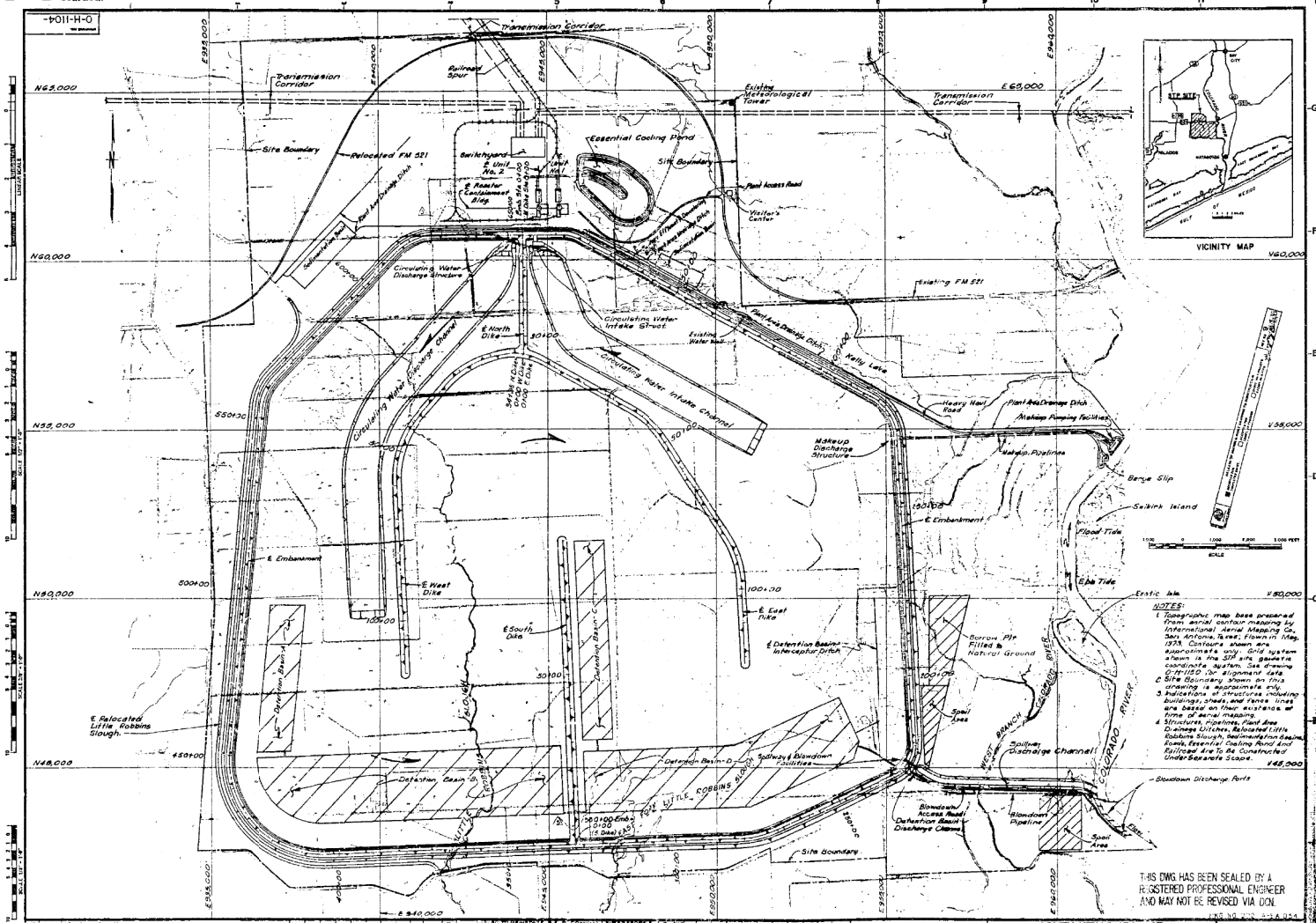

NOTES:
1. Topographic map base prepared from aerial contour mapping by International Aerial Mapping Co. San Antonio, Texas; Flown in May, 1973. Contours shown are approximate only. Grid system shown is the STP site geodetic coordinate system. See drawing 0-H-1150 for alignment data.
2. Site Boundary shown on this drawing is approximate only.
3. Indications of structures including buildings, sheds, and fence lines are based on their existence at time of aerial mapping.
4. Structures, Pipelines, Plant Area Drainage Ditches, Relocated Little Robbins Slough, Sedimentation Basins, Roads, Essential Cooling Pond and Spillway Are To Be Constructed Under Separate Scope.

1		Revised Identification of Containment Building																	
0		For alignment of embankment & Relocated Little Robbins Slough																	
0		Low Pt. Outlet, Hy. Haul Road & Unlined Ret. To Others																	
0		Rev. Left Abutment, Hy. Haul Rte., Dist. Div. Basins & Joint Spoil Area																	
B		General Revision																	
A		Initial Issue																	

RECEIVED BY STP BIDDING FOR CONSTRUCTION

Brown & Root, Inc.
Engineers • Constructors
HOUSTON, TEXAS

SOUTH TEXAS PROJECT
COOLING RESERVOIR EARTHWORK
SITE MAP

CONTRACT NO. CR-0241 | SCALE As Shown
DRAWING NO. 0-H-1104-9

☐ INFORMATION ☐ PRELIMINARY ☐ REVIEW ☐ USE IN CONSTRUCTION

THIS DRAWING MUST BE WORKED WITH THE FOLLOWING DOCUMENTS

DCN'S	FCR'S

29 26 24 22 20 18 16 14.5 12 30X 12 14.5 16 18 20 22 24 26

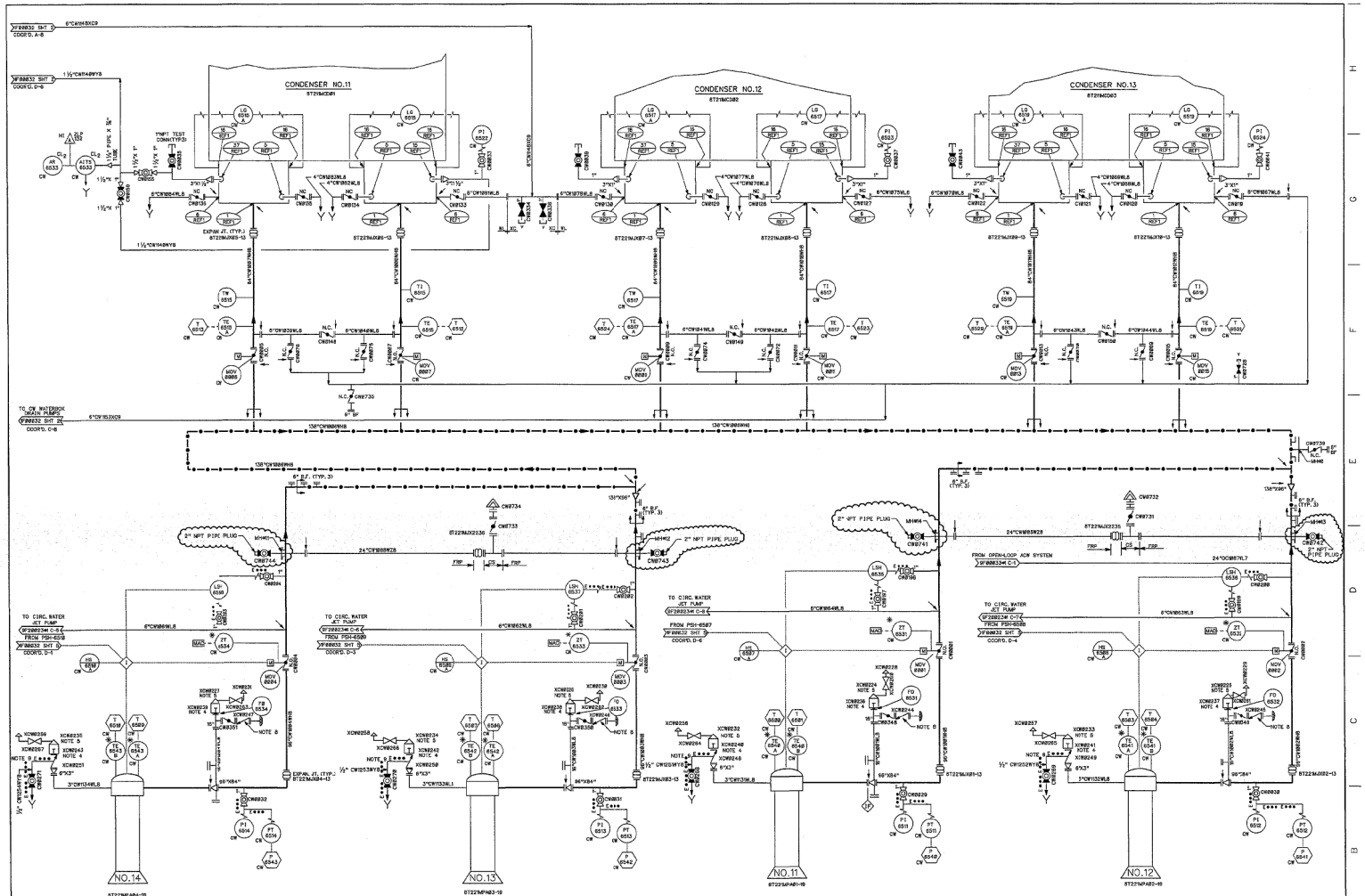

CIRCULATING WATER PUMPS

NOTES:
1. ALL INSTRUMENT TAG NUMBERS SHOWN ON THIS DIAGRAM ARE PREFIXED BY THE UNIT NO(UNLESS OTHERWISE NOTED. SEE GENERAL NOTE D ON 9A53F00002.
2. ALL INSTRUMENTS ON THIS P&ID HAVE SEPARATION GROUP "A".
3. ALL DRAINS FROM CONDENSER WATER BOXES AND CONDENSER INLET & OUTLET LINES ARE ROUTED TO OILY WASTE.ALL OTHER DRAINS ARE ROUTED TO THE MAIN COOLING RESERVOIR UNLESS OTHERWISE NOTED.
4. SURGE CHECK VALVE.
5. AIR AND VACUUM JALVE.
6. LINE HAS BEEN DESIGNATED MATERIAL SPEC. OK1 SOVENT LINED PIPE. HOWEVER,MATERIAL SPEC. OC01 CARBON STEEL PIPE AND FITTINGS HAVE BEEN USED WHERE SHOWN.
7. DELETED.
8. VACUUM BREAKER.
9. VALVE BONNET DRILLED AND TAPPED FOR ½" NPT PIPE.

REFERENCES
1. DWG.NO.6001-0100WA SURF. COND. OUTLINE
2. FOR PIPING & INSTRUMENT SYMBOLS SEE DRAWINGS 9A53F00001 & 9A53F00002.

NO.	ISSUE DATE	REVISION	ORIG	CKR	RE	DV	SE	NO.	ISSUE DATE	REVISION	ORIG	CKR	RE	DV	SE
12	7-6-06	INCORP. DCN 8500268.	JSH	ON FILE											
11	1-4-05	INCORP. DCN 8382369.	LNB	ON FILE											
10	4-9-03	INCORP. DCN 8308518.	VJM	ON FILE											
9	1-21-02	INCORP. DCN 8001417.	JSH	ON FILE											
8	1-8-02	INCORP. DCN's 8001406 AND 8001428.	SIGNATURES ON FILE					14	11-7-12	INCORP. DCN 1127797.	VJM	JR-S	N/A	N/A	N/A
0-7	12-03-96	ISSUED FOR CONSTRUCTION.	SIGNATURES ON FILE					13	11-25-89	INCORP. DCN's 8901952 AND 8901953.	VJM	ON	FILE		

SOUTH TEXAS PROJECT
NUCLEAR OPERATING COMPANY

PRIORITY	CADD FILE NO.	FSUG. NO.	STI. NO.	SCALE	DWG.NO.	SHT.	REV.
1	9T221F000325H1.DGN	D078928	3562 2340	NONE	9T221F00032	1	14

PIPING AND INSTRUMENTATION DIAGRAM
CIRCULATING WATER
(SUPPLY)

10/30/2012 12:58:35 PM vjm

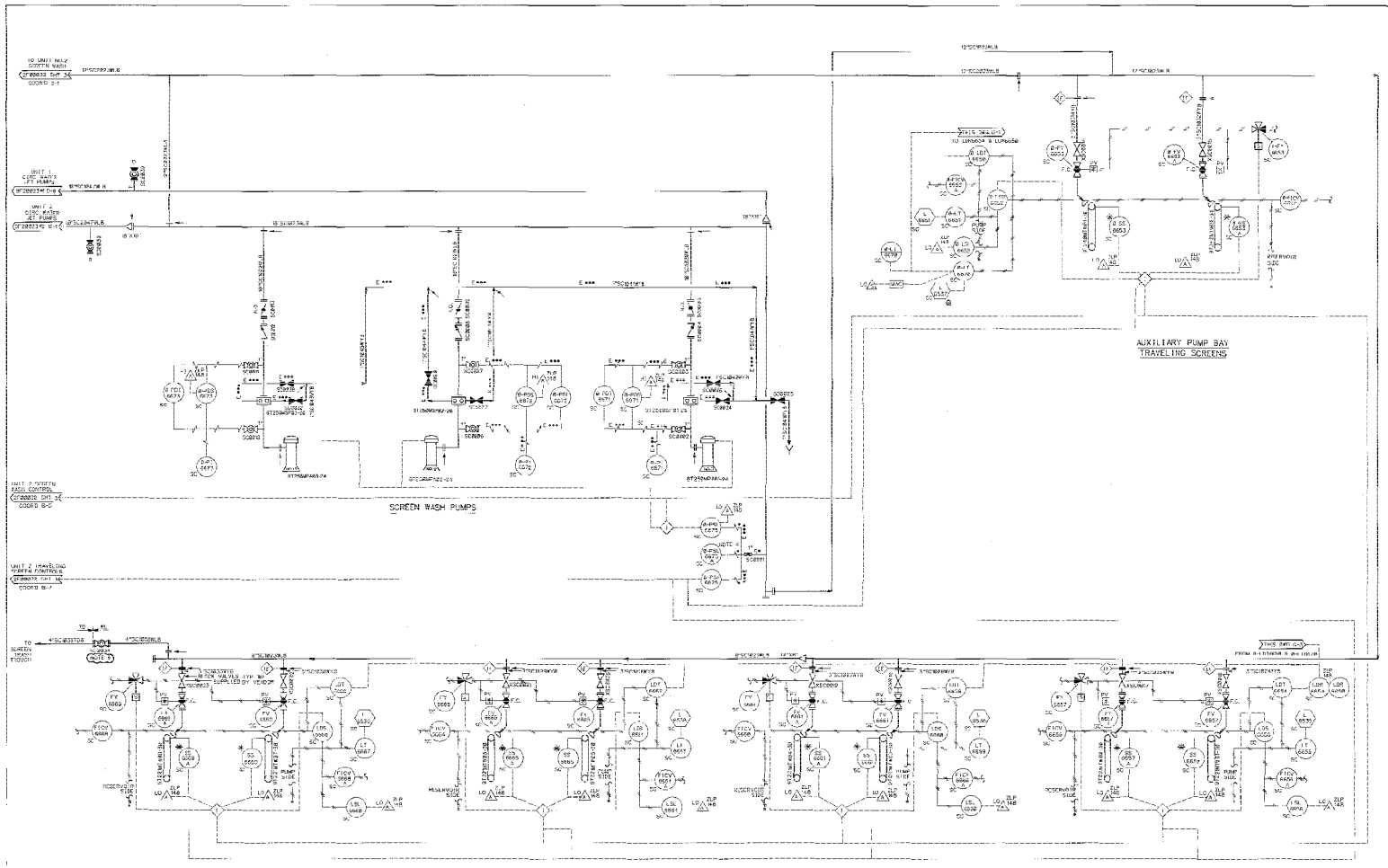

NOTES:

1. ALL INSTRUMENT TAG NUMBERS SHOWN ON THIS DIAGRAM ARE PREFIXED BY THE UNIT NO.(UNLESS OTHERWISE NOTED). SEE DIAGRAM NOTE 3 IN GENERAL NOTES.
2. ALL INSTRUMENTS ON THIS PLOT HAVE CAPACITATION GROUP N.
3. ALL DRAINS FROM CONTAINER WATER BOXES AND CONDENSER OUTLETS OUTLET LINES ARE ROUTED TO DISCHARGE CANAL. OTHER DRAINS ARE ROUTED TO DISCHARGE CANAL OR RESERVOIR UNLESS OTHERWISE NOTED.
4. PRESSURE SWITCH PSL4476A IS SPARE IN PLANT - NOT USED.
5. VALVE IS THROTTLED APPROXIMATELY 30-40% OPEN. HANDLE IS SECURED WITH TURNBUCKLE. POSITION MAY BE ADJUSTED AT DIRECTION OF SYSTEM ENGINEER TO PROVIDE SUFFICIENT FLOW TO TRASH AND MAINTAIN SYSTEM PRESSURE.

REFERENCES

1. DWG. NO. 6001-2 MEWA SURF. COND. OUTLINE
2. FOR PIPING & INSTRUMENT SYMBOLS SEE PRINTINGS 4AWA-9000A & 4AL-9000B2

REV.	DATE	REVISION	ORIG	CKR	ME	PV	SE
5	7-22-97	INCORP. DCN 1181174.					
4	10-25-96	REVISED PER CR # 87 6/5/14.					
3	11-1-94	INCORP. DCN 8481525.					
2	10-3-92	INCORP. DCN 8021780.					
0-1	12-3-90	ISSUED FOR CONSTRUCTION.					

SIGNATURES: NR, JSH, ON FILE, VJM, ON FILE

NO.	ISSUE DATE	REVISION	ORIG	CKR	ME	PV	SE

SOUTH TEXAS PROJECT
NUCLEAR OPERATING COMPANY

PIPING AND INSTRUMENT DIAGRAM
CIRCULATING WATER
(TRAVELING SCREEN WASH SYSTEM)

PRIORITY	CODE FILE NO.	FSUG NO.	STT NO.	SCALE	DWG. NO.	SHT.	REV.
1	F0214.051	D070928	32906735	NONE	9T221F00032	3	5

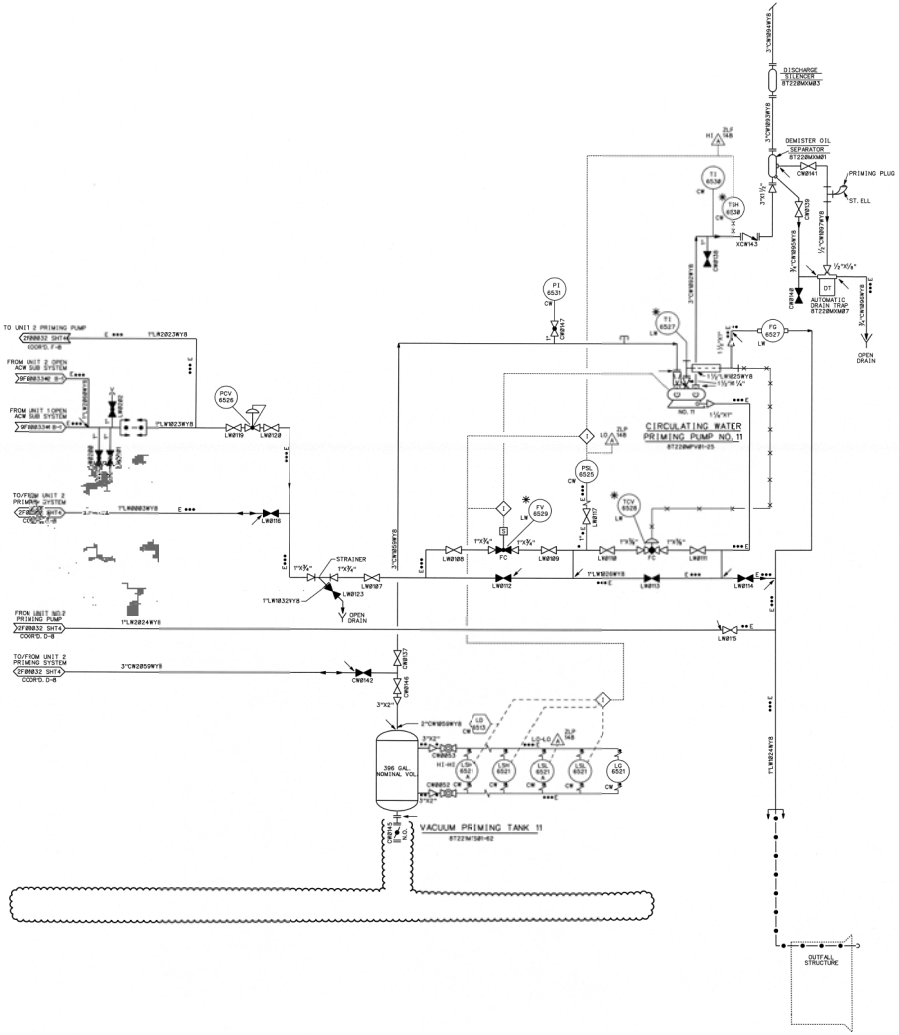

NOTES:
1. ALL INSTRUMENT TAG NUMBERS SHOWN ON THIS DIAGRAM ARE PREFIXED BY THE UNIT DESIGNATOR OTHERWISE NOTED. SEE GENERAL NOTE 0 ON 6A3NF00002.
2. ALL INSTRUMENTS ON THIS P&ID HAVE SEPARATION GROUP N.
3. DELETED.

REV.	ISSUE DATE	REVISION	ORIG	CKR	RE	DV	SE	NO.	ISSUE DATE	REVISION	ORIG	CKR	RE	DV	IE
2	5-7-16	INCORP. DCN 1400951	JSH	TJG	N/A	N/A	N/A								
1	3-12-14	INCORP. DCN 1301102 AND UNITIZED REFERENCE DRAWING NUMBERS.	JGL	ON FILE											
0	12/4/96	ISSUED FOR CONSTRUCTION. THIS DRAWING AND DRAWINGS 9T22F00032 SHTS.1, 2, 3, & 5 SUPERCEDE DRAWING 9T22F00032; GENERAL REVISION.	LDD	ON FILE											

SEED DGN

SOUTH TEXAS PROJECT NUCLEAR OPERATING COMPANY

PIPING AND INSTRUMENTATION DIAGRAM
CIRCULATING WATER
(VACUUM PRIMING)

PRIORITY	CADD FILE NO.	FSUG. NO.	STI. NO.	SCALE	DWG. NO.	SHT.	REV.
1	9T22F00032SHT04.DGN	3070928	341216233	NONE	9T22F00032	4	2

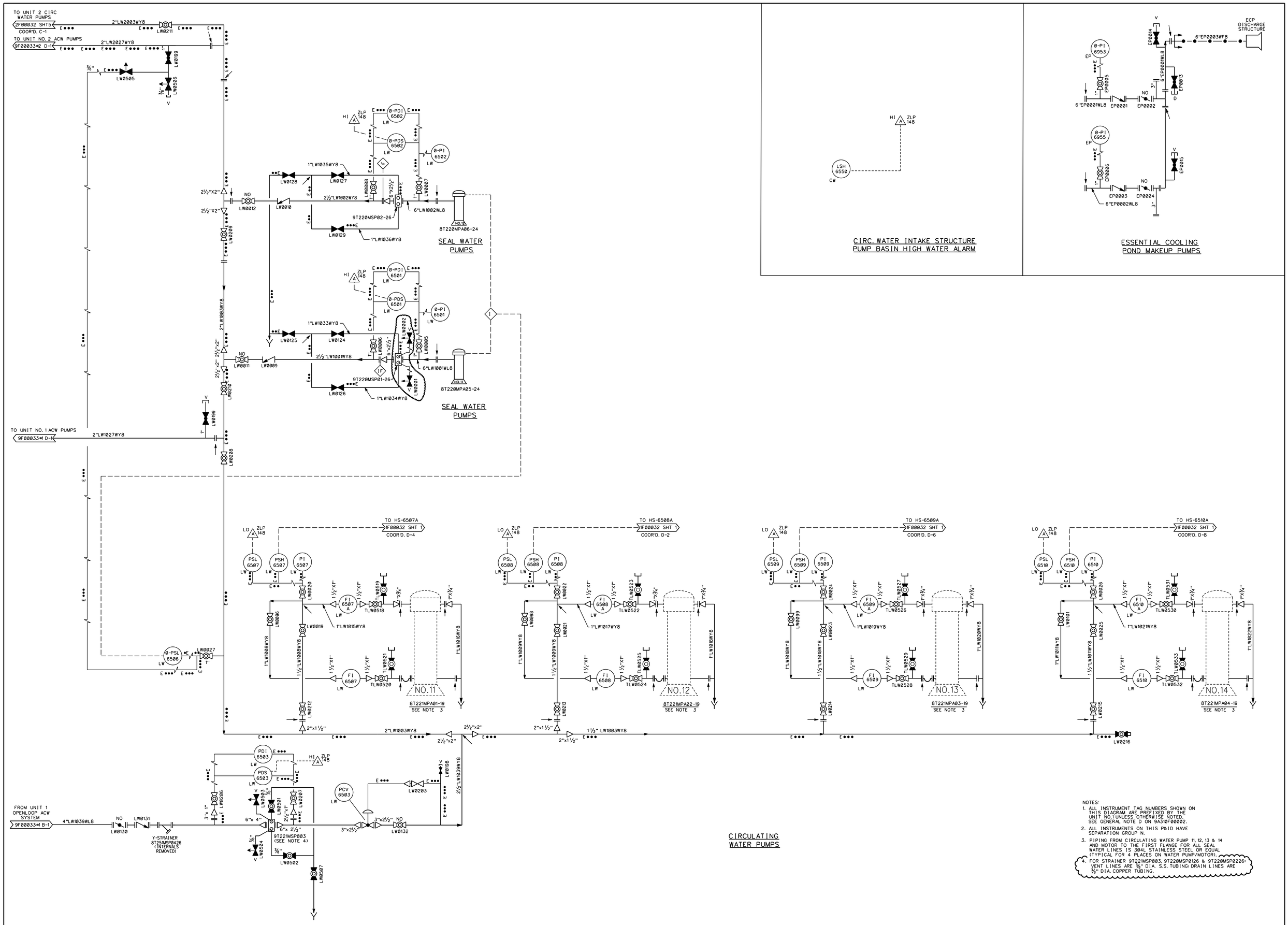

NOTES:

1. ALL INSTRUMENT TAG NUMBERS SHOWN ON THIS DIAGRAM ARE PREFIXED BY THE UNIT NO.1 UNLESS OTHERWISE NOTED. SEE GENERAL NOTE D ON 9A310F00002.
2. ALL INSTRUMENTS ON THIS P&ID HAVE SEPARATION GROUP N.
3. PIPING FROM CIRCULATING WATER PUMP 11, 12, 13 & 14 AND MOTOR TO THE FIRST FLANGE FOR ALL SEAL WATER LINES IS 304L STAINLESS STEEL OR EQUAL (TYPICAL FOR 4 PLACES ON WATER PUMP/MOTOR).
4. FOR STRAINER 9T221MSP003, 9T220MSP0126 & 9T220MSP0226: VENT LINES ARE ⅜" DIA. S.S. TUBING; DRAIN LINES ARE ⅜" DIA. COPPER TUBING.

NO.	APPROVAL DATE	REVISION	ORIG	CKR	RE	DV	SE
10	4-4-18	INCORP. DCN 1502455.	N/A	N/A	N/A		
0-9	12-04-96	ISSUED FOR CONSTRUCTION.	SIGNATURES ON FILE				

NO.	APPROVAL DATE	REVISION	ORIG	CKR	RE	DV	SE

SOUTH TEXAS PROJECT
NUCLEAR OPERATING COMPANY

PRIORITY	CADD FILE NO.	FSUG. NO.	STI. NO.
1	9T221F00032SHT5.DGN	D070928	34643673

PIPING AND INSTRUMENTATION DIAGRAM
CIRCULATING WATER
(SEAL WATER & ECW COOL. POND MAKEUP)

SCALE	DWG. NO.	SHT.	REV.
NONE	9T221F00032	5	10

ESEED.DGN

DRAWING NUMBER 0-H-1104

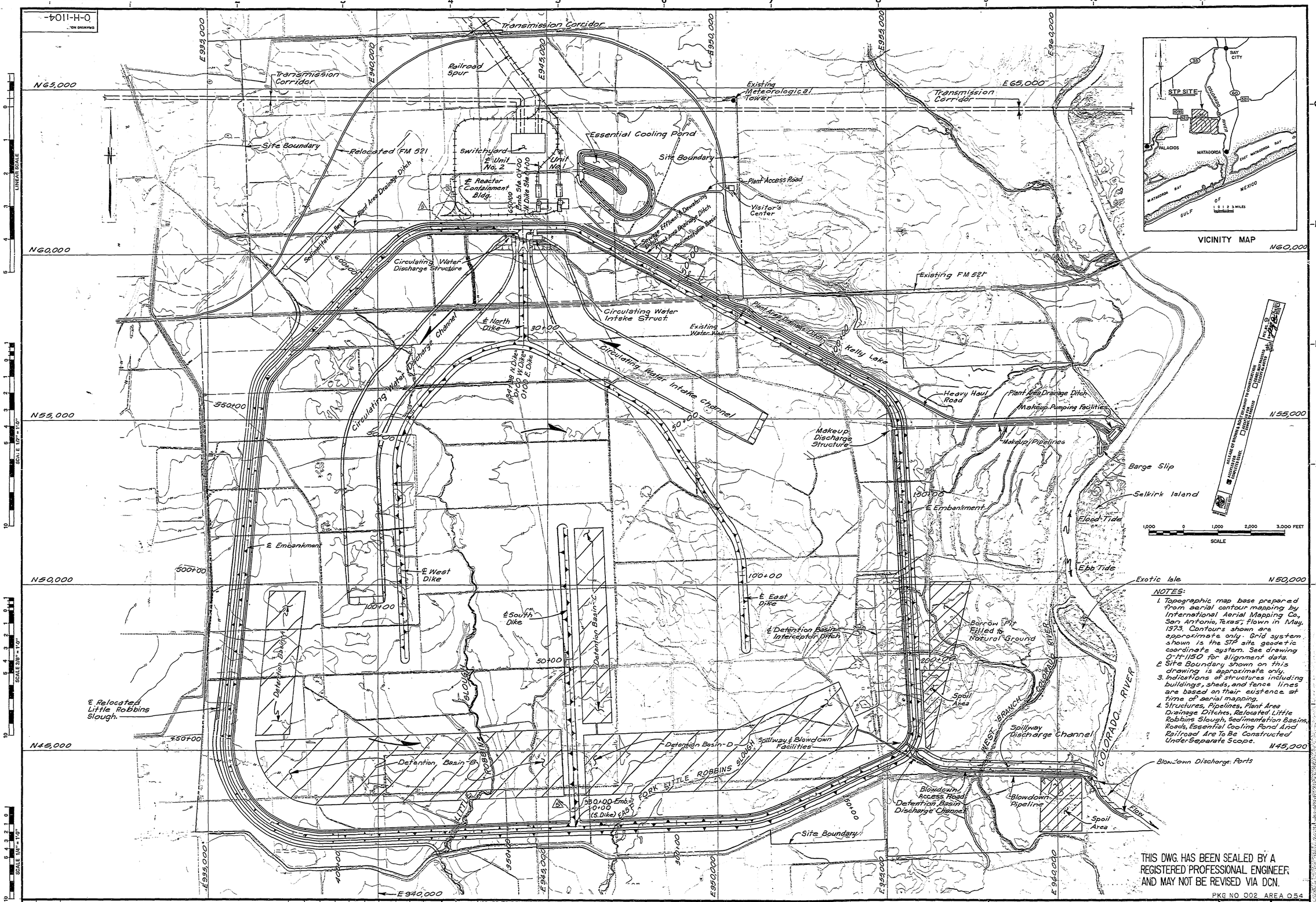

NOTES:

1. Topographic map base prepared from aerial contour mapping by International Aerial Mapping Co., San Antonio, Texas, flown in May, 1973. Contours shown are approximate only. Grid system shown is the STP site geodetic coordinate system. See drawing 0-H-1150 for alignment data.
2. ℄ Site Boundary shown on this drawing is approximate only.
3. Indications of structures including buildings, sheds, and fence lines are based on their existence at time of aerial mapping.
4. Structures, Pipelines, Plant Area Drainage Ditches, Relocated Little Robbins Slough, Sedimentation Basins, Roads, Essential Cooling Pond And Railroad Are To Be Constructed Under Separate Scope.

THIS DWG. HAS BEEN SEALED BY A REGISTERED PROFESSIONAL ENGINEER AND MAY NOT BE REVISED VIA DCN.

PKG NO 002 AREA 054

NO.	DATE	DESCRIPTION	DRN. BY	CHK. BY	DRFT. SUPV.	COG ENG	PROJ ENG	PROJ MGR	O.E.		DESIGN REVIEW
1	6-2-76	Revised Identification of Containment Building	B.E.	GLS	GLS	HLS	JKA	[illegible]	JSP		
0	1-22-76	Issued For Construction	J.C.	GLS	GLS	HLS	JKA	[illegible]	[illegible]		
D	1-20-76	Rev. alignment of embankment & Relocated Little Robbins Slough. Rev. RR. Note 3, Hvy. Haul Road & Deleted Ref. To "Others"	JDS	GLS	GLS	HLS	JKA	[illegible]	[illegible]		
C	9-10-75	Rev. Det. Basins, RR, Hvy. Haul Rd., Del. Clay Blanket, Add. Spoil Area	RCG	GLS	GLS	HLS	JKA	[illegible]			
B	6-30-75	General Revision	G.L.	GLS	GLS						
A	5-11-75	Initial Issue	MLW	B.L.	GLS	HLS					

NO.	DATE	DESCRIPTION	DRN. BY	CHK. BY	DRFT. SUPV.	COG ENG	PROJ ENG	PROJ MGR	O.E.		DESIGN REVIEW
9	3-29-83	REVISED TO REPLACE D & E DRAWING; SUPERSEDES B.E.C. DWG. 9-Y-51 0-H-1104. REV. B NO TECHNICAL CHANGES ADDED BY B.E.C.	—	—	—	—	—	—	—	—	—
6	5-10-82	RECEIVED BY STP RMS/NOT FOR CONSTRUCTION	—	—	—	—	—	—	—	—	—
5	11-11-81	As-Built Revision Per FREA 0-2-0353, Added Safety Class 3	S.S.	DLD	NA	DLD	DLD	[illegible]	[illegible]	—	—
4	4-4-80	As Built Revisions - Added Berms & Borrow Area	JT	HLS	NA	HLS	HLS	[illegible]	JKA		
3	1-3-78	Revised Location Of Visitor's Center	M.A.	DS	M.A.	HLS	JKA	[illegible]	[illegible]		
2		Revised Limits of Detention Basin-A	CJT	DR	GLS	HLS	JKA	[illegible]			

Brown & Root, Inc.
Engineers - Constructors
HOUSTON, TEXAS

SOUTH TEXAS PROJECT

DRAWING TITLE
COOLING RESERVOIR EARTHWORK
SITE MAP

CONTRACT NO. CR-0241
SCALE As Shown.
DRAWING NO. 9Y-51
0-H-1104-9

THIS DRAWING MUST BE WORKED WITH THE FOLLOWING DOCUMENTS

DCN'S	FCN'S	FCR'S

☐ INFORMATION ☐ PRELIMINARY ☐ REVIEW ☐ USE ☒ CONSTRUCTION

I certify that the image contained on the frame was made in the normal and regular course of business, on the date stated below and that it is an accurate reproduction of the document submitted to Micrographics.
OPERATOR Ernie K. Dellanoz SUPERVISOR N. Sezzell
DATE 10-2-85

24 22 20 18 16 14.5 12 30X 12 14.5 16 18 20 22 24

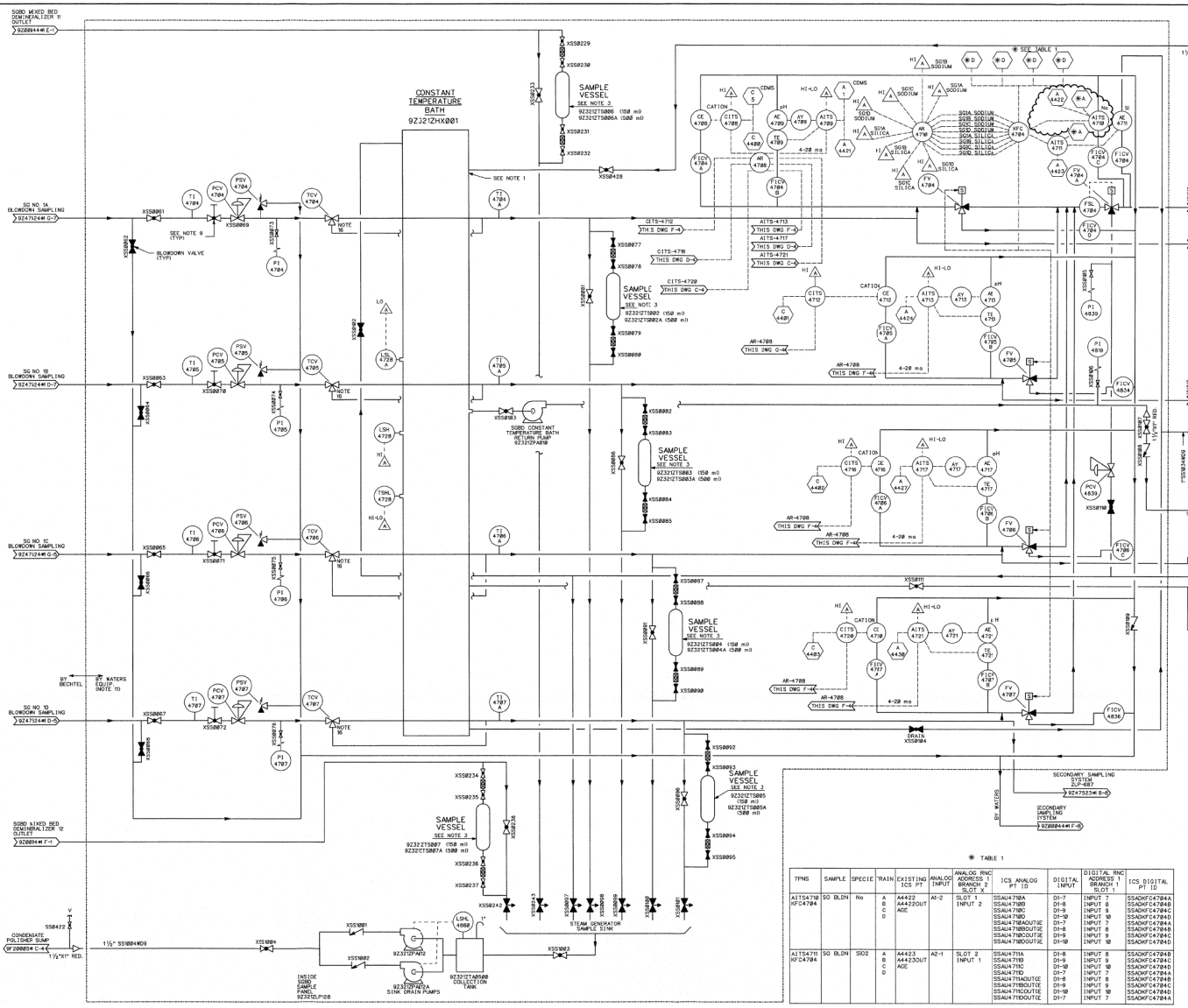

TPNS	SAMPLE	SPECIE	TRAIN	EXISTING ICS PT	ANALOG INPUT	ANALOG RNC ADDRESS 1 BRANCH 2 SLOT X	ICS ANALOG PT ID	DIGITAL INPUT	DIGITAL RNC ADDRESS 1 BRANCH 1 SLOT 1	ICS DIGITAL PT ID
AITS4710 KFC4704	SG BLDN	Na	A	A4422	AI-2	SLOT 1	SSA0KFC4704A	DI-7	INPUT 7	SSA0KFC4704A
			B	A4422OUT		INPUT 2	SSA0KFC4704B	DI-8	INPUT 8	SSA0KFC4704B
			C	AGE			SSA0KFC4704C	DI-9	INPUT 9	SSA0KFC4704C
			D				SSA0KFC4704D	DI-10	INPUT 10	SSA0KFC4704D
							SSA0471AOUT1E	DI-7	INPUT 7	SSA0KFC4704A
							SSA0471BOUT1E	DI-8	INPUT 8	SSA0KFC4704B
							SSA0471COUT1E	DI-9	INPUT 9	SSA0KFC4704C
							SSA0471DOUT1E	DI-10	INPUT 10	SSA0KFC4704D
AITS4711 KFC4704	SG BLDN	SiO2	A	A4423	A2-1	SLOT 2	SSA0471A	DI-6	INPUT 6	SSA0KFC4704E
			B	A4423OUT		INPUT 1	SSA0471B	DI-9	INPUT 9	SSA0KFC4704C
			C	AGE			SSA0471C	DI-10	INPUT 10	SSA0KFC4704D
			D				SSA0471D	DI-7	INPUT 7	SSA0KFC4704A
							SSA0471AOUT1E	DI-6	INPUT 6	SSA0KFC4704E
							SSA0471BOUT1E	DI-9	INPUT 9	SSA0KFC4704C
							SSA0471COUT1E	DI-10	INPUT 10	SSA0KFC4704D
							SSA0471DOUT1E	DI-7	INPUT 7	SSA0KFC4704A

NOTES:

1. THE CONSTANT TEMPERATURE BATH WILL MAINTAIN THE TEMPERATURE OF THE SAMPLE ANALYZERS AT 77 DEGREES F ±5 DEG F. THE BATH HAS AN INTEGRAL TEMPERATURE CONTROL SYSTEM.
2. ANNUNCIATOR ALARMS ARE LOCATED IN SGBD SAMPLE PANEL.
3. EACH STATION IS CAPABLE OF ACCEPTING 150 ml & 500 ml SAMPLE VESSELS.
4. FOR INSTRUMENT & PIPING SYMBOLS SEE DWG'S 9A310F00001 & 9A310F00002
5. THE STEAM GENERATOR BLOWDOWN SAMPLE SINK IS LOCATED IN AN ENCLOSED VENTI-LATED HOOD.
6. ALL INSTRUMENTS ON THIS P&ID HAVE SYSTEM DESIGNATOR SS.
7. ALL INSTRUMENTS ON THIS P&ID HAVE SEPARATION GROUP N.
8. ALL CONDUCTIVITY ELEMENTS, pH ELEMENTS AND SODIUM ANALYZERS INCLUDE AUTOMATIC TEMPERATURE COMPENSATION.
9. MANUALLY ADJUSTED HIGH PRESSURE DROP VALVE.
10. ALL SAMPLE LINES ON THIS P&ID ARE ¾" O.D. X 0.065" WALL ASME SA213 GRADE 316 TUBING, UNLESS OTHERWISE NOTED.
11. REFER TO WATERS EQUIPMENT DRAWING NO. 59307 V. P. NO 4893-000000 FOR FLOW DIAGRAM FOR VENDOR SUPPLIED COMPONENTS.
12. ALL CATION CONDUCTIVITY ANALYZERS HAVE A HYDROGEN ION EXCHANGE COLUMN UPSTREAM OF THE CELL.
13. DELETED.
14. DELETED.
15. SEE DRAWING 9Z3292Z00040#1 FOR ABBREVIATIONS.
16. THESE VALVES ARE MANUALLY THROTTLED.

REVISION NO.	ISSUE DATE	REVISION	ORIG	CKR	RE	DV	SE	NO.	ISSUE DATE	REVISION	ORIG	CKR	RE	DV	SE
21	2-26-98	INCORP. DCN 1500160.	JSH	JWZ	N/A	N/A	N/A								
20	1-24-11	INCORP. DCN 0500786.	JSH	ON FILE											
19	2-12-09	INCORP. DCN 0601301.	VJM	ON FILE											
18	4-26-05	INCORP. DCN 0500736.	JSH	ON FILE											
17	11-17-04	REVISE PER NDCC 04-12534-1.	VJM	ON FILE											
1-16	12-21-82	ISSUED FOR CONSTRUCTION.	SIGNATURES ON FILE												

SOUTH TEXAS PROJECT
NUCLEAR OPERATING COMPANY

PRIORITY	CADD FILE NO.	PSUG. NO.	STI. NO.
1	9Z3292Z00040#1.DGN	C070928	3406447

PIPING AND INSTRUMENTATION DIAGRAM
SECONDARY SAMPLING SYSTEM

SCALE	DWG. NO.	SHT.	REV.
NONE	9Z329Z00040#1		21

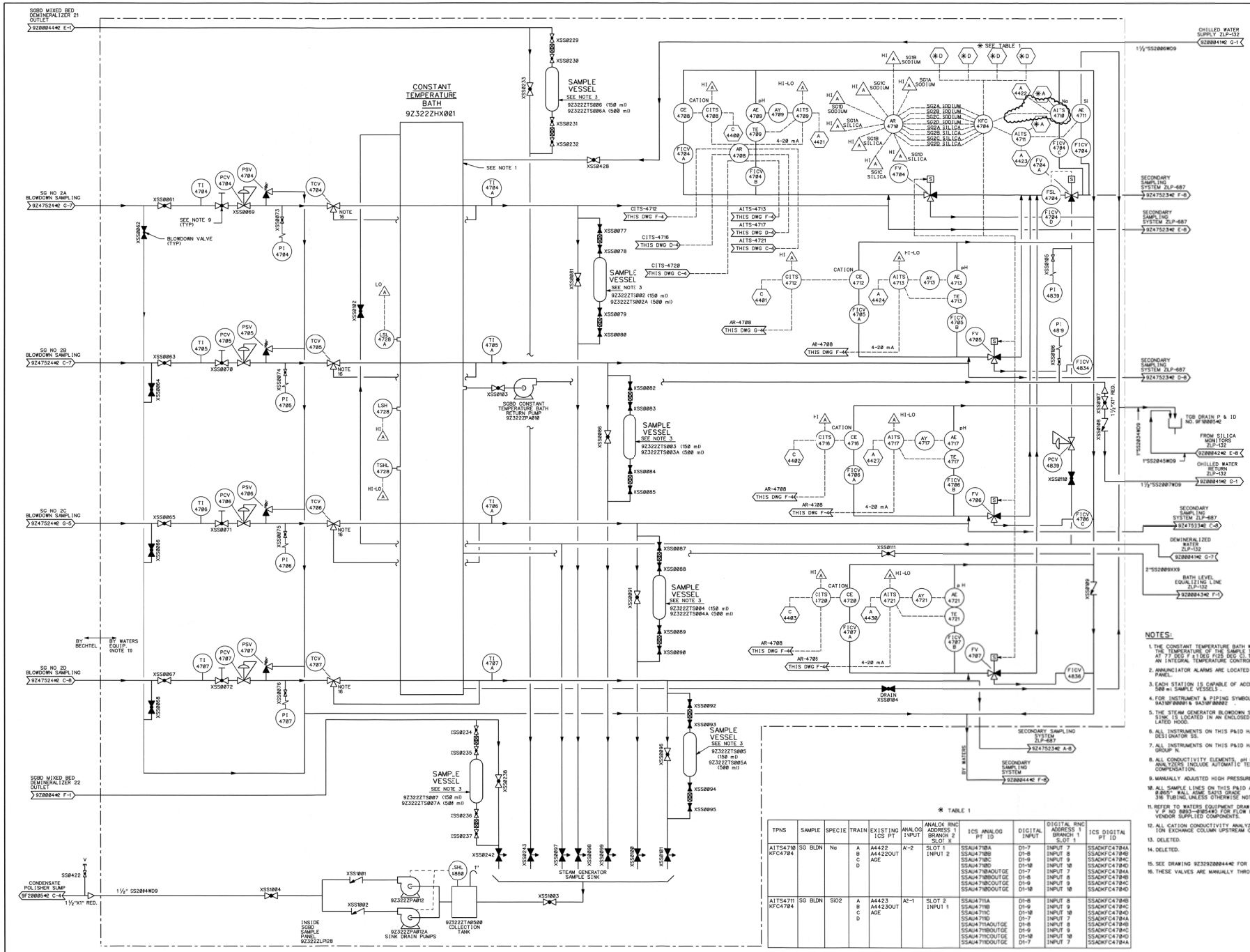

NOTES:

1. THE CONSTANT TEMPERATURE BATH WILL MAINTAIN THE TEMPERATURE OF THE SAMPLE TO THE ANALYZERS AT 77 DEG F ±1DEG F125 DEG C). THE BATH HAS AN INTEGRAL TEMPERATURE CONTROL SYSTEM.
2. ANNUNCIATOR ALARMS ARE LOCATED IN SGBD SAMPLE PANEL.
3. EACH STATION IS CAPABLE OF ACCEPTING 150 ml& 500 ml SAMPLE VESSELS .
4. FOR INSTRUMENT & PIPING SYMBOLS SEE DWG'S 9A310F00001& 9A310F00002 .
5. THE STEAM GENERATOR BLOWDOWN SAMPLE SINK IS LOCATED IN AN ENCLOSED VENTI-LATED HOOD.
6. ALL INSTRUMENTS ON THIS P&ID HAVE SYSTEM DESIGNATOR SS.
7. ALL INSTRUMENTS ON THIS P&ID HAVE SEPARATION GROUP N.
8. ALL CONDUCTIVITY ELEMENTS, pH ELEMENTS AND SODIUM ANALYZERS INCLUDE AUTOMATIC TEMPERATURE COMPENSATION.
9. MANUALLY ADJUSTED HIGH PRESSURE DROP VALVE.
10. ALL SAMPLE LINES ON THIS P&ID ARE ¾" O.D. X 0.095" WALL ASME SA213 GRADE 316 TUBING, UNLESS OTHERWISE NOTED.
11. REFER TO WATERS EQUIPMENT DRAWING NO. 58387 V P NO 8893-#0054#3 FOR FLOW DIAGRAM FOR VENDOR SUPPLIED COMPONENTS.
12. ALL CATION CONDUCTIVITY ANALYZERS HAVE A HYDROGEN ION EXCHANGE COLUMN UPSTREAM OF THE CELL.
13. DELETED.
14. DELETED.
15. SEE DRAWING 9Z3292000440#2 FOR ABBREVIATIONS.
16. THESE VALVES ARE MANUALLY THROTTLED.

* TABLE 1

TPNS	SAMPLE	SPECIE	TRAIN	EXISTING ICS PT	ANALOG INPUT	ANALOG RNC ADDRESS 1 BRANCH 2 SLOT X	ICS ANALOG PT ID	DIGITAL INPUT	DIGITAL RNC ADDRESS 1 BRANCH 1 SLOT 1	ICS DIGITAL PT ID
AITS4710 KFC4704	SG BLDN	Na	A	A4422	A'-2	SLOT 1	SSA04710A	D1-7	INPUT 7	SSADKFC4704A
			B	A4422OUT		INPUT 2	SSA04710B	D1-8	INPUT 8	SSADKFC4704B
			C	AGE			SSA04710C	D1-9	INPUT 9	SSADKFC4704C
			D				SSA04710D	D1-10	INPUT 10	SSADKFC4704D
							SSA04710AOUTGE	D1-7	INPUT 7	SSADKFC4704A
							SSA04710BOUTGE	D1-8	INPUT 8	SSADKFC4704B
							SSA04710COUTGE	D1-9	INPUT 9	SSADKFC4704C
							SSA04710DOUTGE	D1-10	INPUT 10	SSADKFC4704D
AITS4711 KFC4704	SG BLDN	SiO2	A	A4423	A2-1	SLOT 2	SSA04711A	D1-6	INPUT 6	SSADKFC4704B
			B	A4423OUT		INPUT 1	SSA04711B	D1-9	INPUT 9	SSADKFC4704C
			C	AGE			SSA04711C	D1-10	INPUT 10	SSADKFC4704D
			D				SSA04711D	D1-7	INPUT 7	SSADKFC4704A
							SSA04711AOUTGE	D1-6	INPUT 6	SSADKFC4704B
							SSA04711BOUTGE	D1-9	INPUT 9	SSADKFC4704C
							SSA04711COUTGE	D1-10	INPUT 10	SSADKFC4704D
							SSA04711DOUTGE	D1-7	INPUT 7	SSADKFC4704A

NO.	APPROVAL DATE	REVISION	ORIG	CKR	RE	DV	SE	NO.	APPROVAL DATE	REVISION	ORIG	CKR	RE	DV	SE
22	7-21-16	INCORP. DCN 1600374.	JSH	JSH	N/A	N/A	N/A								
0-21	12-21-82	ISSUED FOR CONSTRUCTION.	SIGNATURES ON FILE												

ESSED DCN

SOUTH TEXAS PROJECT NUCLEAR OPERATING COMPANY

PIPING AND INSTRUMENTATION DIAGRAM SECONDARY SAMPLING SYSTEM

PRIORITY	CADD FILE NO.	FSUG. NO.	ST. NO.	SCALE	DWG. NO.	SHT.	REV.
1	9Z329Z0004@#2.DGN	D070928	3434967	NONE	9Z329Z00040#2		22

8 7 6 5 4 3 2 1

A B C D E F G H

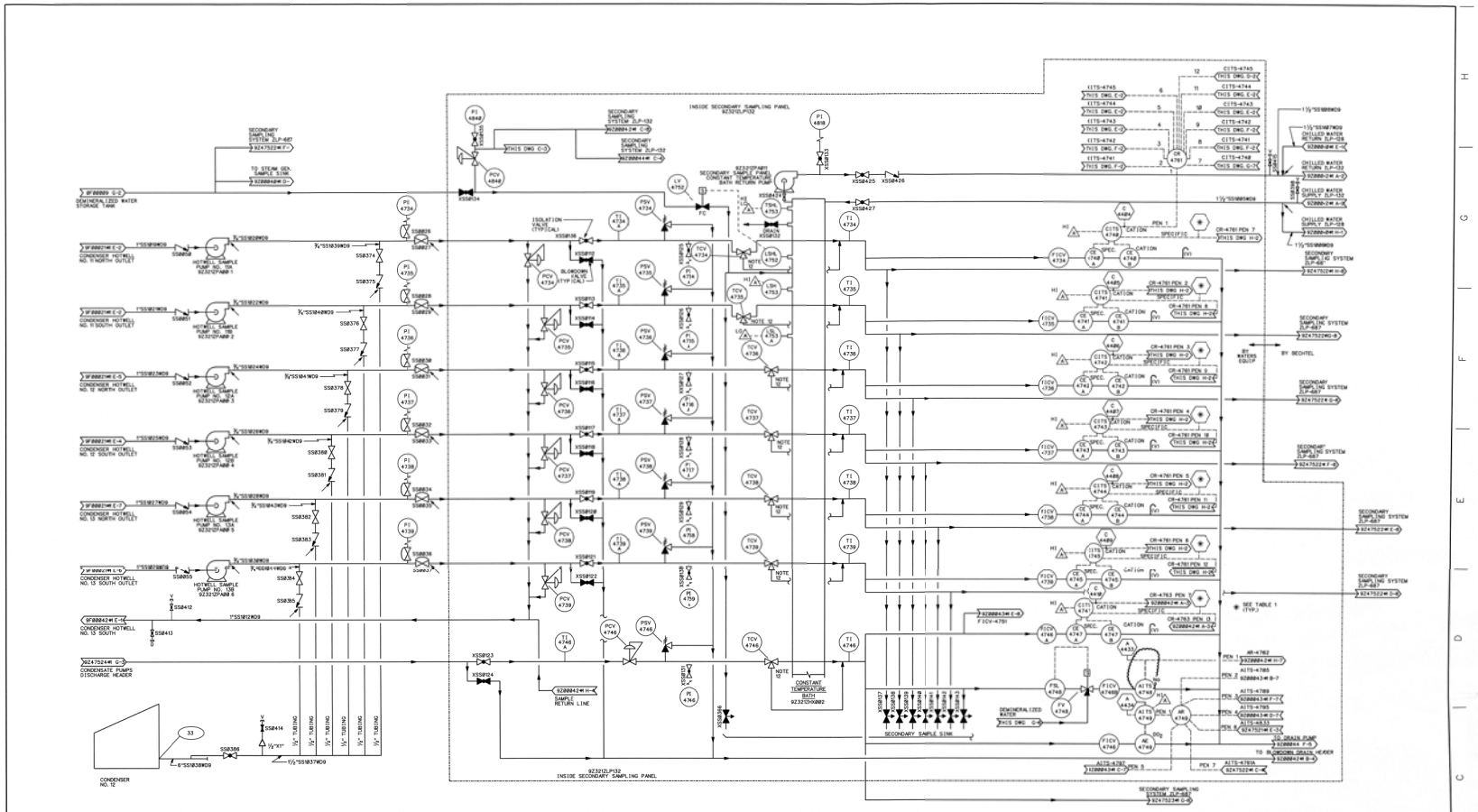

* TABLE 1

TPNS	SAMPLE	SPECIE	ANALOG INPUT	ANALOG RNC ADDRESS 1 BRANCH 2 SLOT X	ICS ANALOG PT ID
CITS4740A	HOTWELL 11N	SC	A1-3	SLOT 1 INPUT 3	SSCU4718A
CITS4741A	HOTWELL 11S	SC	A2-2	SLOT 2 INPUT 2	SSCU4715A
CITS4742A	HOTWELL 12N	SC	A2-3	SLOT 2 INPUT 3	SSCU4712A
CITS4743A	HOTWELL 12S	SC	A3-3	SLOT 3 INPUT 3	SSCU4713A
CITS4744A	HOTWELL 13N	SC	A3-2	SLOT 3 INPUT 2	SSCU4714A
CITS4745A	HOTWELL 13S	SC	A4-2	SLOT 4 INPUT 2	SSCU4715A
CITS4747A	CPD	SC	A3-1	SLOT 3 INPUT 1	SSCU4717A

NOTES:

1. FOR PIPING AND INSTRUMENT SYMBOLS SEE DRAWINGS 92321M0000 AND 92321M0002.
2. ALL CATION CONDUCTIVITY MEASUREMENTS INCLUDE A HYDROGEN ION EXCHANGE COLUMN, EXCEPT CE-4747B WHICH HAS TWO COLUMNS IN SERIES.
3. ALL CONDUCTIVITY ELEMENTS, pH ELEMENTS AND SODIUM ANALYZERS INCLUDE AUTOMATIC TEMPERATURE COMPENSATION.
4. UNLESS OTHERWISE NOTED, ALL ANNUNCIATOR ALARMS ARE LOCATED ON THE SECONDARY SAMPLE PANEL, 2LP-132
5. ALL INSTRUMENTS ON THIS P&ID HAVE SYSTEM DESIGNATOR SS.
6. ALL INSTRUMENTS ON THIS P&ID HAVE SEPARATION GROUP N.
7. DELETED.
8. ALL SAMPLE LINES ON THIS P&ID ARE ¾" O.D. X 0.095" WALL THICKNESS, ASME SA 27 GRADE 316 TUBING, UNLESS OTHERWISE NOTED.
9. DELETED.
10. DELETED.
11. SEE DRAWING 92321M0004 FOR ABBREVIATIONS.
12. THESE VALVES ARE MANUALLY THROTTLED.

REV. NO.	ISSUE DATE	REVISION	ORIG	CKR	RE	DV	SE	NO.	ISSUE DATE	REVISION	ORIG	CKR	RE	DV	SE
15	07-29-14	INCORP. DCN 1481482.	LNB	ON FILE											
14	01-03-11	INCORP. DCN 0800789.	JSH	ON FILE											
13	04-27-05	INCORP. DCN 0500738.	JSH	ON FILE											
12	11-17-04	REVISED PER NDCC 04-12534-1.	VJM	ON FILE											
11	8-19-99	REVISED PER CR 99-5355-3.	LNB	ON FILE											
10	5-14-96	ISSUED FOR CONSTRUCTION.	SIGNATURES ON FILE					16	11-3-14	INCORP. DCN 1381445.	JSH	JC	N/A	N/A	N/A

SHEET 1 OF 1

PRIORITY	CADD FILE NO.	FSWG NO.	STI NO.	SCALE	DWG. NO.	SHT.	REV.
1	9Z329Z0004#1.DGN	D010928	33975157	NONE	9Z329Z00041#1		16

SOUTH TEXAS PROJECT NUCLEAR OPERATING COMPANY

PIPING AND INSTRUMENTATION DIAGRAM SECONDARY SAMPLING SYSTEM

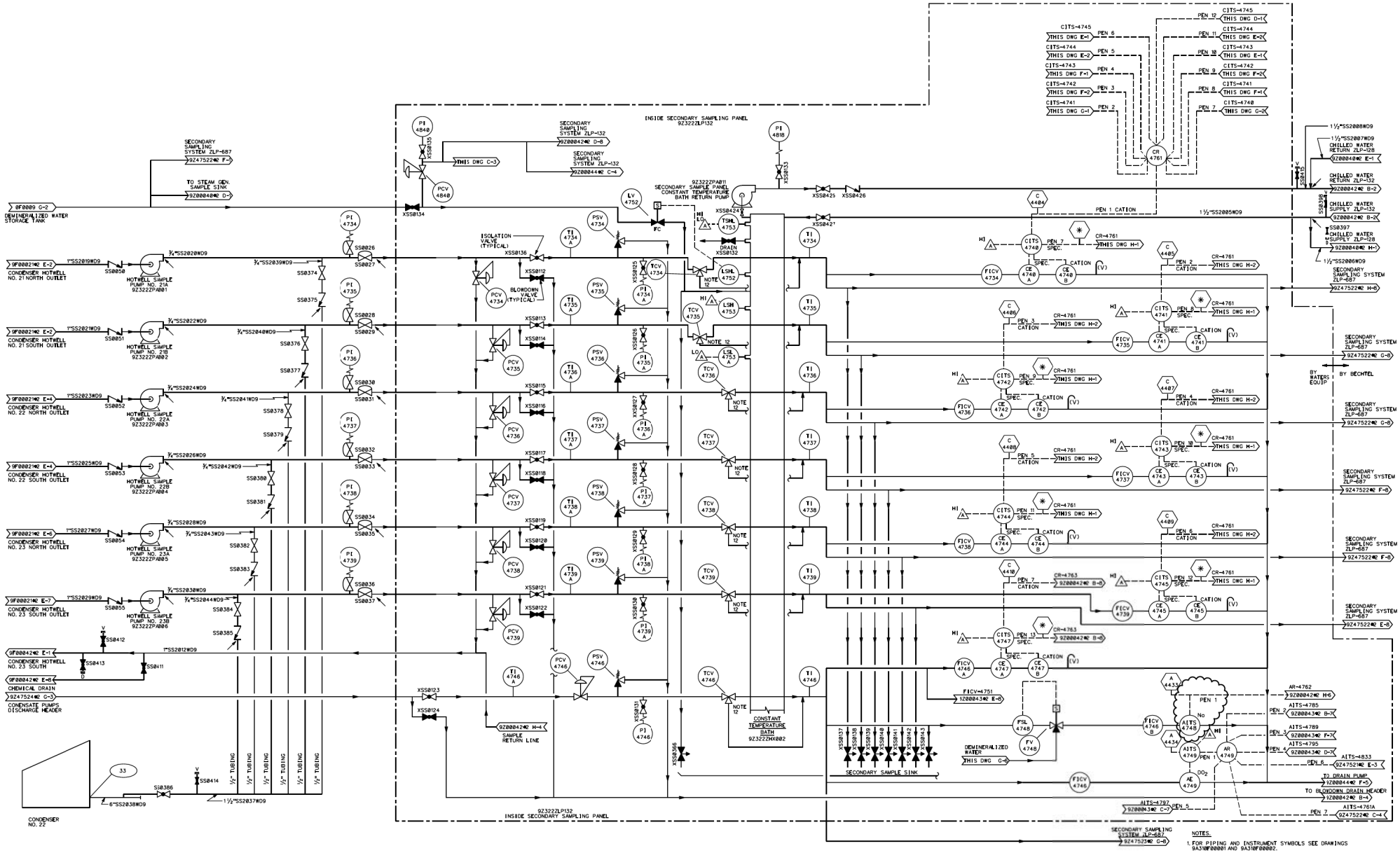

✱ TABLE 1

TPNS	SAMPLE	SPECIE	ANALOG INPUT	ANALOG RNC ADDRESS 1 BRANCH 2 SLOT X	ICS ANALOG PT ID
CITS4740A	HOTWELL 21N	SC	A1-3	SLOT 1 INPUT 3	SSCU4740A
CITS4741A	HOTWELL 21S	SC	A2-2	SLOT 2 INPUT 2	SSCU4741A
CITS4742A	HOTWELL 22N	SC	A2-3	SLOT 2 INPUT 3	SSCU4742A
CITS4743A	HOTWELL 22S	SC	A3-3	SLOT 3 INPUT 3	SSCU4743A
CITS4744A	HOTWELL 23N	SC	A3-2	SLOT 3 INPUT 2	SSCU4744A
CITS4745A	HOTWELL 23S	SC	A4-2	SLOT 4 INPUT 2	SSCU4745A
CITS4747A	CPD	SC	A3-1	SLOT 3 INPUT 1	SSCU4747A

NOTES.

1. FOR PIPING AND INSTRUMENT SYMBOLS SEE DRAWINGS 9A310F00001 AND 9A310F00002.
2. ALL CATION CONDUCTIVITY MEASUREMENTS INCLUDE A HYDROGEN ION EXCHANGE COLUMN. EXCEPT CE-4747B WHICH HAS TWO COLUMNS IN SERIES.
3. ALL CONDUCTIVITY ELEMENTS, pH ELEMENTS AND SODIUM ANALYZERS INCLUDE AUTOMATIC TEMPERATURE COMPENSATION.
4. UNLESS OTHERWISE NOTED, ALL ANNUNCIATOR ALARMS ARE LOCATED ON THE SECONDARY SAMPLE PANEL. ZLP-132
5. ALL INSTRUMENTS ON THIS P&ID HAVE SYSTEM DESIGNATOR SS.
6. ALL INSTRUMENTS ON THIS P&ID HAVE SEPARATION GROUP N.
7. DELETED
8. ALL SAMPLE LINES ON THIS P&ID ARE ¾" O.D. X 0.065" WALL THICKNESS, ASME SA 213, GRADE 316 TUBING, UNLESS OTHERWISE NOTED.
9. DELETED
10. DELETED.
11. SEE DRAWING 9Z329Z00044#2 FOR ABBREVIATIONS.
12. THESE VALVES ARE MANUALLY THROTTLED.
13. ✱ SEE TABLE 1

NO.	APPROVAL DATE	REVISION	ORIG	CKR	RE	DV	SE
16	1-16-17	INCORP. DCN 1600624.	N/A	N/A	N/A	N/A	N/A
15	1-20-16	INCORP. DCN 1401539.	NF	ON FILE			
0-14	12-21-82	ISSUED FOR CONSTRUCTION.	SIGNATURES ON FILE				

SOUTH TEXAS PROJECT NUCLEAR OPERATING COMPANY

PRIORITY	CADD FILE NO.	FSUG. NO.	STI. NO.
1	9Z329Z00041#2.DGN	D070928	34442053

PIPING AND INSTRUMENTATION DIAGRAM
SECONDARY SAMPLING SYSTEM

SCALE	DWG. NO.	SHT.	REV.
NONE	9Z329Z00041#2		16

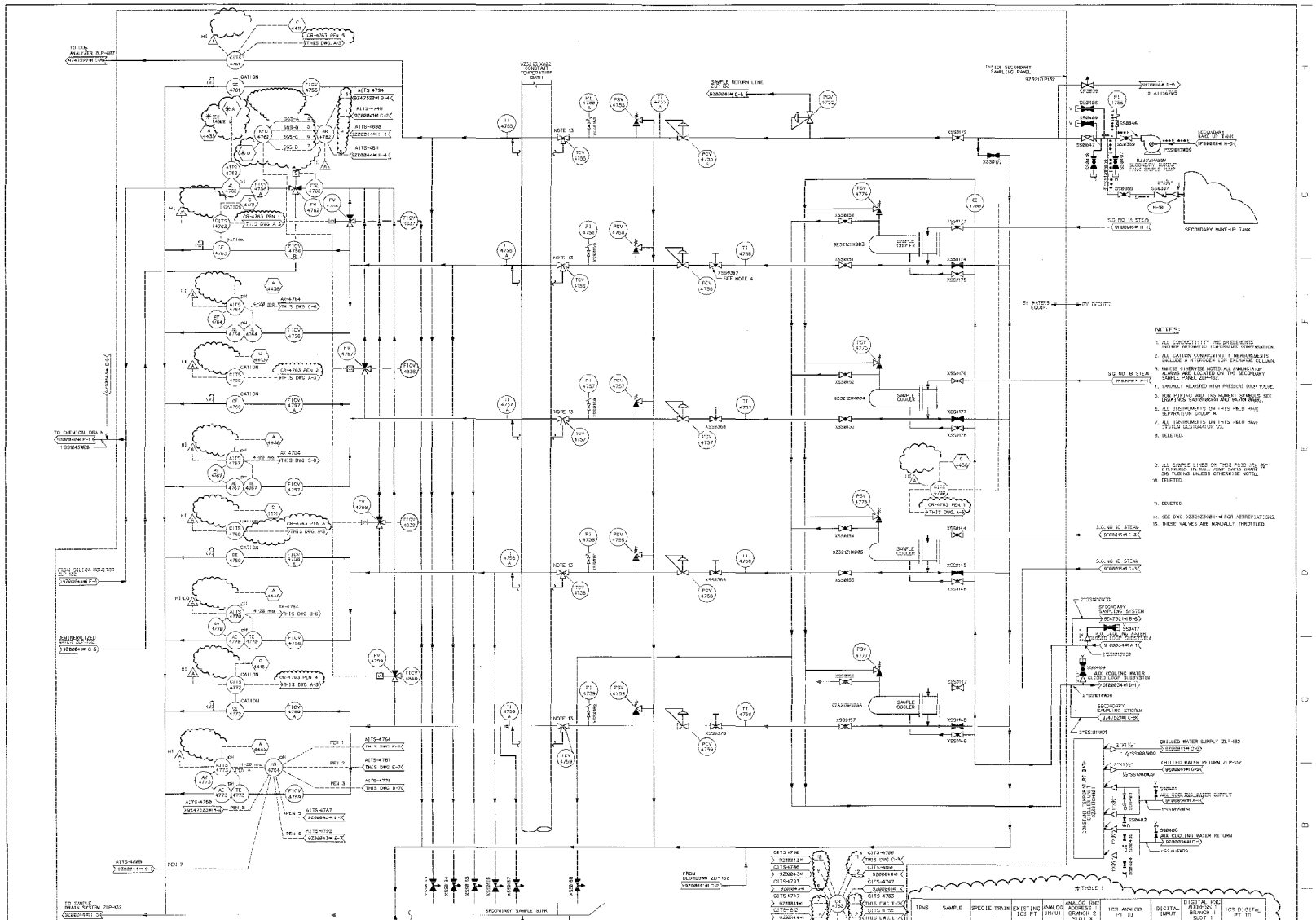
TO SO2 ANALYZER
TO CHEMICAL DRAIN
FROM SILICA MONITOR
DEMINERALIZED WATER
TO SAMPLE DRAIN SYSTEM
INSIDE SECONDARY SAMPLE PANEL
SAMPLE RETURN LINE
INSIDE SECONDARY SAMPLING PANEL
SECONDARY SAMPLE SINK
FROM BLOWDOWN
SECONDARY WAIT-UP TANK
S.G. NO 1A STEAM
S.G. NO 1B STEAM
S.G. NO 1C STEAM
S.G. NO 1D STEAM
BY WATERS EQUIP.
BY OCONITE
SAMPLE COOLER
CHILLED WATER SUPPLY
CHILLED WATER RETURN
AUX. COOLING WATER
SECONDARY SAMPLING SYSTEM
NOTES:
1. ALL CONDUCTIVITY AND pH ELEMENTS INCLUDE AUTOMATIC TEMPERATURE COMPENSATION.
2. ALL CATION CONDUCTIVITY MEASUREMENTS INCLUDE A NITROGEN GAS STRIPPING COLUMN.
3. MAJOR ELEMENTS NOTED ALL ANALYZERS ARE ALSO LOCATED ON THE SECONDARY SAMPLE PANEL ZLP-432.
4. MANUALLY ADJUSTED HIGH PRESSURE DROP VALVE.
5. FOR PIPING AND INSTRUMENT SYMBOLS, SEE DIAGRAMS WATER WASTE AND WATER GENERAL.
6. ALL INSTRUMENTS ON THIS PANEL HAVE SEPARATION GROUP N.
7. ALL INSTRUMENTS ON THIS PANEL HAVE SYSTEM DESIGNATOR 00.
8. DELETED.
9. ALL SAMPLE LINES ON THIS PANEL USE 3/4" DIA.OUTSIDE WALL 0.049" SWITS UNLESS OTHERWISE NOTED.
10. DELETED.
11. DELETED.
12. SEE DWG 9Z329Z000444 FOR ABBREVIATIONS.
13. THESE VALVES ARE MANUALLY THROTTLED.
TABLE 1
TPNS | SAMPLE | SPECIE | TRAIN | EXISTING ICS PT | ANALOG INPUT | ANALOG DIGITAL ADDRESS / BRANCH / SLOT X | ICS ANALOG PT ID | DIGITAL INPUT | DIGITAL ADDRESS / BRANCH / SLOT Y | ICS DIGITAL PT ID
AITS4762 / RFC4762 | SG STEAM | SiO2 | A B C D | A4435 | A14 | SLOT 1 INPUT 1 | SSAU47624 SSAU47625 SSAU47626 SSAU47627 | 01-12 01-13 01-14 01-11 | INPUT 12 INPUT 13 INPUT 14 INPUT 11 | SSADFC47623 SSADFC47621 SSADFC47620 SSADFC47622A
SOUTH TEXAS PROJECT
NUCLEAR OPERATING COMPANY
PIPING AND INSTRUMENTATION DIAGRAM
SECONDARY SAMPLING SYSTEM
SCALE: NONE
DWG. NO. 9Z329Z000042H
SHT. 16
REV. 16
PRIORITY 1
CADD FILE NO. FJA251.161
FSAR NO. 9.3.4.2.2
STI NO. 32800192
15 | 2-17-94 | INCORP DCN 9Q94087 | VUM ON FILE
16 | 2-9-96 | INCORP DCNS 9Q94310, 9Q95011 | VUM ON FILE
13 | 4-11-88 | INCORP DCN 9Q88153 | SIGNATURES ON FILE
12 | 1-29-94 | INCORP PCF 9Q94506-A | SIGNATURES ON FILE
11 | 8-3-92 | H&P ASSUMES DESIGN CHANGE CONTROL & INCORP DCN JD 1213. | SIGNATURES ON FILE
10-8 | 12-21-82 | ISSUED FOR CONSTRUCTION. | SIGNATURES ON FILE
15 | 1-4-94 | INCORP DCN 9Q00470 QA 1-4-94
REVISION
REVISION
8 7 6 5 4 3 2 1

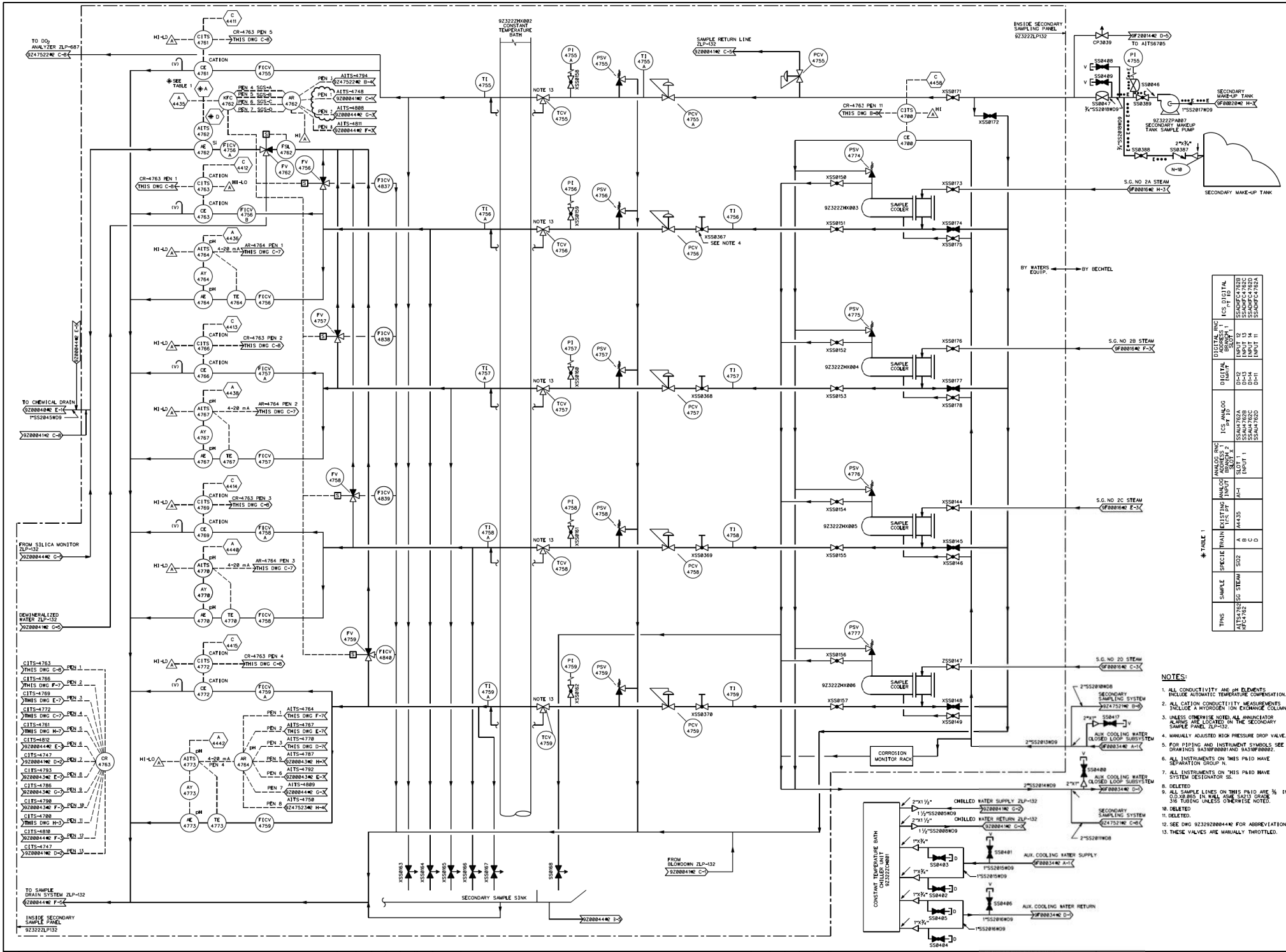

NOTES:

1. ALL CONDUCTIVITY AND pH ELEMENTS INCLUDE AUTOMATIC TEMPERATURE COMPENSATION.
2. ALL CATION CONDUCTIVITY MEASUREMENTS INCLUDE A HYDROGEN ION EXCHANGE COLUMN.
3. UNLESS OTHERWISE NOTED, ALL ANNUNCIATOR ALARMS ARE LOCATED ON THE SECONDARY SAMPLE PANEL ZLP-132.
4. MANUALLY ADJUSTED HIGH PRESSURE DROP VALVE.
5. FOR PIPING AND INSTRUMENT SYMBOLS SEE DRAWINGS 9A310F00001AND 9A310F00002.
6. ALL INSTRUMENTS ON THIS P&ID HAVE SEPARATION GROUP N.
7. ALL INSTRUMENTS ON THIS P&ID HAVE SYSTEM DESIGNATOR SS.
8. DELETED
9. ALL SAMPLE LINES ON THIS P&ID ARE 3/8 IN. O.D.X0.065 IN WALL ASME SA213 GRADE 316 TUBING UNLESS OTHERWISE NOTED.
10. DELETED
11. DELETED.
12. SEE DWG 9Z329Z00044#2 FOR ABBREVIATIONS.
13. THESE VALVES ARE MANUALLY THROTTLED.

NO.	APPROVAL DATE	REVISION	ORIG	CKR	RE	DV	SE	NO.	APPROVAL DATE	REVISION	ORIG	CKR	RE	DV	SE
18	1-16-17	INCORP. DCN 1601397.			N/A	N/A	N/A								
0-17	12-21-82	ISSUED FOR CONSTRUCTION	SIGNATURES ON FILE												

SOUTH TEXAS PROJECT NUCLEAR OPERATING COMPANY

PIPING AND INSTRUMENTATION DIAGRAM SECONDARY SAMPLING SYSTEM

PRIORITY	CADD FILE NO.	FSUG. NO.	STI. NO.	SCALE	DWG. NO.	SHT.	REV.
1	9Z329Z00042#2	D070928	34442676	NONE	9Z329Z00042#2		18

NOTES:

1. FOR PIPING AND INSTRUMENT SYMBOLS SEE DRAWINGS 9A310F00001 AND 9A310F00002.
2. ALL CATION CONDUCTIVITY MEASUREMENTS INCLUDE A HYDROGEN ION EXCHANGE COLUMN.
3. ALL CONDUCTIVITY ELEMENTS AND pH ELEMENTS INCLUDE AUTOMATIC TEMPERATURE COMPENSATION.
4. UNLESS OTHERWISE NOTED, ALL ANNUNCIATOR ALARMS ARE LOCATED ON THE SECONDARY SAMPLE PANEL.
5. ALL INSTRUMENTS ON THIS P&ID HAVE SYSTEM DESIGNATOR SS.
6. ALL INSTRUMENTS ON THIS P&ID HAVE SEPERATION GROUP N.
7. DELETED.
8. ALL SAMPLE LINES ON THIS P&ID ARE 3/8 IN.O.D. X 0.065 IN WALL THICKNESS, ASME SA213 GRADE 316 TUBING UNLESS OTHERWISE NOTED.
9. DELETED.
10. MANUALLY ADJUSTED HIGH PRESSURE DROP VALVE.
11. DELETED
12. SEE DWG 9Z329Z00044#1 FOR ABBREVIATIONS.
13. THESE VALVES ARE MANUALLY THROTTLED.

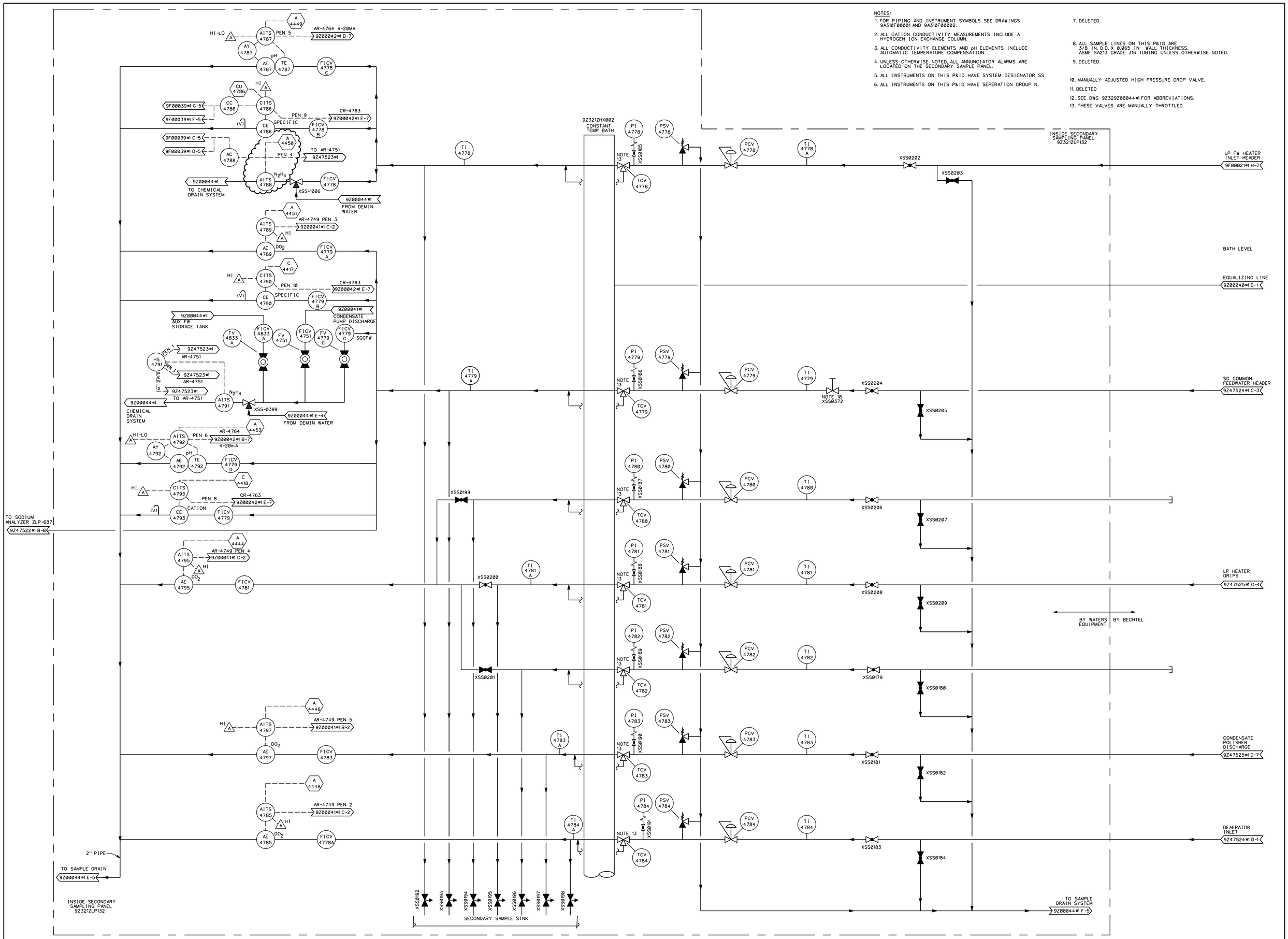

NO.	APPROVAL DATE	REVISION	ORIG	CKR	RE	DV	SE
15	7-11-18	INCORP. DCN 1701197.	N/A	N/A	N/A		
0-14	5-15-96	ISSUED FOR CONSTRUCTION.	SIGNATURES ON FILE				

NO.	APPROVAL DATE	REVISION	ORIG	CKR	RE	DV	SE

SOUTH TEXAS PROJECT NUCLEAR OPERATING COMPANY

PIPING AND INSTRUMENTATION DIAGRAM SECONDARY SAMPLING SYSTEM

PRIORITY	CADD FILE NO.	FSUG. NO.	STI. NO.	SCALE	DWG. NO.	SHT.	REV.
1	9Z329Z00043#1.DGN	D070928	34693193	NONE	9Z329Z00043#1		15

ESEED_DGN

NOTES:

1. FOR PIPING AND INSTRUMENT SYMBOLS SEE DRAWINGS 9A310F00001 AND 9A310F00002.
2. ALL CATION CONDUCTIVITY MEASUREMENTS INCLUDE A HYDROGEN ION EXCHANGE COLUMN.
3. ALL CONDUCTIVITY ELEMENTS AND pH ELEMENTS INCLUDE AUTOMATIC TEMPERATURE COMPENSATION.
4. UNLESS OTHERWISE NOTED, ALL ANNUNCIATOR ALARMS ARE LOCATED ON THE SECONDARY SAMPLE PANEL.
5. ALL INSTRUMENTS ON THIS P&ID HAVE SYSTEM DESIGNATOR SS.
6. ALL INSTRUMENTS ON THIS P&ID HAVE SEPERATION GROUP N.
7. DELETED.
8. ALL SAMPLE LINES ON THIS P&ID ARE 3/8 IN.O.D. X 0.065 IN WALL THICKNESS, ASME SA213 GRADE 316 TUBING UNLESS OTHERWISE NOTED.
9. DELETED.
10. MANUALLY ADJUSTED HIGH PRESSURE DROP VALVE.
11. DELETED
12. SEE DWG 9Z329Z00044#2 FOR ABBREVIATIONS.
13. THESE VALVES ARE MANUALLY THROTTLED.

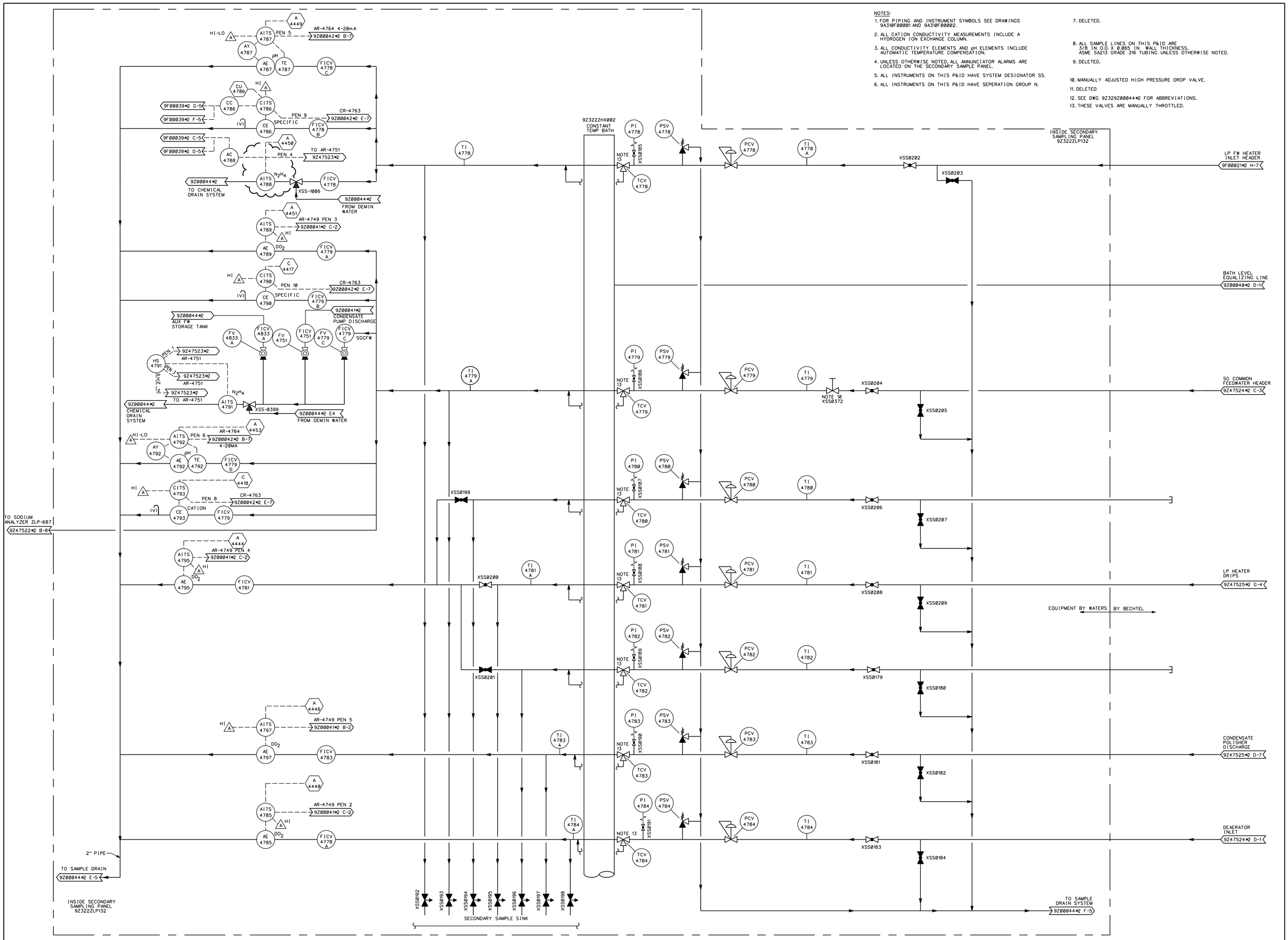

NO.	APPROVAL DATE	REVISION	ORIG	CKR	RE	DV	SE
17	4-2-18	INCORP DCN 1701226.			N/A	N/A	N/A
0-16	12-21-82	ISSUED FOR CONSTRUCTION	SIGNATURES ON FILE				

NO.	APPROVAL DATE	REVISION	ORIG	CKR	RE	DV	SE

SOUTH TEXAS PROJECT
NUCLEAR OPERATING COMPANY

PIPING AND INSTRUMENTATION DIAGRAM
SECONDARY SAMPLING SYSTEM

PRIORITY	CADD FILE NO.	FSUG. NO.	STI. NO.	SCALE	DWG. NO.	SHT.	REV.
1	9Z329Z00043#2.DGN	D070928	34643767	NONE	9Z329Z00043#2		17

ESEED_DGN

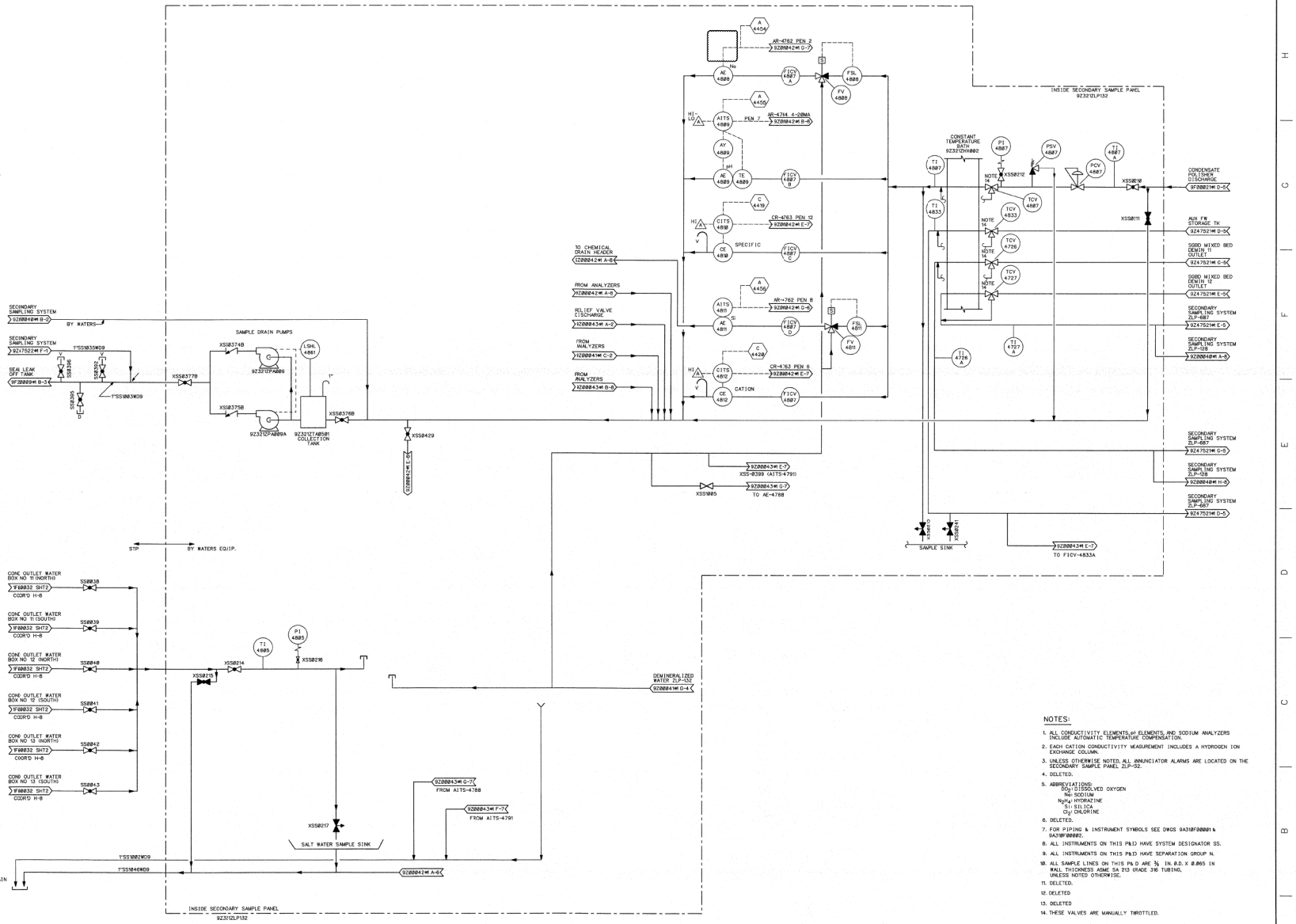

NOTES:

1. ALL CONDUCTIVITY ELEMENTS,pH ELEMENTS, AND SODIUM ANALYZERS INCLUDE AUTOMATIC TEMPERATURE COMPENSATION.
2. EACH CATION CONDUCTIVITY MEASUREMENT INCLUDES A HYDROGEN ION EXCHANGE COLUMN.
3. UNLESS OTHERWISE NOTED, ALL ANNUNCIATOR ALARMS ARE LOCATED ON THE SECONDARY SAMPLE PANEL ZLP-32.
4. DELETED.
5. ABBREVIATIONS:
   DO_2: DISSOLVED OXYGEN
   Na: SODIUM
   N_2H_4: HYDRAZINE
   Si: SILICA
   Cl_2: CHLORINE
6. DELETED.
7. FOR PIPING & INSTRUMENT SYMBOLS SEE DWGS 9A318F00001 & 9A318F00002.
8. ALL INSTRUMENTS ON THIS P&ID HAVE SYSTEM DESIGNATOR SS.
9. ALL INSTRUMENTS ON THIS P&ID HAVE SEPARATION GROUP N.
10. ALL SAMPLE LINES ON THIS P&ID ARE ½ IN O.D.X 0.065 IN WALL THICKNESS ASME SA 213 GRADE 316 TUBING, UNLESS NOTED OTHERWISE.
11. DELETED.
12. DELETED
13. DELETED
14. THESE VALVES ARE MANUALLY THROTTLED.

NO.	ISSUE DATE	REVISION	ORIG	CKR	RE	DV	SE	NO.	ISSUE DATE	REVISION	ORIG	CKR	RE	DV	SE
19	7-24-15	INCORPORATE DCN 1482496.	NF	VJ	N/A	N/A	N/A	N/A							
1-18	12-21-82	ISSUED FOR CONSTRUCTION	SIGNATURES ON FILE												

ISSUED DGN

SOUTH TEXAS PROJECT NUCLEAR OPERATING COMPANY

PIPING AND INSTRUMENTATION DIAGRAM
SECONDARY SAMPLING SYSTEM

PRIORITY	CADD FILE NO.	FSUG. NO.	STI. NO.	SCALE	DWG. NO.	SHT.	REV.
1	9Z329Z00044-M1.DGN	D070928	3116 9284	NONE	9Z329Z00044 M1		19

8 7 6 5 4 3 2 1

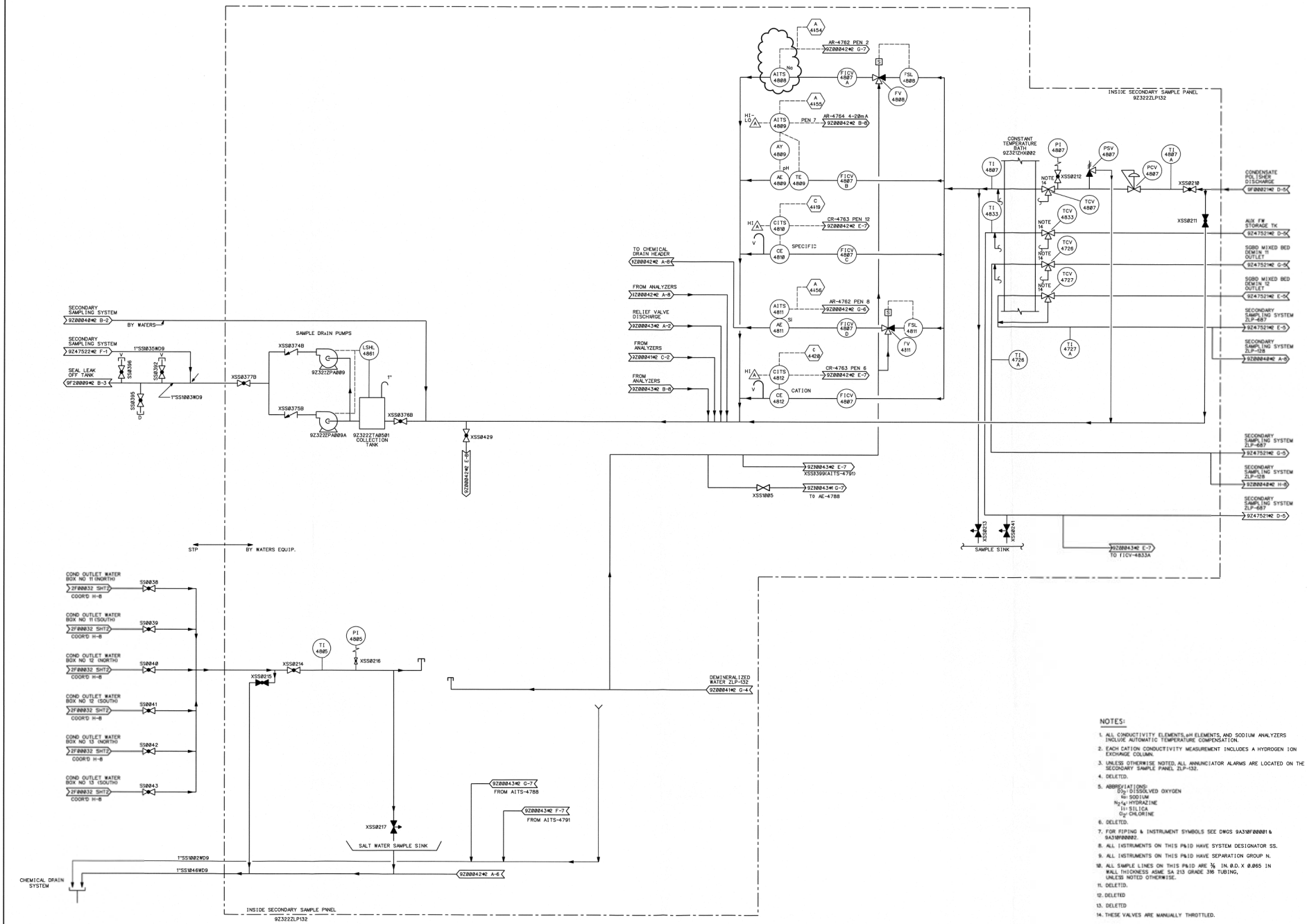

NOTES:

1. ALL CONDUCTIVITY ELEMENTS, pH ELEMENTS, AND SODIUM ANALYZERS INCLUDE AUTOMATIC TEMPERATURE COMPENSATION.
2. EACH CATION CONDUCTIVITY MEASUREMENT INCLUDES A HYDROGEN ION EXCHANGE COLUMN.
3. UNLESS OTHERWISE NOTED, ALL ANNUNCIATOR ALARMS ARE LOCATED ON THE SECONDARY SAMPLE PANEL ZLP-532.
4. DELETED.
5. ABBREVIATIONS:
   DO_2: DISSOLVED OXYGEN
   Na: SODIUM
   N_2H_4: HYDRAZINE
   Si: SILICA
   Cl_2: CHLORINE
6. DELETED.
7. FOR PIPING & INSTRUMENT SYMBOLS SEE DWGS 9A310F00001 & 9A310N00002.
8. ALL INSTRUMENTS ON THIS P&ID HAVE SYSTEM DESIGNATOR SS.
9. ALL INSTRUMENTS ON THIS P&ID HAVE SEPARATION GROUP N.
10. ALL SAMPLE LINES ON THIS P&ID ARE ⅜ IN. O.D. X 0.065 IN WALL THICKNESS ASME SA 213 GRADE 316 TUBING, UNLESS NOTED OTHERWISE.
11. DELETED.
12. DELETED
13. DELETED
14. THESE VALVES ARE MANUALLY THROTTLED.

NO.	APPROVAL DATE	REVISION	ORIG	CKR	RE	DV	SE
18	6-26-86	INCORP. DCN 1600173.	JSH	[illegible]	N/A	N/A	N/A
0-17	2-21-82	ISSUED FOR CONSTRUCTION.	SIGNATURES ON FILE				

SEED DCN

SOUTH TEXAS PROJECT
NUCLEAR OPERATING COMPANY

PIPING AND INSTRUMENTATION DIAGRAM
SECONDARY SAMPLING SYSTEM

PRIORITY	CADD FILE NO.	FSUG. NO.	STI. NO.	SCALE	DWG. NO.	SHT.	REV.
1	9Z329Z00044#2	D070928	34328850	NONE	9Z329Z00044#2		18

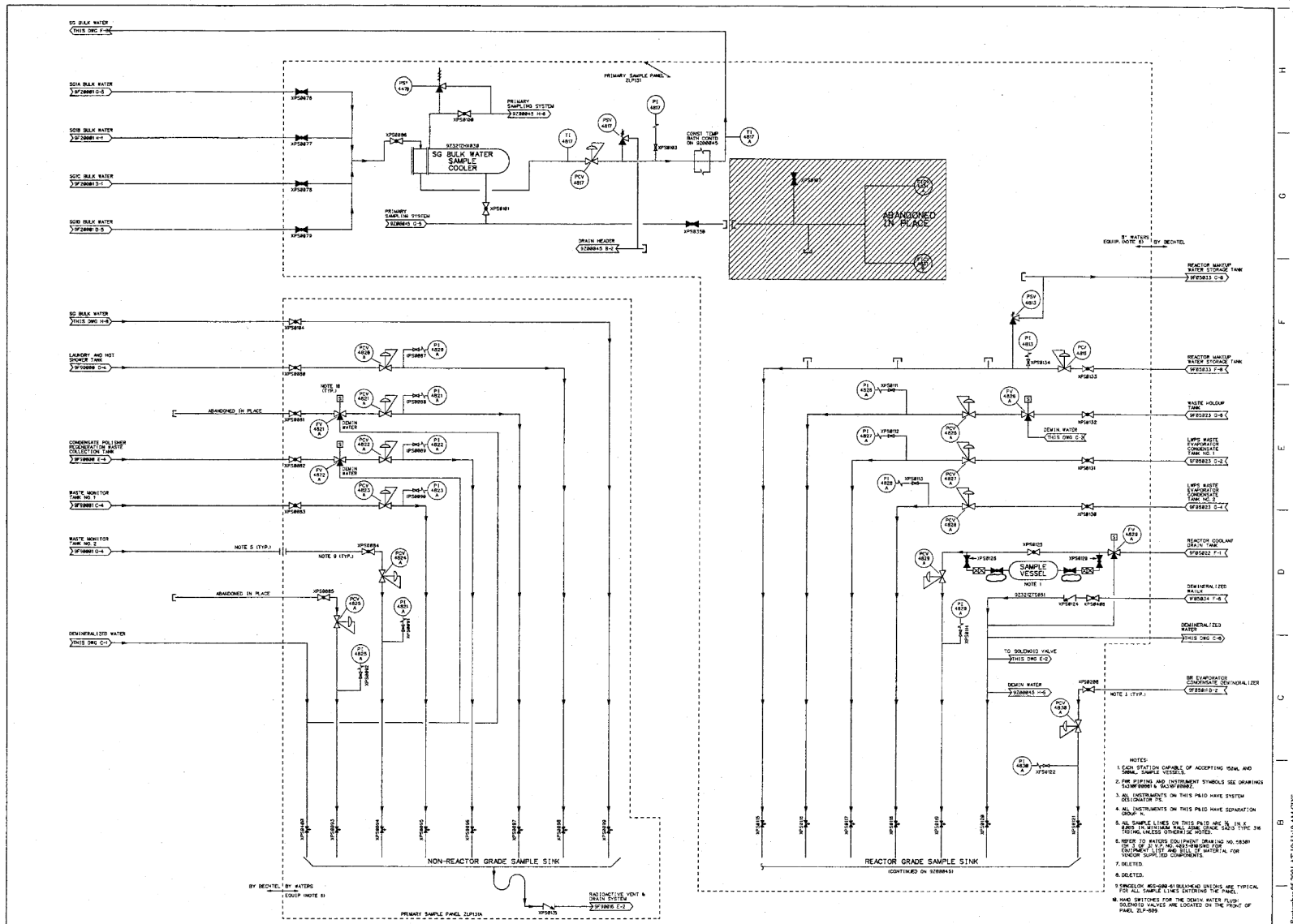

NOTES:

1. EACH STATION CAPABLE OF ACCEPTING 150ML AND 500ML SAMPLE VESSELS.
2. FOR PIPING AND INSTRUMENT SYMBOLS SEE DRAWINGS 5A3NF000014 5A3NF000002.
3. ALL INSTRUMENTS ON THIS P&ID HAVE SYSTEM DESIGNATOR PS.
4. ALL INSTRUMENTS ON THIS P&ID HAVE SEPARATION GROUP H.
5. ALL SAMPLE LINES ON THIS P&ID ARE 3/4 IN.X 0.065 IN MINIMUM WALL 304L GRADE SA312 TYPE 316 TUBING UNLESS OTHERWISE NOTED.
6. REFER TO WATERS EQUIPMENT DRAWING NO. 08381 (SH. 1 OF 2) V.P. NO. 4851-4 (BOM) FOR EQUIPMENT LIST AND BILL OF MATERIAL FOR VENDOR SUPPLIED COMPONENTS.
7. DELETED.
8. DELETED.
9. SINGLELOK MS6-QRM-61 BULKHEAD UNIONS ARE TYPICAL FOR ALL SAMPLE LINES ENTERING THE PANEL.
10. HAND SWITCHES FOR THE DEMIN WATER FLUSH SOLENOID VALVES ARE LOCATED ON THE FRONT OF PANEL ZLP-809.

REVISION	NO.	ISSUE DATE	REVISION	ORIG	CKR	RE	DV	SE	NO.	ISSUE DATE	REVISION	ORIG	CKR	RE	DV	SE
	17	8/6/97	INCORP. DCN 01023383.	JSH												
	8-18	12-1-92	ISSUED FOR CONSTRUCTION.	SIGNATURES ON FILE												

SOUTH TEXAS PROJECT
NUCLEAR OPERATING COMPANY

PIPING AND INSTRUMENTATION DIAGRAM
PRIMARY SAMPLING SYSTEM

PRIORITY	CADD FILE NO.	FSAR NO.	STI NO.	SCALE	DWG NO.	SHT.	REV.
1	FJA267.171	Q070928	31341120	NONE	SZ329Z00047#1	-	17

8 7 6 5 4 3 2 1

Printed by jhayes ON Wednesday September 05 2001 AT 10:31:19 AM CDT

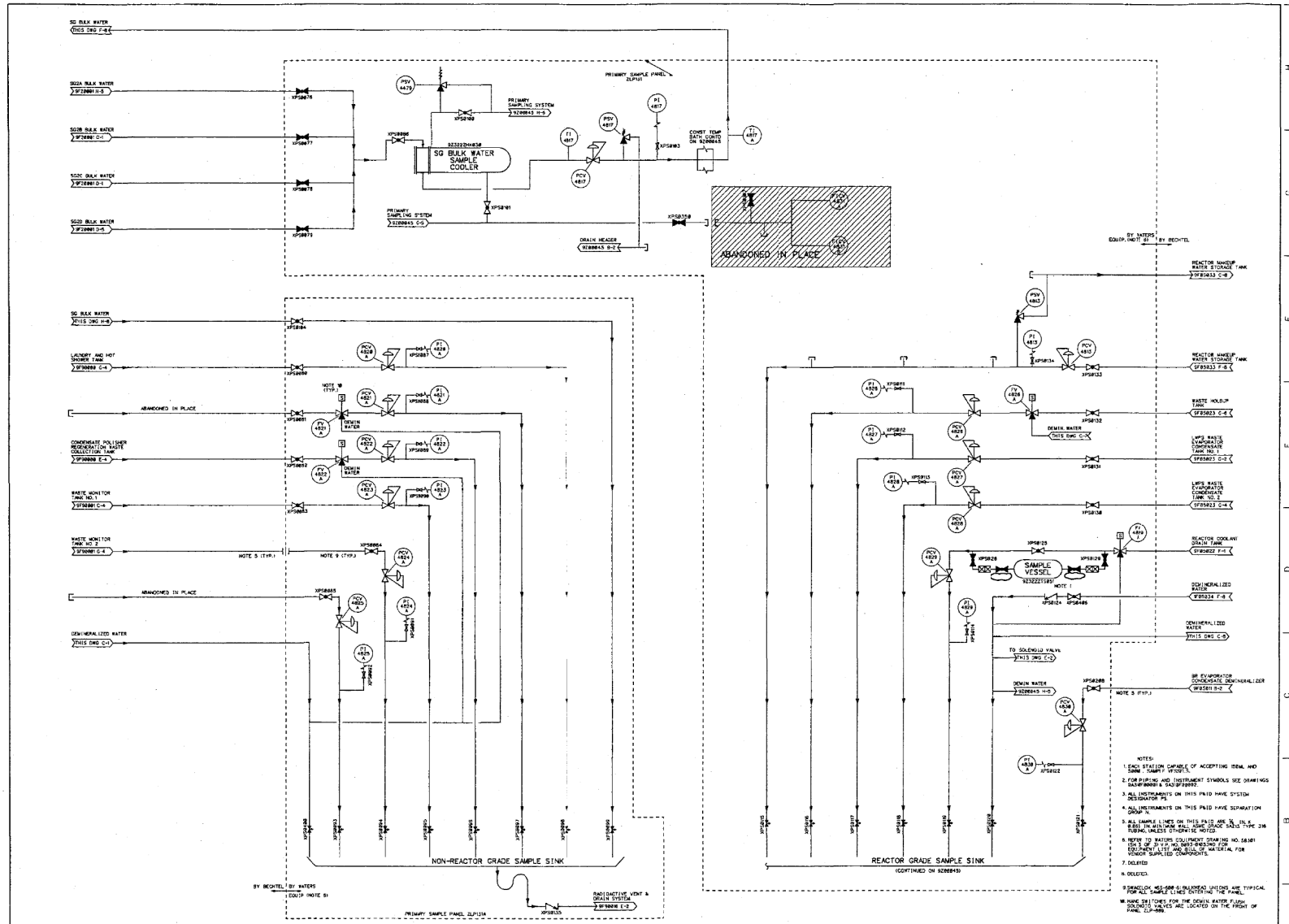

NOTES:

1. EACH STATION CAPABLE OF ACCEPTING ISEML AND SAMM / SAMPY (9F3021).
2. FOR PIPING AND INSTRUMENT SYMBOLS SEE DRAWINGS 9A34F00001 & 9A31F32002.
3. ALL INSTRUMENTS ON THIS PAID HAVE SYSTEM DESIGNATOR PS.
4. ALL INSTRUMENTS ON THIS PAID HAVE SEPARATION GROUP N.
5. ALL SAMPLE LINES ON THIS PAID ARE 3/8 I.N.S. 0.035 (IN MINIMUM WALL ASME GRADE 9A312 TYPE 316 TUBING, UNLESS OTHERWISE NOTED.
6. REFER TO SATORS EQUIPMENT DRAWING NO. 58.101 FOR A LIST OF SATORS EQUIPMENT DESIGNATIONS FOR EQUIPMENT, LIST AND SCOPE OF MATERIAL FOR VENDOR SUPPLIED COMPONENTS.
7. DELETED
8. DELETED.
9. SWAGELOK MS-QM-G BULKHEAD UNIONS ARE TYPICAL FOR ALL SAMPLE LINES ENTERING THE PANEL.
10. HAND SWITCHES FOR THE DEMIN WATER FLUSH SOLENOID VALVES ARE LOCATED ON THE FRONT OF PANEL ZLP-989.

NO	ISSUE DATE	REVISION	ORIG	CHR	RE	DV	SE
14	9/5/91	INCORP. DCN 01102354.	JSH				
0-13	5-15-87	ISSUED FOR CONSTRUCTION.	SIGNATURES ON FILE				

NO.	ISSUE DATE	REVISION	ORIG	CHR	RE	DV	SE

SOUTH TEXAS PROJECT
NUCLEAR OPERATING COMPANY

PIPING AND INSTRUMENT DIAGRAM
PRIMARY SAMPLING SYSTEM

PRIORITY	CADD FILE NO.	PSAG NO.	STI. NO.	SCALE	DWG. NO.	UNIT	REV
1	72A787.141	D070928	3134159	NONE	92329Z00047#2	-	14

ESEED, DDN

Printed by: jhopes ON Wednesday September 05 2001 AT 11:16:42 AM CDT

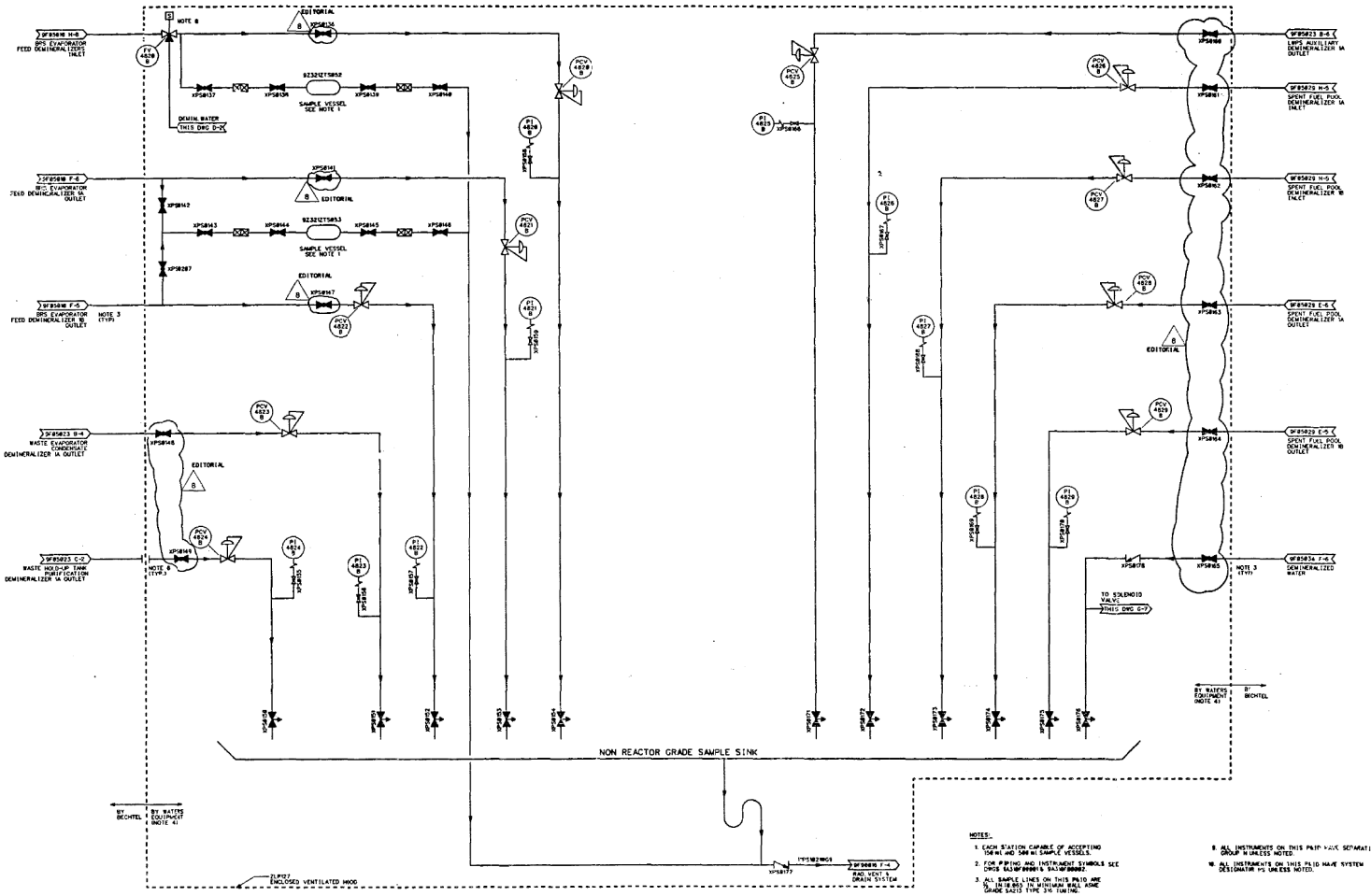

NOTES:

1. EACH STATION CAPABLE OF ACCEPTING 1500 ML AND 500 ML SAMPLE VESSELS.
2. FOR PIPING AND INSTRUMENT SYMBOLS SEE DWGS 9A3WF00001 & 9A3WF00002.
3. ALL SAMPLE LINES ON THIS P&ID ARE 3/8 (0.375) IN MINIMUM WALL ASME GRADE SA213 TYPE 316 TUBING.
4. REFER TO WATERS EQUIPMENT DRAWING NO. 5B39N9N3WF31(4093-H5090) FOR EQUIPMENT LIST AND BILL OF MATERIAL FOR VENDOR SUPPLIED COMPONENTS.
5. THIS DWG SUPERCEDES 9A8 DWG 120048-H AND 220048-C.
6. SWAGELOK MS-SUB-4B1BS,HEAD UNIONS ARE FOR ALL SAMPLE LINES ENTERING THE PANEL.
7. DELETED
8. HAND SWITCHES FOR THE DEMIN WATER FLUSH SOLENOID VALVES ARE LOCATED ON THE FRONT OF PANEL ZLP-127.
9. ALL INSTRUMENTS ON THIS P&ID HAVE SEPARATION GROUP N UNLESS NOTED.
10. ALL INSTRUMENTS ON THIS P&ID HAVE SYSTEM DESIGNATOR H5 UNLESS NOTED.

NO.	ISSUE DATE	REVISION	BY	CKR	RE	DV	NA	SE	PE	NO.	ISSUE DATE	REVISION	BY	CKR	RE	DV	NA	SE	PE
8	4/3/95	HELP ASSUMES DESIGN CHANGE CONTROL AND EDITORIALS	LDD																
7	1-11-88	ISSUED FOR CADD CONVERSION	SIGNATURES ON FILE																
6	5-15-87	ISSUED FOR UNITIZATION/SUPERSEDING 9Z32920B048	SIGNATURES ON FILE																

HOUSTON LIGHTING & POWER COMPANY
SOUTH TEXAS PROJECT ELECTRIC GENERATING STATION

PIPING AND INSTRUMENTATION DIAGRAM
PRIMARY SAMPLING SYSTEM

SCALE	DWG. NO.	REV.
NONE	9Z32920004B #1	8

PRIORITY: DC. NO.

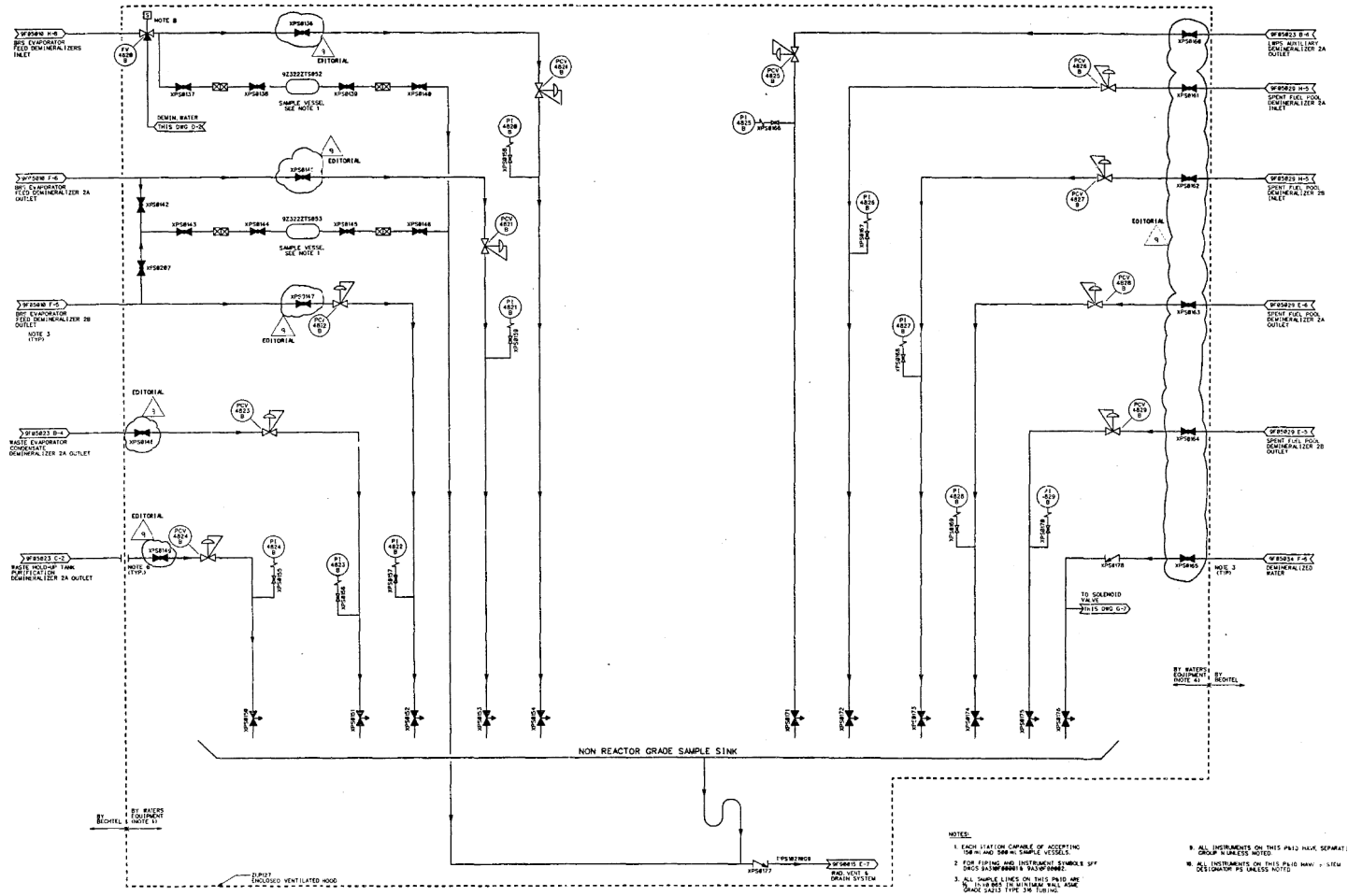

NOTES:

1. EACH STATION CAPABLE OF ACCEPTING 158 in. AND 588 in. SAMPLE VESSELS.
2. FOR PIPING AND INSTRUMENT SYMBOLS SEE DWGS 9A3WF00001 & 9A3WF00002.
3. ALL SAMPLE LINES ON THIS PAID ARE 3/8 IN-10 BWS IN MINIMUM WALL ASME GRADE SA213 TYPE 316 TUBING.
4. REFER TO WATERS EQUIPMENT DRAWING NO. 5838-SKWF3114B93-WW0001 FOR EQUIPMENT LIST AND BILL OF MATERIAL FOR VENDOR SUPPLIED COMPONENTS.
5. THIS DWG SUPERCEDES B&R DWG 2D0448-W AND 2D0448-C
6. SWAGELOK MS-600-61 BULKHEAD UNIONS ARE FOR ALL SAMPLE LINES ENTERING THE PANEL
7. DELETED
8. HAND SWITCHES FOR THE DEMIN WATER FLUSH SOLENOID VALVES ARE LOCATED ON THE FRONT OF PANEL ZLP-101
9. ALL INSTRUMENTS ON THIS P&ID HAVE SEPARATION GROUP N UNLESS NOTED
10. ALL INSTRUMENTS ON THIS P&ID HAVE SYSTEM DESIGNATOR PS UNLESS NOTED

NO.	ISSUE DATE	REVISION	BY	CKR	RE	DV	NA	SE	PE	NO	ISSUE DATE	REVISION	BY	CKR	RE	DV	NA	SE	PE
3	11-13-95	MISC ASSUMES DESIGN CHANGE CONTROL AND EDITORIALS	LEO																
2	10-11-95	INCORPORATED REVISION REPORT COMMENTS	SIGNATURES ON FILE																
1	5-31-95	INCORPORATED SERVICE DESCRIPTION DESIGNATOR	SIGNATURES ON FILE																
—	—	ADDED TO CADD CONVERSION																	
—	—	BORED FOR INSTALLATION/SUPERSEDING 9Z329Z00048	SIGNATURES ON FILE																

HOUSTON LIGHTING & POWER COMPANY
SOUTH TEXAS PROJECT ELECTRIC GENERATING STATION

PIPING AND INSTRUMENTATION DIAGRAM
PRIMARY SAMPLING SYSTEM

SCALE	DRG. NO.	REV.
NONE	9Z329Z00048 #2	9

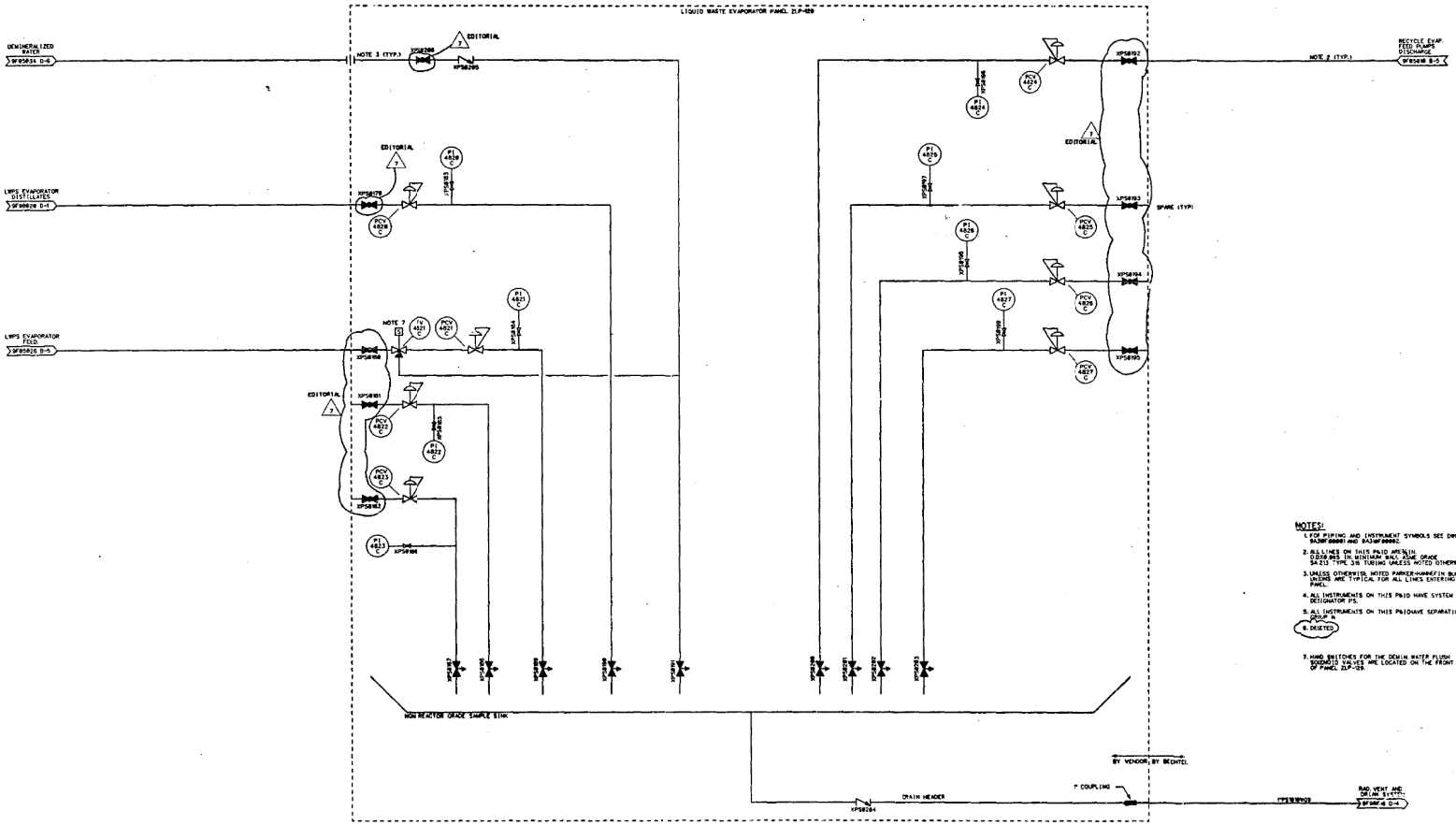

NOTES:

1. FOR PIPING AND INSTRUMENT SYMBOLS SEE DWGS. 9A36F00001 AND 9A36F00002.
2. ALL LINES ON THIS P&ID ARE 3/8 O.D.X.035 IN. MINIMUM WALL ASME GRADE SA 213 TYPE 316 TUBING UNLESS NOTED OTHERWISE.
3. UNLESS OTHERWISE NOTED PARKER-HANNEFIN BULKHEAD UNIONS ARE TYPICAL FOR ALL LINES ENTERING THE PANEL.
4. ALL INSTRUMENTS ON THIS P&ID HAVE SYSTEM DESIGNATOR PS.
5. ALL INSTRUMENTS ON THIS P&ID HAVE SEPARATION GROUP N.
6. DELETED.
7. HAND SWITCHES FOR THE DEMIN. WATER FLUSH SOLENOID VALVES ARE LOCATED ON THE FRONT OF PANEL ZLP-109.

NO.	ISSUE DATE	REVISION	BY	CKR	RE	DV	NA	SI	PE	NO.	ISSUE DATE	REVISION	BY	CKR	RE	DV	NA	SE	PE
7	7/5/95	HLNP ASSUMES DESIGN CHANGE CONTROL AND EDITORIAL	LDD	[illegible]															
6	1/14/89	ISSUED FOR CADD CONVERSION	SIGNATURES ON FILE																
5	8-18-87	REVISED AS NOTED	SIGNATURES ON FILE																
4	3-13-87	ISSUED FOR UNITIZATION, SUPERSEDING 9Z329280049	SIGNATURES ON FILE																

REV. DATA

HOUSTON LIGHTING & POWER COMPANY
SOUTH TEXAS PROJECT ELECTRIC GENERATING STATION

PIPING AND INSTRUMENTATION DIAGRAM
PRIMARY SAMPLING SYSTEM

SCALE	DWG. NO	REV.
NONE	9Z329280049 01	7

PRIORITY

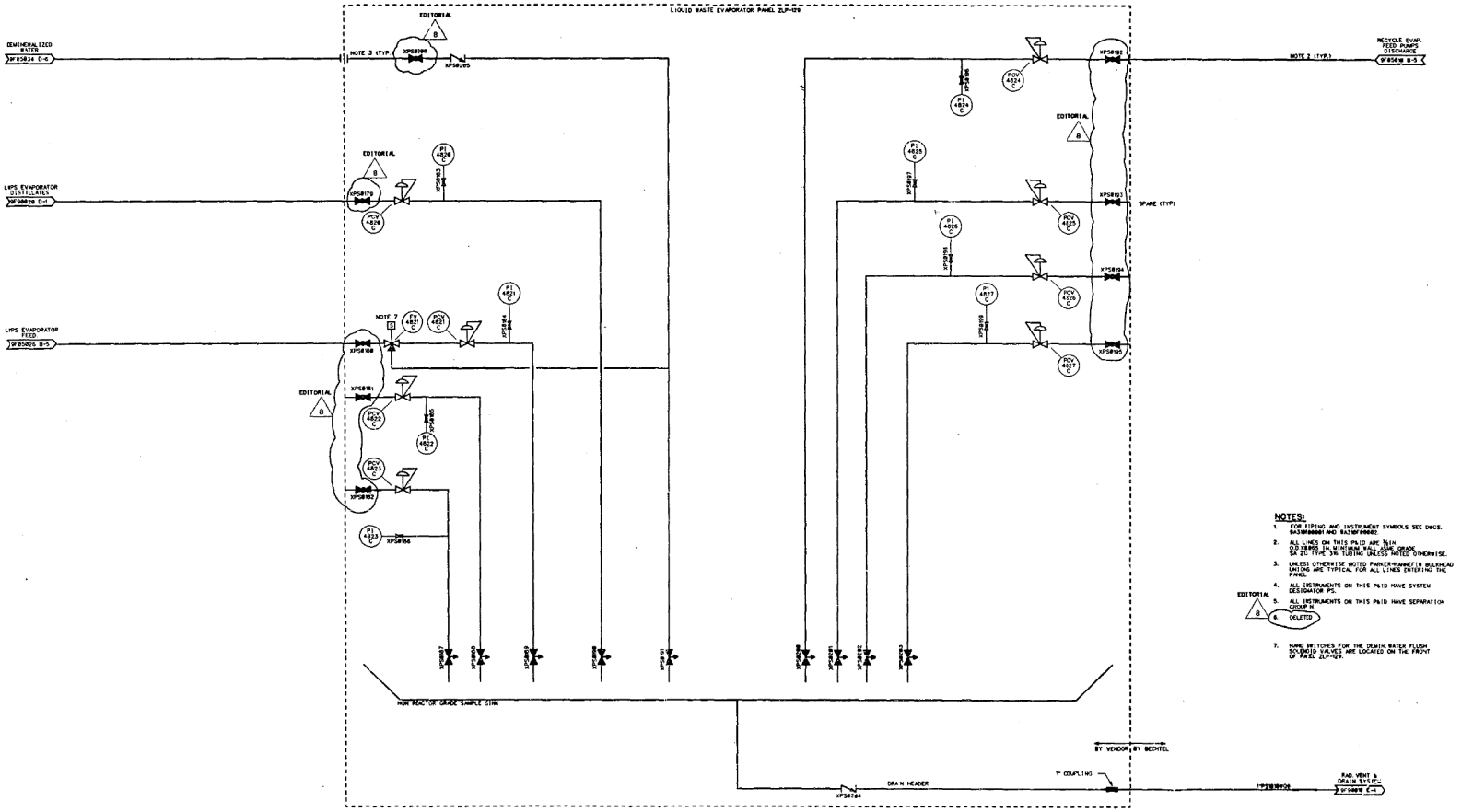

NOTES:

1. FOR PIPING AND INSTRUMENT SYMBOLS SEE DWGS. 9A3M00001 AND 9A3M00002.
2. ALL LINES ON THIS P&ID ARE 3/4IN. O.D.X0.065 IN. MINIMUM WALL ASME GRADE SA 213 TYPE 316 TUBING UNLESS NOTED OTHERWISE.
3. UNLESS OTHERWISE NOTED PARKER-HANNIFIN BULKHEAD UNITONS ARE TYPICAL FOR ALL LINES ENTERING THE PANEL.
4. ALL INSTRUMENTS ON THIS P&ID HAVE SYSTEM DESIGNATOR P51.
5. ALL INSTRUMENTS ON THIS P&ID HAVE SEPARATION GROUP N.
6. DELETED
7. HAND SWITCHES FOR THE DEMIN WATER FLUSH SOLENOID VALVES ARE LOCATED ON THE FRONT OF PANEL ZLP-120.

NO.	ISSUE DATE	REVISION	BY	CKR	RE	DV	NA	SE	PE
9	2/13/92	HLAP ATOMICS DESIGN CHANGE CONTROL AND EDITORIALS	LDD						
7	6-8-88	INCORPORATED REVISION REPORT COMMENTS	SIGNATURES ON FILE						
6	[illegible]	ISSUED FOR SERVICE DESCRIPTION & CADD CONVERSION	SIGNATURES ON FILE						
3	6-16-87	REVISED AS NOTED	SIGNATURES ON FILE						
4	[illegible]	ISSUED FOR INSTALLATION, SUPERSEDING 9Z329Z00849	SIGNATURES ON FILE						

NO.	ISSUE DATE	REVISION	BY	CKR	RE	DV	NA	SE	PE

HOUSTON LIGHTING & POWER COMPANY
SOUTH TEXAS PROJECT ELECTRIC GENERATING STATION

PIPING AND INSTRUMENTATION DIAGRAM
PRIMARY SAMPLING SYSTEM

SCALE	DWG. NO.	REV.
NONE	9Z329Z00849 # 2	B

PRIORITY
CC NO.

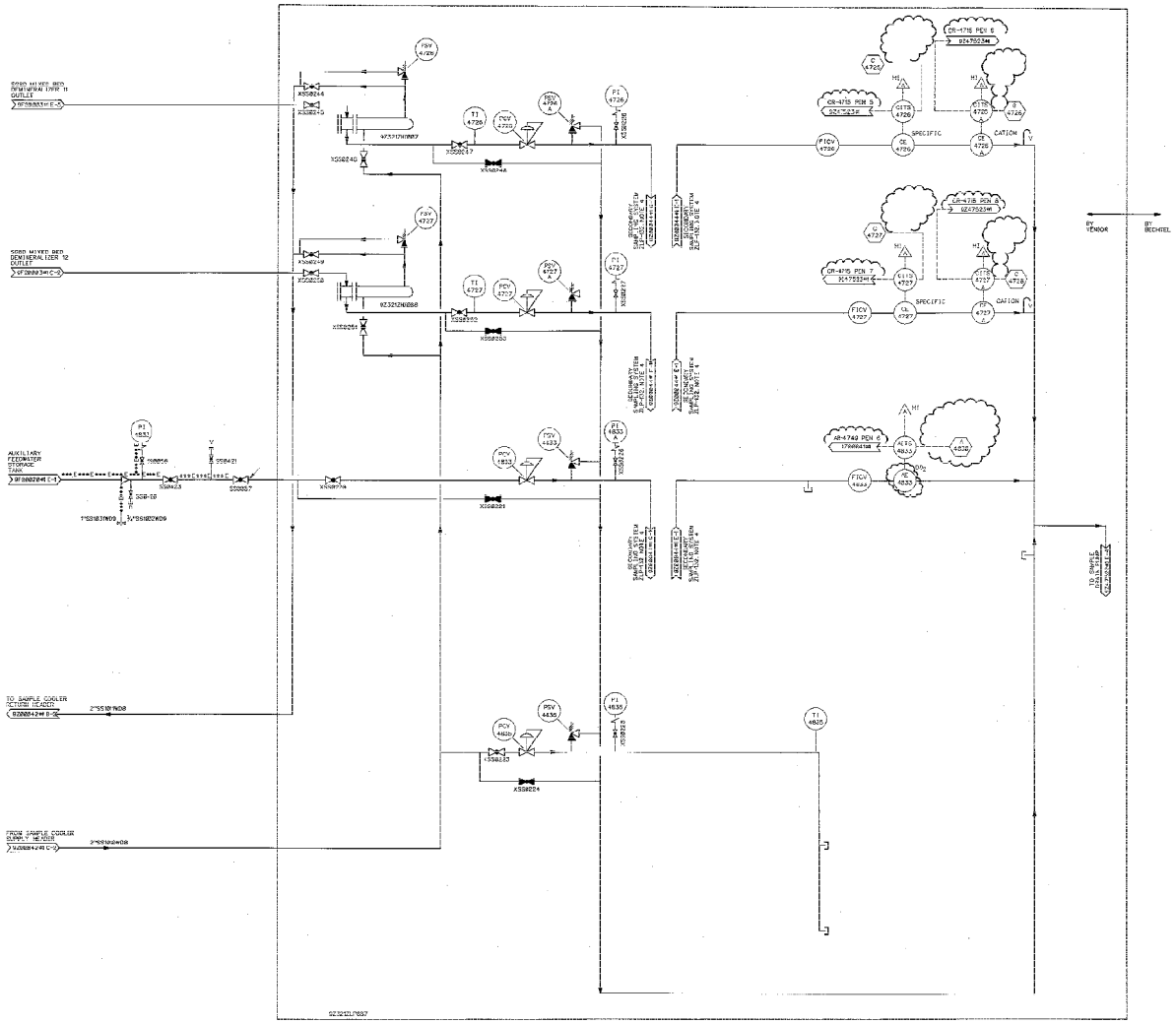

NOTES:

1. FOR INSTRUMENT AND PIPING SYMBOLS SEE 9A3HF68001 AND 9A3HF68002.
2. ALL INSTRUMENTS ON THIS P&ID HAVE SYSTEM DESIGNATOR 33.
3. ALL INSTRUMENTS ON THIS P&ID HAVE SEPARATION GROUP N.
4. SAMPLES ARE TAKEN FROM CONSTANT TEMP BATH LOCATED IN ZLP-422.
5. ALL CONDUCTIVITY ELEMENTS INCLUDE AUTOMATIC TEMPERATURE COMPENSATION.
6. ALL CATION CONDUCTIVITY ANALYZERS HAVE A HYDROGEN ION EXCHANGE COLUMN UPSTREAM OF THE CELL.
7. ALL SAMPLE PIPING ON THIS P&ID ARE 3/8 IN O.D X 0.065 IN WALL ASME GRADE 304TS TYPE 316 TUBING UNLESS OTHERWISE NOTED.
8. DELETED
9. DELETED.
10. SEE DRAWING 9Z329Z00044 FOR ABBREVIATIONS.
11. ALL ALARMS ARE LOCATED ON SECONDARY SAMPLING AUXILIARY PANEL ZL2-687.
12. DELETED.

SEQ. NO.	ISSUE DATE	REVISION	DRW	CHK	RE	DV	SE	NO.	ISSUE DATE	REVISION	DRW	CHK	RE	DV	SE
4	5/15/87	ISSUED FOR UNITIZATION, SUPERSEDES DWG. 9Z329Z4752	SIGNATURES ON FILE					10	1-14-11	INCORP. DCN 8980793.	JSH	JSL	JAS/ALG	VJM	
3	5/15/87	INCORP. PCRS 8Z8167,8Z8627,FOR SIMBIOS.	SIGNATURES ON FILE					9	05 01 06	INCORP. DCN 9Z84531.	VJM	ON FILE			
2	10/23/86	SUPERSEDES W/ DWG. 9Z329Z4752 IN 9Z329Z4752 RC INCORP DCNS 2 & 3	SIGNATURES ON FILE					8	8-30-05	INCORP. DCN 9Z80427.	SIGNATURES ON FILE				
1	4/15/85	INCORP. DCN #1 (NOTED REVD AS NOTED	SIGNATURES ON FILE					7	5-30-05	MAP ASSUMES ACTION CHANGE CONTROL & INC. PCF #9A08A	SIGNATURES ON FILE				
0	12-3-83	ISSUED FOR CONSTRUCTION	SIGNATURES ON FILE					6	1-5-05	INCORP. REVISION REPORT	SIGNATURES ON FILE				
								5	11-22-97	ISSUED FOR CADD CONVERSION	SIGNATURES ON FILE				

PRIORITY	CADD FILE NO.	FSKG. NO.	STT. NO.
1	FJA254.101	D078528	72807341

SOUTH TEXAS PROJECT
NUCLEAR OPERATING COMPANY

PIPING AND INSTRUMENTATION DIAGRAM
SECONDARY SAMPLING SYSTEM

SCALE	DWG. NO.	SHT.	REV.
NONE	9Z329Z47521		10

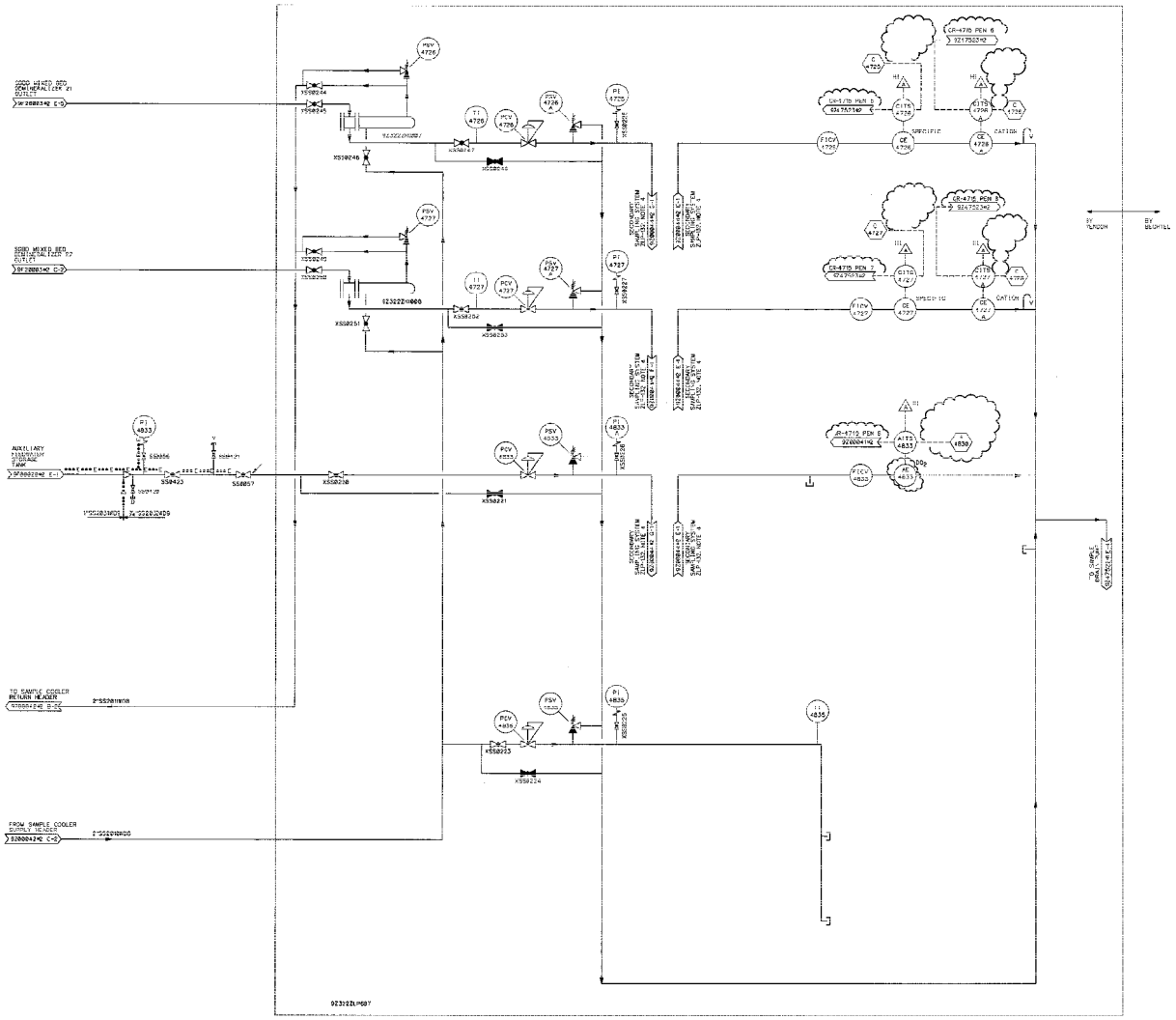

NOTES:

1. FOR INSTRUMENT AND PIPING SYMBOLS SEE 9430F0001 AND 9430F0002.
2. ALL INSTRUMENTS ON THIS P&ID HAVE SYSTEM DESIGNATION 35.
3. ALL INSTRUMENTS ON THIS P&ID HAVE SEPARATION GROUP N.
4. SAMPLES ARE TO/FROM CONSTANT TEMP. BATH LOCATED IN ZLP-132.
5. ALL CONDUCTIVITY ELEMENTS INCLUDE AUTOMATIC TEMPERATURE COMPENSATION.
6. ALL CATION CONDUCTIVITY ANALYZERS HAVE A HYDROGEN ION EXCHANGE COLUMN UPSTREAM OF THE CELL.
7. ALL SAMPLE LINES ON THIS P&ID ARE 1/2 IN.O.D. X 0.065 IN. WALL ASME GRADE 304L, TYPE 316 TUBING, UNLESS OTHERWISE NOTED.
8. DELETED
9. DELETED.
10. REF DRAWING 9732928844P FOR ABBREVIATIONS.
11. ALL ALARMS ARE LOCATED ON SECONDARY SAMPLING AUXILIARY PANEL ZLP-49P
12. DELETED.

NO.	ISSUE DATE	REVISION	ORIG	CKR	RE	DV	SE
10	5-15-96	INCORP. DCN 9500284.	VJM	ON FILE			
9	11-7-95	INCORP. DCN 9500951.	SIGNATURES ON FILE				
8	4-3-95	INCORP. DCN 9500877.	SIGNATURES ON FILE				
7	8-17-94	HLAP ASSUMES DESIGN CHANGE CONTROL. INCORP. PCF 181357 & EDITORIAL CHANGES FOR UNETIZATION.	SIGNATURES ON FILE				
0-6	12-13-83	ISSUED FOR CONSTRUCTION	SIGNATURES ON FILE				

NO.	ISSUE DATE	REVISION	ORIG	CKR	RE	DV	SE
11	3-19-97	INCORP. DCN 9700000.					

SOUTH TEXAS PROJECT
NUCLEAR OPERATING COMPANY

PIPING AND INSTRUMENTATION DIAGRAM
SECONDARY SAMPLING SYSTEM

PRIORITY	CARD FILE NO.	FSAR NO.	STI NO.	SCALE	DWG NO.	SUT.	REV
1	F36754.111	0070928	3001439	NONE	9232947521#2		11

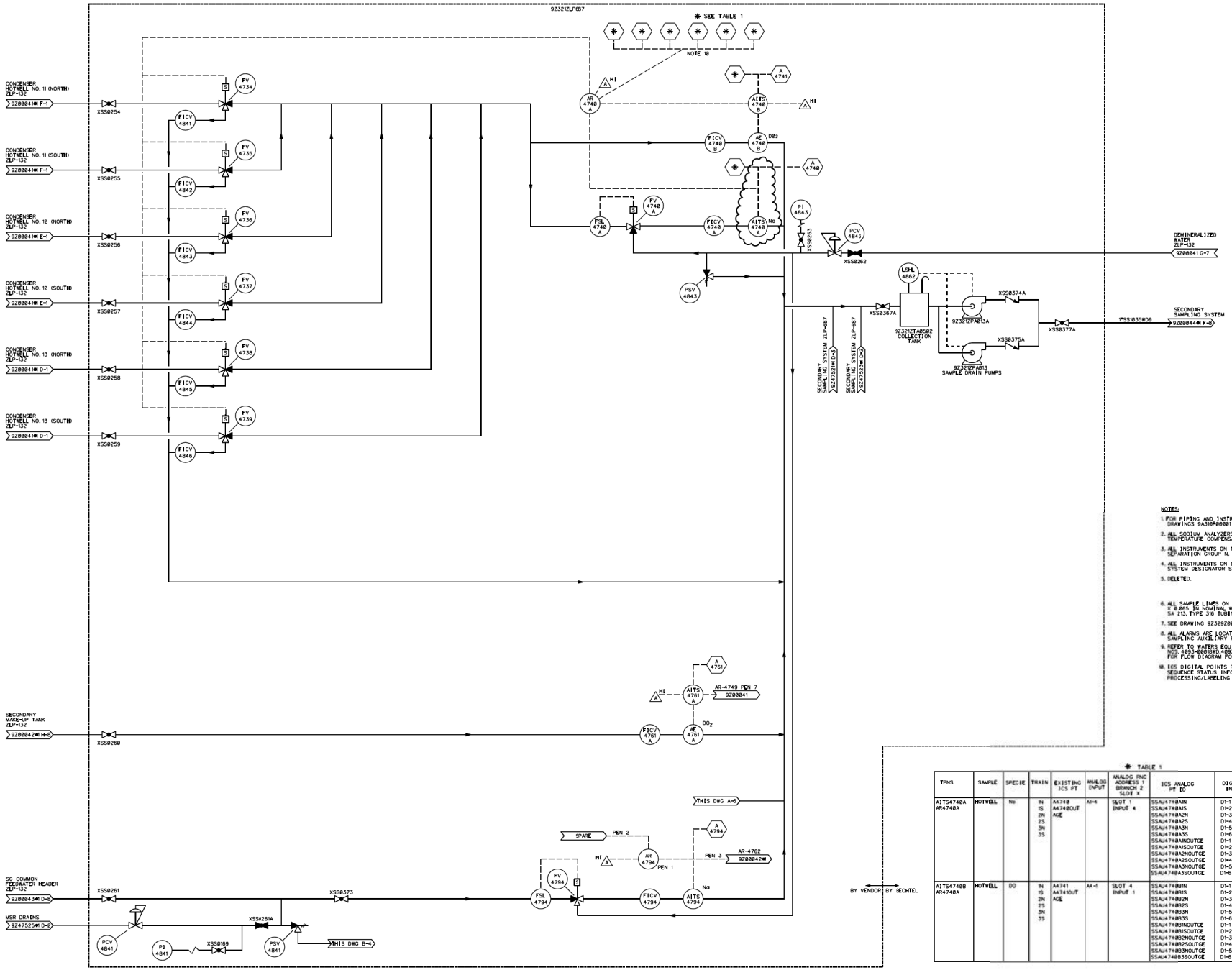

NOTES:

1. FOR PIPING AND INSTRUMENT SYMBOLS SEE DRAWINGS 9A310F00001 AND 9A310F00002.
2. ALL SODIUM ANALYZERS INCLUDE AUTOMATIC TEMPERATURE COMPENSATION.
3. ALL INSTRUMENTS ON THIS P&ID HAVE SEPARATION GROUP N.
4. ALL INSTRUMENTS ON THIS P&ID HAVE SYSTEM DESIGNATOR SS.
5. DELETED.
6. ALL SAMPLE LINES ON THIS P&ID ARE 3/8 IN. OD X 0.065 IN. NOMINAL WALL THICKNESS, ASME GRADE SA 213, TYPE 316 TUBING.
7. SEE DRAWING 9Z329Z00044 FOR ABBREVIATIONS.
8. ALL ALARMS ARE LOCATED ON THE SECONDARY SAMPLING AUXILIARY PANEL.
9. REFER TO WATERS EQUIP. DWG NO. 59784 V.P. NOS. 4093-00018WD, 4093-00019WD, 4093-00020WD FOR FLOW DIAGRAM FOR VENDOR SUPPLIED COMPONENTS.
10. ICS DIGITAL POINTS PROVIDE ICS WITH SAMPLE SEQUENCE STATUS INFORMATION TO ASSIST IN PROCESSING/LABELING OF POINTS ON TABLE.

TABLE 1

TPNS	SAMPLE	SPECIE	TRAIN	EXISTING ICS PT	ANALOG INPUT	ANALOG RNC ADDRESS 1 BRANCH 2 SLOT X	ICS ANALOG PT ID	DIGITAL INPUT	DIGITAL RNC ADDRESS 1 BRANCH 1 SLOT 1	ICS DIGITAL PT ID
AITS4740A AR4740A	HOTWELL	Na	1N 1S 2N 2S 3N 3S	A4740 A4740OUT AGE	A1-4	SLOT 1 INPUT 4	SSAU4740A1N	D1-1	INPUT 1	SSAD4740A1N
							SSAU4740A1S	D1-2	INPUT 2	SSAD4740A1S
							SSAU4740A2N	D1-3	INPUT 3	SSAD4740A2N
							SSAU4740A2S	D1-4	INPUT 4	SSAD4740A2S
							SSAU4740A3N	D1-5	INPUT 5	SSAD4740A3N
							SSAU4740A3S	D1-6	INPUT 6	SSAD4740A3S
							SSAU4740A1NOUTQE	D1-1	INPUT 1	SSAD4740A1N
							SSAU4740A1SOUTQE	D1-2	INPUT 2	SSAD4740A1S
							SSAU4740A2NOUTQE	D1-3	INPUT 3	SSAD4740A2N
							SSAU4740A2SOUTQE	D1-4	INPUT 4	SSAD4740A2S
							SSAU4740A3NOUTQE	D1-5	INPUT 5	SSAD4740A3N
							SSAU4740A3SOUTQE	D1-6	INPUT 6	SSAD4740A3S
AITS4740B AR4740A	HOTWELL	DO	1N 1S 2N 2S 3N 3S	A4741 A4741OUT AGE	A4-1	SLOT 4 INPUT 1	SSAU4740B1N	D1-1	INPUT 1	SSAD4740B1N
							SSAU4740B1S	D1-2	INPUT 2	SSAD4740B1S
							SSAU4740B2N	D1-3	INPUT 3	SSAD4740B2N
							SSAU4740B2S	D1-4	INPUT 4	SSAD4740B2S
							SSAU4740B3N	D1-5	INPUT 5	SSAD4740B3N
							SSAU4740B3S	D1-6	INPUT 6	SSAD4740B3S
							SSAU4740B1NOUTQE	D1-1	INPUT 1	SSAD4740B1N
							SSAU4740B1SOUTQE	D1-2	INPUT 2	SSAD4740B1S
							SSAU4740B2NOUTQE	D1-3	INPUT 3	SSAD4740B2N
							SSAU4740B2SOUTQE	D1-4	INPUT 4	SSAD4740B2S
							SSAU4740B3NOUTQE	D1-5	INPUT 5	SSAD4740B3N
							SSAU4740B3SOUTQE	D1-6	INPUT 6	SSAD4740B3S

NO.	APPROVAL DATE	REVISION	ORIG	CKR	RE	DV	SE
14	2-16-17	INCORP. DCN 1600502.			N/A	N/A	N/A
13	1-16-17	INCORP. DCN 1600570.	ON FILE				
0-12	12-3-83	ISSUED FOR CONSTRUCTION.	SIGNATURES ON FILE				

NO.	APPROVAL DATE	REVISION	ORIG	CKR	RE	DV	SE

SOUTH TEXAS PROJECT NUCLEAR OPERATING COMPANY

PIPING AND INSTRUMENTATION DIAGRAM SECONDARY SAMPLING SYSTEM

PRIORITY	CADD FILE NO.	FSUG. NO.	STI. NO.	SCALE	DWG. NO.	SHT.	REV.
1	9Z329Z47522#1.DGN	D070928	34446681	NONE	9Z329Z47522#1		14

ENGED. JAN

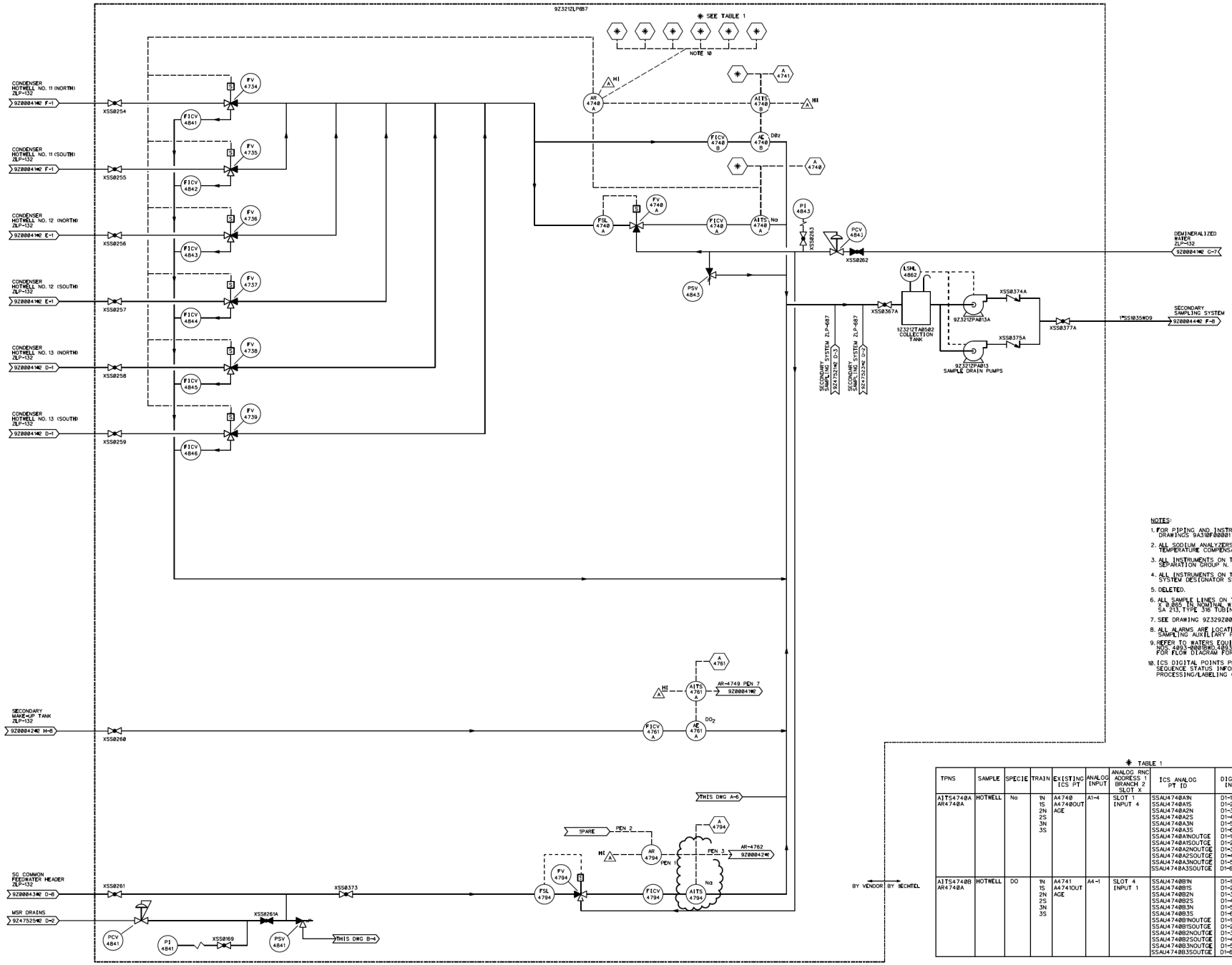

NOTES:

1. FOR PIPING AND INSTRUMENT SYMBOLS SEE DRAWINGS 9A310F00001 AND 9A310F00002.
2. ALL SODIUM ANALYZERS INCLUDE AUTOMATIC TEMPERATURE COMPENSATION.
3. ALL INSTRUMENTS ON THIS P&ID HAVE SEPARATION GROUP N.
4. ALL INSTRUMENTS ON THIS P&ID HAVE SYSTEM DESIGNATOR SS.
5. DELETED.
6. ALL SAMPLE LINES ON THIS P&ID ARE 3/8 IN. OD X 0.065 IN. NOMINAL WALL THICKNESS, ASME GRADE SA 213, TYPE 316 TUBING.
7. SEE DRAWING 9Z329Z00044 FOR ABBREVIATIONS.
8. ALL ALARMS ARE LOCATED ON THE SECONDARY SAMPLING AUXILIARY PANEL.
9. REFER TO WATERS EQUIP. DWG NO. 59784 V.P. NOS. 4003-0001BWD,4001-0001BWD,4013-0002BWD FOR FLOW DIAGRAM FOR VENDOR SUPPLIED COMPONENTS.
10. ICS DIGITAL POINTS PROVIDE ICS WITH SAMPLE SEQUENCE STATUS INFORMATION TO ASSIST IN PROCESSING/LABELING OF POINTS ON TABLE.

SEE TABLE 1

TPNS	SAMPLE	SPECIE	TRAIN	EXISTING ICS PT	ANALOG INPUT	ANALOG RNC ADDRESS 1 BRANCH 2 SLOT X	ICS ANALOG PT ID	DIGITAL INPUT	DIGITAL RNC ADDRESS 1 BRANCH 1 SLOT 1	ICS DIGITAL PT ID
AITS4740A AR4740A	HOTWELL	Na	1N	A4740	A1-4	SLOT 1 INPUT 4	SSAUA4740A1N	D1-1	INPUT 1	SSAD4740A1N
			1S	A4740OUT			SSAUA4740A1S	D1-2	INPUT 2	SSAD4740A1S
			2N	AGE			SSAUA4740A2N	D1-3	INPUT 3	SSAD4740A2N
			2S				SSAUA4740A2S	D1-4	INPUT 4	SSAD4740A2S
			3N				SSAUA4740A3N	D1-5	INPUT 5	SSAD4740A3N
			3S				SSAUA4740A3S	D1-6	INPUT 6	SSAD4740A3S
							SSAUA4740A1NOUTGE	D1-1	INPUT 1	SSAD4740A1N
							SSAUA4740A1SOUTGE	D1-2	INPUT 2	SSAD4740A1S
							SSAUA4740A2NOUTGE	D1-3	INPUT 3	SSAD4740A2N
							SSAUA4740A2SOUTGE	D1-4	INPUT 4	SSAD4740A2S
							SSAUA4740A3NOUTGE	D1-5	INPUT 5	SSAD4740A3N
							SSAUA4740A3SOUTGE	D1-6	INPUT 6	SSAD4740A3S
AITS4740B AR4740A	HOTWELL	DO	1N	A4741	A4-1	SLOT 4 INPUT 1	SSAUA4740B1N	D1-1	INPUT 1	SSAD4740A1N
			1S	A4741OUT			SSAUA4740B1S	D1-2	INPUT 2	SSAD4740A1S
			2N	AGE			SSAUA4740B2N	D1-3	INPUT 3	SSAD4740A2N
			2S				SSAUA4740B2S	D1-4	INPUT 4	SSAD4740A2S
			3N				SSAUA4740B3N	D1-5	INPUT 5	SSAD4740A3N
			3S				SSAUA4740B3S	D1-6	INPUT 6	SSAD4740A3S
							SSAUA4740B1NOUTGE	D1-1	INPUT 1	SSAD4740A1N
							SSAUA4740B1SOUTGE	D1-2	INPUT 2	SSAD4740A1S
							SSAUA4740B2NOUTGE	D1-3	INPUT 3	SSAD4740A2N
							SSAUA4740B2SOUTGE	D1-4	INPUT 4	SSAD4740A2S
							SSAUA4740B3NOUTGE	D1-5	INPUT 5	SSAD4740A3N
							SSAUA4740B3SOUTGE	D1-6	INPUT 6	SSAD4740A3S

NO.	APPROVAL DATE	REVISION	ORIG	CKR	RE	DV	SE	NO.	APPROVAL DATE	REVISION	ORIG	CKR	RE	DV	SE
13	3-28-17	INCORP. DCN 1601486.	SIGNATURES ON FILE		N/A	N/A	N/A								
0-12	2-3-83	ISSUED FOR CONSTRUCTION.													

SOUTH TEXAS PROJECT
NUCLEAR OPERATING COMPANY

PIPING AND INSTRUMENTATION DIAGRAM
SECONDARY SAMPLING SYSTEM

PRIORITY	CADD FILE NO.	FSUG. NO.	STI. NO.	SCALE	DWG. NO.	SHT.	REV.
1	9Z329Z47522#2.DGN	D070928	34465820	NONE	9Z329Z47522#2		13

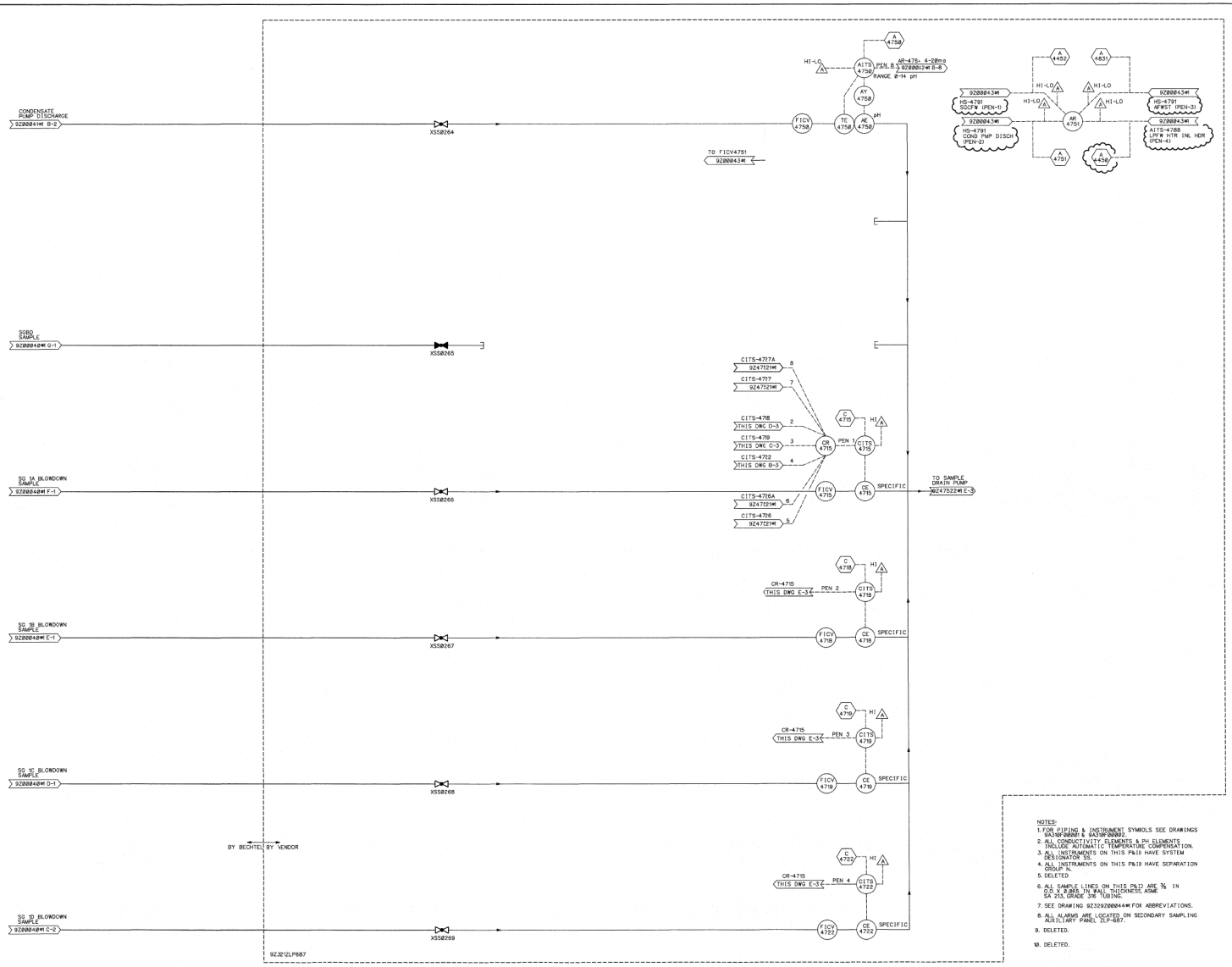

NOTES:

1. FOR PIPING & INSTRUMENT SYMBOLS SEE DRAWINGS 6A338F00001 & 6A338F00002.
2. ALL CONDUCTIVITY ELEMENTS & pH ELEMENTS INCLUDE AUTOMATIC TEMPERATURE COMPENSATION.
3. ALL INSTRUMENTS ON THIS P&ID HAVE SYSTEM DESIGNATOR 3S.
4. ALL INSTRUMENTS ON THIS P&ID HAVE SEPARATION GROUP N.
5. DELETED
6. ALL SAMPLE LINES ON THIS P&ID ARE ¾ IN O.D. X 0.065 IN WALL THICKNESS ASME SA 213, GRADE 316 TUBING.
7. SEE DRAWING 9Z329Z00044WI FOR ABBREVIATIONS.
8. ALL ALARMS ARE LOCATED ON SECONDARY SAMPLING AUXILIARY PANEL 2LP-687.
9. DELETED.
10. DELETED.

NO.	ISSUE DATE	REVISION	ORIG	CKR	RE	DY	SE
12	8-4-14	INCORP. DCN 1401399.	JSH	JSH	N/A	N/A	N/A
11	5-17-12	INCORP. DCN 1100313	VJM	ON FILE			
10	1-4-11	INCORP. DCN 0600795.	JSH	ON FILE			
9	3-12-09	INCORP. DCN 0601385.	KS	ON FILE			
1-8	12-3-83	ISSUED FOR CONSTRUCTION	SIGNATURES ON FILE				

NO.	ISSUE DATE	REVISION	ORIG	CKR	RE	DY	SE

SEED DGN

SOUTH TEXAS PROJECT
NUCLEAR OPERATING COMPANY

PIPING AND INSTRUMENTATION DIAGRAM
SECONDARY SAMPLING SYSTEM

PRIORITY	CADD FILE NO.	FSUG. NO.	STI. NO.	SCALE	DWG. NO.	SHT.	REV.
1	9Z329Z47523WI.DGN	D070928	339148	NONE	9Z329Z47523WI		12

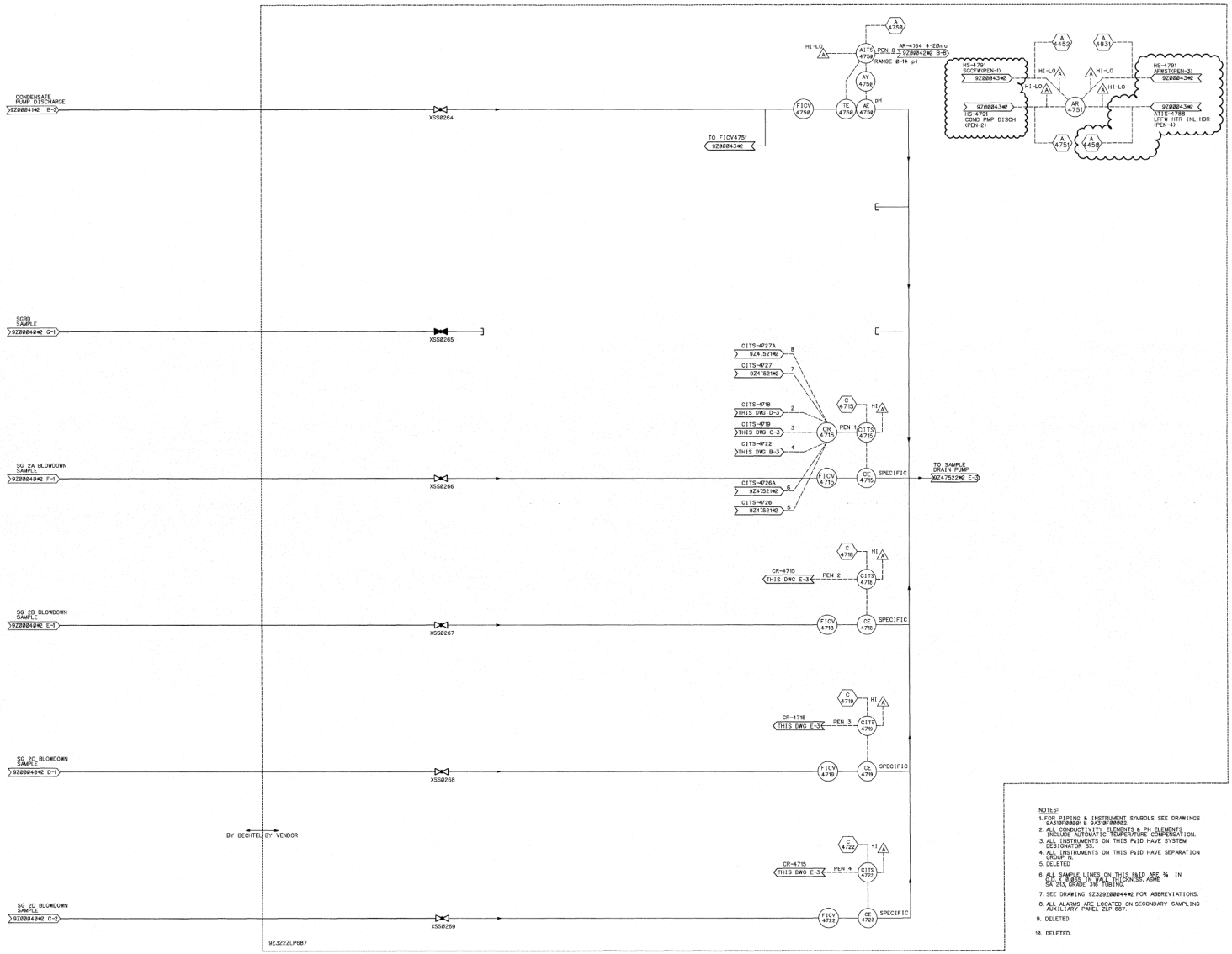

NOTES:

1. FOR PIPING & INSTRUMENT SYMBOLS SEE DRAWINGS 9A310B00001 & 9A310B00002.
2. ALL CONDUCTIVITY ELEMENTS & PH ELEMENTS INCLUDE AUTOMATIC TEMPERATURE COMPENSATION.
3. ALL INSTRUMENTS ON THIS P&ID HAVE SYSTEM DESIGNATOR SS.
4. ALL INSTRUMENTS ON THIS P&ID HAVE SEPARATION GROUP N.
5. DELETED
6. ALL SAMPLE LINES ON THIS P&ID ARE ¾ IN O.D. X 0.083 IN WALL THICKNESS, ASME SA 213, GRADE 316 TUBING.
7. SEE DRAWING 9Z329Z00044W2 FOR ABBREVIATIONS.
8. ALL ALARMS ARE LOCATED ON SECONDARY SAMPLING AUXILIARY PANEL ZLP-687.
9. DELETED.
10. DELETED.

NO.	ISSUE DATE	REVISION	ORIG	CKR	RE	DV	SE	NO.	ISSUE DATE	REVISION	ORIG	CKR	RE	DV	SE
11	1/26/98	INCORP. DCN 14015411	NF		N/A	N/A	N/A								
9-10	12-3-93	ISSUED FOR CONSTRUCTION	SIGNATURES ON FILE												

SOUTH TEXAS PROJECT
NUCLEAR OPERATING COMPANY

PIPING AND INSTRUMENTATION DIAGRAM
SECONDARY SAMPLING SYSTEM

PRIORITY	CADD FILE NO.	FSUG. NO.	STI. NO.	SCALE	DWG. NO.	SHT.	REV.
1	9Z329Z47523W2.DGN	D070928	3426744	NONE	9Z329Z47523#2		11

ESEED.DGN

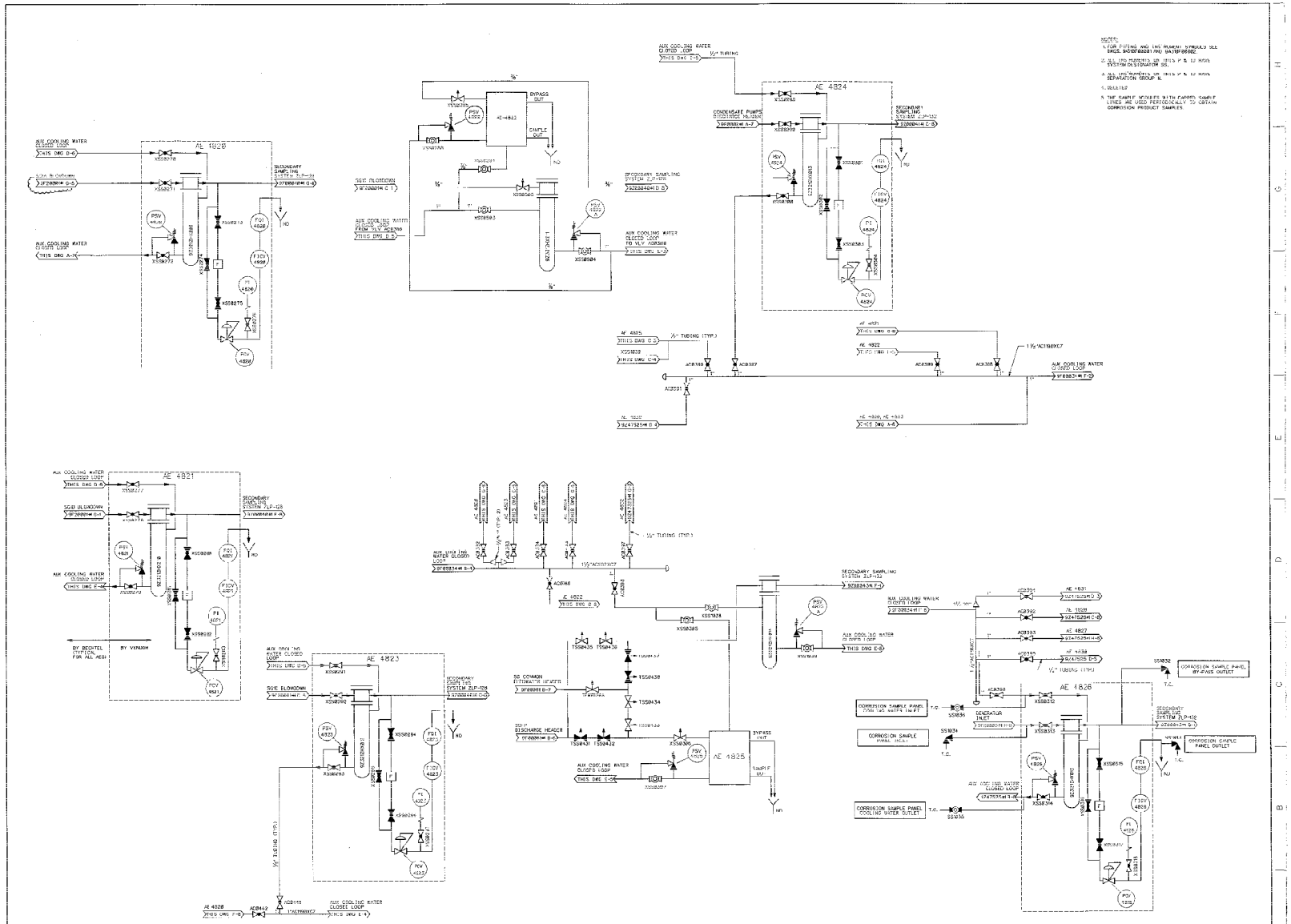

REV. NO.	ISSUE DATE	REVISION	ORTG	CKR	RE	DV	SE	NO.	ISSUE DATE	REVISION	ORTG	CKR	RE	DV	SE
12	7-14-11	REVISED PER CR 1-98-119.	VLM												
11	1-18-08	INCORP. DCN 8801038.	JCL	ON FILE											
10	5-27-02	INCORP. DCN 8200808 & 8102356.	JS-4	ON FILE											
0-9	12-7-81	ISSUED FOR CONSTRUCTION.	SIGNATURES ON FILE												

SOUTH TEXAS PROJECT
NUCLEAR OPERATING COMPANY

PIPING AND INSTRUMENTATION DIAGRAM
SECONDARY SAMPLING SYSTEM

PRIORITY	GOD FILE NO.	FSJC. NO.	STI. NO.	SCALE	DWG. NO.	SHT.	REV.
1	FJA257.121	D870926	32901504	NONE	9Z329Z47524#1		12

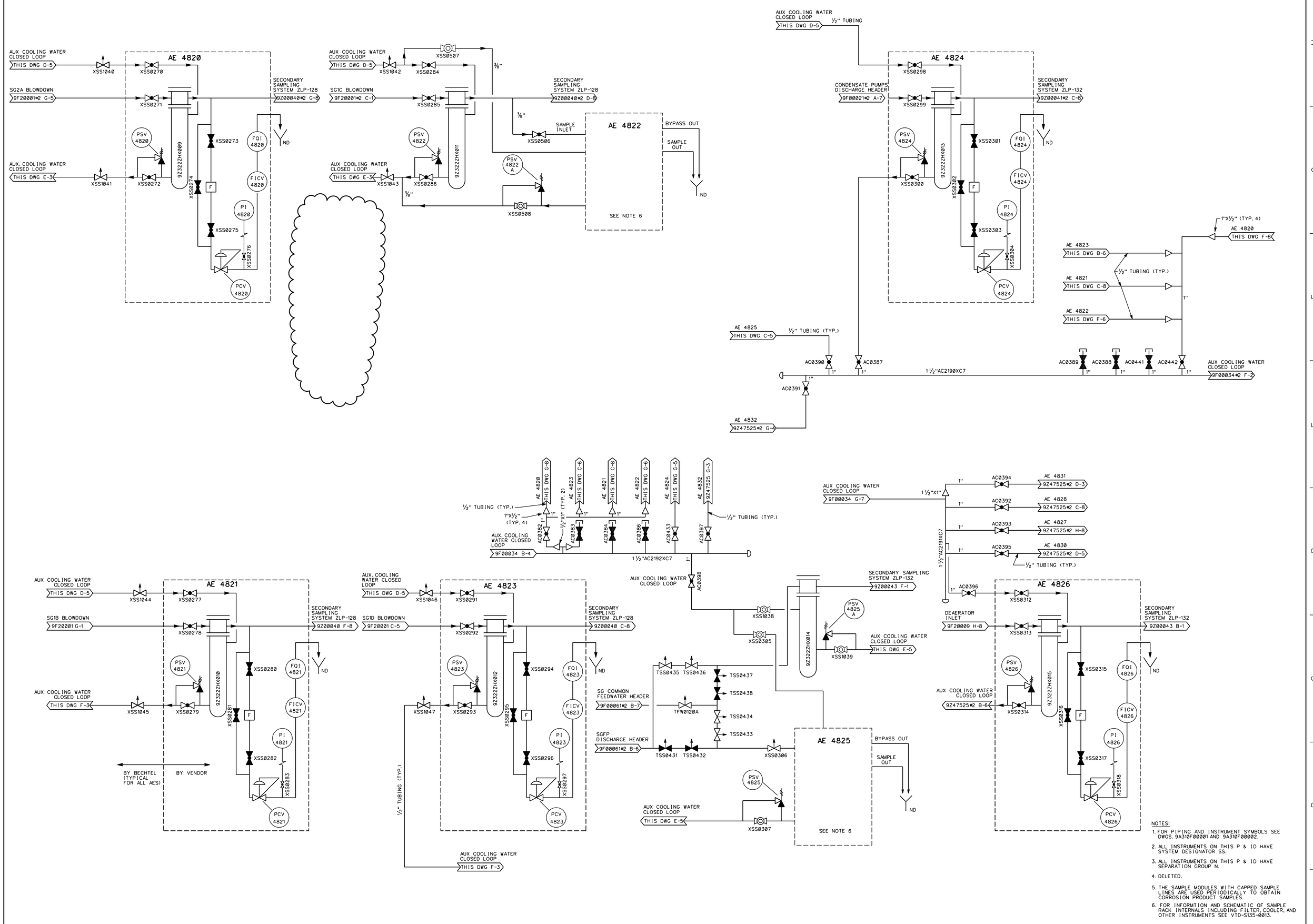

NOTES:

1. FOR PIPING AND INSTRUMENT SYMBOLS SEE DWGS. 9A310F00001 AND 9A310F00002.
2. ALL INSTRUMENTS ON THIS P & ID HAVE SYSTEM DESIGNATOR SS.
3. ALL INSTRUMENTS ON THIS P & ID HAVE SEPARATION GROUP N.
4. DELETED.
5. THE SAMPLE MODULES WITH CAPPED SAMPLE LINES ARE USED PERIODICALLY TO OBTAIN CORROSION PRODUCT SAMPLES.
6. FOR INFORMTION AND SCHEMATIC OF SAMPLE RACK INTERNALS INCLUDING FILTER, COOLER, AND OTHER INSTRUMENTS SEE VTD-S135-0013.

NO.	APPROVAL DATE	REVISION	ORIG	CKR	RE	DV	SE
14	1-28-20	REVISED PER CR 20-739.	N/A	N/A	N/A	N/A	N/A
0-13	12-3-83	ISSUED FOR CONSTRUCTION.	SIGNATURES ON FILE				

NO.	APPROVAL DATE	REVISION	ORIG	CKR	RE	DV	SE

SOUTH TEXAS PROJECT
NUCLEAR OPERATING COMPANY

PIPING AND INSTRUMENTATION DIAGRAM
SECONDARY SAMPLING SYSTEM

PRIORITY	CADD FILE NO.	FSUG. NO.	STI. NO.	SCALE	DWG. NO.	SHT.	REV.
1	9Z329Z47524#2.DGN	D070928	34977381	NONE	9Z329Z47524#2		14

ESEED.DGN

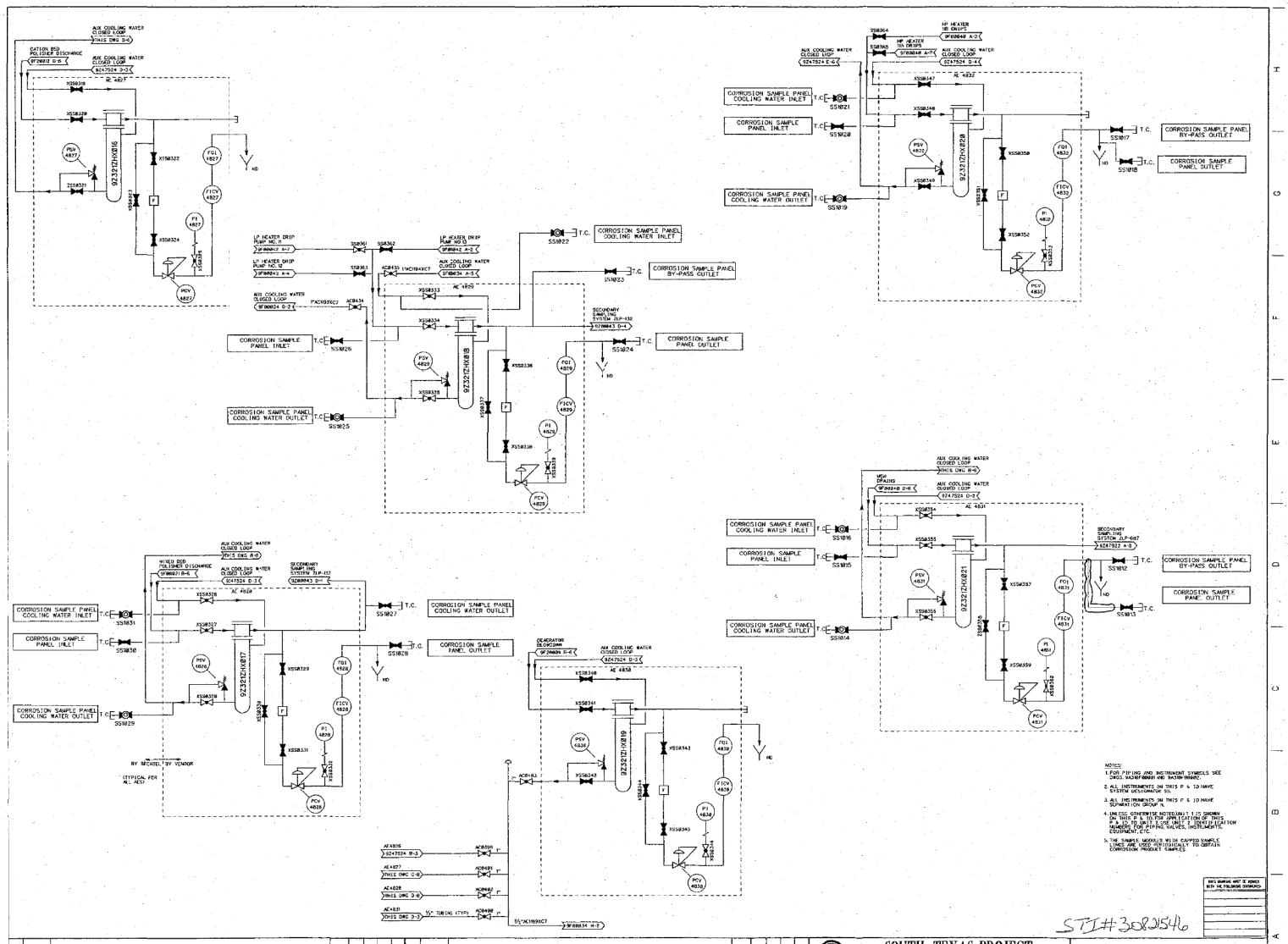

NOTES:

1. FOR PIPING AND INSTRUMENT SYMBOLS SEE DWGS. 9A3N7B0001 AND 9A3N7B0002.
2. ALL INSTRUMENTS ON THIS P & ID HAVE SYSTEM DESIGNATOR SS.
3. ALL INSTRUMENTS ON THIS P & ID HAVE SEPARATION GROUP N.
4. UNLESS OTHERWISE NOTED(NN) 1 1/2 SHOWN ON THIS P & ID FOR UNIT 1 (UNITS OF THIS P & ID TO UNIT 2 USE UNIT 2 IDENTIFICATION NUMBERS FOR PIPING, VALVES, INSTRUMENTS, EQUIPMENT, ETC.
5. THE SAMPLE MODULES WITH CAPPED SAMPLE LINES ARE USED PERIODICALLY TO OBTAIN CORROSION PRODUCT SAMPLES.

STI#3682546

REV	DATE	REVISION	ORIG	CKR	RE	DV	SE
8	2/16/94	REVISED PER DCP 93-8133-2 SUPPLEMENT 3	JSH				
0-7	12-3-83	ISSUED FOR CONSTRUCTION	SIGNATURES ON FILE				

SOUTH TEXAS PROJECT
NUCLEAR OPERATING COMPANY

PRIORITY	RMSECM NO.	DOCCTL NO.	CADD FILE NO.
1	9Z329Z47525#1	D070928	FJA258.001

PIPING AND INSTRUMENTATION DIAGRAM
SECONDARY SAMPLING SYSTEM

SCALE	DWG. NO.	REV.
NONE	9Z329Z47525#1	8

NOTES:

1. FOR PIPING AND INSTRUMENT SYMBOLS SEE DWGS. 9A310F00001 AND 9A310F00002.
2. ALL INSTRUMENTS ON THIS P&ID HAVE SYSTEM DESIGNATOR SS.
3. ALL INSTRUMENTS ON THIS P&ID HAVE SEPARATION GROUP N.
4. UNLESS OTHERWISE NOTED,UNIT 1 IS SHOWN ON THIS P & ID FOR APPLICATION OF THIS P & ID TO UNIT 2.USE UNIT 2 IDENTIFICATION NUMBERS FOR PIPING, VALVES, INSTRUMENTS, EQUIPMENT, ETC.
5. THE SAMPLE MODULES WITH CAPPED SAMPLE LINES ARE USED PERIODICALLY TO OBTAIN CORROSION PRODUCT SAMPLES.
6. ALL SAMPLES LINES ON THIS P&ID ARE 3/8"IN.O.D.X 0.065. IN WALL ASME SA213 GRADE 316 TUBING UNLESS OTHERWISE NOTED.

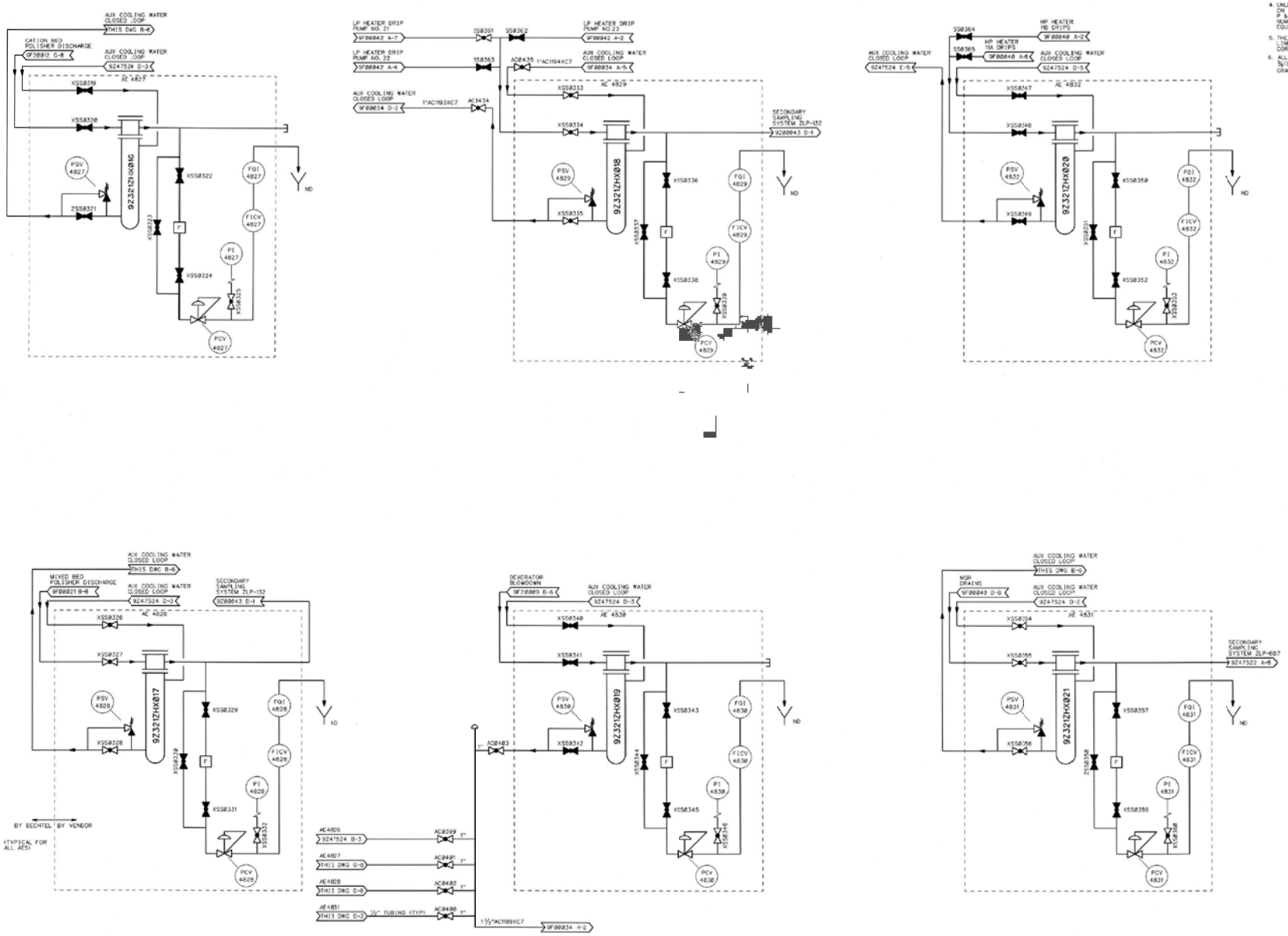

NO.	ISSUE DATE	REVISION	ORIG	CKR	RE	DV	SE	NO.	ISSUE DATE	REVISION	ORIG	CKR	RE	DV	SE
8	7-8-86	REVISED PER CR# 86-69-16.	JSH												
0-7	12-3-83	ISSUED FOR CONSTRUCTION.	SIGNATURES ON FILE												

ISSUED FOR

SOUTH TEXAS PROJECT NUCLEAR OPERATING COMPANY

PRIORITY	CADD FILE NO.	FSUG NO.	STI. NO.	SCALE	DWG. NO.	SHT.	REV.
1	FJA758.881	D070928	31984647	NONE	9Z329Z47525#2		8

PIPING AND INSTRUMENTATION DIAGRAM
SECONDARY SAMPLING SYSTEM