GE Nuclear Energy

General Electric Company
175 Curtner Avenue, San Jose, CA 95125

January 18, 1993

Docket No. STN 52-001

Chet Poslusny, Senior Project Manager
Standardization Project Directorate
Associate Directorate for Advanced Reactors
and License Renewal
Office of the Nuclear Reactor Regulation

Subject: Submittal Supporting Accelerated ABWR Review Schedule

Dear Chet:

Attached are the responses to the memo pertaining to the clarification on LOCAs outside of containment (G. Kelly to J. Duncan, December 22, 1992).

Please provide Mr. Palla with a copy of these responses.

Sincerely,

Jack Fox

Jack Fox
Advanced Reactor Programs

cc: Jack Duncan (GE)
Norman Fletcher (DOE)

JF93-05

See attached Distribution

2222

1/1

January 10, 1993

CC: JD Duncan
N Fletcher (DOE)

To; Glenn Kelly
From: PD Knecht

Subject: Responses to Questions

Reference: Clarification of Submittal on LOCAs Outside of Containment, Memo: Kelly to Duncan, December 22, 1992

The following responses are provided to the referenced request for clarification on the information contained in SSAR section 19E.2.3.3, "Suppression Pool Bypass Paths".

Concern 1

1. Table 19E.2-21 - (a) Is this table complete in its evaluation of all possible bypass paths? (b) If not, do we know what has not been evaluated here? (c) Do we know the limitations?

RESPONSE

Table 19E.2-21 contains only those lines which were not excluded from further concideration. The complete listing of lines considered is provided in Table 19E.2-1 along with the bases for exclusion of certain lines.

2. (a) When estimating the conditional bypass probability, explain how EQ was taken into account. (b) Address [how] GE assured that potentially affected equipment was qualified? (c) If equipment was not known to be qualified, how was it handled?

RESPONSE

(a) The conditional probability of line isolation (X_1)is not significantly affected by Equipment Qualification (EQ) concerns since actuation of the isolation valves occurs shortly after a break occurs and no active function is required after valve closure. Furthermore, since redundant isolation valves are not located in the same area, a diverse enviroment exists. Core cooling (Q_o) is not affected by enviromental concerns since the equipment in the division affected was conservatively assumed not to function. The environmental effects on other divisions are discussed with respect to the value of Q_1, "Second division not affected".

(b) The qualification of potentially affected equipment was addressed by only relying on equipment in unaffected areas.

(c) Equipment in an affected divisional area was not relicd upon in the evaluation.

3. (a) For Figures 1, 2, and 3 in the December 17, 1992 GE draft SSAR submittal, explain how each value of X_1 is calculated. It is unacceptable merely to state that the calculation is similar to other calculations in the staff's possession, although identical calculations can be referenced. (b) Similarly, provide the calculations for Q_o.

RESPONSE

(a) Figures 1, 2, and 3 of the December submittal are included as Figures 19E.2-20 a, b, and c in the revised section 19E.2.3.3. As indicated in section 19E.2.3.3.4, the calculation of X_1 is based on the formulas shown in Table 19E.2-21. Because the line failure probabilities were treated separately in the Figure 19E.2-20 trees, the values corresponding to the number of lines and the break probabilities (P13, P14 and P15) were not included in the values indicated.

(b) The basis for the values of Q_o is provided in section 19E.2.3.3.4. The calculation of the values was accomplished by examining the ratio of core damage frequency to initiating event frequency in the PRA fault trees. Values with degraded divisions were obtained by recalulating the fault trees with the most limiting division(s) disabled. Only the results of this process were provided in Section 19E.2.3.3.4.

4. For medium and large breaks, GE claims that because of the depressurization caused by such break sizes, the rate of loss of inventory from the break (after some unspecified time) is compensated for by available makeup sources outside of containment, such as firew ater. No basis is given for this claim. (a) how much time does an operator have to switch over to an outside source if a break occurs outside of containment? (b) Explain how this makeup will be provided at a dry site (perhaps one with cooling towers or a spray pond). (c) Provide further information/commitments to assure that makeup will be available until the plant can be brought to a safe, stable state.

RESPONSE

(a) Emergency Procedure Guidelines specify that sources external to the containment be used whenever suppression pool level is not maintained. Sources of external makeup include not only firewater, but also HPCF, feedwater/condensate and the RHR Service water Crosstie which can be initiated from the control room. The choice of makeup system is at the operator discretion and depend, in part, on the size of the break. Operator action to achieve a stable long-term response would be the time before the external supplies such as condensate storage are exhausted or until the break can be isolated. This would be expected to be on the order of

several hours.

(b) Makeup at a "dry site" is assured once the break has been isolated. Any further consideration of this consideration should be provided by an applicant.

(c) Actions to provide makeup to achieve a safe stable state are provided by the Emergency Procedure Guidelines.

Concern 2

1. GE's response to concern 2 (whether GE's analysis was exhaustive in searching for and discovering potential bypass lines) is not satisfactory. Provide a judgement on bypass potential based on up-to-date P&IDs, not those from 1988.

RESPONSE

The complete listing of potential bypass lines is included in Table 19E.2-1. This listing has been verified against the most current drawings of the ABWR containment isolation system (GE Drawing 107E5042).

Concern 3

1. It appears that the value of Q_1 (failure of another division) was estimated to be 1E-3 if the LOCA in the secondary containment occurred near another division wall. (a) Please amplify on how this was determined and what was the basis for deciding which LOCAs were or were not 1E-3 events. (b) Also please explain how the values of Q_1 and Q_o in Figure 2 (Medium LOCA Outside of Containment) were determined.

RESPONSE

(a) The basis for the value of Q_1 is described in section 19E.2.3.3.4 as conservative engineering judgement. An impact on the second division was judged to occur primarily due to compartment pressurization or environmental effects. Since the reactor building equipment of concern is qualified for the steam environment and pressurization is largely accomodated by relief of the blowout panels, the probability of consequential effect was judged to be remote. A value of 1E-3 was considered to be consistent with this judgement.

(b) The values of Q_1 in figure 2 (now Figure 19E.2-20B) was based on engineering judgement as discussed in the response above. The Value of Q_o is indicated in a table include with the discussion of Q_o in section 19E.2.3.3.4 for medium size LOCAs. The development of the tree shows the loss of divisions assumed.

2. Please explain the assumed effect that LOCAs outside of secondary containment will have on ac or dc power circuits that power divisions inside of containment.

RESPONSE

As indicated on Table 19E.2-1, potential bypass paths outside of secondary containment relief into the steam tunnel portion of the turbine building. No ac or dc electrical distribution centers are located in this area. The only divisional equipment are dc solenoids associated with the MSIV solenoids and ac motor operated containment isolation valves associated with the main steamline drains. Fuses or circuit breakers associated with these safety related components assure that their failure does not affect the remaining portions of the divisional electrical supply. Therefore no effect of this type of bypass path was considered.

Therefore, it is necessary only to consider static loads on the containment.

A simple analysis was performed to determine the effect of the added hydrogen mass and heat energy associated with 100% fuel-clad metal water reaction. Since the design basis accident for peak containment pressure is a large break LOCA, this accident was chosen as the basis for the analysis.

In order to simplify the analysis several conservative assumptions were made. Since it is not possible to release the hydrogen before the first pressure peak, only the second peak is considered. The hydrogen is distributed in the same manner as the nitrogen. All of the metal water reaction heat energy is assumed to be absorbed by the suppression pool water. Finally, no credit was taken for the drywell and wetwell heat sinks.

Consideration of 100% fuel clad metal water reaction results in a peak pressure of about 75 psig. The governing service level C (for steel portions not backed by concrete)/factored load category (for concrete portions including steel liner) pressure capability of the containment structure is 97 psig which is the internal pressure required to cause the maximum stress intensity in the steel drywell head to reach general membrane yielding according to service level C limits of ASME-III, Division 1, Subarcticle NE-3220. Therefore, the ABWR is able to withstand 100% fuel clad metal water reaction as required by 10 CFR 50.34(f).

19E.2.3.3 Suppression Pool Bypass Paths

19E.2.3.3.1 Introduction

This section reviews the potential risk of certain suppression pool bypass paths and demonstrates that, with the exception of the wetwell drywell vacuum breakers, and certain other lines, bypass paths present no significant risk following severe accidents. Because of this insignificance, only the vacuum breakers and the other lines require further consideration in the ABWR PRA. The approach used in this evaluation is similar to that submitted to the NRC in support of the GESSAR (Reference 7) review.

The results of the evaluation is that bypass lines evaluated contribute no more than about 10% of the total plant risk and therefore do not need to be specifically evaluated further in the PRA.

(1) Definition of Suppression Pool Bypass

Suppression Pool Bypass is defined as the transport of fission products through pathways which do not include the suppression pool. In such cases, the scrubbing action for fission product retention is lost and the potential consequences of the release are higher.

The potential for suppression pool bypass has been a subject of analysis since the early days of WASH 1400 (Reference 6). The "V" sequence which represented a break of the low pressure line outside of the primary containment was one of the more dominant release sequences in WASH 1400. The IDCOR analysis and BMI-2104 also reviewed sequences in which the suppression pool scrubbing action was not obtained in the release pathway.

In order to review the importance of suppression pool bypass pathways, the potential mechanisms, probabilities and source locations were reviewed to identify where fission products might be released outside of the containment. The analysis has conservatively focused on the station blackout event because it leads to a higher likelihood of suppression pool bypass and because it is considered one of the more probable initiating events for core damage sequences.

The principle conclusion of the review is that, with the exception of certain lines addressed in containment event trees of the PRA, suppression pool bypass pathways do not contribute significantly to risk. Consequently, the probabilistic risk assessment does not require a separate evaluation of bypass sequences, unless the sequences develop during the course of an event, for example, as a result of low suppression pool water level. Such cases are considered in Section 19D.5.7.

Nevertheless, certain bypass lines which result from piping failures outside of the primary containment are included in this review in order to assess their significance.

(2) Mechanisms for Suppression Pool Bypass

All lines which originate in the reactor vessel or the primary containment are required by sections of 10CFR50 to meet certain requirements for containment isolation. Lines which originate in the reactor

exceptions to the General Design Criteria (NUREG 0800, Section 6.2.4) and are permitted to have remote manual isolation valves, provided that a means is available to detect leakage or breaks in these lines outside of the primary containment.

A potential mechanism for suppression pool bypass is the "Ex-containment LOCA" which results from the combined failure of a line outside of the primary containment along with the failure of its redundant isolation valves to close. If this combination of events occurs, the operator is made aware of the situation through leakage detection alarms and is instructed by plant procedures to manually isolate the lines, if possible, when the sump water level in areas outside containment exceeds a predetermined point.

Because of these provisions the probability of suppression pool bypass occurring from the "Ex-containment LOCA" is extremely small since it requires the simultaneous failures of a piping system, redundant and electrically separate isolation valves and the failure of the operator to take action. Subsection 19E.2.3.3.4 summarizes an evaluation of the core damage frequency from ex-containment LOCAs.

The plant design criteria ensure a highly reliable system for containment isolation. Nevertheless, even though there is diversity in the types of valves, all types have experienced failures at operating nuclear plants and certain events, such as station blackout event, may make the early isolation of some lines impossible. This section evaluates the significance of bypass paths in order to justify that no additional treatment in the PRA is neccessary.

(3) Methodology for Evaluation of Suppression Pool Bypass

The evaluation of suppression pool bypass pathways is based on a methodology which evaluates the potential relative increase in offsite consequence from bypass events over those events with suppression pool scrubbing. Then, knowing this amount of increase, if it can be shown that the probability of bypass is sufficiently low as to offset the increased consequence, the added risk from these pathways will be insignificant.

The justification for this approach is as follows:

$$\text{Risk} = \text{Total [Event Frequency x Consequence]} \quad (30)$$

$$= F_{nbp} \times C_{nbp} + F_{bp} \times C_{bp} \quad (31)$$

where: F_{nbp} = The total core damage frequency of non-bypass events

C_{nbp} = The consequence of a non-bypass event

F_{bp} = The total core damage frequency by bypass events which are equivalent to a complete bypass of the suppression pool

C_{bp} = The consequence of a complete bypass event

If the total bypass risk is to be insignificant, the last term in equation ~~(X)~~ 31 must be much less than the first, or:

$$\frac{F_{bp}}{F_{ubp}} \ll \frac{C_{nbp}}{C_{bp}} \quad (32)$$

The total bypass and non-bypass event frequencies (F) noted above are the total core damage frequencies for these events assuming that all events have the same consequence. Since this is seldom the case, the bypass frequency must be defined such that the proper consequence is applied. This is accomplished through evaluation of flow split fractions (f) as discussed below.

The total bypass frequency can be expressed as:

$$F_{bp} = F_{cd} \times \sum_i P_{cbpi} \quad (33)$$

where: F_{cd} = The total core damage frequency

P_{cbpi} = The total conditional probability of full suppression pool bypass path i, given a core damage event.

The conditional probability of full bypass can be further refined by the expression:

$$P_{cbpi} = P_{bpi} \times f_i \quad (34)$$

where: f_i = The fraction of fission products generated during a core damage event which pass through line i (subsection 19E2.3.3.3 (1) discusses this term in more detail)

The flow split fraction (f) is defined as the ratio of the flow rate which passes out of the bypass pathway to the total flow rate of aerosols generated during the core melt process. The line flow split reduces the consequence associated with smaller lines due to inherent flow restrictions in those lines as compared with the consequence of larger lines. The flow split fraction accounts for this consequence reduction by reducing the equivalent bypass probability.

and P_{bpi} = The conditional probability of bypass in line i (Section 19E2.3.3.3 (2) discusses this term in more detail).

The conditional probability of bypass is established through a detailed evaluation of each potential bypass pathway, establishing the failure which must occur for a bypass path to develop and assigning a probability to that failure.

Core damage events result in essentially two types of release: releases which bypass the suppression pool and those that do not. With this simplification, the total non-bypass frequency can also be defined as:

$$F_{nbp} = F_{cd} - F_{bp} \quad (35)$$

Inserting equations (33), (34) and (35) into equation (32) yields:

$$P_{bpi} \times f_i << C_{nbp}/C_{bp} \quad (36)$$

assuming F_{bp} is much less than F_{cd} which would be consistent with the bases for containment isolation.

If equation (36) is satisfied, then the total bypass risk is insignificant.

(4) Criteria for Exclusion of Bypass Sequences in the PRA

As noted previously, if it can be shown that the probability of bypass is sufficiently low as to offset the increased consequence, the risk resulting from release through bypass pathways will be insignificant.

To establish a threshold for this frequency, the consequence ratio (right side of equation 36) was evaluated using the MAAP 3B-ABWR and CRAC codes to establish the approximate order of magnitude for evaluation purposes. To establish a threshold for this frequency, the consequence ratio (right side of equation (36)) was evaluated using the MAAP 3B-ABWR and CRAC codes to establish the approximate order of magnitude for evaluation purposes.

For non-bypass case, the offsite dose from normal containment leakage following core damage was used as a basis. "NCL", described in Appendix 19P, is the consequence from normal containment leakage; "Case 7" may be used as an approximation of the full suppression pool bypass consequence.

The corresponding ratio based on values in Table 19P.2-1 is 8.4E-4 which can be used in the evaluation of pool bypass significance. Further evaluation of "Ex-containment LOCA" suppression pool bypass paths in the PRA is not necessary if it can be shown that the total bypass probability is significantly less than this consequence ratio.

19E.2.3.3.2 Identification and Description of Suppression Pool Bypass Pathways

Identification of the potential suppression pool bypass pathways was based on information in the ABWR Standard Safety Analysis Report and supporting piping and instrument diagrams. The potential pathways are shown in matrix form in Table 19E.2-18.

Table 19E.2-1 summarizes the results of reviewing the ABWR design for lines which are potential pathways. For each line the table provides the line sizes, pathways and type of isolation up to the second isolation valve. The bypass lines identified in Table 19E.2-1 were derived from a systematic review of the ABWR P&IDs and other drawings.

Several lines in Table 19E.2-1 were excluded from further consideration on the basis of a variety of judgements discussed in the table notes. In general, the exclusion was based on deterministic rather than probabilistic arguments. For instance, the RWCU return line to feedwater and LPFL Loop A were included in Table 19E.2-1 and excluded from further analysis because the bypass path is protected by the feedwater check valves.

The remaining lines are considered potential sources for significant fission product release following severe accidents. Although the probability that these lines could release a significant amount of fission products is extremely small, they are reviewed further in Subsection 19E.2.3.3.3 to assess the importance of these releases.

19E2.3.3.3 Evaluation of Bypass Probability

Equation (36) of Section 19E2.3.3.1 establishes the need for evaluation of the flow splits and failure probability for each line not excluded in Table 19E.2-1. This section provides the basis for the evaluation of each of these factors.

(1) Evaluation of Bypass Flow Split Fraction (f_i)

To assess the fraction of aerosol release which bypass the suppression pool a flow split fraction is needed, the flow split fraction (f) is defined as the ratio of the flow rate which passes out of a bypass pathway to the total flow rate of aerosols generated during the core melt process. Two generalized bypass paths have been evaluated: 1) a path from the RPV which passes to the reactor building with the remainder passing to the suppression pool through the SRVs and 2) a path from the drywell to the reactor building with the remainder passing to the suppression pool through the drywell vents.

The flow split fraction may be defined as:

$$f = W_j/W_j + nW_k \qquad (37)$$

where W_j = the flow rate which passes through the bypass pathway

W_k = the vent flow rate in a single line (SRV or drywell vent) which passes to the suppression pool

n = the number of flow paths to the suppression pool

This can be simplified into the form:

$$f = f' / 1+f' \qquad (38)$$

where $f' = W_j/nW_k$

From the formula for turbulent compressible fluid flow (Reference 7)

$$W = 1891\, Yd^2\, [(dP)/KV]^{1/2} \qquad (39)$$

where W = j or k (lb/hr)
Y = Expansion factor
d = Internal diameter (in)
(dP) = Differential pressure (psid)
K = Resistance coefficient = f "L/D + K'
f " = friction factor
L/D = pipe length to diameter ratio, including corrections for valves, bends
K' = additional factors for entrance and exit effects
V = Specific volume of fluid (cf/lb)

Solving for f ',

$$f' = 1891\, Y_j d_j^2 [dp/KV]^{1/2} / 1891\, ny_k d_k^2 [dp/KV]^{1/2}$$
$$= Y_j d_j^2 [dp/K]^{1/2} / nY_k d_k^2 [dp/K]^{1/2} \qquad (40)$$

Equation (40) may be rearranged to show:

$$f' = (1/n)\, [Y_j/Y_k]\, [d_j/d_k]^2 \times [dP_j/dP_k]^{1/2}\, [K_k/K_j]^{1/2} \qquad (41)$$

The expressions in equation (41) were evaluated numerically for the actual line configurations to arrive at the flow split fractions used. The following assumptions were made in this analysis:

1. Containment pressure following the core melt is assumed to be at an average of 45 psig during the post core melt period. Although the containment pressure could eventually increase to a higher level, the average is used to assess the total amount of release since a release would be occurring throughout this period. This pressure is typical of those calculated in severe accident analyses (see

Figures 19E.2-2 through 19E.2-12)

2. Prior to RPV melt-through, the reactor pressure vessel (RPV) is maintained at a relatively low pressure (100 psig) by the automatic depressurization system or equivalent manual operator action. Four ten inch safety relief valves (ADS valves) are conservatively assumed to be open to release RPV effluent to the suppression pool. This is consistent with the minimum instructions in the EPGs. Ten 24 inch drywell vent paths are consistent with the ABWR design configuration. For conservatism the vents are assumed to be one quarter uncovered.

3. The pressure drop in the bypass path between the fission product source and the release point is a function of whether the line produces sonic or sub-sonic velocities. For RPV sources, an average 100 psig internal RPV pressure is assumed during the core melt process. This is based on an average 45 psig drywell pressure and an assumed SRV design which closes the SRV when a differential pressure of about 50 psid exists between the main steamline an the SRV discharge line.

   Depressurization of the RPV or containment through the bypass path is not considered. The assumption is made that pressure is continuously generated during the severe accident in sufficient quantity to uncover the SRV discharge or drywell vents.

4. The pressure from in the non-bypass path between the fission product source and the suppression pool release point depends on the suppression pool level. The suppression pool level is assumed to be higher than normal because of the depressurization of the RPV to the Suppression pool through the SRVs. For RPV sources, the SRVs experience about a 20 foot (6.0M) elevation head over the SRVs during the core melt process. For drywell sources a 15 foot (4.5M) elevation head is experienced over the upper horizontal vent. For the station blackout sequence, the effect of ECCS system operation on suppression pool level has been ignored.

5. The length of lines discharging to the suppression pool and through the bypass paths affects the resistance coefficient Equation (39). Based on the ABWR arrangement drawings this length is estimated to be approximately 85 ft. (25 M). For the drywell sources, the path to the suppression pool is estimated to be 5 ft. (1.5 M)

   Other values used in the calculation are listed below:

Parameter	Assumed Value	Basis
Resistance Coefficient (K = f'L/D)		14
Friction Factor	.011 to .018	Ref 8 (pg A-25) Size dependent)
Line Diameter (D)	Various	Line size (see Table 19E.2-1)
Other Resistances (K)		Ref 8 (pg A-30) 14
Gate valve	13	
Check valve	135	
Globe valve	340	
Entrance effects	.5	
Exit effects	1.0	14
Expansion Factor (Y)	.6 to .9	Ref 8 (pg A022) (dP, K dep.)

Table 19E.2-19 shows sample results (f' from equation 41) for a line with two motor operated valves. In the evaluation of individual bypass lines the actual configuration is used. The evaluation of flow split fractions is considered to be conservative for several reasons:

(a) Bypass release paths would normally be expected to be more restricted than evaluated due to smaller lines, more valves and pipe bends, valves being partially closed or pipe breaks being smaller than the piping diameter.

(b) No credit is taken for additional retention of fission products in the reactor building, in piping or through radioactive decay.

(c) For drywell sources, a higher than analyzed differential pressure should exist between the drywell and wetwell. This will lead to lower flows through the bypass path.

(2) Evaluation of Failure Probabilities (P_{bpi})

The failure probabilities used for the detailed calculation of the bypass probabilities are summarized in Table 19E.2-20. The bases for these probabilities are provided below:

(a) The failure to close probability (P1) for the steam pilot MSIVs is judged to be somewhat higher than for comparable MSIVs in currently operating plants because of its reliance on operation of a steam pilot solenoid rather than an air pilot solenoid. Steam pilot valves have not proved very reliable in operating plants since the relatively high temperature tends to lead to binding or sticking in the solenoid valves. The current operating plant MSIV failure to close probability is about 4E-3/demand with a common mode failure probability of about 1E-4/demand. For this evaluation a higher common mode failure probability of 1E-4 is assumed for failure of both valves in a single line to close.

(b) Current operating plants evaluate MSIV leakage against a leakage requirement of 11.5 SCFH per valve. About 50% of the valves typically fail this local leak rate test at this level and about 10% are believed to typically exceed the 640 SCFH level allowed by ABWR proposed technical specifications. The leakage probability (P2) used in this analysis was based on three leakage groups:

Group	Leakage	Probability Per Valve	Probability Per Line
G1	< 11.5 scfh	.5	.5
G2	11.5 to 640 scfh	.4	.2
G3	> 640 scfh	.1	.01

The MSIV leakage probability (P2) is assigned a value of .71 to correspond to the total line leakage probability. Flow split fractions were determined for each of the groups and a weighted average flow split fraction (weighted by the line leakage probabilities) was determined for use in the evaluation.

(c) The probability of flow passing to the main condenser is judged to be governed by the failure of the bypass valve to close. This probability (P3) is taken at 4E-3 from Reference 8. Once flow passes to the main condenser, the condenser is assumed to fail (P4) via the relatively low positive pressure rupture disks.

(d) The main steamline break probability (P5) was line break probability (P15).

(e) Normally open pneumatic (P6) and DC motor operated valves (P7) have failed to close. Causes include improper setting of torque switches leading to valve stem failure, undetected valve operator failures and improper packing materials or lubricants. GE has issued several service information letters on valve problems and recommended actions to prevent recurrence of the failures. The industry failure rates for motor operated valves is about 3.6E-3/demand and 4.1E-3 for air operated valves. These failure rates are not significantly affected by the valve environments. A common cause failure among air operated valves was considered for lines containimg redundant series valves. For these lines a Beta factor of .18 was used for the failure of the second valve.

(f) AC solenoid and motor operated valves are subject to a common mode failure (P8) if motive power is unavailable such as during a Station Blackout event. For station blackout events these valves will have a conditional failure probability of 1.0. For this analysis a failure probability of 1.0 was conservatively assumed.

(g) Check valves have been observed to fail in such a way as to permit full reverse flow, a condition necessary to permit suppression pool bypass for some lines. Maintenance errors associated with testable check valves have also been observed. The industry failure rates for check valves allowing complete reverse flow (P9), based on 7000 hours of operation per operating cycle, is about 8.4E-3 per cycle. A common cause failure among check valves was considered for lines containing redundant series check valves. Only Feedwater and the SLC paths contain more than one check valve. For these lines a Beta factor of .18 was used for the failure of the second valve.

(h) When power is available, some normally closed valves open during an event in response to an injection signal, even though the actual injection fails (a requirement for a core damage to occur).

The probability that ECCS valves are not closed by an operator (P10) is considered remote during a severe accident. A value of 0.5 is judged reasonable especialy considering the potential for room environment degradation. For station blackout events, since the valves do not open, these lines do not contribute to potential bypass risk.

(i) Some normally closed valves may be open at the beginning of the event. The failure probability (P11) for these valves assumes they are open 4 hours during a 7000 hour operating cycle and that the operator fails to recognize the open path and close the vale. A 0.5 probability is judged reasonable for the operators failure to act during the core damage event.

(j) Some valves may be opened by the operator during the course of the event. Such action may be in compliance with written procedures or it may occur due to confusion in following a procedure. The probability that valves are inadvertently opened (P12) is considered a violation of planned procedures. A value of 1E-3 is judged reasonable during a core damage event.

(k) Pipe rupture is extremely rare in stainless steel piping. However, carbon steel piping has been observed to fail under certain conditions. The frequency of these failures has been widely studied and shown to be in the range of 1E-7 events/year. The probabilities of line rupture as a function of line size (P13, P14, P15) are taken from Reference 14. Four line segments outside of the containment are assumed for each bypass line. The intermediate line size (3 to 6 inches) probability is assumed to be twice that of the large line size (greater than 6 inches).

For pipe failures in an individual bypass line, it was presumed that an undetected break in an

unpressurized line could occur at any time. Therefore, the conditional probability of a bypass path was then taken to be the same as the failure rate during a one year period (which was estimated to be 7000 hours). This approach of estimating pipe failure probability is judged to be conservative.

The failure probabilities used in the evaluation should be considered conditional probabilities, given a core melt. In general the above probabilities are not affected by the core melt process itself and can therefore be considered independent of the event process.

Whether the bypass path is the initiator or occurs simultaneously with the event is inconsequential in the evaluation based on the following discussion. The approach taken in the bypass study is to consider the presence of a bypass path as an independent event from the events which caused the core damage in a specific sequence. This approach is acceptable because for large breaks the associated systems are not in general relied upon to prevent core damage and no consequence of these failures have been identified which would affect the systems preventing core damage. Therefore whether the break is an initiator or consequential does not affect the final evaluation. Similarly, none of the systems associated with the smaller bypass lines are associated with preventing core damage. Therefore they too are not associated with the cause of the core melt.

The ACRS has expressed concern regarding the failure of the RWCU suction in combination with failure of the isolation valves to close. The concern is that there may be a flooding situation that could have a high consequence if it leads to an eventual loss of suppression pool and CST inventory or flooding of other ECCS rooms. Such an event would not be consistent with this presumed independence of the assumed conditional probabilities.

If a break in the RWCU suction line were the postulated LOCA, the containment isolation valves would be expected to close, terminating the event. NRC concerns over Motor Operated Valve (MOV) closure capability are being addressed as an industry activity. In this evaluation it was assumed that the valves fail to close due to a Station Blackout event. Furthermore, should the isolation valves fail to close, the system arrangement assures that the core is not uncovered and EPGs require depressurization which both slows the break flow and terminates any long term release from the break. Therefore if the EPG actions are taken, no additional consequence of the event occur.

The system arrangement routes the RWCU lines above the core to avoid a potential siphon of the core inventory. In the event of an unisolated RWCU line break, lowering the RPV level to below the shutdown cooling suction and depressurizing the RPV would be sufficient to terminate the break flow without causing core damage. This action should be possible prior to any impact on other ECCS equipment. These actions are included in Section 19D.7.

(3) Evaluation of Bypass Probability

Table 19E.2-21 summarizes the results of these evaluations. For each potential bypass pathway, it shows the flow split fraction based on the line size and valve configuration, the equation to calculate the bypass probability, the results of the probability calculations using the data from Table 19E.2-20 and the bypass fraction for the line. The table also includes reference to the sketch (Figure 19E.2-19) which illustrates the potential pathways. The evaluation is based on the conservative assumption of a station blackout event since it is believed to be the dominant core damage sequence and gives the highest bypass fractions.

no more text?

(4) Evaluation of Results

3.0

Section 19E2.3.3.1 (4) provides a conservative justification that bypass paths with a total bypass fraction less than 8.4E-4 do not substantially increase the offsite risk. As is shown in Table 19E.2-21, the bypass probability is about 2.0E-5 for all potential paths not addressed in the Containment event trees. This total is well within the goal.

Potential bypass through the Wetwell-Drywell Vacuum Breakers ~~and the ECCS discharge lines~~ are included in the containment event trees. (Section 19D.5).

Based on the above discussion, it can be concluded that suppression pool bypass paths and Ex-Containment LOCAs not addressed by the Containment event trees do not contribute a significant offsite risk and do not need further evaluation in the PRA.

19E.2.3.3.4 Evaluation of Ex-containment LOCA Core Damage Frequency

(1) Introduction

To provide a separate assessment of the importance of bypass paths, a more comprehensive analysis of the frequency of core damage from LOCAs outside containment was conducted using event tree and fault tree techniques.

Conservative and simplified event trees of LOCA outside containment events were developed and included as Figures 19E.2-20a through 19E.2-20c. These trees show that the total core damage frequency due to LOCAs outside of containment is about 1.3E-8 per year. The end-point for these trees is core damage with or without bypass of the containment.

(2) Assumptions

The following definitions and considerations were applied in development of the trees.

$V1_1$ Line Break Outside - The frequency of piping breaks in small, medium or large breaks outside of containment and which communicate directly with the reactor vessel. The lines are grouped by type of isolation. The basis for each event initiation frequency is the line size and the total number of lines considered. The basis for the pipe break frequency is provided in Appendix 19E.2.3.3.3 (2)(k).

X_1 Line Isolation - The conditional probability of automatic isolation valves failing to close given the ex-containment LOCA. Values used and the manner in which probabilities were combined are shown on Table 19E.2-21.

P_1 Oper. Action - The conditional probability that operator fails to act to manually isolate the ex-containment LOCA. Such a failure to act could be due to a lack of instrumentation availability or mechanical failure. For most bypass paths considered, the very conservative assumption was made that no operator action is taken. For ECCS discharge lines and warmup lines the operator is assumed to act to close an open valve, if needed. The basis for the value chosen (P10 in Section 19E.2.3.3 (2)) is based on general operator awareness of the potential for these paths to be unisolated. Although the leak detection system is adequate to alert the operator of a break in the system, instrumentation failure is not considered to provide a strong contribution to the failure probability.

Q_1 Second Division not Affected - For most lines it is conservatively assumed that the LOCA affects the division in which the break occurs. This factor represents the conditional probability that the LOCA also affects the required makeup for core cooling from a second electrical division. It is assumed that such failure results from environmental effects from flooding or pressurization effects.

A systematic evaluation of potential cold flooding due to ex-containment breaks was summarized in Appendix 19R, Probabilistic Flooding Analysis. Flooding in the reactor building is noted to disable the system affected and potentially flood the Reactor Building corridor, but not disable other makeup equipment due to the water-tight doors contained in the design. The analysis of an unisolated RWCU break in subsection 19R.4.5 shows that no cooling systems will be damaged.

Compartment pressurization and environmental effects of high pressure LOCAs in secondary containment were considered in the development of Figures 19E.2-20a through c.

Equipment in the ABWR design is arranged with consideration of divisional separation. A high energy line break in a division would cause the blowout panels from the division to relieve the initial pressure spike to the steam tunnel. Subsequent pressurization of the room could eventually cause a release of the energy into the next adjacent division in a clockwise progression through the reactor building.

As doors from the corridor and penetrations are forced open, the environment of the adjacent divisions could be affected by the presence of steam. However, the qualification of the equipment to 212 degrees F and 100% humidity makes the probability of further system unavailability unlikely. Where a LOCA could occur in an area adjacent to a separate division, a value of 1E-3 was assumed for Q_1, based on conservative engineering judgement, to represent the remote possibility for failure of these adjacent systems.

For line breaks in the turbine building the effect of the break would not impact the divisional power distribution and, for these sequences, the Q_1 value was judged to be negligible.

Although line routing are not specified, the analysis assumes that breaks inside reactor building equipment rooms affect the division in which the breaks occur; LOCAs outside of the secondary containment are not assumed to fail a division of equipment.

Q_o Coolant Makeup - This factor represents the conditional probability of core cooling failure by all sources of cooling with consideration to those affected by the ex-containment LOCA. The values used are derived from an evaluation of the PRA fault trees and are summarized below:

COOLANT MAKEUP FAILURE (Q_o)

	BREAK SIZE		
	Small	Medium	Large
Div. not Affected	2.2E-7	6.2E-7	6.1E-7
1 Div. affected	1.1E-6	8.6E-6	8.5E-6
2 Div. affected	3.6E-4	3.7E-3	3.7E-3

The conditional probability when one or more electrical divisions are affected were derived by disabling the most limiting division in the LOCA event trees and then calculating the resulting conditional probability.

For LOCAs which occur in the reactor building, the event is assumed to fail the division in which the break occurs. For other LOCAs, such as LOCAs in the turbine building, no divisional impact is assumed.

Consideration of inventory depletion due to the LOCA outside containment is addressed by EPGs which specify that coolant makeup sources using inventory sources outside of containment be used as the preferred source. In the ABWR design small breaks can be accommodated by any of the high pressure coolant makeup systems (RCIC, HPCF B and HPCF C) which are in separate divisions and which draw water from the condensate storage. Since condensate is effectively an unlimited supply and makeup capability exists, no additional concern is necessary for the small break LOCAs outside of containment.

Medium and large breaks outside of containment can be accommodated by any of the three divisions in the short term following a break without concern for inventory loss in the RPV. All penetrations, except the RPV/RWCU bottom head drain (a unique situation addressed separately in Section 19.9.1 by an event specific procedure), are above the top of active fuel so that core uncovery due to inventory depletion is not a concern. In the longer term, the break will depressurize the RPV which effectively reduces the loss of inventory from the break to a level well within the makeup capacity of other available systems which makeup from sources outside of containment, such as firewater. Due to the reduction in loss rate through the break, significant time is available for operators to compensate for the usage of water and flooding in the affected area. Furthermore, operators are assumed to follow plant procedures in isolating the break or lowering RPV level to a level below the affected penetration, if necessary. Adequate instrumentation and long term makeup from firewater and condensate sources would normally be available.

(3) Conclusion

For each of the event trees shown in Figures 19E.2-10a through c the total non-bypass and bypass core damage frequencies are shown and are summarized below:

Core Damage Frequency (events/yr)

	Non-Bypass	Bypass	Total
Small LOCAs	1.2E-8	1.1E-9	1.3E-8
Intermediate LOCAs	2.3E-10	1.2E-10	3.5E-10
Large LOCAs	2.0E-10	4.8E-13	2.0E-10
TOTAL	1.2E-8	1.2E-9	1.3E-8

Ex-containment LOCA events without bypass represent a small fraction of the total core damage frequency (1.6E-7) are therefore justified as not being further evaluated in the PRA.

Although the consequence from bypass events is greater than for non-bypass events, the total frequency of bypass events concurrent with core damage is extremely small. The core damage frequency of ex-containment LOCAs with bypass is less than 1% of the total evaluated core damage frequency. Large LOCAs can be excluded from further consideration on the basis of low probability. Exclusion of Medium and Small bypass sequences is based on the additional consideration of the reductions in consequences of the ex-containment LOCAs due to the flow splits provided by restrictions due to line sizing. This is discussed in Section 19E.2.3.3.3.

In addition, since significant margin exists between the current PRA results and the safety goals, it can be concluded that the bypass events do not significantly contribute to the offsite exposure risk.

19E.2.3.3.5 Suppression Pool Bypass Resulting from External Events

The effect of external events on the Suppression Pool Bypass evaluation is discussed in Appendix 19I to determine if a significant potential for bypassing the suppression pool results from component failures induced by a seismic event. Only seismic events were considered to provide a significant challenge to the creation of bypass paths beyond that already considered in the PRA.

TABLE 19E.2-1

POTENTIAL SUPPRESSION POOL BYPASS LINES

DESCRIPTION	NUMBER OF LINES	PATHWAY FROM	PATHWAY TO	SIZE (mm) (1 in. = 25.4 mm)	ISOLATION VALVES	BASIS FOR EXCLUSION (SEE NOTES)
Main Steam	4	RPV	ST	700	(AO, AO) ~~(SP, SP)~~	-
Main Steam Line Drain	1	RPV	ST	200	MO, MO	3
Feedwater	2	RPV	ST	550	CK, CK	-
Reactor Inst. Lines	30	RPV	RB	6	CK	-
CRD Insert/Withdraw	103	RPV	RB	<1	CK, MA	1
HPCF Discharge	2	RPV	RB	200	CK, MO	-
HPCF Warmup	2	RPV	RB	25	MO, MO	-
HPCF Suction	2	SP	RB	400	MO	2
Supp Pool Instrumentation	6	SP	RB	6	None CK	2
SLC Injection	1	RPV	RB	40	CK, CK	-
RCIC Steam Supply	1	RPV	RB	150	(MO, MO)	-
RCIC Discharge	1	RPV	RB	150	CK, MO	5
RCIC Min. Flow	1	SP	RB	150	MO	2
RCIC Suction	1	SP	RB	200	MO	2
RCIC Turbine Exhaust	1	SP	RB	350	MO, CK	2
RCIC Turb. Exh Vac Bkr	1	SP	RB	40	~~MO, MO~~ CK, CK	2
RCIC Vac Pump Discharge	1	SP	RB	50	MO, CK	2
RHR LPFL Discharge	2	RPV	RB	250	CK, MO	-
RHR Warmup Lines	2	RPV	RB	25	MO, MO	-
RHR Wetwell Spray	2	WW	RB	100	MO	2,4
RHR Drywell Spray	2	DW	RB	200	MO, MO	4
RHR SDC Suction	3	RPV	RB	350	MO, MO	3
RHR Supp. Pool Suction	3	SP	RB	450	MO	2
RHR Supp. Pool Return	3	SP	RB	250	MO	2,3

TABLE 19E.2-1 (Continued)

POTENTIAL SUPPRESSION POOL BYPASS LINES

DESCRIPTION	NUMBER OF LINES	PATHWAY FROM	PATHWAY TO	SIZE (mm) (1 in. = 25.4 mm)	ISOLATION VALVES	BASIS FOR EXCLUSION (SEE NOTES)
RWCU Suction	1	RPV	RB	200	(MO, MO)	-
RWCU Return	1	RPV	RB	200	MO, MO	5
RWCU Head Spray Line	1	RPV	RB	150	CK, MO, MO	3
RWCU Instrument Lines	4	RPV	RB	6	CK	-
Post Accident Sampling	4	RPV	RB	25	(MO, MO)	-
RIP Motor Purge	10	RPV	RB	< 1	CK, CK	1
RIP Cooling Water	4	RPV	RB	50	MO, MO	1
LDS Instruments	9	RPV	RB	6	CK	-
SPCU Suction	1	SP	RB	200	MO, CK	2
SPCU Return	1	SP	RB	250	MO, MO	2
Cont. Atmosphere Monitor	6	DW	RB	~~25~~ 20	MA	~~8~~
LDS Samples	2	DW	RB	30	(SO, SO)	-
Drywell Sump Drains	2	DW	RB	100	MO, MO	~~7~~ -
HVCW/RBCW Supply	4	DW	RB	100	CK, MO	1~~8~~
HVCW/DWCW Return	4	DW	RB	100	MO, MO	1~~8~~
DW Exhaust/SGTS	2	DW	RB	250	AO, AO	~~8~~ 7
Wetwell Vent to SGTS	1	WW	RB	250	AO, AO	2
DW ~~Inerting~~/Purge	~~2~~ 1	DW	RB	~~200~~ ~~300~~ 300	AO	~~8~~
WW Inerting/Purge	2	WW	RB	~~200~~ 550	AO, AO	2~~8~~
Instrument Air	2	DW	RB	50	CK, MO	1
SRV Pneumatic Supply	3	DW	RB	50	CK, ~~CK~~ MO	1
Flamability Control	1	DW	RB	100	(MO, MO)	3
ADS/SRV Discharge	8	RPV	WW	300	RV	-
ACS Crosstie	2	DW	WW	~~200~~ 550	AO, AO	~~8~~
WW/DW Vacuum Breaker	8	DW	WW	500	CK	-
Miscellaneous Leakage	1	DW	RB	---	NONE	6
Access Tunnels	2	DW	RB	---	NONE	6

TABLE 19E.2-1 (Continued)

POTENTIAL SUPPRESSION POOL BYPASS LINES

LEGEND AND ACRONYMS

PATHWAY

Source (From)		Termination (To)	
RPV	Reactor Pressure Vessel	WW	Wetwell
DW	Drywell	RB	Reactor Bldg
SP	Suppression Pool	WW	Wetwell
		ST	Steam Tunnel

Isolation Valve Types

~~SP Steam Pilot Operated~~
AO Air Operated
MO Motor Operated
RV Relief Valve
CK Check Valve
MA Manually Actuated
SO Solenoid Operated
( ) Common Mode Failure Potential (See Section 19E2.3.3.3 (2))

Bases for Exclusion

1. Closed systems such as closed cooling water systems which do not directly connect to the RPV or containment atmosphere require two failures to become a bypass pathway: a leak or break within the cooled component and a line break outside of containment. Very low flow is expected out of the break or leak at the cooled component is likely due to the high degree of restriction. These pathways are not considered further on the basis of this very low flow rate. Similarly, extreme restrictions in CRD seals provides the basis for excluding those lines.

2. Pathways which originate in the primary containment wetwell airspace or the suppression pool are excluded because fission product aerosols would first be trapped in the suppression pool and would thus not be available for release through the bypass path.

3. Some lines are closed during normal plant operation and would not be expected to be opened in the short term following a plant accident. These lines are excluded on the basis of low frequency of use. Furthermore, should a bypass pathway develop later when the line is used, the fission product source term would be expected to have been already significantly reduced due to decay and other removal mechanisms.

4. Some lines which originate in the primary containment are designed for operating pressures higher than would be expected in the containment during a severe accident. These lines (with design pressures greater than about 100 psig) were excluded since the probability of a break under less than normal operating pressures and coincident with the severe accident is extremely small.

5. Some lines return to the feedwater line. These pathways (such as LPCF loop A and RWCU) are excluded since they are bounded by the evaluation of feedwater.

6. Acceptable long term leakage from the drywell to the reactor building following a design basis accident is specified at .4% of drywell volume per 24 hours. During severe accident conditions this leakage could be somewhat greater due to higher than design basis containment pressure. However, the contribution of this leakage to overall risk is ignored because this leakage is through numerous tortuous passages of small diameter which provide ample opportunity for plateout and plugging effects (see subsection 19E2.1.3.4). A discussion of the drywell access tunnels is included in section 19F.

7. ~~Drywell Sump Drains - The drywell floor and equipment drain sumps are assumed to be normally open and isolated by motor operated valves. The discharge is assumed to pass to a drain header in the reactor building. Backflow into the reactor building is assumed to be prevented by check valves.~~

8. ~~HVAC Cooling Water, Reactor Building Cooling Water, Containment Atmospheric Control - Line sizes shown in table 19E.2-1 are assumed for these systems.~~

~~9.~~ 7. Drywell purge lines are normally closed and fail closed. The potential for inadvertent opening is considered remote and is addressed by Emergency Procedure guidelines.

Table 19E.2-19

Flow Split Fractions

Line Size		Flow Split Fraction	
mm	in	RPV Source	Drywell Source
6	0.25	1.5E-05	5.4E-05
12	0.5	9.4E-05	3.4E-04
25	1	5.7E-04	2.0E-03
50	2	3.3E-03	1.2E-02
100	4	1.8E-02	6.2E-02
150	6	4.8E-02	1.5E-01
200	8	8.9E-02	2.5E-01
250	10	1.4E-01	3.6E-01
300	12	2.0E-01	4.6E-01
350	14	2.6E-01	5.4E-01
400	16	3.2E-01	6.2E-01
450	18	3.8E-01	6.7E-01
500	20	4.3E-01	7.2E-01
700	28	6.1E-01	8.4E-01
1000	40	7.7E-01	9.2E-01

Table 19E.2-20

Failure Probabilities

Symbol	Description	Prob/Event	Basis
P1	MSIV closure ~~Steam pilot operated valve (MSIV)~~	1.0E-4	a
P2	MSIV leakage probability	7.1E-1	b
P3	Turbine Bypass Isolation	4.0E-3	c
P4	Main condenser failure	1.0	c
P5	MSL break outside containment	8.0E-6	d
P6	Air operated valve (NO)	4.1E-3	e
P7	DC Motor operated valve (NO)	3.6E-3	e
P8	AC Motor Operated valve (NO-SBO)	1.0	f
P9	Check Valve	8.4E-3	g
P10	Motor operated valves (NC)	5.0E-1	h
P11	Motor operated valves (NC)	2.8E-4	i
P12	Inadvertent opening	1.0E-3	j
P13	Small line break	2.4E-4	k
P14	Medium line break	1.6E-5	k
P15	Large line break	8.0E-6	k

Table 19E.2-21

Summary of Bypass Probabilities

Lines from the RPV

Pathway	Flow Split Fraction	Bypass Probability Equation	Bypass Probability	Bypass Fraction	Figure 19E.2-19
Main Steam	6.7E-1	4*P1*(P3*P4+P5)	1.6E-6	1.1E-6	A
Main Steam Leakage	2.2E-5	4*P2*(P3*P4+P5)	1.1E-2	2.5E-7	A
Feedwater	5.2E-1	2*P9*P15	2.4E-8	1.3E-8	B
Reactor Inst. Lines	3.1E-5	30*P13*P9	6.0E-5	1.9E-9	D
HPCF Discharge	1.1E-1	2*P9*P10*P14	1.3E-7	1.5E-8*	C
HPCF Warmup	1.0E-3	2*P10*P11*P13	6.7E-8	6.7E-11*	C
SLC Injection	3.0E-3	1*P9*P13	3.6E-7	1.1E-9	B
RCIC Steam Supply	6.9E-2	1*P8*P14	1.6E-5	1.1E-6	E
LPFL Discharge	1.7E-1	2*P9*P10*P15	6.7E-8	1.1E-8*	C
LPFL Warmup Line	1.0E-3	2*P10*P11*P13	6.7E-8	6.7E-11*	C
RWCU Suction	1.2E-1	1*P8*P14	1.6E-5	2.0E-6	E
RWCU Inst Lines	3.1E-5	4*P13*P9	8.1E-6	2.5E-10	D
Post Acc Sampling	1.0E-3	4*P8*P13	9.6E-4	9.9E-7	J
LDS Instruments	3.1E-5	9*P13*P9	1.8E-5	5.7E-10	D
SRV Discharge	6.9E-2	8*P14	1.3E-4	8.8E-6	K
			Total	1.4E-5	

*These lines may be excluded for station blackout events

Table 19E.2-21

Summary of Bypass Probabilities (Continued)

Lines from the Drywell

Pathway	Flow Split Fraction	Bypass Probability Equation	Bypass Probability	Bypass Fraction	Figure 19E.2-19
Cont Atmos Monitor	8.9E-4	6*P9*P13	1.2E-5	~~1.0E-9~~ 1.1E-8	D
LDS Samples	1.7E-3	2*P8*P13	4.8E-4	~~6.3E-8~~ 8.2E-7	E
Drywell Sump Drain	3.0E-2	2*P8*P13	~~4.0E-4~~ 4.8E-4	~~1.2E-6~~ 1.4E-5	J
DW ~~Inerting~~ Purge	~~[illegible]~~ 4.6 E-1	13 P6 * P11	~~[illegible]~~ 1.1E-6	~~[illegible]~~ 5.3E-7	I
ACS Crosstie	1.1E-1	2*P12	1.5E-6	1.6E-7	H
* WW-DW Vac Bkr	2.6E-1	8*P9	6.7E-2	1.7E-2	G
~~SRV Discharge~~	~~6.9E-2~~	~~8*P14~~	~~1.3E-4~~	~~9.0E-6~~	~~K~~
		Total excluding vacuum breaker ~~and ????? lines~~		~~1.5E-5~~ 1.6E-5	
		Grand Total excluding vacuum breaker ~~and ????? lines~~		~~3.9E-5~~ 3.0E-5	
			Goal	8.4E-4	

* Addressed on Containment Event Trees.

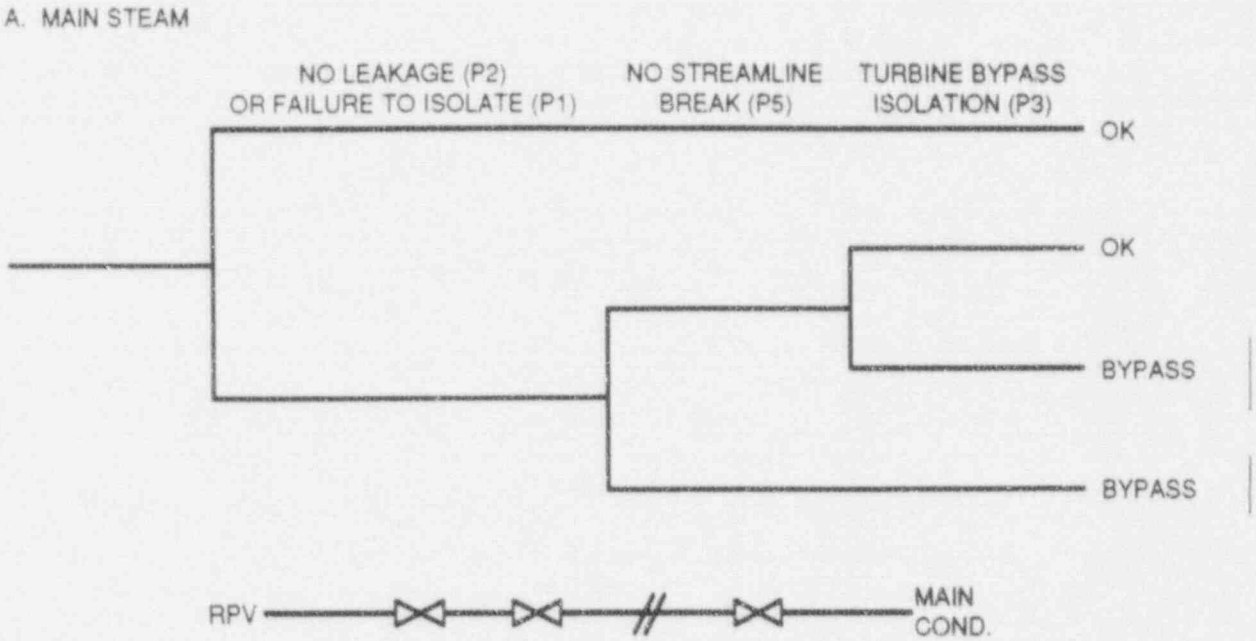

Figure 19E.2-19A SUPPRESSION POOL BYPASS PATHS AND CONFIGURATIONS

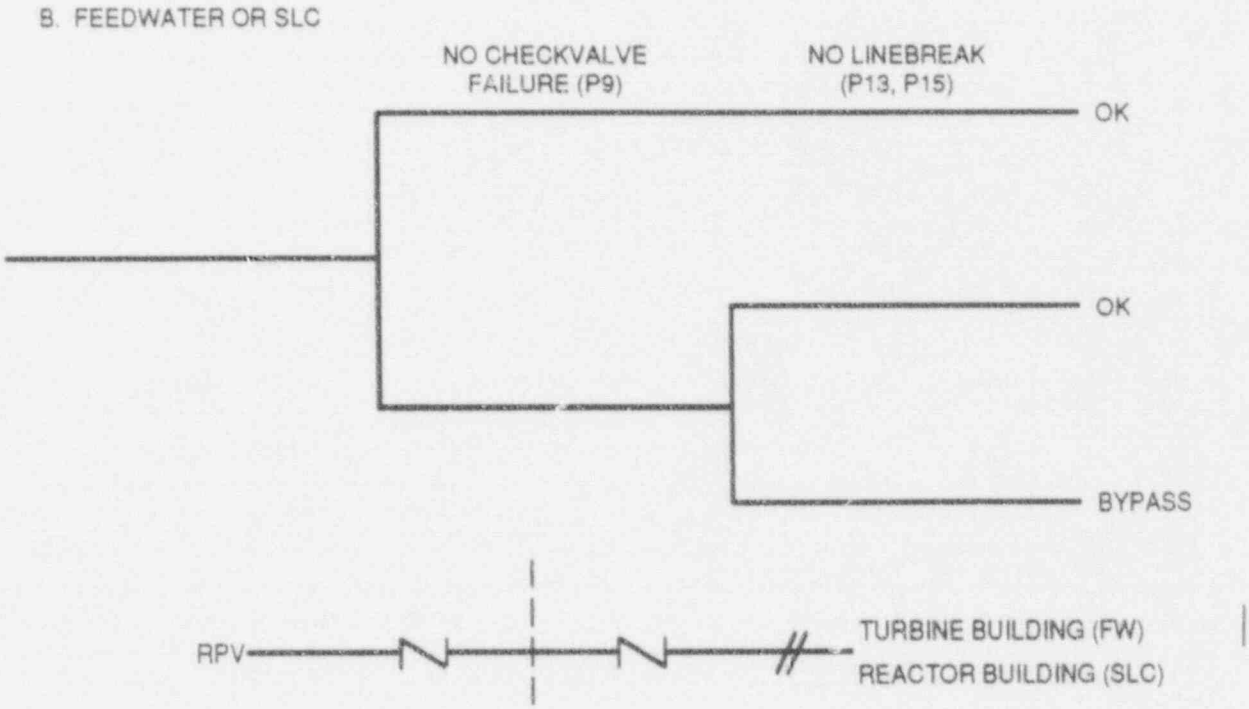

Figure 19E.2-19B SUPPRESSION POOL BYPASS PATHS AND CONFIGURATIONS

C. ECCS LINES

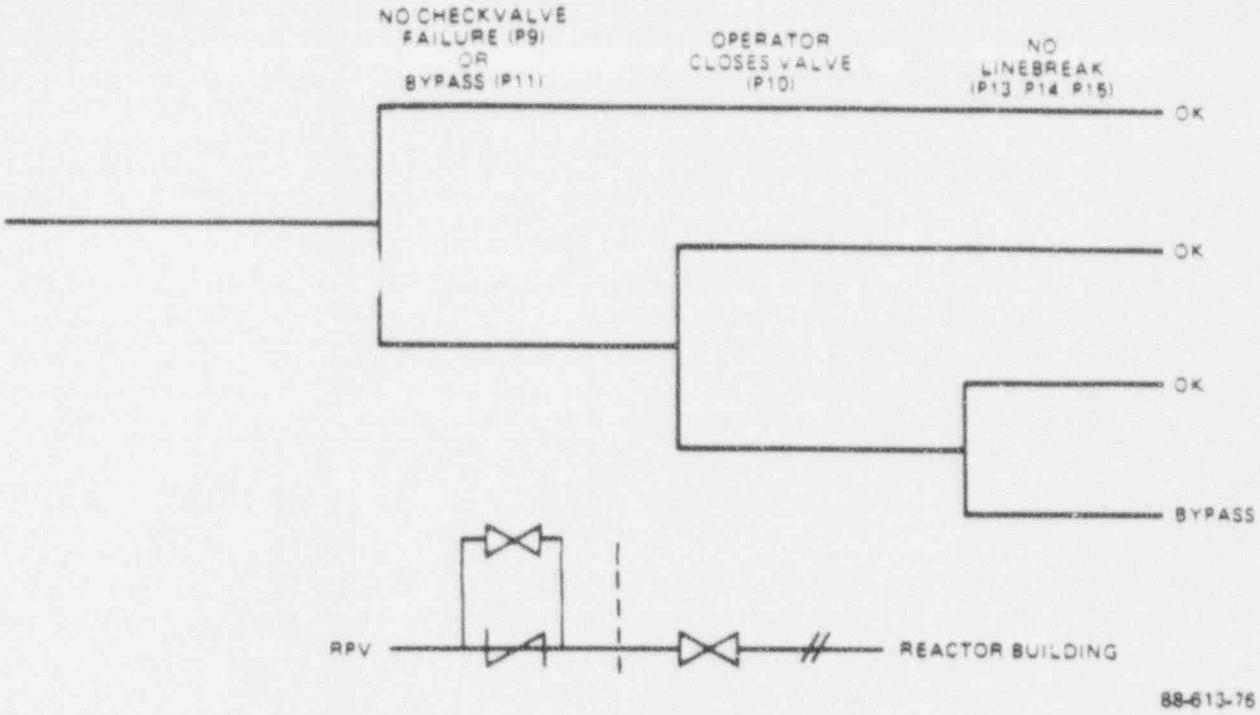

Figure 19E.2–19C SUPPRESSION POOL BYPASS PATHS AND CONFIGURATIONS

D. INSTRUMENT LINES

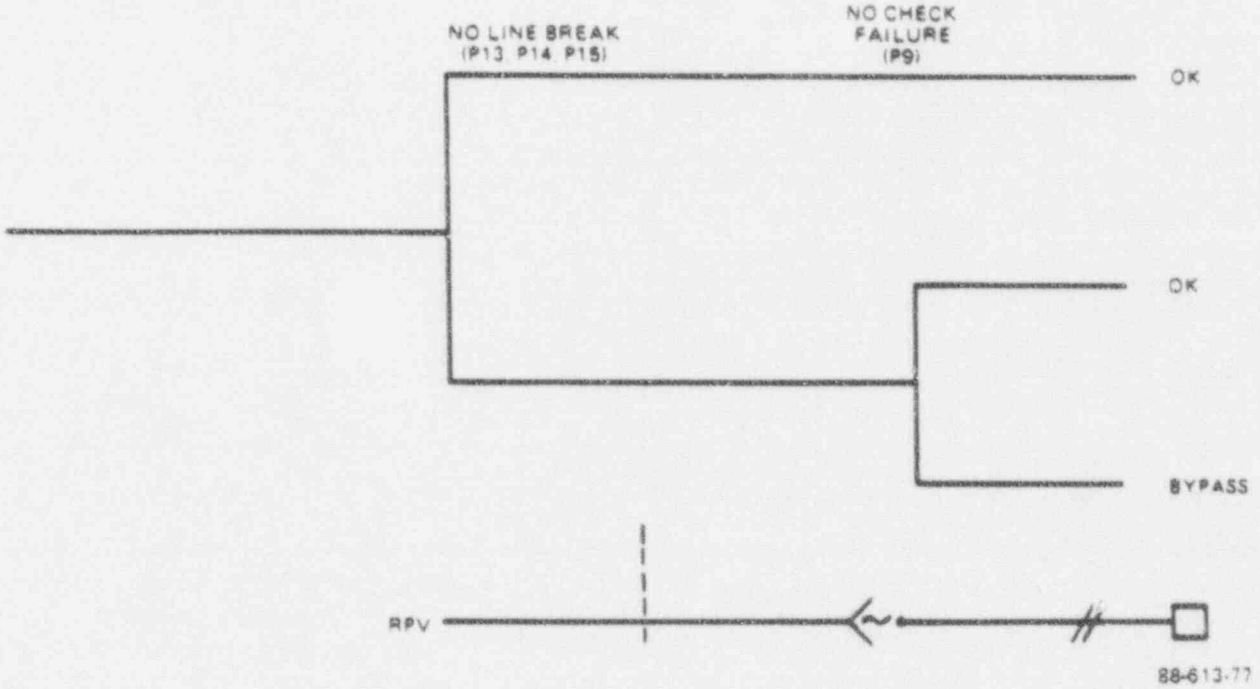

Figure 19E.2–19D SUPPRESSION POOL BYPASS PATHS AND CONFIGURATIONS

E. STATION BLACKOUT AFFECTED LINES

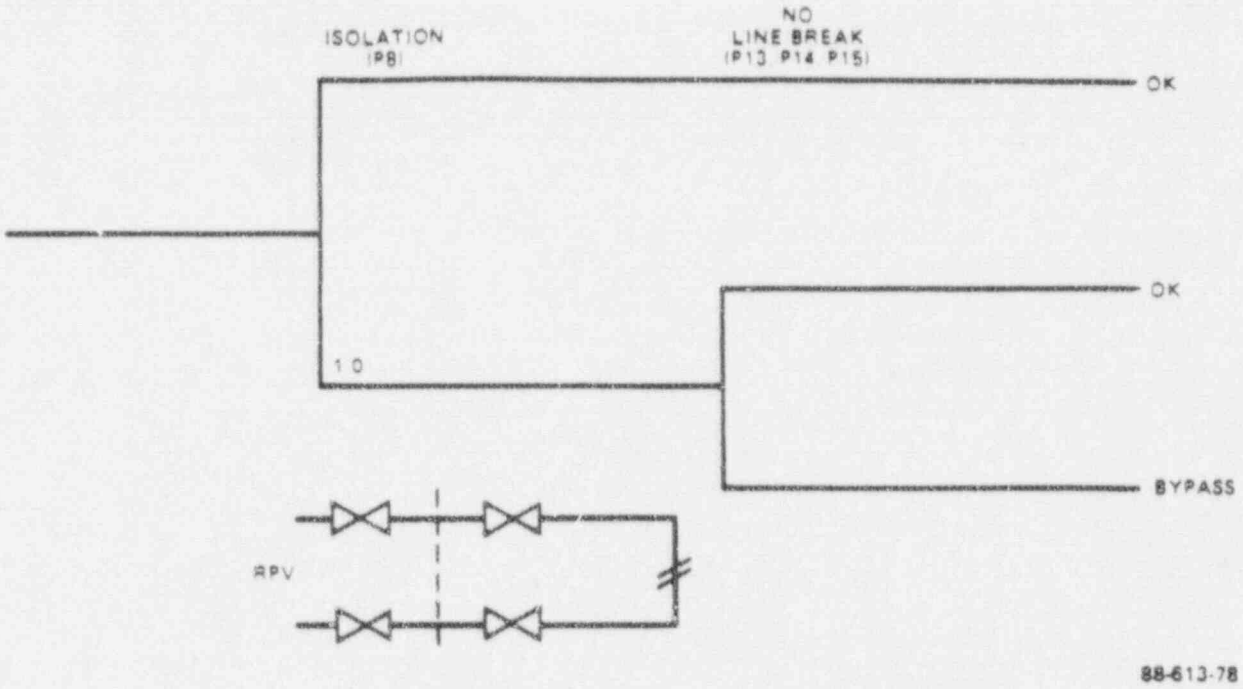

Figure 19E.2–19E SUPPRESSION POOL BYPASS PATHS AND CONFIGURATIONS

F. CONTAINMENT ATMOSPHERIC MONITOR

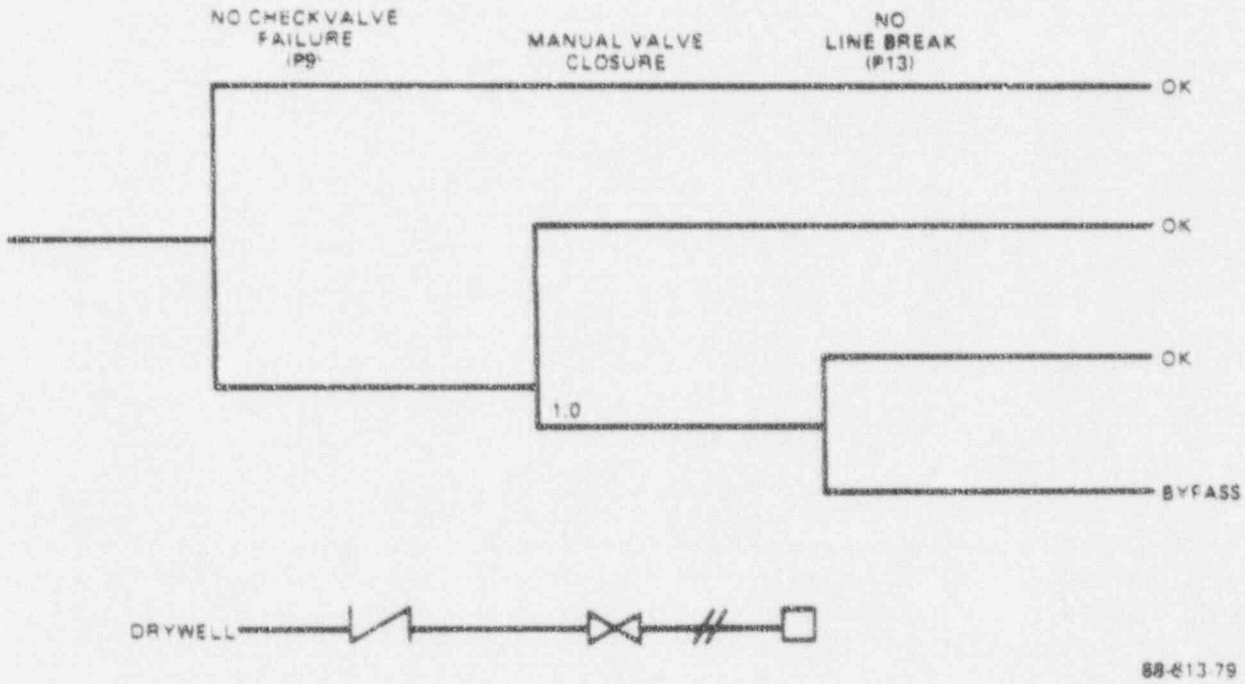

Figure 19E.2–19F SUPPRESSION POOL BYPASS PATHS AND CONFIGURATIONS

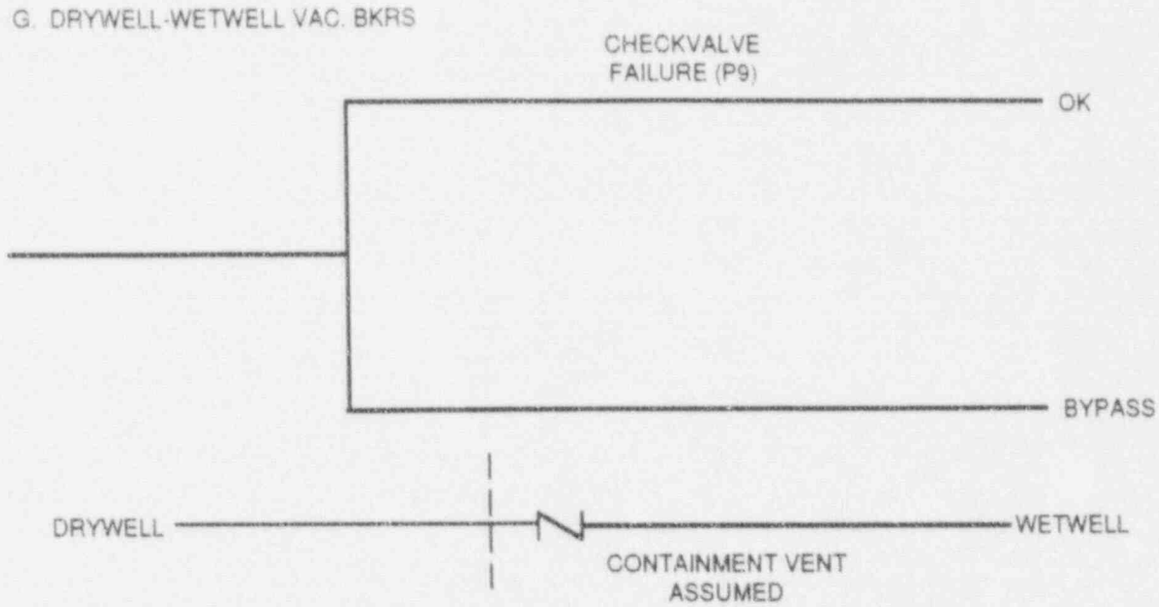

Figure 19E.2-19G SUPPRESSION POOL BYPASS PATHS AND CONFIGURATIONS

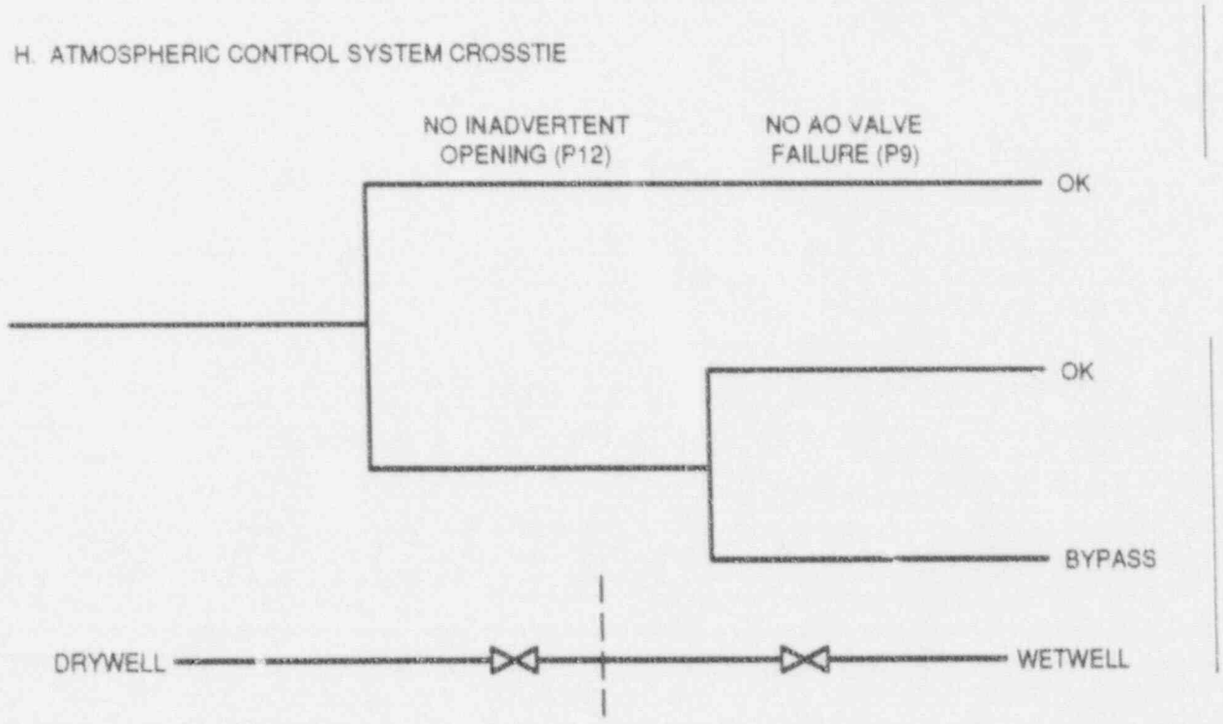

Figure 19E.2-19H SUPPRESSION POOL BYPASS PATHS AND CONFIGURATIONS

I. DRYWELL ~~INERTING~~ PURGE

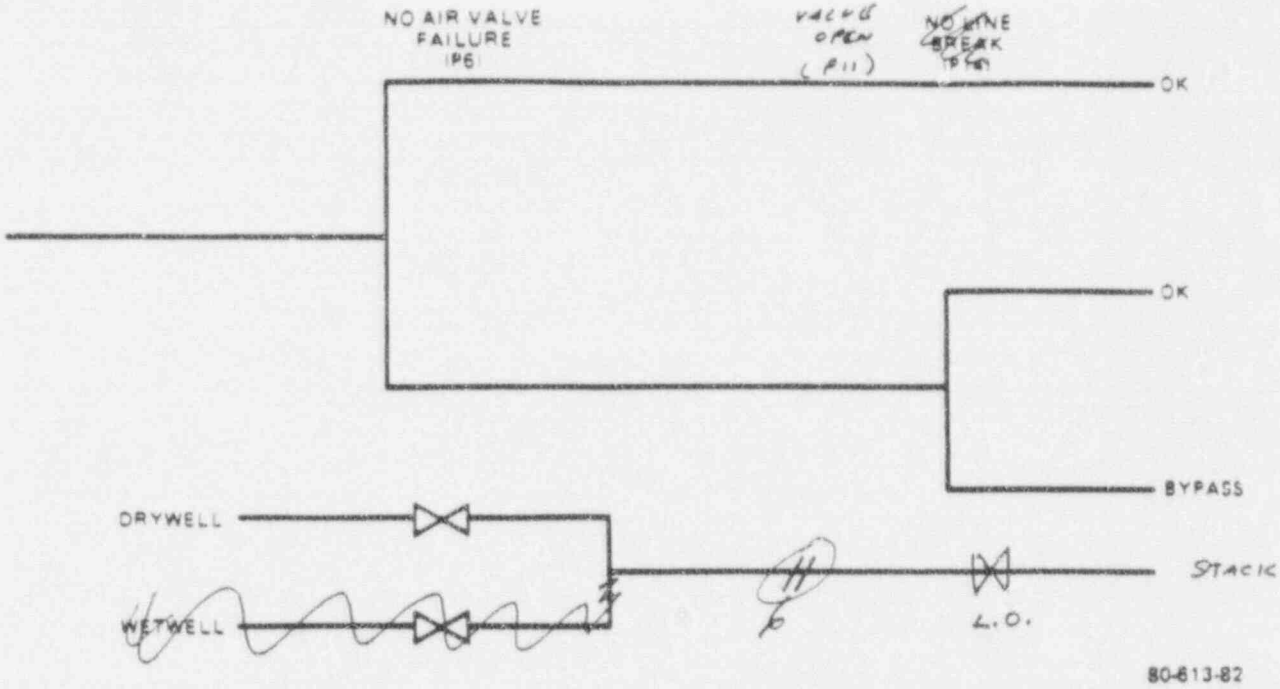

Figure 19E.2–19I SUPPRESSION POOL BYPASS PATHS AND CONFIGURATIONS

J. SAMPLE LINES OR SUMPS

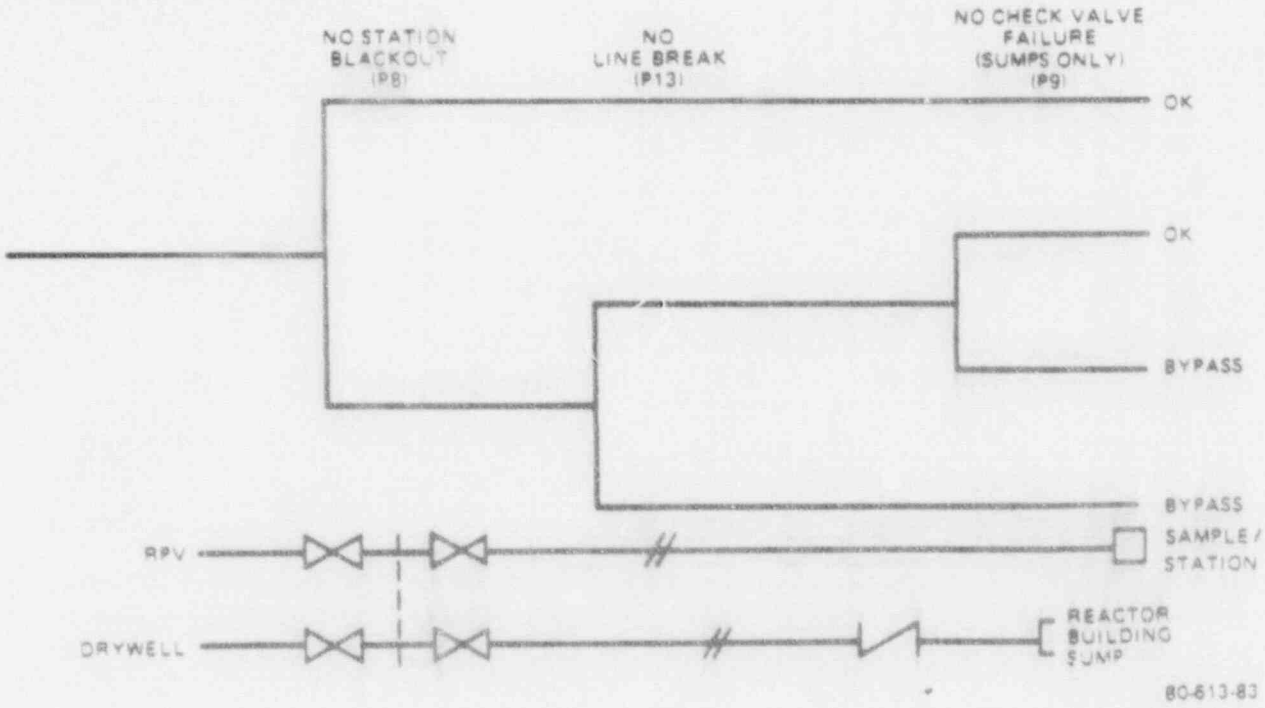

Figure 19E.2–19J SUPPRESSION POOL BYPASS PATHS AND CONFIGURATIONS

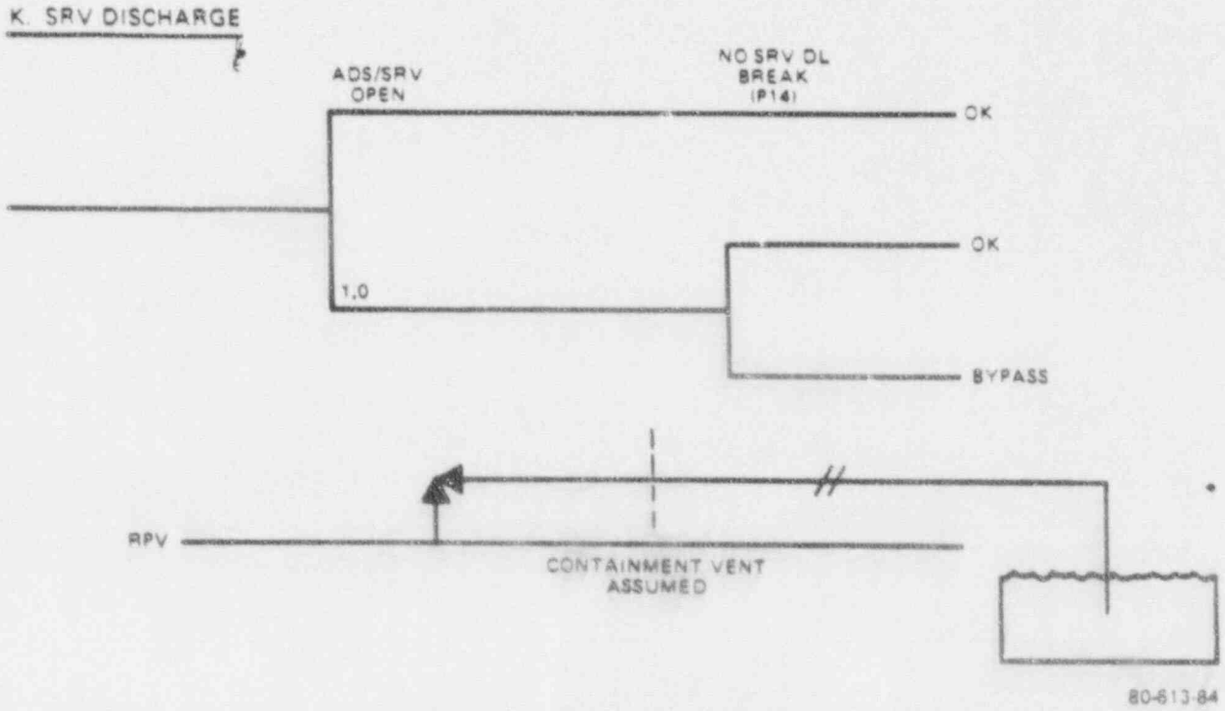

Figure 19E.2–19K SUPPRESSION POOL BYPASS PATHS AND CONFIGURATIONS

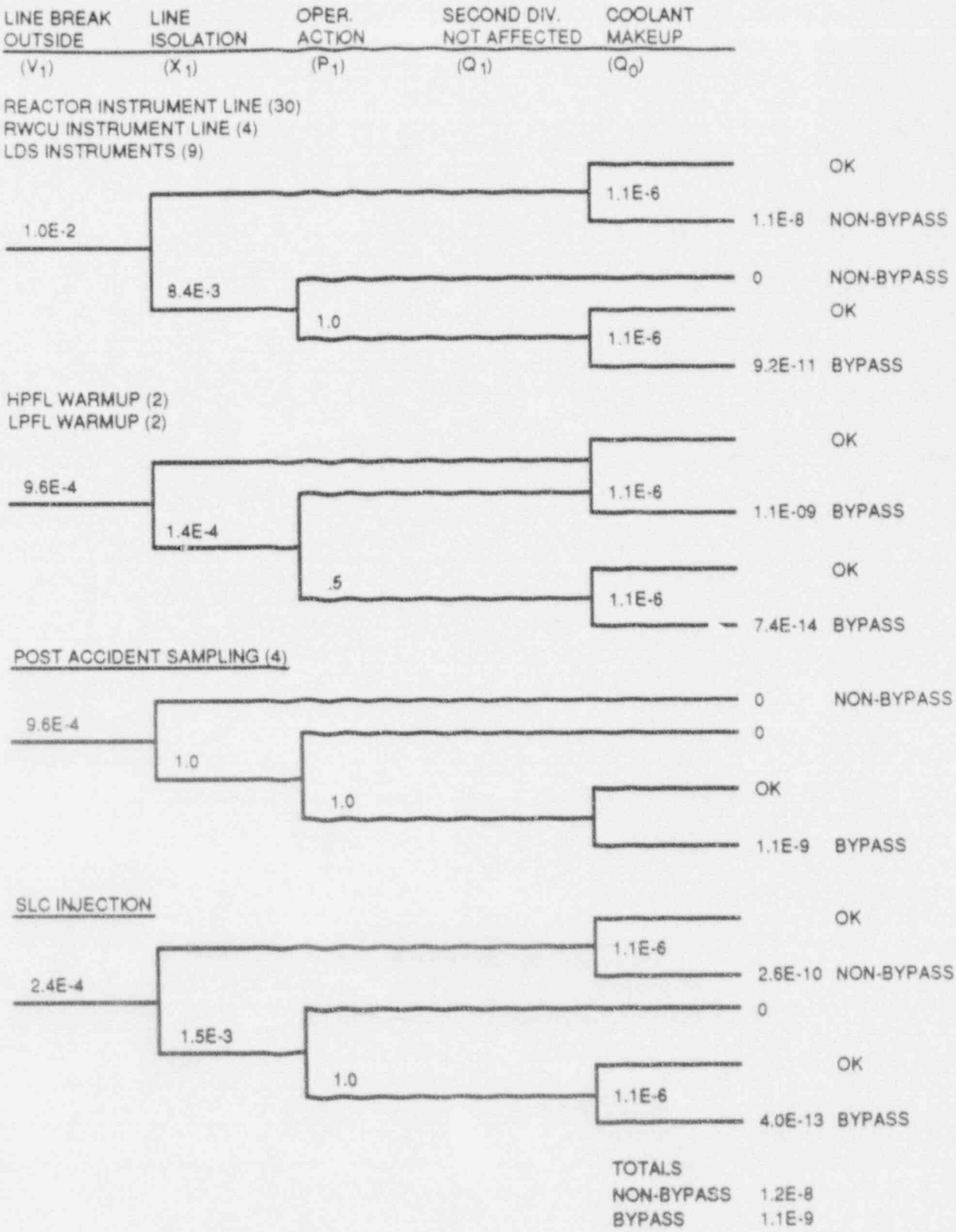

Figure 19E.2-20A SMALL LOCAS OUTSIDE CONTAINMENT

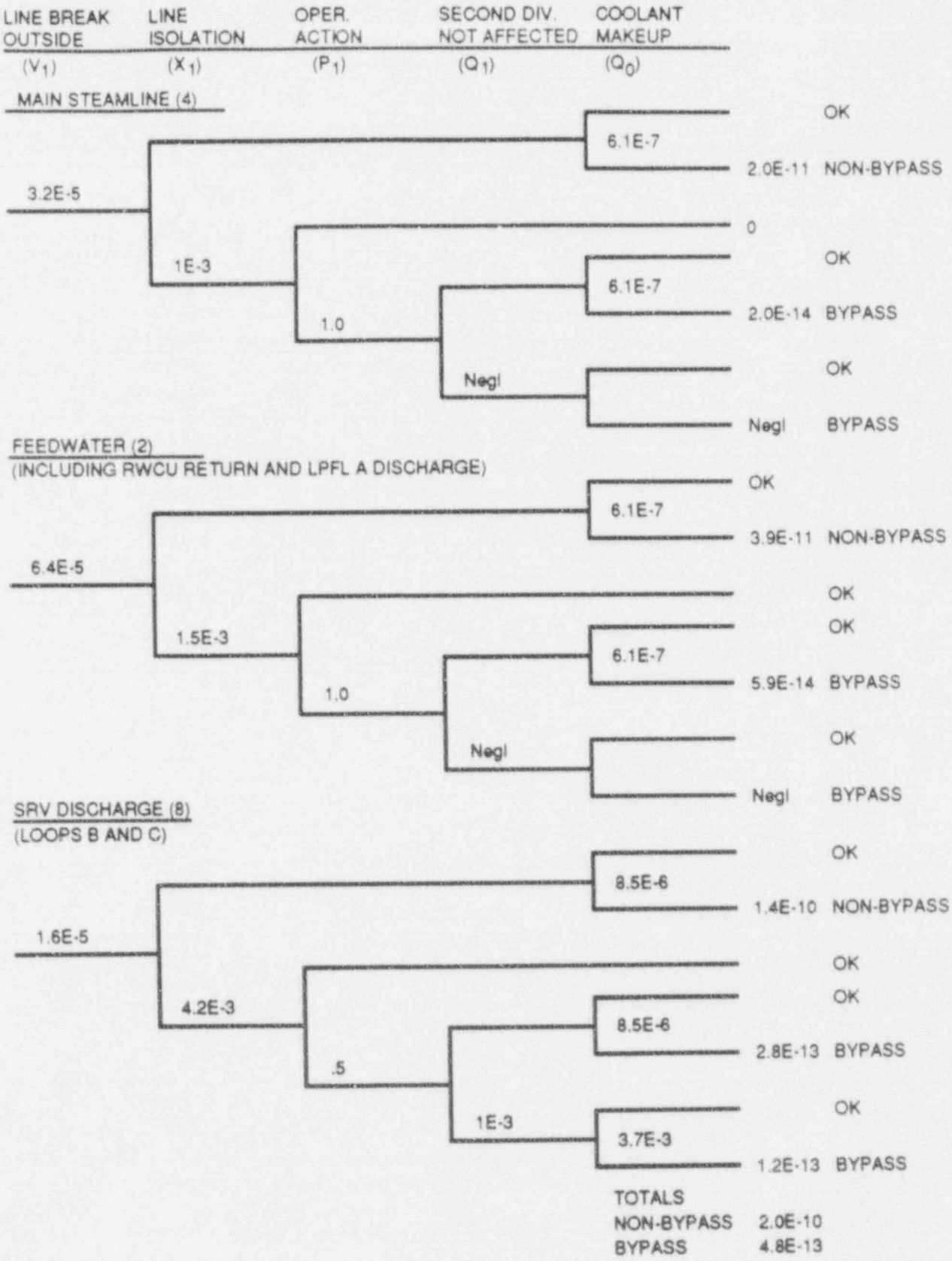

Figure 19E.2-20C LARGE LOCAS OUTSIDE CONTAINMENT

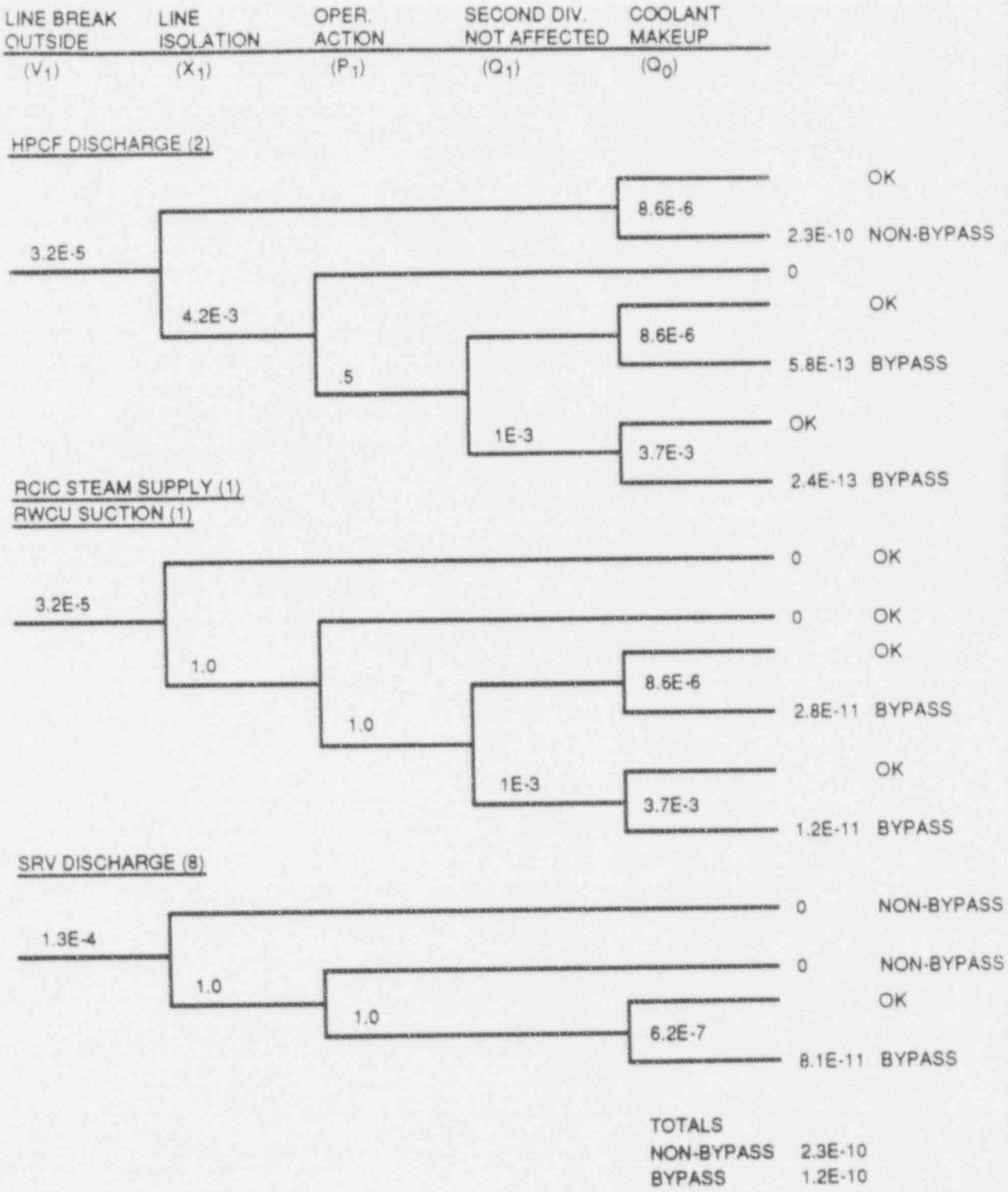

Figure 19E.2-20B MEDIUM LOCAS OUTSIDE CONTAINMENT