ATTACHMENT

RECEIVED

84 OCT 15 P12:26

U.S. NRC RGN II
ATLANTA, GA.

FPL
FLORIDA POWER & LIGHT COMPANY

September 12, 1984
L-84-240

Mr. James P. O'Reilly
Regional Administrator, Region II
U. S. Nuclear Regulatory Commission
Suite 2900
101 Marietta Street, NW
Atlanta, GA 30323

Dear Mr. O'Reilly:

Re: Turkey Point Units 3 and 4
Docket Nos. 50-250 and 50-251
Licensed Operator Exams

At the exit interview on September 7, 1984, Mr. Cook of your office informed us that we needed formal responses to questions raised concerning certain answers on the RO and SRO exams administered here at Turkey Point on September 5, 1984. We assured Mr. Cook that we would provide the formal responses for the questionable areas.

Enclosed you will find our written responses and the reference materials to substantiate our statements. We feel that this information satisfied your request. If there are any questions or if you require additional information, please let us know.

Very truly yours,

J. W. Williams, Jr.
Group Vice President
Nuclear Energy

JWW/JEM/js

Attachment

cc: Harold F. Reis, Esquire
EG&G (Idaho)
PNS-LI-84-325

8501170235 841231
PDR ADOCK 05000250
Q PDR

To: Distribution

Subject: L-84-240
September 12, 1984

From: J.W. Williams, Jr.

NRC CORRESPONDENCE

TURKEY POINT UNITS 3 & 4

GO J.H. Francis
J.E. Moaba
D.C. Poteralski

JB: S.G. Brain
R.F. Englmeier
F.G. Flugger
F.P. Green
J.B. Harper
C.S. Kent
F.A. Panzani
J.L. Parker
J.E. Vessely

PSL 1/2 Vault Custodian

PTP 3/4 Document Control (K. York)
J. Arias
K.L. Jones
G. Nutwell (Bechtel)
T. Peebles (NRC)
T. Young

OTHER: A.W. Wilk (Bechtel)
D.J. Richards (Westinghouse)
Harold Reis, Esq. (Newman)
M. Horrell (Ebasco)

1.05b (RO) and 5.02b (SRO)

This was a true/false question which stated AFD (Axial Flux Difference) becomes more negative as the core ages. The answer key has <u>false</u> listed as the answer, but it should say <u>true</u>. In an initial core the answer would be false, but in subsequent cores fΔI or AFD does swing more negative with core life.

Please refer to the interoffice correspondence from Vito Kaminskas, the PTP Reactor Engineering Supervisor, to W. C. Miller, PTP Training Supervisor, which outlines Westinghouse material on this subject. A Westinghouse Design Report (WCAP 10504) was used to answer question #1 about how axial flux varies over core life. It clearly states that flux becomes more negative at EOL, therefore, we feel the correct answer should be true to these two questions.

*R1/dj:09/10/84

FLORIDA POWER & LIGHT COMPANY

INTER-OFFICE CORRESPONDENCE

TO W. C. Miller

FROM V. A. Kaminskas

SUBJECT: NRC SRO QUESTIONS

LOCATION Turkey Point Nuclear

DATE June 22, 1984

COPIES TO PTP-RE-84-118

As per your request, I have researched the following questions:

(1) How does axial flux vary over core life?

Answer: The calculated axial flux value varies through the life of the core in the range of +6 percent at its most positive value (at BOL equilibrium xenon conditions) to approximately -4 percent at its most negative value (near EOL).

Reference: Westinghouse design report WCAP 10504

(2) Explain how an increase in reactor power from 10% to 100% effects equilibrium Samarium.

Answer: As power is increased from 10% to 100%, Samarium is burned out faster than the production rate, therefore, reducing the Samarium level.

Samarium is in equilibrium when:

Production = Burnup

After some period of time, Samarium production will equal burnup and Samarium equilibrium will be attained again.

Please not that the question is vaguely worded and requires several assumptions (i.e., how long at each power level?, beginning or end of life, and ramp rate between 10% and 100% power).

If you have any questions, please call me at extension 252.

Vito A. Kaminskas
Reactor Supervisor

VAK/awt/R2:3

3.08c

This question asked the candidates what would happen if NIS PR N-44 failed high. It appears that the FSAR was used to develop this question. Our FSAR has not been updated to reflect the deletion of the power mismatch circuits which were disconnected by PCM's 81-13 (Unit 3) and 81-14 (Unit 4) prior to mid 1982. (Please refer to PC/M summary sheets attached.)

The candidates will have answered that there would be no rod motion with this malfunction, because we operate with manual rod control, not auto.

Based on the above, the answer key should be changed to accept "no rod motion" as the best answer due to current plant configuration and operating status.

*R1/dj:09/10/84

PLANT CHANGE/MODIFICATION 81-13

PC/M CLASSIFICATION: NNS

UNIT: 3

IMPLEMENTATION DATE: 04-08-82

SUMMARY DATE: 05-25-82

REVISION: 0

DELETION OF POWER MISMATCH CIRCUITRY FROM ROD CONTROL SYSTEM

Summary:

This PC/M deleted the power mismatch signal, including modules, from the automatic rod control system. This change is a long term solution to the safety/control interaction problem.

Safety Evaluation:

Removal of the power mismatch circuitry affects only that portion of the rod control system which responds to rapid changes in indicated nuclear flux or steam demand. In the FSAR, core protection has been demonstrated for accidents initiated by the rod control system up to specified reactivity insertion. This PC/M does not change the maximum reactivity insertion rates, hence, the sequences of these accidents are not made more severe. Therefore, this modification does not involve an unreviewed safety question.

Affected Drawings:

NOTE: This section may be affected by the drawing verification/update phase of the plant documentation update. A summary revision will be issued to document any changes.

5960 D17
5960 D18
5960 D19
5610-E-481
5610-E-447
(5610-M0430-26 through 28)

NIS - Dwg. not in system
* - Dwg. not included in PC/M package

Affected Procedures:

I & C Maintenance Instructions

PLANT CHANGE MODIFICATION: 81-14

UNIT: 4

IMPLEMENTED: 12-10-81

SUMMARY DATE: 2-11-82

REVISION : 01

DELETION OF POWER MISMATCH FROM ROD CONTROL SYSTEM

3.03c (3 OF 3)

Summary:

This modification to circuitry removed the power mismatch signal, including modules from the automatic rod control system. The following modules were removed: QM-408F P, L, C, N, G, D, M, H, E, K, J. This PCM was a long term solution to the safety/control problem.

Safety Evaluation:

This change did not involve an unreviewed safety question because the probability of the occurrence of an uncontrolled RCCA withdrawal is not made more likely. The change addresses a type of accident which is not specifically analyzed in the FSAR. The rod Control System, is not normally operated in the automatic mode. Therefore, the modifications to the system which only make it less responsive, do not decrease any margin of safety.

Affected Drawings: NOTE - This section may be affected by the drawing verification/update phase of the plant documentation update. A summary revision will be issued to document any changes.

5610-M-430-26
5610-M-430-27
5610-M-430-28
5610-M-481A
5610-E-447A

Affected Procedures:

I & C Maintenance Instructions

The answer key states that **UNDERVOLTAGE** of the RCP buses (the "A" and "B" 4KV buses on both units) will cause an auto start of the auxiliary feedwater pumps. In actuality, a **LOSS OF VOLTAGE** condition on thoses buses is needed to give an AFW auto start. A simple 4KV bus undervoltage condition will not.

Semantically, a loss of voltage condition can be equated to an undevoltage condition. However, it is not true that an undervoltage condition is a loss of voltage, since loss of voltage is used to denote the absence of voltage on a bus, not a degraded bus voltage condition.

Refer to logic sheets 13, 13A, 15 and 20.

Log sheet 13 causes some confusion by its use of the title "4KV Bus A Undervoltage" in the upper left hand corner. Four relays are shown under that heading - two loss of voltage units and two undervoltage units. Please note that the undervoltage relays are not in service at this time. If both loss of voltage relays (which typically actuate at approximately 30 to 38% of nominal bus voltage, or less than 1600V) sense a loss of voltage condition, the AFW pumps will auto start as shown on sheet 13A and 15.

(1) Logic sheet 15 does show that it is possible for an undervoltage condition to give an auto start signal to the AFW System. However, it is not an undervoltage as sensed by the buses with RCPs on them, but is rather one seen at the 480V load centers, and then only as long as the emergency diesel generator output breaker is not closed.

(2) A summary of the pertinent information shown on the four logic sheets mentioned is as follows:

These signals start AFW Pumps: (see logic sheet 15)

*1) LV (Loss of Voltage) NOT UV (undervoltage) on either A 4KV bus or B 4KV bus.
2) SI
3) 2/2 SGFW PPs tripped
4) 1/3 S/G's with Lo-Lo S/G Level (15%)
5) UV on a 480V Load Center (not 4KV bus) WITH ED/G output breaker open.

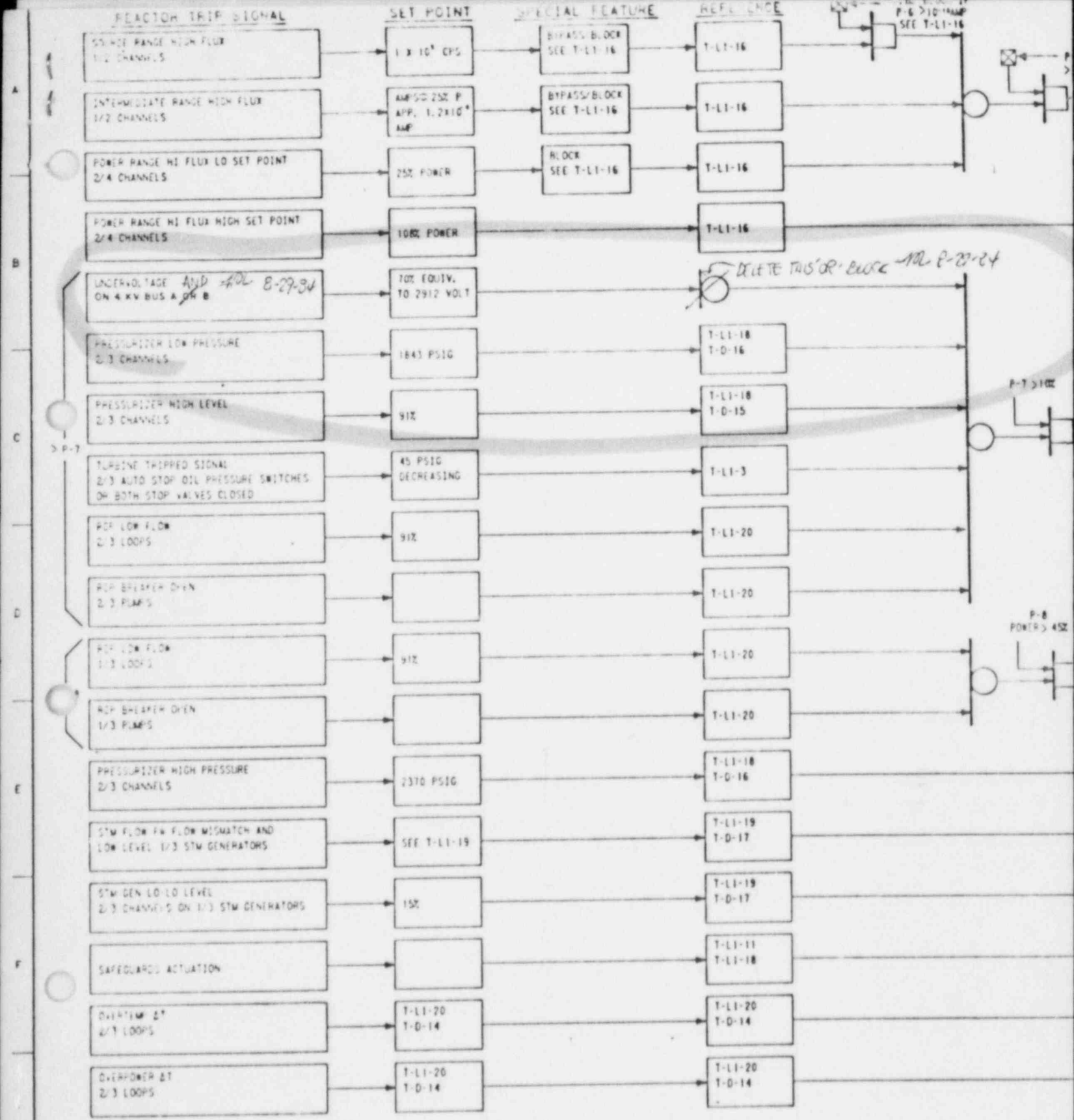

NOTE A

A TRIP SIGNAL TO THE UNDERVOLTAGE TRIP COIL DE-ENERGIZES THE COIL DROPPING OUT THE LATCH AND FREEING THE TRIP SPRING TO TRIP THE BREAKER.
A TRIP SIGNAL TO THE SHUNT TRIP COIL ENERGIZES THE SHUNT TRIP COIL. MAGNETIC FORCE PULLS THE LATCH FREE OF THE TRIP SPRING.

NOTE B

* P.B.'S CLOSE / TRIP AT BKR ACTIVE ONLY WITH BYPASS BKR RACKED OUT.
△ P.B. CLOSE AT TEST PANEL ACTIVE WITH BKR RACKED IN.
△ P.B. TRIP AT T.P. ACTIVE WITH BKR RACKED IN OR OUT.

DATE	REVISION	BY	CK	COR

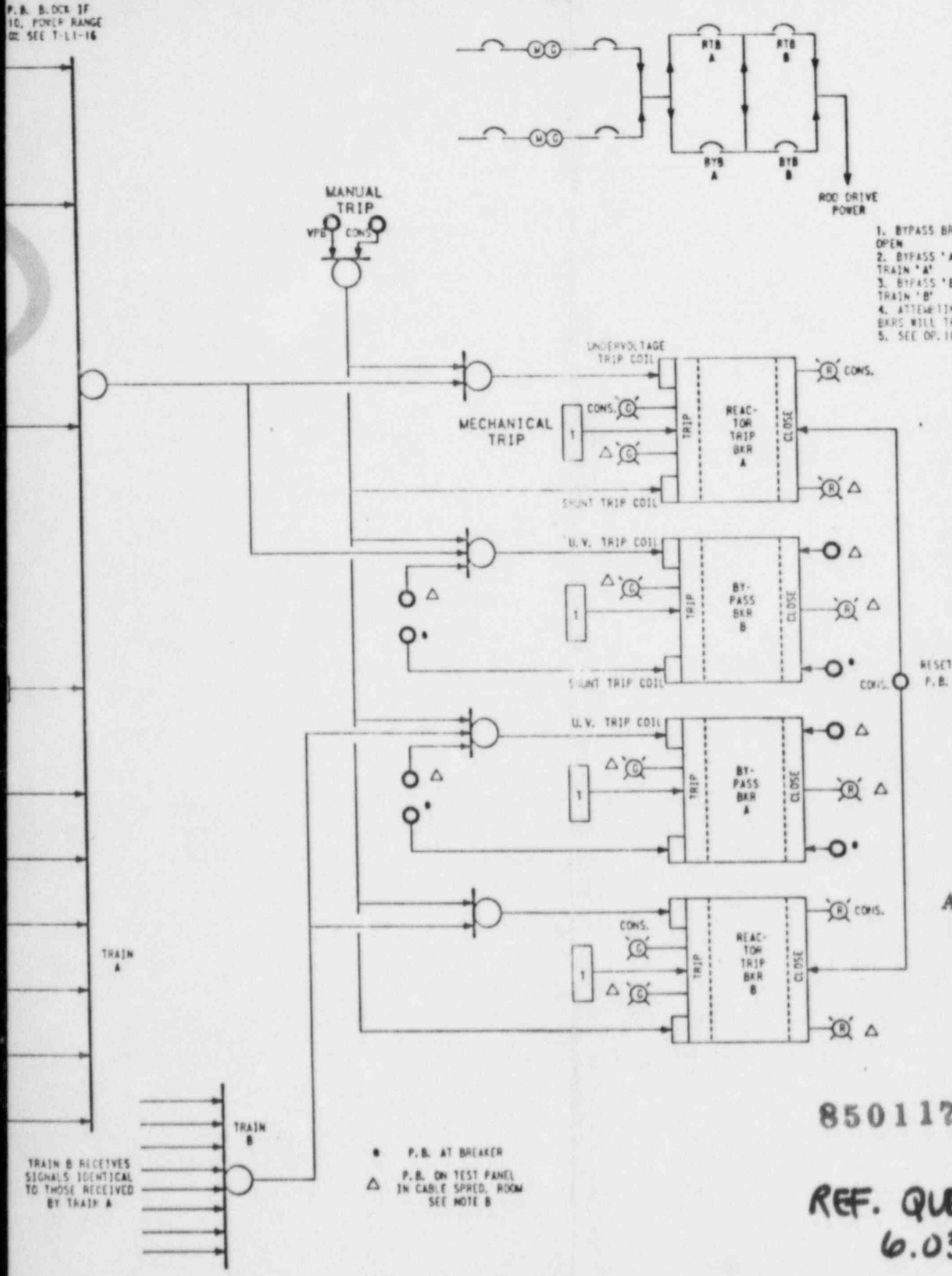

1. BYPASS BREAKERS ARE NORMALLY OPEN
2. BYPASS 'A' CLOSED WHEN TESTING TRAIN 'A'
3. BYPASS 'B' CLOSED WHEN TESTING TRAIN 'B'
4. ATTEMPTING TO CLOSE BOTH BYPASS BKRS WILL TRIP ONE OR BOTH
5. SEE OP. 1004.2

Also Available On Aperture Card

8501170235-01

REF. QUESTION 6.03a

BAYMONT ENGINEERING COMPANY- CAD

APP.	ER	NO.	DATE	REVISION	BY	CK.	COR.	APP.
		5	5/4/84	ISSUED AS BUILT FOR PG/W 80-44 & INCORR DCN NO.	JO	OGS		
		4	3/16/84	RE-DRAWN BY CAD	JAL			

FLORIDA POWER & LIGHT CO.

TURKEY POINT PLANT
UNITS 3 & 4

REACTOR TRIP SIGNALS

DRAWN BY: VMC
APPROVED BY:
CHECKED BY:
DATE: 17-73

5610-T-L1
SHEET 2

5

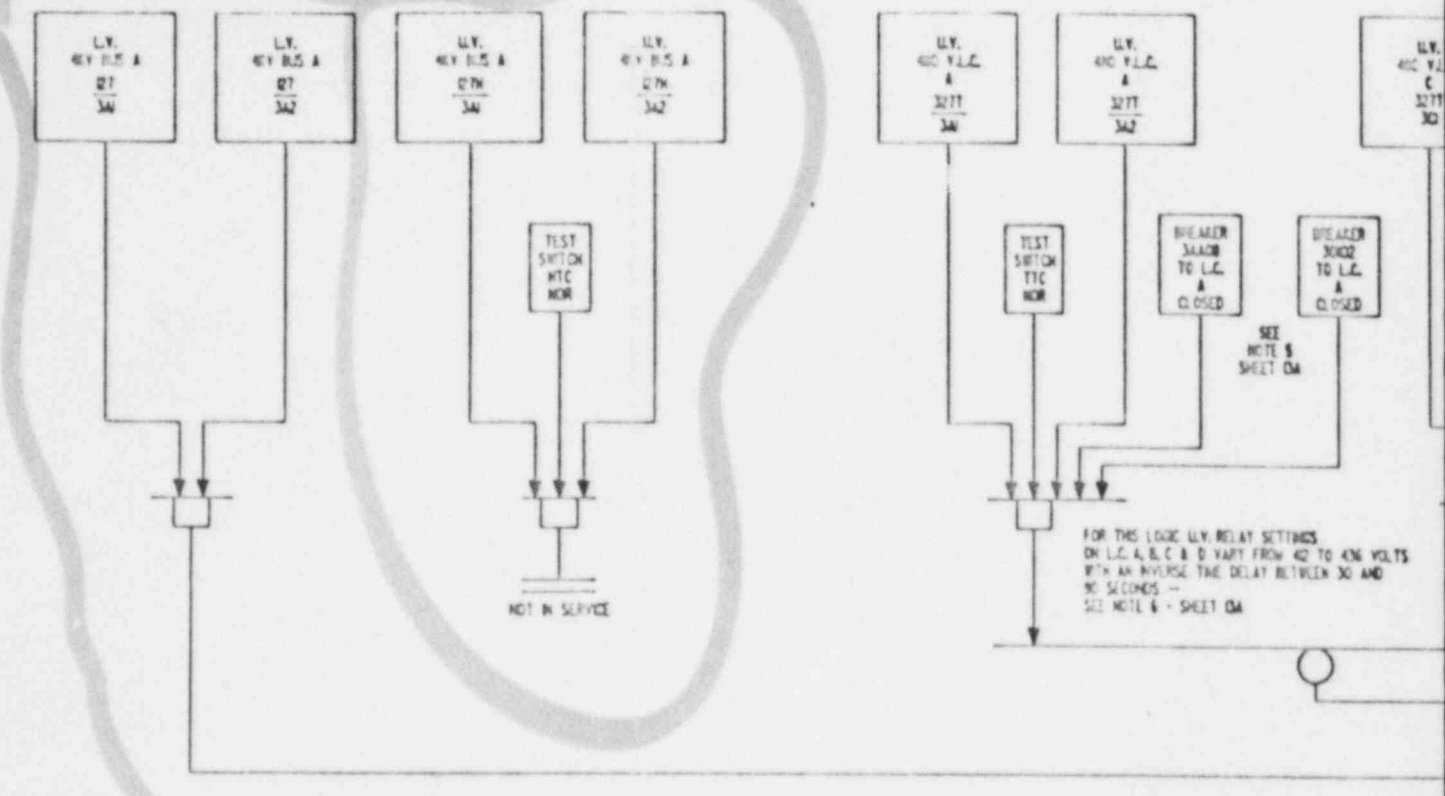

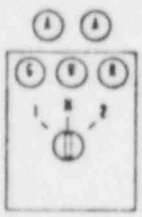

327 NTC OR TTC U.V. LOCK TEST SWITCH ON EACH LOAD CENTER PANEL

REFERENCE SMD-E-28 SHEETS 8, 9, 9A, 9B, 9C, 9D, 9E, 9F, 9G AND 9H

TEST SWITCH OPERATION

1. AT EACH LOAD CENTER PANEL TURN THE KEYLOCK SWITCH POSITION TO "1". THE FOLLOWING SHOULD OCCUR:
   - A. THE GREEN LAMP SHOULD EXTINGUISH TO INDICATE THAT THE CIRCUIT IS NOT IN THE READY STATE TO INDICATE BUS STRIPPING
   - B. ONE AMBER LAMP SHOULD ALSO EXTINGUISH TO INDICATE THAT POTENTIAL TO ONE U.V. COIL HAS BEEN REMOVED BY TEST SWITCH OPERATION
   - C. THE RED LAMP SHOULD GLOW TO INDICATE A SUCCESSFUL TEST
   - D. RELEASE SWITCH NORMAL, TURN TO POSITION "2" TO TEST THE OTHER U.V. CIRCUIT
2. NORMALLY THE GREEN AND BOTH AMBER LAMPS SHOULD BE LIT - THE WHITE LAMP IS NOT USED
3. REPORT ALL TEST DEVIATIONS OR ABNORMAL LAMP INDICATIONS

NOTES:

1. 4KV BUS B AND LOAD CENTERS B AND D HAVE SIMILAR SCHEMES.
2. SEE SHEET 0A FOR A LISTING OF RELAY ACTIONS SPECIFIC TO EACH BUS AND OTHER DESCRIPTIVE NOTES.
3. UNIT 4 IS SIMILAR

0		5/9/74	ISSUED AS BUILT FOR

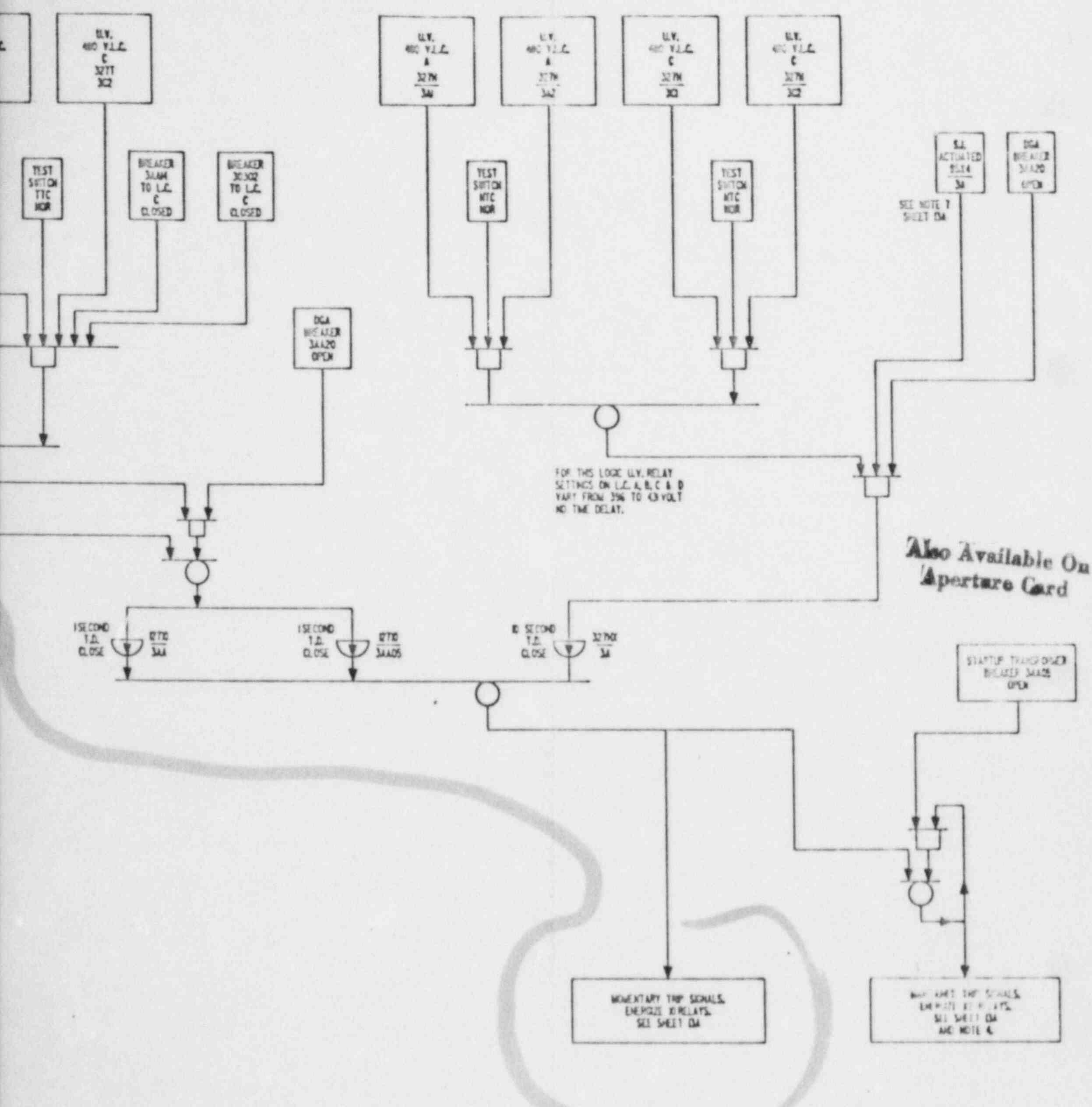

Also Available On Aperture Card

8501170235-02

REF. QUESTION 6.03a

3	5/1/84	REVISED TO INCORPORATE A PARTIAL SYSTEM TURNOVER IN ACCORDANCE WITH APPENDIX K TO PG/M 80-44 AND INCORP DCN NO.1 AND DCN NO.1 ISSUED AGAINST SH.11	

FLORIDA POWER & LIGHT CO.
TURKEY POINT PLANT
OPERATING DIAGRAM, UNIT 3
LOSS OF VOLTAGE AND BUS STRIPPING

DRAWN BY: NORBAR
CHECKED BY: LC
SHEET 13
5610-T-L-1

RELAY ACTIONS - STRIPPING 4KV BUS A

MOMENTARY SIGNAL

TRIP (CI RELAYS)

1. LOAD CENTER 3A
2. LOAD CENTER 3C
3. STARTUP TRANSFORMER BREAKER 3AA05
4. EMERGENCY STARTUP TX BREAKER 3AA22 (FROM OTHER UNIT)
5. AUXILIARY TRANSFORMER BREAKER 3AA02
6. COMPONENT COOLING PUMP 3A
7. COMPONENT COOLING PUMP 3C
8. INTAKE COOLING WATER PUMP 3A
9. SAFETY INJECTION PUMP 3A
10. RESIDUAL HEAT REMOVAL PUMP 3A
11. CONTAINMENT SPRAY PUMP 3A
12. CHARGING PUMP 3A
13. CHARGING PUMP 3C
14. ROD DRIVE M.G. SET 3A
15. SPENT FUEL PIT PUMP
16. TURBINE PLANT COOLING PUMP 3A
17. TURBINE AUXILIARY OIL PUMP
18. TRIP AND L.O. PRZ HEATER BACKUP GROUP A
19. CHILLER A, COMPUTER ROOM (UNIT 4 ONLY)

SIGNAL MAINTAINED UNTIL STARTUP TRANSFORMER BREAKER IS CLOSED

TRIP (C2 RELAYS)

1. REACTOR COOLANT PUMP 3A
2. STEAM GENERATOR FEED PUMP 3A
3. CONDENSATE PUMP 3A
4. CIRCULATING WATER PUMP 3A 1
5. CIRCULATING WATER PUMP 3A 2
6. HEATER DRAIN PUMP 3A
7. PRZ HEATER CONTROL GROUP
8. VITAL - NONVITAL TIE, MCC 3A

OPEN

1. OPEN MOV STEAM SUPPLY VALVES TO AUX. F/W PUMPS.

BLOCK

1. LOW PRESSURE AUTO START OF CCW PUMP 3A
2. LOW PRESSURE AUTO START OF CCW PUMP 3C
3. AUTO START OF TURBINE AUX. OIL PUMP.

OTHER ACTIONS

1. PERMISSIVE TO CLOSE DG A BREAKER
   SEE SHEET 9A AND S&D-E28 SHEET 8
2. START SIGNAL TO DG A
   REF. AS ABOVE
3. REMOVE TRIP INTERLOCK WITH GEN #3 LOCKOUT ACTION
   SEE SHEET 9C AND S&D-E28 SHEET 8
4. PERMISSIVE TO ALLOW MCC A TO AUTO TRANSFER
   TO LC D IF DG A FAILS TO START.
   REF. E28 SHEET 9.
5. SEQUENCER START LOGIC AND INTERLOCKS.

RELAY ACTIONS - STRIPPING 4KV BUS B

MOMENTARY SIGNAL

TRIP (C1 RELAYS)

1. LOAD CENTER 3B
2. LOAD CENTER 3D
3. STARTUP TRANSFORMER BREAKER 3AA05
4. -
5. AUXILIARY TRANSFORMER BREAKER 3AA02
6. COMPONENT COOLING PUMP 3B
7. INTAKE COOLING WATER PUMP 3C
8. INTAKE COOLING WATER PUMP 3B
9. SAFETY INJECTION PUMP 3B
10. RESIDUAL HEAT REMOVAL PUMP 3B
11. CONTAINMENT SPRAY PUMP 3B
12. CHARGING PUMP 3B
13. -
14. ROD DRIVE M.G. SET 3B
15. -
16. TURBINE PLANT COOLING PUMP 3B
17. -
18. -
19. CHILLER B, COMPUTER ROOM (UNIT 3 ONLY)

SIGNAL MAINTAINED UNTIL STARTUP TRANSFORMER BREAKER IS CLOSED

TRIP (C1 RELAYS)

1. REACTOR COOLANT PUMPS 3B AND 3C
2. -
3. CONDENSATE PUMP 3B
4. CIRCULATING WATER PUMP 3B 1
5. CIRCULATING WATER PUMP 3B 2
6. HEATER DRAIN PUMP 3B
7. PRZ HEATER BACKUP GROUP B
8. -

OPEN

1. OPEN MOV STEAM SUPPLY VALVES TO AUX. F/W

BLOCK

1. LOW PRESSURE AUTO START OF CCW PUMP 3B

OTHER ACTIONS

1. PERMISSIVE TO CLOSE DG B BREAKER
   REF. AS FOR "A" 4KV
2. START SIGNAL TO DG B
   REF. AS FOR A 4KV
3. REMOVE TRIP INTERLOCK WITH GEN #3 LOCKOUT
   SEE SHEET 9C AND S&D-E28 SHEET 8
4. PERMISSIVE TO MCC D TRANSFER CIRCUIT IF
   DG B FAILS TO START.
   REF. E-28 SHEET 9A
5. SEQUENCER START LOGIC AND INTERLOCKS.

EP	NO.	DATE	REVISION

NOTES, SHEETS 13 AND 13A

NOTES

1. BUS STRIPPING AND SEQUENCER ACTIONS WILL BE INITIATED BY:
   a. LOSS OF VOLTAGE ON BUS A OR B
   b. UNDERVOLTAGE ON 480 VOLT LOAD CENTERS A, B, C, OR D WITH LOAD CENTER SUPPLY BREAKERS CLOSED AND THE ASSOCIATED DG BREAKER OPEN.

      OR:

      UNDERVOLTAGE ON 480 VOLT LOAD CENTERS A, B, C, OR D AND A S.I. SIGNAL AND THE ASSOCIATED DG BREAKER OPEN.
2. STRIPPING OF BUS A INITIATES DG A START, BUS B FOR DG B.
3. SEQUENCER A ACTIONS WILL BE INITIATED BY STRIPPING OF BUS A. SEQUENCER B BY BUS B.
4. THE MAINTAINED SIGNAL IS TO PREVENT INADVERTANT START OF EQUIPMENT WHICH COULD OVERLOAD DIESELS.
5. LOAD CENTER SUPPLY BREAKERS ARE INCLUDED IN THE LOGIC SCHEME TO PERMIT DE-ENERGIZING LOAD CENTERS FOR MAINTAINANCE.
6. THE TIME DELAYED RELAY ACTION IS TO PROTECT 480 VOLT MOTORS FROM DAMAGE DUE TO SUSTAINED UNDERVOLTAGE.
7. UNDERVOLTAGE CONCURRENT WITH S.I. SIGNAL INITIATES BUS STRIPPING IN ORDER TO OBTAIN RATED VOLTAGE FROM THE DG FOR SAFETY RELATED EQUIPMENT.

REFERENCE WIRING DIAGRAMS

5610-E28 SHEET 9

NOTE: RELAY ACTIONS FOR UNIT 4 ARE SIMILAR.

PUMPS.

ACTION

Also Available On Aperture Card

8501170235-03

REF. QUESTION 6.03d

TECHNOLOGY INC.

BY	CK.	COR.	APP.	ER	NO.	DATE	REVISION	BY	CK.	COR.	APP.
					1	5/4/84	ISSUED TO CHANGE REV.3 TO REV.0 DATED 3-2-84	J.O.	DES	[illegible]	[illegible]
					0	5/2/84	TRACING REDRAWN ON CAD. INCORP. MANUAL CHANGES ONTO NEW CAD ORIGINAL.	R.V.	DES	[illegible]	[illegible]

FLORIDA POWER & LIGHT CO.

TURKEY POINT PLANT
OPERATING DIAGRAM, UNIT 3 & 4
RELAY ACTIONS
4KV BUS STRIPPING

DRAWN BY: NORBAN | APPROVED BY: [illegible]
CHECKED BY: LC | DATE: - -5/[illegible]

SHEET 13A
5610-T- -L1

REV 1

LOGIC - AUX. FW PUMP START

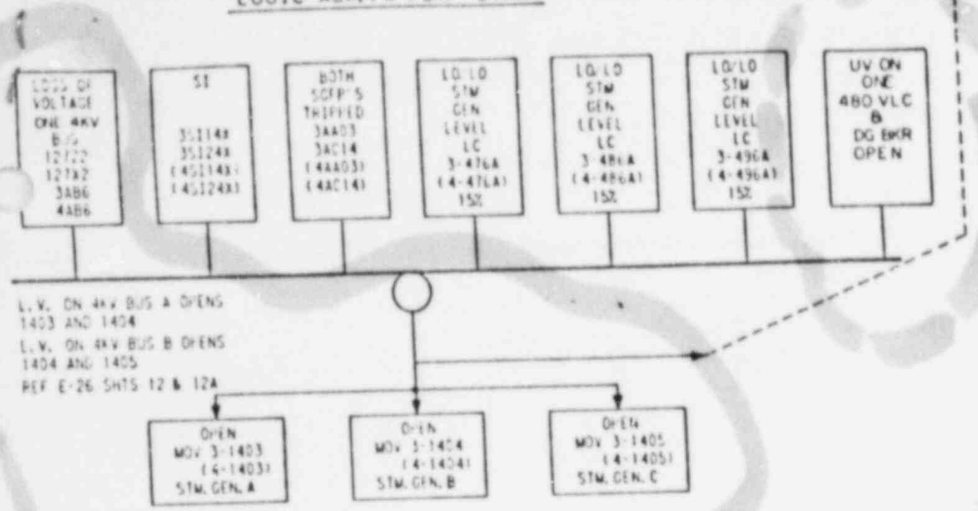

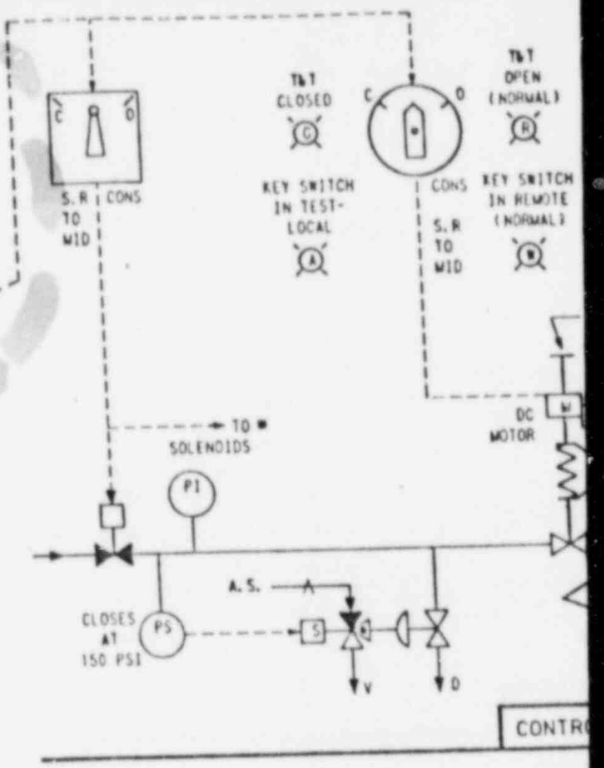

LOCAL TEST PANEL - AUXILIARY FEEDWATER PUMP

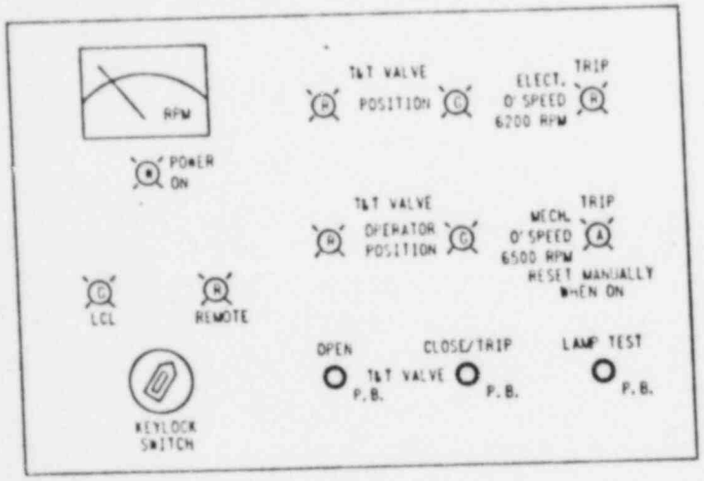

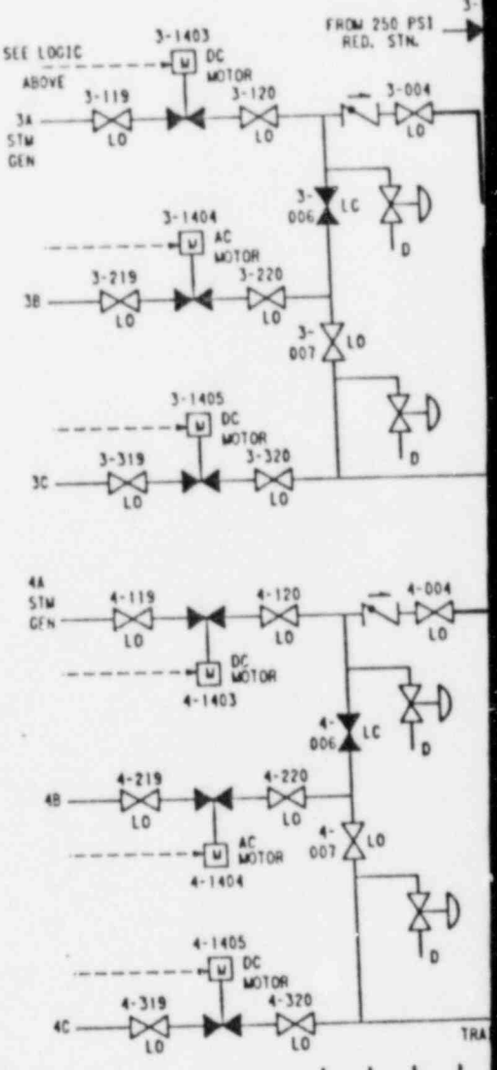

ER	NO.	DATE	REVISION	BY	CK.	COR.	AP

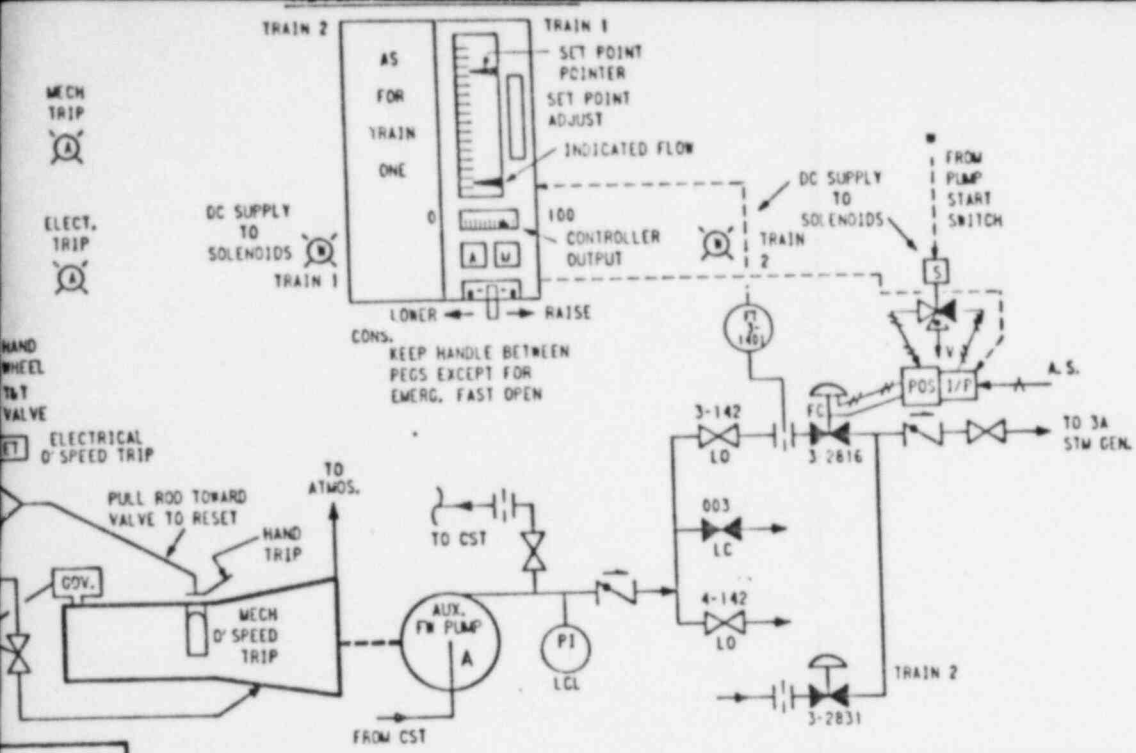

Also Available On Aperture Card

L SYSTEM

P & I DIAGRAM

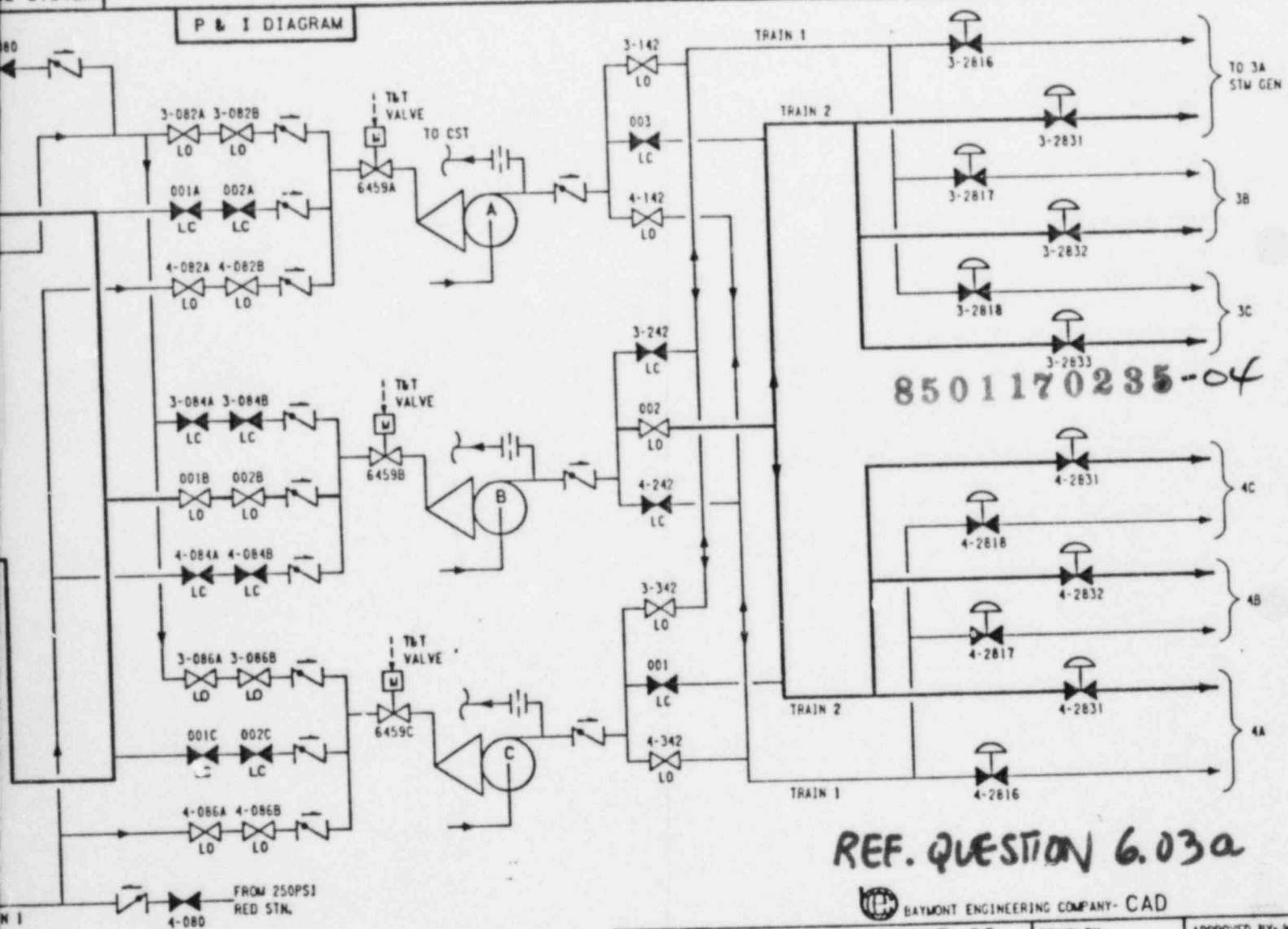

8501170235-04

REF. QUESTION 6.03a

BAYMONT ENGINEERING COMPANY- CAD

NO.	DATE	REVISION	BY	CK.	COR.	APP.
8	5/9/84	ISSUED AS-BUILT FOR PCN 80-44	BE/LG	DFS		
7	5/4/84	REVISED TO INCORPORATE A PARTIAL SYSTEM TURN OVER IN ACCORDANCE WITH APPENDIX R TO PCN 80-44 AND INCORP DCR# 1	BE/LG	DFS		

FLORIDA POWER & LIGHT CO.

TURKEY POINT PLANT
UNITS 3 & 4
AUXILIARY FEEDWATER PUMP START
LOGIC, P&I AND CONTROL SYST.

DRAWN BY: A.V.
CHECKED BY:
APPROVED BY: W.C.M.
DATE: 5/4/84

5610-T-L1
SHEET 15
REV. 8

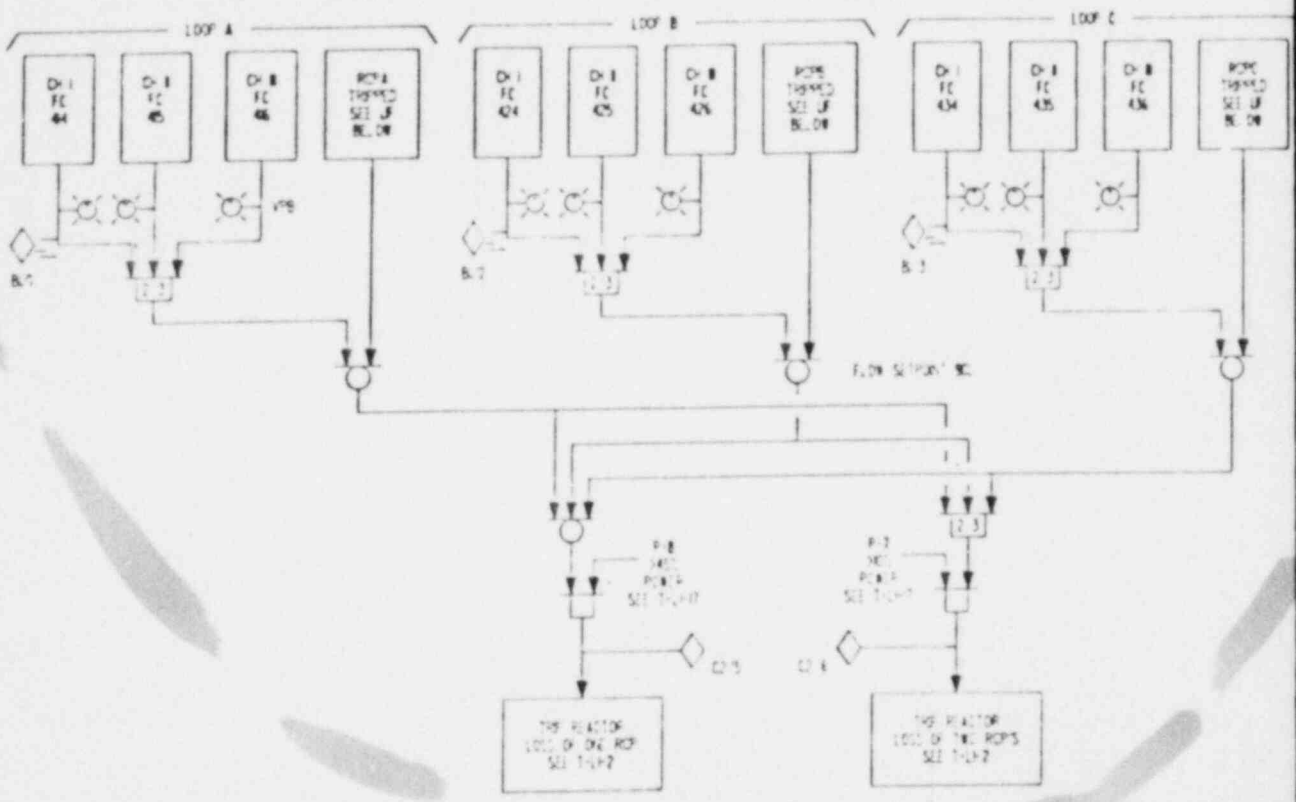

REACTOR COOLANT PUMP
UNDERFREQUENCY TRIP

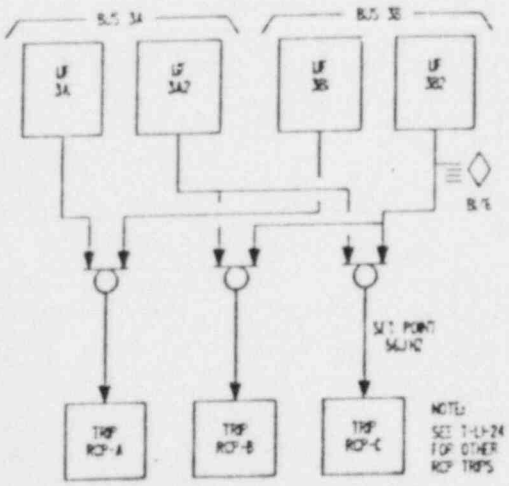

REACTOR TRIP - UNDER VOLTAGE

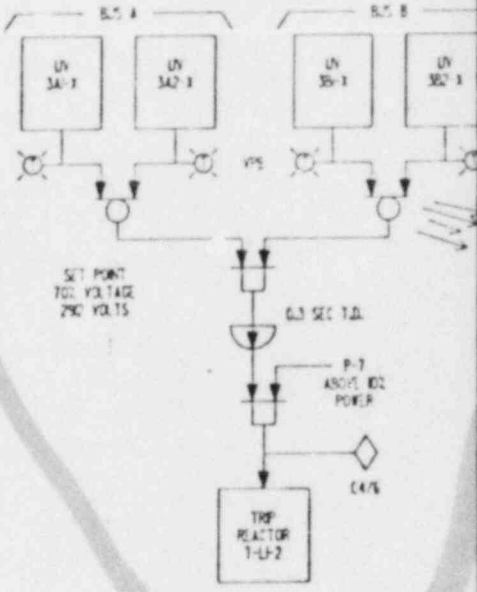

BY	NO.	DATE	REVISION

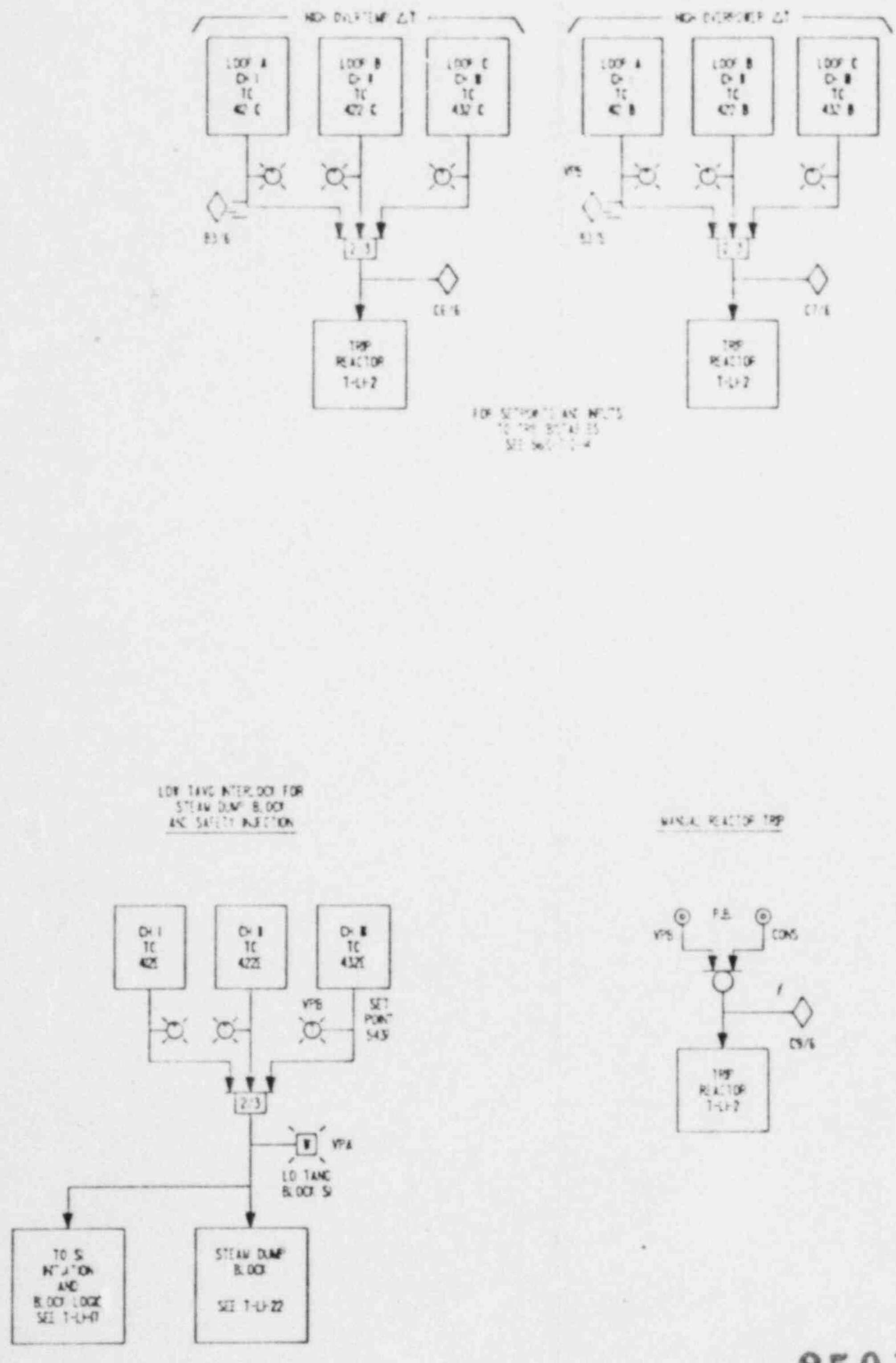

Also Available On Aperture Card

8501170235-05

REF QUESTION 6.03a

TECHNOLOGY INC.

FLORIDA POWER & LIGHT CO.	DRAWN BY: HORSAN
TURKEY POINT PLANT OPERATING DIAGRAM, UNIT 3 & 4	CHECKED BY:
PRIMARY COOLANT SYSTEM REACTOR TRIPS AND TAVG INTERLOCK	DATE: 6-8-84
SHEET 20	REV. 7
5610-T-LI	

NO.	DATE	REVISION	BY	CK.	COR.	APP.
7	6-5-84	TRACING REDRAWN ON CAD				

6.03a Cont'd

(from Logic Sheet 20)

Undervoltage Setpoint is 70% of nominal bus voltage or approximately 2912V.

Undervoltage trips the reactor, after a 0.3 second time delay when power is greater than P-7, as sensed by 1/2 undervoltage relays on 2/2 4KV buses with RCPs (or, A and B only).

*Loss of Voltage on "A" 4KV bus opens MOVs 1403 and 1404 - so A, B, & C AFW pumps start.

Loss of Voltage on "B" 4KV bus opens MOVs 1404 and 1405 - so only A & C AFW pumps start (see normal AFW System lineup chart).

"NORMAL LINE-UP"

S/G's	MOV's	TRAIN	AFW PUMPS
3A	3-1403(DC)	2	B
3B	3-1404(AC)	1	A & C
3C	3-1405(DC)	1	A & C
4A	4-1403(DC)	2	B
4B	4-1404(AC)	1	A & C
4C	4-1405(DC)	1	A & C

(3) I believe the closeness in meaning of the two terms, "UNDERVOLTAGE" and "LOSS OF VOLTAGE" may have lead to the answer as seen on the exam key.

6.05a 2

This question was a "confirm at facility", and dealt with PRMS Channel 1[illegible] automatic actions. Please see the enclosed page 10 of OP 11108.1, which outlines the needed information. You will note that recent changes were made in the wording, as indicated by the brackets around items 2 and 3 under "automatic action". This information is the version as studied by the candidates.

*R3/dj:09/10/84

REF. QUESTION 6.05 a 2.)

NOTE PG 10 TITLE IN UPPER RT CORNER BUT PG IS ON IT'S SIDE!

FLORIDA POWER AND LIGHT COMPANY
TURKEY POINT UNITS 3 AND 4
OFF-NORMAL OPERATING PROCEDURE 11108.1
FEBRUARY 24, 1983

1.0 Title:

PROCESS RADIATION MONITOR - OFF-NORMAL CONDITION OPERATION

2.0 Approval and List of Effective Pages:

2.1 Approval:

Change Dated 2/24/83 Reviewed by Plant Nuclear Safety Committee: 83-16

and Approved by Plant Manager - Nuclear: 2/24/83

2.2 List of Effective Pages:

Page	Date	Page	Date	Page	Date	Page	Date
1	2/24/83	4	2/15/80	7	2/15/80	10	2/24/83
2	2/15/80	5	2/15/80	8	2/15/80		
3	2/15/80	6	2/15/80	9	2/15/80		

3.0 Purpose and Discussion:

3.1 Purpose:

This procedure provides instructions to be followed in the event of a high radiation alarm on the Process Radiation Monitors.

3.2 Discussion:

3.2.1 The Process Radiation Monitoring System (PRMS) is designed to perform three basic functions:

1. Warn operating personnel of any radiation hazard which might develop.

2. Provide early warning of a system or equipment malfunction which could lead to a radiation hazard or plant damage.

3. Prevent inadvertent release of radioactivity to the environment.

CAUTION: Notify the |Plant Supervisor - Nuclear| if two or more monitors fail or are inoperable. Such an occurrence may constitute an "Unusual Event".

4.0 Symptoms:

4.1 Audible and visual annunciation PROCESS MONITOR - HIGH RADIATION.

4.2 Visual annunciation on Process Radiation Monitoring System console. (High alarm light on alarming channel).

4.3 Additional symptoms are included in Section 5.0 for individual channels.

TABLE I (continued)

CHANNEL NUMBER	PROCESS SYSTEM	TYPE OF DETECTOR	AUTOMATIC AND OPERATOR ACTION
R-19	Steam Generator Liquid	Scintillation (Sodium Iodide)	Automatic Action 1. Close steam generator liquid sample isolation valves 2. [Close blowdown tank drain valve to circulating water discharge] 3. [Close steam generator blowdown flow control valves] Immediate Operator Action 1. Verify Valid Alarm 2. Refer to ONOP 1508.2, Steam Generator Tube Leak
R-20	Reactor Coolant Letdown	G-M tube thin wall	No Automatic Action Immediate Operator Action 1. Verify Valid Alarm 2. Refer to ONOP 1008.4, Excessive Reactor Coolant System Activity

6.06d

This was a "check at facility" response on the answer key. The question asked how the operator was prevented from (inadvertantly) opening the containment recirc. sump isolation valve (MOV's 860 A & B and 861 A & B) while cooling down the RCS with RHR via MOV's 750 and 751.

While there are no interlocks to prevent this occurrence, no where in the cooldown procedure (OP 0205.1) is the operator directed to open these MOV's. Since we practice verbatim compliance with our procedures, an accidental opening would have to be assumed. Additionally, the valves referenced are in series, such that both 860A and 861A, or 860B and 861B would have to be mispositioned by the operator (in the absence of procedural guidance to do so) to cause a problem.

Please refer to sheet 1 of 2 of 5610-T-E-4510, OP 0209.1, "Valve Exercising Procedure", and OP 0202.1, "Reactor Startup - Cold Condition to Hot Shutdown Conditions", attached.

Page 34 of OP 0202.1 simply requires that the operator ensure that these valves are closed while going from cold to hot. They are not mentioned in the locked valve list (AP 0103.5). However, pages 21 and 30 of OP 0209.1 lists these valves under Appendix "C", sheet 7 of 9, as valves exercised at cold shutdown. There, a precaution is stated "to exercise one valve at a time and verify (it's) closed by visual observation before exercising the next valve." This is the only procedural guidance extant at this time concerning MOV 860 A/B and 861 A/B. In conclusion, your answer key should reflect this fact.

*R3/dj:09/10/84

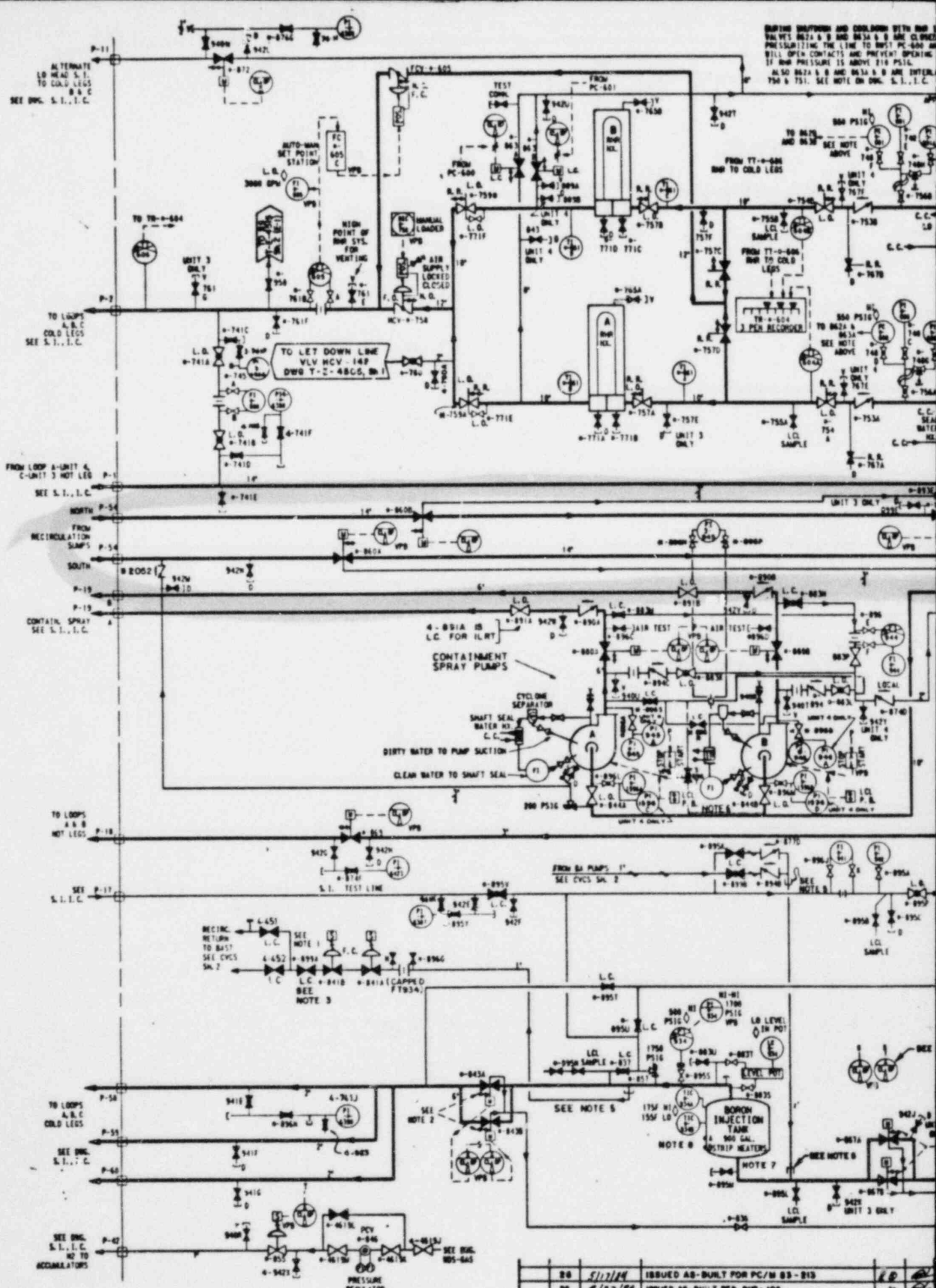

ER	NO.	DATE	REVISION	BY	CK.
	26	5/17/84	ISSUED AS-BUILT FOR PC/M 83-213	KD	
	25	4/27/84	ISSUED AS-BUILT PER DWP-102	dz	
	24	4/19/84	ISSUED AS-BUILT FOR PC/M 82-20	KD	
	23	3/1/84	ISSUED AS-BUILT PER DWP-098	dz	
	22	1/20/84	ISSUED AS-BUILT FOR PC/M 80-80/80-81	dz	
	21	11/30/83	RE-ISSUED AS-BUILT FOR PC/Ms 80-100 & 80-101	KD	

1 2 3 4 5

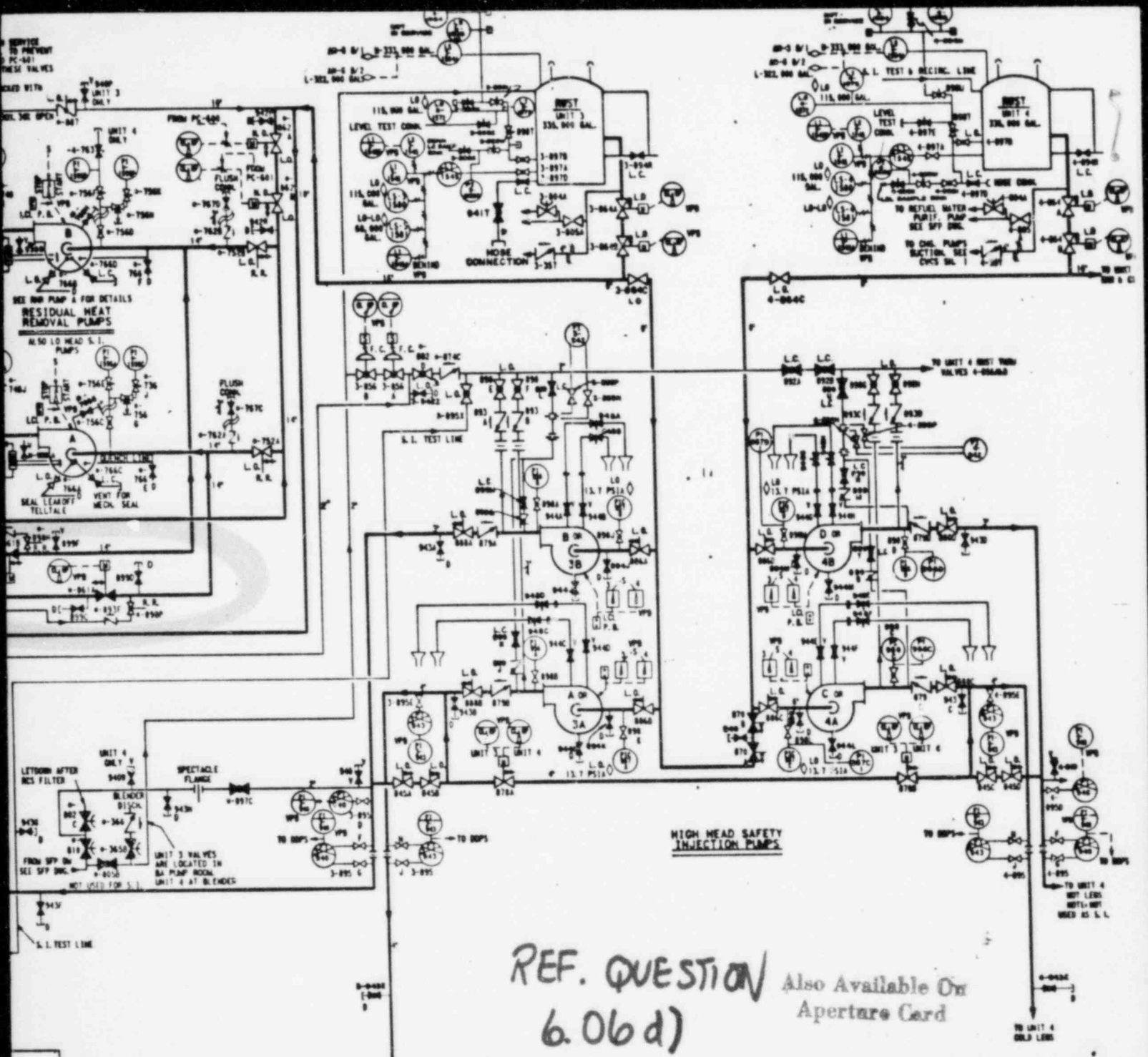

REF. QUESTION 6.06d)

(CAF)

Also Available On Aperture Card

NOTES

1-PARALLEL S.I.T. RECIRC. SYSTEM IS ON UNIT 4 ONLY. VALVES 451 & 452 DO NOT EXIST ON UNIT 3.
2-VALVE STEM LEAKOFF LINE HAS AN ISOLATION VALVE.
3- LOCK FOR UNIT 3 ONLY
4 VALVES 867A & 867B ARE MANUALLY OPERABLE ONLY. CONTROL ROOM OPERABILITY HAS BEEN REMOVED. VALVES 896G & 896H, 841A & 841B AND 89[illegible] ARE TO REMAIN CLOSED
5 1" LINE BETWEEN CAPS LEFT IN PLACE
6 CONTAINMENT SPRAY PUMP DISCHARGE TO SUCTION RECIRCULATION LINE & VALVE 3-896T ARE FOR UNIT 3 ONLY
7 STRIP HEATERS IN BIT HAVE BEEN DISCONNECTED.
8 ELECTRICAL CABLES HAVE BEEN DISCONNECTED. HOWEVER INSTRUMENTS ARE STILL INSTALLED.

8501170235-06

BAYMONT ENGINEERING COMPANY- CAD (TPN, M. -

COR.	APP.	ER	NO.	DATE	REVISION	BY	CK.	COR.	APP.
			20	1/8/84	REISSUED AS-BUILT FOR PC/M 81-102				
			19	10/27/83	ISSUED AS-BUILT FOR PC/M 81-113				
			28	11/5/84	REVISED FLAGS TO T-E-4515 Sh. 2 AND ISSUED AS-BUILT PER DUP-108				
			27	5/23/84	ISSUED AS BUILT FOR PC/M 81-116				
			18	4/21/83	REDRAWN ON C.A.D.				

FLORIDA POWER & LIGHT CO.

TURKEY POINT PLANT
OPERATING DIAGRAM, UNIT 3&4
SAFETY INJECTION & RESIDUAL HEAT REMOVAL SYSTEMS OUTSIDE CONTAINMENT

DRAWN BY: BE/CAD
APPROVED BY:
CHECKED BY: JLS/DW
DATE:

SHEET 1 OF 2
5610-T-E-4510

6.06d
PBN 106 3

FLORIDA POWER AND LIGHT COMPANY
TURKEY POINT UNITS 3 AND 4
OPERATING PROCEDURE 0202.1
MAY 30, 1984

1.0 Title:

REACTOR STARTUP - COLD CONDITION TO HOT SHUTDOWN CONDITIONS

2.0 Approval and List of Effective Pages:

2.1 Approval:

Change Dated 5/30/84 Reviewed by Plant Nuclear Safety Committee: 84-104

and Approved by Plant Manager - Nuclear: 5/30/84

2.2 List of Effective Pages:

Page	Date	Page	Date	Page	Date	Page	Date
1	5/30/84	11	5/22/84	21	5/22/84	32	5/22/84
2	5/22/84	12	5/30/84	22	5/22/84	33	5/22/84
3	5/22/84	13	5/30/84	23	5/22/84	34	5/22/84
4	5/22/84	14	5/22/84	24	5/22/84	35	5/22/84
5	5/22/84	15	5/22/84	25	5/22/84	36	5/22/84
6	5/22/84	16	5/22/84	26	5/22/84	37	5/22/84
7	5/30/84	17	5/22/84	27	5/22/84	38	5/22/84
8	5/22/84	18	5/22/84	28	5/22/84	39	5/22/84
9	5/22/84	19	5/22/84	29	5/22/84	40	5/22/84
10	5/22/84	20	5/22/84	30	5/22/84	41	5/22/84
				31	5/22/84	42	5/22/84

3.0 Purpose:

This procedure provides instructions for the startup of the reactor from a refueling or cold shutdown condition to the hot shutdown conditions and to provide added assurance that ESF system lineups are correct.

4.0 Precautions and Limitations:

NOTE 1: The unit clearance book shall be reviewed to verify that safety related components are not on a clearance order. Should an occasion arise that a safety related component can not be returned to service prior to startup, a technical review is required to ensure this is not an unreviewed safety question.

PC/M 78-102B OTSC 2292

PC/M 73-102b, OTSC's 2292,2300, 2301 INCORPORATED

TABLE 1 (cont'd)

INITIALS	SYSTEM	LOC-ATION	VALVE/ INDICATOR	POSITION/ FLOW	DESCRIPTION
ACCUMULATORS (ACCUM.)					
_____	ACCUM.	I.C.	*-881E	OPEN	"B" Accumulator PT-927 and LT-926
_____	ACCUM.	I.C.	*-881F	OPEN	"B" Accumulator PT-927 and LT-926
_____	ACCUM.	I.C.	*-881G	OPEN	"B" Accumulator PT-925 and LT-924
_____	ACCUM.	I.C.	*-881H	OPEN	"B" Accumulator PT-925 and LT-924
_____	ACCUM.	I.C.	*-881J	OPEN	"C" Accumulator PT-931 and LT-930
_____	ACCUM.	I.C.	*-881K	OPEN	"C" Accumulator PT-931 and LT-930
_____	ACCUM.	I.C.	*-881L	OPEN	"C" Accumulator PT-929 and LT-928
_____	ACCUM.	I.C.	*-881M	OPEN	"C" Accumulator PT-929 and LT-928
_____	ACCUM.	I.C.	*-898R	OPEN	Press. Equalizing Bypass MOV-865A
_____	ACCUM.	I.C.	*-898S	OPEN	Press. Equalizing Bypass MOV-865C
INITIALS	SYSTEM	LOC-ATION	VALVE/ INDICATOR	POSITION/ FLOW	DESCRIPTION
_____	RHR	O.C.	FCV-*-605	CLOSED	RHR Hx Bypass
_____	RHR	O.C.	*-745A	OPEN	RHR Recirc. FI-608
_____	RHR	O.C.	*-745B	OPEN	RHR Recirc. FI-608
_____	RHR	O.C.	*-752A		L.O. "A" RHR Pp. Suct.
_____	RHR	O.C.	*-752B		L.O. "B" RHR Pp. Suct.
_____	RHR	O.C.	*-754A		L.O. "A" RHR Pp. Disch.
_____	RHR	O.C.	*-754B		L.O. "B" RHR Pp. Disch.
_____	RHR	O.C.	*-756A	OPEN	"A" RHR Pp. Disch. PC-600
_____	RHR	O.C.	*-748D	OPEN	"A" RHR Pp. Disch. PC-600
_____	RHR	O.C.	*-756B	OPEN	"B" RHR Pp. Disch. PC-601
_____	RHR	O.C.	*-748F	OPEN	"B" RHR Pp. Disch. PC-601
_____	RHR	O.C.	*-757A		L.O. "A" RHR Hx Inlet
_____	RHR	O.C.	*-757B		L.O. "B" RHR Hx Inlet
_____	RHR	O.C.	*-757C	CLOSED	RHR Pp. Disch. Bypass Around Hx
_____	RHR	O.C.	*-757D	CLOSED	RHR Pp. Disch. Bypass Around Hx
_____	RHR	O.C.	HCV-*-758	NOTE 1	RHR Hx Outlet
_____	RHR	O.C.	MOV-*-860A	CLOSED	Recirc. Sump to RHR Suction
_____	RHR	O.C.	MOV-*-860B	CLOSED	Recirc. Sump to RHR Suction
_____	RHR	O.C.	MOV-*-861A	CLOSED	Recirc. Sump to RHR Suction
_____	RHR	O.C.	MOV-*-861B	CLOSED	Recirc. Sump to RHR Suction
_____	RHR	O.C.	*-759A		L.O. RHR Hx Outlet
_____	RHR	O.C.	*-759B		L.O. RHR Hx Outlet
_____	RHR	O.C.	*-761A	OPEN	RHR Flow FT-605
_____	RHR	O.C.	*-761B	OPEN	RHR Flow FT-605

6.06d

3 of 5

FLORIDA POWER AND LIGHT COMPANY
TURKEY POINT UNITS 3 AND 4
OPERATING PROCEDURE 0209.1
MAY 10, 1984

1.0 Title:

VALVE EXERCISING PROCEDURE

2.0 Approval and List of Effective Pages:

2.1 Approval:

Change Dated 5/10/84 Reviewed by Plant Nuclear Safety Committee: 84-88

and Approved by Plant Manager - Nuclear: 5/10/84

2.2 List of Effective Pages:

Page	Date	Page	Date	Page	Date	Page	Date
1	5/10/84	17	8/25/83	33	10/13/83	49	8/25/83
2	8/25/83	18	8/25/83	34	8/25/83	50	8/25/83
3	8/25/83	19	8/25/83	35	8/25/83	51	8/25/83
4	8/25/83	20	8/25/83	36	8/25/83	52	5/10/84
5	12/15/83	21	8/25/83	37	8/25/83	53	8/25/83
6	8/25/83	22	8/25/83	38	8/25/83	54	5/10/84
7	8/25/83	23	11/23/83	39	8/25/83	55	8/25/83
8	8/25/83	24	8/25/83	40	8/25/83	56	8/25/83
9	8/25/83	25	8/25/83	41	8/25/83	57	8/25/83
10	8/25/83	26	8/25/83	42	8/25/83	58	8/25/83
11	8/25/83	27	8/25/83	43	8/25/83	59	8/25/83
12	8/25/83	28	8/25/83	44	8/25/83	60	8/25/83
13	8/25/83	29	8/25/83	45	8/25/83	61	8/25/83
14	8/25/83	30	8/25/83	46	8/25/83	62	8/25/83
15	8/25/83	31	8/25/83	47	8/25/83	63	8/25/83
16	8/25/83	32	11/23/83	48	8/25/83		

3.0 Purpose:

This procedure provides the instructions for the periodic exercising of Code Class 1, 2, and 3 valves for which exercising is required by the Valve Test Program portion of the Turkey Point Inservice Inspection and Testing Program.

4.0 Precautions and Limits:

4.1 Observe all applicable Radiation Work Permits (obtain RWPs if required for particular valves).

4.2 The specified method, precautions, etc, on the appendix sheets shall be followed for exercising a particular valve. Any discrepancies, either apparent or discerned, with the above (due to varying plant conditions, etc) shall be resolved with the Plant Supervisor - Nuclear prior to proceeding and documented in accordance with Administrative Procedure 0109.3, On the Spot Changes to Procedures.

UNIT 3

APPENDIX C (cont'd)

Unit 3 - Sheet 7 of 9

Valves Exercised at Cold Shutdown (cont'd)

VALVE NUMBER	DESCRIPTION (Location)	STROKE TIME ACT	STROKE TIME MAX REQ.	FAIL-SAFE SAT/UNSAT	FAIL-SAFE REQ.	REM POS INDICATION SAT/UNSAT	EXERCISE VALVE SIGNATURE	DATE	PROCEDURE STEP NUMBER, METHOD, PRECAUTIONS, ETC.
MOV-3-860A	Recirc. Sump to A RHR PP (RHR HX RM)	OPEN		NA	NA				Verify all four valves are closed by visual observation. Exercise one valve at a time and verify closed by visual observation before exercising the next valve.
MOV-3-860B	Recirc. Sump to B RHR PP (RHR HX RM)	OPEN		NA	NA				
MOV-3-861A	Recirc. Sump to A RHR PP (A RHR PP RM)	OPEN		NA	NA	NOTE 2 NA			
MOV-3-861B	Recirc. Sump to B RHR PP (B RHR PP RM)	OPEN		NA	NA	NOTE 2 NA			
MOV-3-866A	Hi Head SI to Hot Leg A (I.C. 14' el. near Pen 18)	OPEN		NA	NA				Verify MOV-3-869 is closed. (Upstream stop valve) See NOTE 1 below
MOV-3-866B	Hi Head SI to Hot Leg B (I.C. 14' el. near Pen 18)	OPEN		NA	NA				
CV-3-855	Nitrogen Stop to Accumulator (P and VR, Pen 42)	CLOSE			FC	NOTE 2 NA			Verify CV-3-853A,B,and C are closed (Acc. N_2 fill valves)
CV-3-956A	Pzr Steam Sample - O.C. (P + VRM Pen 8)	CLOSE			FC	NOTE 2 NA			Verify remote sample valves inside containment (CV-3-951, 953, and 955A-E) are closed prior to exercising.
CV-3-956B	Pzr Liquid Sample - O.C. (P + VRM Pen 9)	CLOSE			FC	NOTE 2 NA			
SV-3-6428	Hot Leg Sample - O.C. (P + VRM Pen 20)	CLOSE			FC	NOTE 2 NA			
CV-3-956D	Accumulator Sample - O.C. (P + VRM Pen 55)	CLOSE			FC	NOTE 2 NA			

REMARKS:

NOTES: 1. The breakers for these valves are normally locked open with the valves closed. Ensure that after the valves are exercised the breakers are relocked open with the valves closed.
2. IWV-3300 Position indication is verified during performance of OP 0209.4.

4a 5

IT 4

APPENDIX C (cont'd)

Unit 4 - Sheet 7 of 9

Valves Exercised at Cold Shutdown (cont'd)

VALVE NUMBER	DESCRIPTION (Location)	STROKE TIME ACT	STROKE TIME MAX REQ.	FAIL-SAFE SAT/UNSAT	FAIL-SAFE REQ.	REM POS INDICATION SAT/UNSAT	EXERCISE VALVE SIGNATURE	DATE	PROCEDURE STEP NUMBER, METHOD, PRECAUTIONS, ETC.
MOV-4-860A	Recirc. Sump to A RHR PP (RHR HX RM)	OPEN		NA	NA				Verify all four valves are closed by visual observation. Exercise one valve at a time and verify closed by visual observation before exercising the next valve.
MOV-4-860B	Recirc. Sump to B RHR PP (RHR HX RM)	OPEN		NA	NA				
MOV-4-861A	Recirc. Sump to A RHR PP (A RHR PP RM)	OPEN		NA	NA	NOTE 2 NA			
MOV-4-861B	Recirc. Sump to B RHR PP (B RHR PP RM)	OPEN		NA	NA	NOTE 2 NA			
MOV-4-866A	Hi Head SI to Hot Leg A (I.C. 14' el. near Pen 18)	OPEN		NA	NA				Verify MOV-4-869 is closed. (Upstream stop valve) See NOTE 1 below
MOV-4-866B	Hi Head SI to Hot Leg B (I.C. 14' el. near Pen 18)	OPEN		NA	NA				
CV-4-855	Nitrogen Stop to Accumulator (P and VR, Pen 42)	CLOSE			FC	NOTE 2 NA			Verify CV-4-853A,B,and C are closed (Acc. N_2 fill valves)
CV-4-956A	Pzr Steam Sample - O.C. (P + VRM Pen 8)	CLOSE			FC	NOTE 2 NA			Verify remote sample valves inside containment (CV-4-951, 953, and 955A-E) are closed prior to exercising.
CV-4-956B	Pzr Liquid Sample - O.C. (P + VRM Pen 9)	CLOSE			FC	NOTE 2 NA			
*SV-4-6428	Hot Leg Sample - O.C. (P + VRM Pen 20)	CLOSE			FC	NOTE 2 NA			
CV-4-956D	Accumulator Sample - O.C. (P + VRM Pen 55)	CLOSE			FC	NOTE 2 NA			

REMARKS:

*Noted as CV-4-956C in IST program.

NOTES: 1. The breakers for these valves are normally locked open with the valves closed. Ensure that after the valves are exercised the breakers are relocked open with the valves closed.
2. IWV-3300 Position indication is verified during performance of OP 0209.4.

5a 5

7.03b 1 and 2

This two part question dealt with the operator's knowledge of how many source and intermediate range NIS channels were required under two different conditions - below HSD and 540°F, and when critical and above 540°F. The reference given in the answer key is the PLS document.

While the PLS book is a controlled document available in the Control Room, the plant operators would necessarily be guided by the latest versions of the applicable procedures and Tech. Specs that address these instruments.

Our Tech. Specs. require both SR's only when changing core geometry. The SR's and the IR's are not mentioned by Tech. Specs. concerning limitations on operation if they are OOS, but three of the four PR's are required for startups and power operations. Thus, our Tech. Specs. are less conservative than the procedures, which, in turn, are less conservative than the PLS document, in this particular case.

Although your use of the PLS document is understandable, it does not accurately reflect the NIS system requirements as addressed by more current documents which are in more frequent usage by the operators.

By examining the off-normals associated with the SR (ONOP 12108) and the IR (ONOP 12208), we can derive the current requirements for operator actions based on the loss of one or both of the channels in each range. In any case, the actions required are dictated by the condition of the reactor when the malfunction(s) occur(s).

Part one of the question asked how many SR and IR channels are required below HSD and 540°F, while part two addressed criticality when RCS

temperature is greater than 540°F. The answer key, using the PLS book as its reference, states both SR's and IR's in the first case, and one of each in the second.

We contend that a better reference, that more accurately reflects the way the plant is operated, would be found in ONOP's 12108 and 12208.

A) ONOP 12108 looks at three seperate reactor conditions with failures of one or both SR's in each case. These conditions are:

(1) Reactor shutdown and less than 525°F (Note the 15° difference in current minimum criticality temperature for Unit 4, that is not mentioned in the PLS document).

(2) Reactor shutdown with T_{ave}, greater than 525°F.

(3) Startup Operations - Reactor Power between hot shutdown and P-6.

In Case #1, a malfunction of one SR channel essentially requires bypassing the channel and notifying I&C. (Fuel movement is ceased if during refueling.)

A failure of both channels, in Case #1, requires establishing cold shutdown boron concentration, ensuring a dilution is not possible, and tripping and racking out of the reactor trip breakers. (Again, fuel movement must cease.) Thus, loss of both channels of SR instrumentation would prevent continued heatup operations.

In Case #2, a failure of one SR channel involves even less than it did in Case #1, since you aren't moving fuel when the RCS is greater than 525°F. The failure of both channels requires manual insertion of all

control and shutdown rods and maintain hot shutdown conditions.

In Case #3, a malfunction of one SR simply requires bypassing the failed channel and notification to I&C. As with Case #2, if both channels fail, you must insert all rods and maintain hot shutdown conditions.

From a procedural standpoint, therefore, we really only require one channel of SR instruments to be operable, while continuing operations, in either of the conditions set forth by part one and part two of the question (unless changing core geometry, under part one, in which case both SR's are required by Tech. Specs.).

B) ONOP 12208 looks at two seperate conditions with a failure of one or both IR's involved.

(1) Reactor subcritical
(2) Startup Operations - Reactor Condition (Power) between critical and P-10

In the subcritical condition no immediate operator action is required other than notification to I&C. Thus, neither IR is required by Tech. Specs. or procedure.

During criticality, prior to reaching P-10, the failure of one IR, requires bypassing that channel. If both channels experience a failure of their compensating voltage, the startup procedure is modified as per page 2, step 5.2.1.2. The failure of both IR's (other than compensating voltage) requires bringing the unit to hot shutdown conditions and maintaining them.

Therefore, from a procedural standpoint, we really require neither IR when subcritical (part one of the question) and only one IR channel during startup operations (part two of the question).

To summarize the differences between references:

	PLS	ONOP's
7.03b1		
(<HSD and 540°)	2 SR's	1 SR (2, if changing core geometry)
	2 IR's	O IR
7.03b2		
(K_{eff} = 1 and > 540°)	1 SR	1 SR
	1 IR	1 IR

We believe the answer key should use the ONOP's as reference.

*R1/dj:09/10/84

REF. QUESTIONS
7.03b1#2
(Pg 1 of 9)

FLORIDA POWER AND LIGHT COMPANY
TURKEY POINT UNITS 3 AND 4
OFF-NORMAL OPERATING PROCEDURE 12108
MAY 1, 1984

1.0 Title:

SOURCE RANGE NUCLEAR INSTRUMENTATION MALFUNCTION

2.0 Approval and List of Effective Pages:

2.1 Approval:

Change Dated 5/1/84 Reviewed by Plant Nuclear Safety Committee: 84-80

and Approved by Plant Manager - Nuclear: 5/1/84

2.2 List of Effective Pages:

Page	Date	Page	Date	Page	Date
1	5/1/84	3	5/1/84	5	12/21/83
2	12/21/83	4	12/21/83	6	12/21/83

3.0 Purpose and Discussion:

This procedure provides instructions to be followed in the event of malfunction of either or both channels of source range nuclear instrumentation. The required operator action varies depending on the condition of the reactor at the time of the channel malfunction.

4.0 Symptoms:

Any of the following symptoms may indicate source range channel malfunction. Most symptoms will actuate associated annunciator alarms and indicating lights.

4.1 Significant disagreement between channels

4.2 Erratic indication

4.3 Drift of indication or bistable settings

4.4 Loss of instrument or control power supply

4.5 Loss of detector voltage

4.6 Unexplained trip

5.0 Instructions:

NOTE: 525° F is the current Unit 4 minimum criticality temperature as per pressure-temperature curves for Units 3 and 4.

5.1 With Reactor Shutdown and Tave less than 525° F:

5.1.1 Malfunction of One Channel

1. Automatic Action:

Failed Low - NONE

Failed High - Reactor Trip, Hi Flux Alarm at Shutdown

2. Immediate Operator Action:

(1) Bypass the Channel
Level Trip Switch - Turn to Bypass
High Flux at Shutdown Switch - Turn to Block

(2) Audio Count Rate Selector Switch - Turn to Operable Channel

(3) If fuel is being moved within the reactor vessel, cease fuel movement.

3. Subsequent Action:

(1) Switch console recorder to the remaining source range channel and monitor frequently.

(2) Confirm shutdown margin from Plant Curve Book, Section III, Figure 1.

(3) Sample RCS as required to verify correct boron concentration.

(4) Notify I and C as soon as practical.

5.1.2 Malfunction of Both Channels:

1. Automatic Action:

Failed Low - NONE

Failed High - Reactor Trip, Hi Flux Alarm at Shutdown

2. Immediate Operator Action:

(1) Establish or maintain at least the cold shutdown boron concentration from Plant Curve Book, Section III, Figure 1.

(2) Trip and rack out reactor trip breakers, verify all rods on bottom.

(3) Check reactor makeup controls to verify that dilution is not possible.

1. FCV-*-114A - CLOSED

2. FCV-*-114B - CLOSED

3. V-*-353 - LOCKED CLOSED

4. Once cold boron concentration is verified, RCS cooldown can begin if desired. (Normal make-up flow path can be used, ARI cold shutdown boron concentrates shall be added during make-up.

5. Sample RCS to verify correct boron concentration.

6. If fuel is being moved within the reactor vessel, cease fuel movement.

3. Subsequent Action:

(1) Switch console recorder to intermediate range channels (if in service).

(2) Continue sampling RCS every 2 hours to verify correct boron concentration and confirm shutdown margin.

(3) Notify I and C as soon as practical.

5.2 With Reactor Shutdown and Tavg greater than 525°F:

5.2.1 Malfunction of One Channel:

1. Automatic Action:

Failed Low - NONE

Failed High - Reactor Trip, Hi Flux at Shutdown Alarm

2. Immediate Operator Action:

(1) Bypass the Channel
Level Trip Switch - Turn to Bypass
High Flux at Shutdown Switch - Turn to Block

(2) Audio Count Rate Selector Switch - Turn to Operable Channel

3. Subsequent Action:

(1) Switch the console recorder to the remaining source range channel and monitor frequently.

(2) Notify I and C as soon as practical.

5.2.2 Malfunction of Both Channels:

1. Automatic Actions:

Fails Low - NONE
Fails High - Reactor Trip and Hi Flux at Shutdown Alarm

2. Immediate Operator Action:

(1) Manually insert all control rods and shutdown banks

(2) Maintain hot shutdown conditions

(3) Confirm shutdown margin from Plant Curve Book, Section III, Figure 1.

(4) Sample RCS to verify correct boron concentration.

(5) Observe intermediate and power range channels for proper operation.

3. Subsequent Action:

(1) Switch console recorder to intermediate range channels.

(2) Continue sampling RCS every 2 hours to verify correct boron concentration and confirm shutdown margin.

(3) Notify I and C as soon as practical.

5.3 Startup Operation - Reactor Power between Hot Shutdown and Permissive P-6

5.3.1 Malfunction of One Channel:

1. Automatic Action:

Fails Low - NONE
Fails High - Reactor Trip, Hi Flux at Shutdown Alarm

2. Immediate Operator Action:

(1) Bypass the Channel
Level Trip Switch - Turn to Bypass
High Flux at Shutdown Switch - Turn to Block

(2) Audio Count Rate Selector Switch (if in service) - Turn to Operable Channel

3. Subsequent Action:

(1) Switch the console recorder to the remaining source range channel and monitor frequently.

(2) Notify I and C as soon as practical.

5.3.2 Malfunction of Both Channels:

1. Automatic Actions:

Fails Low - NONE
Fails High - Reactor Trip and Hi Flux at Shutdown Alarm

2. Immediate Operator Action:

(1) Manually insert all control rods and shutdown banks

(2) Maintain hot shutdown condition

(3) Confirm shutdown margin from Plant Curve Book, Section III, Figure 1.

(4) Sample RC$ to verify correct boron concentration.

(5) Observe intermediate and power range channels for proper operation.

3. Subsequent Action:

(1) Switch console recorder to intermediate range channels.

(2) Continue sampling RCS every 2 hours to verify correct boron concentration and confirm shutdown margin.

(3) Notify I and C as soon as practical.

5.4 Operation Above Permissive P-6 Power Level:

Normally, the source range level trips will be blocked and the detector high voltage off. Malfunction of one or both channels requires no immediate action other than prompt notification of I and C.

5.5 Malfunction of a startup rate channel or audio count rate channel requires no immediate action other than prompt notification of I and C.

6.0 References:

6.1 Westinghouse Abnormal Procedure A-4

6.2 Westinghouse Nuclear Instrumentation System Instruction Manual

6.3 FSAR Section 7.4

6.4 Technical Specifications 3.10.1.

6.5 Plant Curve Book, Section III, Figure 1

7.0 Records Required:

7.1 Normal log entries

RGF QUESTION
7.03b #2
PG 7 of 9

FLORIDA POWER AND LIGHT COMPANY
TURKEY POINT UNITS 3 AND 4
OFF-NORMAL OPERATING PROCEDURE 12208
SEPTEMBER 30, 1982

P.J. BAUM

1.0 Title:

INTERMEDIATE RANGE MALFUNCTION

2.0 Approval and List of Effective Pages:

2.1 Approval:

Change Dated 9/30/82 Reviewed by Plant Nuclear Safety Committee: 82-87

and Approved by Plant Manager - Nuclear: 9/30/82

2.2 List of Effective Pages:

Page	Date	Page	Date	Page	Date
1	9/30/82	2	9/30/82	3	9/30/82

3.0 Purpose and Discussion:

This procedure provides instructions to be followed in the event of malfunction of either or both channels of intermediate range nuclear instrumentation. The required operator action varies depending on the condition of the reactor at the time of the channel malfunction.

4.0 Symptoms:

Any of the following symptoms can indicate intermediate range channel malfunction. Most symptoms will actuate associated annunciator alarms and indicating lights.

4.1 Significant disagreement between channels

4.2 Erratic indication

4.3 Drift of indication or bistable settings

4.4 Loss of instrument or control power supply

4.5 Loss of detector or compensating voltage

4.6 Unexplained trip

5.0 Instructions:

NOTE: Depending on the mode of channel malfunction, immediate automatic action can vary from none to high level rod stop or reactor trip.

5.1 Reactor Subcritical

Malfunction of one or both intermediate range channels requires no immediate operator action other than prompt notification of I and C.

5.2 Startup Operation - reactor condition between critical and permissive P-10.

5.2.1 Immediate Operator Action

1. Failure of one channel - turn level trip switch to BYPASS.

2. Failure of compensating voltage for both channels.

(1) Establish a small start-up rate of approximately .25 dpm as shown by source range indication.

(2) Between 10^4 cps source range and 10^{-9} amps intermediate range, no reactivity changes should be made in excess of; 10 sec rod pulls followed by 3 minute holds.

(3) Source range hi flux trip should be blocked as close to 10^5 cps as practical.

NOTE: When I.R. indication reaches 10^{-9} amps, the need for compensation is no longer required. Proceed with start-up in accordance with Operating Procedure 0202.2, Unit Start-up Hot Shutdown to Power Operation.

3. Failure of both channels

(1) Bring the reactor to and maintain hot shutdown condition.

(2) If required, use P-6 defeat pushbuttons to reinstate source range channels.

5.2.2 Subsequent Action

1. Switch the console recorder to the remaining intermediate or source range channels and monitor frequently.

2. Notify I and C as soon as practical.

5.3 Operation above permissive P-10 power level.

Normally the intermediate range rod stop and level trip will be blocked. Malfunction of one or both channels requires no immeidate action other than prompt notification of I and C.

5.4 Malfunction of a startup rate channel requires no immediate action other than prompt notification of I and C.

6.0 References:

6.1 Westinghouse Abnormal Procedure A-4

6.2 Westinghouse Nuclear Instrumentation System Instruction Manual

6.3 FSAR Section 7.4

6.4 Technical Specifications 1.4 and 3.0

7.0 Records Required:

7.1 Normal Log Entries

7.03c

The PLS document was used as the reference for this question dealing with the need for a small recirculation flow during liquid releases from the waste condensate tanks to the Circulating Water System.

The waste condensate tanks are not used to make releases by administrative controls as referenced in OP 5163.2, "Waste Disposal System - Controlled Liquid Release to the Circulating Water", which addresses releasing the monitor tanks (Boron Recycle System) and the Waste Monitor Tanks (P/O the new rad waste facility). Their sole usage currently is to aid in the calibration of RE-018 by the lab and I&C. (They are nearby, in the same room, and only hold 1000 gallons each, simplifying the calibration process.)

The answer key states that the recirc. flow is needed to prevent dead heading the pump if RCV 018 closes during a WCT liquid release. In all cases, today, in which the WCT discharge pumps are used to recirc. tank contents through RE-018 for calibration purposes, RCV-018 is closed along with the manual isolation valve (4749) which is locked closed, to preclude any chance of an inadvertant discharge to the environment. Of course, the valve lineup must be correct to allow flow back to the WCT's in order to prevent pump damage, but this is standard operating practice which is adequately spelled out in various procedures addressing the Liquid Rad Waste Systems. In this case, however, the candidates may have been misled because this particular system is no longer used by Operations personnel, and consequently is not included in their training programs.

Based on the above considerations, we request that question 7.03c be deleted from the test due to the confusion created by these tanks being referenced in the PLS document but their use for liquid releases not being authorized by plant procedures.

7.03 c

FLORIDA POWER AND LIGHT COMPANY
TURKEY POINT UNITS 3 AND 4
OPERATING PROCEDURE 5163.2
AUGUST 8, 1984

1.0 Title:

WASTE DISPOSAL SYSTEM - CONTROLLED LIQUID RELEASE TO THE CIRCULATING WATER

2.0 Approval and List of Effective Pages:

2.1 Approval:

Change Dated 8/8/84 Reviewed by Plant Nuclear Safety Committee: 84-141

and Approved by Plant Manager - Nuclear: 8/8/84

2.2 List of Effective Pages:

Page	Date	Page	Date	Page	Date	Page	Date
1	8/8/84	4	8/2/84	7	5/31/84	10	8/8/84
2	5/31/84	5	8/8/84	8	5/31/84	11	5/31/84
3	5/31/84	6	5/31/84	9	5/31/84	12	5/31/84
						13	5/31/84

3.0 Purpose:

This procedure provides instructions for making a controlled release of the contents of monitor tanks (boron recycle) or waste monitor tanks (Radwaste Building) to the circulating water.

4.0 Precautions and Limits:

4.1 Prior to release the tank contents shall be sampled and analyzed and a liquid release permit prepared. The release shall be approved by the Plant Supervisor - Nuclear. The operator shall perform the release only after receipt of an approved liquid release permit.

NOTE: Approvals by the Radiochemist and the Health Physics Supervisor are necessary only if the specific activity of the tank contents is equal to or greater than 1×10^{-4} µCi/ml.

4.2 Process Radiation Monitor R-18 shall be in service and frequently observed during the release to be assured that count rate is not approaching R-18 set point as stated on the liquid release permit. If observed count rate exceeds the expected R-18 set point (bgnd + 2 x cpm of sample or 5000 cpm + bgnd whichever is higher), terminate the release and determine the cause (See Step 8.3).

4.3 At least one circulating water pump of any unit (i.e., Unit 1, 2, 3, or 4) shall be in service. The liquid release permit may require more than one CW pump operating.

4.4 If no circulating water pumps of Units 3 and 4 can be operated, jumper the electrical interlock between a circulating water pump(s) and the valves at the seal wells. Ensure that the number of circulating water pumps specified on the Liquid Release Permit are operating on Units 1 and 2 prior to starting the release.

4.5 All applicable radiation protection precautions and procedures shall be observed.

5.0 Related System Status:

5.1 Process Monitor R-18 operable

5.2 Circulating Water Operable. Refer to Precautions 4.3 and 4.4.

6.0 References:

6.1 Westinghouse System Description FPL-406, Waste Disposal

6.2 FSAR Section 11

6.3 Technical Specification 3.9

6.4 FSAR Figure 11.1-1

6.5 Off-Normal Operations, see Step 8.3.

6.6 Operating Procedure 11500, Health Physics Manual

6.7 Operating Procedure 5163.1, WDS - Monitor Tank Operation.

6.8 Operating Procedure 11104.1, Process Radiation monitor - Periodic Test

6.9 Nuclear Chemistry Procedure NC-44, Preparation of a Liquid Release Permit

6.10 Operating Procedure 5163.3, WDS - Waste Monitor Tanks and Demineralizer Operation

7.0 Records Required:

7.1 Completed copies of Section 8.1 or 8.2, as applicable, of this procedure and an approved Liquid Release Permit are quality assurance records and, therefore, shall be retained in accordance with Administrative Procedure 0190.14, Document Control and Quality Assurance Records.

7.2 A second copy of this procedure shall be retained in the Plant Supervisor - Nuclear's file until the next performance of this procedure.

8.0 Instructions:

8.1 Controlled Liquid Release from Monitor Tanks

INITIAL	INITIAL IV	
_____		8.1.1 Have an approved Liquid Release Permit
_____		8.1.2 Permit No._____. Tank to be released_____.
_____		8.1.3 RCO - adjust R-18 alarm setpoint to that specified on the Liquid Release Permit.
_____		8.1.4 Verify that circulating water pump(s) is in service. Refer to Precautions 4.3 and 4.4. Record total number in service on release permit.
_____		8.1.5 Waste Radiation Monitor Indicator, RI-018, on the Waste Disposal Panel has two scale ranges. Contact the Control Room Reactor Control Operator to check which scale to observe during the release. Check below which range is to be observed.
		_____ 10^1 to 10^4 CPM
		_____ 10^1 to 10^6 CPM
		8.1.6 Perform Test on Process Radiation Monitor Channel R-18 as follows:
_____	_____	1. Verify 4749, Stop Valve before RCV-018 CLOSED AND LOCKED
_____		2. Open RCV-018 from WB panel and verify valve open.
_____		3. Initiate High Alarm on Channel R-18 by source check, count rate meter test signal, or alarm set point check, (refer to Operating Procedure 11104.1).
_____		4. Verify RCV-018 closed.
_____		5. Operate control switch for RCV-18 from WB panel to verify that valve cannot be opened from panel.
_____		6. Reset High Alarm on PRMS panel in control room.
_____		7. Restore PRM system to normal at completion of test.

INITIAL	INITIAL IV			
		8.1.7	Align system valves as follows:	
_____	_____		1278A (1278B) BA Cond. Filter A to Monitor Tank A (B) on Tank to be released.	CLOSED
_____	_____		1280A (1280B)BA Cond. Filter B to Monitor Tank A (B) on Tank to be released.	CLOSED
_____	_____	1303	Monitor Tank Cross Connect Valve	CLOSED
_____	_____	1239	Drain Valve Monitor Tank B	CLOSED
_____		1240	Drain Valve Monitor Tank A	CLOSED
_____		1207	Vent Valve Monitor Tank B	CLOSED
_____		1208	Vent Valve Monitor Tank A	CLOSED
_____		1304(1305)	Laundry/Hot Shower Pump Discharge to Monitor Tank A(B), (on monitor tank to be released)	CLOSED
_____		1308	Vent Valve, Laundry Filters to Monitor Tanks	CLOSED
_____		1306	Monitor Tank Discharge to WMT	CLOSED
_____		4801	Vent Valve Monitor Tank Pumps Discharge to Rad Bldg.	CLOSED
_____		1307	Monitor Tank Discharge to WMT	CLOSED
_____	_____	1249B	Monitor Tank Sample Valve	CLOSED
_____		1170B	Monitor Tank Discharge to Unit 3 PWST	LOCKED CLOSED
_____		1291	Monitor Tank Discharge to Unit 4 PWST	LOCKED CLOSED
_____		1161	Monitor Tank Discharge to HUT Header	CLOSED
_____		1299	Monitor Tank Recirc. Through Demin	CLOSED
_____		1296	Monitor Tank Release Valve	CLOSED
_____		1804	Waste Monitor Tank Release Valve	CLOSED
_____	_____	4748	Waste Condensate Tank Release Valve	CLOSED
_____		4747	Waste Holdup Tank Inlet Valve	CLOSED
_____		4745	Waste Condensate Tank Recirc.	CLOSED
_____		4761	Laundry/Hot Shower Tank Release Valve	CLOSED
_____	_____	1805	R-18 Return to Demin.	CLOSED
_____	_____			
_____		1279 (1283)	Monitor Tank Recirc. Monitor Tank A (B) OPEN on Tank to be released, CLOSED on other	

To Release "A" Monitor Tank Using "A" Pump:

_____	1303	Monitor Tank Cross Connect Valve	CLOSED
_____	1282	Monitor Tank "A" Outlet	OPEN
_____	1288	Monitor Tank "A" Suction Valve	OPEN
_____	1290	Monitor Tank "A" Discharge Valve	OPEN

To Release "A" Monitor Tank Using "B" Pump:

_____ _____	1281	Monitor Tank "B" Outlet	CLOSED
_____	1282	Monitor Tank "A" Outlet	OPEN
_____	1303	Monitor Tank Cross Connect Valve	OPEN
_____	1292	Monitor Tank "B" Suction Valve	OPEN
_____	1294	Monitor Tank "B" Discharge Valve	OPEN

INITIAL INITIAL IV

To Release "B" Monitor Tank Using "B" Pump:		
1303	Monitor Tank Cross Connect Valve	CLOSED
1281	Monitor Tank "B" Outlet	OPEN
1292	Monitor Tank "B" Suction Valve	OPEN
1294	Monitor Tank "B" Discharge Valve	OPEN
To Release "B" Monitor Tank Using "A" Pump:		
1282	Monitor Tank "A" Outlet	CLOSED
1303	Monitor Tank Coss Connect Valve	OPEN
1281	Monitor Tank "B" Outlet	OPEN
1288	Monitor Tank "A" Suction Valve	OPEN
1290	Monitor Tank "A" Discharge Valve	OPEN

8.1.8 Adjust tank recirculation valve 1279 (1283) on tank to be released to 1/2 turn OPEN.

8.1.9 On WB Panel align pump - tank level selector to the tank being released. Start pump from WB panel.

8.1.10 4749 Stop valve before RCV-018 UNLOCK AND OPEN.

8.1.11 RCV-018 OPEN

8.1.12 Slowly open valve 1296 until FI-1064 on WB panel indicates the release flow rate specified on Liquid Release Permit.

If the R-18 count rate exceeds the alarm setpoint, stop the pump, close valve 4749 and RCV-018. Notify the Plant Supervisor - Nuclear and await further instructions. See Step 8.3 of this procedure.

8.1.13 Record start time, tank level, and release flow rate on the release permit.

8.1.14 Release time for monitor tanks should be approximately 2 hours.

8.1.15 Alarm and auto stop will occur at low level setpoint. Verify that pump stopped and promptly close RCV-018.

8.1.16 Record stop time, tank level, and required R-18 count rate data on release permit.

8.1.17 Leave valves as follows:

4749	Stop Valve before RCV-108	CLOSED AND LOCKED
1296	Monitor Tank Release Valve	CLOSED
1279 (1283) - On tank released -		CLOSED
1303 - Monitor Tank Cross Connect Valve -		CLOSED

INITIAL INITIAL
IV

8.1.18 Send a copy of this section of the procedure to the Control Room and attach the orignal to the liquid release permit and route it to the Radiochemist.

INITIALS PRINT NAME

Completed by: _____ / _____ Date _____

Completed by: _____ / _____ Date _____

Completed by: _____ / _____ Date _____

INITIALS PRINT NAME

Independently Verified by: _____ / _____ Date _____

Independently Verified by: _____ / _____ Date _____

Independently Verified by: _____ / _____ Date _____

Reviewed by: _____ Date _____
Plant Supervisor - Nuclear

INITIAL INITIAL
IV

8.2 Controlled Liquid Release from Waste Monitor Tanks (Radwaste Building):

_____ 8.2.1 Have an approved Liquid Release Permit

_____ 8.2.2 Permit No._____.

Tank to be released_____.

_____ 8.2.3 RCO - adjust R-18 alarm setpoint to that specified on the Liquid Release Permit.

_____ 8.2.4 Verify that circulating water pumps are in service. Refer to Precautions 4.3 and 4.4. Record total number in service on the release permit.

_____ 8.2.5 Waste Radiation Monitor Indicator, RI-018, on the Waste Disposal Panel has two scale ranges. Contact the Control Room Reactor Control Operator to check which scale to observe during the release. Check below which range is to be observed.

_____ 10^{1} to 10^{4} CPM

_____ 10^{1} to 10^{6} CPM

8.2.6 Perform Test on Process Radiation Monitor Channel R-18 as follows:

_____ _____ 1. Verify 4749, Stop Valve before RCV 018 — CLOSED AND LOCKED

_____ 2. Open RCV-018 from WB panel and verify valve open.

_____ 3. Initiate High Alarm on Channel R-18 by source check, count rate meter test signal, or alarm set point check, (refer to Operating Procedure 11104.1).

_____ 4. Verify RCV-018 closed.

_____ 5. Operate control switch for RCV-18 from WB panel to verify that valve cannot be opened from panel.

_____ 6. Reset High Alarm on PRMS panel in control room.

_____ 7. Restore PRM system to normal at completion of test.

8.2.7 Align system valves as follows:

_____ _____ 1296 Monitor Tank Pump to WDS — CLOSE

_____ 1804 Monitor Tank Pumps Liquid Release to R-18 Aux. Bldg. Isol. — OPEN

INITIAL	INITIAL IV			
		4748	Waste Condensate Pumps Discharge Header	CLOSE
		4761	Laundry and Chemical Drain Tank to Release	CLOSE
		4745	Waste Condensate Pump Recirc. to Waste Cond. Tank	CLOSE
		4747	Waste Condensate and Monitor Tank Pumps to WHT	CLOSE
		1805	R-18 Return to Demineralizers A Aux. Bldg. Isol.	CLOSE

In Radwaste Building, Align Valves:
(Using WMT pump P-23CA)

		1736	WMT Pump "A" Main Recirc. Isol.	CLOSE
		1740	WMT Pump "A" Suction Isol.	OPEN
		1668	WMT Pump "A" Miniflow Recirc.	OPEN
		1653	WMT Pump "A" Discharge Valve	OPEN
		1642	WMT Pump "A" Liquid Release to Aux. Bldg.	CLOSE

CAUTION: Check miniflow recirc. valves (CLOSED) to tanks not being released.

"A" Waste Monitor Tank

		1743	WMT "A" Suction Hdr. Cross-Conn. Isol.	CLOSE
		1699	WMT Pump "A" Suction Hdr. Isol.	OPEN
		1741	WMT "A" Miniflow Inlet Isol.	OPEN

"B" Waste Monitor Tank

		1748	WMT "B" Suction Hdr. Cross-Conn. Isol.	CLOSE
		1699	WMT Pump "A" Suction Hdr. Isol.	CLOSE
		1743	WMT "A" Suction Hdr. Cross-Conn. Isol.	OPEN
		1702	WMT "B" Pump Suction Hdr. Isol.	OPEN
		1746	WMT "B" Miniflow Inlet Isol.	OPEN

"C" Waste Monitor Tank

		1702	WMT "B" Pump Suction Hdr. Isol.	CLOSE
		1699	WMT Pump "A" Suction Hdr. Isol.	CLOSE
		1758	WMT Pump "B" Suction Isol.	OPEN
		1647	WMT "C" Pump Suction Hdr. Isol.	OPEN
		1748	WMT Pump "B" Suction Hdr. Cross-Conn. Isol.	OPEN
		1743	WMT Pump "A" Suction Hdr. Cross-Conn. Isol.	OPEN
		1757	WMT "C" Miniflow Inlet Isol.	OPEN

(Using WMT Pump P-230B)

		1622	WMT Pump "B" Main Recirc. Isol.	CLOSE

INITIAL	INITIAL IV			
_____		1758	WMT Pump "B" Suction Isol.	OPEN
_____		1717	WMT Pump "B" Miniflow Recirc.	OPEN
_____		1754	WMT Pump "B" Discharge Valve	OPEN
_____		1643	WMT Pump "B" Liquid Release to Aux. Bldg.	CLOSE

CAUTION: Check miniflow recirc. valves (CLOSED) to tanks not being released.

"A" Waste Monitor Tank

_____		1740	WMT Pump "A" Suction Isol.	CLOSE
_____		1702	WMT "B" Pump Suction Hdr. Isol.	CLOSE
_____		1647	WMT "C" Pump Suction Hdr. Isol.	CLOSE
_____		1743	WMT Pump "A" Suction Hdr. Cross-Conn. Isol.	OPEN
_____		1748	WMT Pump "B" Suction Hdr. Cross-Conn. Isol.	OPEN
_____		1699	WMT "A" Pump Suction Hdr. Isol.	OPEN
_____		1741	WMT "A" Miniflow Inlet Isol.	OPEN

"B" Waste Monitor Tank

_____		1743	WMT Pump "A" Suction Hdr. Cross-Conn. Isol.	CLOSE
_____		1647	WMT "C" Pump Suction Hdr. Isol.	CLOSE
_____		1748	WMT Pump "B" Suction Hdr. Cross-Conn. Isol.	OPEN
_____		1702	WMT "B" Pump Suction Hdr. Isol.	OPEN
_____		1746	WMT "B" Miniflow Inlet Isol.	OPEN

"C" Waste Monitor Tank

_____		1748	WMT Pump "B" Suction Hdr. Cross-Conn. Isol.	CLOSE
_____		1647	WMT "C" Pump Suction Hdr. Isol.	OPEN
_____		1757	WMT "C" Miniflow Inlet Isol.	OPEN

_____ 8.2.8 Turn low level cutout selector switch on pump to be used to WMT that is to be released. Start the selected WMT pump.

INITIAL	INITIAL IV	
_____		8.2.9 Slowly open 1642 (1643) WMT Pump "A" ("B") Liquid Release To Aux. Bldg.
_____		8.2.10 Open RCV-018.
_____		8.2.11 Unlock and throttle (4749) Stop Valve before RCV-018 until flow indicator FI-1064 on WB Panel (Auxiliary Building) indicates the release rate specified on the Liquid Release permit. If the R-18 count rate exceeds the alarm setpoint, stop the pump, close stop valve 4749 and physically check RCV-018 for closure. Notify the Plant Supervisor - Nuclear and await instructions. (Refer to Step 8.3)
		NOTE: When using waste monitor tank pump A or B, flow indicators FI-1084B or FI-1093B may be used instead of FI-1064.
_____		8.2.12 Record time start, tank level, and release flow rate on liquid release permit.
_____		8.2.13 Alarm and auto pump stop will occur at low level setpoint. Verify that pump stopped and promptly close RCV-018.
_____		8.2.14 Record stop time, tank level, and required R-18 count rate data on liquid release permit.
		8.2.15 Leave valves as follows:
_____	_____	4749 Stop valve before RCV-018 AND LOCK — CLOSE
_____		1804 Monitor Tank Pumps Liquid Release to R-18 Aux. Bldg. Isol. — CLOSE
_____		1642 (1643) Monitor Tank Pumps Liquid Release to Cross Connect Isol. — CLOSE
_____		8.2.16 Send a copy of this section of the procedure to the Control Room and attach the orignal to the liquid release permit and route it to the Radiochemist.

INITIAL INITIAL
IV

INITIALS PRINT NAME

Completed by: _____ / _____ Date: _____

Completed by: _____ / _____ Date _____

Completed by: _____ / _____ Date _____

INITIALS PRINT NAME

Independently
Verified by: _____ / _____ Date _____

Independently
Verified by: _____ / _____ Date _____

Independently
Verified by: _____ / _____ Date _____

Completed by _____ Date _____
Plant Supervisor - Nuclear

INITIAL	INITIAL IV	
		8.3 Flushing R-18 with Service Water:
		8.3.1 Close or Verify Closed
_____		4739B "B" Waste Condensate Pump Suction Valve
_____		4743 Waste Condensate Pump Sample Valve
_____		4742A "A" Waste Condensate Pump Discharge Valve
_____		4757A Waste Condensate Pump Discharge Valve
_____		4757B Drain Valve
_____		1296 Monitor Tank Release Valve
_____		1804 Waste Monitor Tank Release Valve
_____		4700 Cond. Demin to WHT
_____		4761 Waste Evap. Feed Pump Discharge Valve
_____		1805 Evap. Distillate Recirc.
_____		4745 Inlet to Waste Condensate Tanks
_____	_____	4749 RCV-018 Isolation Valve
		CAUTION: Insure that rubber hose is securely attached to service water supply on one end and valve 4738 on the other end.
		8.3.2 Open or Verify Open
_____		4738 Drain Valve
_____		4742B "B" Waste Condensate Pump Discharge Valve
_____		4748 Waste Condensate Release Isolation Valve
_____		4747 Inlet to No. 1 Waste Holdup Tank
_____		3-70-119 Service Water Flush Valve
		8.3.3 Let service water run for approximately three minutes.

INITIAL INITIAL
IV

8.3.4 Close these valves after three minutes:

3-70-119	Water Valve	Service
4738	Drain Valve	
4748	Waste Condensate Release Valve	
4747	Inlet to Waste Holdup Tank	

8.3.5 Return to Step 8.1 or 8.2 of this procedure and proceed.

INITIALS PRINT NAME

Completed by: _____ / _____ Date _____

Completed by: _____ / _____ Date _____

Completed by: _____ / _____ Date _____

INITIALS PRINT NAME

Independently
Verified by: _____ / _____ Date _____

Independently
Verified by: _____ / _____ Date _____

Independently
Verified by: _____ / _____ Date _____

Reviewed by: _____ Date _____
Plant Supervisor - Nuclear

7.03d

In this question the candidates were asked to discuss why we operate with rod withdrawal limits on control rod bank "D". The answer key utilized the PLS document to state that maintaining "BITE" would minimize steam dump usage during rapid power decreases by providing a large enough reactivity insertion to compensate for power coefficient during the design rate power decrease.

This generic information may have applicability at other Westinghouse plants, but at Turkey Point we have operated with Bank "D" fully withdrawn, based on a management decision made in 1975.

Mr. Vito Kaminskas, the Reactor Supervisor, has verified our reasoning for operating ARO. (see attached inter-office correspondence)

The only instruction the candidates received concerning rod withdrawal limits was in conjunction with not exceeding Tech. Specs. concerning (+) MTC at BOL. BITE concerns were not addressed because of the length of time since we have not normally operated with "D" Bank partially inserted.

Also, on page 30 of the PLS (attached) it can be seen that Item 14 Control Bank D Rod Withdrawal is 'NOT USED" - set above operating range. The page is dated 5/9/79, so the PLS was updated at that time to reflect we don't run with 'BITE". (This change allowed running with the annunciator dark instead of in the alarm condition.)

Based on the above considerations, we request that question 7.03d be deleted from the test.

*R1/dj:09/10/84

7.03 d

FLORIDA POWER & LIGHT COMPANY

INTER-OFFICE CORRESPONDENCE

LOCATION *PTP-RE-84-180 Turkey Point Plant-N*
DATE *September 10, 1984*

TO *W. C. Miller*

FROM *Vito A. Kaminskas*

COPIES TO *File*

SUBJECT: *Bite Position*

Reference:
7.03 d) *"What is basis for operating with rod withdrawal limit on "D" Bank?"*

Answer key stated to ensure adequate bite.

We do not operate at the bite position for the following reasons:

1) *Leads to relatively worse axial power distributions (see study performed by R. A. Blake - 1975).*

2) *In the past Turkey Point has been peaking factor limited, therefore it is to our advantage to operate with Bank D at 228 steps.*

3) *Standard operating practice at Turkey Point during steady state operation 100% power Bank D should be positioned at 228.*

4) *Possible restriction to permissible flux difference operation band.*

5) *A small effect is a loss of reactivity and therefore of cycle lifetime in the current cycle due to less than optimum axial burnup distribution.*

6) *The consequences of many accidents are actually worse starting from deep rod insertion even though these worse cases have already been assumed in the accident analysis.*

Studying the advantages and disadvantages of operating at the bite position, a management decision was made to operate with Bank D at 228 steps. It should be noted that Turkey Point is a base loaded plant and not subject to daily load swings. If you have any questions please call.

Vito A. Kaminskas

Vito A. Kaminskas
Reactor Supervisor

VAK:dj
**C1*

7.03d

11.	C. Low-Low Level (LC-459A, LC-460A, LC-461A)	5% of Span
12.	Pressurizer pressure	
	A. high controller output (PC-444E)	2310 psig
	B. high pressure (PC-445C)	2310 psig
	C. low pressure (PC-445B)	2185 psig
13.	Control Banks A, B, C rod withdrawal (TC-409G, TC-409H, TC-409J)	Not used - set above operating range
14.	Control bank D rod withdrawal (TC-409K)	Not used - set above operating range
15.	Nuclear power range channel deviation (NC-401)	± 2% of full power(3)
16.	Rod Position Indication System	
	A. Rod bottom bistable (block auto rod withdrawal)	20 steps
	B. Rod bottom bypass bistable	35 steps

7.05c)

The candidates were asked to supply the primary and secondary backups to PRMS Channel 14 during waste gas releases. The latest version of OP 5523.1, "WDS-Gas Decay Tank, Controlled Release to Atmosphere" states in several places (see pages 1, 2, 4, and, especially, page 6) that SPING-4 is now used instead of the erst-while NMC monitor, as older versions of this procedure indicated. The candidates are familiar with the SPING-4, thus, the answer key should be corrected to reflect this change in plant equipment status.

*R1/dj:09/10/84

REF. QUESTION 7.05c (Pg 1 of 4)

FLORIDA POWER AND LIGHT COMPANY
TURKEY POINT UNITS 3 AND 4
OPERATING PROCEDURE 5523.1
APRIL 20, 1984

P.J.BAUM

1.0 Title:

WASTE DISPOSAL SYSTEM - GAS DECAY TANK, CONTROLLED RELEASE TO ATMOSPHERE

2.0 Approval and List of Effective Pages:

2.1 Approval:

Change Dated 4/20/84 Reviewed by Plant Nuclear Safety Committee: 84-71

and Approved by Plant Manager - Nuclear: 4/20/84

2.2 List of Effective Pages:

Page	Date	Page	Date	Page	Date	Page	Date
1	4/20/84	3	4/20/84	5	3/18/84	7	3/18/84
2	4/20/84	4	3/18/83	6	3/18/84	8	10/21/82

3.0 Purpose:

This procedure provides instruction for making a controlled release of the contents of a GDT to atmosphere.

4.0 Precautions and Limits:

4.1 Prior to release the tank contents shall be sampled, analyzed and a gas release permit issued and the release approved by the plant supervisor. The operator shall perform the release only after receipt of an approved gas release permit. The maximum allowable RCV-014 loader setting and maximum allowable value for the radiation monitor (i.e., R-14, SPING-4 or equivalent) shall be observed closely.

4.2 Process radiation monitors on the plant vent shall be in service and should be frequently observed during the release to be assured that the count rate is not approaching the alarm point. If the observed count rate exceeds the expected reading listed in Part I of the release permit, gradually decrease the RCV-014 loader setting so that monitor reading does not exceed the expected reading. Record the new loader setting in Section IV of the Gas Release Permit.

4.3 The PRM R-14 high radiation alarm sounds simultaneously with auto close of RCV-014, plant vent valve. If the alarm sounds, physically check for closure of RCV-014 and close the GDT to plant vent hand valve. Observe that the count rate is decreasing on vent monitors. Follow procedure as detailed in Off-Normal Operating Procedure 5508.1, WDS - Accidental Release of Radioactive Gas. Do not re-initiate the release until authorized by the Plant Supervisor - Nuclear. If an alternate release monitor is being used in lieu of PRM R-14 during the release, terminate the release manually upon reaching the alarm setpoint and await further instructions after notifying the Plant Supervisor - Nuclear.

4.4 If a high radiation alarm results in auto closure of RCV-014, loading pressure on PCV-014 loader must be run to zero to reset the valve.

4.5 At least one auxiliary building ventilation exhaust fan shall be in service.

4.6 A release should not be initiated if the wind speed is less than 10 mph, if the wind direction is from a southerly direction (150° to 200°) or from the NE (40° to 60°), or if precipitation is falling.

4.7 If the R-14 process monitor is out of service, refer to section 8.3 of this procedure.

4.8 Notify Operations Superintendent - Nuclear if both the R-14 and the plant vent [SPING-4] are out of service simultaneously.

5.0 Related System Status:

6.0 References:

6.1 FSAR, Figure 11.1-2

6.2 FSAR, Section 11

6.3 Technical Specification 3.9

6.4 Operating Procedure 5503.1, WDS - Gaseous Disposal System Operation

6.5 Off-Normal Operating Procedure 5508.1, WDS - Accidental Release of Radioactive Gas

6.6 Operating Procedure 10200, Auxiliary Building Ventilation

6.7 Operating Procedure 11104.1, Process Radiation Monitor - Periodic Test

7.0 Records Required:

7.1 An approved gas release permit

7.2 Normal log entry

7.3 A completed copy of Section 8.1 and 8.2 or 8.3 of this procedure shall be retained, together with the release permit, in accordance with Administrative Procedure 0190.14, Document Control and Quality Assurance Records.

7.05 c
(3 of 4)

INITIALS

2. When release flow rate has been established, verify that the plant vent monitor reading does not exceed the recommended value designated in Part II of the Gas Release Permit. If the plant vent monitor reading exceeds the above value during the release, gradually reduce the RCV-C14 loader setting until the recommended value is reached.

3. Record the initial set of readings in the data table provided in Part IV of the Gas Release Permit.

8.1.11 Record a complete set of readings every 15 minutes in the table provided in Part IV of the Gas Release Permit.

8.1.12 When the GDT pressure reaches about 5 psig, terminate the release as follows:

1. Close RCV-014 by reducing loader pressure to zero.

2. Check valve stem position indicator on RCV-014 for closed position, then close and lock air supply to RCV-014.

3. Close and lock GDT to plant vent valve on tank released.

4. Record a final set of readings in the data table provided in Part IV of the Gas Release Permit.

5. Log the present status of tank.

6. Reset R-14 (if used) trip setpoint to 36K or as labeled on drawer. If SPING-4 or R-12 monitors are used in lieu of R-14, reset their alarm setpoints to their prior values.

8.1.13 Attach this section of the procedure to release permit and route to Radiochemist.

Signature of Operator _____ Date _____

INITIALS

7.05c (Pg 4 of 4)

8.3 |Alternate Plant Vent Gas Monitor

8.3.1 SPING-4 - Primary Back-up

1. Verify that the R-14 process monitor is out of service.

_____ 2. Verify that the plant vent SPING-4 monitor is operable. The monitor is located at the rear of the Auxiliary Building Fan Room.

_____ 3. Verify the initial conditions for the functional test of the plant vent SPING-4 monitor.

_____ 4. Initiate the high alarm by performing a source check.

_____ 5. Verify that the alarm function is actuated at the proper setpoint ± 15%. The proper setpoint of the backup monitors when used in lieu of R-14 should be determined by Nuclear Chemistry.

|DELETED|

_____ 6. Trip auxiliary building exhaust fans, panel B.

_____ 7. Verify that RCV-014 is CLOSED.

_____ 8. Verify closed the GDT discharge valves "A" through "F".

_____ 9. Unlock and open air supply to RCV-014, then operate control switch for RCV-014 to verify that the valve cannot be opened from WB pannel, then close and lock air supply to RCV-014.

_____ 10. Return auxiliary building exhaust fans to normal operation.

Signature of Operator
DAY/DATE_____

_____ 11. Return auxiliary building exhaust fans to normal operation.

Signature of Operator
DAY/DATE_____

8.3.2 R-12 Monitor - Secondary Backup

_____ 1. Verify that the R-14 and the plant vent SPING-4 monitor are out of service.|

_____ 2. Verify that the R-12 monitors are operable. The R-12 monitor to be used during the release will be determined by the Plant Supervisor - Nuclear.

_____ 3. The R-12 monitor chosen is _____.

_____ 4. Designate on 357 or 457 recorder chart that the R-12 monitor is being used for plant vent monitoring.

8.07a)

According to the latest version of AP 0103.12, "Notification of Significant Events to NRC", the Plant Supervisor-Nuclear (PS-N) is responsible for significant event notifications to:

1) The Duty Call Supervisor
2) The NRCOC

Earlier versions did state the "Operations Supervisor" (vice the DCS) as your answer key maintains but the procedure was changed on July 18, 1984. The answer key should be amended to reflect current plant policy as set forth in our administrative procedures.

*R1/dj:09/10/84

ROBERT MERRILL

REF. QUESTION 2.07a (PG 1 OF 3)

FLORIDA POWER AND LIGHT COMPANY
TURKEY POINT UNITS 3 AND 4
ADMINISTRATIVE PROCEDURE 0103.12
JULY 18, 1984

1.0 Title:

NOTIFICATION OF SIGNIFICANT EVENTS TO NRC

2.0 Approval and List of Effective Pages:

2.1 Approval:

Change Dated 7/18/84 Reviewed by Plant Nuclear Safety Committee: 84-131

and Approved by Plant Manager - Nuclear: 7/18/84

2.2 List of Effective Pages:

Page	Date	Page	Date	Page	Date	Page	Date
1	7/18/84	6	7/18/84	11	7/18/84	16	7/18/84
2	7/18/84	7	7/18/84	12	7/18/84	17	7/18/84
3	7/18/84	8	7/18/84	13	7/18/84	18	7/18/84
4	7/18/84	9	7/18/84	14	7/18/84		
5	7/18/84	10	7/18/84	15	7/18/84		

3.0 Scope:

3.1 Purpose:

This procedure provides the administrative controls for notification of significant events to the NRC via the Emergency Notification System (ENS) installed in the nuclear control center to the NRC Operations Center (NRCOC). This notification is required by 10 CFR 50.72.

CAUTION: Some reporting criteria under 10 CFR 50.72 also activates the Emergency Plan. For any off-normal event or condition, review Emergency Procedure 20101, Duties of the Emergency Coordinator, prior to using this procedure. If the off-normal event or condition can be classified under EP 20101, activate the Emergency Plans and report the event. DO NOT use this procedure for reporting Emergency Classifications.

3.2 Discussion:

Refer to Appendix C, Instruction Guide, for any clarification of procedure instructions.

2.07a
(2 OF 3)

3.3 Authority:

Code of Federal Regulations (10 CFR)

3.4 Definitions:

3.4.1 Significant Events - Events which are required by 10 CFR 50.72 to be reported to the NRC via ENS or alternate telephone communications. Such events as they apply to Turkey Point are described and discussed in Appendix A.

3.4.2 NRCOC - Nuclear Regulatory Commission Operations Center in Washington, D.C.

3.4.3 ENS - Emergency Notification System is an unrestricted telephone line to NRCOC.

4.0 Precautions:

4.1 For any significant event that activates the Emergency Plan, use Emergency Procedure 20101, Duties of Emergency Coordinator.

5.0 Responsibilities:

5.1 Plant Supervisor - Nuclear (PS-N) is responsible for Significant Event notifications to:

5.1.1 The |Duty Call Supervisor| or his designee.

5.1.2 The NRCOC

5.2 The |Duty Call Supervisor| or his designee, is responsible for notifications to:

5.2.1 The NRC Resident Inspector.

5.2.2 The Operations Superintendent - Nuclear

5.2.3 The Plant Manager - Nuclear

5.2.4 |Vice President/ Plant Turkey Point|

5.2.5 |The Vice President, Nuclear Operations or his alternate.|

6.0 References:

6.1 10 CFR 50.72, Notification of Significant Events (Effective January 1, 1984)

6.2 10 CFR 20.205, Receipt of Packages

6.3 10 CFR 20.403, Notification of Incidents

7/18/84

E.07a
(3 of 3)

APPENDIX C

INSTRUCTION GUIDE

Duty Call For Significant Events
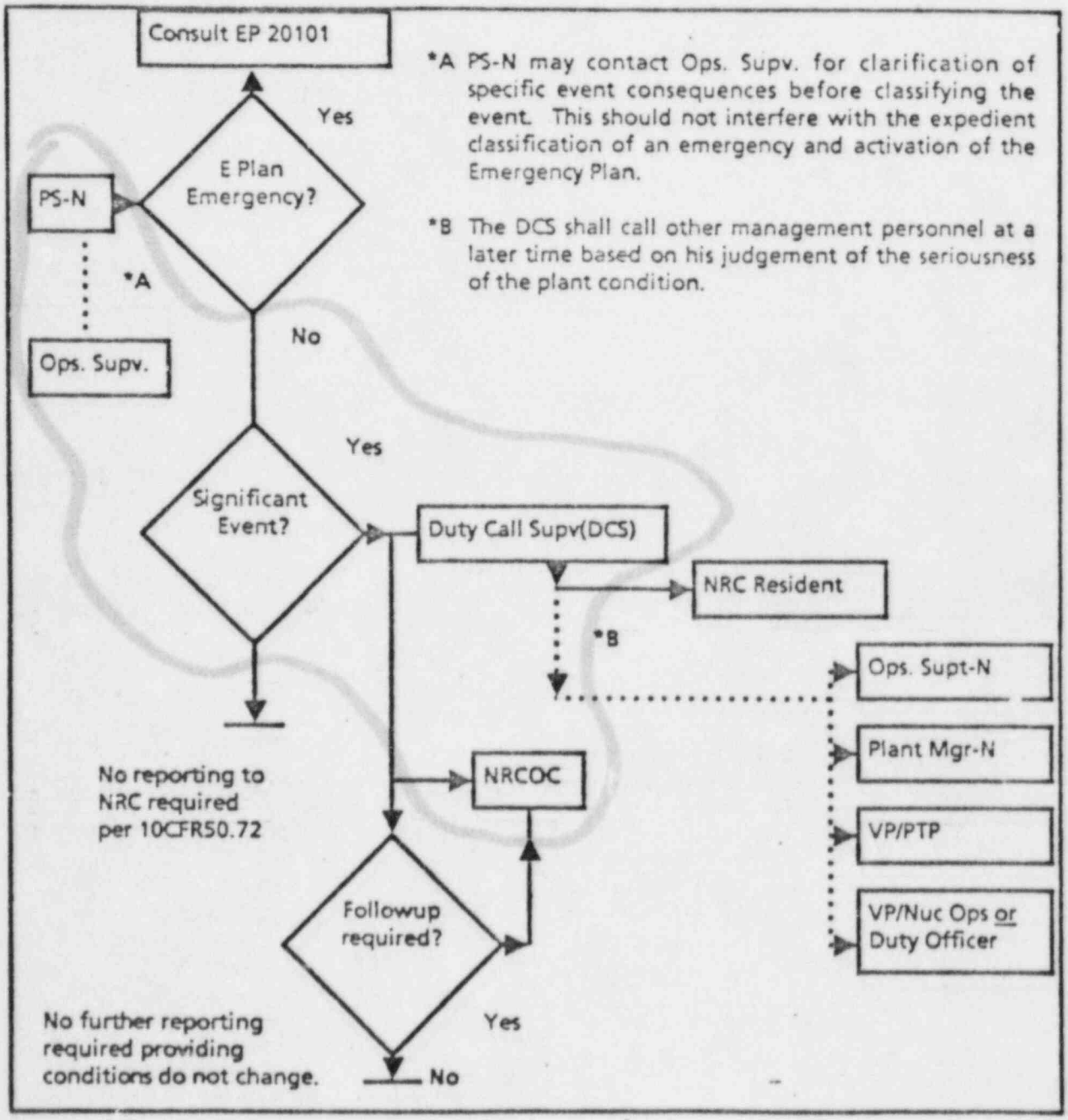
The fault tree illustrates the rationale to be followed for significant event reporting: