BALTIMORE
GAS AND
ELECTRIC

1650 CALVERT CLIFFS PARKWAY • LUSBY, MARYLAND 20657-4702

GEORGE C. CREEL
VICE PRESIDENT
NUCLEAR ENERGY
(410) 260-4455

June 30, 1992

U. S. Nuclear Regulatory Commission
Washington, DC 20555

ATTENTION: Document Control Desk

SUBJECT: Calvert Cliffs Nuclear Power Plant
Unit Nos. 1 & 2; Docket Nos. 50-317 & 50-318
Request Relief from 1968 ASME Boiler & Pressure Vessel Code Section III, Article 9

Gentlemen:

Baltimore Gas and Electric Company (BG&E) requests permanent relief from ASME Boiler & Pressure Vessel Code Section III (1968 Edition), Article 9 as allowed under 10 CFR 50.55a(a)(3). We specifically request permanent relief to allow a stop valve to remain installed downstream of a thermal overpressure relief device for the regenerative heat exchangers of both units. Compliance with Article 9 would result in hardship without compensatory quality or safety improvement. The stop valve is maintained in BG&Es Lock Valve Program.

We believe that our existing design satisfies the intent of our 1968 ASME Section III Class A construction code. However, current code editions and several code interpretations issued after our construction permit date (July 07, 1969) do not allow our system configuration. It is not possible to obtain an interpretation of the 1968 ASME Section III. Therefore, we request permanent code relief to eliminate any ambiguity in our application of the 1968 ASME construction code.

I. COMPONENT FOR WHICH RELIEF IS REQUESTED

Permanent relief is requested for manual isolation valve CVC-188 being located downstream of check valve CVC-435 [see Attachment (1)]. The regenerative heat exchangers (one per unit) transfer heat from the hot Reactor Coolant System (RCS) letdown fluid on the tube side of the heat exchanger to the cooler charging pump RCS fluid on the shell side of the heat exchanger. Spring-loaded check valve CVC-435, located in the bypass line around CV-519, provides thermal overpressure relief protection for the regenerative heat exchanger in the event the charging header is isolated and hot RCS fluid continues to flow through the heat exchanger. The heat exchanger was designed to the 1968 ASME Boiler and Pressure Vessel Code Section III, Class A (stamped C).

A001
1/1

II. CODE REQUIREMENT FOR WHICH RELIEF IS REQUESTED

ASME Boiler and Pressure Vessel Code Section III (1968 Edition), Article 9 paragraph N-910.8 states:

> "Any stop valve or similar device on the inlet or discharge side of a protective device provided in conformity with N-910.7 shall be so constructed, positively controlled and interlocked that the requirement of N-910.1 will be complied with under all conditions of operation of the system."

III. PROPOSED ALTERNATIVE

We propose to maintain our current system configuration. CVC-188 will be maintained in our Locked Valve Program. Valve position is ensured and maintained by a standard Operations' lock and two lock wires. Additionally, a stainless steel information tag which states that the lock and lockwires are required to satisfy ASME code requirements is attached to the handwheel for CVC-188.

IV. SUPPORTING INFORMATION

A. SEQUENCE OF EVENTS

Recently, questions were raised as to whether the location of a manual isolation valve (CVC-188) downstream of a thermal overpressure relief valve (CVC-435) complied with the original intent of the ASME construction code. The construction code for the regenerative heat exchangers, 1968 ASME Section III Article 9 paragraph N-910.8, requires CVC-188 to be positively controlled and interlocked.

Baltimore Gas and Electric Company has reviewed the various ASME code and code interpretations for locating stop valves downstream of pressure relieving devices [see Attachment (2)]. The regenerative heat exchangers were designed to 1968 ASME Section III Class A but stamped Class C because 10 CFR 50.55a did not originally require N stamps.

In order to better understand the intent of the 1968 Section III Class A requirements, we researched the requirements of 1968 Section III Class C. For Class C pressure vessels, the 1968 edition of Section III paragraph N-2111 states that, "The requirements of Section VIII of the code shall apply to the materials, design, fabrication, inspection and testing, and certification of Class C vessels except that the following additional requirements shall apply." Paragraph N-2114 goes on to state that for overpressure protection, the rules of Section VIII do not apply and the overpressure rules for ASME Section III Class A (Article 9) shall be substituted. It is very peculiar that the 1968 Section III Class C code refers the designer to the Section VIII requirements for everything except the overpressure protection requirements.

The 1968 edition of ASME Section VIII paragraph UG-134 (e)(2) states that there shall be no stop valves between the protective device and its point of discharge except

under the conditions set forth in Appendix M. Appendix M paragraph UA-355 allows stop valves on the discharge side of a pressure relieving device provided that the stop valve "can be locked or sealed in either the open or closed position, and it shall be locked or sealed in either position only by an authorized person." If our regenerative heat exchangers had been designed to 1968 Section VIII, the only code requirement for CVC-188 would be to have a simple locked valve. However, the regenerative heat exchangers were designed to 1968 ASME Section III Class A which implies that the overpressure controls of Section VIII are not sufficient. It appears that the Section III requirement of "positive controls and interlocks" means something more than a simple locked valve.

While there are no interpretations of the phrase "positively controlled and interlocked" for the 1968 Edition, the post construction era ASME codes and code interpretations explicitly state that a locked valve is not sufficient control for a stop valve located downstream of a pressure relieving device. Since it is not possible to clearly determine the 1968 ASME Section III Code intent for the words "positively controlled and interlocked", BG&E is seeking NRC code relief.

B. ANALYSIS

The existing system configuration was evaluated. Baltimore Gas and Electric Company believes that our current system configuration adequately controls and satisfies the intent of the construction code. The design of the system facilitates testing and maintenance activities. Without CVC-188, we would be required to freeze seal the Class 1 section of the charging line to run the required Local Leak Rate Test (LLRT) on CVC-435. CVC-188 is temporarily throttled to adjust the flow rate to the pressurizer auxiliary spray, however, it is still capable of accomplishing its pressure relief function.

We investigated the possibility of physically removing the bypass line (CVC-435 and CVC-188) around CV-519 and installing a relief valve for the regenerative heat exchanger. This would require a costly major plant modification which can only be done during an extended outage. We also evaluated the possibility of installing electrical/mechanical interlocks between CVC-188 and CV-519. This would require Control Room panel modifications. The cost associated with either of these two options does not offset the minimal increase in safety.

C. SAFETY SIGNIFICANCE

CVC-435 provides thermal overpressure relief protection for the regenerative heat exchangers. CVC-188, a manual isolation valve, facilitates testing and maintenance of CVC-435. CVC-188 is in our Locked Valve Program. There are administrative controls and physical restraints in place to prevent inadvertent closure of the stop valve. CVC-188 can be manually closed to perform the testing and maintenance activities for which it was designed. Controlling CVC-188 by the Locked Valve Program poses no threat to safety.

If a thermal transient were to occur with all normal flow paths and the overpressure relief line closed, the regenerative heat exchanger could be damaged. Adequate design features (check valves) are in the system to prevent a loss of RCS inventory. MOV-269 would be used for charging via the High Pressure Safety Injection header.

Therefore, maintaining CVC-188 in its current configuration does not create a significant safety concern.

D. CODE-REQUIREMENT PERFORMANCE IMPACT

The options available to upgrade the system configuration to current code editions and interpretations would require either removing CVC-188, replacing CVC-435 and CVC-188 with a relief valve or installing interlocks between CVC-188 and CV-519. All of these options present a significant hardship without a compensating increase in the level of quality or safety.

V. COMPENSATORY ACTIONS

Maintain CVC-188 in the Locked Valve Program and with two additional lock wires.

VI. IMPLEMENTATION SCHEDULE

Maintain our system in its current configuration with a manual isolation valve (CVC-188) located downstream of a thermal overpressure relief valve (CVC-435).

SAFETY COMMITTEE REVIEW

The proposed relief request has been reviewed by our Plant Operations and Safety Review Committee. They concluded that compliance with Article 9 paragraph N-910.8 would result in a hardship without a compensatory improvement in quality or safety.

Should you have any questions regarding this matter, we will be pleased to discuss them with you.

Very truly yours,

GCC/LMD/lmd/bjd/dlm

Attachments: (1) System Configuration
(2) Code Excerpts and Interpretations

cc: D. A. Brune, Esquire
J. E. Silberg, Esquire
R. A. Capra, NRC
D. G. McDonald, Jr., NRC
T. T. Martin, NRC
P. R. Wilson, NRC
R. I. McLean, DNR
J. H. Walter, PSC

ATTACHMENT 1
SYSTEM CONFIGURATION

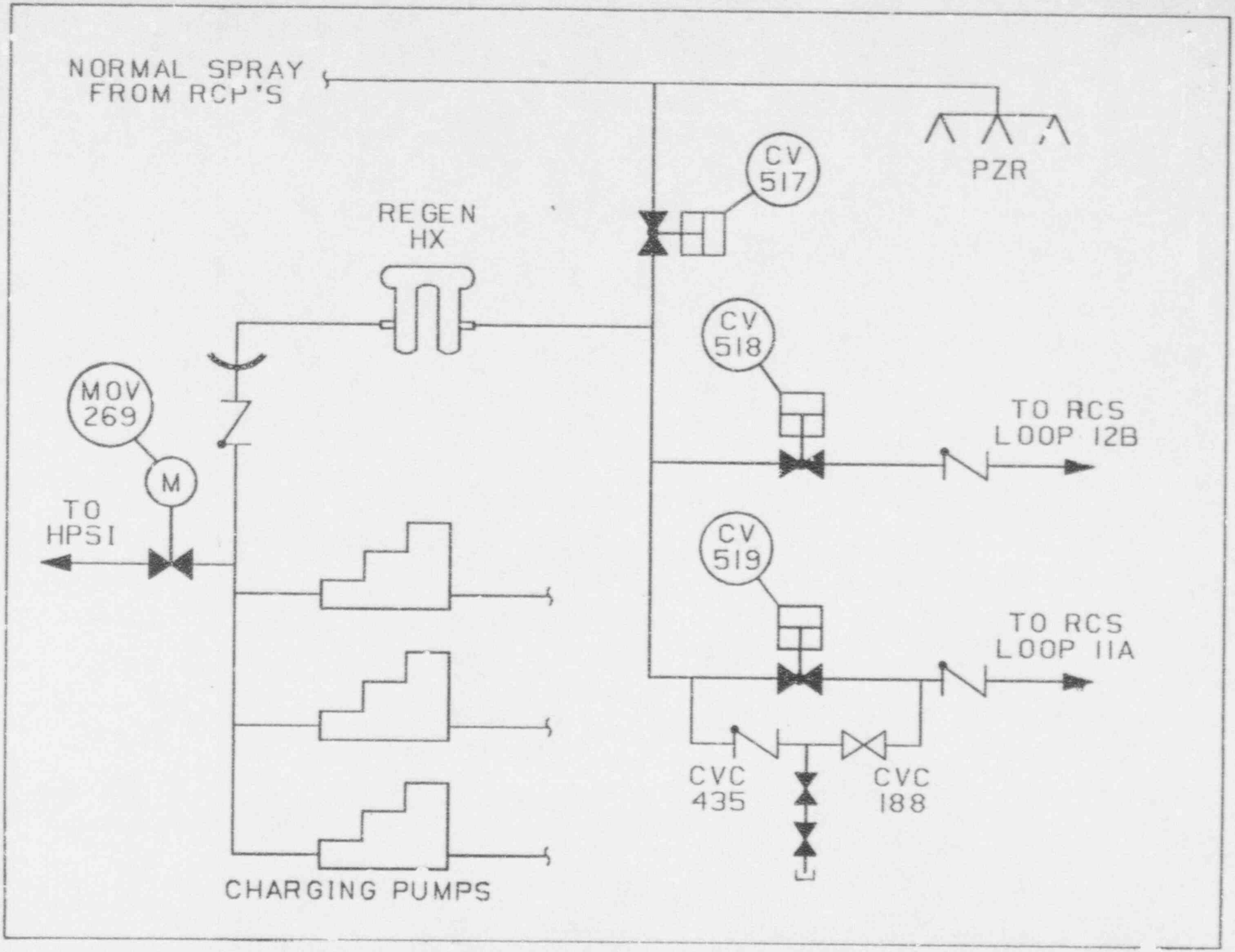
NORMAL SPRAY
FROM RCP'S
PZR
CV
517
REGEN
HX
CV
518
MOV
269
M
TO
HPSI
TO RCS
LOOP 12B
CV
519
TO RCS
LOOP 11A
CVC
435
CVC
188
CHARGING PUMPS

ATTACHMENT 2
CODE EXCERPTS AND INTERPRETATIONS

SUBSECTION C

Requirements for Class C Vessels

ARTICLE 21

General Requirements

N-2110 REQUIREMENTS

Subsection C covers requirements for vessels classified as Class C.

N-2111 The requirements of Section VIII of the Code shall apply to the materials, design, fabrication, inspection and testing, and certification of Class C vessels except that the following additional requirements shall apply.

N-2112 The rules in Par. U-1(g) of Section VIII of the Code shall not apply to Class C vessels.

N-2113 The rules of paragraph UW-2(a) of Section VIII of the Code shall apply to any Class C vessels that may contain substances whose level of radioactivity is such that their production, storage, or use is subject to regulations of Federal or Local jurisdictions.

N-2114 The rules in paragraphs UG-125 through UG-134 of Section VIII of the Code shall not apply and the requirements of Article 9 of this Section shall be substituted therefor.

N-2115 Class C vessels shall be stamped with the letter "N" below the Code U-symbol in the stamping shown in Fig. UG-118 of Section VIII of the Code.

N-910.7 While pressure relieving devices need not be installed directly on the vessels which they serve to protect, no stop valve or similar device shall be placed relative to a protective device required for the protection of any vessel so that it could remove the protection afforded to the vessel, except where such stop valves or other devices are shown to be required in the direct interest of system safety or for the purpose of in-service inspection and testing, subject, however, to the requirements of N-910.8.

N-910.8 Any stop valve or similar device on the inlet or discharge side of a protective device provided in conformity with N-910.7 shall be so constructed, positively controlled and interlocked that the requirement of N-910.1 will be complied with under all conditions of operation of the system.

UG-134 Installation

(e) There shall be no intervening stop valves between the vessel and its protective device or devices, or between the protective device or devices and the point of discharge, except:

(1) When these stop valves are so constructed or positively controlled that the closing of the maximum number of block valves possible at one time will not reduce the pressure-relieving capacity provided by the unaffected relieving devices below the required relieving capacity; or

(2) Under the conditions set forth in Appendix M.

APPENDIX M
Installation and Operation

UA-355 Stop Valves on the Discharge Side of a Pressure-Relieving Device (See Par. UG-134(e).)

A full-area stop valve may be placed on the discharge side of a pressure-relieving device when its discharge is connected to a common header with other discharge lines from other pressure-relieving devices on nearby vessels that are in operation, so that this stop valve when closed will prevent a discharge from any connected operating vessels from backing up beyond the valve so closed. Such a stop valve shall be so arranged that it can be locked or sealed in either the open or closed position, and it shall be locked or sealed in either position only by an authorized person. When it is to be closed while the vessel is in operation, an authorized person shall be present, and he shall remain stationed there; he shall again lock or seal the stop valve in the open position before leaving the station. Under no condition should this valve be closed while the vessel is in operation except when a stop valve on the inlet side of the safety relieving device is installed and is first closed.

ASME SECTION III CODE INTERPRETATIONS

Interpretation: III-80-67

Subject: Section III, Division 1, NC-7142 Provisions When Stop Valves Are Used

Date Issued: April 16, 1980

File: NI-79-241

Question (1): What is meant by the term "controls and interlocks" as found in NC-7142?

Reply (1): The "controls and interlocks" referred to in NC-7142 are pressure sensing devices required to permit pressure relieving function to be met at all times.

Question (2): May administrative controls such as operating procedures governing the use and application of the system be construed as the "controls" of NC-7142?

Reply (2): Yes, operating procedures may be the necessary part of the electrical and mechanical controls required by NC-7142.

Interpretation: III-1-80-67R

Subject: Section III, Division 1, NC-7142 Provisions When Stop Valves Are Used (1980 Edition)

Date Issued: March 1, 1989

File: NI79-241*

Question (1): What is meant by the term *controls and interlocks* as found in NC-7142?

Reply (1): The controls and interlocks referred to in NC-7142 are pressure sensing devices which would activate the stop valve to provide fluid access to the relief valve, thereby assuring the pressure relieving function is met at all times.

Question (2): May administrative controls such as operating procedures governing the use and application of the system be construed as the *controls* of NC-7142?

Reply (2): No.

Note: Interpretation III-80-67, originally issued April 16, 1980, was revised to be consistent with Interpretation III-81-131 issued November 9, 1981. The above Interpretation supersedes Interpretation III-80-67 which appeared in Volume 7, page 55.

NB-7142 Provisions When Stop Valves Are Used

(a) No stop valve or other device shall be placed relative to a pressure relief device so that it could reduce the overpressure protection below that required by the rules of this Article, unless such stop valves are constructed and installed with controls and interlocks so that the relieving capacity requirements of NB-7300 are met under all conditions of operation of both the system and the stop valves.

(b) Simple administrative control of stop valve position is not acceptable.

(c) Stop valves shall have independent and diverse interlocks to prevent valves from being closed during all conditions of system operation when the pressure relief device is needed to meet the requirements of NB-7300.

(d) Stop valves shall have independent and diverse interlocks to assure that the valves will automatically open and remain open during all conditions of system operation when the pressure relief device is needed to meet the requirements of NB-7300.

(e) Means shall be provided such that the operation of controls and interlocks can be verified.

NC-7142 Provisions When Stop Valves Are Used

No stop valve or other device shall be placed relative to a pressure relief device so that it could reduce the overpressure protection below that required by the rules of this Article, unless such stop valves are constructed and installed with controls and interlocks so that the relieving capacity requirements of NC-7300 are met under all conditions of operation of both the system and the stop valves. Means shall be provided such that the operation of controls and interlocks can be verified.

ND-7142 Provisions When Stop Valves Are Used

No stop valve or other device shall be placed relative to a pressure relief device so that it could reduce the overpressure protection below that required by the rules of this Article, unless such stop valves are constructed and installed with controls and interlocks so that the relieving capacity requirements of ND-7300 are met under all conditions of operation of both the system and the stop valves. Means shall be provided such that the operation of controls and interlocks can be verified.