CLINTON POWER STATION

REACTOR PRESSURE VESSEL
WATER LEVEL MEASUREMENT SYSTEM
EVALUATION REPORT

ILLINOIS
POWER
COMPANY

NOVEMBER 1984

Illinois Power Company
Clinton Power Station - Unit #1

REACTOR PRESSURE VESSEL WATER LEVEL MEASUREMENT SYSTEM EVALUATION REPORT

November 1984

Reactor Pressure Vessel
Water Level Measurement System
Evaluation Report

Prepared by:

Terry L. Riley
Illinois Power
Nuclear Station
Engineering
Technical Assessment

Prepared by:

David H. Brainer
Sargent & Lundy
Nuclear Safeguards and
Licensing
Safeguards Systems

Prepared by:

Joel B. Douglas
Illinois Power
Nuclear Station
Engineering
Technical Assessment

Prepared by:

Gary J. Schweitzer
Sargent & Lundy
Nuclear Safeguards and
Licensing
Safeguards Systems

Reviewed by:

Dale L. Holtzscher
Illinois Power
Supervisor-Technical
Assessment

Reviewed by:

Robert D. Astleford
Sargent & Lundy
Nuclear-Safeguards and
Licensing
Safeguards Systems

Approved by:

Erich W. Kant
Illinois Power
Director-Nuclear
Safety & Engineering
Analysis

Approved by:

William R. Peebles
Sargent & Lundy
Supervisor-Safeguards
Systems

TABLE OF CONTENTS

SECTION	DESCRIPTION	PAGE
	LIST OF TABLES	vii
	LIST OF FIGURES	ix
1	EXECUTIVE SUMMARY	1-1
2	INTRODUCTION	2-1
2.1	BWROG Activities	2-1
2.2	NRC Requirements	2-1
2.3	Report Arrangement	2-1
2.4	References	2-2
3	CLINTON REACTOR WATER LEVEL MEASUREMENT SYSTEM DESIGN	3-1
3.1	Description of Level Measurement System	3-1
3.2	Instrument Line Routing	3-4
3.3	Operator Displays	3-4
3.4	Safety and Control Role of Clinton Water Level Measurement System	3-5
4	CPS WATER LEVEL PERFORMANCE	4-1
4.1	Level Indication Errors	4-1
4.1.1	Non-Flashing Instrument Errors	4-4
4.1.1.1	Effects of Fluid Density Variations on Instrument Accuracy	4-6
4.1.1.2	Effects of Vessel Subcooling on Instrument Accuracy	4-8
4.1.1.3	Drywell Temperature Errors	4-9
4.1.1.4	Effect of Containment Temperature Variations on Instrument Accuracy	4-10
4.1.1.5	Steam Dryer Flow Effects	4-11
4.1.1.6	Influence of Jet Pump Suction Flow on Instrument Accuracy	4-11
4.1.1.7	Effects of Jet Pump Discharge on Instrument Accuracy	4-12
4.1.2	Instrument Line Flashing Errors	4-12
4.1.2.1	Transient Flashing Errors	4-13
4.1.2.2	Steady-State Flashing Errors	4-15
4.2	Water Level Relationship to Core State	4-16
4.2.1	The Effectiveness of Water Level Measurement as an Indication of ICC	4-17
4.2.1.1	The Effects of Pressure Variations on the Core Transient During Vessel Isolation	4-20
4.2.2	Recovery From Inadequate Core Cooling	4-21
4.2.2.1	Impact of Flow Blockage on Core Cooling	4-21
4.2.2.2	Counter Current Flow Limiting CCFL Phenomenon	4-21
4.3	Summary and Conclusions	4-22
4.4	References	4-28

TABLE OF CONTENTS (Continued)

SECTION	DESCRIPTION	PAGE
5	CPS PLANT TRANSIENT ACCIDENT ANALYSIS OF WLMS AS ORIGINALLY DESIGNED	5-1
5.1	Plant Transient Events	5-1
5.1.1	Loss of Drywell Cooling	5-2
5.1.1.1	Loss of Drywell Coolers Event Progression	5-2
5.1.1.2	Shutdown Subsequent to Loss of Drywell Coolers and Feedwater	5-4
5.1.1.2.1	Normal Shutdown After Loss of Drywell Coolers and Feedwater	5-5
5.1.1.2.2	Shutdown With ADS (Loss of HPCS/RCIC)	5-6
5.1.2	Shutdown Subsequent to LOCA	5-8
5.1.2.1	Shutdown Subsequent to Small Break LOCA	5-8
5.1.2.2	Shutdown Subsequent to Large Break LOCA	5-10
5.2	Summary	5-10
5.3	References	5-11
6	FAILURE ANALYSIS OF CPS WLMS	6-1
6.1	RPV WLMS Failure Modes and Effects Analysis (FMEA)	6-2
6.1.1	Plant Response to Failure Events	6-3
6.1.1.1	Assumptions for Plant Initial Conditions	6-3
6.1.1.2	Event Initiation and Response Scenarios	6-3
6.1.1.3	Failure of HPCS Transmitter	6-3
6.1.1.4	Failure of RCIC and LPCS/LPCI Transmitters	6-4
6.1.1.5	Failure of ADS Transmitter	6-5
6.1.1.6	Feedwater Control Transmitter Failure	6-5
6.1.1.7	Power Bus Failure	6-5
6.2	Failure Analysis Summary	6-6
6.3	References	6-6
7	DESCRIPTION OF THE WLMS INSTRUMENTATION DESIGN MODIFICATIONS AND SYSTEM PERFORMANCE	7-1
7.1	Introduction	7-1
7.2	Recommended Design Modifications for the BWR WLMS	7-1
7.3	Description of the CPS WLMS Modifications	7-2
7.3.1	Instrument Line Routing Modifications	7-3
7.3.2	Relocation of the Flow Limiting Orifices	7-4
7.4	Evaluation of the Modified WLMS Performance	7-4
7.4.1	Non-Flashing Instrument Errors	7-5

TABLE OF CONTENTS (Continued)

SECTION	DESCRIPTION	PAGE
7.4.1.1	Drywell Temperature Errors	7-5
7.4.1.2	The Influence of Sense Line Modifications on Containment Temperature Errors	7-7
7.4.2	Instrument Line Flashing Errors	7-8
7.4.2.1	Transient Flashing Errors	7-8
7.4.2.2	Steady-State Flashing Errors	7-10
7.5	Equipment Qualification and Pipe Whip Concerns Resulting From the Relocation of the Flow Limiting Orifices	7-11
7.6	Modified WLMS Performance During Plant Transient Events	7-12
7.6.1	Short-Term WLMS Response to Plant Transients	7-12
7.6.2	Long-Term WLMS Response to Plant Transients	7-13
7.7	Summary and Conclusions	7-15
7.8	References	7-16
8	CONCLUSIONS	8-1
9	ACRONYMS LIST	9-1
APPENDIX A	SYSTEM LOGIC DESCRIPTION AND FAILURE MODES AND EFFECTS ANALYSIS	A-1
A.1	Introduction	A-1
A.2	Conventions and Assumptions	A-2
A.2.1	Boolean Algebra	A-2
A.2.2	Failure Modes and Effects Analysis (FMEA)	A-2
A.3	Clinton Plant RPV Water Level Measurement System (WLMS)	A-3
A.4	Logic System Description and Failure Analysis	A-3
A.4.1	Reactor Protection System (RPS)	A-3
A.4.1.1	RPS Boolean Expression	A-7
A.4.1.2	RPS FMEA	A-7
A.4.1.2.1	Reference Leg Failure	A-7
A.4.1.2.2	Reference Leg and Single RPS Transmitter Failures in Conjunction	A-8
A.4.1.2.3	Reference Leg Failure and Loss of Bus in Conjunction	A-8
A.4.1.3	RPS FMEA Summary	A-8
A.4.2	High Pressure Core Spray (HPCS) System	A-9
A.4.2.1	HPCS Boolean Expression	A-9
A.4.2.2	HPCS Initiation FMEA	A-9
A.4.2.2.1	Reference Leg Failure	A-9
A.4.2.2.2	Reference Leg and Single HPCS Transmitter Failures in Conjunction	A-10

TABLE OF CONTENTS (Continued)

SECTION	DESCRIPTION	PAGE
A.4.2.2.3	Reference Leg Failure and Loss of Bus in Conjunction	A-10
A.4.2.3	HPCS Trip FMEA	A-11
A.4.2.3.1	Reference Leg Failure	A-11
A.4.2.3.2	Reference Leg and Single HPCS Transmitter Failures in Conjunction	A-11
A.4.2.3.3	Reference Leg Failure and Loss of Bus in Conjunction	A-12
A.4.2.4	HPCS FMEA Summary	A-12
A.4.3	Reactor Core Isolation Cooling System (RCIC)	A-12
A.4.3.1	RCIC Boolean Expression	A-12
A.4.3.2	RCIC Initiation FMEA	A-13
A.4.3.2.1	Reference Leg Failure	A-13
A.4.3.2.2	Reference Leg and Single RCIC Transmitter Failures in Conjunction	A-14
A.4.3.2.3	Reference Leg Failure and Loss of Bus in Conjunction	A-15
A.4.3.3	RCIC System Trip FMEA	A-15
A.4.3.3.1	Reference Leg Failure	A-15
A.4.3.3.2	Reference Leg and Single RCIC Transmitter Failures in Conjunction	A-16
A.4.3.3.3	Reference Leg Failure and Loss of Power Bus in Conjunction	A-16
A.4.3.4	RCIC FMEA Summary	A-16
A.4.4	Main Steam Line Isolation Valve (MSIV) Closure	A-16
A.4.4.1	MSIV Closure Boolean Expression	A-17
A.4.4.2	MSIV Closure FMEA	A-17
A.4.4.2.1	Reference Leg Failure	A-17
A.4.4.2.2	Reference Leg and Single MSIV Transmitter Failures in Conjunction	A-18
A.4.4.2.3	Reference Leg Failure and Loss of Bus in Conjunction	A-19
A.4.4.3	MSIV FMEA Summary	A-19
A.4.5	Low Pressure Core Spray (LPCS)/Low Pressure Coolant Injection RHR-A(LPCI RHR-A)	A-19
A.4.5.1	LPCS/LPCI RHR-A Boolean Expression	A-19
A.4.5.2	LPCS/LPCI RHR-A FMEA	A-20
A.4.5.2.1	Reference Leg Failure	A-20
A.4.5.2.2	Reference Leg and Single LPCS/LPCI RHR-A Transmitter Failures in Conjunction	A-20
A.4.5.2.3	Reference Leg Failure and Loss of Bus in Conjunction	A-20
A.4.5.3	LPCS/LPCI RHR-A FMEA Summary	A-20
A.4.6	Low Pressure Coolant Injection (LPCI) RHR-B AND C	A-21
A.4.6.1	LPCI RHR-B and C Boolean Expression	A-21
A.4.6.2	LPCI RHR-B and C FMEA	A-21

TABLE OF CONTENTS (Continued)

SECTION	DESCRIPTION	PAGE
A.4.6.2.1	Reference Leg Failure	A-21
A.4.6.2.2	Reference Leg and Single LPCI RHR-B and C Transmitter Failures in Conjunction	A-22
A.4.6.2.3	Reference Leg Failure and Loss of Bus in Conjunction	A-22
A.4.6.3	LPCI RHR-B and C FMEA Summary	A-22
A.4.7	Automatic Depressurization System (ADS)	A-22
A.4.7.1	ADS Boolean Expression	A-22
A.4.7.2	ADS FMEA	A-23
A.4.7.2.1	Reference Leg Failure	A-23
A.4.7.2.2	Reference Leg and Single ADS Transmitter Failures	A-24
A.4.7.2.3	Reference Leg Failure and Loss of Bus in Conjunction	A-24
A.4.7.3	ADS FMEA Summary	A-25
A.4.8	Feedwater Pump Turbine and Main Turbine Trip	A-25
A.4.8.1	Feedwater Turbine and Main Turbine Boolean Expression	A-25
A.4.8.2	Feedwater Turbine and Main Turbine Trip FMEA	A-26
A.4.8.2.1	Reference Leg Failure	A-26
A.4.8.2.2	Reference Leg and Single Transmitter Failures in Conjunction	A-26
A.4.8.2.3	Reference Leg Failure and Loss of Bus in Conjunction	A-27
A.4.8.3	Feedwater Turbine and Main Turbine Trip FMEA Summary	A-27
A.4.9	Upper Pool Dump	A-27
A.4.9.1	Upper Pool Dump Boolean Expression	A-28
A.4.9.2	Upper Pool Dump FMEA	A-28
A.4.9.2.1	Reference Leg Failure	A-28
A.4.9.2.2	Reference Leg and Single Upper Pool Dump Transmitter Failures in Conjunction	A-29
A.4.9.2.3	Reference Leg Failure and Loss of Bus in Conjunction	A-29
A.4.9.3	Upper Pool Dump FMEA Summary	A-30
A.5	Results and Summary	A-30
A.6	References	A-30
APPENDIX B	REVIEW OF MODIFIED WLMS AGAINST THE SIX SOL LEVY CONCERNS (SLI-8211)	B-1
APPENDIX C	CLINTON POWER STATION EMERGENCY PROCEDURE GUIDELINES	C-1
C.1	Introduction	C-1
C.2	CPS Emergency Procedure Guidelines	C-2
C.3	Operator Reliance on RPV Water Level Indication for Maintaining Adequate Core Cooling	C-6

TABLE OF CONTENTS (Continued)

SECTION	DESCRIPTION	PAGE
C.3.1	Loss of Drywell Cooling	C-7
C.3.2	Reference Line Breaks Plus Single ECCS Initiation Instrument Channel Failure	C-8
C.3.3	Multiple Failures in Level Instruments	C-8
C.4	Conclusions	C-9
C.5	References	C-9
APPENDIX D	INSTRUMENT LINE DATA FOR MODIFIED WLMS	D-1
APPENDIX E	EVALUATION OF THE MICHELSON CONCERN	E-1

LIST OF TABLES

TABLE #	TITLE	PAGE
3-1	CPS PLANT DESIGN PARAMETERS	3-9
3-2	CPS VESSEL LEVEL TRIP EVALUATION CORRELATION	3-10
3-3	INSTRUMENTATION ATTACHED TO MECHANICAL DIVISION 1 REFERENCE LEG	3-11
3-4	INSTRUMENTATION ATTACHED TO MECHANICAL DIVISION 2 REFERENCE LEG	3-12
3-5	INSTRUMENTATION ATTACHED TO MECHANICAL DIVISION 3 REFERENCE LEG	3-13
3-6	INSTRUMENTATION ATTACHED TO MECHANICAL DIVISION 4 REFERENCE LEG	3-14
3-7	MECHANICAL DIVISION 1 / AREA 1 REFERENCE LEG LINE LENGTHS - ORIGINAL WLMS DESIGN	3-15
3-8	MECHANICAL DIVISION 2 / AREA 2 REFERENCE LEG LINE LENGTHS - ORIGINAL WLMS DESIGN	3-16
3-9	MECHANICAL DIVISION 3 / AREA 3 REFERENCE LEG LINE LENGTHS - ORIGINAL WLMS DESIGN	3-17
3-10	MECHANICAL DIVISION 4 / AREA 4 REFERENCE LEG LINE LENGTHS - ORIGINAL WLMS DESIGN	3-18
3-11	MECHANICAL DIVISION 1 / AREA 1 LEVEL INSTRUMENT ELEVATIONS	3-19
3-12	MECHANICAL DIVISION 2 / AREA 2 LEVEL INSTRUMENT ELEVATIONS	3-20
3-13	MECHANICAL DIVISION 3 / AREA 3 LEVEL INSTRUMENT ELEVATIONS	3-21
3-14	MECHANICAL DIVISION 4 / AREA 4 LEVEL INSTRUMENT ELEVATIONS	3-22
4-1	COMPARISON OF SELECT THERMAL AND HYDRAULIC DESIGN CHARACTERISTICS FOR THE BWR/4 AND BWR/6 SERIES REACTORS	4-31

LIST OF TABLES (Continued)

TABLE #	TITLE	PAGE
6-1	VULNERABILITY OF SAFETY SYSTEMS TO AUTOMATIC INITIATION FAILURE CAUSED BY REACTOR LEVEL REFERENCE LEG AND/OR SINGLE TRANSMITTER OR BUS FAILURES	6-7
7-1	SUMMARY OF THE NON-FLASHING INSTRUMENT ERRORS INFLUENCED BY THE WLMS MODIFICATIONS	7-17
7-2	COMPARISON OF THE SENSE LINE LENGTH AND ORIFICE FLOW LIMITER LOCATIONS FOR THE ORIGINAL AND MODIFIED WLMS	7-19
A-1	CLINTON RPV WATER LEVEL AND SYSTEM FUNCTION CORRELATIONS	A-4
A-2	ASSIGNMENT OF WATER LEVEL INSTRUMENTATION WHICH INITIATE PLANT SYSTEMS	A-5
A-3	SUMMARY OF FAILURES WHICH PREVENT AUTOMATIC ACTUATION OF SAFETY SYSTEMS VIA RPV WATER LEVEL INPUTS	A-32
D-1	MECHANICAL DIVISION 1/AREA 1 REFERENCE LEG LINE LENGTHS - MODIFIED WLMS DESIGN	D-1
D-2	MECHANICAL DIVISION 2/AREA 2 REFERENCE LEG LINE LENGTHS - MODIFIED WLMS DESIGN	D-2
D-3	MECHANICAL DIVISION 3/AREA 3 REFERENCE LEG LINE LENGTHS - MODIFIED WLMS DESIGN	D-3
D-4	MECHANICAL DIVISION 4/AREA 4 REFERENCE LEG LINE LENGTHS - MODIFIED WLMS DESIGN	D-4
D-5	INSTRUMENT LINE PARAMETERS FOR THE MODIFIED WLMS - DIVISION 1	D-5
D-6	INSTRUMENT LINE PARAMETERS FOR THE MODIFIED WLMS - DIVISION 2	D-6
D-7	INSTRUMENT LINE PARAMETERS FOR THE MODIFIED WLMS - DIVISION 3	D-7
D-8	INSTRUMENT LINE PARAMETERS FOR THE MODIFIED WLMS - DIVISION 4	D-8

LIST OF FIGURES

FIGURE #	TITLE	PAGE
3-1	CLINTON POWER STATION MARK III PRESSURE SUPPRESSION CONTAINMENT	3-23
3-2	COLD REFERENCE LEG RPV WATER LEVEL INSTRUMENT DESIGN	3-24
3-3	ORIENTATION OF DIVISIONS 1 AND 3 WLMS INSTRUMENT TRANSMITTERS	3-25
3-4	ORIENTATION OF DIVISIONS 2 AND 4 WLMS INSTRUMENT TRANSMITTERS	3-26
3-5	LEVEL INSTRUMENT RANGES	3-27
3-6	WLMS REFERENCE LEG PICTORIAL - DIVISION 1 ORIGINAL DESIGN	3-28
3-7	WLMS REFERENCE LEG PICTORIAL - DIVISION 2 ORIGINAL DESIGN	3-29
3-8	WLMS REFERENCE LEG PICTORIAL - DIVISION 3 ORIGINAL DESIGN	3-30
3-9	WLMS REFERENCE LEG PICTORIAL - DIVISION 4 ORIGINAL DESIGN	3-31
3-10	LEVEL INSTRUMENT ELEVATIONS	3-32
3-11	REACTOR WATER LEVEL INDICATIONS IN CONTROL ROOM	3-33
3-12	MAIN CONTROL ROOM FUEL ZONE WATER LEVEL INDICATOR	3-34
3-13	RELATIVE REACTOR VESSEL WATER LEVELS	3-35
4-1	SENSITIVITY OF WATER LEVEL INDICATION TO VARIATIONS IN REACTOR PRESSURE	4-32
4-2	ORIENTATION OF WATER LEVEL INSTRUMENTATION RELATIVE TO THE RPV INSTRUMENT TAPS	4-33
4-3	VESSEL DENSITY EFFECTS ON INSTRUMENT ZERO OFFSET	4-34

LIST OF FIGURES (Continued)

FIGURE #	TITLE	PAGE
4-4	SENSITIVITY OF NARROW RANGE INSTRUMENT ZERO OFFSET ERROR TO DRYWELL TEMPERATURE VARIATIONS - ORIGINAL WLMS DESIGN	4-35
4-5	SENSITIVITY OF WIDE RANGE INSTRUMENT ZERO OFFSET ERROR TO DRYWELL TEMPERATURE VARIATIONS - ORIGINAL WLMS DESIGN	4-36
4-6	SENSITIVITY OF FUEL ZONE INSTRUMENT ZERO OFFSET ERROR TO DRYWELL TEMPERATURE VARIATIONS - ORIGINAL WLMS DESIGN	4-37
4-7	SENSITIVITY OF UPSET AND SHUTDOWN RANGE INSTRUMENTS ZERO OFFSET ERROR TO DRYWELL TEMPERATURE VARIATIONS - ORIGINAL WLMS DESIGN	4-38
4-8	SENSITIVITY OF INSTRUMENTS ZERO OFFSET TO VARIATIONS IN CONTAINMENT TEMPERATURE - ORIGINAL WLMS DESIGN	4-39
4-9	INSTRUMENT ERROR AS A RESULT OF STEAM AND RECIRCULATION FLOW	4-40
4-10	FUEL ZONE INSTRUMENT LEVEL ERROR DUE TO JET PUMP FLOW EFFECTS	4-41
4-11	STEADY-STATE FLASHING ERRORS FOR THE NARROW AND WIDE RANGE INSTRUMENTS - ORIGINAL WLMS DESIGN	4-42
4-12	STEADY-STATE FLASHING ERRORS FOR THE FUEL ZONE, UPSET, AND SHUTDOWN RANGE INSTRUMENTS - ORIGINAL WLMS DESIGN	4-43
4-13	DECAY HEAT AND INTEGRATED HEAT DUMP TIME HISTORY FOLLOWING REACTOR SCRAM	4-44
4-14	THE DOWNCOMER - BYPASS REGION WATER LEVEL TIME HISTORY DURING INVENTORY BOIL-OFF	4-45
4-15	WATER LEVEL AS AN INDICATOR OF CORE COOLING	4-46
5-1	DRYWELL TEMPERATURE AND PRESSURE RESPONSE AFTER LOSS OF DRYWELL COOLERS	5-12
7-1	COMPARISON OF THE REFERENCE LEG DRYWELL VERTICAL DROPS FOR THE ORIGINAL AND MODIFIED WLMS - NARROW, WIDE, AND FUEL ZONE INSTRUMENTS	7-20

LIST OF FIGURES (Continued)

FIGURE #	TITLE	PAGE
7-2	COMPARISON OF THE REFERENCE LEG AND VARIABLE LEG DRYWELL VERTICAL DROP DIFFERENCE FOR THE ORIGINAL AND MODIFIED WLMS - NARROW AND WIDE RANGE INSTRUMENTS	7-21
7-3	COMPARISON OF THE REFERENCE LEG AND VARIABLE LEG DRYWELL VERTICAL DROP DIFFERENCE FOR THE ORIGINAL AND MODIFIED WLMS - FUEL ZONE, SHUTDOWN, AND UPSET RANGE INSTRUMENTS	7-22
7-4	SENSITIVITY OF WIDE RANGE INSTRUMENT ZERO OFFSET ERROR TO DRYWELL TEMPERATURE VARIATIONS - MODIFIED WLMS DESIGN	7-23
7-5	SENSITIVITY OF NARROW RANGE INSTRUMENT ZERO OFFSET ERROR TO DRYWELL TEMPERATURE VARIATIONS - MODIFIED WLMS DESIGN	7-24
7-6	SENSITIVITY OF FUEL ZONE RANGE INSTRUMENT ZERO OFFSET ERROR TO DRYWELL TEMPERATURE VARIATIONS - MODIFIED WLMS DESIGN	7-25
7-7	SENSITIVITY OF UPSET AND SHUTDOWN RANGE INSTRUMENT ZERO OFFSET ERROR TO DRYWELL TEMPERATURE VARIATIONS - MODIFIED WLMS DESIGN	7-26
7-8	SENSITIVITY OF INSTRUMENTS ZERO OFFSET TO VARIATIONS IN CONTAINMENT TEMPERATURE - MODIFIED DESIGN	7-27
7-9	STEADY-STATE FLASHING ERRORS FOR THE NARROW AND WIDE RANGE INSTRUMENTS - MODIFIED WLMS DESIGN	7-28
7-10	STEADY-STATE FLASHING ERRORS FOR THE FUEL ZONE, UPSET, AND SHUTDOWN RANGE INSTRUMENTS - MODIFIED WLMS DESIGN	7-29
A-1	AND GATE LOGIC DEFINITION	A-35
A-2	OR GATE LOGIC DEFINITION	A-36
A-3	ORIENTATION OF SAFETY-RELATED RPV WATER LEVEL TRANSMITTERS WHICH INITIATE PLANT SYSTEMS	A-37

LIST OF FIGURES (Continued)

FIGURE #	TITLE	PAGE
A-4	REACTOR PROTECTION SYSTEM (RPS) LOW WATER LEVEL TRIP 2/4 BASIC LOGIC FOR DIVISION 1	A-38
A-5	REACTOR PROTECTION SYSTEM (RPS) HIGH WATER LEVEL TRIP 2/4 BASIC LOGIC FOR DIVISION 1	A-39
A-6	HIGH PRESSURE CORE SPRAY (HPCS) INITIATION BASIC LOGIC	A-40
A-7	REACTOR CORE ISOLATION COOLING (RCIC) BASIC LOGIC	A-41
A-8	MAIN STEAM LINE ISOLATION VALVE (MSIV) CLOSURE DIVISION 1 BASIC LOGIC	A-42
A-9	MAIN STEAM LINE ISOLATION VALVE (MSIV) CLOSURE BASIC LOGIC	A-43
A-10	LOW PRESSURE CORE SPRAY (LPCS)/LOW PRESSURE COOLANT INJECTION (LPCI) RHR-A INITIATION BASIC LOGIC	A-44
A-11	LOW PRESURE COOLANT INJECTION (LPCI) RHR-B AND C INITIATION BASIC LOGIC	A-45
A-12	AUTOMATIC DEPRESSURIZATION SYSTEM (ADS) BASIC LOGIC - CHANNEL A/E SOLENOID A INITIATION	A-46
A-13	AUTOMATIC DEPRESSURIZATION SYSTEM (ADS) BASIC LOGIC - CHANNEL B/F SOLENOID B INITIATION	A-47
A-14	FEEDWATER PUMP TURBINE AND MAIN TURBINE TRIP BASIC LOGIC	A-48
A-15	LOW WATER LEVEL INITIATION TOWARDS UPPER POOL DUMP BASIC LOGIC	A-49
D-1	WLMS REFERENCE LEG PICTORIAL - DIVISION 1 MODIFIED DESIGN	D-9
D-2	WLMS REFERENCE LEG PICTORIAL - DIVISION 2 MODIFIED DESIGN	D-10
D-3	WLMS REFERENCE LEG PICTORIAL - DIVISION 3 MODIFIED DESIGN	D-11

LIST OF FIGURES (Continued)

FIGURE #	TITLE	PAGE
D-4	WLMS REFERENCE LEG PICTORIAL - DIVISION 4 MODIFIED DESIGN	D-12

SECTION 1

EXECUTIVE SUMMARY

This report is a plant-specific evaluation of the Clinton Power Station (CPS) reactor pressure vessel Water Level Measurement System (WLMS). The evaluation considers potential water level indication errors (including flashing errors), the causes of these various errors, the performance of the WLMS during normal and postulated accident scenarios, the relationship between measured water level and the state of adequate core cooling, and includes a failure modes and effects analysis of the WLMS (including water level system reference leg breaks/leaks and single additional failures in a different WLMS division). Plant behavior and operator capability to respond are assessed for each event sequence evaluated.

As a result of the evaluations performed on the original WLMS design, modifications were made to the CPS WLMS inside the drywell (i.e. sense line re-routing and orifice relocation). An analysis of the modified WLMS has been included which evaluates the resultant error reductions. Post-modification, plant-specific analyses indicate that, regardless of the initiating plant transient, the modified WLMS will always provide automatic initiation of high pressure injection systems without uncovering the Top of Active Fuel core region. In addition, the indication errors for the modified WLMS are significantly reduced from those of the original WLMS design, resulting in more reliable and accurate reactor vessel level indications for use by the plant operators during both normal plant operation and postulated design basis accidents. As modified, the design of the CPS WLMS is considered adequate to meet NRC Staff requirements related to NUREG-0737, TMI Action Plan Item II.F.2, "Instrumentation for the Detection of Inadequate Core Cooling". The justification presented in this report forms the basis for IPC's position that no additional instrumentation will be necessary for CPS to detect conditions that may lead to inadequate core cooling.

SECTION 2

INTRODUCTION

2.1 BWROG Activities

The Boiling Water Reactor Owners Group (BWROG) for Three Mile Island (TMI) Activities commissioned two studies on detection of inadequate core cooling (ICC). The first study, Reference 2-1, evaluated the reliability and accuracy of existing BWR Water Level Measurement Systems (WLMS) and identified possible system improvements. The second study, Reference 2-2, examined the adequacy of existing methods of detecting ICC in BWR's and studied possible improvements. Reference 2-2 concluded that those BWR WLMSs which conformed to the recommendations of Reference 2-1 have sufficiently reduced the risk of core damage due to failure to detect ICC conditions and thus diverse means for detection of ICC would not provide any significant additional risk reduction potential.

2.2 NRC Requirements

On October 26, 1984, the NRC issued Generic Letter 84-23, "Reactor Vessel Water Level Instrumentation in BWRs", which found the proposed improvements to BWR WLMSs, described in the BWROG studies, an acceptable method for complying with NUREG-0737, "Clarifications to TMI Action Plan Requirements", Item II.F.2 (issued in November, 1980), and Regulatory Guide 1.97, Revision 3, "Instrumentation for Light Water Cooled Nuclear Power Plants to Assess Plant and Environs Conditions During and Following an Accident" (issued in May, 1983), with regard to ICC detection.

2.3 Report Arrangement

This report examines the application of Reference 2-1 and Reference 2-2 to the Clinton Power Station reactor WLMS. Its purpose is to demonstrate conformance with Generic Letter 84-23 criteria. The remainder of this report is structured as follows:

- Section 3 provides a detailed description of the CPS reactor WLMS as originally designed. This description includes system arrangement, instrument ranges, system safety and control functions, instrument line routing, and control room displays.

- Section 4 presents analyses of the performance of the originally designed WLMS. The analyses establish expected errors due to variations in vessel conditions, abnormal drywell and containment

temperature conditions, and examines the consequences of sense line inventory boil-off on instrument accuracy.

- Section 5 examines the effects of plant events on the originally designed system. Transient and LOCA events, which could cause the propagation and interaction of errors as developed in Section 4, are discussed.

- Section 6 presents the results of a failure modes and effects analysis of the WLMS. Important areas discussed include automatic emergency core cooling system initiation and trip signal generation for reactor scram.

- Section 7 provides a description, performance analysis, and plant event analysis of the modified WLMS. The methodology presented in Sections 3 through 5 is used in the analyses to demonstrate the improvements in the performance of the modified system.

- Section 8 presents conclusions which are drawn from this report.

- Section 9 provides a list of acronyms and symbols used throughout this report.

- Appendices A through E include the details of the failure modes and effects analysis, a review of the modified system against the six concerns identified in Section 5.0 of Reference 2-1, a description of the Emergency Procedure Guidelines dealing with loss of level indication, instrument line parameters for the modified WLMS, and a review of the modified system against the "Michelson concern."

2.4 References

2-1 SLI-8211, "Review of BWR Vessel Water Level Measurement Systems", S. Levy, Inc., July 1982.

2-2 SLI-8218, "Inadequate Core Cooling Detection in Boiling Water Reactors", S. Levy, Inc., November 1982.

SECTION 3

CLINTON REACTOR WATER LEVEL MEASUREMENT SYSTEM DESIGN

This section provides a detailed description of the original Clinton Power Station (CPS) Reactor Pressure Vessel Water Level Measurement System (WLMS) design. The information provides the basis for the WLMS error analysis given in Section 4 and the failure modes and effects analysis given in Appendix A.

Clinton Power Station has a 985 Megawatt gross electrical (MWe) Boiling Water Reactor (BWR). It is one of the BWR-6 class of plants which utilizes a Mark III pressure suppression type containment (see Figure 3-1). The Nuclear Steam Supply System (NSSS) is provided by General Electric Company (GE). The Balance of Plant (BOP) design is provided by Sargent & Lundy (S&L) Engineers. The major plant design parameters for CPS are given in Table 3-1.

In order to analyze the CPS WLMS, it is necessary to identify the physical layout and the plant system functions for each of the primary level sensors. Also, it is necessary to compile the pertinent facts regarding placement of the vessel instrument nozzles and condensing chambers, the physical arrangement of the instrument piping and connections to the instruments themselves, and the plant system safety and control functions that are influenced by these instruments.

The purpose of this section is to provide the pertinent information of the WLMS for CPS as follows:

A. Description of the level sensing system which includes reactor vessel elevations that correspond to the trip settings and other key levels, system physical separation, and plant systems assigned to each level transmitter;

B. Instrument line routing;

C. Description of the WLMS displays available to the operator; and

D. Role of the reactor pressure vessel (RPV) WLMS.

3.1 Description of Level Measurement System

The CPS reactor Water Level Measurement System senses liquid level in the reactor vessel by using a non-temperature compensated (cold) reference leg connected to the reactor vessel steam space via a condensing chamber and a variable leg connected to the reactor vessel at an elevation below the water level (see Figure 3-2). Density compensation is not provided by this system. The water level in the reactor vessel is then determined by measuring the differential

pressure (ΔP) between the reference leg and variable leg through appropriate instrumentation.

If vessel water level is low, the pressure at the variable leg transmitter input will be low and the measured ΔP large. If vessel water level is high, the pressure at the variable leg transmitter will be high and the measured ΔP small. Mathematically,

$$\Delta P = P_{ref} - P_{var}$$

$$= (d_{ref}\, h_{ref} - d_{var}\, h_{var}) \frac{g}{g_c}$$

where, P_{ref} = pressure sensed in the reference leg
P_{var} = pressure sensed in the variable leg
d_{ref} = density of water in the referenced leg
d_{var} = density of water in the variable leg
h_{ref} = reference leg water column height
h_{var} = variable leg water column height
g = acceleration due to gravity = 32.17 ft/sec^2
g_c = conversion factor = 32.17 ft/lbm-sec^2

In a cold reference leg system the fluid temperature in the reference and variable leg sense lines is not significantly affected by process conditions, but is determined by the drywell ambient temperature.

The level transmitters shown in Figures 3-3 and 3-4 provide logic actuation signals for various systems via the Analog Trip System (ATS). In the ATS, the outputs of the level transmitters are sent to a trip unit which compares the sensor output to a setpoint. When the level output from the transmitter moves across the setpoint, the output of the trip unit changes state and causes the desired trip action to occur. The use of ATS allows the trip setpoints to be set at a control room panel so no access to the instruments is required for setpoint adjustments. The CPS WLMS uses five different instrument ranges (see Figure 3-5). The vessel level elevations covered by each of the instruments are related to key vessel levels and vessel internal features as shown in Table 3-2.

Briefly, the significance of the various water level ranges are as follows:

A. Shutdown Water Level Range: This range is used to monitor the reactor water level during the shutdown condition when the reactor is flooded for maintenance and head removal. The water level measurement design is the reference leg type. A standpipe is employed to provide a reference leg because the condensing chamber is removed with the vessel closure head. The vessel water temperature and pressure condition that is used for calibration is 120° F and 0 psig.

B. Upset Water Level Range: This range provides continuous level monitoring when water level is abnormally high and is continuously recorded (one pen, 0 to 180 inches) on the same dual pen recorder as the Narrow Water Level Range (the other pen, 0 to 60 inches). The vessel water temperature and pressure condition that is used for calibration is normal operating conditions. Information from this range provides historical data for such purposes as post-event evaluation.

C. Narrow Water Level Range: This range has RPV taps at the elevation near the top of the dryer skirt and at the elevation near the bottom of the dryer skirt. The zero for this instrument range is 15" above the bottom of the dryer skirt and the instruments are calibrated to be accurate at normal operating conditions. The feedwater control system uses this range for its water level control and indication inputs.

D. Wide Water Level Range: This range has RPV taps at the elevation near the top of the dryer skirt and at an elevation near the top of active fuel. The zero for this instrument range is 15" above the bottom of the dryer skirt, and the instruments are calibrated to be accurate at normal operating conditions. The ECCS and Reactor Protection Systems are provided with WLMS actuation logic signals from this range.

E. Fuel Zone Water Level Range: This range is used to monitor water level surrounding the active core and has RPV taps at the elevation near the top of the dryer skirt and in the jet pump diffuser. The lower tap allows static water head inside the core shroud to be sensed. The zero for this instrument range is the top of active fuel, and the instruments are calibrated to be accurate at 0 psig and saturated condition. A second scale is provided on the control room indicator which references the water level to 15" above the bottom of the dryer skirt. Water level information is also recorded in the control room to provide historical data for such purposes as post-event evaluation.

The assignment of level instruments to the various plant safety systems is shown in Tables 3-3 through 3-6. There are various stages of logic between the sensors shown in Tables 3-3 through 3-6 and the system functions they initiate. The important information from the tables is the sharing of instruments between systems. The tables show,

for example, that sensors N091A, B, E and F are used in the following systems :

A. LPCS - Low Pressure Core Spray System

B. LPCI - Low Pressure Coolant Injection System

C. RCIC - Reactor Core Isolation Cooling System

D. ADS - Automatic Depressurization System

3.2 INSTRUMENT LINE ROUTING

The routing path of the instrument lines from the vessel tap to the level sensors is required to determine the effect of changes in the fluid density in the lines on sensed level. For conditions where fluid flashing in instrument lines does not occur, the error is proportional to the difference between the reference and variable leg vertical drop. At a particular set of conditions the error due to reference line flashing will depend on the instrument line routing. For example, routing with a vertical drop followed by a long horizontal run will have a different error characteristic than a routing which has a long horizontal run followed by a vertical drop. Schematics of the Clinton reference leg routings for the original WLMS are shown in Figures 3-6 through 3-9. Tables 3-7 through 3-10 list the total lengths and vertical drops for each of the pipe runs illustrated in Figures 3-6 through 3-9, respectively. The required routing information (to be used in Section 4 of this report) for establishing errors due to fluid density changes when flashing has not occurred is shown in Figure 3-10. The dimensions for various instrument ranges are shown in Tables 3-11 through 3-14.

3.3 OPERATOR DISPLAYS

The various level displays available to the operator in the Main Control Room are located on the Residual Heat Removal and High Pressure Core Spray sections of the Emergency Core Cooling System panel (P601) and on the Standby Information Panel (P678) as shown in Figure 3-11. The displays on each of these panels are also listed on the figure. All indicator/recorders use 15" above the bottom of the dryer skirt as a common reference zero, except for the fuel zone indicator/recorder which has a dual reference; 15" above the bottom of the dryer skirt and the top of active fuel (TAF). The dual reference indicator for the fuel zone range, mounted on a main control room panel, is pictured in Figure 3-12.

In addition to these recorders and indicators, there are different indicators and annunciators that are activated on level signals as follows:

A. High Level Trip Indicators - These consist of three amber lamps mounted on the feedwater section of the

Principal Plant Control Console. Each lamp is activated by a level transmitter in the feedwater system (LT C34-N004A, B, or C) and will illuminate when the transmitter indicates that the level is above Level 8.

B. High/Low Level Annunciator - This annunciator is driven from the level transmitter that is selected for feedwater control. The annunciator will sound when indicated level from the transmitter is above Level 7 or below Level 4. The operator then verifies the trouble by observing the level recorder (LR C34-R608) on the feedwater section of the main control console.

C. Level 2 Indicators/Annunciators - When any one of the ECCS transmitters (LT B21-N091A, B, E, F) reach Level 2, an annunciator will sound on the Emergency Core Cooling Benchboard. The "Division 1 low level" annunciator will sound if either N091A or E reads below Level 2. The "Division 2 low level" annunciator will sound if either N091B or F reads below Level 2. In addition, there are four computer points that will alert the operator as to which transmitters are reading below Level 2.

D. Level 1 Indicators/Annunciators - The Level 1 monitoring annunciators are identical to the Level 2.

E. Level 8 Indicators - A red indicator light on the Emergency Core Cooling Benchboard is associated with HPCS high level trip transmitter (LT B21-N073C and G, N091A and E). The indicator light will illuminate when a transmitter monitors reactor level above Level 8.

3.4 SAFETY AND CONTROL ROLE OF CLINTON WATER LEVEL MEASUREMENT SYSTEM

The plant systems that require signals from the output of the level instruments are the Reactor Protection System, the High Pressure Core spray system, the containment isolation systems, the Low Pressure Coolant Systems (including the Automatic Depressurization System), the feedwater control system, the ATWS features plus equipment protection trips for the recirculation flow and main turbine control systems. The signals these systems receive are based upon the function of the WLMS and its relationship to reactor vessel water level. Figure 3-14 shows the vessel levels and their relationship to the reactor core.

Briefly, the significance of the various water level designations are:

A. Level 8 - High Water Level Trip

1. Closure of Main Turbine Stop Valves - Protects the turbine against the occurrence of gross moisture carry over.

2. Trip of Reactor Feedwater and Condensate Booster Pumps - Prevents reactor vessel overfill and protects the feedwater turbines against gross moisture carry over.

3. Trip of RCIC Turbine and HPCS Injection Valve Closure - Prevents vessel overfill.

4. Reactor Scram (if reactor mode switch is in "RUN").

B. Level 7 - High Water Level Alarm

Annunciates the level above which the moisture carry over in the steam is expected to increase at a significant rate while operating at full load.

C. Level 5 - Normal Water Level (Automatic Level Control Range)

Water level is maintained within this range in order to minimize moisture carry over and steam carry under in the normal reactor steam flow range during transient level disturbance conditions. The water level usually is kept at any level above Level 4 and below Level 7.

D. Level 4 - Low Water Level Alarm

Annunciates the level below which the steam carry under in the water is likely to begin affecting the recirculation flow rate significantly under full load conditions, or below which the reduction of vessel inventory following a loss of one feedwater pump with subsequent or coincident low reactor water level (Level 4) initiates logic of the recirculation system flow control automatic runback. Consequently, the recirculation system flow is reduced to lower the reactor power level to within the capacity of the remaining operational feedwater pump.

E. Level 3 - Scram, Recirculation Flow Runback, ADS Permissive, and RHR Isolation

1. This level is above the bottom of the dryer skirt. The inventory below this level is sufficient to allow for evaporation losses and displacements of coolant from the reactor system following interruption of reactor feedwater flow without the vessel level dropping to Level 1. This inventory accounts for steam void collapse below Level 3 following a reactor scram from full power.

2. RHR Isolation - At this level, the shutdown cooling mode of the Residual Heat Removal System (RHR) is isolated.

3. ADS Permissive - This level provides a confirmatory low level signal to the ADS actuation logic.

4. Recirculation Flow Runback - The recirculation pumps will downshift to low speed to prevent cavitation due to insufficient net positive suction head. Normal annulus flow induces an error into the wide range water level instrumentation; however, the error is conservative in direction and poses no operational problems. When the recirculation flow is run back, the error on the wide range water level instrumentation due to the annulus flow is reduced, thereby reducing premature water level trips on decreasing water level for normal large-scale transients.

F. Level 2 - Initiate HPCS, RCIC, Trips Recirculation Pumps, Containment Isolation, ATWS, and Upper Pool Dump

Considerations involved in determining this level's setpoint are as follows:

1. The setpoint is low enough so that the RCIC and HPCS will not be falsely initiated after a scram due to vessel water level, providing feedwater flow is available.

2. The setpoint is high enough so that for complete loss of feedwater flow, the RCIC system flow will be sufficient to prevent initiation of systems at Level 1.

3. This level provides signals to start the Division III Diesel Generator, isolate Reactor Water Cleanup and shut the containment isolation valves.

4. ATWS-ARI and Recirculation Pump Trip (non-safety-related)

   The alternate rod insertion is provided to scram the reactor following the failure of the Reactor Protection System scram feature. Additionally, it trips the recirculation pump which contributes to a reduction in core reactivity.

5. This level provides time delayed direct dumping actuation for the upper containment pool or a permissive for immediate dumping actuation in the event that the suppression pool level is low. This action ensures adequate water supply to maintain drywell horizontal vent coverage by replacing water inventory that is pumped from the Suppression Pool into the vessel and drywell by the ECCS.

G. Level 1 - Initiate RHR LPCI Mode and LPCS, Main Steam Isolation Valve (MSIV) Closure, and ADS Permissive

1. RHR LPCI Mode and LPCS Initiation - This level is set to assure timely Emergency Core Cooling (ECCS) initiation in order to maintain adequate core cooling in the event of a design basis Loss of Coolant Accident (LOCA).

2. MSIV Closure - MSIV closure occurs at this level as part of the Group I isolation scheme. If the Reactor Mode Switch is in the "RUN" position, MSIV closure will result in a reactor scram.

3. In addition, this level contributes signals to the ADS actuation logic, starting of the Division I and II Diesel Generators, and shutting of the Main Steam Line Drains.

The above information provides a description of the CPS RPV water level measurement system as originally designed. This section provides the basis and data used to perform an error analysis, the results of which are contained in the following section.

TABLE 3-1

CPS PLANT DESIGN PARAMETERS

NSSS Supplier	General Electric Company
Architect/Engineer	Sargent & Lundy Engineers
Turbine Supplier	General Electric Company
Reactor Type	BWR-6/218-inch Vessel I.D.
Plant Thermal Rating	2894 MWt
Gross Electrical Power	985 MWe
Steam Flow at 420°F Final Feedwater Temperature	12.453×10^6 lbm/hr
Steam Bypass Capacity	35%
Number of Fuel Assemblies	624
Active Fuel Length	150 inches
Average Linear Heat Generating Rate	5.7 kW/ft
Core Coolant Flow Rate	84.5×10^6 lbm/hr
Jet Pump M-Ratio (suction flow/driving flow)	2.43
Jet Pump Exit Velocity	25.2 ft/sec
Rated Jet Pump Head	85.4 ft
WLMS Instrumentation Type	Rosemount Transmitters with Rosemount 510 DU Alarm/Trip units
Feedwater Temperature	420°F
Number of SRV's	16
SRV Manufacturer	Dikkers
Feedpump Drive Type	2 Turbine and 1 Motor
Rated Steam Separator/Dryer Pressure Drop	0.49 psi
Dynamic Head at Wide Range Taps at Rated Conditions	28 psi

TABLE 3-2

CPS VESSEL LEVEL TRIP EVALUATION CORRELATION

REFERENCE	DESCRIPTION	INCHES ABOVE[1] TOP OF ACTIVE FUEL	LEVEL INSTRUMENT ZERO	VESSEL ZERO
Tap "a" nozzle	Steam tap for condensing chambers.	227.69	65.63	586.25
	Narrow and wide range upscale.	222.06	60.0	580.62
Level 8	Trip RCIC turbine and HPCS injection valve closure signal. Close main turbine stop valves, trip feed pumps and condensate booster pumps, SCRAM.	214.06	52.00	572.62
Level 7	Feedwater control high level alarm.	200.86	38.80	559.42
Level 4	Feedwater control low level alarm.	192.86	30.80	551.42
Level 3	SCRAM and contribute to ADS. Run recirculation flow back and close RHR shutdown isolation valves.	170.97	8.90	529.52
Instrument Zero	For wide, narrow, shutdown/upset range instrumentation. Narrow and shutdown range down-scale.	162.06	0.00	520.62
Tap "b" nozzle	Narrow, upset, and shutdown range tap (variable leg).	150.44	-11.62	509.00
	Feedwater sparger.	124.94	-37.12	483.00
Level 2	Initiate RCIC and HPCS. Close primary system isolation valves except RHR shutdown isolation valves, start Division 3 standby diesel, initiate ATWS (non-safety related ARI and trip recirculation pumps).	116.56	-45.50	475.12
Level 1	Initiate RHR and LPCS. Contribute to ADS. Start Division 1 and Division 2 standby diesels. Close MSIV's.	16.56	-145.50	375.12
TAF	Top of Active Fuel, Fuel Zone Instrument Zero.	0	-162.06	358.56
Tap "c" nozzle	Wide range tap (variable leg).	-0.56	-162.62	358.00
BAF	Bottom of Active Fuel, Fuel Zone Downscale.	-150.00	-312.06	208.56
Tap "d"	Fuel Zone tap (variable leg).	-209.56	-371.62	149.00

[1] Elevations based on cold vessel conditions

TABLE 3-3

INSTRUMENTATION ATTACHED TO MECHANICAL DIVISION 1 REFERENCE LEG

TRIP/DISPLAY	INSTRUMENT PROVIDING TRIP	INSTRUMENT AND DECISION LOGIC POWER	ACTUATION DEVICE POWER
SCRAM and RHR Isolation	1B21-N080A(L3)	NSPS-A	120 Vac-A 120 Vac-B
HPCS Trip	N/A	N/A	N/A
HPCS Initiate	N/A	N/A	N/A
RCIC Trip	1B21-N091A(L8)	NSPS-A	125 Vdc-A
RCIC Initiate	1B21-N091A(L2)	NSPS-A	125 Vdc-A 120 Vac-A
	1B21-N091E(L2)	NSPS-A	125 Vdc-A 120 Vac-A
MSIV Closure	1B21-N081A(L1)	NSPS-A	120 Vac-A
LPCS/LPCI(RHR-A) Initiate	1B21-N091A(L1)	NSPS-A	125 Vdc-A 120 Vac-A
	1B21-N091E(L1)	NSPS-A	125 Vdc-A 120 Vac-A
ADS Actuation Permissive	1B21-N091A&E(L1) 1B21-N095A(L3)	NSPS-A NSPS-A	125 Vdc-A 125 Vdc-A
Feedwater and Main Turbine Trip	1C34-N004A(L8)	INSTR	125 Vdc
Narrow Range	N/A	N/A	N/A
Wide Range	1B21-N081A(LR)	NSPS-A	N/A
Shutdown Range	N/A	N/A	N/A
Upset Range	N/A	N/A	N/A
Fuel Zone Range	N/A	N/A	N/A
ATWS (Non-Safety-related)	1B21-N400A (L2)	INSTR	120 Vac-A

TABLE 3-4

INSTRUMENTATION ATTACHED TO MECHANICAL DIVISION 2 REFERENCE LEG

TRIP/DISPLAY	INSTRUMENT PROVIDING TRIP	INSTRUMENT AND DECISION LOGIC POWER	ACTUATION DEVICE POWER
SCRAM and RHR Isolation	1B21-N080B(L3)	NSPS-B	120 Vac-A 120 Vac-B
HPCS Trip	N/A	N/A	N/A
HPCS Initiate	N/A	N/A	N/A
RCIC Trip	1B21-N091B(L8)	NSPS-B	125 Vdc-A
RCIC Initiate	1B21-N091B(L2)	NSPS-B	125 Vdc-A 120 Vac-A
	1B21-N091F(L2)	NSPS-B	125 Vdc-A 120 Vac-B
MSIV Closure	1B21-N081B(L1)	NSPS-B	120 Vac-A
LPCI (RHR B&C) Initiate	1B21-N091B(L1)	NSPS-B	125 Vdc-B 120 Vac-B
	1B21-N091F(L1)	NSPS-B	125 Vdc-B 120 Vdc-B
ADS Actuation Permissive	1B21-N091B&F(L1) 1B21-N095B(L3)	NSPS-B NSPS-B	125 Vdc-B 125 Vdc-B
Feedwater and Main Turbine Trip	1C34-N004B(L8)	DC-B	125 Vdc
Narrow Range	1C34-N017(LR)	DC-A	N/A
Wide Range	1B21-N081B(LR)	NSPS-B	N/A
Shutdown Range	1B21-N027(LI)	INSTR	N/A
Upset Range	1C34-N017(LR)	DC-A	N/A
Fuel Zone Range	N/A	N/A	N/A
ATWS (Non-Safety-related)	1B21-N400F(L2)	INSTR	120 Vac-B

TABLE 3-5

INSTRUMENTATION ATTACHED TO MECHANICAL DIVISION 3 REFERENCE LEG

TRIP/DISPLAY	INSTRUMENT PROVIDING TRIP	INSTRUMENT AND DECISION LOGIC POWER	ACTUATION DEVICE POWER
SCRAM and RHR Isolation	1B21-N080C(L3)	NSPS-C	120 Vac-A 120 Vac-B
HPCS Trip	1B21-N073C(L8)	NSPS-C	120 Vac-C
HPCS Initiate	1B21-N073C(L2) 1B21-N073G(L2)	NSPS-C NSPS-C	120 Vac-C 120 Vac-C
RCIC Trip	N/A	N/A	N/A
RCIC Initiate	N/A	N/A	N/A
MSIV Closure	1B21-N081C(L1)	NSPS-C	120 Vac-B
LPCS/LPCI Initiate	N/A	N/A	N/A
ADS Actuation Permissive	N/A	N/A	N/A
Feedwater and Main Turbine Trip	1C34-N004C(L8)	DC-A	125 Vdc
Narrow Range	N/A	N/A	N/A
Wide Range	1B21-N081C(LI)	NSPS-C	N/A
Shutdown Range	N/A	N/A	N/A
Upset Range	N/A	N/A	N/A
Fuel Zone Range	1B21-N044C(LR)	INSTR	N/A
ATWS (Non-Safety-related)	1B21-N400B(L2)	INSTR	120 Vac-A

TABLE 3-6

INSTRUMENTATION ATTACHED TO MECHANICAL DIVISION 4 REFERENCE LEG

TRIP/DISPLAY	INSTRUMENT PROVIDING TRIP	INSTRUMENT AND DECISION LOGIC POWER	ACTUATION DEVICE POWER
SCRAM and RHR Isolation	1B21-N080D(L3)	NSPS-D	120 Vac-A 120 Vac-B
HPCS Trip	1B21-N073D(L8)	NSPS-D	120 Vac-C
HPCS Initiate	1B21-N073D(L2) 1B21-N073H(L2)	NSPS-D NSPS-D	120 Vac-C 120 Vac-C
RCIC Trip	N/A	N/A	N/A
RCIC Initiate	N/A	N/A	N/A
MSIV Closure	1B21-N081D(L1)	NSPS-D	120 Vac-B
LPCS/LPCI Initiate	N/A	N/A	N/A
ADS Actuation Permissive	N/A	N/A	N/A
Feedwater and Main Turbine Trip	N/A	N/A	N/A
Narrow Range	N/A	N/A	N/A
Wide Range	N/A	N/A	N/A
Shutdown Range	N/A	N/A	N/A
Upset Range	N/A	N/A	N/A
Fuel Zone Range	1B21-N044D(LI)	INSTR	N/A
ATWS (Non-Safety-related)	1B21-N400E(L2)	INSTR	120 Vac-B

TABLE 3-7

MECHANICAL DIVISION 1/AREA 1 REFERENCE LEG LINE LENGTHS - ORIGINAL WLMS DESIGN[1]

POINT[2]	ELEVATION	VERTICAL DROP FROM PREVIOUS ELEVATION	ACCUMULATED VERTICAL DROP	TRUE LENGTH FROM PREVIOUS POINT	ACCUMULATED TRUE LENGTH	AZIMUTH[3]
N14	792'-10.25"					20°
1	793'-.67"	-2.41"	-2.41"	4'-11.55"	4'-11.55"	--
2	793'-4.5"	-3.84"	-6.25"	6.11"	5'-5.66"	--
3	793'-4.5"	0"	-6.25"	1'-3.25"	6'-8.91"	--
CONDEN-SING POT						
4	792'-6.0"	10.50"	10.50"	10.50"	10.50"	--
5	792'-1.0"	5.0"	1'-3.50"	9'-8.54"	10'-7.04"	--
6	791'-4.0"	9.0"	2'-0.50"	9'-4.92"	19'-11.96"	--
7	787'-8.5"	3'-7.50"	5'-8.00"	3'-7.50"	23'-7.46"	--
8	784'-8.5"	3'-0.0"	8'-8.00"	3'-0.05"	26'-7.51"	--
9	784'-7.88"	0.63"	8'-8.63"	9.02"	27'-4.53"	40°

1 Line lengths and elevations based on cold vessel conditions.
2 See Figure 3-6 for point definitions.
3 Azimuth locations given in Tables 3-7 through 3-10 are approximate. Exact locations are given in Figures 3-6 through 3-9.

TABLE 3-8

MECHANICAL DIVISION 2/AREA 2 REFERENCE LEG LINE LENGTHS - ORIGINAL WLMS DESIGN[1]

POINT[2]	ELEVATION	VERTICAL DROP FROM PREVIOUS ELEVATION	ACCUMULATED VERTICAL DROP	TRUE LENGTH FROM PREVIOUS POINT	ACCUMULATED TRUE LENGTH	AZIMUTH
N14	792'-10.25"					200°
1	793'-0.66"	-2.41"	-2.41"	4'-8.55"	4'-8.55"	--
2	793'-4.50"	-3.84"	-6.25"	6.11"	5'-2.66"	--
3	793'-4.50"	0"	-6.25"	2'-1.25"	7'-3.91"	--
CONDEN-SING POT						
4	792'-6.0"	10.50"	10.50"	10.50"	10.50"	--
5	792'-1.0"	5.0"	1'-3.50"	7'-0.54"	7'-11.04"	--
6	791'-5.0"	8.0"	1'-11.50"	8'-6.01"	16'-5.05"	--
7	791'-1.0"	4.0"	2'-3.5"	4'-0.11"	20'-5.22"	--
8	790'-11.0"	2.0"	2'-5.5"	2'-0.08"	22'-5.30"	--
9	782'-6.75"	8'-4.25"	10'-9.75"	8'-4.25"	30'-9.55"	--
10	782'-5.75"	1.0"	10'-10.75"	1'-0.04"	31'-9.60"	222°

1 Line lengths and elevations based on cold vessel conditions.
2 See Figure 3-7 for point definitions.

TABLE 3-9

MECHANICAL DIVISION 3/AREA 3 REFERENCE LEG LINE LENGTHS - ORIGINAL WLMS DESIGN[1]

POINT[2]	ELEVATION	VERTICAL DROP FROM PREVIOUS ELEVATION	ACCUMULATED VERTICAL DROP	TRUE LENGTH FROM PREVIOUS POINT	ACCUMULATED TRUE LENGTH	AZIMUTH
N14	792'-10.25"					160°
1	793'-1.19"	-2.94"	-2.94"	4'-11.57"	4'-11.57"	--
2	793'-4.50"	-3.31"	-6.25"	5.26"	5'-4.83"	--
3	793'-4.50"	0"	-6.25"	1'-3.91"	6'-8.74"	--
CONDEN-SING POT						
4	792'-6.0"	10.50"	10.50"	10.50"	10.50"	--
5	792'-1.0"	5.00"	1'-3.50"	5'-3.20"	6'-1.70"	--
6	791'-8.63"	4.38"	1'-7.88"	7'-5.87"	13'-7.57"	--
7	788'-10.0"	2'-10.63"	4'-6.50"	2'-10.63"	16'-6.19"	--
8	788'-0.0"	10.00"	5'-4.50"	9'-5.89"	26'-0.08"	--
9	785'-3.63"	2'-8.38"	8'-0.88"	2'-8.38"	28'-8.45"	--
10	785'-1.50"	2.13"	8'-3.00"	2'-2.21"	30'-10.66"	133°

1 Line lengths and elevations based on cold vessel conditions.
2 See Figure 3-8 for point definitions.

TABLE 3-10

MECHANICAL DIVISION 4/AREA 4 REFERENCE LEG LINE LENGTHS - ORIGINAL WLMS DESIGN[1]

POINT[2]	ELEVATION	VERTICAL DROP FROM PREVIOUS ELEVATION	ACCUMULATED VERTICAL DROP	TRUE LENGTH FROM PREVIOUS POINT	ACCUMULATED TRUE LENGTH	AZIMUTH
N14	792'-10.25"					340°
1	793'-0.66"	-2.41"	-2.41"	4'-11.55"	4'-11.55"	--
2	693'-4.50"	-3.84"	-6.25"	6.11"	5'-5.66"	--
3	793'-4.50"	0"	-6.25"	1'-3.25"	6'-8.91"	--
CONDEN-SING POT						
4	792'-6.0"	10.50"	10.50"	10.50"	10.50"	--
5	792'-1.0"	5.00"	1'-3.50"	9'-6.96"	10'-5.46"	--
6	791'-9.5"	3.5"	1'-7.0"	4'-3.52"	14'-8.98"	--
7	789'-9.0"	2'-0.5"	3'-7.5"	2'-0.5"	16'-9.48"	--
8	789'-3.5"	5.5"	4'-1.0"	5'-1.65"	21'-11.12"	--
9	786'-8.0"	2'-7.5"	6'-8.5"	2'-7.5"	24'-6.62"	--
10	786'-6.0"	2.0"	6'-10.5"	1'-9.10"	26'-3.72"	--
11	782'-4.13"	4'-1.88"	11'-0.38"	4'-1.88"	30'-5.60"	--
12	782'-2.69"	1.44"	11'-1.81"	11.84"	31'-5.43"	319°

1 Line lengths and elevations based on cold vessel conditions.
2 See Figure 3-9 for point definitions.

TABLE 3-11

MECHANICAL DIVISION 1/AREA 1
LEVEL INSTRUMENT ELEVATIONS

PARAMETER[1]	DIMENSIONS[2] NARROW RANGE (Azimuth 20°)	DIMENSIONS[2] WIDE RANGE (Azimuth 20°)
Xs	6.25"	6.25"
Xr	8'-8.63"	8'-8.63"
ΔE	5'-11.75"	19'-10.19"
Xm	7'-8.88"	9'-0.31"
Xr minus Xm	11.75"	-3.68"
L_O	11.62"	2.62"

1 See Figure 3-10 for parameter definitions
2 Dimensions based on cold vessel conditions
3 Azimuth locations given in Tables 3-11 through 3-14 are approximate. Exact locations are given in Figures 3-6 through 3-9.

TABLE 3-12

MECHANICAL DIVISION 2/AREA 2
LEVEL INSTRUMENT ELEVATIONS

PARAMETER[1]	DIMENSIONS[2] NARROW RANGE (Azimuth 200°)	WIDE RANGE (Azimuth 200°)	UPSET RANGE (Azimuth 244°)	SHUTDOWN RANGE (Azimuth 244°
Xs	6.25"	6.25"	1'-11.5"	1'-11.5"
Xr	10'-10.75"	10'-10.75"	30'-1.83"	30'-1.83"
ΔE	6'-4.5"	19'-4.44"	9'-6.81"	9'-6.81"
Xm	10'-3.75"	10'-8.69"	10'-3.75"	10'-3.75"
Xr minus Xm	7.0"	2.06"	19'-10.08"	19'-10.08"
L_O	11.62"	2.62"	11.62"	11.62"

1 See Figure 3-10 for parameter definition.
2 Dimensions based on cold vessel conditions.

TABLE 3-13

MECHANICAL DIVISION 3/AREA 3
LEVEL INSTRUMENT ELEVATIONS

PARAMETER[1]	DIMENSIONS[2] NARROW RANGE (Azimuth 160°)	WIDE RANGE (Azimuth 160°)	FUEL RANGE (Azimuth 160°)
Xs	6.25"	6.25"	6.25"
Xr	8'-3"	8'-3"	8'-3"
ΔE	6'-5"	19'-11"	41'-1.38"
Xm	7'-8.5"	8'-7.5"	12'-4.88"
Xr minus Xm	6.5"	-4.5"	-4'-1.88"
L_O	11.62"	2.62"	4'-11.56"

1 See Figure 3-10 for parameter definition.
2 Dimensions based on cold vessel conditions.

TABLE 3-14

MECHANICAL DIVISION 4/AREA 4
LEVEL INSTRUMENT ELEVATIONS

PARAMETER[1]	DIMENSIONS[2] NARROW RANGE (Azimuth 340°)	WIDE RANGE (Azimuth 340°)	FUEL RANGE (Azimuth 340°)
Xs	6.25"	6.25"	6.25"
Xr	11'-1.81"	11'-1.81"	11'-1.81"
ΔE	7'-4.31"	18'-8.63"	34'-9.94"
Xm	11'-6.63"	10'-3.94"	9'-0.25"
Xr minus Xm	-4.81"	9.88"	2'-1.56"
L_O	11.62"	2.62"	4'-11.56

1 See Figure 3-10 for parameter definition.
2 Dimensions based on cold vessel conditions.

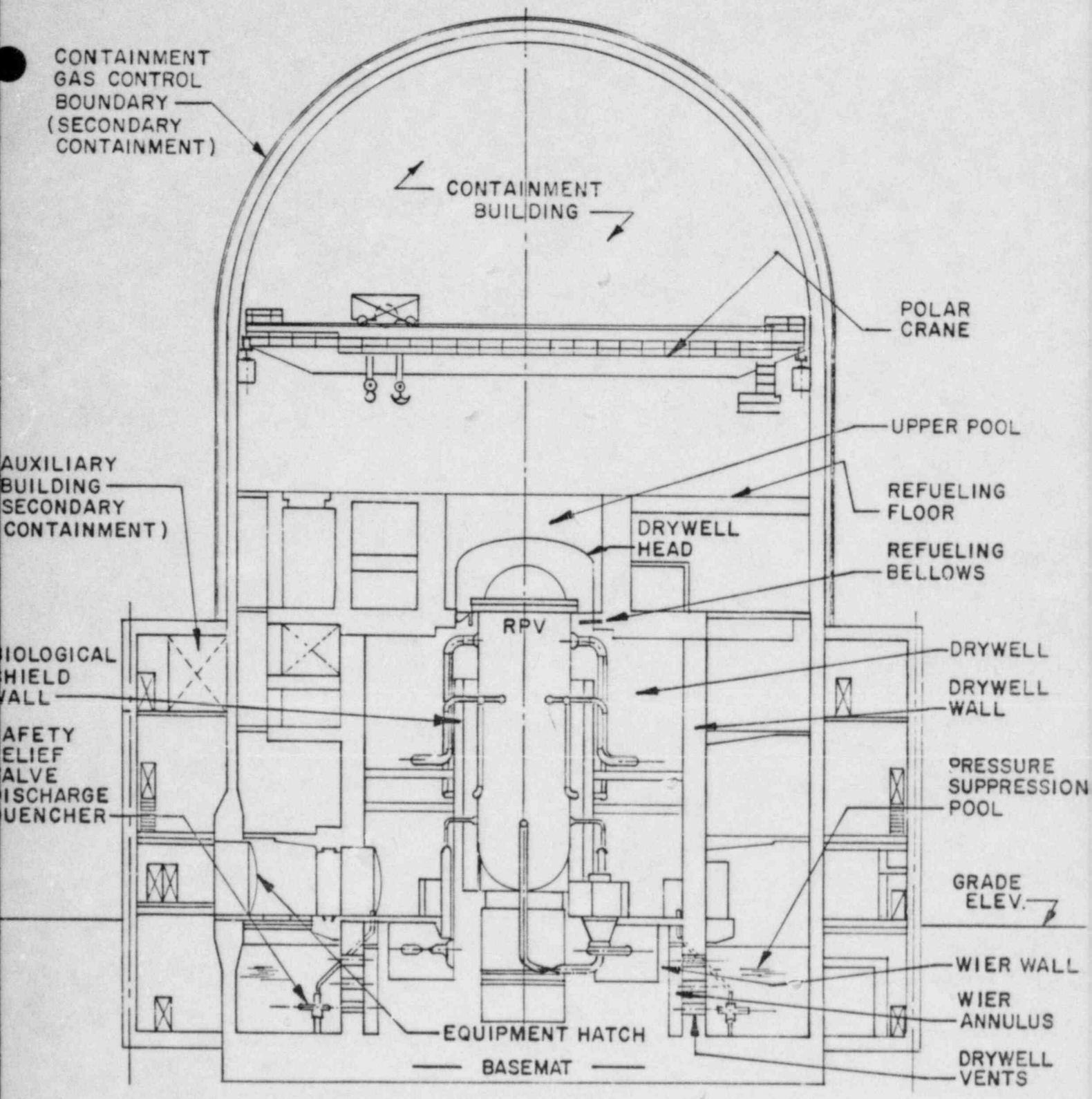

CLINTON POWER STATION
MARK III PRESSURE SUPPRESSION CONTAINMENT

FIGURE 3-1

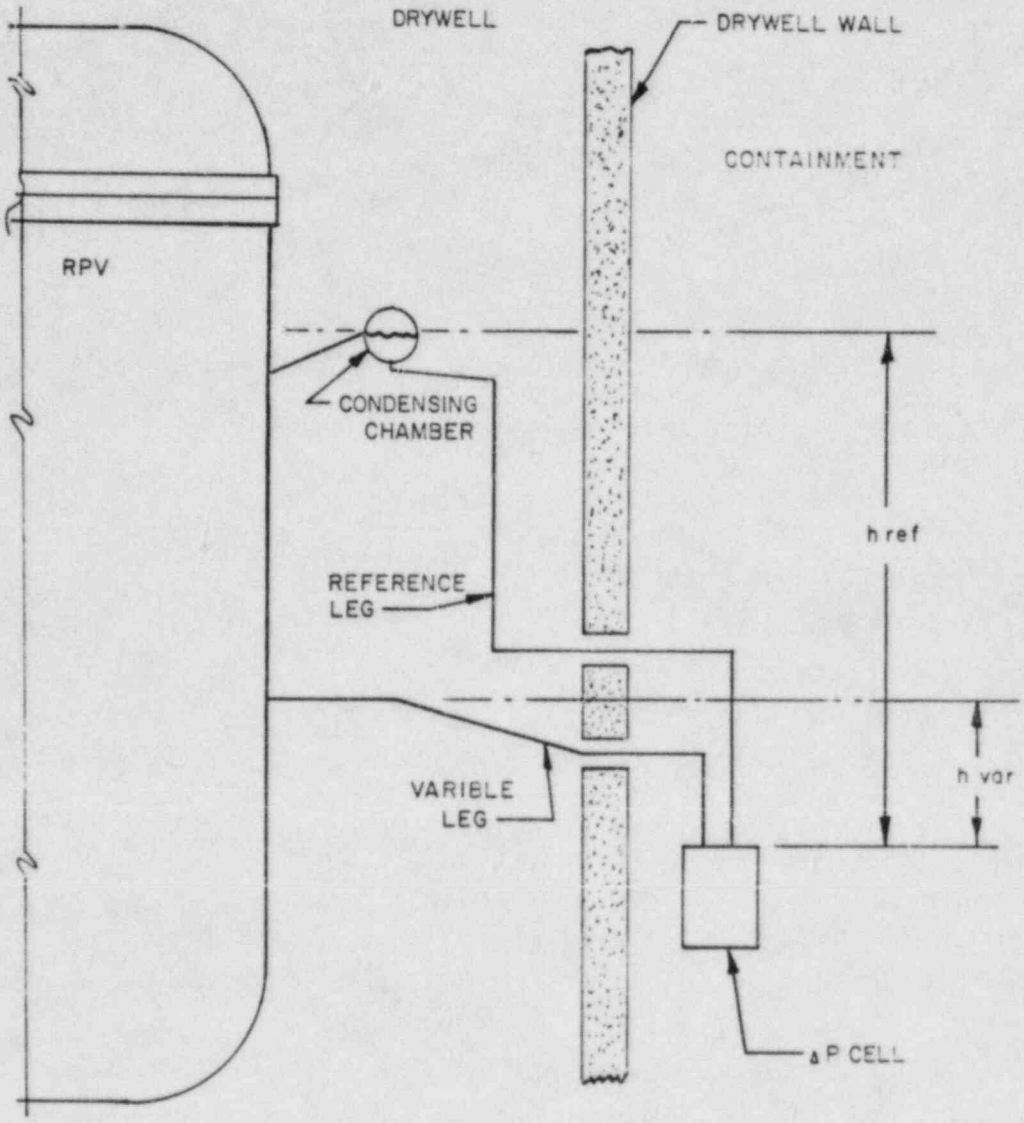

h ref = reference leg water column height

h var = variable leg water column height

COLD REFERENCE LEG RPV WATER LEVEL INSTRUMENT DESIGN

FIGURE 3-2

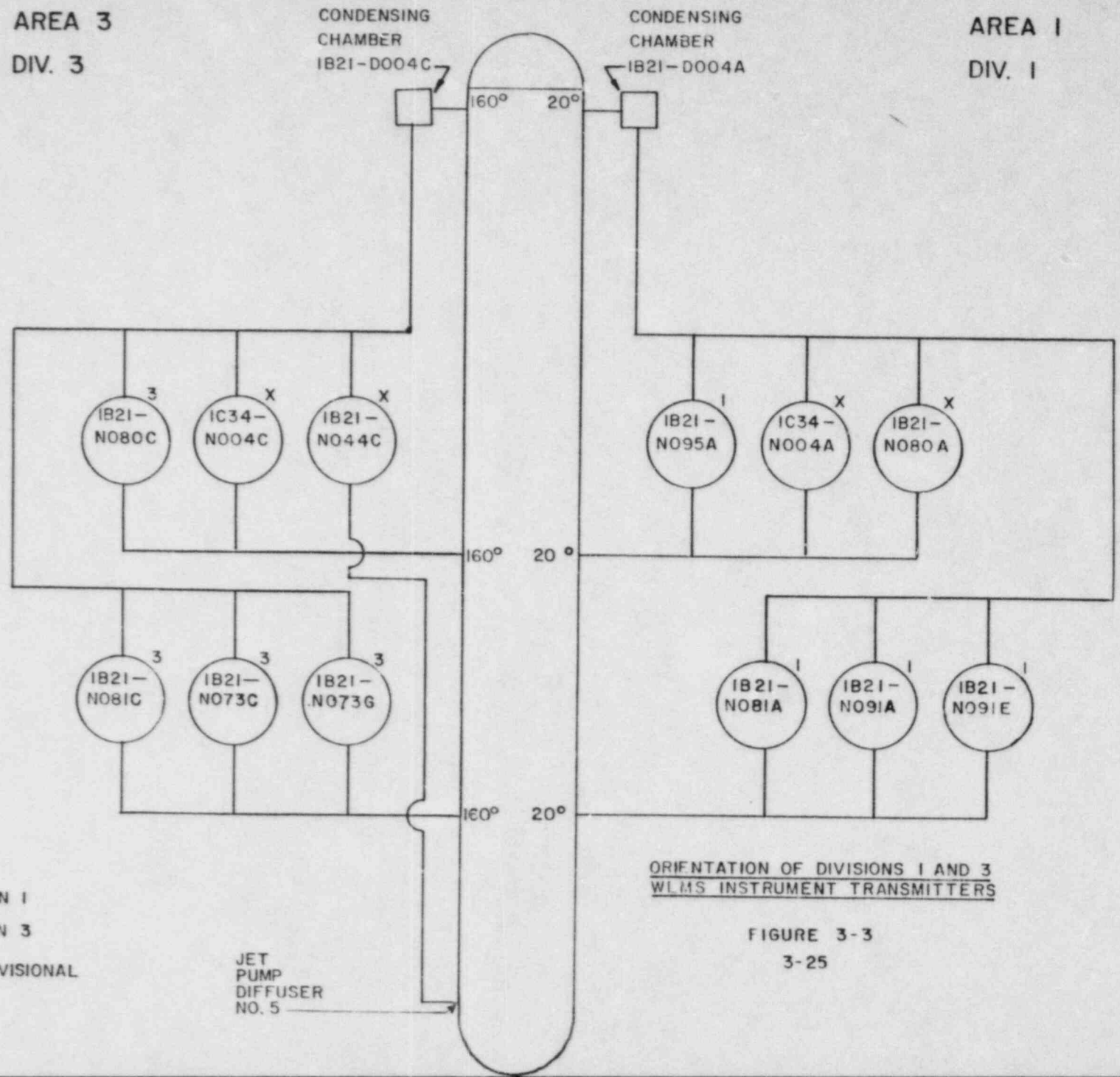

NOTE: 1 = DIVISION 1

3 = DIVISION 3

X = NON-DIVISIONAL

ORIENTATION OF DIVISIONS 1 AND 3
WLMS INSTRUMENT TRANSMITTERS

FIGURE 3-3

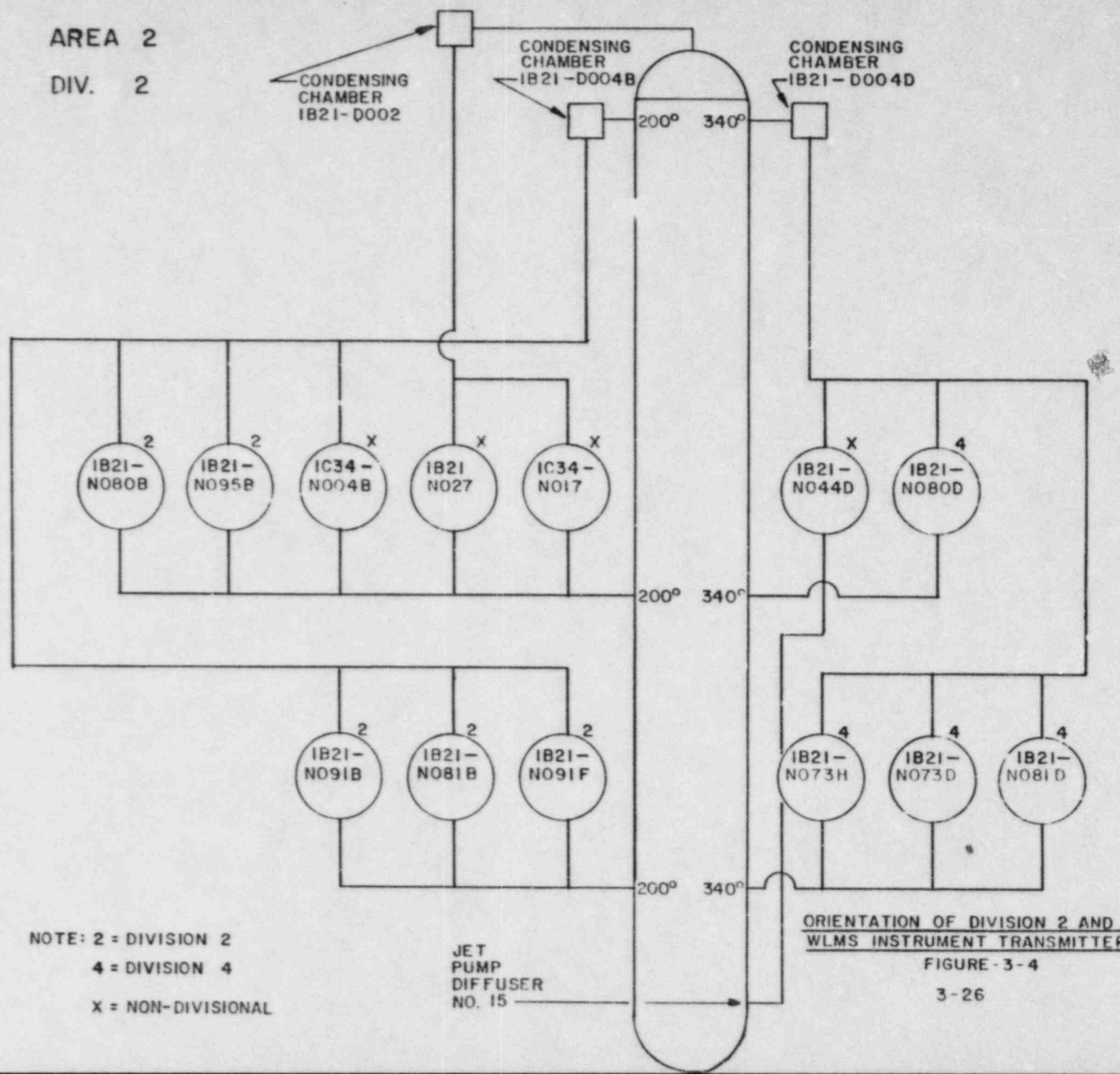

NOTE: 2 = DIVISION 2
4 = DIVISION 4
X = NON-DIVISIONAL

ORIENTATION OF DIVISION 2 AND 4 WLMS INSTRUMENT TRANSMITTERS

FIGURE-3-4

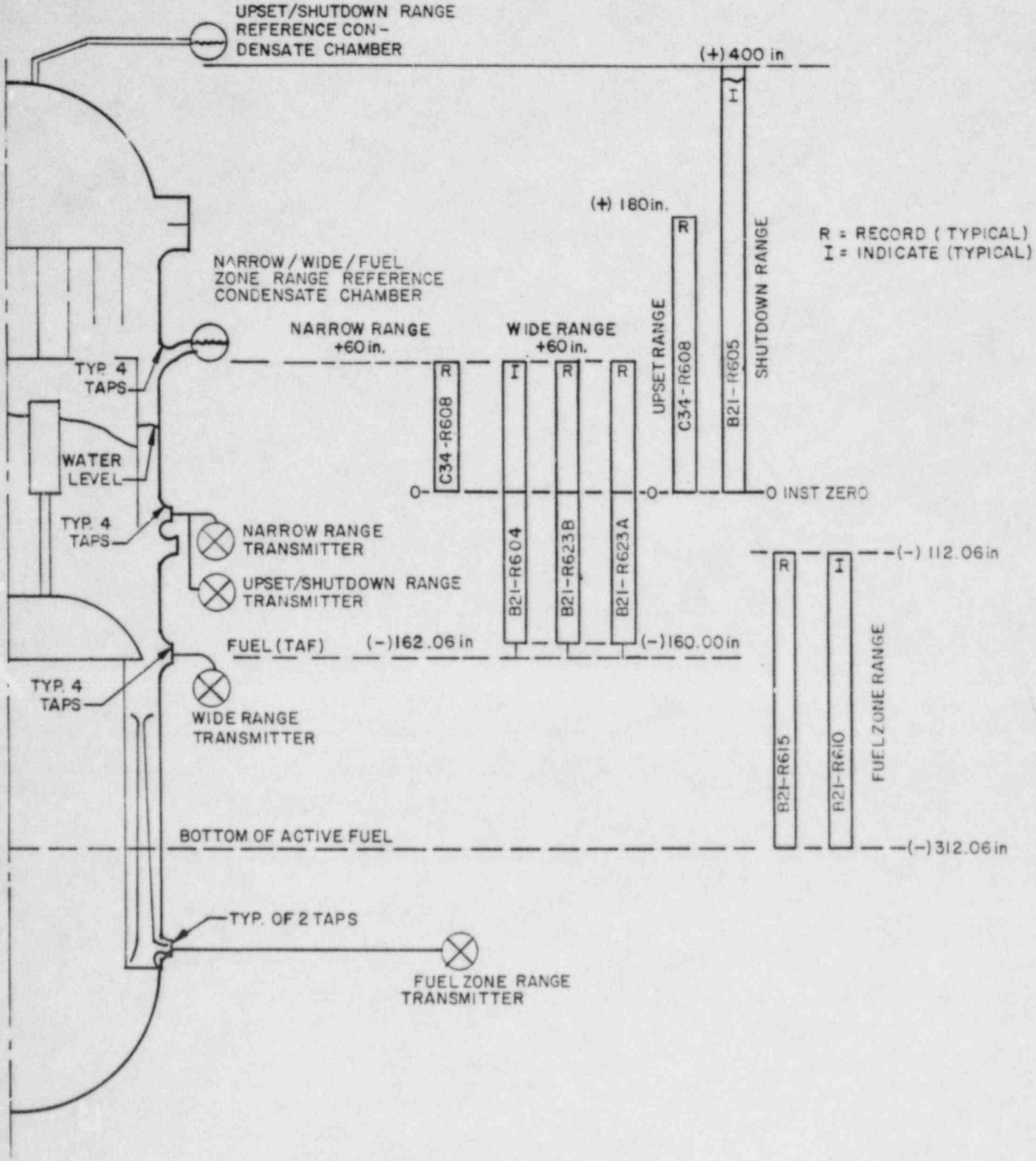

LEVEL INSTRUMENT RANGES

FIGURE 3-5

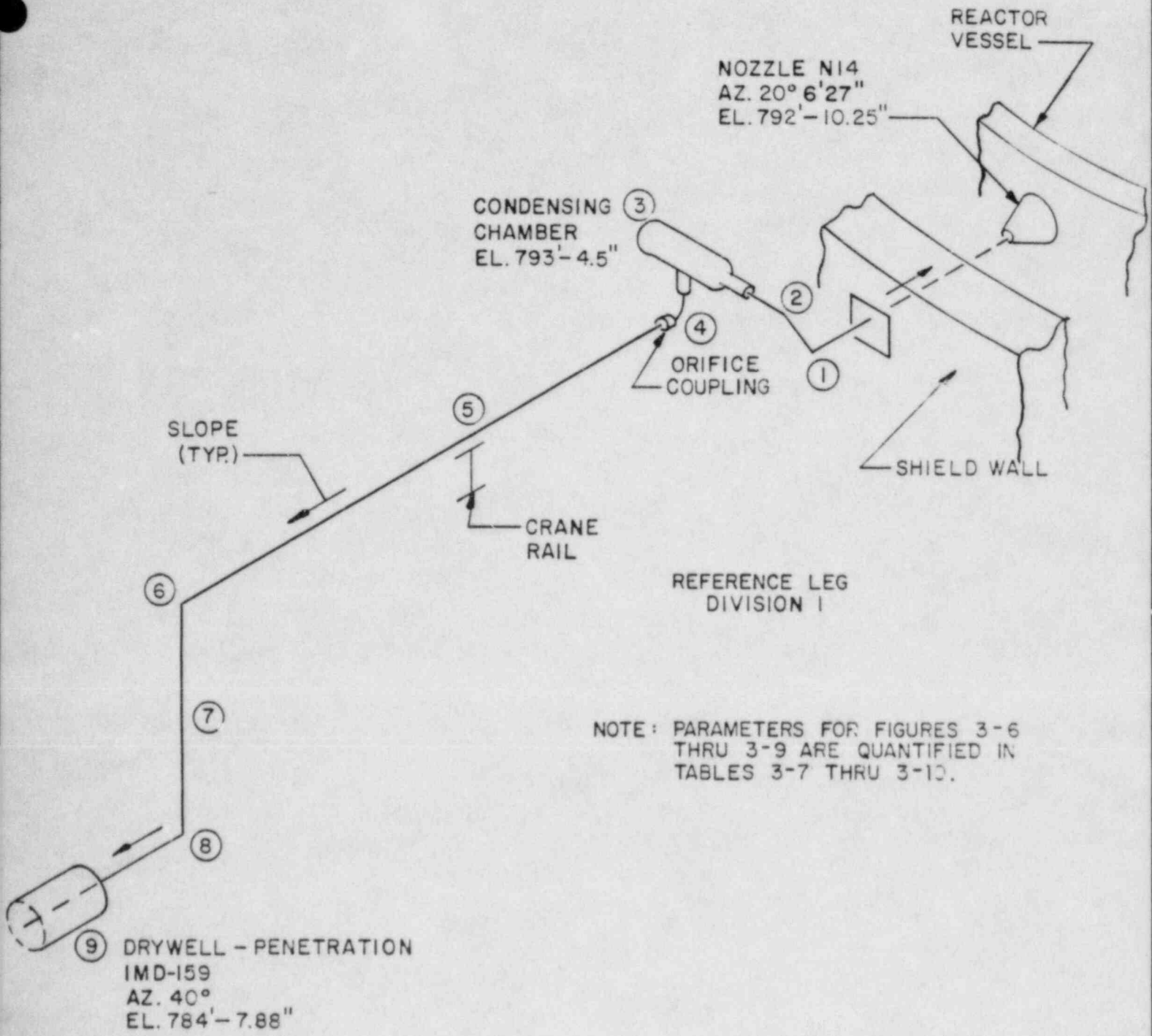

NOTE: PARAMETERS FOR FIGURES 3-6 THRU 3-9 ARE QUANTIFIED IN TABLES 3-7 THRU 3-10.

WLMS REFERENCE LEG PICTORIAL
DIVISION I ORIGINAL DESIGN

FIGURE 3-6

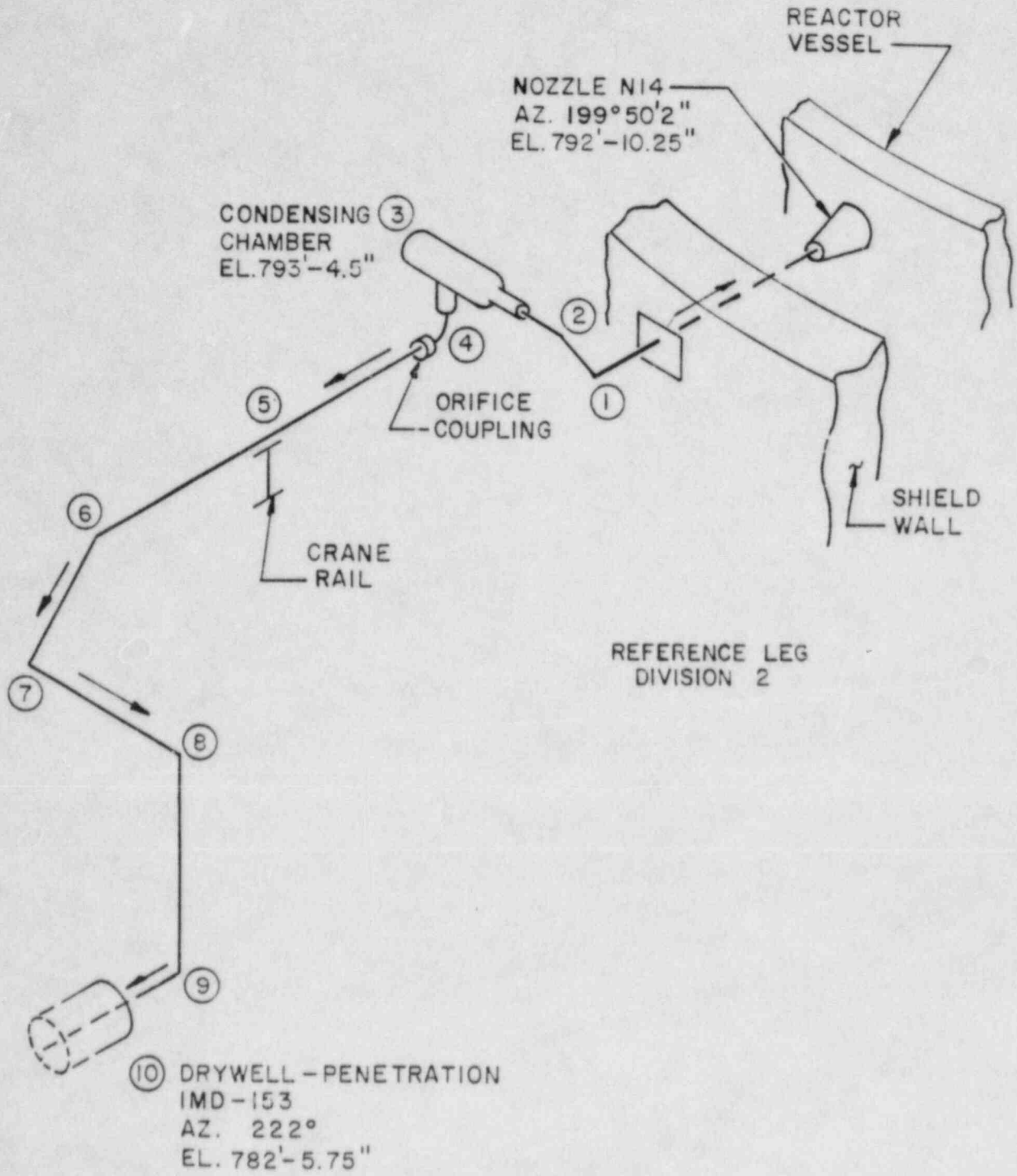

WLMS REFERENCE LEG PICTORIAL
DIVISION 2 ORIGINAL DESIGN

FIGURE 3-7

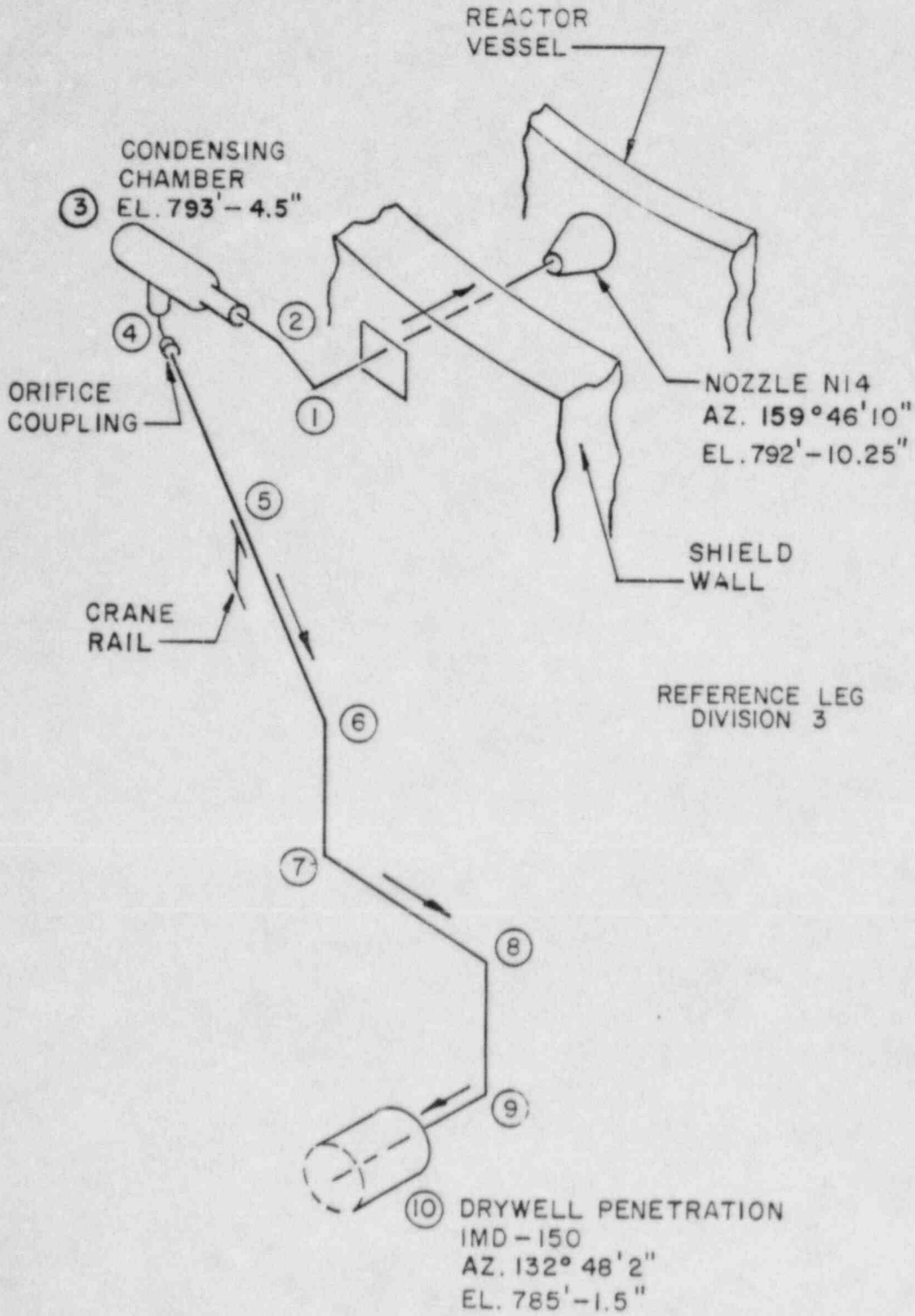

WLMS REFERENCE LEG PICTORIAL
DIVISION 3 ORIGINAL DESIGN

FIGURE 3-8

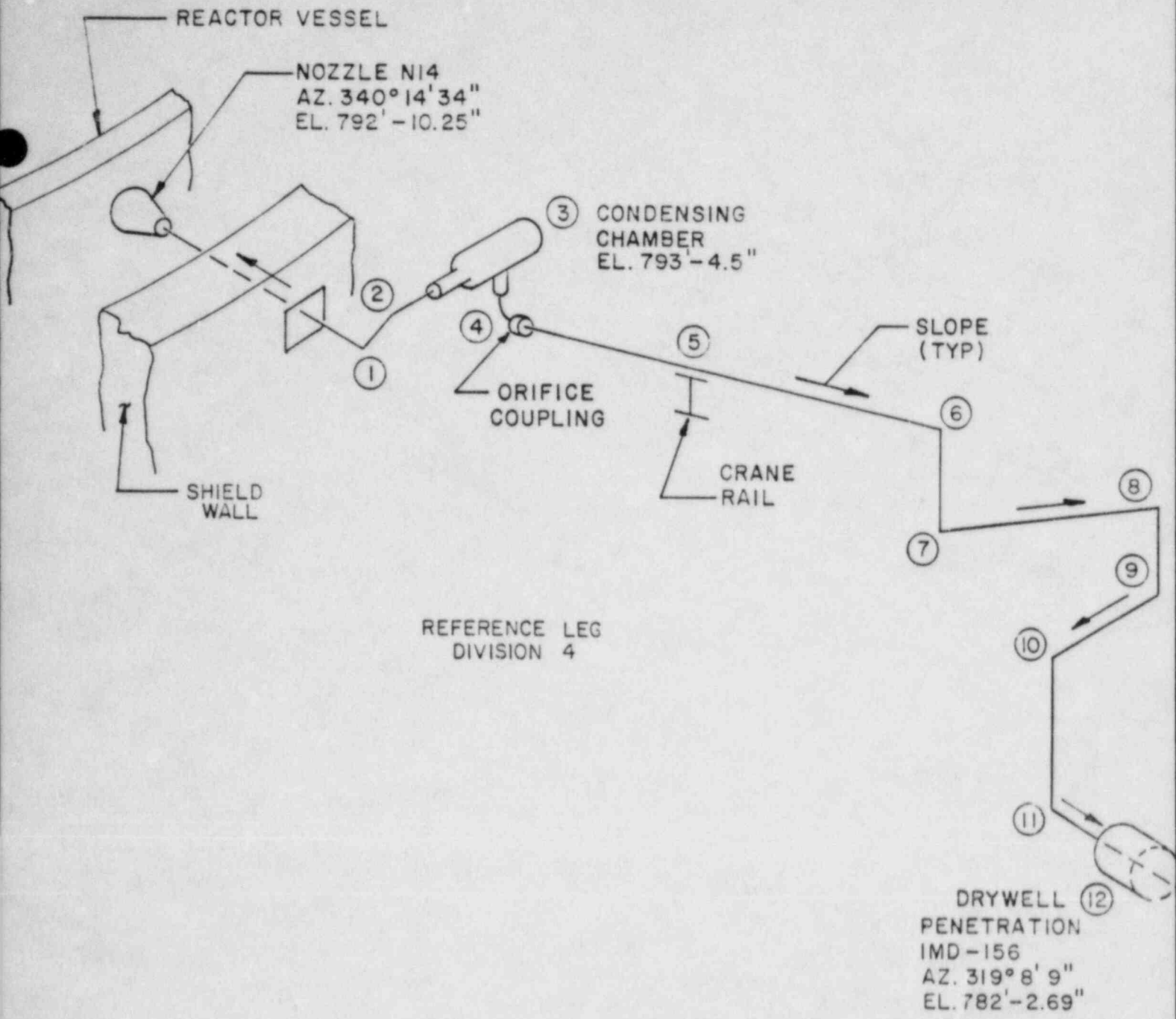

WLMS REFERENCE LEG PICTORIAL
DIVISION 4 ORIGINAL DESIGN

FIGURE 3-9

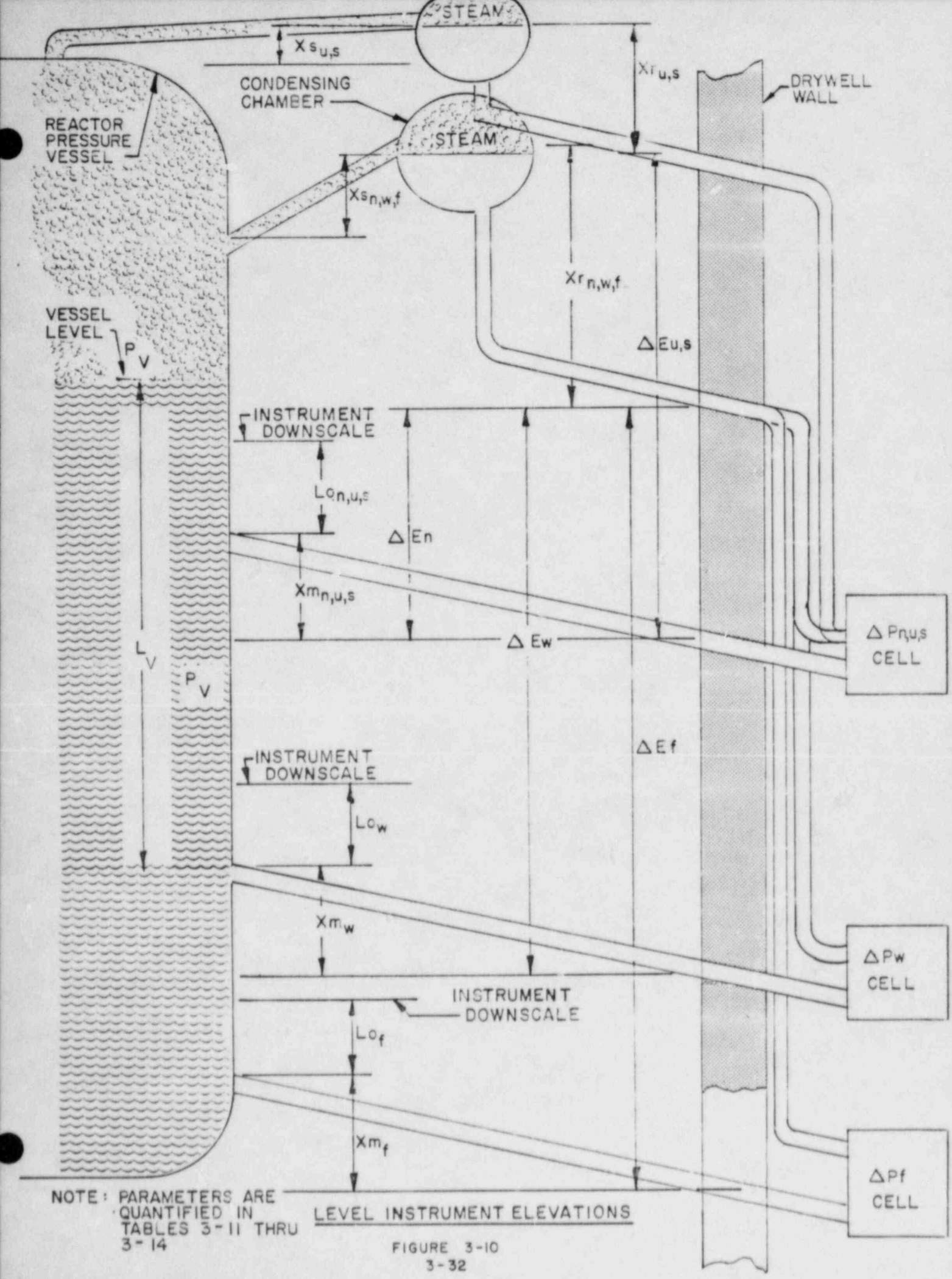

NOTE: PARAMETERS ARE QUANTIFIED IN TABLES 3-11 THRU 3-14

LEVEL INSTRUMENT ELEVATIONS

FIGURE 3-10

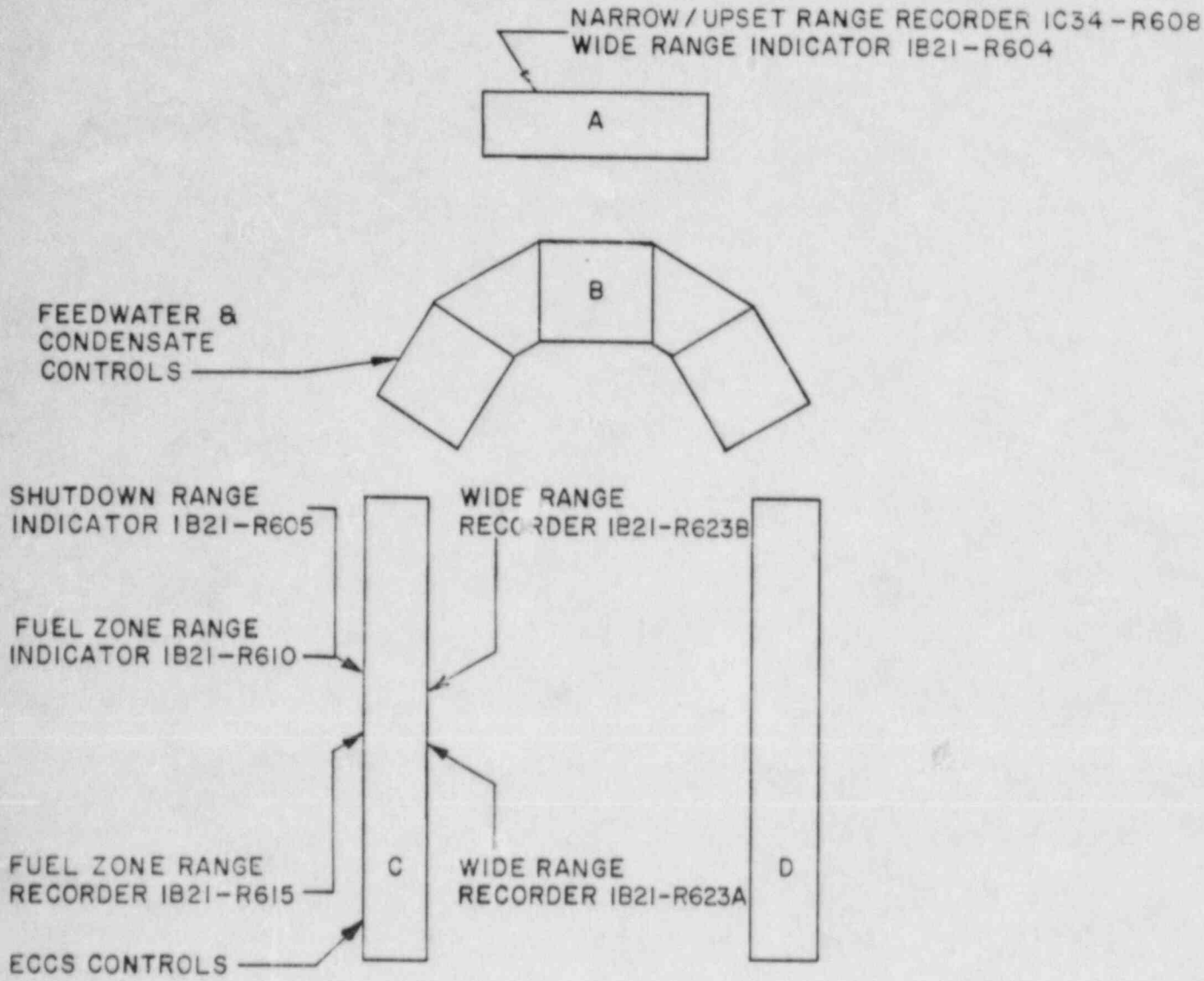

A	1H13 - P678	STANDBY INFORMATION PANEL
B	1H13 - P680	PRINCIPAL PLANT CONTROL CONSOLE
C	1H13 - P601	EMERGENCY CORE COOLING BENCH BOARD
D	1H13 - P870	BOP CONTROL BENCH BOARD

REACTOR WATER LEVEL INDICATIONS IN CONTROL ROOM

FIGURE 3-11

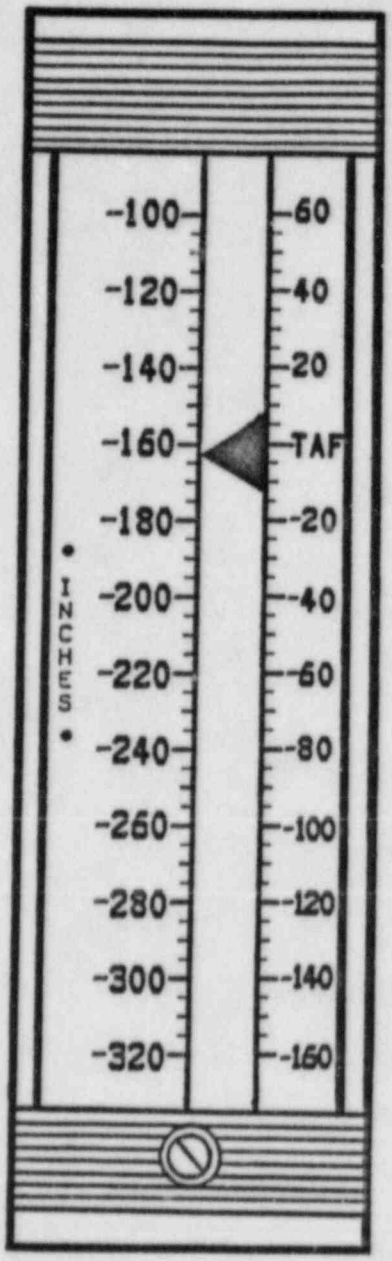

Main Control Room
Fuel Zone Water Level Indicator
Life-Size Dual Scales
Mounted on GE Type 180 Instrument

Figure 3-12

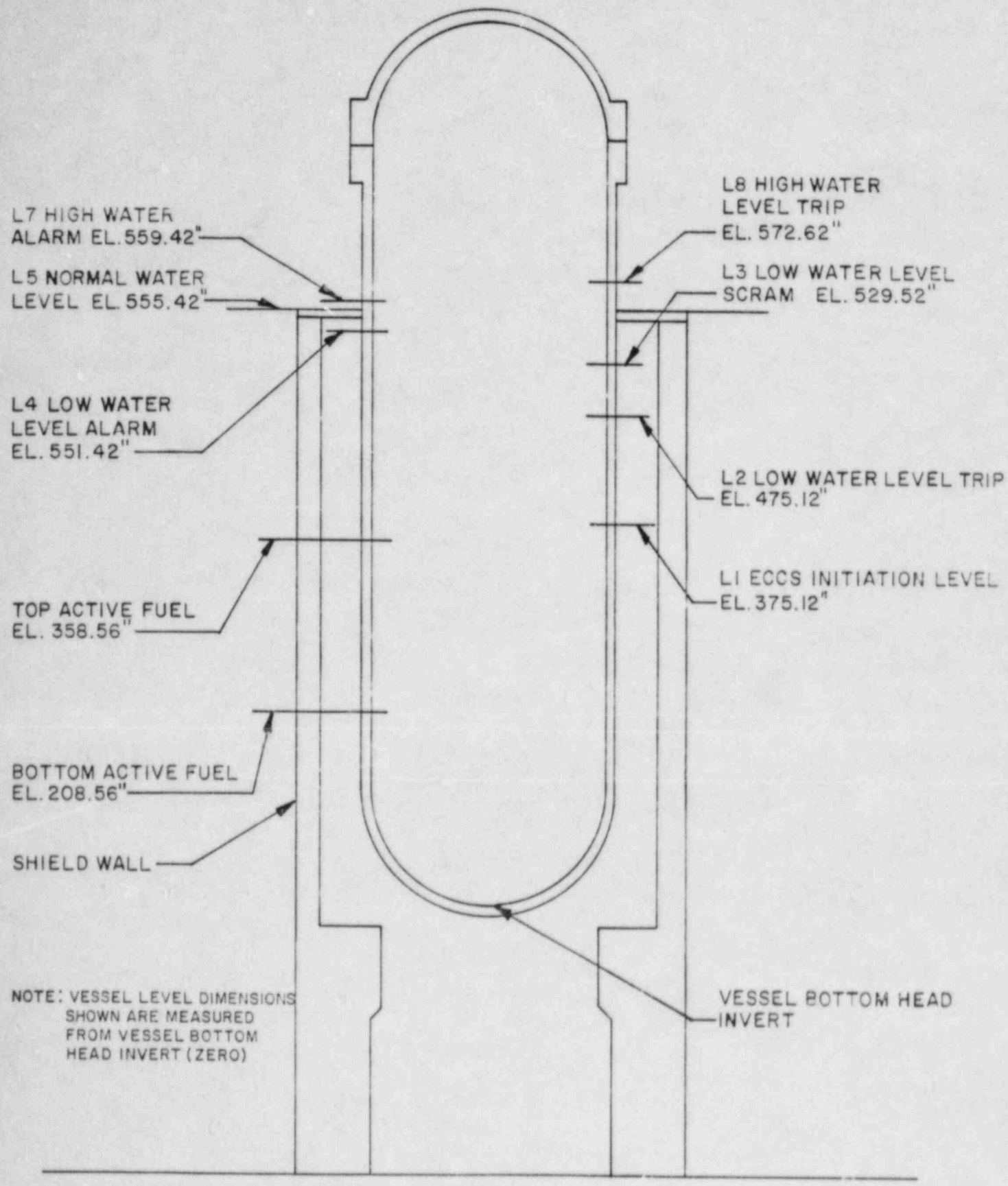

RELATIVE REACTOR VESSEL WATER LEVELS

FIGURE 3-13

SECTION 4

CPS WATER LEVEL PERFORMANCE

Section 4 evaluates the overall performance of the Clinton RPV Water Level Measurement System as originally designed. Each of the five different instrument ranges were examined to determine the effects of variations in the process and environmental conditions on the accuracy of the instruments' recorded and/or indicated readings. The sensitivity study includes a discussion of nonflashing, transient, and steady-state flashing instrument errors. Further discussion addresses the relationship between RPV water level and the state of core cooling under decay heat generation and natural circulation conditions. A summary of the CPS RPV Water Level Measurement System's ability to measure accurate level indications under various reactor vessel and environmental conditions is also provided.

4.1 Level Indication Errors

The Clinton RPV Water Level Measurement System (WLMS) provides level indication by measuring the pressure difference caused by the weight of water in the reactor vessel. If the static pressure above the water column, the static pressure below the water column, and the density of the water are known, then the level can be accurately determined. Note that the WLMS measures collapsed level (the level that the vessel water would assume if the steam entrained in it above the variable leg tap were allowed to rise above the water line, completely separating the steam and the water between the WLMS instrument taps into two distinct regions). In the Clinton WLMS, the two pressures are transmitted to a remote location through water-filled instrument lines which are connected to an instrument that is sensitive to the pressure difference between these lines. The transmission process modifies the pressure due to elevation changes in the instrument lines and the dynamic effect in the lines.

The Clinton WLMS measures the differential pressure at the end of the instrument lines and is calibrated for assumed constant densities in the vessel and instrument piping. Density changes in the vessel and instrument lines are not distinguishable from actual variations in water level. The pressure at the vessel end of the instrument lines is the local, not vessel static pressure so the sensed pressure is affected by fluid motion. The indicated level contains errors caused by the following:

- Differences between actual and assumed vessel water and steam densities,
- Differences between actual and assumed water calibrated density in the instrument lines,
- Kinetic effects on the sensed pressure, and
- Instrument line flow resistance effects.

The WLMS instrumentation is designed and calibrated to reduce the effects of the above sources of error under most operating conditions. Unique calibration strategies are used for each of the five instrument ranges to account for the vessel and environmental conditions existing during their intended use. However, when plant operating conditions vary significantly from the instrument calibration conditions, errors in the indicated level may occur.

Water level indication errors due to density variations are caused by two distinct, but related, phenomena. These phenomena include: 1) changes in the density of the process fluid and of the fluid in the instrument lines (as a function of process temperature and drywell temperature) causes changes in the sensed level, and 2) extreme combinations of process pressure and drywell temperature induce flashing in the instrument lines. Instrument line flashing will produce errors in both the reference and variable legs due to voiding and frictional losses as boiling forces the sense line water into the vessel. This transient flashing error causes indicated level to be high, to be low, or to oscillate between the two while flashing is occurring.

Errors in the sensed water level are not readily quantifiable during flashing conditions because of the dependence on the relationship between flashing rates in the reference and variable legs. However, bounds on the flashing effects can be established. After the initial transient, the system reaches steady-state with some loss of fluid inventory from the reference leg. Bounds on the amount of fluid lost can be determined from the system thermodynamics. The fluid lost from the variable leg will be quickly replaced by fluid from the vessel such that, subsequent to flashing, the variable leg will be refilled with fluid (assuming water level is above the vessel variable leg tap).

The magnitude and direction of the level indication error depends on the assumed process and environmental conditions used for instrument calibration. The CPS WLMS calibration conditions used in this analysis are given below and are provided in Reference 4-1.

Wide Range - Instruments are calibrated for a reactor vessel pressure of 1025 psig, 135°F ambient drywell temperature with no jet pump flow, and 20 BTU/lbm subcooling below the middle water level nozzle tap and saturated conditions above.

Narrow Range - Instruments are calibrated for saturated water and steam conditions at a vessel pressure of 1025 psig and a drywell ambient temperature of 135°F.

Fuel Zone Range - Instruments are calibrated for saturated water and steam conditions at 0 psig in the vessel with no jet pump flow. The drywell calibration temperature is 212°F.

Upset Range - Instruments are calibrated for saturated water and steam conditions at a vessel pressure of 1025 psig and 135°F ambient drywell temperature.

Shutdown Range - Instruments are calibrated for 120°F water at 0 psig vessel pressure and 80°F ambient drywell temperature.

Specific calibration conditions and instrument setpoints for the Clinton WLMS instrumentation have been established (Reference 4-1). However, General Electric has not yet verified the vessel conditions existing during instrument calibration for CPS (this verification is usually performed about 12 months prior to fuel load). The following additional conditions, typically specified, were also utilized:

1. Narrow range instruments are assumed to be calibrated for a dryer head loss at 100% rated steam and jet pump flow conditions.

2. Wide, upset, shutdown and fuel zone range instruments are calibrated for 0% steam flow.

3. All narrow, wide and upset range instrument calibration accounts for the steam head within the vessel. The steam head contribution can be neglected for fuel zone and shutdown range instruments since these instruments are calibrated for 0 psig RPV pressure.

4. The middle water level nozzle tap elevation is assumed to be the narrow range variable leg instrument tap.

An average normal operating temperature of 80°F was used for the containment building environmental condition for

all instrument calibration (References 4-1 and 4-2). The sections that follow examine the sensitivity of level indication to variations in the process and environmental parameters specific for the Clinton WLMS as originally designed.

4.1.1 Non-Flashing Instrument Errors

Non-flashing level indication errors resulting from variations in plant conditions will be examined in this section. The routing and relative orientation of the 12 Clinton WLMS instruments in the Clinton drywell was presented in Section 3. Figures 3-6 through 3-9 provide isometric illustrations of the four reference leg instrument lines used by the Clinton narrow, wide and fuel zone instruments. Tables 3-11 through 3-14 provide the parametric data for the water level instruments needed to perform this evaluation.

The Clinton fuel zone, narrow and wide range instruments access the four divisions of reference legs (one in each reactor quadrant) which sense the steam environment outside the vessel dryer skirt. The upset and shutdown range instruments are connected to a reference leg attached to the head/spray vent in the top of the reactor vessel head. For each of the four instrument divisions, the wide and narrow range instrumentation share a common reference leg, reference leg condensing chamber, and reference leg steam tap in their respective reactor quadrant. Each of the two divisions of fuel zone instruments share a common reference column system with the wide and narrow range instruments located in reactor quadrants 3 and 4.

There are four variable leg taps approximately 13 feet above Top of Active Fuel (TAF) used for narrow, upset, and shutdown range level measurement which sense the water level outside the steam dryer skirt (outside the core shroud). There are four variable leg taps approximately six inches above TAF used by the wide range instruments which sense the level in the downcomer annulus (outside the core shroud). Two additional variable leg taps located in two jet pump diffusers sense water level inside the core shroud. These taps, located approximately 4 feet 6 inches below bottom of active fuel, are used by the fuel zone instruments to measure the collapsed liquid level in the vessel fuel zone region.

Each of the five types of water instruments are designed to monitor water level in different regions of the vessel under specific plant operating conditions. Therefore, changes in plant conditions will impact the level accuracy of each instrument type differently. Using the

methodology provided in Reference 4-3, the level indication errors for the Clinton WLMS instruments can be written as follows:

Narrow Range, Upset Range, and Shutdown Range Instruments

$$E_{n,u,s} = S_L L + S_L L_o + S_s L_s + Z_{dt} + Z_{ct} + Z_{dp} \quad (4\text{-}1)$$

Wide Range Instruments

$$E_w = S_L L + S_L L_o + S_s L_s + S_{sc} L_{sc} + Z_{dt} + Z_{ct} + Z_{dp} + Z_{js} \quad (4\text{-}2)$$

Fuel Zone Range Instruments

$$E_f = S_L L + S_L L_o + S_s L_s + S_{sc} L_{sc} + Z_{dt} + Z_{ct} + Z_{dp} + Z_{jd} \quad (4\text{-}3)$$

where:

S_L = Sensitivity of level indication to changes in the bulk reactor vessel water density as a function of reactor vessel pressure.

S_s = Sensitivity of level indication to changes in the reactor vessel steam density as a result of variations in reactor vessel pressure.

S_{sc} = Sensitivity of level indication to variations in the subcooling of the vessel water.

Z_{dt} = Instrument zero shift due to variations in drywell temperature from the instrument calibration condition (inches).

Z_{ct} = Instrument zero shift due to changes in the containment building temperature (inches).

Z_{dp} = Instrument zero shift due to the kinetic effects of the pressure drop across the steam dryer (inches).

Z_{js} = Instrument zero shift due to the kinetic effects of the jet pump recirculation flow in the downcomer region (inches).

Z_{jd} = Instrument zero shift due to the kinetic effects of the jet pump flow in the jet pump diffuser region (inches).

L = Distance from the minimum downscale instrument reading to the actual reactor vessel level (inches).

L_o = Distance from the instrument variable leg tap to the minimum downscale instrument reading (inches).

L_s = Column of steam in the vessel measured from the vessel collapsed water level to the centerline of the reference leg condensing pot (inches).

L_{sc} = Height of subcooled water above the variable leg tap (inches).

A positive error calculated from the instrument error equations means the indicated water level is higher than the actual water level in the reactor vessel.

4.1.1.1 Effects of Fluid Density Variations on Instrument Accuracy

Variations in Liquid Density

The S_L parameter in the instrument error equations represents the water level indication sensitivity to changes in the saturation density of the bulk water column as a function of RPV pressure. The water column is measured outside the vessel core shroud above the instruments' variable leg tap. As vessel pressure increases from the calibration pressure, the water density decreases. Conversely, for pressure decreases, the bulk water density increases. Since each instrument type is calibrated for a given vessel water density, changes in density will be erroneously interpreted by the instrumentation as changes in water level. Figure 4-1 presents the functional relationship between S_L and the reactor pressure for the Clinton WLMS instrumentation.

The level indication error due to changes in bulk water density is composed of two distinct error components. $S_L L$ represents the vessel density effects acting on the column of water, L, located above the instrument minimum scale reading as illustrated in Figure 4-2. $S_L L_o$ represents the water level indication error due to variations in the vessel density in the column of water. L_o, existing between the variable leg tap and the instruments minimum scale reading. The total water level indication error due to changes in bulk water density is the summation of these two terms.

The parameter $S_L L$ is a function of two variables: RPV water level and system operating pressure. Plotted, this error term would be depicted by a three dimensional surface. However, $S_L L_o$ is a function of only reactor pressure provided water levels remain above the instruments minimum scale reading. The L_o elevations for Clinton are constant and are presented below (refer to Tables 3-11 through 3-14):

Wide range instruments	L_o = 2.62 inches
Narrow, upset & shutdown range instruments	L_o = 11.62 inches
Fuel zone range instruments	L_o = 59.56 inches

Figure 4-3 presents the level indication errors due to vessel water density effects on the instrument zero offset for the five ranges of water level instruments at Clinton Power Station. $S_L L_o$ for the narrow and upset instruments are similar since their calibration conditions and instrument down- scale elevations are identical. $S_L L_o$ for the wide range, shutdown range, and fuel zone range are unique.

During normal plant operation, reactor vessel pressure may vary by approximately 100 psig. Vessel water density variations in the range of normal operating pressures results in a water density change of approximately 3% for all narrow and wide range instruments. This density change corresponds to a high level indication error of less than one inch for all narrow range instrumentation, and less than four inches for all wide range instruments.

Variations in Steam Density

The S_s parameter contained in the error equations represents the WLMS instrument sensitivity to changes in the vessel steam density as vessel pressure deviates from the calibration condition.

The error parameter $S_s L_s$ is a function of the vessel operating pressure and the head of steam existing during reactor operation. The relationship between the steam head and the liquid head is illustrated in Figure 4-2.

For a given vessel pressure and water level condition, the error contributed by the variation in steam density can be readily determined.

Narrow, wide and upset range instruments are calibrated at rated reactor pressure (1040 psia). Decreases in vessel pressure will produce low water level indication errors

due to the decrease in the RPV steam density. An RPV pressure of 900 psia will result in a sensitivity coefficient of -1.0 percent. If the vessel is fully depressurized, the sensitivity coefficient will increase to -5.1 percent. Steam head errors, S_sL_s, can be calculated given the vessel pressure and the corresponding column of steam, L_s, present under the prescribed conditions.

Fuel zone and shutdown range instruments are calibrated with the RPV pressure at atmospheric conditions. Therefore, the steam head at rated reactor pressures will contribute to high level indication errors. At rated vessel pressure, a sensitivity coefficient, S_s, of 4.0 percent can be expected. The sensitivity coefficient for the fuel zone and shutdown range instruments is less than 1.0 percent for vessel pressures below 300 psia.

4.1.1.2 Effects of Vessel Subcooling on Instrument Accuracy

Feedwater subcooling in the annulus region due to the injection of feedwater also influences the level indication accuracy. The degree of subcooling is a function of RPV pressure, feedwater temperature, and the relationship between feedwater and recirculation flow. The parameter $S_{sc}L_{sc}$, presented in equations (4-2) and (4-3), represents the subcooling of the column of water, L_{sc}, located between the instruments variable leg tap and the middle water level tap (narrow range variable leg tap). The subcooling phenomenon only influences the wide, shutdown and fuel zone range instruments. For the shutdown range, the subcooling effects during operation produce negative errors of negligible magnitude. Since these instruments are used by the operator only during RPV maintenance conditions and excluded from further discussion. Narrow and upset range instruments are unaffected by vessel subcooling since variable leg taps used by these instruments are located in the saturated liquid region.

The subcooling term $S_{sc}L_{sc}$ is proportional to the difference between the density change due to subcooling at calibration conditions and operating conditions. Wide range instruments are calibrated for 20 BTU/lbm of subcooling which corresponds to a density difference of 1.01 lbm/ft^3 between the saturation and subcooled liquid condition. Higher degrees of subcooling will cause level indication to increase. Conversely, lower subcooling will cause vessel level indication to decrease. During normal plant operating conditions (1025 psig with feedwater temperature = 420°F), wide range level indication will not be affected since these instruments are calibrated for these conditions. If saturation conditions exist throughout the vessel (no subcooling), wide range level indication will

read low by -3.0 inches. Fuel zone instruments are calibrated for saturated conditions (no subcooling). Therefore, fuel zone level indication will increase with the degree of vessel subcooling. Fuel zone error will be high by +7.6 inches during normal plant operating conditions. Errors due to subcooling will decrease linearly to zero as the column of subcooled liquid drops from the elevation of the middle water level tap down to the instrument's variable leg tap.

4.1.1.3 Drywell Temperature Errors

Drywell temperatures different from that assumed for instrument calibration have a direct effect on indicated water level. Variations in water level indication occur as a result of density changes in the instrument line fluid. The magnitude of this error is directly proportional to the difference in the reference leg and variable leg drywell vertical drops. If drywell temperature is above the calibration temperature and a positive drywell vertical drop difference exists (reference leg drop greater than variable leg drop) the indication error will be positive (i.e., indicated level greater than actual level). The drywell vertical drop differences for the Clinton WLMS instruments, as originally designed, are provided in Tables 3-11 through 3-14. Figures 4-4 through 4-7 present the effects of drywell temperature changes on the five ranges of water level instruments. Following a Loss of Coolant Accident (LOCA), drywell temperatures could reach the maximum design value of 330°F (Reference 4-4). Under these environmental conditions, with the vessel at rated pressure, water level indication errors range from -0.6 to +1.2 inches for the narrow range instruments and from -0.5 to +1.1 inches for the wide range instruments. Low level indication errors occur because the variable leg vertical drop is larger than the reference leg vertical drop. Drywell temperature errors for these instruments were determined to be relatively insensitive to variations in vessel pressure.

Drywell temperature errors for the fuel zone instruments are illustrated in Figure 4-6. The error functions shown are for the vessel at rated operating pressure which represents the bounding case. Division 3 and 4 fuel zone instruments would experience indication errors of -3.8 and +2.0 inches respectively if the drywell were at the design temperature. Lower vessel pressures would reduce the magnitude of these errors. For a given drywell temperature, fuel zone drywell temperature errors would decrease by no more than 23 percent if the vessel were fully depressurized.

At rated vessel conditions the indication error, Z_{dt}, for the Division 2 upset range instrument will be 26.8 inches when the drywell temperature is 330°F. Lower vessel

pressures will reduce the magnitude of these errors as shown in Figure 4-7. Drywell temperature errors will decrease by no more than 24 percent for vessel pressures lower than rated. The large relative magnitude of these errors is due to the fact that the upset range reference leg connects to the instrument tap in the top of the vessel head which results in a large reference leg vertical drop.

Shutdown range instruments will read high by +30.6 inches when the drywell temperature is 330°F with the vessel at rated pressure. However, these errors are of little consequence since the operator is instructed not to use shutdown range instrumentation when the vessel is pressurized. Shutdown range instrument errors will be +9.40 inches when the vessel is fully depressurized and the vessel and drywell are at saturation conditions. Drywell temperatures greater than saturation (212°F) will result in boiloff or flashing of the fluid inventory within the shutdown range instrument line. The impact of instrument line flashing on instrument accuracy will be discussed in Section 4.1.2.

4.1.1.4 Effect of Containment Temperature Variations on Instrument Accuracy

Variations in the containment building temperature from the calibration conditions will also induce water level indication errors. Water level instruments are calibrated at a containment temperature of 80°F. Temperatures for the containment building can range between 65°F and 104°F during normal plant operation (Reference 4-5). A maximum environmental temperature of 185°F can be expected following a design basis LOCA (Reference 4-2). The Z_{ct} error parameter represents the instrument indication error occurring as a result of temperature variations in the containment building environment. The magnitude of Z_{ct} is dependent on the variation in the instrument line fluid density with changes in containment temperature and the elevation difference between the reference leg and variable leg drywell penetrations. Figure 4-8 displays the Z_{ct} level indication errors for the Clinton WLMS instrumentation. Figure 4-8 illustrates that the narrow, wide, shutdown, and upset range instruments are relatively insensitive to variations in the containment temperature and reactor pressure.

Water level indication errors for wide, narrow and upset range instruments will not exceed +1.5 inches for containment temperatures within the range of normal plant operation. Fuel zone range instrument errors are affected to a greater extent by containment temperature variations due to the large difference in elevation between reference leg and variable leg drywell penetrations as illustrated in Tables 3-13 and 3-14 of Section 3. During normal plant

operation, Z_{ct} indication errors as large as +2.6 inches can be expected for fuel zone range instrumentation. Following a design basis LOCA with the vessel fully depressurized, a maximum indication error of +2.6 inches can be expected for all narrow and upset range instruments. Wide range errors will approach +7.1 inches and fuel zone range errors will not exceed +14.5 inches.

4.1.1.5 Steam Dryer Flow Effects

The Z_{dp} parameter represents the water level indication error resulting from changes in the vessel steam dryer pressure drop with steam flow variations. The pressure drop through the steam dryer assembly produces a depression in the liquid level inside the dryer skirt with respect to that outside the vessel dryer skirt assembly. The elevated level outside the dryer skirt will have a direct impact on the sensed pressure measured at the variable leg tap. A level difference of 18.4 inches of water at rated reactor conditions will occur in the Clinton BWR/6 vessel design (Reference 4-6). This level difference is functionally related to the square of the main steam flow as illustrated in Reference 4-7. Figure 4-9 presents the Z_{dp} parameters for the Clinton WLMS instruments. Instrument calibration conditions dictate whether the steam dryer pressure effects will produce high or low level indication. Narrow range instruments are calibrated at rated vessel steam flow, therefore, Z_{dp} will be zero during full flow conditions. A 20% reduction in steam flow, however, will produce a narrow range low level indication error of -6.4 inches. Wide range and fuel zone level instruments are calibrated for use during natural circulation conditions (no jet pump or steam flow). High level indication errors for these instruments will be a maximum of +18.4 inches at rated steam flow conditions and will decrease with the square of the steam flow.

4.1.1.6 Influence of Jet Pump Suction Flow on Instrument Accuracy

The velocity head of the jet pump suction flow combined with suction flow friction losses produce indicated levels lower than actual. Only the wide range level instruments are affected by the suction flow phenomenon as illustrated in equation (4-2). Variable leg taps used by the narrow range instruments are not influenced by the flow dynamics associated with jet pump operation since the RPV nozzle taps are located well above the vessel shroud head.

The instrument error introduced by the velocity head varies approximately with the square of the recirculation flow as depicted in Reference 4-7. Friction effects, which are small compared to the velocity head component, vary approximately linearly with flow rate. The total combined error introduced by these components is dependent

on the recirculation flow rate, the annulus area, and the location of the instrument tap. A maximum low level indication of -11 inches was calculated for the Clinton wide range instrumentation (Reference 4-8). Figure 4-9 displays the Z_{is} error as a function of rated flow for the Clinton wide range instruments.

4.1.1.7 Effects of Jet Pump Discharge on Instrument Accuracy

The high pressure drive flow in the jet pump diffusers influences the pressure sensed by the fuel zone instruments. The term Z_{id} in equation (4-3) represents the kinetic effects of the jet pump recirculation flow on the fuel zone instruments variable leg tap.

Figure 4-10 presents the Clinton fuel zone level error as a function of vessel recirculation flow. Fuel zone water level is sensed at variable leg taps located in two of the vessel jet pump diffusers. At rated plant operating conditions, the high pressure drive flow results in a sensed pressure in excess of the vessel static pressure by approximately 67.0 feet (Reference 4-6). The fuel zone instruments will, therefore, read full upscale during normal plant operation. Under natural circulation conditions (less than 30% of rated flow), the jet pump friction loss causes the pressure to be slightly less than the vessel static pressure. For the BWR/6 jet pump design, the error function existing between the natural circulation condition and full rated flow conditions has not been exactly determined (Reference 4-8), however, it has been approximated as illustrated in Figure 4-10.

4.1.2 Instrument Line Flashing Errors

Elevated drywell temperatures accompanied by reactor vessel depressurization can result in instrument line flashing. When instrument line flashing occurs, the vessel pressure drops to a point where the instrument line fluid temperature is greater than the saturation temperature at the corresponding vessel pressure. Under these conditions, the fluid in the lines begins to boil.

During instrument line flashing, the expansion of the fluid within the piping induces flow into the reactor vessel. Flashing produces transient and steady state level indication errors. Both the reference leg and variable leg instrument lines are influenced by the flashing phenomenon. However, the effects of flashing on the variable leg are transitory. Subsequent to flashing, the variable leg will be refilled with saturated liquid from the reactor vessel. The reference leg, however, will be depleted of some fluid inventory. Inventory regain will occur when the operator floods the vessel, above the elevation of the condensing pot, as directed by the

Emergency Operating Procedures. The two types of flashing errors will be examined in this section. The data provided in Section 3 combined with the methodology provided in References 4-3 and 4-9 will be used to estimate the magnitude of these flashing errors for the Clinton water level instrumentation.

4.1.2.1 Transient Flashing Errors

Instrument line flashing results in the expansion of the fluid inventory. The fluid expansion induces a bulk flow towards the reactor vessel. The bulk flow contributes to the loss of fluid inventory and produces a pressure drop along the instrument line as the fluid is accelerated out of the pipe. Transient flashing results in two conflicting level indication errors. First, the flashing reduces the average instrument line fluid density (static head) and second, the pressure gradient resulting from the fluid boil-off causes the pressure at the transmitter to remain high while the vessel pressure continues to decrease. The combined effect is a dynamic contribution to the pressure sensed at the instrument transmitter and the potential for erroneous water level indications.

The magnitude and duration of these errors are highly dependent on the event scenario, and on the actual piping configuration of the instrument system. The rate of vessel depressurization, the drywell temperature distribution, the instrument line length and the location of the instrument line flow limiting orifice all require consideration.

Previous studies (Reference 4-3) demonstrated that a significant contributor to the dynamic pressure variation within the instrument line is due to the flow limiting orifice. Since the WLMS instrument line piping penetrates the drywell, flow limiting orifices were mounted in these lines to reduce the consequences of line breaks. The basis for the orifice location was to have the flow restriction as close to the RPV as possible to limit the length of piping upstream of the orifice, and to minimize the consequence of pipe whip. As the instrument line liquid flashes, the mere presence of the orifice in the instrument line increases the pressure drop and therefore, the magnitude of the indication error.

Studies performed by General Electric (Reference 4-9) estimated the magnitude of the instrument error due to the flow restrictive orifice. The analysis predicted the pressure time-history and the corresponding transient error response for the variable leg instrument line. Flashing of only the variable leg was considered since variable leg flashing will result in high level indication which is non-conservative.

Consideration of flashing in only the variable leg instrument line will maximize the magnitude of the high level indication errors.

The one-dimensional model used in Reference 4-9 examined a 1-inch diameter instrument line, 50 foot in length. A 1/4-inch diameter flow limiting orifice was placed near the open end of the system (i.e. near the RPV). The variable leg system modeled was designed to be representative of typical BWR WLMS piping configurations. The spatial response and the magnitude of the pressure difference occurring along the instrument line length were evaluated. Events requiring ADS were shown in Reference 4-3 to produce the largest potential for transient water level errors. The magnitude of the instrument error was evaluated during an ADS event for a drywell temperature of 300°F. The Reference 4-9 results demonstrated that the flow limiting orifice, when located near the RPV, can produce high level indication errors as large as six feet. The duration of these errors could be expected to last for as long as two minutes.

The Clinton WLMS, as originally designed, can be expected to respond similarly to the instrument line orifice system examined in Reference 4-9. A comparison of the Clinton variable leg geometry with that used in the General Electric model illustrates the system similarities. The variable leg line lengths for the Clinton WLMS instrumentation range from between 32 and 52 feet and are equipped with 1/4 inch flow limiting orifices. The 3/4-inch instrument line diameter, though smaller than the 1-inch line diameter examined by General Electric, is expected to produce a less severe transient error due to the reduced area ratio between the instrument line and the orifice. A less severe reduction in flow area will decrease the magnitude of the pressure drop within the CPS variable leg during transient flashing. In addition, similar peak temperature conditions can be expected for the CPS drywell environment. The results of the General Electric study, therefore, provide a conservative estimate of the magnitude for the transient flashing errors for the CPS WLMS instrumentation as originally designed.

Transient high level indication errors of six feet will adversely impact the system initiation and/or trip functions controlled by the WLMS instrumentation. If both the reference and the variable legs were to flash simultaneously, actual indication errors would likely be lower and could even be negative (low level indication) depending on the relative flashing rates between the two legs. Therefore, to provide a true assessment of the error time-history, the combined effects of flashing in both instrument legs should be considered. While the Reference 4-9 analysis only considered the response of the variable leg instrument line, the results nevertheless provide a

conservative estimate of the worst case transient response of the CPS WLMS. In addition, the analysis illustrates that the flow limiting orifices, when located near the RPV, will adversely influence the pressure sensed by the WLMS instrument transmitters.

4.1.2.2 Steady State Flashing Errors

The purpose of this section is to provide the water level indication errors that would occur following the initial flashing transient, before the vessel is completely flooded and the drywell temperature is reduced. A loss of fluid inventory from the reference leg will produce erroneous high level indications which are nonconservative. The amount of fluid inventory lost from the reference leg can be estimated from thermodynamics given the initial fluid temperature and the final steady state vessel pressure.

Reference 4-3 considered two flashing scenarios. One case assumes that full inventory carryover occurs where the expanding steam forces liquid inventory from the instrument line into the reactor vessel. For the full carryover case, the indicated level errors change rapidly with variations in vessel pressure and reference leg temperature. For this case, the amount of water remaining in the line is controlled by the fluid void fraction. The second case assumes no carryover during flashing. Steam bubbles move out of the instrument line without displacing the water in the line. Instrument errors, therefore, change relatively slowly. For the no carryover case, the water inventory remaining in the line is a function of the fluid quality.

The full carryover case will produce the maximum possible flashing error while the no carryover case represents the minimum possible errors. The actual error will fall somewhere between the two cases. Since the reference leg instrument line piping slopes monotonically downward from the condensing pot to the drywell wall, the fluid left in the reference leg will drain down to replace fluid lost in the horizontal runs for both boil-off scenarios. Therefore, calculation of instrument errors should consider the line routing within the drywell. The maximum error, however, is proportional to and limited by the total reference leg vertical line drop in the drywell.

For the Clinton analyses, full vessel depressurization and complete loss of the reference leg fluid inventory was assumed. Although a complete loss of the reference leg due to flashing cannot occur during the depressurization process alone, a complete loss of fluid inventory could occur if the drywell remained above the saturation temperature for an extended duration. These assumptions will

produce the maximum indication errors and therefore represent bounding worst case values for the steady state flashing condition.

Figures 4-11 and 4-12 present the indication errors subsequent to flashing for the 12 water level instruments used at Clinton. A 12-inch reduction in the wide and narrow range reference leg water column results in approximately a 15.6 inch rise in indicated level. This phenomenon is due primarily to the density difference between the liquid in the vessel and the reference leg under conditions assumed for instrument calibration. Steady state flashing errors for wide and narrow range instruments range between +131 and +176 inches. Under the prescribed conditions, the narrow range instruments will all read full upscale. Wide range level indication errors could read high by as much as +176 inches.

Fuel zone instrument indication would read high by +135 inches which is equivalent to the total reference leg drywell vertical drop for these instruments. The 1 to 1 correspondence exists because the fuel zone instruments are calibrated with the vessel fully depressurized. Therefore, vessel water density effects do not further influence the level indication accuracy.

4.2 Water Level Relationship to Core State

This section provides a qualitative discussion of the relationship between the state of core cooling and coolant inventory under decay power and natural circulation conditions. A detailed analysis was performed in Reference 4-11 for the Peach Bottom 2 BWR design. Peach Bottom 2 is a BWR/4 reactor equipped with jet pumps with a fuel geometry corresponding to the 8x8 fuel lattice arrangement. A direct application of the quantitative results from the Peach Bottom study would be inappropriate due to the differences between the BWR/4 and the Clinton BWR/6 designs. A comparison of the vessel/core parameters can be found in Table 4-1. The results and conclusions from the Reference 4-11 analyses can, however, provide the insight needed to determine the relationship between RPV water level and the state of the core for CPS. The ability of the Clinton WLMS instrumentation to provide the operator with a reliable indication of the approach to, existence of, and recovery from Inadequate Core Cooling (ICC) can then be evaluated.

A definition of ICC is appropriate before the performance of the CPS WLMS system can be reviewed. Reference 4-16 examined the fuel bundle cladding temperature response occurring during core uncovery. The first state of fuel failure is that of cladding perforation due to the weakening of the cladding from excessive internal fuel rod

pressure. Cladding perforations tend to occur at fuel cladding temperatures between 1300°F to 1500°F. Perforation failure results primarily in the release of fission product gases present in the fuel cladding gap. At fuel temperatures in excess of 1800°F, the fuel cladding begins to react chemically with the surrounding water and/or steam and hydrogen begins to be formed. The exothermic metal-water reaction accelerates fuel cladding degradation and gross cladding failure can occur. For this discussion, ICC will be defined to exist at temperatures above 1500°F. Cladding temperatures less than 1500°F in an average fuel assembly will provide a satisfactory indication that adequate core cooling exists. The cladding temperature limit of 1500°F is conservative for this discussion since 1) it limits the extent of fuel assembly damage to perforation failures, 2) it minimizes the production of hydrogen and assures that a coolable core geometry will be maintained, and 3) the limit is well within the 2200°F post LOCA fuel cladding temperature limit specified in Reference 4-17 for light water reactor ECCS evaluation.

In a BWR, there is a direct and unambiguous relationship between collapsed level (vs. indicated level) and coolant inventory. That is, because of the BWR's physical layout, collapsed level above, in and below the core can be directly interpreted in terms of coolant inventory. Collapsed level is defined as the level which would result if all of the steam were assumed to be above the liquid. This relationship is used in the following discussion to illustrate the connection between coolant inventory and ICC considering plant events most likely to lead to these severe conditions.

4.2.1 The Effectiveness of Water Level Measurement as an Indication of ICC

One condition that could lead to an ICC event is initiated with the isolation of the BWR primary system. Vessel isolation could occur from any one of several reasons (i.e. turbine trip, loss of offsite power), but the particular cause is unimportant to the accident sequence under study. The analyses performed in Reference 4-16 considered the reactor to be scrammed and the recirculation pumps tripped. Neither the RCIC system nor the ECC systems are assumed to be available. It is assumed that the Control Rod Drive (CRD) cooling system is the only vessel injection system operating (of the make-up systems available, the CRD system will represent the least helpful to the operator from the standpoint of level restoration). No break is postulated. Hence, the vessel remains pressurized but without emergency inventory make-up. Sensible and decay heat in the fuel will continue to

boil off the system's liquid inventory. The steam produced is assumed to be released at a steady rate so that the reactor vessel will remain at a constant pressure. In this situation, natural circulation will continue in the vessel until enough liquid inventory has been depleted so that the downcomer water level drops to the level where it can no longer provide sufficient elevation head to drive liquid through the upper plenum and steam separators. After this time, circulation will continue inside the shroud, with flow going up through the fuel assemblies and down the common bypass region between the channel walls. Unless make-up inventory is supplied, the liquid level will eventually drop below the top of the fuel bundles, breaking the coolant circulation loop, and the accident will progress towards the boil-off/core heat-up phase.

During this event scenario, the water level in the fuel bundles will be controlled by the hydrostatic head available in the downcomer region. Liquid inventory depletion is related directly to the net amount of fuel sensible and decay heat transferred to the vessel fluid. Only heat generation from the portion of the fuel rods below the water line will go into producing steam. Heat generation above the core coolant level would contribute only to increased fuel rod temperatures and steam superheating.

Reference 4-16 utilized the American Nuclear Society (ANS) decay heat standard for infinite fuel exposure to conservatively estimate the vessel decay heat function. Figure 4-13 graphically presents the ANS standard for the decay heat time-history (Reference 4-10). The total energy transfered to the fluid is represented by the time integral of the fuel decay heat and the fuel sensible heat, minus the RPV heat losses and the heat removed by the steady steam leakage and the CRD make-up flow. A detailed analysis of the core was performed using a model which included energy contributed by radiation, conduction, and convection heat transfer along with the energy released by the exothermic metal/water reaction that occurs at cladding temperatures in excess of 1800°F.

From the Reference 4-16 analyses, a functional relationship between the core and downcomer-bypass region inventory levels were evaluated. Figure 4-14 presents an illustration of the water level time history for the purpose of qualitative discussion. Water level refers to downcomer level when it is above the top of the jet pumps and to bypass level when it is below the jet pump suction level. The results indicate that the lowest power fuel bundle would not begin to uncover until the downcomer water level had dropped midway between the TAF and the jet pump suction level. This positive differential water level between the core and downcomer-bypass regions can be

attributed to the high void fractions present within the core during the initial phase of the water level transient.

Subsequent to the time of core uncovery, all the fuel bundles would contain nearly equal amounts of liquid water due to the downcomer hydrostatic forces. Therefore, all collapsed bundle levels would be equal. The lowest two-phase level would always occur first in the lowest power assembly. Results from Reference 4-16 illustrated that the downcomer level and the core levels would asymptomatically approach the bottom of active fuel (BAF) because only the decay heat from the submerged fuel rods would go into producing steam (inventory boil-off). The bypass level would decrease slightly faster during the period immediately following the downcomer level drop into the jet pumps due to the decrease in the effective downcomer cross-sectional area. However, until the water level reached BAF, the water level in the core was shown to always be greater than the level within the downcomer bypass region.

During the early stages of core uncovery, the peak cladding temperature would be reached first in the lowest power fuel assemblies. The lower heat flux generated within these assemblies leads to a lower two-phase void fraction and a lower overall two-phase fluid level. The lower two-phase fluid level results in fuel rod uncovery and elevated cladding temperatures. The rest of the fuel assemblies at this point remain covered and normal coolant saturation conditions would be maintained.

As the transient progresses, further loss of coolant inventory takes place. The location of the peak cladding temperature moves radially inward from the lower power bundles to the higher power fuel assemblies as coolant inventory is depleted. The peak cladding temperature eventually resides in the highest power fuel assemblies for the remaining duration of the transient. Figure 4-15 illustrates the relationship between the peak cladding temperatures and core water level for the lowest power bundle, the average power bundle and for the entire core. For the plant event analyzed here, it can be concluded that cladding temperature is indeed functionally related to the core water level as shown in Figure 4-15. ICC conditions are reached in the core at water levels of approximately 3.6 feet above bottom of active fuel (BAF). As expected, cladding temperatures asymptotically approach the melting point as levels approach BAF and complete core uncovery occurs. Reference 4-11 went on to demonstrate that the relationship between core level and the peak cladding temperature was relatively insensitive to the rate at which core uncovery occurred. Therefore, regardless of the rate of inventory boil-off, the end result would remain unchanged.

It can be concluded from Figures 4-14 and 4-15 on a generic basis that the downcomer-bypass levels are indeed an excellent indication of core water level and core state. When water level is in the downcomer-bypass region (above the jet pump suction), water level is a conservative indicator of core water level (i.e., core level is higher than downcomer level). For water levels below the top of the jet pumps, bypass level provides an even better indication of level in the core. In addition, water level has been shown to provide an indication of the peak cladding temperature and therefore an indication of the existence of ICC. Further, the relative insensitivity of the cladding temperature-water level relationship to the rate of core uncovery makes the level/cladding temperature relationship applicable to many other plant transient events. The level/cladding temperature relation holds irrespective of the plant initiating event. Therefore, based on the qualitative evaluation of the Reference 4-16 analysis, the CPS WLMS can be expected to provide the operator with a reliable indication of the core state during degraded plant conditions.

4.2.1.1 The Effects of Pressure Variations on the Core Transient During Vessel Isolation

Cyclic operation of the vessel safety relief valves (SRV) was not modeled in the analysis reviewed in the previous section. The vessel pressure was assumed constant and the inventory loss occurred continuously at a rate equal to the inventory boil-off rate. The results presented for the constant pressure system, however, were conservative. The sawtooth-shaped pressure function generally associated with intermittent SRV action would produce sudden pressure drops within the vessel. Vessel depressurization would induce sudden surges in the two-phase coolant level, resulting in coolant flow past the previously uncovered fuel rods. Wide and narrow range instrument indicated levels would also increase due to the increased water density in the vessel downcomer region following RPV depressurization.

Automatic or operator activated ADS blowdown would depressurize the vessel resulting in an accelerated loss of vessel inventory. As discussed in the previous section, a more rapid loss of vessel inventory will produce increased steam flow rates within the core region. To evaluate the effect of ADS initiation on the analysis, realize first that rod-to-steam convection is the most crucial heat transfer mechanism in the clad heatup process. The convective cooling provided by the rising steam would be directly proportional to both the steam mass flow and the temperature difference between the fuel rod cladding and the steam. In addition, the boil-off rate would be inversely proportional to the latent heat of vaporization of the water at the vessel pressure. If the analysis had

been conducted at a vessel pressure of 100 psia instead of 1000 psia, the latent heat of vaporization would be 37 percent higher, therefore reducing the steam mass flowrate by 27 percent. However, the saturated steam would be over 200°F cooler. The convective cooling in the early stages of vessel boil-off would be greater at the lower vessel pressure as a result of the decrease in fluid temperature even with the reduced steam flowrate through the core. Therefore, the conclusions present in the previous section are conservative and apply to transient events occurring at lower system pressures.

4.2.2 Recovery from Inadequate Core Cooling

In the event that ICC does take place, the flooding of the core prior to core melt will result in the return to adequate core cooling. Conservative calculations in BWR FSAR analyses show this to be the case. If the period of ICC is extended, then fuel failures and local core damage can produce flow blockages. Flow blockages can inhibit coolant flow which may in turn lead to fuel melting. A summary of the results of these evaluations and the key conclusions are given below:

4.2.2.1 Impact of Flow Blockages on Core Cooling

ICC can result in gross fuel failure producing obstructions or flow blockages within the core. Test reports show that effective core cooling is obtained both above and below the blockage and cooling water flow is not obstructed for channel blockage of up to 60 percent (Reference 4-18). Other analyses have concluded that:

- For flow blockages up to 79 percent of the fuel channel area and rated power, nucleate boiling will be retained and no dramatic increases in fuel temperature will occur (Reference 4-12).

- Analysis indicates that bundle flow blockages of up to 90 percent of flow area will not impair flooding effectiveness sufficiently to cause fuel melt (Reference 4-13). No fuel melt will occur for up to 95 percent channel blockage although some cladding failures may occur (Reference 4-12).

4.2.2.2 Counter Current Flow Limiting (CCFL) Phenomenon

Another concern with water level/core cooling correlation during refill is the counter current flow limiting (CCFL) phenomenon in which the water from a spray cooling system is held in the upper plenum by the steam rising out of the core. In order for CCFL to exist, a high-channel steam flow is required. CCFL phenomenon is a concern only when the downcomer or bypass level is low and the core is partially uncovered. The resulting steam flow from the

inventory boil-off can prevent the coolant injection flow from reaching the lower portion of the fuel cladding assemblies. This phenomenon is of particular concern when inventory make-up is provided from ECC spray systems located in the upper plenum. Tests on a 30-degree sector of a BWR core (Reference 4-13) indicate that CCFL phenomenon is highly unlikely because:

- Much higher fuel channel steam flows are required to support CCFL with parallel flow channels than with single channels.
- As soon as the core spray water reaches the core exit, CCFL breaks down and is dispersed.
- Water level in the downcomer or bypass region reflects the state of the core during these conditions since the lower plenum level will not be influenced by the CCFL phenomenon occurring in the upper plenum region.

In conclusion, vessel water level is a good indication of the core state since core damage cannot occur during vessel flooding (Adequate Core Cooling) and water level measurements can be used to estimate peak fuel cladding temperatures.

4.3 Summary and Conclusions

The preceding sections have examined the sensitivity of the CPS WLMS instrumentation to variations in plant process or environmental conditions. Further information was provided to quantify the effects of instrument line flashing on instrument accuracy during vessel depressurization. The results of the sensitivity study can be used to estimate the total indication errors which can be expected during a given plant transient. The effects of variations in plant operating conditions on the accuracy of the WLMS instrumentation are illustrated below. Shutdown and upset range instrument errors are not included in the operating conditions examined since these instruments are not used to initiate/trip RPV protection systems or to detect the approach to or existence of ICC conditions. Section 5 will provide a detailed plant event analysis examining the response of the WLMS under transient and accident conditions.

Case 1

During normal plant operation, the following process and environmental conditions would be expected:

Reactor Pressure	= 1025 psig
Feedwater Inlet Temperature	= 420°F

Average Drywell Temperature	= 135°F
Average Containment Temperature	= 80°F
Rated Steam & Recirculation Flow	= 100%
Vessel Water Level	= Level 5 (normal level)

Under these plant conditions, the WLMS instrumentation indication errors would be as follows:

Narrow Range Instruments = Negligible error. Instrument calibration conditions exist (all divisions).

Wide Range Instruments = +18.4 inches due to the effects of the dryer pressure drop, and -11.0 inches due to jet pump suction effects, for a total error of +7.4 inches at rated conditions (all divisions).

Fuel Zone Range Instruments = Both divisions of fuel zone instrumentation will read full upscale due to the large jet pump discharge head and normal water level.

Case 2

If the vessel is in hot standby, the following conditions would exist:

Reactor Pressure	= 1025 psig
Vessel Recirculation Flow	= 30% of rated
Average Drywell Temperature	= 135°F
Average Containment Temperature	= 80°F
Vessel Water Level	= Level 5 (normal level)
Saturated Conditions Exist Throughout the RPV (no subcooling)	

Under these plant conditions, the instrument indication errors would be the following:

Narrow Range Instruments = A total error of -16.7 inches due to the dryer pressure drop (all divisions).

Wide Range Instruments = -3.0 inches due to subcooling effects, +1.7 inches due to the dryer pressure drop, and -1.0 inches due to the jet pump suction effects for a total error of -2.3 inches (all divisions).

Fuel Zone Instruments = -36.0 inches due to the jet pump head, +1.7 inches due to the dryer pressure drop, and -91.7 inches due to vessel density effects for a total error of-126.0 inches (both divisions).

If the vessel is fully depressurized when high drywell temperatures exist, flashing of the reference leg fluid inventory would produce large level indication errors. Under such conditions, evaluation of the indication errors must consider the contribution of both the non-flashing and flashing errors on instrument accuracy. Drywell temperature errors should be evaluated as part of the flashing error since the loss of the reference leg fluid inventory will greatly influence their magnitude as illustrated in Case 3 and Case 4 below.

Case 3

Should the vessel be depressurized, as a result of elevated drywell temperatures, the following vessel conditions could exist:

Reactor Pressure = 0 psig
Drywell Temperature = 212°F
Containment Temperature = 104°F
Vessel Water Level = level 5 (normal level)
Vessel Recirculation Flow = 30% of rated
Saturated Conditions Exist
Throughout the RPV (no subcooling)

Indication errors would be:

Narrow Range Instruments = +12.0 inches due to the reduction in vessel pressure, -16.7 inches due to the loss of the dryer pressure drop and +0.4 inches due to containment temperature effects. Non-flashing errors total -4.3 inches. Long term flashing errors could range from +130.6 to +175.8 inches. Loss of the drywell leg vertical drop fluid inventory results in drywell temperature errors as large as -3.8 inches producing a total cumulative error ranging from +122.5 to +167.7 inches. Therefore, all narrow range instruments could read full upscale following vessel depressurization.

Wide Range Instruments	=	+57.4 inches due to the reduction in vessel pressure, -3.0 inches due to the loss of subcooling, -1.7 inches due to the reduction in steam flow through the steam dryer, -1.0 inches due to jet pump suction flow, and +0.60 inches due to the containment temperature variation. Non-flashing errors total +52.3 inches. Long term flashing errors could range from +130.6 to +175.8 inches. Loss of the drywell reference leg vertical drop fluid inventory results in drywell temperature errors as large as -3.5 inches producing a total cumulative error ranging from +179.4 to +224.6 inches. Therefore, all wide range instruments could read full upscale following vessel depressurization.
Fuel Zone Range Instruments	=	Full vessel depressurization does not effect fuel zone instruments since calibration conditions exist. Negligible error due to the reduction in steam flow, -36.0 inches due to jet pump flow effects, and +1.50 inches due to containment temperature variations. Nonflashing errors total -34.5 inches. Long term flashing errors could range from +100.3 to +135.0 inches. Drywell temperature errors are negligible since fuel zone instruments are calibrated for 212°F drywell conditions. Fuel zone instruments should read full upscale due to normal RPV water levels and long term flashing errors.

Case 4

If the vessel is depressurized, and water level were to drop to level 1 with negligible natural circulation flow through the jet pumps, WLMS instrument errors would be:

Narrow Range Instruments = Water level is below the instruments variable leg tap. Long term flashing errors could range from +130.6 to +175.8 inches. Loss of the drywell reference leg vertical drop fluid inventory results in drywell temperature errors as large as -3.8 inches producing a total cumulative error ranging from +126.8 to +172.0 inches. Therefore, all narrow range instruments would read full upscale.

Wide Range Instruments = -6.0 inches due to vessel pressure effects, -3.0 inches due to loss of subcooling, and +0.60 inches due to containment temperature variations. Non-flashing errors could be expected to total -8.4 inches.

Long term flashing errors could range from +130.6 to +175.8 inches. Loss of the drywell reference leg vertical drop fluid inventory results in drywell temperature errors as large as -3.5 inches. Total cumulative errors could range from +118.7 to +168.7 inches. As a result, wide range instrument scale readings could range between -26.8 inches to +18.4 inches under these conditions.

Fuel Zone Range Instruments = Water level is above instruments full upscale reading. Large, positive magnitude, long term flashing errors would ensure that these instruments read full upscale.

The above examples illustrate how the results of the sensitivity analyses can be used to quantify CPS WLMS instrument indication errors. For normal plant operation (Case 1), the narrow range instrumentation provides

accurate indication of the vessel level. Negligible error will exist under full flow conditions. The primary contributor to narrow range water level error during normal plant operation will result from recirculation flow reductions. However, the direction of these errors will be conservative (i.e., low indication errors) as indicated in Figure 4-9 of section 4.1.1.5. Wide range instrument errors will be nonconservative during normal plant operating conditions as illustrated in Case 1. Instrument accuracy will be improved as the recirculation flow is reduced primarily due to the reduction in the pressure drop errors associated with the vessel steam dryer (Case 2). Fuel zone instruments will be of little value during the scenarios illustrated due to the large variation in the vessel conditions relative to the calibration state and the water level location relative to the instruments full upscale range.

If the vessel is depressurized when the drywell temperature is at or above the saturation temperature (212°F), the level monitoring capability of the WLMS instrumentation could be lost due to instrument line flashing as shown in Case 3. Case 4 demonstrates that as the vessel level approaches TAF, wide range level indication would be recovered. However, excessive high level indications would persist due to the loss of the drywell reference leg fluid inventory. Long term flashing errors are large due to the excessive reference leg drops within the drywell. Reference leg vertical drops range from 99 inches to as much as 134 inches for the wide, narrow and fuel zone range instruments. As a result, a large portion of the reference leg fluid inventory could be boiled-off and large indication errors introduced.

Should instrument line flashing occur, the fuel zone instruments could read as high as +135 inches. Errors of this magnitude could only be reached if the drywell temperature were allowed to remain at or above the saturation temperature of 212°F for an extended duration. This case is highly unlikely since the operator is instructed through the Clinton Emergency Operating Procedures (EOPs) to take actions to control drywell temperature. Further instruction is provided to flood the reactor vessel if reactor water level is indeterminant in an effort to prevent ICC conditions from occurring. Flooding of the vessel would reflood the reference leg instrument lines and assist in recovering the water level instrumentation. A more detailed discussion of the Clinton EOPs is provided in Appendix C.

The discussion presented in Section 4.2.1 concluded that water level, as measured in the downcomer region, will conservatively indicate the state of the core for events in which instrument line flashing does not occur. However, if elevated drywell temperatures persist and

flooding of the RPV is delayed by the operator, the fuel zone reference leg inventory in the drywell could be lost. At this point, large level indication errors would be introduced. Actual vessel level within the core could drop to 4.2 feet below TAF when the Division 3 fuel zone instrument indicates level to be +50 inches above TAF. At this level, Figure 4-15 indicates that a peak cladding temperature in the average fuel bundle would be below 700°F and therefore, no cladding damage would be expected. Accounting for long term flashing effects, core vulnerability would not occur until the fuel zone instrument indicated level dropped to between +23 inches above TAF (Division 4) to -12 inches below TAF (Division 3). At this point, peak cladding temperatures would exceed 1500°F and by definition ICC conditions would exist.

In conclusion, the Clinton water level measurement system will provide the operator with conservative indication of core conditions under most plant conditions provided indicated level is maintained at level 1 or above. Indication errors for nonflashing conditions proved to be relatively insignificant provided the instruments are used as intended. However, when conditions which can lead to instrument line flashing exist, large level indication errors can delay the automatic initiation of safety functions provided by the WLMS instrumentation. Large level indication errors can be avoided as long as instrument line flashing can be prevented. As a result of these errors, the operator requires EOPs to prevent the approach to ICC conditions. The magnitude of the long term flashing errors can be reduced if the drywell reference leg vertical drops are minimized. These modifications would then reduce the burden and reliance on the operators to mitigate the level transient.

4.4 References

4-1 General Electric Drawing No. 768E324AA, "P&ID Data; Nuclear Boiler System", Revision 1, March 23, 1984.

4-2 Clinton Power Station Design Criteria, Document No. DC-ME-09-CP, "Equipment Environmental Design Conditions," Revision 2, December 15, 1978.

4-3 SLI-8211, Review of BWR Reactor Vessel Water Level Measurement Systems, S. Levy, Inc., July 1982.

4-4 Illinois Power Company, Clinton Power Station Final Safety Analysis Report, Table 3.11-6, Amendment 27, October 1983.

4-5 Illinois Power Company, Clinton Power Station Final Safety Analysis Report, Table 3.11-5, Amendment 27, October 1983.

4-6 Letter from Brad Erbes (General Electric) to D. L. Holtzscher (IPC), dated January 11, 1984.

4-7 SLI-8211, Review of BWR Reactor Vessel Water Level Measurement Systems, Figure 5-7, S. Levy, Inc., July, 1982.

4-8 Record of Coordination No. Y-71641 documenting telephone conversation between J. F. Wakeland (IPC), K. Kumar and O. Foster (GE), dated March 15, 1984.

4-9 General Electric Report No. AE-10-0184, "Effects of Orifices in BWR Water Level Instruments", March 1984.

4-10 ANSI/ANS-5.1-1979, "American National Standard for Decay Heat Power in Light Water Reactors", August, 1979

4-11 G. L. Holloway and L. M. Shiraiski, Core Design and Operating Data for Cycle 3 of Peach Bottom 2, EPRI NP-971, April 1981.

4-12 General Electric Report NEDO-10174, Rev.1, "Consequences of a Postulated Flow Blockage Incident in a BWR", October, 1977.

4-13 General Electric Report NEDO-10208, "Effects of Fuel Rod Failure on ECCS Performance", August, 1978.

4-14 Illinois Power Company, Clinton Power Station Final Safety Analysis Report, Table 4.4-1, Amendment 27, October 1983.

4-15 Illinois Power Company, Clinton Power Station Final Safety Analysis Report, Table 1.3-1, Amendment 27, October 1983.

4-16 SLI-8218, Inadequate Core Cooling Detection in Boiling Water Reactors, S. Levy, Inc., June 1982.

4-17 Code of Federal Regulations; 10 CFR 50 Part 50, Section 46, December 14, 1982 and Appendix K, September 29, 1980.

4-18 General Electric Report NEDO-20355A, "The Effects of a Large Bundle Flow Area Restriction on the BWR Emergency Core Cooling Effectiveness", August, 1976.

TABLE 4-1

COMPARISON OF SELECT THERMAL AND HYDRAULIC DESIGN CHARACTERISTICS FOR THE BWR/4 AND BWR/6 SERIES REACTORS

	Peach Bottom[1] Unit 2 BWR/4	Clinton Power Station Unit 1 BWR/6
Vessel diameter (inches)	251	218
Fuel rod array	8x8	8x8
Number of fuel assemblies	764	624
Total core heat transfer area (ft^2)	74,871	61,151
Maximum fuel thermal output (Kw/ft)	13.4	13.4
Average fuel thermal output (Kw/ft)	5.38	5.70
Active core flow area per fuel assembly (in^2)	15.82	15.02
Total core pressure drop	24.74	25.3

1 Peach Bottom 2 design data was obtained from Reference 4-11. Clinton Station design data was obtained from References 4-14 and 4-15.

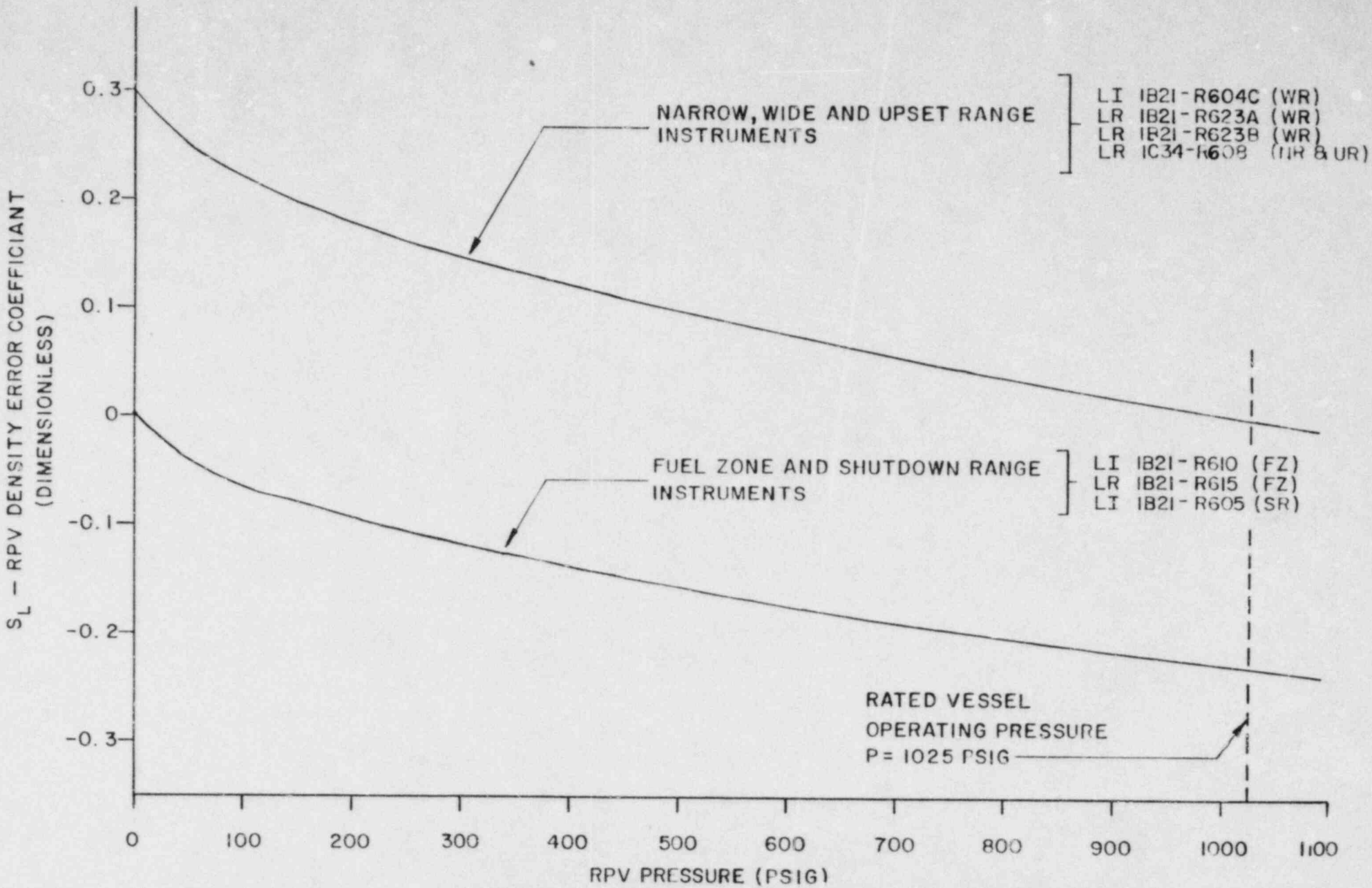

SENSITIVITY OF WATER LEVEL INDICATION
TO VARIATIONS IN REACTOR PRESSURE

FIGURE 4-1

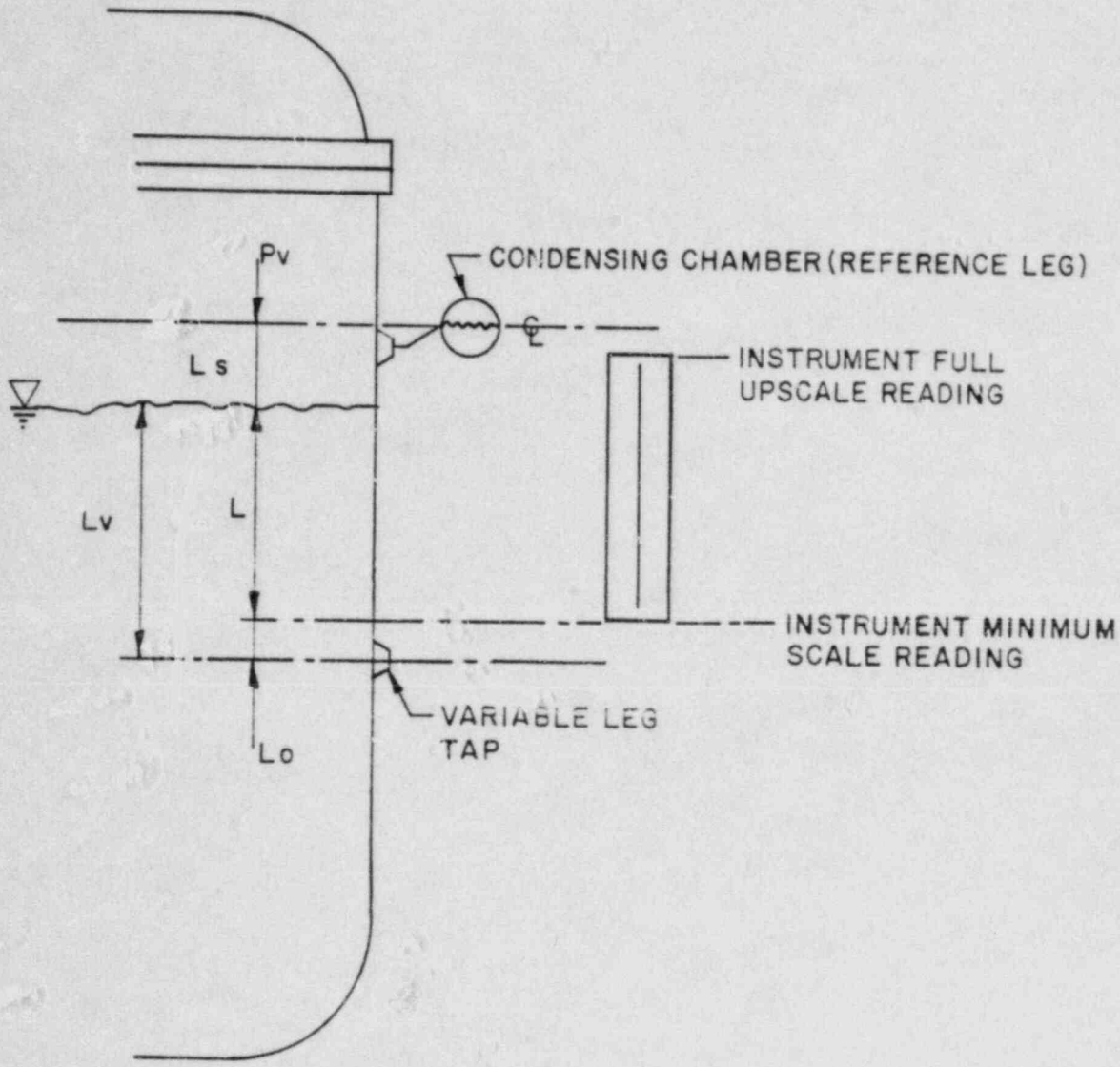

ORIENTATION OF WATER LEVEL INSTRUMENTATION
RELATIVE TO THE RPV INSTRUMENT TAPS

FIGURE 4-2

VESSEL WATER DENSITY EFFECTS ON INSTRUMENT ZERO OFFSET

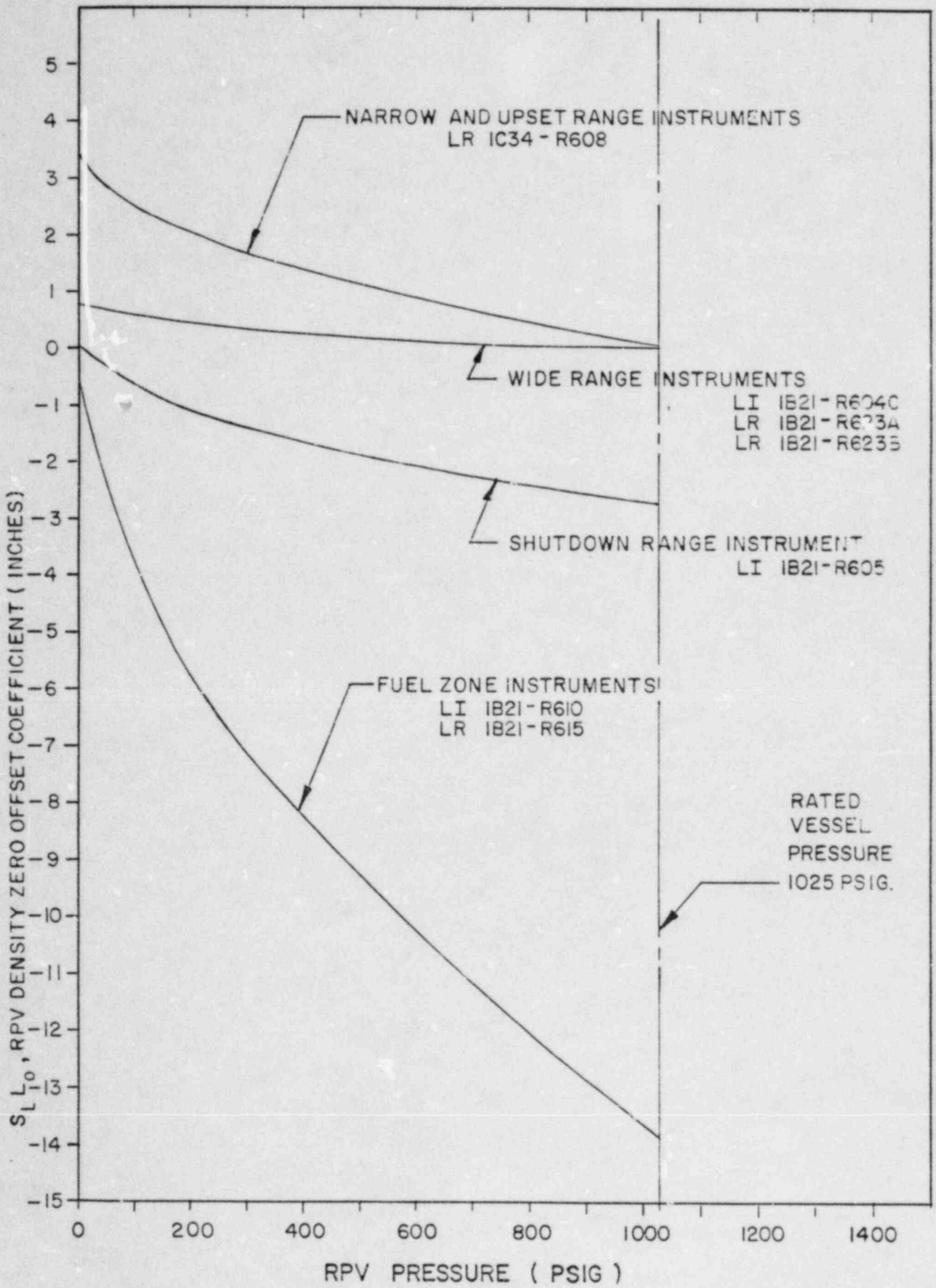

FIGURE 4-3

SENSITIVITY OF NARROW RANGE INSTRUMENT ZERO OFFSET ERROR TO DRYWELL TEMPERATURE VARIATIONS – ORIGINAL WLMS DESIGN

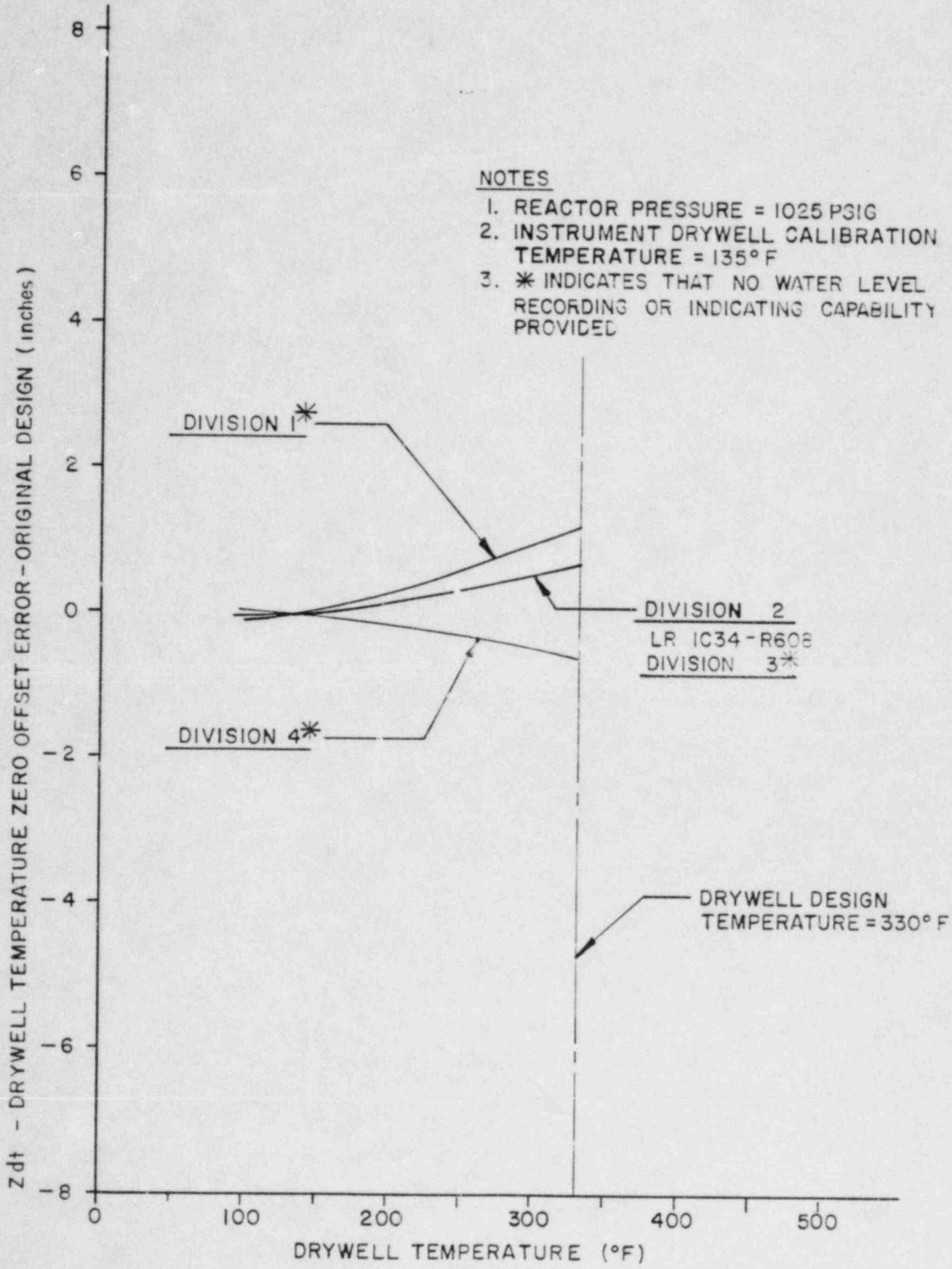

FIGURE 4 - 4

SENSITIVITY OF WIDE RANGE INSTRUMENT ZERO OFFSET ERROR TO DRYWELL TEMPERATURE VARIATIONS — ORIGINAL WLMS DESIGN

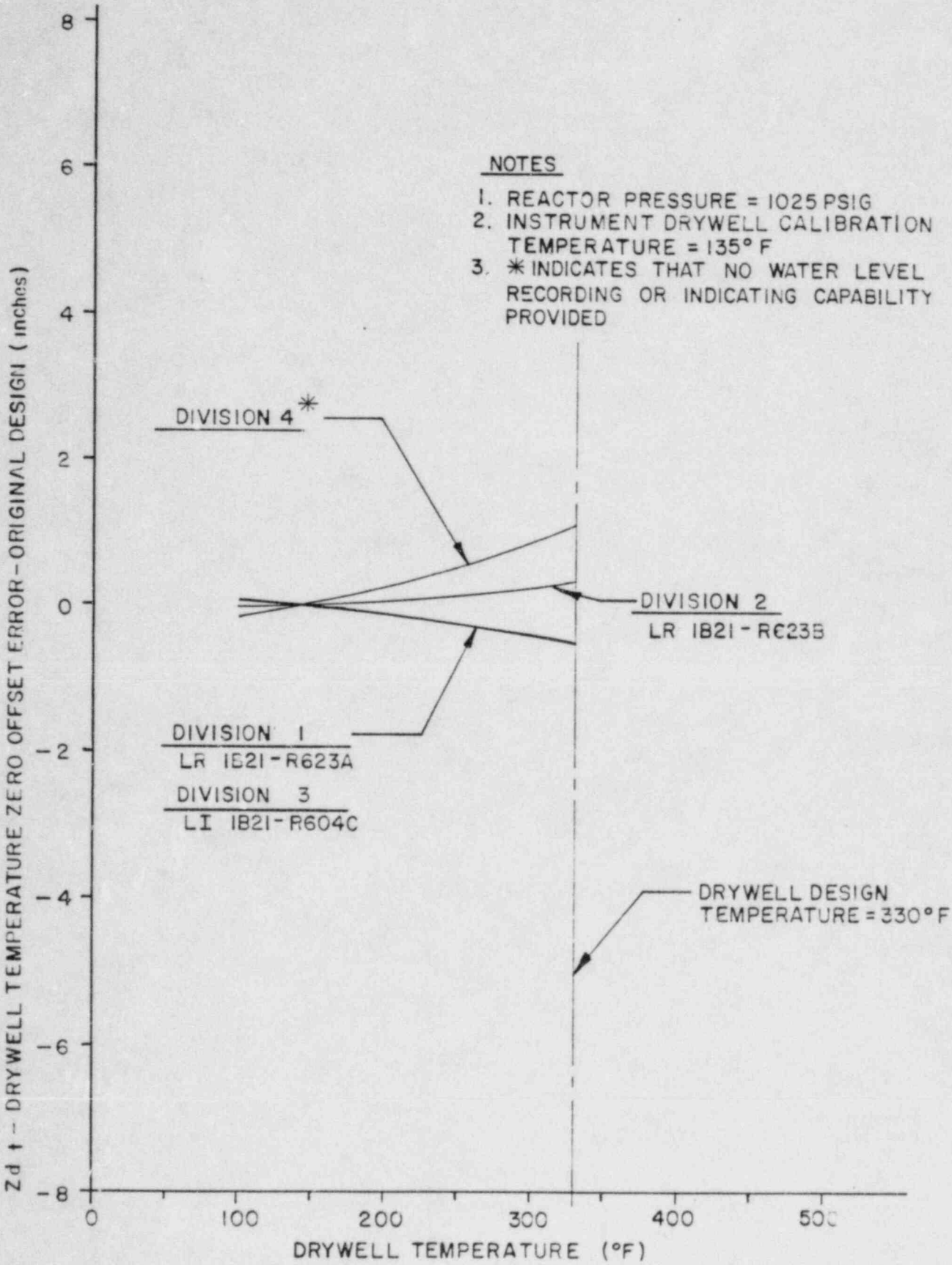

FIGURE 4-5

SENSITIVITY OF FUEL ZONE INSTRUMENT ZERO OFFSET ERROR TO DRYWELL TEMPERATURE VARIATIONS – ORIGINAL WLMS DESIGN

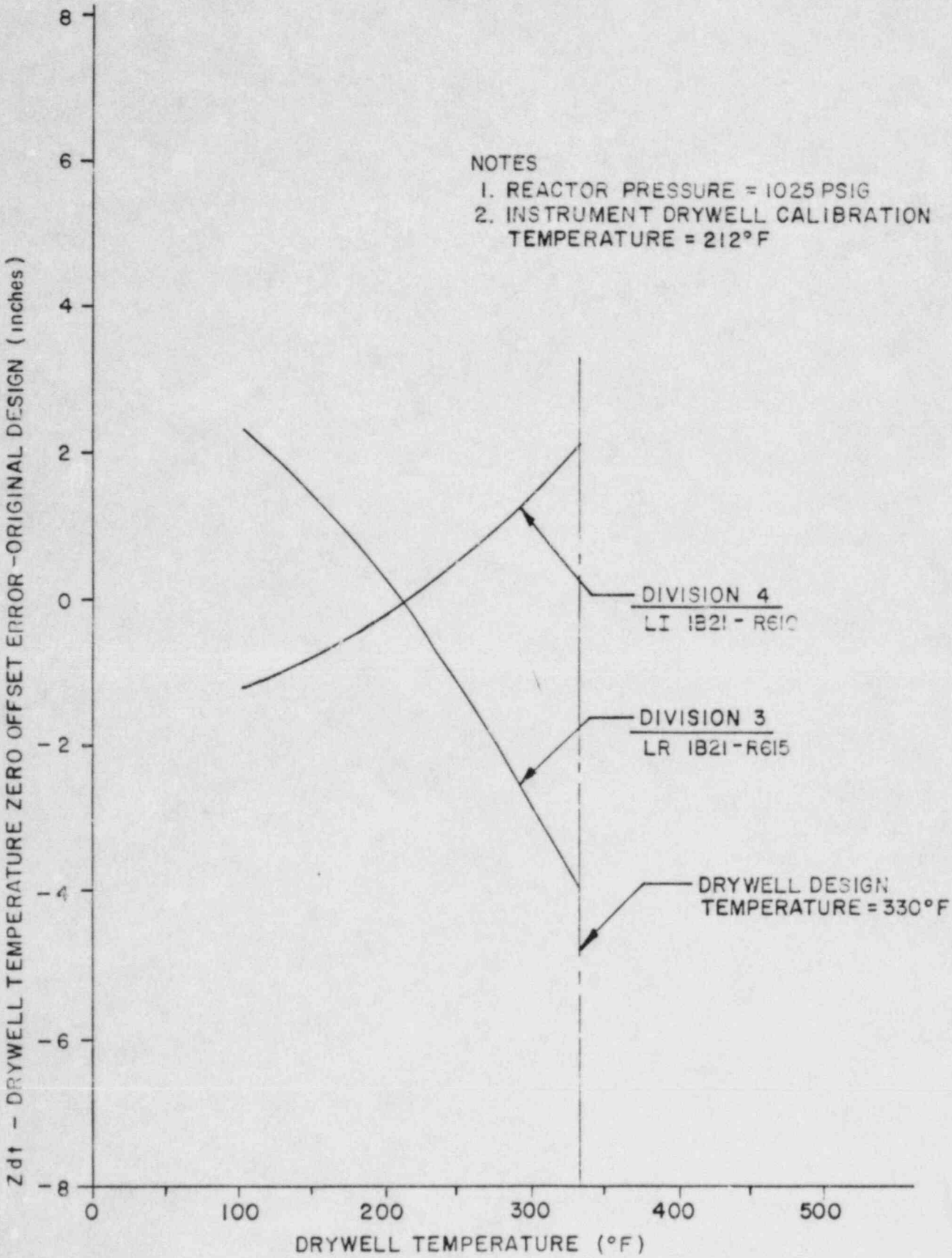

FIGURE 4-6

SENSITIVITY OF UPSET AND SHUTDOWN RANGE INSTRUMENTS ZERO OFFSET ERROR TO DRYWELL TEMPERATURE VARIATIONS - ORIGINAL WLMS DESIGN

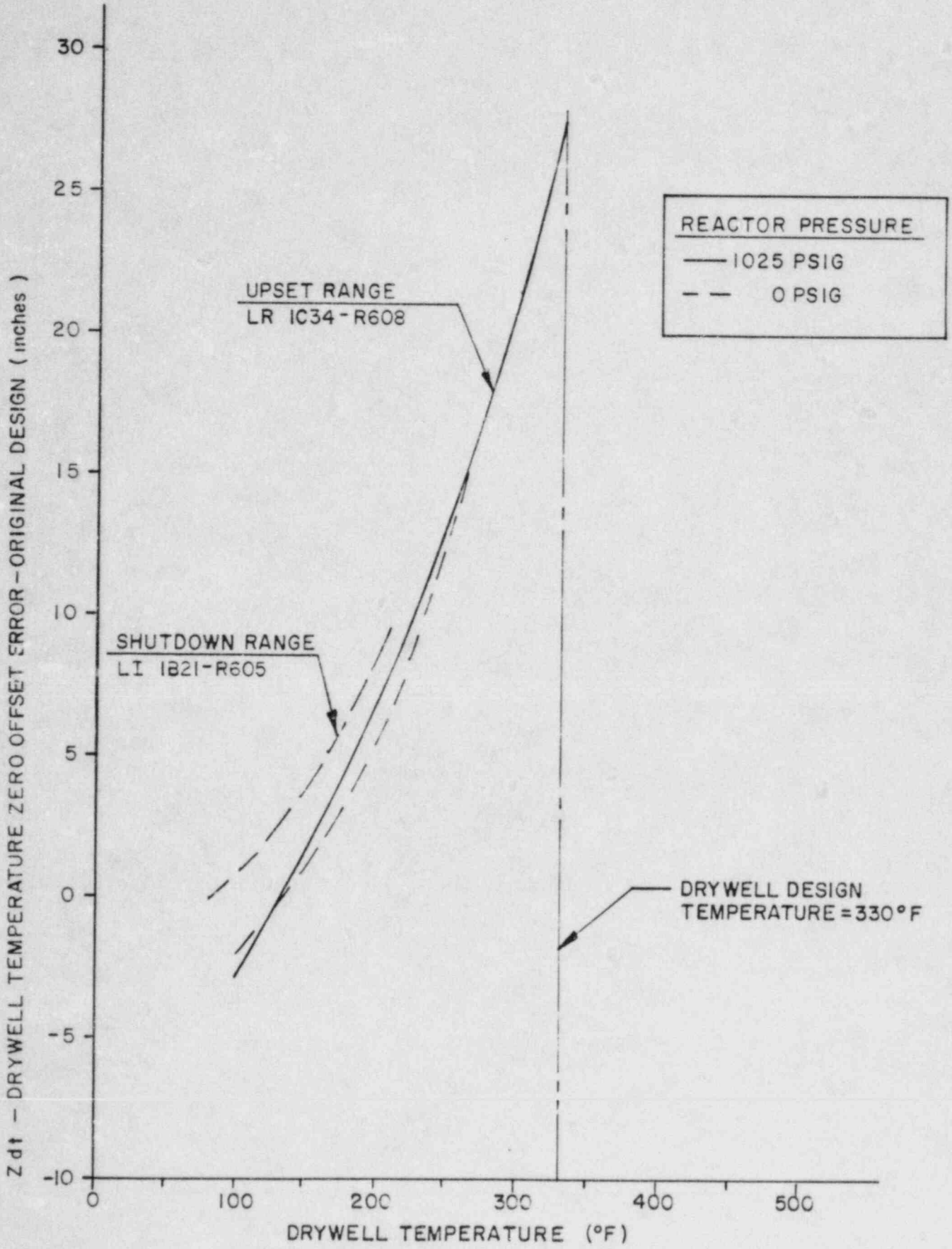

FIGURE 4-7

SENSITIVITY OF INSTRUMENTS ZERO OFFSET TO VARIATIONS IN CONTAINMENT TEMPERATURE - ORIGINAL WLMS DESIGN

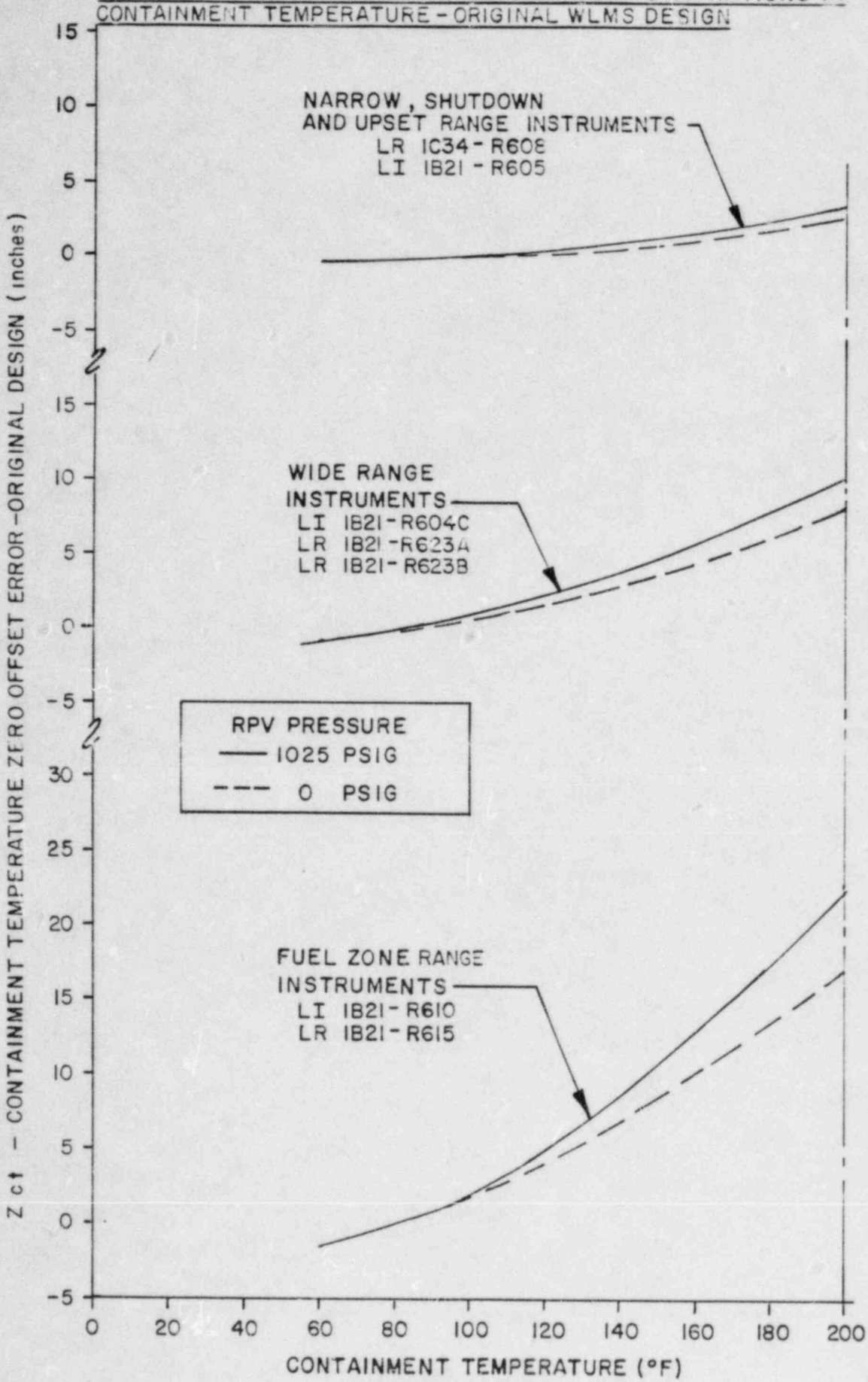

FIGURE 4-8

INSTRUMENT ERROR AS A RESULT OF STEAM AND RECIRCULATION FLOW

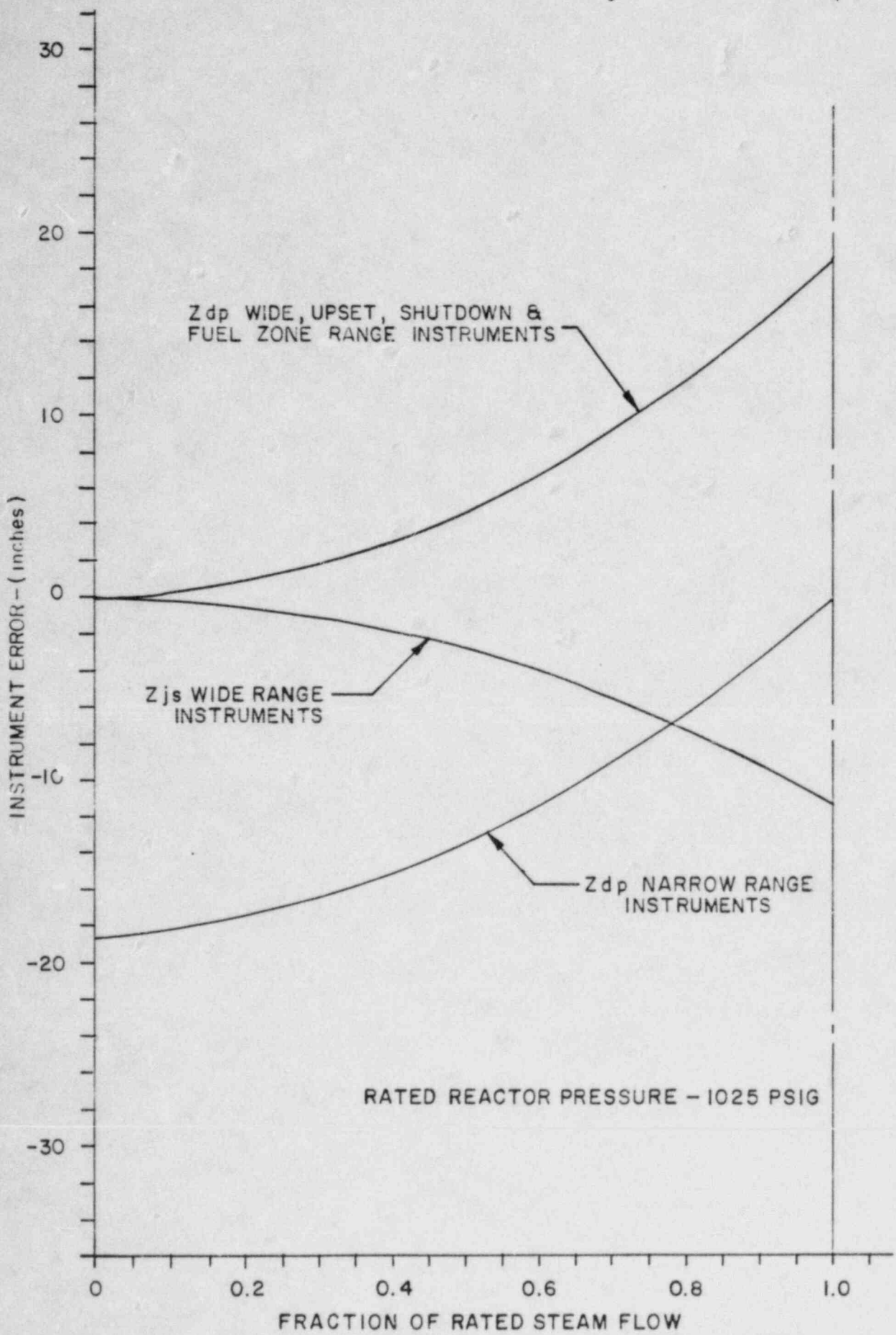

FIGURE 4-9

FUEL ZONE INSTRUMENT LEVEL ERROR DUE TO JET PUMP FLOW EFFECTS

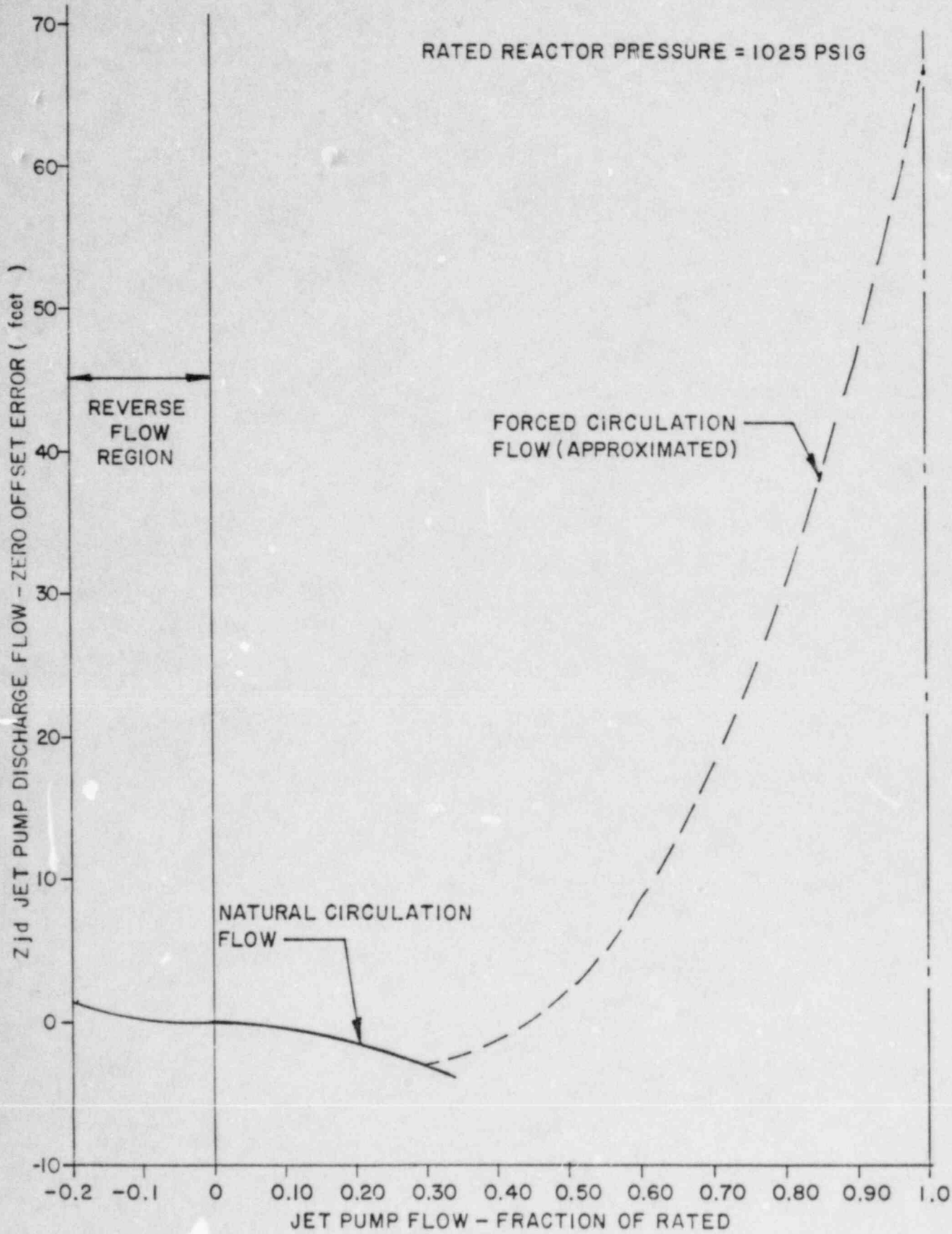

FIGURE 4-10

STEADY – STATE FLASHING ERRORS FOR THE NARROW AND WIDE RANGE INSTRUMENTS – ORIGINAL WLMS DESIGN

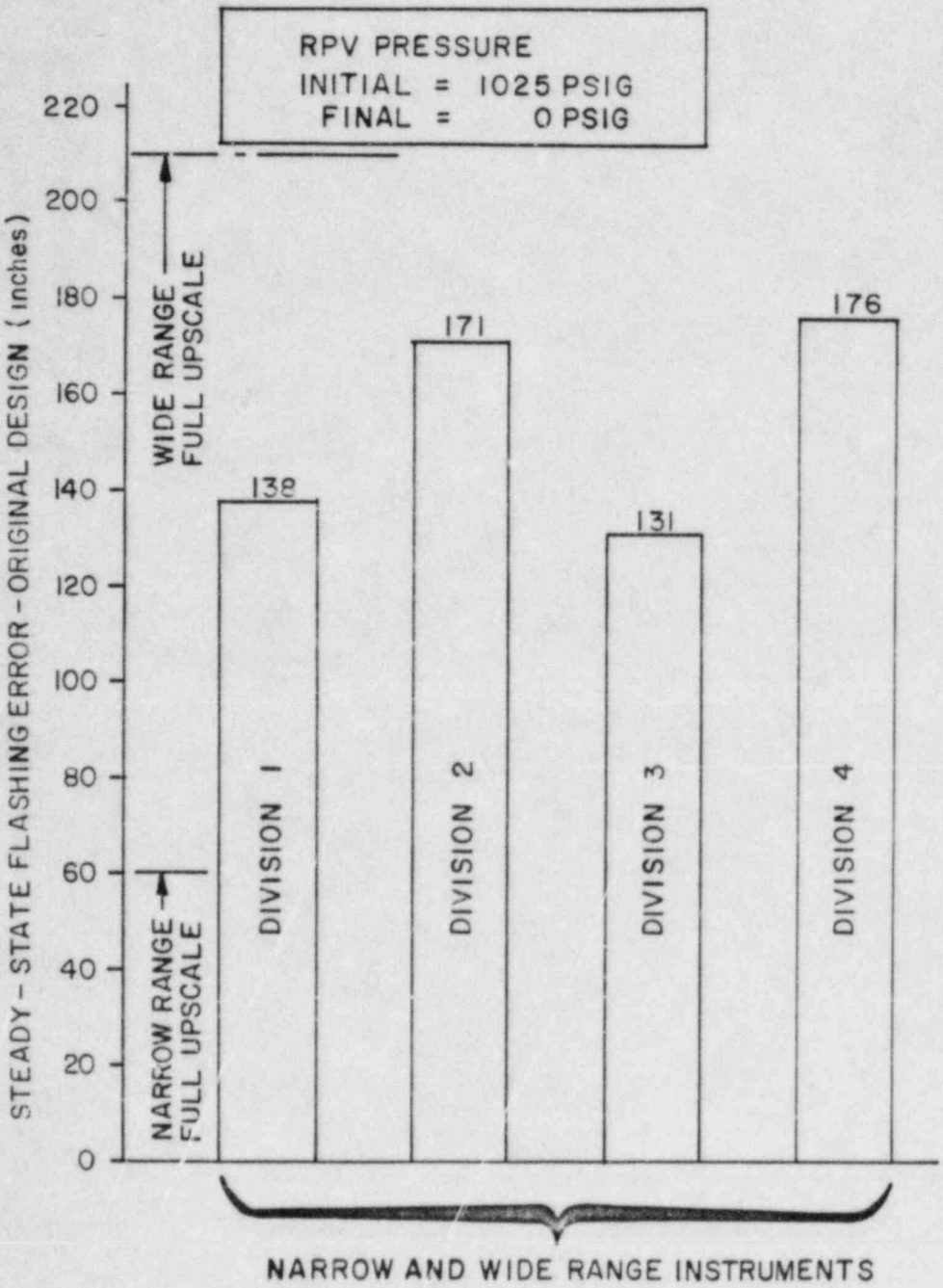

FIGURE 4-11

STEADY-STATE FLASHING ERRORS FOR THE FUEL ZONE, UPSET & SHUTDOWN RANGE INSTRUMENTS – ORIGINAL WLMS DESIGN

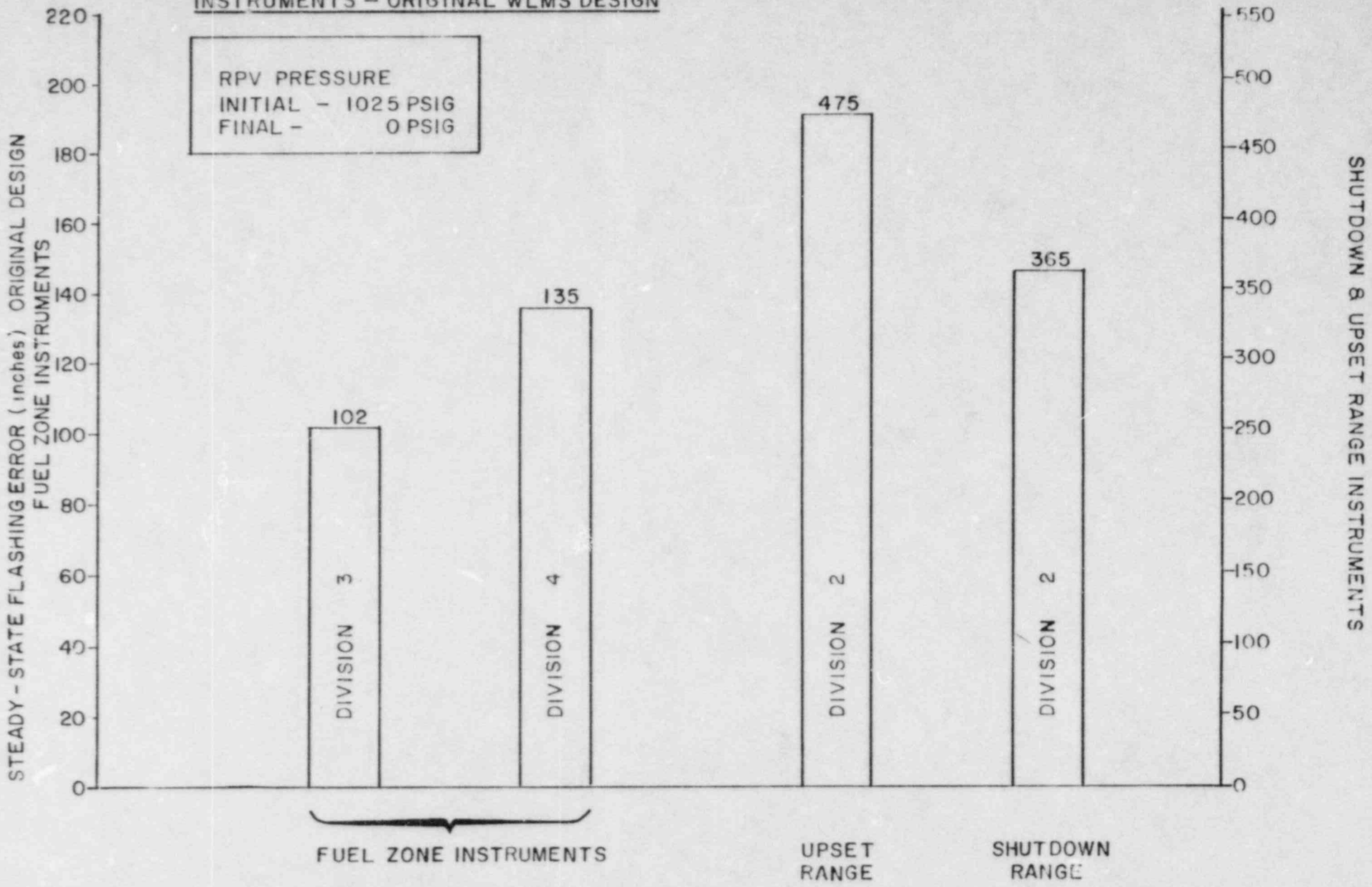

FIGURE 4-12

DECAY HEAT AND INTEGRATED HEAT DUMP TIME HISTORY FOLLOWING REACTOR SCRAM (REFERENCE 4-10)

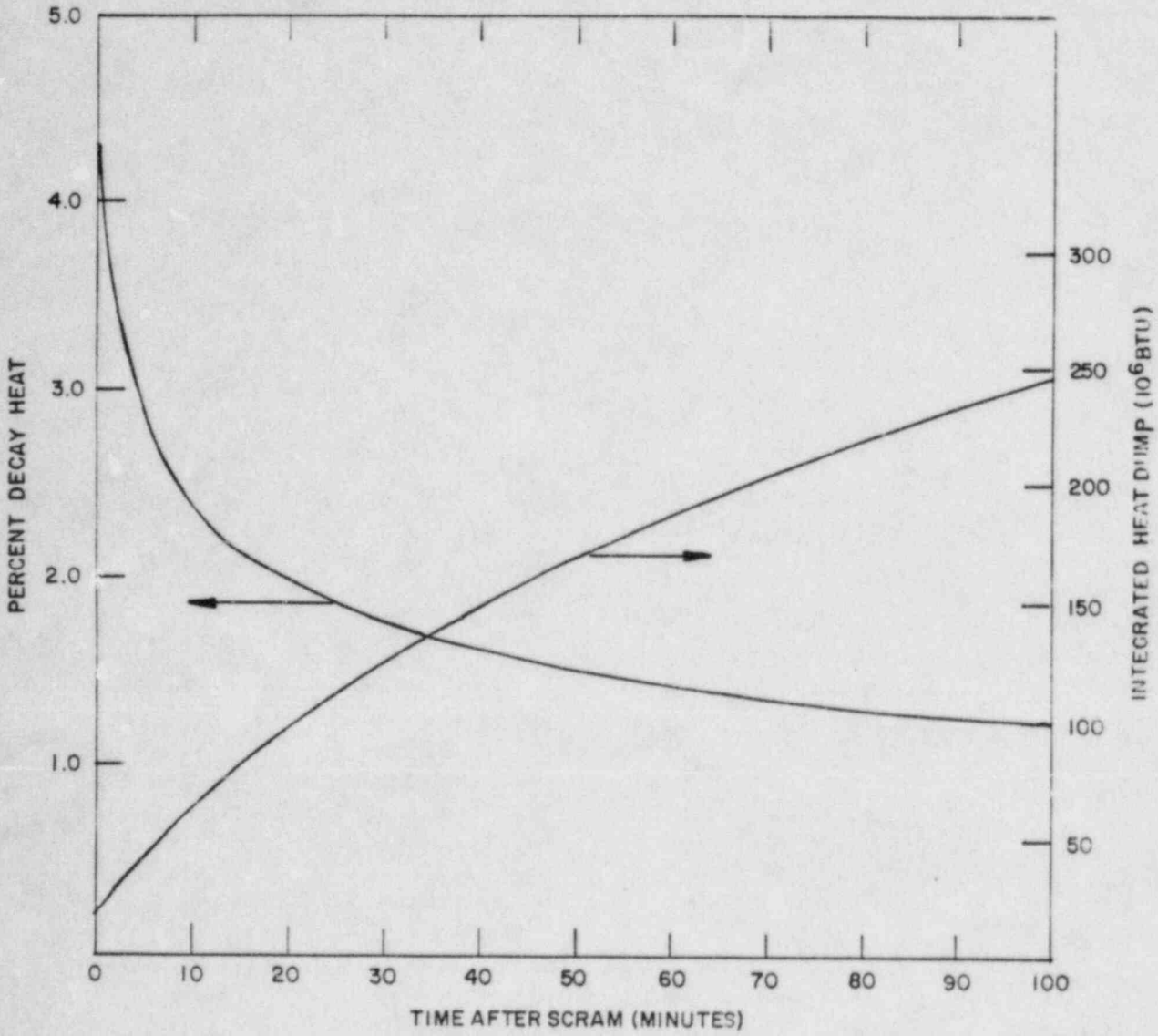

FIGURE 4-13

THE DOWNCOMER / BYPASS REGION WATER LEVEL TIME HISTORY DURING INVENTORY BOIL - OFF

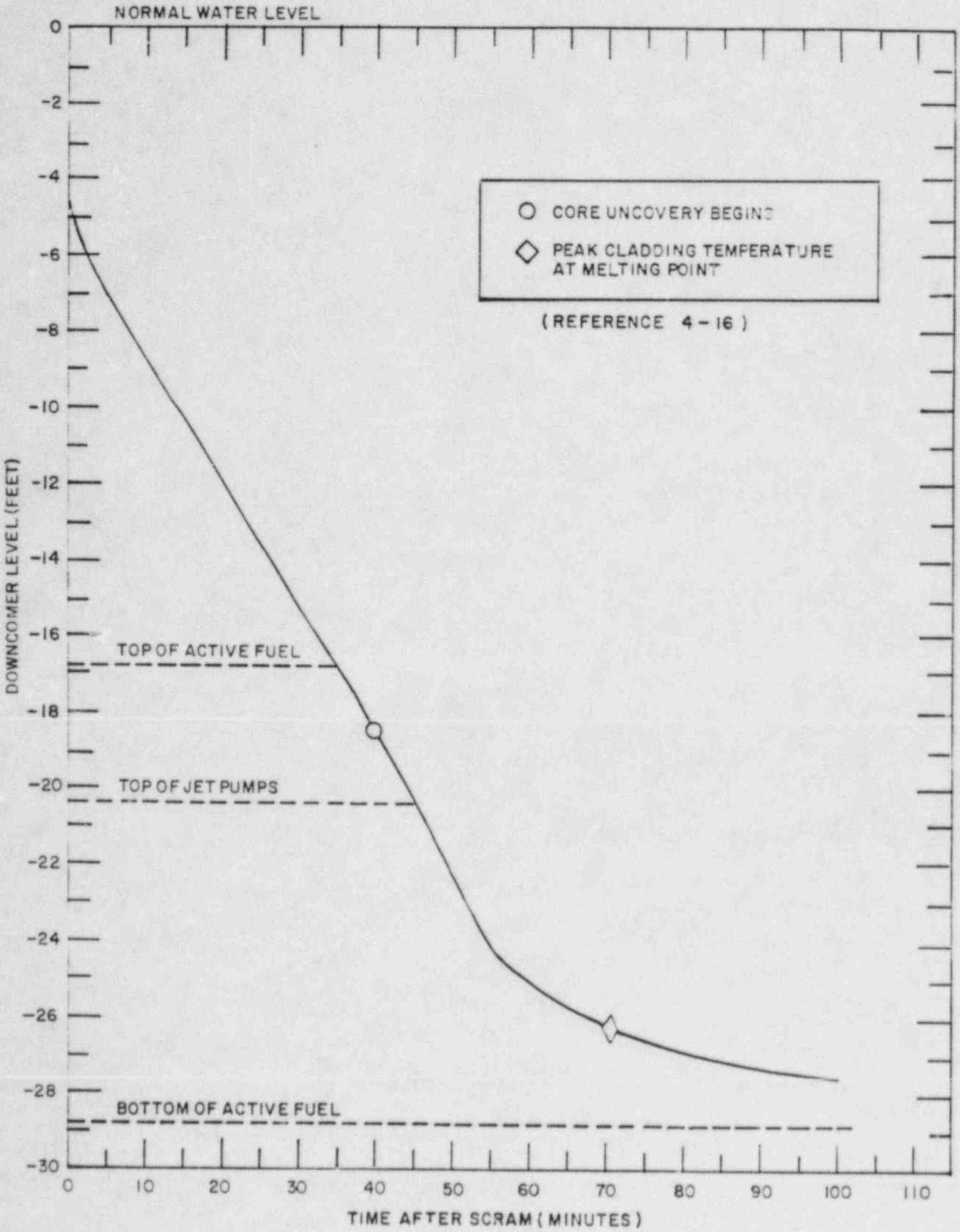

FIGURE 4-14

WATER LEVEL AS AN INDICATOR OF CORE OVERHEATING

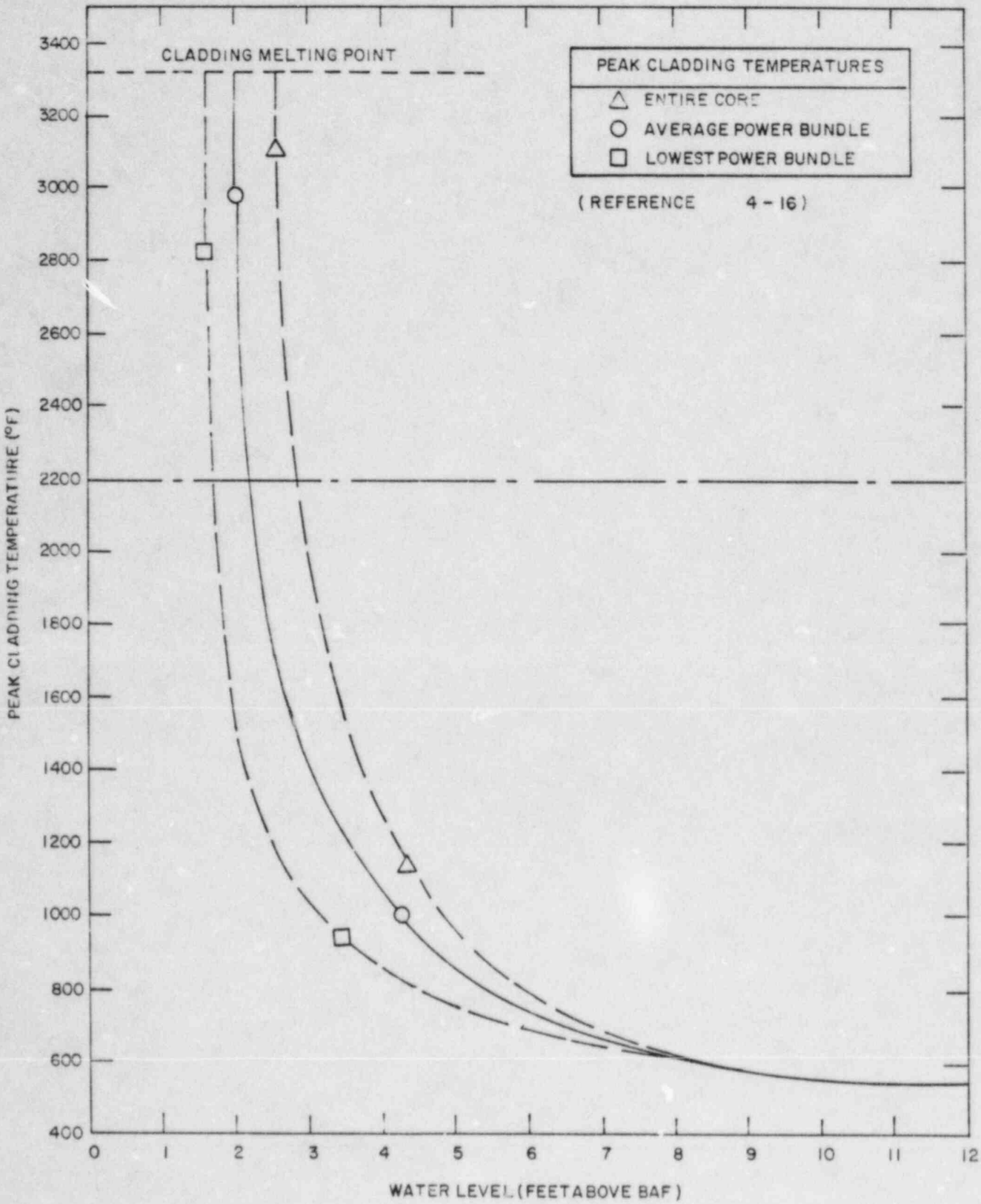

FIGURE 4-15

SECTION 5

CPS PLANT TRANSIENT AND ACCIDENT ANALYSIS OF WLMS AS ORIGINALLY DESIGNED

Section 5 presents an analysis of the interaction between plant events, the RPV WLMS as originally designed, and plant systems used to mitigate the events. As illustrated in Section 4, key parameters which directly affect sensed/indicated water level include drywell and containment temperature, RPV pressure and temperature, and recirculation/steam flow within the RPV. Section 4 also quantified errors in water level indication when the parameters deviate from calibration conditions during normal plant operation. This section addresses abnormal plant transient and accident events which can cause plant process and environmental parameters to significantly deviate from calibration conditions. The error relationships developed in Section 4 are used to estimate the relationship between actual water level and level sensed by the water level instrumentation at critical points in time for selected plant events. The capability of plant systems to respond to these events are then evaluated with respect to the goal of providing adequate core cooling.

5.1 Plant Transient Events

The review performed in Section 4 illustrated that concurrent high drywell temperature and low RPV pressure are required before level indication experiences significant degradation. Errors in sensed water level resulting from high drywell temperature alone are quite small. Peak drywell temperatures (330 °F) will produce errors ranging from -0.6 to + 1.2 inches for the narrow and wide range instruments when the RPV pressure is maintained at 1025 psig. In contrast, low RPV pressure can produce errors of 30 percent upscale in both the narrow and wide range instruments at normal drywell temperature (135 °F) and reactor water level. However, as the water level indication approaches the low end of the scale, the absolute value of the error is small. Eventually, the error will cause sensed water level to be lower than the actual water level. As an example, given the RPV is completely depressurized, drywell temperature is normal, and feedwater is tripped, wide range instruments would sense water level L1 (16.56 inches above TAF) when the actual water level is 23.2 inches above TAF. This can be demonstrated by summing $S_L L$ = +6.34 inches, $S_L L_0$ = +.78 inches, SsLs = -10.8 inches, and SscLsc = -3.0 inches for a total error of -6.68 inches. It is evident that sufficient water is provided for core cooling in this case. Therefore, reduced RPV pressure alone does not degrade the ability of the operator and automatic plant systems to maintain adequate core cooling.

If high drywell temperature and low RPV pressure were to occur concurrently, the total error is the sum of the two errors (i.e., drywell temperature plus RPV pressure effects) which could be quite large. Additionally, extreme combinations of low RPV pressure and high drywell temperature can cause flashing errors as described in Section 4. Therefore, plant transient events which create both conditions simultaneously are of the greatest concern.

Two initiating plant events have been identified which lead to the circumstances described above. They include: loss of drywell cooling and LOCA. The following subsections examine these initiating events and evaluate the ability of the Clinton WLMS to effectively respond.

5.1.1 Loss of Drywell Cooling

A loss of drywell cooling during normal plant operation will result in a rapid increase in drywell temperature and pressure which will, in itself, subsequently induce a reactor scram and shutdown of the reactor. If the operator depressurizes the RPV as part of the normal shutdown process, flashing of water within the instrument lines may occur given the elevated drywell temperature. Since there is no Clinton-specific drywell temperature response to loss of coolers available, the temperature response used in this analysis is based on typical BWR responses (Reference 5-1). It is expected that a Clinton-specific temperature response would be similar to the generic temperature profile.

The exponential temperature profile shown on Figure 5-1 represents a drywell thermal time constant of about $t \leq 10$ minutes and a maximum drywell temperature of 310 °F. The pressure response was determined using the temperature response and the ideal gas law at saturation conditions. The event evaluations assume that all trips successfully occur when sensed level is at a trip setting given in Table 3-2. Moreover, it is assumed that the thermal time constant for sense line heating is small when compared to the drywell thermal time constant. This assumption will generally give conservative results for drywell events in which the temperature increases.

5.1.1.1 Loss of Drywell Coolers Event Progression

Assuming loss of all drywell coolers, the narrow range transmitters will sense water levels higher than actual as a result of increasing drywell temperature. The feedwater control system will respond by decreasing feedwater flow until the narrow range instrument senses normal water level. Consequently, the actual water level will be lower than the water level indicated on the control room instrumentation.

For Clinton, scram and ECCS initiation signals will occur after the drywell pressure reaches the high drywell pressure set point of 1.68 psig. At this time, the drywell temperature will be approximately 200 °F per Figure 5-1. Since the RPV pressure is at operating conditions at this point in time, the absolute errors within the indicated water level resulting from high drywell temperature will be small. The Division 1 feedwater controlling transmitter will sense water level that is 0.3 inches higher (see Figure 4-4) than the actual water level. If either the Division 2 or 3 feedwater controlling transmitter is being used to control feedwater, the sensed level will be between 0.1 and 0.2 inches higher (see Figure 4-4) than the actual water level.

Correspondingly, the wide range instrumentation will be indicating water level that is approximately 7.3 to 7.7 inches higher than the actual water level. For example, the Division 1 wide range error can be found by summing Zdt = -.17 inches, Zdp = + 18.4 inches, and Zjs = -11.0 inches for a total error of + 7.3 inches. The fuel zone instruments will be reading full upscale until tripping of the recirculation pumps.

One of three possible general plant conditions could occur immediately after the scram signal. These conditions depend on the relative response rates of the instrumentation and equipment associated with the RPV pressure regulator and the feedwater control system. They are as follows:

A. Pressure regulator controlling RPV pressure: feedwater system tripped. This scenario occurs if the pressure regulatory response is fast and the feedwater system is slow. Subsequent to scram, the pressure regulator will reduce steamline flow by quickly reducing recirculation flow. The RPV pressure will decrease slightly but feedwater flow will remain high. The excess feedwater, in combination with the pressure decrease will cause the sensed water level to rise above the high level trip set point (Level 8) for feedwater pump, HPCS pump and RCIC pump. RPV pressure is maintained within the proper band by the pressure regulator and steam inventory is directed through the turbine bypass valves to the main condenser.

B. Pressure regulator controlling RPV pressure: feedwater maintaining level. This scenario occurs if the difference in response rates between the regulator and feedwater system is such that the sensed water level stays below the high level feedwater pump trip.

C. Vessel isolated. This scenario occurs if the response of the pressure regulator is slow enough to allow the steamline pressure to drop below the 849 psig MSIV closure set point prior to the operator switching from the run mode to the shutdown mode. Subsequent to MSIV closure, feedwater and main turbine trips and recirculation pump trips occur. The Safety Relief Valves (SRV's) maintain RPV pressure within the design limits of the RPV. RPV inventory will slowly be depleted through intermittent SRV action. The operator should take manual control of HPCS or RCIC to maintain level. HPCS and RCIC pump high level trip will occur if the operator fails to maintain water level below level 8 (L8).

As shown by the above three scenarios, the more challenging situation occurs when the vessel is isolated with loss of feedwater. Therefore, the following subsections evaluate water level measurement system performance with respect to this scenario. In the event that feedwater is or becomes available, errors in water level indication would be, at worst, no greater than that determined in the following subsections.

5.1.1.2 Shutdown Subsequent to Loss of Drywell Coolers and Feedwater

It is assumed that all feedwater pumps are tripped shortly after scram. Depending on the loss of feedwater scenario, HPCS and/or RCIC will be available for automatic initiation at the L2 setpoint. Additionally, the Emergency Operating Procedures instruct the operator to verify ECCS initiation. As the water level drops below 162 inches above TAF, the narrow range instruments will read full downscale.

Assuming RPV isolation and a 50% reduction of recirculation flow, the wide range instruments will sense L2 when the actual water level is approximately 2.1 inches lower than the L2 setpoint. As an example, the error for the Division 4 wide range instruments can be shown by summing $S_L L$ = + 4.5 inches, $S_L L_0$ = +.1 inches, SsLs = -1.7 inches, SscLsc = -3.0 inches, Zdt = +.25 inches, Zdp = +4.6 inches, and Zjs = -2.7 inches for a total error of +2.1 inches. If recirculation flow is less than 50%, correspondingly, the magnitude of the error will be less.

Automatic signals will initiate HPCS and/or RCIC at appropriate water levels at which time the fuel zone water level indicators will be upscale.

5.1.1.2.1 Normal Shutdown After Loss of Drywell Coolers and Feedwater

Clinton Emergency Operating Procedures (EOP) instruct the operator to quickly depressurize the RPV if drywell temperature cannot be maintained below design temperature (330 °F). This subsection assumes the operator elects to bring the reactor to cold shutdown using normal shutdown procedures (i.e., with an RPV cooldown rate of -100°F/hr). Initially, HPCS or RCIC is used to maintain RPV water level. When the RPV pressure drops to 135 psig (i.e., the RHR shutdown cooling mode interlock), the plant is placed in the shutdown cooling mode.

The water within the instrument lines will remain subcooled until the RPV pressure drops to a point where the instrument line fluid temperature is equal to the saturation temperature at the corresponding vessel pressure. For a drywell temperature of 310°F (see Figure 5-1), the corresponding pressure at saturation conditions is 63 psig. During depressurization, the operator is instructed by the EOP's to maintain water level between L3 and L8. For an L3 (170.96 inches above TAF) water level indication just prior to achieving 63 psig, the approximate actual water level above TAF for each instrument division is as follows:

	Div. 1	Div. 2	Div. 3	Div. 4
Wide Range	143.5"	143.0"	143.5"	142.2"
Narrow Range	182.9"	183.3"	183.3"	184.3"

As an example for the narrow range instruments, the combined error for Divisions 2 and 3 is $S_L L$ = + 5.20 inches, $S_L L_O$ = + 2.8 inches, SsLs = -2.48 inches, Zdt = +.65 inches, and Zdp = -18.5 inches for a total error of -12.33 inches. As an example for the wide range, the error for Division 1 can be found by summing $S_L L$ = +34.65 inches, $S_L L_O$ = +.65 inches, SsLs = -4.39 inches, SscLsc = -3.0 inches, and Zdt = -.45 inches for a total error of +27.46 inches. Inadvertent isolation of the RHR system is prevented and adequate water level is assured by maintaining water level indications between L3 and L8 via the narrow range or wide range instrumentation. Wide range and fuel zone instrumentation will read upscale if the narrow range water level indications are maintained at L3 or higher. If L3 is maintained on the wide range instruments, narrow range indications will be downscale.

If the RPV pressure is allowed to drop below 63 psig, transient flashing within the instrument lines will occur. As described in Section 4, errors as large as +72.0 inches could be introduced into the water level indications as a result of transient flashing. However, water levels would be sufficiently above TAF given an L3 indication via narrow or wide range water instruments. For example, given complete RPV depressurization and transient flashing, an L3

wide range indication would ensure that the actual water level is approximately 83 inches above TAF. As an example, this can be shown for the Division 4 instrument by summing $S_L L$ = +24.6 inches, $S_L L_O$ = +.78 inches, SsLs = -7.7 inches, Zdt = +.6 inches, SscLsc = -3.0 inches, and the transient flashing error of +72 inches for a total error of +87.28 inches. Additionally, the sudden rise of the water level indication resulting from the flashing would be noticed by the operator since no inventory change is expected during shutdown cooling conditions. Operator training and EOPs allow for quick identification of potential flashing conditions.

In the event that the depressurization continues without reduction of high drywell temperature, subsequent steady state flashing errors could be introduced into sensed water level in the long term. As shown in Figure 4-11, the bounding subsequent flashing error for the wide range instruments could be as high as +176 inches. For the fuel zone instrumentation, the subsequent flashing error could be as high as +135 inches. When taking into account negative errors which also exist under these conditions, use of the wide range instrumentation to maintain indicated water level at L3 will assure that the core is covered with water. As an example, this can be shown for Division 4 instruments by summing $S_L L$ = +1.4 inches, $S_L L_O$ = +.78 inches, SsLs = -11.6 inches, SscLsc = -3.0 inches, Zdt = +.6 inches, and the subsequent transient flashing error of +176.0 inches for a total net error of +164.2 inches. It is noted that Zdt is actually a negative error after complete flashing of the reference leg inventory. The value used (Zdt = +0.6 inches) in the above summation represents the worst case assuming the reference leg inventory has not flashed. However, the change in magnitude is small when comparing the two values. Therefore, the change was conservatively ignored in the above summation and in subsequent error summations which include the Zdt and steady-state flashing errors. Both the narrow range and fuel zone range water level indicators would read upscale.

5.1.1.2.2 Shutdown with ADS (Loss of HPCS/RCIC)

In the unlikely event that both HPCS and RCIC are unavailable, the RPV must be quickly depressurized so that low pressure makeup water can be injected into the vessel. Assuming no initial action by the operator, the water level will drop to L2 (116.56 inches above TAF) within 12 seconds. As discussed in Subsection 5.1.1.2., wide range water level indications will remain within two inches of the actual water level for this time period. Upon a L1 water level indication, the actual water level will be approximately 8 inches above TAF. Automatic ADS initiation based on RPV water level will, therefore, be successful. Once ADS is initiated, the RPV pressure will drop with an exponential decay. Upon reaching 135 psig, the depressurization of the RPV is stopped by the operator and injection via LPCI/LPCS is initiated. Thus flooding of the RPV is accomplished.

Having established low pressure injection, the operator is to maintain water level between L3 and L8 as directed by the Clinton Level Control Emergency Operating Procedure. In the event that the operator were to allow the RPV pressure to drop below 63 psig, short-term transient flashing and subsequently long term flashing errors could be introduced into the indicated water levels. As described in the previous subsection, the maximum short-term transient flashing error is +72 inches. Therefore, during transient flashing, the wide range instruments will read, at worst, 73 inches high given an L2 level indication after considering all applicable error effects. As an example, the error for the Division 4 instrument can be found by summing $S_L L$ = +12.42 inches, $S_L L_Q$ = +.78 inches, SsLs = -9.76 inches, Zdt = +.6 inches, SscLsc = -3.0 inches, and the transient flashing error of +72.0 inches for a total error of +73.04 inches.

If complete boil-off of the instrument line fluid is allowed, maintaining an L3 indication on the wide range instruments for the long term, when taking into account negative errors which also exist under these conditions, would assure that the core was covered. As an example, the error for the Division 4 instrument is determined by summing $S_L L$ = +1.4 inches, $S_L L_Q$ = +.78 inches, SsLs = -11.6 inches, Zdt = +.6 inches, SscLsc = -3.0 inches, and the subsequent flashing error of +176 inches for a total error of +164.2 inches. Maintaining an L8 wide range water level indication would assure that the actual water level is 38 inches above TAF. As an example, the Division 4 instrument error is found by summing $S_L L$ = +10.98 inches, $S_L L_Q$ = +.78 inches, SsLs = -10.00 inches, Zdt = +.6 inches, SscLsc = -3 inches and the subsequent flashing error of +176.0 inches for a total error of +175.36 inches. In addition, the Division 3 fuel zone indicator will remain upscale until the water level drops approximately 49 inches below TAF. The error for the Div.3 fuel zone instruments was found by summing Zdt = -3.2 inches and the steady state flashing error of 102 inches for a total error of +98.8 inches. The Division 4 fuel zone instrument will remain upscale until the water level drops approximately 87 inches below TAF. This was determined by summing Zdt = +1.8 inches and the steady state flashing error of +135 inches for the Division 4 fuel zone instruments.

If the operator had originally allowed the ADS to quickly reduce RPV pressure below 63 psig, the same scenario would develop with respect to transient flashing errors. The narrow range instruments, though, would be downscale as a result of the water level dropping below the variable leg taps. Indications would remain downscale until makeup water is provided filling the RPV above the narrow range variable leg tap. As noted above, the worst case transient flashing error is +72 inches. The core would be covered during the initial stages of flashing as long as wide range instrumentation indication was greater than 73" above TAF. As an

example, the error for the Division 4 instrument can be found by summing $S_L L$ = +12.42 inches $S_L L_O$ = +.78 inches, SsLs = -9.76 inches, Zdt = +.6 inches, SscLsc = -3.0 inches, and the transient flashing error of +72.0 inches for a total error of +73.04 inches. Fuel zone indications would be upscale until the water level drops approximately 25 inches below TAF. This can be shown for the Division 3 fuel zone instrument by summing Zdt = +2.0 and the transient flashing errors of +72.0 inches for a total of +74.0 inches. Since Zdt = -3.9 inches for the Division 3 reference leg, its total error will be less, equaling +68.1 inches. If at this point the operator cannot determine actual water level, the EOPs instruct the operator to disregard level indications and use all possible means to flood the vessel to provide adequate core cooling.

5.1.2 Shutdown Subsequent to LOCA

5.1.2.1 Shutdown Subsequent to Small Break LOCA

Subsequent to a small line break, the drywell temperature will reach 330 °F within 45 seconds. Additionally, the containment temperature will reach 185 °F within 10 minutes. Upon receiving the high drywell pressure signals, the operator is directed to depressurize the RPV and flood the vessel after scram. However, as was the case for the loss of drywell cooling event, the operator may elect to use normal shutdown procedures to mitigate the accident. At this point in the event, HPCS and/or RCIC would be either automatically initiated or manually controlled to maintain RPV inventory. Since the RPV is near normal operating pressure, errors in sensed water level resulting from elevated drywell temperature will be small. However, errors resulting from elevated containment temperature will become significant. After 10 minutes of LOCA, the wide range instrumentation will read approximately 8.1, 8.7, 8.1, and 9.6 inches higher than actual water level for Divisions 1, 2, 3, and 4, respectively. As an example, the error for the Division 1 instrument can be found by summing Zdt = -.45 inches and Zct = +8.5 inches for a total error of +8.1 inches. Since recirculation has stopped, narrow range instrumentation Divisions 1, 2, 3, and 4 will read 14.3, 14.9, 14.9, and 16.1 inches lower, respectively, than the actual water level. As an example, the errors for the Division 1 instruments can be found by summing Zdt = +1.2 inches, Zct = +3.0 inches, and Zdp = -18.5 inches for a total error of -14.3 inches.

If the operator does not follow the EOPs and allows the RPV pressure to drop below 88.3 psig (saturation pressure corresponding to 330 °F drywell temperature), transient flashing errors could occur causing the sensed water levels to increase. In addition, the potential for steady-state flashing errors could exist. For a narrow or wide range L3 water level indication just prior to achieving 88 psig, the actual water levels will be approximately 1.5 and 4.4 inches

lower, respectively, than that identified for the loss of drywell coolers event described in Subsection 5.1.1.2.1. For example, the Division 4 narrow range instrument error can be found by summing $S_L L$ = +4.7 inches, $S_L L_Q$ = +2.8 inches, SsLs = -2.5 inches, Zdt = -.6 inches, Zct = +2.3 inches, and Zdp = 18.5 inches for a total error of -11.81 inches. Therefore, the actual water level is 182.8 inches above TAF given the L3 indication. From subsection 5.1.1.2.1, the corresponding error during the loss of drywell cooler event is +12.3 inches, thus the difference is 1.5 inches. During transient flashing, wide range instrumentation will sense L2 when the actual water level is 38 inches above TAF. This can be verified by examining the Division 4 instrument as an example. The total error can be found by summing $S_L L$ = +8.2 inches, $S_L L_Q$ = +.6 inches, SsLs = -9.4 inches, SscLsc = -3.0 inches, Zdt = +1.1 inches, Zct = +8.5 inches, and the transient flashing error of +72 inches for a total error of +78.0 inches. When the actual water level drops below the narrow range variable leg taps, the narrow range indicators will read downscale. After total boil-off of the reference leg fluid, the long term steady state errors will cause the narrow range instruments to read upscale and the wide range instruments to read 170.5 inches high for an L3 indication. This can be shown for all four wide range instruments by summing $S_L L_Q$ = +.8 inches, SsLs = -11.8 inches SscLsc = 3.0 inches, Zct = 8.5 inches and a subsequent flashing error of +176 inches for a total error of 170.1 inches. Therefore, by maintaining at least an L3 indication on any one wide range indicator, it can be assured that the core is covered. If all wide range instruments are kept upscale, it can be assured that the actual water level is, at least, approximately 32 inches above TAF. This can be shown for all four wide range divisions by summing $S_L L$ = +9.24 inches, $S_L L_Q$ = +.8 inches, SsLs = -10.3 inches, SscLsc = -3.0 inches, Zct = +8.5 inches, and the subsequent flashing error of 176 inches for a total error of +181.2 inches. If the operator allows the water level to drop to L3, core uncovery could occur.

In the unlikely event that HPCS and RCIC were unavailable at the onset of the event, the level will drop until ADS is initiated at L1. Considering the errors produced by the elevated drywell and containment temperature, ADS would be initiated when the actual water level is approximately eight inches below L1 which is acceptable. As an example, the error for the Division 1 instrument can be found by summing Zdt = -.4 inches and Zct = +8.5 inches for a total error of +8.1 inches. At this time, the operator will initiate the low pressure injection systems to flood the RPV. If during depressurization, the operator allows the RPV pressure to drop below 88.3 psig, flashing errors in water level indication will occur as quantified above for normal shutdown scenario.

5.1.2.2 Shutdown Subsequent to Large Break LOCA

A large steam line break (e.g., main steam line) will cause the RPV to depressurize quickly. The drywell temperature will rapidly rise, peaking at 330 °F within 1.5 seconds, then drop to 250 °F within one hour. As for a the small break LOCA, the containment will peak at 185 °F within 10 minutes. Since the transient is so rapid, the instrument lines will not be affected by the increased drywell and containment temperatures during the initial stages of the event. As a result, all necessary water level trips initiating ECCS will occur as the water level rapidly drops. If the RPV pressure drops below 88.3 psig, transient flashing will begin producing errors in indicated water level. These errors would essentially be the same as quantified for small LOCA. The long term steady-state errors will also be the same except that boil-off will occur much faster. Long term core cooling would be assured by maintaining any one of the wide range indicators at L3.

5.2 Summary

The evaluation shows that the CPS WLMS, as originally designed, will provide adequate water level indications at the onset of an abnormal event. Additionally, the WLMS will provide adequate water level indications if the RPV pressure is maintained above saturation pressure subsequent to an abnormal event. However, if the RPV pressure is allowed to drop below 88.3 psig after a LOCA, or 63 psig after loss of drywell coolers, significant errors would be introduced into water level indications as a result of flashing in the instrument lines. During the transient phase of flashing, adequate water level indication would be provided by the WLMS assuring core coverage. However, the evaluation shows that after total boil-off of the reference leg fluid, the WLMS would allow the water level to drop considerably below TAF without providing ECCS initiation signals. Therefore, operator actions would be required to assure proper ECCS initiation. In addition, operator action would be required to ensure that the water level was always maintained above TAF during the recovery period after boil-off of the reference leg fluid. To be certain that the core was covered after any abnormal event, the operator would have to maintain wide range indicators at L3 or higher. Since there are numerous other activities the operator is performing during recovery, adequate core cooling would become subject to potential operator error.

Therefore, it was determined that the original WLMS would require modifications as a result of the significant errors summarized above. The WLMS, as originally designed, would provide adequate indications and initiate the required ECC function for the short-term, subsequent to an abnormal

event. However, the WLMS cannot assure long-term water level indications and ECCS initiation following total flashing of fluid in the reference legs. WLMS modifications have been incorporated which alleviate the problems described above. These modifications are presented and described in Section 7.

The following section provides a failure analysis of the CPS RPV water level measurement system.

5.3 References

5-1 SLI-8211, Review of BWR Reactor Vessel Water Level Measurements, S. Levy, Inc., July 1982.

DRYWELL TEMPERATURE AND PRESSURE RESPONSE AFTER LOSS OF DRYWELL COOLERS
(Reference 5-1)

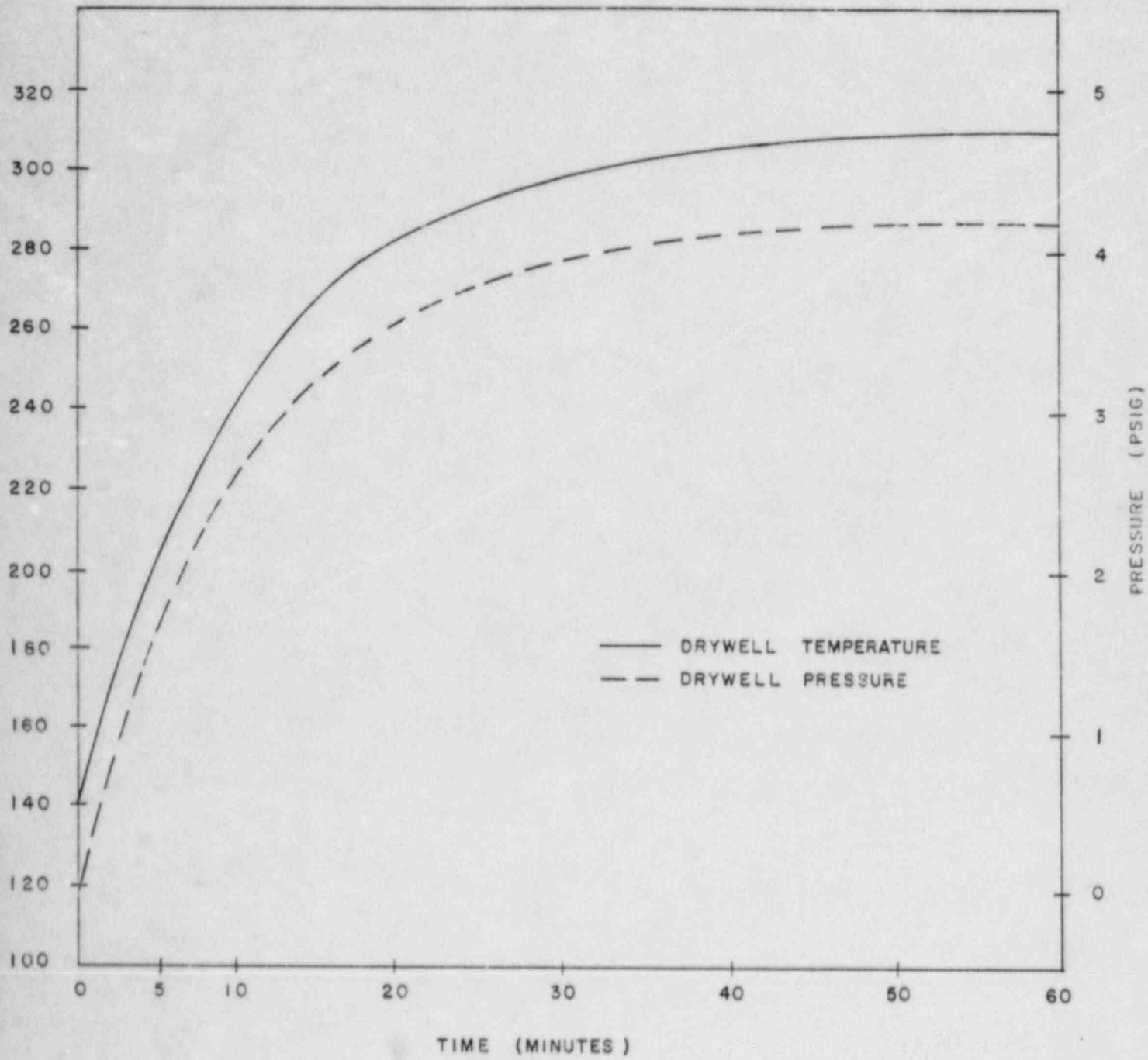

FIGURE 5-1

SECTION 6

FAILURE ANALYSIS OF CPS WLMS

This section presents a failure analysis of the Clinton RPV WLMS. Instrument elementary drawings were reviewed in detail to determine the basic logic of plant safety systems affected by the WLMS. Logic diagrams were created to illustrate the interconnections of reference legs, water level transmitters, and buses required to initiate plant safety systems via RPV water level inputs. Safety systems evaluated in this section include the Reactor Protection System (RPS), High Pressure Core Spray (HPCS) system, Reactor Core Isolation Cooling (RCIC) system, Low Pressure Core Spray/Injection (LPCS/LPCI) systems, and Automatic Depressurization System (ADS). Additionally, water level logic systems for MSIV closure, tripping of feedwater and main turbines, and contribution to Upper Containment Pool Dump were included in the evaluation. The logic diagrams for these plant systems provided the basis from which the vulnerability of the plant was determined.

The vulnerabilities of plant safety systems to WLMS failures were determined from evaluation of the logic diagrams in a failure modes and effects analysis (FMEA) presented in Appendix A. The FMEA shows the worst case set of failures to be a reference leg failure in conjunction with either an undetected transmitter failure in one of the other three reference legs or in conjunction with a bus failure. The significance of a reference leg failure is that it affects all attached instrumentation. When water within the reference leg is lost, the water level transmitters will immediately sense high (upscale) water level without regard to the actual water level in the RPV. In this analysis, it was conservatively assumed that a line break or a leak sufficient to affect the water level in a reference leg will cause high RPV water level indications. It is noted that the analysis addressed only system vulnerabilities with regards to RPV water level inputs. Actuation of affected systems can be initiated by many other sources such as drywell pressure transmitters, etc., but credit for these actuations is not considered in this analysis. System vulnerabilities for reference leg failure plus undetected single active component failure are shown in Table 6-1. This table summarizes the detailed FMEA results presented in Table A-3 of Appendix A.

The following explanation is provided to avoid confusion on the meaning and use of Table 6-1.

a. The first row in the table identifies the location of the postulated reference leg failure, i.e., Division 1, 2, 3, or 4.

b. The second row identifies the location of the postulated additional single active component failure. Each column in the table then represents a particular combination of reference leg failure and single active component failure.

c. The remaining rows in the table identify, on a system by system basis, the plant "vulnerability" to each combination of reference leg break and single component failure. A "V" in any location in these rows means that there is at least one single active component failure in conjunction with a reference leg failure that will cause the system to fail to initiate on RPV water level inputs. An "X", "X*" or "X**" in any location in these rows means that only one of the two failures considered will cause the system to fail to initiate on RPV water level inputs. All "Vs" or "Xs" in a single column would indicate a failure combination which would prevent the WLMS from actuating all listed systems.

d. The feedwater control system is treated differently in this table. A "DS" in any location in the matrix means that the feedwater control system will cause the feedwater flow to decrease and shut off. "DS" means that the decrease and shut off is caused by the reference leg break alone. "DS*" means that the decrease and shut off is caused by the single active component failure alone.

The consequences resulting from the failures shown in Table 6-1 were evaluated qualitatively in the following sections for various plant response scenarios.

6.1 RPV WLMS Failure Modes and Effects Analysis (FMEA)

The results for a FMEA, performed on the RPV WLMS, are presented in Tables A-3 and 6-1. These results identify failure combinations (events) which can prevent initiation of some safety systems. These postulated failure combinations include a reference leg failure in conjunction with a single active failure of a transmitter or a single active failure of a NSPS power bus. Component failures which contribute to these events include: (1) failure of a HPCS transmitter, (2) failure of a RCIC transmitter, (3) failure of a LPCS/LPCI transmitter, (4) failure of an ADS transmitter, (5) failure of a feedwater controlling transmitter, and (6) loss of one of the redundant NSPS 120 VAC INSTR buses. It is important to note the FMEA shows that automatic actuations which are not affected include: (1) the actuation of the Reactor Protection System (RPS) and (2) closure of the Main Steam Isolation Valves (MSIV).

6.1.1 Plant Response to Failure Events

6.1.1.1 Assumptions For Plant Initial Conditions

The postulated scenarios assume the plant is initially operating at full power with feedwater (FW) flow controlled by either the Division 1 or Division 2 reference leg. There is an undetected single active failure of a water level transmitter or power bus that is not attached to or feeds the FW controlling reference leg. It is assumed that strict adherance to the CPS technical specifications with respect to any maintenance and/or surveillance work (i.e. with respect to channel availability) on the WLMS is standard procedure.

6.1.1.2 Event Initiation and Response Scenarios

The event is initiated by a break in the Division 1 or Division 2 (whichever is controlling feedwater) reference leg. The failed reference leg will cause attached water level transmitters to read upscale. As a result, the feedwater control system will sense high water level and reduce the feedwater flow; eventually shutting it off. There is a delay of five seconds (see Reference 6-1) before the flow reaches zero because of system inertia. The pressure within the RPV will decrease in response to the reduced feedwater flow thus, decreasing the core inlet subcooling. The subsequent increase in the core void fraction reduces reactor power. The power reduction will moderate the decrease of the RPV water level for the first few seconds of the event. It is then assumed that all water level transmitters which are not attached to the failed reference leg will immediately sense the reduced water level which drops to Level 3 within 8 seconds (see Reference 6.1). This time is approximate and is dependent on a number of variables such as the size of the reference line break and the inertia of the feedwater system. However, the qualitative analysis is not sensitive to the times, thus, an exact value is not important. The scenario up to this point is identical to the loss of feedwater flow event analyzed in Reference 6-2. Consideration of the undetected single active component failure is still to be included. The following subsections expand the scenario to include single component failures. Separate discussions qualitatively evaluating the plant's response are presented for each of the events.

6.1.1.3 Failure of HPCS Transmitter

As indicated in Tables 6-1 and A-3 and as shown in Figure A-6, HPCS water level signals from the Division 3 and 4 reference legs are designed to be single failure proof. Therefore, loss of HPCS by a single Division 3 or 4 transmitter failure in conjunction with a failure of the

reference leg controlling feedwater flow (either Division 1 or 2) is precluded and the event is not a concern.

Events which are a concern include a break in the Division 3 reference leg and an active failure of LT-1B21-N073D (Division 4) or a break in the Division 4 reference leg and an active failure of LT-1B21-N073C (Division 3). These failure combinations produce a situation whereby HPCS would not initiate on a low RPV water level signal. Furthermore, if the spurious signal from the failed transmitter indicates high water level, the high level (level 8) trip function could be activated and preclude initiation of HPCS until the spurious high level trip is overridden by the operator. However, feedwater flow is not lost in this event, thus, the event would be benign since HPCS would not be required to prevent fuel damage or to preclude core uncovery.

6.1.1.4 Failure of RCIC and LPCS/LPCI Transmitters

From Tables 6-1 and A-3, and Figures A-7, A-10, A-11, it is apparent that the effects of a single component failure of an RCIC and Low Pressure Coolant Injection transmitter depends on which reference leg is controlling feedwater. With respect to initiating LPCS/LPCI(RHR-A), a single failure of either the Division 1 reference leg, LT-1B21-N091A, or LT-1B21-N091E would alone prevent low water level initiation. Similarly, a single failure of either the Division 2 reference leg, LT-1B21-N091B, or LT-1B21-N091F would prevent low water initiation of LPCI (RHR-B/C). However, there is no single reference leg or transmitter failure which would disable all means of low pressure injection.

A failure of the Division 1 reference leg in conjunction with an active failure of either LT-1B21-N091B or LT-1B21-N091F would prevent RCIC initiation and an upper containment pool dump via water level in addition to the loss of LPCS and LPCI. Additionally, a failure of the Division 2 reference leg in conjunction with an active failure of either LT-1B21-N091A or LT-B21-N091E would also prevent RCIC initiation and an upper containment pool dump via water level in addition to the loss of LPCS and LPCI. These same failure conditions would also prevent actuation of the ADS, but RPS, MSIV closure, and HPCS would be activated by low RPV water level signals as designed. It is noted that HPCS is the most desirable coolant injection system for the loss of feedwater event, therefore, failure of an RCIC/low pressure injection system transmitter does not disable the function of the ECCS. Thus, there would be no challenge to fuel design limits or danger of core uncovery.

6.1.1.5 Failure of ADS Transmitter

As shown in Tables 6-1 and A-3 and on Figures A-12 and A-13, a single active failure of a reference leg controlling the feedwater system would not prevent ADS actuation via RPV water level inputs. There are transmitter failures, however, which would prevent ADS actuation when combined with the failure of a reference leg which is controlling the feedwater system. One set of combinations include loss of LT-1B21-N091B, LT-1B21-N091F or LT-1B21-N095B in conjunction with failure of the Division 1 reference leg. A second set of failure combinations include loss of LT-1B21-N091A, LT-1B21-N091E, or LT-1B21-N095A in conjunction with failure of the Division 2 reference leg. These failure combinations would preclude ADS initiation via RPV water level inputs. However, HPCS is not affected by the failures and can be initiated by low water level indications. Therefore, there would be no challenge to fuel design limits or danger of core uncovery.

6.1.1.6 Feedwater Control Transmitter Failure

From Table 6-1 it is evident that there are no safety trips of ECCS that are vulnerable to a single active failure of a feedwater transmitter. This is because the feedwater control transmitters (LT-1C34-N004A, N004B, N004C) do not actuate ECCS.

6.1.1.7 Power Bus Failure

As shown in Figures A-4 through A-13, WLMS instrumentation which actuates ECCS is powered by the following sources:

1. NSPS 120 VAC INSTR BUS A
2. NSPS 120 VAC INSTR BUS B
3. NSPS 120 VAC INSTR BUS C
4. NSPS 120 VAC INSTR BUS D

As shown in Table 6-1, failure of the NSPS 120 VAC INSTR BUS A alone would prevent initiation of RCIC and LPCS/LPCI (RHR-A) via RPV water level inputs. Similarly, failure of the NSPS 120 VAC INSTR BUS B alone would prevent initiation of LPCI (RHR-B/C) via water RPV water level inputs. Additionally, failure of the NSPS 120 VAC INSTR BUS C alone would prevent initiation of HPCS via water level inputs. A failure of the Division 1 reference leg in conjunction with failure of a NSPS 120 VAC INSTR BUS B would prevent initiation of RCIC, LPCS, LPCI, ADS, and contribution to upper containment pool dump. Similarly, a failure of the Division 2 reference leg in conjunction with a failure in NSPS 120 VAC BUS A would also prevent initiation of the RCIC, LPCS, LPCI, ADS, and contribution to upper pool dump. There is no single NSPS AC bus failure in combination with a failed reference leg which would block both HPCS and RCIC initiation via RPV water level signals. Thus, there will

always be one high pressure coolant injection system available for initiation given any single failure or combination of NSPS AC bus and reference leg failures. A NSPS AC bus failure would not affect initiation of the RPS or closure of the MSIVs.

It is further noted that a NSPS power bus failure would be detected as soon as it occurs because annunciators are provided to warn the operator of the failure, therefore, the bus failure would have to occur subsequent to the reference leg failure. This scenario has a much lower probability of occurrence than that of an undetected transmitter failure.

6.2 Failure Analysis Summary

The failure analysis clearly shows that the consequences of single component failures or combinations of component failures within the RPV water level measurement system (WLMS) are not of an immediate concern for any of the events analyzed. The redundancy within the WLMS allows for the availability of at least one high pressure injection system for each event. As a result, there is never a challenge to fuel design limits and core uncovery. Furthermore, there are diverse instruments which monitor other parameters not included in the analysis which would initiate many of the systems. Operator recovery actions are also available, but as shown above, there is no need for unusual operator actions to mitigate the event consequences.

6.3 References

6-1 Illinois Power Company, Clinton Power Station Final Safety Analysis Report, Table 15.2.7-1.

6-2 Illinois Power Company, Clinton Power Station Final Safety Analysis Report, Section 15.2.7.

TABLE 6-1

VULNERABILITY OF SAFETY SYSTEMS TO AUTOMATIC INITIATION FAILURE
CAUSED BY REACTOR LEVEL REFERENCE LEG AND/OR
SINGLE TRANSMITTER OR BUS FAILURES

Reference Leg Failure:	Division 1							Division 2							Division 3							Division 4						
Single Component Failure:	Transmitter Failure Division			NSPS 120 VAC INSTR Bus Failure				Transmitter Failure Division			NSPS 120 VAC INSTR Bus Failure				Transmitter Failure Division			NSPS 120 VAC INSTR Bus Failure				Transmitter Failure Division			NSPS 120 VAC INSTR Bus Failure			
	2	3	4	A	B	C	D	1	3	4	A	B	C	D	1	2	4	A	B	C	D	1	2	3	A	B	C	D
System																												
HPCS	-	-	-	-	-	X*(1)	-	-	-	-	-	-	X*	-	-	-	V(2)	-	-	X*	V	-	-	V	-	-	X*	-
RCIC (3)	V	-	-	X*	V	-	-	V	-	-	X*	-	-	-	-	-	-	X*	-	-	-	-	-	-	X*	-	-	-
LPCS/RHR A	X	X	X	X**	X	X	X	X*	-	-	X*	-	-	-	X*	-	-	X*	-	-	-	X*	-	-	X*	-	-	-
RHR B,C	X*	-	-	-	X*	-	-	X	X	X	X	X**	X	X	-	X*	-	-	X*	-	-	-	X*	-	-	X*	-	-
ADS, UPD (4)	V	-	-	-	V	-	-	V	-	-	V	-	-	-	-	-	-	-	-	-	-	-	-	-	-	-	-	-
Feedwater																												
-Div.1 Control	DS(5)	DS	DS	-	-	-	-	DS*	-	-	-	-	-	-	DS*	-	-	-	-	-	-	DS	-	-				
-Div.2 Control	DS*	-	-	-	-	-	-	DS	DS	DS	-	-	-	-	-	DS*	-	-	-	-	-	-	DS*	-				

NOTES:

(1) X = System will not automatically initiate due to indicated reference leg failure alone.
X* = Same effect as X but due to single active component failure alone.
X** = Same effect as X but due to either reference leg failure alone or single active component failure alone.

(2) V = Vulnerability of the system(s) to fail to initiate automatically on level inputs, due to the indicated combination of reference leg failure and single worst case active component failure within the division specified.

(3) Brackets] indicate these systems share the same set of water level transmitters.

(4) UPD = Upper Containment Pool Dump

(5) DS = Feedwater will decrease, then shut off under the indicated divisional reference leg failure alone.
DS* = Same effect as DS but due to the failure of the transmitter alone.

SECTION 7

DESCRIPTION OF THE WLMS INSTRUMENTATION DESIGN MODIFICATIONS AND SYSTEM PERFORMANCE

7.1 Introduction

The preceding sections presented a detailed description of the Clinton WLMS and provided an evaluation of the overall performance of the system under normal plant operation and for selected abnormal plant transient events. The results of the analyses performed in sections 4 and 5 demonstrates that the Clinton WLMS, as originally designed, would perform favorably under conditions expected for normal plant operation and during the initial stages of abnormal plant events. However, under unusual plant transient conditions, the WLMS instrumentation would be unable to provide an acceptably accurate indication of water level in the reactor vessel over the long term. Extreme combinations of high drywell temperature and low vessel pressure produce large positive level indication errors which are non-conservative. The magnitude of these errors could affect safety system actuation/trip and inhibit the operator's ability to take appropriate action to stabilize plant conditions subsequent to these abnormal events.

This section presents a summary of the design modifications made to the Clinton WLMS in an effort to improve the overall performance of the system during abnormal plant events. Design modifications were made primarily to enhance the accuracy of the water level recorded and/or indicated readings under unusual conditions of high drywell temperature combined with low reactor pressure. A description of the design modifications along with an evaluation of their impact on the system performance is provided in the subsections that follow.

7.2 Recommended Design Modifications for the BWR WLMS

Previous studies conducted by S. Levy, Inc., (Reference 7-1) and General Electric Company (References 7-2 and 7-3) identified several design enhancements for the BWR Water Level Measurement System. These studies confirmed that conditions of elevated drywell temperature combined with low vessel pressures will produce indicated water levels considerably higher than actual vessel levels. Elevated drywell temperatures will cause an upward shift in the instrument zero due to changes in the fluid density in the reference leg and the subsequent flashing of the reference leg fluid inventory when the vessel is depressurized. However, the dominant contributor to large level indication errors for the BWR WLMS instrumentation design resulted from the flashing of the reference leg fluid inventory. The WLMS instrumentation as originally designed could provide erroneous level indica-

tions which may mislead the operator or affect safety system actuation/trip following plant transients where instrument line flashing occurs.

Several generic concerns were identified (Reference 7-1) for the BWR WLMS for which specific design improvements were recommended. The generic recommendations included both passive and active system design modifications which, if implemented, would reduce the magnitude of the instrument errors and enhance the accuracy of the water level instrumentation. The design modifications considered to be the most effective for the BWR instrument design consist of the following:

1. The relocation of instrument line flow limiting orifices from their current location at the RPV instrument tap to as close to the drywell wall as possible to minimize the effects of transient flashing on level indication,

2. Limit the reference leg vertical drop in the drywell to no greater than 30 inches to reduce the total fluid inventory susceptible to flashing (hydraulic head loss). This constraint on the reference leg vertical drop will considerably reduce the overall magnitude of the long term flashing errors, therefore, improving overall instrument performance, and

3. Reduce the vertical drop of the variable leg instrument line so as to maintain the vertical drop difference, between the reference leg and the variable leg, in the drywell to no greater than ±12 inches for those water level instruments responsible for the actuation of safety systems or the reactor protection system. This constraint will maintain the non-flashing drywell temperature errors to a negligible magnitude.

The Clinton WLMS design was reviewed with respect to the generic concerns and the recommended design modifications identified in Reference 7-1. A summary of the results of this review can be found in Appendix B. It was determined that the above design modifications, if integrated into the Clinton WLMS design, would greatly enhance the accuracy of the water level instrumentation under the degraded conditions of high drywell temperature in combination with low reactor pressure. The Clinton WLMS was therefore redesigned to bring the system into conformance with the above guidelines. A description of the WLMS design modifications implemented at CPS is provided in the following section.

7.3 Description of the CPS WLMS Modifications

The modifications made to the CPS WLMS consisted of the (1) rerouting of instrument lines within the drywell and containment environs, and (2) the relocation of the flow

limiting orifices within these lines. Modifications were made to 12 of the 15 WLMS instrument lines in an effort to minimize the impact of drywell temperature effects and instrument line flashing on instrument accuracy. The instrument line modifications impacted the four reference legs shared by the narrow, wide and fuel zone range instruments and the eight variable legs used by the narrow, wide, upset, and shutdown range instruments. The reference leg shared by the upset and shutdown range instruments and the two fuel zone variable leg instrument lines were not included in the design modification package since these instruments are not responsible for the initiation of safety-related ECC injection systems and are not the primary instruments used for operator decision making.

7.3.1 Instrument Line Routing Modifications

The narrow, wide and fuel zone range reference legs were re-routed within the Clinton drywell in an effort to limit the total reference leg vertical drop to under 30 inches. The four divisions of reference legs were re-routed from the condensing chamber to the drywell wall. New drywell wall penetrations were provided to accommodate the vertical drop requirements. The 3/4-inch diameter stainless steel piping was sloped downward from the condensing chamber to the drywell wall such that the cumulative vertical drop did not exceed the 30-inch constraint established in Reference 7-1. Figure 7-1 presents a comparison of the reference leg vertical drop for the narrow, wide and fuel zone range instruments for the original and modified WLMS instrument piping. The modified reference leg vertical drop in the drywell is maintained at 25 inches for all four instrument divisions, well within the recommended value. Total reference leg drops were reduced from 74 inches (Division 3) to as much as 108.8 inches (Division 4). The modified reference leg line routing in the drywell used by the wide, narrow and fuel zone WLMS instruments are illustrated in Figures D1 through D4 and tabulated in Tables D-1 and D-4 contained in Appendix D.

Variable leg instrument lines which are used by the narrow and wide range instruments were modified to maintain the reference leg to variable leg vertical drop differences within the drywell to approximately ±12 inches. Only the narrow and wide range variable leg instrument lines were modified since these instruments control the initiation/operation of RPV protection systems. However, the shutdown and upset range instrument variable legs were indirectly affected by the Division 2 narrow range variable leg instrument line modifications since they share a common variable leg. Fuel zone instrument variable legs remained as originally designed.

Figure 7-2 illustrates how the modified variable leg line routing influences the magnitude and direction of the modified vertical drop differences for the narrow and wide range instrumentation. In most cases, the vertical drop differences were reduced or became negative (i.e., variable leg drop is greater than reference leg vertical drop) which will have a positive impact (i.e., in the conservative direction) on the magnitude of drywell temperature errors. Figure 7-3 presents how the fuel zone, shutdown, and upset range instrument vertical drop differences are affected by the wide range and narrow range instrument line modifications. Tables D-5 through D-8 contained in Appendix D provide the instrument line parameters for the modified WLMS. These parameters are used to evaluate the overall performance of the modified WLMS instrumentation in the subsections that follow.

7.3.2. Relocation of the Flow Limiting Orifices

The orifice effects produce the dominant indication error during transient flashing as discussed in Section 4.1.2.1. These errors are directly proportional to the location of the orifice from the drywell wall in terms of true pipe length. Flow limiting orifices were therefore relocated in the reference leg and variable leg instrument lines associated with the wide and narrow range instruments to reduce the impact of transient flashing on instrument accuracy. Flow limiting orifices were moved from their original location at the RPV instrument tap to within approximately 35 inches from the drywell wall penetration head fitting in terms of true pipe length. In most cases, the orifice was placed within approximately 7 inches from the penetration head fitting.

Flow limiting orifices located in the fuel zone reference legs and the shutdown and upset variable leg instrument lines were placed near the drywell wall due to the wide and narrow range instrument line modifications. Flow limiting orifices associated with the shutdown and upset range reference leg and the fuel zone variable leg instrument lines were left in their original location. These instruments are not used by the operator during the transient flashing condition. Therefore, relocation of the flow limiting orifices in these lines would not further enhance the accuracy of these instruments during their intended use.

7.4 Evaluation of the Modified WLMS Performance

Section 4 evaluated the overall performance of the Clinton RPV WLMS instrumentation as originally designed. Each of the five instrument ranges were examined to determine the effects of variations in the process and environmental conditions on the instruments accuracy. Both non-flashing and flashing instrument errors were considered in the assessment. The system modifications discussed in Section

7.3 were implemented with the intention of improving the overall accuracy of the WLMS instrumentation. This section identifies specifically those errors affected by the sense line modifications and attempts to quantify the impact of the design modifications on the overall system performance.

7.4.1 Non-flashing Instrument Errors

The sense line modifications will influence selected non-flashing errors previously discussed in Section 4.1.1. The non-flashing error equations (equations 4-1 through 4-3) presented the eight error parameters and their functional relationship for each of the five WLMS instrument ranges. Each error parameter was examined individually in an attempt to quantify its contribution to the water level indication errors as a function of plant operating conditions. Table 7-1 presents a summary of the non-flashing errors discussed in Section 4.1.1 and the primary parameters for which these errors are dependent.

Non-flashing instrument errors can be divided into two distinct categories which include 1) those errors produced by changes in plant process conditions, and 2) those errors caused by changes in drywell and/or containment environmental conditions. Error parameters which are a function of the process conditions within the reactor vessel will be unaffected by the modifications made to the instrument sense lines. The non-flashing errors affected by the rerouting of the instrument lines include both the drywell temperature errors, Z_{dt}, and the containment temperature errors, Z_{ct}. These non-flashing errors, produced by variations in plant environmental conditions, will be influenced by the sense line modifications since these errors are proportional to the instrument reference leg to variable leg vertical drop differences. All other non-flashing errors are unaffected by the WLMS modifications as illustrated in Table 7-1. Therefore, the functional relationships previously developed for the RPV process errors in Section 4 remain unchanged. The following sub-sections examine the non-flashing errors which are directly impacted by the WLMS redesign in an attempt to estimate the overall improvement in system performance.

7.4.1.1 Drywell Temperature Errors

As discussed in Section 4.1.1.3, non-flashing errors due to drywell temperature variations are directly proportional to the difference in the reference leg and variable leg drywell vertical drop (X_r-X_m). If the drywell is above the calibration temperature, and a positive vertical drop difference exists (reference leg drop is greater than the variable leg drop), errors indicating level higher than actual level will be produced. High level indication errors are non-conservative from the standpoint of ECC system initiation since they would temporarily delay initiation or result in premature tripping of these systems.

The sense line modifications implemented at CPS impact the vertical drop differences (X_r-X_m) of the 12 WLMS as illustrated in Figures 7-2 and 7-3. The modified vertical drop differences were used to calculate the resulting drywell temperature errors for the five ranges of WLMS instrumentation. The drywell temperature errors, Z_{dt}, for the modified WLMS design are presented in Figures 7-4 through 7-7.

Figure 7-4 displays the drywell temperature errors for the wide range instruments. Drywell temperature errors for wide range instruments, as a whole, have a negligible effect on instrument accuracy. Drywell temperature errors shift in the conservative direction for all divisions of wide range instruments at CPS. Drywell temperature errors are negative (i.e., indicated water level is less than actual water level) and no greater than -0.70 inches at the drywell LOCA temperature of 330°F. Errors range from -0.60 inches to -0.70 inches for the modified sense line routing compared to -0.50 inches to +1.0 inches for the original design at the drywell LOCA temperature condition. The modified vertical drop differences for the wide range instruments results in a conservative shift of the total drywell temperature error band. The negative drywell temperature errors for the wide range instruments can be attributed to the conservative shifting of the vertical drop differences as shown in Figure 7-2.

Figure 7-5 presents the drywell temperature errors for the narrow range instrumentation. Narrow range drywell temperature errors were reduced and/or shifted in the conservative direction for all instrument divisions except Division 4. Division 4 narrow range drywell temperature errors changed in the non-conservative direction (i.e., high level indication errors). However, errors no greater than +0.40 inches can be expected following a LOCA in the drywell. The magnitude of these errors is negligible and presents no problem to the operator or to the operation of the RPV safety protection systems. Following a LOCA in the drywell, narrow range Z_{dt} errors ranged from -1.6 inches (Div. 3) to +0.40 inches (Div. 1) for the modified system compared to -0.6 inches to +1.2 inches for the original system design. As illustrated in the above comparison, the modified sense line routing produces an overall shift of the error band in the conservative direction for the narrow range.

The fuel zone reference leg sense line modifications produce drywell vertical drop differences which result in conservative drywell temperature level indication errors (i.e., indicated level is lower than actual level). Figure 7-6 presents Z_{dt} for the division 3 and 4 fuel zone instruments. The large low level indication errors are produced as a result of the large negative vertical drop differences as illustrated in Figure 7-3. Errors range from -9.3 inches (Div. 3) to -6.2 inches (Div. 4) for the modified system compared to -6.6 inches (Div. 3) and +3.50 inches

(Div. 4) for the original design when the drywell temperature is 330° F and the vessel is at rated pressure. Although the shift in Z_{dt} is in the conservative direction, the magnitude of these errors is large. However, the large low level indication errors that are produced are not a concern since 1) the fuel zone instruments are not responsible for the initiation or trip of reactor protection systems, and 2) the operator is cautioned of the effects of elevated drywell temperature conditions on level indication accuracy in the Clinton EOPs. Appendix C presents a review and discussion of the Clinton EOPs with respect to the WLMS instrumentation and ICC concerns.

Upset and shutdown range drywell temperature errors are displayed in Figure 7-7. Z_{dt} errors for both instruments increase as a result of the sense line modifications. Shutdown range drywell temperature errors are of no concern since the operator is instructed to use this instrument for level indication only during RPV maintenance. Upset range errors increase by approximately 36% to +36.4 inches following a LOCA in the drywell. The non-conservative shift presents no threat to plant safety since the upset range instruments are not responsible for the initiation of safety-related systems and are used primarily for information purposes and is not used to direct operator action.

7.4.1.2 The Influence of Sense Line Modifications on Containment Temperature Errors

The sense line modifications will effect the magnitude of the containment temperature error, Z_{ct}. As discussed in Section 4.1.1.4, Z_{ct} is directly proportional to the vertical drop difference between the reference leg and variable leg within the containment. The containment vertical drop difference, ΔE, is measured from the reference leg to the variable leg sense line penetration elevations within the drywell. Tables D-5 through D-8 contained in Appendix D present the ΔE parameters for the modified WLMS. Figure 7-8 presents the Z_{ct} errors for the modified WLMS instrumentation.

Containment vertical drop differences for the modified wide and narrow range sense line configurations change very little from the original design. The ΔE parameters are dictated by the vertical drop difference in the drywell environment. Since the drywell vertical drop differences for both the original and modified WLMS sense line routing approximately comply with the ±12 inch criteria (Reference 7-3), containment vertical drop differences for the modified WLMS remain virtually unchanged. As a result, water level indication errors for the narrow and wide range instruments are approximately equivalent to those of the original design. For containment temperatures within the range of normal plant operation (65°F to 104°F), water level indica-

tion errors will not exceed +1.5 inches. Containment temperature errors for the wide and narrow range instruments will approach +8.6 inches and +3.6 inches, respectively, when the containment environment reaches the design temperature of 185°F.

Fuel zone, upset and shutdown instrument containment temperature errors, however, are influenced to a greater extent by the sense line modifications. Fuel zone containment vertical drop differences increased by 15% (Div. 3) to 26% (Div. 4) since the fuel zone variable legs were left as originally designed but their reference legs were moved. Upset and shutdown range containment vertical drops were decreased by more than 75% as a consequence of the narrow and wide range variable leg sense line modifications. During normal plant operation, Z_{CF} indication errors as large as +3.5 inches can be expected for fuel zone instrumentation. Upset and shutdown range errors will be negligible. Following a design basis LOCA, with the vessel fully depressurized, a maximum indication error of +16.7 inches can be expected for the Division 3 and 4 fuel zone instruments. Upset and shutdown range errors will be no greater than +1.0 inch.

7.4.2 Instrument Line Flashing Errors

Flashing errors were determined in Section 4 to be the dominant contributor to instrument error under extreme combinations of high drywell temperature and low RPV pressure. Instrument sense line modifications were made to reduce the magnitude of both the short-term transient and the long-term steady-state flashing errors. Both transient and steady-state flashing errors are re-examined in the following subsections with respect to the sense line modifications in an attempt to estimate the improvement in the accuracy of the WLMS instrumentation during these abnormal plant conditions.

7.4.2.1 Transient Flashing Errors

In an effort to reduce the magnitude of the Clinton WLMS transient flashing errors, and to comply with the BWR system design criteria established in References 7-1 and 7-2, the sense line flow limiting orifices in all narrow and wide range instrument lines were moved from their original location at the RPV to the drywell wall penetration. As discussed in Section 7.3.2, orifice plates in most cases were placed within approximately seven inches from the drywell wall penetration head fitting in terms of true instrument line length. Table 7-2 presents a summary comparison of the instrument line length and the orifice locations relative to the drywell wall for the original and modified WLMS.

Studies performed by Sol Levy (Reference 7-1) and later verified by General Electric (Reference 7-2) determined that the magnitude and duration of the transient flashing errors are dependent on the event scenario and on the instrument sense line configuration; specifically, the overall line length and the location of the flow limiting orifice. The shorter the line length and the further the orifice is placed from the RPV instrument tap, the greater the reduction in instrument error during transient flashing. Results presented in the Reference 7-2 analyses indicate that the magnitude of the transient flashing level indication errors can be reduced from +72 inches down to approximately +8 inches as a result of the recommended sense line modifications.

The transient flashing errors for the CPS WLMS instrumentation are expected to be reduced by a similar magnitude due to the nature of the sense line design changes. The instrument line data comparison presented in Table 7-2 illustrates that the sense line modifications in ten of the twelve cases reduced the overall instrument line length. Line lengths were reduced from .4 to as much as 32 percent. However, the average line length was reduced by 11 percent. The lengths of two narrow range variable leg sense lines increased by 4 percent. The true line length to the flow limiting orifice relative to the drywell penetration head fitting decreased by 91 percent to as much as 98 percent resulting in actual orifice locations ranging from 6 to 35 inches from the drywell penetration head fitting.

Movement of the orifice close to the penetration head fitting will reduce the pressure drop in the sense line during flashing and allow the sense line fluid to flow unrestricted towards the reactor vessel. Locating the orifice close to the drywell wall will minimize the volume of instrument line fluid susceptible to flashing downstream of the orifice. The modified orifice location will enhance the accuracy of the pressure sensed by the instrument transmitter by reducing the overall pressure drop along the sense line length and providing pressure relief during fluid boil-off.

The shorter sense line length will also assist in decreasing the secondary effects of friction head losses contributed as a result of the fluid motion within the instrument line. The secondary friction losses, in all cases, were found to be no greater than +2.5 inches in a 50 foot sense line following an ADS event with the drywell temperature at approximately 330°F (Reference 7-1). Modified sense line lengths for the CPS WLMS, in all cases, are less than 35.2 feet for all narrow and wide range instrument lines. The Clinton line lengths are approximately 30 percent shorter than those examined in the Reference 7-1 analysis. Since the friction pressure drop is proportional to the instrument

line length, friction head losses for the Clinton sense lines are expected to contribute no more than +1.8 inches to the total transient flashing error for all narrow and wide range instruments.

It can be concluded that the sense line modifications will improve the overall WLMS instrument accuracy during transient flashing. CPS transient flashing errors have been reduced from +72" to no greater than +8.0 inches for all narrow and wide range instruments assuming flashing occurs in only the variable leg sense line. Simultaneous flashing of the reference leg will have the effect of further reducing the magnitude of the flashing errors. The decreased magnitude of the transient flashing errors will also assist in the initiation and trip of the required reactor safety systems. The smaller, short-term flashing errors will significantly reduce the delay time and insure the proper operation of the reactor ECC systems.

Fuel zone transient flashing errors will not be significantly affected by the design modifications. Fuel zone variable leg sense lines were not included in the design change package since these instruments are not responsible for the operation of safety injection systems and would not be used by the operator during transient flashing conditions. Upset and shutdown variable legs were redesigned as a result of the narrow range sense line changes since these instruments share common variable leg instrument lines. However, the improvement in the instrument transient flashing response is of little consequence due to the fact that the shutdown and upset instruments 1) will not be used by the operator during instrument line flashing event scenarios, and 2) do not trip/initiate RPV circulation or safety injection systems.

7.4.2.2 Steady-State Flashing Errors

A complete loss of the fluid inventory from the reference leg could occur if the vessel is depressurized and the drywell temperature remains above the corresponding saturation condition for an extended duration. The maximum steady-state flashing error, however, is proportional to and limited by the total reference leg vertical line drop in the drywell.

Sense line modifications included the rerouting of the four reference legs used by the narrow, wide and fuel zone range WLMS instruments. The four divisions of reference legs were modified to limit the total vertical drop to under the 30 inch constraint established in Reference 7-1. As illustrated in Figure 7-1, the WLMS reference leg vertical drops for the modified design were reduced to approximately 25 inches, well within the recommended design criteria. The steady-state flashing errors for the modified WLMS instrumentation are presented in Figures 7-9 and 7-10.

Steady-state flashing errors for the original and modified narrow and wide range sense line designs are compared in Figure 7-9. Steady-state flashing errors for modified narrow and wide range instruments will not exceed +34.3 inches when the piping is in hot position (i.e., the vessel instrument line piping at operating temperature). Note that a 12-inch reduction in reference leg water column in the drywell results in approximately a 15.6 inch reduction in the error in the indicated level due to the density difference between the liquid in the vessel and the reference leg under conditions assumed for instrument calibration. The steady-state errors for the modified narrow and wide range instruments decrease from 74 percent to as much as 81 percent.

Figure 7-10 presents a comparison of the steady-state flashing errors for the original and the modified fuel zone instruments. Fuel zone range steady-state flashing errors decrease to +24 inches for both divisions which is equivalent to the total reference leg drywell vertical drop during hot system operation. The one-to-one correspondence exists because the fuel zone instruments are calibrated with the vessel fully depressurized. Therefore, vessel water density effects do not further influence the level indication accuracy. The reduction in these errors range from 66 percent for Division 3 to 81 percent for Division 4. Long-term flashing errors for the upset and shutdown range instruments remain unchanged since the reference leg shared by these instruments was excluded from the design modification.

7.5 Equipment Qualification and Pipe Whip Concerns Resulting from the Relocation of the Flow Limiting Orifices

The relocation of the flow limiting orifices results in two additional design concerns which include: 1) steam blowdown rate through a ruptured instrument line at the RPV tap will significantly increase, possibly affecting the drywell environmental qualification design envelopes, and 2) potential effects of pipe whip resulting from the increased blowdown rate from the RPV which may pose a threat to safety related components within the drywell. Pipe whip resulting from an instrument line rupture does not need to be examined in the assessment of the modified WLMS design because the instrument lines diameter of 3/4" is smaller than the 1" diameter criteria established in Reference 7-4. However, the impact of higher mass energy blowdown rate on drywell temperature/pressure profiles used for the qualification of Class 1E components must be evaluated.

The CPS design basis drywell pressure/temperature profiles for a small break accident (SBA) are presented in Reference 7-5. Reference 7-6 determined the drywell design temperature by finding the combination of primary system pressure

and peak drywell pressure which produce the maximum superheat temperature. For CPS, the peak drywell steam temperature occurs when the primary system pressure is at approximately 450 psia (maximum enthalpy of RPV steam) at a drywell pressure of 15 psig. A maximum superheat steam temperature of 330°F was determined using these worst case conditions. For design purposes, it was further assumed that blowdown of reactor steam occurs for a 6-hour period. This period corresponds to the time required to shutdown the reactor in an orderly manner following a Small Break LOCA. Equipment qualification envelopes for CPS assumed that the 330°F superheat condition exists for three hours at which time the shutdown cooling system is initiated. At this point the RPV pressure is 150 psia which corresponds to a maximum superheated steam temperature of 310°F (assuming maximum drywell pressure). It was then assumed that the 310°F condition existed in the drywell for an additional three hours after which the reactor is brought to full shutdown conditions.

The SBA temperature/pressure profiles currently presented in Reference 7-5 correspond to peak thermodynamic conditions resulting from any credible loss-of-coolant accident. These profiles thermodynamically envelope the conditions which could be produced from a reactor steam blowdown through a failed instrument line. Hence, the resulting drywell environmental conditions from an instrument line HELB without orifice restrictions would be bounded by the profiles currently presented in Reference 7-5.

7.6 Modified WLMS Performance During Plant Transient Events

The previous subsection illustrated how the design modifications impacted sensed water level versus actual water level. This sub-section will show how the modifications have improved the responsiveness of the WLMS to plant transients and accidents. Section 5 presented a plant transient analysis of the WLMS as originally designed. Critical plant transient events considered in the analysis included loss of drywell coolers or LOCA in conjunction with loss of feedwater. The evaluation concluded that the original design was adequate for providing short-term water level indications and ECCS initiation for both plant transients. However, the WLMS was found to be potentially inadequate for providing long term water level indications and ECCS if total boil-off of the reference leg fluid inventory had occurred. Hence, the following subsections evaluate the modified WLMS with respect to short-term and long-term performance during plant transient events.

7.6.1 Short-Term WLMS Response To Plant Transients

Section 5 demonstrated that the original WLMS design would provide adequate initiation of ECCS immediately following a loss of drywell cooler event or a LOCA. Prior to transient

flashing, the predominate contributor to errors in sensed water level is low RPV pressure. In comparison, errors related to high drywell temperature are insignificant for both the original and modified designs. As a result, actual water levels versus indicated water level for the modified and original WLMS prior to transient flashing are essentially the same. Hence, the plant transient progressions and corresponding WLMS responses described in Section 5 also apply to the modified system up to that point at which time transient flashing occurs within the reference legs.

Assuming transient flashing in the reference legs, the original design would have continued to provide water level indications that would ensure that the core was covered with water. However, as a result of relocating the orifices, an additional safety margin has been added to the WLMS. For example, if transient flashing occurs during normal shutdown after loss of drywell coolers and feedwater, an L3 water level indication for the original system corresponds to an actual water level 83 inches above TAF. For this same scenario, the actual water level would increase 58% to 131 inches above TAF for a L3 indication on the modified system. Consider the case for a small break LOCA. If the operator does not follow the EOP instructions and allows the RPV pressure to drop below 88.3 psig, transient flashing will occur. As a result, an L2 indication on the original design corresponds to an actual water level of 38 inches above TAF. The corresponding actual water level for the modified system is 89 inches above TAF, an improvement of 134%.

In summary, the WLMS did not require modifications with respect to short-term performance after initiation of a plant transient. However, as shown above, performance and safety margins have been enhanced considerably as a result of the modifications.

7.6.2 Long-Term WLMS Response To Plant Transients

Long-term performance of the WLMS during plant events has significantly improved as a result of sensing line routing modifications. As summarized in Section 5 for the original design, wide range indications would have to be continuously maintained above L3 (171" above TAF) during the recovery period following a transient event to ensure core coverage. If the indicated water level were to drop below L3, the wide range variable leg taps would become uncovered at which time the wide range indicators will become unresponsive to changing water level. As a result, any possibility of automatic high pressure injection system initiation via L2 (117" above TAF) and low pressure ECCS initiation via L1 (17" above TAF) trip signals is thwarted (injection system initiation by other signals such as high drywell pressure are expected but not assumed for this evaluation). Not taking credit for other signals such as high drywell pressure would require operator action to ensure any

injection system initiation. However, as a result of the modifications described in the previous subsections, this problem has been significantly improved.

If the operator fails to maintain RPV pressure above 88.3 psig during a LOCA or 63 psig during a loss of drywell cooler event, loss of all fluid inventory in the modified reference legs could occur. The EOPs direct the operator to maintain RPV water level between L3 and L8. As a result of the modifications to the WLMS, this will ensure actual water coverage between 104" (for L3) and 136" (for L8) above TAF. Considering that the corresponding actual water levels for the original WLMS would have been between 1" (for L3) and 32" (for L8) above TAF, demonstrates the considerable improvement made possible through the line routing modification.

Under steady-state flashing conditions, if the operator allows the water level to drop below L3, high pressure injection systems will initiate at L2 which will correspond to an actual water level of 64" above TAF. For the original WLMS design, the high pressure injection systems would not have automatically initiated. If high pressure injection systems are not available, water level would continue to drop to TAF. At approximately 12" indicated level above the L1 setpoint, the wide range variable leg taps at TAF would become uncovered and the wide range transmitters/ indicators would become unresponsive to changing water level. As a result, low pressure injection systems would not automatically initiate. This situation does not negate the acceptability of the modified CPS WLMS since:

1. Low pressure ECCS initiates automatically, based on WLMS input, early in the events postulated (i.e. before the maximum flashing errors occur);

2. Low pressure ECCS does not trip on high water level inputs;

3. The operator has symptomatic Emergency Procedure Guidelines providing direction on the use of low pressure ECCS; and

4. The measurement errors under worst case conditions for the modified system are less than 20% of the error allowed in NRC generic letter 84-23.

The accuracy of the WLMS has been significantly improved down to levels approaching TAF. When the actual water level reaches TAF, the indicated level under maximum error conditions is about 30" above TAF. The corresponding indicated level for the original WLMS would have been 171" above TAF. The increased accuracy of the WLMS improves the operators understanding of the actual water level trend/

situation and provides him with greater confidence in his instrumentation. In additon, the modified WLMS design provides a significant improvement over the original design by reducing operator burden via automatic initiation of high pressure injection systems at L2 and improving the accuracy of level indication under long term transients which could cause steady state flashing.

7.7 Summary and Conclusions

The preceding sections provided a description of the WLMS modifications, reviewed the influence of the sense line modification on instrument accuracy, and examined the ability of the system to successfully respond during abnormal plant events. The assessment determined that the modified WLMS instrumentation design will improve system performance and reduce the magnitude of the level indication/recorded errors over the range of postulated event scenarios.

The sensing line modifications were found to have little effect on non-flashing instrument errors. As illustrated in Table 7-1, non-flashing errors resulting from variations in RPV process conditions remained unchanged following the instrument line design changes. Instrument errors produced by elevated drywell and/or containment temperatures represent the only non-flashing errors affected by the re-design of the instrument sense lines. The modified WLMS sense line design in most cases reduced the magnitude of the wide and narrow range temperature errors. However, the magnitude of these errors is small and their contribution to the overall instrument inaccuracy is negligible compared to the other non-flashing errors. Table 7-1 summarizes the non-flashing errors, their functional dependence, and the applicable figures to be used for estimating the non-flashing indication errors for the modified WLMS instrumentation.

The greatest improvement in level indication accuracy is seen in the magnitude of the flashing errors. Transient flashing errors are expected to be reduced by as much as 88 percent for the wide and narrow range instruments as a result of the relocation of flow limiting orifices. Transient flashing errors will be no greater than +8 inches assuming worst case conditions. The decreased magnitude of the transient flashing errors will assist in the timely initiation and trip of the required reactor safety systems.

Steady-state long term flashing errors for the wide, narrow and fuel zone range instruments will be greatly reduced as a result of the reduction in the reference leg drywell vertical drop. For the original WLMS design, long-term flashing errors were responsible for the largest contribution to water level indication errors under conditions of high drywell temperature combined with low RPV pressure. Large level indication errors were predominantly a result of the

loss of instrument line fluid inventory due to flashing. However, for the modified WLMS instrumentation, changes in vessel process conditions (i.e., variations in vessel pressure) will represent the largest error contribution. The reference leg vertical drop constraint of +25 inches placed on all CPS narrow, wide and fuel zone reference legs greatly reduces the fluid inventory in the vertical portion of the line susceptible to flashing and limits the possible magnitude of the steady-state flashing indication errors. As an outcome of the sense line modifications, the ability of the WLMS to respond to abnormal plant events has improved significantly. Contrary to the original design, the modified design will ensure automatic initiation of high pressure injection systems without ever allowing uncovery of the core. This holds true regardless of the nature of the plant transient. As a result, operator intervention is not required during the plant transient with respect to maintaining RPV water level provided high pressure injection systems are available. If the operator elects to manually control RPV water level, wide range level indication of 14" higher than L1 via the modified WLMS will always ensure that the core is covered with water.

7.8 References

7-1 S. Levy, Inc., "Review of BWR Reactor Vessel Water Level Measurement Systems", SLI-8211, July 1982.

7-2 G. L. Sozzi, "Effects of Orifices in BWR Water Level Instruments", General Electric Document No. AE-10-1034, March 1984.

7-3 General Electric Nuclear Service Information Letter, "High Drywell Temperature Effects on Reactor Vessel Water Level Instrumentation", SIL Report 299, July 1979, and Supplement 1 to SIL Report 299, September 1980.

7-4 USNRC, Standard Review Plan for the Review of Safety Analysis Reports for Nuclear Power Plants - LWR Edition, NUREG-0800, pp. 3.6.2-10 through 3.6.2-18, July 1981.

7-5 Illinois Power Company Clinton Power Station Final Safety Analysis Report, Table 3.11-6, Amendment 27, October 1983.

7-6 General Electric, "Containment and NSSS Interface", Document No. 22A3759AM, Revision 3, August 14, 1979.

7-7 Sargent & Lundy Interoffice Memorandum from R. Rutha (MD&D) to D. Brainer and G. J. Schweitzer (NSLD), Subject: "Accumulated Line Lengths of Revised RPV Water Level Instrument Line", April 24, 1984.

TABLE 7-1

SUMMARY OF THE NON-FLASHING INSTRUMENT ERRORS INFLUENCED BY THE WLMS MODIFICATIONS

Error Parameter[1,2]	Description	Functional Dependence	Parameters Impacted By WLMS Modifications	Applicable[3] Figure(s)
$S_L(L+L_0)$	RPV Liquid Density Effects	° RPV Calibration Pressure, P_{cal} ° RPV Operation Pressure, P_V ° Distance from the instrument variable leg tap to the actual vessel level, $L + L_0$	None	4-1
$S_S L_s$	RPV Steam Density Effects	° RPV Calibration Pressure, P_{cal} ° RPV Operating Pressure, P_V ° Steam head present within the RPV, L_S	None	None
$S_{sc} L_{sc}$	Liquid Subcooling Effects	° RPV Calibration Pressure, P_{cal} ° RPV Operating Pressure, P_V ° Feedwater Temperature, T_{FW} ° Feedwater Flowrate ° Column of subcooled liquid present within vessel, L_{Sc}	None	None
Z_{dt}	Drywell Temperature Error	° RPV Calibration Pressure, P_{cal} ° Drywell Calibration Temperature, $T_{DW,cal}$ ° Drywell Operating Temperature, T_{DW} ° Reference leg - variable leg vertical drop difference in drywell, $(X_r - X_m)$	° Reference leg - variable leg vertical drop difference in drywell $(X_r - X_m)$	7-4 7-5 7-6 7-7
Z_{ct}	Containment Temperature Error	° RPV Calibration Pressure ° Containment Calibration Temperature, $T_{c,cal}$ ° Containment Operating Temperature, T_c ° Reference leg - variable leg vertical drop difference in containment, ΔE	° Reference leg - variable leg vertical drop difference in the containment ΔE	7-8

(continued on next page)

SUMMARY OF THE NON-FLASHING INSTRUMENT ERRORS INFLUENCED BY THE WLMS MODIFICATIONS

Error Parameter[1,2]	Description	Functional Dependence	Parameters Impacted By WLMS Modifications	Applicable[3] Figure(s)
Z_{dp}	Steam Dryer Flow Effects	° Main Steam flowrate at calibration condition ° Main steam flowrate at conditions under consideration ° Steam dryer loss coefficient	None	4-9
Z_{js}	Jet Pump Suction Effects	° Jet pump recirculation flow rate	None	4-9
Z_{jd}	Jet Pump Discharge Effects	° Jet pump recirculation flow rate	None	4-10

1 Nomenclature is defined in Section 4.0.

2 Figure 4-2 illustrates the orientation of the water level instrumentation relative to the RPV instrument taps.

3 Applicable figures for evaluating non-flashing errors for the modified WLMS design.

TABLE 7-2

COMPARISON OF THE SENSE LINE LENGTH AND ORIFICE FLOW LIMITER LOCATIONS FOR THE ORIGINAL AND MODIFIED WLMS

Reference Leg - RPV Nozzle N-14[1] Narrow, Wide and Fuel Zone Range Instruments	Original WLMS Design	Modified WLMS Design	Percent Decrease	Percent Increase
Div. 1 - X_L[2] =	27.4	27.3	0.4%	-
X_o[3] =	26.1	0.56	98%	-
Div. 2 - X_L =	31.8	27.2	14.5%	-
X_o =	30.5	0.50	98%	-
Div. 3 - X_L =	30.9	23.8	23%	-
X_o =	29.6	0.56	98%	-
Div. 4 - X_L =	31.5	28.3	10%	-
X_o =	30.2	0.56	98%	-
Variable Leg - RPV Nozzle N-13[1] Narrow, Upset and Shutdown Range Instruments				
Div. 1 - X_L =	32.8	34.2	-	4%
X_o =	31.3	2.9	91%	-
Div. 2 - X_L =	34.0	35.0	-	4%
X_o =	32.5	0.56	98%	-
Div. 3 - X_L =	36.0	31.2	13%	-
X_o =	34.5	0.56	98%	-
Div. 4 - X_L =	36.3	35.1	3%	-
X_o =	34.8	0.56	98%	-
Variable Leg - RPV Nozzle N-12[1] Wide Range Instruments				
Div. 1 - X_L =	45.0	30.4	32%	-
X_o =	44.5	1.0	98%	-
Div. 2 - X_L =	36.2	30.3	16.5%	-
X_o =	35.0	1.0	97%	-
Div. 3 - X_L =	32.4	28.8	11%	-
X_o =	30.9	0.75	97.6%	-
Div. 4 - X_L =	36.1	30.9	14%	-
X_o =	34.6	1.6	95%	-

1 RPV Instrument Nozzle taps located azimuthally at approximately 20, 160, 200 and 340 degrees. See figures 3-6 through 3-9 or Figures D-1 through D-4 for exact locations.

2 Sense line length measured from the drywell wall penetration head fitting to the RPV instrument nozzle connection - dimensions of feet.

3 Centerline location of flow limiting orifice plate measured from the drywell wall penetration head fitting - dimensions of feet.

COMPARISON OF THE REFERENCE LEG DRYWELL - VERTICAL DROPS FOR THE ORIGINAL AND MODIFIED WLMS - NARROW, WIDE AND FUEL ZONE RANGE INSTRUMENTS

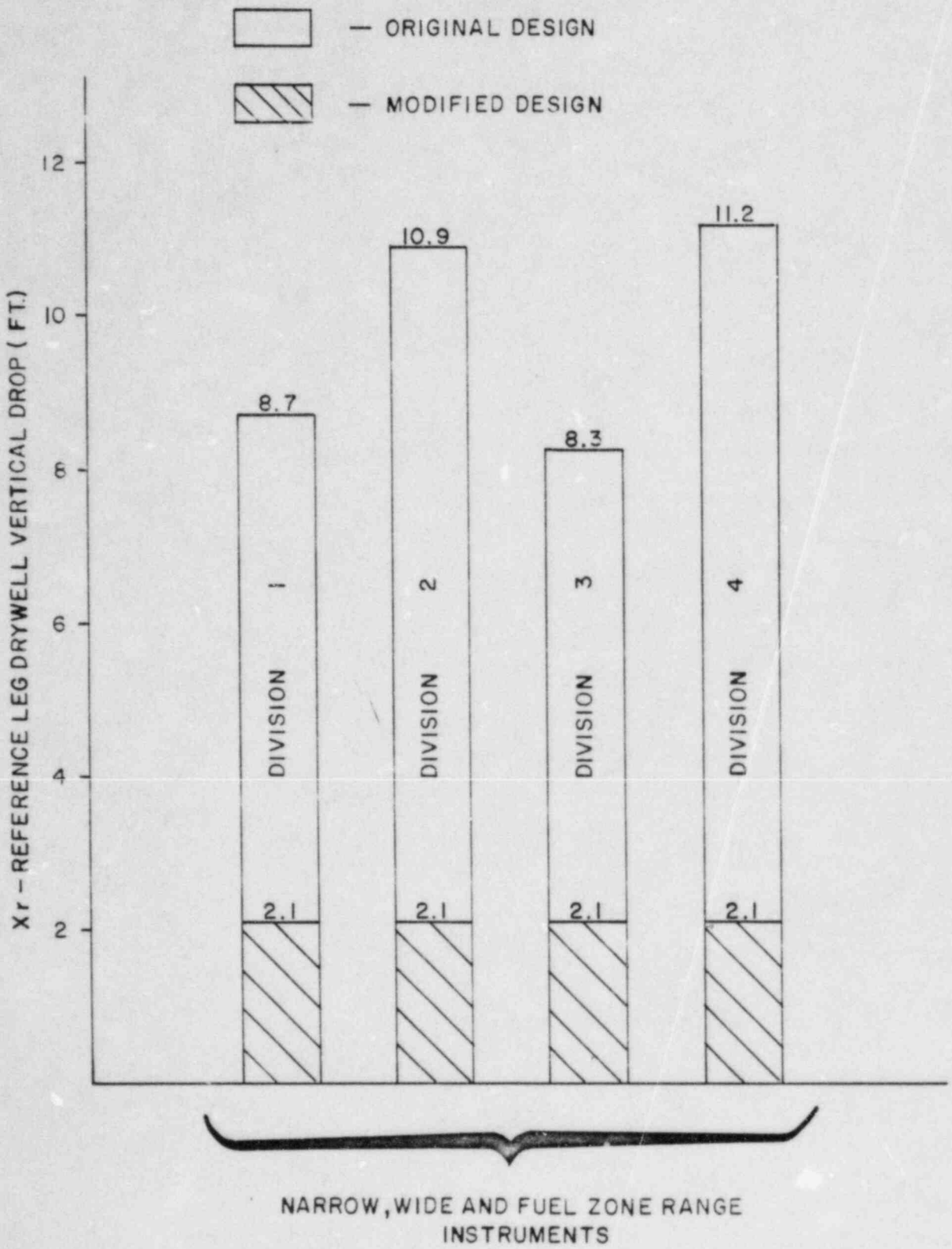

FIGURE 7-1

COMPARISON OF THE REFERENCE LEG AND VARIABLE LEG DRYWELL VERTICAL DROP DIFFERENCE FOR THE ORIGINAL AND MODIFIED WLMS NARROW & WIDE RANGE INSTRUMENTS

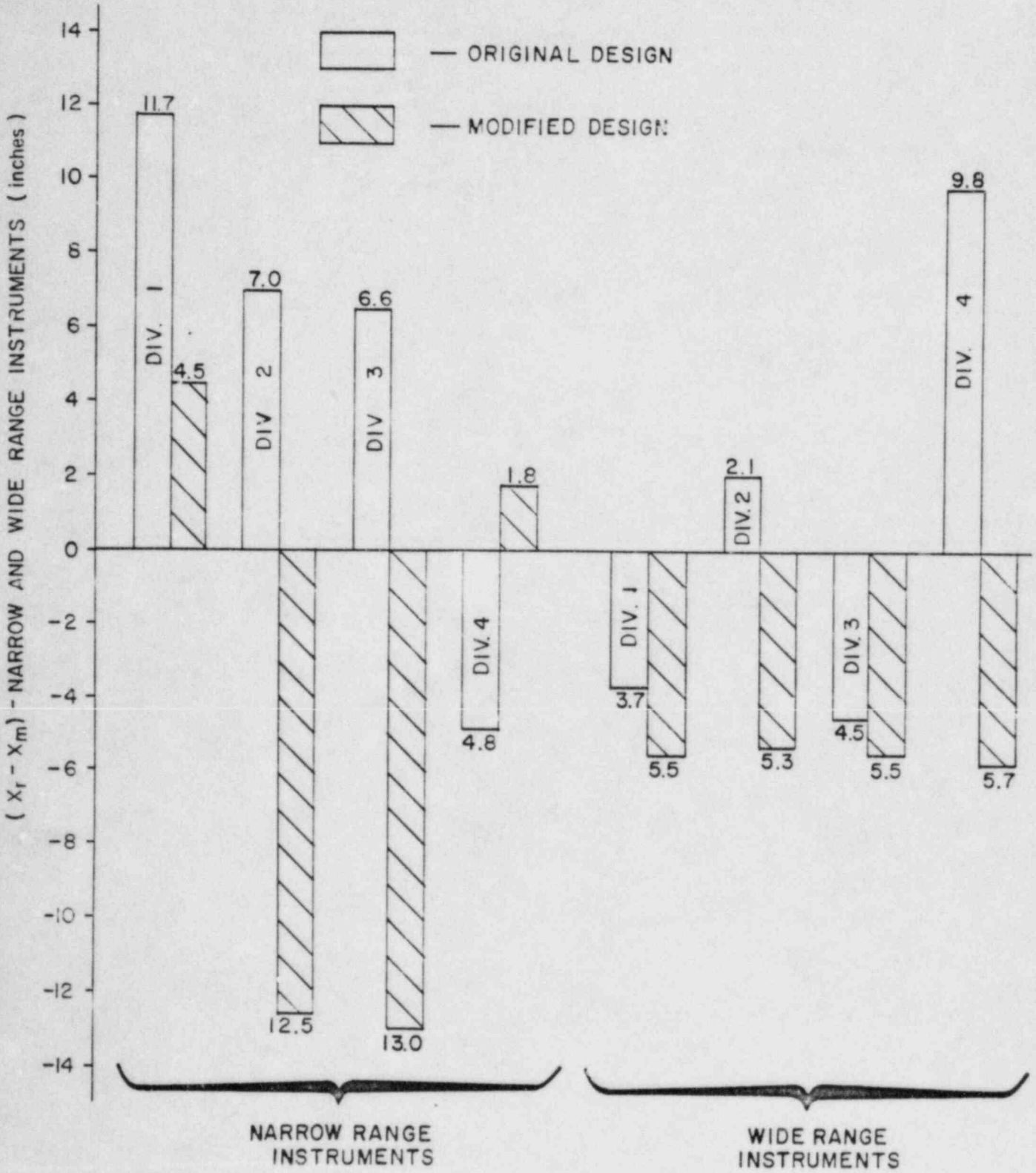

FIGURE 7-2

COMPARISON OF THE REFERENCE LEG AND VARIABLE LEG DRYWELL VERTICAL DROP DIFFERENCE FOR THE ORIGINAL AND MODIFIED WLMS FUEL ZONE, SHUTDOWN & UPSET RANGE INSTRUMENTS

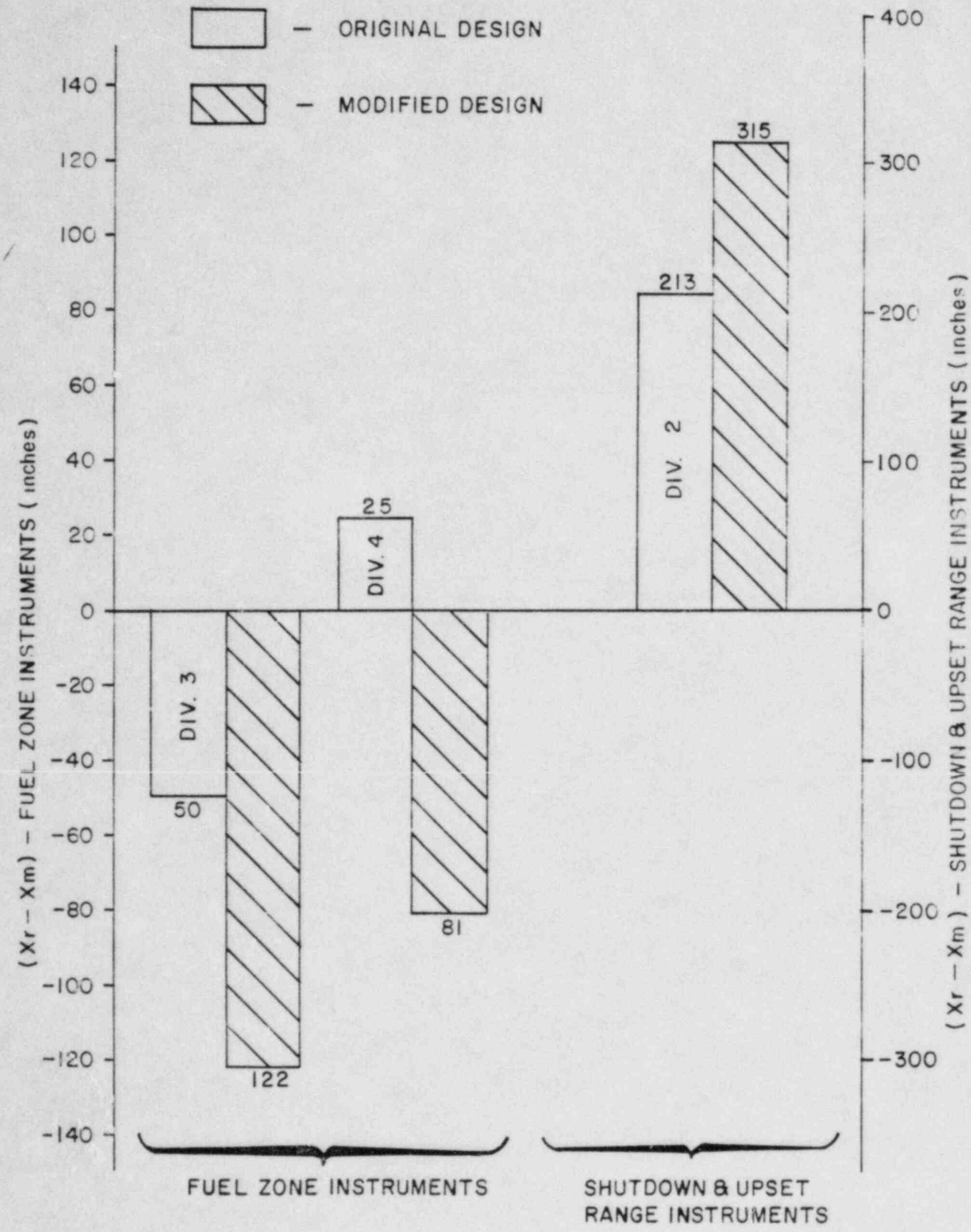

FIGURE 7-3

SENSITIVITY OF WIDE RANGE INSTRUMENT ZERO OFFSET ERROR TO DRYWELL TEMPERATURE VARIATIONS – MODIFIED WLMS DESIGN

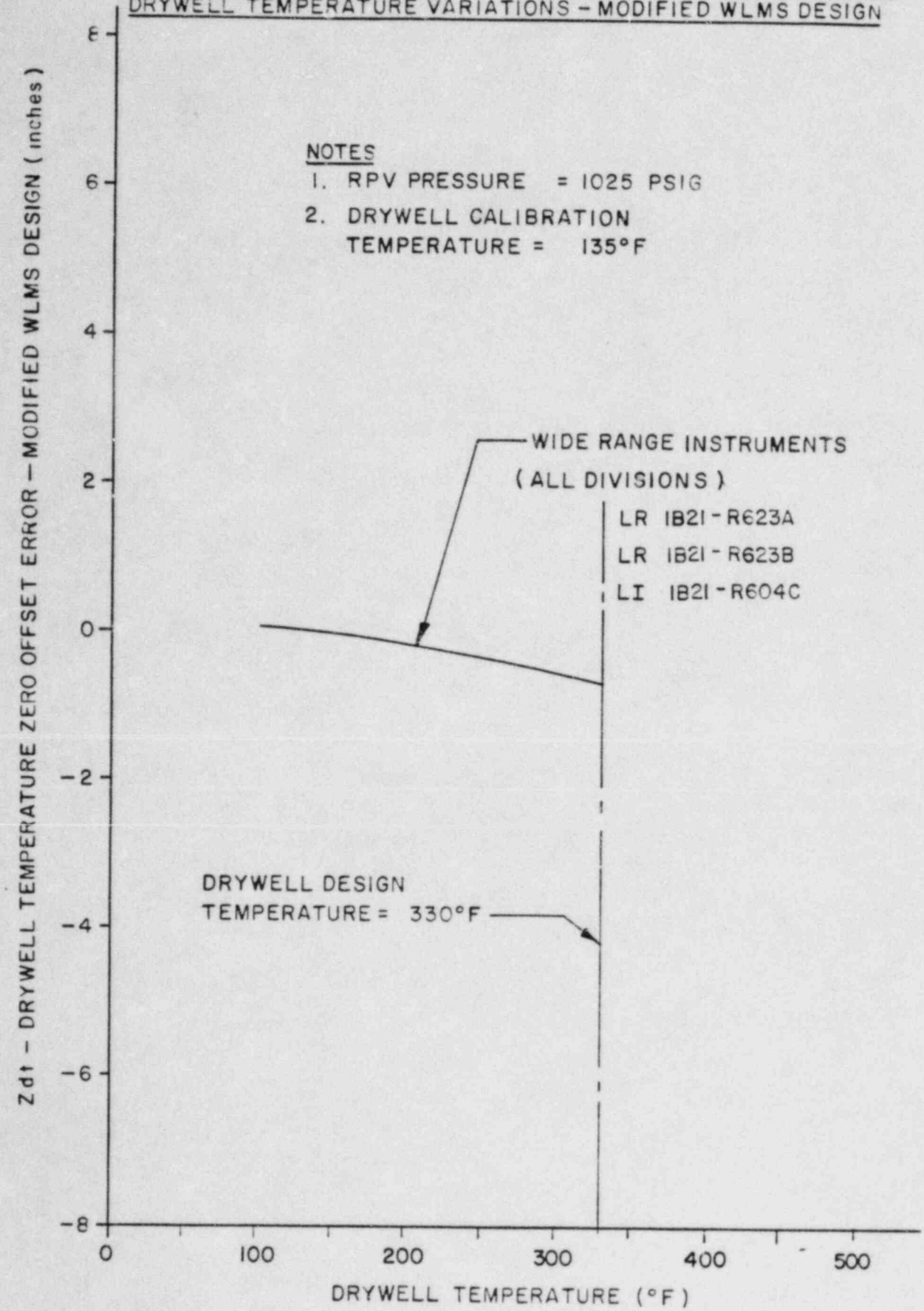

FIGURE 7-4

SENSITIVITY OF NARROW RANGE INSTRUMENT ZERO OFFSET ERROR TO DRYWELL TEMPERATURE VARIATIONS – MODIFIED WLMS DESIGN

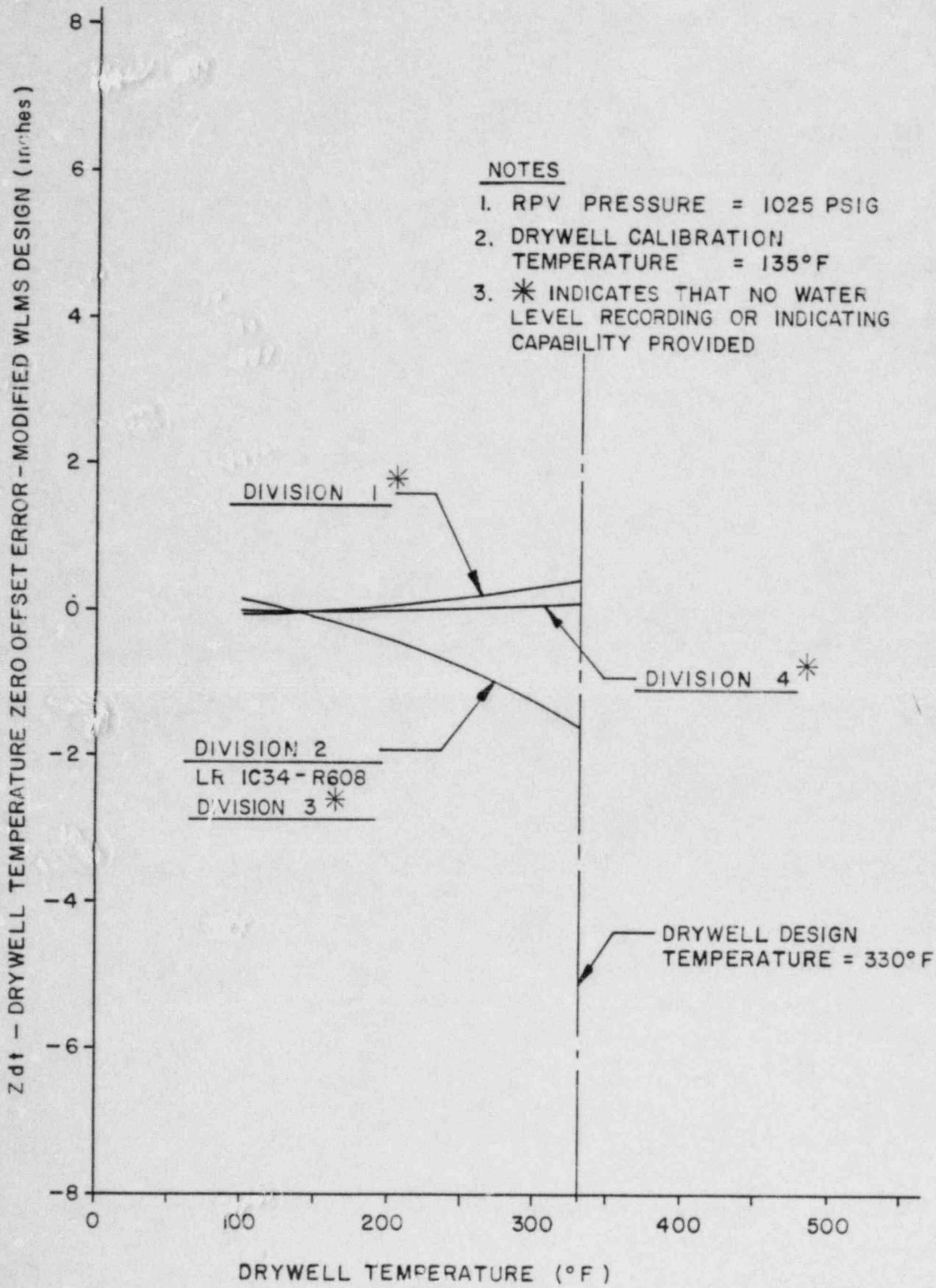

FIGURE 7-5

SENSITIVITY OF FUEL ZONE RANGE INSTRUMENT ZERO OFFSET ERROR TO DRYWELL TEMPERATURE VARIATIONS – MODIFIED WLMS DESIGN

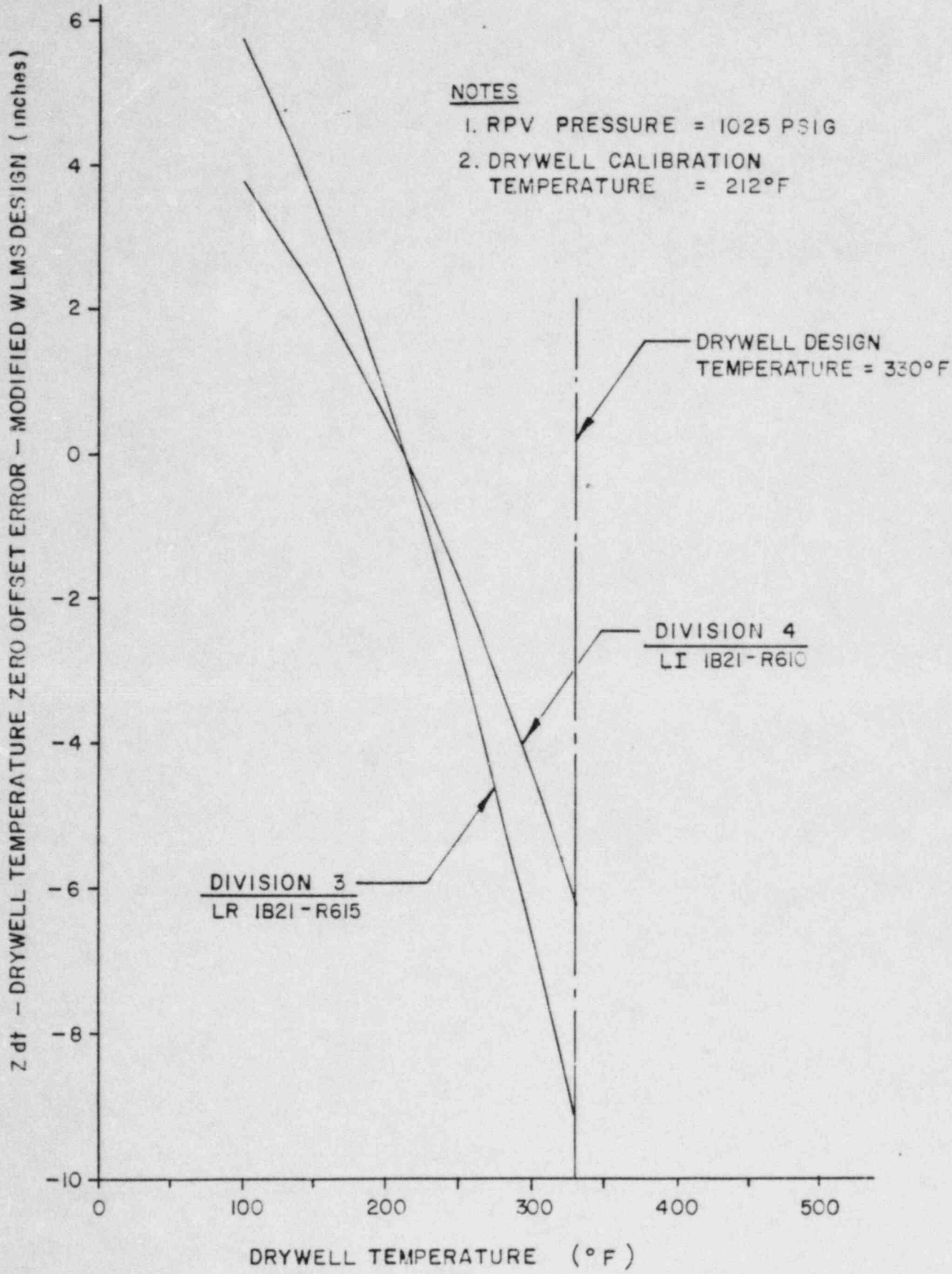

FIGURE 7-6

SENSITIVITY OF UPSET & SHUTDOWN RANGE INSTRUMENT ZERO OFFSET ERROR TO DRYWELL TEMPERATURE VARIATIONS - MODIFIED WLMS DESIGN

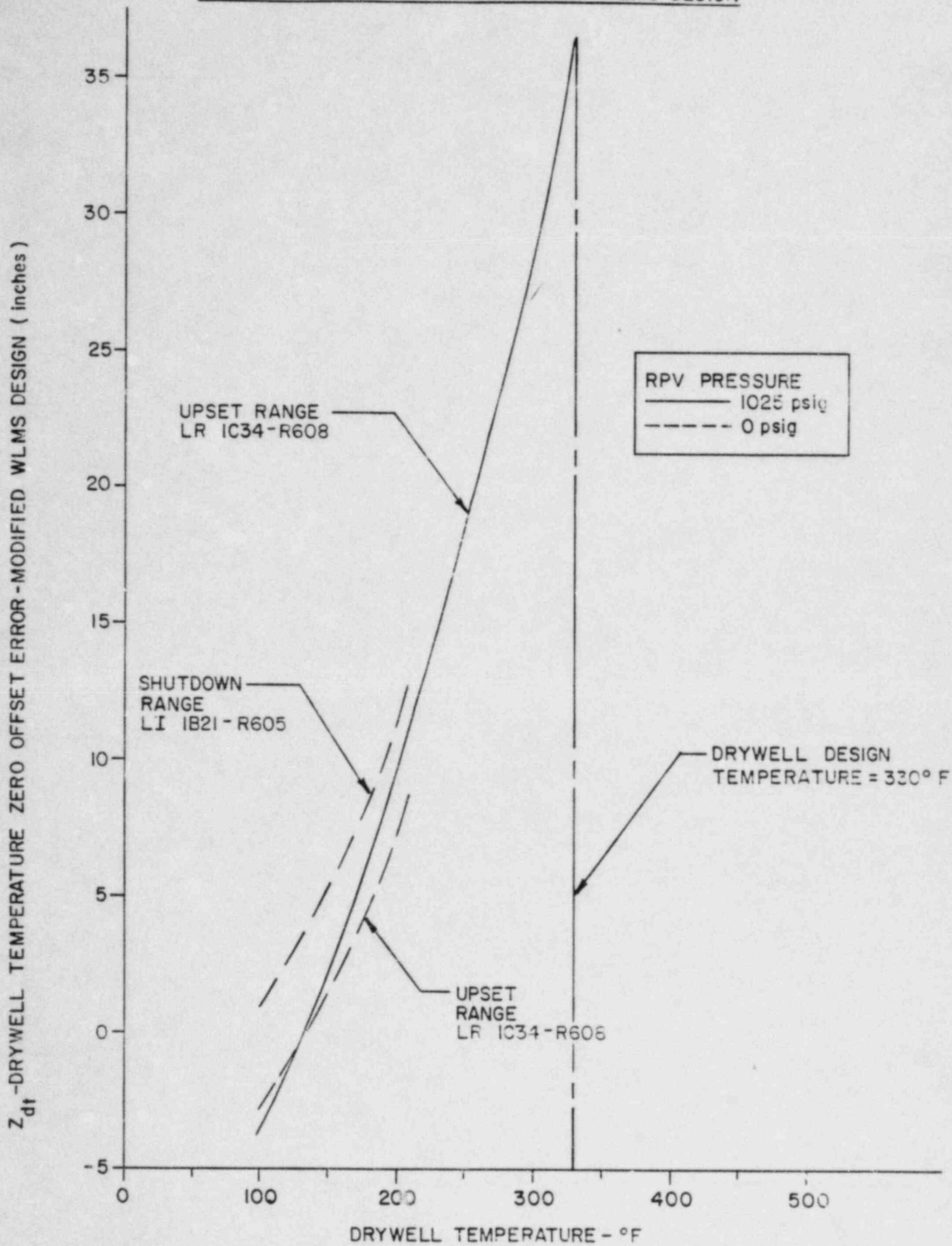

FIGURE 7-7

SENSITIVITY OF INSTRUMENTS ZERO OFFSET TO VARIATIONS IN CONTAINMENT TEMPERATURE - MODIFIED DESIGN

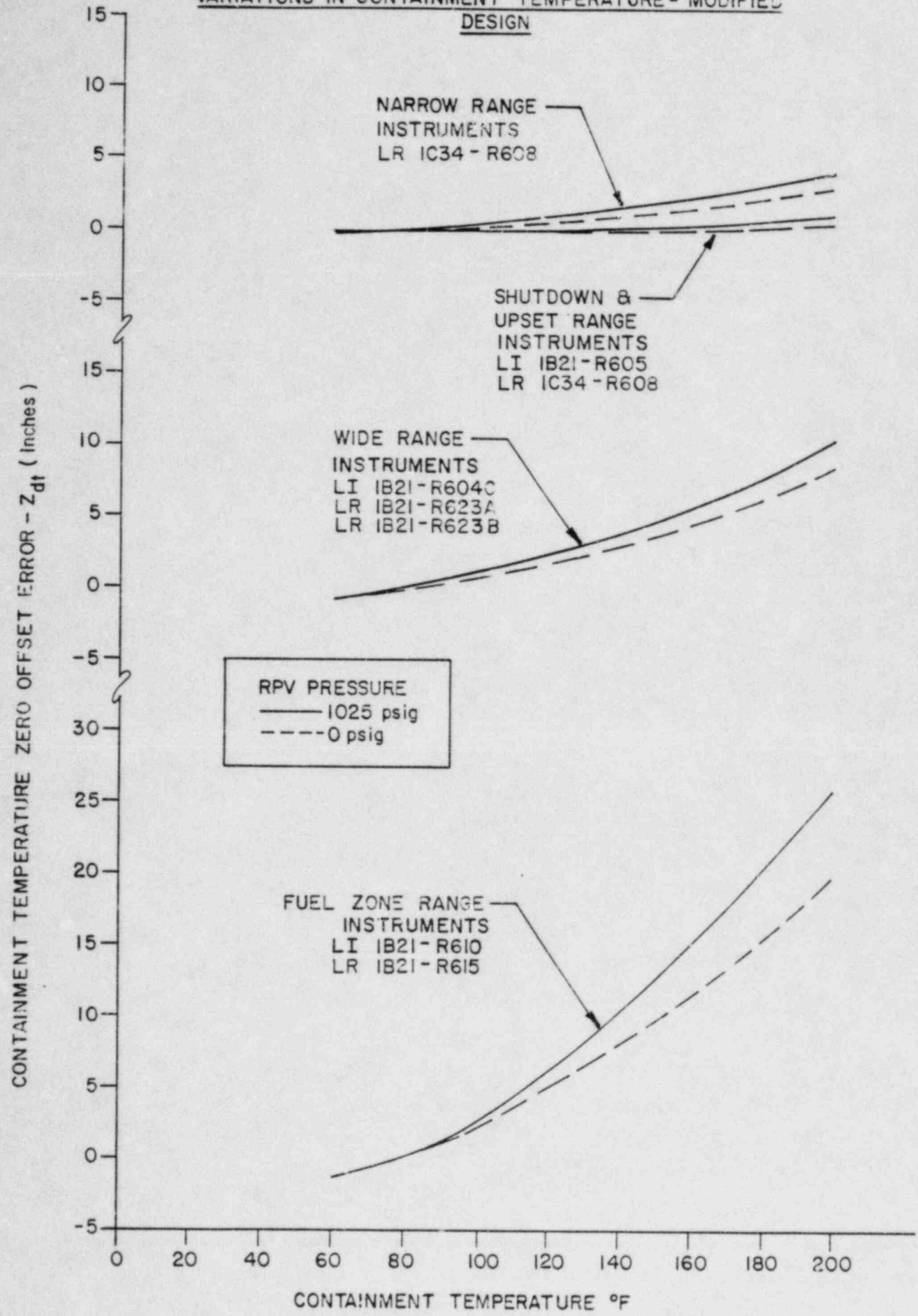

FIGURE 7-8

STEADY-STATE FLASHING ERRORS FOR THE NARROW AND WIDE RANGE INSTRUMENTS - MODIFIED WLMS DESIGN

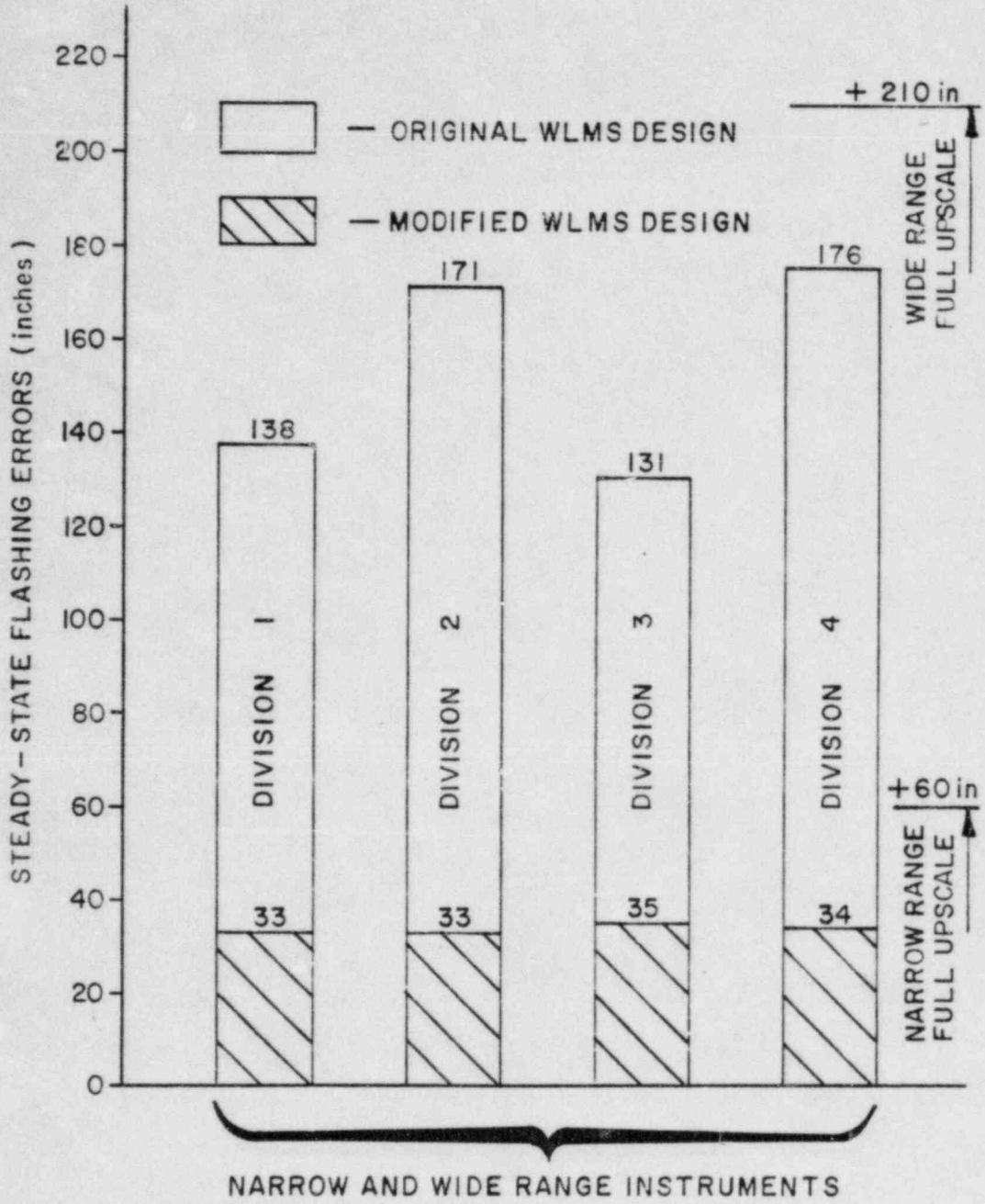

FIGURE 7-9

STEADY-STATE FLASHING ERRORS FOR THE FUEL ZONE, UPSET & SHUTDOWN RANGE INSTRUMENTS - MODIFIED WLMS DESIGN

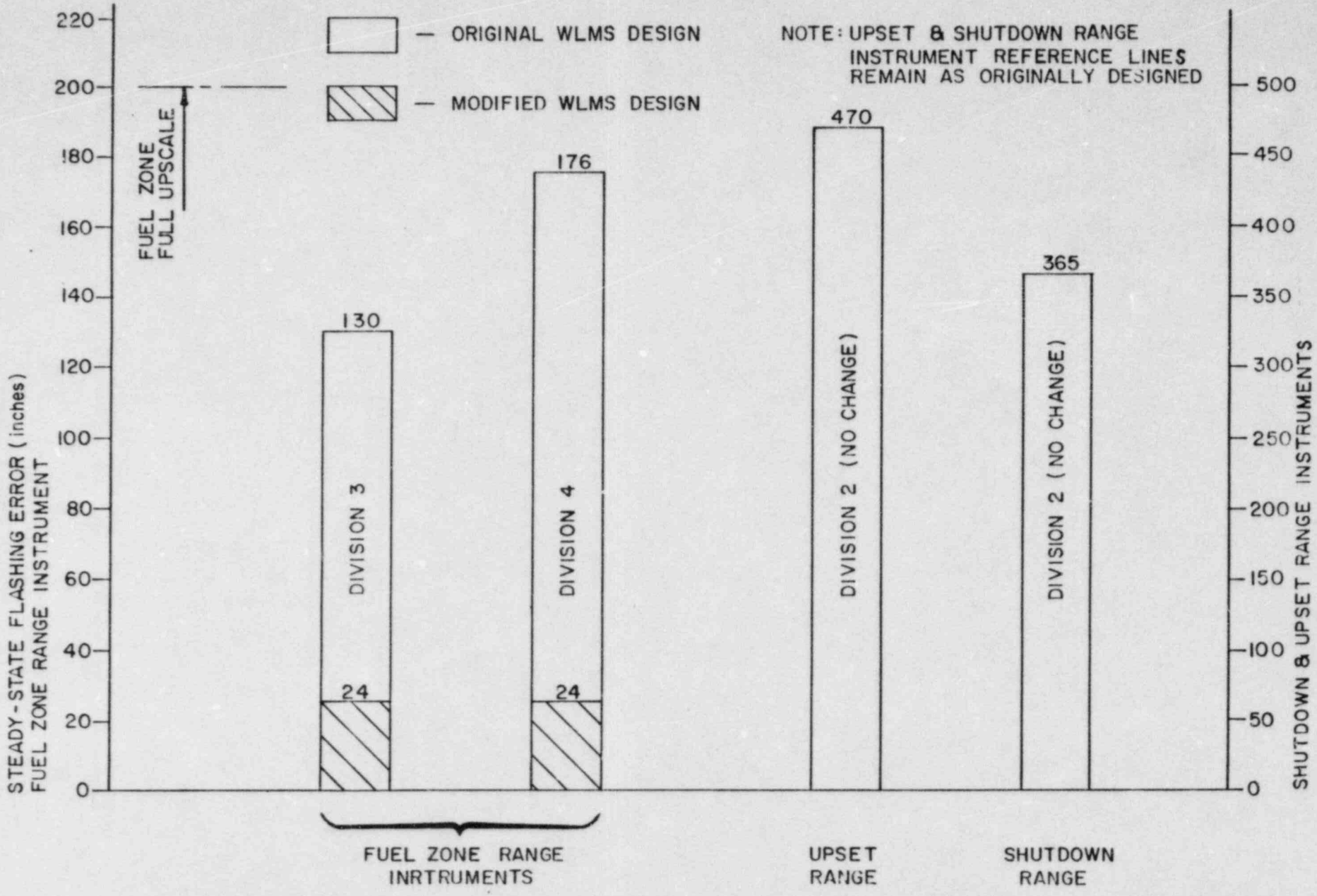

FIGURE 7-10

SECTION 8

CONCLUSIONS

The Clinton Power Station reactor pressure vessel Water Level Measurement System analysis, contained within the previous sections of this report, is the result of a study of the interaction between the WLMS, those plant systems initiated by the WLMS, and the plant operators. The key features of the Clinton WLMS are as follows:

- The CPS WLMS uses non-temperature compensated (cold) reference legs connected to the reactor vessel steam space via a condensing chamber and a variable leg connected to the reactor vessel at an elevation below the water level. Density compensation as provided in a heated reference leg system, is not a feature of the Clinton system. The water level is determined by measuring the differential pressure between the reference leg and the variable leg. In a cold reference leg system, the fluid temperature in the instrument sensing lines is not significantly affected by process conditions, but is determined by the drywell and containment ambient temperature.

- The level instrument signals are used by the various plant systems that can be actuated by the WLMS via the Analog Trip System (ATS). The anticipated ATS component failure rates for CPS should be less than about 2×10^{-5}/hour/trip unit based on a comparison between the CPS ATS design and the original ATS designed by General Electric as discussed in licensing topical report NEDO-21617-A, "Analog Transmitter/Trip Unit System for Engineered Safeguard Sensor Trip Inputs", December 1978.

- The WLMS utilizes four divisions of instrumentation covering five different instrument ranges. The five ranges measure water levels from about -150" to +560" with respect to the Top of Active Fuel (TAF).

- The safety system automatic actuation logic from the WLMS is as follows:

  - Reactor Protection System actuation logic for reactor scram is any two-out-of-four WLMS input signals on low water level (L3) or high water level (L8);

  - Main Steam Isolation Valve Closure actuation logic is any two-out-of-four WLMS input signals on low water level (L1);

- High Pressure Core Spray (HPCS) and Reactor Core Isolation Cooling (RCIC) actuation logic is one-out-of-two taken twice for initiation on WLMS input signals of low water level (L2) and two-out-of-two for high water level (L8) trip on WLMS input signals;

- Low Pressure Core Spray (LPCS) and Low Pressure Coolant Injection (LPCI) actuation logic for initiation is two-out-of-two WLMS input signals on low water level (L1);

- Contribution to Automatic Depressurization System (ADS) acutation logic is one-out-of-two solenoids (see Figure A-12 of Appendix A) based on low water level input signals (L1 and L3) with a 6-minute time delay that allows low water level signals to bypass high drywell pressure signals;

- Feedwater Turbine and Main Turbine trips are both two-out-of-two WLMS input signals from any of three logic trains on high water level (L8); and

- Contribution to Upper Pool Dump actuation logic is from water level inputs which contribute to initiation of LPCS/LPCI RHR-A or LPCI RHR-B/C and include a 30-minute time delay prior to initiation.

° The modified CPS WLMS design includes the following features:

- The vertical drop in the drywell for the narrow, wide and fuel zone range reference legs has been limited to no greater than 25" to reduce the total fluid inventory in the vertical portion of the leg susceptible to flashing. This modification has significantly reduced the level indication errors due to steady-state flashing.

- The vertical drop difference between the narrow and wide range reference leg and variable leg instrument lines has been maintained at approximately ±12" in order to keep non-flashing drywell temperature errors at negligible quantities; and

- The instrument line flow limiting orifices for all sensing lines except the two fuel zone range variable legs and the upset/shutdown range reference leg have been relocated from their original location at the RPV instrument tap to as close to the drywell wall as possible to minimize the short-term (transient) effects of fluid flashing on level indication.

The key results from the CPS WLMS evaluation are as follows:

1. The various level indication ranges coupled with the instrument specific calibration stategies, provides satisfactory level indications for determining the state of core cooling. Indication of the approach to and the existence of Inadequate Core Cooling (ICC) can be accomplished by using the WLMS since level is a good indication of core temperature and the state of the fuel cladding. The relationship between core water level and peak cladding temperature is relatively insensitive to the rate at which core uncovery occurs.

2. The significance of flashing errors has been greatly reduced due to the WLMS instrument line redesign. Under the worst flashing conditions postulated for CPS, the WLMS will always provide automatic initiation of high pressure injection systems at L2. In addition, the actual water level will always be above TAF when indicated level is 14" above L1.

3. The significance of high drywell temperature effects on level measurement accuracy have been minimized by maintaining nearly equal vertical drops in the reference and variable legs within the drywell.

4. The Failure Modes and Effects Analysis (FMEA) indicates that the redundancy within the WLMS design allows for the availability of at least one high pressure injection system for each failure combination event. In addition, comparisons between the CPS WLMS and generic WLMS designs indicate that such events are of very low probability for BWR/6s. The Michelson-type scenario would not result in a challenge to fuel design limits or result in any core uncovery for CPS.

5. The CPS Emergency Procedure Guidelines, and the Emergency Operating Procedures developed from them, are based on NRC approved generic guidelines developed through the BWR Owner's Group for TMI activities. These procedures provide explicit water level control instructions to the plant operators which supplement the WLMS displays and assure adequate core cooling regardless of the state of the WLMS.

Based on these conclusions, the modified CPS WLMS provides for reliable and accurate reactor vessel water level indications during both normal plant operation and postulated design basis accidents. As such, the design modifications made to the CPS WLMS resolves TMI Action Plan Item II.F.2 as contained in NUREG-0737. Therefore, based on the results of this Clinton specific WLMS assessment, it is concluded that no additional instrumentation will be necessary for CPS to detect conditions that may lead to inadequate core cooling.

SECTION 9

LIST OF ACRONYMS

ACRONYM	DEFINITION
AC	ALTERNATING CURRENT
ADS	AUTOMATIC DEPRESSURIZATION SYSTEM
ALM	ALARM UNIT
ANS	AMERICAN NUCLEAR SOCIETY
ARI	ALTERNATE ROD INSERTION
ATM	ANALOG TRIP MODULE
ATS	ANALOG TRIP SYSTEM
ATWS	ANTICIPATED TRANSIENT WITHOUT SCRAM
BAF	BOTTOM OF ACTIVE FUEL
BOP	BALANCE OF PLANT
BWR	BOILING WATER REACTOR
BWROG	BOILING WATER REACTOR OWNERS GROUP
CCFL	COUNTER CURRENT FLOW LIMITING
CPS	CLINTON POWER STATION
CRD	CONTROL ROD DRIVE
DBA-LOCA	DESIGN BASIS ACCIDENT - LOSS OF COOLANT ACCIDENT
DC	DIRECT CURRENT
ECCS	EMERGENCY CORE COOLING SYSTEM
ED	ELEMENTARY DIAGRAM
EOP	EMERGENCY OPERATING PROCEDURE
EPG	EMERGENCY PROCEDURE GUIDELINE
FCD	FUNCTIONAL CONTROL DIAGRAM
FMEA	FAILURE MODES AND EFFECTS ANALYSIS

FSAR	FINAL SAFETY ANALYSIS REPORT
FW	FEEDWATER
GE	GENERAL ELECTRIC COMPANY
HELB	HIGH ENERGY LINE BREAK
HPCS	HIGH PRESSURE CORE SPRAY
ICC	INADEQUATE CORE COOLING
INSTR	INSTRUMENT
IPC	ILLINOIS POWER COMPANY
L1, L2,...	Level 1, Level 2,...
LCO	LIMITING CONDITIONS OF OPERATION
LI	LEVEL INDICATOR
LOCA	LOSS OF COOLANT ACCIDENT
LODWC	LOSS OF DRYWELL COOLING
LPCI	LOW PRESSURE COOLANT INJECTION
LPCS	LOW PRESSURE CORE SPRAY
LR	LEVEL RECORDER
LRG-II	LICENSING REVIEW GROUP II
MSIV	MAIN STEAM ISOLATION VALVE
NRC	NUCLEAR REGULATORY COMMISSION
NSPS	NUCLEAR SYSTEM PROTECTION SYSTEM
NSSS	NUCLEAR STEAM SUPPLY SYSTEM
P&ID	PIPING AND INSTRUMENTATION DIAGRAM
RCIC	REACTOR CORE ISOLATION COOLING
RHR	RESIDUAL HEAT REMOVAL
RPS	REACTOR PROTECTION SYSTEM
RPT	RECIRCULATION PUMP TRIP
RPV	REACTOR PRESSURE VESSEL

SD	SCHEMATIC DIAGRAM
S&L	SARGENT & LUNDY ENGINEERS
SBA	SMALL BREAK ACCIDENT
SRV	SAFETY RELIEF VALVE
TAF	TOP OF ACTIVE FUEL
TMI	THREE MILE ISLAND
TS	TECHNICAL SPECIFICATIONS
UPD	UPPER CONTAINMENT POOL DUMP
WLMS	WATER LEVEL MEASUREMENT SYSTEM
ΔP	DIFFERENTIAL PRESSURE

APPENDIX A

SYSTEM LOGIC DESCRIPTION AND FAILURE MODES AND EFFECTS ANALYSIS

APPENDIX A

SYSTEM LOGIC DESCRIPTION AND FAILURE MODES AND EFFECTS ANALYSIS

A.1 Introduction

This Appendix qualifies the effects of reference leg failures on successful initiation of pertinent plant systems via RPV water level inputs. Basic logic diagrams for water level inputs are determined for each of the considered plant systems. Piping and instrument diagrams (P&ID's), functional control diagrams (FCD's), and elementary diagrams were used to obtain the logic information. From the basic logic diagrams, Boolean equations were derived which were evaluated with respect to reference leg failures in a failure modes and effects analysis (FMEA).

The FMEA evaluates reference leg failures with respect to plant system actuation via RPV water level inputs. A reference leg failure occurs when water within the line is lost as a result of: (1) a line break or leak anywhere between the RPV tap and the water level instruments, (2) evaporation within the condensing chamber and line without normal make-up water, (3) and other abnormal events which result in leakage of the reference leg. This type of reference leg failure will cause the attached RPV water level transmitters to read upscale (i.e., sensed water level is higher than actual water level). As a result, the transmitters will not be able to sense low RPV water level and initiate plant safety systems. Additional concerns also include failure of the water level transmitter and loss of power to the transmitter and associated logic. Therefore, the following failure combinations are also evaluated in the FMEA: (1) reference leg failure in conjunction with a single water level instrument failure in another division and (2) reference leg failure in conjunction with loss of a power bus in another division. The effects of a single instrument failure is covered in Chapter 7 of Clinton's Final Safety Analysis Report (FSAR) and is not repeated in this appendix. Multiple reference leg failures resulting from a common cause (i.e., high drywell temperature) are also not considered in this analysis. Sections 4, 5, and 7 of this report addresses this concern when evaluating reference leg flashing. A summary of the various failure modes and effects is presented at the end of this appendix.

A.2 Conventions & Assumptions

A.2.1 Boolean Algebra

A plant systems logic is graphically depicted using AND and OR logic gates whose definitions are given in Figures A-1 and A-2, respectively. A Boolean expression is then derived from the pictorial interconnection of logic gates. The Boolean expression is evaluated using Boolean algebra which is a switching algebra involving variables that have only two states. Typically, the states represent opposite extremes of a condition (e.g., a valve is either fully opened or completely closed). For this analysis, variables (i.e., water level transmitter) are denoted using letters and numbers and the variable states are denoted as either 0 (zero) or 1 (one) representing no voltage or the presence of voltage, respectively. The resulting expression is reduced by application of Boolean algebra definitions and theorems regarding the basic operations of AND (•) and OR (+) presented in Figures A-1 and A-2.

Certain simplifications are made when determining the system logic diagrams and corresponding Boolean equations. Since the purpose of the logic diagram is to graphically depict the combinational nature of the water level input logic, other variables need not be included in the diagram. For some plant systems, inputs from other variables (e.g., drywell pressure transmitters) are included on the graphical depictions for clarity, but the derived Boolean expression will only include RPV water level inputs.

A.2.2 Failure Modes and Effects Analysis (FMEA)

The FMEA performed in this Appendix identifies failure modes of RPV water level transmitters and evaluates the consequences resulting from these failures with respect to initiation and tripping of plant systems. Transmitter failure modes are identified with respect to their inability to provide the appropriate initiation/trip signal (0 or 1). This inability can result from: (1) failure of the reference leg to which the transmitter is attached, (2) failure of the transmitter, or (3) loss of the bus supplying power to the transmitter and/or logic fed by the transmitter. It is assumed that all water level transmitters attached to a failed reference leg will sense water level greater than Level 8. With respect to a defective transmitter, output signals could be high, low, or erratic when responding to changing RPV water level. However, only total success or failure can be considered when using Boolean algebra. Therefore, this analysis conservatively assumes that the output state of a defected transmitter is such that an initiation signal is not produced for actuation of the plant system being evaluated. It is assumed that remaining instrumentation downstream of the initiation logic successfully operates. The Boolean expression being considered is evaluated by substituting the appropriate value (0 or 1) for each variable in the expression. A summary of the analysis is then presented in tabular form.

A.3 Clinton Plant RPV Water Level Measurement System (WLMS)

The orientation for the RPV water level measurement system (WLMS) is shown in Figure A-3. A summary of vessel level and system actions is presented in Table A-1. The system assignment of instruments, the power used for the instrument, and the Analog Trip Module (ATM) which receives the signal from the transmitter are shown in Table A-2.

A.4 Logic System Description and Failure Analysis

In this section, logic diagrams are developed for the following plant safety systems or functions:

a) Reactor Protection System (RPS),
b) High Pressure Core Spray (HPCS),
c) Reactor Core Isolation Cooling (RCIC),
d) Main Steam Isolation Valve (MSIV) Closure,
e) Low Pressure Core Spray (LPCS),
f) Low Pressure Coolant Injection (LPCI),
g) Automatic Depressurization System (ADS),
h) Feedwater and Main Turbine Trip, and
i) Upper Containment Pool Dump (UPD),

A.4.1 Reactor Protection System (RPS)

Signals from four RPS transmitters (one attached to each reference leg) are fed through four two-out-of-four circuits providing four RPS divisional logic output signals. The input/output logic diagram for RPS Division 1 is shown on Figure A-4. The input/output logic diagrams for RPS Divisions 2, 3, and 4 are identical to RPS Division 1. However, the power sources for each RPS division logic is different. The resulting four RPS divisional signals are fed through a second scram logic train whose output signals actuate the RPS. Since it is assumed that all components successfully operate other than the postulated reference leg/transmitter failures, actuation of the RPS is dependent on the four RPS divisional output signals. Therefore, the second scram logic train is not considered in the analysis.

This evaluation assumes that all four channels (transmitters) are available before postulating failures. Surveillance/maintenance requirements per Reference A-1 do require that a channel be placed out of service for: (1) a channel functional test, (2) a channel calibration, and (3) a trip unit calibration. The total time required to perform these procedures for 4 channels is approximately 10 hours per month. Assuming the plant is operating 70% of the time (500 hours/month), the unavailability of one channel as a result of normal surveillance/maintenance work is 2.0×10^{-2}. This does not consider that many of these calibrations would be performed during downtime. Therefore, it is concluded that to postulate: (1) an inoperable channel resulting from normal surveillance/maintenance work, (2) a failed reference leg, and (3) an undetected failed transmitter to occur all in conjunction would result in an extremely low probability event, therefore, the event is not considered in this analysis.

TABLE A-1

CLINTON RPV WATER LEVEL AND SYSTEM FUNCTION CORRELATIONS (1)

Description	Inches Above TAF (2)
Steam tap for condensing chambers.	227.69
Narrow and wide range upscale.	222.10
Level 8 - Trip RCIC turbine and HPCS injection valve closure signal. Close main turbine stop valves, Trip feed pumps and condensate booster pumps, SCRAM.	214.06
Level 7 - Feedwater control high level alarm.	200.86
Level 4 - Feedwater control low level alarm.	192.86
Level 3 - SCRAM (RPS) & contribute to auto depressurization. Run recirculation flow back. Close RHR shutdown isolation valves.	170.96
Instrument zero - for wide, narrow, shutdown and upset range. Narrow and shutdown range downscale.	162.06
Narrow range tap (variable leg).	150.44
Feedwater Sparger.	124.94
Level 2 - Initiate RCIC & HPCS. Close primary system isolation valves except RHR shutdown isolation valves, start Div. 3 stand-by diesel, initiate ATWS (non-safety related ARI and RPT).	116.56
Level 1 - Initiate LPCI & LPCS. Contribute to auto depressurization. Start Div. 1 & Div. 2 stand-by diesels. Close MSIV's.	16.56
TAF - Top of active fuel. Fuel zone range instrument zero.	0
Wide range tap (variable leg).	- 0.56
BAF - Bottom of Active Fuel. Fuel zone range downscale	-150

NOTES:
(1) Also See Table 3-2 in Section 3.
(2) TAF is 358.56 inches above inside bottom of vessel.

TABLE A-2

ASSIGNMENT OF WATER LEVEL INSTRUMENTATION WHICH INITIATE PLANT SYSTEMS

System	Analog Trip Module	Water Level Transmitter	Reference Leg Division to Which Transmitter is Attached	Power Bus	Function
RPS	ATM 1B21-N680A	LT-1B21-N080A	1	NSPS A, 120 VAC	Level 3 SCRAM
	ATM 1B21-N680B	LT-1B21-N080B	2	NSPS B, 120 VAC	
	ATM 1B21-N680C	LT-1B21-N080C	3	NSPS C, 120 VAC	
	ATM 1B21-N680D	LT-1B21-N080D	4	NSPS D, 120 VAC	
	ATM 1B21-N683A	LT-1B21-N080A	1	NSPS A, 120 VAC	Level 8 SCRAM
	ATM 1B21-N683B	LT-1B21-N080B	2	NSPS B, 120 VAC	
	ATM 1B21-N683C	LT-1B21-N080C	3	NSPS C, 120 VAC	
	ATM 1B21-N683D	LT-1B21-N080D	4	NSPS D, 120 VAC	
HPCS	ATM 1B21-N673C	LT-1B21-N073C	3	NSPS C, 120 VAC	Level 2
	ATM 1B21-N673D	LT-1B21-N073D	4	NSPS D, 120 VAC	Initiate HPCS
	ATM 1B21-N673G	LT-1B21-N073G	3	NSPS C, 120 VAC	
	ATM 1B21-N673H	LT-1B21-N073H	4	NSPS D, 120 VAC	
	ATM 1B21-N674C	LT-1B21-N073C	3	NSPS C, 120 VAC	Level 8
	ATM 1B21-N674D	LT-1B21-N073D	4	NSPS D, 120 VAC	Trip HPCS
RCIC	ATM 1B21-N692A	LT-1B21-N091A	1	NSPS A, 120 VAC	Level 2
	ATM 1B21-N692B	LT-1B21-N091B	2	NSPS B, 120 VAC	Initiate RCIC
	ATM 1B21-N692E	LT-1B21-N091E	3	NSPS A, 120 VAC	
	ATM 1B21-N692F	LT-1B21-N091F	4	NSPS B, 120 VAC	
	ATM 1B21-N693A	LT-1B21-N091A	1	NSPS A, 120 VAC	Level 8
	ATM 1B21-N693B	LT-1B21-N091B	2	NSPS B, 120 VAC	Trip RCIC

TABLE A-2 (Cont'd)

System	Analog Trip Module	Water Level Transmitter	Reference Leg Division to Which Transmitter is Attached	Power Bus	Function
MSIV Closure	ATM 1B21-N681A	LT-1B21-N081A	1	NSPS A, 120 VAC	Level 1 Initiate MSIV Closure
	ATM 1B21-N681B	LT-1B21-N081B	2	NSPS B, 120 VAC	
	ATM 1B21-N681C	LT-1B21-N081C	3	NSPS C, 120 VAC	
	ATM 1B21-N681D	LT-1B21-N081D	4	NSPS D, 120 VAC	
LPCS/ LPCI RHR-A	ATM 1B21-N691A	LT-1B21-N091A	1	NSPS A, 120 VAC	Level 1 Initiate LPCS/ LPCI RHR-A Contribute Towards Upper Pool Dump
	ATM 1B21-N691E	LT-1B21-N091E	1	NSPS A, 120 VAC LPCI RHR-A Contribute Towards Upper Pool Dump	
LPCI RHR-B and C	ATM 1B21-N691B	LT-1B21-N091B	2	NSPS B, 120 VAC	Level 1 Initiate LPCI/ RHR-B and C Contribute Towards Upper Pool Dump
	ATM 1B21-691F	LT-1B21-N091F	2	NSPS B, 120 VAC	
ADS	ATM 1B21-N691A	LT-1B21-N091A	1	NSPS A, 120 VAC	Level 1 Initiate ADS
	ATM 1B21-N691E	LT-1B21-N091E	1	NSPS A, 120 VAC	
	ATM 1B21-N691B	LT-1B21-N091B	2	NSPS B, 120 VAC	
	ATM 1B21-N691F	LT-1B21-N091F	2	NSPS B, 120 VAC	
	ATM 1B21-N695A	LT-1B21-N095A	1	NSPS A, 120 VAC	Level 3 Confirmation
	ATM 1B21-N695B	LT-1B21-N095B	2	NSPS B, 125 VDC	
Feedwater	ALM 1C34-K624A(1)	LT-1B21-N004A	1	120 VAC INSTR BUS(2)	Level 8 Trip Feedwater and Main Turbines
	ALM 1C34-K624B(1)	LT-1B21-N004B	2	125 VDC BUS B(2)	
	ALM 1C34-K624C(1)	LT-1B21-N004C	3	125 VDC BUS A(2)	

NOTES:
1. Alarm Unit
2. Power source is non-safety related.

A.4.1.1 Reactor Protection System (RPS) Boolean Expression

The RPS Division 1 logic diagrams for low and high water level inputs are presented on Figures A-4 and A-5, respectively. The resulting Boolean equations per Figures A-4 and A-5 for RPS Division 1 are the same. The Boolean equation is as follows:

$$S = [[(D1 \cdot P1) + (D2 \cdot P2)] \cdot [(D1 \cdot P1) + (D3 \cdot P3)] \cdot [(D1 \cdot P1) + (D4 \cdot P4)] \cdot [(D2 \cdot P2) + (D3 \cdot P3)] \cdot [(D3 \cdot P3) + (D4 \cdot P4)] \cdot [(D2 \cdot P2) + (D4 \cdot P4)]] \cdot P1, \quad \text{(Eq. A-4.1)}$$

where,

D1 = LT-1B21-N080A, Division 1 Reference Leg,
D2 = LT-1B21-N080B, Division 2 Reference Leg,
D3 = LT-1B21-N080C, Division 3 Reference Leg,
D4 = LT-1B21-N080D, Division 4 Reference Leg,

P1 = NSPS 120 VAC INSTR BUS A,
P2 = NSPS 120 VAC INSTR BUS B,
P3 = NSPS 120 VAC INSTR BUS C,
P4 = NSPS 120 VAC INSTR BUS D,

S = 1, Normal state,
S = 0, Division 1 RPS initiation signal,

D1, D2, D3, D4 = 1 if water level is between L8 and L3,
D1, D2, D3, D4 = 0 if water level is above L8 or below L3,

P1, P2, P3, P4 = 1 if power is available, and
P1, P2, P3, P4 = 0 if power is not available.

A.4.1.2 Reactor Protection System (RPS) FMEA

A.4.1.2.1 Reference Leg Failure

Assuming a failure of the Division 1 reference leg, LT-1B21-N080A (D1) would fail to provide an initiation signal on low/high RPV water level, thus the assumed transmitter failure mode is:

$$D1 = 1$$

Assuming power is available (P1=P2=P3=P4=1), Equation A-4.1 becomes:

$$S = [[(1 \cdot 1) + (D2 \cdot 1)] \cdot [(1 \cdot 1) + (D3 \cdot 1)] \cdot [[(1 \cdot 1) + (D4 \cdot 1)] \cdot [(D2 \cdot 1) + (D3 \cdot 1)] \cdot [[(D3 \cdot 1) + (D4 \cdot 1)] \cdot [(D2 \cdot 1) + (D4 \cdot 1)]] \cdot 1$$

which reduces to

$$S = [(1) + (D2)] \cdot [(1) + (D3)] \cdot [(1) + (D4)] \cdot [(D2) + (D3)] \cdot [(D3) + (D4)] \cdot [(D2 + (D4)] \quad \text{(Eq. A-4.2)}$$

Substituting initiation signals (0) for D2, D3, and D4 into Equation A-4.2 produces:

$$S = [(1) + (0)]\cdot[(1) + (0)]\cdot[(1) + (0)]\cdot [(0) + (0)]\cdot[(0) + (0)]\cdot[(0) + (0)] = 0$$

The RPS would be actuated upon low or high RPV water levels (<L3 or >L8, respectively). There are three combinations of coincident signals in Equation A-4.2 of which any one combination would de-energize and actuate RPS. The combinations include; (1) D2 and D3, (2) D3 and D4. and (3) D2 and D4. The analysis also holds true when considering failures of Division 2, 3, or 4 reference legs, though the signal combinations would be different.

A.4.1.2.2. Reference Leg and Single RPS Transmitter Failures in Conjunction

Assuming a failure of the Division 1 reference leg and failure of LT-1B21-N080B (D2), the transmitter failure modes are: D1 = 1 (See Subsection A.4.1.2.1), and D2 = 1.

Substituting the failure mode for D2 and initiation signals for D3 and D4 into Equation A-4.2 produces the Boolean expression:

$$S = [(1) + (1)]\cdot[(1) + (0)]\cdot[(1) + (0)]\cdot [(1) + (0)]\cdot[(0) + (0)]\cdot[(1) + (0)] = 0 \qquad \text{(Eq. A-4.3)}$$

Coincident 0 signals from LT-1B21-N080C (D3) and LT-1B21-N080D (D4) would provide a RPS Division 1 initiation signal. The analysis also holds true when applied to the remaining 3 RPS Divisions. Hence, initiation signals would be provided by all 4 RPS Divisions given any combination of reference leg/single transmitter failures.

A.4.1.2.3 Reference Leg Failure and Loss of Bus in Conjunction

If it is conservatively assumed that the transmitter fed by a failed NSPS 120 VAC power bus is incapacitated, 2 water level transmitters would be available for providing signals. As shown in the previous subsection, coincident 0 signals from any two water level transmitters would produce initiation signals from all 4 RPS Divisions. If it is further assumed that the RPS Division logic fed by the failed bus is also incapacitated, 3 RPS divisional initiation signals would remain. Subsequently, 3 initiation signals from any combination of RPS divisions are sufficient to scram all valve groups. Furthermore, scram valves fail open upon loss of power, thus loss of a power bus feeding the valves will contribute to the RPS initiation.

A.4.1.3 Reactor Protection System (RPS) FMEA Summary

Successful actuation of the RPS via RPV water level inputs is not vulnerable to any single reference leg failure, nor to any

combination of reference leg failure and water level transmitter or power bus failure.

A.4.2 High Pressure Core Spray (HPCS) System

The basic logic for HPCS initiation via RPV water level inputs is shown in Figure A-6.a. The logic consists of two groups of two RPV transmitters. An initiation signal from each group is required to actuate the HPCS system when the water level drops below L2.

The basic logic for HPCS trip is shown in Figure A-6.b. The logic consists of two transmitters, of which both must provide a signal to trip HPCS when the RPV water level rises above L8.

A.4.2.1 High Pressure Core Spray (HPCS) Boolean Expression

The resulting HPCS initiation Boolean equation per Figure A-6.a is as follows:

$$S = [(1D3 \cdot P3) + (1D4 \cdot P4)] \cdot [(2D3 \cdot P3) + (2D4 \cdot P4)] \cdot P3, \quad \text{(Eq. A-4.4)}$$

where,

1D3 = LT-1B21-N073C, Division 3 Reference Leg,
2D3 = LT-1B21-N073G, Division 3 Reference Leg,
1D4 = LT-1B21-N073D, Division 4 Reference Leg,
2D4 = LT-1B21-N073H, Division 4 Reference Leg,

P3 = NSPS 120 VAC INSTR BUS C,
P4 = NSPS 120 VAC INSTR BUS D,

S = 1, initiate HPCS logic signal,
S = 0, normal,

1D3, 2D3, 1D4, 2D4 = 1 if water level is below L2,
1D3, 2D3, 1D4, 2D4 = 0 if water level is above L2,

P3, P4 = 1 if power is available, and
P3, P4 = 0 if power not available.

The resulting HPCS trip Boolean equation per figure A-6.b is as follows:

$$S = [(1D3 \cdot P3) \cdot (1D4 \cdot P4)] \cdot P3 \quad \text{(Eq. A-4.5)}$$

Nomenclature for Equation A-4.5 is defined above for Equation A-4.4.

A.4.2.2 High Pressure Core Spray (HPCS) Initiation FMEA

A.4.2.2.1 Reference Leg Failure

Assuming failure of the Division 3 reference leg, LT-1B21-N073C (1D3) and LT-1B21-N073G (2D3) would not sense low RPV water level. Therefore, the failure modes identified are:

1D3 = 0, and
2D3 = 0

Assuming power is available (P3=P4=1), Equation A-4.4 becomes:

$$S = [(0 \cdot 1) + (1D4 \cdot 1)] \cdot [(0 \cdot 1) + (2D4 \cdot 1)] \cdot 1,$$

which reduces to

$$S = [1D4] \cdot [2D4] \qquad \text{(Eq. A-4.6)}$$

Substituting initiation signals (1) for 1D4 and 2D4 into Equation A-4.6 produces:

$$S = [1] \cdot [1] = 1$$

HPCS would be actuated via low RPV water level trip signals from LT-1B21-N073D (1D4) and LT-1B21-N073H (2D4). The analysis also holds when considering failure of the Division 4 reference leg as the transmitters attached to the Division 3 reference leg (1D3 and 2D3) would actuate HPCS.

Loss of either Division 1 or 2 reference leg has no effect on HPCS actuation logic.

A.4.2.2.2 Reference Leg and Single HPCS Transmitter Failure In Conjunction

Assuming failure of the Division 3 reference leg and LT-1B21-N073D (1D4), the failure modes verified are:

1D3 = 0
2D3 = 0, and } See Subsection A.4.2.2.1

1D4 = 0

Substituting the failure mode for 1D4 into Equation A-4.6 produces:

$$S = [0] \cdot [2D4] = 0$$

The initiation logic is locked into its normal state, thus HPCS cannot be actuated via RPV water level inputs. This also holds true for failure combinations which include the Division 4 reference leg and Division 3 HPCS transmitters.

A.4.2.2.3 Reference Leg Failure and Loss of Bus in Conjunction

Assuming failure of the Division 3 reference leg and loss of the

NSPS 120 VAC INSTR BUS D (P4), the failure modes identified are:

1D3 = 0,
2D3 = 0, and } See Subsection A.4.2.2.1

P4 = 0

Assuming power from the NSPS 120 VAC BUS C is available (P3=1), substituting the above failure modes into Equation A-4.4 produces:

$$S = [(0 \cdot 1) + (1D4 \cdot 0)] \cdot [(0 \cdot 1) + (2D4 \cdot 0)] \cdot 1,$$

which reduces to

$$S = [(0) + (0)] \cdot [(0) + (0)] = 0 \qquad \text{(Eq. A-4.7)}$$

HPCS, as shown by Equation A-4.7, could not be initiated via low RPV water level trip signals. Failure of the NSPS 120 VAC INSTR BUS C, alone would prevent HPCS actuation via water level inputs. The only failure combination which would not prevent HPCS initiation is failure of the Division 4 reference leg in conjunction with loss of NSPS 120 VAC INSTR BUS D.

A.4.2.3 High Pressure Core Spray (HPCS) Trip FMEA

A.4.2.3.1 Reference Leg Failure

Failure of the Division 3 reference leg will cause LT-1B21-N073C (1D3) to sense water level greater than L8, therefore, 1D3 = 1.

Assuming power is available (P3=P4=1), Equation A-4.5 becomes:

$$S = [(1 \cdot 1) \cdot (1D4 \cdot 1)] \cdot 1,$$

which reduces to

$$S = [1D4]$$

A high water level signal from LT-1B21-N037D would then trip HPCS. The same also holds when considering failure of the Division 4 reference leg.

A.4.2.3.2 Reference Leg and Single HPCS Transmitter Failures in Conjunction

Assuming failure of the Division 3 reference leg and LT-1B21-N073D (1D4) produces the following failure modes:

1D3 = 1, and

1D4 = 0

Assuming power is available (P3=P4=1), Equation A-4.5 becomes:

$$S = [(1 \cdot 1) \cdot (0 \cdot 1)] \cdot 1,$$

which reduces to

$$S = 0$$

Tripping of HPCS upon high water level is blocked by the failure combination. The same holds true when considering failure of the Division 4 reference leg and LT-1B21-N073C.

A.4.2.3.3 Reference Leg Failure and Loss of Power Bus In Conjunction

Failure of either NSPS 120 VAC INSTR BUS C or D alone would block high water level tripping of HPCS.

A.4.2.4 High Pressure Core Spray (HPCS) FMEA Summary

Successful actuation of HPCS via RPV water level inputs is not vulnerable to any single reference leg failure. HPCS actuation is vulnerable to combinations of Division 3 or 4 reference leg and single HPCS transmitter or bus failures. Additionally, failure of NSPS 120 VAC INSTR bus C alone would block HPCS initiation.

Successful tripping of HPCS via water level inputs is not vulnerable to a single reference leg failure. However, HPCS tripping is vulnerable to combinations of reference leg and transmitter failures. HPCS tripping is blocked given failure of either NSPS 120 VAC INSTR bus C or D.

A.4.3 Reactor Core Isolation Cooling (RCIC) System

The basic logic for RCIC initiation via RPV water level inputs is shown in Figure A-7.a. The input logic consists of two groups of two RPV transmitters. An initiation output signal from each group is required to actuate the RCIC system when the water level drops below L2.

The basic logic for RCIC trip is shown in Figure A-7.b. The logic consists of two transmitters of which both must provide an initiation signal to trip RCIC when the RPV water level rises above L8. Each RCIC transmitter is attached to a different reference leg.

A.4.3.1 Reactor Core Isolation Cooling (RCIC) System Boolean Expression

The resulting RCIC initiation Boolean equation per Figure A-7.a is as follows:

$$S = [(1D1 \cdot P1) + (1D2 \cdot P2)] \cdot [(2D1 \cdot P1) + (2D2 \cdot P2)] \cdot P1 \quad \text{(Eq. A-4.9)},$$

where,

1D1 = LT-1B21-N091A, Division 1 Reference Leg.

2D1 = LT-1B21-N091E, Division 1 Reference Leg.

1D2 = LT-1B21-N091B, Division 2 Reference Leg.

2D2 = LT-1B21-N091F, Division 2 Reference Leg.

P1 = NSPS 120 VAC INSTR BUS A,

P2 = NSPS 120 VAC INSTR BUS B,

S = 1, initiate RCIC logic signal,

S = 0, normal,

1D1, 2D1, 1D2, 2D2 = 1 if water level drops below L2,

1D1, 2D1, 1D2, 2D2 = 0 if water level is above L2,

P1, P2 = 1 if power is available, and

P1, P2 = 0 if power is not available.

The resulting RCIC trip Boolean equation per Figure A-7.b is as follows:

$$S = [(1D1 \cdot P1) \cdot (1D2 \cdot P2)] \cdot P1 \qquad \text{(Eq. A-4.10)}$$

Nomenclature for Equation A-4.10 is defined above for Equation A-4.9.

A.4.3.2 Reactor Core Isolation Cooling (RCIC) System Initiation FMEA

A.4.3.2.1 Reference Leg Failure

Assuming failure of the Division 1 reference leg, LT-1B21-N091A (1D1) and LT-1B21-N091E (2D1) would not sense low RPV water level. Therefore, the failure modes identified are:

1D1 = 0, and

2D1 = 0

Substituting the above values for 1D1 and 2D1 into Equation A-4.9 while assuming power is available (P1=P2=1) produces:

$$S = [(0 \cdot 1) + (1D2 \cdot 1)] \cdot [(0 \cdot 1) + (2D2 \cdot 1)] \cdot 1,$$

which reduces to

$$S = [(1D2)] \cdot [(2D2)] \qquad \text{(Eq. A-4.11)}$$

Substituting the initiation signals for 1D2 and 2D2 into Equation A-4.11 produces:

$$S = [(1)] \cdot [(1)] = 1$$

RCIC would be actuated by a combination of signals from LT-1B21-N091B (1D2) and LT-1B21-N091F (2D2). When assuming failure of the Division 2 reference leg, similar results occur, though the signal combinations will be different. Loss of either Division 3 or 4 reference leg has no effect on RCIC actuation logic.

A.4.3.2.2 <u>Reference Leg and Single RCIC Transmitter Failures in Conjunction</u>

Assuming failure of the Division 1 reference leg and LT-1B21-N091B (1D2), the transmitters failure modes are:

$$\left.\begin{array}{l} 1D1 = 0 \\ 2D1 = 0, \text{ and} \end{array}\right\} \text{See Subsection A.4.3.2.1}$$

$$1D2 = 0$$

Substituting the failure mode for 1D2 and the initiation signal for 2D2 into Equation A-4.11 produces

$$S = [(0)] \cdot [(1)] = 0$$

The initiation logic is blocked, thus actuation of RCIC via RPV water level inputs cannot occur. If LT-B21-N091F (2D2) is assumed to fail, the transmitter failure modes are:

$$1D1 = 0,$$

$$2D1 = 0, \text{ and}$$

$$2D2 = 0$$

Substituting the failure mode for 2D2 and the initiation value for 1D2 into Equation A-4.11 produces

$$S = [(1)] \cdot [(0)] = 0$$

Again, RCIC actuation would not occur via RPV water level inputs. The overall analysis presented above also holds when considering failure of the Division 2 reference leg. Loss of the Division 2

reference leg and LT-1B21-N091A (1D1) or LT-1B21-N091E (2D1) would block RCIC actuation, but if the single failed RCIC transmitter were LT-1B21-N091B(1D2) or LT-1B21-N091F (2D2), RCIC actuation via RPV water level inputs would occur successfully.

A.4.3.2.3 Reference Leg Failure and Loss of Bus in Conjunction

Assuming failure of the Division 1 reference leg and loss of NSPS 120 VAC INSTR BUS B, the transmitter failure modes are:

$$\left.\begin{array}{l} 1D1 = 0, \\ 2D1 = 0, \text{ and} \end{array}\right\} \text{See Subsection A.4.3.2.1}$$

$$P2 = 0$$

Assuming power via NSPS 120 VAC INSTR BUS A is available (P1=1), substitution of initiation signals for 1D2 and 2D2 into Equation A-4.9 produces:

$$S = [(0 \cdot 1) + (1 \cdot 0)] \cdot [(0 \cdot 1) + (1 \cdot 0)] \cdot 1$$

$$S = [(0) + (0)] \cdot [(0) + (0)] = 0$$

RCIC actuation is not successful via RPV water level inputs. Failure of NSPS 120 VAC INSTR BUS A alone will prevent RCIC actuation via RPV water level inputs. The only failure combination which would not block RCIC initiation via water level inputs is failure of the Division 2 reference leg and NSPS 120 VAC INSTR BUS B.

A.4.3.3 Reactor Core Isolation Cooling (RCIC) System Trip FMEA

A.4.3.3.1 Reference Leg Failure

Failure of the Division 1 reference leg will cause LT-1B21-N091A (1D1) to sense water level greater than L8, therefore,

$$1D1 = 1$$

Assuming power is available (P1=P2=1), Equation A-4.10 becomes:

$$S = [(1 \cdot 1) \cdot (1D2 \cdot 1)] \cdot 1,$$

which reduces to

$$S = [1D2]$$

A high water level signal from LT-1B21-N091B would trip RCIC. The same also holds when considering failure of the Division 2 reference leg.

A.4.3.3.2 Reference Leg and Single RCIC Transmitter Failures in Conjunction

Assuming failure of the Division 1 reference leg and LT-1B21-N091B (1D2) produces the following failure modes:

1D1 = 1, and

1D2 = 0

Assuming power is available (P1=P2=1), Equation A-4.10 becomes:

$S = [(1 \cdot 1) \cdot (0 \cdot 1)] \cdot 1,$

which reduces to

$S = 0$

Tripping of RCIC upon high water level is blocked by the combination. The same holds true when considering failure of the Division 2 reference leg and LT-1B21-N091A.

A.4.3.3.3 Reference Leg Failure and Loss of Power Bus in Conjunction

Failure of either NSPS 120 VAC INSTR BUS A or B alone would block high water level tripping of RCIC.

A.4.3.4 Reactor Core Isolation Cooling (RCIC) FMEA Summary

Successful actuation of RCIC via RPV water level inputs is not vulnerable to any single reference leg failure. RCIC actuation is vulnerable to RCIC combinations of Division 1 or 2 reference leg and single RCIC transmitter or bus failures. Additionally, failure of NSPS 120 VAC INSTR BUS A alone would block RCIC initiation.

Successful tripping of RCIC via water level inputs is not vulnerable to a single reference leg failure. However, RCIC tripping is vulnerable to combinations of reference leg and transmitter failures. RCIC tripping is blocked given failure of either NSPS 120 VAC INSTR BUS A or B.

A.4.4 Main Steam Line Isolation Valve (MSIV) Closure

The basic logic consists of 4 divisional 2/4 logic circuits (Division 1 is shown on Figure A-8) which feed a second logic circuit shown on Figure A-9. The 2/4 basic logic is the same as that described in Subsection A.4.1 for the RPS. The Division 1 MSIV logic is evaluated in the following subsections. As was also qualified in Subsection A.4.1, this evaluation assumes that all four channels (transmitters) are available before postulating failures.

A.4.4.1 Main Steam Line Isolation Valve (MSIV) Closure Boolean Expression

The MSIV closure Division 1 logic diagram with respect to RPV water level inputs is presented on Figure A-8. The resulting Boolean equation per Figure A-8 is:

$$S = [(D1 \cdot P1) + (D2 \cdot P2)] \cdot [(D1 \cdot P1) + (D3 \cdot P3)] \cdot [(D1 \cdot P1) + (D4 \cdot P4)] \cdot [(D2 \cdot P2) + (D3 \cdot P3)] \cdot [(D2 \cdot P2) + (D4 \cdot P4)] \cdot [(D3 \cdot P3) + (D4 \cdot P4)] \cdot P1, \quad \text{(Eq. A-4.12)}$$

where,

D1 = LT-1B21-N081A, Division 1 Reference Leg,

D2 = LT-1B21-N081B, Division 2 Reference Leg,

D3 = LT-1B21-N081C, Division 3 Reference Leg,

D4 = LT-1B21-N081D, Division 4 Reference Leg,

P1 = NSPS 120 VAC INSTR BUS A,

P2 = NSPS 120 VAC INSTR BUS B,

P3 = NSPS 120 VAC INSTR BUS C,

P4 = NSPS 120 VAC INSTR BUS D,

S = 1, normal state,

S = 0, initiation of MSIV closure,

D1, D2, D3, D4 = 1 if water level is above L1,

D1, D2, D3, D4 = 0 if water is below L1,

P1, P2, P3, P4 = 1 if power is available, and

P1, P2, P3, P4 = 0 if power is not available.

A.4.4.2 Main Steam Line Isolation Valve (MSIV) Closure FMEA

A.4.4.2.1 Reference Leg Failure

Assuming a failure of the Division 1 reference leg, LT-1B21-N081A (D1) would fail to provide an initiation signal on

low RPV water level, thus the assumed transmitter failure mode is:

$D1 = 1$

Assuming power is available (P1=P2=P3=P4=1), Equation A-4.12 becomes:

$$S = [(1\cdot1) + (D2\cdot1)]\cdot[(1\cdot1) + (D3\cdot1)]\cdot$$
$$[(1\cdot1) + (D4\cdot1)]\cdot[(D2\cdot1) + (D3\cdot1)]\cdot$$
$$[(D2\cdot1) + (D4\cdot1)]\cdot[(D3\cdot1) + (D4\cdot1)]\cdot 1,$$

which reduces to

$$S = [(1) + (D2)]\cdot[(1) + (D3)]\cdot[(1) + (D4)]\cdot$$
$$[(D2) + (D3)]\cdot[(D3) + (D4)]\cdot[(D3) + (D4)] \quad \text{(Eq.A-4.13)}$$

Substituting initiation signals for D2, D3, and D4 into Equation A-4.13 produces:

$$S = [(1) + (0)]\cdot[(1) + (0)]\cdot[(1) + (0)]\cdot$$
$$[(0) + (0)]\cdot[(0) + (0)]\cdot[(0) + (0)] = 0$$

Since Equation A-4.13 is applicable to all 4 divisional 2/4 logic circuits, a closure signal would be produced by all 4 MSIV divisions. MSIV closure would then be initiated upon low RPV water level (<L1) per Figure A-9. There are three combinations of coincident signals in Equation A-4.12 of which any one combination would produce a MSIV closure signal. The transmitter combinations include; (1) D2 and D3, (2) D3 and D4, and (3) D2 and D4. When considering failures of Division 2, 3 or 4 reference legs, the signal combinations would be different.

A.4.4.2.2 <u>Reference Leg and Single MSIV Transmitter Failures in Conjunction</u>

Assuming a failure of the Division 1 reference leg and failure of LT-1B21-N081B (D2), the transmitter failure modes identified are:

D1 = 1, and (See Subsection A.4.4.2.1)

D2 = 1.

Substituting the failure modes for D1 and D2 and initiation signals for D3 and D4 into Equation A-4.12 produces the following Boolean expression:

$$S = [(1) + (1)]\cdot[(1) + (0)]\cdot[(1) + (0)]\cdot$$
$$[(1) + (0)]\cdot[(1) + (0)]\cdot[(0) + (0)]\cdot 1 = 0$$

Coincident 0 signals from LT-1B21-N081C (D3) and LT-1B21-N081D (D4) would initiate closure of the MSIV. The analysis holds true for all combinations of reference leg/signal MSIV transmitter failures, though the signal combinations would be different.

A.4.4.2.3 Reference Leg Failure and Loss of Bus in Conjunction

If it is conservatively assumed that a transmitter fed by a failed NSPS 120 VAC power bus is incapacitated in conjunction with a failed reference leg, 2 water level transmitters would be available for providing signals. As shown in the previous subsection, coincident 0 signals from any two water level transmitters would produce initiation signals from all 4 MSIV Divisions. If it is further assumed that the MSIV Divisional logic fed by the failed bus is also incapacitated, 3 divisional initiation signals would remain. As shown on Figure A-9, 3 initiation signals from any combination of MSIV divisions are sufficient to cause MSIV closure.

A.4.4.3 Main Steam Line Isolation Valve (MSIV) FMEA Summary

Successful closure of the MSIV's via RPV water level inputs is not vulnerable to any single reference leg failure, nor to any combination of reference leg failure and water level transmitter or power bus failure.

A.4.5 Low Pressure Core Spray (LPCS)/Low Pressure Coolant Injection RHR-A (LPCI RHR-A)

The basic logic diagram for LPCS/LPCI-RHR-A initiation via RPV water level inputs is shown on Figure A-10. Two RPV water level transmitters attached to the Division 1 reference leg are used in the logic.

A.4.5.1 LPCS/LPCI RHR-A Boolean Expression

The resulting Boolean equation for RPV water level inputs per Figure A-10 is as follows:

$$S = [(1D1 \cdot P1) \cdot (2D1 \cdot P1)] \cdot P1, \qquad \text{(Eq. A-4.14)}$$

where,

1D1 = LT-1B21-N091A, Division 1 Reference Leg,

2D1 = LT-1B21-N091E, Division 1 Reference Leg

P1 = NSPS 120 VAC INSTR BUS A,

S = 1, initiation of LPCS/LPCI RHR-A,

S = 0, normal state,

1D1, 2D1 = 1 if water level is below L1,
1D1, 2D1 = 0 if water level is above L1,

P1 = 1 if power is available, and
P1 = 0 if power is not available.

A.4.5.2 LPCS/LPCI RHR-A FMEA

A.4.5.2.1 Reference Leg Failure

Assuming a failure of the Division 1 reference leg, LT-1B21-N091A (1D1) and LT-1B21-N091E (2D1) would fail to sense low RPV water level and, thus, fail to provide initiation signals. Therefore, the transmitter failure modes are:

1D1 = 0, and
2D1 = 0

Assuming power is available (P1=1), substituting the failure modes into Equation A-4.14 produces:

$$S = [(0 \cdot 1) \cdot (0 \cdot 1)] \cdot 1 = 0$$

The logic is locked into its normal state, thus LPCS/LPCI RHR-A cannot be actuated by low RPV water level inputs. Failure of Divisions 2, 3, or 4 reference legs are not a concern as no transmitters used in the basic logic are attached to these reference legs.

A.4.5.2.2 Reference Leg and Single LPCS/LPCI RHR-A Transmitter Failures in Conjunction

This combination of failures is not a concern since a failure of the Division 1 reference leg alone would block LPCS/LPCI RHR-A actuation (See Subsection A.4.5.2.1). Additionally, a single failure of LT-B21-N091A or LT-B21-N091E would block LPCS/LPCI RHR-A actuation via water level inputs.

A.4.5.2.3 Reference Leg Failure and Loss of Bus in Conjunction

A failure of NSPS INSTR BUS A alone will block LPCS/LPCI RHR-A actuation, therefore, a reference leg failure in combination is not a concern.

A.4.5.3 LPCS/LPCI RHR-A FMEA Summary

Initiation of LPCS/LPCI RHR-A via RPV water level inputs is blocked given a single failure of either the Division 1 reference leg, NSPS 120 VAC INSTR BUS A, LT-B21-N091A, or LT-B21-N091E.

A.4.6 Low Pressure Coolant Injection (LPCI) RHR-B and C

The basic logic diagram for LPCI RHR-B and C initiation via RPV water level inputs is shown on Figure A-11. Two RPV water level transmitters attached to the Division 2 reference leg are used in the logic.

A.4.6.1 LPCI RHR-B and C Boolean Expression

The resulting Boolean equation for RPV water level inputs per Figure A-11 is as follows:

$$S = [(1D2 \cdot P2) \cdot (2D2 \cdot P2)] \cdot P2, \qquad \text{(Eq. A-4.15)}$$

where

1D2 = LT=1B21-N091B, Division 2 Reference Leg,

2D2 = LT-1B21-N091F, Division 2 Reference Leg,

P2 = NSPS 120 VAC INSTR BUS B,

S = 1, initiation of LPCS/LPCI RHR-A,

S = 0, normal state,

1D1, 2D1 = 1 if water level is above L1,

1D1, 2D1 = 0 if water level is below L1,

P1 = 1 if power is available, and

P1 = 0 if power is not available.

A.4.6.2 LPCI RHR-B and C FMEA

A.4.6.2.1 Reference Leg Failure

Assuming a failure of the Division 2 reference leg, LT-1B21-N091B (1D2) and LT-1B21-N091F (2D2) would fail to sense low RPV water level, thus fail to provide initiation signals. Therefore, the transmitter failure modes are:

1D2 = 0, and

2D2 = 0

Assuming power is available (P2=1), substituting the failure modes into Equation A-4.15 produces:

$$S = [(0 \cdot 1) \cdot (0 \cdot 1)] \cdot 1 = 0$$

The logic is locked into its normal state, thus LPCI RHR-B and C cannot be actuated by low RPV water level inputs. Failure of Divisions 1, 3 or 4 reference legs are not a concern as no transmitters used in the basic logic are attached to these reference legs.

A.4.6.2.2 Reference Leg and Single LPCI RHR-B and C Transmitter Failures in Conjunction

This combination of failures is not a concern since a failure of the Division 2 reference leg alone would block LPCI RHR-B and C actuation (See Subsection A.4.6.2.1). Additionally, a single failure of LT-B21-N091B or LT-B21-N091F would block LPCI actuation.

A.4.6.2.3 Reference Leg Failure and Loss of Bus in Conjunction

A failure of NSPS INSTR BUS B alone will block LPCI RHR-B and C actuation, therefore, a reference leg failure in combination is not a concern.

A.4.6.3 LPCI RHR-B and C FMEA Summary

Initiation of LPCI RHR-B and C via a RPV water level inputs is blocked given a single failure of either the Division 2 reference leg, NSPS 120 VAC INSTR BUS B, LT-B21-N091B, or LT-B21-N091F.

A.4.7 Automatic Depressurizaiton System (ADS)

The basic logic for initiation of the ADS is presented on Figures A-12 and A-13. Initiation of either A or B solenoids will actuate the ADS. It is noted that signals from drywell pressure transmitters are not required to initiate ADS. A 6-minute delay is included in the logic that allows water level signals to bypass high drywell pressure signals. Therefore, the pressure transmitters are not considered in the analysis.

A.4.7.1 Automatic Depressurization System (ADS) Boolean Expression

The resulting Boolean expression as a function of water level inputs per Figures A-12 and A-13 are:

$$S = [(1D1 \cdot P1) \cdot (2D1 \cdot P1) \cdot (3D1 \cdot P1)] \cdot P1 + [(1D2 \cdot P2) \cdot (2D2 \cdot P2) \cdot (3D2 \cdot P2)] \cdot P2, \qquad \text{(Eq. A-4.16)}$$

where:

1D1 = LT-1B21-N091A, Division 1 Reference Leg,

2D1 = LT-1B21-N095A, Division 1 Reference Leg,

3D1 = LT-1B21-N091E, Division 1 Reference Leg,

1D2 = LT-1B21-N091B, Division 2 Reference Leg,

2D2 = LT-1B21-N095B, Division 2 Reference Leg,

3D2 = LT-1B21-N091F, Division 2 Reference Leg,

P1 = NSPS 120 VAC INSTR BUS A,

P2 = NSPS 120 VAC INSTR BUS B,

S = 1, initiation of ADS,

S = 0, normal state,

1D1, 3D1, 1D2, 3D2 = 1 if water level is below L1,

1D1, 3D1, 1D2, 3D2 = 0 if water level is above L1,

2D1, 2D2 = 1 if water level is below L3,

2D1, 2D2 = 0 if water level is above L3,

P1, P2 = 1 if power is available, and

P1, P2 = 0 if power is not available.

A.4.7.2 Automatic Depressurization System (ADS) FMEA

A.4.7.2.1 Reference Leg Failure

Assuming a failure of the Division 1 reference leg, the attached RPV water level transmitters will not sense low RPV water level, and thus will fail to provide initiation signals. Therefore, the transmitter failure modes are:

1D1 = 0,

2D1 = 0, and

3D1 = 0

Assuming power is available (P1=P2=1), substituting the failure modes for LT-1B21-N091A (1D1), LT-1B21-N095A (2D1), and LT-1B21-N091E (3D1) into Equation A-4.16 produces:

$$S = [(0\cdot1)\cdot(0\cdot1)\cdot(0\cdot1)]\cdot1 + [(1D2\cdot1)\cdot(2D2\cdot1)\cdot(3D2\cdot1)]\cdot1,$$

which reduces to

$$S = [1D2\cdot2D2\cdot3D2] \qquad \text{(Eq. A-4.17)}$$

Substituting initiation signals for LT-1B21-N091B (1D2), LT-1B21-N095B (2D2), and LT-1B21-N091F (3D2) into Equation A-4.17 results in:

$$S = [1 \cdot 1 \cdot 1] = 1$$

ADS B solenoids would be actuated via ADS logic output channels B and F. The analysis also holds if the Division 2 reference leg is assumed to fail as ADS logic output channels A and E would initiate ADS A solenoids. Failure of either the Division 3 or 4 reference leg does not affect ADS logic.

A.4.7.2.2 Reference Leg and Single ADS Transmitter Failures

Assuming failure of the Division 1 reference leg and LT-1B21-N091B (1D2), the transmitter failure modes are:

$$\left.\begin{array}{l} 1D1 = 0, \\ 2D1 = 0, \\ 3D1 = 0, \text{ and} \end{array}\right\} \text{See Subsection A.4.7.2.1}$$

$$1D2 = 0$$

Assuming power is available (P1=P2=1), substituting the failure mode for LT-1B21-N091B (1D2) and initiation signals for LT-1B21-N095B (2D2) and LT-1B21-N091F (3D2) into Equation A-4.17 produces:

$$S = [0 \cdot 1 \cdot 1] = 0$$

The logic is locked into its normal state, thus ADS cannot be actuated via RPV water level inputs. This analysis also holds for all failure combinations that include the Division 2 reference leg and Division 1 ADS transmitters.

A.4.7.2.3 Reference Leg Failure and Loss of Bus in Conjunction

Assuming failure of the Division 1 reference leg and NSPS 120 VAC INSTR BUS B, the transmitter failure modes are:

$$\left.\begin{array}{l} 1D1 = 0, \\ 2D1 = 0, \\ 3D1 = 0, \text{ and} \end{array}\right\} \text{See Subsection A.4.7.2.1}$$

$$P2 = 0$$

Substituting the failure modes into Equation A-4.16 produces

$$S = [(0 \cdot 1) \cdot (0 \cdot 1) \cdot (0 \cdot 1)] \cdot 1 +$$

$$[(1 \cdot 0) \cdot (1 \cdot 0) \cdot (1 \cdot 0)] \cdot 0 = 0$$

The logic is locked into its normal state, thus ADS cannot be actuated via RPV water level inputs. If, however, NSPS 120 VAC INSTR BUS A fails, the resulting Boolean equation would be Equation A-4.17. Initiation signals from 1D2, 2D2, and 3D2 would actuate the ADS B solenoids. The analysis also holds for failure of the Division 2 reference leg. Initiation would be blocked given simultaneous failure of NSPS 120 VAC INSTR BUS A, but not by loss of NSPS 120 VAC INSTR BUS B.

A.4.7.3 Automatic Depressurization System (ADS) FMEA Summary

Initiation of ADS via RPV water level inputs is not vulnerable to any single reference leg failure, but is vulnerable to combinations of a Division 1 or 2 reference leg failure and a single ADS transmitter failure. ADS actuation is also vulnerable to combinations of reference leg and bus failures. Specifically these combinations are: (1) Division 1 reference leg and NSPS 120 VAC INSTR BUS B, and (2) Division 2 reference leg and NSPS 120 VAC INSTR BUS A.

A.4.8 Feedwater Pump Turbine and Main Turbine Trip

The basic logic for tripping the feedwater pump turbines and the main turbine via RPV water level inputs is shown on Figure A-14. A signal inverter is located between the transmitters and the alarm units (ALM) and logic. The inverter reverses the state of the transmitter's output signal. When the water level rises above L8, the transmitters output signals are subsequently switched from 0 to 1 for input to the ALM and logic.

A.4.8.1 Feedwater Turbine and Main Turbine Boolean Expression

The resulting Boolean equation downstream of the inverters per Figure A-14 is:

$$S = [(D1' \cdot P1) \cdot (D2' \cdot P2)] + [(D1' \cdot P1) \cdot (D3' \cdot P3)] + [(D2' \cdot P2) \cdot (D3' \cdot P3)], \qquad \text{(Eq. A-4.18)}$$

where,

D1 = LT-1C34-N004A, Division 1 Reference Leg,
D2 = LT-1C34-N004B, Division 2 Reference Leg,
D3 = LT-1C34-N004C, Division 3 Reference Leg,

P1 = 120 VAC INSTR BUS,
P2 = 125 VDC BUS B,
P3 = 125 VDC BUS A,

S = 1, trip feedwater and main turbines
S = 0, normal,

D1', D2', D3', = 1 if RPV water level is above L8,
D1', D2', D3', = 0 if RPV water level is below L8,

P1, P2, P3 = 1 if power is available, and
P1, P2, P3 = 0 if power is not available.

A.4.8.2 Feedwater Turbine and Main Turbine Trip FMEA

During normal plant operation, feedwater flow is automatically controlled by one of two water level transmitters shown on Figure A-14. The operator can either select LT-1C34-N004A or LT-1C34-N004B to perform the function. As a result, failure of a controlling reference leg will immediately cause the sensor to read upscale resulting in feedwater flow reduction, then shutoff. Therefore, the following failure analysis addresses non-controlling reference legs. It is also assumed that a controlling transmitter can fail in such a manner that it cannot initiate a trip signal.

A.4.8.2.1 Reference Leg Failure

Assuming failure of the Division 1 reference leg, LT-1C34-N004A would sense water level above L8, therefore, the transmitter failure mode is:

$D1' = 1$

Assuming power is available (P1=P2=P3=1), substituting the D1' failure mode and high water level trip signals for D2' and D3' into Equation A-4.18 produces:

$$S = [(1 \cdot 1) \cdot (1 \cdot 1)] +$$

$$[(1 \cdot 1) \cdot (1 \cdot 1)] +$$

$$[(1 \cdot 1) \cdot (1 \cdot 1)],$$

which reduces to

$$S = [1] + [1] + [1] = 1$$

The turbines would be tripped via water level transmitters given high RPV water level. The analysis also holds true given a failure of either the Division 2 or 3 reference leg.

A.4.8.2.2 Reference Leg and Single Transmitter Failures In Conjunction

It is assumed that LT-1C34-N004B (D2) is controlling feedwater flow. If D2 becomes incapacitated and the Division 1 reference leg fails the following failure modes are produced:

D1' = 1, and (See Subsection A.4.8.1.1)

D2' = 0

Assuming power is available (P1=P2=P3=1), substituting the D1' and D2' failure modes and a high water level trip signal for D3' into Equation A-4.18 produces:

$$S = [(1 \cdot 1) \cdot (0 \cdot 1)] + [(1 \cdot 1) \cdot (1 \cdot 1)] + [(0 \cdot 1) \cdot (1 \cdot 1)],$$

which reduces to

$$S = [0] + [1] + [0] = 1$$

The turbines would be tripped via water level transmitters upon high water level. The results are applicable to all combinations of reference leg and feedwater controlling transmitter failures.

A.4.8.2.3 Reference Leg Failure and Loss of Bus in Conjunction

Assuming failures of the Division 1 reference leg and the 125 VDC BUS B produces the following modes:

D1' = 1, and

P2 = 0

Assuming power from 120 VAC BUS (P1=1) and 125 VDC BUS A (P3=1) is available, substituting the D1' and P2 failure modes and high water level trip signals for D2' and D3' into Equation A-4.18 shows successful tripping of the turbines. This analysis holds for any combination of reference leg and bus failures.

A.4.8.3 Feedwater Turbine and Main Turbine Trip FMEA Summary

Tripping of the feedwater and main turbines via RPV water levels is not vulnerable to any failure or combination of failures involving reference legs not controlling feedwater flow and transmitters or power buses. Failure of a reference leg controlling feedwater flow will cause a reduction, then shutdown of feedwater flow.

A.4.9 Upper Pool Dump

As shown on Figure A-15, water level inputs which contribute to upper pool dump are those signals which initiate LPCS/RHR-A and RHR-B/C. Thus, the analyses performed in Subsections A.4.5 and A.4.6 are combined with respect to evaluating upper pool dump initiation via RPV water level inputs.

A.4.9.1 Upper Pool Dump Boolean Expression

The Boolean expression for upper pool dump via RPV water level inputs is found by adding equations A-4.14 and A-4.15 as follows:

$$S = [(1D1 \cdot P1) \cdot (2D1 \cdot P1)] \cdot P1 + [(1D2 \cdot P2) \cdot (2D2 \cdot P2)] \cdot P2, \qquad \text{(Eq. A-4.20)}$$

where

1D1 = LT-1B21-N091A, Division 1 Reference Leg,

2D1 = LT-1B21-N091E, Division 1 Reference Leg,

1D2 = LT-1B21-N091B, Division 2 Reference Leg,

2D2 = LT-1B21-N091F, Division 2 Reference Leg,

P1 = NSPS 120 VAC INSTR BUS A,

P2 = NSPS 120 VAC INSTR BUS B,

S = 1, contribution to upper pool dump,

S = 0, normal state,

1D1, 2D1, 1D2, 2D2, = 1 if water level below L1,

1D1, 2D1, 1D2, 2D2, = 0 if water level above L1,

P1, P2 = 1 if power is available, and

P1, P2 = 0 if power is not available.

A.4.9.2 Upper Pool Dump FMEA

A.4.9.2.1 Reference Leg Failure

Assuming a failure of the Division 1 reference leg, LT-1B21-N091A (1D1) and LT-1B21-N091E (2D1) would fail to sense low RPV water level, thus failing to provide initiation signals. Therefore, the transmitter failure modes are:

1D1 = 0, and
2D1 = 0

Assuming power is available (P1=P2=1), substituting the failure modes and initiation signals into Equation A-4.20 produces:

$$S = [(0 \cdot 1) \cdot (0 \cdot 1)] \cdot 1 + [(1 \cdot 1) \cdot (1 \cdot 1)] \cdot 1 = 1$$

Upper pool dump would be successful if the suppression pool level would drop to the low-low setpoint subsequent to low RPV water level. The evaluation also holds true when considering failure of the Division 2 reference leg. Failure of the Division 3 and 4 reference legs are not a concern as no transmitters used in the basic logic are attached to these reference legs.

A.4.9.2.2 Reference Leg and Single Upper Pool Dump Transmitter Failures in Conjunction

Assuming failure of the Division 1 reference leg in conjunction with failure of LT-1B21-N091B produces the following failure modes:

1D1 = 0,
2D1 = 0, and } See Subsection A.4.9.2.1

1D2 = 0

Assuming power is available (P1=P2=1), substituting the above failure modes along with an initiation signal for LT-1B21-N091F (2D2) produces the following:

$$S = [(0 \cdot 1) \cdot (0 \cdot 1)] \cdot 1 + [(0 \cdot 1) \cdot (1 \cdot 1)] \cdot 1 = 0$$

Upper pool dump could not be actuated via RPV water level inputs. The same holds if LT-1B21-N091F fails in conjunction with the Division 1 reference leg failure. Additionally, failure of the Division 2 reference leg in conjunction with failure of LT-1B21-N091A or LT-1B21-N091E will block upper pool dump via RPV water level inputs.

A.4.9.2.3 Reference Leg Failure and Loss of Bus in Conjunction

Assuming failure of the Division 1 reference leg in conjunction with loss of NSPS 120 VAC INSTR BUS B (P2) produces the following failure modes:

1D1 = 0,
2D1 = 0, and } See Subsection A.4.9.2.1

P2 = 0

Assuming power is available from NSPS 120 VAC INSTR BUS A (P1=1), substitution of the failure modes and initiation signals into Equation A-4.20 produces:

$$S = [(0 \cdot 1) \cdot (0 \cdot 1)] \cdot 1 + [(1 \cdot 0) \cdot (1 \cdot 0)] \cdot 0 = 0$$

Again, upper pool dump could not be actuated via RPV water level inputs. Additionally, loss of the Division 2 reference leg and NSPS 120 VAC INSTR BUS A in conjunction will block initiation of upper pool dump.

A.4.9.3 Upper Pool Dump FMEA Summary

Upper pool dump initiation via RPV water level inputs is not vulnerable to failure of any reference leg. However, initiation is vulnerable to combinations of reference leg and transmitter/or power bus failures.

A.5 Results and Summary

The FMEA performed in Appendix A shows that there are reference leg failures and/or combinations of reference leg, RPV water level transmitter, and bus failures which can prevent automatic actuation of pertinent plant safety systems via RPV water level inputs. A summary is presented in Table A-3 showing which failure or combination of failures prevent actuation of specific plant systems as determined in this analysis. It is noted that there are numerous alternative sources (e.g., pressure sensor) that were not considered in the analysis which would automatically initiate many of the systems. Furthermore, operator recovery actions are also available to assure initiation of the appropriate systems.

A.6 References

A-1 "CPS Unit 1 Draft Technical Specifications," transmitted to A. Schwencer (NRC) from F.A. Spangenberg (IPC) via Letter U-0739, dated September 28, 1984.

A-2 "ED - Reactor Protection System (NSPS)," GE Drawing No. 851E378, Shts. 4, 5, Revision 17, Sht 16, Revision 15.

A-3 "ED - Reactor Protection System (NSPS), "GE Drawing No. 851E378, Shts. 4, 5, Revision 17, Sht. 16, Revision 15, Sht. 17, Revision 14.

A-4 a. "ED - High Pressure Core Spray System (NSPS)," GE Drawing No. 851E380, Shts. 3 and 4, Revision 13.
b. "ED - Reactor Protection System (NSPS)," GE Drawing No. 851E378, Sht. 5, Revision 17.

A-5 a. "ED - Residual Heat Removal System (NSPS)," GE Drawing No. 828E544AC, Sht. 4, Revision 13, Sht. 15, Revision 11.
b. "ED - Low Pressure Core Spray System (NSPS)," GE Drawing No.851E377, Shts. 3 and 4, Revision 12.
c. "ED - Reactor Core Isolation Cooling System (NSPS)," GE Drawing No. 851E382AC, Shts. 3, 6, and 12, Revision 6.

d. "ED - Reactor Protection System (NSPS)," GE Drawing No. 851E378, Sht. 4, Revision 17.

A-6 a. "ED - Nuclear Steam Supply Shutoff System (NSPS)," GE Drawing No. 851E381AC, Shts. 5 and 9, Revision 0.
b. "ED - Reactor Protection System (NSPS)," GE Drawing No. 851E378, Shts. 4 and 5, Revision 17.

A-7 a. "ED - Nuclear Steam Supply Shutoff System (NSPS)," GE Drawing No. 851E381AC, Shts. 18, 19, 20, and 21, Revision 1.
b. "Interface Control/Diagram - Isolation Valve," GE Drawing No. 105D5228, Sht. 2, Revision 10.

A-8 a. "ED - Low Pressure Core Spray System (NSPS)," GE Drawing No.851E377, Shts. 3, 4, and 5, Revision 12.
b. "ED - Reactor Protection System (NSPS)," GE Drawing No. 851E378, Sht. 4, Revision 17.

A-9 a. "ED - Residual Heat Removal System (NSPS)," GE Drawing No. 828E544AC, Sht. 4, Revision 13, Sht. 16, Revision 11.
b. "ED - Reactor Protection System (NSPS)," GE Drawing No. 851E378, Sht. 4, Revision 17.

A-10 a. "ED - Automatic Depressurization System (NSPS), GE Drawing No. 851E713, Shts. 4, 7, 9, and 10, Revision 14, Sht. 6, Revision 12.
b. "ED - Low Pressure Core Spray (NSPS)," GE Drawing No. 851E377, Shts. 3 and 5, Revision 12.
c. "ED - Reactor Protection System (NSPS)," GE Drawing No. 851E378, Sht. 4, Revision 17.

A-11 a. "ED - Automatic Depressurization System (NSPS)," GE Drawing No. 851E713, Shts, 4, 8, 10, 11, Revision 14, Sht. 6, Revision 12.
b. "ED - Residual Heat Removal System (NSPS)," GE Drawing No. 828E544AC, Sht. 4, Revision 13, Sht. 16, Revision 11.
c. "ED - Reactor Protection System (NSPS)," GE Drawing No. 851E378, Sht. 4, Revision 17.

A-12 a. "ED - Feedwater Control System," GE Drawing No. 851E711CJ, Shts. 4 and 7, Revision 14.

A-13 a. "ED - Low Pressure Core Spray (NSPS)," GE Drawing No. 851E377, Sht. 5, Revision 12.
b. "ED - Residual Heat Removal System (NSPS)," GE Drawing No. 828E544AC, Sht. 15, Revision 9, Sht. 16, Revision 11, Sht. 7, Revision 10.
c. "S/D - Component Cooling Water System (CC)," S&L Drawing No. E02-1CC99, Sht. 16, Revision T.
d. "S/D - Suppression Pool Makeup System (SM)," S&L Drawing No. E02-1SM99, Shts. 1 and 2, Revision G, Sht. 3, Revision F.

TABLE A-3: SUMMARY OF FAILURES WHICH PREVENT AUTOMATIC ACTUATION OF SAFETY SYSTEMS VIA RPV WATER LEVEL INPUTS

Component Failure(2)	Division of Assumed Reference Leg Failure 1	2	3	4	Transmitter Failure Mode (Logic State)	Affects on Actuation of Plant System Functions(1): RPS	HPCS	RCIC	MSIV	LPCS/LPCI RHR-A	LPCI RHR-B/C	ADS	FW AND MT TRIP	UPPER POOL DUMP
LT-1B21-N080A (Division 1)	-	X			1						AVR			
	-		X											
	-			X										
LT-1B21-N080B (Division 2)	X	-			1					AVR				
		-	X											
		-		X										
LT-1B21-N080C (Division 3)	X		-		1					AVR				
		X	-											
			-	X							AVR			
LT-1B21-N080D (Division 4)	X			-	1					AVR				
		X		-										
			X	-							AVR			
LT-1B21-N073C (Division 3)	X		-		0					AVR				
		X	-											
			-	X			AV				AVR			
LT-1B21-N073G (Division 3)	X		-		0					AVR				
		X	-											
			-	X			AV				AVR			
LT-1B21-N073D (Division 4)	X			-	0					AVR				
		X		-										
			X	-			AV				AVR			
LT-1B21-N073H (Division 4)	X			-	0					AVR				
		X		-										
			X	-			AV				AVR			
LT-1B21-N091A (Division 1)	-	X			0			AV		AVC	AVR	AV		AV
	-		X							AVC				
	-			X						AVC				
LT-1B21-N091B (Division 2)	X	-			0			AV		AVR	AVC	AV		AV
		-	X								AVC			
		-		X							AVC			
LT-1B21-N091E (Division 1)	-	X			0			AV		AVC	AVR	AV		AV
	-		X							AVC				
	-			X						AVC				
LT-1B21-N091F (Division 2)	X	-			0			AV		AVR	AVC	AV		AV
		-	X								AVC			
		-		X							AVC			

TABLE A-3: SUMMARY OF FAILURES WHICH PREVENT AUTOMATIC ACTUATION OF SAFETY SYSTEMS VIA RPV WATER LEVEL INPUTS (Cont'd)

Component Failure (2)	Division of Assumed Reference Leg Failure 1	2	3	4	Transmitter Failure Mode (Logic State)	Affects on Actuation of Plant System Functions (1): RPS	HPCS	RCIC	MSIV	LPCS/LPCI RHR-A	LPCI RHR-B/C	ADS	FW AND MT TRIP	UPPER POOL DUMP
LT-1B21-N081A (Division 1)	-	X			1						AVR			
	-		X											
	-			X										
LT-1B21-N081B (Division 2)	X	-			1					AVR				
		-	X											
		-		X										
LT-1B21-N081C (Division 3)	X		-		1					AVR				
		X	-								AVR			
			-	X										
LT-1B21-N081D (Division 4)	X			-	1					AVR				
		X		-							AVR			
			X	-										
LT-1B21-N095A (Division 1)	-	X			0						AVR	AV		
	-		X											
	-			X										
LT-1B21-N095B (Division 2)	X	-			0					AVR		AV		
		-	X											
		-		X										
LT-1C34-N004A (Division 1)	-	X			0						AVR			
	-		X											
	-			X										
LT-1C34-N004B (Division 2)	X	-			0					AVR				
		-	X											
		-		X										
LT-1C34-N004C (Division 3)	X		-		0					AVR				
		X	-								AVR			
			-	X										
NSPS INSTR BUS A (120 VAC)	X				N/A			AVC		AVC & AVR				
		X						AVC		AVC	AVR	AV		AV
			X					AVC		AVC				
				X				AVC		AVC	AVC			
NSPS INSTR BUS B (120 VAC)	X				N/A			AV		AVR	AVC	AV		AV
		X									AVC & AVR			
			X								AVC			
				X							AVC			

TABLE A-3: SUMMARY OF FAILURES WHICH PREVENT AUTOMATIC ACTUATION OF SAFETY SYSTEMS VIA RPV WATER LEVEL INPUTS (Cont'd)

Component Failure(2)	Division of Assumed Reference Leg Failure 1	2	3	4	Transmitter Failure Mode (Logic State)	Affects on Actuation of Plant System Functions(1): RPS	HPCS	RCIC	MSIV	LPCS/LPCI RHR-A	LPCI RHR-B/C	ADS	FW AND MT TRIP	UPPER POOL DUMP
NSPS INSTR BUS C (120 VAC)	X				N/A		AVC			AVR				
		X					AVC				AVR			
			X				AVC							
				X			AVC							
NSPS INSTR BUS D (120 VAC)	X				N/A					AVR				
		X									AVR			
			X				AV							
				X										
INST A 120 VAC Non-essential	X				N/A					AVR				
		X									AVR			
			X											
				X										
125 VDC BUS A Non-essential	X				N/A					AVR				
		X									AVR			
			X											
				X										
125 VDC BUS B Non-essential	X				N/A					AVR				
		X									AVR			
			X											
				X										

(1) Nomenclature for Table A-3 is as follows:
AV - Failure combinations will prevent automatic initiation of safety system on RPV water level inputs.
AVC - Failed component alone would prevent automatic actuation of safety system on RPV water level inputs.
AVR - Failed reference leg alone would prevent actuation of safety system.

No nomenclature implies that failure of the component, or the reference leg, or the combination of the two will not prevent automatic initiation of the safety system via RPV water level inputs.

(2) For failed transmitters, the reference leg to which the transmitter is attached is indicated in parenthesis.

Symbol:

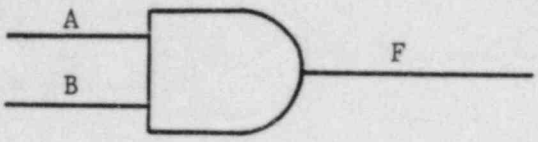

Truth Table:

Inputs		Output
A	B	F=A·B
0	0	0
0	1	0
1	0	0
1	1	1

Statements:
(1) If both inputs = 1, the output = 1; otherwise the output = 0 for other input combinations.
(2) If any input = 0, it will force the output to 0.
(3) There can be more than two inputs. All inputs must = 1 to obtain the output = 1.

Theorems:
(1) $X \cdot 1 = X$
(2) $X \cdot 0 = 0$
(3) $X \cdot X = X$

AND Gate Logic Definitions

Figure A-1

Symbol:

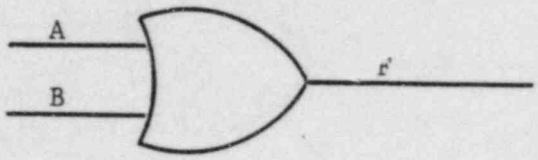

Truth Table:

Inputs		Output
A	B	F=A+B
0	0	0
0	1	1
1	0	1
1	1	1

Statements:

(1) If both inputs = 0, the output = 0; otherwise, the output = 1 for other input combinations.

(2) If any input = 1, it will force the output to 1.

(3) There can be more than two inputs. All inputs must = 0 to obtain output = 0.

Theorems:

(1) X+0 = X

(2) X+1 = 1

(3) X+X = X

OR GATE LOGIC DEFINITIONS

Figure A-2

NOTE:
See Figures 3-3 and 3-4 for orientation of all RPV water level transmitters. See Table A-1 for tap elevations.

A - Condensing Chamber 1B21-D004A, Division 1 Reference Leg
B - Condensing Chamber 1B21-D004B, Division 2 Reference Leg
C - Condensing Chamber 1B21-D004C, Division 3 Reference Leg
D - Condensing Chamber 1B21-D004D, Division 4 Reference Leg

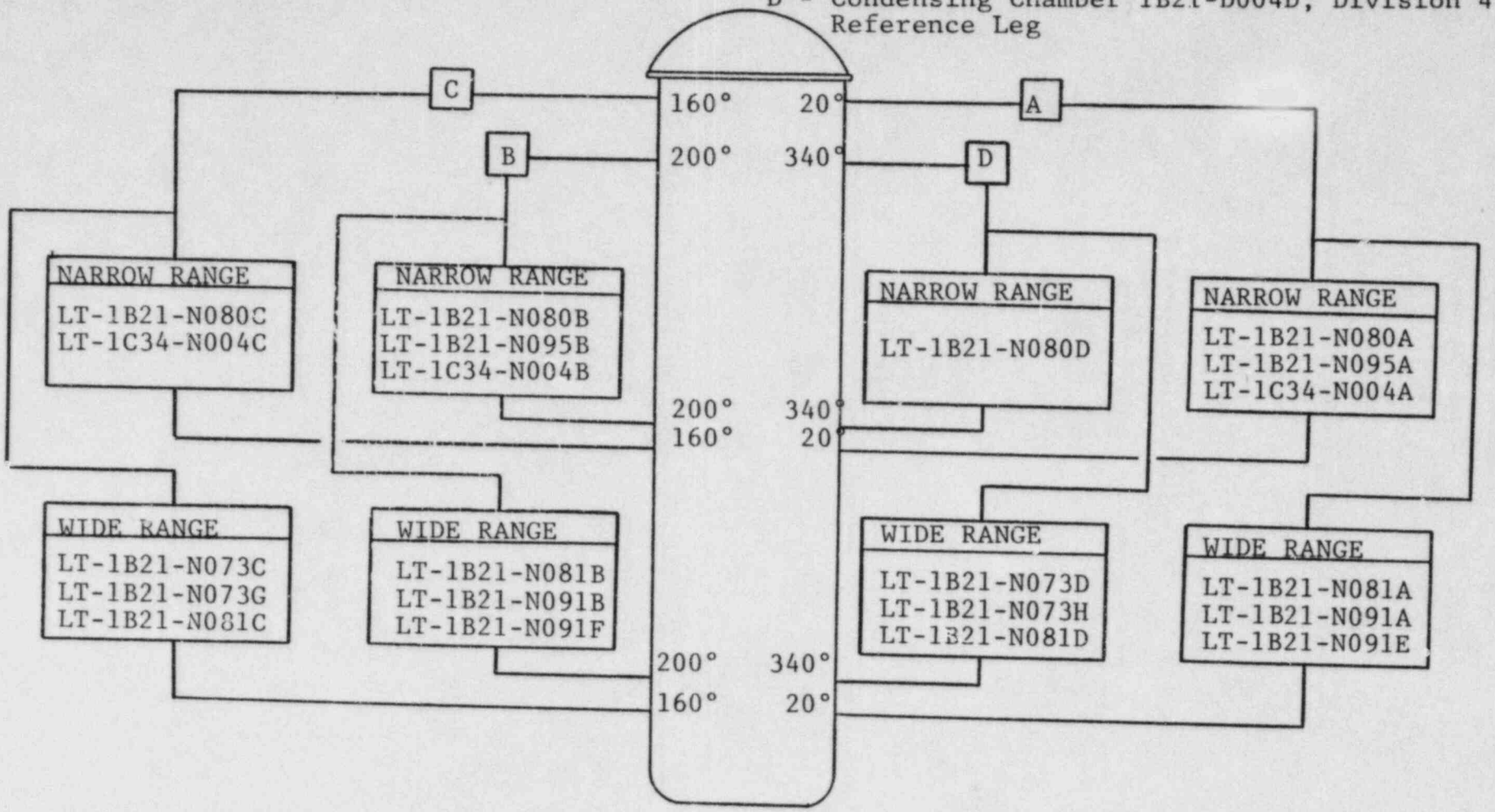

Orientation of Safety - Related RPV Water Level Transmitters Which Initiate Plant Systems

Figure A-3

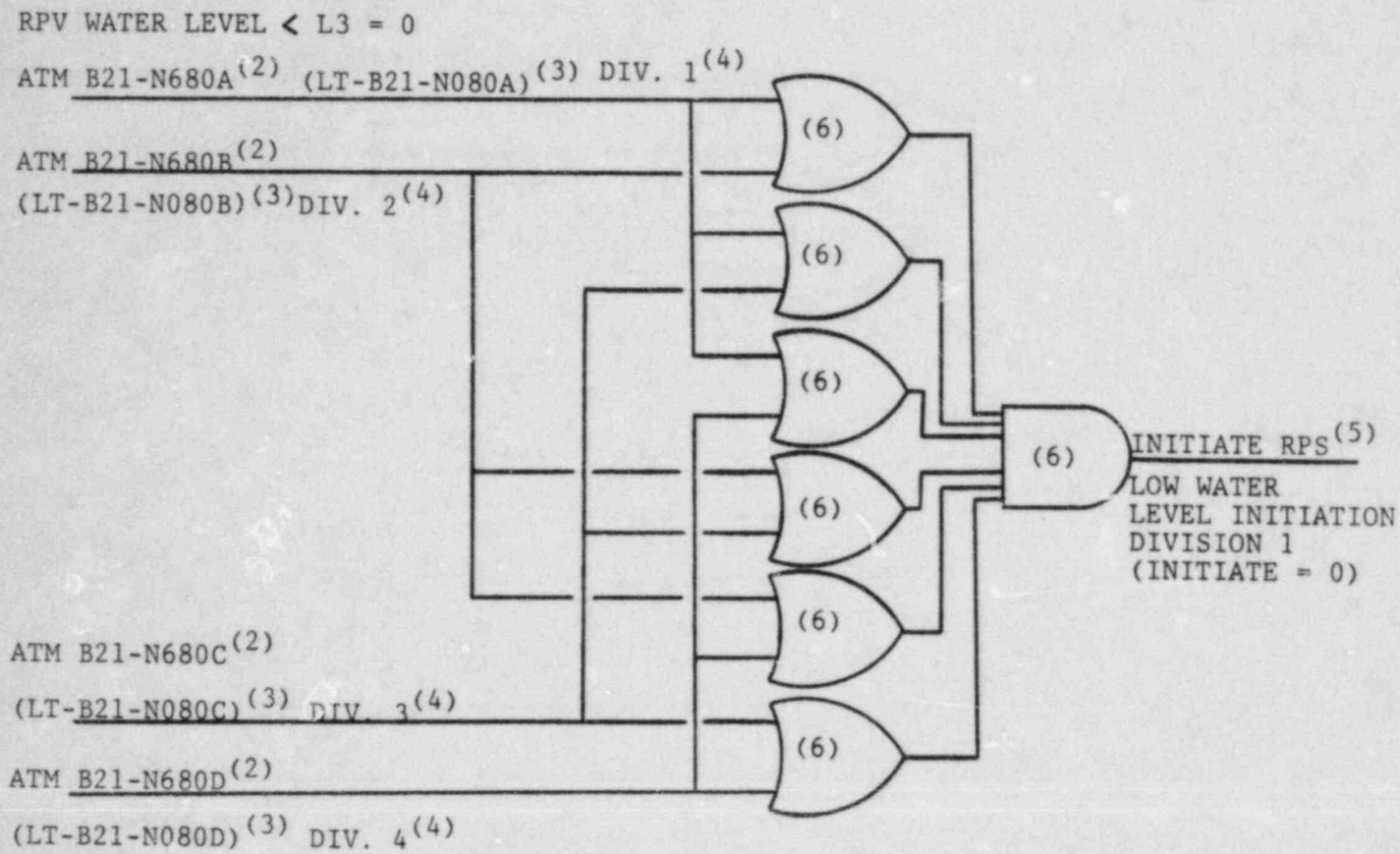

NOTES:

1. See Referenc A-2.
2. Analog Trip Module (ATM) receives water level inputs via transmitter in parenthesis.
3. Power source for transmitters are as follows:
   a. LT-B21-N080A - NSPS 120 VAC INSTR BUS A
   b. LT-B21-N080B - NSPS 120 VAC INSTR BUS B
   c. LT-B21-N080C - NSPS 120 VAC INSTR BUS C
   d. LT-B21-N080D - NSPS 120 VAC INSTR BUS D
4. Reference Leg Division to which level transmitter is attached.
5. Basic logic for RPS Divisions 2, 3, and 4 are identical to Division 1 except for logic power source. The four divisional signals then pass through a scram logic.
6. Power sources for RPS logic are as follows:
   a. Division 1 - NSPS 120 VAC INSTR BUS A
   b. Division 2 - NSPS 120 VAC INSTR BUS B
   c. Division 3 - NSPS 120 VAC INSTR BUS C
   d. Division 4 - NSPS 120 VAC INSTR BUS D

Reactor Protection System (RPS) Low Water Level 2/4 Basic Logic For Division 1[1]

Figure A-4

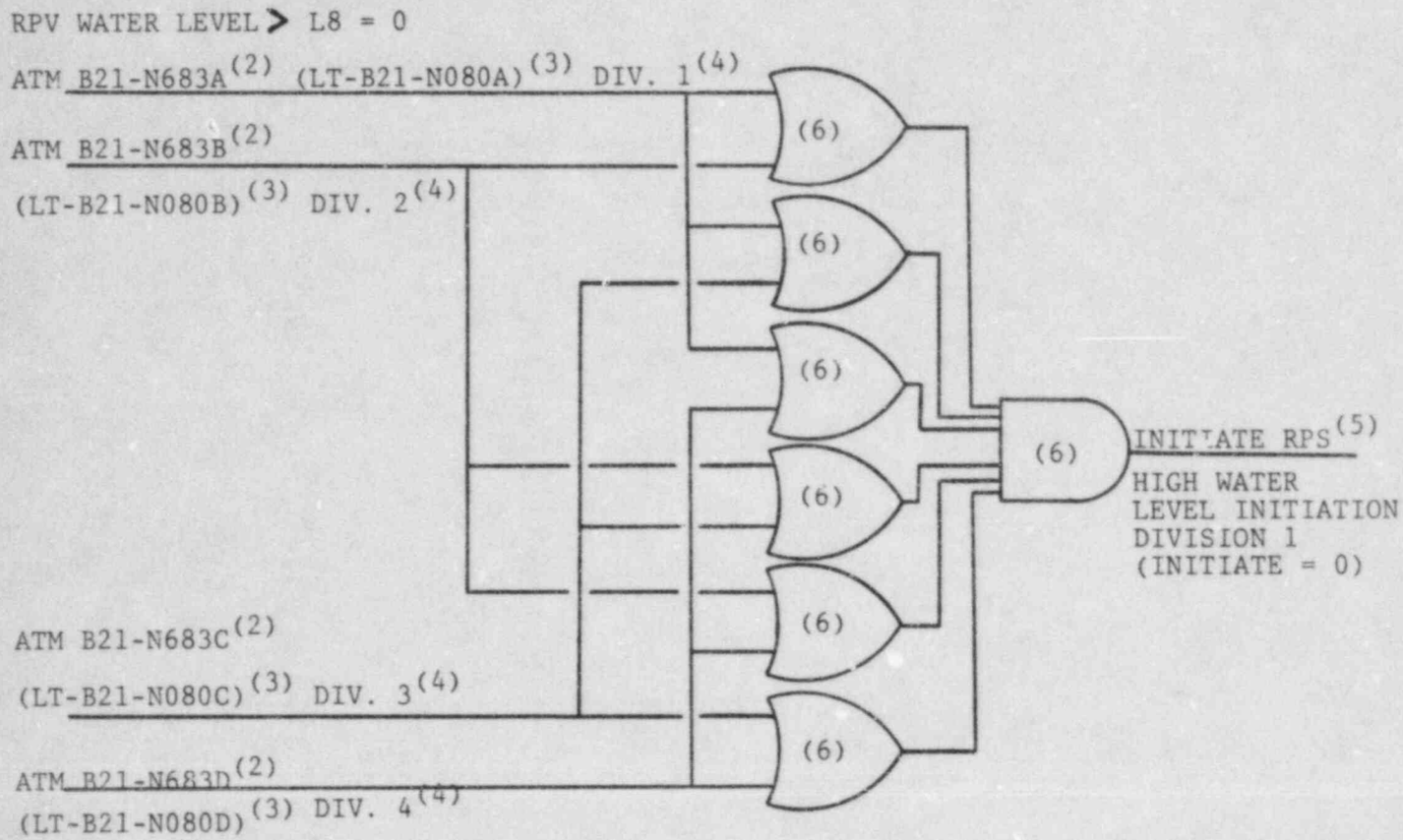

NOTES:

1. See Reference A-3.
2. Analog Trip Module (ATM) receives water level inputs via transmitter in parenthesis.
3. Power source for transmitters are as follows:
   a. LT-B21-N080A - NSPS 120 VAC INSTR BUS A
   b. LT-B21-N080B - NSPS 120 VAC INSTR BUS B
   c. LT-B21-N080C - NSPS 120 VAC INSTR BUS C
   d. LT-B21-N080D - NSPS 120 VAC INSTR BUS D
4. Reference Leg Division to which level transmitter is attached.
5. Basic logic for RPS Divisions 2, 3, and 4 are identical to Division 1 except for logic power source. The four divisional signals then pass through a scram logic.
6. Power sources for RPS logic are as follows:
   a. Division 1 - NSPS 120 VAC INSTR BUS A
   b. Division 2 - NSPS 120 VAC INSTR BUS B
   c. Division 3 - NSPS 120 VAC INSTR BUS C
   d. Division 4 - NSPS 120 VAC INSTR BUS D

Reactor Protection System (RPS) High Water Level 2/4 Basic Logic for Division 1[1]

Figure A-5

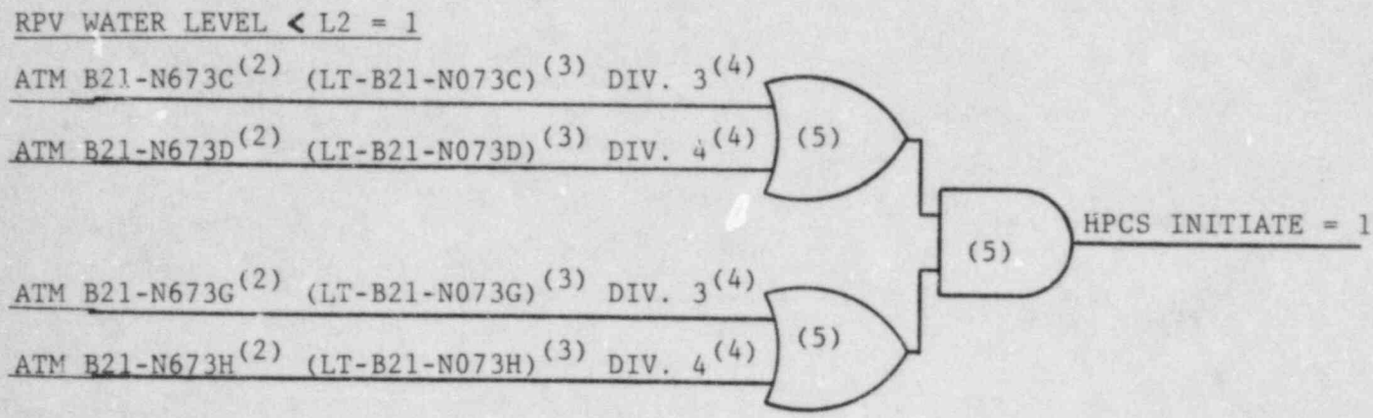

HPCS Initiate Basic Logic

Fig. A-6.a

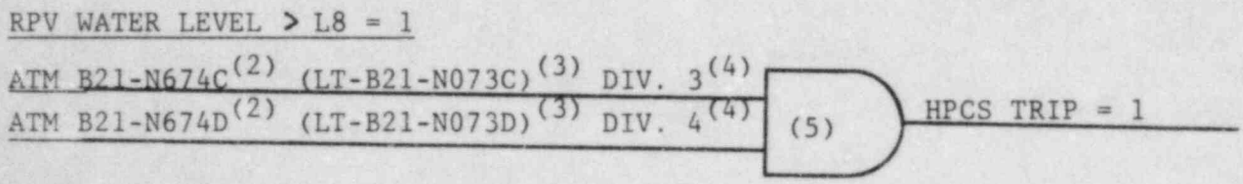

HPCS Trip Basic Logic

Fig. A-6.b

NOTES:

1. See Reference A-4.

2. Analog Trip Module (ATM) receives water level inputs via transmitter indicated in parenthesis.

3. Power source for transmitters are as follows:

   a. LT-B21-N073C/LT-B21-N073G - NSPS 120 VAC INSTR BUS C
   b. LT-B21-N073D/LT-B21-N073H - NSPS 120 VAC INSTR BUS D

4. Reference Leg Division to which level transmitter is attached.

5. Power source for logic is NSPS 120 VAC INSTR BUS C.

High Pressure Core Spray (HPCS) Basic Logic(1)

Figure A-6

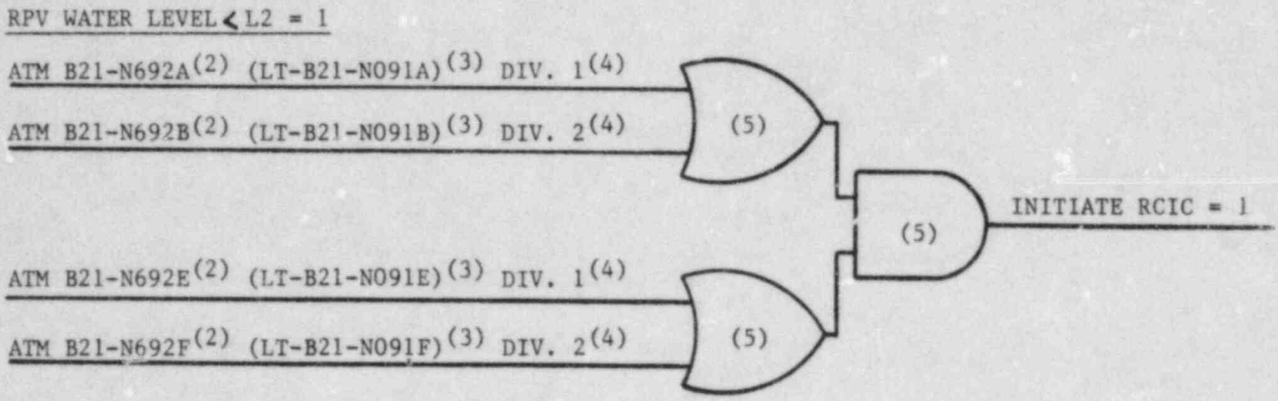

RCIC Initiation Basic Logic

Fig. A-7.a

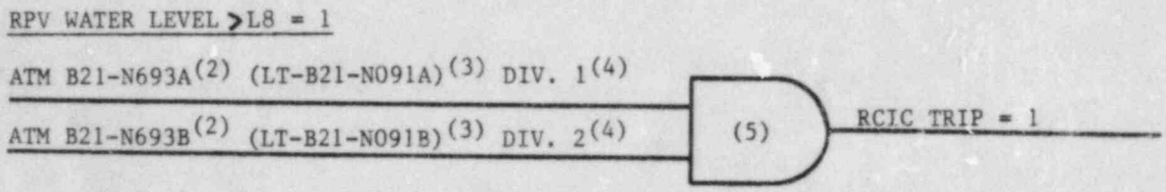

RCIC Trip Basic Logic

Fig. A-7.b

NOTES:

1. See Reference A-5.
2. Analog Trip Module (ATM) receives water level inputs via transmitter indicated in parenthesis.
3. Power sources for transmitters are as follows:
   a. LT-B21-N091A/LT-B21-N091E - NSPS 120 VAC INSTR BUS A
   b. LT-B21-N091B/LT-B21-N091F - NSPS 120 VAC INSTR BUS B
4. Reference Leg Division to which level transmitter is attached.
5. Power source for logic is NSPS 120 VAC INSTR BUS A.

Reactor Core Isolation Cooling (RCIC) Basic Logic(1)

Figure A-7

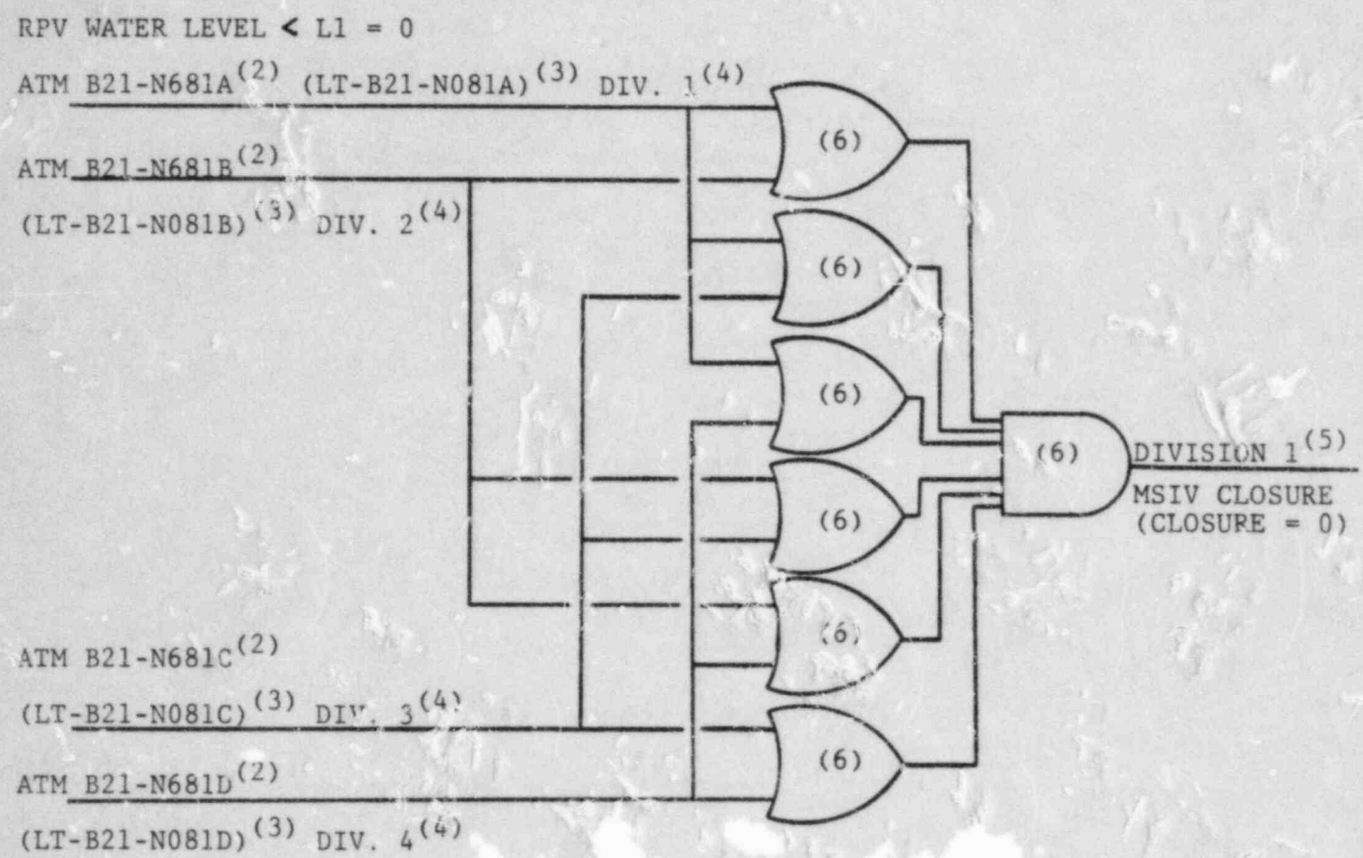

NOTES:

1. See Reference A-6
2. Analog Trip Module (ATM) receives water level [illegible] transmitter in parenthesis.
3. Power source for transmitters are as follows:
   a. LT-B21-N081A - NSPS 120 VAC INSTR BUS A
   b. LT-B21-N081B - NSPS 120 VAC INSTR BUS B
   c. LT-B21-N081C - NSPS 120 VAC INSTR BUS C
   d. LT-B21 N081D - NSPS 120 VAC INSTR BUS D
4. Reference Leg Division to which level transmitter is attached.
5. Basic logic for Divisions 2, 3, and 4 MSIV closure are identical to Division 1 except for logic power source.
6. Power source for MSIV closure logic are as follows:
   a. Division 1 - NSPS 120 VAC INSTR BUS A
   b. Division 2 - NSPS 120 VAC INSTR BUS B
   c. Division 3 - NSPS 120 VAC INSTR BUS C
   d. Division 4 - NSPS 120 VAC INSTR BUS D

Main Steam Line Isolation Valve (MSIV)
2/4 Basic Logic For Division 1

Figure A-8

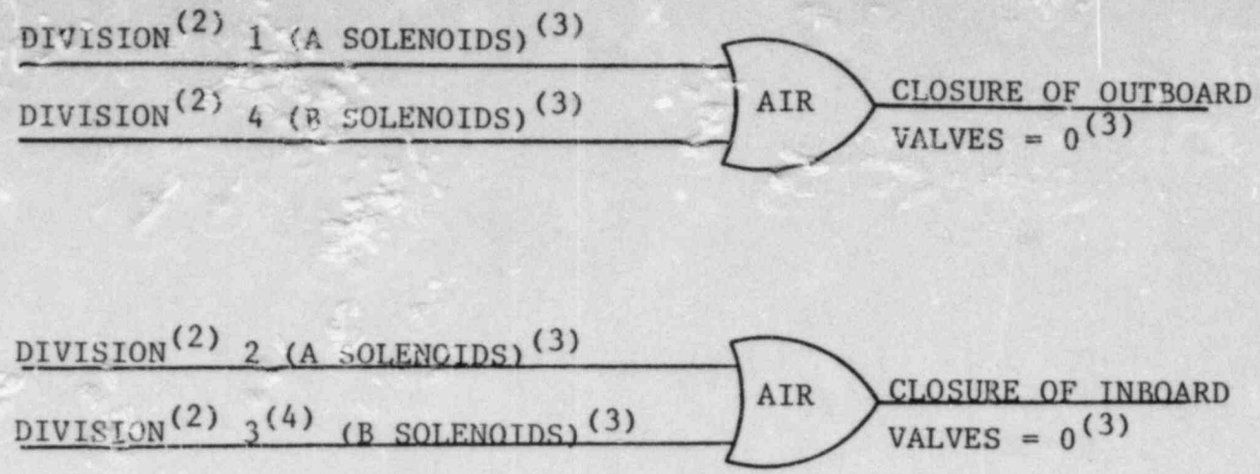

NOTES:

1. See Reference A-7.

2. See Figure A-8 for Divisional logic. Divisional valve closure initiation signal equals zero.

3. MSIV will close at high speeds when both solenoid pilot valves (A & B) are de-energized (0 signal).

4. The Division 3 trip input signal is formed in the Division 3 logic circuitry, but passes through a logic-to-logic isolating device requiring power from NSPS 120 VAC INSTR BUS A.

Main Steam Line Isolation Valve
(MSIV) Basic Logic (1)

Figure A-9

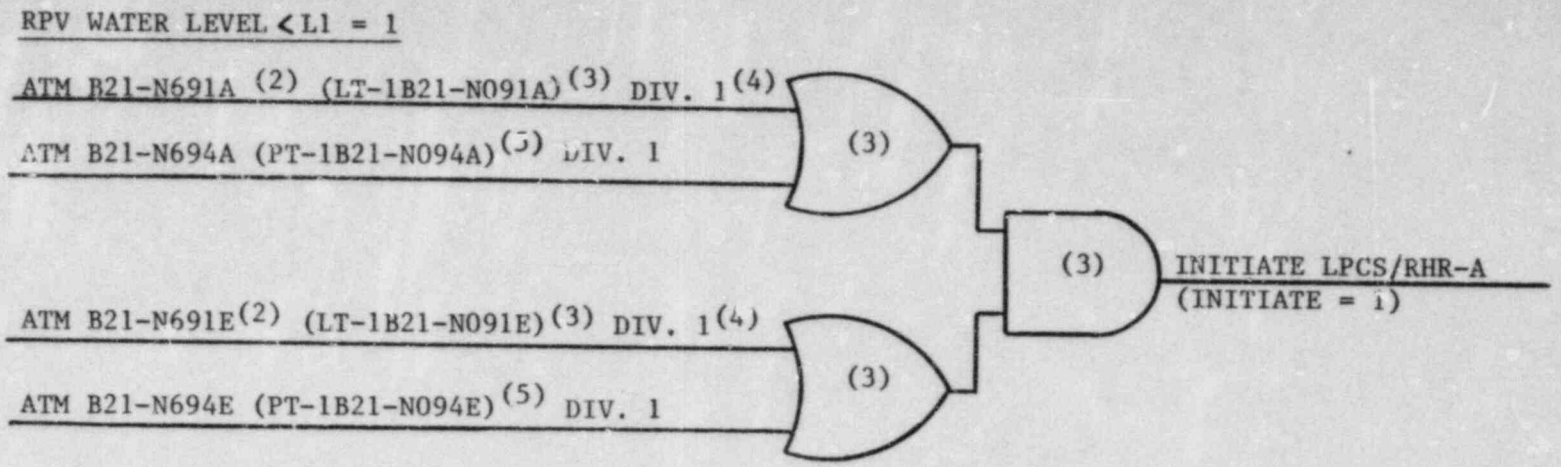

NOTES:

1. See Reference A-8.
2. Analog Trip Module (ATM) receives RPV water level inputs via transmitter indicated in parenthesis.
3. Power source for level transmitters and logic is NSPS 120 VAC INSTR BUS A.
4. Reference Leg Division to which level transmitter is attached.
5. Drywell Pressure ≥ Setpoint = 1.

Low Pressure Core Spray (LPCS)/Low Pressure Coolant Injection (LPCI) RHR A Initiation Basic Logic

Figure A-10

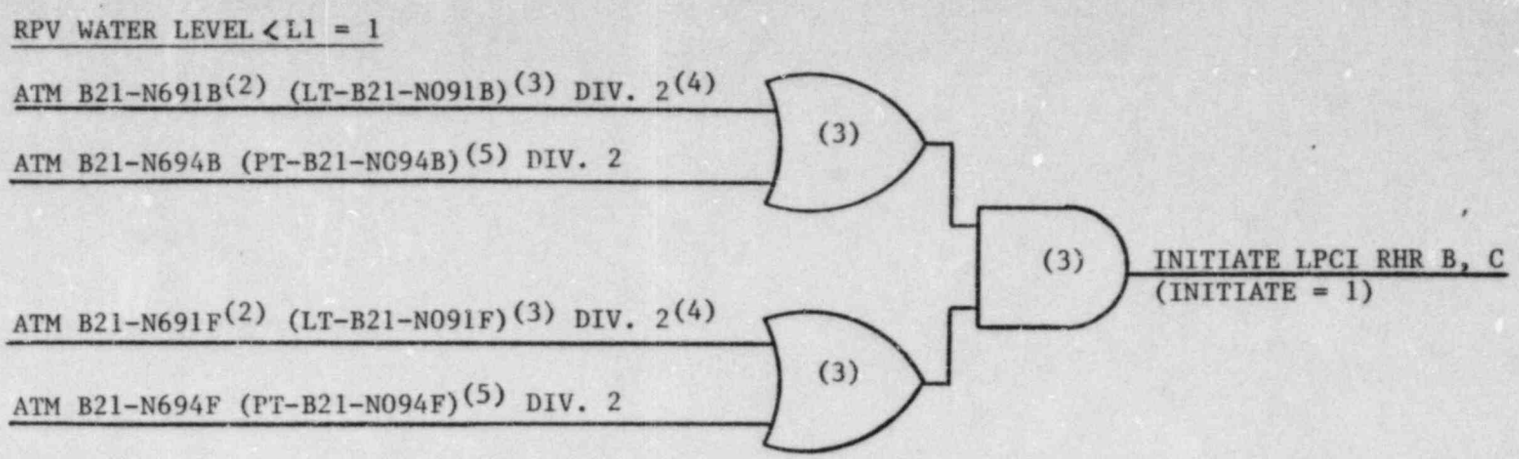

NOTES:

1. See Reference A-9.
2. Analog Trip Module (ATM) receives water level inputs via transmitter indicated in parenthesis.
3. Power source for level transmitters and logic is NSPS 120 VAC INSTR BUS B.
4. Reference Leg Division to which level transmitter is attached.
5. Drywell Pressure $\geq$ Setpoint = 1.

Low Pressure Coolant Injection (LPCI)
RHR B and C Basic Logic(1)

Figure A-11

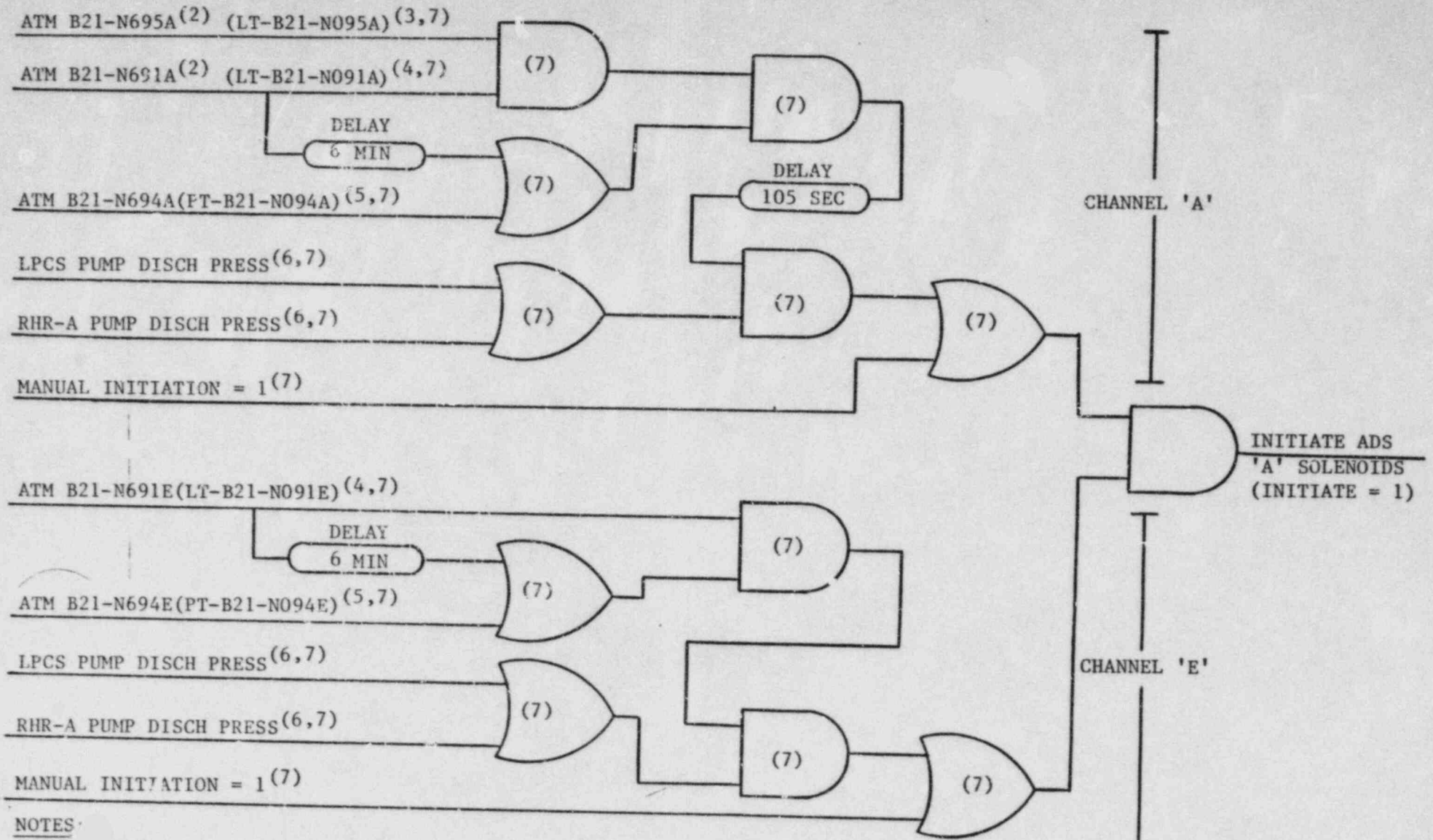

NOTES:

1. See Reference A-10.
2. Analog Trip Module (ATM) receives water level inputs via transmitters indicated in parenthesis.
3. RPV Water Level < L3 = 1. Level transmitter is attached to Division 1 Reference Leg.
4. RPV Water Level < L1 = 1. Level transmitter is attached to Division 1 Reference Leg.
5. Drywell Pressure ≥ Setpoint = 1.
6. Disch Press ≥ Setpoint = 1.
7. Power source is NSPS 120 VAC INSTR Bus A.

Automatic Depressurization System (ADS)
Basic Logic - Channel A/E Solenoid A Initiation(1)

Figure A-12

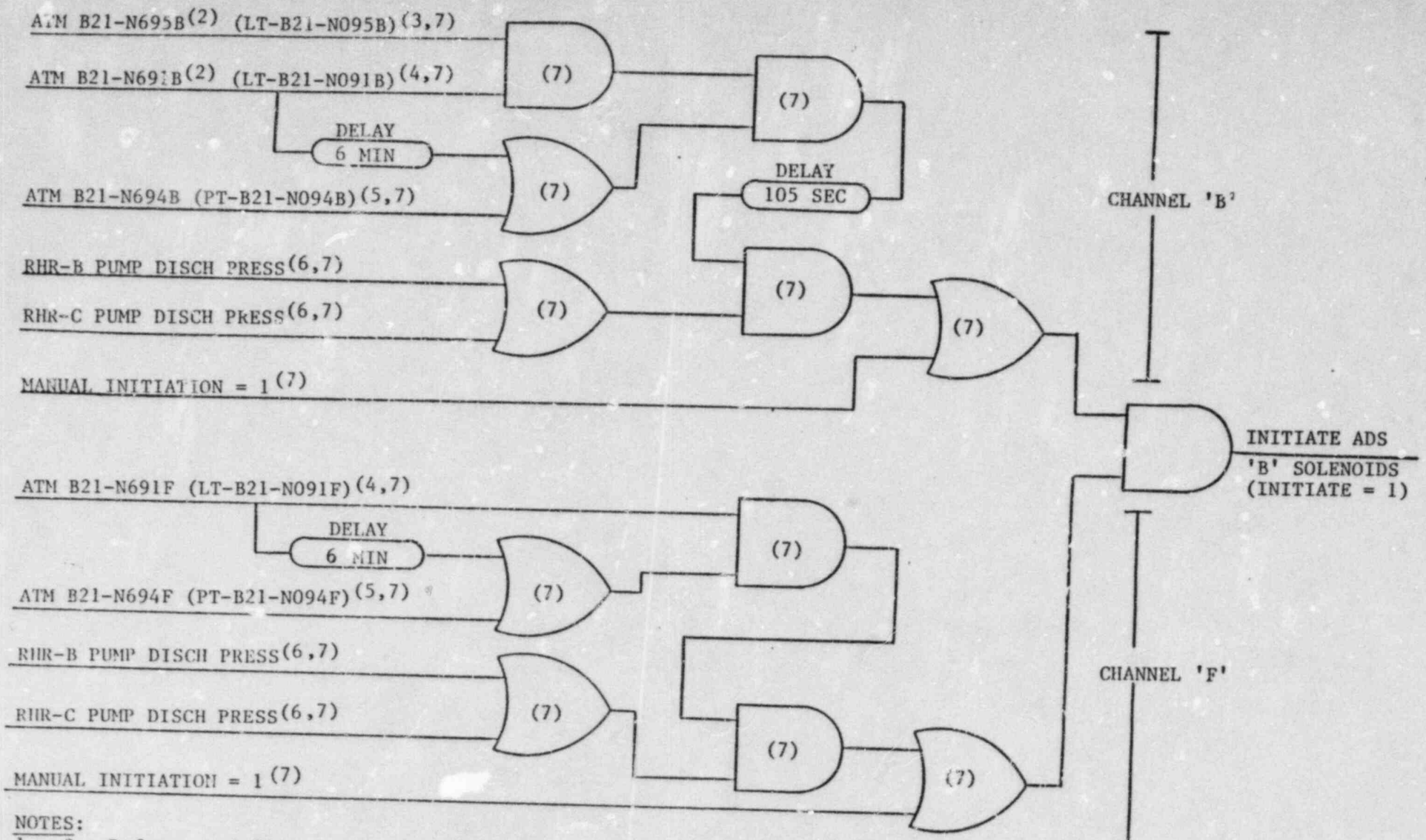

NOTES:

1. See Reference A-11.
2. Analog Trip Module (ATM) receives water level inputs via transmitters indicated in parenthesis.
3. RPV Water Level < L3 = 1. Level transmitter is attached to Division 2 Reference Leg.
4. RPV Water Level < L1 = 1. Level transmitter is attached to Division 2 Reference Leg.
5. Drywell Pressure ≥ Setpoint = 1.
6. DISCH PRESS ≥ Setpoint = 1.
7. Power source is NSPS 120 VAC INSTR Bus B.

Automatic Depressurization System (ADS) Basic Logic - Channel B/F Solenoid B Initiation(1)

Figure A-13

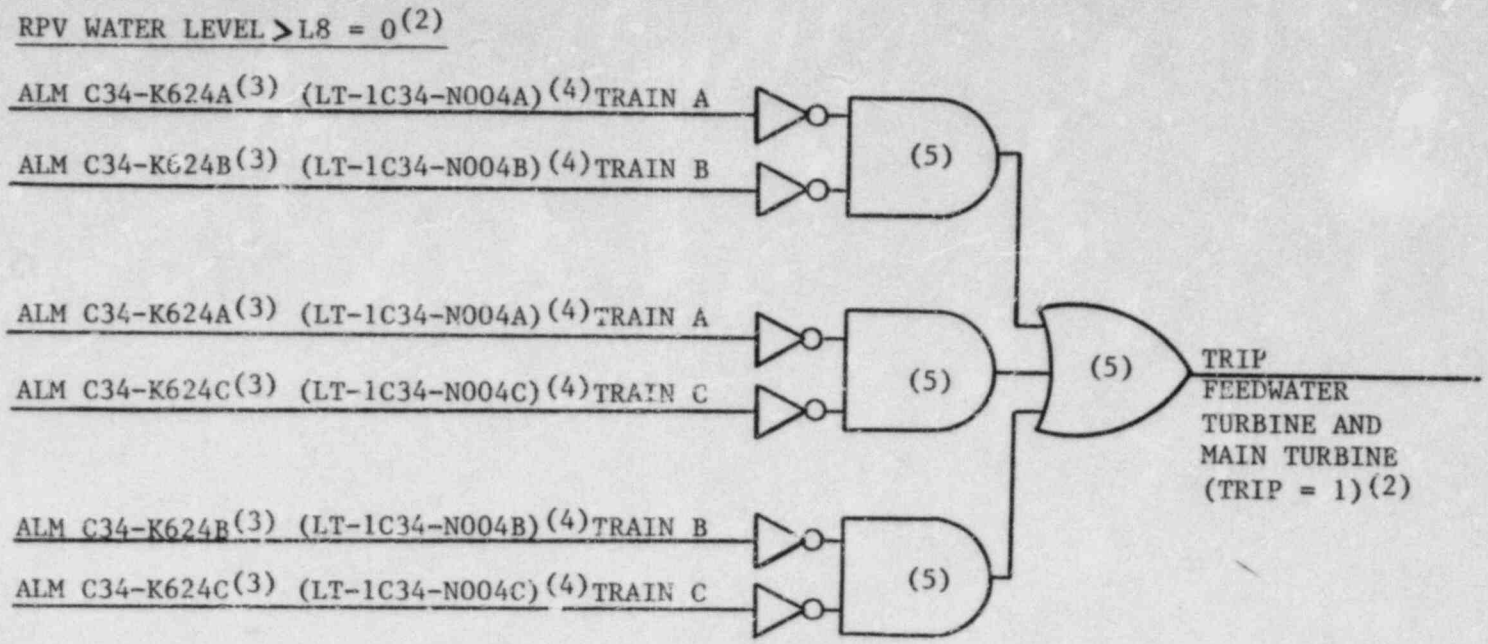

NOTES:

1. See Reference A-12.
2. Output contact open = 0, output contact closed = 1.
3. Alarm Unit (ALM) receives RPV water level inputs via transmitter indicated in parenthesis.
4. Non-safety related power source for transmitters are as follows:
   a. LT-1C34-N004A - 120 VAC INST BUS
   b. LT-1C34-N004B - 125 VDC BUS B
   c. LT-1C34-N004C - 125 VDC BUS A
5. Dry contact relay.

Feedwater Turbine and Main Turbine Trip Basic Logic(I)

Figure A-14

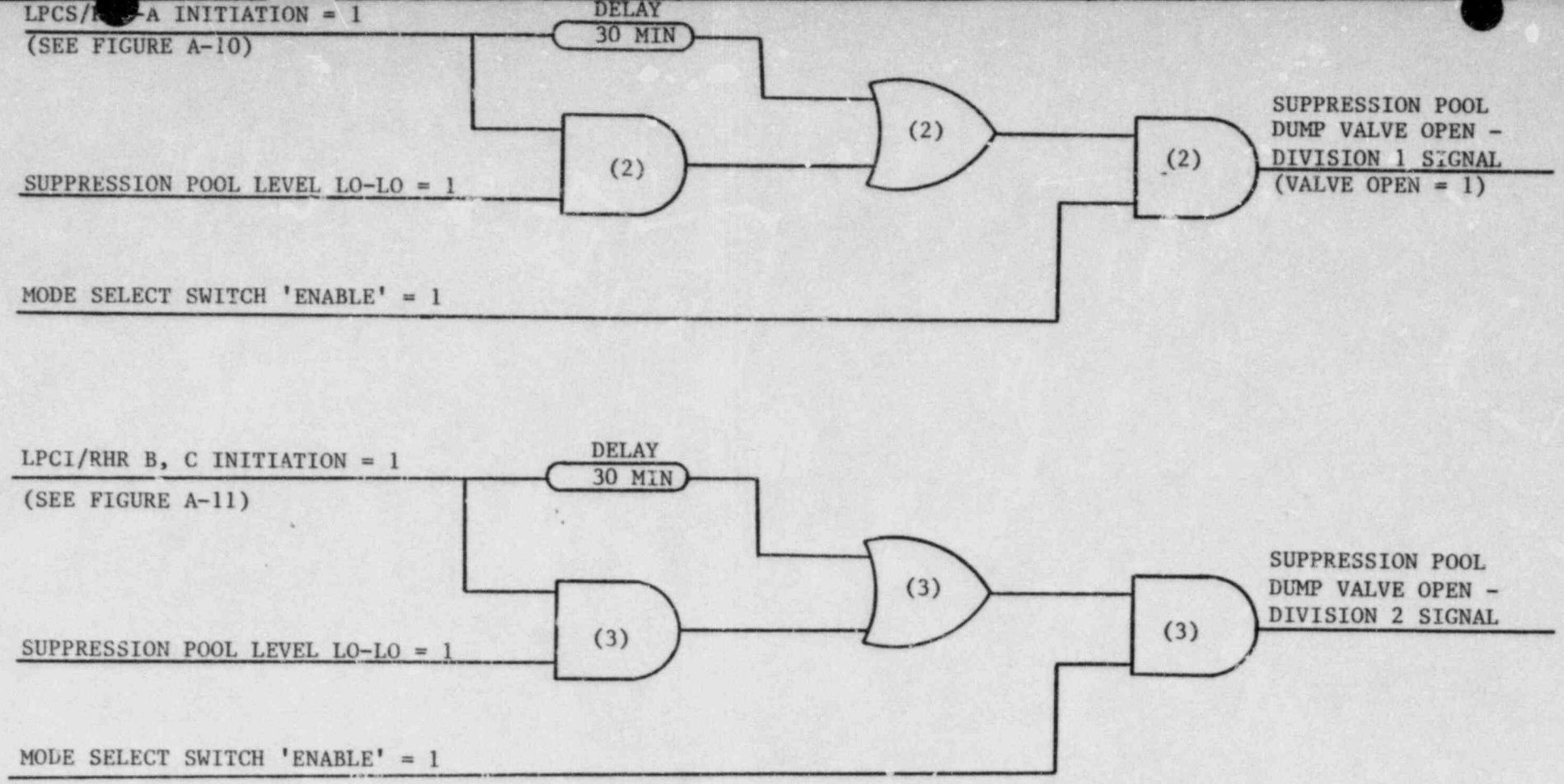

NOTES:
1. See Reference A-13.
2. Dry contact relay. Power source for relay logic is 120 VAC Containment Building MCC E2 (OAP54EB).
3. Dry contact relay. Power source for relay logic is 120 VAC Containment Building MCC F2 (OAP55EB).

Low Water Level Initiation Towards Upper Pool Dump Basic Logic(1)

Figure A-15

APPENDIX B

REVIEW OF MODIFIED WLMS AGAINST THE SIX SOL LEVY CONCERNS (SLI-8211)

APPENDIX B

REVIEW OF MODIFIED WLMS AGAINST THE SIX SOL LEVY CONCERNS (SLI-8211)

This appendix provides a review of the modified CPS RPV Water Level Measurement System (WLMS) with respect to the six (6) concerns identified in Sol Levy Report SLI-8211 regarding the performance of the WLMS during and following postulated abnormal plant conditions. The six concerns from SLI-8211 and the CPS response for each are as follows:

Concern #1

This concern is associated with WLMSs which use Yarway temperature compensated reference legs. With the reference leg operating at an elevated drywell temperature, conflicting and erratic level indications may occur when the vessel reaches intermediate pressure (350 to 400 psia) during the course of plant cooldown. The concern arises because of the potential for Yarway reference leg flashing under these conditions. The nonconservative (i.e. "high") level indications could delay injection system actuation and cause premature termination of the high pressure injection systems.

CPS Response #1

The design of the CPS WLMS does not include Yarway temperature compensated instruments. Cold reference legs with fluid near the ambient drywell temperature (about 135°F) are utilized. No flashing potential for fluid of this temperature exists during the course of plant depressurization and shutdown. Therefore this concern is not applicable to CPS.

Concern #2

This concern is associated with the flow limiting orifices that exist in the reference and variable legs of the WLMSs at most plants. Characteristically, these orifices are located as near as practical to the RPV nozzle to which the reference or variable leg is attached. During combined conditions of low vessel pressure and high drywell temperature, orifices at these locations produce a pressure gradient as a result of the fluid flow out of the lines as it flashes to steam. Erratic level indications, erroneous system trips or initiations, and operator confusion can result from such flashing. Orifices located nearer the drywell penetrations are less susceptible to this concern.

CPS Response #2

This concern applies to the original design of the CPS WLMS and has been resolved by relocating the flow limiting orifices near the drywell penetrations. The concern relates to transient (short-term) flashing errors. Section 4.1.2.1 of this report describes the cause and effects of these errors.

Flow limiting orifices were relocated in the reference leg and variable leg instrument lines associated with the wide and narrow range instruments to reduce the impact of transient flashing errors. Orifice plates were moved from their original location at the RPV instrument tap to within approximately 35" of the drywell wall penetration head fitting (in terms of true pipe length). In many cases, the orifice plates were placed within approximately 7" of the penetration head fitting. Flow limiting orifices located in the fuel zone reference legs and the shutdown and upset range variable legs were also placed near the drywell wall due to the wide and narrow range instrument line modifications. Orifice plates associated with the shutdown and upset range reference leg and the fuel zone variable leg instrument lines were left in their original position since these instruments are not used by the operators during transient flashing conditions.

Studies performed by General Electric for the BWROG demonstrate that the magnitude and duration of the transient flashing errors are dependent upon the event scenario and the instrument sense line configuration; specifically, the overall line length, location of the orifice plate, and the ratio of the orifice flow area to the instrument line flow area. The results of the evaluations performed for the CPS WLMS modification, as described within this report (Section 7), indicate that the magnitude of these errors have been reduced from about 6' to about 8" during postulated accident conditions.

The relocation of the flow limiting orifices was evaluated for concerns related to high energy line breaks (HELB) and pipe whip (see Section 7.5 of this report). It was determined that the resulting drywell environmental conditions from an instrument line break without orifice restrictions are bounded by the pressure/temperature profiles currently described in the CPS Final Safety Analysis Report. The concern of pipe whip was evaluated against the criteria of NUREG-0800 (Standard Review Plan for the Review of Safety Analysis Reports for Nuclear Power Plants, July 1981), page 3.6.1-19. This criteria states that circumferential breaks in piping exceeding 1" nominal pipe size must be evaluated. Because of the small diameter (3/4") of the instrument lines, pipe whip resulting from an instrument line rupture need not be considered in the system design.

Concern #3

This concern is associated with the difference in vertical drop in the drywell between the reference and variable legs of the WLMS. If a situation exists in which the reference leg vertical drop in the drywell exceeds the variable leg vertical drop and drywell temperature is high, there is a possibility that safety systems may not initiate at the prescribed levels, and there will be corresponding erroneous level indication. The larger the difference in vertical drop, the larger the corresponding potential error.

CPS Response #3

This concern has been resolved for the modified WLMS design by maintaining the difference in vertical drops in the drywell to approximately ±12".

The instrument sense line vertical drop differences directly affect the non-flashing WLMS errors. The cause and effects of these errors are discussed in Section 4.1.1 of this report. The associated non-flashing error magnitudes for the CPS WLMS are discussed in Sections 4.1.1 and 7.4.1 for the original and modified WLMS design, respectively. The sense line rerouting effects both the drywell and containment (non-flashing) temperature errors.

If the drywell is above the instrument calibration temperature, and a positive vertical drop difference exists (i.e. reference leg drop is greater than variable leg drop), high level indication errors will result. High level indication errors are non-conservative because they may temporarily delay initiation or result in premature tripping of ECCS. In addition, the high level indication presents erroneous information to the operator(s). The following provides the resultant impact for each of the modified WLMS instrument ranges at CPS:

1. Wide Range Instruments -
   Drywell temperature errors for these instruments have a negligible effect upon instrument accuracy. These errors shift in the conservative direction for all divisions of the wide range instruments. Drywell temperature errors are negative and no greater than -0.70" at the drywell LOCA temperature of 330°F.

2. Narrow Range Instruments -
   Drywell temperature errors were reduced and/or shifted in the conservative direction for all instrument divisions except Division 4. However, errors no greater than +0.40" can be expected following a drywell LOCA. The magnitude of these errors is negligible and presents no problem to the operator or to the operation of ECCS.

3. Fuel Zone Instruments -
The fuel zone reference leg sense line modifications have resulted in drywell vertical drop differences which produce conservative level indication errors. Errors range from -9.3" to -6.2" for the modified system. These low level indication errors are not a concern since the fuel zone instruments are not used for initiation or trip of reactor protection systems and the operator is cautioned on the effects that elevated drywell temperature conditions have on level indication accuracy in the CPS Emergency Operating Procedures.

4. Upset and Shutdown Range Instruments -
Drywell temperature errors for both of these instrument ranges increase as a result of the modifications to the WLMS. Shutdown range errors are of no concern since the operator is instructed to use this instrument for level indication only during RPV maintenance. Upset range errors increase to +36.4" (non-conservative) following a drywell LOCA. The non-conservative shift presents no threat to plant safety since the upset range instruments are not responsible for initiation of safety-related systems and are used only for information purposes, and are not used to direct operator action.

The vertical drop difference between the reference and variable leg instrument lines inside containment also affects water level indication accuracy. The resultant impact of the WLMS modification on the containment temperature errors for each WLMS instrument range is provided below:

1. Wide & Narrow Range Instruments -
Errors for these ranges changed very little from those associated with the original WLMS design due to the small changes in vertical drop differences for these instruments. For containment temperatures within the range of normal plant operation (65°F to 104°F), water level indication errors will not exceed +1.5". Containment temperature errors will approach +8.6" and +3.6", for the wide and narrow range instruments respectively, when the containment environment reaches the design temperature of 185°F.

2. Fuel Zone, Upset & Shutdown Range Instruments -
These instruments were influenced to a greater extent by the WLMS modifications. During normal plant operation the containment temperature indication errors can be as large as +3.5" for the fuel zone instruments. Upset and Shutdown range

errors will be negligible under normal plant conditions. Following a design basis LOCA, with the vessel fully depressurized, a maximum indication error of +16.7" can be expected for the fuel zone instruments (non-conservative). Upset and Shutdown range errors will be no greater than +1.0" under accident conditions. Again, since these instruments do not provide input signals for the actuation of safety-related systems, these errors will not be a problem.

Concern #4

This concern is associated with any WLMS that has a significant reference leg vertical drop in the drywell. With high drywell temperature and low reactor pressure conditions, the fluid in the vertical portion of the reference leg can flash to steam resulting in an error in level indication proportional to the vertical drop in the drywell. The WLMS will indicate higher than actual water level and, therefore, is confusing to the operator and may cause water injection systems to terminate prematurely. This concern occurs at very low pressure while achieving cold shutdown or during the course of an accident involving reactor vessel depressurization.

CPS Response #4

This concern is applicable to the original CPS WLMS design and has been resolved by rerouting the reference leg instrument sense lines (see Section 7 for discussion of the modifications). The vertical drops of the CPS WLMS reference legs have been reduced to within approximately 25" in the drywell.

This concern relates to the effects of steady-state (i.e. long-term) boiling of the reference leg fluid inventory. The cause and effects of these errors are discussed in Section 4.1.2.2 of this report. The associated errors for the original and modified WLMS designs are discussed in Section 4.1.2.2 and 7.4.2.2, respectively, of this report.

The steady-state flashing errors for the modified WLMS narrow and wide range instruments will not exceed +34.3". This amounted to an approximate 75% decrease in error magnitude over the original WLMS design (it should be noted that a 12" reduction in the reference leg water column for the narrow and wide range instruments results in approximately a 15.6" reduction in the indicated level due to the density difference between the liquid in the vessel and the reference leg under conditions assumed for instrument calibration). Assuming a loss of all fluid within the modified reference legs after a DBA-LOCA or a Loss of Drywell Cooling event, maintaining a Level 3 indication

would ensure 104" of water is present above the Top of Active Fuel (TAF). Considering that the corresponding actual water level for the original WLMS design would have been slightly below TAF demonstrates the considerable improvements achieved as a result of this modification. Additionally, Level 8 and Level 2 wide range level indications via the modified WLMS design would ensure 136" and 64" respectively, of water above TAF. The modified CPS WLMS will always provide automatic initiation of high pressure injection systems at L2. In addition, the accuracy of the WLMS has been significantly improved down to levels approaching TAF. When the actual water level reaches TAF, the indicated level is about 30" above TAF. The corresponding indicated level for the original WLMS would have been 171" above TAF.

Fuel zone range steady-state flashing errors decrease to a maximum of +24" for both divisions. Long-term boiling errors for the upset and shutdown range instruments are +190" and +145", respectively. Although the magnitude of these errors is large, the effects of these errors are not considered to be significant since these instruments do not provide actuation signals to the ECCS logic and are used by the plant operator(s) only under very controlled plant conditions.

Concern #5

This concern is that certain WLMS logic configurations may lead to situations or transients that have not been previously considered. If one assumes a break of a reference leg and a logic configuration whereby a single additional instrument failure can defeat a particular safety function, a sequence of events may result that requires operator action to control reactor vessel inventory.

CPS Response #5

This has been identified by the NRC Staff as the "Michelson Concern". Appendix E of this report addresses this concern in detail.

Appendix A contains a Failure Modes and Effects Analysis (FMEA) performed on the CPS WLMS. The FMEA results show that the redundancy within the CPS WLMS allows for the availability of at least one high pressure water make-up system for each event analyzed. As a result, there is never a challenge to fuel design limits or core uncovery. The FMEA performed on the CPS WLMS design is also discussed in Section 6 of this report.

Concern #6

This concern is associated with the seemingly large number of failures of mechanical trip systems/instrumentation. Mechanical instrumentation is vulnerable to drift, calibration problems, mechanical failures, and maintenance errors.

CPS Response #6

This concern does not apply to CPS since the CPS WLMS logic utilizes Analog Trip Units which receive a signal from the WLMS transmitters. The trip units compare the sensor output to a setpoint. When the level output from the transmitter moves through the setpoint, the output of the trip unit changes state, causing the desired action to occur. The use of the Analog Trip System allows the trip setpoints to be set at a control room panel so no access to the transmitters is required for adjustments.

The Analog Trip System (ATS) was originally designed by General Electric for application to Boiling Water Reactors. The original ATS design is discussed in detail in licensing topical report NEDO-21617-A (Analog Transmitter/Trip Unit System for Engienered Safety Sensor Trip Inputs), December 1978. The BWR Owner's Group (BWROG) has provided information to the NRC Staff, as requested, related to anticipated ATS failure rates. This information indicates that NEDO-21617-A undetected failure rate frequencies of 1.95×10^{-5}/hour/unit on the master trip units and 3.1×10^{-5}/hour/unit on the slave trip units (including the series failure effect of the master trip unit on the slave trip unit) is applicable to the original GE ATS design. These failures are alarmed on local panels at CPS and a gross failure alarm is provided in the Main Control Room. The ATS design for CPS represents an improvement over the original GE ATS design in that the system does not utilize static converters, incorporates different power supplies, and has better qualified components. As such, the anticipated ATS component failure rates for CPS will be significantly smaller. With the low failure rates involved in the design of the CPS ATS components and since such failures are alarmed to the plant operator(s), the ATS is considered acceptable with respect to resolving this concern for CPS.

APPENDIX C

CLINTON POWER STATION EMERGENCY PROCEDURE GUIDELINES

APPENDIX C

CLINTON POWER STATION
EMERGENCY PROCEDURE GUIDELINES

C.1 Introduction

Item I.C.1 of Reference C-1 requires that the Emergency Operating Procedures (EOP's) be upgraded to be consistent with the operator actions necessary to cope with transients and accidents. The BWR TMI Owner's Group has responded to these requirements through its Emergency Procedure Committee's development of generic, symptomatic BWR Emergency Procedure Guidelines (EPG's). Operator task analyses were performed in developing these generic guidelines. Illinois Power Company has and is continuing to participate in these BWR Owner's Group efforts.

The generic EPG's were written to address all BWR plant designs developed by General Electric (BWR 2 through 6, Mark I through III containments). The EPG's address all major systems and modes of operation which may be used to respond to an emergency. Because Clinton Power Station (CPS) does not have all of these systems addressed in the generic EPG's, plant-specific EPG's were prepared by deleting statements which are not applicable, substituting equivalent systems where appropriate, and reorganizing steps so that CPS EOP's could be more easily prepared from the EPG's. Identification and explanation of these changes and modifications are contained in CPS Plant Procedure No. 1450.00 (CPS EPG's).

At various points within the EPG's, threshold limits are specified beyond which certain actions are required. While conservative with respect to plant design criteria, these limits are derived from engineering analyses utilizing best-estimate (as opposed to licensing design basis) models. Consequently, these limits are not as conservative as the limits specified in the plant Technical Specifications. This is not to imply that operation beyond the Technical Specification is recommended in an emergency situation. Rather, such operation may be required under certain degraded plant conditions beyond the design basis in order to safely mitigate the accident consequences. The limits specified in the EPG's establish the boundaries within which continued safe operation of the plant can be assured.

The entry conditions for the EPG's are symptomatic of emergencies or events which may degrade into emergencies. The EPG's specify actions appropriate for both. Therefore, entry into the CPS EOP's, developed from the EPG's, is not conclusive that an emergency has occurred.

C.2 CPS Emergency Procedure Guidelines

The EPG's have been submitted to the NRC as part of Illinois Power's commitment to Reference C-1 (see Reference C-2). A brief description of the basic format for the EPG's is provided below.

Based on the CPS BWR/6 and Mark III containment design, the following Clinton-specific, symptomatic EPG's have been developed from the generic EPG's:

(a) RPV Control Guideline - purpose is to maintain adequate core cooling, shutdown the reactor, stabilize and control RPV pressure, and to achieve and maintain RPV cold shutdown conditions.

(b) Containment Control Guideline - purpose is to maintain primary containment integrity and to protect equipment inside the primary containment.

(c) Secondary Containment/Radioactivity Release Control Guideline - purpose is to protect equipment in the secondary containment, limit radioactivity release to the secondary containment and subsequently to maintain secondary containment integrity.

(d) Combustible Gas Control Guideline - purpose is to control accident-generated hydrogen within acceptable concentration limits, maintain primary containment integrity, and to protect equipment inside the primary containment.

(e) Contingencies - various guidelines covering more degraded plant conditions are as follows:
1. Level Restoration
2. Emergency RPV Depressurization
3. Steam Cooling
4. Core Cooling Without Level Restoration
5. Alternate Shutdown Cooling
6. RPV Flooding
7. Level/Power Control
8. Alternate RPV Flooding
9. Alternate Control Rod Insertion

The scope of this appendix is concerned with the extent to which the plant operator(s) rely upon RPV water level indications for assuring adequate core cooling under various postulated CPS transient/accident conditions. A brief overview of the CPS EPG's with respect to operator control of core cooling is provided. The CPS EPG's, as outlined below, are consistent with the actual format used:

(a) Cautions - General/specific operator precautions are provided throughout the EPG's. With respect to maintaining assurance of adequate core cooling, the following cautions apply:

1. Caution #6 - For each of the RPV water level measurement instruments, drywell/containment temperature and indicated water level conditions are defined which, if exceeded, provide indication that actual RPV water level may be anywhere below the elevation of the lower instrument tap. Therefore, this caution defines the criteria under which the RPV water level trend information may not be accurate.

2. Caution #10 - This caution provides instructions to the operator(s) to not secure or place an ECCS in manual override unless, by at least two independent indications, (i) misoperation in automatic mode is confirmed, (ii) adequate core cooling is assured, or (iii) specifically directed to do so. If an ECCS is placed in manual override it will not initiate automatically.

3. Caution #11 - When RPV water level is being controlled within a specified range, this caution instructs the operator(s) to prevent injection from those LPCS/LPCI pumps not required to assure adequate core cooling prior to reaching their maximum injection pressures, if a high drywell pressure ECCS initiation signal occurs or exists while depressurizing. Caution #11 is a further extension of Caution #10, suggesting a specific situation in which it is advisable to take manual control of low pressure ECCS. Caution #11 avoids a rapid rise in RPV water level which may unnecessarily flood the vessel.

4. Caution #14 - This caution provides direction to not depressurize the RPV below 50 psig unless motor driven pumps, sufficient to maintain RPV water level, are running and available for injection. This ensures that steam for the RCIC turbine remains available.

5. Caution #18 - The operator is directed to not divert RHR from the LPCI Mode if continuous LPCI operation of any RHR pump is required to assure adequate core cooling.

6. Caution #21 - This caution provides a warning that elevated containment pressure may trip the RCIC turbine on high exhaust pressure. This

point can be reached at relatively low containment pressures because RCIC exhaust flow itself adds to the sensed pressure.

(b) RPV Control Guideline - The "Level Control" portion of this EPG has the explicit purpose of maintaining adequate core cooling. In this EPG, RPV water level is restored and maintained between Level 3 (low level reactor scram setpoint) and Level 8 (high level ECCS trip setpoint) utilizing Condensate/Feedwater, ECCS, RCIC, CRD, diesel-driven fire pump systems, etc. (as needed).

If RPV water level cannot be restored and maintained above Level 3, then RPV water level is maintained above top of active fuel. If this action is accomplished and the ADS timer has initiated, automatic RPV depressurization is prevented by resetting the ADS timer. This action prevents core uncovery due to ADS actuation with RPV water level initially maintained at top of active fuel.

If RPV water level cannot be maintained above top of active fuel, then the operator is directed to Contingency #1 described below.

(c) Containment Control Guideline - The "drywell and containment temperature control" portions of this EPG describe conditions under which RPV flooding (Contingency #6) is required. This is necessary to assure adequate core cooling if drywell/containment temperature reaches the RPV saturation temperature. Under these conditions, RPV water level measurement instrument line flashing can occur which produces a non-conservative level indication error.

(d) Contingency #1 (Level Restoration) - This contingency identifies the means of recovering RPV water level depending upon the trends of RPV water level and RPV pressure. This EPG utilizes alternate RPV injection systems (e.g. PHR, service water, fire protection, etc.) as well as any ECCS systems which may be available.

Criteria are established for entry into Contingency #2, "Emergency RPV Depressurization", Contingency #3, "Steam Cooling", and Contingency #4, "Core Cooling Without Level Restoration" as described below.

(e) Contingency #2 (Emergency RPV Depressurization) - This EPG provides the operator a controlled means of rapidly depressurizing the RPV utilizing the SRV's, Main Condenser, RHR (steam condensing mode), and other systems as needed. Emergency RPV depressuriza-

tion may be required so that low pressure core cooling systems can be utilized. Following RPV depressurization, the RPV flooding contingency (#6) can be entered if needed to assure adequate core cooling (e.g. due to loss of level indication).

(f) Contingency #3 (Steam Cooling) - If no RPV injection sources are available, then short-term core cooling can be provided by these actions. The operator is directed to wait until RPV water level drops to 3.5 feet above bottom of active fuel (the CPS minimum zero-injection RPV water level) and then open one SRV.

Opening an SRV at the minimum zero-injection RPV water level draws steam up through the fuel assemblies. This steam absorbs heat from the fuel and produces a significant decrease in cladding temperature. As RPV pressure decreases, steam flow through the core and the open SRV also decreases so that less heat is removed from the fuel and the fuel clad temperature trend reverses.

When RPV pressure drops to 700 psig (the CPS minimum single SRV steam cooling pressure), emergency RPV depressurization (Contingency #2) is required.

(g) Contingency #4 (Core Cooling Without Level Restoration) - In the event that the core cannot be flooded, this contingency directs the operator(s) to open all SRVs to establish the maximum RPV heat removal capability. Then HPCS/LPCS is operated with suction from the suppression pool. Spray systems can provide adequate core cooling without level restoration.

(h) Contingency #6 (RPV Flooding) - In this contingency the operator(s) is directed to flood the RPV with all available injection systems while maintaining RPV pressure at least 68 psid across the open SRVs (the CPS minimum RPV flooding pressure) until containment/drywell temperatures are below 212°F (i.e. flashing of the instrument line fluid inventory is prevented - RPV WLMS instrumentation is available). When the RPV can be determined to be full, injection is terminated. These actions are repeated, if necessary, to assure adequate core cooling is maintained.

(i) Contingency #8 (Alternate RPV Flooding) - The actions prescribed here are used in lieu of Contingency #6 if RPV flooding is required but the reactor has not been shutdown with control rods. Injection is throttled and RPV water level is allowed to slowly increase

to control reactor power level. The RPV is not filled to avoid washing boron solution out of the core.

Once RPV conditions have stabilized and level can be controlled in the normal band (Level 3 to Level 8), then the EPG's direct the operator(s) to take the plant to shutdown cooling conditions.

C.3 Operator Reliance on RPV Water Level Indication For Maintaining Adequate Core Cooling

The goal of both the operator and various automatic plant systems is to prevent potential inadequate core cooling (ICC) conditions from occuring. For most normal and abnormal plant conditions, the automatic plant systems operate to prevent ICC conditions. The operator's reliance on RPV water level indications to prevent ICC, therefore, is of primary importance where (1) operator action may be necessary to supplement initiation of the automatic systems and (2) assuring appropriate operator action to take manual control of plant systems and stabilize RPV water level following transients and accidents.

The evaluation contained within this report identifies postulated events that can lead to degradation in sensed RPV water level or result from failures in the RPV WLMS. The accident sequence initiators which may lead to a potential for ICC and which also contain RPV water level indication dependent operator action are as follows:

1) loss of drywell cooling (LODWC) with drywell pressure below the scram setpoint (1.68 psig);
2) reference line breaks plus a single ECCS initiation instrument channel failure; and
3) multiple failures in level instrumentation and equipment required to provide inventory makeup.

The CPS EPG's (as described above) and the CPS EOPs, reinforced by thorough operator training, prescribe operator actions as a function of indicated reactor vessel water level. This guidance provides explicit instructions for the operator(s) when the RPV water level displays become unreliable. Therefore, operator actions to provide adequate makeup flow are defined for a wide range of normal and abnormal conditions. The operator reliance on RPV water level measurement instrumentation in these accident conditions may be examined by evaluating the described operator action(s) at appropriate points throughout the EPG's.

C.3.1 Loss of Drywell Cooling

Events where drywell temperature exceeds the drywell temperature Limiting Condition of Operation (LCO) but drywell pressure remains below the high drywell pressure setpoint are covered by the manual shutdown due to LODWC. If drywell pressure rises above the high drywell pressure setpoint, then the reliance on RPV water level indications is reduced due to automatic ECCS initiation. The dominant ICC contribution for the LODWC initiator occurs when the RPV pressure is low and the operator is in the process of establishing long-term RPV cooling. Therefore, the evaluation for events with high drywell pressure would not be substantially different than the evaluation with low drywell pressure. The dominant sequences for these events would be those cases where the potential for instrument line flashing occurs.

If flashing has been detected, the RPV water level contribution is small because the CPS EPG's prescribe vessel flooding and continued injection until level indications are restored. If the operator is assumed to violate the EPG's and not implement RPV flooding subsequent to instrument line flashing, then there would be the potential for prematurely terminating RPV makeup flow due to false high indications on the water level measurement displays. This condition would have to exist for a long period of time before ICC conditions could occur. If the operator does not instigate flooding, then the EPG's, at the related plant conditions, prescribe placing the plant in the shutdown cooling mode of RHR or using alternate shutdown cooling procedures. When shutdown cooling is established, the plant is in a safe condition since there is little or no vessel inventory loss in this mode. Therefore the operator's attempts to establish shutdown cooling would have to fail over a long time period while bleeding off inventory in order to maintain low RPV pressure. The operator(s) would not be expected to maintain a bleed-off/makeup mismatch with unresponsive or rising water level displays long enough to create potential ICC. The operator's reliance on water level indications to prevent ICC for these events are therefore limited to those cases where he has violated the EPG's, and even in those cases there are indications and circumstances which supplement the RPV water level indications. Also, long-term total reliance on RPV water level subsequent to instrument line flashing, leads to potential ICC only in cases where reference leg instrument line flashing causes several level instruments (particularly the wide range instruments) to read above level 3 when actual level is below the lower (variable leg) instrument tap. This scenario is not possible at CPS with the modified reference leg vertical drops.

For the cases where drywell/containment temperatures are high, but flashing does not occur, the degradation in sensed level is much less. Caution #6 of the CPS EPG's warns the operator that the level displays are unreliable at the low end of the instrument range for this indication. Also, the zero shift upward is insufficient to cause the primary level displays to be near Level 3 when actual level is below the instrument tap. Therefore, this condition does not have a significant contribution to potential ICC.

C.3.2 Reference Line Breaks plus Single ECCS Initiation Instrument Channel Failure

Reference line breaks followed by single ECCS initiation instrument channel failures were evaluated in Section 6 and Appendix A of this report. There are some failure combinations which would result in defeating automatic initiation of HPCS, LPCS, LPCI, ADS, or RCIC. However, the failure analysis clearly shows that the consequences are not of an immediate concern for any of the events. The redundancy within the RPV WLMS allows for the availability of at least one high pressure injection system for each event. As a result, there is never a challenge to fuel design limits and core uncovery. Furthermore, there are alternative instruments (sensing other plant parameters - e.g., drywell pressure) not included in the analysis which would initiate many of the safety systems. Also, operator recovery actions were not included. The analysis shows that there is no need for unusual operator actions to mitigate the event consequences.

C.3.3 Multiple Failures in Level Instruments

Sequences which require the greatest degree of operator action to supplement automatic system initiation are those involving multiple WLMS failures, with low drywell pressure, and high vessel pressure, in conjunction with the inoperability of all high pressure makeup systems so that manual depressurization is required. For those sequences, the operator reliance on water level can be viewed as his perception of the need for providing additional makeup (i.e. the degree of operator reliance on water level to assure he will provide injection by any means available). For these types of events, the important consideration is what is referred to as "common mode reliance" on RPV water level between automatic system initiation/operation and operator action. For the Clinton Power Station, the operator has both wide and narrow range RPV water level displays. The automatic ECCS initiations are from the wide range water level instruments only. ADS requires a confirming low water level signal from narrow range instruments; however the ADS signal source is not from the transmitters used for the narrow range displays.

In addition, the wide range water level displays are sourced at the same transmitters used for the MSIV closure initiation (not the ECCS initiation level transmitters). The "common mode reliance" is therefore very small. Numerous level instrument failures among different groups of level instruments would have to occur before low water level automatic ECCS initiation and correct operator perception of RPV water level were simultaneously defeated. It should be noted that continued loss of inventory with no compensation by a makeup system would indicate to the operator that RPV water level is dropping.

Accident/transient sequences, where appropriate RPV water level-dependent operator actions to stabilize conditions may be jeopardized, occur when high drywell temperature and low RPV pressure occur concurrently. The operator reliance on RPV water level indications in these cases is similar to the reliance in those sequences following a LODWC initiator previously discussed.

C.4 Conclusions

In conclusion, RPV water level related transient/accident sequences which may lead to ICC require all of the following to occur:

1. severe degradation of several RPV WLMS instruments;
2. violation of EPG-based procedures (EOP's) which call for flooding when RPV water level indications become unreliable; and
3. extended operation with continuing loss of RPV inventory and insufficient RPV makeup flow.

Should this set of circumstances occur and result in some core damage, then high levels of radioactivity (e.g. high containment gamma radiation, etc.) and containment hydrogen will be measured. These indications would alert the operator(s) to the existence of (but not the approach to or recovery from) fuel damage and thus initiate actions to prevent further fuel damage. These indications represent diverse means of detecting the existence of ICC.

In summary, the CPS EPG's, and the EOP's developed from them, provide explicit instructions which supplement the RPV water level displays and assure adequate core cooling regardless of the state of the WLMS.

C.5 References

C-1 USNRC, "Clarifications of TMI Action Plan Requirements", NUREG-0737, October 1980.

C-2 Illinois Power Company letter U-0708, CPS Procedures Generation Package, from D.I. Herborn to A. Schwencer, dated May 1, 1984.

APPENDIX D

INSTRUMENT LINE DATA FOR MODIFIED WLMS

TABLE D-1

MECHANICAL DIVISION 1/AREA 1 REFERENCE LEG LINE LENGTHS - MODIFIED WLMS DESIGN[1]

Point[2]	Elevation	Vertical Drop from Previous Elevation	Accumulated Vertical Drop	True Length from Previous Point	Accumulated True Length	Azimuth[3]
N14	792'-10.25					20°
1	793'- 0.83	-2.38"	-2.38"	4'-11.55"	4'-11.55	
2	793'- 4.5"	-3.88"	-6.25"	0'- 6.16"	5'- 5.71"	
3	793'- 4.5"	0	-6.25"	1'- 2.87"	6'- 8.58"	
Condensing Pot						
4	792'- 6.0"	10.5"	10.5"	10.5"	10.5"	
5	792'- 1.0"	5.0"	1'-3.5"	10'- 0.10"	10'-10.60"	
6	791'-11.88"	1.13"	1'-4.63"	1'-11.65"	12'-10.26"	
7	791'- 7.81"	4.06"	1'-8.69"	7'- 0.35"	19'-10.60"	
8	791'- 3.5"	4.31"	2'-1.00"	7'- 5.35"	27'- 3.96"	50°

1. Line lengths and elevations based on cold vessel conditions.

2. See Figure D-1 for point definitions.

3. Azimuth locations given in Tables D-1 through D-4 are approximate. Exact locations are shown in Figures D-1 through D-4.

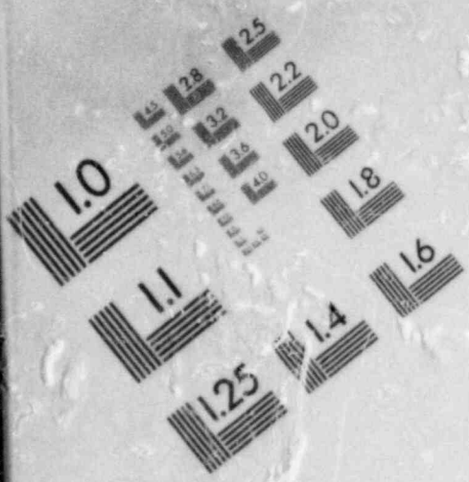

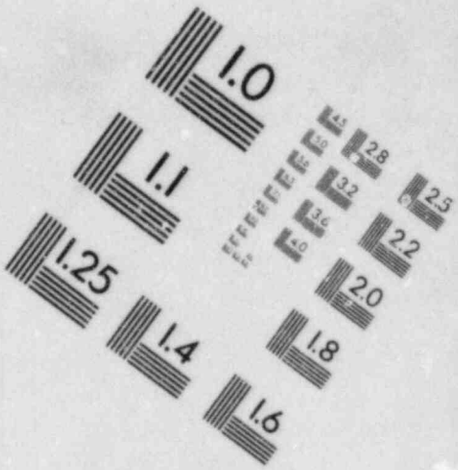

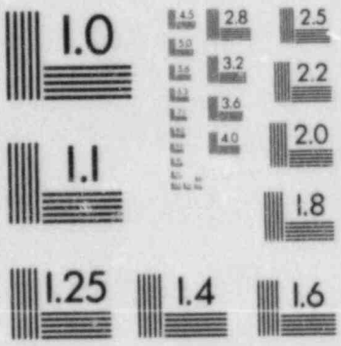

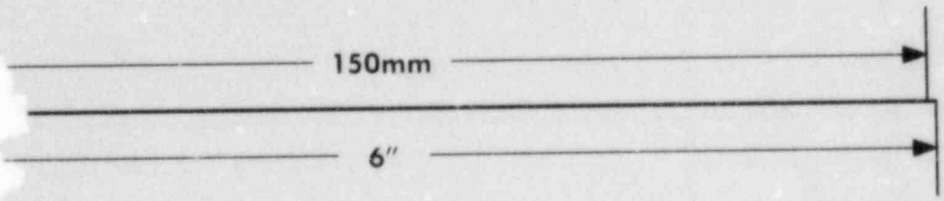

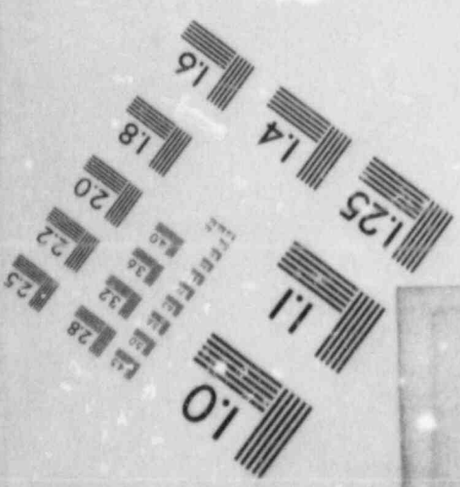

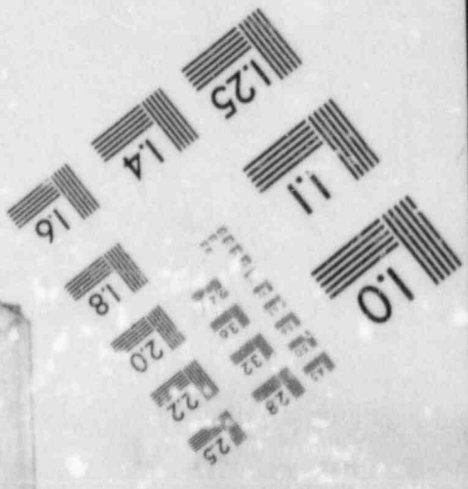

IMAGE EVALUATION
TEST TARGET (MT-3)

TABLE D-2

MECHANICAL DIVISION 2/AREA 2 REFERENCE LEG LINE LENGTHS - MODIFIED WLMS DESIGN[1]

Point[2]	Elevation	Vertical Drop from Previous Elevation	Accumulated Vertical Drop	True Length from Previous Point	Accumulated True Length	Azimuth
N14	792'-10.13					200°
1	793'- 0.63	-2.50"	-2.50"	4'- 8.56"	4'- 8.56	
2	793'- 4.50"	-3.88"	-6.38"	0'- 6.16"	4'- 2.72"	
3	793'- 4.50"	0.0"	-6.38"	2'- 1.72"	7'- 4.43"	
Condensing Pot						
4	792'- 6.0"	10.5"	10.5"	10.5"	10.5"	
5	792'- 1.0"	5.0"	1'- 3.5"	7'- 3.14"	8'- 1.64"	
6	791'-11.38"	1.63"	1'- 5.13"	3'- 3.53"	11'- 5.18"	
7	791'- 9.88"	1.50"	1'- 6.63"	3'- 0.40"	14'- 5.58"	
8	791'- 5.56"	4.31"	1'-10.94"	8'- 8.09"	23'- 1.67"	
9	791'- 3.81	1.75"	2'- 0.69"	3'- 6.54"	26'- 8.21"	
10.	791'- 3.50"	0.31"	2'- 1.00"	0'- 6.01"	27'- 2.21"	222°

1. Line lengths and elevations based on cold vessel conditions.

2. See Figure D-2 for point definitions.

TABLE D-3

MECHANICAL DIVISION 3/AREA 3 REFERENCE LEG LINE LENGTHS - MODIFIED WLMS DESIGN[1]

Point[2]	Elevation	Vertical Drop from Previous Elevation	Accumulated Vertical Drop	True Length from Previous Point	Accumulated True Length	Azimuth
N14	792'-10.31					160°
1	793'- 0.63	2.31"	-2.31"	4'-11.55"	4'-11.55	
2	793'- 4.5"	-3.88"	-6.19"	6.16"	5'- 5.71"	
3	793'- 4.5"	0"	-6.19"	1'- 3.96"	6'- 9.67"	
Condensing Pot						
4	792'- 6.0"	10.5"	10.5"	10.5"	10.5"	
5	792'- 2.0"	4.0"	1'- 2.5"	6'- 3.23"	7'- 1.73"	
6	791'- 9.0"	5.0"	1'- 7.5"	7'-11.13"	15'- 0.86"	
7	791'- 3.3"	5.5"	2'- 1.0"	8'- 8.77"	23'- 9.63"	142°

1. Line lengths and elevations based on cold vessel conditions.

2. See Figure D-3 for point definitions.

TABLE D-4

MECHANICAL DIVISION 4/AREA 4 REFERENCE LEG LINE LENGTHS - MODIFIED WLMS DESIGN[1]

Point[2]	Elevation	Vertical Drop from Previous Elevation	Accumulated Vertical Drop	True Length from Previous Point	Accumulated True Length	Azimuth
N14	792'-10.31					340°
1	793'- 0.63	-2.31"	-2.31"	4'-11.55"	4'-11.55	
2	793'- 4.50"	-3.88"	6.19"	6.16"	5'- 5.71"	
3	793'- 4.50"	0.0"	-6.19"	1'- 3.10"	6'- 9.71"	
Condensing Pot						
4	792'- 6.0"	10.5"	10.5"	10.5"	10.5"	
5	792'- 1.0"	5.0"	1'- 3.5"	10'- 0.13"	10'-10.63"	
6	792'- 0.0"	1.0"	1'- 4.5"	1'- 9.75"	12'- 8.38"	
7	791'- 8.5"	3.5"	1'- 8.0"	6'- 4.81"	19'- 1.18"	
8	791'- 7.94"	0.56"	1'- 8.56"	1'- 0.0"	20'- 1.19"	
9	791'- 7.13"	0.81"	1'- 9.38"	1'- 6.0"	21'- 7.19"	
10	791'- 3.5"	3.63"	2'- 1.0"	6'- 8.63"	28'- 3.81"	313°

1. Line lengths and elevations based on cold vessel conditions.

2. See Figure D-4 for point definitions.

TABLE D-5

INSTRUMENT LINE PARAMETERS FOR THE MODIFIED WLMS - DIVISION I

PARAMETER[2]	DIMENSIONS[1] NARROW RANGE AZ 20[3]	WIDE RANGE AZ 20
Xs	6.25"	6.25"
Xr	2'-1"	2'-1"
ΔE	6'-7.31"	20'-0"
Xm	1'-8.56"	2'-6.50"
Xr minus Xm	4.44"	-5.5"
Lo	11.62"	2.62"

NOTES (Typical for Tables D-5 through D-8)

1. Dimensions are for the WLMS instrument piping in the cold position; Drywell and RPV Temperature = 80° F

2. Instrument Line Parameters are illustrated in Figure 3-10 contained in Section 3.

3. Azimuth locations of RPV instrument line taps are approximate. Exact locations are shown in Figures D-1 through D-4.

TABLE D-6

INSTRUMENT LINE PARAMETERS FOR THE MODIFIED WLMS - DIVISION 2

PARAMETER	DIMENSIONS			
	NARROW RANGE AZ 200	WIDE RANGE AZ 200	UPSET RANGE AZ 244	SHUTDOWN RANGE AZ 244
Xs	6.38"	6.38"	1'-11.5"	1'-11.5"
Xr	2'-1.0"	2'-1.0"	30'-1.83"	30'-1.83"
ΔE	8'-0"	20'-0"	2'-4.56"	2'-4.56"
Xm	3'-1.5"	2'-6.3"	3'-1.5"	3'-1.5"
Xr minus Xm	-1'-0.5"	-5.31"	27'-0.33"	27'-0.33"
Lo	11.62"	2.62"	11.62"	11.62"

TABLE D-7

INSTRUMENT LINE PARAMETERS FOR THE MODIFIED WLMS - DIVISION 3

PARAMETER	DIMENSIONS		
	NARROW RANGE	WIDE RANGE	FUEL ZONE
	AZ = 160	AZ = 160	AZ = 160
Xs	6.19"	6.19"	6.19"
Xr	2'-1.0"	2'-1.0"	2'-1.0"
ΔE	8'-0"	20'-0"	47'-3.38"
Xm	3'-2"	2'-6.50"	12'-3.05"
Xr minus Xm	-1'-1.0"	-5.5"	-10'-2.05"
Lo	11.62"	2.62"	4'-11.56"

TABLE D-8

INSTRUMENT LINE PARAMETERS FOR THE MODIFIED WLMS - DIVISION 3

PARAMETER	DIMENSIONS		
	NARROW RANGE	WIDE RANGE	FUEL ZONE
	AZ = 340	AZ = 340	AZ = 340
Xs	6.19"	6.19"	6.19"
Xr	2'-1.0"	2'-1.0"	2'-1.0"
ΔE	6'-9.69"	20'-0.25"	43'-10.75"
Xm	1'-11.19"	2'-6.75"	8'-10.41"
Xr minus Xm	1.81"	-5.15"	-6'-9.41"
Lo	11.62"	2.62"	4'-11.56"

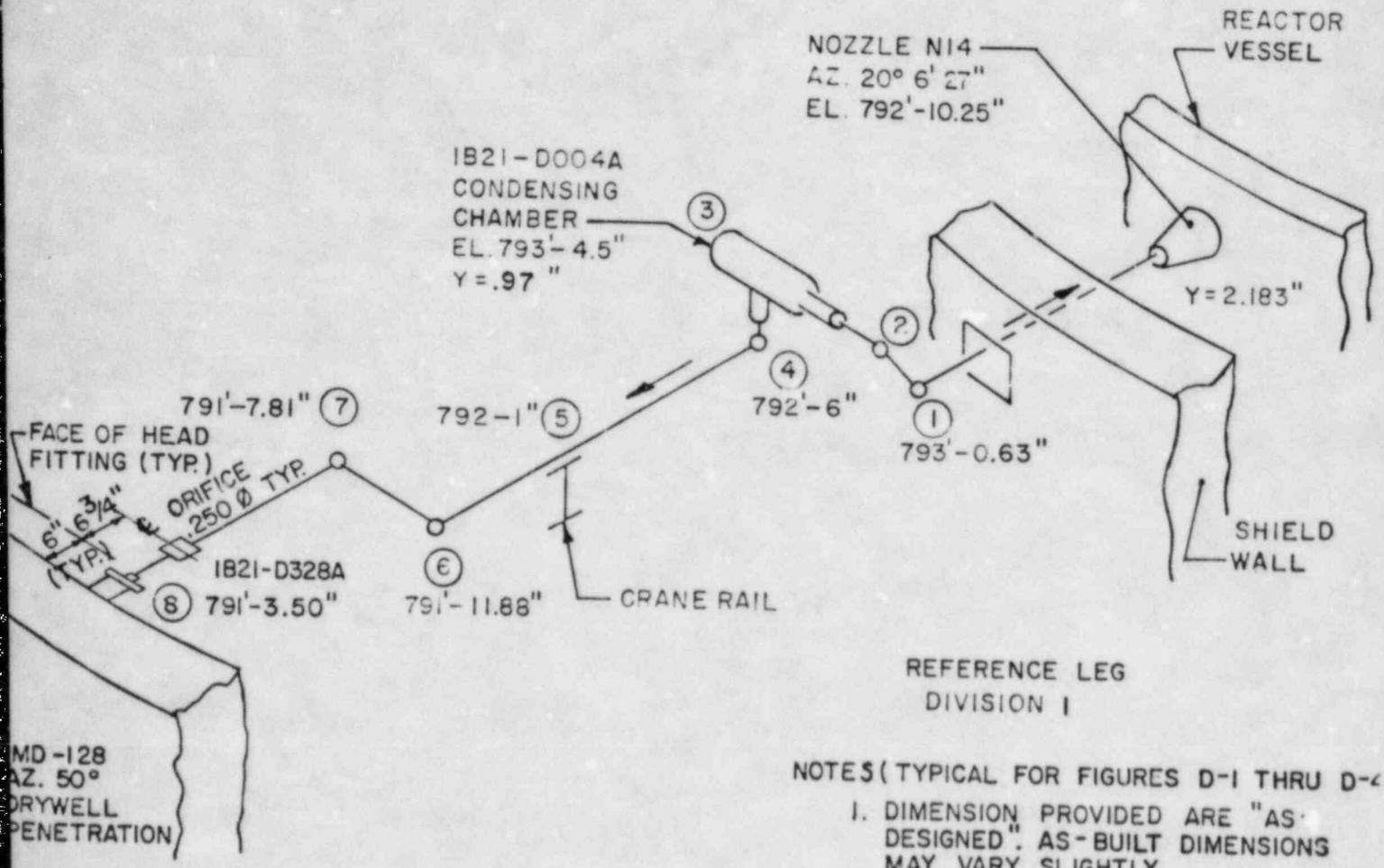

REFERENCE LEG
DIVISION I

NOTES (TYPICAL FOR FIGURES D-1 THRU D-4

1. DIMENSION PROVIDED ARE "AS-DESIGNED". AS-BUILT DIMENSIONS MAY VARY SLIGHTLY.
2. PARAMETERS FOR FIGURES D-1 THRU D-4 ARE QUANTIFIED IN TABLES D-1 THRU D-4.

WLMS REFERENCE LEG PICTORIAL —
DIVISION I MODIFIED DESIGN

FIGURE D-1

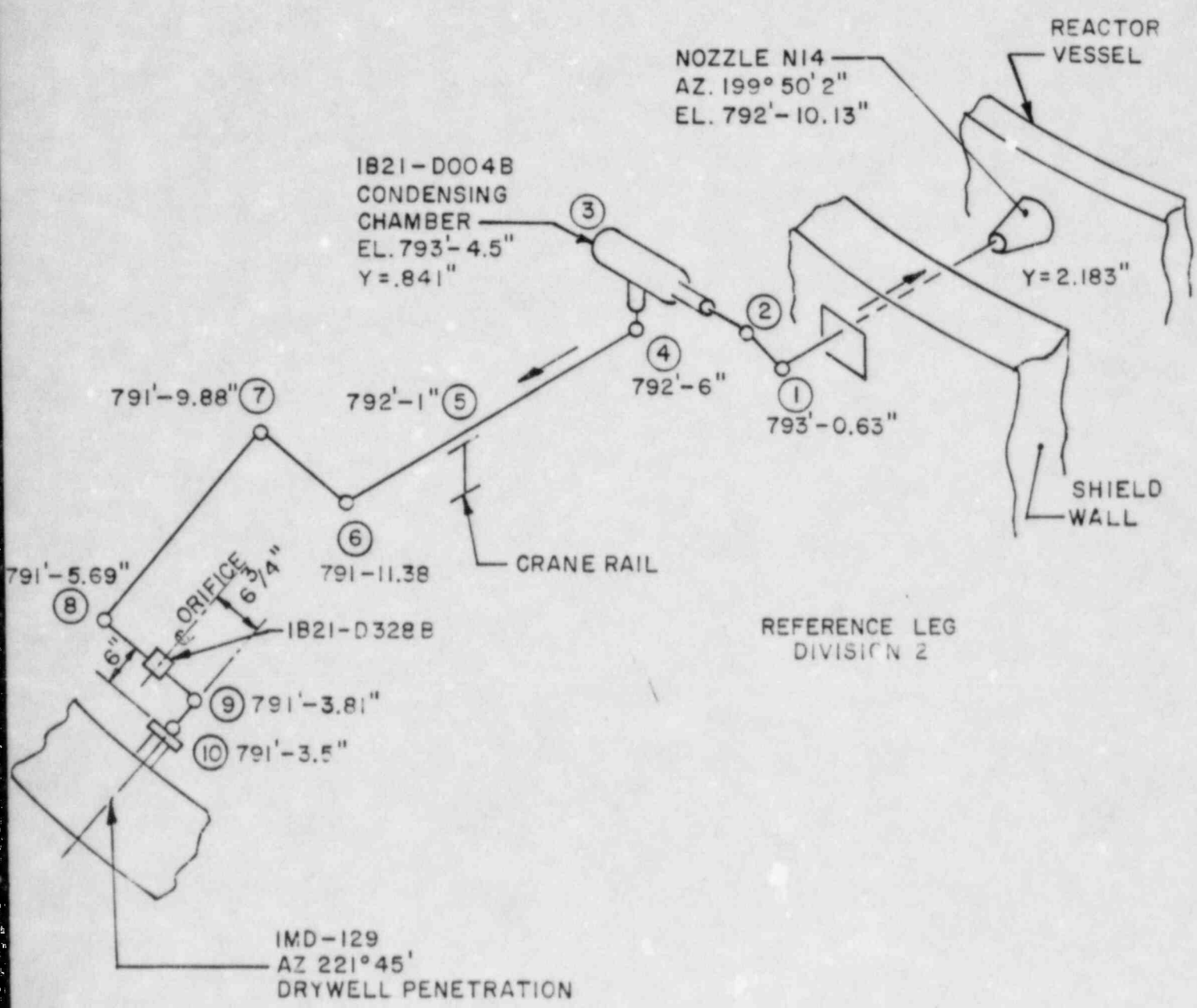

WLMS REFERENCE LEG PICTORIAL –
DIVISION 2 MODIFIED DESIGN

FIGURE D-2

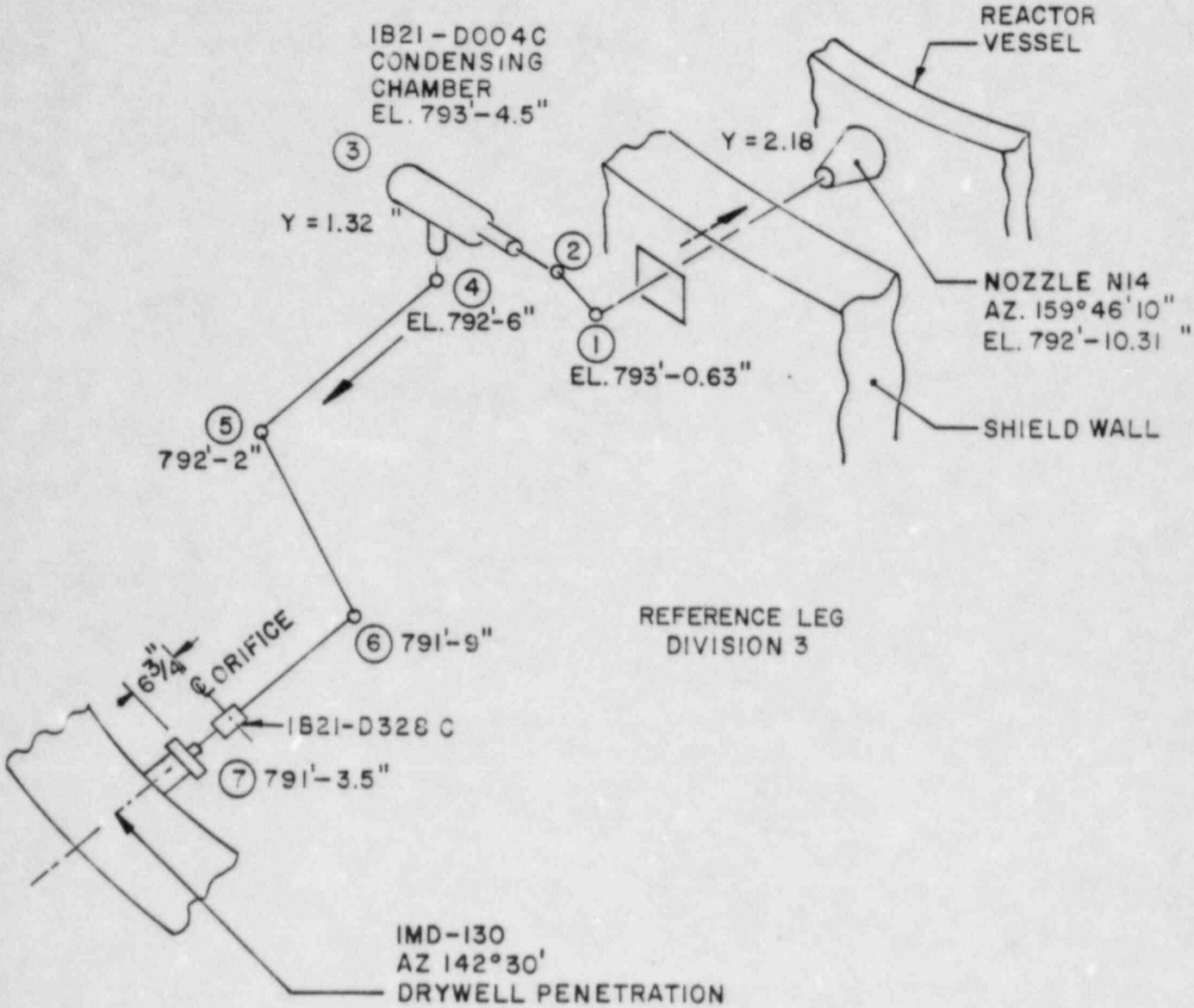

WLMS REFERENCE LEG PICTORIAL--
DIVISION 3 MODIFIED DESIGN

FIGURE D-3

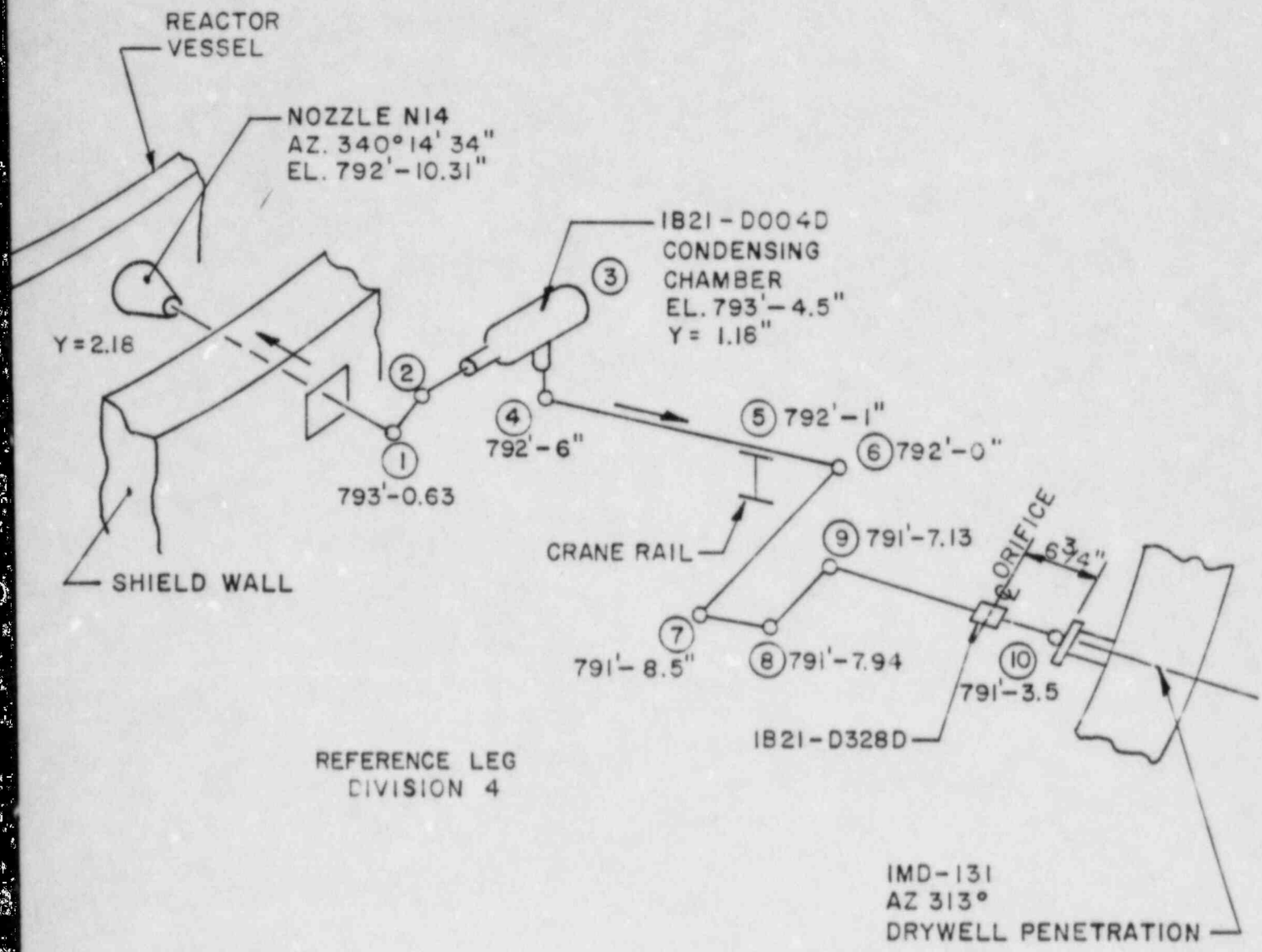

WLMS REFERENCE LEG PICTORIAL —
DIVISION 4 MODIFIED DESIGN

FIGURE D-4

APPENDIX E

EVALUATION OF THE MICHELSON CONCERN

APPENDIX E

EVALUATION OF THE MICHELSON CONCERN

This Appendix provides a review of the "Michelson-type Scenario" and how this concern is resolved in the design of the CPS WLMS.

The Michelson-type scenario involves a break in the reference leg of one division of the WLMS in combination with an instrument failure (i.e. loss of power supply or transmitter failure) in another division of the WLMS. Such event scenarios have been fully investigated and analyzed by the BWR Owner's Group (BWROG) for the BWR 2-6 WLMS designs (see Letter BWROG - 8447 dated November 1, 1984, from BWROG Chairman, D.R. Helwig, to Wayne Hodges of the NRC). In addition, Section 6 and Appendix A of this report provide a Failure Modes and Effects Analysis (FMEA) of the CPS WLMS that addresses such events and their potential impact on CPS.

The evaluations performed by the BWROG included a review of postulated failures, and their corresponding rates, for the Analog Trip System (ATS) design and a probabilistic risk assessment of the Michelson-type scenario. A summary of each of these evaluations follows.

The CPS WLMS design utilizes the ATS concept. The ATS was originally designed by General Electric (GE) for application to Boiling Water Reactors. The original ATS design is discussed in detail in GE licensing topical report NEDO-21617-A, "Analog Transmitter/Trip Unit System for Engineered Safeguard Sensor Trip Inputs", dated December 1978. The originally designed ATS described within this report consists of electronic analog transmitters, master trip units, slave trip units, interposing relays, power supplies, and static inverters. Each component can, under certain conditions fail to operate as required. The ATS is designed to detect and alarm most failure conditions. Periodic functional tests are performed to detect those failures which are not alarmed.

Based on the original ATS design availability analysis in NEDO-21617-A, most failures originating from the analog transmitters, power supplies, and inverters which are essential for operation of the trip units are detected and annunciated by the master trip units and the slave trip units. These alarms are provided on local panels, with the gross failure of any trip unit also alarming in the Main Control Room. The probability of power supply, transmitter, or inverter failures which are not annunciated is small. The major sources of undetected failures are the master trip units and slave trip units. NEDO-21617-A quotes undetected failure rate frequencies of 1.95×10^{-5}/hour/

unit on the master trip units and 3.1 X 10^{-5}/hour/unit on the slave trip units (including the series failure effect of the master trip unit on the slave trip unit). The BWROG evaluation assumed a functional test frequency for the ATS of once per month, resulting in undetected ATS failure rates of approximately 0.014/month and 0.022/month for each master and slave trip unit, respectively. The ATS design for CPS represents an improvement over the original GE ATS design in that the system does not utilize static converters, incorporates separate power supplies, and has better qualified components. As such, the anticipated ATS component failure rates for CPS should be significantly smaller.

In addition to the evaluation of the ATS failure frequencies, Sol Levy performed a probabilistic risk assessment, for the BWROG, of BWR WLMSs during a Michelson-type event. This evaluation calculated, on an absolute numerical basis, the frequencies of ECCS automatic initiation failures following such events. The postulated accident initiators investigated included the following WLMS failures:

1. A reference line break;

2. A leak of the reference line; and

3. An embedded failure in a reference leg which would adversely affect the reference leg during a reactor trip.

The endpoint of the analysis was chosen to be a failure to automatically initiate ECCS. Such scenarios do not necessarily lead to adverse plant conditions because the BWR Emergency Procedure Guidelines provide explicit guidance to the operators in such circumstances. The results of this evaluation, as it relates to the BWR/6 (CPS) design, indicated the following:

1. In all cases the frequency of failure to automatically initiate ECCS is dominated by events involving a leak of a reference line; and

2. The BWR/6 configuration is nearly immune to the postulated initiating events even when coupled to the postulated additional single failure (or in many cases double failures).

Also, it should be noted that the results of the Sol Levy analysis concluded that the instrument power bus failure contributed less than 10% to the initiation phase of such postulated event scenarios leading to automatic ECCS initiation failure. The overall failure frequency for the BWR/6 design was calculated to be approximately 1 X 10^{-8}/reactor year.

The CPS WLMS FMEA, contained in Section 6 and Appendix A of this report, supports the general conclusions of these previous generic evaluations. The FMEA analyzes a reference leg failure

combined with either an undetected transmitter failure or an instrument bus power failure in another WLMS division. The significance of the reference leg failure is that it affects all attached instrumentation in the affected division. When water within the reference leg is lost, the water level transmitters will immediately sense high (upscale) water level. It should be noted that this FMEA addresses system vulnerabilities in regard to WLMS input failures. Actuation of ECCS can still occur from many other signal input sources such as high drywell pressure, etc. The WLMS failure combinations evaluated may result in the failure to initiate/trip the following water injection systems:

1. High Pressure Core Spray;

2. Reactor Core Isolation Cooling;

3. Low Pressure Core Spray;

4. Low Pressure Coolant Injection; and

5. Feedwater Control.

These system failures do not occur concurrently for each WLMS signal input failure combination analyzed. It should be noted that these systems can also be initiated by other input signals, such as a high drywell pressure signal. The FMEA did not take credit for system initiations from these other signal sources. The following systems were not affected by the combined WLMS failures analyzed:

1. the Reactor Protection System; and

2. Closure of the Main Steam Isolation Valves.

Power bus failures are immediately recognizable to the plant operator since Main Control Room annunciators are provided which alarm on low bus voltage.

The FMEA results indicate that the redundancy within the CPS WLMS design allows for the availability of at least one high pressure injection system for each failure combination event. Thus, the Michelson-type event scenarios do not result in a challenge to fuel design limits or result in any core uncovery for CPS.

The CPS WLMS FMEA is also supported by evaluations performed by the Licensing Review Group II (LRG-II) for BWR/6 plants. LRG-II position paper 1-ICSB, "Failures in Vessel Sensing Lines Common to Control and Protective Systems", addresses the Michelson-type event scenario. This evaluation concluded that for solid state plants, such as CPS, the Reactor Protection System (RPS) logic requires 2-out-of-4 channels to generate a reactor scram. Therefore, if one RPS channel reads erroneously high due to instrument line failure and any additional RPS channel is assumed to fail, there are still 2 remaining channels left to accomplish

a normal scram. This analysis also concluded that both High Pressure Core Spray and Reactor Core Isolation Cooling cannot fail due to a single electrical failure. Therefore, the postulated failures have no adverse impact upon the safe operation of BWR/6 solid state plants during such events.

Based on the generic evaluations performed for the BWROG and on the CPS-specific FMEA, the likelihood of a Michelson-type event occurring is negligible. In any case, the consequences of such events for CPS are acceptable in terms of ensuring the safe condition of the plant.