UNITED STATES
NUCLEAR REGULATORY COMMISSION
WASHINGTON, D. C. 20555

SAFETY EVALUATION FOR GRANTING OF RELIEF BY THE OFFICE OF NUCLEAR REACTOR REGULATION RELATED TO INSERVICE TESTING REQUIREMENTS FOR ACCUMULATOR CHECK VALVES AND REFUELING WATER SYSTEM CHECK VALVE

ALABAMA POWER COMPANY

JOSEPH M. FARLEY NUCLEAR PLANT, UNIT NOS. 1 AND 2

DOCKET NOS. 50-348 AND 50-364

Introduction

By a letter dated June 1, 1984, supplemented October 24, 1984, Alabama Power Company (the licensee) requested relief from ASME Code requirements for full stroke testing the six accumulator check valves V032A, B and C and V037A, B and C. A schematic diagram showing the relationship of these valves to the reactor coolant system (RCS) and to each other is included as Enclosure to this evaluation. The licensee proposed to perform partial stroke testing once every ten years during the accumulator system blowdown test for all these valves.

By the June 1, 1984 letter the licensee also proposed a method for testing the operational readiness of the Refueling Water Storage Tank (RWST) check valve, V014. The staff had previously agreed with the licensee by our letters dated April 8, and May 2, 1983 and January 26, 1984 to allow a full stroke test of this valve at every refueling outage. The licensee proposed, in the June 1, 1984 letter, to test this valve every ten years by a design flow test.

Based on discussions between the NRC staff and APCo personnel during a conference call on October 16, 1984, the licensee provided modified proposals by letter dated October 24, 1984. Our evaluation follows.

Evaluation and Conclusion

1. Accumulator Check Valves

The accumulator check valves must function by opening automatically when the RCS pressure decreases below a specific pressure during a loss of coolant accident (LOCA). As such, the operational readiness of these valves must be assured by full stoke testing, as outlined in Section XI of the ASME Code and summarized in the licensee's submittal.

8412050436 841115
PDR ADOCK 05000348
P PDR

The difficulties associated with verification of full stroke operation are well understood, having been fully documented by the licensee in letters to the NRC dated July 5 and November 28, 1983 and June 1, 1984. The staff had previously granted interim relief from full stroke testing based on the licensee's commitment to provide an acceptable plan for assuring the operational readiness of these valves. Also, in verbal discussions with the licensee as documented in the attachment to the licensee's letter dated November 23, 1983, the NRC staff had proposed disassembly of one of the valves at each refueling outage as an alternative to verification of full stroke operation.

The proposed test method originally proposed partial stroke testing of the accumulator check valves, as outlined by the licensee in the June 1, 1984 submittal, was considered unacceptable by the NRC staff. In consideration of past performance of such check valves on other plants, a partial stroke test at reduced pressure will not provide sufficient verification of the operational readiness of these valves. Since these valves must operate under LOCA conditions, periodic verification of valve full stroke capability is required to assure operational readiness of the passive accumulator, an integral part of the Safety Injection System.

In addition, the licensee's original proposal of a ten-year test interval is considerably greater than the maximum ASME Code specified test interval of every cold shutdown. The Code test interval could extend to an interval as long as each refueling outage (about a year or 18 months depending on the fuel enrichment). Thus, the proposed ten-year test interval was considered unacceptable by the NRC staff.

Following discussions between the NRC staff and the licensee on October 16, 1984 the licensee proposed in a letter dated October 24, 1984 to disassemble one accumulator check valve during the Unit 2 third refueling outage and during the Unit 1 sixth refueling outage. Also, the licensee will evaluate the feasibility of a blowdown test at reduced pressure to be bounding for accident conditions. Such reduced pressure flow tests should meet the ASME Code requirements and the relief proposed would not be needed in the future.

However, at this time we grant relief to the extent that the licensee should disassemble a different one of these six check valves on a rotating schedule, at each refueling outage, in order to verify operational readiness. If any degradation is detected that would interfere with the operation of the valve, then the other five valves must also be disassembled, inspected and repaired, if necessary, before the plant returns to operation.

2. RWST Check Valve

The RWST check valve is located between the RWST and the suction side of the containment spray pumps. Operation is necessary to provide refueling water for spray of the containment atmosphere following a LOCA. The ASME Code requires that the check valve shall be partially stroked during operation, if practical, and full stroked during each cold shutdown. However, as noted above, the licensee proposed by letter dated June 1, 1984, that the valve,

which is part stroked during plant operation, be flow tested by demonstrating that the design flowrate will pass through the valve. The licensee proposed this test once every ten years during the inservice inspection outage. This interval is excessively long and was considered unacceptable to the NRC staff.

As noted above, the licensee letter dated October 24, 1984 modified the earlier proposal. The licensee proposes to disassemble the RWST check valve during the Unit 2 third refueling outage and during the Unit 1 sixth refueling outage. The licensee will pursue the ASME Code, Section XI "equivalent flow" concept as a continuing effort. We accept this approach.

Accordingly, we grant relief for the proposed disassembly test method as described in the October 24, 1984 letter. However, the RWST check valve must be tested at every refueling outage and not once every ten years, as proposed in the June 1, 1984 letter. Should the licensee develop a test method demonstrating that the design flowrate will pass through the check valve, this relief would not be needed.

The staff has determined that where stated the code requirements are impractical, the granting of this relief is authorized by law and will not endanger life or property of the common defense and security, and is otherwise in the public interest considering the burden that could result if they were imposed on your facility.

Dated: November 14, 1984

Principal Contributors:
O. Rothberg
E. Reeves

Enclosure: As stated

ENCLOSURE

CHECK VALVE CONFIGURATION
ACCUMULATORS

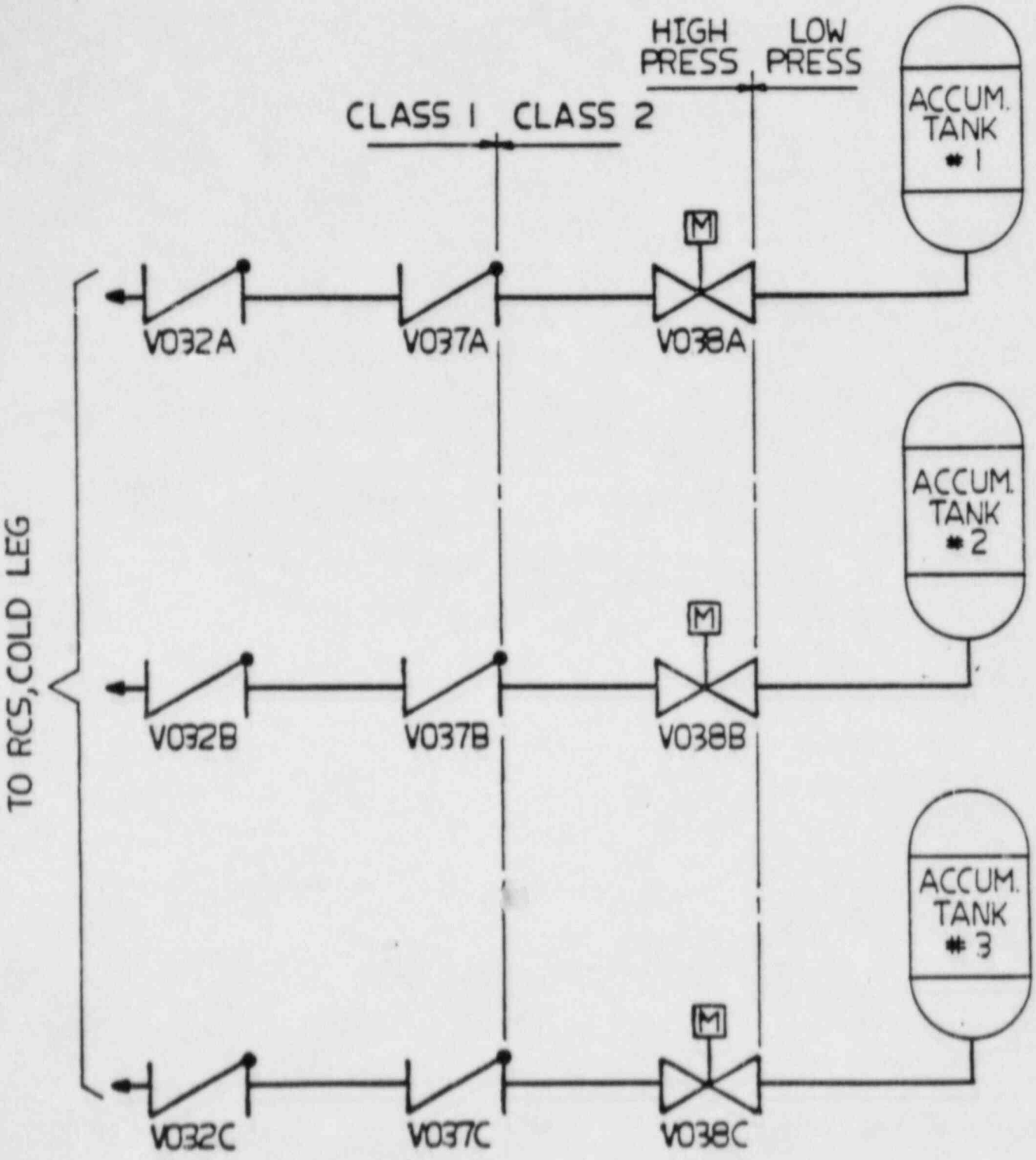

NOTE
ALL VALVE NUMBERS ARE PRECEEDED BY E21.
ENTIRE SYSTEM IS INSIDE REACTOR CONTAINMENT.