SYSTEM 80+™ DESIGN CERTIFICATION

DISTRIBUTION SYSTEMS DESIGN GUIDE

Prepared by:

ABB COMBUSTION ENGINEERING NUCLEAR POWER
WINDSOR, CT

DUKE ENGINEERING & SERVICES, INC.
CHARLOTTE, NC

DRAFT

July 25, 1992

9208070100 920731
PDR ADOCK 05200002
A PDR

SYSTEM 80+™ DESIGN CERTIFICATION
DISTRIBUTION SYSTEMS DESIGN GUIDE

TABLE OF CONTENTS

TABLE OF CONTENTS (Cont'd)

TABLE OF CONTENTS (Cont'd)

TABLE OF CONTENTS (Cont'd)

TABLE OF CONTENTS (Cont'd)

TABLE OF CONTENTS (Cont'd)

TABLE OF CONTENTS (Cont'd)

TABLE OF CONTENTS (Cont'd)

TABLE OF CONTENTS (Cont'd)

TABLE OF CONTENTS (Cont'd)

TABLE OF CONTENTS (Cont'd)

TABLE OF CONTENTS (Cont'd)

TABLE OF CONTENTS (Cont'd)

TABLE OF CONTENTS (Cont'd)

TABLE OF CONTENTS (Cont'd)

TABLE OF CONTENTS (Cont'd)

TABLE OF CONTENTS (Cont'd)

TABLE OF CONTENTS (Cont'd)

TABLE OF CONTENTS (Cont'd)

TABLE OF CONTENTS (Cont'd)

TABLE OF CONTENTS (Cont'd)

TABLE OF CONTENTS (Cont'd)

TABLE OF CONTENTS (Cont'd)

TABLE OF CONTENTS (Cont'd)

TABLE OF CONTENTS (Cont'd)

TABLE OF CONTENTS (Cont'd)

TABLE OF CONTENTS (Cont'd)

LIST OF TABLES

LIST OF FIGURES

LIST OF FIGURES (Cont'd)

LIST OF FIGURES (Cont'd)

LIST OF FIGURES (Cont'd)

SYSTEM 80+™ DESIGN CERTIFICATION
DISTRIBUTION SYSTEMS DESIGN GUIDE

1.0 PURPOSE

The purpose of this design guide is to provide guidance for the mechanical and structural design of distribution systems (piping, HVAC ductwork, and electrical cable trays/conduit) for the System 80+ standard design. The goal of using this guide is to provide a well-defined, integrated, consistent, standardized, and optimized design for System 80+ design certification.

If the guidance provided herein proves to be too conservative to uphold the goal for development of standardized distribution system designs for all potential sites, project management must be consulted.

2.0 SCOPE

This design guide is to be used for the design of all System 80+ distribution systems. This guide covers the design process from incorporation of system requirements to analyses confirming the adequacy of the design. This design guide addresses both safety-related and non-safety related distribution systems.

This design guide provides recommended design and analysis methods and processes reflecting industry practice and NRC approved criteria at the time of System 80+ design certification. Other proven design and analysis methods and criteria, as demonstrated by industry practice and NRC acceptance at the time of application, which also meet the purpose and intent of this guide are acceptable.

Efforts have been made to assure that the guidance provided by this document is consistent with the requirements provided in CESSAR-DC for safety-related distributions systems. Should there be inconsistencies between this design guide and CESSAR-DC, the requirements of CESSAR-DC shall prevail.

3.0 INTRODUCTION

This design guide covers the design process from incorporating system requirements to the analyses verifying the design. Licensing and safety issues (leak-before-break, postulated pipe breaks, etc.) are covered in detail in this design guide.

Section 4.0 addresses the factors to be considered in incorporating system requirements such as safety class, seismic category, separation and constraints.

Section 5.0 addresses system interactions to be considered in meeting the system requirements. These interactions are system requirements, however, they must be provided by other systems or structures such as cross-connects to other systems, structural separation and electrical power requirements.

Section 6.0 provides guidelines and considerations in routing distribution systems. These guidelines are intended to integrate the design process and meet multiple requirements at once (e.g., use building structure for spatial separation, flooding prevention, and fire protection) rather than meeting each requirement individually. The goal of the integrated design process is optimization while meeting all pertinent requirements.

Section 7.0 describes the analyses to verify the system design and routing. Pipe break considerations are covered in Section 7.1 for leak-before-break (LBB) and postulated pipe ruptures.

Interactions between systems and structures must be considered in the integrated design process. Considerations such as safety, maintainability, and constructability must be evaluated collectively rather than individually to obtain the optimum design. This document addresses these interactions, and incorporation of the guidelines presented herein should minimize conflicting design requirements.

To distinguish between requirements that must be met and recommendations, the following conventions are used throughout this document. The term "shall" is used to denote requirements that are mandatory. The term "should" is used to denote recommendations that are not mandatory. The term "may" is used to denote conditions that are permissible but not required.

The references listed at the end of each section are current versions which were used in the development of this design guide. The year or version of codes and standards that will be used in the final design will be determined by the approved versions in effect at the time of the specific plant application. Thus, when codes and standards are referred to in the design guide text, only the name is specified, not the version.

4.0 SYSTEM DESIGN CONSIDERATIONS

4.1 GENERAL

4.1.1 SYSTEM REQUIREMENTS

The detailed design of distribution systems requires careful consideration of the system design requirements. The system requirements are specified in the Design Certification System Requirements (DCSRs) developed for each system within the System 80+ design. The following system requirements are described in the DCSRs and should be considered when designing distribution systems.

4.1.1.1 System Function

4.1.1.1.1 Functions

The system functions are fundamental in the system design. The system functions are qualitative in nature and only provide general system requirements. Specific requirements relating to these system functions are covered in other sections. Where a system function is provided in combination with other system(s), the contribution by each system should be provided. See **Sections 4.2.1.1, 4.3.1.1, and 4.4.1.1** for specific system functions.

4.1.1.1.2 Constraints

The integrated design process should result in minimized system constraints. Constraints on the system methods of meeting its design requirements can influence the design of the distribution system. Typical constraints include:

- Divisional Separation Precluding Cross-connects
- Electrical Power Limitations
- Building Layout Limitations
- Temperature/Pressure Limitations
- Material Requirements

See **Sections 4.2.1.2 and 4.3.1.2** for specific system constraints.

4.1.1.2 Performance Requirements

System or component performance requirements define how the component or system must perform, or what its capabilities must be in order to perform its functional requirements. The following are performance requirements which can affect the design of distribution systems. An individual system or component can have fewer or more performance requirements which require consideration.

4.1.1.2.1 Safety Classification

The safety classifications of systems and equipment, as established by **ANSI/ANS-51.1, "Nuclear Safety Criteria for the Design of Stationary Pressurized Water Reactor Plants"**, should be used as a guide to the selection of codes, standards, and regulations for the design and construction of systems and their components.

4.1.1.2.2 Seismic Classification

The seismic design classification system, as established in **NRC Regulatory Guide 1.29, "Seismic Design Classification"**, identifies those plant features that should be designed to withstand the effects of the Safe Shutdown Earthquake (SSE). Plant features not required to withstand the SSE should be designed to appropriate static loads or comply with applicable building codes regarding seismic effects. Seismic classifications, including Seismic Category II, are described in **CESSAR-DC, Section 3.2.1.**

4.1.1.2.3 Redundancy/Diversity Requirements

A component or system can require that other systems or components duplicate its essential function to the extent that either one may perform the required function regardless of the state of operation or failure of the other. The components or systems may or may not be physically identical. System and component diversity should be specified where prevention of common mode failure is critical in overall plant core melt risk.

4.1.1.2.4 Capacity Requirements

System and component capacity requirements are key parameters that affect system design. Capacities can include such parameters as head and flow rate for a pump, load carrying capability for supports, air flow or cooling capacity for HVAC, or current and voltage regulation of a power supply.

4.1.1.2.5 Failure Considerations

The following failure considerations should be reviewed to determine the impact they could have on the design of the distribution system:

A. Performance under conditions of single or multiple (active and passive) failures.

B. Separation, protection, and design of components and piping to prevent multiple failures as a result of a single event.

C. Design margins to accommodate single failures.

D. Reliability performance.

E. Provisions to mitigate the effects of failures in the system on the remainder of the plant.

4.1.1.2.6 Design Basis Events and Transient Considerations

System design basis events and design basis transients shall be considered in the design. These design basis events and transients should either be enveloped or considered individually.

4.1.1.3 Operational Requirements

Operational requirements must be sufficiently defined to enable the designer to provide a detailed design. Following are areas in which systems or components can have operational requirements. An individual system or component can have fewer or more areas which should be considered.

4.1.1.3.1 Power or Cooling Requirements

There could be design requirements or limitations on available electric, pneumatic, hydraulic, or other power supplies and air or water cooling supplies. Considerations to ensure system requirements are met by interacting systems are described in **Section 5.0**.

4.1.1.3.2 Environment

Requirements or limitations can be imposed on the system due to the operating environment in which it must perform its function. Environmental considerations are described in **CESSAR-DC, Section 3.11**.

4.1.1.3.3 Radiation

Requirements or limitations can be imposed on the system due to the operating radiation environment, which could affect the performance of the system (see **Section 6.2.4**).

4.1.1.3.4 Design Life

The System 80+ design operating life is 60 years. Provisions should be provided to replace components which cannot be designed for a 60 year operating life.

4.1.1.3.5 Operating Cycle

Requirements or limitations can be imposed on the system due to the operating cycle of the system or components.

4.1.1.4 Instrumentation and Control Requirements

System instrumentation and control requirements must be considered in the design of the distribution system. Following are areas where systems or components can have instrumentation and control requirements.

4.1.1.4.1 Power Sources

Power source requirements include normal onsite and/or offsite AC power, emergency power, and special requirements for separate or diverse sources of power.

4.1.1.4.2 Controls

Control requirements of the system can impact other parts of the system or other systems. Instrumentation may be required to provide system control and monitoring capability.

4.1.1.5 Inspection and Testing Requirements

Requirements can be imposed on the system design to enable or facilitate the performance of required tests and inspections during fabrication, installation, and operation.

4.1.1.6 System Interface Requirements

Interface requirements are design functions or requirements which must be satisfied by the remainder of the plant design to ensure proper, safe, and reliable operation of a system or component. The distribution system design and operation can be influenced by the system interface requirements. Therefore, the design of distribution systems should take into account the design functions and requirements of interfacing systems. The following interface requirements categories should be considered:

- Power
- Protection from Natural Phenomena
- Protection from Pipe Failure
- Missiles
- Separation
- Connectivity
- Independence
- Thermal Limitations
- Monitoring
- Operation and Controls
- Inspection and Testing

- Chemistry and Sampling
- Material
- System and Component Arrangement
- Radiological Waste
- Overpressure Protection
- Related Service
- Environmental
- Construction
- Maintenance

System interface considerations are described further in **Section 5.0**.

4.1.1.7 Physical Protection

Systems and components important to safety require protection from hazards resulting from postulated events both internal and external to the plant. Physical protection is an important consideration in creating a detailed distribution system design. **ANSI/ANS-58.3, "Physical Protection for Systems and Components Important to Safety"**, shall be followed to establish physical protection criteria for systems and components important to safety in the plant. The following highlights from **ANSI/ANS-58.3** are included here to aid the designer in identifying hazards and protection methods which could be relevant to the system being designed. Refer to **ANSI/ANS-58.3** for additional information.

4.1.1.7.1 Identification of Hazards

The following are some of the hazards, resulting from postulated events, which should be considered in designing distribution systems:

- Missiles
- Pressure, Pressure Differential
- Temperature
- Pipe Whip
- Fluid Jet
- Fire
- Radiation
- Steam or Humidity
- Chemical Attack
- Flooding

- Debris Blockage

4.1.1.7.2 Protection Methods

The following protection methods should be used to provide protection from hazards:

- Distance
- Orientation
- Barriers
- Enclosures
- Restraints
- Hardening

4.1.1.8 Maintenance Provisions

Requirements can be imposed on the system design to enable or facilitate system/component maintenance. Provisions for maintenance include features to reduce personnel radiation exposure when performing maintenance, design features or components required for maintenance activities (vents, drains, bypass/isolation provisions, equipment removal provisions), and accessibility.

4.2 PIPING

4.2.1 SYSTEM REQUIREMENTS

4.2.1.1 System Functions

The function of the piping system drives the design. Specific requirements relating to system functions can impact the piping system design. The following are typical system functions associated with piping systems that should be addressed:

- Cooling
- Heating
- Purification
- Monitoring
- Lubrication
- Storage
- Pneumatic Supply
- Makeup
- Recirculation

4.2.1.2 Constraints

Constraints on the ability of the system to meet its design requirements can influence the design of the system piping. The following constraints are commonly imposed on piping system designs and should be considered:

- Friction Loss (L/D limits)
- Net Positive Suction Head (NPSH)
- Maximum Velocity Based on Noise and Friction Loss
- Erosion/Corrosion Pipe Wall Thinning
- ALARA
- Water/Steam Hammer/Rapid Valve Actuation
- Piping Layout Restrictions

4.2.1.3 Performance Requirements

In addition to the general guidelines of **Section 4.1.1.2**, the following performance requirements are related to piping systems.

4.2.1.3.1 Capacity/Flowrate

The primary performance requirement is usually system or component capacity. This capacity can be in the form of flowrate, cooling capacity or pressure. The capacity should either envelope all expected operating conditions or address each operating condition independently. The piping system design must provide the required capacity or flowrate.

4.2.1.3.2 Design Pressure and Temperature

The maximum operating pressure and temperature will be determined by system requirements and component characteristics. The design pressure and temperature are required to determine pipe wall thickness, thermal expansion characteristics and overpressure provisions.

4.2.1.3.3 Overpressure Protection

Adequate overpressure protection is required to prevent exceeding the design pressure and possible failure of the piping system or individual components. Overpressure protection shall be provided per the applicable design code, as follows:

A. **ASME Boiler and Pressure Vessel (B&PV) Code, Section III** for Class 1, 2, and 3 piping.

B. **ASME B31.1, Power Piping** for non-safety related piping.

C. **ASME B&PV Code, Section VIII** for pressure vessels.

4.2.1.3.4 Water Chemistry

Water chemistry requirements and constraints (i.e., pH, oxygen level, or chloride content) may be specified along with the allowable limits. Water chemistry requirements should be used as input for material selection, monitoring requirements, and chemical addition provisions.

4.2.1.3.5 Erosion/Corrosion Pipe Wall Thinning

Currently operating nuclear power plants have experienced pipe wall thinning in carbon steel piping and components, resulting in unplanned piping replacements and plant shutdowns. This degradation is best prevented in the design stage by identifying susceptible systems/components, and using appropriate preventative methods. Design methods to preclude erosion/corrosion pipe wall thinning are described below and in **Section 6.2.8**.

4.2.1.3.5.1 Erosion/Corrosion Susceptibility

Systems susceptible to erosion/corrosion pipe wall thinning are those with wet steam, flashing liquids, or liquid flow with high localized velocities. These factors should be considered along with water chemistry and usage time to determine susceptibility and appropriate preventative methods.

4.2.1.3.5.2 Erosion/Corrosion Minimization

For systems susceptible to erosion/corrosion, the following methods may be used to minimize degradation:

A. Proper material selection is essential for the prevention of excessive pipe wall thinning and is the most practical method in the design stage. Higher grade alloys involve more capital cost but lower inspection and piping replacement costs over the life of the plant. Low alloy steel is significantly more resistant to wall thinning than carbon steel, however the post-weld heat treatment must be considered. Stainless steel is essentially immune to erosion/corrosion and should be used in the most susceptible areas.

B. Additional wall thickness may be specified to accommodate a limited amount of wall thinning without violating code requirements. This method will usually result in increased inspection requirements over the life of the plant to ensure adequate wall thickness. These costs should be compared to material upgrade costs to determine the optimum design.

C. The bulk fluid velocity should be limited to prevent excessive erosion of the pipe wall. The following velocity limits should be used for carbon steel piping:

TABLE 4.2-1

Recommended Bulk Velocity Limits

Service	Velocity
Steam Piping	150 ft/sec
Water (Temperature < 300°F)	10 ft/sec
Water (Temperature > 300°F)	10 - 20 ft/sec
Recirculation Lines (Infrequent Use)	20 - 25 ft/sec

D. Pipe routing guidelines to lower pipe wall thinning susceptibility are discussed in **Section 6.2.8.1**.

4.2.1.4 Operational Requirements

Operational requirements and limitations of the system will influence the piping design. Typical operational requirements are described in **Section 4.1.1.3**.

4.2.1.5 Instrumentation And Control Requirements

Requirements related to instrumentation and controls can impact the design of the piping system. Refer to **Section 4.1.1.4** for the discussion of instrumentation and controls.

4.2.1.6 Inspection and Testing Requirements

Piping system features can be required solely to accommodate inspection and testing requirements during fabrication, installation, and operation. Inspection and testing requirements are contained in the applicable piping code: **ASME B&PV Code** for Class 1, 2, and 3 piping; and **ASME B31.1** for non-safety related piping.

4.2.1.6.1 Examination Requirements

The piping system designer should be cognizant of the examinations to be performed on the system piping and be familiar with the activities associated with the examinations in order to include any necessary features in the piping design to facilitate the examinations. The following are examinations commonly conducted on piping systems:

- Preoperational (NDE)
- Inservice Inspection (ISI) per **ASME Section XI**
- Visual Inspection of Raw Water Piping
- Pipe Wall Thinning Inspections

4.2.1.6.2 Testing Requirements

Certain testing requirements can necessitate special piping design features to facilitate testing activities. The piping system designer should know what tests are applicable to the system and have an understanding of how the tests are performed. Familiarity with the required testing will aid the designer in creating a piping system which is conducive to testing. The following are common test requirements associated with piping systems:

- Preoperational (Hydrostatic, operability, pre-critical vibration monitoring)
- Pump and Valve Inservice Testing (IST) per **ASME Section XI**
- Leak Tests
- Full-Flow Pump Testing for ASME Class 1, 2, and 3 Pumps

4.2.1.6.3 Accessibility Provisions

Testing and inspection activities associated with piping systems require considerations for personnel and equipment access. **Section 6.2.6** contains specific guidelines for providing access for inspection and testing activities.

4.2.1.6.4 Testing Provisions

Piping system designs should include provisions for system and component testing. The piping system designer should be familiar with testing applicable to the system and its components so that design features required to perform the tests will be included in the piping design. **Section 6.2.7** contains design features to be considered when incorporating testing provisions in piping system designs.

4.2.1.7 System Interaction Requirements

Interacting system requirements should be considered when designing piping systems. The interaction requirements categories outlined in **Section 4.1.1.6** should be reviewed to assist in determining what design features must be incorporated to accommodate interacting systems or components. **Section 5.2** contains additional information pertaining to piping interaction considerations.

4.2.1.8 Physical Protection

Piping systems can require hazard protection measures. If hazard protection is required, the guidelines of **Section 4.1.1.7** should be used to assist in determining the type of hazard(s) which can influence the system and the general methods of protection.

4.2.1.9 Maintenance Provisions

Maintenance activities will be required over the life of the plant. The following design features may be required to accommodate maintenance activities.

4.2.1.9.1 Bypass/Isolation Provisions

The ability to bypass or isolate system components and interfacing systems should be provided within the piping system to allow maintenance to be performed.

4.2.1.9.2 Accessibility

Accessibility for maintenance activities should be provided.

4.2.1.9.3 Equipment Removal Provisions

Equipment removal provisions should be provided. This includes lifting provisions, removal paths, and flanged equipment connections.

4.2.1.9.4 Vent and Drain Connections

The piping system design should incorporate vent and drain connections for performing maintenance on the piping system and its components. Personnel access should be also be considered for these connections.

4.2.1.9.5 Removable Insulation

The piping system design should incorporate insulation removal where required to perform maintenance, inspections, or testing. These locations should be provided with removable insulation to expedite maintenance activities, reduce personnel radiation exposure, and reduce costs associated with insulation replacement.

4.2.1.9.6 ALARA

Design features should be provided in piping system designs to reduce personnel exposure associated with maintenance activities. **Section 6.2.4** contains specific ALARA guidelines for reducing personnel radiation exposure during maintenance.

4.3 HVAC DUCTWORK

4.3.1 SYSTEM REQUIREMENTS

4.3.1.1 System Functions

The function of the HVAC system drives its design. Specific requirements relating to system functions can impact the ductwork system design. The following are typical HVAC system functions to be considered:

- Temperature/Humidity Control
- Normal/Essential
- Moisture Removal
- Radioactive Iodine Vapor and Solid Particulate Removal
- Ventilation
- Smoke Removal
- Pressure Control
  - Positive
  - Negative

4.3.1.2 Constraints

Constraints on the system's means of meeting its design requirements can influence the design of the ductwork system. The following constraints are commonly imposed on ductwork system designs:

- Accepted Engineering Practices and Data (ASHRAE Handbooks and SMACNA Manuals)
- Friction Loss
- Velocity Constraints
- Sound Level Constraints
- ALARA
- Building Layout Restrictions/Space Availability
- Thermal Conductivity (Heat losses or gains)
- System Balancing
- Fire and Smoke Control
- Adequate Air Distribution
- Duct Leakage
- Supports/Seismic Restraints

4.3.1.3 Performance Requirements

The general guidelines in **Section 4.1.1.2** should be reviewed to determine the influence that the HVAC system's performance requirements have on the design of the system's ductwork.

4.3.1.3.1 Capacity/Flowrate

Design parameters should properly address system operating conditions. The following are typical HVAC capacities which may require consideration:

- Volumetric Air Flow Rate (SCFM)
- Design Pressure (Inches of water gage)
- Relative Humidity (Percent)
- Heating/Cooling Capacity (BTU/hour)
- Safety/Seismic Classification
- Component Radiation Dose (Rads)
- Duct and Air Handling Unit (AHU)/Air Cleaning Unit Maximum Permissible Leak Rate
- Electrical Characteristics (Voltage, amperage, phase, maximum temperature rise)

4.3.1.3.2 Pressure Control

Along with ventilation and cooling requirements, some HVAC systems are required to maintain a negative or positive pressure in specified areas. This pressure maintenance must be considered in the design, where applicable.

4.3.1.4 Operational Requirements

Consideration should be given to the operational requirements of the system and their influence on the ductwork design. Typical HVAC system operational requirements are described below and in **Section 4.1.1.3**.

4.3.1.4.1 Radioactive Vapor/Steam Removal

In some areas, there is the potential for airborne radiation (i.e., due to radioactive fluid leakage), or steam removal (i.e, Loss-of-Coolant-Accident) that would require the removal of radioactive iodine, solid particulates, or water vapor. This could result in the release of radiation to the environment, personnel exposure, or equipment damage. Air cleaning units, which may consist of moisture separators, electric heaters, absolute (HEPA) filters, and carbon adsorbers should be used along with instrumentation, alarms, and control dampers to automatically route the air flow through the air cleaning unit when required, if the unit is normally bypassed.

4.3.1.5 Instrumentation and Control Requirements

Requirements related to instrumentation and control should be reviewed for their impact on the design of the ductwork system. Refer to **Section 4.1.1.4** for general guidelines to be considered.

4.3.1.6 Inspection and Testing Requirements

Ductwork systems should be designed to accommodate inspection and testing requirements during fabrication, installation, and operation. The ductwork system designer should be aware of the testing and inspections performed on HVAC systems and components so that adequate design features can be incorporated in the system to facilitate these activities.

Provisions should also be provided to allow performance testing of fans, filter units and dampers.

4.3.1.7 System Interaction Requirements

Interacting system requirements should be considered when designing ductwork systems. The interaction requirements categories outlined in **Section 4.1.1.6** should be reviewed by the designer to assist in determining what design features must be incorporated to accommodate interacting systems or components. **Section 5.3** contains additional information pertaining to ductwork interaction considerations.

4.3.1.8 Physical Protection

HVAC ductwork systems should be evaluated to determine if hazard protection measures are required. If the ductwork requires hazard protection, the guidelines of **Section 4.1.1.7** should be used to assist in determining the type of hazard(s) which can influence the system and the general methods of protection available.

4.3.1.9 Maintenance Provisions

Adequate design features should be provided in the ductwork system design to support maintenance activities associated with the system and components (see **Sections 6.3.3.2** and **6.3.3.3**). Accessibility for fan and damper inspections and maintenance should be provided along with filter changeout provisions, and heating/cooling coil removal provisions. The following design features should be considered when designing HVAC ductwork systems.

4.3.1.9.1 Bypass/Isolation Provisions

The ability to bypass or isolate system components and interfacing systems should be provided within the ductwork system to allow maintenance to be performed.

4.3.1.9.2 Accessibility

Accessibility for required maintenance activities should be considered when designing ductwork systems.

4.3.1.9.3 Equipment Removal Provisions

Equipment removal and replacement should be considered for all HVAC ductwork systems. This includes lifting lugs and/or rigging provisions for all AHU/air cleaning units. The use of multiple modules with field joints should be used for large AHU/air cleaning units rather than single modules to allow for initial placement and removal of the unit. Removal paths for regular maintenance components such as fan motors, cooling/heating coils, and filters should be provided.

Ductwork should be designed to avoid removable hatches, monorails, jib cranes, or other maintenance areas. If the ductwork should infringe on these areas, easily removable duct sections should be used.

4.3.1.9.4 Insulation

Insulation should not be applied to the inside of ducts and housings where airborne radiation or personnel radiation exposure could occur. Materials applied to the outside of ducts and housings should not prevent access to any bolted construction joint, door, access hatch, or instrumentation that would penetrate the housing or duct pressure boundary, which could result in exceeding allowable leakage rates.

4.3.1.9.5 ALARA

Design features should be provided in ductwork system designs to reduce personnel exposure associated with maintenance activities. **Section 6.3.4** contains specific ALARA guidelines for reducing personnel radiation exposure during maintenance.

4.3.1.10 Fire Protection

Due to ductwork penetrations through fire barriers being large, fire protection must be considered in the design. Ductwork routing should minimize the number of penetrations through fire barriers. Fire seals at the penetrations and fire dampers must maintain the required fire barrier rating. A smoke purge exhaust system with smoke dampers should be considered where smoke migration is likely.

4.3.2 CONNECTIVITY

Due to the size of HVAC equipment and ductwork, system connectivity is vital. This is best accomplished by proper equipment placement (see **Section 5.3.1**) and reserving ductwork space early in the design process. Proximity of the following should be carefully considered when placing equipment to minimize the amount of required ductwork:

- Proximity to Outside Air Sources
- Proximity to Duct Shafts and Plenums
- Proximity to the Unit Vent Shaft
- Proximity to Areas Served by HVAC System
- Orientation of Fans and AHUs to Inlet and Outlet Ductwork

4.4 ELECTRICAL CABLE TRAYS/CONDUIT

4.4.1 SYSTEM REQUIREMENTS

4.4.1.1 System Functions

Consideration should be given to the function of the electric power system being designed. The function of the electric power system establishes the basis for the arrangement of the systems within the plant. The on-site power distribution systems should be arranged according to the following:

- Electrical power distribution systems feeding non-safety related loads required exclusively for unit operation
- Electrical power distribution systems supplying power to permanent non-safety loads (i.e., non-safety loads that, due to their specific functions are generally required to remain operational at all times or when the unit is shut down)
- Electrical power distribution systems feeding safety-related (Class 1E) loads

4.4.1.2 Equipment Selection

The selection of electrical equipment should be carefully considered for impact on the overall design of electric power distribution systems. The impact of the following should be considered:

- Class 1E/Non-Class 1E
- Voltage

- Power Rating
- Control System Requirements

4.4.1.3 Environmental Requirements

Environmental requirements for electrical systems may influence the design of electrical distribution systems. The following categories should be considered during the design process to determine their impact on the design:

- Temperature
- Humidity
- Radioactivity
- Hazardous Environment
- Corrosive Environment
- Non-combustible Materials
- Inside Environment
- Outside Environment
- Seismic Requirements

Safety-related electrical components should be designed and qualified as Class 1E, for the environmental conditions and duty cycles specified for the operation of the plant safety systems.

4.4.1.4 Separation Requirements

4.4.1.4.1 Physical Separation

The features, configuration, and divisional separation of the safety-related AC and DC power distribution systems should be integrated with the building design to enhance the plant capability for hazard protection.

4.4.1.4.1.1 Fire Protection

The arrangement of the electrical distribution systems, both safety-related and non-safety related , should be such that safe shutdown can be achieved with all equipment in any one fire area rendered inoperable by fire, smoke, hot gases, or fire suppressant.

The plant Permanent Non-safety buses and the Alternate AC (AAC) source shall be located in different buildings from the Class 1E 4160 V Safety buses and Emergency Diesel Generators (EDGs). Thus, they will be physically separated into different fire areas.

Special attention should be given to the location of safety and non-safety buses and the routing of cables. Safety Class 1E divisional cables and Permanent Non-safety bus cables shall be fully separated by fire barriers. Further, the cables within a Class 1E division for each bus shall be separated within the division, where practical and when it provides a reliability improvement.

Switchgear rooms containing safety-related equipment should be separated from the remainder of the plant by barriers with the required fire resistance rating. Redundant switchgear safety divisions should be separated from each other by barriers with the required fire resistance rating. Equipment in switchgear rooms should be located, to the maximum extent practicable, such that there is access on all sides for manual fire suppression.

Redundant safety-related panels remote from the control complex should be separated from each other by barriers having the required fire resistance rating. Panels providing remote shutdown capabilities should be separated from the control complex by barriers having the required fire resistance rating. Fire barriers should not impede access to safety-related panels.

Safety-related battery rooms should be separated from each other and from other areas of the plant by barriers having the required fire resistance rating. DC switchgear and converters should not be located in battery rooms.

The power cables to the 4160 V Safety buses from the Permanent Non-safety buses and EDG for each shutdown division should be routed so that they are not all in the same fire area, which could result in a single fire affecting all of the cables.

The EDG and the AAC should be designed such that no single fire scenario (fire confined to a single fire area) will result in the loss of both sources.

4.4.1.4.1.2 Flood Protection

Electrical cable and electrical equipment should be designed and routed to be protected from flooding. Typical protection methods included cable routing away from floors, and equipment placement on raised base pads.

4.4.1.4.2 Electrical Separation

4.4.1.4.2.1 Segregation of Voltage Levels

Cables should be separated and cable trays arranged according to voltage levels for fire protection and to prevent high energy lines from affecting instrumentation and control circuits. See **Section 6.4.1.3.3** for recommended separation requirements.

4.4.1.4.2.2 Safety Channels

To minimize the possibility of common mode failure, cabling for the safety channels should be routed separately. However, the cables of different safety functions within one channel may be routed together.

The cabling associated with redundant channels of safety-related circuits should be arranged such that a single failure cannot cause multiple channel malfunctions or interactions between channels.

4.4.1.4.2.3 Safety/Non-safety Related

Safety-related Class 1E and associated electric cabling and sensing lines from sensors should be kept separate from non-safety related cabling.

The design of the plant electrical distribution systems should be such that non-safety circuits are not connected to safety circuits or power sources.

The sets of circuits which constitute the divisions of the safety power distribution systems should be physically separated and electrically independent. Independence and separation should be maintained throughout the load groups. No cross-ties should be used between buses or circuits (AC or DC) belonging to different safety divisions.

4.4.1.5 Physical Protection

Electrical power distribution systems should be reviewed to determine if hazard protection measures are required. If protection is required, the guidelines of **Section 4.1.1.7** should be used to assist in determining the type of hazard(s) which may influence the system and the general methods of protection commonly used.

Power cables that are part of safety circuits should be installed in duct banks or raceways designed to provide a high level of protection against industrial hazards, long-term degradation, and other potential risks such as fire, missiles, pipe failure, water spray, or earthquakes.

4.4.1.6 Interface Requirements

The systems which supply power to, and the systems which receive power from an electrical power distribution system have requirements which influence the design of the system. The designer should be able to identify the interfacing systems and incorporate the necessary interface requirements to ensure proper, safe, and reliable operation of the electrical power distribution system.

4.4.1.7 Inspection and Testing Requirements

The electrical power distribution system design should incorporate the necessary provisions to test or inspect the system or components as required.

4.5 REFERENCES

4.5.1 ANSI/ANS-51.1-1983, "Nuclear Safety Criteria for the Design of Stationary Pressurized Water Reactor Plants".

4.5.2 USNRC Regulatory Guide 1.29, "Seismic Design Classification", Revision 3, September 1978.

4.5.3 ANSI/ANS-58.3-1977, "Physical Protection for Systems and Components Important to Safety".

4.5.4 ASME Boiler and Pressure Vessel Code, 1989 Edition.

4.5.5 ASME B31.1-1989 Edition, Power Piping.

5.0 DISTRIBUTION SYSTEMS INTERACTION CONSIDERATIONS

5.1 GENERAL

The integrated design process requires consideration of interactions between systems and structures. This process ensures that:

A. System requirements are not met at the expense of other system and structure designs.

B. System effects are accounted for in other systems and structures.

C. Multiple design requirements are provided with a single feature.

D. Optimization is achieved in the design process.

5.1.1 RELATIVE ELEVATIONS

Generally, HVAC ductwork and cable trays should be located above piping to protect them from spray and impingement damage due to leaks and pipe ruptures.

5.1.2 STRUCTURAL INTERACTIONS

Buildings and structures should be used to the extent practical to meet system requirements such as fire protection, flood protection, jet impingement protection, missile protection, separation of redundant trains, and structural support.

5.1.2.1 Connectivity

In placing system equipment, other system connections and interactions must be considered. Equipment should be located to minimize the amount of connecting piping/ductwork/cable while still meeting other system requirements such as elevation relationships. The equipment locations and connecting piping/ductwork/cable should also provide the segregation features discussed in **Section 5.1.3**.

5.1.2.2 Hazard Protection

5.1.2.2.1 Flood Protection

Structural components should be utilized to the extent possible to provide flood protection. Walls and curbs should be used wherever possible instead of flood doors which hamper maintenance. The divisional wall at the lowest elevation in the Nuclear Annex (50+0 elevation) contains no doorways or passages. Divisional wall penetrations are minimized and sealed to ensure flooding in one division does not affect the other division.

5.1.2.2.2 Fire Protection

Similar to flood protection, structural components (walls, floors, ceilings, columns) should be utilized to provide spatial separation and fire barriers. See **Section 5.2.7** for further discussion of fire protection interactions.

5.1.2.2.3 Missile Protection

Structural components should be utilized wherever possible to provide protection from other hazards such as missiles, pipe whip and jet impingement.

5.1.2.3 Divisional/Quadrant Separation

Structural walls should be utilized for divisional separation, and in some cases, quadrant separation. This separation prevents pipe ruptures or other failures in one division/quadrant from affecting redundant equipment in another division or quadrant.

5.1.2.4 Proximity To Support Structures

Proximity to support structures (walls, columns, ceilings, floors) should be considered when routing piping/ductwork/cable tray or locating equipment. See **Section 6.1.6** for routing methods to achieve this.

5.1.3 SEGREGATION

Equipment and piping/ductwork/cable should be segregated in some applications to minimize adverse interactions.

5.1.3.1 Seismic/Non-seismic

Seismic and non-seismic distribution systems are normally segregated to the maximum extent possible. This segregation minimizes the interaction effects that must be considered for the seismic systems and minimizes the amount of non-seismic systems requiring more rigorous analysis. See **Sections 6.1.5.1 and 6.2.3.5** for further routing guidelines and interaction effects of non-seismic piping with safety-related piping/ductwork/cable trays, along with electrical and mechanical equipment.

5.1.3.2 Radiation

Radioactive piping/ductwork and components should be segregated from non-radioactive components to minimize personnel radiation exposure and the potential for contamination spread. Similarly, different radiation levels should be segregated where practical.

5.1.3.3 High Energy Lines

The effects of high energy line breaks should be minimized by segregation of areas containing these lines, thus minimizing mitigation features required. Existing structural members should be used to the maximum extent practical to protect against the effects of postulated high energy line breaks that are not eliminated by the leak-before-break (LBB) methodology (see **Sections 7.1.8 and 7.1.9**).

5.2 PIPING

5.2.1 EQUIPMENT LOCATIONS

5.2.1.1 Accessibility

Equipment must be placed so as to perform its required function, while having the proper elevation relationships and orientation. Accessibility for maintenance should be provided based on equipment vendor recommendations.

5.2.1.2 Labyrinths

Labyrinth walls should be provided for radioactive components to prevent excessive personnel exposure at doorways or passageways. Removable wall sections may be required in these labyrinth walls to allow equipment removability (see **Section 5.2.1.3**). Labyrinths may also be utilized to provide missile protection.

5.2.1.3 Equipment Removal Provisions

Equipment pull space should be provided to allow maintenance or replacement of components over the 60-year design life. Other provisions for equipment removal include:

- Lifting Provisions
- Removal Path
- Removable Wall Sections
- Flanged Equipment Connections

5.2.1.4 Curbs

Curbs should be used for containment of liquids around equipment. Curbs should also be placed around storage tanks with hazardous materials or radioactive liquids to prevent the spread of these materials in the event of a leak or rupture. The height of the curb will depend on the liquid volume that must be contained and the area inside the curb. Sloped ramps provide easier access inside the curbs for tank replenishment and maintenance.

Curbs may also be used for flooding protection, either to protect equipment from flooding, or to contain the liquid from equipment leakage or failure.

5.2.1.5 Raised Base Plates

Raised equipment base plates may be used to protect equipment from flooding by raising the equipment above the flood level. Raised base plates are not necessarily used in conjunction with curbing, however, if curbing is also used, the interaction of the curbing should also be considered.

5.2.1.6 Elevation Relationships

5.2.1.6.1 Net Positive Suction Head

Pump net positive suction head (NPSH) requirements should be accounted for in the placement of equipment by providing the necessary elevation relationships. The friction loss in the pump suction piping should also be considered since the pressure drop increases the required elevation difference. See **Section 6.2.12** for pump suction pipe routing guidelines.

5.2.1.6.2 Drains and Sumps

Proper elevation relationships should be considered when locating and designing gravity drains and sumps. Floor sumps must be designed to avoid excessive weakening of the floor where they are placed. Physical protection of the sump pumps and discharge piping may be required based on the safety function of the sump pumps.

5.2.1.6.3 Tank Overflow Provisions

Tank overflow provisions should be provided for tanks to prevent failure due to overfilling. These provisions may include curbs and drains depending on the contents and discharge locations as discussed above.

5.2.1.7 Electrical Power Provisions

Proximity to power supplies and controllers should be considered when locating equipment which is a large electrical load (e.g., pumps).

5.2.2 PIPE SLEEVES

Proper pipe sleeve design is vital due to their interaction with buildings and structures. They also should be integrated with the hazard protection provisions and ALARA.

5.2.2.1 Locations

5.2.2.1.1 General

A. When locating multiple sleeves in a wall, the center lines of the sleeves should line up, such that concrete rebar interruptions are minimized (see **Figure 5.2.2-1**).

B. For placement of sleeves in corners, see **Section 6.2.3.1.2.C** and **Figure 6.2.3-4**.

C. Spare sleeves should be provided without weakening the structure. That is, Items A and B above should be followed. Spares should be lined up with sleeves located for specific pipes.

D. Sleeves should be located to accommodate only one pipe each.

E. For information regarding sleeve locations for radiation shielding considerations, see **Section 6.2.4.3**.

F. Sleeves should be located to allow adequate space so that fittings need not be located within or close to a sleeve. See **Section 6.1.3.2.B**.

G. In determining sleeve locations and piping locations, consideration must be given to accessibility and maintenance access aisles.

H. Sleeves and piping should be designed to minimize the possibility of having a fitting in a sleeve (see **Section 6.1.3.2.B**).

I. Sleeves and piping should be located to provide some flexibility and adjustment to account for thermal growth and construction tolerances. See **Section 6.2.5.3.1.1** and **Section 6.2.5.3.1.2**.

5.2.2.1.2 Core Drill

Since core drills are costly and can weaken the structure, efforts should be made to find feasible alternatives to drilling such as using an existing spare sleeve or routing pipe to an available sleeve in a nearby area. If no alternatives are practical and a core drill is necessary, the above general requirements are applicable along with the following special considerations:

A. The core drill area should be free of embedded obstacles such as piping, electrical conduit, and steel plates.

FIGURE 5.2.2-1

Pipe Sleeve Configurations

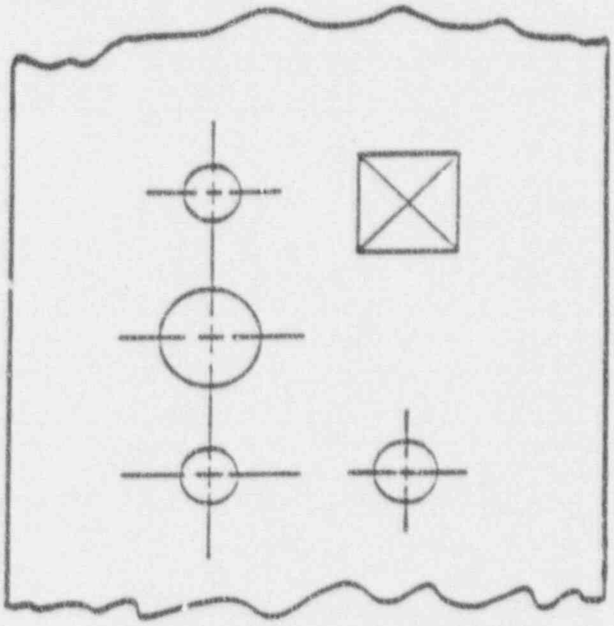

PREFERRED
SLEEVE
CONFIGURATION

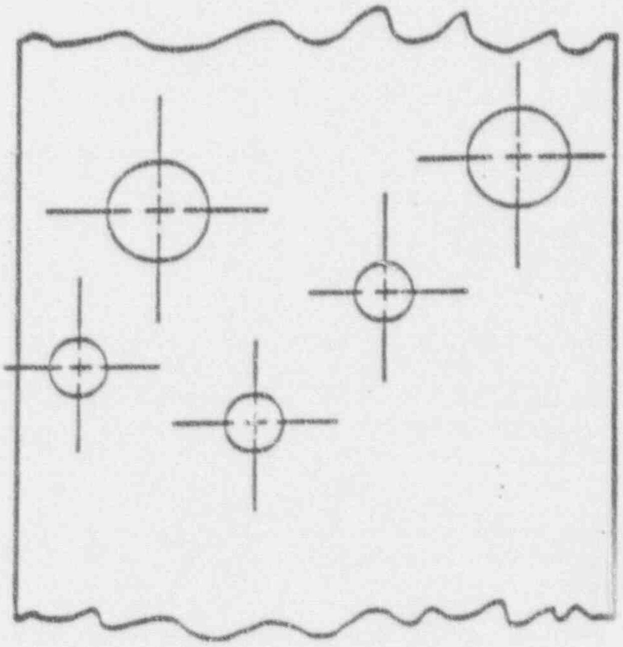

NON-PREFERRED
SLEEVE
CONFIGURATION

B. A 3-inch minimum clearance should be provided at the core drill location to provide for drilling machine access.

5.2.2.2 Sleeve Configurations

A. If a sleeve passes through a wall that is a fire wall or necessary for flood protection, a projection should be left to allow a boot to be attached. A minimum projection of 2 inches is recommended (see **Figure 5.2.2-2** and **Section 5.2.7.5.1**).

B. If a sleeve passes through a wall that is not a fire wall or other barrier necessary for flood protection, it should be constructed flush with the wall.

C. Special sleeve configurations such as ovals should be avoided where possible because of additional fabrication requirements. Generally, it is better to use a larger sleeve than to use a special configuration, except where OSHA safety requirements restrict the sleeve size (i.e., floor penetrations). See **Figure 5.2.2-3**.

D. If a sleeve passes through a floor, a projection should be left as specified in **Section 5.2.2.2.A** above.

5.2.2.3 Inspection Accessibility

Fittings and other components requiring inspection should be minimized within sleeves. However, if components require inspections within sleeves, provisions should be provided for these inspections (see **Section 6.2 6.8.2**).

5.2.2.4 Sizing

Sizing of sleeves requires consideration of thermal growth, insulation and tolerances. Generally a 1" minimum clear space between the outer surface of the piping (including insulation) and the inside of the sleeve is recommended.

5.2.2.4.1 Insulation

When the outer diameter of the insulation has been determined, a sleeve should be chosen which allows a minimum of 1" clearance between the outside of the insulation and the inside of the pipe sleeve.

When insulation is either not required or the thickness is not known, the following method may be used:

A. Low Temperature Piping (Design temperature less than or equal to 200°F) - Increase the sleeve size by two nominal pipe sizes.

FIGURE 5.2.2-2

Boot Seal

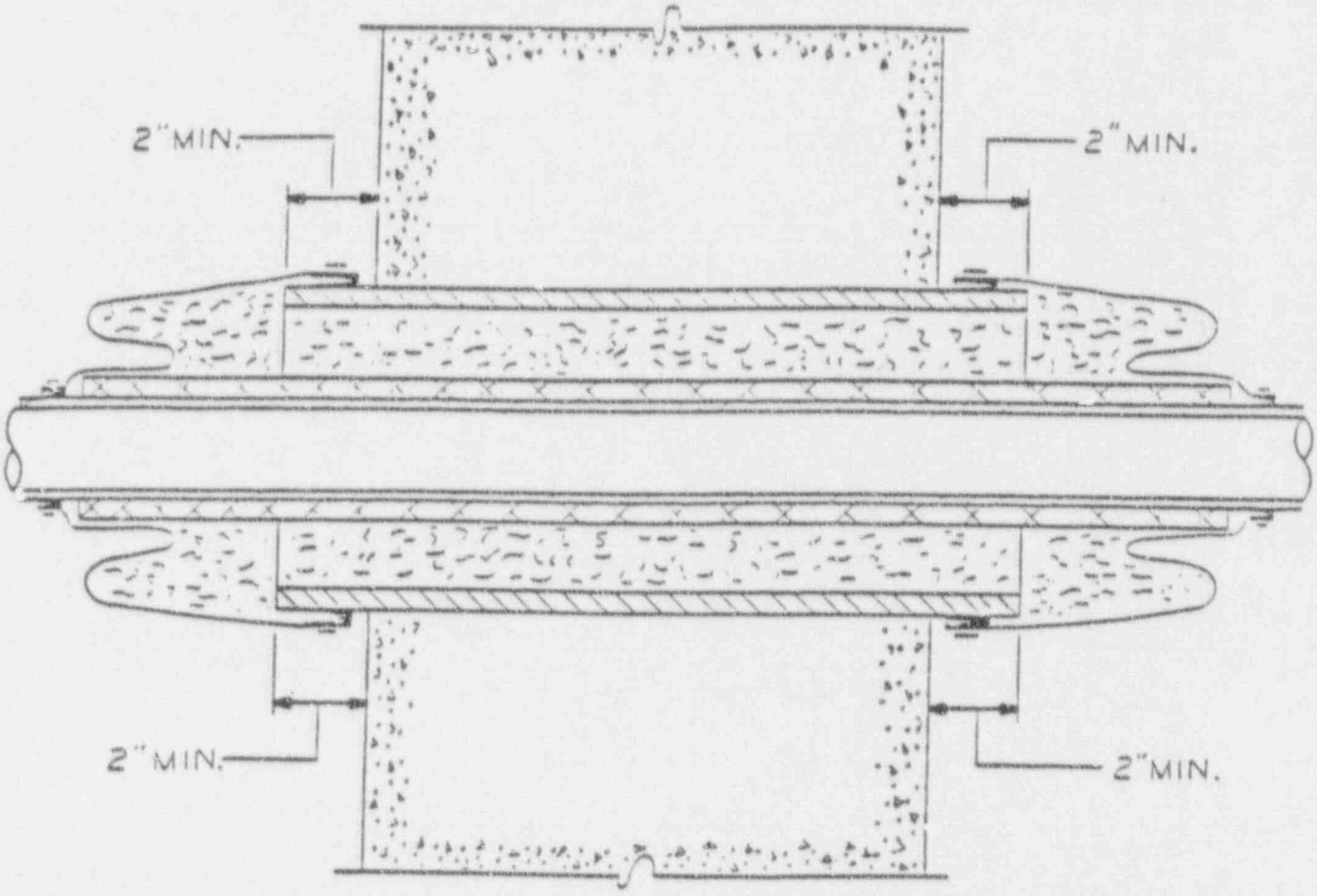

FIGURE 5.2.2-3

Oval Sleeve Configuration

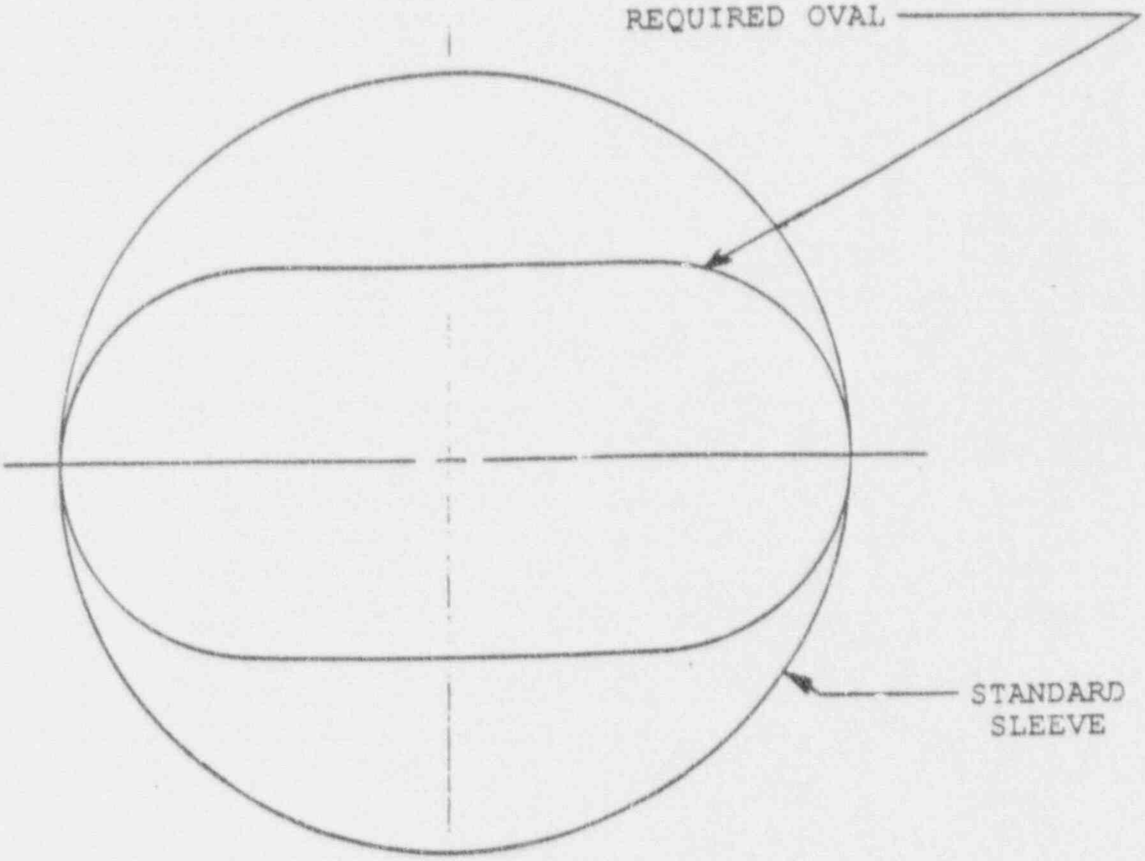

PREFERRED

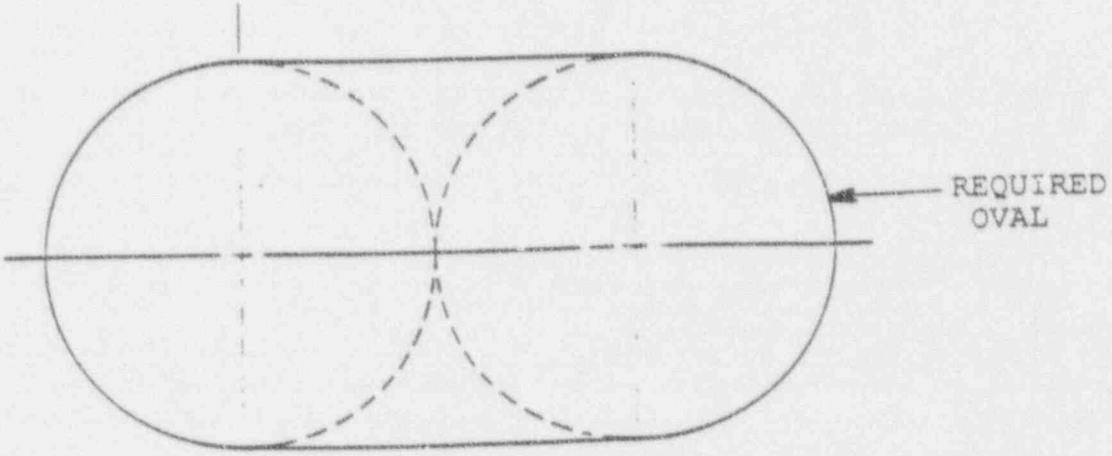

NON-PREFERRED

B. High Temperature Piping (Design temperature greater than 200°F) - Increase the sleeve size by three nominal pipe sizes.

Examples:

1. 2" pipe, design temperature = 150°F ⇒ 6" sleeve required
2. 2" pipe, design temperature = 300°F ⇒ 8" sleeve required

5.2.2.4.2 Tolerances

There are several tolerances which apply when specifying sleeves or designing pipe through sleeves and these tolerances can accumulate such that erected piping cannot go through its intended sleeve properly.

This can be avoided by specifying sleeves which are sufficiently larger than the intended pipe.

In special cases, strict erection tolerances may be imposed upon construction. Tolerances less than those specified on plant tolerance drawings should only be used as a last resort to assure critical piping can be installed properly.

5.2.2.4.3 Excessively Large Sleeves

At times, the sizing method above can result in excessively large sleeves. In some cases it may be better to reduce insulation in sleeves (e.g., anti-sweat, cooling water insulation). A trade-off is necessary because of possible compromises in structural strength or number of sleeves. For example, when sleeves are large their number should be kept to a minimum, and when sleeves are small their number may be larger.

Walls can support their intended structural loads with a limited area allotted for sleeves. If the sleeve information is known prior to structural design, walls can be designed to allow for many large sleeves. Cost for the structure, however, will increase as the number and size of the sleeves increase.

5.2.2.5 <u>Specifications</u>

Only standard pipe sizes should be specified for sleeves, since sleeves are made from pipe.

5.2.3 FLOODING PROTECTION

Flooding protection should be provided to prevent postulated flooding sources from preventing required safety functions. For general flood protection guidelines, see **Section 5.1.2.2.1.** Potential flooding sources include:

- Tanks
- Fire Protection Piping
- Moderate Energy Piping

Note that potential water spray damage from pipe ruptures in high energy lines should be enveloped by jet impingement interactions.

5.2.3.1 Areas Of Interaction

The following guidelines should be used to evaluate the possibility of nuclear safety-related components being sprayed by water.

5.2.3.1.1 Moderate Energy Pipe Ruptures

Water spray can result from (postulated) pipe ruptures in moderate energy piping. Water spray (a direct consequence of the fluid emitting from a pipe rupture) should be considered only as the physical wetting of a component without pressure effects. Water spray should be assumed to occur as a constant area jet (i.e., no jet expansion assumed).

5.2.3.1.2 Inadvertent Actuation of Fire Protection System

Inadvertent actuation of the fire protection system in any given area has the potential for causing water spray interactions and should be considered.

5.2.3.1.3 Inadvertent Actuation of Containment Spray

Inadvertent actuation of containment spray in containment has the potential for causing water spray interactions and should be considered.

5.2.3.2 Evaluation of Water Spray Effects

A review of water spray effects is required to determine if there are any nuclear safety-related components (i.e., equipment, instrumentation, electrical equipment) within the general routing area which might be damaged by the water spray.

5.2.3.2.1 Damage Assessment

5.2.3.2.1.1 Equipment

Safety-related electrical components such as pump motors, motor control centers, and switchgear should be assumed incapable of performing their required safety function upon being sprayed by water.

5.2.3.2.1.2 Instrumentation

Water spray should not preclude the ability of instrumentation to initiate and complete any required safety function. A loss of redundancy is permissible only if, after assuming a single active failure of any component, the safety function of the instrumentation can still be completed.

5.2.3.2.1.3 Valves

Nuclear safety-related valves with electrical operators should be assumed to be incapable of performing their intended function upon being sprayed by water unless the valve operators are qualified for water spray. Specific valve operator qualifications should be checked for water spray qualifications.

5.2.3.3 Flooding Prevention/Protection

Structural components should be used to the maximum extent possible for flooding protection. Following are typical methods of flooding prevention/protection:

- Division/Quadrant Separation
- Pipe Routing
- Equipment Locations
- Sump Pump Redundancy
- Sump Hi-Level Alarms

5.2.3.4 Other Flooding Prevention/Protection Methods

If adverse interactions cannot be resolved by rerouting the pipe or relocating the equipment as discussed above, one of the following methods should be used to show protection.

5.2.3.4.1 Component Qualification

Safety-related components which are designed such that they are not affected by water spray need not be further protected from water spray.

5.2.3.4.2 Spray Shields

Spray shields may be used for situations where pipe rerouting or relocation of safety-related equipment is not possible.

5.2.3.5 Floor Drains

Floor drains should be adequately sized to drain spray from fire protection nozzles to prevent area flooding.

5.2.3.6 Flooding Isolation

Structural members should be used to the maximum extent possible for flooding isolation. Other methods include:

- Flood Doors
- Curbs
- Sump Pumps

5.2.4 EMBEDDED PIPING

The location of the interface point between embedded and exposed portions of piping should allow for easy fit up to the matching exposed piping. Generally, a minimum of 6" is needed (See **Figure 5.2.4-1**).

5.2.4.1 Piping/Concrete Interaction

Interaction of embedded piping and the concrete should be considered based on **ACI 318, "Building Code Requirements for Reinforced Concrete"**. Parameters to consider include:

- Temperature
- Thermal Expansion
- Pressure
- Material
- Seismic Interaction

5.2.4.2 Embedded Drains

The following are suggested practices for the design of embedded drains:

A. Minimize the length of the run for drains.

B. Minimize the number of fittings used in routing drains.

C. Avoid low points and dead legs.

D. Butt welds should be used in lieu of socket welds.

E. Eccentric reducers with the flat side on the bottom are more desirable fittings than concentric reducers. If there is a possibility of choked flow, and crud build-up is unlikely, eccentric reducers with a flat side on top are acceptable.

F. Clean-outs should be placed every twenty feet, where possible.

FIGURE 5.2.4-1

Embedded Piping Interface

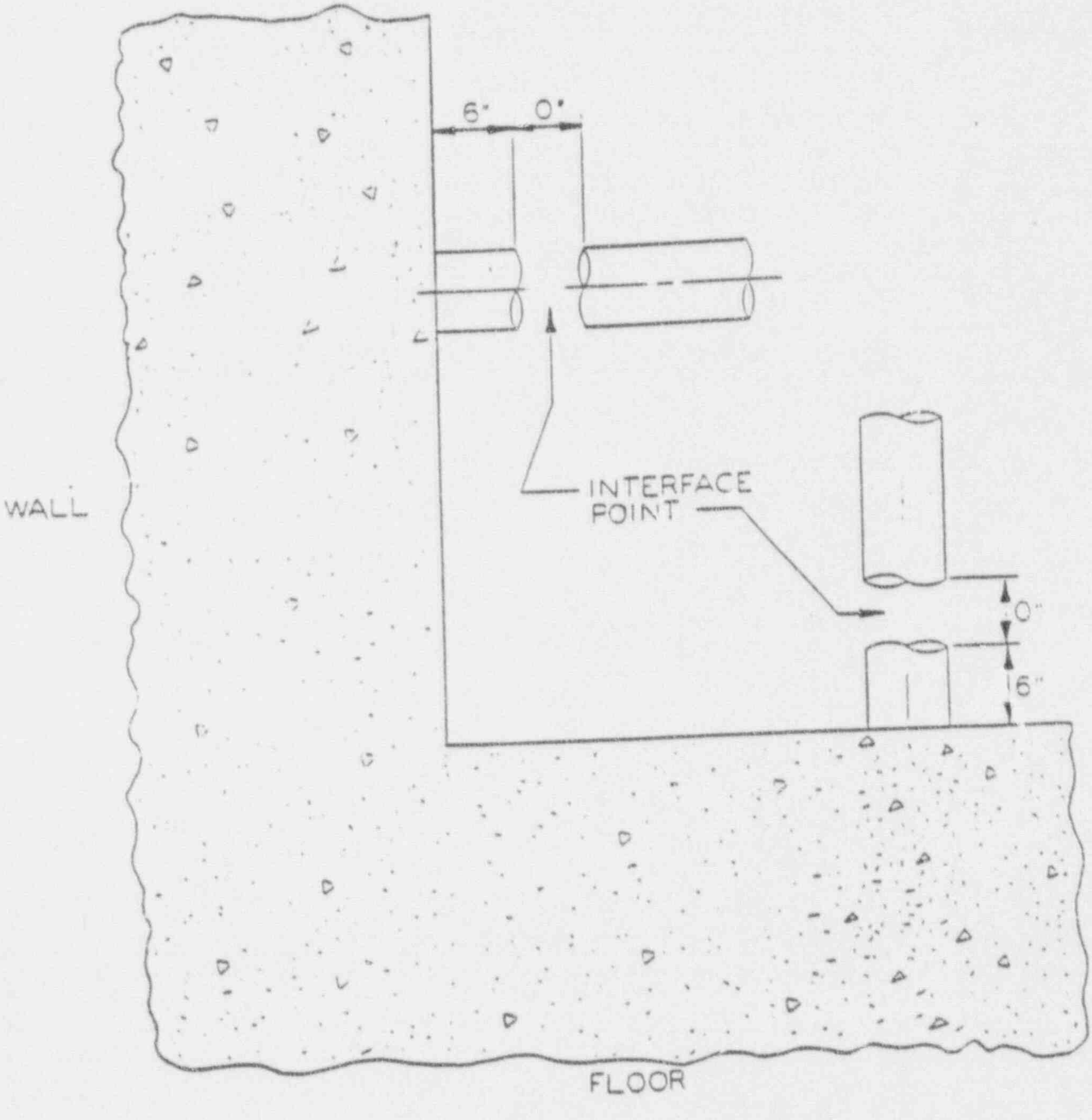

Allow Minimum 6" Projection to Interface Point

G. Pipe should be sloped 1/8" per foot in the direction of flow, where possible.

H. Straight-in approach and abrupt changes of direction should be avoided (see **Figures 5.2.4-2** and **5.2.4-3**).

This design approach will minimize potential hot spots and crud traps from forming in the drain lines in potentially radioactive piping.

5.2.5 BURIED PIPING

5.2.5.1 Freeze Protection

Piping and equipment located in potential freeze zones should be considered for insulation and possibly heat tracing.

The effects of freezing temperatures on pipe, equipment, and instruments should be considered during the design phase. There are several methods which may be utilized to prevent freezing. Recommended methods of freeze protection are listed below:

A. Reroute to an Interior Area

B. Heat Tracing

C. Insulation

D. Localized Heating

From a piping design standpoint, method A or C is preferable. If method B is to be used, the electrical impact must be considered. If method D is to be used, the HVAC impact should be considered.

5.2.5.2 Inspection and Access Requirements

Access for required inspections should be provided, usually by accessible pipe trenches or pits. Trenches should also be considered to provide access for piping which could require replacement over the life of the plant.

5.2.5.3 Physical Protection

Physical protection should be provided for buried piping. Usually freeze protection also provides physical protection, either by an enclosed pipe trench or burial below the freeze line. Administrative requirements should be implemented to prevent damage due to excavation.

FIGURE 5.2.4-2

Floor Drain Configuration

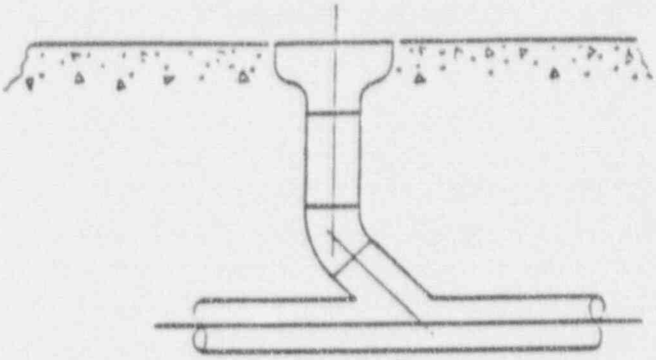

PREFERRED FLOOR DRAIN DESIGN

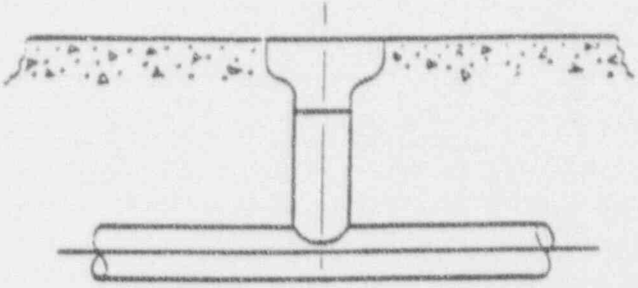

NON-PREFERRED FLOOR DRAIN DESIGN

FIGURE 5.2.4-3

Equipment Drain Configuration

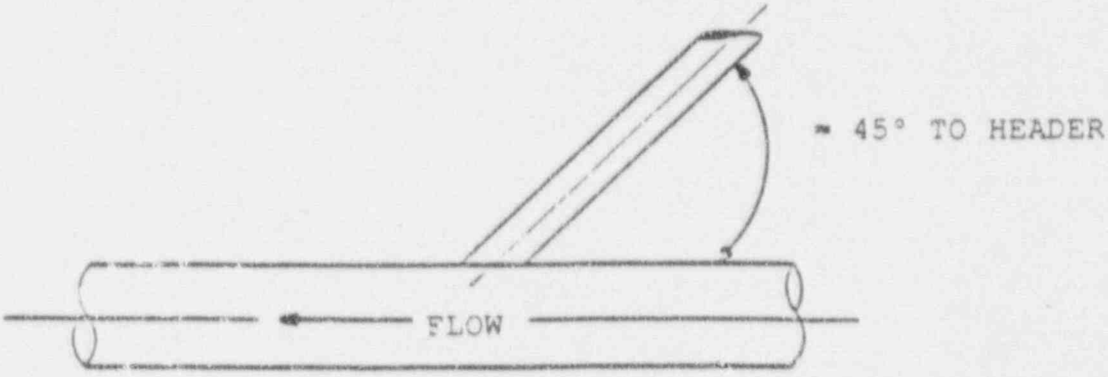

PREFERRED EQUIPMENT DRAIN STUB

Saddle-in or Saddle-on preferred and less expensive than half coupling.

5.2.5.4 Seismic Interaction With Structures

Seismic interaction of buried piping and structures is described in **CESSAR-DC**, **Section 3.7.3.12.1**.

5.2.6 EXPOSED PIPING

5.2.6.1 Freeze Protection

Exposed piping, especially instrument lines are susceptible to freezing damage and should be avoided, especially in cold climates. If exposure is not avoidable, the freeze protection methods discussed in **Section 5.2.5.1** should be considered depending on the fluid medium and winter climate conditions.

5.2.6.2 Physical Protection

Exposed piping is also susceptible to physical damage and should be avoided where possible. Where not avoidable, appropriate protection should be provided. Protection from postulated hazards must be shown by analysis for safety-related piping.

5.2.7 FIRE PROTECTION

Fire protection is required throughout the plant, but adds special interactions that should be considered for all piping systems.

5.2.7.1 Plant Layout

Plant layouts should be arranged to isolate safety-related equipment from unacceptable fire hazards and separate redundant safety-related systems from each other so that both are not subject to damage from a single fire hazard.

5.2.7.2 Fire Protection Sprinkler System

The location of process piping in plant areas served by sprinklers should allow free dispersion of the sprinkler liquid. Routing piping close to sprinkler heads should be avoided.

5.2.7.3 Fire Protection Valves

Fire protection valves should be located away from the areas they service. The nature of these valves require quick and easy accessibility at all times. Therefore, process piping routed in these areas should facilitate accessibility.

5.2.7.4 Hose Reel Cabinets

Hose reel cabinets should be easily accessible. All process piping should be routed to accommodate this.

5.2.7.5 Fire Seals

Fire seals are used to seal penetrations through fire walls. Two appropriate methods for sealing wall sleeves are described below:

5.2.7.5.1 Boot Seal

A boot seal is an approved fire barrier. The seal is made from a flexible fire resistant material and looks somewhat like a concentric reducer.

The use of a boot seal normally requires that the wall sleeve project approximately 2 inches from the wall, thus allowing one end of the seal to be clamped to the sleeve and the other end to be clamped to the pipe passing through the sleeve. Note that there are methods of applying a boot seal to sleeves which are flush with the wall.

A boot seal should be specified for use in situations where the piping passing through the sleeve is subject to thermal movements which cannot be tolerated by fire seal foam (see **Section 5.2.7.5.2**).

5.2.7.5.2 Fire Seal Foam

Fire seal foam is an approved fire barrier which is used to seal fire wall penetrations. Fire seal foam is applied in a liquid state and then cures to a foam-like material.

Fire seal foam is an effective fire seal, however, its application is governed by the geometry of the piping in the sleeve and the thermal movement of the piping. The geometry restrictions are addressed in **Section 5.2.7.8.1.A, B, and C** while the thermal movement restrictions are addressed in **Section 5.2.7.8.2**.

5.2.7.6 Drains

Floor drains, sized to remove expected fire fighting liquids plus liquids from other sources (e.g., tanks), should be provided in those areas where water suppression systems are installed. Drains should also be provided in other areas where hand hose lines could be used if such fire fighting water could cause unacceptable damage to equipment.

5.2.7.7 Flushing and Testing Provisions

Provisions should be provided for flushing and testing of fire protection piping.

5.2.7.8 Fire Barrier Penetrations

All piping penetrations in fire barrier walls should be sealed appropriately.

5.2.7.8.1 Design Considerations

Fire barrier penetration design considerations are as follows:

A. Multiple pipes and cables through the same sleeve should be avoided.

B. The annular space should be no more than 4" if fire seal foam is to be used.

C. The maximum normal sleeve size should be 14". Sleeves larger than 14" should project from the wall at least 2" to allow boot seal installation.

D. Pipes penetrating a steel stud drywall should have a space envelope of at least 2" around the O.D. of the pipe and 8" from the wall. This allows for boot installation and should be checked for interferences (e.g., hangers).

E. Fire wall penetrations by non-metallic piping (e.g., PVC) should be changed to steel pipe for a distance of at least 5 feet on either side of the wall.

5.2.7.8.2 Piping Penetrations Subject To Movement

Foam fire wall sealant can absorb ¼" of movement per 2" of foam radial thickness. Thickness is measured from the pipe OD to the sleeve ID. Movements greater than that allowed for foam require a boot seal or another acceptable fire seal.

5.2.7.9 Other Fire Protection Interaction Considerations

5.2.7.9.1 Fire Hazard Prevention

Provision should be made to preclude fire hazards for piping carrying petroleum-based or other potential flammable materials.

5.2.7.9.2 Explosion Prevention

Provision should be made to preclude explosion hazards for piping carrying combustible gases such as hydrogen.

5.2.7.9.3 Personnel Protection From Exposure to Incapacitating Gases

Incapacitating gas protection, such as chlorine gas protection for the Control Room, should be provided for where warranted.

5.2.8 PIPING INTERACTION WITH ELECTRICAL EQUIPMENT/CABLE

5.2.8.1 Electrical Equipment Interaction

5.2.8.1.1 Piping Guidelines

Piping should be designed and routed so as to not adversely impact electrical equipment operation or cable operability. Piping guidelines include the following:

A. Piping should not be routed above electrical equipment to avoid water and/or collision damage in the event of a pipe rupture.

B. Piping should not interfere with electrical cabinet door swing space or enter in the cabinet maintenance access area.

C. Piping should not be routed close to electrical equipment. A typical minimum distance of 30" to the side and below electrical equipment should be maintained.

5.2.8.1.2 Guideline Compromises

Wherever possible, the guidelines listed in **Section 5.2.8.1.1** should be applied. The following compromises may be made, though, for situations where these guidelines are impractical:

A. Moderate energy or seismically designed high energy piping may be routed above non-safety related electrical equipment if only straight pipe is involved (i.e., no in-line components such as valves or instruments) and anti-sweat insulation is installed.

B. A minimum clearance of 30" below or to the side of electrical equipment is desired but may be compromised, taking into account the characteristics of the pipe such as:

   1. Type of fluid in pipe.
   2. Temperature of fluid in pipe.
   3. Seismic/non-seismic design of pipe and/or electrical equipment.
   4. Whether or not the electrical equipment is safety-related.
   5. Other pipe or electrical equipment characteristics which influence accident damage possibility.

5.2.8. Cable Tray Interaction

Where a single pipe crosses perpendicular to a cable tray, a minimum vertical clearance of 6 inches should always be maintained between the piping and the cable tray. Wherever possible, use the spacing requirements of **Table 6.2.6-1**.

5.2.8.3 Other Piping Interaction Considerations

A. Piping should not be located in, above, or below electrical shafts.

B. High energy piping should not be routed in the Control Complex, Electrical Penetration Rooms, Vital Instrumentation and Electrical Rooms, or Remote Shutdown Panel Rooms to keep potential adverse interactions to a minimum. See **Section 7.1.8.1.1** for a description of high energy piping.

C. Moderate energy piping should not be routed in the Control Room to prevent potential flooding interactions.

5.2.8.4 Separation of Electrical Components

Piping of one train connecting to electrical equipment for control purposes should be routed so as to comply with the electrical separation of redundant components requirement. Redundant circuits should be separated three feet horizontally and five feet vertically in the General Plant Area and one foot horizontally and three feet vertically for the Control Complex Area.

Electrical requirements dictate that there should be a minimum separation distance between redundant Class 1E and Non-Class 1E circuits and equipment. This separation distance must be free of interposing structures, equipment, or materials which could aid in the propagation of fire or could disable Class 1E circuits. The piping layout should not interfere with the separation distance.

5.2.8.5 Fiber Optic Cable Interaction

Radiation effects should be considered in potential fiber optic cable applications. Where the radiation levels preclude the use of fiber optic cable, coaxial cable should be used.

5.2.9 PIPING INTERACTION WITH HVAC EQUIPMENT/DUCTWORK

5.2.9.1 General

General HVAC ductwork/piping interaction considerations are contained in **Section 5.1**. In addition, piping should not be routed through ductwork due to potential adverse interactions.

5.2.9.2 Access to Dampers and Other HVAC Equipment

Access should be provided to HVAC dampers, fans, and filter units so as to facilitate maintenance activities.

5.2.10 POSTULATED PIPE BREAKS

Postulated pipe breaks, their interactions, and analysis requirements are discussed in **Section 7.1.8**.

5.3 HVAC DUCTWORK

5.3.1 HVAC EQUIPMENT LOCATIONS

5.3.1.1 Accessibility

Equipment must be placed to perform its required function, and allow access for operation and maintenance. Accessibility for maintenance should be provided based on equipment vendor recommendations and operational experience.

5.3.1.2 Space Limitations

HVAC equipment (fans, filters, AHUs) takes up a significant amount of space and must be located accordingly. Allotting equipment space early in the design process should ensure adequate space and allow the ductwork length to be minimized.

5.3.1.3 Equipment Removal Provisions

Equipment pull space should be provided to allow maintenance or replacement of components over the 60-year design life. Other provisions for equipment removal include:

- Lifting Provisions
- Removal Path
- Removable Wall Sections
- Flanged Connections
- Access for Filter Changeout
- Removal and Laydown Space for Ductwork Sections

5.3.1.4 ALARA

Due to the potential radioactivity of some HVAC equipment (e.g., filter trains), ALARA must be considered in the design. Equipment enclosure should be considered along with provisions for changing potentially radioactive filters.

5.3.1.5 Electrical Power Provisions

Proximity to power supplies and controllers should be considered when locating equipment which is a large electrical load (e.g., fans).

5.3.1.6 Chilled Water

Chilled water pipe routing should be considered when placing equipment such as recirculating air handling units.

5.3.1.7 Drain Provisions

Drain provisions should be considered for equipment such as fans, cooling coils, moisture separators, and water deluge systems in air cleaning units. The radioactivity potential of the drain water must also be considered.

5.3.2 STRUCTURAL INTERFACE

5.3.2.1 Wall/Floor Openings

The strength of floors and walls around ductwork openings should be carefully considered due to the required size of the penetrations.

5.3.2.2 Structural Loading

The structure must be adequate to support the HVAC equipment loading along with supports for the ductwork and in-line components. See **Section 7.2** for HVAC ductwork analysis.

5.3.2.3 Fire Protection

Seals should be provided at duct penetrations (walls, floors) of fire barriers. Fire seals and fire dampers should be used to ensure that the penetration does not degrade the fire barrier below required levels (see **Section 4.3.1.10**).

Vertical duct shafts and plenums should be reviewed carefully, since stack effect can occur if adequate fire barriers are not provided at floor elevations.

5.3.3 MECHANICAL INTERFACE

5.3.3.1 Piping Interface

HVAC ductwork should be routed above piping where possible to prevent ductwork damage due to pipe leakage or rupture. Routing of pipe through ductwork should be avoided.

5.3.3.2 Electrical Cable Tray/Conduit Interface

Ductwork and cable trays will usually be in the same vicinity in the upper room elevations. Proper segregation (seismic, non-seismic) should minimize adverse interactions between HVAC ductwork and cable trays (see **Section 5.1.3**).

5.4 ELECTRICAL CABLE TRAYS/CONDUIT

5.4.1 ELECTRICAL EQUIPMENT LOCATION

5.4.1.1 Space Allocation

Space for electrical equipment should be allocated in the plant general arrangement during the design phase to ensure adequate room exists for electrical panels, cabinets, switchgear, and other electrical equipment. In addition, space for cable trays should be reserved on the plant arrangements as these electrical items tend to require a significant amount of space.

5.4.1.2 Space Limitations

Building space limitations can result in equipment placement and routing constraints. Adequate space should be provided by reviewing other locations, reorienting the equipment, or building arrangement changes.

5.4.1.3 Connectivity

Electrical equipment should be located so as to reduce the amount of cabling required, thus reducing the amount of cable trays and conduit within the plant.

5.4.1.4 Accessibility

Electrical equipment should be located considering accessibility. Sufficient clearance should be provided for cabinet door swing space, electrical panel access and removal, and junction box access.

5.4.1.4.1 Maintenance Provisions

Accessibility to electrical equipment and components which may require maintenance should be provided.

5.4.1.4.2 Equipment Removal Provisions

The electrical power systems should be designed for a 60-year operating life without replacement of major components or cabling. However, the design of the systems and the building arrangement should permit such replacement, if required.

5.4.2 STRUCTURAL INTERACTION

5.4.2.1 Wall/Floor Openings

The strength of floors and walls around cable openings should be considered.

5.3.2.2 Structural Loading

The structure must be adequate to support the electrical equipment loading along with supports for the cable trays and conduit. See **Section 7.3** for electrical cable tray and conduit analysis.

5.4.2.3 Support/Restraints

A seismically qualified cable support system shall be provided for all raceways containing Class 1E cables (see **Section 7.3**).

5.4.2.4 Equipment Bases

Equipment bases shall be provided for electrical equipment and components in areas which are subject to becoming wet.

5.4.2.5 Embedded Conduit

Embedded conduit locations should be considered to take into account rebar, openings, and other interferences.

5.4.2.6 Grounding System

The grounding system arrangement should be considered for equipment placement and cable routing.

5.4.3 MECHANICAL INTERACTION

5.4.3.1 Piping Interaction

Whenever possible, non-safety related electrical cable trays should not be routed above or adjacent to safety-related piping such that seismic interaction is possible.

5.4.3.1.1 Temperature Considerations

Multi-level cable tray systems should provide, as a minimum, one-foot, four-inch vertical spaces between the bottom of the upper tray and the top of the lower tray, and two feet of horizontal space between adjacent trays.

Cable tray and conduit should be located a safe distance from high temperature piping systems to preclude the necessity of reducing the cable ampacity as a result of increased ambient temperature.

5.4.3.1.2 Accessibility for Maintenance and Testing

Access should be provided to electrical equipment to facilitate maintenance activities and testing. Cabinet door swing should be considered as well as other test connections.

5.5 REFERENCES

5.5.1 ACI 318-89, "Building Code Requirements for Reinforced Concrete".

5.5.2 ASME B31.1-1989 Edition, Power Piping.

5.5.3 CESSAR Design Certification, System 80+ Standard Design, Amendment I.

6.0 DISTRIBUTION SYSTEMS ROUTING GUIDELINES

6.1 GENERAL

6.1.1 PIPING/DUCTWORK/CABLE TRAY RELATIVE ELEVATIONS

Piping should generally be routed below HVAC ductwork and cable trays to protect the ductwork and cable trays from spray and impingement damage due to leakage and postulated pipe ruptures.

6.1.2 DIVISIONAL AND QUADRANT SEPARATION

Structural walls should be utilized for divisional separation in the Nuclear Island. Quadrant separation should be maintained for ECCS components in the Reactor Building subsphere. This separation is intended to prevent pipe ruptures or other failures in one division/quadrant from affecting redundant equipment in another division and/or quadrant.

6.1.3 STANDARD COMPONENTS

Use of standard components should be maximized for all distribution systems. Standard components are more interchangeable, more readily available, and less costly.

6.1.3.1 Piping

For interchangeability and ease of procurement, standard pipe sizes and materials should be utilized wherever possible.

6.1.3.2 Fittings

A. Standard fittings should be used in all possible applications. Non-standard fittings as shown in **Figure 6.1.3-1** should be avoided.

B. Fittings in sleeves hinder access for welding and inspections. Fittings and welds in sleeves should be avoided.

C. Branch fittings should be checked for compatibility and compliance with piping and installation specifications.

6.1.3.3 Valves

Manual and control valves, as well as valve operators, should be standardized to the maximum extent possible.

FIGURE 6.1.3-1

Non-standard Fittings

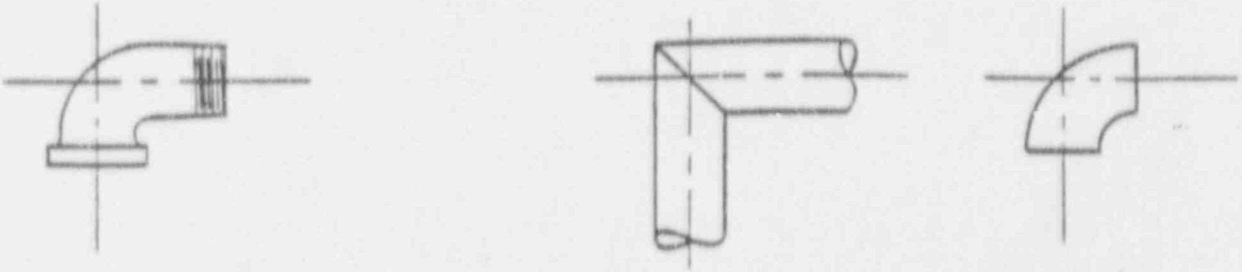

90° STREET ELBOW

MITERED 90° ELBOW OR
90° SHORT RADIUS ELBOW

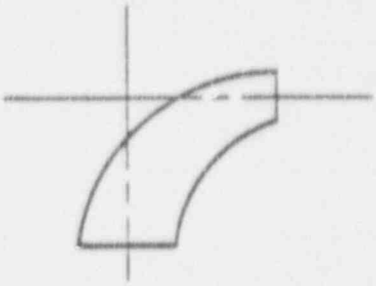

90° LONG RADIUS
REDUCING ELBOW

NOZZLE WELD

CROSS

SADDLE

Use of these non-standard fittings should be avoided.

6.1.3.4 Pipe Supports

Standard pipe support designs and materials should be utilized to the maximum extent possible. Optimum envelopes for support designs should be developed for use during pipe routing. Support guidelines are described in **Section 6.2.3**.

6.1.3.5 HVAC Components

Similar to piping, HVAC systems and components should be standardized to the maximum extent possible. HVAC components include ductwork, ductwork supports, fans and dampers.

6.1.3.6 Electrical Components

Similar to piping and HVAC, electrical components should be standardized to the maximum extent possible. Electrical components include cable, supports, cable trays, conduit, junction boxes and MCCs.

6.1.4 CONSTRUCTABILITY

6.1.4.1 Tolerances

Adequate tolerances should be provided in the design to facilitate construction and preclude rework and field change delays.

6.1.4.2 Standard Components

Standard components should be utilized to the maximum extent possible (see **Section 6.1.3**).

6.1.4.3 Accessibility

6.1.4.3.1 Clearance

Clearances should be provided in the design to allow for construction, preservice/inservice inspection, operation, and maintenance.

6.1.4.3.2 Testing Provisions

Testing provisions should be incorporated into the design. Access should be provided for both preservice and inservice testing. Personnel and testing equipment access should also be considered. Isolation valves, test connections, and recirculation/bypass lines should be incorporated into the design to preclude abnormal system lineups.

6.1.4.4 Interferences

Field changes during construction result in significant delays and costs. These problems are best circumvented in the design phase by preventing interferences. Interferences should be precluded by utilizing an integrated 3-D plant model with interference check capability.

6.1.5 SEGREGATION

6.1.5.1 Seismic/Non-seismic

To the extent practical, non-seismic and seismic system segments should be segregated to lower the amount of non-seismic piping requiring seismically analyzed supports (see **Section 6.2.3.5**).

6.1.5.2 Radioactive/Non-Radioactive Piping

Radioactive piping should be segregated to the extent possible in order to utilize the shielding provided by the structure while maintaining radiation levels within limits imposed during design.

6.1.6 SUPPORTABILITY

Distribution systems should be routed to be supportable. The routing guidelines in this section facilitate supportability.

6.1.6.1 Proximity to Support Structures

Distribution systems should be routed close to support structures (walls, columns, ceilings, floors). This simplifies support designs and allows support standardization. Close proximity is especially important near in-line components such as valves, flowmeters and dampers. Valve supportability is discussed in **Section 6.2.2**. Structural interactions are discussed in **Section 5.1.2**.

6.1.6.2 Base Plate Provisions

Embedded plates should be utilized wherever practical to minimize embedded anchor bolt use. Spare embedded plates should be provided to allow for modifications over the plant life.

6.2 PIPING

6.2.1 EQUIPMENT CONSIDERATIONS

6.2.1.1 Equipment Arrangement

6.2.1.1.1 Accessibility

Accessibility for installation, testing, operation, and maintenance of equipment should be provided based on equipment requirements provided by the vendor and past plant experience.

6.2.1.1.2 Pull Space

Equipment pull space should be provided based on vendor requirements. Pull space provisions include equipment and equipment module (i.e., tube bundles, pump motors) removability.

6.2.1.1.3 Maintenance

Maintenance provisions should be provided, including monorails, jib cranes, removable wall sections, hatches, and flanged connections. Orientation and requirements of other equipment in the vicinity should also be considered.

6.2.1.2 Connecting Piping Requirements

6.2.1.2.1 Nozzle Loads

Equipment nozzle loads should be minimized to be within equipment vendor specifications. If nozzle load limits are not known, conservative nozzle loads may be assumed and verified with vendor specifications. Typical nozzle loads that may be used for these conservative assumptions are listed below in **Table 6.2.1-1**.

TABLE 6.2.1-1

Typical Allowable Nozzle Loads

Service Level	Forces (lbs)	Moments (In-lbs)
Normal	200 x A	2000 x S
Upset	400 x A	4000 x S
Faulted	500 x A	5000 x S

Where: A = Pipe cross-sectional metal area (in^2)
S = Pipe section modulus (in^3)

6.2.1.2.2 End Connections

End connections should be designed to be compatible with interconnecting piping.

6.2.1.2.3 Heat Tracing

Heat tracing is used for liquid-containing pipelines to prevent the liquid from freezing or becoming too viscous. In pipelines containing gases, heat tracing prevents gas components from condensing. Piping may be heated by using fluid heating media (steam, hot water, hot oil, or Dowtherm®), or by electricity. Heat tracing should be minimized due to the required maintenance.

Typical heat traced piping applications include borated water lines, and lines subject to freezing during cold weather. Borated water lines greater than 2.5% by weight require heat tracing to prevent precipitation. Note that for System 80+, the only borated water piping requiring heat tracing should be for CVCS boron batching due to the RCS boron concentration being less than 2.5%.

6.2.1.2.3.1 Requirements

When a piping system requires heat tracing, the designer should take into account the installation and maintenance of the heat tracing system. Guidelines are as follows:

A. In order to minimize the possibility of short-out due to flooding or loss of heat, piping requiring electrical heat tracing should not be located near floors or at low points in the building.

B. Heat traced piping should not be located in high traffic areas where physical damage could occur (e.g, access aisles). If piping must be located in a high traffic area, a minimum clearance of 30 inches should be provided and protective shields should be installed.

C. Heat traced piping should be separated from other piping, walls, floors, and ceilings, with sufficient space for installation of cables and insulation. Typically, a 12" minimum clearance is needed. General spacing requirements for ASME Class 1, 2, and 3 piping are given in **Section 6.2.6.2**.

D. Flange connections should be kept to a minimum to avoid the need for heating cable adders.

E. When choosing a sleeve for a pipe that is being heat traced, the sleeve should be large enough to accommodate the heat tracing cables and necessary insulation (see **Section 5.2.3.4**).

F. Outdoor piping should meet the intent of **Section 6.2.1.2.3.1.B** and should remain easily accessible from a standpoint of setting and maintaining locally mounted temperature controllers.

6.2.1.2.3.2 Steam Tracing Of Pipelines

Heat to piping may be provided by steam pipes either inside or outside the line. Steam jacketing may also be used, but due to its high cost, it is employed only for special situations involving high heating loads. Since steam has a high film heat-transfer-coefficient, it condenses at constant temperature and flows to the point of use without pumps. Typically, this practice is not used in nuclear plants due to the unavailability of high temperature, superheated steam. In other plants (coal, oil) where high temperature, superheated steam is available, this method is more practical.

6.2.1.2.3.3 Electrical Pipe Heating

External heat tracing consists of installing electric heating cables in contact with the outer surface of the pipe with stainless steel straps, and then applying insulation to the pipe. The most common size cable used is 3/8" OD with an option of 5/8" OD wiring. After the wires are connected, the heat tracing is covered with aluminum lagging. Heating by electricity to maintain temperatures in pipelines has advantages over steam. These are:

A. Heat can be provided with automatic controls.

B. Heating of the pipe is more uniform.

C. Operating and maintenance cost are lower than steam.

D. Heating can be applied equally to short and long pipelines.

Some borated water system use two heat tracing systems. The primary system can have a temperature setting of 175°F, and the secondary system a setting of 160°F. The secondary system can be used as a backup system, or it can be used as an additional heating system along with the primary system to prevent crystallization of borated water at higher concentrations.

Note that at boron concentrations less than 2.5% by weight, crystallization does not occur down to 32°F. Since the System 80+ maximum boron concentration is 2.5%, only the borated water piping used in the mixing and transfer from the CVCS batching tanks requires heat tracing.

6.2.1.3 Flowmeters

Twenty pipe diameters of straight pipe should be provided upstream, and ten pipe diameters of straight pipe should be provided downstream of flow elements unless otherwise specified by manufacturer's instructions. The inside diameter should be used for the pipe diameter computation.

6.2.2 VALVES

6.2.2.1 Valve Functions

General valve applications and guidelines are stated below. Specific applications should be researched further, as appropriate.

6.2.2.1.1 Gate Valve

6.2.2.1.1.1 Solid Wedge

This valve is recommended for lines at ambient temperatures and in line sizes 4 inches and smaller. Thermal differentials and pipe loads can distort critical body interfaces that the solid wedge cannot adapt to.

Additionally, the solid wedge is not suited for use with power actuators. Changes in operating characteristics of actuators and environmental changes dictate its use to be limited to applications where manual actuation is acceptable.

6.2.2.1.1.2 Flex-Wedge and Split Wedge

These are probably the best general purpose gate valves available. The flexibility of the wedge allows operation over a broader range of conditions. They should not be used in applications that are subject to extreme temperature variations or fast closure. The limitation on speed of operation is a result of the tendency of the wedge to lock or bind when closed quickly.

6.2.2.1.1.3 Double Disc

The double disc valve is designed to provide tight shut-off and reliable operation in extreme environments. Its free floating disc and parallel seats eliminate the criticality of the seat-disc angles, permit tight sealing under the most adverse temperature and pipe loading conditions, and greatly simplify maintenance. The wedging mechanism allows the valve to be used at temperature extremes and assures reliable opening regardless of closure speed. This type of valve should be considered whenever one or more of the following conditions are required: (1) the valve must close quickly, (2) bubble tightness is desired, or (3) air seat leakage testing is required.

6.2.2.1.1.4 Conduit

The conduit gate is a valve that is designed for use in service where an unobstructed flow passage through the seat area is required. It has been extensively used in pipeline services where the practice of running "pigs" through the pipeline necessitates the elimination of any surfaces that they could get hung up on. Conduit valves are also used in lines where the media is "dirty" and contains particles like rocks or metal chips.

6.2.2.1.2 Globe Valve

Globe valves are generally used for throttling and shut-off. When used in throttling applications they should be installed with flow under the seat. The configuration of the disc is such that only the bottom presents a smooth flow profile. The sharp profile of the top of the disc, when exposed to high velocity fluids can cause turbulence. This results in unreliable throttling and possible valve damage.

Globe valves can also be used for shut-off, but are also unidirectional in this application. In order to obtain a tight seal, the valve should be installed with flow over the disc. With flow under the disc, the actuator has to provide a force equal to the full differential plus an additional amount to provide a sufficient unit load in the seat to achieve a seal. This force must be maintained if the valve is to remain tightly sealed.

With flow over the disc, the pressure acts as the sealing force. In this situation, the actuator is required only to overcome the differential pressure force when the valve is operated.

Aside from the different types of discs supplied, globe valves are also supplied in four different body configurations. They are the Regular (horizontal or pattern), "Y" (wye), Angle, and the Y-Angle (elbow down).

Note that packless globe valves are used as isolation service with flow under the disc. Packless globe valves should not be used for throttling or reversible flow conditions. These valves should also be installed in clean systems as they are very susceptible to seat damage caused by impurities in the system.

6.2.2.1.2.1 Horizontal Globe

This is the most commonly used of the globe valves even though it has the greatest flow resistance.

6.2.2.1.2.2 Y-Globe

This design is used where throttling capability is required but lower flow resistance is desired. The inclined stem angle makes maintenance more difficult than with a horizontal globe.

6.2.2.1.2.3 Angle Globe

This design takes advantage of a 90° bend in the piping and replaces the elbow with a throttling valve. This eliminates extra welds, reduces system pressure drop, and permits the most efficient use of available space.

6.2.2.1.2.4 Y-Angle Globe

This design combines the installation versatility of the angle valve with the lower pressure drop of the Y-globe. The installation limitations of this type are opposite of those for a regular angle valve.

6.2.2.1.3 Check Valve

Check valves differ considerably in their construction and operation from the other groups of valves designed either to stop the flow entirely or to throttle the flow to the degree desired.

There are three basic designs of the check valve; the swing check valve, the lift check valve, and the tilting disc valve.

6.2.2.1.3.1 Swing Check

These are the most popular of all check valves since they offer very little resistance to flow when in the wide open position. They are generally used in all piping where the pressure drop is of prime importance. Swing check valves are used for handling liquids, and can be installed in vertical (flow up) or horizontal position without impairing their performance. To allow for maintenance, swing check valves 8" and larger should not be installed in vertical pipe runs unless horizontal installation is not possible or feasible, or other applications where the reversal of flow is frequent, since this could cause the valve disk to fluctuate rapidly and result in "valve chatter."

6.2.2.1.3.2 Lift Check

Lift checks are based on globe valve body designs and as a result are available in either the regular, angle, or wye configuration. The regular is the most common, even though it has the highest pressure drop. The angle lift check is designed to be used in a 90° pipe bend. Installed in place of an elbow, this valve eliminates extra welds, and minimizes the additional pressure drop in the system. The wye lift check has the lowest pressure drop of the three lift checks but is still greater than most swing checks. It is not generally supplied in larger sizes because the weight of the disc on the guides can impair operation. In many designs wye lift checks are supplied with a spring above the disc to compensate for friction between the disc and guides.

All lift checks should be installed with the bonnet vertical. This means that regular lift checks should only be used in horizontal lines, and angle lift checks should be installed with the normal flow up. Wye lift checks can be installed in either horizontal lines or in vertical lines with the normal flow upward. Packless type globe and lift check valves should only be used in relatively clean environments as close tolerances promote damage to the seat area from slurries or particulates.

6.2.2.1.3.3 Tilting Disc Check

The tilting disc check (TDC) valve offers significant advantages over swing checks or lift checks, when high velocities are present, but perform poorly when return velocity and differential pressures are small. Without a large force in the reverse direction, TDC's with metal seats will not seal tightly. A TDC has less flow resistance than a lift check, but has a greater flow resistance than a swing check valve.

6.2.2.1.4 Plug Valve

The major application for this valve is to function as a complete shut-off. It may be used for throttling where accurate adjustment is not necessary. It is normally used in applications with low temperatures and pressures. The simple design offers easy operation, positive closure, and therefore lends itself to automatic control. In addition to the two-way valves, multiple port arrangements are possible for special applications such as flow diversion or blending. Plug valves are limited to low temperature, low pressure application (i.e., 300 lb. ANSI Class, 200°F).

6.2.2.1.5 Butterfly Valve

The butterfly valve has the advantage of combining in one valve, the block-valve (on/off) function with the throttling-control function. This could require a positioner to assure that proper valve control is obtained, but it does allow for combining the two functions into one valve. Also, the single wafer-disk that pivots in the body can easily be operated manually or automatically. The use of geared operators, levers, electric-motor drives, air-cylinder, or hydraulic-cylinder operators, or diaphragm operators is quite common for local or remote operation of butterfly valves.

6.2.2.1.6 Diaphragm Valve

Diaphragm valves rely on a flexible diaphragm to block fluid flow. Both high and low weir designs are available. The high weir causes less flexing of the diaphragm, but produces higher pressure drop.

Diaphragm valves can be used for throttling and to handle solids-laden streams as well as in clean service. They have no pockets to trap material. Pressures and temperatures are usually low (215 psig and 300°F maximum) because the diaphragm is not able to withstand extremes. Diaphragm failure and replacement can occur and cause considerable damage when handling corrosive chemicals.

6.2.2.1.7 Ball Valve

The ball valve is limited to those temperatures and pressures allowed by the seat material. They are not limited to a particular fluid material.

These valves are of the on-off variety. However, the ball valve provides not only tight shutoff but also good flow characteristics approaching those of an equal percentage valve. For this reason, it is often applied as a combination throttling and shut-off valve.

6.2.2.1.8 Relief Valve

Relief valves are required to protect against exceeding the design pressure of a system or component. The design pressure of the equipment the pressure relief valve is intended to protect will determine its set pressure. These valves are designed primarily for liquid service.

The function of the relief valve is to sense a pressure build up in the system and to provide a slow path for material out of the system. Pressure build up is sensed by a force-balance arrangement that consists of process pressure acting on a fixed area and opposed by a spring or weight.

The direct, spring-opposed pressure relief valve usually has an angle body. The inlet connection is suitable for the upstream temperature and pressure, while the outlet side and bonnet are designed for lower pressures. The outlet side is normally larger to allow for expansion of the flowing medium.

6.2.2.1.9 Safety Valve

Safety valves are generally used in steam service. When used in superheated steam service over 450°F, the body, bonnet, and spindle should be carbon steel or higher alloy material.

6.2.2.1.10 Safety-Relief Valve

This valve is an automatic pressure-actuated relieving device suitable for use either as a safety valve or relief valve, depending on the application. It is also used on the discharge of positive-displacement pumps and compressors for thermal expansion of liquids and gases. Lifting levers are required for hot water (greater than 140°F), air, and steam service.

6.2.2.1.11 Control Valve

The three major types of control valves; globe, butterfly, and ball are used in throttling applications. The throttling action is a function of the pressure-drop across the valve.

Cage guided globe valves are typically used for steam letdown or large differential pressure applications. Butterfly control valves would be used for steam or water service with a low to moderate differential pressure. Ball valves are general service, low differential pressure throttling devices that could be used in superheated steam lines or for corrosive process fluids.

6.2.2.1.12 Solenoid Valve

There are two types of solenoid valves - the modulation type and the shut-off (isolation) type. Modulation solenoid valves are normally used for small line sizes. Precautions for solenoid valves include:

A. Limiting interpass temperature when welding in-line.

B. Using in clean systems since many solenoid valves are pilot-operated and have small passages.

C. Installation in an upright position for proper operation.

6.2.2.2 Valve Orientation Considerations

6.2.2.2.1 Valve Types

6.2.2.2.1.1 Gate Valve

The gate valve is extremely versatile as an isolation valve. The use of pressure as the primary sealing force enables it to seal tightly at high pressures. Gate valves are designed to take advantage of differential pressures, using the resultant force to seal the disc. Where gate valves incorporate a secondary wedging force, they can be used to seal reliably at low pressures as well. In the absence of a differential sealing force, the wedging force provides the unit loading required for metal to metal sealing.

Because the sealing force is normal to the direction of disc movement, operation requires less force than most other valves. The force that must be overcome is mainly due to the friction of the disc being forced against the seat by the differential pressure. The actual force a gate actuator must overcome is a force equal to the differential pressure times a coefficient of friction, (generally 0.3 for a wedge gate and 0.2 for a parallel seat gate). This results in the use of a relatively small actuator on most gate valves. Small bypass valves are sometimes used to equalize pressure prior to opening large, high pressure valves.

Gate valves should not be used as throttling devices due to erosion at the edge of the disc and seat ring when they are exposed to the turbulence produced by the partially open gate.

6.2.2.2.1.2 Globe Valve

Globe valves are used as throttling devices. The streamlined surface that the plug presents to the flow, minimizes turbulence (and resulting erosion) and permits reliable control of the flow rate. The smooth profile is especially critical when high energy fluids must be controlled over a wide range. The high velocities through the seat area, when the valve is throttled, can cause severe erosion of any obstructions in the flow path. In addition to the potential damage to the disc, the turbulence created by using a valve not designed for throttling service can cause erosion of the adjacent body service.

The opposite unidirectional nature of the globe valve for throttling and shut-off should be carefully considered. These two functions should not be combined in a single valve if sealing and throttling are in the same direction. When the throttling function is required in one direction and shut-off is desired in the other, a globe valve is an ideal choice. Because globe valves have poorer flow characteristics (i.e., greater pressure drop), and require larger actuators than gate valves, they are not considered as good a choice for solely isolation service. Note that globe valves must be procured for their throttling service conditions. Also, they are not designed for large differential pressures in the reverse direction due to the tendency to unseat the disc.

6.2.2.2.1.3 Check Valve

Check valves are designed to prevent the reversal of flow in a line automatically. Where the flow in a line is in one direction and isolation is in the opposite direction, the ability of a check valve to close independently of any outside signal can be very useful.

Because the sealing force in a check valve is obtained solely as a result of differential pressure, obtaining a tight seal at low differential pressure is difficult, particularly with metal seated valves. The large unit loading necessary for a tight seal at low pressures is not present in a check valve, but when environmental conditions permit the use of a resilient seat material, the weight of the disc can sometimes provide enough force to seal. This aspect is useful where low pressure differentials exist.

6.2.2.2.1.4 Plug Valve

The plug valve is of the "block" or complete shut-off type. Several basic features make the plug valve ideal for power plant application. It has no projecting yokes or bonnets, no exposed threads, and no underhanging body to waste vital space. The plug valve can safely and efficiently handle gas and liquid fuel, boiler feedwater, condensate, and similar mediums.

The plug is the only movable member. The valve is opened by rotation with the plug turning on a seat. Rotation eliminates the need for raising and lowering a movable valve member, and protects seating surfaces from exposure to corrosive elements.

One feature of the plug valve is the quick opening and closing operation, a quarter turn fully opens or closes the valve. Valves are wrench, gear, air, or motor operated. Plug valves have a polymer base sleeve which limits normal operating fluid temperatures to approximately 200°F. They are not restricted to one-way flow, (i.e., the valve can be installed in either direction because it holds pressure in either direction).

6.2.2.2.1.5 Butterfly Valve

Butterfly valves often appear in modified form to suit requirements such as tight shut-off, tailored characteristics, better control performance, or higher rangeability.

They are normally used in isolation and moderate throttling applications for low pressure/temperature services. In leak-tight shutoff applications, soft seats should be specified. Advantages of butterfly valves are compactness and ease of installation. Two disadvantages are poor cavitation performance and the possibility of damage to the seat and disc when throttling at low flows.

6.2.2.2.1.6 Diaphragm Valve

This valve consists of three simple elements; the valve body, valve diaphragm, and valve bonnet assembly. The diaphragm in this valve serves as the closing, or seat, member as well as the partition that separates the valve working parts (bonnet) from the fluid passageway. The diaphragm is not used as a packing substitute, but instead is used as a dynamic seating element, and eliminates the necessity for conventional valve stem packing material.

The attribute of bubble-tight seating in this valve design results in its principal application where drip-tight, bubble-proof closure is required.

The standard elastomeric rubber-base diaphragm operating temperature is from 180°F to 200°F for special heat resisting diaphragms. The use of Teflon as a diaphragm material permits the use of the valve at temperatures up to 300°F.

6.2.2.2.1.7 Ball Valve

Ball valves are basically modified plug valves. The wall has a port opening that joins with the body in the open position. Ball valves are mainly used for on-off services, however, they can also be used satisfactorily for throttling service in low differential pressure applications. They are quick to operate, easy to maintain, require no lubrication, give tight sealing with low torque, and exhibit a pressure drop that is a function of the port size selected.

One disadvantage is that when closed, some fluid is trapped between the seats and in the hole of the ball, which might be damaging at high temperatures.

6.2.2.2.1.8 Relief Valve

Relief valves prevent overpressurization of process equipment and piping. Such valves operate automatically at a predetermined pressure to vent fluid and relieve the excess pressure.

The pressure-relief valve usually consists of an angle type body having an inlet flange at the bottom and an outlet flange at the side. The inlet flange is designed for inlet pressure and inlet temperature ratings. The larger outlet flange usually has a lower pressure rating.

6.2.2.2.1.9 Safety Valve

The overall design of the safety valve is similar to that of the relief valve. In steam, air, gas, and vapor services, the safety valve pops open when pressure reaches the set pressure. Pressure will continue to rise - usually 3% to 33% above the set pressure. After relieving (called blowdown), the disk reseats at about 4% below the set pressure.

6.2.2.2.1.10 Safety-Relief Valve

This valve incorporates the same basic design as the relief valve. Its function is to sense a pressure build up in the system and to provide a flow path from the system. Pressure build up is sensed by a force-balance arrangement that consists of process pressure acting on a fixed area and opposed by a spring.

6.2.2.2.1.11 Control Valve

Control valves are the basic regulatory devices in any process operation handling fluid streams. They are usually the same size or one size smaller than the upstream pipe size, never larger. Control valves are much smaller than line size when high pressure differentials have to be absorbed.

The three basic types of valves used for control valve design are globe valves, specially designed ball valves, and butterfly valves. Globe valves with cage style trim are standard for control valves. The cage offers valve-plug guiding for stability in the region where maximum pressure drop occurs.

6.2.2.2.1.12 Solenoid Valve

Solenoid operated valves, normally referred to as simply solenoid valves, get their name from the fact that they are actuated by a solenoid motor. The valve body is normally a globe style. Solenoid valves can be either on-off or modulating valves, although the latter is seldom used except for small valves. Actuation can be direct acting for moderate pressures or pilot assisted for high pressures. A major advantage of solenoid valves is that they can be seal welded to prevent external leakage.

6.2.2.2.2 Valve Body

A. Valves should be oriented with the stem vertical unless specifically permitted by the manufacturer's drawing (see **Figure 6.2.2-1**), or if required otherwise to comply with an overriding requirement.

B. Check valves must be oriented vertically up or horizontal unless specified otherwise by the valve manufacturer (see **Figure 6.2.2-2**).

C. Swing check valves may be placed in vertical runs providing the normal flow is upward. Swing check valves, 8" and larger should not be installed in vertical pipe runs unless horizontal installation is not possible or feasible from other good installation practices. For swing check valves adjacent to fittings, the plane of the fitting should be perpendicular to the clapper arm hang pin. If the requirements of **Section 6.2.2.3.1.1** cannot be met, as a minimum, a 6" spool is needed between a swing check valve and a downstream valve or fitting to prevent clapper arm interference.

FIGURE 6.2.2-1

Valve Body Orientation

The preferred valve body orientation is with the bonnet vertical, in a horizontal pipe run. This produces a symmetric natural balance in the valve yielding minimum wearing forces on moving valve parts. Also, stresses are greatly reduced with the valve in this orientation.

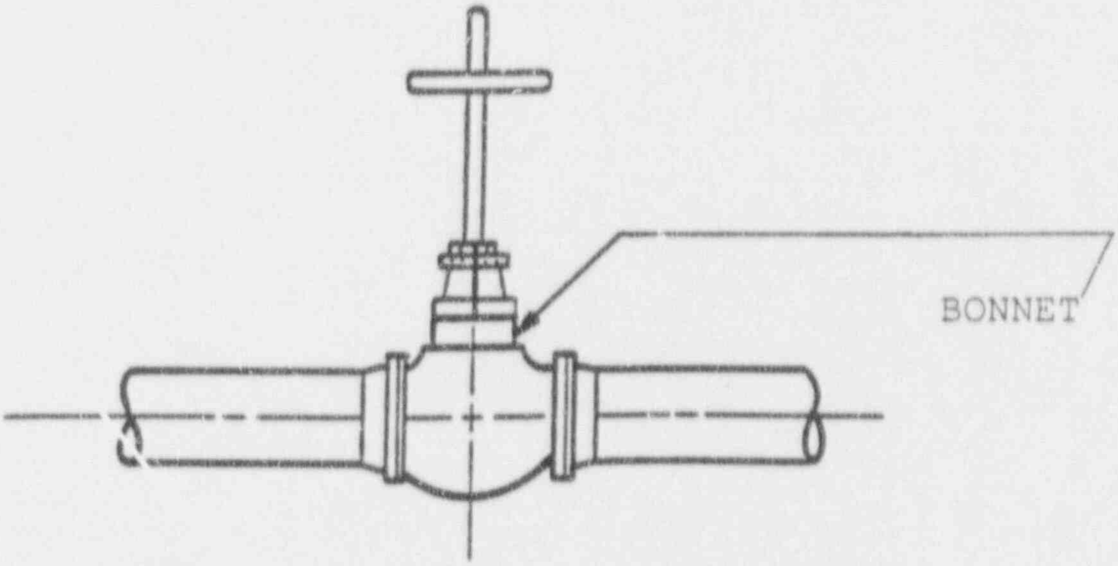

PREFERRED VALVE ORIENTATION

FIGURE 6.2.2-2

Check Valve Body Orientation

Check valves should be placed in horizontal pipe runs with the bonnet vertical. While not recommended, most check valves may be placed in vertical runs, provided that the normal flow direction is vertical.

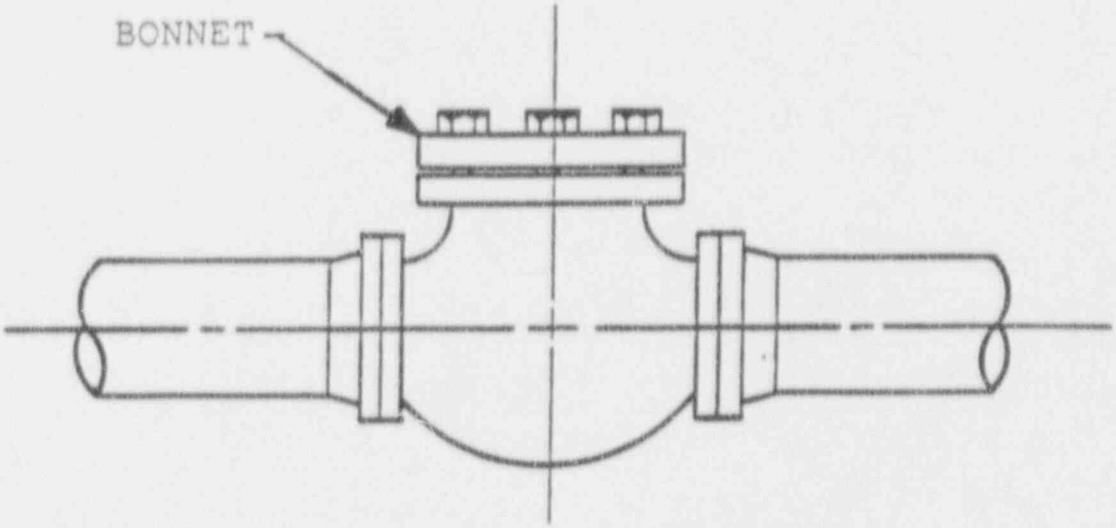

PREFERRED CHECK VALVE ORIENTATION

D. All lift check valves should be installed with the bonnet pointing up. Therefore, regular lift check valves should be located in horizontal piping, and angle lift check valves should be located with normal flow up. Wye lift check valves may be located in either horizontal piping or vertical piping if the normal flow is upward.

E. Relief valves should always be oriented with the bonnet vertical (see **Figure 6.2.2-3**).

F. Large butterfly valves (36" and up) should have at least 8 diameters of straight pipe both upstream and downstream (see **Figure 6.2.2-4**). If this cannot be met, the following guidelines should be used.

   1. Adjacent to elbow, the valve shaft should be in the plane of the elbow centerline.

   2. Adjacent to centrifugal pump discharge: with the pump shaft vertical the valve shaft should be horizontal, and with the pump shaft horizontal, the valve shaft should be vertical.

   3. Adjacent to vertical lift pump, the valve shaft should be vertical.

G. Control valves should have a 6" minimum spool piece to allow for hanger attachment and/or inservice inspection requirements between the reducer (if required) and valve body. Note that this reducer does not violate the straight run requirements.

H. Gate valves, which are subject to temperatures in excess of 200°F, 2½ inches and larger, should be oriented with the valve stem horizontal or above to prevent overpressurization of the valve due to possible heat expansion of entrapped fluid in the bonnet cavity.

I. Valves should be oriented with the bonnet vertical to prevent creation of crud traps (See **Figure 6.2.2-5**).

J. When locating valves, the orientation should allow for required valve disassembly and reassembly activities (see **Figure 6.2.2-6**).

6.2.2.2.3 Operators

6.2.2.2.3.1 Electrohydraulic

Electrohydraulic valves should be installed with the operator stem vertical.

FIGURE 6.2.2-3

Relief Valve Body Orientation

Relief valves should be oriented with the bonnet/spring vertical.

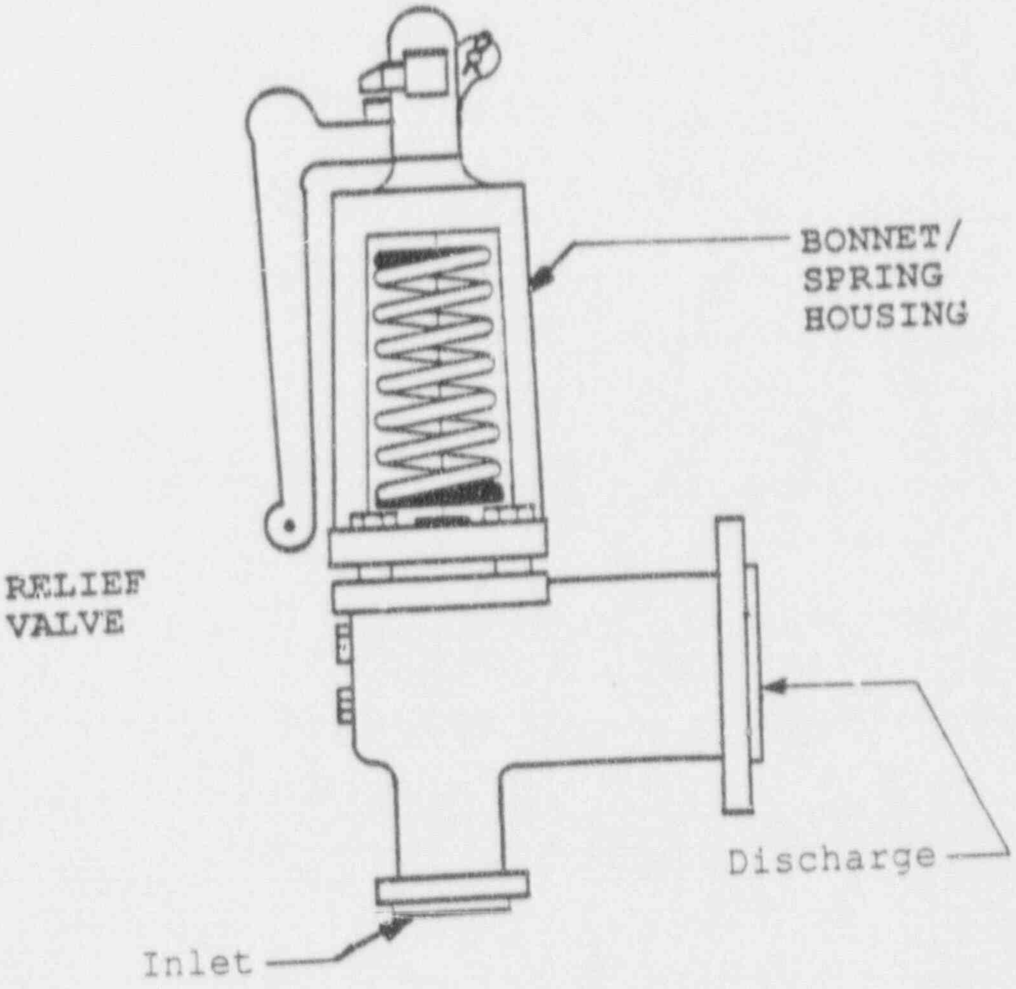

FIGURE 6.2.2-4

Butterfly Valve Configuration

Butterfly valves should have eight pipe diameters of straight both upstream and downstream of the valve.

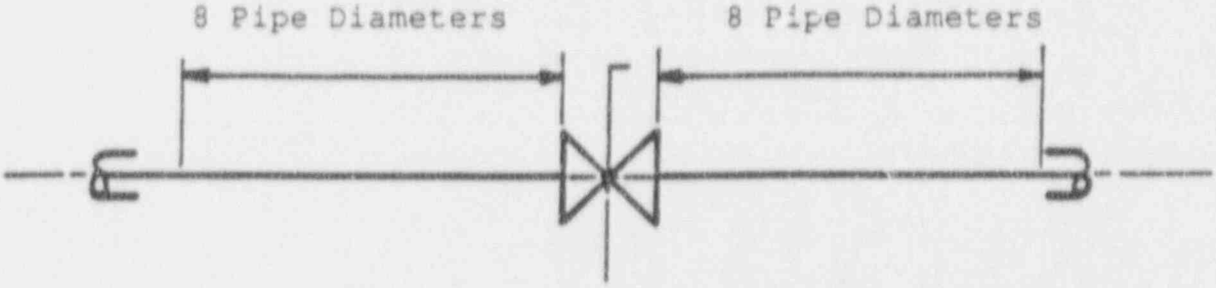

BUTTERFLY VALVE

FIGURE 6.2.2-5

Valve Bonnet Orientation

Valve bonnets create crud traps when installed below the pipe centerline. With the bonnet vertical, the valve is better able to drain. This is especially important in radwaste systems.

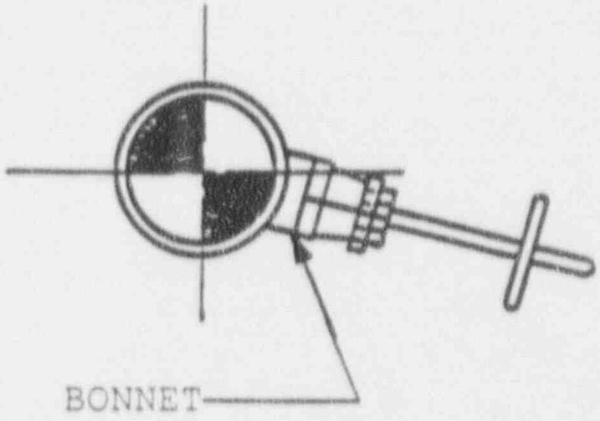

NON-PREFERRED VALVE ORIENTATION

FIGURE 6.2.2-6

Non-preferred Bonnet Orientation

Valve reassembly is extremely difficult with the bonnet facing downward. Valve parts such as rings, seals, springs, and sleeves must be inserted in the valve before the bonnet and stem are inserted.

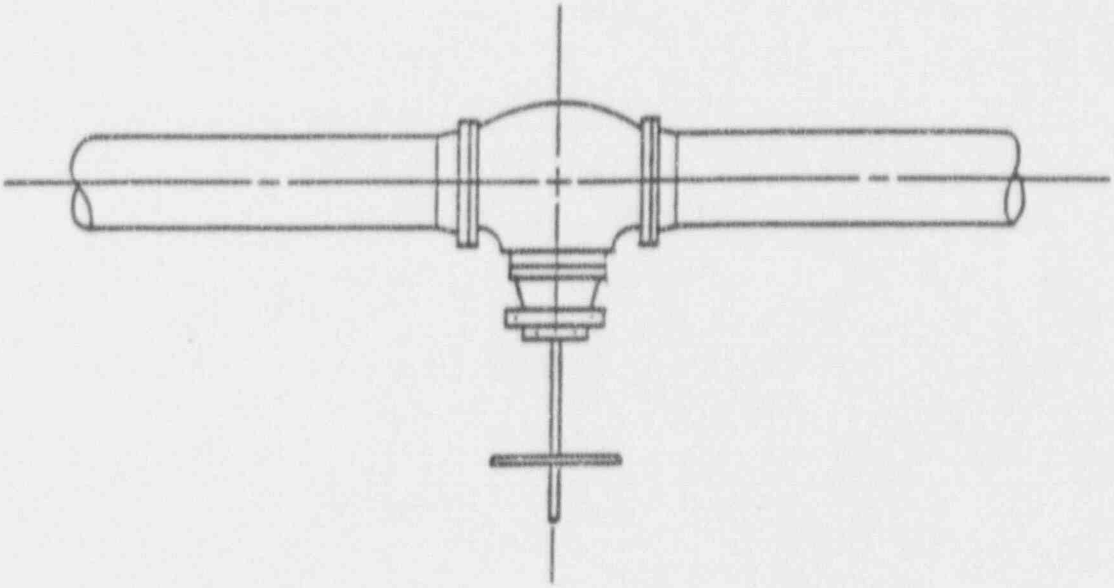

EXTREMELY DIFFICULT TO HOLD SMALL PARTS IN PLACE DURING REASSEMBLY

NON-PREFERRED CONFIGURATION

6.2.2.2.3.2 Electric Motor-Operated

Electric motor-operated (EMO) valve operators should be oriented such that neither the motor nor limit switch housing is below horizontal. If, due to other restrictions, it is not possible to meet these criteria, it may be necessary to rotate the operator on the valve until these criteria are satisfied, unless shown to be acceptable by the valve manufacturer.

6.2.2.2.3.3 Chain Wheel Operators

Valves to be equipped with chain operators can be rotated to horizontal unless specifically stated otherwise by the manufacturer's drawing. If a listing is not available which identifies chain operated valves, the following guidelines can be used to determine the possibility of a valve requiring a chain operator.

A. The valve is operated on a routine basis (monthly or more often).

B. The valve is operated in the plant startup sequence.

C. The valve is operated in the plant shutdown sequence.

D. The valve is operated for emergency bypass and/or isolation purposes.

6.2.2.2.3.4 Pneumatic Piston Operators

Valves equipped with pneumatic piston operators should be limited to vertical orientations. Orientations other than this will severely reduce the operator life.

6.2.2.2.4 End Connections

Valve end connections should be selected considering removability, welding, and bolting access.

6.2.2.2.5 Manufacturer's Instructions

Manufacturer's instructions should also be considered, in addition to these general routing guidelines.

6.2.2.3 Valve Location Considerations

6.2.2.3.1 Valve Arrangement

6.2.2.3.1.1 Line Valves

Generally, valves should not be located adjacent to fittings, (See **Figure 6.2.2-7**), especially with corrosive fluids because of the turbulence produced at the fittings. Valve performance and life is greatly increased by adding straight runs of pipe before and after valves. Spool pieces between fittings and valves aid in supportability. Optimum length spool pieces upstream and downstream of the valve would be 4 pipe diameters.

6.2.2.3.1.2 Butterfly Valves

Ideally, butterfly valves should have at least 8 pipe diameters of straight pipe both upstream and downstream of the valve (see **Figure 6.2.2-4**).

6.2.2.3.1.3 Control Valves

Control valves should have at least 10 pipe diameters of straight pipe upstream and 8 diameters downstream, for maximum pressure recovery (see **Figure 6.2.2-8**). If these cannot be met, a minimum of 4 pipe diameters upstream and downstream may be used.

Where the minimum requirements of 4 pipe diameters upstream and downstream cannot be achieved, piping should be rerouted to conform to these requirements.

For high flashing flow situations, such as into a flash tank or condenser, the control valve should be placed as close as possible to the vessel with no directional changes after the valve.

6.2.2.3.2 Maintenance

The valve location can hinder maintenance without proper design considerations. The following guidelines are applicable to all valves, but first consideration should be given to valves with operators, switches, or other types of moving parts, or electric controls which will be more likely to require maintenance.

6.2.2.3.2.1 Location Requirements

A. Frequently operated valves should be more accessible than infrequently operated valves. For the purposes of this criteria, infrequently operated valves are listed below. All others should be considered frequently operated valves.

   1. Drain Valves
   2. Vent Valves
   3. Equipment Isolation Valves
   4. Pressure Test Valves
   5. Local Sample Connection Isolation Valves
   6. Tell-tale Isolation Valves
   7. Relief Valves

FIGURE 6.2.2-7

Line Valve Configuration

FITTINGS PRODUCE TURBULENCE IN THE FLOW AREA

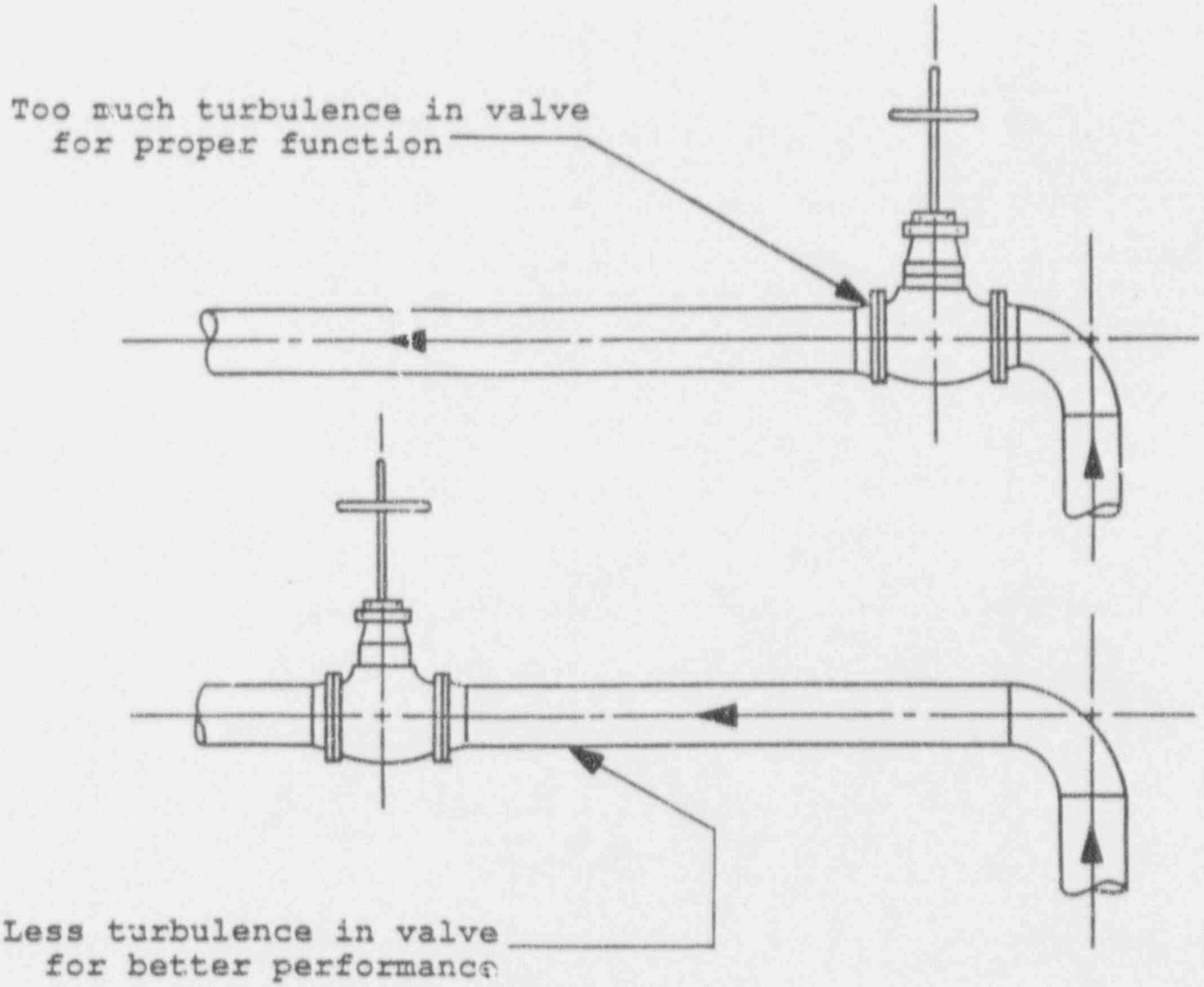

FIGURE 6.2.2-8

Control Valve Configuration

It is preferred to have ten pipe diameters of straight pipe upstream of the control valve and eight pipe diameters downstream of the valve. Placing control valves immediately adjacent to fittings should be avoided.

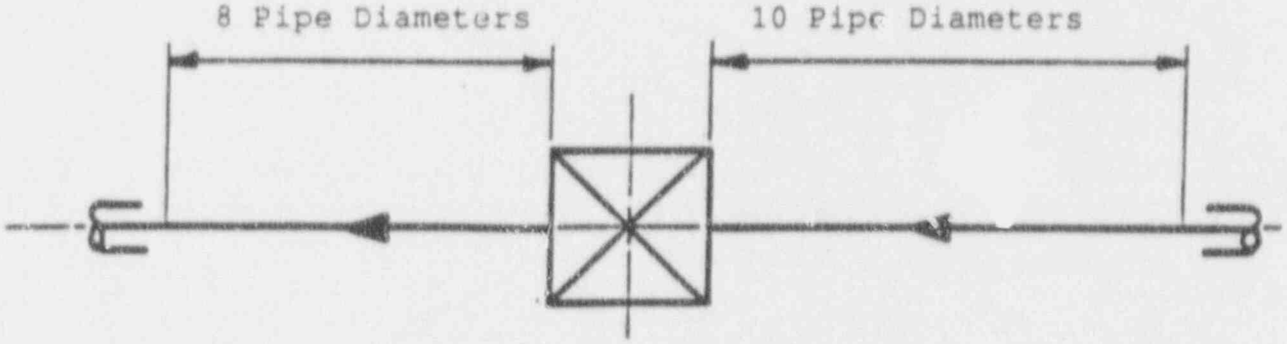

CONTROL VALVES

B. Valves should not be located next to walls where they are not easily accessible.

C. Valves should be placed close to floors or operating platforms to make them more accessible, but not in maintenance access areas.

D. Valves should accommodate reach rod configurations.

6.2.2.3.2.2 Removal Requirements

A. Maintenance and Removal - For valve maintenance and removal, manufacturer's specifications should be reviewed to determine if special tools are required. Space should be provided for use of these tools.

B. Disassembly - Space should be allowed for disassembly of valves. Disassembly dimensions should be shown on valve outline drawings.

C. Flanges - For flanged valves with stem leakoffs, flanges or another type of disconnect should be provided for the stem leakoffs to eliminate cutting and rewelding.

D. For valve packing leakoffs, tubing connections should be used instead of flanges.

E. Clearance should be provided above check valves for pulling internals during maintenance. This is especially important for ASME Class 1 check valves.

F. Clearance should be provided for pulling relief valves which must be bench tested periodically.

G. Routing piping over and around valves, blocking their access, should be avoided.

H. Relief valves should always be flanged.

6.2.2.3.2.3 Valve Type

6.2.2.3.2.3.1 Gate Valve

Most gate valves will at some point require reworking of the seating surface. Allowing adequate maintenance space will aid in the ability to relap the valve seat in-line. Proper maintenance pull spaces also allows quick, easy removal. It is extremely important that gate valves 2½" and larger with service temperatures above 200°F be oriented with the stem horizontal or above (vertical is preferred). Orientations other than this could cause the valve to become overpressurized due to possible heat expansion of entrapped fluid in the bonnet cavity.

6.2.2.3.2.3.2 Globe Valve

Globe valves are fairly low maintenance items. Replacement screw-in type seats improve maintenance greatly. The horizontal globe is the easiest to maintain when the stem is vertical. It can be installed in either horizontal or vertical lines with flow in either direction. The Y-globe can also be installed in either horizontal or vertical lines. In vertical lines it is not recommended for installation with the stem angled down. Besides maintenance concerns, the bonnet becomes a crud trap. The angle globe allows the replacement of an elbow with a valve and takes advantage of the 90° bend. This eliminates welds, reduces pressure drops, and efficiently uses available space. When used for throttling, the flow in the vertical leg should be upward, and for isolation service should be downward. The Y-angle globe installation should be opposite that of an angle globe.

6.2.2.3.2.3.3 Check Valve

Swing check valves can be installed in either horizontal lines or in vertical lines with the normal flow upward. Swing checks should not be used in lines where the flow pulsates or fluctuates frequently without special attention being paid to the hinge bearing areas. The angle lift check is installed in place of a 90° pipe bend. Installed in place of an elbow, this valve eliminates welds and minimizes the additional pressure drop in the system. All lift checks should be installed with the bonnet pointing up. This means that regular lift checks should only be used in horizontal lines, and angle lift checks should be installed with the normal flow up. Wye lift checks can be installed in either horizontal or vertical lines with the normal flow upward.

Check valves should not be installed more than 45° from vertical. Maintenance becomes more difficult when installed below the horizontal.

Swing check valves downstream of fittings (i.e., elbows, tees) should have the fitting oriented to the plane perpendicular to the swing check valve clapper arm hang pin.

6.2.2.3.2.3.4 Plug Valve

Plug valves can be used in vertical or horizontal piping and for two-way flow. Plug valves are fairly low maintenance items which can be reclaimed after extended use by a simple resleeving process. Sufficient maintenance space above the valve should be provided to permit in-line resleeving.

6.2.2.3.2.3.5 Butterfly Valve

Butterfly valves can be used in either vertical or horizontal piping and for two-way flow. The amount of maintenance required depends on the type of operation, process fluid, and the seating material.

The valve stem should be in the same plane as the upstream fitting. This allows loading of the valve disc by the process fluid which minimizes torque on the disc.

6.2.2.3.2.3.6 Diaphragm Valve

Diaphragm valves can be used in either vertical or horizontal piping and for two-way flow. The bonnet should remain above the horizontal to eliminate the creation of a crud trap.

The diaphragm acts as a part of the seat and as a separating member of the bonnet, eliminating the need for packing. The three element construction has the advantage of permitting in-line maintenance without requiring removal and it eliminates stem repacking, seat grinding, and the necessity for selective fits during reassembly.

Note that typical vendor recommendations are that diaphragms be replaced for all valves at five year intervals. Each time the diaphragm is replaced, the stem travel stop should be reset. Therefore, ample space should be provided to allow this maintenance to be performed. Also, placement of these valves in high radiation zones should be minimized.

6.2.2.3.2.3.7 Ball Valve

Ball valve maintenance usually requires the installation of new seat seals, a new ball and stem, new packing, gaskets, bolts, and nuts. [illegible] the remachining of ball valve components is necessary. Generally, [illegible] proper seating can be corrected in-line.

These valves can be used in either vertical or horizontal piping and for two-way flow.

6.2.2.3.2.3.8 Pressure Relief Valve

Pressure relief valves are relatively low maintenance items, having a simple design and few moving parts. However, provisions for removing these valves for bench testing should be provided.

The inlet piping on relief valves, safety valves and safety-relief valves should be at least equal in area to the valve inlet conditions. Safety valves on power boilers must be mounted on nozzles directly connected to the boiler without intervening pipe. Otherwise, relief valves and safety-relief valves protecting vessels may have their inlets connected to a common piping header.

Pressure relief valves should be mounted upright with the spindle in the vertical position in such a manner that liquid does not accumulate on the discharge side of the valve.

Relief valve discharge piping should be oriented and routed to minimize the valve backpressure. The backpressure should be verified to be within the valve manufacturer's allowables. Safety valve discharge piping which could contain steam should be routed to drain any condensation to prevent water slug damage during valve actuation.

6.2.2.3.2.3.9 Control Valve

For in situ maintenance, clearance space is required below and above the valve for removal of the seat, plug, actuator cover, spring, and yoke. Clearance space requirements should be obtained from the manufacturer's drawings.

The best position for a control valve is with the stem vertical. A control valve can operate in angular, horizontal, or vertically downward position. The actuator determines the best operating position. Large angle control valves are an exception; a horizontal position is the most practical.

6.2.2.3.2.3.10 Solenoid Valve

The best orientation is with the stem vertical (pipe horizontal) for both operability and maintenance. Space should be provided above the valve to permit disassembly.

6.2.2.3.2.3.11 Pressure Seal Valve

Available pressure seal valves are gate, globe, and check valves, 600 lb. ANSI Class and greater, 2½ inch and larger. These valves should be in a vertical orientation to facilitate disassembly/reassembly. Correct line-up of the body and bonnet is critical and orientation in any other position hinders proper assembly. Space above the valve is required to allow maintenance.

6.2.2.3.3 Operability

A. Reach rods should be used for remote actuation of infrequently operated valves which require shielding. This allows valve operation from behind the safety of a shielded wall.

B. Manually operated valves more than 5 feet above the floor should be oriented such that they can be equipped with a chain operator.

6.2.2.3.4 Accident Accessibility

Manual valves requiring operation during an accident should be in low radiation areas or have provisions for temporary shielding.

6.2.2.3.5 Equipment Proximity

The valve function should be considered in its placement (e.g., heat exchanger isolation valves should be in the proximity of the heat exchanger). Also, valves that are normally operated together should be in close proximity.

6.2.2.4 Seismic Acceleration

Valve seismic accelerations should not exceed allowable vendor allowables. In lieu of specific values, generic seismic valve accelerations may be used provided the valve is specified to these seismic acceleration limits.

6.2.2.5 Water Hammer Considerations

Valve specifications should specify any limitations on valve operating times to preclude water hammer.

6.2.3 SUPPORT GUIDELINES

.2.3.1 General Guidelines

In order to avoid costly support/restraint (S/R) rework and reanalysis, the designer should follow these layout guidelines for either new systems or modifications. Compromises to these guidelines are sometimes necessary but doing so risks creating other complications, such as awkward S/R design and interferences.

One of the goals of the System 80+ piping design effort is the development of a standard piping support system for all sites. If the guidance provided herein proves to be too conservative to uphold this goal, project management must be consulted.

6.2.3.1.1 Grouping and Locations

A. Piping should be routed close to structures (ceilings, walls, columns, floors) which can be used for support attachment.

B. When possible, piping should be grouped for common supports. Interactions should be minimized by separating non-seismic and seismic piping. See Section 6.1.5.1 for non-seismic interactions. See Section 6.2.3.5.2.6 for interactions between seismic and non-seismic piping.

C. In pipe groupings, a horizontal or vertical pattern or grid should be maintained. The pipe bottoms should be located at the same elevation in each horizontal row to facilitate common vertical supports (see Figures 6.2.3-1 and 6.2.3-2).

D. When possible, piping should be separated or grouped by temperature. This will ensure similar thermal performance for gang support design.

6.2.3.1.2 Clearances

A. A 12" minimum clearance should be provided near walls and columns for clamp and support attachment (see **Figure 6.2.3-3**).

B. A minimum 12" vertical clearance should be provided to floors and ceilings.

C. Sleeves should be located a minimum of 12" from the corners of walls (see **Figure 6.2.3-4**).

D. For high temperature (≥200°F) seismic piping, the lateral and vertical minimum clearance to support points should be increased to 3 feet on pipes smaller than 12" nominal pipe size (NPS), and to 4 feet on pipes 12" NPS and larger to allow for installation of snubbers.

E. Where space permits, a 12" minimum lateral and vertical clearance should be maintained between pipes in groupings except for high temperature seismic piping where the provisions of **Section 6.2.3.1.2.D** could necessitate staggering of pipe locations (see **Figures 6.2.3-1 and 6.2.3-5**).

F. For high temperature piping where large vertical movements are expected, spring supports and, for seismic lines, vertical snubbers could be required. In this case, additional vertical clearance should be provided above or below the piping (see **Figure 6.2.3-6**).

G. **Figures 6.2.3-7 through 6.2.3-10** show typical support/restraint standard components. **Figures 6.2.3-11 through 6.2.3-23** show typical support/restraints.

6.2.3.1.3 Piping

A. Piping runs should be avoided below large ducts, cable trays, or other wide obstructions where the line would be supported from above (see **Figure 6.2.3-24**).

B. Piping should not be routed near concrete block walls if possible.

C. Piping should be routed along embedded plates as much as possible.

FIGURE 6.2.3-1

Support Grid Pattern

When adding pipe, a horizontal or vertical pattern should be maintained.

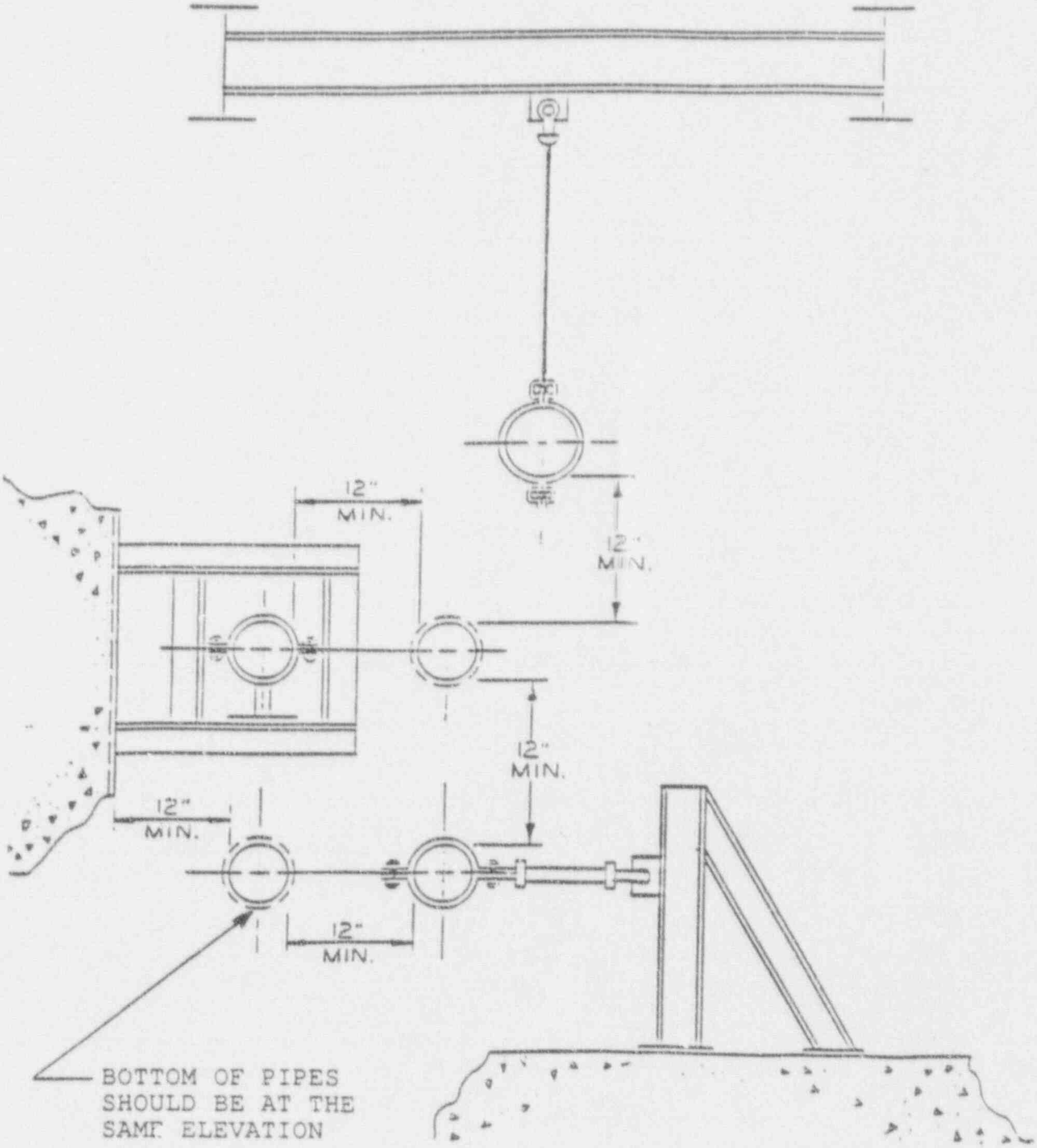

FIGURE 6.2.3-2

Typical Support Grid

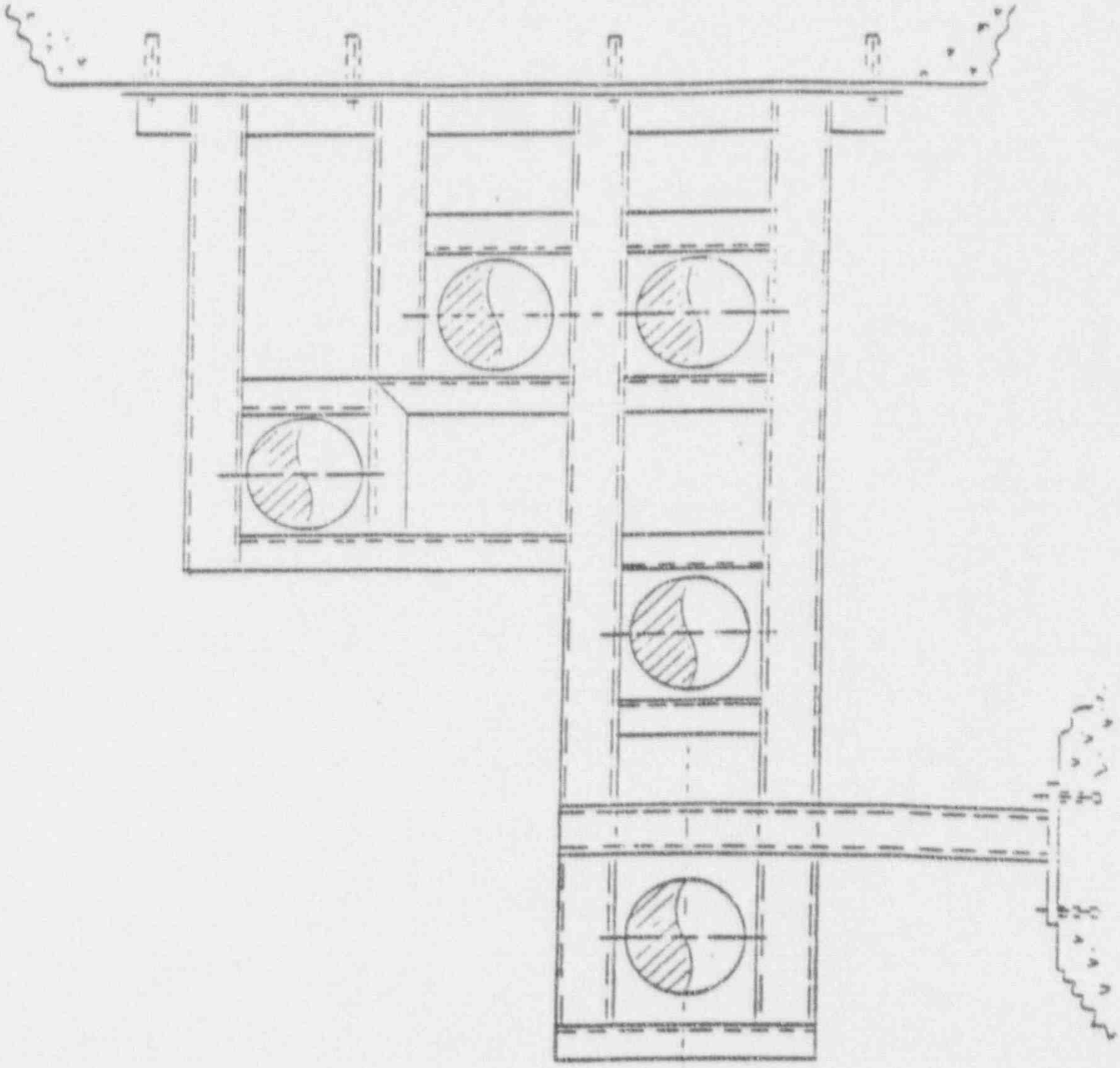

FIGURE 6.2.3-3

Wall Column Pipe Clearance

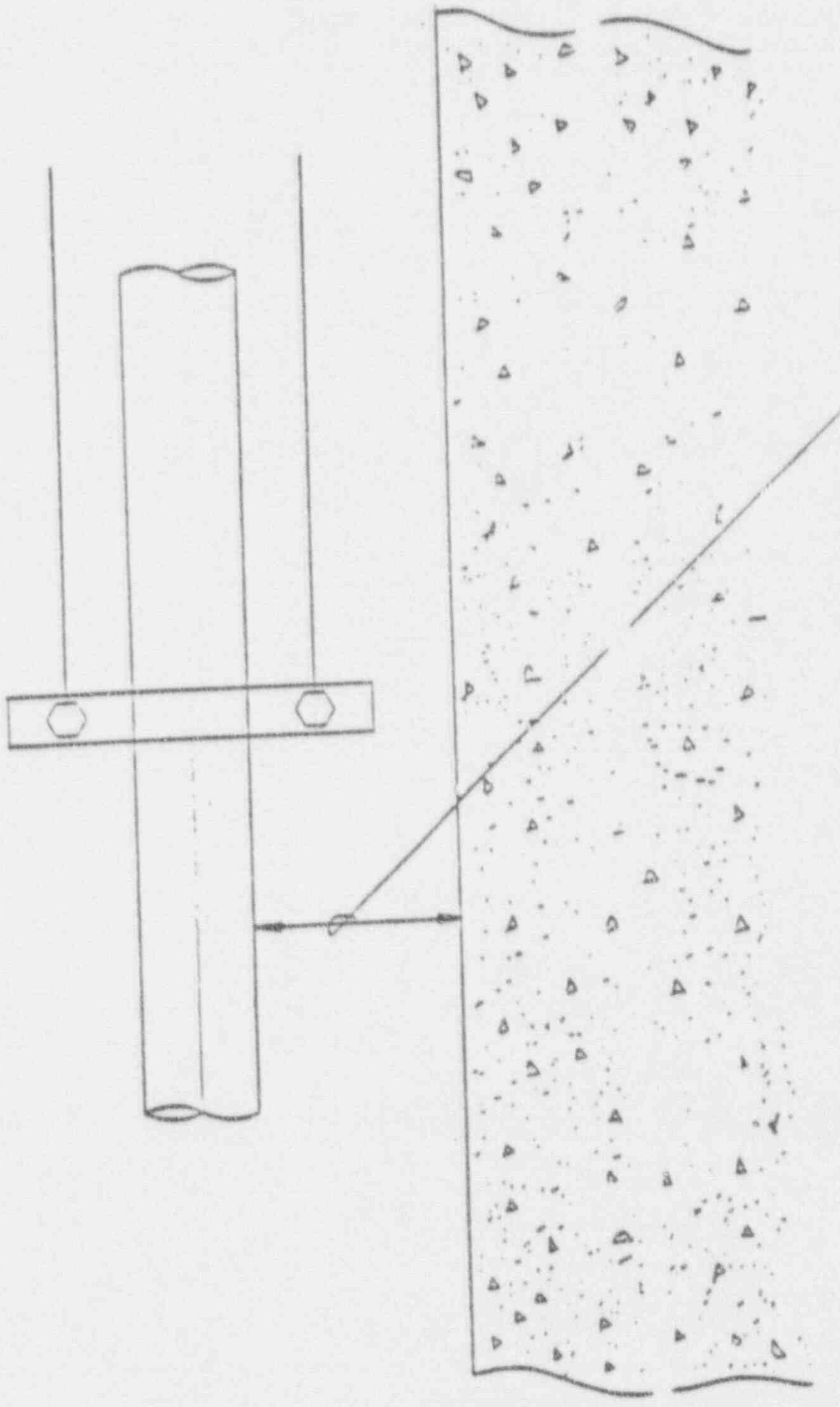

Long risers should be a minimum of 1 foot from wall for clamp and support attachment.

FIGURE 6.2.3-4

Sleeve Clearances

Sleeves should be at least 12" from the corners of walls.

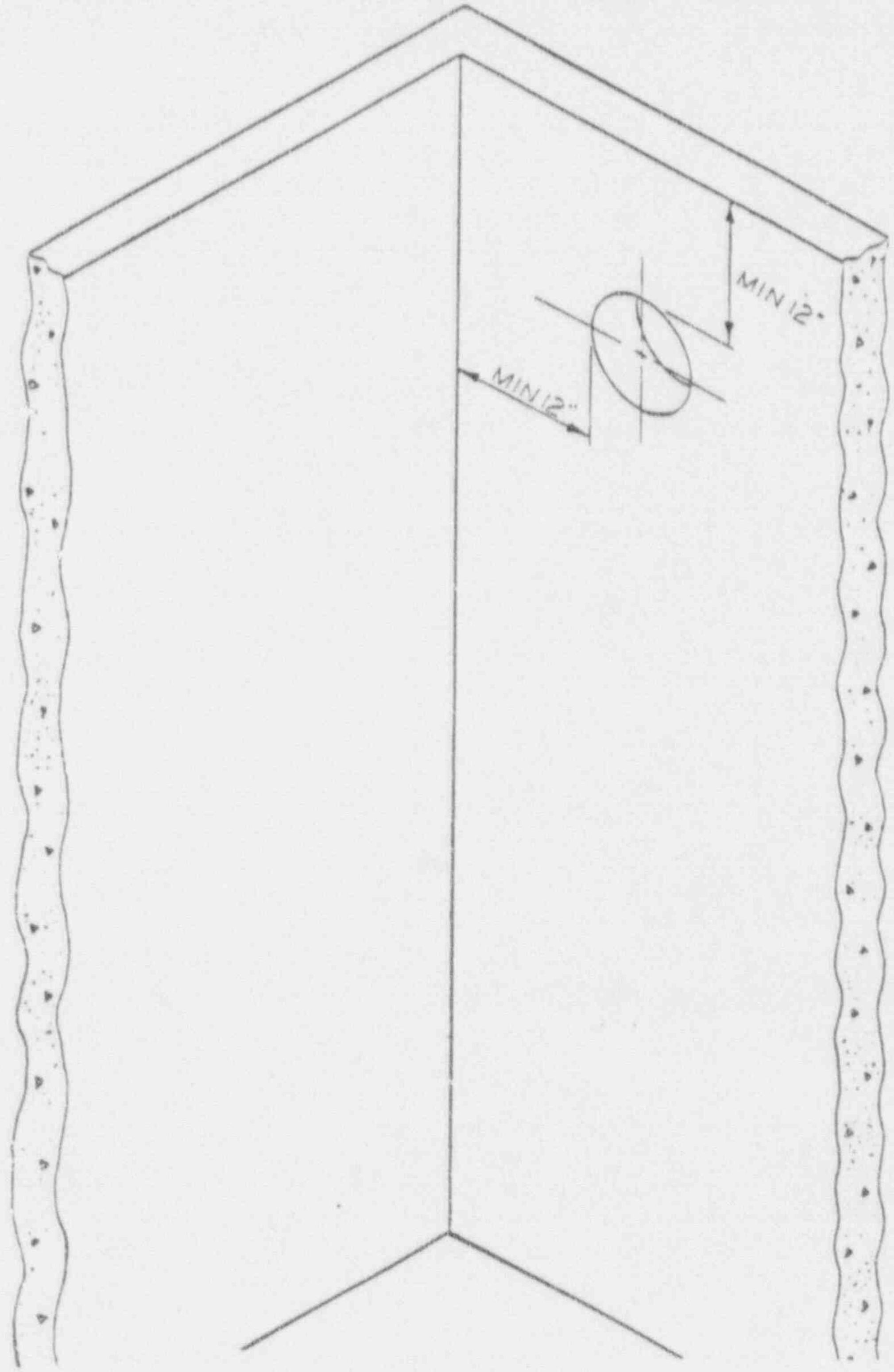

FIGURE 6.2.3-5

Vertical Clearance Between Pipes

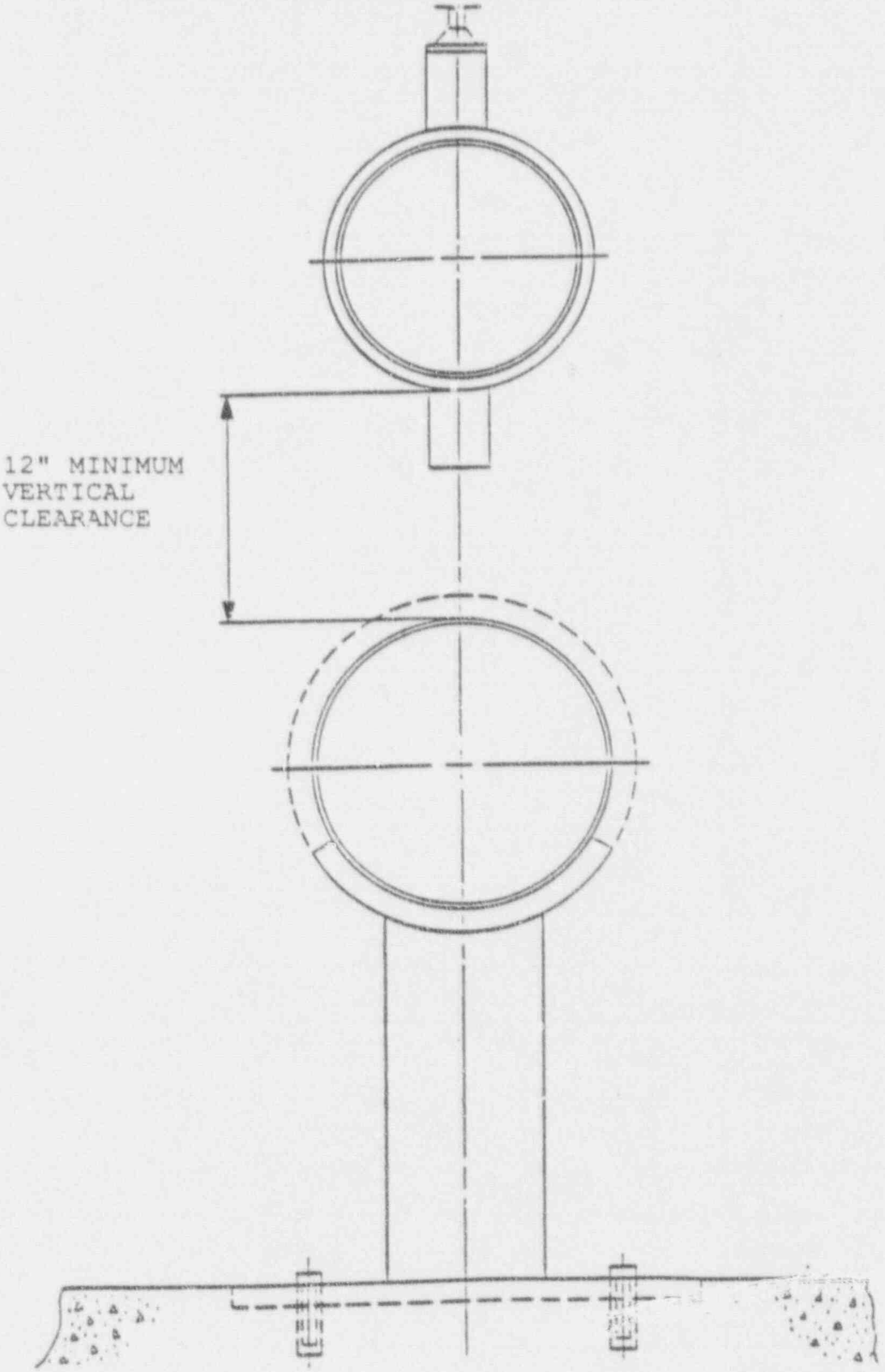

FIGURE 6.2.3-6

Non-preferred Configuration for Piping With Large Movements

Pipes expected to have large displacements should not be run one above the other because the upper pipe blocks space required for spring supports and snubbers for the lower piping.

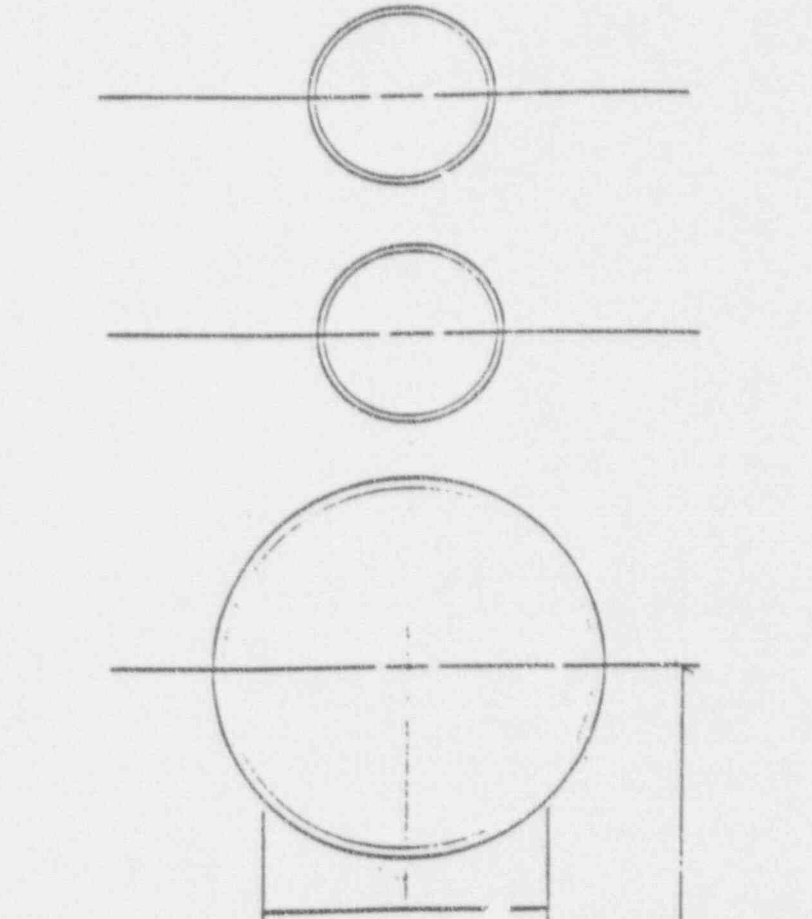

FIGURE 6.2.3-7

Typical Standard Hanger

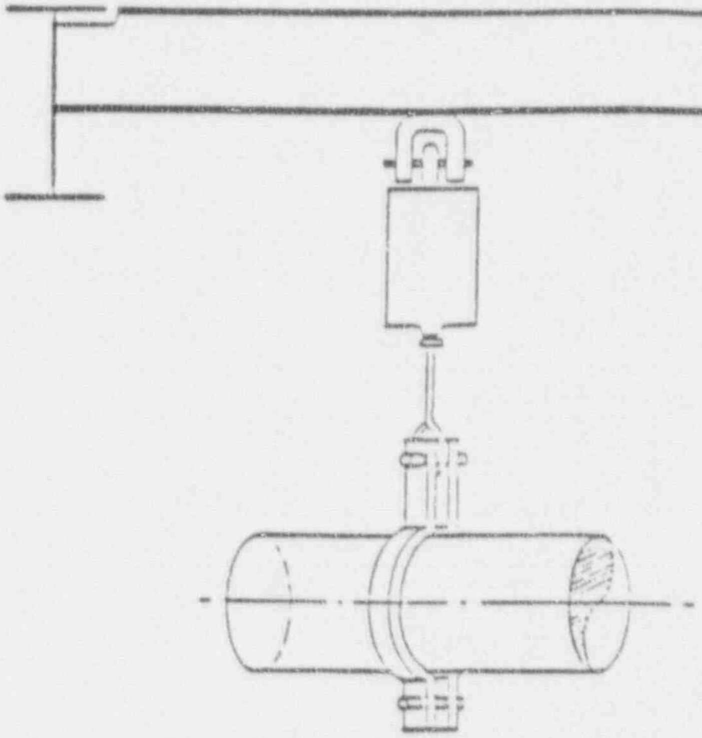

SPRING HANGER

FIGURE 6.2.3-8

Typical Standard Hanger

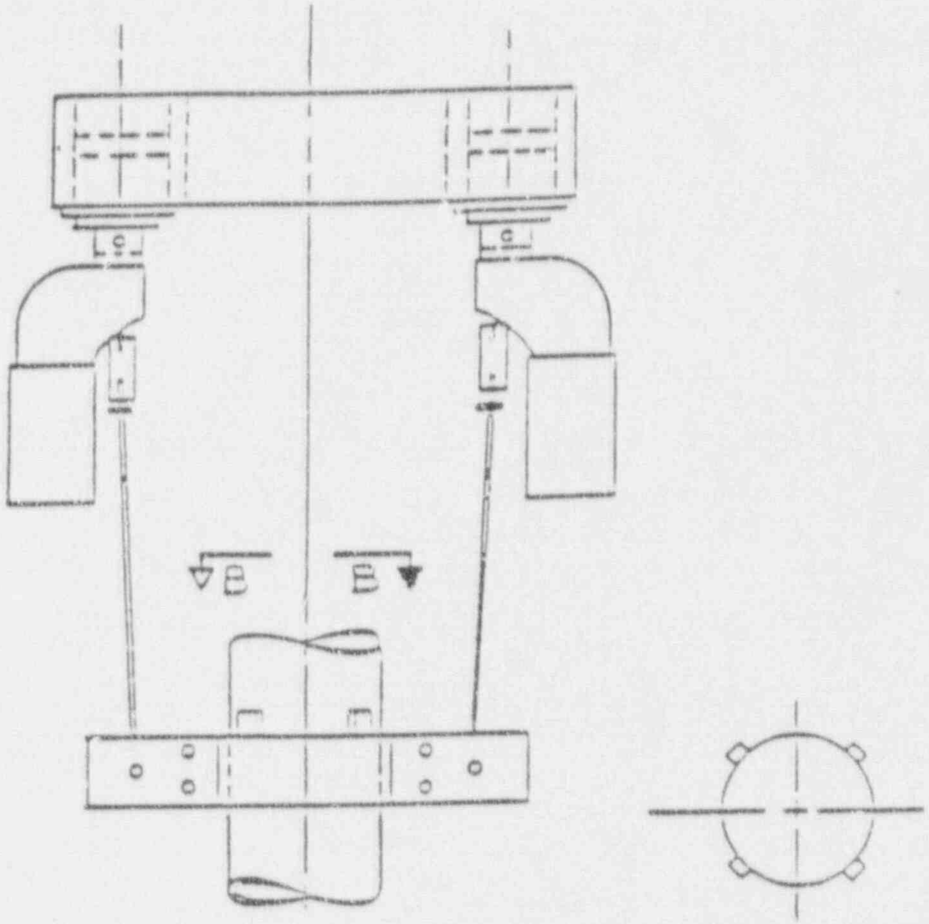

ELEVATION

PLAN B-B

CONSTANT SUPPORT HANGER

FIGURE 6.2.3-9

Typical Standard Srubber

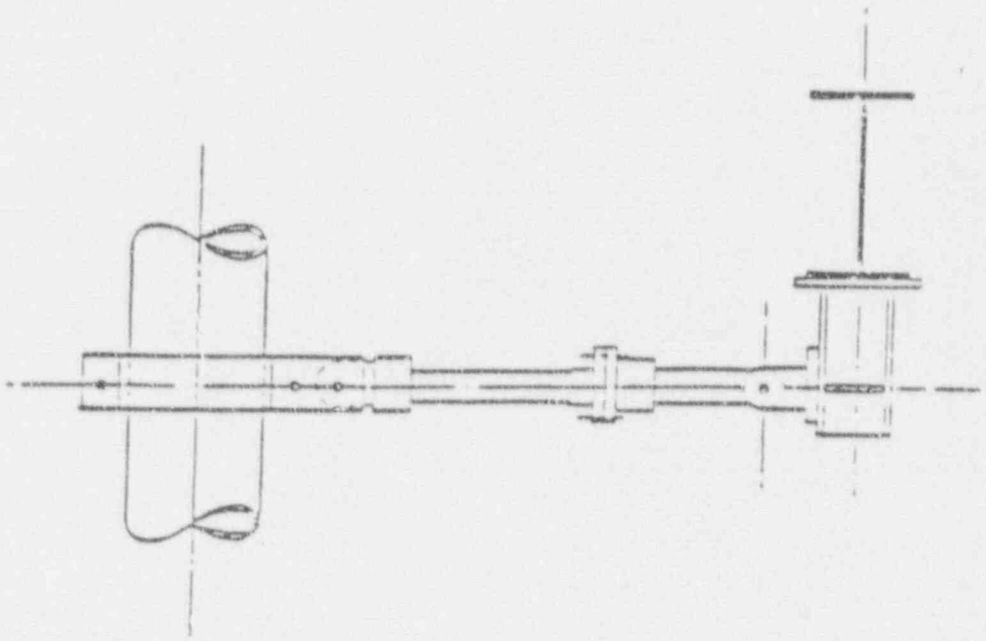

FIGURE 6.2.3-10

Typical Standard Snubber

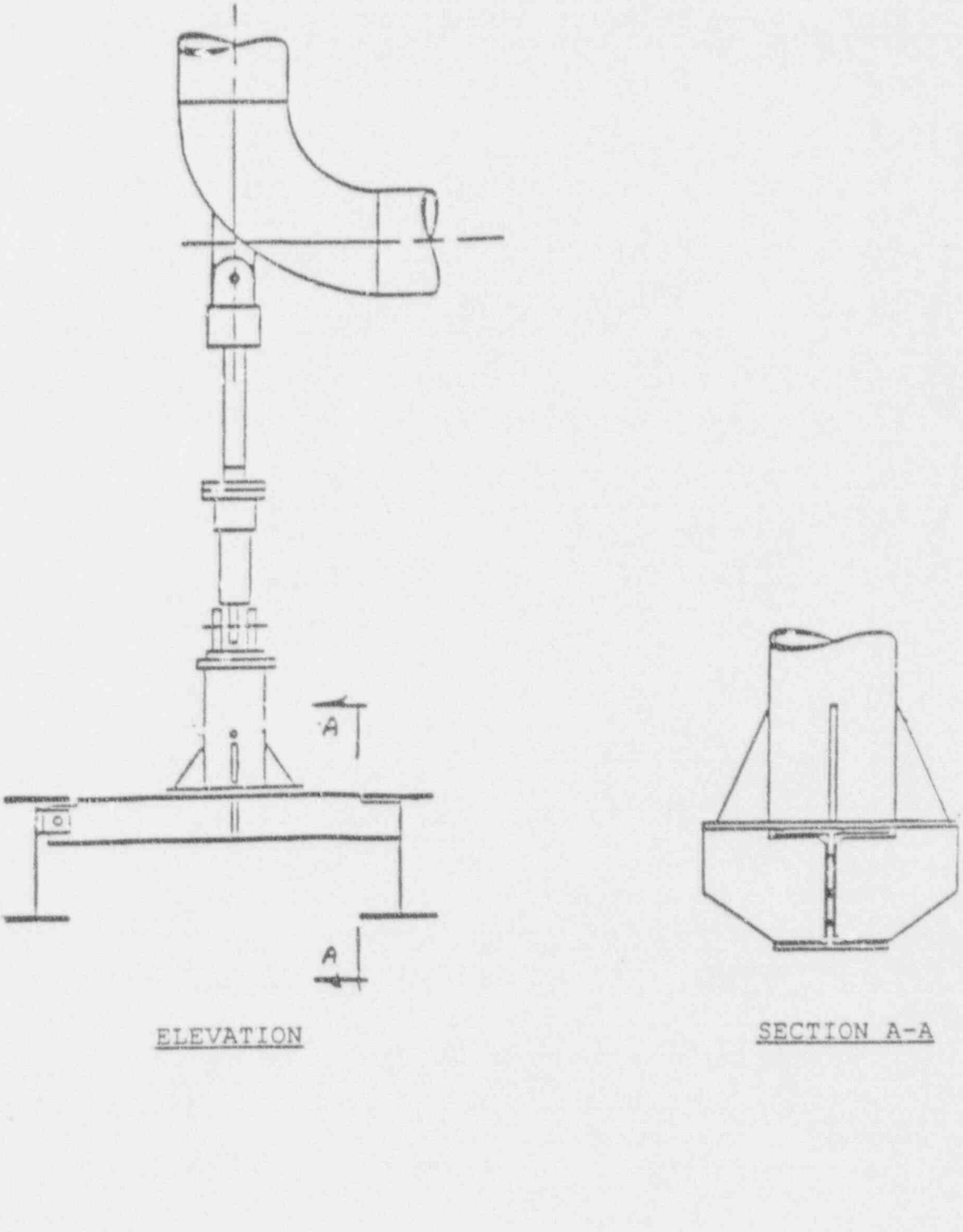

ELEVATION

SECTION A-A

FIGURE 6.2.3-11

Typical Support/Restraint

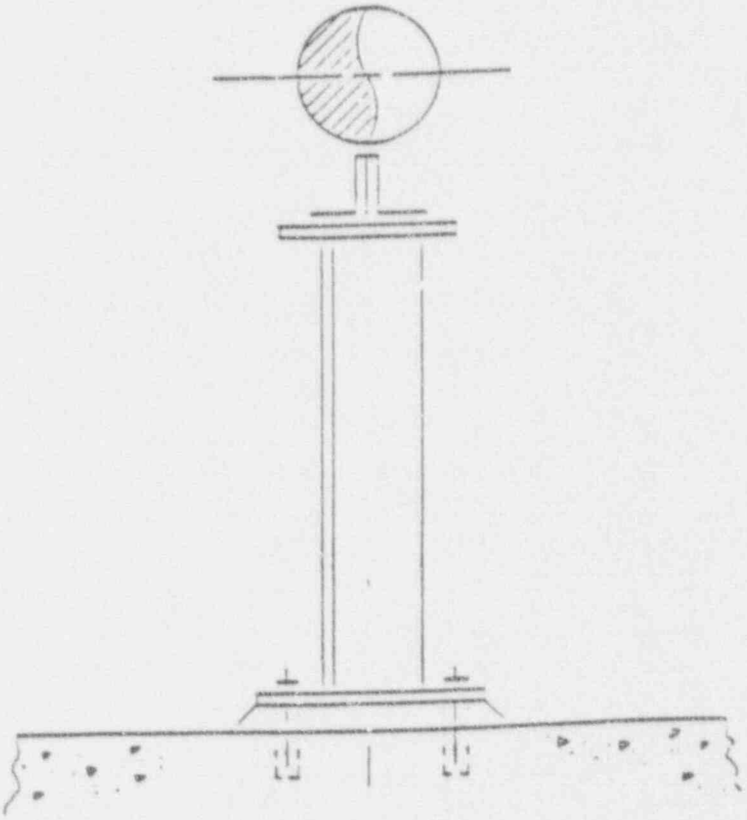

FIGURE 6.2.3-12

Typical Support/Restraint

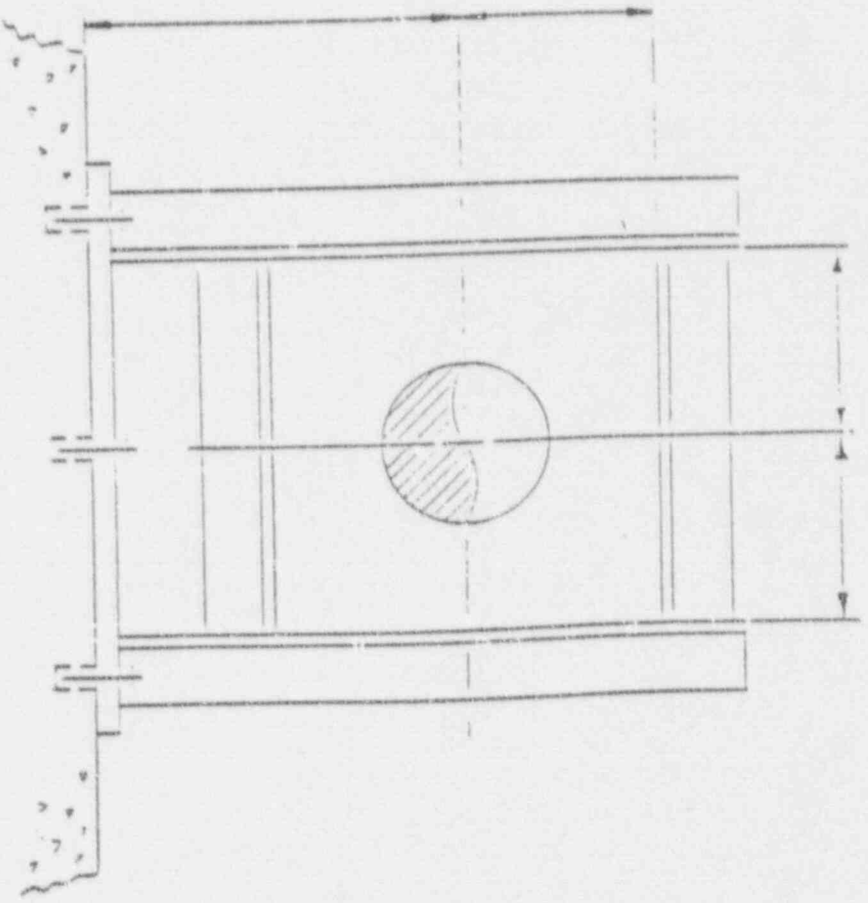

FIGURE 6.2.3-13

Typical Support/Restraint

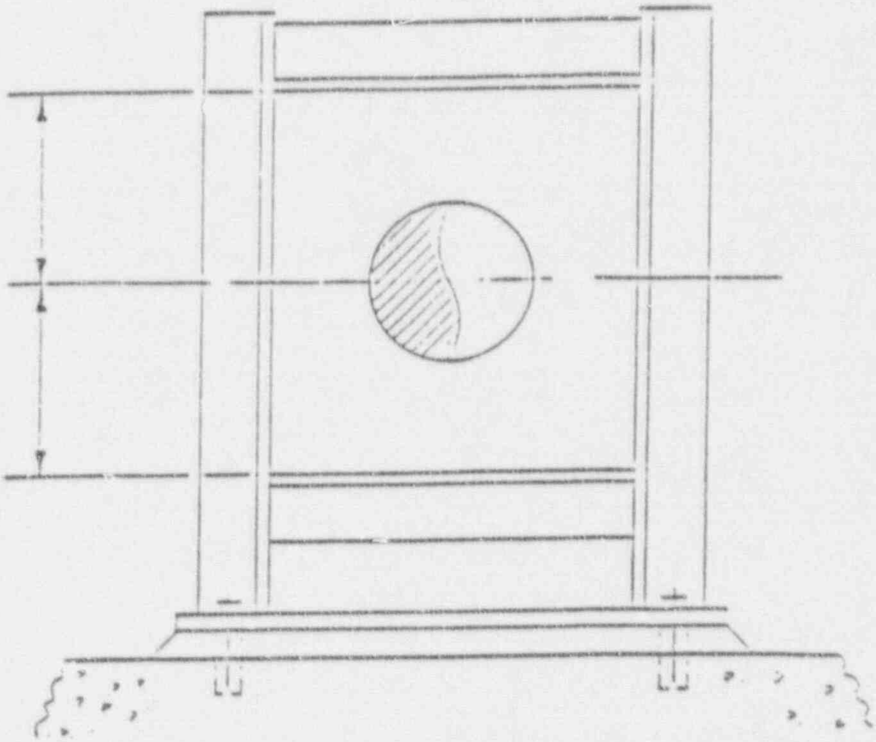

FIGURE 6.2.3-14

<u>Typical Support/Restraint</u>

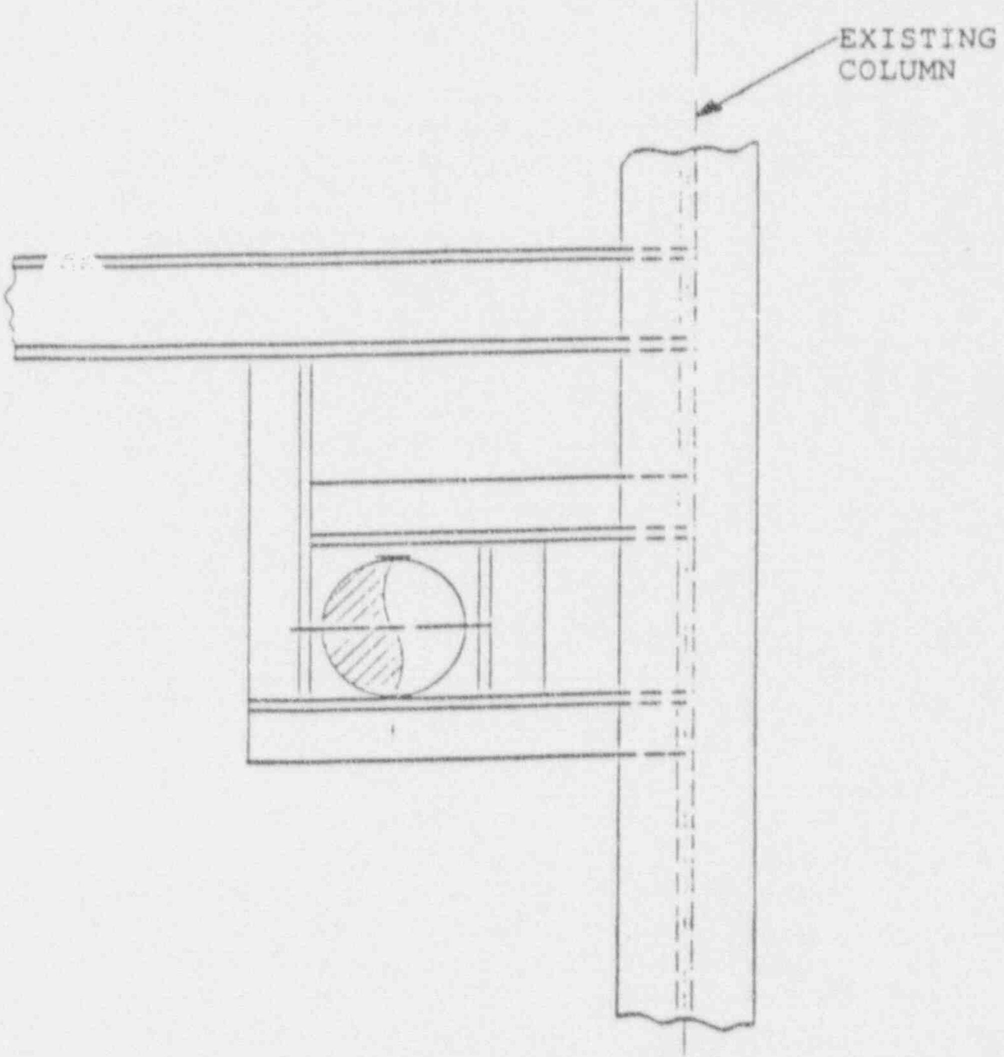

FIGURE 6.2.3-15

<u>Typical Support/Restraint</u>

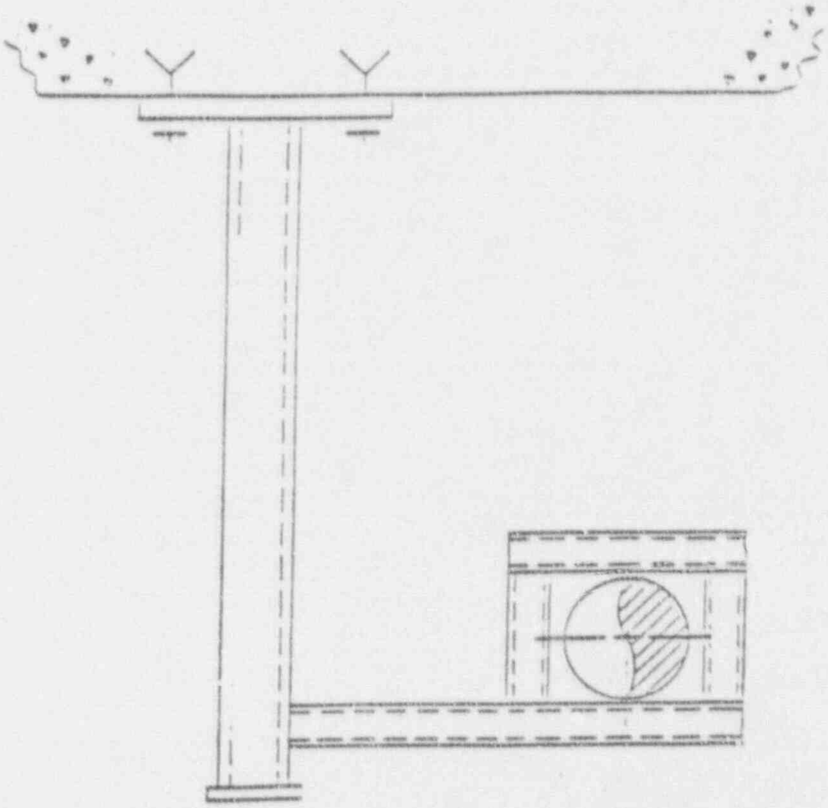

FIGURE 6.2.3-16

Typical Support/Restraint

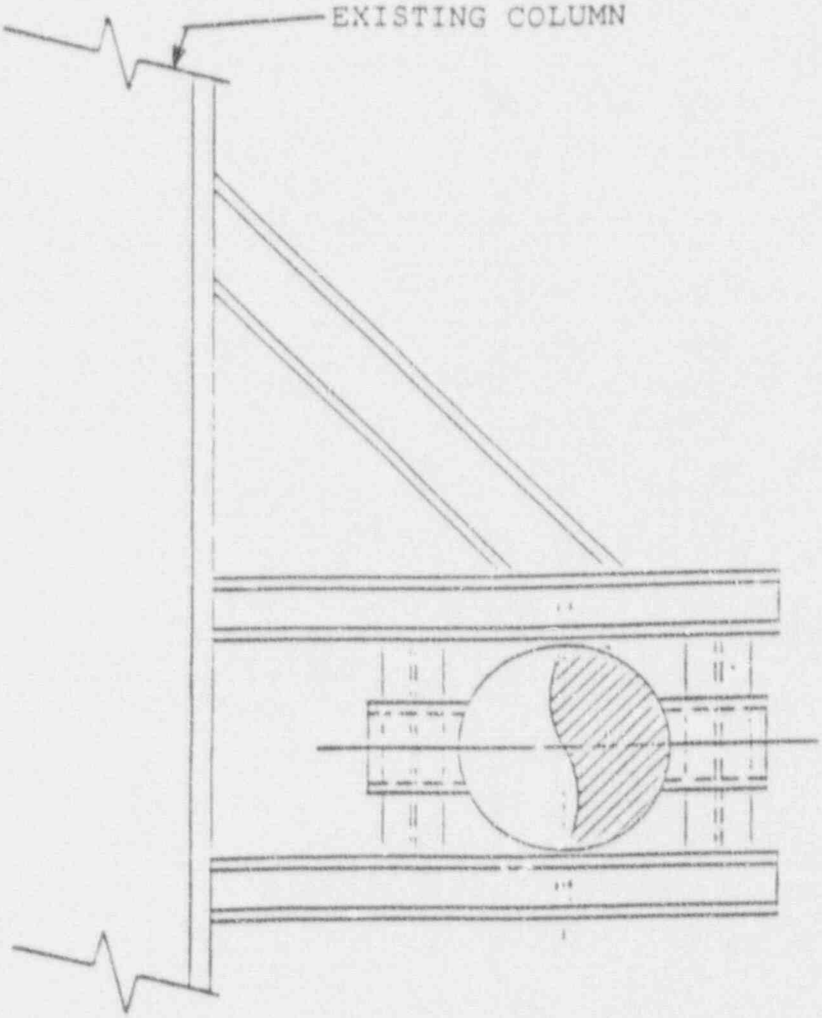

FIGURE 6.2.3-17

Typical Support/Restraint

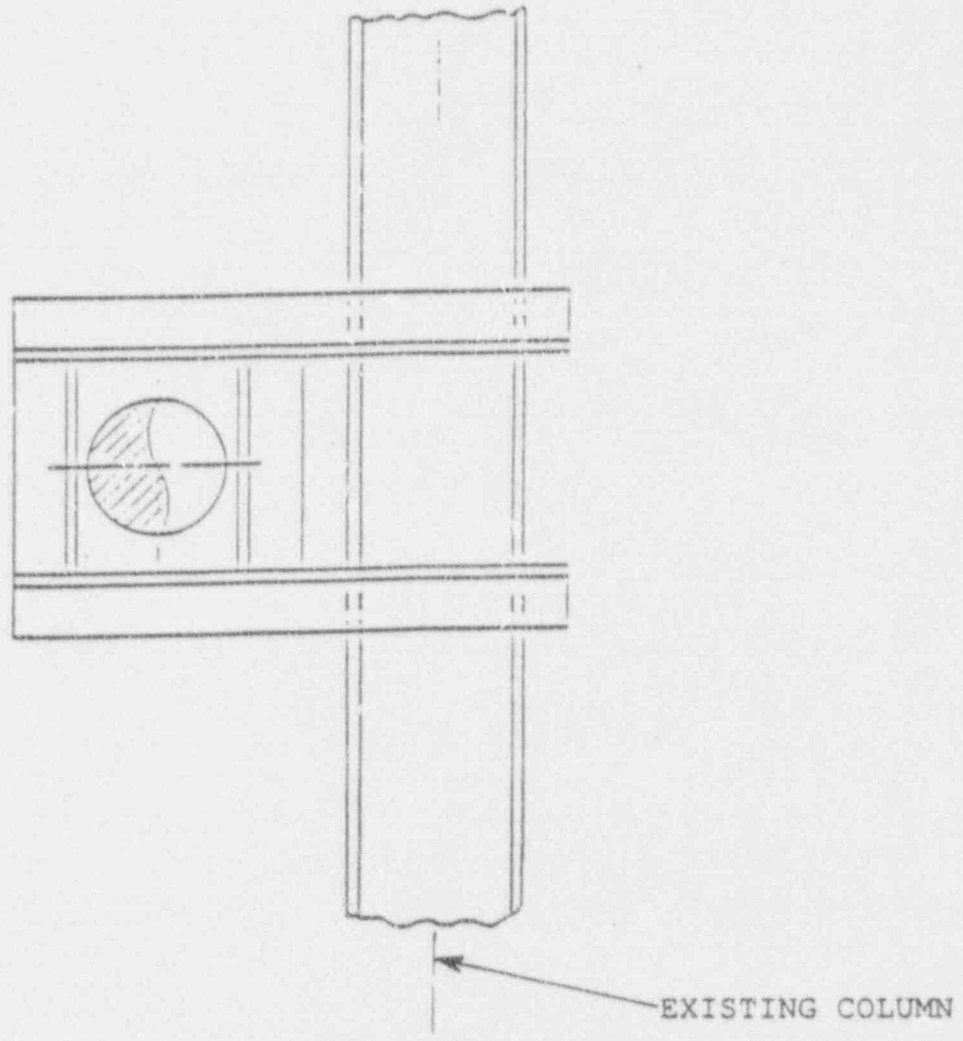

FIGURE 6.2.3-18

Typical Support/Restraint

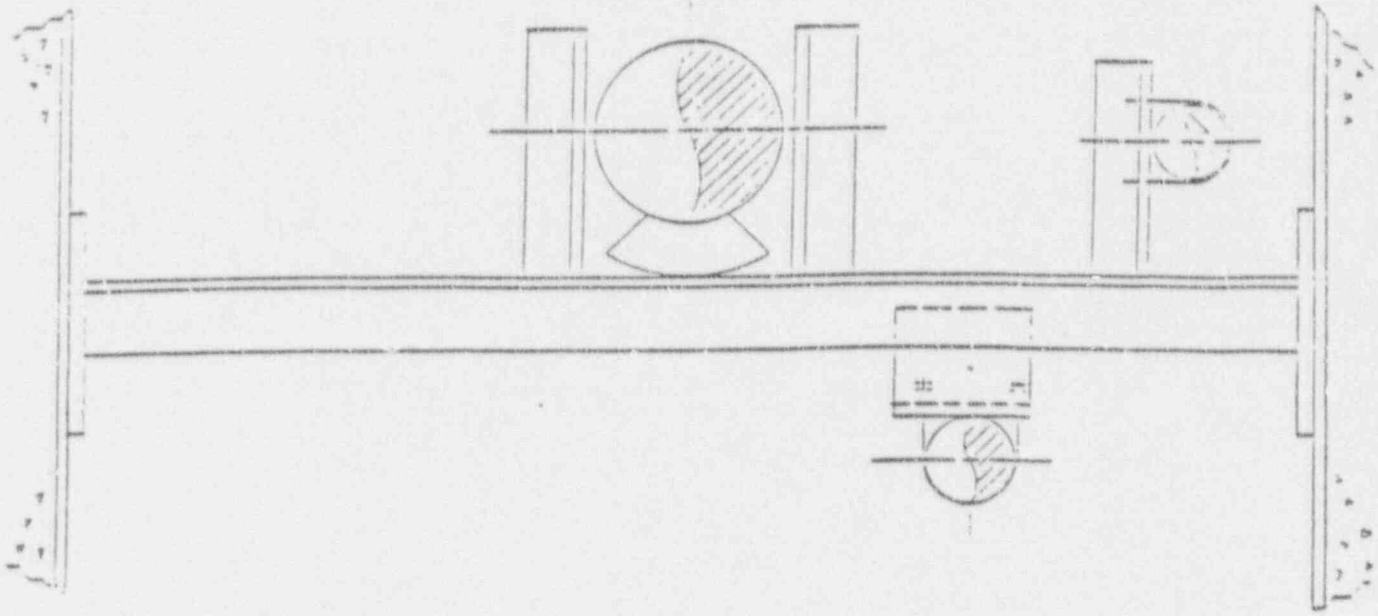

FIGURE 6.2.3-19

Typical Support/Restraint

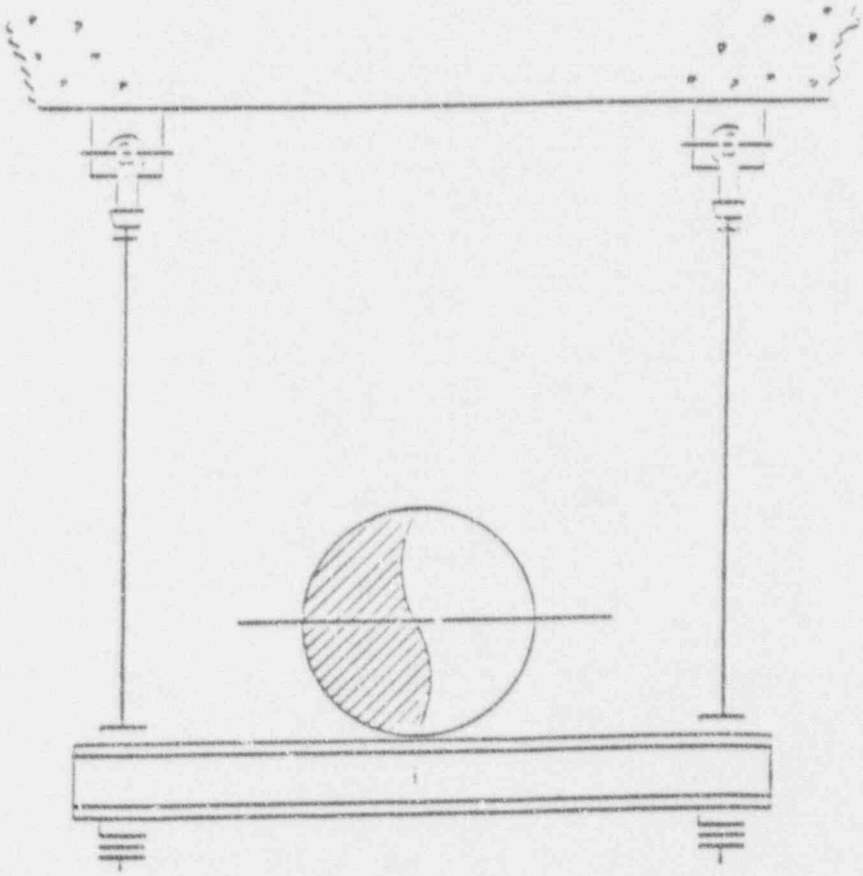

FIGURE 6.2.3-20

Typical Support/Restraint

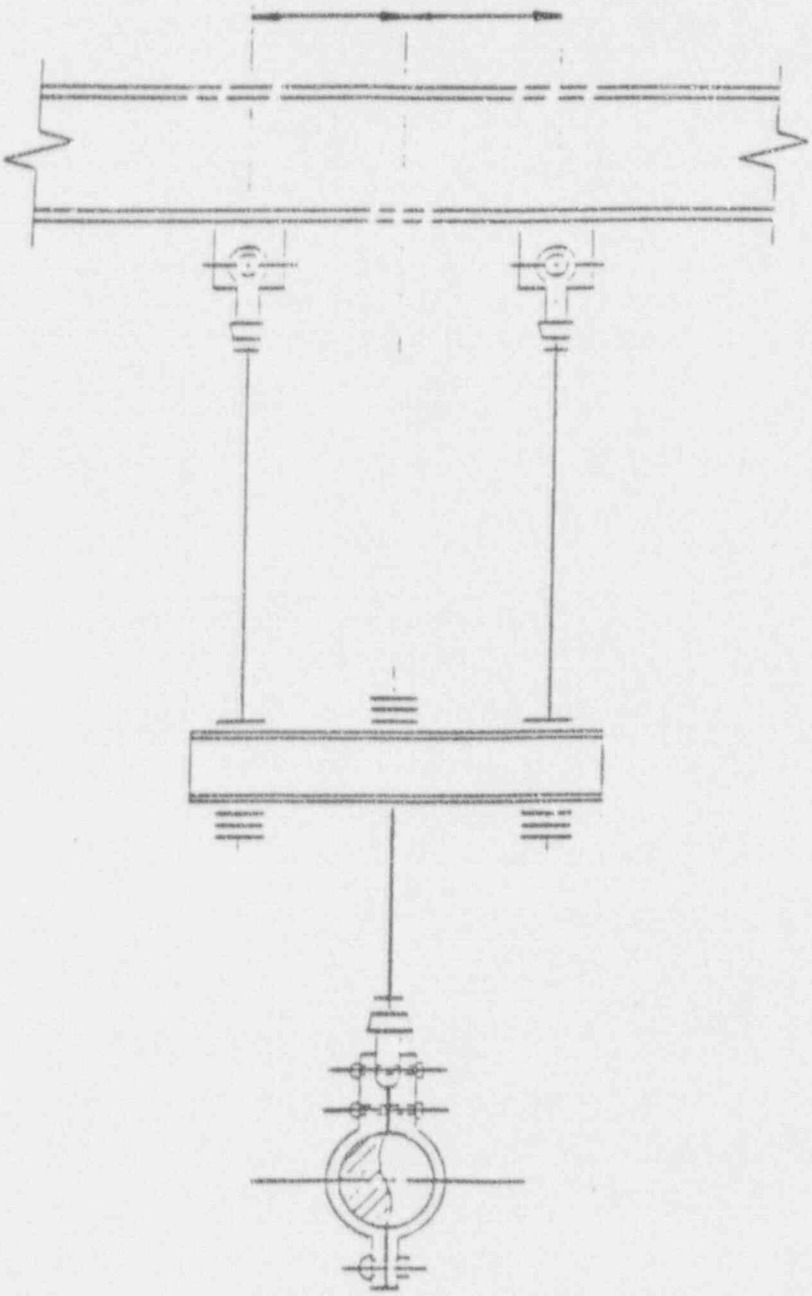

FIGURE 6.2.3-21

Typical Support/Restraint

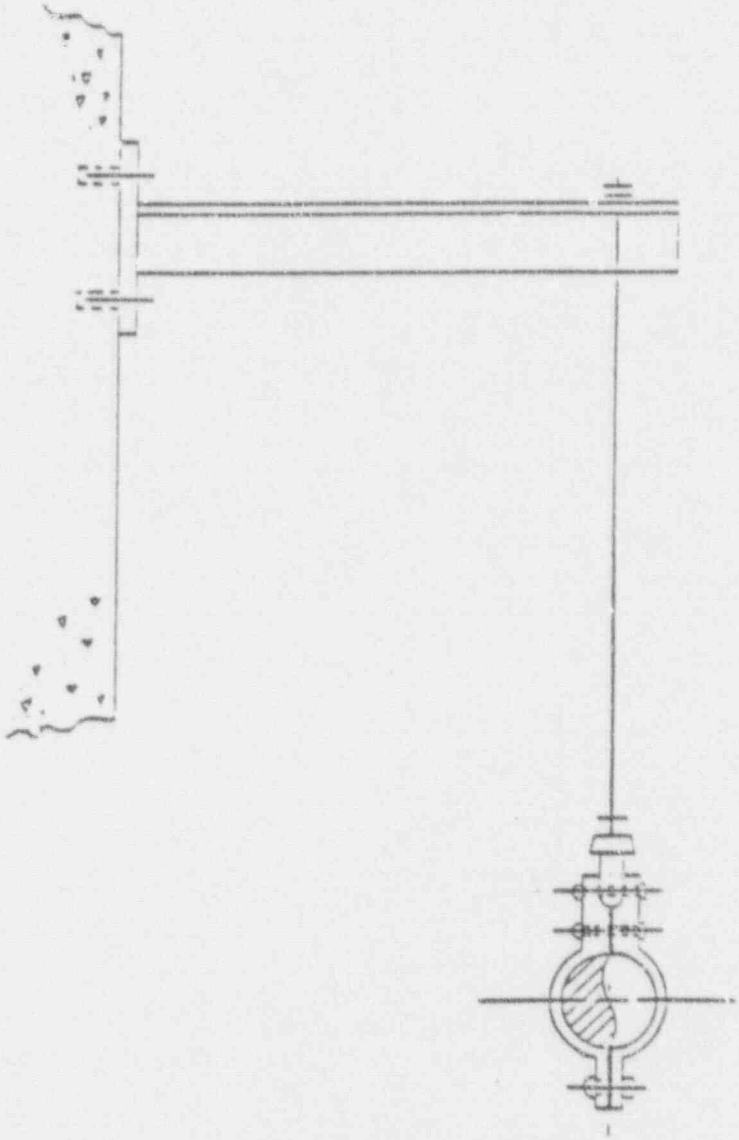

FIGURE 6.2.3-22

Typical Support/Restraint

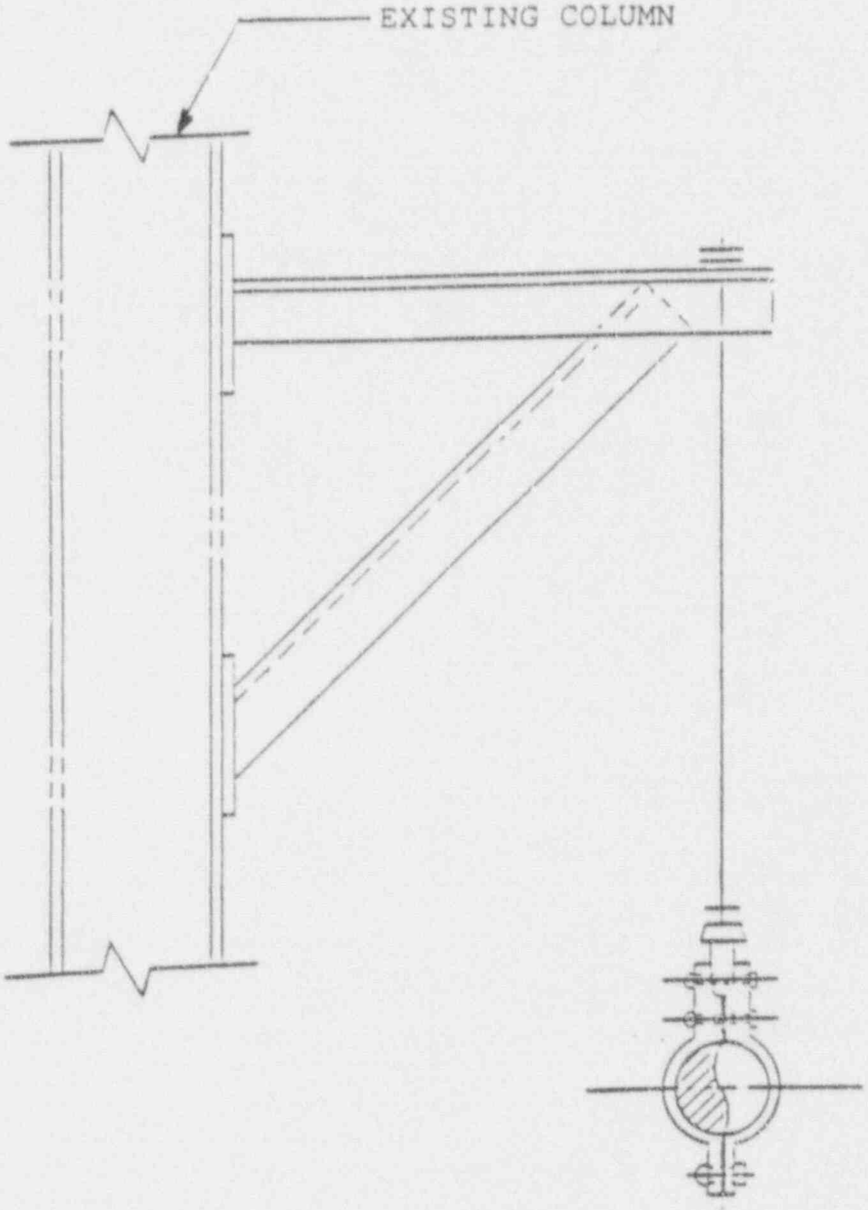

FIGURE 6.2.3-23

Typical Support/Restraint

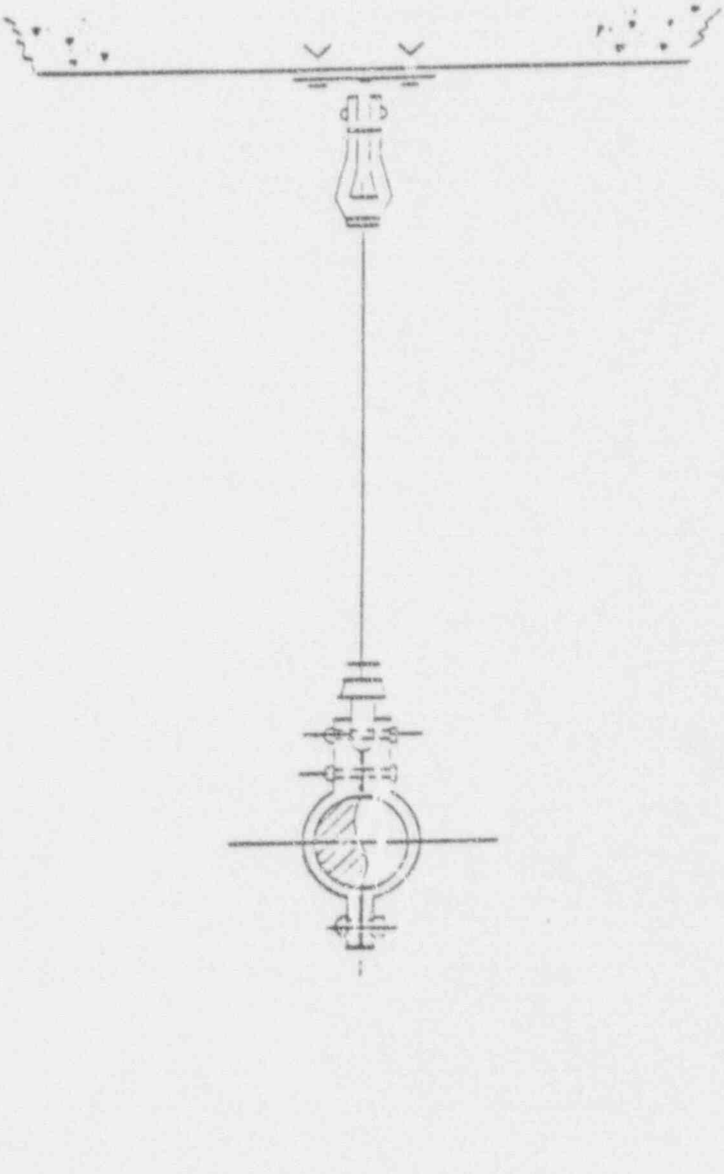

FIGURE 6.2.3-24

Support Layout With Cable Tray

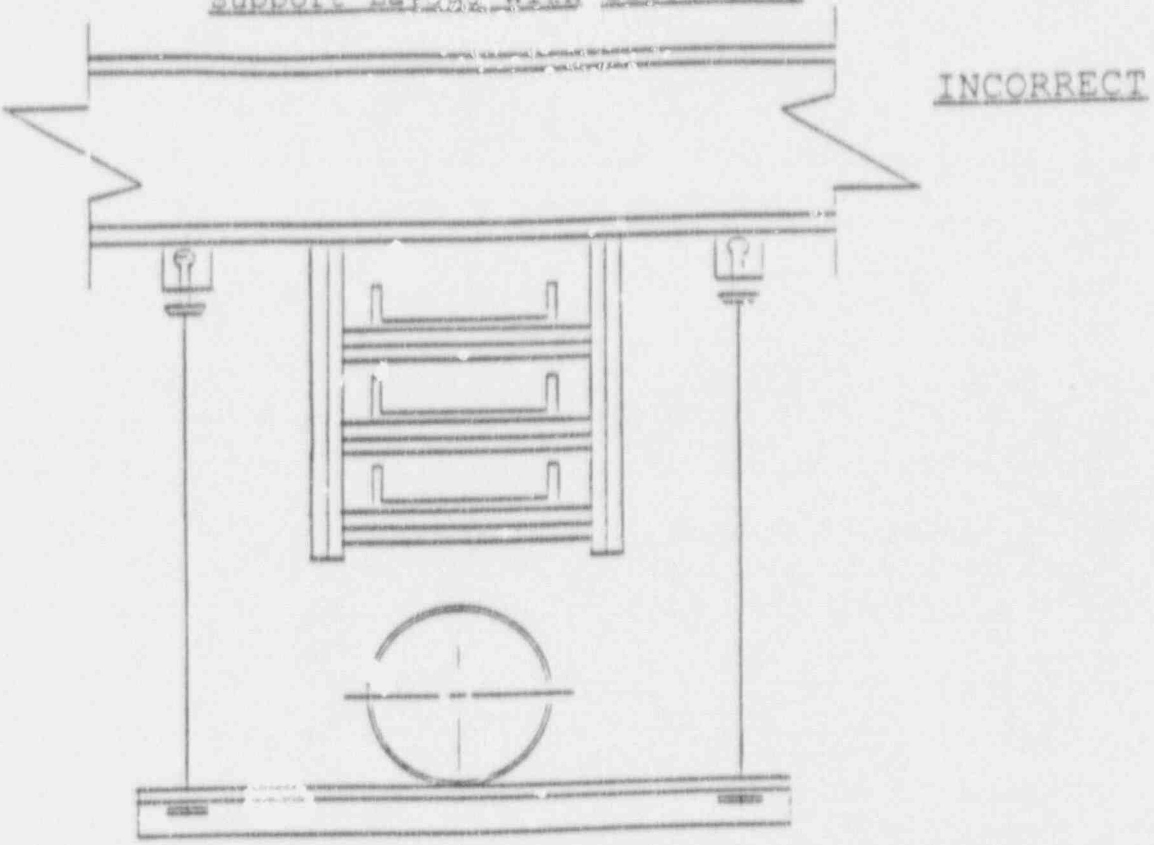

To simplify supports, avoid placing piping below cable tray.

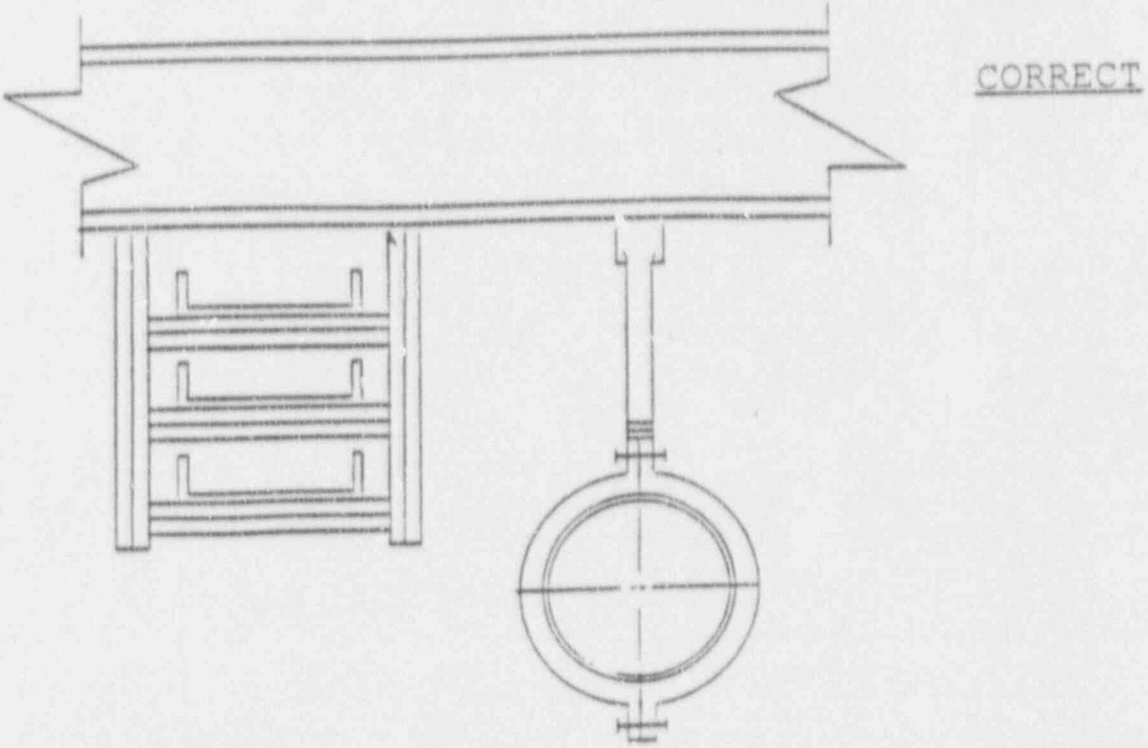

D. Avoid fitting-to-fitting and fitting-to-component configurations. A minimum of 6" should be provided between all fittings, if possible (see **Figure 6.2.3-25 and Sections 6.2.5.3.1.2 and 6.2.6.4**).

E. For seismic piping, if the nominal pipe size (NPS) ratio of the pipe run to the branch is less than 4:1 then the branch should consist of a straight tee followed by at least a 10" spool, then a reducer. If the ratio is greater than 4:1, then no 10" spool is required. The 10" spool allows a lateral support on the branch to act as an axial restraint on the run.

F. Valves and other concentrated weights or eccentricities should be placed at least one span, if not two, away from nozzles.

G. Large, heavy valve operators should be placed directly above or below the pipe centerline, preferably directly above.

H. The lengths of seismic and safety-related piping should be minimized to the extent possible (see **Figure 6.2.3-26**).

I. Where high temperature piping is insulated, space should be allowed for a saddle to be used to support the piping.

6.2.3.2 Snubber Minimization

Supports that serve as seismic restraints only (e.g., snubbers) should be minimized to the maximum extent possible. Minimizing snubbers reduces the inservice testing (IST) and maintenance requirements over the life of the plant, along with the resultant reduction in personnel radiation exposure.

6.2.3.3 Piping Design by Analysis

For larger piping, particularly greater than 8" NPS, the optimum pipe routing would have the centerline of the pipe a distance "L" from the walls and ceiling. This would enable the use of struts, snubbers, and springs without having to build a frame. **Figure 6.2.3-27** provides recommended distances "L" for typical pipe sizes. **Figures 6.2.3-28 and 6.2.3-29** illustrate desirable and undesirable pipe routings.

All ASME Class 1, 2, and 3 piping is designed by analysis. Other piping is also analyzed excluding that which is non-safety related and low temperature and low pressure (see **Section 6.2.11** for field routing guidelines and restraints). Piping analysis is generally performed with the aid of a computer, and therefore the following

FIGURE 6.2.3-25

Spool Pieces for Hanger Supports

INCORRECT

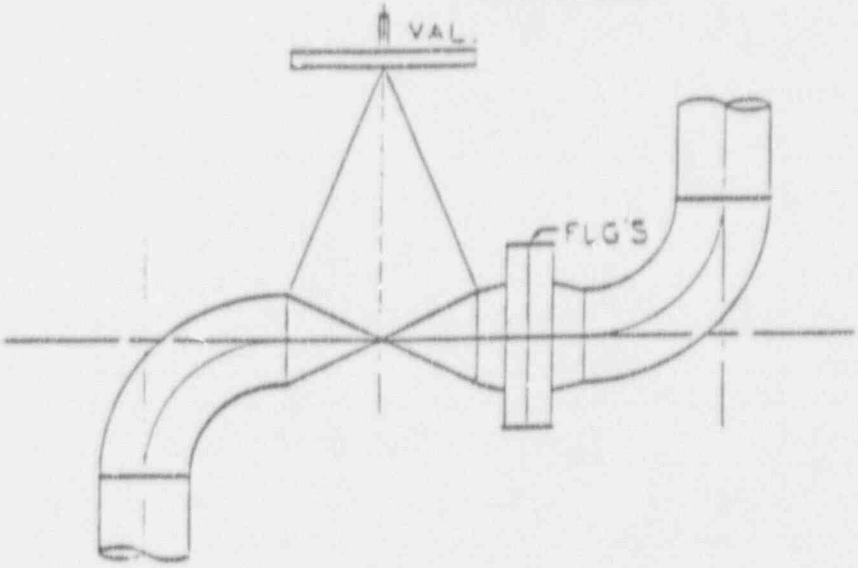

Fitting-to-fitting (valve, flanges, elbows) does not allow for hanger support.

CORRECT

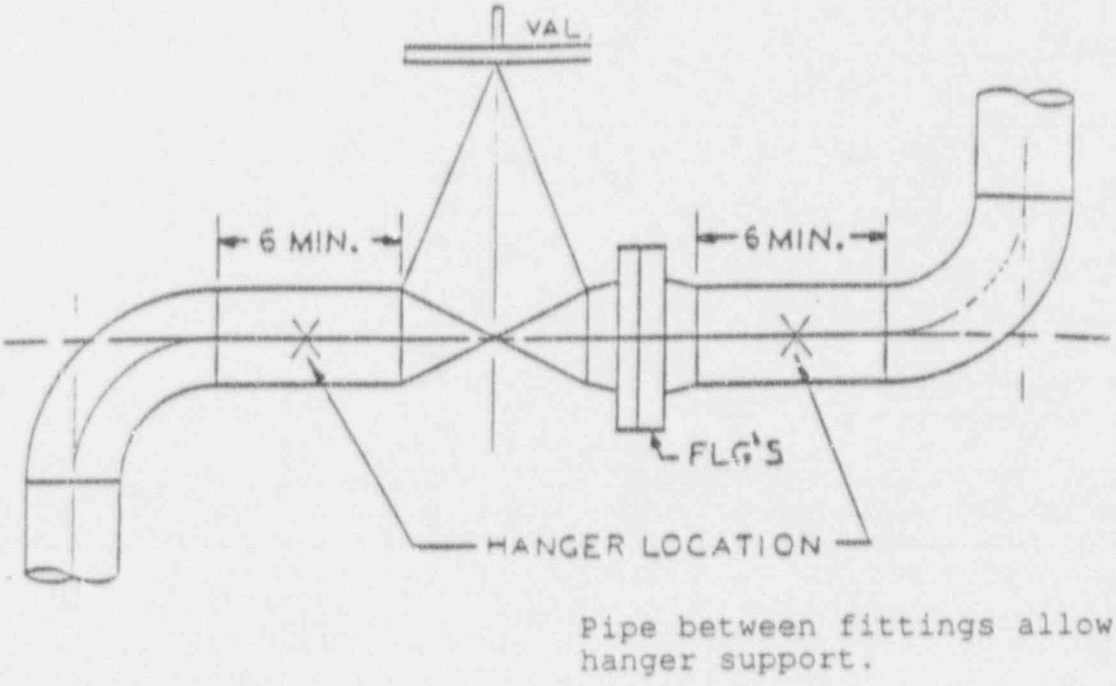

Pipe between fittings allow for hanger support.

FIGURE 6.2.3-26

Seismic Piping Length Minimization

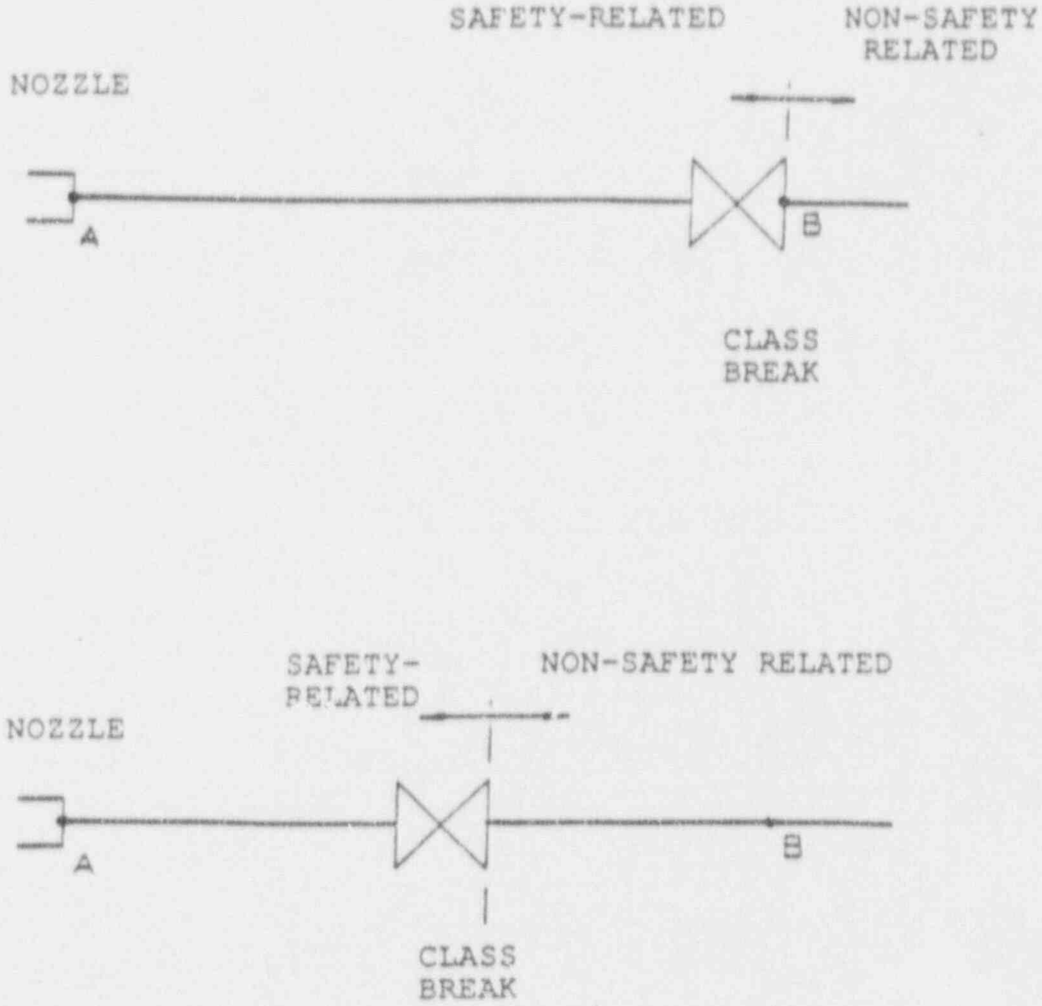

The length of safety-related piping should be minimized.

FIGURE 6.2.3-27

Pipe Clearance

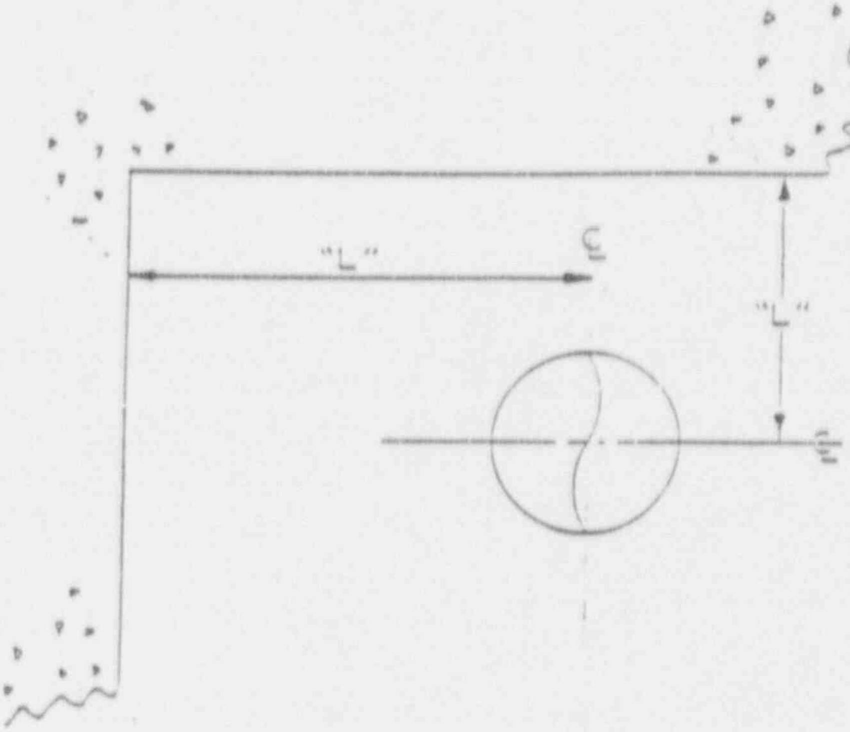

NOMINAL PIPE SIZE	LENGTH "L"
10"	35" (MIN.)
12"	37"
14"	43"
16"	44"
18"	45"
20"	46"
24"	53"
30"	56"
36"	60"
42"	71"

FIGURE 6.2.3-28

Pipe Clearance

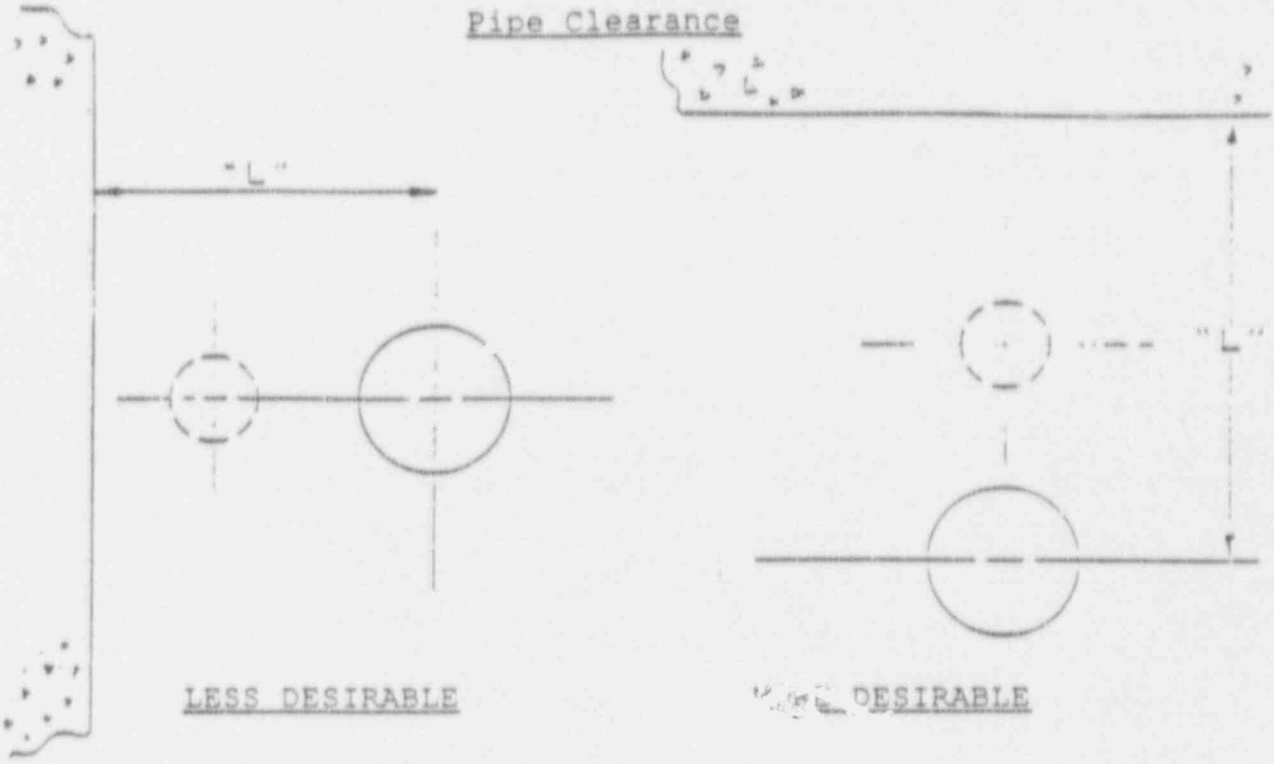

LESS DESIRABLE   MORE DESIRABLE

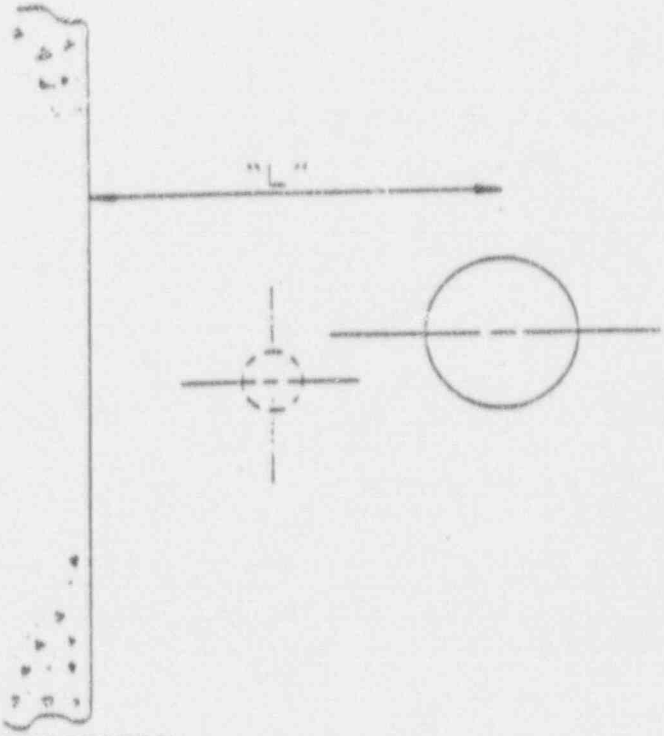

L = Distance "L" as
defined in Section
6.2.3.3

MORE DESIRABLE

FIGURE 6.2.3-29

Pipe Clearance for Gang Support

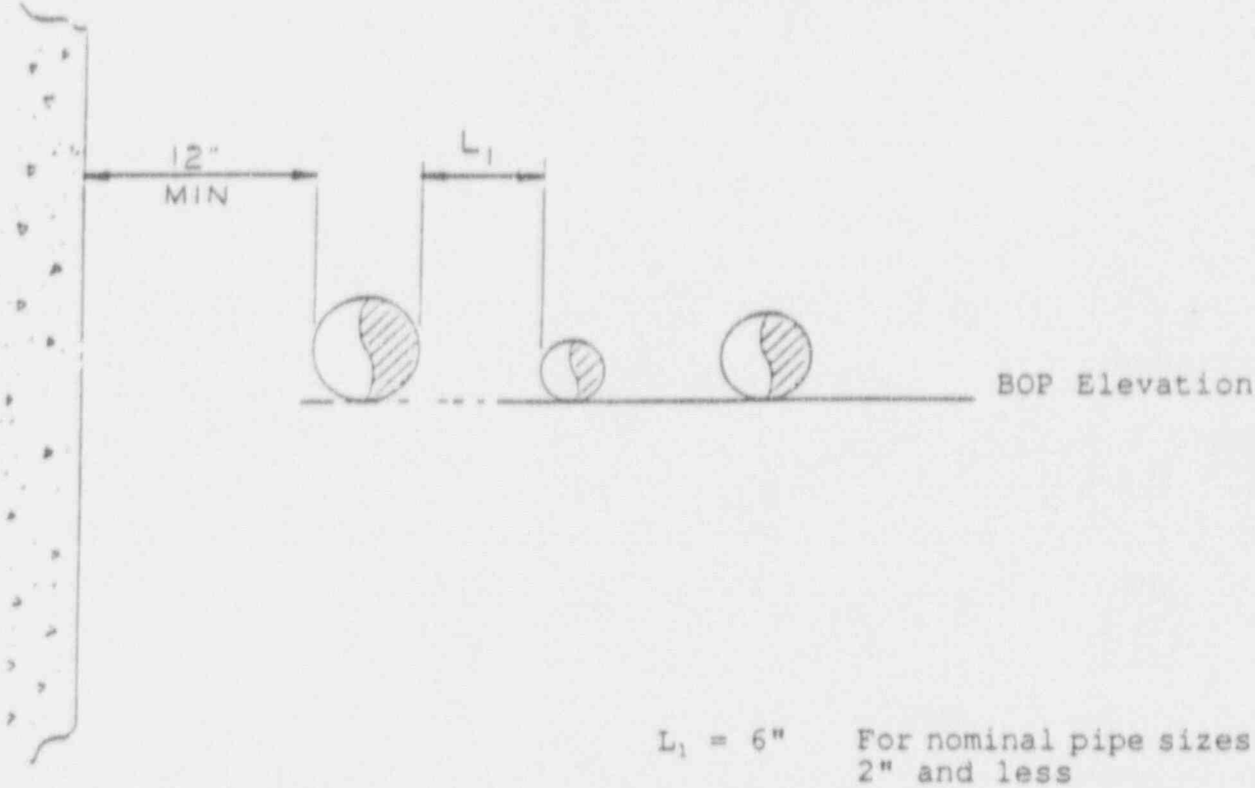

L_1 = 6" For nominal pipe sizes 2" and less

L_1 = 12" For nominal pipe sizes 3" to 4"

Note: Largest pipe size governs L_1

A gang support is feasible in congested areas.

Piping should be routed so that the bottom of pipe (BOP) elevation is the same.

Note: This applies to piping 4" NPS and smaller.

guidelines are not intended to replace those calculations but to serve as a conservative guide for locating supports and/or restraints through simple calculations.

6.2.3.3.1 Seismically Supported Pipe

Seismic support spans should be assumed to be the same span length as those for simple gravity support spans (see **Table 6.2.3-1**).

6.2.3.3.2 Vertical Supports

Table 6.2.3-2 shows maximum gravity support spacing with the limitations as noted on the chart.

6.2.3.3.2.1 Support Locations

Gravity supports are located using the recommended hanger spacing. This does not take into account concentrated weights such as in-line pumps, flanges, or valves.

6.2.3.3.2.1.1 Concentrated Loads

For significant weights, supports should be located as close to the concentrated weight as possible. Inservice inspection tolerances could limit how close a support can be. See **Section 6.2.6** for inservice inspection tolerances.

6.2.3.3.2.1.2 Equipment Connections

The span by should be decreased by 1/2 for the first support from any equipment.

6.2.3.3.2.1.3 Terminal Ends

Penetrations and points of embedded piping should be considered the beginning of the required span. Support points should be located using no greater than the calculated spans.

6.2.3.3.2.1.4 Vertical Piping

Supports at the upper or lower end of risers should be located as close as possible to the elbow. This will normally be limited by inservice inspection requirements.

6.2.3.3.3 Lateral Supports (Seismic)

6.2.3.3.3.1 Concentrated Loads

Lateral restraints should be assumed at each concentrated weight. Inservice inspection requirements will limit how close a restraint can be placed.

TABLE 6.2.3-1

Seismic Span Lengths
(with concentrated weights)

NPS (In)	Schedule	Conc. Wt.	Span "L" (Ft)
½	80	40	0.9
		70	0.5
¾	80	40	1.5
		70	0.9
		100	0.6
1	80	70	1.6
		100	1.1
		150	0.8
1½	80	70	3.6
		100	2.9
		150	2.1
		200	1.6
2	80	100	4.3
		150	3.3
		200	2.7
		300	1.9
2½	80	100	6.1
		150	5.5
		200	4.9
		300	3.5
		500	2.4
3	80	200	6.3
		300	5.3
		500	3.7
		1000	1.9
4	80	200	8.1
		300	7.4
		500	5.9
		1000	3.4

TABLE 6.2.3-2

Suggested Pipe Support Spacing

Nominal Pipe Size NPS (In)	Suggested Maximum Spacing			
	Water Service		Steam, Gas, or Air Service	
	(Ft)	(m)	(Ft)	(m)
1	7	2.1	9	2.7
2	10	3.0	13	4.0
3	12	3.7	15	4.6
4	14	4.3	17	5.2
6	17	5.2	21	6.4
8	19	5.8	24	7.3
12	23	7.0	30	9.1
16	27	8.2	35	10.7
20	30	9.1	39	11.9
24	32	9.8	42	12.8

Note 1 Suggested maximum spacing between pipe supports for horizontal straight runs of standard and heavier pipe at maximum operating temperature of 750°F (400°C).

Note 2 Does not apply where span calculations are made or where there are concentrated loads between supports such as flanges, valves or specialties.

Note 3 The spacing is based on a fixed beam support with a bending stress not exceeding 2300 psi (15.86 MPa) and insulated pipe filled with water or the equivalent weight of steel pipe for steam, gas, or air service, and the pitch of the line is such that a sag of 0.1 in. (2.5 mm) between supports is permissible.

Ref. **ASME B31.1-1989 Edition, Table 121.5**

6.2.3.3.3.2 Support Spacing

Span lengths for lateral restraints, except those which restrain concentrated weights, may be increased up to two times the normal gravity support distance.

Lateral restraints are most effective when placed near changes in direction at already existing gravity support positions. If unsure about exact lateral placement, these can be assumed at every gravity support location.

6.2.3.3.3.3 Equipment Nozzles

A lateral restraint should be assumed at the first gravity support from all equipment.

6.2.3.3.4 Non-Seismically Supported Pipe

Maximum gravity spans have been previously calculated using the equations for minimum deflection and stress requirements. The two equations are as follows:

For minimum deflection:

$$L=\sqrt[4]{\frac{384EI}{5\omega}(.1inch)} \qquad \textbf{(Eqn. 6.2-1)}$$

For minimum stress:

$$L=\sqrt[4]{\frac{8Z}{\omega}(1500lbs/inch^2)} \qquad \textbf{(Eqn. 6.2-2)}$$

Where: E = Young's Modulus (psi)
I = Moment of Inertia (in^4)
ω = Weight per Unit Length (lbf/in)
Z = Section Modulus (in^3)

Table 6.2.3-2 shows maximum gravity support spacing with the limitations as noted on the chart.

6.2.3.3.5 Leak-Before-Break Considerations

See **Section 7.1.9 and Appendix 7A** for leak-before-break (LBB) considerations and analysis techniques.

6.2.3.4 Gang Support Criteria

6.2.3.4.1 Gang Supported Pipe

The limitations for gang supports are analyzed piping equal to or less than 8" NPS and 300°F. Larger pipe sizes have higher loads making it impractical to design common supports.

6.2.3.4.2 Routing Gang Supported Pipe

Pipes that are routed in close proximity to each other should be lined up vertically or have BOP elevations the same to allow the piping to be gang supported.

The largest piping should be closest to the wall with the smaller piping out into the room and at higher elevations. See **Section 6.2.5.2** for more information on constructability and piping design.

Piping should be routed close to structures which can be used for support attachment and group piping for common support.

Seismic and non-seismic piping interactions grouping should comply with the requirements outlined in **Section 6.2.3.5.2.6**.

6.2.3.5 Non-seismic Piping

Non-seismic piping has not been analyzed to withstand an earthquake and thus cannot be credited for operability during earthquake conditions. Note that while non-safety related piping is generally non-seismic, it may be seismically supported to prevent adverse interactions with safety-related piping and equipment.

6.2.3.5.1 Routing Considerations

The following routing consideration should be taken into account when routing non-seismic piping.

A. Non-seismic piping should be separated from seismic piping to keep potential interactions to a minimum. If the piping cannot be completely separated, it should be located as far apart as possible.

B. Non-seismic piping should not be located above seismic components (i.e., piping, equipment, cable trays, ductwork).

C. Seismic piping should not be routed in areas where walls, stairwells, and other supports are not seismically supported.

D. Non-seismic piping should not be located above seismic valve operators.

E. Non-seismic piping, where possible, should not be routed in rooms containing safety-related equipment. When non-seismic piping is located in these areas, it should not be routed above the equipment.

6.2.3.5.2 Interaction Analysis

The following are assumed failures as a result of a seismic event and should be used to determine the reaction of non-seismic piping on other seismic components and structures. This criteria deals only with the physical effects of a non-seismic pipe falling.

6.2.3.5.2.1 Non-Seismic Cable Tray and HVAC Duct

These guidelines deal with non-seismic piping interactions. Failure of non-seismic cable trays, ductwork, and stairwells are not considered but if there is a possibility of an interaction involving these components, they should be assumed to fail.

6.2.3.5.2.2 Hangers

All non-seismic hangers should be assumed to fail instantaneously.

6.2.3.5.2.3 Mechanical Connections

All flanges and bolted connections should be assumed to fail, allowing each section of piping to fall independently.

6.2.3.5.2.4 Rigid Constraint

Welded piping should be assumed to fail at all rigidly constrained piping locations such as seismic structures, tanks, and equipment unless shown to be sufficiently supported.

Non-seismic piping which is supported by or within a seismic structure and is within the suggested pipe support spacing of **Table 6.2.3-2** (**Table 121.5** of **ASME B31.1**), should be considered to lose pressure boundary but not sever and fall.

All cases outside of the limits of **Table 6.2.3-2** should be assumed to fail.

6.2.3.5.2.5 Piping Area of Influence

All moderate energy piping should be assumed to fall vertically downward from its original position. Side motion should be assumed to be ±6 inches (centerline to centerline) from the original pipe position. Pipe whip should be considered for high energy piping.

6.2.3.5.2.5.1 Arrest

Safety-related piping equal to or greater than the diameter of non-seismic piping may be assumed to stop the downward motion of non-seismic piping.

6.2.3.5.2.6 Seismic/Non-Seismic Interaction

For seismic/non-seismic interfaces, the piping is assumed to fail in the non-seismic piping beyond the last seismically designed support.

6.2.3.5.3 Targets

When non-seismic piping is routed in the area of safety-related equipment and seismic piping, all piping and equipment located below the non-seismic piping and within the assumptions of **Section 6.2.3.5.2** are potential targets.

6.2.3.5.4 Damage Assessment

No secondary interactions should be considered for damage assessment for moderate energy piping. Only primary interactions should be evaluated for damage.

6.2.3.5.4.1 Piping

All non-seismic piping, two and one-half inch NPS and greater is capable of damaging other piping equal to or less than its diameter. Non-seismic piping, less than two and one-half inch NPS and greater than one-inch NPS, should not be considered capable of damaging any component except instrumentation devices and tubing, flex-hose, and unsupported cables. Non-seismic piping, one-inch NPS and less, should not be considered capable of damaging any component.

6.2.3.5.4.2 Valves

Valves without operators may be treated the same as piping.

6.2.3.5.4.3 Electrical Equipment and Instrumentation

Cables in seismic cable trays should be assumed to be damaged by non-seismic piping greater than eight-inch NPS. Non-seismic piping between four and eight-inch NPS should be assumed to damage cables and cable trays if the piping centerline elevation is more than one foot above the cable tray top elevation.

6.2.3.5.4.4 Mechanical Equipment

For purposes of evaluating impact effects on mechanical equipment from piping interactions, four-inch NPS and greater piping should be considered capable of damaging mechanical equipment.

6.2.3.5.5 Protection

6.2.3.5.5.1 Pipe Rerouting

Adverse interactions with non-seismic piping should be eliminated by rerouting the pipe if an acceptable alternate route can be found. Alternate routes should incorporate applicable piping layout criteria.

6.2.3.5.5.2 Classification of Pipe Supports

Supports for non-safety related piping may be upgraded to a seismic Category II classification. This upgrading includes the requirement that the piping be seismically supported in order to protect safety-related equipment and systems.

6.2.3.5.5.3 Deflector Shields

Deflector shields may be designed around seismic systems to prevent interaction. These shields should protect the seismic equipment from any possible failure of non-seismic components. These shields should be designed and constructed to seismic standards.

6.2.3.5.5.4 Impact Analysis

An analysis may be performed to estimate the amount of damage that will occur when a non-seismic component fails. The impact load should be analyzed from a conservative standpoint and damage potential determined. If no damage potential exists, no needs to be taken.

6.2.3.6 Hydrostatic Testing Provisions for Steam Piping

Gravity support provisions shall be provided for water filling of steam lines for hydrostatic testing. Any provisions that are only used for the testing (e.g., pinned hangers) should be specified to allow return to the normal configuration following the hydrostatic test.

6.2.4 ALARA

6.2.4.1 General

Incorporating ALARA principles in the design phase is essential to minimizing personnel radiation exposure over the life of the plant. The following ALARA methods should be utilized in pipe routing.

A. Routing should minimize required operation and maintenance time in areas with high radiation levels.

B. Distance should be maximized between radiation sources and personnel during operations and maintenance.

C. Low points and dead leg crud traps should be minimized.

D. Adequate shielding should be provided.

E. Evaporators should not be used.

F. Piping containing highly radioactive liquids and gases should be routed in shielded pipe chases and trenches.

Implementation of these design methods is discussed further in the following sections.

6.2.4.2 Radioactive Pipe Routing

6.2.4.2.1 Radiation Zones/Personnel Areas

During preliminary design, the plant is divided into several radiation zones. These zones indicate maximum dose rates based on normal operation of the station (i.e., location of high radioactive major components, personnel pathways, and period of human occupancy). Zone number designations can be found in **CESSAR-DC, Table 12.3-1**. Generally, zone designation numbers increase as the permissible level of occupancy decreases. These occupancy levels vary from continuous occupancy, as is the case for areas outside the plant, to infrequent occupancy around highly radioactive sources.

6.2.4.2.2 Fluid Radiation Intensity

Radioactive piping differs in both degree of radioactivity and density. Routing considerations vary according to these differences. The appropriate system description will aid in determining fluid density (gaseous, liquid, or slurry). This information can be used with the following sections to determine proper routing considerations.

6.2.4.2.2.1 Reactor Coolant Prior to Processing

Reactor coolant fluid prior to processing contains fission and corrosion products generated by the reactor and associated piping. This fluid can be liquid or gaseous. Liquids are later processed via degasification, demineralizers, filters and concentrators. Gases are filtered and released through the unit vent.

6.2.4.2.2.1.1 Pipe Area

Reactor coolant fluid prior to processing (both liquid and gaseous) should stay in the most infrequently occupied zone (Zone 5) but may enter the next lower zone (Zone 4) if its radiation level is within the limits of that zone.

6.2.4.2.2.1.2 Pipe Configuration

Dead legs and lowered legs should be avoided in liquid lines because they collect radioactive particulates and thereby form localized "hot" spots in the system. Lowered legs are acceptable only when unavoidable and when lines are routed through inaccessible areas such as pipe chases. Gaseous lines are less prone to be crud traps.

Valves should be oriented to prevent crud accumulation and to allow drainage (liquid lines only).

6.2.4.2.2.2 Spent Resins

Spent resins are slurries, usually of radioactive particulates and isotopes that have been processed out of reactor coolant fluid. Resins are removed from the demineralizer during sluicing operations. Spent resins are typically the most radioactive of all fluids in the plant.

6.2.4.2.2.2.1 Pipe Area

The layout of piping for spent resins should be confined to the most infrequently occupied areas of the plant (Zone 5). Any deviation of this layout consideration constitutes a potential radiation concern.

6.2.4.2.2.2.2 Pipe Configuration

Because of the slurry nature of resin lines, traps for particulates should not be designed into the lines. Any further concentration would result in extreme levels of radioactivity, and possibly restrict flow sufficiently to require manual clean-out. Such a clean-out operation would expose personnel to an unnecessary radiation dose. Suggested practices to avoid such particulate traps in both radioactive and nonradioactive spent resin lines are listed below.

A. The length of pipe run should be minimized; the most direct routing permitted by zones should be used.

B. The number of fittings should be minimized.

C. Low points and dead legs should be minimized.

D. Piping should be sloped in the direction of flow.

E. 5D pipe bends should be used where practical.

F. Butt welds should be used instead of socket welds - socket weld applications should be specified.

G. Laterals should be used wherever possible; if tees are unavoidable, orient branch above main run.

H. Cleanouts should be located every 20 feet except for straight pipe runs where wider spacing is acceptable.

I. When reducers are necessary, eccentric reducers with the flatside on the bottom should be used.

J. Valves should be oriented to prevent crud accumulation and to allow drainage. Refer to **Section 6.2.2** for specific valve information.

Lowered legs should be avoided in all radioactive piping. They allow the buildup of crud deposits, and thereby concentrate radiation. Lowered legs are acceptable only when unavoidable and when lines are routed through inaccessible areas such as pipe chases.

6.2.4.2.2.3 Diluted and Processed Fluid

Diluted radioactive fluid consists of the liquid waste which is collected from the floor drains and valve stem leakoffs throughout the station. Processed fluid is reactor coolant downstream of the demineralizers and filters.

6.2.4.2.2.3.1 Pipe Area

Diluted radioactive fluid and processed reactor coolant fluid should be confined to the most infrequently occupied zone (Zone 5) and the first lower zone (Zone 4) but may pass through the second lower zone (Zone 3) if its radiation level is within the limits for that zone.

6.2.4.2.2.3.2 Pipe Configuration

Diluted and processed radioactive fluid requires no special configuration provisions.

6.2.4.2.2.4 Concentrates

During processing, reactor coolant is passed through a concentrator which boils off water thereby concentrating particulates. Therefore, concentrate fluid is essentially concentrated reactor coolant and should be treated accordingly.

6.2.4.2.2.4.1 Pipe Area

Concentrates should be confined to the most infrequently occupied zone (Zone 5) of the plant.

6.2.4.2.2.4.2 Pipe Configuration

Dead legs should not be designed into concentrate lines, and clean-outs should be oriented so as not to form crud traps.

Valves should be oriented to prevent crud accumulation and to allow drainage Refer to **Section 6.2.2** for specific valve information.

6.2.4.2.2.5 Post-LOCA Fluid

After a loss-of-coolant accident, a percentage of the radioactive isotopes present in the fuel rods are assumed to be released into the coolant. The assumed release percentages result in post-LOCA fluids being even more highly radioactive than spent resins

6.2.4.2.2.5.1 Pipe Area

Post-LOCA fluid piping should be limited to areas inside containment. If maintaining the fluid inside containment is not possible, it should be located in inaccessible areas of the highest radiation zone classification. Refer to the post-LOCA zoning drawings in **CESSAR-DC, Section 12.3** for permissible areas. Post-LOCA zone designations are contained in **CESSAR-DC, Table 12.3-3**.

6.2.4.2.2.5.2 Pipe Configuration

The configuration constraints of **Section 6.2.4.2.2.1.2** apply to post-LOCA piping.

6.2.4.2.3 Field Routing

Pipe which is field routed has its layout determined by construction personnel. As such, field routed piping has very little design control of its layout. For this reason, field routed piping of potentially radioactive lines is prohibited. For specific considerations of field routed piping see **Section 6.2.11**.

6.2.4.3 Sleeve and Opening Location

Scattering and streaming are two cases of radiation leaving a shielded area due to discontinuities in the shield wall. These factors should be considered in the sleeve design.

6.2.4.3.1 Sleeve Selection

Sleeve selection into or out of a shielded area should be made with priority given to streaming. The sleeve should not be in a direct line with major radioactive components. This would give a direct path for radiation out of shielded area. See **Section 6.2.4.3.3** and **Figures 6.2.4-1 and 6.2.4-2**.

6.2.4.3.2 Scattering Considerations

If streaming is properly designed for, then scattering will generally be insignificant. The primary criteria, therefore, will be to design against streaming.

6.2.4.3.3 Streaming Considerations

Usual passages for streamed radiation are openings to shielded areas, unused sleeves, and any open space between a sleeve and what it allows through the shield. There are three considerations to avert streaming: See **Figures 6.2.4-1 and 6.2.4-2**

A. All shield area openings should be labyrinthed so that there is no direct path for radiation to follow out of the shield area.

B. Attention should be given to sleeve location. Sleeves should not be placed in a direct line with major radioactive components, as this could allow a direct path for radiation to leave the shielded area.

C. Close attention should be given to the usage of sleeves. Spare sleeves should be filled after the design and erection in a particular area is complete, thus eliminating them from consideration.

6.2.4.4 General Plant Arrangement

All hazardous radiation sources should be located in shielded areas. The primary consideration is to prevent any line of sight between normally accessed personnel areas and radiation sources. Specific considerations are described below.

FIGURE 6.2.4-1

Sleeve for Shielded Area

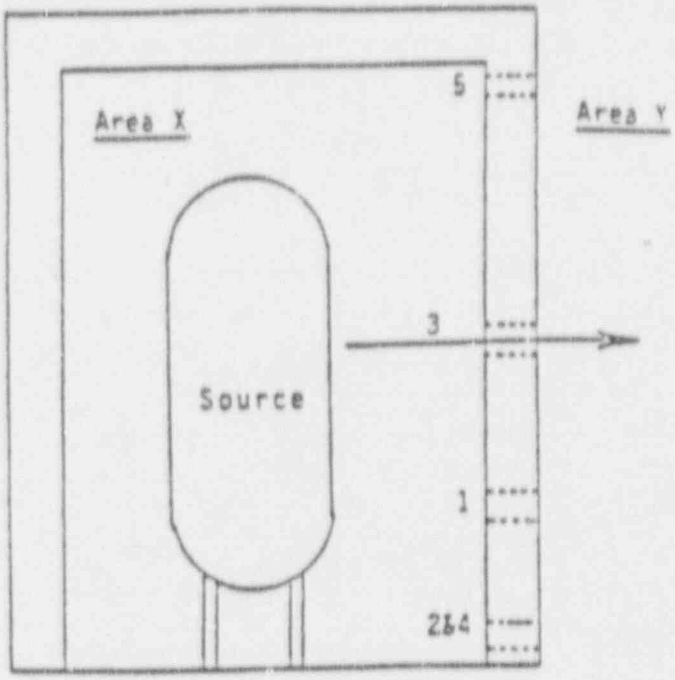

Side View

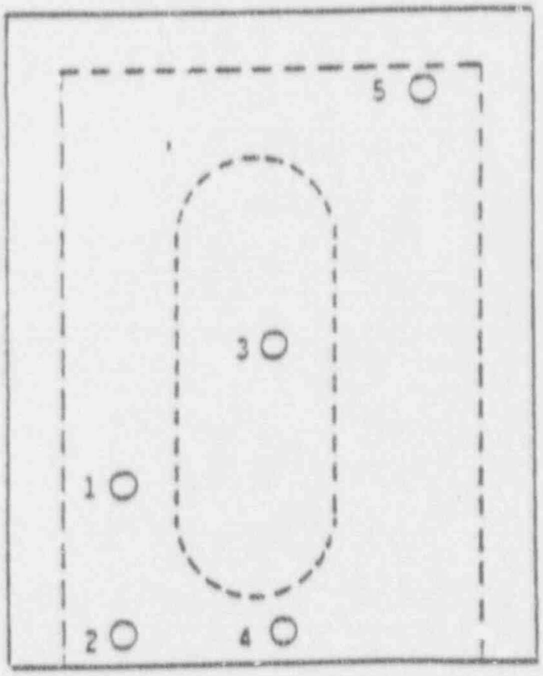

Front View

Penetration # 3 is an improper location since it is in direct line with the source and therefore results in excessive streaming.

FIGURE 6.2.4-2

Radiation Streaming

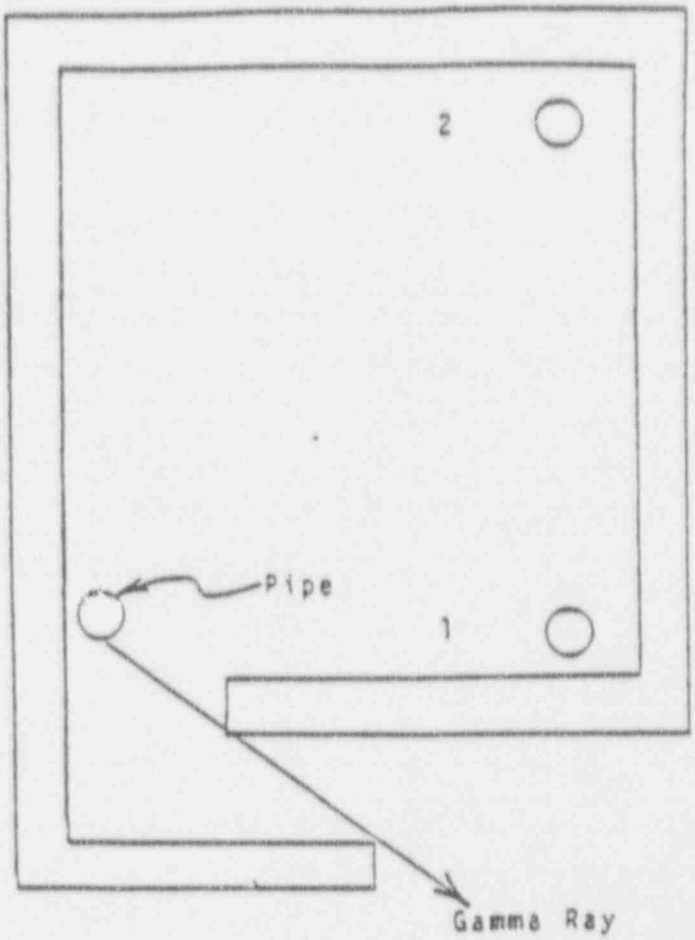

The above sketch shows "streaming" radiation through a doorway. Locations 1 and 2 indicate two possible areas where the pipe near the doorway could be relocated to reduce streaming.

6.2.4.4.1 Additional Shielding for High Radiation Components

High radiation level components (i.e., ion exchangers, filters, tanks) require additional shielding. Shielded valve galleries should also be considered.

6.2.4.4.2 Labyrinths

To prevent a line of sight between components in a shielded area and a personnel area, labyrinths should be used in the design of entrances to shielded areas.

6.2.4.4.3 Sleeves

Sleeves should be placed through shield walls in such a location as to allow piping through the wall while minimizing streaming and scattering.

6.2.4.4.4 Isolation of Components

Generally, to minimize personnel radiation exposure during operations and maintenance, only one radioactive component should be located per room. When two components are located in the same room additional radiation barriers should be considered and located where practical.

6.2.4.4.5 Pipe Chases

Pipe chases should be provided such that piping serving radioactive components does not need to violate a radiation zone to reach the component.

6.2.4.4.6 Sampling Rooms

Sampling areas should be separate from radioactive component rooms so that personnel can sample system fluids with a minimum of radiation exposure.

6.2.4.4.7 Curbing Around Tanks Containing Radioactive Liquid or Slurries

Curbing should be placed around tanks containing radioactive liquid or slurries to prevent the spread of contamination in the event of a leak.

6.2.4.5 Maintenance Considerations

Normal plant maintenance can constitute substantial personnel radiation exposure. There are, however, design considerations that should be used to reduce this exposure.

6.2.4.5.1 Vendor-Specified Removal Space

As a minimum, the vendor removal space dimension should be available at the component to be serviced. This ensures that the component can be disassembled for servicing. Any additional allowance for special tools should be used along with this removal space requirements (see **Figure 6.2.4-3**).

6.2.4.5.2 Accessibility

Components requiring maintenance should be easily accessible. This allows personnel to arrive and depart from the component quickly with minimum exposure. For this reason, maintenance components should never be located in radioactive pipe chases.

6.2.4.5.3 Equipment Separation in Compartments

Piping runs with components that require servicing should be separated from other radioactive piping.

6.2.4.5.4 Non-Radioactive Piping and Components

Non-radioactive components requiring maintenance should not be located in areas containing radioactive components. This will allow personnel to maintain non-radioactive equipment without receiving unnecessary personnel radiation exposure.

6.2.4.5.5 Direct Drive Fans

Direct drive fans should be used in areas of high radiation to minimize maintenance requirements and the resultant exposure.

6.2.4.6 Valve Shielding

6.2.4.6.1 Valve Galleries

For high radiation components, valves should be located in shielded valve galleries to allow valve operation and maintenance away from highly radioactive components.

6.2.4.6.2 Valve Operator Rooms

Valve operator rooms may be used to separate radioactive component rooms and valve galleries so that valves remotely operated by reach rods can be manipulated with shielding between the valve operator and the radioactive valve(s).

FIGURE 6.2.4-3

Valve Pull Space

Adequate space should be provided to remove the topworks (bonnet, yoke, stem) from the valve and perform necessary repairs.

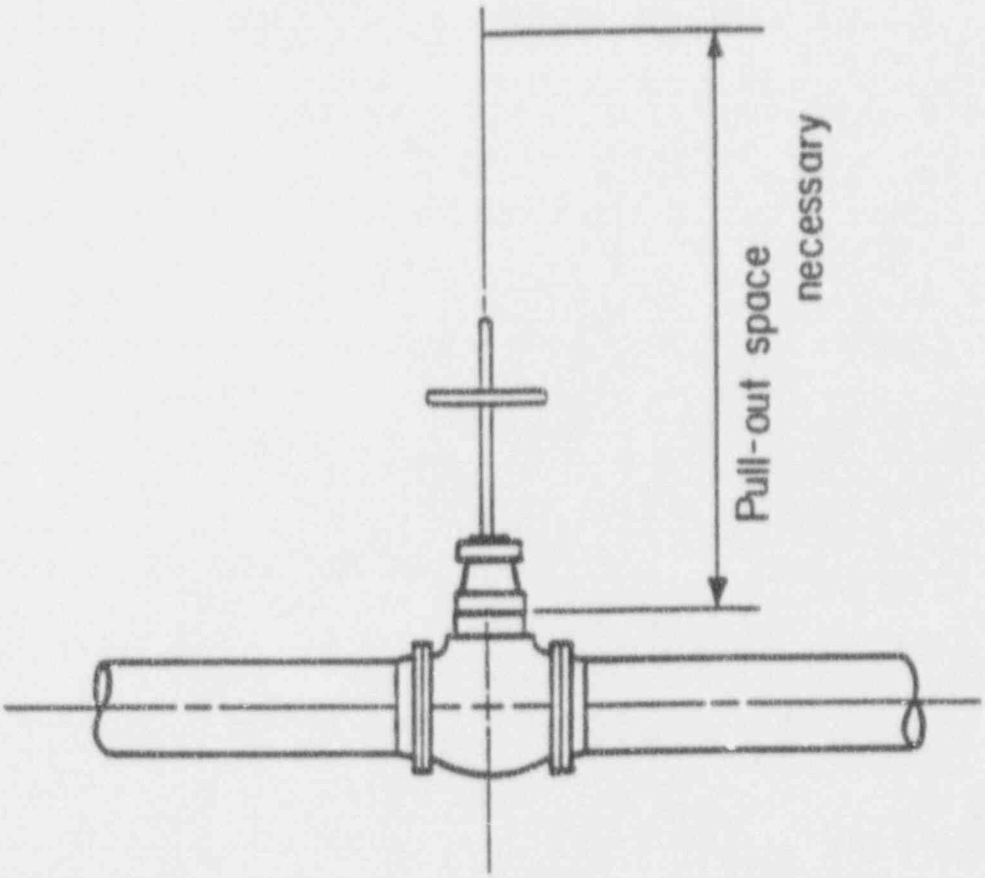

6.2.4.6.3 Remote Valve Operators

Remote valve operators may also be used to minimize personnel exposure. However, valve operator maintenance should be considered along with the radiation effects on elastomers and lubricants in the valve operator.

6.2.4.7 Mechanical Components

All components which process radioactive fluids (gas or liquid) can pose a radiation hazard. Specific considerations are described below.

6.2.4.7.1 Pumps

Pumps are generally a small radiation source. However, pumps are a high maintenance item, and therefore, could contribute significantly to the total station dose. The following items should be considered in order to minimize the dose rate.

6.2.4.7.1.1 Low Points

Low points should be minimized in suction lines for two reasons. First, low points tend to collect radioactive particulates. Second, suction lines cannot be drained during operation. These combine to make suction line low points potential crud collectors.

6.2.4.7.1.2 Leakage

Leakage of pumps seals should be accounted for along with the conditions of pump drains.

6.2.4.7.2 Heat Exchangers

Heat exchangers associated with radioactive systems are susceptible to crud plateout on the tube side, leading to radiation concentration. There is also the possibility of tube leakage, which would contaminate otherwise nonradioactive systems. Heat exchangers should be designed to reduce maintenance exposure by providing flushing and draining provisions and making the radioactive fluid the lower pressure fluid. They should also be separated or shielded from high maintenance items.

6.2.4.7.3 Demineralizers

Demineralizers remove radioactive source materials by absorbing them into a resin bed. Periodically, this resin is sluiced out and replaced. Because demineralizers concentrate radioactive source materials, they represent a substantial radiation exposure source. Exposure during operation and maintenance should be minimized by placing valves, motors, switches, and other items outside demineralizer equipment rooms or behind shielded partitions.

6.2.4.7.4 Tanks

Tanks associated with radioactive systems contain large volumes of radioactive fluids. While the fluids themselves may not be highly radioactive, the large volume, and any crud in the liquid, make the tank a radiation source. Streaming and scattering usually represent the primary exposure potential in these rooms. The design should consider serviceability in the same manner as demineralizers.

Curbs should also be placed around tanks containing radioactive fluid to minimize the spread of contamination in the event of a leak.

6.2.4.7.5 Concentrators

Concentrators separate radioactive particulates from reactor coolant water and concentrate them. As such they represent varying degrees of radiation exposure potential. As these components are often skid mounted, care should be taken to locate valves and other maintenance items away from the "hot" side of the skid.

6.2.4.7.6 Strainers

Strainers present a potential radiation source as they remove relatively large chunks of material from the fluid and may warrant shielding. The design should consider serviceability in the same manner as demineralizers.

6.2.4.7.7 Filters

Filters remove moderate size particulates from the fluid, thereby concentrating radiation. Filters, therefore, represent a radiation hazard. The design should consider serviceability in the same manner as demineralizers.

6.2.4.7.8 Valves

Valves should be located and oriented to minimize the potential of crud traps. Some valve types are more prone to be crud traps and should be considered in the valve selection. Care should be exercised to avoid placing valves near any highly radioactive component. They should be in valve galleries whenever possible or in areas of lower radiation dose rate and accessible for maintenance. For more information of valve orientation to avoid crud traps and facilitate drainage as well as valve descriptions, see **Section 6.2.2**.

6.2.4.8 Protection

6.2.4.8.1 Pipe Rerouting

Pipe rerouting may be required as the design progresses to satisfy sometimes conflicting design considerations (see **Section 6.2.4.2**). From a purely economic viewpoint, rerouting during the design process is generally the preferred method to minimize radioactive pipe routing concerns. Other methods should be considered as second alternatives. Rerouting may be required for any of the following reasons.

6.2.4.8.1.1 Radiation Zone Violations

Several rerouting methods are possible for radiation zone violations, each depending on the degree of violation.

A. Increase Separation Distance - For cases where the radiation dose rate at the nearest personnel path is only slightly higher than the allowable rate for the zone in question, an acceptable method is to increase the separation distance from the source to the personnel path. This can be accomplished by raising or otherwise relocating the pipe within the zone.

B. Reroute Through Higher Zone - For cases where the radiation dose rate of the pipe in question is much higher than the zone it is routed through, or it is not possible to provide sufficient separation distance, rerouting the pipe through a higher zone is the preferred method.

6.2.4.8.1.2 Streaming

Streaming can be minimized by routing pipe such that streaming from large components cannot occur. This involves rerouting pipe and locating sleeves so that there is no direct line from a component through the shield wall.

6.2.4.8.1.3 Crud Traps

Rerouting of pipe to eliminate crud traps can be accomplished by revising layouts to satisfy the guidelines of **Section 6.2.4.2.2.2.2**.

6.2.4.8.2 Wall Construction or Relocation

The construction of a wall solely to contain radiation is a possible method to increase radiation shielding. It is, however, usually not practical unless all rerouting possibilities have been exhausted. If the wall has not yet been erected, the consequences of relocating the wall are lessened and could be more feasible than relocating the pipe

6.2.4.8.3 Lead Shielding

Construction of a lead shield to contain radiation is another possible shielding method. This method should only be considered when rerouting of the piping is not practical.

6.2.5 CONSTRUCTABILITY

6.2.5.1 Standard Components

Standard components should be used to the maximum extent possible for piping, fittings, valves, and supports (see **Section 6.1.4.2**).

6.2.5.2 Pipe Assembly

6.2.5.2.1 Banked Piping Assemblies

The requirements for the location of piping assemblies in banked piping differs for seismic and non-seismic. For specific guidelines on banked piping with analyzed piping and gang supported piping interactions, refer to **Section 6.2.3.4**.

6.2.5.2.1.1 Field-Routed Piping

For field-routed piping, field personnel prefer the largest pipe to be closest to the wall with the smaller pipe out into the room and at a higher elevation. See **Figure 6.2.5-1** for the preferred location of the piping arrangement and **Section 6.2.3** for support requirements.

6.2.5.2.1.2 Piping in Trenches

Stacking of pipe in a horizontal trench should be done from the bottom to the top beginning at the wall. The center of the trench should be left open to provide access to piping toward the walls. Clearance from walls, ceilings and floors should be at least 12 inches for purposes of construction, maintenance and inspection. For inservice inspection considerations for piping in trenches, see **Section 6.2.6.5** and **Figure 6.2.5-2**.

6.2.5.2.1.3 Elevations

The bottom elevation of non-seismic piping should be kept the same to facilitate the use of common hanger steel when running banks of piping (see **Figure 6.2.5-3**). See **Section 6.2.3.4** for pipe routing for supportability.

FIGURE 6.2.5-1

Field Routing Configuration

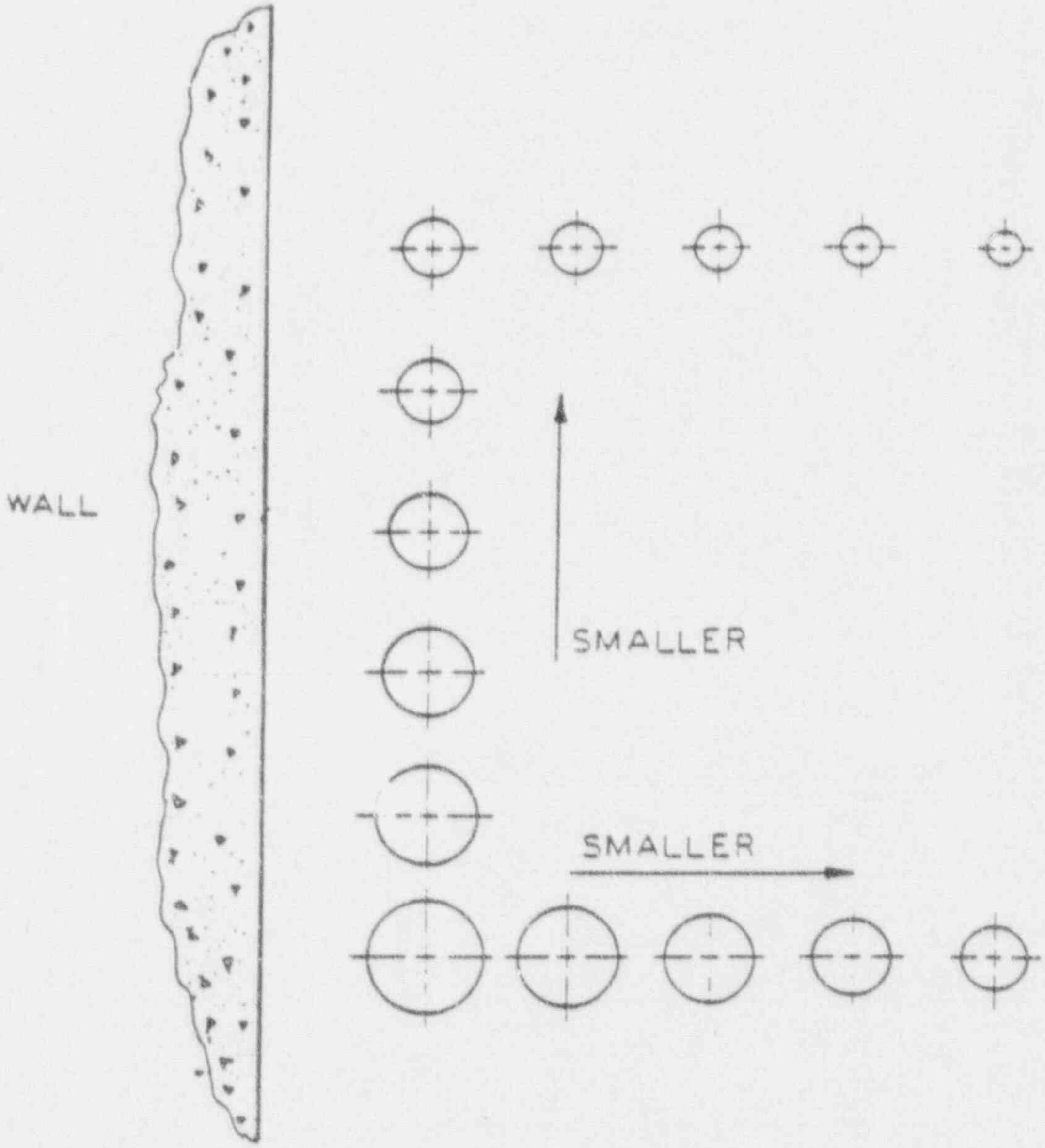

NON-ANALYZED OR FIELD ROUTED CONFIGURATION

FIGURE 6.2.5-2

Pipe Trench Configuration

Section in center of trench should be left open to allow access.

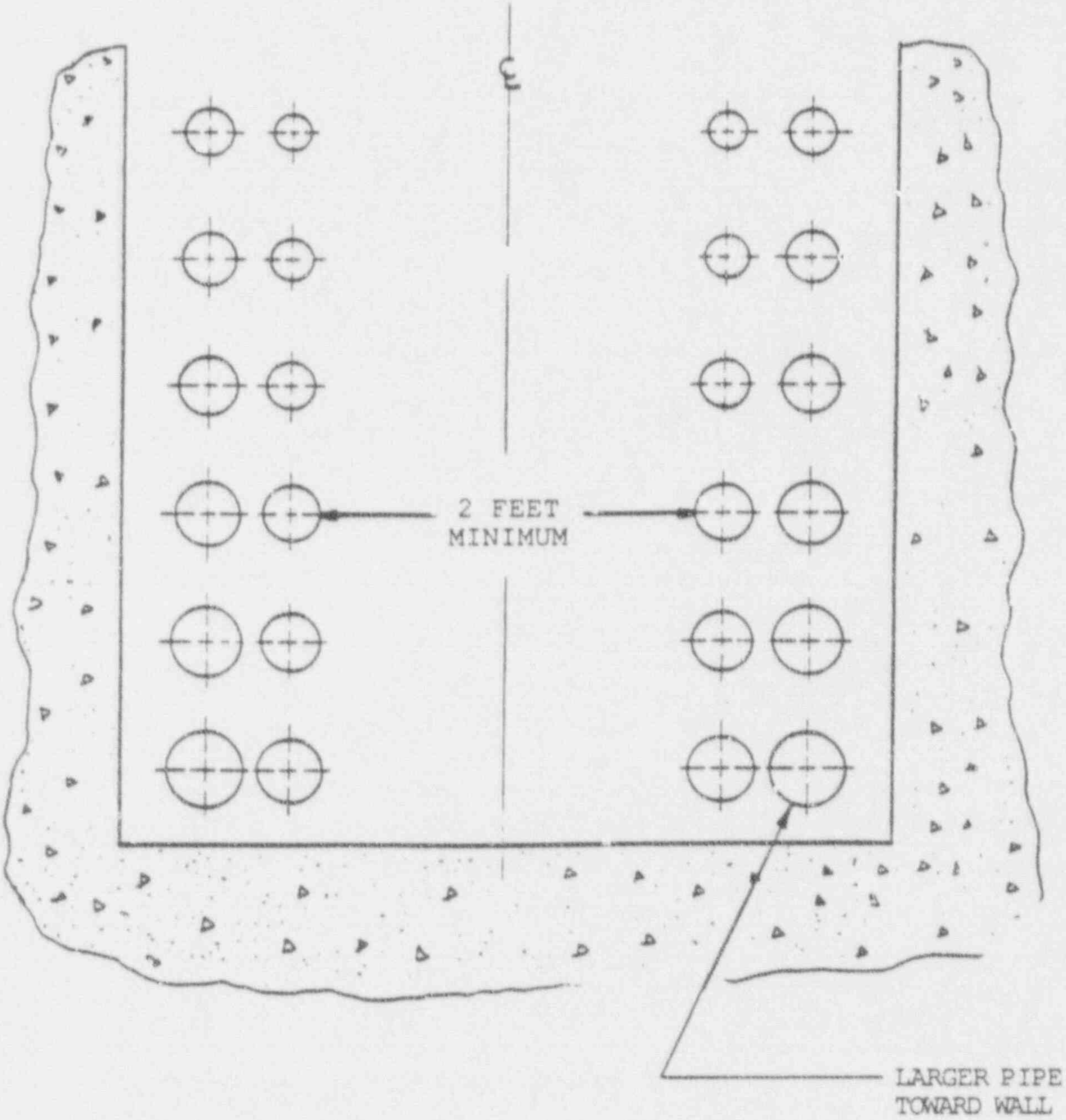

FIGURE 6.2.5-3

Common Support Configuration

Outside diameter of pipe should have common bottom elevation to allow use of common pipe support.

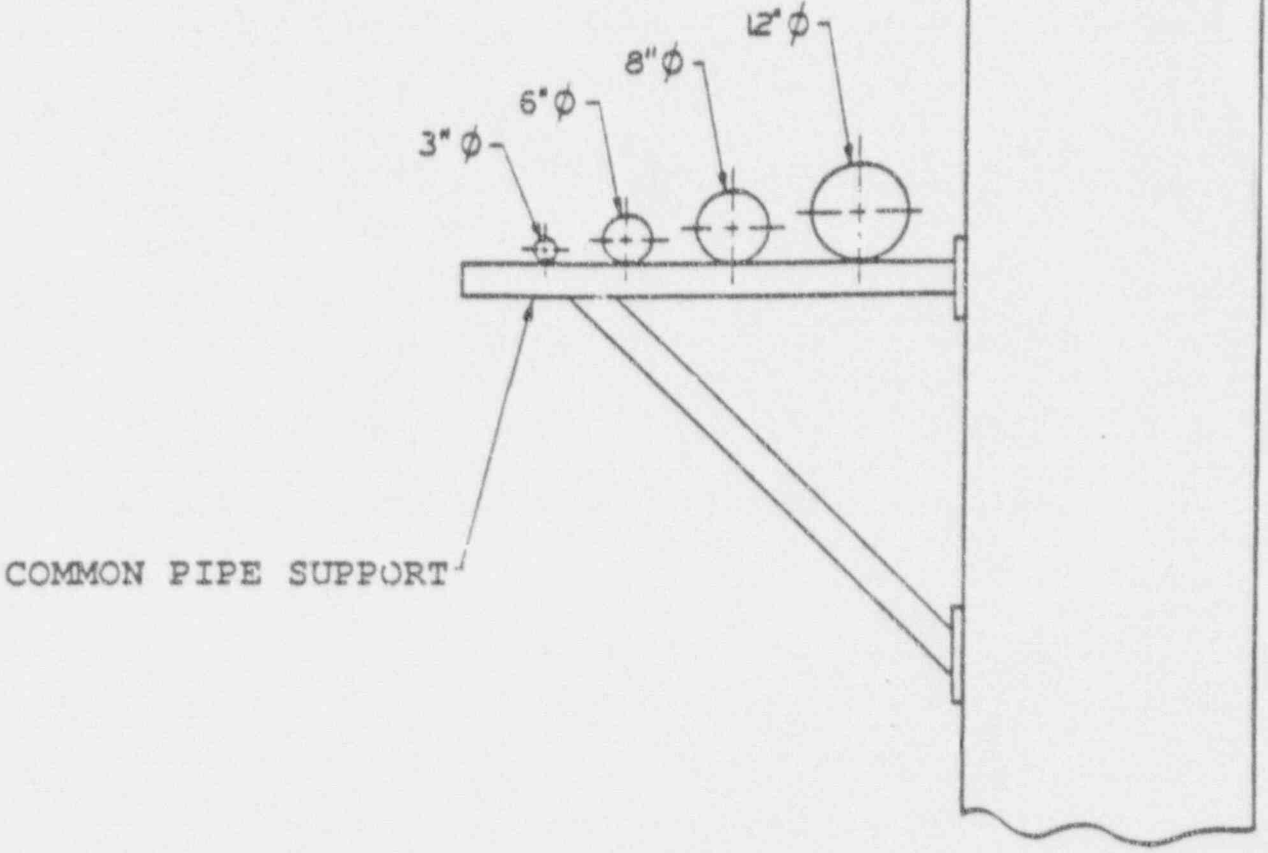

6.2.5.2.2 Pipe Bends

6.2.5.2.2.1 Radius Bends

When designing long radius bends, as in the Reactor Building, branches from the long radius bend to another 3D or 5D bend should be avoided. These branches are very difficult to fabricate. A tee should be installed in a tangent area with the branch bend connected to the tee branch.

6.2.5.2.2.2 Sloped Piping

If a piping system requires a slope, the slope may be obtained if butt welds or socket welds are used. Specific slope considerations for socket welds and butt welds are as described below.

6.2.5.2.2.2.1 Socket Weld Piping

Due to the geometry of a socket weld fitting, there is enough play between the pipe and fitting so that the pipe can be welded into the fitting at an angle. If a greater slope is required, the inside of the fitting may be ground to 87.5% of the nominal wall thickness. This will allow the pipe to be welded at a greater angle. When a slope is required, which cannot be obtained by one of the above methods, the piping may require a bend.

6.2.5.2.2.2.2 Butt Weld Piping

Fittings for butt weld pipe may be mitered in order to obtained a slope in the pipe. The fit-up gap for the backing ring bevel gap in butt weld pipe may be maneuvered within tolerances to obtain a sloped pipe.

6.2.5.2.2.2.3 Arced Piping

Arced piping should not be additionally sloped. This requires forming a 2-plane bend, which is beyond the capabilities of field personnel, and also increases the radius of the original arced pipe.

6.2.5.2.2.3 Bend Constraints

6.2.5.2.2.3.1 Bend Clearances

Fittings, equipment, and connections should not be placed within six inches of the tangent to the bend radius (see **Figure 6.2.5-4**).

6.2.5.2.2.3.2 Bend Deflection

Bends should not be specified unless the maximum deflection is greater than one-inch, which is generally the tolerance for field personnel to form theses bends. **Table 6.2.5-1** lists the radius of a bend and the angle where the deflection becomes one inch.

6.2.5.3 Construction Assembly

6.2.5.3.1 Layout

6.2.5.3.1.1 Fitting-to-Fitting Restrictions

From a field fabrication standpoint, fitting-to-fitting connections should be eliminated since they do not allow any adjustment during fit-up. This is especially true when the piping passes through a wall or floor (See **Figure 6.2.5-5**).

The following restrictions apply to fitting-to-fitting connections:

A. Elbows should only be connected to spool pieces, other elbows, or reducers.

B. Reductions in line size of 4:1 or more should be done in at least two steps with spool pieces in between.

C. ASME Class 1, 2, and 3 piping should have a spool piece between all fittings with a minimum length of 6 inches.

6.2.5.3.1.2 Spool Pieces

6.2.5.3.1.2.1 Construction Fit-up

Piping layout should include a large enough spool piece to allow for: (1) adjustment during fit-up, especially in the case of equipment hook-ups, (2) flexibility to adjust for thermal growth, and (3) construction tolerances (see **Figure 6.2.5-6**).

6.2.5.3.1.2.2 Minimum Spool Pieces

The following should have a 6" minimum spool piece:

A. Piping discontinuities (see **Section 6.2.6.4**).

B. Fitting-to-fitting or fitting-to-component configurations (**see Section 6.2.3.1.3**).

C. Adjacent valves to serve as a weld safe. See **Figure 6.2.5-7** and **Section 6.2.6.4**.

D. Traceability information and overlapping of fillet welds on socket weld pipe (see **Figure 6.2.5-8**).

A minimum 6" spool piece should be used for small diameter pipe (6" NPS or less) and a 6" to 12" minimum spool piece for NPS larger than 6".

TABLE 6.2.5-1

Bend Radius

R	S	θ
120′ (1440″)	9′-0″	4.3°
115′ (1380″)	8′-10″	4.4°
110′ (1320″)	8′-8″	4.5°
105′ (1260″)	8′-5″	4.6°
100′ (1200″)	8′-2″	4.7°
95′ (1140″)	8′-0″	4.8°
90′ (1080″)	7′-8″	4.9°
85′ (1020″)	7′-7″	5.1°
80′ (960″)	7′-3″	5.2°
75′ (900″)	7′-1″	5.4°
70′ (840″)	6′-10″	5.6°
65′ (780″)	6′-7″	5.8°
60′ (720″)	6′-3″	6.0°
55′ (660″)	6′-1″	6.3°
50′ (600″)	5′-9″	6.6°
45′ (540″)	5′-6″	7.0°
40′ (480″)	5′-2″	7.4°

Deflection = 1″

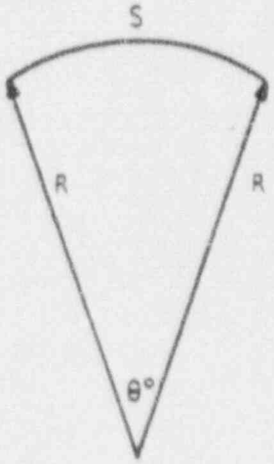

R = Radius
θ = Angle

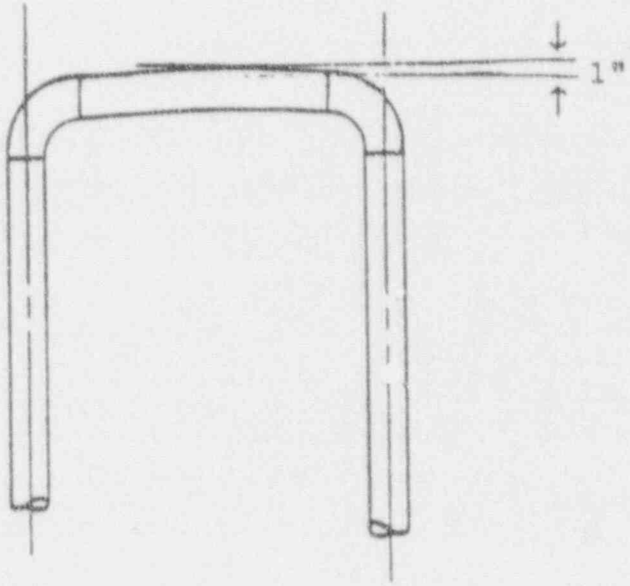

DEFLECTION < 1″

BEND DOES NOT
NEED TO BE
SPECIFIED

FIGURE 6.2.5-4

Bend Clearances

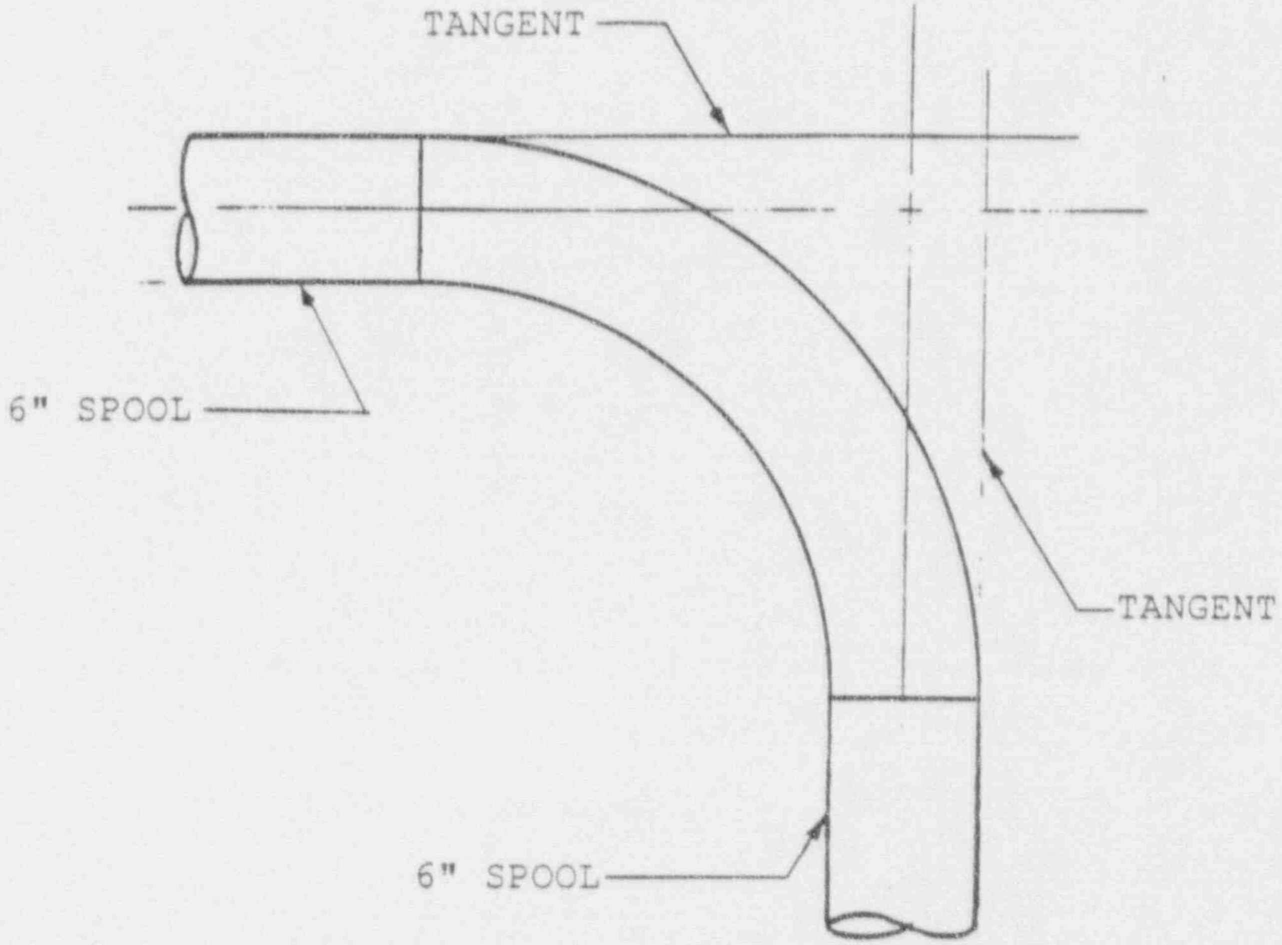

FIGURE 6.2.5-5

Non-preferred Sleeve Configuration

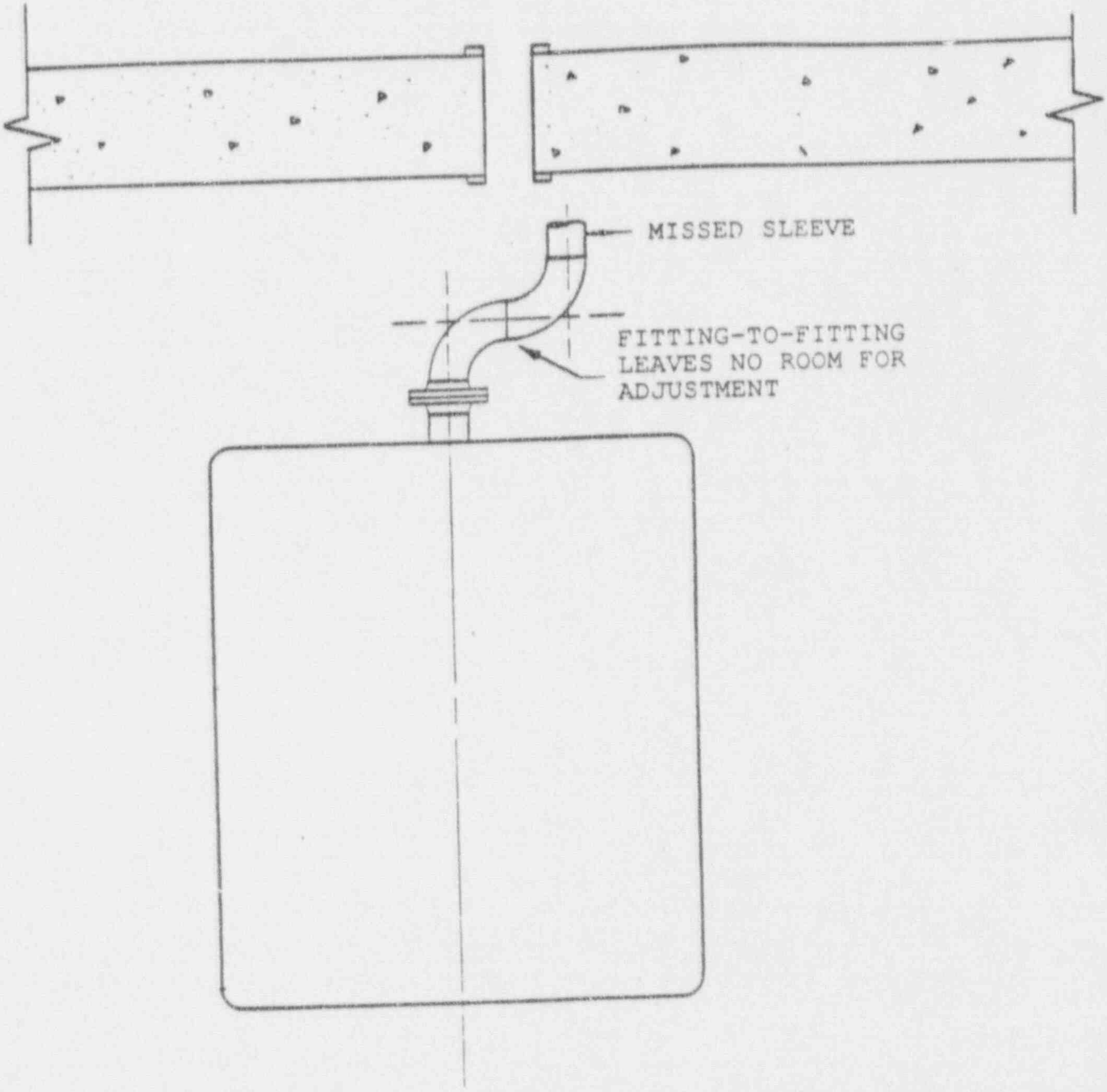

FIGURE 6.2.5-6

Equipment Fit-up

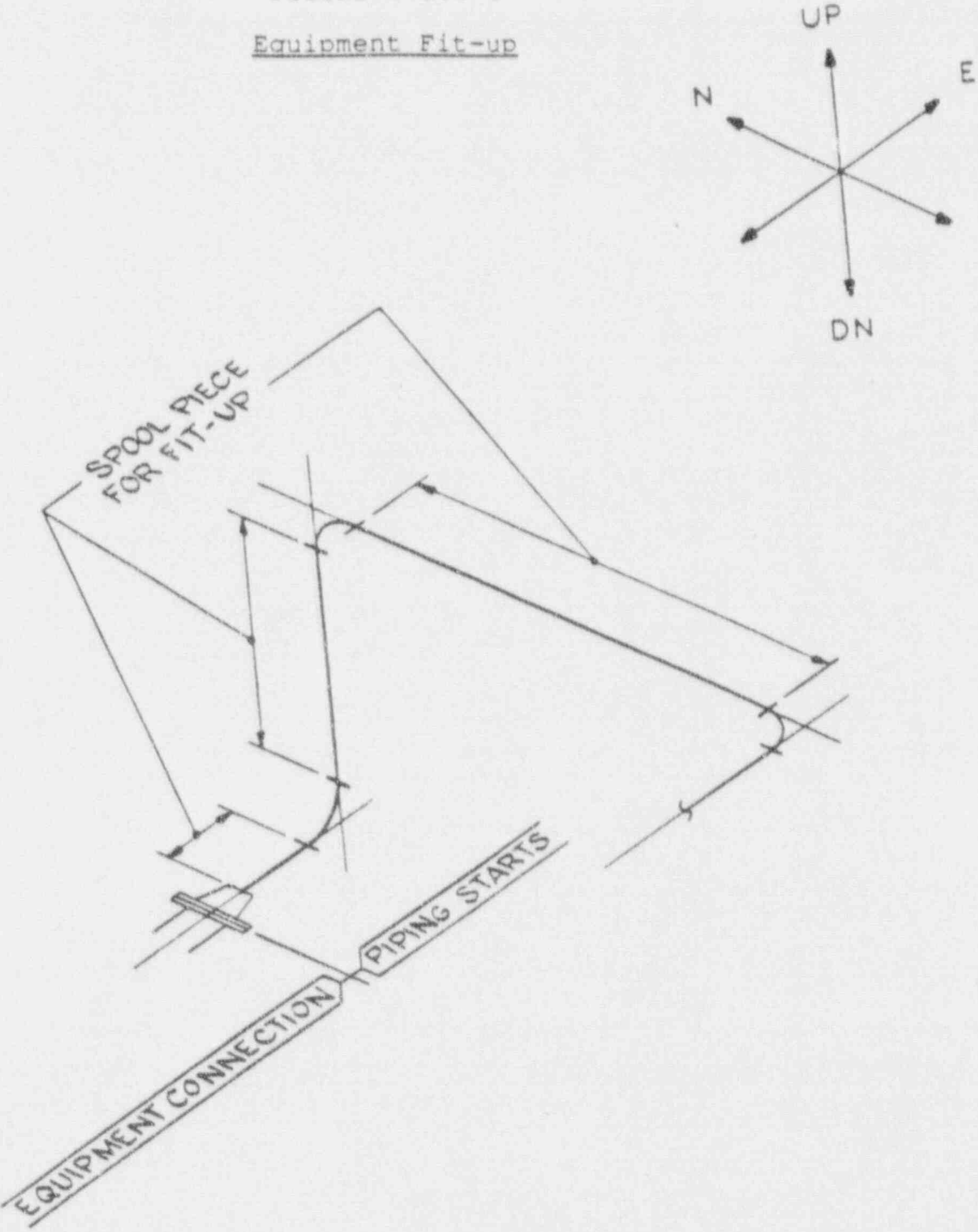

FIGURE 6.2.5-7

Spool Piece Between Valves

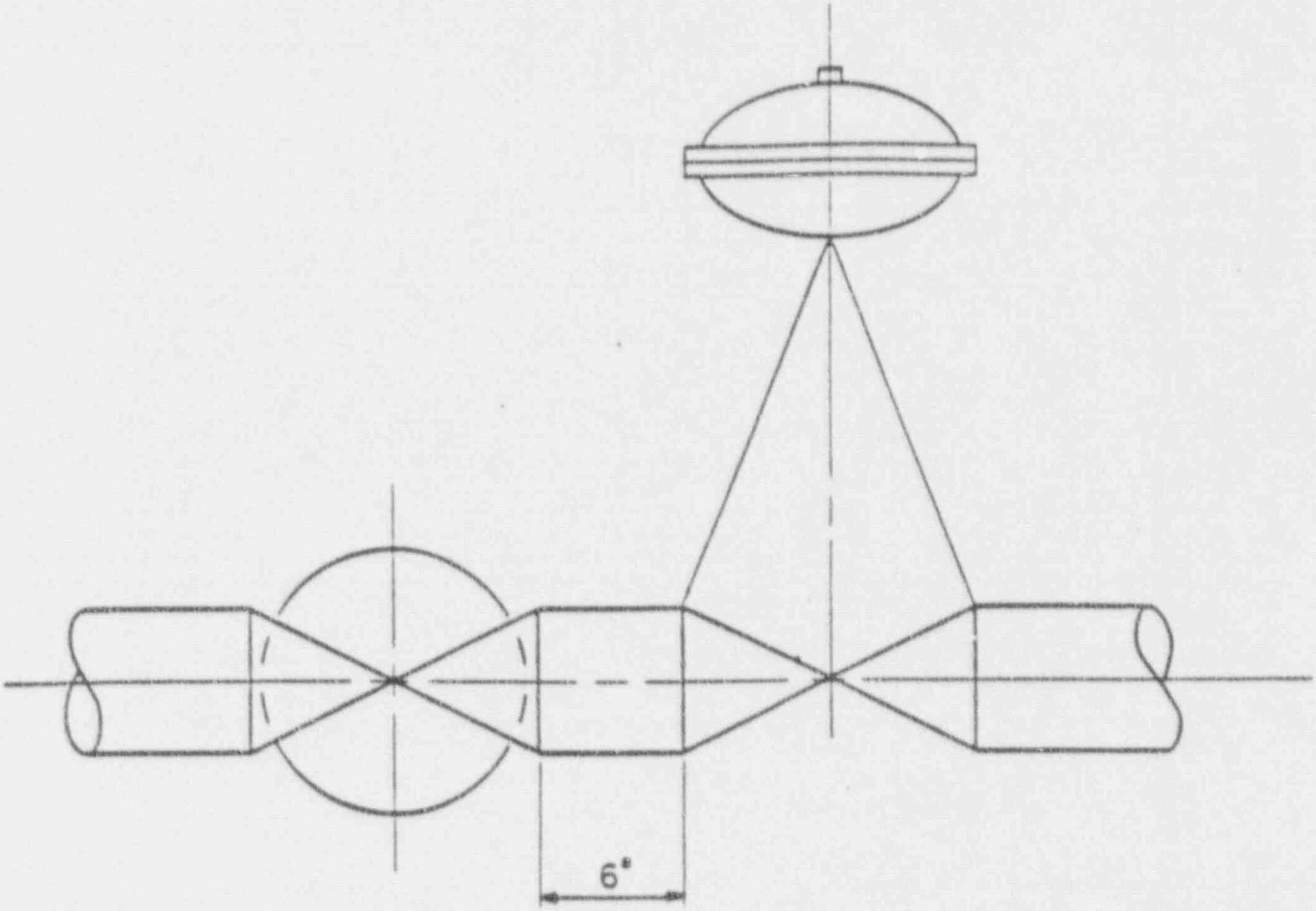

FIGURE 6.2.5-8

Traceability Information

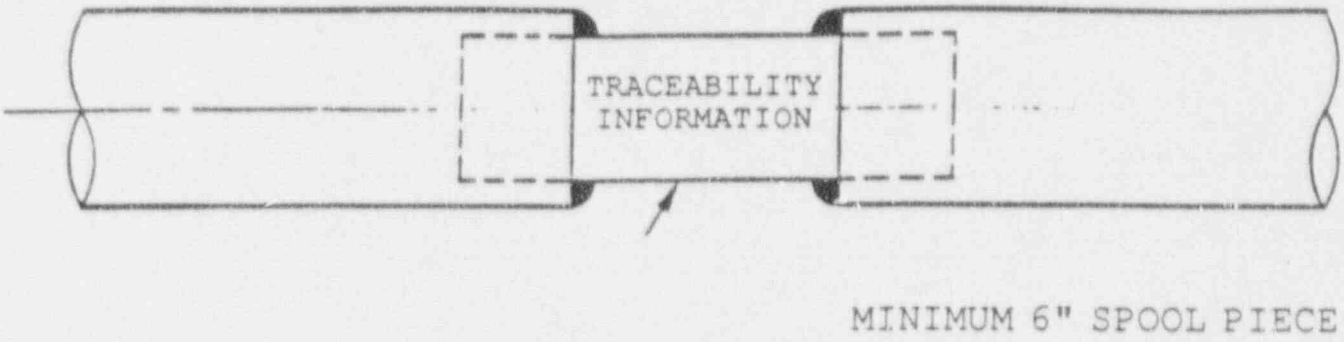

6.2.5.3.2 Equipment

6.2.5.3.2.1 Equipment End Connections

All valve and equipment connections should be checked against the manufacturer's drawing to ensure that the nozzle is of the same schedule as the pipe and the same type of connection (flange, butt weld, socket weld). A transition piece should be provided if necessary.

6.2.5.3.3 Tolerances

Tolerances should provide adequate flexibility for field installation. Spool pieces in three directions are a method to prevent tolerances from being overly restrictive (see **Figure 6.2.5-7**)

6.2.5.3.4 Weld Types

6.2.5.3.4.1 Field Welding Provisions

Field welding is performed under less controlled conditions than shop welds. Adequate fit-up tolerances should be provided so as to not make erection overly restrictive, thus requiring excessive field changes.

6.2.5.3.4.2 Minimize Field Welds

Due to the less controlled conditions for field welding, field welds should be minimized where possible.

6.2.5.3.4.3 Butt Welds

Butt welds are standard in piping greater than 2" NPS, but may be used in smaller piping where there is the potential for crud buildup. The minimum size for butt welds should be 1" (see **Section 6.2.4.2.2.2**).

6.2.5.3.5 Insulation Allowances

Allowances should be provided for insulation. For removable insulation (reflective, blanket), access and clearance should also be adequate for insulation removal and replacement. Additional clearance should also be provided to prevent contact of adjoining piping and insulation under maximum allowable thermal movement.

6.2.5.4 <u>Accessibility for Construction</u>

6.2.5.4.1 Clearance

A. Adequate clearance should be given at all points for welding, inspection, testing and maintenance. Typically, at least 12" of clearance is needed from walls, floors, and ceilings. For seismic piping, a clearance of at least 18" should be left for installing snubbers. If the piping is ASME Class 1, 2, or 3, **Section 6.2.6.3** gives the minimum clearances. For piping support considerations, see **Section 6.2.3.1.2** for clearances.

B. When locating equipment, the needed for installing studs and flanges around equipment should be considered.

C. An envelope should be left around piping and structures, depending on diameters, for the installation of insulation.

6.2.5.4.2 Flanges

A. Flange connections should be used for all high maintenance equipment for easy removal. All connections to the equipment should be flanged, not just major connections. Equipment with lower maintenance priority may have welded connections.

B. When flanging equipment that is frequently disassembled, laydown consequences should be considered. Flanges should be placed so as to permit the part to be laid down without damaging the piping or equipment (see **Figure 6.2.5-9**).

6.2.5.4.3 Valves/Isolation

When designing piping and locating valves, the orientation of the valve and space required for installation, operation, and maintenance should be considered (see **Section 6.2.2**).

6.2.5.4.4 Door Swing Space

When designing piping in the area of control cabinets, door swing space should be considered.

6.2.5.4.5 Testing Provisions

Testing provisions are described in **Section 6.2.7**.

6.2.5.4.6 Inspection Provisions

Inspection provisions are described in **Section 6.2.6**.

FIGURE 6.2.5-9

Flange Configuration

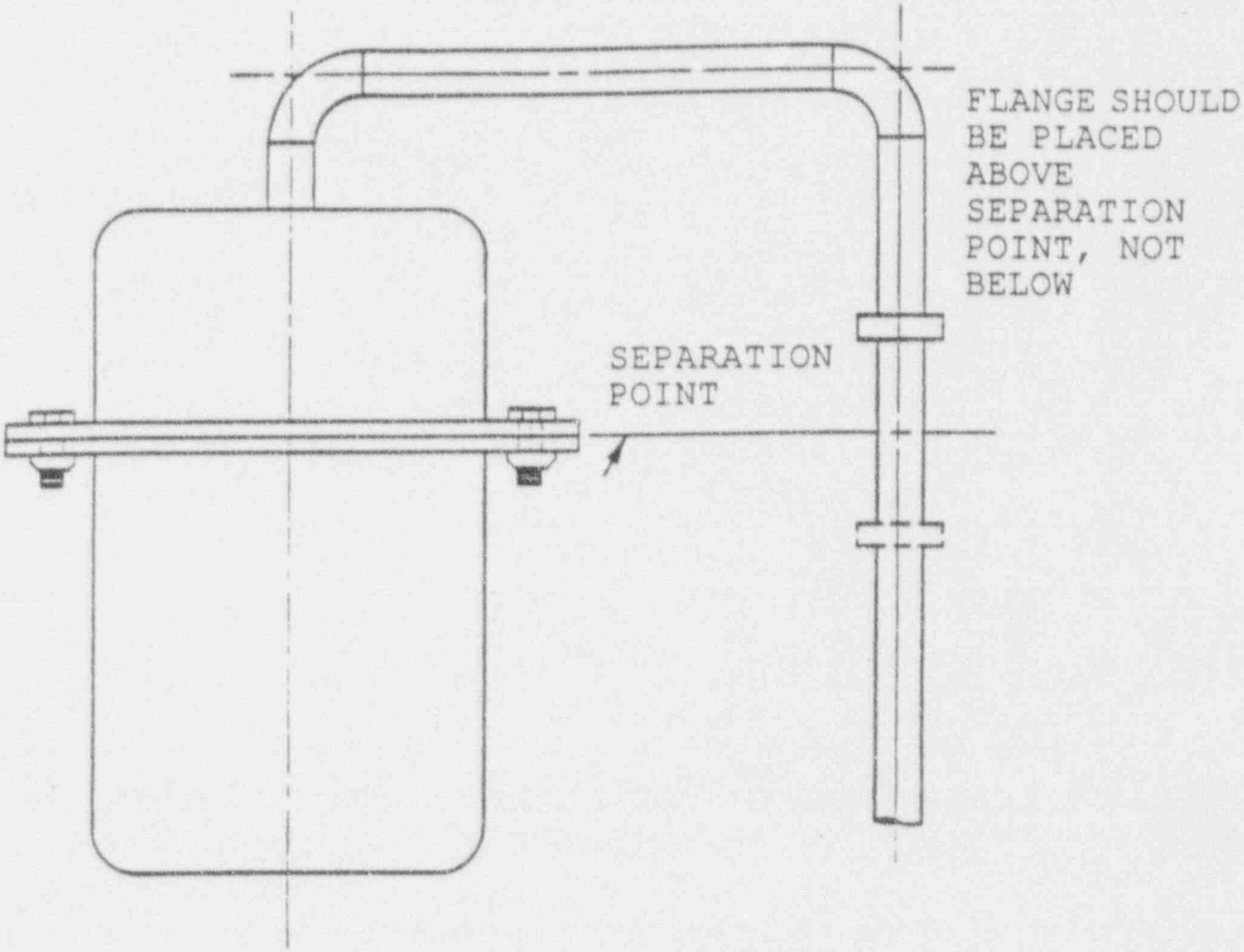

6.2.6 ACCESSIBILITY FOR INSERVICE INSPECTION

Inservice inspection (ISI) involves four main examination procedures: (1) visual examinations, (2) surface examinations, (3) volumetric examinations and (4) pressure testing. Most ASME Class 1 and 2 components require a combination of the four types of inspection, while Class 3 components require only visual and pressure examinations. This also includes preservice inspections (PSI) prior to placing the system in service.

In order to perform inservice inspection, the layout and design of the piping should provide adequate access to the various ASME Class 1, 2, and 3 components. This section describes minimum spacing requirements needed to perform inservice inspection.

6.2.6.1 Clearance For Inspection Equipment

Provision for placement of inspection equipment should be provided for all ASME Class 1, 2, and 3 piping.

6.2.6.2 Parallel Pipe Spacing

For ASME Class 1, 2, and 3 piping, the piping design and layout should provide the following clearance between pipes:

A. For piping (including necessary insulation) with an OD of 9 inches or less, an minimum envelope of (1.33 x OD) should be left around the pipe, separating it from parallel piping. For ease in design calculations, 1.5 (OD) is an acceptable design value (see **Figure 6.2.6-1**).

B. For piping (including necessary insulation) with an OD greater than 9 inches, a 12 inch parallel spacing requirement should be used. Additionally, a 2 foot square area should be maintained above and below the piping for visual inspection.

C. The separation requirements for the larger line including necessary insulation should be used when different line sizes are run parallel.

6.2.6.3 Structural Clearance

The minimum allowable distance from floors, ceilings, and walls for piping should be in accordance with the values given in **Table 6.2.6-1**. This piping may or may not contain insulation. The minimum distance designated here will be free space between the structure and the outside of the piping insulation. See **Section 6.2.3** on support/restraint requirements.

6.2.6.4 Discontinuities

The following requirements apply to all ASME Class 1, 2, and 3 piping in order to meet inspection requirements.

Piping discontinuities are items that break-up linear runs of piping, such as tees, elbows, valves, and other fittings. These discontinuities should not be joined directly together. There should be a minimum spacing of six inches between discontinuities. This space allows a clear sound path for ultrasonic inspection of the joining welds. Support requirements and constructability requirements also necessitate this six-inch minimum spacing. Note that not all fitting-to-fitting designs are undesirable; however, for ASME Class 1, 2, and 3 piping, no fitting-to-fitting configurations should be used. Examples of spacing requirements for several piping discontinuities are given in **Figure 6.2.6-2.**

6.2.6.5 Pipe Chases and Trenches

In horizontal and vertical pipe chases, the piping layout should be in accordance with constructability requirements as provided in **Section 6.2.5.2.1.2**. Only ASME Class 2 and 3 piping should be placed in chases and trenches; Class 1 piping should not be located in chases or trenches.

6.2.6.5.1 Horizontal Pipe Chase

Class 2 and 3 piping should be run in the lower third of horizontal pipe chases and near the access aisle to allow for inservice inspection. The spacing requirements of **Section 6.2.6.2** should be met, except where other criteria (i.e., interactions or support/ restraints) will affect them. Access aisle width should be at least 3 feet (see **Figure 6.2.6-3**).

6.2.6.5.2 Vertical Pipe Chase

ASME Class 2 and 3 piping should be run in close proximity to the ladder provided for access. The pipe spacing requirements of **Section 6.2.6.2** should be met. See **Figure 6.2.6-4** for allowable zones. Access around the ladder should be 3 feet.

6.2.6.5.3 Trenches

ASME Class 2 and 3 piping should be run in the top third of the trench with priority to accessibility given to Class 2 piping. **Section 6.2.6.2** spacing requirements only apply for Class 2 piping as Class 3 piping can be pressure tested in the trenches. The access area should be 3 feet in width (see **Figure 6.2.6-5**).

TABLE 6.2.6-1

Minimum Structural Clearance

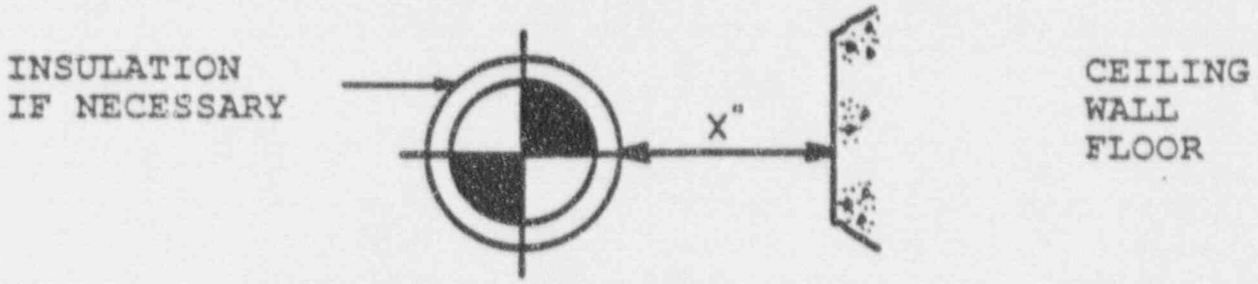

PIPE OD INCLUDING INSULATION	CLASS 1 AND 2 PIPING "X" (In)	CLASS 3 PIPING "X" (In)
1"	12"	12"
2"	12"	12"
3"	12"	12"
4"	12"	12"
* 5"	12"	12"
6"	12"	12"
8"	12"	12"
10"	14"	12"
12"	18"	12"
14"	18"	14"
16"	18"	16"
18"	18"	16"
20"	18"	16"
≥ 24"	18"	18"

* Non-standard pipe size.

FIGURE 6.2.6-1

<u>Parallel Pipe Spacing</u>

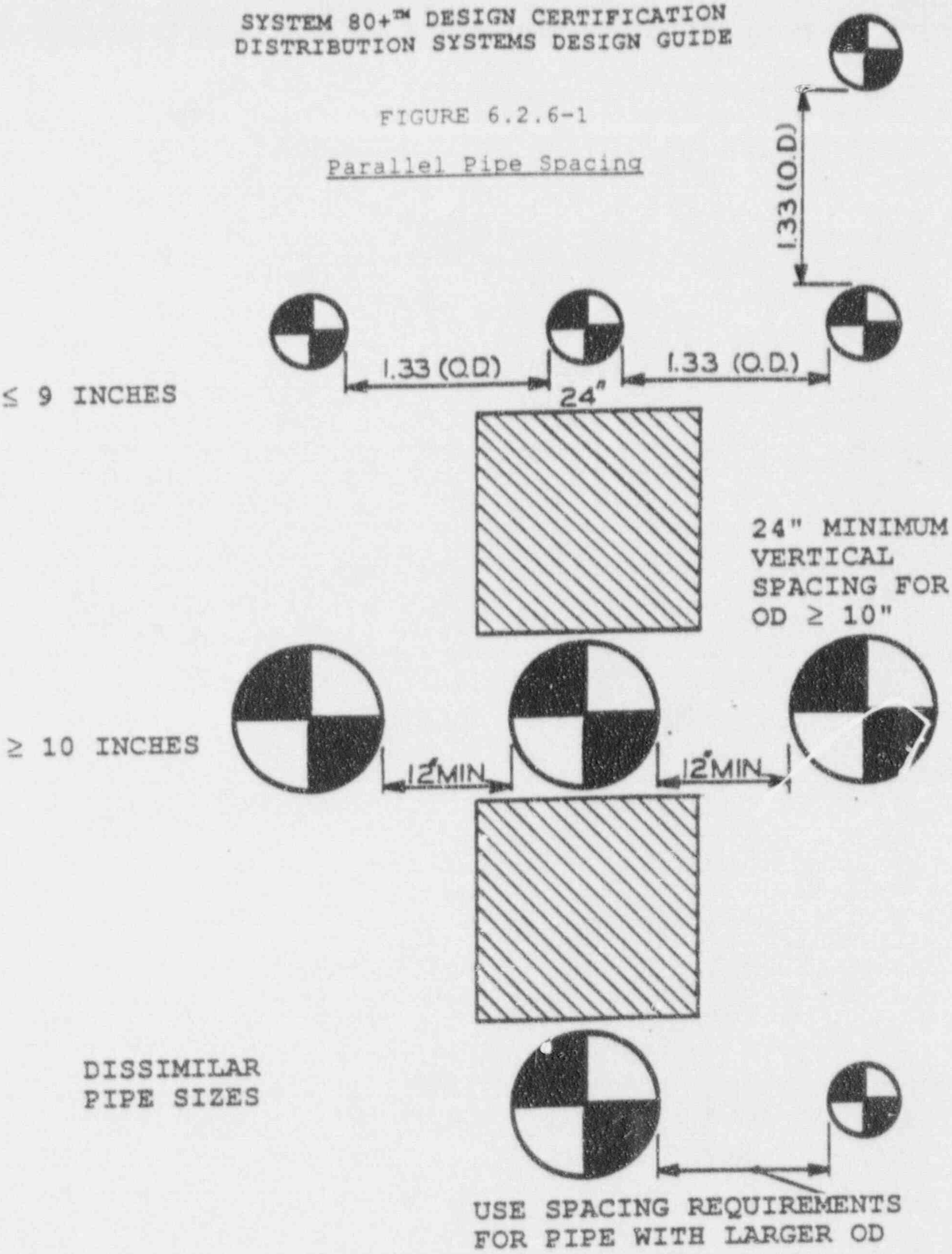

Note: Outside diameter includes insulation.

FIGURE 6.2.6-2

Piping Discontinuities

FITTINGS

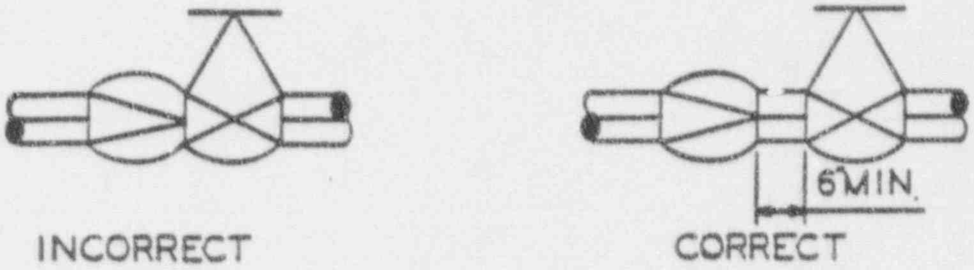

VALVES

BRANCHES

FIGURE 6.2.6-3

Preferred Horizontal Chase Area

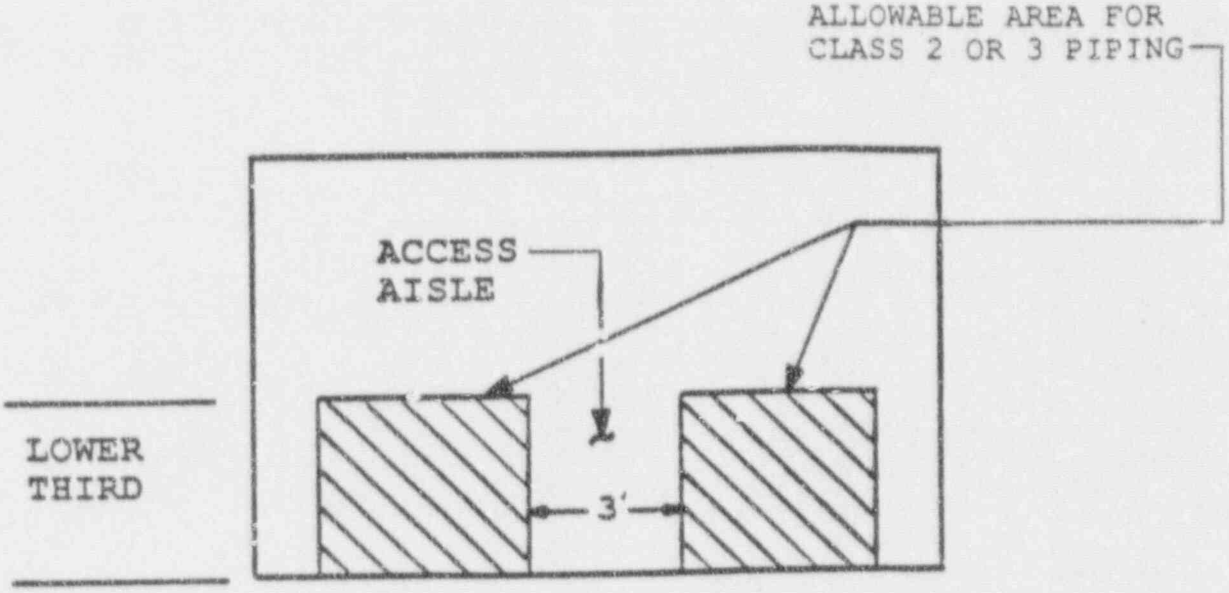

FIGURE 6.2.6-4

Preferred Vertical Chase Area

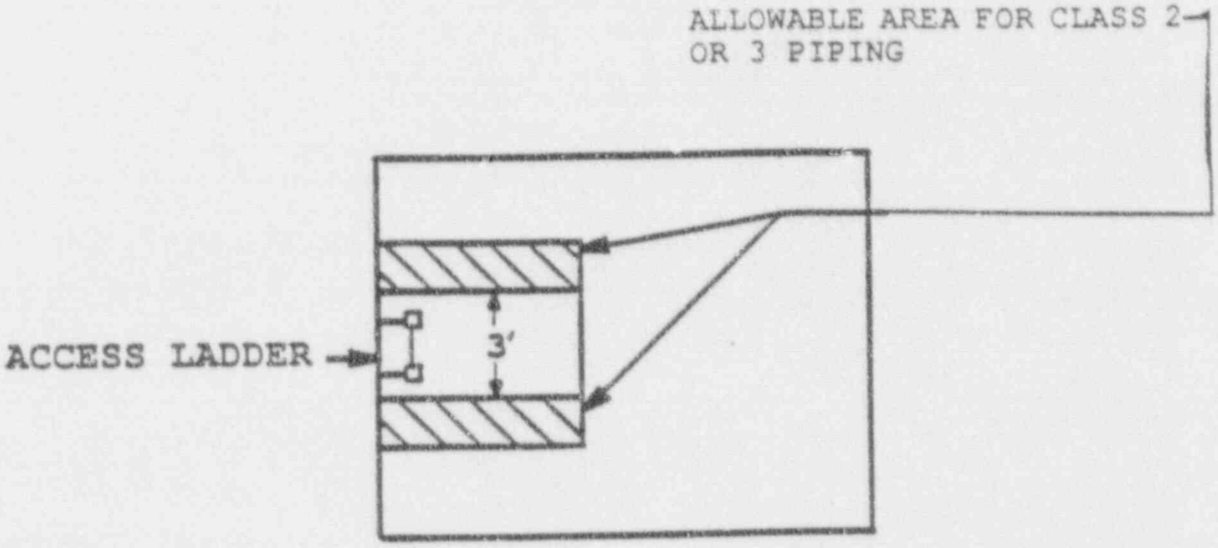

FIGURE 6.2.6-5

Preferred Trench Area

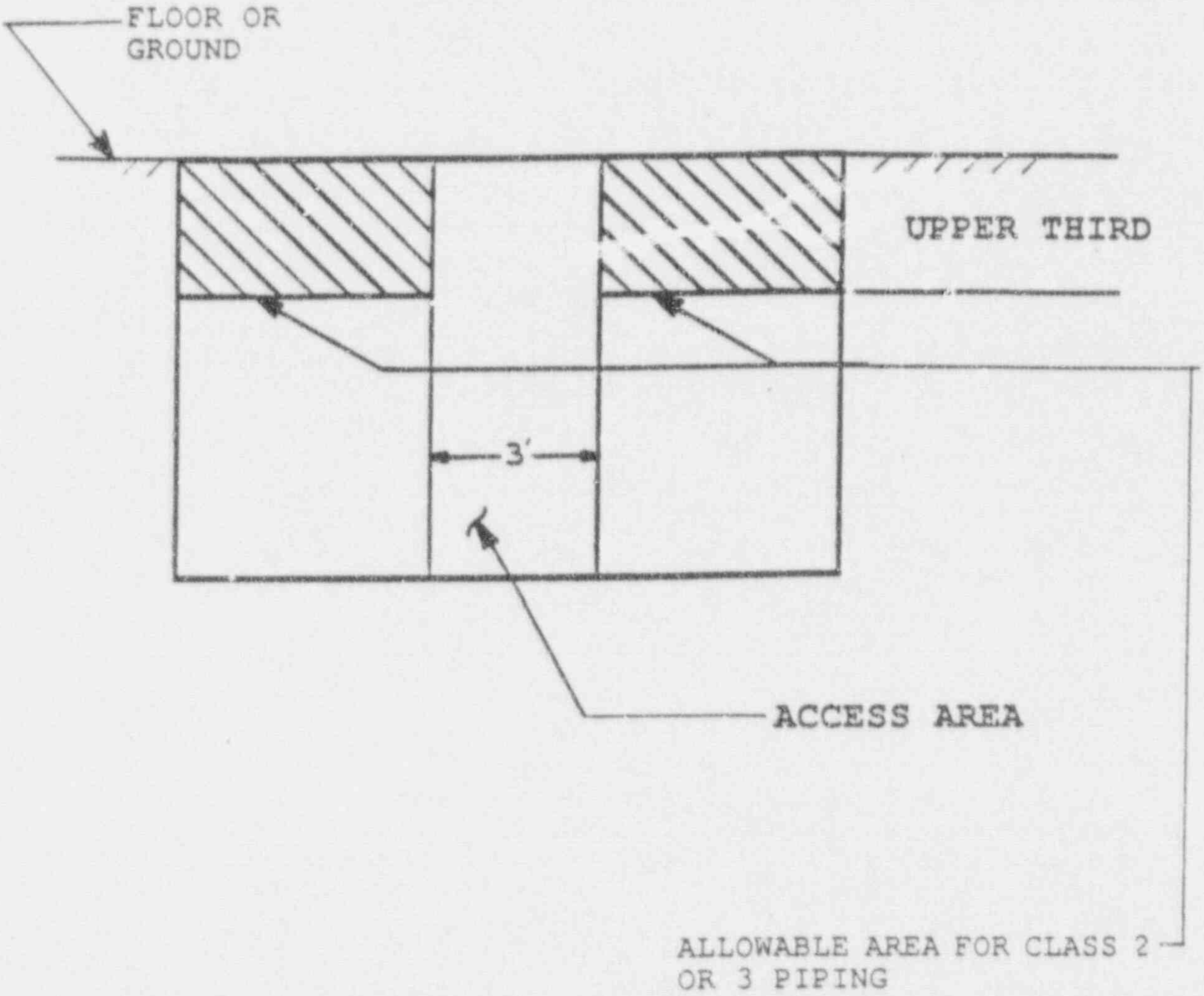

6.2.6.6 Insulation

Proper design of component insulation can greatly improve the ease and time required for inspection. Where used, reflective insulation should be designed for ease of removal and replacement to allow access to welds in order to meet ALARA standards.

6.2.6.7 Guard Pipe Interference

At present, there are no inservice inspection requirements for guard pipe; however, the guard pipe should not prohibit access to the process piping. **Figure 6.2.6-6** illustrates inspection requirements for a ASME Class 1, 2, or 3 process pipe enclosed in a guard pipe.

6.2.6.8 Penetrations

6.2.6.8.1 Containment Penetrations

The containment isolation valves should be located no closer than six inches to the containment penetrations.

The ability to inservice inspect containment penetration piping is a function of penetration design. The attachment welds to the penetrations should be inspected and therefore should be accessible. See **Figure 6.2.6-7** for an example of containment penetration weld access.

6.2.6.8.2 Wall and Sleeve Requirements

Where it is necessary to run piping through walls, welds should be avoided adjacent to and within wall sleeves. Access should be provided for a distance of at least 3t (t = pipe wall thickness) and a minimum of 6 inches on either side of the weld. Where system requirements dictate a weld adjacent to or within a wall penetration, an annulus of at least 6 inches around the pipe should be provided. In all cases, the annulus should provide at least a 30° projection from the weld centerline to the containment barrier.

Supports for piping at penetrations should also consider inspection accessibility. Supportability of the items such as in **Figure 6.2.6-8** is also necessary, therefore, the use of removable supports may be warranted in order to provide accessibility to these areas.

6.2.7 TESTING PROVISIONS

Testing includes both preservice (i.e., hydrostatic and operability testing) and periodic inservice testing (IST). Provisions should be provided in the design and routing to allow this testing. These provisions include bypass lines/valves, isolation valves, drains, and vents, as described below.

FIGURE 6.2.6-6

Guard Pipe Requirements for Inservice Inspection

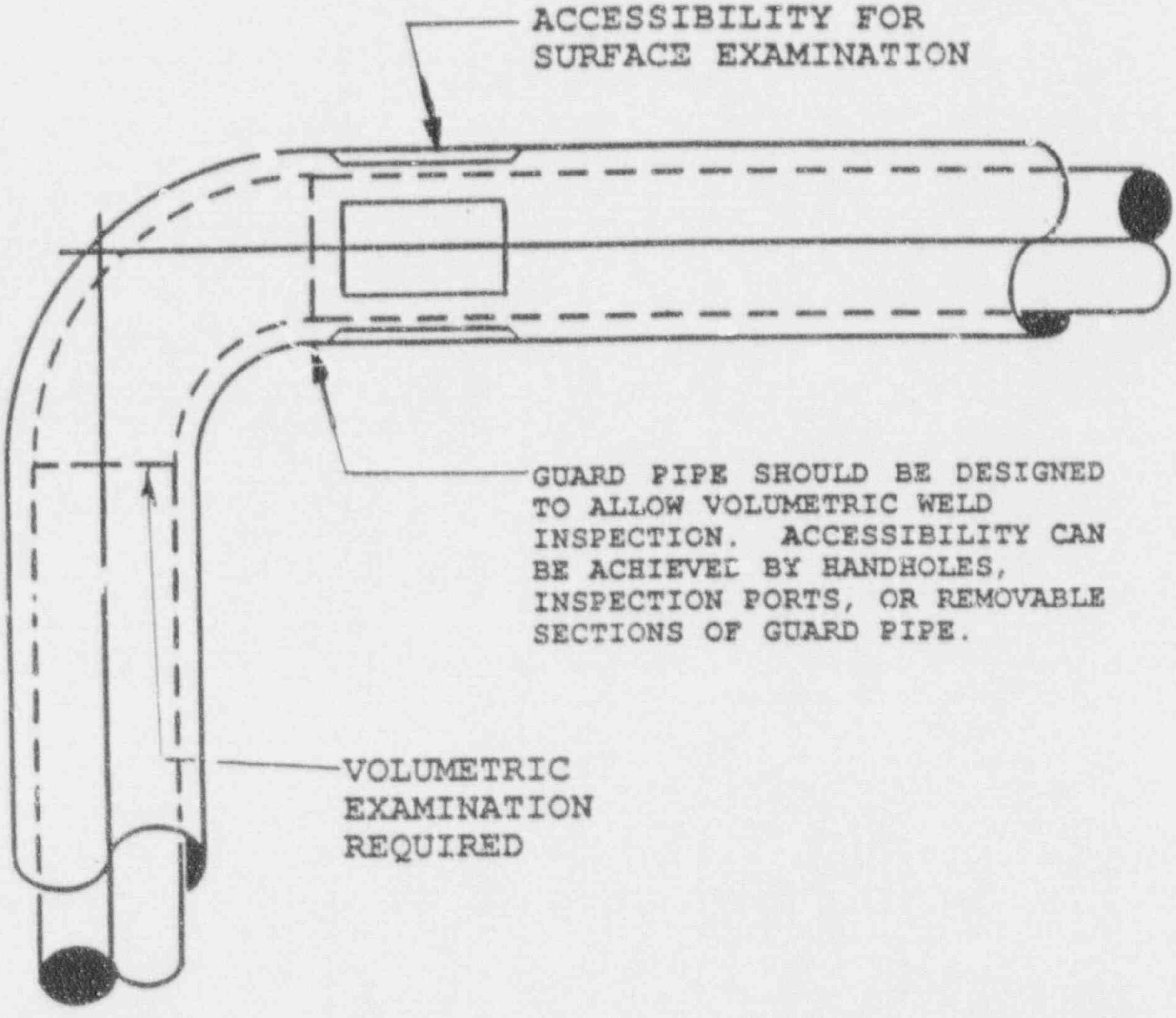

FIGURE 6.2.6-7

Containment Penetration Weld Areas

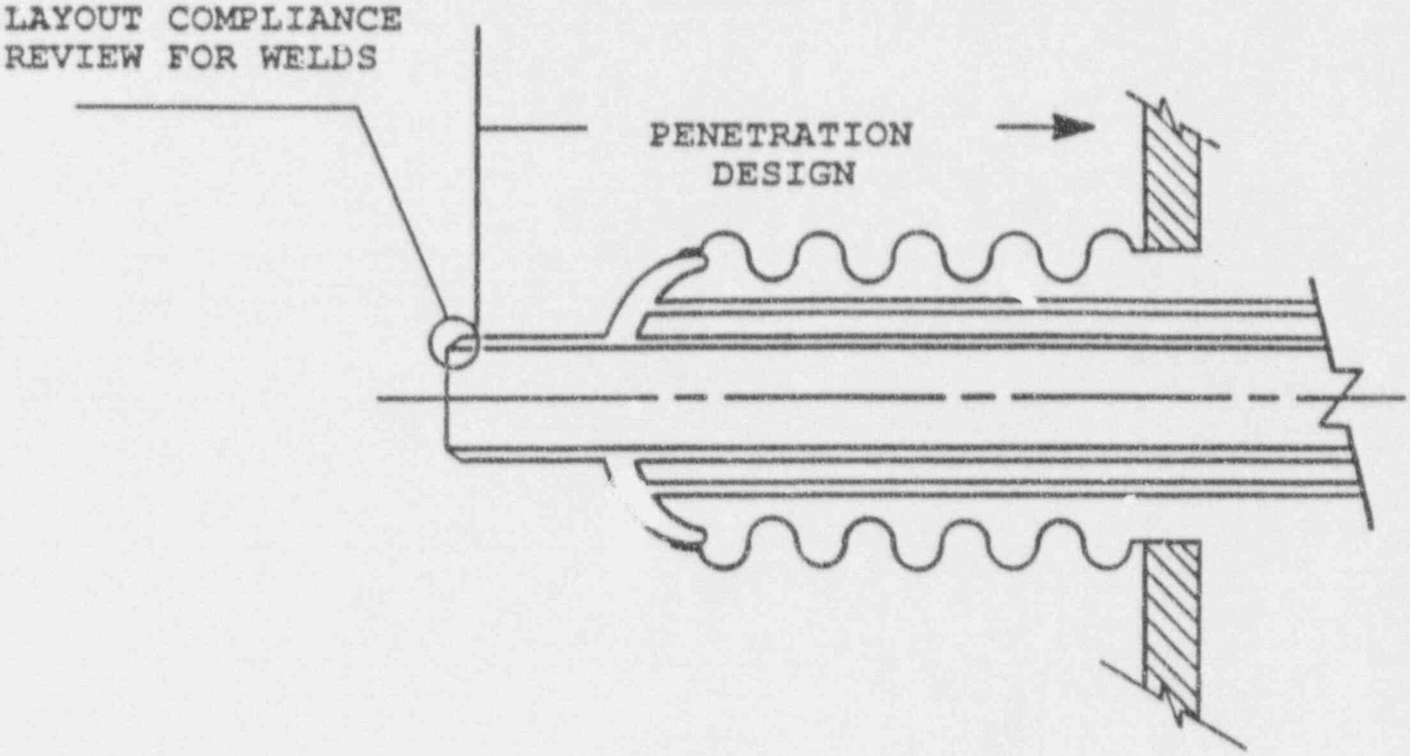

FIGURE 6.2.6-8

<u>Access for Walls and Sleeves</u>

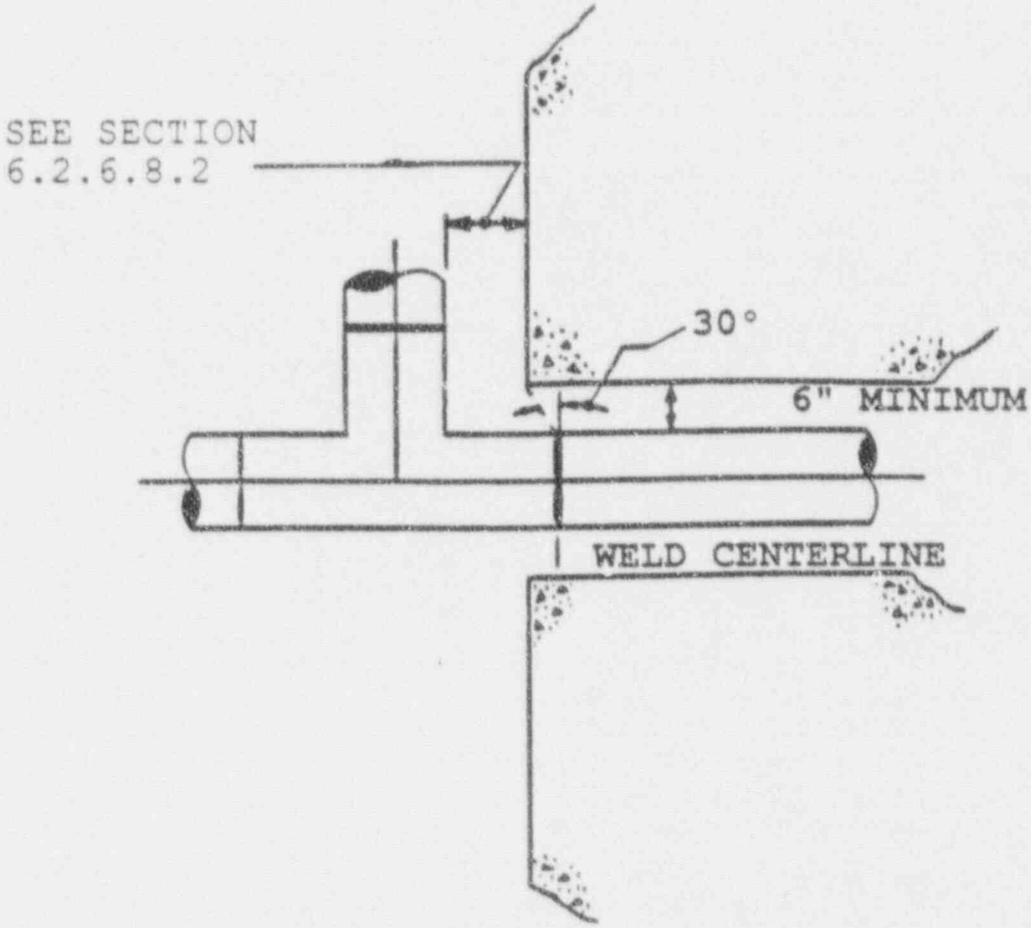

6.2.7.1 <u>Preservice Testing</u>

Preservice testing is performed prior to the system being placed in service to ensure system design requirements are met. Preservice testing requirements are governed by the applicable piping code: **ASME Boiler and Pressure Vessel Code** for ASME Class 1, 2, and 3 piping; and **ASME B31.1** for non-safety related piping.

6.2.7.1.1 Hydrostatic Testing

Prior to being placed in service, hydrostatic testing of the piping system is required per the applicable piping code. This testing requires filling the system with water, pressurizing to greater than the maximum operating pressure, and checking the system for leaks at welds, flanges, and other seams. The following provisions are required to perform this testing.

6.2.7.1.1.1 High Point Vents

To allow filling of the system with water, high point vents are required. These connections may also be used to provide venting capability during the hydrostatic test. These vents may also be used when refilling the system following maintenance.

6.2.7.1.1.2 Low Point Drains

Low point drains are primarily used for system draining and flushing for maintenance, but may also be used for the hydrostatic pump connection.

6.2.7.1.1.3 Instrumentation

As a minimum, pressure instrumentation is required during the hydrostatic test. For hydrostatic testing of isolated sections of the system, instrumentation testing connections may be used.

6.2.7.1.1.4 Isolation

Isolation capability is required to set the testing boundaries using valves, blank flanges, and other isolation methods.

6.2.7.1.1.5 Steam Piping

The water filling of steam piping imposes a larger than normal gravity load on the piping and supports. This additional loading shall be considered in the design and could warrant features such as temporary supports, and pinned hangers.

6.2.7.1.2 Operability Testing

Operability testing ensures that the system will perform as designed. Primarily, instrumentation is required to verify system parameters such as flow and cooling. Testing connections may be used for temporary instrumentation requirements.

6.2.7.1.3 Inservice Testing

Periodic inservice testing (IST) is required for ASME Class 1, 2, and 3 components in accordance with **ASME Boiler and Pressure Vessel Code, Section XI**. Provisions for required IST should be considered throughout the design and routing, as described below.

6.2.7.1.3.1 Bypass/Isolation Capability

Some IST is required during plant operation and requires isolation and/or bypassing the component to be tested. These provisions include testing stations, and close proximity valve/component operations wherever practical. These provisions should support ALARA goals and minimize/eliminate technical specification challenges by minimizing the number, and the time required with components non-operable to perform the testing.

6.2.7.1.3.2 Full-Flow Pump Testing

A System 80+ design goal is to provide full-flow test capability for all ASME Class 1, 2 , and 3 pumps. Proper system design (bypass lines, isolation valves, etc.) and routing are required to meet this goal.

6.2.7.1.3.3 Instrumentation

Adequate instrumentation and its proper placement are required to monitor IST parameters such as pump flow and pump differential pressure.

6.2.7.1.3.4 Accessibility

Accessibility should be provided for required IST. This access is needed to perform valve lineups, place test equipment, and instrumentation monitoring.

6.2.8 EROSION/CORROSION PIPE WALL THINNING PROVISIONS

Erosion/corrosion wall thinning of carbon steel piping has caused extensive piping replacements and unplanned shutdowns at existing nuclear power plants. In addition to the material selection and piping schedule (see **Section 4.2.1.3.5.2**), proper pipe routing is vital to minimize pipe wall thinning degradation.

6.2.8.1 Routing Guidelines

6.2.8.1.1 Dry Steam Pipe Routing Guidelines

Erosion/corrosion wall thinning of steam piping is primarily due to impingement of water droplets in the high velocity steam. Since dry steam is not susceptible to erosion/corrosion, the primary routing guideline in dry steam lines (e.g., Main Steam) is to minimize low points and provide moisture removal at the low points in the piping.

6.2.8.1.2 Wet Steam Pipe Routing Guidelines

Wet steam piping (e.g., Extraction Steam) is susceptible to erosion/corrosion and should be routed to minimize moisture droplet impingement. The following guidelines can be used to achieve this:

A. Minimize long runs of straight pipe ending in an elbow.

B. Route equipment inlet and outlet piping so as to minimize impingement damage to the piping and equipment.

C. Minimize flow restrictions which will further accelerate the wet steam, especially with close proximity to downstream elbows.

D. Consider laterals rather than tees.

E. Place piping takeoffs on the top of the main line to minimize moisture carryover.

F. Minimize wet steam entering a tee from the branch.

6.2.8.1.3 Flashing Liquid Pipe Routing Guidelines

Water lines with flow restrictions (i.e., orifices, control valves) can experience flashing to steam or cavitation, causing very high localized velocities immediately downstream of the restriction and severe piping degradation. The primary method of damage prevention should be proper valve and pipe material specification (see **Section 4.2.1.3.5.2**). Degradation can also be reduced by placing several pipe diameters of straight pipe immediately downstream of the restriction, or by increasing the downstream pipe diameter.

Note that normally closed valves with large differential pressure are also susceptible to water flashing degradation due to valve leakage. Pump recirculation lines to the condenser are especially susceptible. The same methods described above should be used to reduce the pipe wall thinning potential. Also, the isolation valve should be placed as close as possible to the condenser with no downstream directional changes.

6.2.8.1.4 Liquid Pipe Routing Guidelines

For liquid piping systems with fluid and material properties making it susceptible to erosion/corrosion, the piping should be routed to preclude high localized water velocities. This is mainly accomplished by minimizing close proximity fittings, especially downstream of tee branch connections.

6.2.8.2 Pipe Wall Thinning Inspection Provisions

Piping systems susceptible to pipe wall thinning should be included in the plant pipe wall thinning inspection program. Accessibility for inspection (ultrasonic or internal) should be considered in the routing. Items to consider include:

- Accessibility
- Scaffolding erection
- Use of removable insulation

6.2.8.3 Manway Access for Internal Inspections

For large bore piping requiring internal inspection, adequate manway access should be provided.

6.2.9 WATER/STEAM HAMMER PREVENTION

Water and steam hammer has caused piping and piping support damage, and unplanned shutdowns at existing nuclear power plants. Proper design and pipe routing is vital to minimize damage during transients over the life of the plant. Water hammer and steam hammer can be minimized by the following pipe routing features.

6.2.9.1 Vertical Piping Loop Minimization

For liquid lines which are close to saturation conditions, or that encounter sizable pressure changes during transients, vertical piping loops should be avoided. These configurations provide an area for steam formation and collapse and the resulting water hammer.

6.2.9.2 High Point Venting Provisions

Venting provisions should be provided at piping high points to prevent air pockets during system startup or transients.

6.2.9.3 Condensate Removal From Steam Piping

For steam piping, low points should be minimized and condensate removal provisions should be provided at those low points.

6.2.10 THERMAL STRATIFICATION MINIMIZATION

Thermal stratification occurs when low (laminar) flow occurs with large thermal gradients in the horizontal piping. This condition can be minimized by reducing long horizontal runs of pipe with large temperature changes, or by reducing the potential temperature difference by system design changes.

6.2.11 FIELD ROUTED LINES

Field routed lines are those lines and associated components which have their layout determined by field personnel. Engineering personnel may stipulate connection points and general guidelines, but the bulk of the layout is done in the field. Because there is little design input into this type of line, it is much less expensive to install than lines with detailed design input. From a commercial standpoint, field routed lines are very desirable. On the other hand, the reduced control by design personnel in locating these lines could later lead to interferences with other piping design routes.

6.2.11.1 Scope

All of the following restrictions should be met for any piping to be considered for field routing:

- Non-nuclear Safety (NNS) class
- Operates less than 150°F and 275 psig
- 2 inches or less NPS, or any size tubing

Information to make this determination can be found on the flow diagrams. Note that portions of systems as well as entire systems, can be field routed.

The above described lines could be further restricted by system turnover dates. Systems required early during construction which are candidates for field routing should be designed to avoid interferences with designed piping.

6.2.11.2 Field Routing Constraints

6.2.11.2.1 Non-Safety Related

Safety-related lines are necessary for safe shutdown of the reactor. Because of their safety function they must be routed so as to be operational under emergency conditions. Due to the importance of safety-related lines, they shall not be field routed.

6.2.11.2.2 Cannot Interact With Safety Related Equipment

Field routed lines cannot impair operation of safety-related equipment. For this reason, 200°F and 275 psig limits shall not be exceeded for field routed pipe in areas of the plant where safety-related equipment is located. This is to avoid assessing the interactions of a field routed high energy line with safety-related items (piping operating over 200°F and 275 psig is considered high energy). See **Section 7.1.8.1** for more information.

For areas where there is no safety-related equipment, field routed lines may operate at temperatures up to 300°F. This maximum temperature is governed by stress analysis requirements.

6.2.11.2.3 Does Not Require Analysis

Piping operating at temperatures greater than 300°F should not be field routed. The stress analysis required in piping with operating temperatures above 300°F requires detailed layout information that is not available for field routed lines.

6.2.11.2.4 Cannot Carry Radioactive Fluids

Lines carrying radioactive fluids must be routed so as to avoid possible excessive radiation exposure. Possible hazards include routing radioactive lines through personnel areas as well as the formation of crud traps in lines. In order to avoid these potential hazards, lines containing radioactive fluids shall not be field routed.

6.2.11.2.5 Small Diameter

The absence of detailed drawings for field routed piping is a potential cause of interferences with designed piping. These interferences can be minimized by selectively field routing small diameter lines. For purposes of this criteria, only two-inch and smaller lines can be field routed. This includes both piping and tubing.

6.2.11.2.6 Not Required Early In Construction

Even lines which meet all of the above field routing constraints could be required be designed in some cases. These systems would be designed in order to meet early turnover dates. Designing these systems is justified due to their potential for interactions with designed piping during design and erection.

Representative system lists are presented as a means to aid the engineer in his determination of the affect of system turnover schedules on lines which meet all other requirements for field routing constraints. These lists are not all inclusive nor are they definitive. They are meant to be used as a guide.

The following is a list of the types of systems which have been field routed in the past. However, since they were required to be operational relatively early in the construction stages, they caused interferences with designed piping, and thus should not be field routed.

- Demineralized Water
- Drinking Water
- Gas Systems - Nitrogen, Hydrogen, Oxygen, Carbon Dioxide
- Instrument Air
- Station Air
- Breathing Air
- Fire Protection

Conversely, the following list is comprised of systems which may be field routed, and because of their relatively late turnover schedule will result in few interferences.

- Feedwater Seal Water
- Conventional Condensate Sampling
- Stator Cooling Water
- Condenser Tube Cleaning
- Chemical Addition
- Cooling Tower Chemistry
- Vacuum Priming

In order to determine the effect of turnover schedules on the applicability of field routing, consult the two lists above. If the system in question is part of the latter list or if its turnover schedule is more in line with the latter list than the former, then field routing of the system could be practical.

6.2.11.3 Field Routing Design Requirements

Design requirements should be specified on the field routing drawing. The following are design requirements that could be specified:

- Sloping for drains
- Special fittings
- Sleeve locations
- Avoidance of dead legs or pockets
- Limitations of routing near equipment

- Minimum dimensions
- Area access requirements

6.2.11.4 Interface Requirements

Field routed lines should not be connected directly to designed piping. Enough of the field routed line should be designed to ensure that it will not impart significant loading to the designed line. For purposes of this criteria, three spans of "field routed" line should be designed at the interface. Typically, the first support into the field routed pipe at the design pipe interface is analyzed as designed piping. The three spans also provide a type of isolation between the designed piping and field routed piping.

If the three span requirement cannot be satisfied, the use of flex hose may be permitted. However, flex hose is a high maintenance item and a potential crud trap.

6.2.12 PUMP SUCTION PIPE ROUTING

Pump suction piping should be routed for minimum friction loss to maintain adequate NPSH to the pump. Generally, low velocity (larger NPS) piping is used with a minimum number of elbows, tees, and other flow restrictions (see **Section 5.2.1.6.1**).

6.2.13 FLOOD PROTECTION

Flood protection is required for all safety-related piping. In the Nuclear Annex, divisional separation is required to ensure a failure in one division does not affect redundant equipment in the other division. Divisional cross-connects should be minimized, and where cross-connects are required, they should be adequately sealed to prevent propagation of the flooding to the other division.

In the Reactor Building subsphere, quadrant separation should be maintained to ensure a moderate energy pipe break does not flood ECCS equipment in the other quadrant in that division.

6.3 HVAC DUCTWORK

6.3.1 GENERAL GUIDELINES

6.3.1.1 Plant Arrangement

6.3.1.1.1 Reservation of Ductwork Space

Space for major HVAC equipment and ductwork should be reserved early in the design process, along with ductwork shafts and plenums. This practice, along with proper equipment placement and orientation (see **Section 4.3.2**), will minimize the amount of large ductwork required, and reduce rerouting required.

6.3.1.1.2 Minimize Duct Length

6.3.1.1.2.1 Equipment Placement

Proper equipment placement and orientation improves system connectivity and thus reduces the amount of ductwork.

6.3.1.1.2.2 Pressure Differential Utilization

Wherever practical, system/area pressure differential should be utilized to preclude ductwork. An example would be the Reactor Building Subsphere Supply/Exhaust System. In this system, the Engineered Safety Feature (ESF) Pump and Heat Exchanger Rooms are maintained at a negative pressure with respect to the adjacent maintenance access aisles. The supply air is distributed in the maintenance access aisles and enters the ESF rooms via door grilles, thus precluding any supply ductwork entering these rooms.

6.3.1.3 Zinc Limitations in Containment

The zinc in galvanizing is a potential source of hydrogen production in containment during a LOCA. Zinc should be minimized to the maximum extent possible in containment. The total zinc inventory in containment shall be limited to the amounts specified in **CESSAR-DC, Table 6.2.5-4**, unless justified.

6.3.2 HVAC DUCTWORK DESIGN

The ductwork design and routing should incorporate the system requirements from **Section 4.3.1**, where applicable, plus the overall goal of ductwork minimization (see **Section 6.3.1.1.2**).

6.3.3 MAINTENANCE PROVISIONS

Replacement and maintenance of HVAC equipment and in-line components should be considered in the design and routing as described below.

6.3.3.1 Standard Components

Standard components are easier to procure and allow ease of maintenance and interchanging. These components include fans, dampers, ductwork, filter units, recirculating cooling units, and supports (see **Section 6.1.3**).

6.3.3.2 Access for Inspection or Service of Dampers

Access should be provided for inspection and maintenance of dampers and other HVAC components. These provisions include duct access doors, damper location and damper orientation.

6.3.3.3 Adequate Space for Damper Operators

The type of damper operator should be considered as well as inspection and maintenance requirements for the damper operator.

6.3.3.4 Duct Location

6.3.3.4.1 Clearances

Adequate clearances should be provided in the ductwork routing to allow for construction, testing, and maintenance. Clearances should take into account maximum tolerances. Provisions should also be made to remove ductwork sections for equipment removal and maintenance.

6.3.3.4.2 Leakage Tests

Access should be provided for required leakage tests. Other necessary testing provisions should also be provided to perform the testing (i.e., bypass/isolation capability, instrumentation).

6.3.4 ALARA

HVAC ductwork design and routing should support ALARA goals as described below.

6.3.4.1 Penetration Design

Penetration designs should provide compartment isolation. Factors to consider include differential pressure, penetration seal type, and contamination potential if not sealed (see **Section 5.3.1.4**).

6.3.4.2 Exhaust Systems

Proximity should be provided to the appropriate exhaust plenum/shaft, and adequate space provided for required exhaust filtering. Some exhaust systems have a bypass around the filter unit to allow normal filter bypass with automatic switching over to the filter units during an accident or high radiation level detection.

6.3.4.3 Utilization of Negative Pressure

Maintaining a slight negative pressure in a room or compartment minimizes the potential of contaminating adjacent rooms or compartments. In addition, less ductwork is required. This feature should be used wherever practical.

6.3.5 SUPPORTS AND RESTRAINTS

6.3.5.1 Design/Analysis Criteria, Methods, and Philosophy

All support and restraint (S/R) designs should include consideration of all applicable tolerances given in applicable drawings and specifications.

6.3.5.1.1 Function and Classification

The purpose of HVAC supports and restraints is to provide adequate support for ductwork and equipment under normal and seismic conditions, where applicable. Accordingly, the S/R System should be designed to sustain forces generated by the ductwork and equipment masses subjected to a predicted seismic acceleration (see **Section 7.2**).

The HVAC S/R System is comprised of individual restraints acting in unison to sustain postulated forces. See **Section 7.2** for analysis requirements for seismic HVAC supports. The individual restraints are classified and defined as follows.

6.3.5.1.1.1 Horizontal Duct Runs

6.3.5.1.1.1.1 Vertical Support/Restraints

A vertical support/restraint (S/R) is a restraint that transmits vertical forces to the building structure principally through tension or compression members. It is assumed to provide restraint in the vertical direction only.

Example:

FIGURE 6.3.5-1

Vertical Support/Restraint

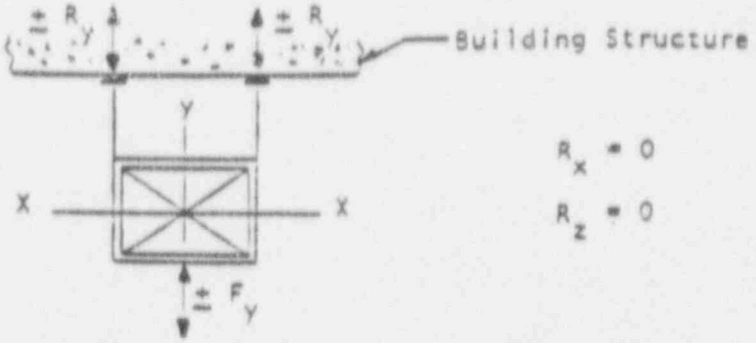

Note: The magnitude of positive F_y will not equal the magnitude of negative F_y since net seismic acceleration in the vertical direction is defined as 1 g plus or minus the seismic response acceleration obtained from the appropriate response curve.

6.3.5.1.1.1.2 Lateral Support/Restraints

A lateral S/R is a restraint that transmits horizontal forces acting perpendicular to the duct's longitudinal axis to the building structure principally through tension or compression members. It is assumed, therefore, to provide restraint in the lateral direction only.

Example:

FIGURE 6.3.5-2

Lateral Support/Restraint

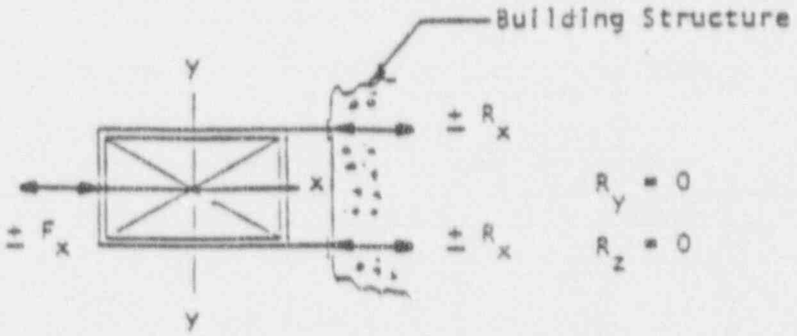

6.3.5.1.1.1.3 Vertical-Lateral Support/Restraints

A vertical-lateral S/R is a restraint that transmits both vertical and horizontal (lateral) forces to the building structure principally through tension or compression members. It is assumed to provide restraint in both the vertical and lateral directions only.

Example:

FIGURE 6.3.5-3

Vertical-Lateral Support/Restraint

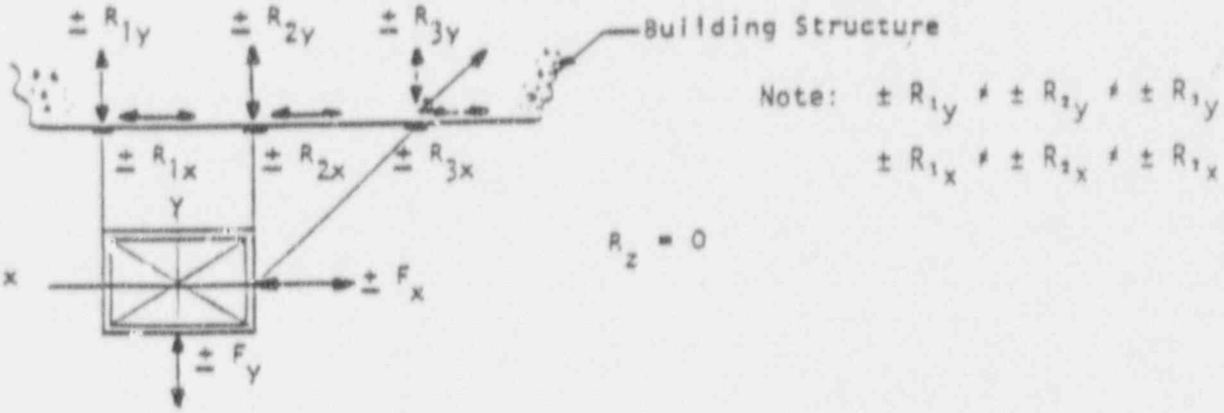

Note: $\pm R_{1y} \neq \pm R_{2y} \neq \pm R_{3y}$

$\pm R_{1x} \neq \pm R_{2x} \neq \pm R_{3x}$

$R_z = 0$

6.3.5.1.1.1.4 Axial Support/Restraints

An axial S/R is a restraint that transmits horizontal (axial) forces acting along the longitudinal duct axis to the building structure principally through tension or compression members. It is usually also a vertical restraint. It is assumed, therefore, to provide restraint in both the axial and vertical directions only.

Example:

FIGURE 6.3.5-4

Axial Support/Restraint

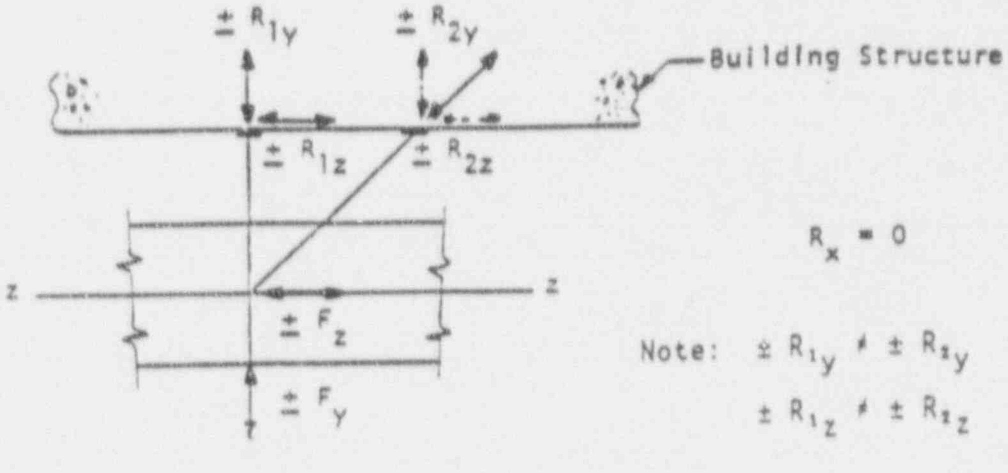

$R_x = 0$

Note: $\pm R_{1y} \neq \pm R_{2y}$

$\pm R_{1z} \neq \pm R_{2z}$

6.3 5.1.1.1.5 Three-way Support/Restraints

A three-way S/R is a restraint that transmits forces in all three orthogonal directions to the building structure principally through tension or compression members.

Example:

FIGURE 6.3.5-5

<u>Three-way Support/Restraint</u>

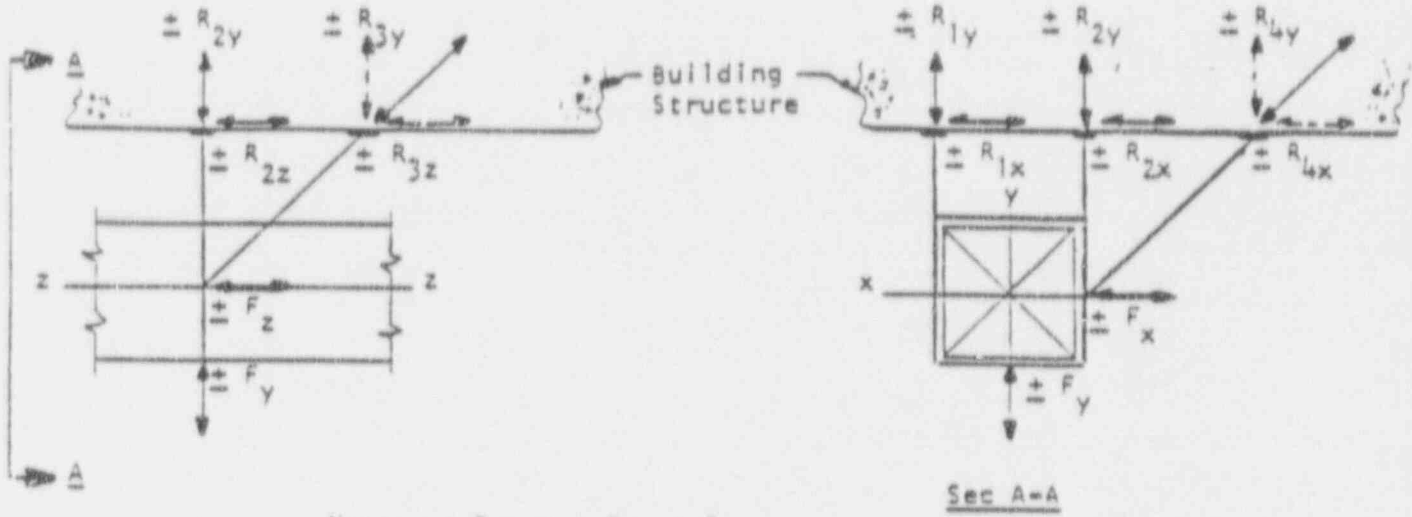

Note: $\pm R_{1x} \neq \pm R_{2x} \neq R_{4x}$

$\pm R_{1y} \neq \pm R_{2y} \neq \pm R_{3y} \neq \pm R_{y}$

$\pm R_{2z} \neq \pm R_{3z}$

6.3.5.1.1.2 Vertical Duct Runs (Risers)

6.3.5.1.1.2.1 Three-way Support/Restraints

A three-way S/R is a S/R which, under normal operating conditions, transmits only vertical forces to the building structure. During seismic conditions, the S/R could transmit forces in both the horizontal and the vertical direction to the building structure principally through tension or compression members (see **Figure 6.3.5-6**).

6.3.5.1.1.2.2 Lateral-Vertical Support/Restraints

A lateral-vertical S/R is a S/R which, under normal operating conditions, is assumed to transmit no forces to the building structure. During seismic conditions, this S/R could transmit forces in either of the two horizontal directions, the vertical direction, or any combination of these to the building structure principally through tension or compression members. The vertical forces during seismic conditions are assumed to be transmitted to the S/R via 'stop' angles. (See **Figure 6.3.5-6**).

Example:

FIGURE 6.3.5-6

<u>Lateral-Vertical Support/Restraint</u>

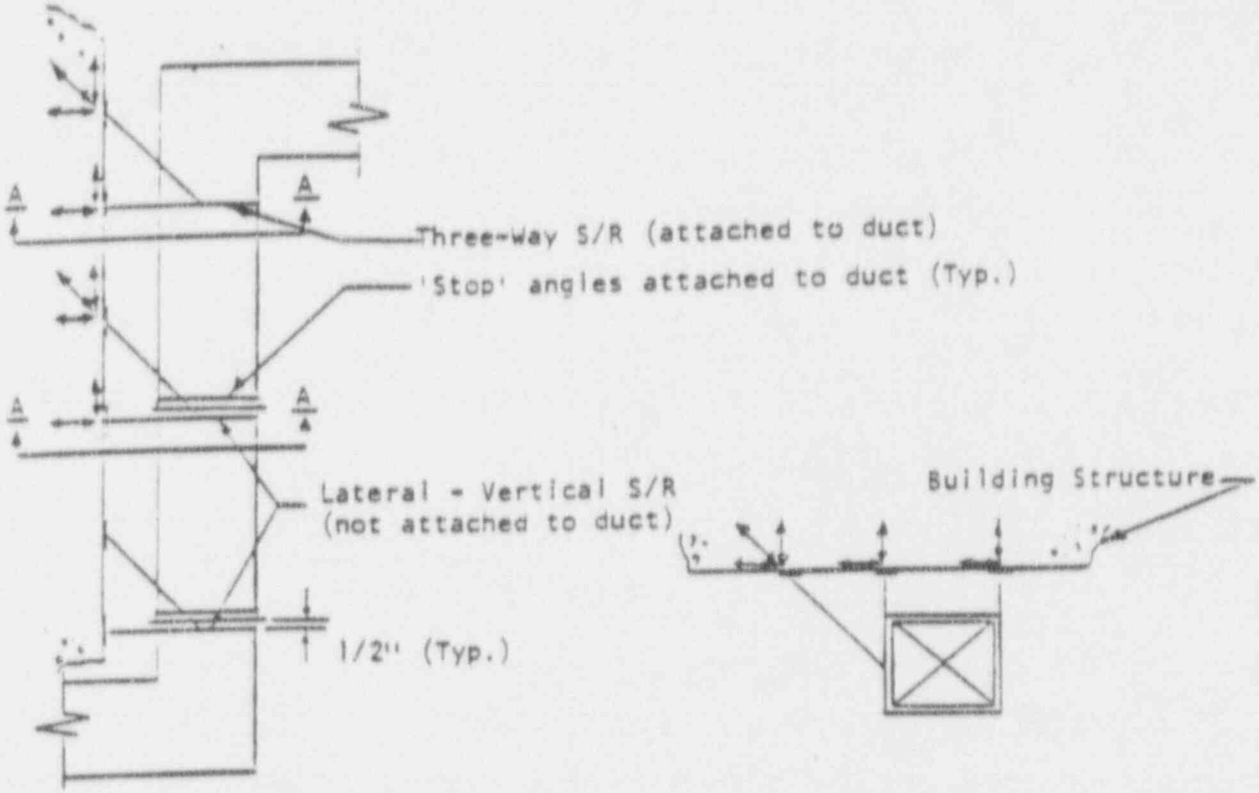

6.4 ELECTRICAL CABLE TRAYS/CONDUIT

6.4.1 CABLE TRAYS

6.4.1.1 Types

6.4.1.1.1 Safety-Related

Safety-related cable trays are those containing safety-related cabling which supply power to Class 1E loads.

6.4.1.1.2 Permanent Non-Safety Related

Permanent non-safety related cable trays are those containing cabling which supply power to non-safety loads that, due to their specific functions, are generally required to remain operational at all times or when the unit is shut down.

6.4.1.1.3 Non-Safety Related

Non-safety related cable trays are those containing cabling feeding non-safety loads required exclusively for unit operation.

6.4.1.2 Locations

6.4.1.2.1 Space Allocation

Sufficient space should be allocated early in the design process for cable trays. Cable trays typically are arranged in the overhead and along the walls and generally require a great deal of space for routing, particularly in the areas under the control room.

The cable tray system should be designed with adequate space between the bottom of the tray and the top of equipment, especially when drip loops are required.

Cable tray systems should be designed such that trays are no closer than 6 inches to a wall, ceiling or column.

Cable trays should be routed away from hazard areas.

6.4.1.2.2 Physical Identification

All cable trays, conduits, and wireways containing Class 1E cables should be color coded for ease of identification and to assure that separation is maintained. These raceways should be marked at each end, at all entrances and exits to rooms, and at intervals not to exceed 15 feet. Raceways should be marked prior to the installation of their cables.

6.4.1.2.3 Accessibility for Cable Pulls

The overall design of electrical power distribution systems should take into account personnel and equipment accessibility for making required cable pulls. Since cable trays are typically located in the overhead, access for cable pulls is limited. The designer should consider access to areas which would typically be used by personnel to make cable pulls.

6.4.1.2.4 Accessibility for Maintenance

Cable trays should be exposed and accessible. Sufficient space should be provided and maintained around cable trays to permit adequate access for installing and maintaining cables.

6.4.1.3 Separation

6.4.1.3.1 Divisional/Quadrant Separation

Divisional separation shall be maintained to the maximum extent possible. Safety-related cable crossing divisional walls shall be designed to prevent fire propagation to redundant equipment in the other division. This can be achieved by embedded conduit, physical separation, or adequate fire barriers.

Fire barriers should be provided for the ECCS equipment in the Reactor Building subsphere to separate the safety trains in that division.

6.4.1.3.2 Fire Protection

All openings for cable and cable tray runs in fire rated walls and floors should be protected consistent with the rating of the wall or floor.

Cable tray systems should be designed to use natural barriers and to minimize distances as much as possible.

6.4.1.3.3 Cable Segregation by Voltage Levels

To reduce fire hazard and prevent high energy power cables from affecting instrumentation and control circuits, cable trays should be arranged physically, from top to bottom, in accordance with the function and voltage class of the cables, as follows:

- 15 KV power cables
- 8 or 5 KV power cables
- Low voltage power AC and DC cables
- High level signal and control cables (120 VAC, 125 VDC)
- Cables for low level analog and digital signal

A cable tray designated for a single class of cables should contain only cables of that same class.

To prevent spurious signals from being induced into low voltage instrumentation circuits from external sources, cable trays containing low voltage instrumentation cables should provide protection against spurious signal sources.

6.4.1.4 Material Requirements

6.4.1.4.1 Aluminum Limitations in Containment

Aluminum cable trays should not be used in Containment due to the hydrogen generation potential during a LOCA. Aluminum limits in Containment are specified in **CESSAR-DC, Table 6.2.5-4**.

6.4.1.4.2 Zinc Limitations in Containment

The zinc in galvanizing is a potential source of hydrogen generation during a LOCA. For this reason, zinc should be minimized to the maximum extent possible in Containment. Zinc limits in Containment are specified in **CESSAR-DC, Table 6.2.5-4**.

6.4.1.4.3 Cable Tray Materials

For consistency with current practice to minimize fire hazard, only metal should be used for cable trays.

6.4.1.5 Cable Tray Fill Criteria

The cable tray system should be designed with sufficient trays to prevent overfilling with cables.

6.4.1.5.1 Power Cables

The cable tray fill criterion for those trays containing power cables allows only one single layer of power cables to be routed in any tray. In general, separation of one-quarter of the diameter of the larger cable should be maintained between adjacent power cables within a cable tray.

6.4.1.5.2 Instrumentation and Control Cables

The cable tray fill criterion for those trays containing instrumentation and control cables is that the cross-sectional area of these cables should not exceed the usable cross-sectional area of the tray.

6.4.2 CONDUIT

6.4.2.1 Conduit Routing

6.4.2.1.1 Bend Radius Guidelines

The cabling systems should be designed so as to observe minimum bending radii for cables and ensure that cable pulling loads do not exceed the allowable limits of cable tensile strength guaranteed by the cable vendor. This requirement will prevent damage to cables due to improper handling, and installation methods and practices.

6.4.2.1.2 Water Exclusion Guidelines

Where it is possible for water or liquids to enter conduits, they should be sloped downward away from equipment and drained at low points.

Where conduit enters equipment enclosures from the top, the installation should be designed to prevent water from entering the equipment. If the installation is such that condensation could occur in the conduit, a drain fitting should be installed at the equipment.

Conduit should be sealed where it enters buildings to prevent water drainage into the building.

6.4.2.1.3 Pull Boxes

Adequate pull boxes should be provided in conduit runs in order to install cable without damage. The maximum distance between pull points for a straight run of exposed conduit is 200 feet. For each 90° bend in the conduit run, 50 feet should be deducted from the length of the run between pull points. Where possible, it is good design practice to locate the pull box where the conduit makes a 90° bend. The distance between pull boxes in a vertical conduit run should be no greater than the required support spacing for the cable installed in the conduit.

6.4.2.2 Separation

6.4.2.2.1 Divisional/Quadrant Separation

For divisional and quadrant separation criteria for electrical cable, see **Section 6.4.1.3.1**.

6.4.2.2.2 Fire Protection

For electrical cable fire protection guidelines, see **Section 6.4.1.3.2**.

6.4.2.2.3 Embedded Conduit

The spacing between embedded conduits should be three times the diameter of the conduit unless a closer spacing is justified.

6.4.2.3 Material Requirements

Rigid metal conduit or metal raceways should be used for cable conduit in air. Flexible metallic tubing should be used only in short lengths for equipment connections. Non-metallic conduit should only be allowed when used with concrete encasement or for direct burial runs.

Aluminum conduit should not be used in Containment due to the hydrogen production potential during a LOCA. Aluminum limits in Containment are specified in **CESSAR-DC, Table 6.2.5-4**.

6.5 INSTRUMENT LINES

6.5.1 DEFINITIONS

6.5.1.1 Instrumentation

Instruments, instrument lines, and associated hardware (i.e., valves, fittings) used in the installation of loops whose function is to monitor, control, or sample parameters of a process system.

6.5.1.2 Instrument Lines

6.5.1.2.1 Impulse Lines

Impulse lines consist of piping, tubing, fittings, and valves are used to connect instruments to process piping, process components, ductwork, or to an enclosed area (e.g., Containment). Sealed reference legs are considered to be part of the instrument.

6.5.1.2.2 Control Lines

6.5.1.2.2.1 Supply Air Lines

Supply air lines consist of piping, tubing, fittings, and valves used to connect plant instrument air to pneumatic instrumentation.

6.5.1.2.2.2 Transmitted Air Lines

Transmitted air lines consist of piping, tubing, fittings, and valves used to connect air-operated control apparatus and/or pneumatic transmitters to other pneumatic instruments.

6.5.1.2.3 Sample Lines

Sample lines consist of piping, tubing, fittings, and valves used for the collection of samples of steam, water, oil, gases, or other process fluids.

6.5.1.2.4 Blowdown Lines

Blowdown lines consist of piping, tubing, fittings, and valves connected to impulse lines in order to provide a means to periodically clean the impulse line with process media.

6.5.1.2.5 Filled Capillary Lines

Filled capillary tubes consist of piping, tubing, fittings, and valves used to connect instruments to a process sensor (i.e., bellows sensor, diaphragm seal). These lines are filled with a fluid which transmits a signal from the sensor to the instrument, and serves to isolate the instrument from the process fluid.

6.5.1.3 Root Valves

Root valves are isolation valves at the process tap.

6.5.1.4 Change in Direction

All other bends greater than 10 degrees should be considered a change in direction for typical tube spans.

6.5.1.5 Track Supports

Track supports are designed to support tubetrack.

6.5.1.6 Tube Supports

Tube supports are designed to support tubing contained in tubetrack or support tubing lines routed individually.

6.5.2 GENERAL

Instrument lines are to be field routed unless otherwise specified on design drawings. The route selected should be the most direct route possible with the following restrictions:

A. The routing of liquid filled lines over electrical control panels, cabinets, or enclosures should be avoided.

B. Walkways and access areas should be kept adequately cleared. Instrument lines should be routed sufficiently above the finished floor levels when required to cross access areas.

C. Instrument lines should be routed:

1. At least six inches from the outside insulation of any steam line.
2. At least two inches from all other piping and equipment.
3. At least four inches, (in the pressurizer cavity) from all other piping and equipment.

D. The requirements of **Section 6.5.8** should be met at all times.

E. When instrumentation is removed or modified, the disconnected tubing is to be capped on both ends. There should be no open ended tubing unless specified on a design document.

6.5.3 IMPULSE LINES

6.5.3.1 Slope Requirements

All gas filled impulse lines are to be sloped upward from the process tap. All liquid filled impulse lines are to be sloped downward from the process tap. For steam filled applications, impulse lines may be sloped upward or downward from the process tap as dictated by the physical arrangement of each application. The normal recommended slope is one inch per foot. Minimum slope should be one-quarter of an inch per foot.

6.5.3.2 Impulse Line Size

The line size from the last root valve to the instrument isolation or manifold valve should be ½ inch tubing unless otherwise specified on the instrument detail drawing.

6.5.3.3 Blowdown Lines

Where blowdown lines are required, the impulse line should be routed to a point near the instrument then drop down to the blowdown line. The impulse line should be oriented in such a manner as to trap sediment in the blowdown line.

6.5.3.4 Process Tap Connections

Process tap connection locations should be specified on design drawings.

6.5.3.5 Instrument With Two Connections

A. The top connection should be used on gas filled impulse lines. The bottom connection should be used for drains.

B. The bottom connection should be used on liquid filled impulse lines. The top connection should be used for vents.

6.5.4 CONTROL LINES

6.5.4.1 Main Air Headers and Branch Lines

A. Main air header routing should be designed rather than field routed.

B. Branch air lines may be field routed. All branch lines should connect to the top of the main headers and isolation valves should be provided as close to the main header as possible.

C. Branch lines should be routed to avoid low points and moisture traps. In places where low points and moisture traps cannot be avoided, drains should be provided for water collection. Drain valves should be ¼ of the header size or smaller to prevent excessive pressure drop during blowdown.

6.5.5 SAMPLE/PROCESS LINES

Sample/process lines can be routed and supported as impulse lines if the process fluid temperature is less than or equal to 150°F. Sample/process lines with process fluid temperatures above 150°F should be designed piping.

6.5.6 SEPARATION CRITERIA

Functionally redundant instrument lines for safety-related instruments should meet the physical separation criteria of eighteen inches minimum separation (edge-to-edge). When functionally redundant process connections have less than 18 inches separation or a common tap is used for more than one functionally redundant measurement, the minimum separation (18") should be obtained in the shortest practical distance and maintained for the remaining length of the instrument lines. Functionally redundant instruments are those which measure the same parameter on the same piece of equipment and provide the same safety function.

6.5.7 EXPANSION COILS

Expansion coils should be used in non-safety related applications when connecting to a process system that has a design temperature greater than or equal to 300°F. The coil should be seven (7) inches or greater in diameter with a minimum of four (4) coils. It should be made with the appropriate size tubing and installed as close as possible to the root valve.

6.5.8 SPECIAL ROUTING AND SUPPORTING REQUIREMENTS

All control and impulse lines should be routed and supported by either the requirements of **Section 6.5.3.1** or **6.5.3.2**.

6.5.8.1 Free Tube Spans

The routing and analysis requirements for tubing that is supported by free tube spans (rather than tubetrack) are described in **Section 7.1.11.2 and Table 7.1.11-1**.

6.5.8.2 Track Supported Tubes

The routing and analysis requirements for impulse and control lines routed in tubetrack are described in **Section 7.1.11.3**. Sample lines should not be installed in tube tracks unless the process fluid temperature is less than or equal to 150°F.

Tubetrack should not be modified by cutting or bending without approval from the designer.

6.5.8.3 Support and Mounting Requirements

Support and mounting requirements for tubing are described in **Section 7.1.11.4**.

TABLE 6.5-1

Minimum Tube Bending Radii

Tube OD	**Minimum Bending Radius**
1/4"	1-1/4"
3/8"	1-7/8"
1/2"	2-1/2"
5/8"	3-1/8"
3/4"	3-3/4"
1"	5"

6.5.9 TUBE BENDS

The minimum bending radius (5D bends) should not be less than shown in **Table 6.5-1**. Tube fittings should be used whenever smaller bending radii are required.

6.6 REFERENCES

6.6.1 ASME B31.1-1989 Edition, Power Piping.

6.6.2 ASME Boiler and Pressure Vessel Code, Section XI, 1989 Edition.

6.6.3 NCIG-14, "Procedure for Seismic Evaluation and Design of Small Bore Piping", EPRI NP-6628, April 1990.

6.6.4 CESSAR-DC Design Certification, System 80+ Standard Design, Amendment I.

7.0 DISTRIBUTION SYSTEMS ANALYSIS REQUIREMENTS

7.1 PIPING

7.1.1 GENERAL

Seismic Category I piping, as defined in **CESSAR-DC, Section 3.2.1**, shall meet the analysis requirements of the **ASME Boiler and Pressure Vessel (B&PV) Code, Section III, Subarticles NB-3650, NC-3650, and ND-3650**.

Seismic Category II piping, as defined in **CESSAR-DC, Section 3.2.1**, should be analyzed to the same requirements as Category I piping. Category II requirements are conservatively satisfied by analyzing the piping to the same criteria as Category I.

Non-Category I and II piping shall be designed to meet the requirements of **ASME B31.1, Power Piping**.

The analysis requirements described in Section 7.1 apply only to Seismic Category I and II piping. Note that in some cases, other analysis methods may be utilized, such as new analysis techniques and computer codes, where justified.

7.1.2 DESIGN CONSIDERATIONS

7.1.2.1 Pressure

The pipe wall thickness shall be sized to accommodate the specified internal pressures and meet the requirements of the **ASME B&PV Code, Section III, Subarticle 3640**. Stresses due to the system design pressures and maximum peak pressures should be included in the acceptance criteria.

7.1.2.2 Gravity

The weight of the pipe, in-line components, contents of the pipe and insulation shall be included. The weight of water during hydrostatic testing shall be considered for steam or air-filled lines.

7.1.2.3 Thermal

The effect of thermal expansion of the system due to the design temperature shall be included. Possible operating modes of the system that will result in more severe thermal expansion stresses than the entire system at design temperature should be considered. The maximum operating temperature may be used in lieu of design temperature where available.

The effects of anchor movement due to thermal expansion of equipment or other piping should be considered.

7.1.2.4 Seismic

The effects of earthquake loading shall be considered. The inertia loads and movements, including earthquake anchor movements, and the effects of fatigue shall be included in the analysis.

7.1.2.4.1 Seismic Anchor Movements

Seismic anchor motion shall be included for piping supported by more than one structure by applying; 1) the building seismic movements, and/or 2) equipment seismic movements, as support movements on the pipe.

The support movements should be assumed in the most conservative combination for adjacent structures to give the maximum stress in the pipe, unless the relative time phasing of the motions of the supporting structures or equipment is determined by simultaneous time history analyses. The effects of seismic anchor motion on the piping should be included for the operating basis earthquake (OBE) only. Seismic anchor motion produces secondary stresses and should not be evaluated with the safe shutdown earthquake (SSE) except for supports.

7.1.2.5 Wind/Tornado

Exposed piping shall be designed to withstand wind and tornado loads. Simultaneous wind and tornado loads are not considered.

7.1.2.6 Fluid Transient Loadings

7.1.2.6.1 Relief/Safety Valve Thrust

Valve thrust loads should be considered for both open and closed valve discharge cases. All thrust loads should first be considered for their significance. If considered a significant transient, steady state thrust loads should be applied to the piping system. If determined insignificant, then thrust loads need not be applied.

7.1.2.6.2 Water and Steam Hammer

Water and steam hammer are dynamic loadings on piping that are caused by a sudden change in momentum of the flow medium due to a rapid system transient.

Although hammer effects can potentially occur on any line where valve closing time is less than 3 seconds, the effects on small lines are generally negligible and only large lines with high pressures, large flow rates, and very rapid closing valves need to be evaluated.

7.1.2.6.3 Other Loadings

Other fluid transient loadings such as pump start, check valve slam, and filling empty lines should also be considered.

7.1.2.7 Pipe Break Loads

Pipe break loadings can consist of pipe whip, jet impingement, differential pressure, support movements, or temperature increases resulting from the rupture of nearby pipes other than the line under consideration.

7.1.2.8 Thermal Stratification

Piping subjected to stratified flow conditions should be evaluated for the effects of thermal stratification.

7.1.2.9 Missile Loads

Piping subjected to the loads described in **CESSAR-DC, Section 3.5.1** shall be evaluated for the effects of missiles.

7.1.3 DESIGN LOAD COMBINATIONS

Loading combinations, in accordance with **CESSAR-DC, Section 3.9.3.1**, applicable to ASME Class 1 piping shall be as detailed in **Tables 7.1.3-1 and 7.1.3-2**.

Load combinations applicable to ASME Class 2 and 3 piping shall be detailed in **Table 7.1.3-3**.

7.1.4 ANALYSIS

Static and dynamic analyses, as defined in this section, should be based on linear elastic analysis methods.

7.1.4.1 Gravity Analysis

The gravity analysis shall include the weight of the pipe or piping component, the weight of the enclosed fluid, the weight of all other sustained mechanical loads, and the weight of any attached insulation. Also, if the system contents vary during operation, the analysis should consider all modes of operation. Weight due to attached support/restraints should be included if determined to be significant.

TABLE 7.1.3-1

Design Conditions and Load Combinations for ASME Class 1 Piping

CONDITION	LOADS	COMMENTS
1. Design Condition	Design Pressure Weight Other Sustained Mechanical Loads OBE Inertia (1/2 range)	
2. Normal and Upset Conditions (1) (Reference Table 7.1.3-2, Notes 1 and 4)	Range of Operating Pressure Thermal Expansion and Transients Anchor Movements (TAM, OBE, SAM, DFL) OBE Inertia Other Mechanical Loads Dynamic Fluid Loads (2)	Combination used for Eq. 10, NB-3653.1
	Thermal Expansion Thermal Anchor Movements Thermal Transients	Combination used for Eq. 12, NB-3653.6 (if required)
	Weight Other Sustained Mechanical Loads OBE Inertia (1/2 range) Range of Operating Pressures Dynamic Fluid Loads (2)	Combination used for Eq. 13, NB-3653.6 (if required)
3. Emergency Conditions	Maximum Pressure Weight SSE Inertia (1/2 range) Other Sustained Mechanical Loads Dynamic Fluid Loads (2)	
4. Faulted Conditions (3)	Maximum Pressure Weight SSE Inertia (1/2 range) Other Sustained Mechanical Loads Pipe Rupture Loads Dynamic Fluid Loads (2)	

TABLE 7.1.3-1 (Cont'd)

Design Conditions and Load Combinations for ASME Class 1 Piping

CONDITION	LOADS	COMMENTS
5. Testing Conditions	Pressure, Temperature, and Hydrostatic Test as defined in established system tests	

NOTES:

1. The method for analyzing Upset Conditions is the same as for Normal per NB-3654.
2. Dynamic Fluid Loads (DFL) are occasional loads such as safety/relief valve thrust, steam hammer, water hammer or other loads associated with Plant Upset or Faulted Condition as applicable. The worst combination of pressure, weight, sustained, seismic, and DFL loads should be checked.
3. Dynamic loads are combined by the square root of the sum of the squares (SRSS).

TABLE 7.1.3-2

Code Compliance Criteria for ASME Class 1 Piping

CONDITION		STEP	CHECK FOR CODE COMPLIANCE PER (8)
1. Design Conditions	1A	Primary Stress Intensity Limit	Eq. 9/NB-3652
2. Normal and Upset Conditions (5) (6)	2A.1	Primary Plus Secondary Stress Intensity Range	Eq. 10/NB-3653.1 (1)
	2A.2	If Eq.10 is met, calculate Peak Stress Intensity Range (S_p). If not, skip to Step 2B.1	Eq. 11/NB-3653.2 (2)
	2A.3	Calculate Alternating Stress Intensity ($S_{Alt.}$)	$S_{Alt.} = 1/2\ S_p$ NB-3653.3 (3)
	2A.4	Evaluate Cumulative Usage. If acceptable, proceed to check Faulted Conditions	NB-3653.4, 3653.5 NB-3222.4(e)(5)
	2B.1	If Eq.10 is not met, perform Simplified Elastic-Plastic Discontinuity Analysis (4)	Eq. 12/ NB-3653.6(a)
	2B.2	Check Primary Plus Secondary Stress Intensity Range	Eq. 13/ NB-3653.6(b)
	2B.3	Calculate S_{Alt}	Eq. 14/ NB-3653.6(c) (3)
	2B.4	Evaluate Cumulative Usage. If acceptable, proceed to check Faulted Conditions	NB-3653.4, 3653.5 NB-3222.4(e)(5)

TABLE 7.1.3-2 (Cont'd)

Code Compliance Criteria for ASME Class 1 Piping

CONDITION		STEP	CHECK FOR CODE COMPLIANCE PER (8)
3. Emergency Conditions		**LATER**	
4. Faulted Conditions	4A	Determine maximum faulted pressure	App. F (8)
	4B	Check Primary Intensity Limit	App. F (8)
5. Testing Conditions (7)	5A	Check General Primary Membrane Stress Intensity	NB-3226 (a)
	5B	Check Primary Membrane Plus Bending Stress Intensity	NB-3226 (b)
	5C	Check External Pressure	NB-3226 (c)
	5D	Incorporate Test Condition into Fatigue Evaluation	NB-3226 (d) NB-3226 (e)

NOTES:

1. If Eq. 10 is not met, the component may still be satisfactory provided Eq. 12/ NB-3653.6 is met or the requirements of NB-3200 are satisfied.

2. The purpose of this equation is to calculate the value of S_p using the same load sets used to evaluate Eq. 10.

3. $S_{Alt.}$ is used in conjunction with the Design Fatigue Curves to determine the allowable number of cycles per NB-3653.4.

4. Qualifying Normal/Upset Conditions using the simplified Elastic-Plastic Discontinuity Analysis per Eq. 12 is necessary only for points that do not satisfy Eq. 10.

TABLE 7.1.3-2 (Cont'd)

Code Compliance Criteria for ASME Class 1 Piping

5. The method for analyzing Upset conditions is the same as for Normal per NB-3654.

6. These limits must be satisfied for all possible ranges.

7. Alternatively, Test Conditions may be included as part of Normal and Upset Conditions to be checked.

8. Articles referenced is taken from the **ASME Boiler and Pressure Vessel Code, Section III**.

TABLE 7.1.3-3

Design Conditions, Load Combinations, and Code Compliance Criteria for ASME Class 2 and 3 Piping

	CONDITION	LOADS	CHECK FOR CODE COMPLIANCE PER (5)
1.	Normal		
	a. Sustained Loads (4)	Pressure Weight (6)	Eq. 8, NC/ND-3652
	b. Thermal Expansion	Thermal Expansion Thermal Anchor Movements	Eq. 10, NC/ND-3653.2 (3)
	c. Sustained Loads + Thermal Expansion	Pressure Weight (6) Thermal Expansion Thermal Anchor Movements	Eq. 11, NC/ND-3653.2 (3)
2.	Upset	Pressure Weight (6) DFL (2) OBE (Inertia) OBE (Anchor Movements) (1) or Wind (8)	Eq. 9, NC/ND-3653.1
3.	Emergency	Pressure Weight (6) DFL (2) SSE (Inertia) or Tornado (8)	Eq. 9, NC/ND-3652.1
4.	Faulted	Pressure Weight (6) Pipe Rupture SSE (Inertia) DFL (2)	Eq. 9, NC/ND-3653.1
5.	Functional Capability	Pressure Weight (6) SSE (Inertia) DFL (2) Pipe Rupture	See Note 7

TABLE 7.1.3-3 (Cont'd)

Design Conditions, Load Combinations, and Code Compliance Criteria for ASME Class 2 and 3 Piping

NOTES:

1. Stresses due to seismic displacements such as anchor movements may alternatively be considered as secondary stresses and combined with thermal expansion in Eq. 10 or 11 and omitted from Eq. 9.

2. Dynamic Fluid Loads (DFL) are occasional loads such as safety/relief valve thrust, steam hammer, water hammer or loads associated with Plant Upset or Faulted Condition as applicable.

3. Stresses must meet the requirements of either Eq. 10 or Eq. 11 (i.e., both conditions need not be satisfied).

4. If, during operation, the system normally carries a medium other than water (air, gas, steam), sustained loads should be checked for weight loads during hydrostatic testing as well as normal operation weight loads.

5. Articles referenced from the **ASME Boiler and Pressure Vessel Code, Section III**.

6. Weight loads include all sustained Mechanical Loads.

7. Functional capability is not a standard loading condition as defined by the ASME Code. However, functional capability must be maintained for ASME Class 2 and 3 stainless steel elbows. See Appendix 7B for the acceptance criteria.

8. Wind and tornado loads are not combined with earthquake loading.

9. Dynamic loads are combined by the square root of the sum of the squares (SRSS).

7.1.4.2 Thermal Analysis

A thermal analysis of piping systems shall take into account forces and moments resulting from expansion and contraction. For all analyses, the ambient temperature should be taken to be 70°F. Flexibility analyses should be based on the material property values at the temperature under consideration. Therefore, the analyses should be based on the value of Young's modulus at temperature, E_{hot}. ASME Code requires that stresses should be based on E_{cold}. This may be accomplished by multiplying the analysis results by E_{cold}/E_{hot}.

All possible operating modes should be evaluated to determine the highest range of thermal expansion stress. The effects of anchor movement due to thermal expansion of equipment or other piping should also be considered.

7.1.4.2.1 Specific Thermal Requirements for Class 1 Piping

The thermal analysis shall include a check of the stress intensity range and shall evaluate fatigue (as expressed by cumulative usage) for all normal and upset operating temperature distributions, the transient events experienced in going from one operating mode to another, thermal anchor movements associated with the operating conditions and transients, and all test conditions.

7.1.4.2.2 Thermal Stratification

Piping systems with low flow rates and potentially subjected to stratified flow may require evaluation for additional thermal stresses due to thermal stratification. Stratified flow exists when a hotter fluid flows over a colder region of fluid. This condition induces a vertical thermal gradient resulting in increased overall bending stresses and localized thermal gradient stresses.

A linear thermal gradient will cause a convex upward curvature, K, in an unconstrained pipe equal to:

$$K=\frac{\alpha\Delta T}{D} \qquad \textbf{(Eqn. 7.1-1)}$$

Where: $\Delta T = T_{Top} - T_{Bottom}$ (with $T_{Top} > T_{Bottom}$)
D = Pipe outside diameter
α = Thermal expansion coefficient

The resulting bending stresses should be calculated by allowing the pipe to thermally expand unconstrained and then applying a set of equal and opposite displacements at the rigid support points.

If the temperature distribution in the pipe is nonlinear, the above curvature formula is only approximate and the nonlinear distribution should be considered in terms of its effect on curvature and local thermal stresses. This may be done by means of a finite element analysis comprised of a heat transfer analysis to determine the pipe wall temperature variation based on fluid temperature, followed by a thermal stress analysis to determine the initial pipe curvature and maximum stress intensity. This stress intensity should then be used in Equation 11 of the **ASME Boiler and Pressure Vessel Code, Section III, Subsection NB-3650** as the nonlinear through-wall temperature gradient stress. These analyses consider both steady state and transient conditions.

7.1.4.3 Seismic Analysis

Seismic analysis of a piping system generally involves both dynamic and static evaluations. A dynamic analysis is performed to evaluate the inertia loads developed as the mass of the piping is accelerated due to seismic motion. The static analysis is performed to determine loading resulting from differential seismic movements of structures or large lines to which piping is attached.

7.1.4.3.1 Static Analysis

Standard seismic analysis is a dynamic analysis using the modal superposition and response spectrum method. The design response spectra for earthquake ground motion indicate that at a frequency higher than the frequency corresponding to the zero period acceleration (ZPA), all modes respond like a rigid body without amplification. This cut-off frequency defines the rigid range. If a piping system is so rigidly supported that its lowest natural frequency is higher than the frequency corresponding to the ZPA, then the system will respond like a rigid body. The maximum effect is due to an inertia force equal to the maximum floor acceleration, and therefore, a static analysis is sufficient for predicting the maximum effect due to an earthquake.

The analysis is similar to a gravity analysis. Attention should be paid to the following points in performing the analysis:

A. Inertia loads should be applied separately in the x, y, and z directions, and the results of the 3 separate analyses combined by SRSS. The accelerations are obtained from the respective floor response spectra with values corresponding to the zero period.

B. The active supports are seismic supports, rather than gravity supports (i.e., snubbers will be active and low stiffness spring hangers inactive).

7.1.4.3.2 Dynamic Analysis

7.1.4.3.2.1 Response Spectrum Analysis

7.1.4.3.2.1.1 General

The response of a flexible system to seismic forces depends upon its natural frequencies and the frequencies of excitation. For these systems, it is necessary to know the natural frequencies, and the seismic excitation which is usually defined as acceleration response spectrum. The development of response spectra for piping systems must be consistent with the goal of a standardized piping support system, stated in Section 6.2.3.1.

To determine the system natural frequencies, each pipe should be idealized as a mathematical model consisting of lumped masses connected by elastic members. Lumped masses should be located at carefully selected points in order to adequately represent the dynamic and elastic characteristics of the pipe system. Using the elastic properties of the pipe, the flexibility for the pipe should be determined. The flexibility calculations should include the effects of torsional, bending, shear, and axial deformations (i.e., the degrees of freedom). Node point spacing should be selected to obtain accurate dynamic results. As a minimum, the number of degrees of freedom should be taken as equal to twice the number of modes with frequencies less than the frequency corresponding to the ZPA.

Once the flexibility and mass of the mathematical model are calculated, the frequencies and mode shapes for all significant modes of vibration should be determined. Piping stresses and displacements should then be determined utilizing standard modal response spectra analysis techniques.

7.1.4.3.2.1.2 Response Spectrum

A response spectrum is a curve which represents the peak acceleration response verses frequency of a single degree of freedom spring mass system which is excited by an earthquake motion time history. It is a measure of how a structural system with certain natural frequencies will respond to an earthquake applied at its supports.

The response spectra curves for System 80+ have been developed using several ground motion time history analyses. These analyses were used to cover a range of possible soil conditions. The resulting floor response spectra may be enveloped or considered in subgroups up to individually in the seismic analysis to account for all of the various soil cases.

Most analyses will consist of multiple supports with different characteristic response spectrum. To account for this, the applicable response spectra for all structures and elevations supporting the pipe in the dynamic model may be enveloped to determine the response spectra for that piping.

If this method is determined to be overly conservative, a multiple-support spectra method may be used. The response spectrum of the individual support locations may be input separately with the response due to each support combined in a conservative manner. This method should not be used in combination with variable damping.

7.1.4.3.2.1.3 Spectrum Peak Broadening

To account for possible uncertainties, the initially computed floor response spectra are usually smoothed, and peaks associated with the structural frequencies are widened. The method used to determine the amount of peak widening, associated with the structural frequency, should be as detailed in **ASME Code, Section III, Division I, Appendix N, Section N-1226.3.**

7.1.4.3.2.1.4 Damping

Damping values are provided in **CESSAR-DC, Section 3.7.1.3** and are summarized below;

	OBE	SSE
Piping diameter ≤ 12"	1%	2%
Piping diameter > 12"	2%	3%

Alternately, when using response spectra analyses, variable damping values in accordance with the requirements and limitations of the **ASME Code Case N-411-1 "Alternative Damping Values for Response Spectra Analysis of Class 1, 2, and 3 Piping, Section III, Division I"** is acceptable. However, no combination of the two damping criteria shall be used. The variable damping curve is provided in **CESSAR-DC, Table 3.7-41.**

7.1.4.3.2.1.5 Modal Cutoff and Rigid Range Acceleration Effects

The number of modes included in the analysis should be chosen to correspond with the range of seismic excitation frequencies up to the frequency corresponding to the ZPA. There is no limit on the number of modes. The number of modes included in the analysis should be selected so that the response from the remaining higher modes does not result in more than a 10% increase in total system response.

At modal frequencies above the frequency corresponding to the ZPA, pipe members are considered rigid. The acceleration associated with these rigid modes is usually small. However, in certain situations the response to high frequency modes can significantly affect support loads, particularly axial restraints on long runs. The effects of rigid range accelerations may be evaluated by

7.1.4.3.2 Dynamic Analysis

7.1.4.3.2.1 Response Spectrum Analysis

7.1.4.3.2.1.1 General

The response of a flexible system to seismic forces depends upon its natural frequencies and the frequencies of excitation. For these systems, it is necessary to know the natural frequencies, and the seismic excitation which is usually defined as acceleration response spectrum.

To determine the system natural frequencies, each pipe should be idealized as a mathematical model consisting of lumped masses connected by elastic members. Lumped masses should be located at carefully selected points in order to adequately represent the dynamic and elastic characteristics of the pipe system. Using the elastic properties of the pipe, the flexibility for the pipe should be determined. The flexibility calculations should include the effects of torsional, bending, shear, and axial deformations (i.e., the degrees of freedom). Node point spacing should be selected to obtain accurate dynamic results. As a minimum, the number of degrees of freedom should be taken as equal to twice the number of modes with frequencies less than the frequency corresponding to the ZPA.

Once the flexibility and mass of the mathematical model are calculated, the frequencies and mode shapes for all significant modes of vibration should be determined. Piping stresses and displacements should then be determined utilizing standard modal response spectra analysis techniques.

7.1.4.3.2.1.2 Response Spectrum

A response spectrum is a curve which represents the peak acceleration response verses frequency of a single degree of freedom spring mass system which is excited by an earthquake motion time history. It is a measure of how a structural system with certain natural frequencies will respond to an earthquake applied at its supports.

The response spectra curves for System 80+ have been developed using several ground motion time history analyses. These analyses were used to cover a range of possible soil conditions. The resulting floor response spectra may be enveloped or considered in subgroups up to individually in the seismic analysis to account for all of the various soil cases.

Most analyses will consist of multiple supports with different characteristic response spectrum. To account for this, the applicable response spectra for all structures and elevations supporting the pipe in the dynamic model may be enveloped to determine the response spectra for that piping.

If this method is determined to be overly conservative, a multiple-support spectra method may be used. The response spectrum of the individual support locations may be input separately with the response due to each support combined in a conservative manner. This method should not be used in combination with variable damping.

7.1.4.3.2.1.3 Spectrum Peak Broadening

To account for possible uncertainties, the initially computed floor response spectra are usually smoothed, and peaks associated with the structural frequencies are widened. The method used to determine the amount of peak widening, associated with the structural frequency, should be as detailed in **ASME Code, Section III, Division I, Appendix N, Section N-1226.3.**

7.1.4.3.2.1.4 Damping

Damping values are provided in **CESSAR-DC, Section 3.7.1.3** and are summarized below;

	OBE	SSE
Piping diameter ≤ 12"	1%	2%
Piping diameter > 12"	2%	3%

Alternately, when using response spectra analyses, variable damping values in accordance with the requirements and limitations of the **ASME Code Case N-411-1 "Alternative Damping Values for Response Spectra Analysis of Class 1, 2 and 3 Piping, Section III, Division I"** is acceptable. However, no combination of the two damping criteria shall be used. The variable damping curve is provided in **CESSAR-DC, Table 3.7-41.**

7.1.4.3.2.1.5 Modal Cutoff and Rigid Range Acceleration Effects

The number of modes included in the analysis should be chosen to correspond with the range of seismic excitation frequencies up to the frequency corresponding to the ZPA. There is no limit on the number of modes. The number of modes included in the analysis should be selected so that the response from the remaining higher modes does not result in more than a 10% increase in total system response.

At modal frequencies above the frequency corresponding to the ZPA, pipe members are considered rigid. The acceleration associated with these rigid modes is usually small. However, in certain situations the response to high frequency modes can significantly affect support loads, particularly axial restraints on long runs. The effects of rigid range accelerations may be evaluated by approximating the higher mode response using the spectral acceleration at the frequency corresponding to the ZPA and combining this response with the dynamic analysis results in an additional mode (using the square root of the sum of the squares, SRSS).

7.1.4.3.2.1.6 Modal and Direction Result Combination

As stated in **CESSAR-DC, Section 3.7.3.7**, the seismic response of each mode shall be calculated and combined with the other modal responses using the methods described in **Regulatory Guide 1.92, "Combining Modal Responses and Spatial Components in Seismic Response Analysis"**.

If the modes are not closely spaced (two consecutive modes are defined as closely spaced if their frequencies differ from each other by 10 percent or less of the lower frequency), the results may be combined by the square root of the sum of the squares (SRSS). Closely spaced modes should be combined by one of the following methods: (1) Grouping Method, (2) Ten Percent Method, or, (3) Double Sum Method.

The responses due to each of the three separate directions of seismic excitation should be combined by SRSS.

7.1.4.3.2.1.7 Seismic Anchor Movements

The effects of seismic anchor motion shall be considered in the seismic analysis. For models with piping in more than one building, it should be assumed that the buildings move 180° out of phase. Movements within all buildings except the Reactor Building should be assumed to be in phase. Within the Reactor Building there can be differential movements between the Reactor Building, the Containment Vessel, Reactor Interior Structures, and the NSSS. These movements, when applicable, should be assumed to act 180° out of phase. The resulting relative movement should be applied as static support displacements with all dynamic supports active.

Support loads shall be obtained and defined for both OBE and SSE motions.

7.1.4.3.2.1.8 Fatigue

The cyclic load basis for fatigue analysis of the OBE earthquake shall be a minimum of 75 full load cycles for Class 1 piping systems.

7.1.4.3.2.2 Time History Analysis

7.1.4.3.2.2.1 General

Time history analysis may be used as an alternative method to response spectrum analysis for any piping system.

For those piping systems analyzed by time history methods, development of mathematical models, which define flexibility and mass, and calculation of natural frequencies and mode shapes, as described in **Section 7.1.4.3.2.1.1**, should first be performed.

7.1.4.3.2.2.2 Piping Dynamically Decoupled from the NSSS

Most piping systems can be dynamically decoupled from the nuclear steam supply system (NSSS), following the guidelines of **Section 7.1.5.2.2**. The surge line, which is functionally part of the NSSS, is included in those piping systems which can be shown to meet the decoupling criteria, and should therefore be analyzed separately from the rest of the NSSS.

The solution of the differential equations of motion, which describe the dynamic response of a system to a seismic excitation, can be obtained by the method of modal superposition or by the method of direct integrations, using time history analysis. These methods are described in **CESSAR-DC, Section 3.7.2.1.1.2**.

The mathematical model should be subjected to seismic excitations at the anchor points (terminal ends) and at building supports. For statistically independent earthquake motions, input excitations in all three translation directions and, as applicable, in all three rotational directions should be applied simultaneously to the anchor points and building supports.

Input of multiple time history excitations, which allow calculation of the effects of both differential motion and inertia, should normally be used in a multiply supported system such as a piping system. An acceptable alternate time history method, as described in **ASME Code, Section III, Division I, Appendix N, Section N-1228.4**, is to input an "envelope" time history excitation to calculate the inertia response, and separately to determine the effects of differential support motion using a static analysis. The ASME B&PV Code defines the envelope excitation as a time history whose response spectrum envelopes the response spectra for the individual support motions.

7.1.4.3.2.2.3 Piping Dynamically Coupled to the NSSS

The only piping system that is dynamically coupled to the NSSS for the purpose of structural analysis is the main coolant loop piping. The main coolant loop piping should be seismically analyzed as an integral part of the reactor coolant system structure, using methods described in **CESSAR-DC, Sections 3.7.2.1.2 and 3.7.2.6.2.**

7.1.4.4 Equipment Nozzles

The following effects of equipment nozzles should be considered in the analyses and included where appropriate:

- Equipment response spectra
- Equipment nozzle displacements and rotations
- Equipment nozzle flexibility

7.1.4.5 Wind/Tornado Analysis

Exposed piping shall be designed to withstand forces generated by wind and tornados. Maximum wind speeds provided in **CESSAR-DC, Section 3.3** are listed below;

A. Wind loading: 130 mph maximum wind speed

B. Tornado loading:

1. 330 mph maximum wind speed
2. 260 mph rotational wind velocity
3. 70 mph translational wind velocity

Tornado loads are based upon the NRC Staff interim position based on **NRC Regulatory Guide 1.76, "Design Basis Tornado for Nuclear Power Plants"**.

7.1.4.6 Fluid Transient Analysis

Transient fluid dynamic loadings on piping should be evaluated and the resulting loads included in the piping analysis. The loads considered should be those significant loads due to fast valve closure, steam hammer, water hammer, relief valve discharge, and multiple relief valve discharge. Potential loadings should be evaluated and defined for each problem on a case-by-case basis. Multiple safety valve discharges should be analyzed so as to maximize piping stresses and support/restraint design loads unless another discharge sequence can be justified. Discharge sequences considered should include the possibility of the instantaneous and simultaneous discharge of all valves in the same vicinity. The following represents acceptable analysis methods. Other methods such as characteristics computer programs may be used where justified.

7.1.4.6.1 Safety/Relief Valve Thrust

Safety/relief valves produce transient and steady-state loads on the valve inlet piping and discharge piping (if used). The thrust load, F, is a function of fluid type (water or steam), design pressure, and valve throat area. An acceptable method of calculating the valve thrust loads is as follows.

A. Water Discharge:

$$F_{STATIC} = 0.0022\left(\frac{GPM}{ID}\right)^2 \qquad \textbf{(Eqn. 7.1-2)}$$

Where: GPM = rated valve discharge in gallons per minute
ID = inside diameter of the discharge pipe in inches

A dynamic load factor of two should be included for the dynamic loading unless a lower value is justified.

B. Steam Discharge:

The procedure of **ASME B&PV Code, Section III, Appendix O**, should be used, with the caution that negative (below atmospheric) discharge pressures are meaningless and the equation does not apply for those cases.

Relief valves cause both dynamic and static loading conditions. To simplify analysis, however, essentially all relief valve thrust loads are evaluated statically. Closed discharge and piped relief valves have an additional complicating factor since transient forces develop at each intermediate turn in the piping during the initial phase when the flow along the pipe is being established. These transient loads should be treated as water/steam hammer. As the transient phase ends, all of the intermediate forces cancel each other out, leaving only the steady state thrust force at the exit point of the fluid from the discharge system. For closed discharge systems, the steady state thrust force is zero at the valve outlet.

Dynamic relief valve thrust loads should be applied to the piping model as static loads with snubbers active and a dynamic load factor applied to the loads.

7.1.4.6.2 Water and Steam Hammer Analysis

Water and steam hammer are both dynamic loading conditions on the piping. Forcing functions, using actual time history analyses, may be used in the dynamic analysis. However, the following simplified conservative approximations of the forces may be used in a static evaluation.

The simplified method described below determines the worst net force developed in a segment of piping and applies it assuming it can occur in either direction along the local 'x' axis of the pipe. This net force that develops depends on flow rates, fluid velocities, valve closing time, the length of straight runs of pipe, and the fluid involved.

7.1.4.6.2.1 Water Hammer Forces

Two equations exist for determining the resultant force, F_n, on any straight segment of piping due to water hammer. The proper one to use depends on the ratio of L/L_s for the pipe segment in question, where L (ft) is the length of straight pipe of the segment and L_s (ft) is the distance travelled by the shock wave during the valve closure. L is available from the piping drawings and is shown as an example for piping run 2 on **Figure 7.1.4-1**. The distance travelled by the shock wave (1) may be calculated:

$$L_s = c \times t \qquad \text{(Eqn. 7.1-3)}$$

Where: c = sonic velocity in water (4,700 ft/sec)
t = valve closure time (sec)

A. For $(L/L_s) < 1.0$

$$F_n = \frac{\dot{m}c}{g} \qquad \text{(Eqn. 7.1-4)}$$

Where: $\dot{m}$ = mass flow rate of water (lbm/sec)
c = 4,700 (ft/sec)
g = 32.174 lbm-ft/lbf-sec^2
F_n = resultant net force (lbs) along pipe run

B. For $(L/L_s) > 1.0$

$$F_n = \frac{\dot{m}L}{gt} \qquad \text{(Eqn. 7.1-5)}$$

Where the above defined terms apply and:

L = length of straight pipe run (ft)
t = valve closure time (sec)

One of the above equations should be used to calculate the net force to be applied for each straight segment of piping until a point is reached where the pressure waves are damped out at a tank, closed valve, equipment connection, or connection to a large header.

7.1.4.6.2.2 Steam Hammer Forces

Since steam is a compressible fluid, the calculation of resultant forces along each straight run can be performed by the following six steps and terms:

A. Terms

$\dot{m}$ = steam mass flow rate (lbm/sec)
P = design pressure (psig)
T = steam temperature (saturated) at P (°F)
v = specific volume of steam at T and P (ft^3/lbm)
v_{1000} = specific volume at P and 1000°F (ft^3/lbm)
L_s = distance travelled by shock wave (ft)
c = sonic velocity at P and T (ft/sec)
F_n = net force exerted on pipe segment (lbs)
t = valve closure time (sec)
TF = temperature factor
V = steam velocity (ft/sec)
A = flow area of pipe (in^2)
L = pipe length between turns (ft)

B. Net Force Calculation

1. Compute temperature factor (TF)

$$TF=\sqrt{\frac{v_{1000}}{v}} \qquad \textbf{(Eqn. 7.1-6)}$$

2. Calculate length (L_s) over which the pressure wave propagates during the valve closure time (t)

$$L_s=c\times t$$

3. Calculate initial steam velocity (V)

$$V=\frac{\dot{m}v}{A} \qquad \textbf{(Eqn. 7.1-7)}$$

4. Using **Figure 7.1.4-2**, pick the curve (or interpolate a curve) that represents the steam velocity (V) above. From this curve determine the slope at the steepest section of the plot. At this steepest point, the abscissa difference is the ratio L/L_s. Multiplying

this abscissa difference by the slope provides the pressure rise ratio $\Delta P/P$:

$$(\text{Abscissa Difference}) \times (\text{Slope}) = \Delta P/P$$

5. The force exerted along any segment is then:

$$F = P \times TF \times A\left(\frac{\Delta P}{P}\right) \qquad \textbf{(Eqn. 7.1-8)}$$

6. As with water hammer, this force should be determined for each straight segment of pipe until a point is reached (equipment, tank, closed valve, etc.) where the pressure wave would be damped.

7.1.4.7 Pipe Break Analysis

Pipe break loads are any loads that are applied to unbroken pipe resulting from ruptures of nearby piping. Pipe break loadings include, but are not limited to, the effects of the following: pipe whip, jet impingement, differential pressure, temperature increase (localized or overall), and support/anchor movement (including reactor coolant loop and containment vessel). Effects of a ruptured pipe on other portions of itself need not be considered, except to demonstrate that a whipping pipe is restrained.

In general, pipe break loads are defined for each piping problem on a case-by-case basis. These loads should be applied by the piping analyst as applicable to the appropriate piping problem. See **Section 7.1.8** for further details of postulated pipe breaks. Pipe break loadings due to two or more assumed pipe breaks shall be considered to act individually as separate events.

7.1.4.8 High Energy and Moderate Energy Requirements

High and moderate energy piping systems shall be evaluated for postulated pipe breaks. Intermediate break locations are based on potential high stresses and fatigue limits determined by the piping stress analysis results. For the postulated pipe break evaluation requirements see **Section 7.1.8**.

7.1.4.9 Non-Rigid Valves

Normally, valves are specified to be rigid. Non-rigid valves (indicating that the valve has modes of vibration < ZPA) are identified by the applicable valve seismic report. The effects of the non-rigid valve should be considered in the piping analysis.

FIGURE 7.1.4-1

Water/Steam Hammer Forces

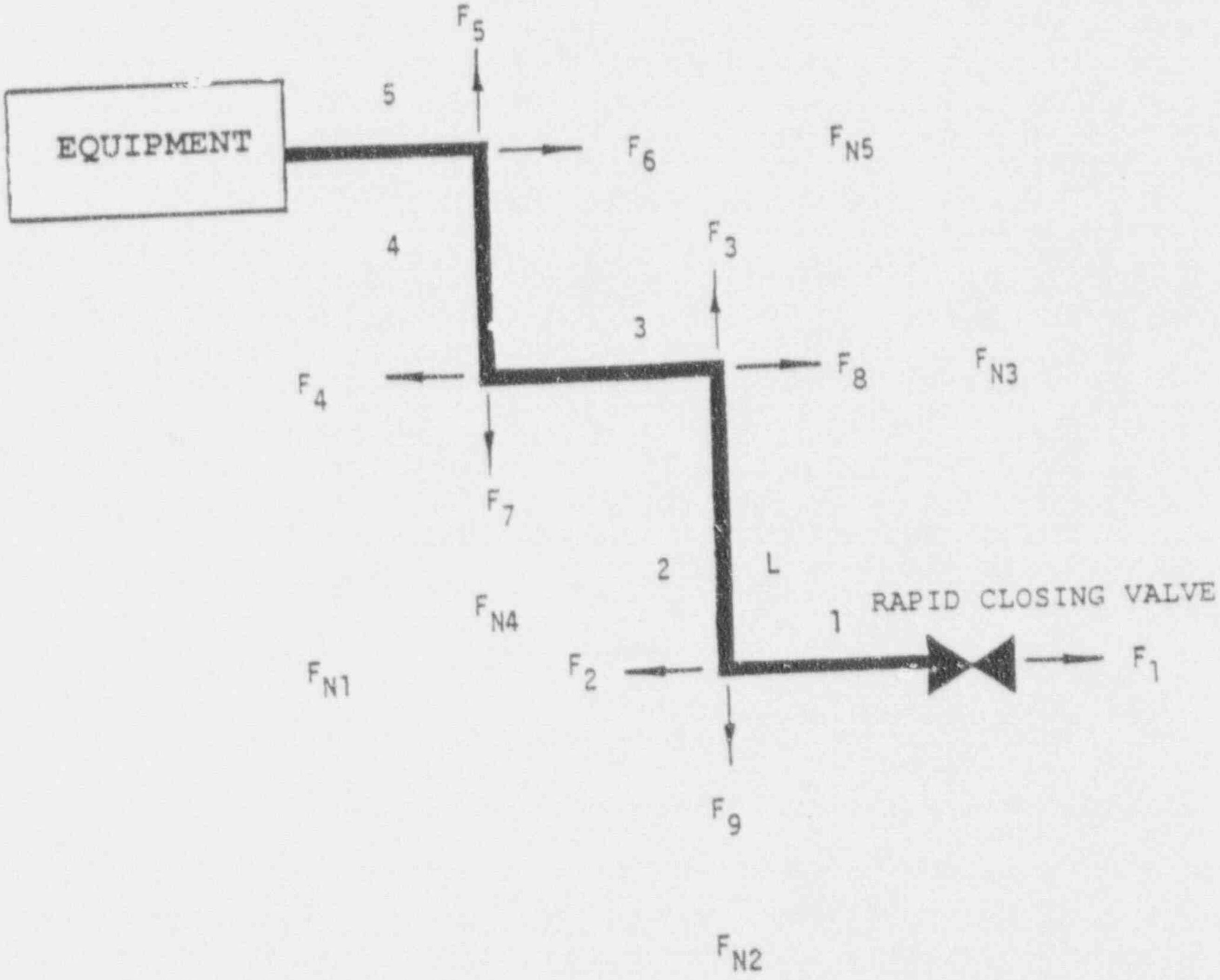

F_i = Time dependent force developed at change in direction.

F_{Ni} = Net resultant force along axis of pipe at worst time (i.e., maximum difference between opposing F_i's).

FIGURE 7.1.4-2

Percent Pressure Rise vs. Valve Closing Time

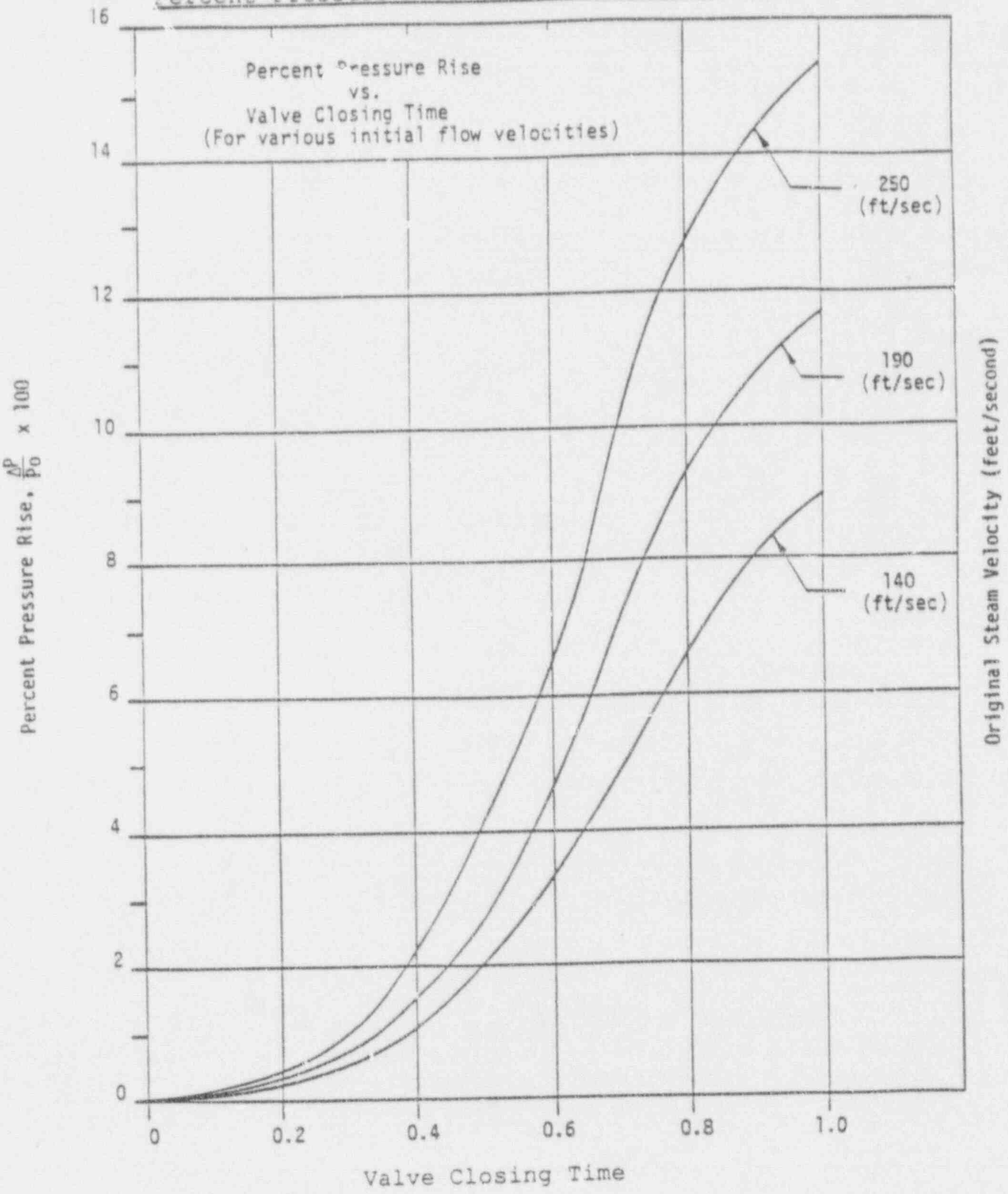

7.1.4.10 Expansion Joints

Expansion joints allow limited relative lateral and axial displacements and bending rotations between the ends of the joint, depending on the type of joint in use. Expansion joints should be considered in the analysis.

7.1.5 ANALYSIS TECHNIQUES

7.1.5.1 Model Boundaries

Piping models ideally run from anchor to anchor (equipment nozzle, or penetration). Where this is not feasible, the piping may be separated by decoupling, overlapping, isolation, or in-line anchors as described in the following subsections to form more manageable models for analysis. These subsections present minimum requirements. If the piping cannot be separated to form smaller analysis models by these methods, the analyst may consider the use of an intermediate anchor to separate models subject to the considerations of **Section 7.1.5.5**.

7.1.5.2 Decoupling

7.1.5.2.1 General

Small branch lines may be decoupled from larger run piping regardless of seismic classification. Decoupling may also be applied for in-line pipe size changes (such as at a reducer or reducing insert). For consistency with the following text, the smaller line should be considered the "branch" and the larger line should be considered the "run". To be decoupled, piping should meet the size, section modulus, or moment of inertia ratios as detailed in the following paragraphs.

7.1.5.2.2 Decoupling Criteria

Branch lines meeting the following criteria may be decoupled from the main run:

A. $D_b/D_r \leq 0.25$, or

B. $Z_b/Z_r \leq 0.10$, or

C. $I_b/I_r \leq 0.04$

Where: D_b = branch nominal pipe size
D_r = run nominal pipe size
Z_b = branch section modulus
Z_r = run section modulus
I_b = branch moment of inertia
I_r = run moment of inertia

An appropriate stress intensity factor (SIF) should be included on the branch and main run lines at the point where the piping is decoupled. Mass effects of the branch line should be considered in the analysis of the run line and included, if significant. The branch point should be considered as an anchor in the analysis of the branch pipe. Thermal and seismic anchor movement analyses of the decoupled branch lines should be performed with the thermal, seismic inertial, seismic anchor movement (SAM), or pipe break movements of the larger pipe header applied as anchor displacements and/or rotations to the smaller branch line if these movements are significant.

Piping may also be decoupled at flexible hose provided each interfacing analysis considers the flexible hose weight and significant stiffness, and the flexible hose qualifies for the net end displacements of the interfacing analysis problems. Analysis results of the interfacing problems do not have to be combined. The flexible hose should not be allowed to experience large tensile loads.

7.1.5.3 Overlapping

7.1.5.3.1 General

Overlapping is used to separate seismically analyzed piping problems. Isolation of non-seismic piping from seismic piping is addressed in **Section 7.1.5.4**.

Seismic piping that cannot be separated by decoupling as described in **Section 7.1.5.2** may be separated using an overlap region. The overlap region should have enough rigid restraints and include enough bends in three directions to prevent the transmission of motion due to seismic excitation from one end to the other. The following criteria present minimum requirements which should be upgraded if required to satisfy this condition.

7.1.5.3.2 Overlap Criteria

A section of piping to be considered an overlap region should meet the following criteria:

A. The section contains a minimum of four (4) restraints in each of three perpendicular directions. If a branch is encountered, the balance of restraints needed beyond that point should be included on all lines joining at the branch.

B. The restraints in the section are so spaced that the pipe span between any two restraints, taken as simply supported beams, have a fundamental natural frequency (bending and torsion) not less than the frequency corresponding to the ZPA.

C. In lieu of criteria B, a dynamic analysis of the overlap region should be made with pinned boundaries extended beyond the overlap region either to the next actual support or to a span length equal to the largest span length within the region. The fundamental frequency determined from this analysis should be greater than the frequency corresponding to the ZPA.

The overlap region should contain at least one change in direction to filter torsional effects. The overlap piping should be included in all models adjacent to the overlap region. An axial restraint on a run may be counted effective at each point of lateral restraint on that same run. Hanger design loads and movements in the overlap region should be obtained by enveloping the results of all models adjacent on the overlap region. Pipe stresses and valve accelerations should be checked in each separate analysis.

7.1.5.3.2.1 Restrained Elbow (or Tee)

Adequately restrained elbows or restrained tees may be used to terminate or separate analysis models. Restrained elbows and restrained tees should meet the criteria of **Figures 7.1.5-1 and 7.1.5-2**, respectively. Results of all analyses should be combined to obtain pipe stresses and hanger loads for the restrained elbow and restrained tee configurations.

7.1.5.4 In-line Anchors

An in-line anchor is a device restricting all six degrees of freedom, thereby isolating each run. In-line anchors should only be used to separate piping models, if practical, based on the following considerations:

A. Anchors could be impractical, especially on large diameter piping (>4" nominal pipe size, NPS) or on lines with high thermal and/or seismic movements.

B. The addition of anchors can add terminal end break locations to high and moderate energy piping.

C. The use of anchors can be limited by high piping thermal expansion loads or the practicality of the anchor design and installation.

D. Anchor load results from the piping on both sides of an anchor should be combined to obtain the design loads for the anchor. If the piping on one side of the anchor is unanalyzed, appropriate loads should be developed to represent the unanalyzed pipe. As an example, plastic collapse moments for the unanalyzed side may be used.

FIGURE 7.1.5-1

Restrained Elbow

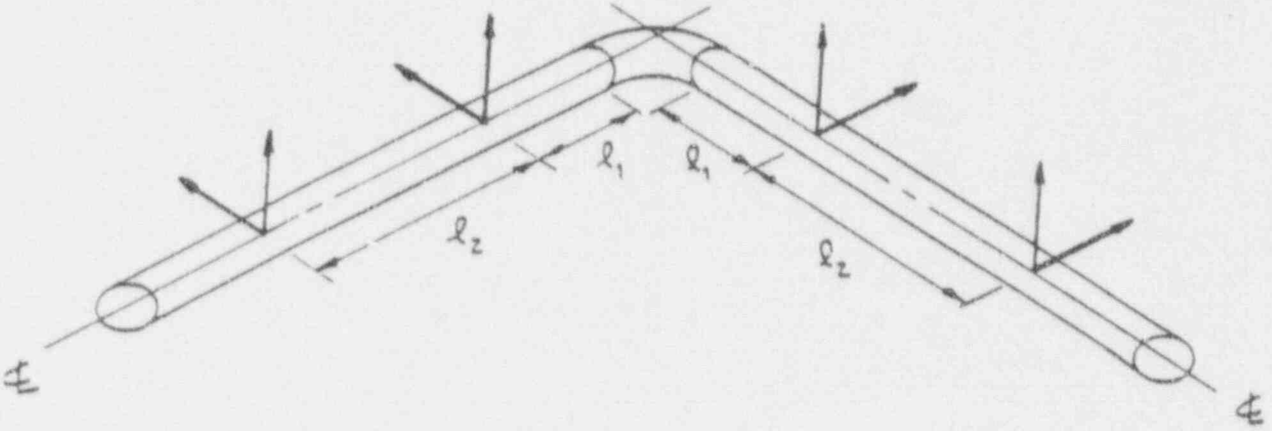

Dimensions ℓ_1 and ℓ_2 are defined as follows:

	NOMINAL	MINIMUM	MAXIMUM
ℓ_1	6"	Weld Clearance	6"
ℓ_2	L/4	L/8	L/4

Where: L = ASME B31.1 Recommended Support Span per Table 121.5.

FIGURE 7.1.5-2

Restrained Tee

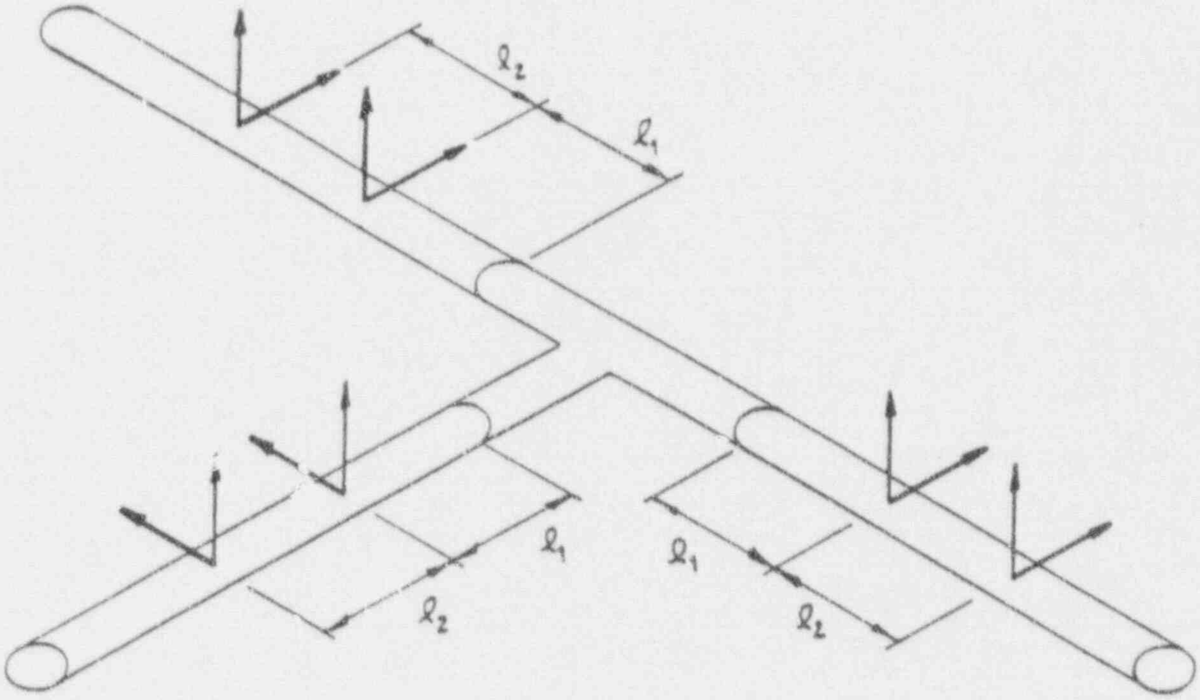

Dimensions ℓ_1 and ℓ_2 are defined as follows:

	NOMINAL	MINIMUM	MAXIMUM
ℓ_1	6"	Weld Clearance	6"
ℓ_2	L/4	L/8	L/4

Where: L = ASME B31.1 Recommended Support Span per Table 121.5.

7.1.5.5 Support Considerations

The proper participation and orientation of each support/restraint should be included in the piping analysis. Participation should be consistent with how the support type performs during the loadings under consideration. Some loading conditions create pipe movements that could affect the analyzed support orientation, such as vertical supports with large lateral thermal movements. The effects of such pipe movements on the analyzed support orientation should be evaluated.

7.1.6 ACCEPTANCE CRITERIA

7.1.6.1 ASME Class 1 Piping

The allowable stress limits for the specified loading combinations for ASME Class 1 piping are shown in **Tables 7.1.3-1 and 7.1.3-2**.

7.1.6.2 ASME Class 2 and 3 Piping

The allowable stress limits for the specified loading combinations for ASME Class 2 and 3 piping are shown in **Table 7.1.3-3**.

7.1.6.3 Allowable Nozzle Loads

Loads applied to equipment nozzles shall not exceed allowable values provided by the equipment vendor. In lieu of specific values, generic allowable equipment nozzle loads may be used provided the equipment is specified to these design nozzle load values.

7.1.6.4 Allowable Penetration Loads

Loads and displacements on containment penetration assemblies, as shown in **CESSAR-DC, Figure 3.8-2**, shall meet manufacturer's allowables.

7.1.6.5 Welded Attachments

Per **ASME Section III, Subarticle NC/ND 3645**, external and internal attachments to piping shall be designed so as not to cause flattening of the pipe, excessive localized bending stresses, or harmful thermal gradients in the pipe wall. It is important that such attachments be so designed to minimize stress concentrations in applications where the number of stress cycles, due either to pressure or thermal effect, is relatively large for the expected life of the equipment.

Local stresses due to all support loads acting on a welded attachment should be evaluated and added directly to the nominal pipe stresses at the point of the attachment. The sum of the stresses shall be compared against the allowable stresses given in

Tables 7.1.3-2 and 7.1.3-3. Methods for evaluating local stresses due to welded attachments are provided in **ASME Code Cases N-318 and N-392**.

7.1.6.6 Functional Capability Requirements

CESSAR-DC, Section 3.9.3.1.4.2 requires that ASME Class 2 and 3 piping be evaluated for functional capability. **Appendix 7B** provides the functional capability requirements for ASME Class 2 and 3 stainless steel elbows as stated in **Texas Utilities' letter TXX 3423**.

7.1.6.7 Valve Requirements

Valve accelerations should meet the allowable manufacturer's requirements for seismic acceleration. The loads on supports attached to valve operators should also be evaluated.

7.1.6.8 Expansion Joint Requirements

Expansion joints should be evaluated to ensure compliance with vendor allowables.

7.1.7 PIPE SUPPORT DESIGN REQUIREMENTS

7.1.7.1 General

The design of pipe supports should meet the intended functional requirements of the stress analysis as well as meeting the specified stress limits for the support components. Support components may include typical structural steel members as well as manufactured catalog items for typical support components.

Supports are idealized in the piping analysis as providing restraint in the analyzed direction while providing unrestricted movement in the unrestrained direction. Since the design of supports cannot completely duplicate the idealized condition, supports should be designed to minimize their effects on the piping analysis. Additionally, the support design should not invalidate any assumptions used in the analysis of the piping system.

In addition to loads defined by the stress analysis, any additional forces the support are subjected to should be considered in the support qualification.

7.1.7.2 Design Considerations

7.1.7.2.1 Deadweight Loads

Gravity loads of the pipe are typically restrained by two types of supports. The piping analysis will define whether the support should be designed as a rigid or flexible support. Flexible supports are usually specified when the pipe must be restrained for its gravity weight, however must remain free to move during thermal expansion. Vendor supplied spring components with specified spring constants are typically provided in this application.

In addition to gravity loads from the piping analysis, the deadweight of the support itself should be considered in the support qualification.

7.1.7.2.2 Thermal Loads

Temperature changes within the piping system, including thermal stratification, will cause the pipe to thermally expand. Thermal loads are induced into supports which restrain the piping system from being able to freely expand. Additional thermal loads could be a result of "anchor" displacements. Movements at the terminal end points of the piping system, such as branch lines and vessels, will induce loads into supports which resist these movements. These forces are usually referred to as thermal anchor movements (TAM). All possible thermal conditions, including ambient thermal, should be evaluated when combining thermal loads with other load cases to obtain the worst loading on the supports. The pipe will also experience radial expansion due to temperature increases. To minimize local stresses within the pipe, supports should be designed to allow for this expansion. See **Section 7.1.7.2.10** concerning support gaps.

Pipe supports should also be evaluated for environmental thermal conditions. Temperature increases in the area around the support will cause the support itself to tend to thermally expand. In addition, local high temperatures can exist close to the pipe wall. Support elements which are subjected to these elevated temperatures should be evaluated for thermal effects. Material property values consistent with the associated temperature should be used.

Thermal expansion of the pipe support and/or the building structure from which the support is attached should be evaluated for its effects on the piping analysis.

7.1.7.2.3 Seismic Loads

The building response to earthquake motion will cause seismic acceleration of the piping system. Earthquake inertia forces are applied to supports that restrain the seismic movement of the piping system. Additional seismic movements could be caused by seismic acceleration of terminal end points of the piping system such as branch lines and vessels. These forces are usually referred to as seismic anchor movements (SAM).

The response of the support itself due to seismic acceleration should also be evaluated. Typically, the inertia response of the support mass would be evaluated using a response spectrum analysis similar to the piping analysis as described in **Section 7.1.4.3.2.1**. Damping values for welded and bolted structures are provided in **CESSAR-DC, Table 3.7-1**.

7.1.7.2.4 Dynamic Fluid Loads

Dynamic fluid loads are a result of fluid transients due to safety relief valve thrust, water and steam hammer. These events are evaluated in the piping analysis. Supports should be designed to meet the requirements of the piping analysis.

7.1.7.2.5 Wind/Tornado Loads

Exposed piping and support structures shall be designed to withstand forces generated by wind and tornados. Wind and tornado loading on the piping should be evaluated in the piping analysis. The effects of wind and tornado on the support structure shall also be considered in the support qualification. Design wind speeds are provided in **CESSAR-DC, Section 3.3**.

7.1.7.2.6 Missile Loads

Supports subjected to loads described in **CESSAR-DC, Section 3.5.1** should be evaluated for the effects of missiles.

7.1.7.2.7 Pipe Break Loads

The dynamic effects of pipe breaks on the piping system shall be considered in the piping analysis unless eliminated by leak-before-break (LBB) methodology. The effects of pipe whip, jet impingement, and temperature increases on the support structure should be considered in the support qualification.

7.1.7.2.8 Support Stiffness

Supports may be modeled in the piping analysis by using the actual support stiffness values or by using rigid stiffness values. If using the actual support stiffnesses, the flexibility of all support components as well as the effects of the building structure should be included in the total stiffness value.

Rigid stiffness values are typically used. Actual stiffness values for flexible supports (e.g., spring cans) are usually included in the piping analysis. When using rigid stiffnesses, it is also important that all supports, in a given pipe analysis, be designed with a reasonably equal stiffness. This reduces the effects of load redistribution to stiffer supports due to the deflection of the more flexible supports.

Since supports are usually modeled with one stiffness value for both directions of a support axis, supports should be designed to have similar stiffnesses in both directions. Additionally, support stiffness in the unrestrained direction of the pipe should be considered to minimize the effects of seismic inertia loading of the support mass.

Additionally, the piping analysis may assume that supports are sufficiently rigid in comparison to the pipe to allow decoupling of the supports from the piping analysis. Therefore, rigid supports should be designed to ensure the stiffness of the supports do not significantly affect the pipe frequency.

7.1.7.2.9 Friction

Temperature changes in the piping system will cause movement in the unrestrained direction of the pipe. If the pipe is free to slide across a support, frictional forces will be developed between the support surface and the pipe. The amount of frictional force developed is a function of the coefficient of friction of the sliding surfaces and the support stiffness in the direction of movement. Since friction is due to gradual movement of the pipe, such as thermal expansion, frictional forces should be considered in the support qualification under combined deadweight and thermal loading only. Friction forces should be applied in both directions of thermal expansion.

Typically frictional forces are neglected in the analysis of the piping system because supports are designed to minimize the effects of friction on the piping analysis.

7.1.7.2.10 Support Gaps

Gaps between the support and the restrained direction of the pipe create a non-linear situation which should be avoided. However for frame type supports built around the pipe, small gaps should be provided. These gaps allow for radial thermal expansion of the pipe as well as allowing for pipe rotation. In order to neglect support gaps in the piping analysis, they are typically restricted to a total of 1/8" in the restrained direction. More restrictive gaps could be needed at supports close to sensitive equipment or where specific thermal or transient stops are specified. Gaps of these magnitudes are typically negligible and considered to be zero in the piping analysis.

Gaps in the unrestrained direction should be specified large enough to accommodate the maximum movement of the pipe. Standard practice is to provide an additional 1/2" gap to account for uncertainties in the piping analysis.

7.1.7.2.11 Support Orientation

Supports should be provided in the direction required by the piping analysis. However, due to pipe movements, the orientation of the support axis could change during different plant conditions.

Therefore, supports such as struts and snubbers should be designed to minimize the effects of the pipe movements.

7.1.7.2.12 Support Mass

Typically the mass of the support is not considered in the piping analysis. Therefore, the weight of components supported by the pipe should be limited to the extent possible. For example, spring supports should include the weight of the components below the spring in the spring load setting, thus negating the weight that would have been supported by the pipe. However, due to the seismic response of the attached mass, supports which add substantial mass to the pipe should be evaluated for the effects on the piping analysis.

7.1.7.2.13 Welded Pipe Attachments

Welded attachments to the pipe wall should be avoided where possible. However, certain design requirements such as anchors or axial restraints could require the use of welded lugs or trunnions. All welded attachments will require the evaluation of the local stresses induced into the pipe. Materials used as welded attachments shall be compatible with the piping material.

7.1.7.3 Load Combinations

Load combinations shall be in accordance with **CESSAR-DC, Section 3.9.3.1** and are detailed in **Table 7.1.7-1**.

7.1.7.4 Acceptance Criteria

Stress limits for structural members of pipe supports shall meet the requirements defined in **ANSI/AISC N690, "Nuclear Facilities-Steel Safety-Related Structures for Design Fabrication and Erection"**.

Manufactured catalog items should meet the requirements of **MSS-SP-58, "Pipe Hangers and Supports-Materials, Design and Manufacture"**. The application of catalog components should be consistent with the manufacturer's requirements and should meet the manufacturer's load rated capacities for the items.

Expansion anchors and other steel embedments used in the support design shall meet the requirements of **ACI-349, "Code Requirements for Nuclear Safety Related Concrete Structures"**.

7.1.7.5 Jurisdictional Boundaries

The jurisdictional boundaries shall be as defined in **ASME Code, Section III, Subsection NF**. However, the acceptance criteria as defined above should also be applicable for the qualification of support components within the NF boundaries.

TABLE 7.1.7-1

Loading Conditions and Load Combination Requirements for ASME Code Class 1, 2, and 3 Piping Supports

	CONDITION	LOAD COMBINATION
1.	Normal Condition (Service Level A)	Weight Thermal (1)
2.	Upset Condition (Service Level B)	Weight Thermal (1) Dynamic Fluid Loads (2) OBE Inertia OBE Seismic Anchor Movements or Wind (3)
3.	Emergency Condition (Service Level C)	Weight Thermal (1) Dynamic Fluid Loads (2) SSE Inertia SSE Seismic Anchor Movements or Tornado (3)
4.	Faulted Condition (Service Level D)	Weight Thermal (1) Dynamic Fluid Loads (2) SSE Inertia SSE Seismic Movements Pipe Rupture Loads

NOTES:

1. Thermal conditions (including ambient temperature) to be combined to provide maximum load combinations.
2. Dynamic Fluid Loads due to safety/relief valve thrust, steam hammer, and water hammer.
3. Wind and tornado loads are not combined with earthquake loading.

7.1.8 POSTULATED PIPE BREAKS

7.1.8.1 Classification

7.1.8.1.1 High Energy

High energy piping systems are those systems or portions of systems that are maintained pressurized at either temperatures in excess of 200°F or at pressures exceeding 275 psig during any of the following normal plant operating modes. For systems containing process fluids other than water, the atmospheric boiling temperature may be applied in place of the 200°F criterion.

- Reactor Startup
- Hot Standby
- Operation at any Power Level
- Reactor Cooldown to Cold Shutdown

Exceptions:

A. Non-liquid piping systems (air, gas, steam) with a maximum pressure less than or equal to 275 psig are not considered high energy regardless of the temperature.

B. Piping which operates at pressures and/or temperatures meeting high energy requirements is not considered high energy if the total time spent in operation at high energy conditions is less that either of the following:

   1. One percent of the normal operating lifespan of the plant, or

   2. Two percent of the time period required to accomplish its system design function.

C. Piping of one-inch nominal pipe size and less is not considered "high energy."

7.1.8.1.2 Moderate Energy

Moderate energy piping systems are those systems or portions of systems, that during any of the normal plant operating modes are maintained pressurized at a maximum temperature of 200°F or less and a maximum pressure of 275 psig or less including all piping excluded from high energy.

Exceptions:

A. Open-ended vents and drains are not considered moderate energy.

B. Piping of one-inch nominal pipe size and less is not considered moderate energy.

7.1.8.2 Postulated Rupture Locations

7.1.8.2.1 Break Locations in ASME Class 1 Piping Runs

Breaks, in accordance with **Section 7.1.8.2.5**, shall be postulated to occur at the following locations in ASME Class 1 piping:

A. The terminal ends of the pressurized portions of the run.

B. At intermediate locations selected by either one of the following methods:

1. At each location of potential high stress or fatigue, such as pipe fittings (elbow, tees, reducers, etc.), valves, flanges, and welded attachments; or

2. At all intermediate locations between terminal ends where the following stress or fatigue limits are exceeded:

   - The maximum stress range, S, between any two load sets (including the zero load set) calculated by Eq. (10) in **Subarticle NB-3653, ASME Code, Section III**, exceeds $2.4S_m$ and the stress ranges calculated by both Eq. (12) and Eq. (13) in **Subarticle NB-3653, ASME Code, Section III**, exceeds $2.4\ S_m$.

   - U exceeds 0.1.

   Where: S_m = allowable design stress-intensity value, as defined in **Subarticle NB-3600, ASME Code, Section III**.

   U = the cumulative usage factor as calculated in accordance with **Subarticle NB-3600, ASME Code, Section III**.

7.1.8.2.2 Break Locations in ASME Class 2 and 3 Piping Runs

Breaks, in accordance with **Section 7.1.8.2.5** shall be postulated to occur at the following locations in ASME Class 2 and 3 piping:

A. The terminal ends of the pressurized portions of the run.

B. At intermediate locations selected by either one of the following methods:

1. At each location of potential high stress or fatigue, such as pipe fittings (elbows, tees, reducers, etc.), valves, flanges, and welded attachments; or

2. Where the piping contains no fittings, welded attachments, or valves, at one location at each extreme of the piping run adjacent to the protective structure, or

3. At all locations where the stress, S, exceeds 0.8 x (X + Y).

Where, as defined in **ASME Code, Subarticle NC-3650,**

S = stresses under the combination of loadings associated with the normal and upset plant condition loadings and an OBE event, as calculated from the sum of Eq. (9) and (10).

X = equation (9) Service Level B allowable stress.

Y = equation (10) allowable stress.

7.1.8.2.3 Break Locations in Non-Safety Related Piping Runs

For non-safety class piping which is not seismically analyzed, leakage cracks are postulated at axial locations such that they produce the most severe environmental effects.

7.1.8.2.4 Break Locations In Piping Runs With Multiple ASME Code Piping Classes

Breaks, in accordance with **Section 7.1.8.2.5** shall be postulated to occur at the following locations:

A. The terminal ends of the pressurized portions of the run.

B. At intermediate locations selected by either one of the following methods:

1. At each location of potential high stress or fatigue, such as pipe fittings, valves, flanges, and welded attachments; or

2. At all intermediate locations between terminal ends where the stress and fatigue limits of **Sections 7.1.8.2.1.B.2, or 7.1.8.2.2.B.2,** are exceeded.

7.1.8.2.5 Break Locations

Both circumferential and longitudinal breaks are postulated to occur, but not simultaneously, in all high-energy piping systems at the locations specified in **Sections 7.1.8.2.1** through **7.1.8.2.4** except as follows:

A. Circumferential breaks are not postulated in piping runs of a nominal diameter equal to or less than 1 inch.

B. Longitudinal breaks are not postulated in piping runs of a nominal diameter less than 4 inches

C. Longitudinal breaks are not postulated at terminal ends.

D. Only one type of break is postulated at locations where, from a detailed stress analysis, such as finite-element analysis, the state of stress can be used to identify the most probable type. If the primary plus secondary stress in the axial direction is found to be at least 1.5 times that in the circumferential direction for the most severe loading combination association with Level A and Level B service limits, then only a circumferential break is postulated. Conversely, if the primary plus secondary stress in the circumferential direction is found to be at least 1.5 times that in the axial direction for the most severe loading combination associated with Level A and Level B service limits, then only a longitudinal break is postulated.

E. Circumferential and longitudinal breaks are not postulated at locations where the requirements of **Section 7.1.8.2.7** are satisfied.

F. Circumferential and longitudinal breaks are not postulated at locations where the criterion in **Section 7.1.8.2.6.2** is used.

7.1.8.2.6 Crack Locations

7.1.8.2.6.1 Through-Wall Cracks

Through-wall cracks are postulated in all high-energy and moderate-energy piping systems having a nominal diameter greater than 1 inch at the locations specified in **Sections 7.1.8.2.1** through **7.1.8.2.4**, except that through-wall cracks are not postulated at locations where:

A. For Class 1 piping, the calculated value of S, as defined in **Section 7.1.8.2.1**, is less than 1.2 S_m.

B. For Class 2 and Class 3 piping, the calculated values of S as defined in Section 7.1.8.2.2 is less than 0.4 x (X + Y).

C. The requirements of **Section 7.1.8.2.7** are satisfied.

D. The criterion in **Section 7.1.8.2.6.2** is used.

7.1.8.2.6.2 Leakage Cracks

A leakage crack is postulated in place of a circumferential break, or longitudinal break, or through-wall crack, if justified by an analysis performed on the pipeline in accordance with the requirements of **Section 7.1.9**.

For moderate-energy fluid systems in areas other than containment penetrations, leakage cracks are postulated at axial and circumferential locations that result in the most severe environmental consequences. Where a break in a high-energy fluid system is postulated which results in more limiting environmental conditions, the leakage crack in the moderate-energy fluid system is not postulated.

Leakage cracks, instead of breaks, are postulated in the piping of fluid systems that qualify as high-energy fluid systems for short operational periods of time but that qualify as moderate-energy fluid systems for the major operational period.

7.1.8.2.7 Piping Near Containment Isolation Valves

Ruptures are not postulated between the containment wall and the inboard or outboard isolation valves in piping, which is designed in accordance with the rules of the **ASME Code, Section III**, and which meets the following additional requirements:

A. The limits for postulating intermediate rupture locations, as specified in **Section 7.1.8.2.1** for Class 1 piping and **7.1.8.2.2** for Class 2 and 3 piping, are not exceeded in that portion of piping.

B. Following a postulated pipe break of high-energy piping beyond either isolation valve, the stresses in the piping from the containment wall, to and including the length of the isolation valve, are maintained within Level C Service Limits as specified in the **ASME Code, Section III**.

C. The design and inservice inspection requirements, as specified in the **USNRC Branch Technical Position, MEB 3-1 (CESSAR-DC, Section 3.6, Reference 4)**, are satisfied.

D. The containment isolation valves are appropriately qualified to assure that operability and leak tightness are maintained when subjected to any combination of loadings, which could be transmitted to the valves from postulated pipe breaks beyond the valves.

E. For moderate-energy piping, the stresses calculated by the sum of equations (9) and (10) in **ASME B&PV Code, Section III, NC-3653**, do not exceed 0.4 times the sum of the stress limits given in NC-3653.

7.1.8.3 Postulated Rupture Configurations

7.1.8.3.1 Break Configurations

Where break locations are postulated at fittings without the benefit of a detailed stress calculation, breaks should be assumed to occur at each pipe-to-fitting weld. If detailed stress analyses or tests are performed, the maximum stressed location in the fittings may be selected as the break location.

Circumferential and longitudinal breaks should be postulated in fluid system piping and branch runs as specified in **Section 7.1.8.2.5**.

7.1.8.3.2 Crack Configurations

Leakage cracks should be postulated at those axial locations specified in **Section 7.1.8.2.6**.

For high-energy piping, leakage cracks should be postulated in those locations that result in the most severe environmental consequences. The flow from the crack should be assumed to wet all unprotected components within the compartment with consequent flooding in the compartment and communicating compartments. Flooding effects should be determined on the basis of a conservatively estimated time period required to effect corrective actions.

7.1.8.4 Pipe Rupture Loads

This section applies to all high-energy piping other than that whose dynamic effects due to pipe breaks are eliminated from the design basis by leak-before-break (LBB) evaluation.

A. Circumferential Breaks

Circumferential breaks are assumed to result in pipe severance and separation amounting to at least a one-diameter lateral displacement of the ruptured piping sections, unless physically limited by piping restraints, structural members, or piping stiffness. The dynamic force of the jet discharge at the break location is based on the effective cross-sectional flow area of the pipe and on a calculated fluid pressure as modified by an analytically determined thrust coefficient. Limited pipe displacement at the break locations, line restriction flow limiters, positive pump controlled flow, and the absence of energy reservoirs are taken into account, as applicable, in the reduction of the jet discharge. Pipe whip is assumed to occur in the plane defined by the piping geometry and configuration, and to cause pipe movement in the direction of the jet reaction.

B. Dynamic Force of the Fluid Jet Discharge

The dynamic force [illegible] the fluid jet discharge is based on a circular break area equal to the cross-sectional flow area of the pipe at the break location and on a calculated fluid pressure modified by an analytically determined thrust coefficient, as determined for a circumferential break at the same location. Line restrictions, flow limiters, positive pump-controlled flow, and the absence of energy reservoirs are taken into account, as applicable, in the reduction of jet discharge.

Piping movement is assumed to occur in the direction of the jet reaction, unless limited by structural members, piping restraints, or piping stiffness.

C. Pipe Blowdown Force and Wave Force

The fluid thrust forces that result from either postulated circumferential or longitudinal breaks, are calculated using a simplified one-step forcing function methodology. This methodology is based on the simplified methods described in **ANSI/ANS 58.2, "Design Basis for Protection of Light Water Nuclear Power Plants Against the Effects of Postulated Pipe Rupture"**. See **CESSAR-DC, Section 3.6, References 5 and 6**.

When the simplified method discussed above leads to impractical protective measures, then a more detailed computer solution which more accurately reflects the postulated pipe rupture event is used. The computer solution is based on the NRC's computer program developed for calculating two-phase blowdown forces. See **CESSAR-DC, Section 3.6, Reference 7**.

D. Evaluation of Jet Impingement Effects

Jet impingement force calculations are performed only if structures or components are located near postulated high energy line breaks and it cannot be demonstrated that failure of the structure or component will not adversely affect safe shutdown capability.

E. Longitudinal Breaks

A longitudinal break results in an axial split without severance. The split should be assumed to be orientated at any point of highest stress as justified by detailed stress analysis. For the purpose of design, the longitudinal break should be assumed to be circular or elliptical (2D x 1/2D) in shape, with an area equal to the largest piping cross-sectional flow area at the point of the break and have a discharge coefficient of 1.0. Any other values used for the area, diameter and discharge coefficient associated with a longitudinal break should be verified by test data which defines the limiting break geometry.

7.1.8.5 Pipe Rupture Analysis

7.1.8.5.1 Dynamic Analysis of Pipe Whip

Pipe whip restraints usually provide clearance for thermal expansion during normal operation. If a break occurs, the restraints or anchors nearest the break are designed to prevent unlimited movement at the point of break (pipe whip).

The dynamic nature of the thrust load is considered. In the absence of analytical justification, a dynamic load factor of 2.0 is applied in determining restraint loading. (Elastic-plastic) pipe and whip restraint material properties may be considered, as applicable. The effect of rapid strain rate of material properties is considered. A 10 percent increase in yield strength is used to account for strain rate effects.

In general, the loadings that result from a break in piping are determined using either a dynamic blowdown or a conservative static blowdown analysis. The method for analyzing the interaction effects of a whipping pipe with a restraint is one of the following: (1) Equivalent Static Method, (2) Lumped Parameter Method, or (3) the Energy Balance Method.

In cases where the time history or energy balance method is not used, a conservative static analysis model should be used.

The lumped parameter method is carried out by utilizing a lumped mass model. Lumped mass points are interconnected by springs to take into account inertia and stiffness properties of the system. A dynamic forcing function or equivalent static loads may be applied at each postulated break location with unacceptable pipe whip interactions. A nonlinear elastic-plastic analysis of the piping-restraint system is used.

The energy balance method is based on the principle of conservation of energy. The kinetic energy of the pipe generated during the first quarter cycle of movement is assumed to be converted into equivalent strain-energy, which is distributed to the pipe or the whip restraint.

7.1.8.5.2 Dynamic Analysis of Unrestricted Pipes

The impact velocity and kinetic energy of unrestricted pipes is calculated on the basis of the assumption that the segments at each side of the break act as rigid-plastic cantilever beams subject to piecewise constant blowdown forces. The hinge location is fixed either at the nearest restraint or at a point determined by the requirement that the shear at an interior plastic hinge is zero. The kinetic energy of an accelerating cantilever segment is equal to the difference between the work done by the blowdown force and that done on the plastic hinge. The impact velocity V_I is found from the expression for the kinetic energy:

$$KE=\frac{1}{2}M_{eq}V_I^2 \qquad \text{(Eqn. 7.1-9)}$$

Where M_{eq} is the mass of the single degree of freedom dynamic model of the cantilever. The impacting mass is assumed equal to M_{eq}.

7.1.9 LEAK-BEFORE-BREAK

7.1.9.1 Design of Piping Evaluated For Leak-Before-Break

The approach being taken toward design certification of System 80+ is to include leak-before-break (LBB) considerations in the piping design. One aspect of the LBB evaluation pursued for each selected piping system is performance of a preliminary LBB evaluation prior to and independent of pipe routing. This evaluation is used to provide the piping designer with LBB acceptance criteria, in terms of a range of materials, pipe sizes, and NOP and maximum design loads for all locations in the pipe. If the acceptance criteria is met, an acceptable result of the LBB evaluation of the final design is assured. The range of piping parameters developed by this preliminary evaluation forms a "window" of acceptance criteria which the piping designer can utilize to route, design and support the piping system.

For the System 80+ design, the following five piping systems inside containment will be designed to the requirements of **Section 7.1.9.2** to assure leak-before-break:

- Main Coolant Loop (42-inch ID hot leg and 30-inch ID cold leg)
- Surge Line (12-inch diameter)

- Shutdown Cooling Line (16-inch diameter portion)
- Direct Vessel Injection (10-inch diameter portion)
- Main Steam Line (28-inch ID portion)

7.1.9.2 Piping Design Requirements

The piping design requirements for assuring that LBB is met are given in **Table 7.1.9-1** below:

TABLE 7.1.9-1

System 80+ Piping Design Requirements For LBB

Piping System	NOP Plus Max Design Load	Pipe Material	Weld Material
Main Coolant Loop (Hot Leg)	<		>
Main Coolant Loop (Cold Leg)	<		>
Surge Line (12")	<	(LATER)	>
Shutdown Cooling Line (16")	<		>
Direct Vessel Injection (10")	<		>
Main Steam Line (28" ID)	<		>

The requirements of **Table 7.1.9-1** are established by LBB evaluations using the methodology described in **Appendix 7A**. In addition to the requirements of **Table 7.1.9-1**, the five piping systems listed above must meet the LBB applicability criteria outlined in **Appendix 7A, Section 1.2.1**. NOP and maximum design loads are defined in **Appendix 7A, Section 1.1.4**. **Appendix 7A** also discusses design philosophy and offers design guidelines for piping systems evaluated for LBB.

7.1.9.3 Piping Design Procedure

The designer shall route, design and analyze the piping evaluated for LBB in accordance with the **ASME Boiler and Pressure Vessel Code**, considering the LBB requirements given above and utilizing guidelines herein. As-calculated piping loads should be compared to the "window" of acceptance criteria in **Table 7.1.9-1** established by the LBB evaluations. If the acceptance criteria are met, demonstration of LBB is assured. If the acceptance criteria are not met, the as-calculated loads based on the actual routing should be evaluated for LBB using the finite element analysis methodology described in **Appendix 7A, Section 1.3.4**. If this LBB evaluation does not assure that LBB is met, an iterative process of generating revised LBB acceptance criteria for a re-sized pipe and redesigning the piping system should be pursued.

7.1.10 SMALL-BORE PIPING

To simplify the procedure for the design of small-bore piping, two-inch nominal pipe size (NPS) and smaller, the procedure provided in **NCIG-14, "Procedure for Seismic Evaluation and Design of Small Bore Piping"** may be used in lieu of the more rigorous analysis as detailed in **Section 7.1.4**.

7.1.11 TUBING

7.1.11.1 General

Process and instrumentation tubing is shown to be acceptable based on meeting the applicable support criteria within this section. These criteria only applies to safety-related tubing; they serve as guidelines for non-safety related tubing which is not analyzed and can be field routed (see **Section 6.2.11.2.5**).

Tubing is supported in two ways, as free tube spans and tube track supports. The criteria for each support mechanism are described in the following sections.

7.1.11.2 Free Tube Spans

The following requirements apply to tubing that is supported as free tube spans (not in tube tracks):

A. The minimum spacing between tube supports (L) should be two (2) feet unless the supports are used to support an in-line component in which case a tube support should be located adjacent to the component (on each side).

B. The maximum spacing between supports should be as indicated in **Table 7.1.11-1**.

C. If heat tracing or insulation is required, span lengths, support designs, and tube details could require amendment.

D. All reservoirs, valves, and other in-line components should be independently supported.

E. Tube support locations should be located accordingly if there is a change in direction or fitting in the span (see **Table 7.1.11-1**).

F. When tees are used in tube routing, tube supports should be arranged as shown below.

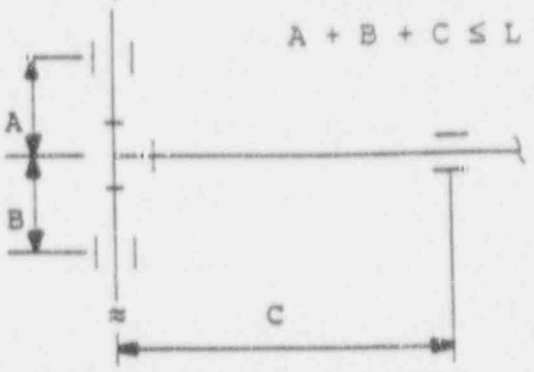

A + B + C ≤ L (L from **Table 7.1.11-1**)

G. In addition to the requirements listed above, supports for 1" tubing should be arranged as shown below:

L from **Table 7.1.11-1**

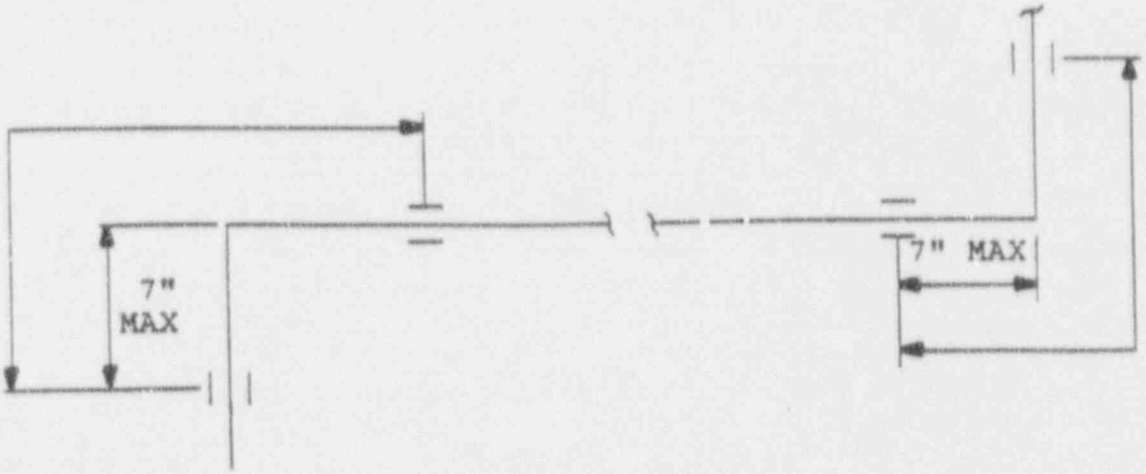

TABLE 7.1.11-1

Maximum Free Tube Span Lengths (L)

Tube Size	Straight Span	Change in Direction	Straight Tube With Fitting	Change in Direction and Fitting
1/4"	6′ - 0"	4′ - 6"	5′ - 6"	4′ - 0"
3/8"	8′ - 0"	6′ - 0"	7′ - 6"	5′ - 6"
1/2"	8′ - 0"	6′ - 0"	7′ - 6"	5′ - 6"
5/8"	8′ - 0"	6′ - 0"	7′ - 6"	5′ - 6"
3/4"	8′ - 0"	6′ - 0"	7′ - 6"	5′ - 6"
1"	8′ - 0"	6′ - 0"	7′ - 6"	5′ - 6"

Table 7.1.11-1 Notes:

1. The maximum allowable internal design pressure is 2950 psig.
2. Tube span lengths should be amended accordingly if insulation is required.
3. The tube span before and after the span containing the change in direction should be limited to the same length as the span including the change in direction.
4. The allowable spans for copper tubing should be one-half of the values tabulated.

7.1.11.3 Track Supported Tubes

The following requirements apply to tubing routed in tube tracks. Sample lines should not be installed in tube tracks unless the process fluid temperature is less than 150°F.

Tube track should not be modified by cutting or bending. Tube track should be connected using standard components.

7.1.11.3.1 Uninsulated Applications

The following criteria apply to uninsulated tubing routed in tracks:

A. The maximum number of tubes per track should be four (4) for 1/4", 3/8", and 1/2" tubing. Tubes larger than 1/2" should be supported per **Section 7.1.11.2**.

B. The tubing should be attached to the tube track at a minimum of 2'-0" and a maximum of 3'-0" spacing.

C. The maximum span between track supports should be 8'-0" for a straight span and 6'-0" if a change in direction occurs in the span. The maximum span length for spans adjacent to spans containing a change in direction is 6'-0".

D. Tube track should not extend/overhang past the last track support by more than 1'-0".

E. Reservoirs, valves, or other in-line components should be independently supported.

F. When tees are used in the routing of tube track, track supports should be arranged as shown below:

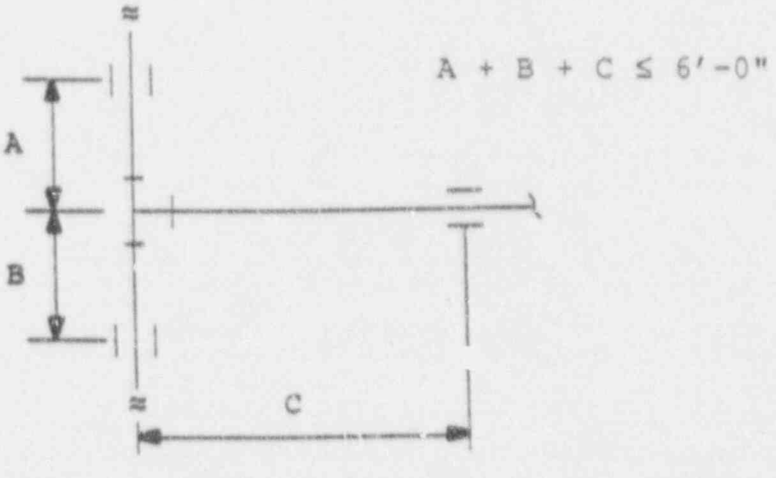

7.1.11.3.2 Insulated and Heat Traced Applications

The following criteria apply for insulated and heat-traced tubing. Other constraints could also apply based on the specific application.

A. The maximum number of tubes per track should be two (2) for 1/4", 3/8", and 1/2" tubing.

B. Insulation and heat tracing of 5/8", 3/4", or 1" tubing may require additional analysis.

C. No more than two (2) heat trace cables should be allowed per track.

D. Insulation should be fiberglass, no thicker than 1-1/2". The insulation should surround the tube track and have an inside diameter of 3" for L2x2 angle and C2x1 channel track, and 3-1/2" inside diameter for C4x1 channel track.

E. Tubing should be attached to the tube track at a minimum of 2'-0" and a maximum of 3'-0" spacing.

F. Reservoirs, valves, or other in-line components should be independently supported.

7.1.11.4 Support and Mounting Requirements

Tubing that is routed in two or more Seismic Category I structures (i.e., Reactor Building, Containment, Main Steam Valve House, Nuclear Annex, Diesel Generator Building) should be verified to have sufficient flexibility to allow for differential building displacements.

Non-safety related manifold valves, solenoid valves, and instruments located over or near safety-related equipment or components should be supported using the criteria in this section, unless justified by analysis. This will prevent any damage, degradation, or interference with the performance of equipment required for safety functions.

7.2 HVAC DUCTWORK AND SUPPORT/RESTRAINTS

7.2.1 GENERAL

HVAC ductwork shall be designed and supported to withstand dead weight (DW) and seismic loading, as applicable. The design and analysis guidelines herein apply to the HVAC supports/restraints (S/Rs) to maintain S/R stresses within allowables and limit ductwork deflections to maximum deflection (Δ_{MAX}) criteria. Limiting ductwork displacements to Δ_{MAX} allowables precludes rigorous analysis of the sheet metal ductwork to ensure its integrity.

HVAC ductwork S/R systems shall be designed in accordance with American Institute of Steel Construction (AISC) standards (**ANSI/AISC N690** for safety-related systems, **Manual of Steel Construction** for non-safety related systems). Essential safety-related ductwork constructed of pipe should be designed to ASME Class 2 standards, or equivalent.

7.2.2 DESIGN CONSIDERATIONS

7.2.2.1 Gravity

Dead weight (DW) loads include the weight of the ductwork itself, in-line components (e.g., dampers), externally mounted components, insulation, plus the weight of the S/R or stiffeners. Other DW loads such as ice and snow are included where applicable. DW loads are considered for both seismic and non-seismic S/Rs.

7.2.2.2 Seismic

7.2.2.2.1 Safety-Related Ductwork

Seismic S/Rs shall be used for all HVAC ductwork required to perform a safety function. Seismic load determination is discussed in **Section 7.2.4**.

The OBE and SSE should be considered separately with the OBE loads used for the Level B load combination and the SSE loads used for Levels C and D. Both horizontal and the vertical components of the seismic excitation should be applied simultaneously in the direction that will produce worst-case stresses and deflections.

7.2.2.2.2 Overlap Regions

In areas where non-safety related ductwork passes over or near safety-related equipment or components, the support/restraint and duct system should be designed so that it can maintain its structural integrity. This will prevent any damage, degradation, or interference with the performance of equipment required for safety functions.

In lieu of designing the entire ductwork system to withstand a seismic event, those portions of the duct passing over safety-related equipment or components may be isolated from the remaining duct by flexible duct connections and/or walls and supported seismically.

7.2.2.3 Thermal Expansion

Thermal expansion loads are negligible and are not considered.

7.2.2.4 Internal Pressure

Internal pressure loads are negligible and are not considered for the duct S/R system.

7.2.2.5 External Pressure Differential

Dynamic external pressure differential (EPD) loads resulting from postulated pipe breaks should be considered for safety-related ductwork or ductwork whose failure could damage, degrade, or interfere with the performance of safety-related equipment. This condition will normally be precluded by ductwork routing away from the affected area.

7.2.3 DESIGN LOAD COMBINATIONS

The loading to be considered for the S/R system for the various Service Levels are as follows:

Service Level	Load Combination
A (Normal)	DW
B (Upset)	DW + OBE
C (Emergency)	DW + SSE
D (Faulted)	DW + SSE + EPD

7.2.4 ANALYSIS AND ACCEPTANCE CRITERIA

7.2.4.1 General

The general analytic/design procedure which should be used to design HVAC S/R systems is as follows:

A. Determine S/R locations and types using the guidelines given in **Section 6.3.5**.

B. Determine the response of the S/R system. Two methods of response determination may be employed.

   1. Static Coefficient Method

   2. Dynamic Analysis Method

Descriptions and usage guidelines for these two methods are given in **Sections** 7.2.4.3 **and** 7.2.4.4.

C. Calculate S/R loads.

D. Design supports/restraints.

Note: When determining the flexural design properties of rectangular duct, a reduced effective width should be utilized where applicable. **Section Q1.9.2.2 and Appendix QC of ANSI/AISC N690** provide guidelines for computing effective width for safety-related ductwork, and **Section 1.9.2.2 and Appendix C of the Manual of Steel Construction** provide similar guidelines for non-safety related ductwork.

7.2.4.2 Damping Values

A damping value of 5% may be used for both OBE and SSE for HVAC ductwork systems.

7.2.4.3 Static Coefficient Method

The static coefficient method is a simple conservative analysis method. No determination of natural frequency of the system is made. Instead, the system response is assumed to be the peak of the required response spectra. This response is then multiplied by a static coefficient of 1.5. This coefficient takes into account the effects of both multifrequency excitation and multimode response. Having determined the peak response accelerations for a given system, the S/R loadings may be obtained by multiplying this acceleration by a factor of 1.5 and the participating mass.

This method of response determination results in very conservative S/R loads for the Upset, Faulted, and Emergency conditions. These loads should be safely sustained by the S/R and the structure to which the S/R is attached.

7.2.4.3.1 Static Coefficient Method Calculation

The S/R loadings are calculated by the Static Coefficient Method as follows:

A. Determine Participating Load

To establish the participating load (PL), all ductwork, and the S/R system should be modeled as a series of simple beams between S/Rs providing similar directions of restraint. The PL should include the weights of all ductwork and S/Rs included in the segment of ductwork being considered. Weight of other S/Rs, however, may be neglected.

B. Determine Normal Load

The normal load (NL) is the same as the PL when considering the vertical direction only. When determining loading in any other direction, the NL is equal to zero.

C. Determine Upset Load

The upset load (UL) is determined by:

$$UL = NL \pm (PL \times S_{OBE}) \qquad \textbf{(Eqn. 7.2-1)}$$

Where: S_{OBE} = OBE Seismic Coefficient

OBE = Operating Basis Earthquake loading, represented by:

$$OBE = PL \times S_{OBE} \qquad \textbf{(Eqn. 7.2-2)}$$

D. Emergency Load

The emergency load (EL) may be determined by:

$$EL = NL \pm (PL \times S_{SSE}) \qquad \textbf{(Eqn. 7.2-3)}$$

Where: S_{SSE} = SSE Seismic Coefficient

SSE = Safe Shutdown Earthquake loading, represented by:

$$SSE = PL \times S_{SSE} \qquad \textbf{(Eqn. 7.2-4)}$$

E. Faulted Load

The faulted load (FL) may be determined by:

$$FL = NL \pm (PL \times S_{SSE}) \qquad \textbf{(Eqn. 7.2-5)}$$

The values for S are the peak responses for the different areas and elevations from the "Acceleration Response Spectra Curves", multiplied by 1.5 as indicated in **Section 7.2.4.3.**

The maximum deflection (Δ_{max}), that can be sustained so that the duct function is not impaired should be determined by analysis.

7.2.4.4 Dynamic Analysis Method

For the dynamic analysis method the ductwork and S/R system is modelled to best represent its mass distribution and stiffness characteristics. This model is then analyzed to determine if it is rigid or flexible. All systems having natural frequencies greater than cutoff frequency for the ZPA are considered rigid, where the ZPA (zero period acceleration) is the acceleration level of the high frequency, non-amplified portion of the response spectrum. For rigid systems, S/R loadings for the various operating conditions may be determined by multiplying the maximum floor acceleration (the ZPA of the floor response spectrum), and the participating masses. This is an equivalent static analysis.

Flexible systems (i.e., systems having natural frequencies less than the cutoff frequency for the ZPA), may be analyzed using response spectrum model analysis techniques or time history analysis techniques. However, in lieu of implementing these analysis techniques, it is desirable to use the simpler equivalent static analysis technique. Therefore, systems having natural frequencies less than the cutoff frequency for the ZPA may be redesigned such that they are rigid and the equivalent static analysis is justified. This redesign implies an increase in system stiffness, a decrease in system mass, or a combination of both.

7.2.4.4.1 Dynamic Analysis Method Calculation

In the dynamic analysis method the stiffness of the ductwork and the stiffness of the S/Rs in specified directions should be considered when evaluating a "system" stiffness. If this system stiffness is such that a natural frequency is greater than the cutoff frequency for the ZPA, the duct-S/R system may be considered rigid and the maximum floor response acceleration may be used in calculating the seismic S/R loadings. This is the basic objective of the dynamic analysis method.

A. Calculate Participating Load

When calculating the duct-S/R system natural frequency, an appropriate participating mass (or participating load, PL) should be considered. The mass should consist of the following:

1. Mass of the S/R being analyzed.
2. Mass of applicable length(s) of ductwork assuming the duct run is a series of simply supported beams between S/Rs providing the same direction of restraint.

3. Mass(es) of other S/Rs within the applicable duct span.

4. Mass(es) of equipment.

B. The dynamic analysis method is applied to the two generalized categories of S/Rs as follows:

1. Lateral and vertical S/Rs in various combinations.

2. Axial S/Rs.

C. Lateral and Vertical S/Rs

These two functional types of S/Rs may be considered in a single category for determining a ductwork flexural rigidity for both types of S/Rs.

1. Plan View

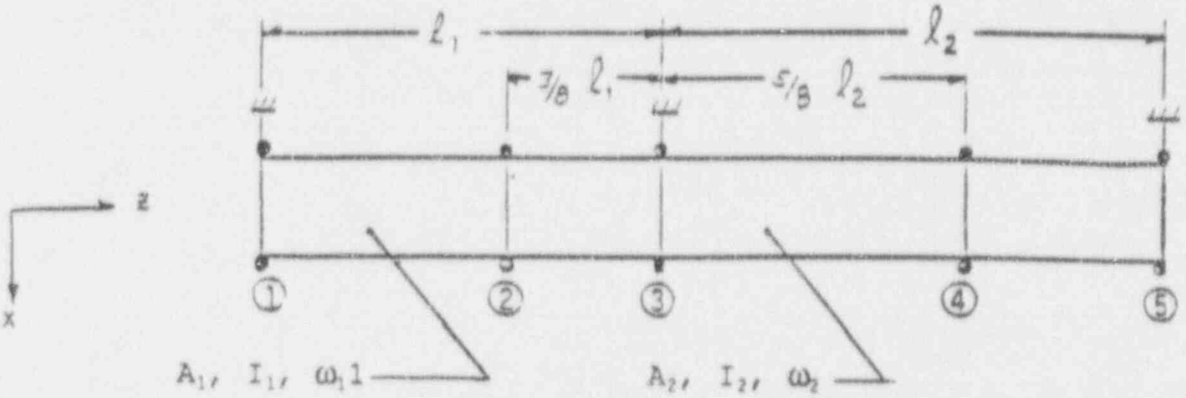

S/Rs 1, 3, and 5 are lateral-vertical S/Rs (x-y)
S/Rs 2 and 4 are vertical S/Rs (y)

2. Load Model

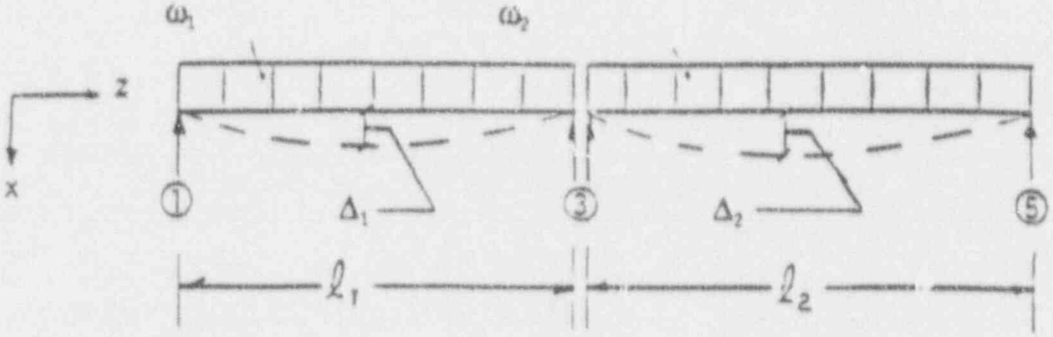

3. Calculate Duct Stiffnesses (Assumes S/Rs as infinitely rigid)

For the simple beam models and loadings shown, the maximum 1 g lateral ('x') deflections are:

$$\Delta_{1_{MAX}} = \frac{5}{384} \times \frac{\omega_1 l_1^4}{I_{1Y} E} \qquad \text{(Eqn. 7.2-6)}$$

$$\Delta_{2_{MAX}} = \frac{5}{384} \times \frac{\omega_2 l_2^4}{I_{2Y} E} \qquad \text{(Eqn. 7.2-7)}$$

Where: Δ_{MAX} = Maximum duct deflection (in)
ω = Duct loading per unit length (lbs/in)
l = Duct length (in)
I = Duct section modulus (in^4)
E = Duct modulus of elasticity (psi)

Note: For loading distributions other than that shown, appropriate expressions for Δ_{MAX} should be developed.

$$K_{1_{DUCT}} = \frac{\omega_1 l_1}{\Delta_{1_{MAX}}} \,(lbs/inch) \qquad \text{(Eqn. 7.2-8)}$$

$$K_{2_{DUCT}} = \frac{\omega_2 l_2}{\Delta_{2_{MAX}}} \,(lbs/inch) \qquad \text{(Eqn. 7.2-9)}$$

Where: K_{Duct} = Duct stiffness (lbs/in)

4. Calculate the participating mass (participating load, PL) in the applicable direction acting on the S/R being analyzed.

$$PL_{S/R_3} = P_{S/R_3} + \frac{\omega_1 l_1}{2} + \frac{\omega_2 l_2}{2} + P_{S/R_2}\,^{*} \qquad \text{(Eqn. 7.2-10)}$$

Where: $P_{S/R}$ = S/R weight (lbs)

* Note that only S/R_2 is considered as it falls within the half-span ($l_1/2$) being considered for S/R_3. In

general, only those S/Rs falling in the half-spans nearest the S/R being analyzed need to be considered in the participating mass (PL) calculation. The effects of these S/Rs may be shown to be negligible and not considered in the analysis.

5. Calculate $\Delta_{MAX\ S/R}$ in the applicable direction due to a 1 g loading. This calculation may be performed by simplified hand calculation methods or by computer. Note that for this example the applicable direction is in the 'x' direction.

6. Calculate the stiffness of the S/R in the direction considered.

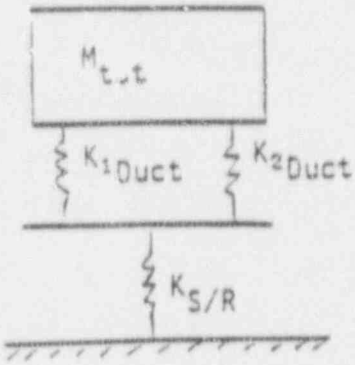

$$K_{S/R} = \frac{PL_{S/R}}{\Delta_{MAX_{S/R}}}\ (lbs/inch) \qquad \textbf{(Eqn. 7.2-11)}$$

$$K_{S/R_1} = \frac{PL_{S/R_1}}{\Delta_{MAX_{S/R_1}}}\ (For\ 'x'\ direction)$$

7. Develop the spring-mass model and calculate the equivalent 'system' stiffness.

   For the lateral and vertical directions the spring-mass model used is as follows:

$$M_{tot} = \frac{PL_{S/R}}{g} \qquad \textbf{(Eqn. 7.2-12)}$$

Where: $PL_{S/R}$ from Step 4 (lbs)
M_{tot} = Total mass (lbm)
g = 386.4 in/sec^2

The equivalent stiffness is given by:

$$\frac{1}{K_{EQ}} = \frac{1}{K_{1_{Duct}} + K_{2_{Duct}}} + \frac{1}{K_{S/R}} \qquad \textbf{(Eqn. 7.2-13)}$$

-OR-

$$K_{EQ} = \frac{(K_{1_{Duct}} + K_{2_{Duct}})\, K_{S/R}}{K_{1_{Duct}} + K_{2_{Duct}} + K_{S/R}} \,(lbs/inch) \qquad \textbf{(Eqn. 7.2-14)}$$

Note: As an alternate, a single span system model may be used. Effective mass and spring rates of the S/Rs should be used. The system frequency of the actual spans on either side of the S/R should be determined separately with the lower of the two controlling. Typically, the longer span of duct and/or the duct with the lowest section properties control. Each S/R is required to support a weight of duct equivalent to the weight of the chosen span of duct.

The alternate single span spring-mass model would be as follows:

$$M_{tot} = \frac{P_{S/R_1} + \omega l + P_{S/R_2}}{g} \qquad \textbf{(Eqn. 7.2-15)}$$

Where: g = 386.4 in/sec^2

The equivalent stiffness is given by:

$$\frac{1}{K_{EQ}}=\frac{1}{K_{S/R_1}+K_{S/R_2}}+\frac{1}{K_{Duct}}$$

-OR-

$$K_{EQ}=\frac{K_{Duct}\,(K_{S/R_1}+K_{S/R_2})}{K_{Duct}+K_{S/R_1}+K_{S/R_2}}\ (lbs/inch)$$

Where:

$$K_{Duct}=\frac{\omega l}{\Delta_{MAX}} \qquad \text{(Eqn. 7.2-16)}$$

$$K_{S/R}=\frac{P_{S/R}+\omega l}{\Delta_{MAX_{S/R}}} \qquad \text{(Eqn. 7.2-17)}$$

$$\Delta_{MAX}=\frac{5}{384}\times\frac{\omega l^4}{I_{Duct}E} \qquad \text{(Eqn. 7.2-18)}$$

Both of these spring-mass models will produce frequencies lower than a complete system model.

8. Calculate the natural frequency of the system.

$$fn_{sys}=\frac{1}{2\pi}\sqrt{\frac{K_{EQ}}{M_{tot}}} \qquad \text{(Eqn. 7.2-19)}$$

$$fn_{sys}=\frac{1}{2\pi}\sqrt{\frac{K_{EQ}g}{PL_{S/R}}} \qquad \text{(Eqn. 7.2-20)}$$

Where: fn_{sys} = System natural frequency (Hz)

9. If fn_{sys} is greater than the ZPA, the system is rigid and the appropriate seismic acceleration coefficient should be chosen from the "Acceleration Response Spectra Curves". Upset and Faulted condition loadings are then calculated as outlined in **Section 7.2.4.3**.

The values for S in this case are the ZPA acceleration coefficients for the areas and elevations from the "Acceleration Response Spectra Curves".

D. Axial S/Rs

This functional type of S/R is considered in a separate category since an AE/L stiffness is being evaluated for the ductwork.

1. Plan View

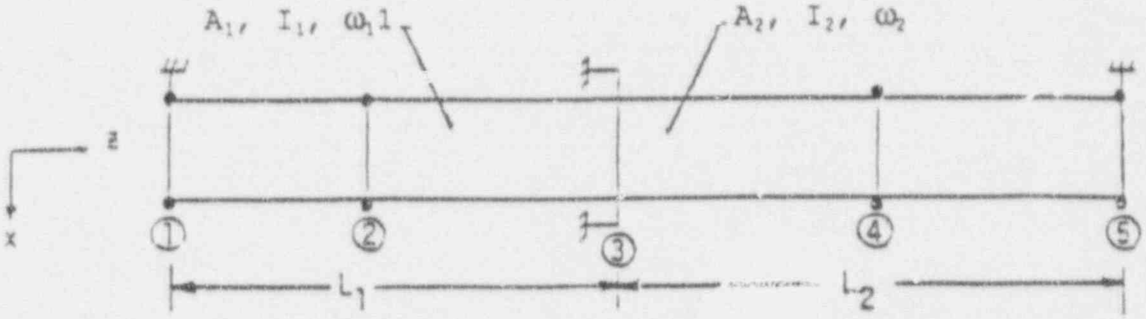

S/Rs 1 and 5 are vertical-lateral S/Rs (x-y)
S/Rs 2 and 4 are vertical S/Rs (y)
S/R 3 is an axial S/R (z)

2. Determine applicable lengths of ductwork and calculate ductwork stiffness. Axial direction stiffness is given by:

$$K_{Duct}=\frac{AE}{L} \qquad \text{(Eqn. 7.2-21)}$$

Where: A = Cross-sectional area (in^2)
E = Duct section modulus (psi)
L = Applicable length (in)

Note: If the duct area varies in length L, the average area (A_{AV}) can be used, as shown below:

$$A_{AV}=\frac{\Sigma A_i L_i}{\Sigma L_i} \qquad \text{(Eqn. 7.2-22)}$$

$$K_{1_{Duct}} = \frac{A_{1_{av}} E}{L_1} \; (lbs/inch)$$

$$K_{2_{Duct}} = \frac{A_{2_{av}} E}{L_2} \; (lbs/inch)$$

3. Calculate participating mass (PL) in the applicable direction acting on the S/R being analyzed.

$$PL_{S/R_3} = P_{S/R_3} + (\omega_1 L_1 + \omega_2 L_2) + (P_{S/R_1} + P_{S/R_2} + P_{S/R_4} + P_{S/R_5}) \; ^{*}$$

(Eqn. 7.2-23)

* Note that all S/Rs in the applicable duct lengths are considered in this example. The effects of these S/Rs may be shown to be negligible and not considered in the analysis.

4. Calculate $\Delta_{MAX\ S/R}$ in the applicable direction due to the 1 g loading. This calculation may be performed by simplified hand calculation methods or by computer. Note that for this example the applicable direction is in the 'z' direction.

5. Calculate stiffness of the S/R in the direction considered (z).

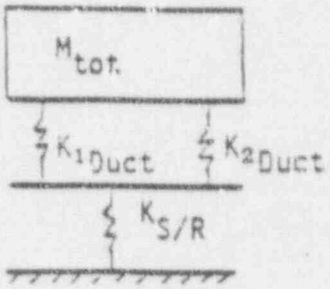

$$K_{S/R_3} = \frac{PL_{S/R_3}}{\Delta_{MAX_{S/R_3}}}$$

6. Develop the spring-mass model and calculate the equivalent 'system' stiffness.

   For the axial direction, the spring-mass model is as follows:

$$M_{tot}=\frac{PL_{S/R}}{g}$$

Where: $PL_{S/R}$ from Step 3 (lbs)
g = 386.4 in/sec^2

The equivalent stiffness is given by:

$$\frac{1}{K_{EQ}}=\frac{1}{K_{1_{Duct}}+K_{2_{Duct}}}+\frac{1}{K_{S/R}}$$

-OR-

$$K_{EQ}=\frac{(K_{1_{Duct}}+K_{2_{Duct}})\,K_{S/R}}{K_{1_{Duct}}+K_{2_{Duct}}+K_{S/R}}\,(lbs/inch)$$

7. Calculate the natural frequency of the system.

$$fn_{sys}=\frac{1}{2\pi}\sqrt{\frac{K_{EQ}}{M_{tot}}}$$

$$fn_{sys}=\frac{1}{2\pi}\sqrt{\frac{K_{EQ}g}{PL_{S/R}}}$$

8. If fn_{sys} is greater than the ZPA, the system is rigid and the appropriate seismic acceleration coefficient should be chosen from the "Acceleration Response Spectra Curves". Upset and Faulted condition loadings are then calculated as outlined in **Section 7.2.4.3**. The values for S in this case are the ZPA acceleration coefficients for the different areas and elevations from the "Acceleration Response Spectra Curves".

7.2.5 ALLOWABLE STRESS CRITERIA

All HVAC S/R systems should be able to safely sustain stresses induced by the various loading conditions. The criteria determining the allowable stresses are established using conservative values in compliance with the requirements of **CESSAR-DC** and **ANSI/AISC N690**. These values are provided as a basis for evaluating the required structural integrity of the support/restraints.

Stress levels for the various operating conditions shall be as follows:

Normal- Service Level A	Upset- Service Level B	Emergency- Service Level C	Faulted- Service Level D
Basic Stress Allowables	Basic Stress Allowables	1.6 x Basic Stress Allowables	1.7 x Basic Stress Allowables

In addition to satisfying the above stress limits, the S/R system should be designed to safely transfer all loadings to the structure. Concrete expansion anchors shall meet the requirements of **ACI-349, "Code Requirements for Nuclear Safety Related Concrete Structures"**.

7.2.6 ALLOWABLE DEFLECTION CRITERIA

No S/R deflection limitations other than those implied by the stress criteria given in **Section 7.2.5** and any S/R system stiffness requirements are imposed.

7.3 CABLE TRAY/CONDUIT AND SUPPORT/RESTRAINTS

7.3.1 GENERAL

Cable tray and conduit should be analyzed in a similar manner as HVAC ductwork, designed and supported to withstand dead weight (DW), and seismic loading, as applicable. The design and analysis guidelines apply to the cable tray and conduit supports/restraints (S/Rs) to maintain S/R stresses within allowables.

Cable tray and conduit S/R systems shall be designed in accordance with American Institute of Steel Construction (AISC) standards (**ANSI/AISC N690** for safety-related systems, **Manual of Steel Construction** for non-safety related systems)

7.3.2 DESIGN CONSIDERATIONS

7.3.2.1 Gravity

Dead weight (DW) loads include the weight of the cable tray or conduit itself, fittings, externally mounted components, cable tray covers, fireproofing, plus the weight of the S/R or stiffeners. DW loads are considered for both seismic and non-seismic S/Rs.

7.3.2.2 Seismic

7.3.2.2.1 Safety-Related Cable Tray and Conduit

Seismic S/Rs shall be used for all cable trays and conduit required to perform a safety function. Seismic S/Rs are discussed in **Section 7.3.4**.

The OBE and SSE should be considered separately with the OBE loads used for the Level B load combination and the SSE loads used for Levels C and D. Both horizontal and the vertical components of the seismic excitation should be applied simultaneously in the direction that will produce the worst-case stresses.

7.3.2.2.2 Overlap Regions

In areas where non-safety related cable tray/conduit passes over or near safety-related equipment or components, the support/restraint and cable tray/conduit system should be designed so that it can maintain its structural integrity. This will prevent any damage, degradation, or interference with the performance of equipment required for safety functions.

In lieu of designing the entire cable tray/conduit system to withstand a seismic event, those portions of the cable tray/conduit passing over safety-related equipment or components may be isolated from the remainder of the system and supported seismically.

7.3.2.3 Thermal Expansion

Thermal expansion loads (T) are negligible and should not be considered.

7.3.3 DESIGN LOAD COMBINATIONS

The design loading to be considered for the S/R system for the various Service Levels are as follows:

Service Level	Load Combination
A (Normal)	DW
B (Upset)	DW + OBE
C (Emergency)	DW + SSE
D (Faulted)	DW + SSE

7.3.4 ANALYSIS AND ACCEPTANCE CRITERIA

7.3.4.1 General

The general analytic/design procedure which should be used to design cable tray and conduit S/R systems is as follows:

A. Determine S/R locations and types using the guidelines given in **Section 6.3.5**.

B. Determine the response of the S/R system. Two methods of response determination may be employed.

   1. Static Coefficient Method

   2. Dynamic Analysis Method

   Both the static coefficient method and the dynamic analysis method of response determination can yield an equivalent static approach to the seismic analysis of the S/R system. Descriptions and usage guidelines for these two methods are given in **Sections 7.3.4.3 and 7.3.4.4**.

C. Calculate S/R loads.

D. Design supports/restraints.

7.3.4.2 Damping Values

Damping values should be similar to HVAC ductwork systems. A damping value of 5% may be used for both the OBE and SSE load cases.

7.3.4.3 Static Coefficient Method

The static coefficient method is a simple conservative analysis method. No determination of natural frequency of the system is made. Instead, the system response is assumed to be the peak of the required response spectra. This response is then multiplied by a static coefficient of 1.5. This coefficient takes into account the effects of both multifrequency excitation and multimode response. Having determined the peak response accelerations for a given system, the S/R loadings may be obtained by multiplying this acceleration by a factor of 1.5 and the participating mass.

This method of response determination results in very conservative S/R loads for the Upset, Faulted, and Emergency conditions. These loads should be safely sustained by the S/R and the structure to which the S/R is attached.

7.3.4.3.1 Static Coefficient Method Calculation

LATER

7.3.4.4 Dynamic Analysis Method

For the dynamic analysis method the cable tray/conduit and S/R system is modeled to best represent its mass distribution and stiffness characteristics. This model is then analyzed to determine the system response.

7.3.4.4.1 Dynamic Analysis Method Calculation

LATER

7.3.5 ALLOWABLE STRESS CRITERIA

All cable tray/conduit S/R systems should be able to safely sustain stresses induced by the various loading conditions. The criteria determining the allowable stresses are established using conservative values in compliance with the requirements of **CESSAR-DC** and **ANSI/AISC N690**. These values are provided as a basis for evaluating the required structural integrity of the support/restraints.

Stress levels for the various operating conditions shall be as follows:

Normal- Service Level A	Upset- Service Level B	Emergency- Service Level C	Faulted- Service Level D
Basic Stress Allowables	Basic Stress Allowables	1.6 x Basic Stress Allowables	1.7 x Basic Stress Allowables

In addition to satisfying the above noted stress limits, the S/R system should be designed to safely transfer all loadings to the structure. Concrete expansion anchors shall meet the requirements of **ACI-349**, **"Code Requirements for Nuclear Safety Related Concrete Structures"**.

7.3.6 ALLOWABLE DEFLECTION CRITERIA

No S/R deflection limitations other than those implied by the stress criteria given in **Section 7.3.5** and any S/R system stiffness requirements are imposed.

7.4 REFERENCES

7.4.1 CESSAR Design Certification, System 80+ Standard Design, Amendment I.

7.4.2 ASME Boiler and Pressure Vessel Code, Section III, Nuclear Power Plant Components, Class 1, 2, and 3, 1989 Edition.

7.4.3 ASME B31.1-1989 Edition, Power Piping.

7.4.4 ASME Code Case N-411-1, "Alternate Damping Values for Response Spectra Analysis of Class 1, 2, and 3 Piping, Section III, Division I".

7.4.5 USNRC Regulatory Guide 1.92, "Combining Modal Responses and Spatial Components in Seismic Response Analysis", Revision 1, February 1976.

7.4.6 USNRC Regulatory Guide 1.76, "Design Basis Tornado for Nuclear Power Plants", April 1974.

7.4.7 Texas Utilities Letter TXX 3423, "Comanche Peak Steam Station, Functional Capacity of ASME Code Class 2 and 3 Stainless Steel Elbows".

7.4.8 NCIG-14, "Procedure for Seismic Evaluation and Design of Small Bore Piping", EPRI NP-6628, April 1990.

7.4.9 ANSI/AISC N690, "Nuclear Facilities-Steel Safety-Related Structures for Design Fabrication and Erection".

7.4.10 MSS-SP-58, "Pipe Hangers and Supports-Materials, Design and Manufacture".

7.4.11 USNRC Branch Technical Position, MEB 3-1 of Standard Review Plan 3.6.2 in NUREG-0800.

7.4.12 ANSI/ANS 58.2, "Design Basis for Protection of Light Water Nuclear Power Plants Against the Effects of Postulated Pipe Rupture".

7.4.13 AISC Manual of Steel Construction.

7.4.14 ACI-349, "Code Requirements for Nuclear Safety Related Concrete Structures".

7.4.15 ASME Boiler and Vessel Code, Code Case N-318, "Procedure for Evaluation of the Design of Rectangular Cross-Section Attachments on Class 2 or 3 Piping".

7.4.16 ASME Boiler and Vessel Code, Code Case N-392, "Procedure for Evaluation of the Design of Hollow Circular Cross-Section Welded Attachments to Class 2 or 3 Piping, Section III, Division I".

APPENDIX 7A

1.0 LEAK-BEFORE-BREAK

1.1 PLANT AND PIPING DESIGN CONDITIONS

1.1.1 PIPING DESIGN PARAMETERS

The use of Leak-Before-Break (LBB) technology has, in the past, been limited to the evaluation of piping systems already designed and constructed. The System 80+ design certification approach makes it possible to design certain piping systems such that elimination of the dynamic effects of postulated pipe breaks by LBB is assured at the design stage.

In piping design, fluid system requirements normally drive the selection of specific piping parameters. For those piping systems chosen for LBB evaluation, LBB considerations must be integrated into the process of selecting those design parameters. Specifically, the design parameters for which LBB should be considered include pipe size (cross-section), pipe and weld materials, loads, and piping system thermal flexibility.

The pipe and weld material should be chosen considering LBB requirements along with system, stress and fatigue requirements. Within the limitations of the fluid system and ASME Code requirements, the designer should select pipe and weld materials which have good corrosion resistance, high yield and high toughness characteristics.

Piping system thermal flexibility is governed by the stress requirements of the ASME Code and the duty cycle of loadings. The piping system should be routed such that it is sufficiently flexible to be able to thermally deflect without exceeding stress or fatigue limits. It should also meet criteria for all load combinations associated with earthquakes (see **Sections 7.1.4 through 7.1.6**).

Increased flexibility of the piping system results in lower pipe loads from thermal loadings. Low normal operation (NOP) loads are advantageous in the LBB crack stability analyses provided that low NOP loads do not result in a leakage crack length that is too long. A smaller NOP load results in a longer circumferential crack length necessary to produce a crack with a detectable flow rate. This longer crack leaves a weaker pipe cross section, which is subjected to load combinations in the stability analyses. This means that the pipe designer must also be mindful of the SSE loading if the pipeline under consideration is to meet LBB requirements. Inclusion of seismic supports should be considered in the overall flexibility of the piping system. A piping system that is made too flexible because of NOP considerations alone could require too many seismic snubbers.

The approach in considering piping system thermal flexibility should be to route the pipe subject to the thermal loadings, other NOP loadings, seismic loadings and stress and fatigue limits. Revisions or limitations to certain thermal modes of operation may need to be considered in order to satisfy thermal flexibility requirements. Determination of a leakage crack length for LBB should be made on the basis of the NOP pipe loads generated or may be conservatively calculated by applying operating pressure alone to the crack model (see **Appendix 7A**, **Section 1.3.3**).

1.1.2 LEAKAGE DETECTION SYSTEMS

CESSAR-DC, Section 3.6.3.3.1 states the following:

> A leak detection system is recommended by **NRC Regulatory Guide 1.45** capable of detecting a leakage rate of...1.0 gpm...or less...from the primary system. **NUREG-1061, Volume 3, "Evaluation of Potential for Pipe Breaks"**, recommends a safety margin of ten on the leak detection system. Diverse measurement means are provided, including water inventory monitoring, sump level and flow monitoring, and measurement of airborne radioactive particulates or gases....Leak detection system requirements to support the LBB analysis for main steam line piping are met by a combination of humidity detectors, condensation on the containment air coolers, radioactive airborne activity sensors and sump flow and level meters.

The various means of leak detection support, but may not be designed specifically to, the requirements of the LBB evaluation. **NRC Regulatory Guide 1.45** requires a Leakage Detection System (LDS) capable of detecting a 1.0 gpm rate or less, independent of LBB requirements. The LBB evaluation, however, depends on these "diverse measurement means", their diverse sensitivities and accuracies, which constitute the LDS, in order to correlate a crack length to a flow rate ten times the leak detection capability. Unless otherwise justified, the LBB evaluations of System 80+ piping systems should be based on a leak detection capability of 1.0 gpm and a safety margin of 10.

1.1.3 CONSIDERATION OF POTENTIAL FOR DEGRADATION SOURCES

CESSAR-DC, Section 3.6.3.1, states the following:

> Piping evaluated for LBB is first shown to meet the applicability requirement of **NUREG-1061, Volume 3**. The

> piping is designed to meet the requirement to have a low susceptibility to failure from the effects of corrosion, water hammer or low- or high-cycle fatigue, or degradation or failure of the piping from indirect causes such as missiles or failure of nearby components.

In order to meet the commitment of **CESSAR-DC, Section 3.6.3.1**, the LBB evaluation must consider pipe and weld material selection, significant thermal modes of operation, the environment in which the piping is routed, and potential for water hammer within the particular fluid system, as each relates to the potential for degradation of the pipe (see **NUREG-1061, Volume 3, Section 5.1**). Consideration of LBB, in turn, should be integrated into the process of selecting materials (for corrosion resistance), determining modes of operation (for reduction of loads from critical thermal transients), designing the piping system to preclude water hammer, and routing, where possible, to minimize the potential of failure of the pipe from indirect causes (see **Sections 4.2.1.2, 4.2.1.3, 6.2.9 and 7.1.2.6**).

1.1.4 CONSIDERATION OF LOADING CONDITIONS

Loads due to NOP (dead weight, pressure, and normal steady state thermal conditions) should be applied to the pipe section to calculate a crack length that will result in ten times the detectable leakage rate. As previously mentioned, a pressure-only load may be considered in this crack length determination in order to generate a maximum bounding case on leakage crack length. For smaller pipes, this could be too conservative, in which case a full set of NOP loads should be applied to determine crack length.

NOP loads, critical thermal transients (including loads due to thermal stratification, **Sections 6.2.10 and 7.1.2.8**), SSE loads, and normal operation dynamic transient loads (such as from rapid valve closure), combined in the same manner as prescribed in the piping design specification for the ASME Code design report, should be considered in the stability analyses. The combination of the NOP load and the largest of the design loads (which will be referred to herein as the "maximum design" load) should be applied to the cracked pipe section in the stability analyses, along with the applicable load margin. Minimization of the above loads is, in general, advantageous to the LBB evaluation and should be pursued in the routing and design of the selected piping system (see **Appendix 7A, Section 1.1.1** for a further discussion with respect to LBB). In addition, overuse of dynamically activated snubbers to reduce piping response loads due to seismic and dynamic transient excitations should be avoided, or at least be balanced against the reduced reliability and maintainability that snubbers can cause in plant operations (see **Sections 6.2.3 and 6.2.9**).

1.2 CRITERIA

1.2.1 APPLICABILITY OF LBB

CESSAR-DC, Section 3.6.3.1, outlines the LBB applicability requirements for a piping system by committing to the applicability requirements of **NUREG-1061, Volume 3** (also see **Appendix 7A, Section 1.1.3**).

1.2.2 DETECTABLE LEAKAGE RATE REQUIREMENT

Per **NUREG-1061, Volume 3**, the detectable leakage rate requirement of the leak detection system is 1.0 gpm or less. The leakage crack to be subjected to the crack stability analyses should leak at a rate ten times the capability of the LDS. **CESSAR-DC, Section 3.6.3.3,** commits to these requirements of **NUREG-1061, Volume 3**. Unless otherwise justified, LBB evaluations should be based on a leak detection capability of 1.0 gpm.

1.2.3 STABILITY ANALYSIS ACCEPTANCE CRITERIA

CESSAR-DC, Section 3.6.3.9, summarizes the stability analysis acceptance criteria as follows:

A. Cracks which are assumed to grow through the pipe wall leak significantly while remaining stable. The amount of leakage is detectable with a safety margin of at least a factor of 10.

B. Cracks of the length that leak at the rate in A above can withstand normal operation plus maximum design loads with a safety factor of at least $\sqrt{2}$.

C. Cracks twice as long as those addressed in B above will remain stable when subjected to normal operation plus maximum design loads.

NOP and maximum design loads are defined in **Appendix 7A, Section 1.1.4**.

1.3 ANALYSIS

1.3.1 DETERMINATION OF LEAKAGE CRACK LOCATIONS

It is a regulatory requirement that LBB be applied to an entire piping system or analyzable portion thereof, typically segments located between anchor points. Therefore, for practicality, locations of higher maximum design loads should be determined in order to reduce the number of locations where the LBB evaluation is to be performed.

A screening process based on comparison of the maximum design load to crack length (i.e., applied moment to the square of the crack length "a") may be used to determine the locations where crack stability is most likely to be challenged. These locations become the basis for locating leakage cracks to be evaluated. Simple criteria may be developed for screening. For example, locations with significantly lower maximum design loading and similar NOP loading may be eliminated from further consideration. Large diameter pipes with low NOP and maximum design loads compared with more highly loaded locations may be eliminated. Smaller pipes are more difficult to screen since the final margin on crack size (2) or final margin on load ($\sqrt{2}$) each have the potential of being the limiting criterion. These two margins are equally limiting for larger pipes, which remain mostly elastic.

1.3.2 FLOW RATE CORRELATION

The leakage crack size should be correlated to the LDS capability. In order to simplify the LBB evaluations and provide safety margin, the value of 250 gpm/in^2 should be used for the leakage rate in the primary system. A value of 40 gpm/in^2 of condensed liquid should be used for the leakage rate in the main steam line. These values account for variables such as surface roughness of the side walls of the crack, the nonparallel relationship of the side walls due to the elongated crack shape, and possible zig-zag tearing of the material during crack formation. The selection of the respective value above as a conservative lower bound is supported by **NUREG/CR 4572, "NRC Leak-Before-Break (LBB) Analysis Methods for Circumferentially Through-Wall Cracked Pipes Under Axial Plus Bending Loads"**. For example, in order for 10 gpm leakage to occur at a rate of 250 gpm/in^2, the leakage area should be 0.04 in^2. Similarly, in order for 10 gpm leakage to occur at a rate of 40 gpm/in^2, the leakage area should be 0.25 in^2. These respective crack opening areas should be used to determine the length of the detectable leakage crack for stability evaluations unless another correlation is justified.

1.3.3 PRELIMINARY LBB EVALUATION USING EPRI/GE ESTIMATION OR SIMILAR METHOD (Where Applicable)

The approach being taken toward design certification of System 80+ is to include LBB considerations in the piping design. One aspect of the LBB evaluation pursued for each selected piping system is performance of a preliminary LBB evaluation prior to and independent of pipe routing. This evaluation is used to provide the piping designer with LBB acceptance criteria, in terms of a range of materials, pipe siz · and NOP and maximum design loads for all locations on the pipe. If the acceptance criteria is met, an acceptable result of the LBB evaluation of the final design is assured. The range of piping parameters developed by this preliminary evaluation forms a "window" of acceptance criteria which the piping designer can utilize to route, design and support the piping system.

The preliminary LBB evaluation does not require determination of specific leakage crack locations, detailed analysis of finite element crack models, or prior calculation of NOP or SSE pipe loads. Crack opening areas may be calculated for large diameter pipes using methods such as the EPRI/GE estimation method of elastic-plastic fracture mechanics. The EPRI/GE estimation method relies on a catalog of pre-analyzed pipes for a variety of sizes and material behavior. For smaller diameter pipes, the finite element analyses described in **Appendix 7A, Section 1.3.4** are performed.

The evaluation of crack opening areas vs. crack lengths is performed first. The EPRI/GE estimation or similar method requires the material stress-strain properties to be in the form of the Ramberg-Osgood law (**NP-1931, "An Engineering Approach for Elastic-Plastic Fracture Analysis"**). The preliminary analysis utilizes best available material properties for the range of materials being evaluated. The Ramberg-Osgood law is fit to represent many stress-strain curves of a range within a generic type of material (e.g., three different types or grades of stainless steel). Using the material properties in the form described above, the EPRI/GE method is used to calculate the crack mouth opening displacements for various crack lengths. The crack opening areas are estimated from the crack lengths and opening displacements using an elliptical approximation for the opening areas.

Next, the leakage rates are computed from the crack lengths and opening areas. The pressure-only load and a minimum NOP load are used to create a range of loads and a corresponding range of crack lengths. The results are leakage rate vs. crack length curves.

The J-integral curves are then calculated using the J-integral estimation methods of the EPRI/GE or a similar method. J-integral curves are calculated for the leakage crack sizes for both (NOP + Maximum Design Load) and $\sqrt{2}$ x (NOP + Maximum Design Load). The applied loads are chosen to create an acceptance range.

For some piping systems, this method creates a "window" of design requirements for the piping design. In cases where this "window" is developed, there could be a larger range of acceptable loads beyond the window than the preliminary estimation method generates, for two reasons:

A. The detailed piping design ultimately provides actual NOP loads, maximum design loads, and piping design parameters for the detailed finite element analysis of the crack in the final LBB evaluation.

B. The crack length in the detailed analysis may be based on calculated rather than conservatively low NOP loads, and will therefore be shorter.

Design of the piping system to the LBB requirements developed using the above approach will therefore assure that LBB will be demonstrated in the final design.

1.3.4 DETAILED FINITE ELEMENT ANALYSIS

Detailed finite element LBB analyses are performed as a preliminary analysis at the design certification stage, for pipes for which the estimation method (**Appendix 7A, Section 1.3.3**) is too conservative or inapplicable. A finite element analysis model is used to analyze the bounding crack cases in detail. For each location in the piping system where a detailed evaluation is performed, at least two finite element models are developed. One model approximating the leakage crack size at normal operating loads is used to demonstrate safety margin on the loads. The other model, having a crack length twice that of the first model, is used to demonstrate the margin on crack size. Additional crack lengths may be modelled in order to better define the J-integral vs. crack length relationship.

A three-dimensional isoparametric brick element is used in the detailed analysis model. Symmetry is used to minimize the size of each model analyzed. Constraints are imposed on the models based on symmetry. The crack surface area is free from constraint in the direction of the crack opening. External pipe loads are applied to the pipe typically at a distance of five times the radius of the pipe in order to minimize local effects in the cracked region of the pipe.

The detailed analyses of cracks in pipe welds require consideration of the properties of the pipe and the weld materials. Per **CESSAR-DC, Section 3.6.3.5**, the LBB analysis of cracks in pipe welds results in a bounding case when the material stress-strain properties of the base metal, which has the lower yield, and the fracture properties of the weld, which has the lower toughness, are used in combination for the entire structure analyzed. **CESSAR-DC, Section 3.6.3.5** summarizes materials selected for System 80+ piping systems evaluated for LBB. For preliminary LBB evaluations, the stress-strain curve and J-integral are developed from best available information. For final LBB evaluations, the stress-strain curve and J-integral are developed by testing representative samples of piping material to be used in the piping system being evaluated. The ductile fracture parameter, J-integral, is used to characterize the propensity for crack extension and stability in the piping material under consideration.

The primary loading on the pipes are those occurring during NOP. It is this loading condition which is used to determine leakage crack size. Crack opening areas are calculated at each bounding location for normal operating conditions. For a 10 gpm flow rate, the opening areas given in **Appendix 7A, Section 1.3.2** are used to determine the leakage crack length.

The NOP and maximum design load combinations are used in the analysis to envelope the loads. The loads applied are as follows:

A. Pressure Loads

The internal pressure is applied to the inner surface of the pipe, and the average pressure is applied to the crack face to account for the pressure drop from internal to atmospheric pressure across the crack. A longitudinal end force equilibrating the pressure is applied remote from the crack. The first incremental load step is scaled to the first yield of the pipe material. Subsequent loading is applied until full pressure is reached.

B. Normal Operation Loads

The axial force and bending moment is applied to the remote end of the model. The loads are applied in small increments. This method of load application allows the analysis to precisely follow the stress-strain curve of the material.

C. Maximum Design Loads (Largest of the Safe Shutdown Earthquake Loads, Critical Thermal Transient Loads, or Normal Operation Dynamic Transient Loads)

The same procedure followed for the NOP loads is used for the maximum design loads. These loads are applied incrementally to the model which is loaded by the pressure and normal operation loads.

To evaluate margin on loads, all the loads used in Steps A to C above are added together and then increased to demonstrate additional margin, per **NUREG-1061, Volume 3**. The additional loads are applied to the model so that the total load applied is equal to $\sqrt{2}$ times (Pressure + NOP + Maximum Design Load). The resulting J-integral value is compared to the material fracture properties in order to demonstrate crack stability. The final LBB criteria are $J < J_{MAT}$ and $dJ/da < dJ_{MAX}/da$ for the crack sizes and loading previously given.

To evaluate margin on crack size, the model with a crack size twice the assumed leakage crack length is used, per **NUREG-1061, Volume 3**. The pressure and moment loads are applied in the same fashion. The sum of the loads applied is equal to (Pressure + NOP + Maximum Design Load).

The J-integral technique is used to demonstrate crack stability with the margin on load and margin on crack size. The J-integral is determined in the finite element analysis for pressure, NOP and maximum design loadings for the two or more crack lengths for each geometric model. The stability evaluations are made by comparing the J vs. "a" and J_{MAT} vs. "a", where "a" is the crack size. Intersection of the curves illustrates that crack stability is assured, indicating that LBB is demonstrated for the crack evaluated. Crack stability is assured for each location in a given piping system where the loads are within the window analyzed, which demonstrates LBB for that piping system.

2.0 APPENDIX 7A REFERENCES

2.1 NUREG-1061, Volume 3, "Evaluation of Potential for Pipe Breaks", November 1984.

2.2 NUREG/CR 4572 (BMI-2134), "NRC Leak-Before-Break (LBB) Analysis Methods for Circumferentially Through-Wall Cracked Pipes Under Axial Plus Bending Loads", R. Klecker, F. Brust, G. Wilkowski, May, 1986.

2.3 EPRI Report No. NP-1931, "An Engineering Approach for Elastic-Plastic Fracture Analysis", V. Kumer, M. D. German and C. F. Shih, July, 1981.

2.4 USNRC Regulatory Guide 1.45, "Reactor Coolant Pressure Boundary Leakage Detection Systems", May 1973.

APPENDIX 7B

1.0 FUNCTIONAL CAPABILITY REQUIREMENTS

ASME Code Class 2 and 3 stainless steel elbows should be considered to meet the functional capability criteria when the following equation is met. Functional capability evaluations are only required on elbows with $D_o/t > 50$.

$$B_1\left(\frac{PD_o}{2t}\right)+B_2\left(\frac{M_j}{Z}\right)\le 1.8S_y \qquad \text{(Eqn. 7B-1)}$$

Where: $B_1 = (-0.1 + 0.4h)$, and $0 \le B_1 \le 0.5$

And: $B_1 = 0.5$ for $B_2 = 1.0$

$B_2 = 1.3/h^{2/3}$ for $\propto_o > 90°$

$= 0.895/h^{0.912}$ for $\propto_o = 90°$

$= 1.0$ for $\propto_o = 0°$

but not less than 1.0

Linear interpolation is allowed for values of $\propto_o$ between 0° and 90°.

$h = tR/r^2$

$\propto_o$ = angle of the bend

R = elbow bend radius (inch)

r = mean radius of pipe (inch)

P = pipe design pressure (psig)

D_o = pipe outside diameter (inch)

t = nominal pipe wall thickness (inch)

M_j = moment associated with plant faulted loads

S_y = yield strength of material at design temperature

Z = section modulus (in^3)