50-344
50-412

BVPS ANNUAL EXERCISE 1992

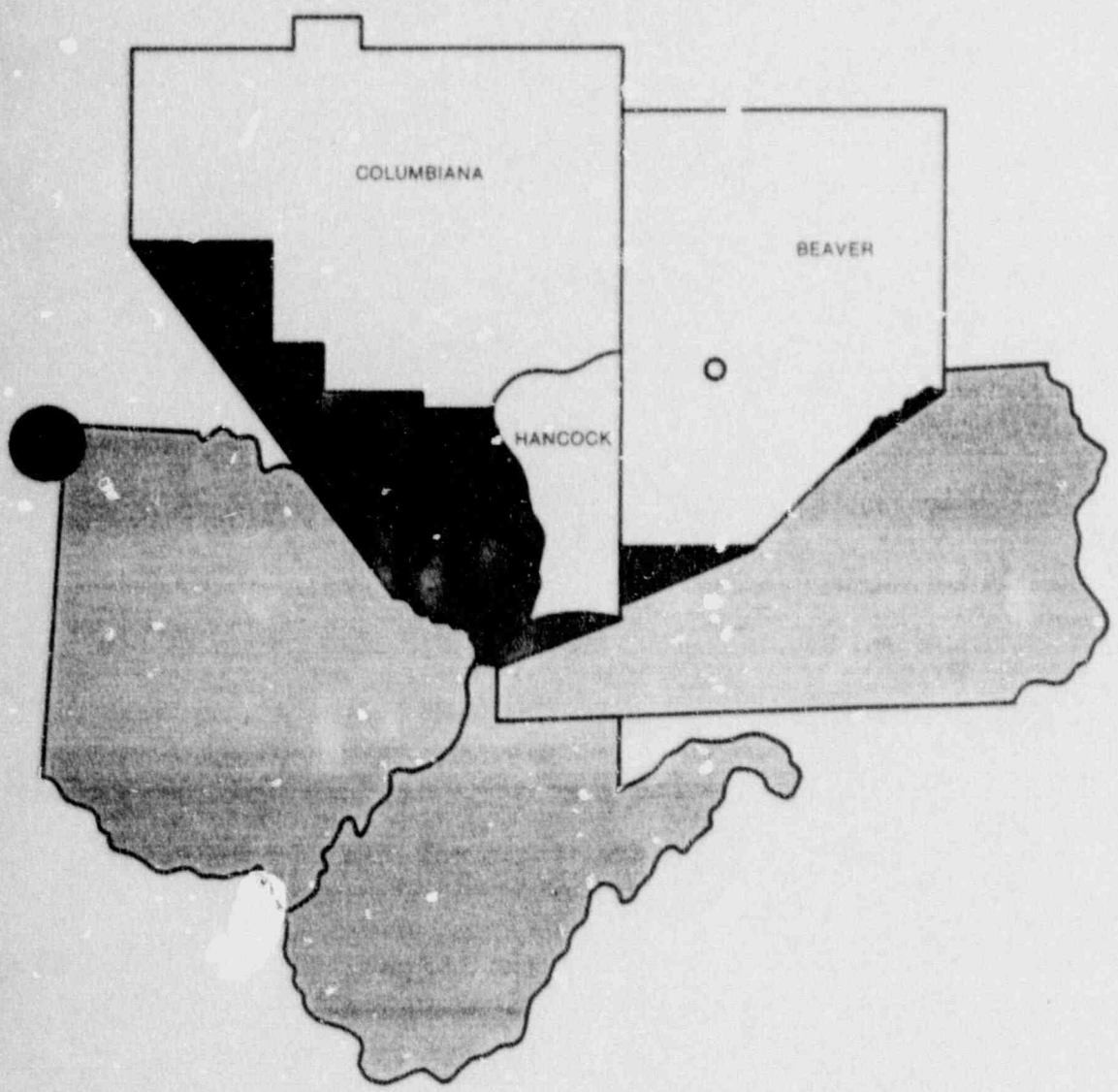

Duquesne Light

9206170318 920609
PDR ADOCK 05000344
F PDR

DF01 0/2

Duquesne Light

Nuclear Group
P.O. Box 4
Shippingport, PA 15077-0004

Telephone (412) 393-6000

DUQUESNE LIGHT COMPANY

BEAVER VALLEY POWER STATION

INGESTION ZONE

1992 ANNUAL EMERGENCY PREPAREDNESS EXERCISE

FOREWORD

This exercise package has been developed to provide the basis for the conduct of a simulated radiological accident at the Beaver Valley Power Station Unit 2 facility located in Beaver County, Pennsylvania, through which the capabilities and effectiveness of the Emergency Response Plans for the Duquesne Light Company can be evaluated. This package is to be utilized by the exercise controllers and observers of the Federal, State and Local agencies, as well as the Utility, to initiate, control and evaluate the activities of the participants in the exercise.

The Duquesne Light Company approves this document as the standard for conduct in performance of the June 9 - 11, 1992 Ingestion Zone Annual Emergency Preparedness Exercise.

D. E. Spoerry
General Manager,
Nuclear Ops. Services

EPP EXERCISE
COPY NO. 25

Duquesne Light

Nuclear Group
P.O. Box 4
Shippingport, PA 15077-0004

Telephone (412) 393-6000

DUQUESNE LIGHT COMPANY

BEAVER VALLEY POWER STATION

INGESTION ZONE

1992 ANNUAL EMERGENCY PREPAREDNESS EXERCISE

FOREWORD

This exercise package has been developed to provide the basis for the conduct of a simulated radiological accident at the Beaver Valley Power Station Unit 2 facility located in Beaver County, Pennsylvania, through which the capabilities and effectiveness of the Emergency Response Plans for the Duquesne Light Company can be evaluated. This package is to be utilized by the exercise controllers and observers of the Federal, State and Local agencies, as well as the Utility, to initiate, control and evaluate the activities of the participants in the exercise.

The Duquesne Light Company approves this document as the standard for conduct in performance of the June 9 - 11, 1992 Ingestion Zone Annual Emergency Preparedness Exercise.

D. E. Spoerry
General Manager,
Nuclear Ops. Services

CONTROLLED

COPY NO. _____

DUQUESNE LIGHT COMPANY

BEAVER VALLEY POWER STATION

1992 INGESTION ZONE ANNUAL EMERGENCY PREPAREDNESS EXERCISE

--TABLE OF CONTENTS--

Section I	Introduction	001
	A. Participants	003
	B. Date and Time of Exercise	005
	C. Overall Schedule of Events	007
	D. Controllers & Locations	010
	E. List of Abbreviations	013
Section II	Objectives	017
	A. Onsite	018
	B. Offsite	024
Section III	Precautions & Limitations	074
Section IV	Events Summary	079
	A. Justification & Basis for Events	082
	B. Written Summary	085
Section V	Onsite Sequence of Events	092
Section VI	Offsite Sequence of Events	109

--TABLE OF CONTENTS CONT.--

Section VII	Prompting Material	111
	A. Cue Information Sheets and Signs	112
	B. Controller Free Play	167
	C. Prepared Plant Data	168
	1. Plant Operations Data Package	169
	2. PVC Data Package	321
	3. In-Plant Rad Level Data Package	697
	4. Radiochemical Analysis Data	723
	5. Weather Data Package	726
	6. Dose Assessment Data Package	728
	7. Field Monitoring	736
	8. Injured Person(s) Medical Data	755
	9. Miscellaneous	761
	10. Corporate Communications Data	774
Section VIII	Controller Package	790
	A. Controller/Observer Conduct	790
	B. Exercise Evaluation Criteria	792
Section IX	Critique Agenda	863
	A. Critique Agenda	864
	B. References	866
	C. Acknowledgements	868

Introduction

Section I

SECTION I

Introduction

This Annual Exercise shall demonstrate the ongoing preparedness capabilities of the Beaver Valley Power Station to include its emergency response personnel, facilities and equipment for maintaining public and plant safety in the unlikely event of an emergency here at the station.

The Annual Exercise date has been set for June 9, 1992.

Offsite participation is planned for the exercise.

DRILL PARTICIPANTS WILL NOT HAVE PRIOR KNOWLEDGE OF THE NATURE OF THIS SIMULATED INCIDENT OR ANY PART THEREOF. THIS DRILL IS DESIGNED TO PROVIDE ADDITIONAL TRAINING SO THAT PERSONNEL CAN DEMONSTRATE THEIR RESPONSIBILITIES ACCORDING TO CURRENT PLANS AND PROCEDURES.

In order to achieve a sequence of events that will test participating groups from the emergency response organization, the drill must contain some unlikely plant problems. These problems will involve equipment failures and improbable operator and participant error. Thus, for this drill, the above assumptions have been made in order to test the implementation of the emergency plan.

This confidential package is designed to assist the Controller/Observers in the conduct and evaluation of the Dry Run.

Remember, the primary purpose of the Dry Run is to monitor the player's preparedness and to provide hands-on training in a controlled setting. This exercise is scheduled to run for approximately eight (8) hours.

NOTE: As exercise efforts progress, minor changes may be required to this scenario package. Any changes will be identified during pre-exercise meetings.

Participants

Section I

(Part A)

Section I

ANNUAL EXERCISE PARTICIPANTS

Duquesne Light Company, Beaver Valley Power Station

* Participation in the areas of information, decision making and protective action recommendations is planned by the following State and Local agencies.

1. Pennsylvania Emergency Management Agency
2. Department of Environmental Resources/Bureau of Radiation Protection - Pennsylvania
3. Ohio Emergency Management Agency and State Department of Health
4. West Virginia Office of Emergency Services and State Department of Health
5. Beaver County Emergency Management Agency
6. Columbiana County Emergency Management Agency
7. Hancock County Office of Emergency Services

Date and Time
of
Exercise

Section I

(Part B)

Section I

EXERCISE DATE AND TIME

In compliance with NUREG-0654/FEMA - REP-1, Rev. 1 and associated federal regulations governing continuing evaluation of radiological emergency response plans and preparedness for nuclear power plants, Duquesne Light Company will conduct an Ingestion Zone Annual Emergency Preparedness Exercise June 9-11, 1992.

The exercise has been developed to initiate response actions beginning at 1430 hrs. on June 9, 1992. The exercise has been designed to test most of the major aspects of the Station's emergency preparedness program (refer to the exercise objectives, Section II) throughout the course of the day. Anticipated response actions are expected to occupy the exercise participant's time throughout the day.

The date and times associated with the conduct of this exercise have been agreed upon by Duquesne Light Company, the states of Pennsylvania, Ohio and West Virginia, and Beaver, Columbiana and Hancock Counties as well as the Nuclear Regulatory Commission and the Federal Emergency Management Agency.

Overall Schedule
of
Events

Section I

(Part C)

Section I

OVERALL SCHEDULE OF EVENTS

Monday, June 5, 1992

A. Time: 1300 Hrs.

Location: Simulator Bldg, Classroom 3/4 (2nd Floor)

Purpose: Controller Meeting

Tuesday, June 9, 1992

A. Time: 1330 hrs.

Location: Simulator Bldg, Classroom 3/4 (2nd Floor)

Purpose: Orientation for TSC/EOF personnel

B. Time: 1400 hrs.

Location: Plant (CR, ROC, OSC, CAS)

Purpose: Orientation for Plant personnel.

Tuesday, June 9, 1992

A. 1400 hrs. Exercise Controllers will provide the Control Room, Radcon, Maintenance and Security personnel with their players briefing at this time.

B. 1430 hrs. BVPS Ingestion Zone Annual Exercise Commences and Initial Conditions are provided to the Plant Operators (for detailed exercise sequence of events refer to sections V and VI).

C. 1455 hrs. An Unusual Event is declared due to a toxic/flammable gas release in Midland.

[illegible]	[illegible]	Declaration of an Alert due to an explosion in the Diesel Generator building.
F.	1615 hrs.	A contaminated/injured man and a radioactive liquid release occurs.
G.	1710 hrs.	Time is available for lunch.
H.	1800 hrs.	Declaration of a Site Area Emergency due to an ATWS and a call for Site Assembly.
K.	1805 hrs.	Call for a Site Accountability.
L.	1950 hrs.	Containment radiation monitors increase due to fuel damage.
M.	2010 hrs.	Declaration of a General Emergency due to fuel damage and a Steam Generator Tube Rupture and a release to the environment.
N.	2130 hrs.	The offsite release ends.
O.	2133 hrs.	Water is returned to the core.
M.	2200 hrs.	The 1992 BVPS Ingestion Zone Annual Exercise concludes.

Wednesday, June 10, 1992

A.	1000 hrs.	Controller meeting at Simulator Building Classroom 3/4.
B.	1200 hrs.	The Ingestion Zone Exercise continues with the State Agencies and the JPIC.
C.	1400 hrs.	Station critique of the exercise is held at the Simulator Building, Classroom 3/4 (2nd Floor). (observed by the NRC).
D.	1515 hrs.	NRC critique of the exercise is held at the Simulator Building, Classroom 3/4 (2nd Floor). (for DLC Management).
E.	1700 hrs	The Ingestion Zone Exercise concludes.

Thursday, June 11, 1992

A.	1200 hrs.	Recovery/Reentry continues at the States and Counties.

Controllers & Locations

Section I

(Part D)

Controller/Observer Locations

Due to the timing and location of events during the Annual Exercise, all controller/observer locations have been tentatively broken down in the following manner. Depending on the actual response actions of the participants and the amount of "free play" allowed by the controllers, some of these positions may alter during the conduct of the exercise.

a. Onsite

Lead Controller	- Dave Haser

b. Control Room

Operations Management	- Bob Kahler
Operations Management	- Art Beckert
Communications	- Charles McFeaters
	- Joann West
Roving	- Glenn McKee
E. Squad/Roving	- Barry Sommer/Brad Silk

c. Medical

Onsite Medical	- Barry Sommer/Ray Moser
Offsite Hospital	- Bob Drew

d. In-Plant Radcon

ROC	- Jim Freund
DRMS Panel	- Tom Sidora
Roving	- Ray Moser
Roving	- John Lebus
Roving	- Jeff Fontaine
Roving	- Jim Breslin

e. Offsite Rad Monitoring

Rad Monitoring Team #1	- Milt Shaw
Rad Monitoring Team #2	- Bil Brady
Rad Monitoring Team #3	- Scott Marchak

f. Chemistry

Plant Chemistry	- Joe Kalinyak

g. Security

CAS/Roving	- Nick DiPietro
Roving	- Tom Bundy
Roving	- William Walker
Roving	- Joseph Gagliano
Roving	- Rich Dibbler

h. Maintenance

OSC	- Don Feigley
Roving	- Dave Hosmer
Roving	- Don Carothers
Roving	- Leigh Marciniak
Roving	- Bill Nealon
Roving	- Jim Winters

i. ERF

Lead Controller	- Hal Szklinski

j. Technical Support Center (TSC)

Management	- John Marietta
Engineering	- Bill Pulling
PVC/SPDS Operations	- Matt Hamel/John Sloan
Communications	- Charles McFeaters
	- Joann West
Chemistry	- Frank Liptak

k. Emergency Operations Facility/Communications Area (EOF)

Management	- Bill Mahan

l. FA & DP Section Environmental Activities

Operations	- Tony Lonnett

m. Joint Public Information Center (JPIC)

Management	- Kirk Troxler
Roving	- Ron Fedin
Roving	- Dale Dignan
Roving	- Kurtis Hill
Roving	- Ann Ryan
Roving	- Rich Gernat
Roving	- Tom Zogleman

List of Abbreviations

Section I

(Part E)

Section I

EMERGENCY PREPAREDNESS ABBREVIATIONS

ACP	Access Control Point
ARERAS	Atmospheric Radioactive Effluent Release Assessment System
BCEMA	Beaver County Emergency Management Agency
BVPS	Beaver Valley Power Station
CCEMA	Columbiana County Emergency Management Agency
CFR	Code of Federal Regulations
DBA	Design Basis Accident
DEP	Director of Emergency Planning
DER/BRP	Department of Environmental Resources/Bureau of Radiation Protection (Pennsylvania)
DLC	Duquesne Light Company
DOE	Department of Energy (US)
EAL	Emergency Action Level
ENS	Emergency Notification System
EOC	Emergency Operations Center
EOF	Emergency Operations Facility
EPA	Environmental Protection Agency
EPZ	Emergency Planning Zone
ERF	Emergency Response Facility
ERFCS	Emergency Response Facility Computer System
FEMA	Federal Emergency Management Agency

Section I

EMERGENCY PREPAREDNESS ABBREVIATIONS (continued)

FSAR	Final Safety Analysis Report
HCOES	Hancock County Office of Emergency Services
INPO	Institute of Nuclear Power Operations
JPIC	Joint Public Information Center
LEARN	Law Enforcement Activity Radio Network
LCO	Limiting Condition for Operations
LOCA	Loss of Coolant Accident
LPZ	Low Population Zone
MIDAS	Meteorological Information Dose Acquisition System
NRC	Nuclear Regulatory Commission (US)
NWS	National Weather Services
OEMA	Ohio Emergency Management Agency
ORC	Offsite Review Committee
OSC	Operations Support Center
OSC	Onsite Safety Committee
PAG	Protective Action Guides
PEMA	Pennsylvania Emergency Management Agency
PVC	Plant Variable Computer
RACES	Radio Amateur Civil Emergency System
ROC	Radiological Operations Center
SAPS	Shippingport Atomic Power Station
SPDS	Safety Parameter Display System

Section I

EMERGENCY PREPAREDNESS ABBREVIATIONS (continued)

SPING	Stationary Particulate, Iodine, Noble Gas Monitoring System
TCP	Traffic Control Point
TSC	Technical Support Center
WVOES	West Virginia Office of Emergency Services
X/Q	Wind Dispersion Factor (Chi/Q)

DUQUESNE LIGHT COMPANY

Beaver Valley Power Station

1992

Ingestion Zone
Annual Emergency Preparedness Exercise

**** Scope & Objectives ****

ONSITE SCOPE AND OBJECTIVES

PART A

Duquesne Light Company

Beaver Valley Power Station

1992 Ingestion Zone
Annual Emergency Preparedness Exercise

SCOPE:

The 1992 exercise, scheduled to be conducted on June 9, 1992 will simulate accident events culminating in a radiological accident from the Beaver Valley Power Station Unit #2, located in Beaver County, Shippingport, Pennsylvania. The exercise will involve events that test the effectiveness of the Station's Emergency Preparedness Program including the activation and utilization of all emergency response facilities. This Full-Scale Ingestion Exercise will include mobilization by State and local emergency personnel and resources in Pennsylvania, Ohio and West Virginia.

ONSITE OBJECTIVES

In order to establish the scope and boundaries of the 1992 BVPS emergency exercise scenario, a definitive set of objectives had to be developed. These objectives not only are used to ascertain the required input to the exercise sequence of events, but also to establish evaluation critique areas to be graded by the exercise controllers and observers during actual conduct of the exercise. The following objectives are to be used for this purpose.

NOTE: The objectives listed with an asterisk (*) to the left indicates that objective is used as both a scenario development objective and a controller/observer evaluation objective. The other listed objectives are strictly to be used as evaluation objectives to enhance the grading criteria.

A. Overall Onsite Objectives

1. Demonstrate adequate and effective information flow between BVPS Emergency Response Facilities (ERFs) and proper utilization of emergency response equipment.

2. Demonstrate at all BVPS emergency response facilities the ability to maintain accurate record keeping and logging of data, information, message transmittals and status boards.

3. Demonstrate the ability to establish and maintain solid accident management command and control authority and maintain continuity of authority in all BVPS emergency facilities throughout the exercise.

4. Demonstrate the ability to notify and mobilize staff, and activate emergency facilities in a timely manner.

5. Demonstrate the ability to provide 24 hour staffing in all emergency facilities for a multi-day event via scheduling paperwork.

6. Demonstrate an effective exercise critique program to include participating players, controllers and observers.

* 7. Deficiencies identified in past exercises or inspections have been addressed and corrected, and will be demonstrated if applicable.

B. Operations Objectives

* 1. Demonstrate the Control Room's ability to recognize operations symptoms and parameters indicative of degrading plant conditions.

2. Demonstrate the Control Rooms ability to respond to emergency situations using appropriate Abnormal Operating Procedures (AOPs) and Emergency Operating Procedures (EOPs).

* 3. Demonstrate the ability to initially classify emergency conditions and properly activate the necessary emergency response facilities and personnel.

4. Demonstrate efficient and effective 24-hour communications capability to notify onsite and offsite personnel to include use of phone systems, audible alarms, public address systems, and/or visual alarms.

5. Demonstrate effective communications/informational flow from the Control Room to other emergency response facilities.

* 6. Demonstrate the operating shift's capability to assemble and dispatch emergency squads/teams in response to in-plant problems.

* 7. Demonstrate the capability to shift authorities and responsibilities from the on-shift emergency organization to the onsite (TSC) emergency organization upon activation.

C. Radiological Control Objectives

1. Demonstrate the ability to provide adequate radiation protection services while maintaining personnel exposures ALARA through the utilization of appropriate procedures.

* 2. Demonstrate radiological controls necessary to remove a contaminated injured individual from an accident scene and to assist the medical team in minimizing the consequences of the contaminated individual.

* 3. Demonstrate the ability to conduct radiological surveys for airborne and/or liquid releases.

4. Demonstrate the ability to assist the Emergency Director and Emergency Recovery Manager with radiological emergency protective action recommendations for onsite employees.

5. Demonstrate the ability to determine habitability of the Control Room, Operations Support Center, Radiological Operations Center, Technical Support Center, and the Emergency Operations Facility during emergency conditions.

D. Environmental Assessment and Dose Projection Objectives

1. Demonstrate the ability to coordinate and direct offsite radiological monitoring in relation to plume monitoring.

2. Demonstrate the ability to coordinate analysis of simulated airborne or liquid samples and direct radiation measurements in the environment.

* 3. Perform timely and accurate offsite dose projections concerning airborne radiological releases.

* 4. Demonstrate the ability to calculate dose projections based on a liquid radioactive release.

5. Demonstrate the ability to interact with offsite agency personnel in resolving questions associated with dose projections.

E. Chemistry Objectives

1. Demonstrate the ability of the Chemistry Department to obtain samples in support of accident assessment activities.

2. Demonstrate the ability to assess data obtained as a result of sampling activities.

3. Demonstrate the ability to assist with factoring sample results into the overall assessment process.

4. A PASS Drill was conducted 2/25/92. The Drill package is available for review in the Document Control Vault. If a PASS sample is requested during the Exercise, PASS activities will be simulated (see Chemistry section of the Annual Exercise Package).

F. Security Objectives

1. Demonstrate maintenance of site security operations throughout the exercise, and the ability to establish and control security access control points.

* 2. Demonstrate timely and efficient means for allowing station access to local offsite supporting agencies (ambulance support).

* 3. Demonstrate security escort capabilities.

4. Demonstrate the ability to provide appropriate security access control for the ERF once activated.

* 5. Demonstrate the ability to perform personnel Assembly/Accountability for the BVPS site.

G. Technical Support Center

* 1. Demonstrate understanding of Emergency Action Levels (EALs) and the ability to recognize and classify emergency conditions properly.

* 2. Demonstrate the ability to determine and implement appropriate protective action recommendations to protect Site personnel based on plant parameters.

H. Emergency Operations Facility

1. Demonstrate the ability to interact and coordinate with offsite agencies present in the EOF during emergency conditions.

* 2. Demonstrate the ability to provide an appropriate protective action recommendation to offsite agencies based on plant conditions and/or dose projections.

I. Corporate Communications Objectives

1. Demonstrate coordination of news briefings with government emergency response spokespersons at the Joint Public Information Center (JPIC).

2. Demonstrate the timely and accurate release of information to the public.

3. Demonstrate the distribution of verbal information via news briefings.

4. Demonstrate the staffing of the various public information emergency response facilities.

5. Demonstrate the distribution of hard copy information via news announcements.

6. Demonstrate the control and follow-up of misinformation originating from the news media.

7. Test the capabilities of the utility to respond to telephone inquiries from the media, electric utility industry, and the general public.

8. Demonstrate the involvement of senior company management in the notification of news information.

9. Demonstrate distribution of news information to all company employees.

OFFSITE SCOPE AND OBJECTIVES

PART B

OFFSITE OBJECTIVES

The Offsite Objectives for Pennsylvania and Beaver County were not available at the time of this printing.

3/2/92 DRAFT

STATE OF OHIO OBJECTIVES
BVPS FULL SCALE, PARTIAL INGESTION EXERCISE
JUNE 9-10, 1992

GROUP A - CORE OBJECTIVES

EMERGENCY CLASSIFICATION LEVELS

1. Demonstrate the ability to monitor, understand and use emergency classification levels (ECL) through the appropriate implementation of emergency functions and activities corresponding to ECL's as required by the scenario. The four ECL's are Notification of Unusual Event, Alert, Site Area Emergency, and General Emergency.

   Objective: Selected
   Limiting Conditions: None. ECLs nomenclature will be used throughout the exercise at all EOFs and field activity locations.

MOBILIZATION OF EMERGENCY PERSONNEL

2. Demonstrate the ability to alert, mobilize and activate personnel for both facility and field-based emergency functions. (See Objective #34 for 24-hour, continuous staffing function within a six-year time frame). (1)

   Objective: Selected
   Limiting Conditions: The staffing of field activities will be pre-staged day one and day two for the convenience of the participants.

DIRECTION AND CONTROL

3. Demonstrate the ability to direct, coordinate and control emergency activities. (3)

   Objective: Selected
   Limiting Conditions: None. This objective will be demonstrated both day one and day two.

COMMUNICATIONS

4. Demonstrate the ability to communicate with all appropriate locations, organizations and field personnel. (5)

   Objective: Selected
   Limiting Conditions: None

FACILITIES, EQUIPMENT AND DISPLAYS

3/2/92 DRAFT

5. Demonstrate the adequacy of facilities, equipment, displays and other materials to support emergency operations. (4)

   Objective: Selected
   Limiting Conditions: None. The State and County EOCs will be activated and fully staffed.

EMERGENCY WORKER EXPOSURE CONTROL

6. Demonstrate the ability to continuously monitor and control emergency worker exposure. (20)

   Objective: Selected
   Limiting Conditions: None. Personal dosimetry will be distributed to designated emergency workers and readings will be taken and reported to the responsible official.

FIELD RADIOLOGICAL MONITORING

7. Demonstrate the appropriate equipment and procedures for determining field radiation measurements. (7)

   Objective: Selected
   Limiting Conditions: None. Three of the field radiological monitoring teams will be dispatched from the Columbiana County EOC to demonstrate equipment and procedures on the first day of the exercise.

8. Demonstrate the appropriate equipment and procedures for the measurement of airborne radioiodine concentrations as low as 10-7 microcuries per cc in the presence of noble gases. (8)

   Objective: Selected
   Limiting Conditions: None. All three of the field teams (see objective #7) have the capability of obtaining air samples. They will be advised when to take air samples by the Field Team Coordinator who is located in the communications van.

9. Demonstrate the ability to obtain samples of particulate activity in the airborne plume and promptly perform laboratory analyses. (New Objective)

   Objective: Selected
   Limiting Conditions: Air samples will be collected and taken to a Sample Screening Point at the communications van, but will not be transported tothe Department of Health Lab in Columbus. The Lab will be demonstrated out of sequence on the second day of the exercise.

PLUME DOSE PROJECTION

3/2/92 DRAFT

10. Demonstrate the ability, within the plume exposure pathway to project dosage to the public via plume exposure, based on plant and field data. (10)

Objective: Selected
Limiting Conditions: None. Projections will be calculated by dose assessment at the State EOC.

PLUME PROTECTIVE ACTION DECISION-MAKING

11. Demonstrate the ability to make appropriate protective action decisions, based on projected or actual dosage, EPA PAG's, availability of adequate shelter, relevant factors. (10)

Objective: Selected
Limiting Conditions: None. Protective action recommendations will be made at the State EOC by the Executive Group. The number of recommendations will depend on the outcome of discussions with the State of Pennsylvania.

ALERT NOTIFICATION AND EMERGENCY INFORMATION

12. Demonstrate the ability to initially alert the public within the 10-mile EPZ and begin dissemination of an instructional message within 15 minutes of a decision by appropriate State and/or local official/s. (13)

Objective: Selected
Limiting Conditions: The state will consult with Columbiana County to determine the best immediate protective action for the populace. Once a decision is reached that requires the activation of the alert and notification system, sirens will be sounded and the appropriate EBS message will be aired within 15 minutes, as specified in the Columbiana County emergency plan.

13. Demonstrate the ability to coordinate the formulation and dissemination of accurate information and instructions to the public in a timely fashion after the initial alert and notification has occurred. (14, 25)

Objective: Selected
Limiting Conditions: The state PIO will be present at the JPIC to address protective actions being implemented and the activities taking place at the state level. The Ingestion Zone/Recovery and Re-entry Advisory Group will coordinate protective actions with those counties located in the 50-mile ingestion exposure pathway. In addition, the Ohio Cooperative Extension Service (CES) will inform local CES agents, through computer link, of specific protective actions that the agricultural community should take. (See objective #11.)

3/2/92 DRAFT

14. Demonstrate the ability to brief the media in an accurate, coordinated and timely manner. (24)

    Objective: Selected
    Limiting Conditions: This objective will be demonstrated at the JPIC in Coraopolis, Pennsylvania.

15. Demonstrate the ability to establish and operate rumor control in a coordinated and timely fashion. (26)

    Objective: Selected
    Limiting Conditions: None. Two State EMA rumor control operators will be demonstrated in the State EOC on the first day of the exercise.

GROUP B - SCENARIO DEPENDENT OBJECTIVES

USE OF KI

16. Demonstrate the ability to make the decision to recommend the use of KI to emergency workers and institutionalized persons, based on predetermined criteria, as well as to distribute and administer it once the decision is made, if necessitated by radioiodine releases. (21, 22)

    Objective: Not Selected
    Limiting Conditions: At closest point, Ohio is approximately 5 miles from BVPS. Levels needed to recommend emergency worker KI use (25 REM to adult thyroid) will probably not be reached.

17. Demonstrate the ability to make the decision, if the State Plan so specifies, to recommend the use of KI for the general public, based on predetermined criteria, as well as to distribute and administer it once the decision is made, if necessitated by radioiodine releases. (21, 22)

    Objective: Not Selected
    Limiting Conditions: This objective does not apply. The State Plan does not specify the use of KI by the general public.

IMPLEMENTATION OF PROTECTIVE ACTIONS

18. Demonstrate the ability and resources necessary to implement appropriate protective actions for the impacted permanent and transient plume EPZ population (including transit-dependent persons, special needs populations, handicapped persons and institutionalized persons). (15)

    Objective: Selected
    Limiting Conditions: The state will demonstrate the organizational ability in the EOC to provide assistance to the county (as

requested) in areas such as personnel, vehicles, and traffic control equipment.

19. Demonstrate the ability and resources necessary to implement appropriate protective actions for school children within the plume EPZ (19)

Objective: Not Selected
Limiting Conditions: Not to be demonstrated. School is not in session at the time of the exercise.

20. Demonstrate the organizational ability and resources necessary to control evacuation traffic flow and to control access to evacuated and sheltered areas. (16, 17)

Objective: Selected
Limiting Conditions: The Ohio State Highway Patrol will establish one traffic control point, out of sequence. The state will demonstrate the organizational ability in the EOC to provide assistance to the county (as requested) in areas such as personnel and traffic control equipment, as well as procedurally demonstrate the ability to restrict rail and air traffic.

RELOCATION CENTERS (REGISTRATION, MONITORING, CONGREGATE CARE AND DECONTAMINATION)

21. Demonstrate the adequacy of procedures, facilities, equipment and personnel for the registration, radiological monitoring and decontamination of evacuees. (27)

Objective: Selected
Limiting Conditions: The state will demonstrate the organizational ability in the EOC to provide assistance to the county (as requested) in areas such as personnel and radiological monitoring equipment.

22. Demonstrate the adequacy of facilities, equipment and personnel for congregate care of evacuees. (28)

Objective: Selected
Limiting Conditions: The state will demonstrate the organizational ability at the EOC to coordinate efforts by county, public, and private relief organizations in the operations of reception and care centers.

MEDICAL SERVICES (TRANSPORTATION AND FACILITIES)

23. Demonstrate the adequacy of vehicles, equipment, procedures and personnel for transporting contaminated, injured or exposed individuals. (30)

Objective: Not Selected
Limiting Conditions: This objective will be demonstrated at the Medical Drill on October 21, 1992.

24. Demonstrate the adequacy of medical facilities, equipment, procedures and personnel for handling contaminated, injured or exposed individuals. (31)

Objective: Not Selected
Limiting Conditions: This objective will be demonstrated at the Medical Drill on October 21, 1992.

DECONTAMINATION

25. Demonstrate the adequacy of facilities, equipment, supplies, procedures and personnel for decontamination of emergency workers, equipment and vehicles and for waste disposal. (29)

Objective: Selected
Limiting Conditions: The state will demonstrate the organizational ability in the EOC to provide assistance to the county (as requested) in areas such as personnel, radiological monitoring equipment, and waste disposal.

GROUP C - OTHER OBJECTIVES:
TO BE DEMONSTRATED AT LEAST ONCE EVERY SIX-YEARS

SUPPLEMENTARY ASSISTANCE (FEDERAL/OTHER)

26. Demonstrate the ability to identify the need for and call upon federal and other outside support agencies' assistance. (32)

Objective: Selected
Limiting Conditions: None

INGESTION EXPOSURE PATHWAY

27. Demonstrate the appropriate use of equipment and procedures for collection and transport of samples of vegetation, food crops, milk, meat, poultry, water and animal feeds (indigenous to the area and stored). (9)

Objective: Selected
Limiting Conditions: Samples will be collected and taken to a Sample Screening Point in Stubenville, but will not be transported to the Lab in Columbus. The Lab is being demonstrated out of sequence

28. Demonstrate the appropriate lab operations and procedures for measuring and analyzing samples of vegetation, food crops, milk,

meat, poultry, water and animal feeds (indigenous to the area and stored). (9)

NEEDS FURTHER EXPLANATION!!!!!!

Objective: Selected
Limiting Conditions: The Department of Health Labs will be demonstrated out of sequence on the second day of the exercise. They will be analyzing _____, _____ and _____ to demonstrate the capability.

29. Demonstrate the ability to project dosage to the public for ingestion pathway exposure and determine appropriate protective measures based on field data, FDA PAG's and other relevant factors. (11)

Objective: Selected
Limiting Conditions: None

30. Demonstrate the ability to implement both preventative and emergency protective actions for ingestion pathway hazards. (12)

Objective: Selected
Limiting Conditions: None

RECOVERY, RE-ENTRY AND RELOCATION

31. Demonstrate the ability to estimate total population exposure. (34)

Objective: Not Selected
Limiting Conditions: Will not be demonstrated in this exercise.

32. Demonstrate the ability to determine appropriate measures for controlled re-entry and recovery based on estimated total population exposure, available EPA PAG's and other relevant factors.

Objective: Not Selected
Limiting Conditions: Will not be demonstrated this exercise.

33. Demonstrate the ability to implement appropriate measures for controlled re-entry and recovery.

Objective: Not Selected
Limiting Conditions: Will not be demonstrated this exercise.

34. Demonstrate the ability to maintain staffing on a continuous 24-hour basis by an actual shift change. (2)

Objective: Not Selected

Objective: Not Selected
Limiting Conditions: This objective will be demonstrated at the Medical Drill on October 21, 1992.

24. Demonstrate the adequacy of medical facilities, equipment, procedures and personnel for handling contaminated, injured or exposed individuals. (31)

Objective: Not Selected
Limiting Conditions: This objective will be demonstrated at the Medical Drill on October 21, 1992.

DECONTAMINATION

25. Demonstrate the adequacy of facilities, equipment, supplies, procedures and personnel for decontamination of emergency workers, equipment and vehicles and for waste disposal. (29)

Objective: Selected
Limiting Conditions: The state will demonstrate the organizational ability in the EOC to provide assistance to the county (as requested) in areas such as personnel, radiological monitoring equipment, and waste disposal.

GROUP C - OTHER OBJECTIVES:
TO BE DEMONSTRATED AT LEAST ONCE EVERY SIX-YEARS

SUPPLEMENTARY ASSISTANCE (FEDERAL/OTHER)

26. Demonstrate the ability to identify the need for and call upon federal and other outside support agencies' assistance. (32)

Objective: Selected
Limiting Conditions: None

INGESTION EXPOSURE PATHWAY

27. Demonstrate the appropriate use of equipment and procedures for collection and transport of samples of vegetation, food crops, milk, meat, poultry, water and animal feeds (indigenous to the area and stored). (9)

Objective: Selected
Limiting Conditions: Samples will be collected and taken to a Sample Screening Point in Stubenville, but will not be transported to the Lab in Columbus. The Lab is being demonstrated out of sequence

28. Demonstrate the appropriate lab operations and procedures for measuring and analyzing samples of vegetation, food crops, milk,

3/2/92 DRAFT

Limiting Conditions: Will not be demonstrated this exercise.

EVACUATION OF ONSITE PERSONNEL

35. Demonstrate the ability to coordinate the evacuation of onsite personnel. (23)

Objective: Not Selected
Limiting Conditions: Beaver Valley is located in the state of Pennsylvania. Onsite evacuees fall under their jurisdiction.

UNANNOUNCED AND OFF-HOURS

36. Demonstrate the ability to carry out emergency response functions (i.e., activate EOC's, establish communications linkages and complete telephone call down) during an unannounced off-hours drill or exercise. (New Objective)

Objective: Not Selected
Limiting Conditions: Will not be demonstrated this exercise.

3/2/92 DRAFT

COLUMBIANA COUNTY OBJECTIVES
BVPS FULL SCALE, PARTIAL INGESTION EXERCISE
GROUP A - CORE OBJECTIVES

EMERGENCY CLASSIFICATION LEVELS

1. Demonstrate the ability to monitor, understand and use emergency classification levels (ECL) through the appropriate implementation of emergency functions and activities corresponding to ECL's as required by the scenario. The four ECL's are Notification of Unusual Event, Alert, Site Area Emergency, and General Emergency.

   Objective: Selected
   Limiting Conditions: None. ECL nomenclature will be used throughout the exercise.

MOBILIZATION OF EMERGENCY PERSONNEL

2. Demonstrate the ability to alert, mobilize and activate personnel for both facility and field-based emergency functions. (See Objective #34 for 24-hour, continuous staffing function within a six-year time frame). (1)

   Objective: Selected
   Limiting Conditions: None. Field based activities will be pre-staged on day one for the convenience of the participants.

DIRECTION AND CONTROL

3. Demonstrate the ability to direct, coordinate and control emergency activities. (3)

   Objective: Selected
   Limiting Conditions: None. This objective will be demonstrated on day one of the exercise.

COMMUNICATIONS

4. Demonstrate the ability to communicate with all appropriate locations, organizations and field personnel. (5)

   Objective: Selected
   Limiting Conditions: None

FACILITIES, EQUIPMENT AND DISPLAYS

5. Demonstrate the adequacy of facilities, equipment, displays and other materials to support emergency operations. (4)

   Objective: Selected

Limiting Conditions: None. The County EOC will be activated and fully staffed on day one of the exercise.

EMERGENCY WORKER EXPOSURE CONTROL

6. Demonstrate the ability to continuously monitor and control emergency worker exposure. (20)

   Objective: Selected
   Limiting Conditions: None. Personal dosimetry will be distributed to designated emergency workers and readings will be taken and reported to the responsible official.

FIELD RADIOLOGICAL MONITORING

7. Demonstrate the appropriate equipment and procedures for determining field radiation measurements. (7)

   Objective: Not Selected
   Limiting Conditions: This objective is not a County Function and will not be demonstrated.

8. Demonstrate the appropriate equipment and procedures for the measurement of airborne radioiodine concentrations as low as 10-7 microcuries per cc in the presence of noble gases. (8)

   Objective: Not Selected
   Limiting Conditions: This objective is not a County Function and will not be demonstrated.

9. Demonstrate the ability to obtain samples of particulate activity in the airborne plume and promptly perform laboratory analyses. (New Objective)

   Objective: Not Selected
   Limiting Conditions: This objective is not a County Function and will not be demonstrated.

PLUME DOSE PROJECTION

10. Demonstrate the ability, within the plume exposure pathway to project dosage to the public via plume exposure, based on plant and field data. (10)

    Objective: Not Selected
    Limiting Conditions: This objective is not a County Function and will not be demonstrated.

PLUME PROTECTIVE ACTION DECISION-MAKING

11. Demonstrate the ability to make appropriate protective action

decisions, based on projected or actual dosage, EPA PAG's, availability of adequate shelter, relevant factors. (10)

Objective: Selected
Limiting Conditions: This objective will be demonstrated to the extent that PAR's are adjusted at the County, based on local constraints.

ALERT, NOTIFICATION AND EMERGENCY INFORMATION

12. Demonstrate the ability to initially alert the public within the 10-mile EPZ and begin dissemination of an instructional message within 15 minutes of a decision by appropriate State and/or local official/s. (13)

    Objective: Selected
    Limiting Conditions: The County will demonstrate the ability to alert the public within the prescribed time. The sounding of the sirens will be simulated; contact will be made with the primary EBS station; the EBS message given to the EBS station will be simulated broadcast.

13. Demonstrate the ability to coordinate the formulation and dissemination of accurate information and instructions to the public in a timely fashion after the initial alert and notification has occurred. (14, 25)

    Objective: Selected
    Limiting Conditions: None.

14. Demonstrate the ability to brief the media in an accurate, coordinated and timely manner. (24)

    Objective: Selected
    Limiting Conditions: The County PIO will be present at the JPIC which is located in Coraoplis, Pennsylvania, and he will take an active part in preparing briefing materials and participating in the briefings.

15. Demonstrate the ability to establish and operate rumor control in a coordinated and timely fashion. (26)

    Objective: Selected
    Limiting Conditions: Rumor control will be set up at The County EOC and operated by the County PIO on the first day of the exercise.

GROUP B - SCENARIO DEPENDENT OBJECTIVES

USE OF KI

3/2/92 DRAFT

16. Demonstrate the ability to make the decision to recommend the use of KI to emergency workers and institutionalized persons, based on predetermined criteria, as well as to distribute and administer it once the decision is made, if necessitated by radioiodine releases. (21, 22)

Objective: Not Selected
Limiting Conditions: This objective is not a County function and will not be demonstrated.

17. Demonstrate the ability to make the decision, if the State Plan so specifies, to recommend the use of KI for the general public, based on predetermined criteria, as well as to distribute and administer it once the decision is made, if necessitated by radioiodine releases. (21, 22)

Objective: Not Selected
Limiting Conditions: This objective does not apply. The State Plan does not specify the use of KI by the general public.

IMPLEMENTATION OF PROTECTIVE ACTIONS

18. Demonstrate the ability and resources necessary to implement appropriate protective actions for the impacted permanent and transient plume EPZ population (including transit-dependent persons, special needs populations, handicapped persons and institutionalized persons). (15)

Objective: Selected
Limiting Conditions: The County EOC staff will demonstrate the ability only. The coordination for resources with the State EOC will be on an as-needed basis. The resource will be simulated and people will not be moved.

19. Demonstrate the ability and resources necessary to implement appropriate protective actions for school children within the plume EPZ (19)

Objective: Not Selected
Limiting Conditions: Not to be demonstrated - school is not in session at the time of the exercise.

20. Demonstrate the organizational ability and resources necessary to control evacuation traffic flow and to control access to evacuated and sheltered areas. (16, 17)

Objective: Selected
Limiting Conditions: One access control point will be demonstrated on the first day of the exercise by the Ohio Highway Patrol.

3/2/92 DRAFT

RELOCATION CENTERS (REGISTRATION, MONITORING, CONGREGATE CARE AND DECONTAMINATION)

21. Demonstrate the adequacy of procedures, facilities, equipment and personnel for the registration, radiological monitoring and decontamination of evacuees. (27)

    Objective: Selected
    Limiting Conditions: One congregate care center and one assembly area will be demonstrated. When resources beyond the capability of the County are reached coordination for those resources will be made with the State EOC.

22. Demonstrate the adequacy of facilities, equipment and personnel for congregate care of evacuees. (28)

    Objective: Selected
    Limiting Conditions: One congregate care center and one assembly area will be demonstrated. When resources beyond the capability of the County are reached coordination for those resources will be made with the State EOC.

MEDICAL SERVICES (TRANSPORTATION AND FACILITIES)

23. Demonstrate the adequacy of vehicles, equipment, procedures and personnel for transporting contaminated, injured or exposed individuals. (30)

    Objective: Not Selected
    Limiting Conditions: This objective will be demonstrated at the Medical Drill on October 21, 1992.

24. Demonstrate the adequacy of medical facilities, equipment, procedures and personnel for handling contaminated, injured or exposed individuals. (31)

    Objective: Not Selected
    Limiting Conditions: This objective will be demonstrated at the Medical Drill on October 21, 1992.

DECONTAMINATION

25. Demonstrate the adequacy of facilities, equipment, supplies, procedures and personnel for decontamination of emergency workers, equipment and vehicles and for waste disposal. (29)

    Objective: Selected
    Limiting Conditions: Decontamination of one emergency worker will be demonstrated at the designated site.

GROUP C - OTHER OBJECTIVES:

3/2/92 DRAFT
TO BE DEMONSTRATED AT LEAST ONCE EVERY SIX-YEARS

SUPPLEMENTARY ASSISTANCE (FEDERAL/OTHER)

26. Demonstrate the ability to identify the need for and call upon Federal and other outside support agencies' assistance. (32)

Objective: Not Selected
Limiting Conditions: This objective is not a County Function and will not be demonstrated.

INGESTION EXPOSURE PATHWAY

27. Demonstrate the appropriate use of equipment and procedures for collection and transport of samples of vegetation, food crops, milk, meat, poultry, water and animal feeds (indigenous to the area and stored). (9)

Objective: Not Selected
Limiting Conditions: This objective is not a County Function and will not be demonstrated.

28. Demonstrate the appropriate lab operations and procedures for measuring and analyzing samples of vegetation, food crops, milk, meat, poultry, water and animal feeds (indigenous to the area and stored). (9)

Objective: Not Selected
Limiting Conditions: This objective is not a County Function and will not be demonstrated.

29. Demonstrate the ability to project dosage to the public for ingestion pathway exposure and determine appropriate protective measures based on field data, FDA PAG's and other relevant factors. (11)

Objective: Not Selected
Limiting Conditions: This objective is not a County Function and will not be demonstrated.

30. Demonstrate the ability to implement both preventative and emergency protective actions for ingestion pathway hazards. (12)

Objective: Not Selected
Limiting Conditions: This objective is not a County Function and will not be demonstrated.

RECOVERY, RE-ENTRY AND RELOCATION

31. Demonstrate the ability to estimate total population exposure. (34)

Objective: Not Selected
Limiting Conditions: This objective will not be demonstrated.

32. Demonstrate the ability to determine appropriate measures for controlled re-entry and recovery based on estimated total population exposure, available EPA PAG's and other relevant factors.

Objective: Not Selected
Limiting Conditions: This objective will not be demonstrated.

33. Demonstrate the ability to implement appropriate measures for controlled re-entry and recovery.

Objective: Not Selected
Limiting Conditions: This objective will not be demonstrated.

34. Demonstrate the ability to maintain staffing on a continuous 24-hour basis by an actual shift change. (2)

Objective: Not Selected
Limiting Conditions: This objective will not be demonstrated.

EVACUATION OF ONSITE PERSONNEL

35. Demonstrate the ability to coordinate the evacuation of onsite personnel. (23)

Objective: Not Selected
Limiting Conditions: Beaver Valley is located in the state of Pennsylvania. Onsite evacuees fall under their jurisdiction.

UNANNOUNCED AND OFF-HOURS

36. Demonstrate the ability to carry out emergency response functions (i.e., activate EOC's, establish communications linkages and complete telephone call down) during an unannounced off-hours drill or exercise. (New Objective)

Objective: Not Selected
Limiting Conditions: This objective will not be demonstrated.

WEST VIRGINIA STATE OBJECTIVES
for the
BEAVER VALLEY 1992 EXERCISE

GROUP A - CORE OBJECTIVES THAT ARE SCENARIO INDEPENDENT

Objective #		NUREG-0654 FEMA-REP-1
	EMERGENCY CLASSIFICATION LEVELS	
1.	Demonstrate the ability to monitor, understand and use emergency classification levels (ECL) through the appropriate implementation of emergency functions and activities corresponding to ECL's as required by the scenario. The four ECL's are: Notification of Unusual Event, Alert, Site Area Emergency, and General Emergency.	C.3 D.4
	EXPECTED DEMONSTRATION:	
	Actual demonstration. NOTE: Scenario begins at Unusual Event.	
	MOBILIZATION OF EMERGENCY PERSONNEL	
2.	Demonstrate the ability to fully alert, mobilize and activate personnel for both facility and field-based emergency functions.	E.1 E.4
	EXPECTED DEMONSTRATION:	
	State EOC; Joint Public Information Center will be fully staffed in accordance with plans. State field teams will be prepositioned in the County.	
	DIRECTION AND CONTROL	
3.	Demonstrate the ability to direct, coordinate and control emergency activities	A.1.d, A.2.a
	EXPECTED DEMONSTRATION:	
	Actual demonstration.	
	COMMUNICATIONS	
4.	Demonstrate the ability to communicate with all appropriate locations, organizations and field personnel.	F.
	EXPECTED DEMONSTRATION:	
	Actual demonstration.	

WEST VIRGINIA STATE OBJECTIVES
for the
BEAVER VALLEY 1992 EXERCISE

GROUP A - CORE OBJECTIVES THAT ARE SCENARIO INDEPENDENT

Objective 5		NUREG-0654 FEMA-REP-1
	FACILITIES, EQUIPMENT AND DISPLAYS	
5.	Demonstrate the adequacy of facilities, equipment, displays and other materials to support emergency operations.	G.3.a, H.2,3
	EXPECTED DEMONSTRATION:	
	Actual demonstration.	
	EMERGENCY WORKER EXPOSURE CONTROL	
6.	Demonstrate the ability to continuously monitor and control emergency worker exposure.	K.3
	EXPECTED DEMONSTRATION:	
	Actual demonstration.	
	FIELD RADIOLOGICAL MONITORING	
7.	Demonstrate the appropriate equipment and procedures for determining field radiation measurements.	I.8,11
	EXPECTED DEMONSTRATION:	
	Actual demonstration.	
8.	Demonstrate the appropriate equipment and procedures for the measurement of airborne radioiodine concentrations as low as 10 to -7 microcuries per cc in the presence of noble gases.	I.9
	EXPECTED DEMONSTRATION:	
	Actual demonstration.	

WEST VIRGINIA STATE OBJECTIVES
for the
BEAVER VALLEY 1992 EXERCISE

GROUP A - CORE OBJECTIVES THAT ARE SCENARIO INDEPENDENT

Objective #		NUREG-0654 FEMA-REP-1
9.	Demonstrate the ability to obtain samples of particulate activity in the airborne plume and promptly perform laboratory analyses. EXPECTED DEMONSTRATION: Transport of sample to laboratory will be simulated, but procedure will be documented with transportation provider and laboratory.	I.10
	PLUME DOSE PROJECTION	
10.	Demonstrate the ability, within the plume exposure pathway to protect dosage to the public via plume exposure, based on plant and field data. EXPECTED DEMONSTRATION: Calculations will be performed in Hancock County by State personnel from data received from BVPS. Information is then communicated to the State EOC.	I.10
	PLUME PROTECTIVE ACTION DECISIONMAKING	
11.	Demonstrate the ability to make appropriate protective action decisions, based on projected or actual dosage, EPA PAG's, availability of adequate shelter, evacuation time estimates and other relevant factors. EXPECTED DEMONSTRATION: Actual demonstration.	J.10.m

WEST VIRGINIA STATE OBJECTIVES
for the
BEAVER VALLEY 1992 EXERCISE

GROUP A - CORE OBJECTIVES THAT ARE SCENARIO INDEPENDENT

Objective #		NUREG-0654 FEMA-REP-1
	ALERT, NOTIFICATION AND EMERGENCY INFORMATION	
12.	Demonstrate the ability to initially alert the public within the 10-mile EPZ and begin dissemination of an instructional message within 15 minutes of a decision by appropriate State and/or local official/s. **EXPECTED DEMONSTRATION:** The Protective Action Recommendation is made at the State EOC. Implementation of PAR is done by the County.	E.6
13.	Demonstrate the ability to coordinate the formulation and dissemination of accurate information and instructions to the public in a timely fashion after the initial alert and notification has occurred. **EXPECTED DEMONSTRATION:** At least 2 EBS messages will be generated.	E.5, G.4.b
14.	Demonstrate the ability to brief the media in an accurate, coordinated and timely manner. **EXPECTED DEMONSTRATION:** Media briefings will be conducted at the State EOC and at the Joint Public Information Center (JPIC).	G.3.a, G.4.a
15.	Demonstrate the ability to establish and operate rumor control in a coordinated and timely fashion. **EXPECTED DEMONSTRATION:** Actual demonstration.	G.4.c

WEST VIRGINIA STATE OBJECTIVES
for the
BEAVER VALLEY 1992 EXERCISE

GROUP B - SCENARIO-DEPENDENT OBJECTIVES

Objective #		NUREG-0654 FEMA-REP-1
	USE OF POTASSIUM IODIDE (KI)	
16.	Demonstrate the ability to make the decision to recommend the use of KI to emergency workers and institutionalized persons, based on predetermined criteria, as well as to distribute and administer it once the decision is made, if necessitated by radioiodine releases. EXPECTED DEMONSTRATION: A decision by the appropriate State officials as to whether to authorize the use of KI by emergency workers will be demonstrated.	J.10.e.f
17.	Demonstrate the ability to make the decision, if the State Plan so specifies, to recommend the use of KI for the general public, based on predetermined criteria, as well as to distribute and administer it once the decision is made, if necessitated by radioiodine releases. EXPECTED DEMONSTRATION: Not applicable in West Virginia.	J.10.f
	IMPLEMENTATION OF PROTECTIVE ACTIONS	
18.	Demonstrate the ability and resources necessary to implement appropriate protective actions for the impacted permanent and transient plume EPZ population (including transit-dependent persons, special needs populations, handicapped persons and institutionalized persons). EXPECTED DEMONSTRATION: N/A at State level.	J.9, J.10.d,g

WEST VIRGINIA STATE OBJECTIVES
for the
BEAVER VALLEY 1992 EXERCISE

GROUP B - SCENARIO-DEPENDENT OBJECTIVES

Objective #		NUREG-0654 FEMA-REP
19.	Demonstrate the ability and resources necessary to implement appropriate protective actions for school children within the plume EPZ. EXPECTED DEMONSTRATION: N/A at State level.	J.9, J.10.g
20.	Demonstrate the organizational ability and resources necessary to control evacuation traffic flow and to control access to evacuated and sheltered areas. EXPECTED DEMONSTRATION: N/A at State level.	J.10.j,K
	RELOCATION CENTERS (REGISTRATION, MONITORING, CONGREGATE CARE AND DECONTAMINATION)	
21.	Demonstrate the adequacy of procedures, facilities, equipment and personnel for the registration, radiological monitoring and decontamination of evacuees. EXPECTED DEMONSTRATION: N/A at State level.	J.12
22.	Demonstrate the adequacy of facilities, equipment and personnel for congregate care of evacuees. EXPECTED DEMONSTRATION: N/A at State level.	J.10.h

WEST VIRGINIA STATE OBJECTIVES
for the
BEAVER VALLEY 1992 EXERCISE

GROUP B - SCENARIO-DEPENDENT OBJECTIVES

Objective #		NUREG-0654 FEMA-REP-1
	MEDICAL SERVICES (TRANSPORTATION AND FACILITIES)	
23.	Demonstrate the adequacy of vehicles, equipment, procedures and personnel for transporting contaminated, injured or exposed individuals.	L.4
	EXPECTED DEMONSTRATION: N/A at State level.	
24.	Demonstrate the adequacy of medical facilities, equipment, procedures and personnel for handling contaminated, injured or exposed individuals.	L.1
	EXPECTED DEMONSTRATION: N/A at State level.	
	DECONTAMINATION	
25.	Demonstrate the adequacy of facilities, equipment, supplies, procedures and personnel for decontamination of emergency workers, equipment and vehicles and for waste disposal.	K.5.a,b
	EXPECTED DEMONSTRATION: N/A at State level.	

GROUP C - OTHER OBJECTIVES: TO BE DEMONSTRATED AT LEAST ONCE EVERY SIX YEARS

	SUPPLEMENTARY ASSISTANCE (FEDERAL/OTHER)	
26.	Demonstrate the ability to identify the need for and call upon Federal and other outside support agencies' assistance.	C.1.a.b
	EXPECTED DEMONSTRATION: Actual demonstration.	

WEST VIRGINIA STATE OBJECTIVES
for the
BEAVER VALLEY 1992 EXERCISE

GROUP C - OTHER OBJECTIVES: TO BE DEMONSTRATED
AT LEAST ONCE EVERY SIX YEARS

Objective :		NUREG-0654 FEMA-REP-1
	INGESTION EXPOSURE PATHWAY	
27.	Demonstrate the appropriate use of equipment and procedures for collection and transport of samples of vegetation, food crops, milk, meat, poultry, water and animal feeds (indigenous to the area and stored).	I.8, J.11
	EXPECTED DEMONSTRATION:	
	Two (2) teams will be dispatched.	
28.	Demonstrate the appropriate lab operations and procedures for measuring and analyzing samples of vegetation, food crops, milk, meat, poultry, water and animal feeds (indigenous to the area and stored).	C.3, J.11
	EXPECTED DEMONSTRATION:	
	Laboratory will discuss procedures for analyzing samples.	
29.	Demonstrate the ability to project dosage to the public for ingestion pathway exposure and determine appropriate protective measures based on field data, FDA PAG's and other relevant factors.	I.10, J.9, J.11
	EXPECTED DEMONSTRATION:	
	Actual demonstration.	
30.	Demonstrate the ability to implement both preventative and emergency protective actions for ingestion pathway hazards.	J.9, J.11
	EXPECTED DEMONSTRATION:	
	Actual demonstration.	

WEST VIRGINIA STATE OBJECTIVES
for the
BEAVER VALLEY 1992 EXERCISE

GROUP C - OTHER OBJECTIVES: TO BE DEMONSTRATED AT LEAST ONCE EVERY SIX YEARS

Objective #		NUREG-0654 FEMA-REP-1
	RECOVERY, REENTRY AND RELOCATION	
31.	Demonstrate the ability to estimate total population exposure. EXPECTED DEMONSTRATION: Actual demonstration.	M.4
32.	Demonstrate the ability to determine appropriate measures for controlled reentry and recovery based on established total population exposure, available EPA PAG's and other relevant factors. EXPECTED DEMONSTRATION: Actual demonstration.	M.1
33.	Demonstrate the ability to implement appropriate measures for controlled reentry and recovery. EXPECTED DEMONSTRATION: Decision will be made at State level. Implementation will be demonstrated at the County level.	M.1
	MOBILIZATION OF EMERGENCY PERSONNEL (24-HOUR, CONTINUOUS BASIS)	
34.	Demonstrate the ability to maintain staffing on a continuous 24-hour basis by an actual shift change. EXPECTED DEMONSTRATION: N/A in this exercise.	A.1.e, A.4

WEST VIRGINIA STATE OBJECTIVES
for the
BEAVER VALLEY 1992 EXERCISE

GROUP C - OTHER OBJECTIVES: TO BE DEMONSTRATED
AT LEAST ONCE EVERY SIX YEARS

Objective #		NUREG-0654 FEMA-1, P-1
	EVACUATION OF ONSITE PERSONNEL	
35.	Demonstrate the ability to coordinate the evacuation of onsite personnel.	B.6, J.2
	EXPECTED DEMONSTRATION:	
	N/A in this exercise.	
	UNANNOUNCED AND OFF-HOURS	
36.	Demonstrate the ability to carry out emergency response functions (i.e., activate EOC's, mobilize staff that report to the EOC's, establish communications linkages and complete telephone call down) during an unannounced off-hours drill or exercise.	N.1.b
	EXPECTED DEMONSTRATION:	
	N/A in this exercise.	

INGESTION COUNTY OBJECTIVES
for the
BEAVER VALLEY 1992 EXERCISE

GROUP A - CORE OBJECTIVES THAT ARE SCENARIO INDEPENDENT

Objective #		NUREG-0654 FEMA-REP-1
	EMERGENCY CLASSIFICATION LEVELS	
1.	Demonstrate the ability to monitor, understand and use emergency classification levels (ECL) through the appropriate implementation of emergency functions and activities corresponding to ECL's as required by the scenario. The four ECL's are: Notification of Unusual Event, Alert, Site Area Emergency, and General Emergency.	D.3 D.4
	EXPECTED DEMONSTRATION:	
	N/A	
	MOBILIZATION OF EMERGENCY PERSONNEL	
2.	Demonstrate the ability to fully alert, mobilize and activate personnel for both facility and field-based emergency functions.	E.1 E.4
	EXPECTED DEMONSTRATION:	
	The ingestion counties will partially activate their EOC'S with appropriate staff to demonstrate their requirements.	
	DIRECTION AND CONTROL	
3.	Demonstrate the ability to direct, coordinate and control emergency activities	A.1.d, A.2.a
	EXPECTED DEMONSTRATION:	
	Actual demonstration.	
	COMMUNICATIONS	
4	Demonstrate the ability to communicate with all appropriate locations, organizations and field personnel.	F.
	EXPECTED DEMONSTRATION:	
	Actual demonstration, no limits on communications.	

INGESTION COUNTY OBJECTIVES
for the
BEAVER VALLEY 1992 EXERCISE

GROUP A - CORE OBJECTIVES THAT ARE SCENARIO INDEPENDENT

Objective #		NUREG-0654 FEMA-REP-1
	FACILITIES, EQUIPMENT AND DISPLAYS	
5.	Demonstrate the adequacy of facilities, equipment, displays and other materials to support emergency operations.	G.3.a, H.2,3
	EXPECTED DEMONSTRATION:	
	Actual demonstration.	
	EMERGENCY WORKER EXPOSURE CONTROL	
6.	Demonstrate the ability to continuously monitor and control emergency worker exposure.	K.3
	EXPECTED DEMONSTRATION:	
	N/A	
	FIELD RADIOLOGICAL MONITORING	
7.	Demonstrate the appropriate equipment and procedures for determining field radiation measurements.	I.8,11
	EXPECTED DEMONSTRATION:	
	N/A	
8.	Demonstrate the appropriate equipment and procedures for the measurement of airborne radioiodine concentrations as low as 10 to -7 microcuries per cc in the presence of noble gases.	I.9
	EXPECTED DEMONSTRATION:	
	N/A	

INGESTION COUNTY OBJECTIVES
for the
BEAVER VALLEY 1992 EXERCISE

GROUP A - CORE OBJECTIVES THAT ARE SCENARIO INDEPENDENT

Objective #		NUREG-0654 FEMA-REP-1
9.	Demonstrate the ability to obtain samples of particulate activity ir the airborne plume and promptly perform laboratory analyses.	I.10
	EXPECTED DEMONSTRATION:	
	N/A	
	PLUME DOSE PROJECTION	
10.	Demonstrate the ability, within the plume exposure pathway to protect dosage to the public via plume exposure, based. on plant and field data.	I.10
	EXPECTED DEMONSTRATION:	
	N/A	
	PLUME PROTECTIVE ACTION DECISIONMAKING	
11.	Demonstrate the ability to make appropriate protective action decisions, based on projected or actual dosage, EPA PAG's, availability of adequate shelter, evacuation time estimates and other relevant factors.	J.10.m
	EXPECTED DEMONSTRATION:	
	N/A	
	ALERT, NOTIFICATION AND EMERGENCY INFORMATION	
12.	Demonstrate the ability to initially alert the public within the 10-mile EPZ and begin dissemination of an instructional message within 15 minutes of a decision by appropriate State and/or local official/s.	E.6
	EXPECTED DEMONSTRATION:	
	N/A	

INGESTION COUNTY OBJECTIVES
for the
BEAVER VALLEY 1992 EXERCISE

GROUP A - CORE OBJECTIVES THAT ARE SCENARIO INDEPENDENT

Objective #		NUREG-0654 FEMA-REP-1
13.	Demonstrate the ability to coordinate the formulation and dissemination of accurate information and instructions to the public in a timely fashion after the initial alert and notification has occurred. EXPECTED DEMONSTRATION: Staff briefings will be demonstrated. Instructions to the public will be demonstrated in a tabletop format.	E 5, G.4.b
14.	Demonstrate the ability to brief the media in an accurate, coordinated and timely manner. EXPECTED DEMONSTRATION: There will be no media briefings conducted at the County. Media procedures will be discussed in a tabletop format.	G.3.a, G.4.a
15.	Demonstrate the ability to establish and operate rumor control in a coordinated and timely fashion. EXPECTED DEMONSTRATION: Rumor Control will be demonstrated in a tabletop format.	G.4.c

GROUP B - SCENARIO-DEPENDENT OBJECTIVES

USE OF POTASSIUM IODIDE (KI)

16.	Demonstrate the ability to make the decision to recommend the use of KI to emergency workers and institutionalized persons, based on predetermined criteria, as well as to distribute and administer it once the decision is made, if necessitated by radioiodine releases. EXPECTED DEMONSTRATION: N/A	J.10.e,f

INGESTION COUNTY OBJECTIVES
for the
BEAVER VALLEY 1992 EXERCISE

GROUP B - SCENARIO-DEPENDENT OBJECTIVES

Objective #		NUREG-0654 FEMA-REP-1
17.	Demonstrate the ability to make the decision, if the State Plan so specifies, to recommend the use of KI for the general public, based on predetermined criteria, as well as to distribute and administer it once the decision is made, if necessitated by radioiodine releases. EXPECTED DEMONSTRATION: N/A	J.10.f
	IMPLEMENTATION OF PROTECTIVE ACTIONS	
18.	Demonstrate the ability and resources necessary to implement appropriate protective actions for the impacted permanent and transient plume EPZ population (including transit-dependent persons, special needs populations, handicapped persons and institutionalized persons). EXPECTED DEMONSTRATION: N/A	J.9, J.10.d,g
19.	Demonstrate the ability and resources necessary to implement appropriate protective actions for school children within the plume EPZ. EXPECTED DEMONSTRATION: N/A	J.9, J.10.g
20.	Demonstrate the organizational ability and resources necessary to control evacuation traffic flow and to control access to evacuated and sheltered areas. EXPECTED DEMONSTRATION: N/A	J.10.j,K

INGESTION COUNTY OBJECTIVES
for the
BEAVER VALLEY 1992 EXERCISE

GROUP B - SCENARIO-DEPENDENT OBJECTIVES

Objective #		NUREG-0654 FEMA-REP-1
	RELOCATION CENTERS (REGISTRATION, MONITORING, CONGREGATE CARE AND DECONTAMINATION)	
21.	Demonstrate the adequacy of procedures, facilities, equipment and personnel for the registration, radiological monitoring and decontamination of evacuees. EXPECTED DEMONSTRATION: N/A	J.12
22.	Demonstrate the adequacy of facilities, equipment and personnel for congregate care of evacuees. EXPECTED DEMONSTRATION: N/A	J.10.h
	MEDICAL SERVICES (TRANSPORTATION AND FACILITIES)	
23.	Demonstrate the adequacy of vehicles, equipment, procedures and personnel for transporting contaminated, injured or exposed individuals. EXPECTED DEMONSTRATION: N/A	L.4
24.	Demonstrate the adequacy of medical facilities, equipment, procedures and personnel for handling contaminated, injured or exposed individuals. EXPECTED DEMONSTRATION: N/A	L.1

INGESTION COUNTY OBJECTIVES
for the
BEAVER VALLEY 1992 EXERCISE

GROUP B - SCENARIO-DEPENDENT OBJECTIVES

Objective #		NUREG-0654 FEMA-REP-1
	DECONTAMINATION	
25.	Demonstrate the adequacy of facilities, equipment, supplies, procedures and personnel for decontamination of emergency workers, equipment and vehicles and for waste disposal.	K.5.a,b
	EXPECTED DEMONSTRATION:	
	N/A	

GROUP C - OTHER OBJECTIVES: TO BE DEMONSTRATED AT LEAST ONCE EVERY SIX YEARS

	SUPPLEMENTARY ASSISTANCE (FEDERAL/OTHER)	
26.	Demonstrate the ability to identify the need for and call upon Federal and other outside support agencies' assistance.	C.1.a.b
	EXPECTED DEMONSTRATION:	
	N/A	
	INGESTION EXPOSURE PATHWAY	
27.	Demonstrate the appropriate use of equipment and procedures for collection and transport of samples of vegetation, food crops, milk, meat, poultry, water and animal feeds (indigenous to the area and stored).	I.8, J.11
	EXPECTED DEMONSTRATION:	
	N/A	
28.	Demonstrate the appropriate lab operations and procedures for measuring and analyzing samples of vegetation, food crops, milk, meat, poultry, water and animal feeds (indigenous to the area and stored).	C.3, J.11
	EXPECTED DEMONSTRATION:	
	N/A	

INGESTION COUNTY OBJECTIVES
for the
BEAVER VALLEY 1992 EXERCISE

GROUP C - OTHER OBJECTIVES: TO BE DEMONSTRATED AT LEAST ONCE EVERY SIX YEARS

Objective #		NUREG-0654 FEMA-REP-1
29.	Demonstrate the ability to project dosage to the public for ingestion pathway exposure and determine appropriate protective measures based on field data, FDA PAG's and other relevant factors. EXPECTED DEMONSTRATION: N/A	I.10, J.9, J.11
30.	Demonstrate the ability to implement both preventative and emergency protective actions for ingestion pathway hazards. EXPECTED DEMONSTRATION: Preventative and emergency protective actions are recommended at the State level. Implementation is accomplished at the County level. These actions will be demonstrated in a tabletop format.	J.9, J.11
	RECOVERY, REENTRY AND RELOCATION	
31.	Demonstrate the ability to estimate total population exposure. EXPECTED DEMONSTRATION: N/A	M.4
32.	Demonstrate the ability to determine appropriate measures for controlled reentry and recovery based on established total population exposure, available EPA PAG's and other relevant factors. EXPECTED DEMONSTRATION: N/A	M.1

INGESTION COUNTY OBJECTIVES
for the
BEAVER VALLEY 1992 EXERCISE

GROUP C - OTHER OBJECTIVES: TO BE DEMONSTRATED AT LEAST ONCE EVERY SIX YEARS

Objective #		NUREG-0654 FEMA-REP-1
33.	Demonstrate the ability to implement appropriate measures for controlled reentry and recovery.	M.1
	EXPECTED DEMONSTRATION:	
	N/A	
	MOBILIZATION OF EMERGENCY PERSONNEL (24-HOUR, CONTINUOUS BASIS)	
34.	Demonstrate the ability to maintain staffing on a continuous 24-hour basis by an actual shift change.	A.1.e, A.4
	EXPECTED DEMONSTRATION:	
	N/A	
	EVACUATION OF ONSITE PERSONNEL	
35.	Demonstrate the ability to coordinate the evacuation of onsite personnel.	B.6, J.2
	EXPECTED DEMONSTRATION:	
	N/A	
	UNANNOUNCED AND OFF-HOURS	
36.	Demonstrate the ability to carry out emergency response functions (i.e., activate EOC's, mobilize staff that report to the EOC's, establish communications linkages and complete telephone call down) during an unannounced off-hours drill or exercise.	N.1.b
	EXPECTED DEMONSTRATION:	
	N/A	

HANCOCK COUNTY OBJECTIVES
for the
BEAVER VALLEY 1992 EXERCISE

GROUP A - CORE OBJECTIVES THAT ARE SCENARIO INDEPENDENT

Objective #		NUREG-0654 FEMA-REP-1
	EMERGENCY CLASSIFICATION LEVELS	
1.	Demonstrate the ability to monitor, understand and use emergency classification levels (ECL) through the appropriate implementation of emergency functions and activities corresponding to ECL's as required by the scenario. The four ECL's are: Notification of Unusual Event, Alert, Site Area Emergency, and General Emergency.	D.3 D.4
	EXPECTED DEMONSTRATION:	
	Actual demonstration. NOTE: Scenario begins at Unusual Event.	
	MOBILIZATION OF EMERGENCY PERSONNEL	
2.	Demonstrate the ability to fully alert, mobilize and activate personnel for both facility and field-based emergency functions.	E.1 E.4
	EXPECTED DEMONSTRATION:	
	State and County EOC's; Joint Public Information Center; full staffing in accordance with plans.	
	Other facilities (reception and mass care centers, emergency worker decon station) and field activities (field teams, access/ traffic control): number of activated personnel specified under associated Objectives.	
	DIRECTION AND CONTROL	
3.	Demonstrate the ability to direct, coordinate and control emergency activities	A.1.d, A.2.a
	EXPECTED DEMONSTRATION:	
	Actual demonstration.	

HANCOCK COUNTY OBJECTIVES
for the
BEAVER VALLEY 1992 EXERCISE

GROUP A - CORE OBJECTIVES THAT ARE SCENARIO INDEPENDENT

Objective #		NUREG-0654 FEMA-REP-1
	COMMUNICATIONS	
4.	Demonstrate the ability to communicate with all appropriate locations, organizations and field personnel.	F.
	EXPECTED DEMONSTRATION:	
	Actual demonstration.	
	FACILITIES, EQUIPMENT AND DISPLAYS	
5.	Demonstrate the adequacy of facilities, equipment, displays and other materials to support emergency operations.	G.3.a, H.2,3
	EXPECTED DEMONSTRATION:	
	Actual demonstration.	
	EMERGENCY WORKER EXPOSURE CONTROL	
6.	Demonstrate the ability to continuously monitor and control emergency worker exposure.	K.3
	EXPECTED DEMONSTRATION:	
	1) Dosimetry at storage locations, to verify quantity. 2) Briefing by Radiological Officer on equipment use. 3) Simulated TLD's and KI to be used.	
	FIELD RADIOLOGICAL MONITORING	
7.	Demonstrate the appropriate equipment and procedures for determining field radiation measurements.	I.8,11
	EXPECTED DEMONSTRATION:	
	N/A for the County.	

HANCOCK COUNTY OBJECTIVES
for the
BEAVER VALLEY 1992 EXERCISE

GROUP A - CORE OBJECTIVES THAT ARE SCENARIO INDEPENDENT

Objective #		NUREG-0654 FEMA-REP-1
8.	Demonstrate the appropriate equipment and procedures for the measurement of airborne radioiodine concentrations as low as 10 to -7 microcuries per cc in the presence of noble gases. EXPECTED DEMONSTRATION: N/A for the County.	I.9
9.	Demonstrate the ability to obtain samples of particulate activity in the airborne plume and promptly perform laboratory analyses. EXPECTED DEMONSTRATION: N/A for the County.	I.10
	PLUME DOSE PROJECTION	
10.	Demonstrate the ability, within the plume exposure pathway to protect dosage to the public via plume exposure, based on plant and field data. EXPECTED DEMONSTRATION: N/A for the County.	I.10
	PLUME PROTECTIVE ACTION DECISIONMAKING	
11.	Demonstrate the ability to make appropriate protective action decisions, based on projected or actual dosage, EPA PAG's, availability of adequate shelter, evacuation time estimates and other relevant factors. EXPECTED DEMONSTRATION: County may adjust decision based on local constraints.	J.10.m

HANCOCK COUNTY OBJECTIVES
for the
BEAVER VALLEY 1992 EXERCISE

GROUP A - CORE OBJECTIVES THAT ARE SCENARIO INDEPENDENT

Objective #		NUREG-0654 FEMA-REP-1
	ALERT, NOTIFICATION AND EMERGENCY INFORMATION	
12.	Demonstrate the ability to initially alert the public within the 10-mile EPZ and begin dissemination of an instructional message within 15 minutes of a decision by appropriate State and/or local official/s.	E.6

EXPECTED DEMONSTRATION:

1) The fifteen minute capability will be demonstrated upon the initial Alert and Notification System activation, and possibly for the initial protective action decision.
2) The siren and EBS activations will be coordinated with Beaver and Columbiana Counties to achieve simultaneous activations throughout the EPZ.
3) Preparation of an appropriate EBS message, with information pertinent to the scenario events, will be demonstrated; distribution of the message will be simulated. The CPCS-1 EBS station will be notified but not activated.
4) Siren activation will be simulated in the County EOC.
5) Route Alerting capability will be demonstrated by two Route Alert teams and through discussions in the County EOC for all hearing-impaired residents to demonstrate siren-backup capability.

HANCOCK COUNTY OBJECTIVES
for the
BEAVER VALLEY 1992 EXERCISE

GROUP A - CORE OBJECTIVES THAT ARE SCENARIO INDEPENDENT

Objective #		NUREG-0654 FEMA-REP-1
13.	Demonstrate the ability to coordinate the formulation and dissemination of accurate information and instructions to the public in a timely fashion after the initial alert and notification has occurred. EXPECTED DEMONSTRATION: 1) EBS messages containing appropriate information and instructions will be prepared in the EOC for each change in emergency classification and/or protective action, including any updates. 2) The CPCS-1 EBS Station will be notified but not activated.	E.5, G.4.b
14.	Demonstrate the ability to brief the media in an accurate, coordinated and timely manner. EXPECTED DEMONSTRATION: 1) News releases will be prepared, coordinated, and exchanged, and media briefings will be performed in accordance with the plans. 2) Media briefings will take place at the JPIC. EBS messages and news releases will be prepared in the EOC.	G.3.a, G.4.a
15.	Demonstrate the ability to establish and operate rumor control in a coordinated and timely fashion. EXPECTED DEMONSTRATION: Actual demonstration.	G.4.c

HANCOCK COUNTY OBJECTIVES
for the
BEAVER VALLEY 1992 EXERCISE

GROUP B - SCENARIO-DEPENDENT OBJECTIVES

Objective #		NUREG-0654 FEMA-REP-1
	USE OF POTASSIUM IODIDE (KI)	
16.	Demonstrate the ability to make the decision to recommend the use of KI to emergency workers and institutionalized persons, based on predetermined criteria, as well as to distribute and administer it once the decision is made, if necessitated by radioiodine releases.	J.10.e.f

EXPECTED DEMONSTRATION:

1) Both parts of this objective will be demonstrated: a) a decision by appropriate State officials as to whether to authorize the use of KI by emergency workers, and b) the availability of an adequate supply of KI, and the distribution procedure.
2) Demonstration of Part B of this Objective will include: a) supply of KI at County storage location (to verify quantity) b) delivery procedure, in real time, if required. This includes transfer of (simulated) KI from the storage location to the distribution site, during the exercise, according to the plans. c) distribution procedure to emergency workers, including briefing.
3) Emergency workers in the field and monitors at mass care and emergency worker decon centers will have simulated KI and be fully knowledgeable of the procedures for its administration.
4) NOTE: The use of KI in West Virginia is limited to emergency workers, not institutionalized persons.

HANCOCK COUNTY OBJECTIVES
for the
BEAVER VALLEY 1992 EXERCISE

GROUP B - SCENARIO-DEPENDENT OBJECTIVES

Objective #		NUREG-0654 FEMA-REP-1
17.	Demonstrate the ability to make the decision, if the State Plan so specifies, to recommend the use of KI for the general public, based on predetermined criteria, as well as to distribute and administer it once the decision is made, if necessitated by radioiodine releases. EXPECTED DEMONSTRATION: N/A for the general public.	J.10.f
	IMPLEMENTATION OF PROTECTIVE ACTIONS	
18.	Demonstrate the ability and resources necessary to implement appropriate protective actions for the impacted permanent and transient plume EPZ population (including transit-dependent persons, special needs populations, handicapped persons and institutionalized persons). EXPECTED DEMONSTRATION: 1) Lists of people with special needs will be reviewed in the EOC and at the fire department performing Route Alerting. 2) Calls will be made in the EOC to providers of buses, ambulances, and other vehicles to verify availability (vehicles will not be dispatched). 3) Calls to hospitals and nursing homes for patient census will be made in the EOC, including arrangements for host health care facilities.	J.9, J.10.d,g
19.	Demonstrate the ability and resources necessary to implement appropriate protective actions for school children within the plume EPZ. EXPECTED DEMONSTRATION: Will not be demonstrated due to schools' summer recess, however, EOC discussions will take place.	J.9, J.10.g

HANCOCK COUNTY OBJECTIVES
for the
BEAVER VALLEY 1992 EXERCISE

GROUP B - SCENARIO-DEPENDENT OBJECTIVES

Objective #		NUREG-0654 FEMA-REP-1
20.	Demonstrate the organizational ability and resources necessary to control evacuation traffic flow and to control access to evacuated and sheltered areas. EXPECTED DEMONSTRATION: The requirements for establishing traffic and access control for the entire evacuated area will be addressed administratively at the County EOC, in accordance with the plans. Actual field demonstration will be one Traffic/ Access Control Point, performed out-of-sequence (between 7 and 8 p.m.).	J.10.j,K
	RELOCATION CENTERS (REGISTRATION, MONITORING, CONGREGATE CARE AND DECONTAMINATION)	
21.	Demonstrate the adequacy of procedures, facilities, equipment and personnel for the registration, radiological monitoring and decontamination of evacuees. EXPECTED DEMONSTRATION: One Mass Care Center and one Reception Center will be established. Centers will be fully staffed, including monitoring/ decontamination personnel. Reception Center procedures call for vehicle monitoring only; decontamination is a Mass Care Center team responsibility.	J.12
22.	Demonstrate the adequacy of facilities, equipment and personnel for congregate care of evacuees. EXPECTED DEMONSTRATION: One Mass Care Center will be established. Center will be fully staffed, including monitoring/decontamination personnel.	J.10.h

HANCOCK COUNTY OBJECTIVES
for the
BEAVER VALLEY 1992 EXERCISE

GROUP B - SCENARIO-DEPENDENT OBJECTIVES

Objective #		NUREG-0654 FEMA-REP-1
	MEDICAL SERVICES (TRANSPORTATION AND FACILITIES)	
23.	Demonstrate the adequacy of vehicles, equipment, procedures and personnel for transporting contaminated, injured or exposed individuals.	L.4
	EXPECTED DEMONSTRATION: To be demonstrated during the Annual MS-1 Exercise on September 1, 1992.	
24.	Demonstrate the adequacy of medical facilities, equipment, procedures and personnel for handling contaminated, injured or exposed individuals.	L.1
	EXPECTED DEMONSTRATION: To be demonstrated during the Annual MS-1 Exercise on September 1, 1992.	
	DECONTAMINATION	
25.	Demonstrate the adequacy of facilities, equipment, supplies, procedures and personnel for decontamination of emergency workers, equipment and vehicles and for waste disposal.	K.5.a,b
	EXPECTED DEMONSTRATION: 1) One emergency worker decontamination center will be established; center will be fully staffed. 2) FEMA Objectives #4 (Communication), #6 (Exposure Control) and #16 (Use of Potassium Iodide) will be evaluated in conjunction with this objective.	

HANCOCK COUNTY OBJECTIVES
for the
BEAVER VALLEY 1992 EXERCISE

GROUP C - OTHER OBJECTIVES: TO BE DEMONSTRATED
AT LEAST ONCE EVERY SIX YEARS

Objective #		NUREG-0654 FEMA-REP-1
	SUPPLEMENTARY ASSISTANCE (FEDERAL/OTHER)	
26.	Demonstrate the ability to identify the need for and call upon Federal and other outside support agencies' assistance.	C.1.a.b
	EXPECTED DEMONSTRATION:	
	N/A for the County.	
	INGESTION EXPOSURE PATHWAY	
27.	Demonstrate the appropriate use of equipment and procedures for collection and transport of samples of vegetation, food crops, milk, meat, poultry, water and animal feeds (indigenous to the area and stored).	I.8, J.11
	EXPECTED DEMONSTRATION:	
	N/A for the County.	
28.	Demonstrate the appropriate lab operations and procedures for measuring and analyzing samples of vegetation, food crops, milk, meat, poultry, water and animal feeds (indigenous to the area and stored).	C.3, J.11
	EXPECTED DEMONSTRATION:	
	N/A for the County.	
29.	Demonstrate the ability to project dosage to the public for ingestion pathway exposure and determine appropriate protective measures based on field data, FDA PAG's and other relevant factors.	I.10, J.9, J.11
	EXPECTED DEMONSTRATION:	
	N/A for the County.	

HANCOCK COUNTY OBJECTIVES
for the
BEAVER VALLEY 1992 EXERCISE

GROUP C - OTHER OBJECTIVES: TO BE DEMONSTRATED AT LEAST ONCE EVERY SIX EARS

Objective #		NUREG-0654 FEMA-REP-1
30.	Demonstrate the ability to implement both preventative and emergency protective actions for ingestion pathway hazards.	J.9, J.11
	EXPECTED DEMONSTRATION:	
	N/A for the County.	
	RECOVERY, REENTRY AND RELOCATION	
31.	Demonstrate the ability to estimate total population exposure.	M.4
	EXPECTED DEMONSTRATION:	
	N/A for the County.	
32.	Demonstrate the ability to determine appropriate measures for controlled reentry and recovery based on established total population exposure, available EPA PAG's and other relevant factors.	M.1
	EXPECTED DEMONSTRATION:	
	N/A for the County.	
33.	Demonstrate the ability to implement appropriate measures for controlled reentry and recovery.	M.1
	EXPECTED DEMONSTRATION:	
	County activities will be based upon decisions made at the State.	
	MOBILIZATION OF EMERGENCY PERSONNEL (24-HOUR, CONTINUOUS BASIS)	
34.	Demonstrate the ability to maintain staffing on a continuous 24-hour basis by an actual shift change.	A.1.e, A.4
	EXPECTED DEMONSTRATION:	
	Not an objective for this exercise.	

HANCOCK COUNTY OBJECTIVES
for the
BEAVER VALLEY 1992 EXERCISE

GROUP C - OTHER OBJECTIVES: TO BE DEMONSTRATED
AT LEAST ONCE EVERY SIX YEARS

Objective #		NUREG-0654 FEMA-REP-1
	EVACUATION OF ONSITE PERSONNEL	
35.	Demonstrate the ability to coordinate the evacuation of onsite personnel.	B.6, J.2
	EXPECTED DEMONSTRATION:	
	N/A for the County.	
	UNANNOUNCED AND OFF-HOURS	
36.	Demonstrate the ability to carry out emergency response functions (i.e., activate EOC's, mobilize staff that report to the EOC's, establish communications linkages and complete telephone call down) during an unannounced off-hours drill or exercise.	N.1.b
	EXPECTED DEMONSTRATION:	
	Not an objective for this exercise.	

THIS PAGE INTENTIONALLY BLANK

Precautions & Limitations

Section III

Section III

PRECAUTIONS AND LIMITATIONS

This section provides information for all exercise Controllers and Observers related to the rules and guidelines to be followed throughout the conduct of this exercise. Prior to initiation of the exercise, a pre-exercise briefing will be held to review the entire exercise process with all the exercise Controllers and Observers identified in the Introduction Section of this package.

A. Should, at any time during the course of the conduct of this exercise, an actual emergency situation arise, all activities and communications related to the exercise will be suspended. It will be the responsibility of any exercise Controller or Observer that becomes aware of an actual emergency to suspend exercise response in his/her immediate area and to inform the Lead exercise Controllers of the situation. Upon notification of an actual emergency, the Lead exercise Controllers will notify all other Controllers/Observers to suspend all exercise activities.

B. Should, at any time during the course of the conduct of this exercise, an exercise Controller or Observer witness an exercise participant undertake any action which would, in the opinion of the Controller/Observer, place either an individual or component in an unsafe condition, the Controller/Observer is responsible for intervening in the individuals actions and terminating the unsafe activity immediately. Upon termination of the activity, the Controller/Observer is responsible for contacting the Lead exercise Controllers and informing them of the situation. The Lead exercise Controllers will make a determination at that point whether to continue, place a temporary hold on, or terminate the exercise.

C. No pressurization of fire hoses, discharging of fire extinguishers, or initiation of any fire suppression systems will be required.

Section III

PRECAUTIONS AND LIMITATIONS (continued)

D. Manipulation of any plant operating systems, valves, breakers or controls in response to this exercise are only to be simulated. There is to be no alteration of any plant operating equipment, systems or circuits during the response to this exercise.

E. All repair activities associated with the scenario will be simulated with extreme caution emphasized around operating equipment.

F. All telephone communications, radio transmissions and public address announcements related to the exercise must begin and end with the statement, "This is an exercise (or drill)." Should a Controller or Observer witness an exercise participant not observing this practice, it is the Controllers/Observers responsibility to remind the individual of the need to follow this procedure.

G. Any motor vehicle response to this exercise, whether it be ambulance, fire fighting equipment, police/security vehicles or field monitoring teams, should observe all normal motor vehicle operating laws including posted speed limits, stop lights/signs, one way streets, etc.

H. Should any onsite security actions be required in response to this exercise, exercise participants are to cooperate as directed, and security representatives are to be prudent and tolerant in their actions.

I. Exercise participants are to inject as much realism into the exercise as is consistent with its safe performance; however, caution must be used to prevent overreaction.

Section III

PRECAUTIONS AND LIMITATIONS (continued)

J. Care must be taken to assure that any non-participating individuals who may observe exercise activities or overhear exercise communications are not misled into believing that an actual emergency exists. Any exercise Controller or Observer who is aware of an individual or group of individuals in the immediate vicinity who may have become alarmed or confused about the situation, should approach that individual or group and explain the nature of the exercise and its intent.

K. Meteorological, operational and radiological data will be supplied by Controllers. Realtime data will be used only at the direction of a Controller.

L. If you disagree with data provided by a Controller, discuss this quietly and if time permits he/she may contact the Lead Controller but theirs is the final word.

M. Exercises often involve high radiation and airborne problems. Treat them as if they are real and act accordingly. Do not be confused by the fact that Controller/Observers are exempt from acting as if high levels exist. No one is exempt from normal station radiological practices.

N. Use your logs, status boards, etc. as much as possible to document your drill related actions. Remember: "Put it in writing." All such documents are considered to be QA exercise records and at the end of the exercise should be put in the envelopes provided in various emergency centers.

O. Full participation in the areas of notifications, dissemination of information, decision making and protective action recommendations are planned by the States and Counties. Controllers will provide a listing of Offsite agencies actually to be contacted.

Section III

PRECAUTIONS AND LIMITATIONS (continued)

P. If you feel the exercise has revealed deficiencies in emergency plans, procedures, training or equipment, bring this to the attention of a Controller or write it down and give it to a Controller/Observer. Do not trust that you will remember the problem later.

Q. Remember: Speak out loud and identify your key actions and decisions and do not assume that a simulated or unobserved action worked. This seems artificial but it is essential to the conduct and evaluation of the exercise.

R. Plant operational parameters will be preprogrammed into the Plant Variable Computer (PVC). Realtime data will not be used in the drill, unless specified by controllers.

S. Since operational and radiological data follows a predetermined course to accomplish objectives for the exercise, players should not limit their attempts at problem solving to the situations posed to them. Alternative solutions are encouraged and should be brought to the attention of the controller in their respective areas. Controllers will note alternatives, but may have to direct a course of action to stay within the scenario.

Events Summary

Section IV

Section IV

EVENTS SUMMARY

Any emergency exercise must have a significant effort put forth in research and development to ensure that the events depicted are as realistically possible as can be simulated through the use of cue cards, signs, etc. For discussion purposes, these events can generally be broken down into two categories:

1. Human Error, and

2. Equipment Malfunction.

The first, human error, is the easiest and more flexible of the two categories to identify in a scenario; however, no one likes to assume that they will make mistakes, especially of the magnitude to cause significant plant damage or offsite consequences. This does not, however, preclude using this means to provide input into the scenario, since the possibility for human error does exist based on the amount of human judgement involved in implementing emergency response actions for off-normal plant events.

The second category, equipment malfunction, is much harder to incorporate into a scenario, especially where it is needed to cause plant damage that creates a serious problem to the offsite environment. This is true because of the tremendous effort placed on equipment reliability and redundancy during design, fabrication and installation of systems at nuclear power facilities. The Safety Analysis Report, written for all nuclear facilities, including the Beaver Valley Power Station, analyzes the capabilities of plant systems to maintain control over radioactive material within the plant during all types of off-normal plant incidents. Thus, in order to incorporate equipment-related problems into the scenario, some unrealistic assumptions must be made.

Additionally, the public's perception of the exercise scenario often times leads them to believe that these events may very well be probable. However, it should be known that if the events in the exercise scenario presented within were at all possible, an unanswered safety question would exist and actions would be taken to rectify the situation.

Section IV

EVENTS SUMMARY (continued)

Thus, in order to achieve a sequence of events that will lead to a significant plant problem, the exercise scenario must contain an incredible plant situation, and unlikely series of equipment failures, or an improbable operator error combined with equipment failures. For this scenario in particular, the following assumptions have been made in order to force the participants into an unusually high level of response activities that may never normally be required.

Justification & Basis
for
Events

Section IV

(Part A)

Section IV

Justification and Basis for Events

First, it is important to realize (especially for the plant participants and observers) that the scenario is not there to test the Operator's knowledge of the plant. It definitely should be as realistic and as comprehensive as possible. However, no scenario can provide the detailed information or exact time sequence that will actually occur during a similar plant event unless the exercise is run using a Control Room simulator. Even then, much of the data and observations must come from in-plant locations other than the Control Room where, again, cue sheets or signs must be used and, thus, the simulation is far from realistic. What the scenario should do is provide enough impetus to test not only the Operators, but also, the rest of the response organizations on their knowledge of the Emergency Plans, implementing and/or Standard Operating Procedures, and how each must interface with the other.

Second, it should be understood that many varied conditions must be assumed initially in order to provide answers to expected Operator or Engineering responses that will occur following each event in the scenario. This is important since their attitude during the exercise can affect the attitude and perception of the overall response given an exact or detailed summary of why their suggestion won't work to mitigate the event, they will react as if the situation is more realistic and, armed with this new information, attack the problem more eagerly. This eagerness and willingness-to-respond attitude has proven in the past to be transferred to the offsite participants. On the other hand, if they are given a "no, this won't work" answer, they get disgruntled and disgusted with the scenario, won't know where to look next and won't care since they'll expect the same answer. This definitely has a detrimental transfer effect on how communications flow and how the interface with offsite agencies occurs. For this reason, a comprehensive set of initial plant conditions has been developed and, no matter how unrealistic it appears to be in the beginning of the exercise, this will soon be forgotten once they are into the exercise and each of these in turn plays an active role in providing input into Operator and Engineering response actions.

In addition, the exercise scenario was designed to inject as much realism into the postulated events as is consistent with safe performance. Non-participating individuals who may observe the exercise, listen to communications or review this exercise package may be misled into believing an actual emergency of this type would occur at Beaver Valley Power Station with similar results to offsite areas. To resolve this situation, the following information is provided to resolve any major concerns which could develop based on scenario content.

Section IV

JUSTIFICATION AND BASIS FOR EVENTS

As indicated in the Written Summary (Part B of this Section), the exercise scenario utilized a combination of many events to achieve escalation to a General Emergency classification. Based on this understanding, the following Emergency Action Levels (EALs) were used to upgrade the emergency classification from an Unusual Event, to an Alert, to a Site Area Emergency and finally, to a General Emergency. It should be noted that the Scenario Development Committee has chosen only a few of the applicable EAL's and the Exercise Players may use alternate EAL's to achieve the final end point in the scenario.

Justification and Basis for Events

1) Unusual Event

A. Initiating Condition (EAL)- (TAB 18) Toxic/Flammable Gases

UNUSUAL EVENT (A OR B OR C OR D)

A. CRITERION: Report By Plant Personnel of a Chlorine Gas Release Within The SITE PERIMETER Rendering an Area Inaccessible.

B. CRITERION: Confirmed Observation By Plant Personnel of an Onsite Release of Flammable Gas (i.e., H2) Within The SITE PERIMETER.

INDICATORS:

1. Report by Plant Personnel That the Average of Three Readings Taken in a 10 ft. Triangular Pattern in a Yard Area Adjacent to a Facility Structure is > 25% LEL as Indicated on the GasTech.

C. CRITERION: Confirmed Report By Local, County or State Officials That an Offsite Toxic/Flammable Gas Release Has Occurred Within One Mile of the Plant (Refer to Figure 2).

NOTE: Report Verification Should Be Made Through the Beaver County Emergency Management Agency (775-0880).

NOTE: Refer to AOP 1/2 44A.1 "Chlorine/Toxic Gas Release" Attachment 1 For a List of Chemicals Stored, Produced or Transported Near BVPS and Their Toxicity Limits.

D. CRITERION: Report of Detrimental Personnel Health Affects Due to Toxic Gas Onsite From an Undetermined Source.

Justification and Basis for Events

Section IV

2) Alert

A. Initiating Condition (EAL)- (Tab 26) Explosion

ALERT (A OR B)

A. CRITERION: Unanticipated Explosion Within Any of the Following Buildings of Sufficient Force to Result in Any Visible Damage to Permanent Plant Equipment or Structures.

- Main Steam Valve Room
- Containment Building
- Primary Aux. Building
- Service Building
- Cable Vault & Rod Control Bldg.
- RWST (QSS*TK21)
- Primary Plant Demin Water Storage Bldg. (FWE-TK-210)
- Control Building
- Penetrations Area
- Diesel Generator Building
- Primary Intake Structure
- Fuel Building
- Unit 1-2 Cable Tunnel (CV-3)
- Safeguards Building
- Cable Tunnel and Spreading Rooms
- Emergency Switchgear
- Relay Room

INDICATORS:

1. Confirmed Report By Plant Personnel of an Explosion in Any of the Above Buildings/Areas, of Sufficient Force to Result in Any Visible Damage to Permanent Plant Equipment or Structures.

B. CRITERION: Unanticipated Explosion Which Results in a Unit Trip.

INDICATORS: (1 AND 2)

1. Report By Plant Personnel of an Explosion.

2. Turbine and/or Reactor Trip Results From the Explosion.

OR

B. Initiating Condition (EAL)- (TAB 25) Fire

ALERT

A. CRITERION: FIRE in the Following Areas Not Extinguished Within Ten (10) Minutes From the Initiation of Fire Fighting Activities (Application of the Extinguishing Agent).

- Control Room *
- Instrument and Relay Room 707'*
- Cable Spreading Room 725'*
- West Communications Room 707'*
- Cable Tunnel 712'*
- Cable Tunnel 735'*
- Diesel Generator Buildings
- Fuel Building
- Containment Building
- Cable Vault and Rod Control Bldg.
- ERF Substation & ERF Diesel Building
- Relay Room
- Emergency Switchgear
- Safeguards Building
- Service Bldg. 745'
- Penetrations Area
- Main Steam Valve Room
- PAB
- Intake Structure Cubicles
- CV-3 (Unit 1-2 Cable Tunnel)

NOTE: Refer to AOP-2.44A.2, "Purging Smoke or Toxic Gases From the Control Room".

* If This Results in a Control Room Evacuation in Accordance with BVPS Operations Manual 2.56C.4 "Alternate Safe Shutdown" (Refer to SITE AREA EMERGENCY).

3) Site Area Emergency

A. Initiating Condition (EAL)- (Tab 14) Degraded Plant Response

SITE AREA EMERGENCY

A. CRITERION: Reactor Not Subcritical After VALID Trip Signal(s) and Attempts to Manually Trip From The Bench Board are Unsuccessful.

INDICATORS:

1. STA/NSOF/Ops Personnel Report FR-S.1 Has Been Entered.

4) General Emergency

A. Initiating Condition (EAL)- (TAB 6) Primary to Secondary Leakage

PRIMARY TO SECONDARY LEAKAGE

GENERAL EMERGENCY

A. CRITERION: RUPTURED S/G is Also FAULTED (outside of containment) and Indication of Damaged Fuel Exists.

INDICATORS: (1 AND 2 AND 3 AND 4)

1. NSOF/Ops Personnel Report E-3 Has Been Entered.

2. NSOF/Ops Personnel Report the RUPTURED S/G Identified is Also FAULTED.

3. Indication of Fuel Damage Exists. (a or b or c).

   a. VALID Reading > 3.63E+3 uCi/cc (300 x HIGH Alarm Setpoint) on 2CHS*RQ101A and/or B Reactor Coolant Letdown Monitor Received Prior to Letdown Isolation.

      NOTE: Alarm is Generated From The Psuedo (Best) Channel Only.

   b. Radiochemistry Analysis: Dose Equivalent Iodine (I-131) > 300 uCi/gm.

      NOTE: If Indication of Damaged Fuel Was Not Received Prior to Event, a Subsequent PASS Sample Must be Obtained and Analyzed as > 300 uCi/gm Dose Equivalent Iodine (I-131). In this Situation the SITE AREA EMERGENCY Declaration Must be Made While Waiting for the Sample Results.

   c. Main Steam Radiation Monitor 2MSS-RQ1101A/(B)(C) on the FAULTED S/G Reading 2.7E+0 uCi/cc.

4. Containment Radiation, Pressure, and Sump Level Are Consistent With Pre-event Values.

Written Summary

Section IV

(Part B)

WRITTEN SUMMARY

Beaver Valley Power Station Unit 2 has been at 100% power for the past 364 days and is near the end of core life. Unit 1 is in a refueling outage. The following equipment problems exist at Unit 2. The A Station Service Transformer is out of service due to a lightning strike. The B emergency diesel is out of service due first to voltage adjuster problems and when those repairs were completed, the engine would not come up to speed due to the fuel rack failing to open completely. However, the A train diesel was "bumped" at 1350 hrs. and declared operable. It is now ready for a run test. The startup feedwater pump is out of service due to seal repairs. The A charging pump is out of service for preventative maintenance while the C pump is running and the B pump is in stand-by.

At 1400 hrs., the Control Room players receive a briefing regarding current plant status including the above mentioned problems and other items of a typical shift turnover. After site announcements, the 1992 Full Ingestion Zone Exercise begins at 1430 hrs. At 1445 hrs., a call is received from the Beaver County EMA regarding the release of chlorine gas from the Midland Water Treatment Plant. After checking the current wind direction, the Control Room determines that the gas could pose a danger to the site. Based on EPP/IP I-1, Tab 18, Criterion C, an Unusual Event is declared at approximately 1455 hrs. Notifications are begun to onsite personnel and the appropriate offsite agencies. At 1505 hrs., the Beaver County EMA calls to inform BVPS that the chlorine leak has ended and that the gas cloud is no longer a threat.

At 1515 hrs., during the testing of the B emergency diesel, a fire ball occurs between the exciter and generator. This results in a fire near the fuel rack. The test personnel safely exit the room and a call is made to the Control Room, which calls for the Fire Brigade to assemble. By about 1527, the Brigade is on the scene to assess the situation and fight the fire. At approximately 1530 hrs., an Alert is declared based on EPP/IP I-1, Tab 26, Criterion A. With the Alert declaration, offsite notifications are made and personnel are requested to activate the TSC with the EDF placed in a standby status. By 1550 hrs., the fire in the Diesel Generator Building has been extinguished. By approximately 1630 hrs., the TSC is fully activated and providing support to the Control Room.

WRITTEN SUMMARY (cont.)

At 1630 hrs., a laborer, working in the Fuel Handling Building, slips and falls. This results in a gashed and broken arm. In falling, he knocks off a temperature indicator, which sprays him with contaminated water. Water is now spraying into the area as he exits through a fire escape door (simulated). This sets off a Security alarm and the Central Alarm Station (CAS) sends a Security Officer to investigate. The officer finds the individual sitting outside the door. The guard places a call to CAS (or the Control Room). The Control Room activates the Emergency Squad and when they arrive on the scene, they determine that offsite support will be required. The Control Room requests an ambulance through Beaver County Emergency Services. By approximately 1703 hrs., the ambulance crew assumes responsibility for the care of the contaminated/injured person. At 1645 hrs., the fuel pool water begins flowing out from under the Fuel Handling Building roll-up door and begins to make its way toward the nearest catch basin and then to the Ohio River at 1700 hrs.

At 1749 hrs., a relay actuates on the D bus and locks out the D bus feeder breakers. At 1751, an ATWS occurs and when the steam driven aux feed water pump (AFW) starts, it trips on overspeed and will not restart. When the reactor can not be tripped from the bench board, an operator is dispatched to Switchgear. At 1757, the operator successfully opens the reactor trip breakers.

At approximately 1800 hrs., a Site Area Emergency is declared based on EPP/IP I-1, Tab 14, Criterion A. Per procedure, there is a call for site assembly and accountability. At this time, the EOF begins to activate as does the Joint Public Information Center (JPIC).

At 1802 hrs., the A AFW pump stops running due to a shorted trip coil in a breaker. At 1805 hrs., the B System Service Station Transformer is shorted out by metal from the disintegration of the oil transfer pump impeller. This results in the loss of the normal 4 kV C and D busses. However, the ERF diesel is powering the G & H busses and the #1 (A) diesel is powering the AE bus. The DF emergency bus is not powered because of the fire in the #2 (B) diesel.

At 1810 hrs., operators initiate a manual safety injection (SI), which results in a phase A containment isolation. At 1812 hrs., the

WRITTEN SUMMARY (cont.)

speed increaser gear train in the C charging pump seizes. This leaves no source of water to the reactor and no heat sink, due to the loss of AFW pumps. At 1815 hrs., the pressure increase in the Reactor Coolant System (RCS) lifts a pressurizer relief valve and at the same time, the pressure spike blows out the pressurizer relief tank rupture disk. This results in a small LOCA in containment.

By 1951 hrs., indications are that fuel damage is beginning to occur. At 2000 hrs., the A AFW pump is ready for service and operators begin feeding the C steam generator to regain a heat sink. The shock of the cold water on the hot, dry tubes causes a tube rupture. The reactor coolant flashing to steam results in a code safety lifting and sticking open. The release to the environment begins at 2003 hrs. Dose projections will show 0.3 R/hr whole body and 10 R/hr child thyroid at the site boundary.

At 2005 hrs., operators begin to slowly feed the B steam generator for cool down. By approximately 2010 hrs., a General Emergency is declared based on EPP/IP I-1, Tab 6, Criterion A. The protective action recommendation to the offsite agencies is for a 10 mile, 360 degree evacuation.

By 2021 hrs., the safety injection accumulators begin to discharge into the RCS and within three minutes they are empty. The core exit temperature is 838 degrees F with the reactor vessel level less than 40%. The core exit temperature continues to rise with level remaining less than 40%. By 2130 hrs., the temperature increases to 932 degrees F. At this time, the code safety closes and the environmental release ends. By 2133 hrs., the A charging pump has been repaired and is put into service supplying water to the core. Reactor vessel level begins to rise and temperatures to fall. After basic recovery discussions, the onsite exercise terminates at 2200 hrs.

Onsite Sequence
of
Events

Section V

Section V

PROMPTING MATERIAL

The use of the prompting material provided in this section is predicated on the need to incorporate into this exercise the latitude to allow as much "free play" and "undirected response" on the part of the exercise participants, consistant with the ability to stage an emergency situation on the scale necessary to satisfy the objectives of all agencies involved. To this extent, the use of the Cue Signs and Cue Information Sheets, has been adopted to provide the necessary vital information to the exercise participants, minimizing the questions and answers interactions between Exercise Controllers and the exercise participants.

CS - Cue Sign- An 8 1/2 x 11" or larger sheet of paper, posted to indicate condition in a particular area of the plant or on a piece of equipment.

CIS- Cue Information Sheet- An 8 1/2 x 11" or larger sheet of paper, handed to an exercise participant to reflect a sequence of changing plant parameters for a given period of time. This sheet may have single or multiple initiating instructions, data or information. The players will receive only the upper portion of this sheet with the controller having the entire sheet with the expected player actions on the bottom.

PROP- Various materials used to support the scenario, (ex., injury make-up kit).

When disseminating the prompting material, each Exercise Controller should follow the written exercise scenario to ensure that the material being provided is given at the appropriate time in relation to the other exercise events.

Initial Conditions:

- A significant difficulty to over come in any scenario is preventing the exercise participants from resolving simulated problems prior to allowing response organizations, both onsite and offsite, to activate. The purpose for developing Initial Conditions, Onsite Sequence of Events and Offsite Sequence of Events is to alleviate this situation to some extent. To set the stage for the 1992 Ingestion Zone Annual Exercise, the following Initial Plant Conditions will be used.

- Beaver Valley Power Station Unit #2 is in Mode 1 (100% power) for 364 days and is at the end of core life. Refueling operations are scheduled for 8/1/92.

- Beaver Valley Power Station Unit #1 is in a refueling outage with all fuel out of the reactor and stored in the spent fuel pool.

- System operations is reporting low system availability and has requested Beaver Valley Unit #2 to remain at power.

- Station Service Transformer (SST) "A" is Out-Of-Service (OOS) due to a lightning strike on 6/9/92 at 0630 hrs. The lightning strike resulted in bushing contamination which caused a flash over and damage at the disconnect switch. Damaged parts have been removed. System has just finished rebuilding the switches in the yard, so no additional parts may be available for repairs.

- The 2-2 Diesel Generator is OOS due to voltage base adjuster problems. Maintenance repairs were completed at 1100 hrs. Operations ran Diesel for a test 1200 hrs., and it would not come up to speed due to the fuel rack not fully opening. Repairs on the fuel rack were complete at 1400 hrs.

- Diesel Generator 2-1 was bumped at 1350 hrs. and declared operable per Tech. Spec. 3.8.1.1.. O.S.T. 2.36.7 was also completed satisfactorily.

- The Startup feedwater pump is OOS due to seal maintenance. The pump is torn down, the seal disassembled and awaiting parts.

- The "A" charging pump is OOS due to a Preventative Maint. Procedure (PMP) on the oil and Service Water systems., the "B" charging pump is in stand-by and the "C" charging pump is running.

- The station is in normal onsite electrical system arrangement with power being supplied to the 4 KV busses by the Unit System Station Transformer's (USST's).

- The "A" Train for the Fuel Pool Cooling System is in service.

- The ERFCS is preprogrammed with Exercise data on the designated spare groups.

- MIDAS IS NOT preprogrammed with meteorological data. This data will be provided by a controller.

- The shift Operating Report and Nuclear Control Operators Report will be provided to appropriate Control Room personnel as a shift turnover at the start of the Exercise. Also, similar turnovers will occur in Radcon, Maintenance, Security and Chemistry.

Real Time	Drill Time	Event	
1400	-0030	BVPS Unit #2 is simulated to be in Operational Mode 1 at 100% Reactor Power for the past 364 days and is at the end of core life. Note: The actual operating shift personnel will not be participating in the exercise due to normal plant operations and safety concerns. Additional Operations personnel will be present to perform the activities necessary to respond to the simulated plant conditions and will be briefed on the Initial Conditions at this time. Players will also be made available in the areas of Security, Radcon, Maintenance, and Chemistry due to station security and safety operations. Meteorological Information: Time: 1400 hrs. Wind Speed 35': 10 MPH 35' Temp: 81°F Precipitation: None Conditions: Cloudy Initial Conditions are given to Exercise participants.	CIS-01
1425	-0005	The Beaver Valley Power Station Unit #2 Ingestion Zone Annual Emergency Preparedness Exercise begins. Announcements are made to onsite station personnel. (NOTE: Page Party System line #2 will be dedicated for drill use.)	CIS-02

Real Time	Dri Time	Event	
1430	0000	The 1992 Ingestion Zone Annual Exercise commences. The OST run on the "B" Diesel begins.	CIS-03
1445	0015	A call is received in the Control Room from the Beaver County Emergency Operations Center informing them of a chlorine leak at the Midland Water Treatment Plant.	CIS-04
1455	0025	After confirming the information and checking with MIDAS for the wind direction (toward BVPS), it is determined that the chlorine cloud could pose a threat to the Site. An Unusual Event should be declared based on EPP/I-1, TAB 18, "Toxic/Flammable Gases", Criterion C, "Confirmed report by local, County or State officials that an offsite toxic/flammable gas release has occurred within one mile of the plant". Notifications are made to onsite personnel, offsite agencies and NRC.	
1505	0035	A call is received from Beaver County Emergency Management Agency informing BVPS that the Chlorine leak has stopped.	CIS-05
1510	0040	An Unusual Event should be declared by now. The controller should use the contingency card provided if this action has not bee completed, however, if discussions are underway which the controller feels will lead to the declaration of the emergency classification, this CIS may be held for an additional time period.	CIS-06X

Real Time	Drill Time	Event	
1515	0045	During the "B" Diesel OST field flash, a fire ball occurs between the exciter and the generator. The operator conducting the OST exits the area, and a fuel oil fire starts near the fuel rack.	CIS-07 CIS-08
1517	0047	The operator calls the Control Room and informs them of the explosion and fire in the Diesel Generator Building.	
1520	0050	The Control Room calls for the assembly of the Fire Brigade.	
1527	0057	The Fire Brigade arrives at the Diesel Generator Building and begins fire fighting activities.	CIS-09
1530	0100	An Alert should be declared based on EPP/I-1, TAB 26, "Explosion", Criterion A, "Unanticipated explosion within the ... Diesel Generator Building ... of sufficient force to result in any visible damage to permanent plant equipment and structures". NOTE: Notifications are commenced to plant personnel, the NRC and offsite agencies per EPP/I-3 (Alert). The beepers should be toned out at this time by Security personnel in the Central Alarm Station (CAS). Emergency workers of the onsite emergency response organization begin activation of the Technical Support Center (TSC), Radiological Operations Center (ROC), and Operations Support Center (OSC). Personnel for the Emergency Operations Facility (EOF) are placed in a standby status.	

Real Time	Drill Time		Event	
1540	0110	*	An Alert should be declared (if not already done) based on EPP/I-1, "Fire", TAB 25, Criterion A, "Fire in the ... Diesel Generator Building ... not extinguished within 10 minutes from the initiation of fire fighting activities".	CIS-10X
1545	0115	*	Damage assessment begins on the Diesel.	CIS-11
1550	0120	*	The fire in the Diesel Generator Building is extinguished. An Alert should be declared by now. The controller should use the contingency card provided if this action has not been completed, however, if discussions are underway which the controller feels will lead to the declaration of the emergency classification, this CIS may be held for an additional time period. NOTE: If clearance tags are prepared for any reason during the performance of this exercise for damaged or non-operational equipment, they should not be hung, or equipment tampered with in any manner. Any repair activities associated with this exercise will be simulated.	CIS-12
1630	0200		The TSC is activated per EAP/IP 1.4 and begins providing technical assistance, management and communications support to the Control Room.	
During	Anytime		Corporate Communications prepares news releases concerning the accident conditions at Beaver Valley.	

Real Time	Drill Time	Event	
1630	0200	A laborer is dusting pipes associated with the Fuel Pool A Train Heat Exchanger on 739'. He loses his balance and falls off the ladder. As he falls, he breaks off piping associated with a Temperature Indicator (2FNC-TI-10.A) and Fuel Pool water begin to spray into the area. The fall results in a broken and gashed left arm.	CIS-13
1631	0201	The laborer panics and exist via the 735' fire door to the North yard causing a Security Door Alarm. Upon exiting the door, he feel faint and sits down outside the door. CAS notifies a Security Officer to investigate the alarm.	CIS-14
1632	0202	The Security Officer arrives at the Fuel Building Door, discovers the injured person. He notifies CAS.	
1633	0203	CAS informs the Control Room of the injured man at the Fuel Building.	
1634	0204	The Control Room calls for the assembly of the Emergency Squad.	
1642	0212 *	The Emergency Squad arrives on the scene of the injured person. They assess his condition and determine transportation to an offsite hospital is necessary due to the nature of the injury. Radcon determines that the individual and his wound are contaminated and begin to control access to the contaminated area. Operations should isolate the leaking Fuel Pool water. The squad prepares to remove the individual. The team starts first aid and decon efforts.	CIS-15

Real Time	Drill Time	Event	
1645	3215	The Control Room receives a Fuel Building Sump Alarm due to the Fuel Pool leak. Water from the release begins to leak out from under the Fuel Building roll-up door.	CIS-16 CIS-17
1648	0218 *	The Control Room calls Beaver County Emergency Services Center to provide ambulance service and notifications are made to the Medical Center of Beaver.	
1658	0228 *	The ambulance summoned by the Control Room arrives onsite and is escorted into the Protected Area by Security personnel.	
1700	0230	The Fuel Pool Leak reaches a Storm Drain to the Ohio River.	CIS-18
1703	0233 *	The ambulance crew assumes responsibility for the injured man.	
1710	0240	Time is now available for lunch rotation.	CIS-19
1720	0250	The ambulance leaves Site with the injured man.	
1740	0310 *	The ambulance arrives at the Medical Center and hospital personnel assume responsibility for the victim.	CIS-20
1749	0319	Relay 51-VD1204 on the "D" Bus actuates opening and locking out the "D" Bus feeder breakers.	CIS-21

Real Time	Drill Time		Event	
1751	0321		An ATWS occurs and the Terry Turbine trips on overspeed and can not be restarted (the "A" Aux. Feedwater pump is still working). The reactor will not trip from the Control Room bench boards. Operators begin to manually drive in the control rods, however, they move in 3 steps and stop. An operator is dispatched to the trip breakers.	CIS-22 CIS-23
1757	0327		The operator trips the reactor from the reactor trip breakers in switchgear.	CIS-24 CIS-25
1800	0330	*	A Site Area Emergency should be declared based on EPP/I-1 TAB 14, "Protection System Failure", Criterion A, "Reactor not subcritical after valid trip signal and attempts to manually trip from the bench board are unsuccessful". Per EPP/I-4 (Site Area Emergency), an onsite assembly for station personnel is requested. The EOF begins activation per EPP/IP 1.6, if not already activated. Offsite notifications are begun by the TSC and/or EOF. Also, Corporate Communications begins activation of the Joint Public Information Center (JPIC). NOTE: If notifications are made to offsite manufacturers or vendors at any time during the exercise, for parts or equipment, they should be simulated. NOTE: Evacuations both onsite and offsite will be simulated.	

Real Time	Drill Time		Event	
			NOTE For the purposes of this exercise, no silver Zeolite cartridges or KI will be distributed or used.	
1802	0332		The "A" Aux. Feedwater pump trips due to a shorted trip coil in the breaker.	CIS-26
1803	0333		The OSC dispatches a team to the "A" Aux. Feedwater pump.	CIS-27
1805	0335		The SSST "B" impeller on an oil transfer pump disintegrates. The metal in the oil causes arcing, a transfer to ground and SST "B" to trip. This causes a total loss of normal 4KV Bus's C and D.	CIS-28
			NOTE: The ERF Diesel (G & H Bus's) and "A" Diesel (AE Bus) are in service.	
1805	0335	*	Per EPP/IP 3.2 accountability is commenced.	
1809	0339	*	OSC Personnel arrive at SSST "B".	CIS-29
1810	0340		A manual Safety Injection (SI) is initiated which causes Containment Isolation Phase A (CIA). (The SI and CIA signals will not be reset, due to no pumps being available to provide SI water.)	CIS-30
1812	0342		The "C" charging pump trips due to gear seize up.	CIS-31
			Non-Emergency Personnel begin to report to their appropriate assembly areas.	

Real Time	Drill Time		Event	
1815	0345	*	Due to the pressure in the Pressurizer, the Pressurizer PORV opens and, the Pressurizer Relief Tank Rupture disk fails. A small leak is now occurring in containment.	
			OSC personnel are dispatched to the "C" Charging Pump.	CIS-32
			A report is received from the hospital that the injured worker is stable and resting comfortably.	CIS-33
1820	0350		A Site Area Emergency should be declared by now. The controller should use the contingency card provided if this action has not been completed, however, if discussions are underway which the controller feels will lead to the declaration of the emergency classification, this CIS may be held for an additional time period.	CIS-34X
1835	0405	*	Accountability is complete.	
1845	0415		The EOF should be fully activated (unless activated earlier) and performing support services, dose projections and offsite liaison duties.	
1930	0500	*	Field monitoring teams may be assembled if not done earlier.	
1936	0506		The Control Room receives an Alert Rad. Monitor Alert due to the PRT rupture disk failing on over pressure.	CIS-35

Real Time	Drill Time	Event	
1951	0521	Due to operational conditions, fuel damage begins and containment radiation monitors begin to increase . Field monitoring teams may be dispatched, if not done earlier.	CIS-36
1954	0524	Containment radiation monitors begin to rapidly increase (indication of increased fuel damage occurring).	CIS-37
1957	0527	Core Exit Temp. at 730 degrees F and RVLIS at <40%.	
2000	0530	Maint. calls the Control Room and informs them that the "A" Aux. Feedwater pump can be returned to service.	CIS-38
2001	0531	With the "A" Aux. Feedwater pump returned to service, water is slowly being supplied to the "C" Steam Generator to return the heat sink.	
2002	0532	The Pressurizer PORV closes stopping the RCS leak to containment.	
2003	0533	The shock of cold water in reflooding the "C" Steam Generator causes a massive Tube Rupture in the "C" Steam Generator. A radioactive release to the environment, via the "C" S/G Code Safety, begins due to a pressure spike in the main steam system caused by the Tube Rupture. (With the Steam Generator being mostly dry, this is a release of almost pure Reactor Coolant to the environment).	CIS-39
2005	0535	Operators begin to slowly supply the "B" Steam Generator with water.	

Real Time	Drill Time	Event
2007	0537	Dose projections indicate 0.3 R/hr Whole Body and 10 R/hr Child Thyroid at the Site Boundary.
2010	0540	A General Emergency should be declared based on EPP/I-1, TAB 6 Criterion A, "Primary to secondary leakage", Criterion A, "Ruptured S/G is also faulted (located outside containment) and indication of damaged fuel exists; or TAB 1 "Radioactive Effluent", Criterion A, "EAB dose resulting from actual or imminent release of gaseous radioactivity to the environment that exceeds 1 rem WB or 5 rem CT for the actual or projected duration of the release as estimated via dose projections using actual meteorology"; or TAB 15 Criterion A, "Loss of 2 of 3 fission product barriers with the potential loss of the third.". Also at this time, based on EPP/IP 4.1, an offsite Protective Action Recommendation of "Evacuate 10 miles 360 degrees" is provided to the offsite agency.
2021	0551	Accumulators begin injecting.
2024	0554	Accumulators are empty.
2030	0600	Core Exit Temp. is 838 degrees F with RVLIS at <40%.

CIS-40

Real Time	Drill Time	Event	
		A General Emergency should be declared by now. The controller should use the contingency card provided if this action has not been completed, however, if discussions are underway which the controller feels will lead to the declaration of the emergency classification, this CIS may be held for an additional period of time.	CIS-41X
		Field Monitoring Teams should be attempting to follow the plume and reporting results back to EA & DP. Iodine data reported from the FMT's will be higher than calculated due to reduced partitioning in the Steam Generator.	
2051	0621	Core Exit Temp. 869 degrees F and RVLIS <40%.	
2115	0645	Core Exit Temp. 908 degrees F and RVLIS <40%.	
2130	0700	The Code Safety reseats and ends the release to the environment. Core Exit Temp. 932 degrees F and RVLIS <40%.	CIS-42
2131	0701	Maint. calls the Control Room and informs them that the "A" Charging pump can be returned to service.	CIS-43
2133	0703	The "A" Charging Pump is returned to service and begins to supply water to the RCS.	
2145	0715 *	Core Exit Temp. begin to decrease and RVLIS begin to increase.	
2150	0720	After basic recovery efforts are discussed or simulated, the exercise will terminate to allow for continuation of activities for the Ingestion Zone Exercise the next day. All exercise players and participants will assemble all pertinent records for collection by the designated person.	CIS-44

Real Time	Drill Time	Event	
2200	0730	The 1992 Annual Exercise concludes. The Ingestion Exercise will continue on June 10, 1992, at 1200 hours. Data for the Ingestion Zone Exercise is contained a separate BVPS 1992 Ingestion Zone Exercise Package distributed with the Annual Exercise Package.	CIS-45
	*	Time variable	
	**	All controller/observers should complete their critique sheets and prepare a list of major findings (Good/Bad). They should assure that all records generated for this exercise for their respective areas are gathered and present these records and comments to the lead exercise controller, who will be located at Simulator Building Classroom 3/4 on 6/10/92.	

Offsite Sequence
of
Events

Section VI

NOTE: Information pertaining to the Offsite Sequence of Events is incorporated in the Onsite Sequence of Events Section.

Prompting Material

Section VI

Prompting Material

CIS/CUE Information Sheet

CS/CUE Sign

Prop/Materials used to Support

The Scenario (ex. Injury Make-up Kit)

(Part A)

Section VI

PROMPTING MATERIAL

The use of the prompting material provided in this section is predicated on the need to incorporate into this exercise the latitude to allow as much "free play" and "undirected response" on the part of the exercise participants, consistant with the ability to stage an emergency situation on the scale necessary to satisfy the objectives of all agencies involved. To this extent, the use of Cue Signs and Cue Information Sheets, has been adopted to provide the necessary vital information to the exercise participants, minimizing the questions and answers interactions between Exercise Controllers and the exercise participants.

CS- Cue Sign- An 8 1/2" x 11" or larger sheet of paper, posted to indicate conditions in a particular area of the plant or on a piece of equipment.

CIS - Cue Information Sheet- An 8 1/2" x 11" or larger sheet of paper, handed to an exercise participant to reflect a sequence of changing plant parameters for a given period of time. This sheet may have single or multiple initiating instructions, data or information. The players will receive only the upper portion of this sheet with the controller having the entire sheet with the expected player actions on the bottom.

PROP - Various materials used to support the scenario, (ex., injury make-up kit).

When disseminating the prompting material, each Exercise Controller should follow the written exercise scenario to ensure that the material being provided is given at the appropriate time in relation to the other exercise events.

Time: 1400

CIS No: 01

BEAVER VALLEY POWER STATION
1992 EMERGENCY PREPAREDNESS EXERCISE
CUE INFORMATION SHEET

Message for: Control Room, RadCon, Maint., Security, Chemistry

Message: Attached are the initial conditions for the Unit #2 1992 Annual Exercise. Also, attached are the appropriate turnover logs.

FOR CONTROLLERS USE ONLY

Cont Notes: Provide additional information for turnover.

Actions Exp: None.

Beaver Valley Power Station Unit 1/2 1/2 48.1
CONDUCT OF OPERATIONS Issue 3 Revision 13
ORGANIZATIONAL AND RESPONSIBILITIES OF THE OPERATIONS GROUP Page C 8 of 29

SHIFT TURNOVER AND RELIEF

Nuclear Control Operators
SHIFT TURNOVER CHECKLIST

BVPS Unit No 2

		0800	1600	2400
1. Oncoming and offgoing N.C.O. conduct together a walkdown of the control board including status panels discussing evolutions in progress and planned, unusual equipment or system status and any unusual alarms or indications		RO PO ☐ ☐	RO PO ☐ ☐	RO PO ☐ ☐
2. Review previous shifts logs - oncoming		☐ ☐	☐ ☐	☐ ☐
3. Discuss any identified trends that require special attention.		☐ ☐	☐ ☐	☐ ☐
4. Discuss any temporary logs, parameter trending or temporary procedures in effect		☐ ☐	☐ ☐	☐ ☐
5.				
a. Circle the priority train[16]	N/A for all modes other than Modes 5 and 6	A or B	A or B	A or B
b. Verify normal and emerg. power to priority train	N/A for all modes other than Modes 5 and 6	N E ☐ ☐	N E ☐ ☐	N E ☐ ☐
6. Review any MSPs, OSTs, BVTs, PMPs (or other procedures affecting control room indications) in progress (oncoming)		☐ ☐	☐ ☐	☐ ☐
7. Discuss any gas or liquid discharge in progress		☐ ☐	☐ ☐	☐ ☐
8. List on reverse any technical specification action items in effect (By offgoing) Review list-oncoming		☐ ☐	☐ ☐	☐ ☐
9. Review the ESF Mimic Print for out of normal conditions - oncoming		☐ ☐	☐ ☐	☐ ☐
10. Review the Station Equipment Status Board. (oncoming)		☐ ☐	☐ ☐	☐ ☐
11. Previous Days S1-4, 5 and 6 copied and placed in binder.		00-08 PO		

	(Offgoing)	(Oncoming)
0800	RO _____	RO _____
	PO _____	PO _____
1600	RO _____	RO _____
	PO _____	PO _____
2400	RO _____	RO _____
	PO _____	PO _____

Reviewed _____
(ANSS or NSS)

(Example)
FIGURE NO 48 1 C-3 (FRONT)

TECH SPEC ACTION ITEMS IN EFFECT (Special Surveillance Below)

Component/ System	T.S. No.	Date/Time Applied	Date/Time Due	Date/Time Complete
D/G 2-2	3.8.1.1	6/7/92 1100	6/10/92 ~~1100 DA~~	
SSST 2A	3.8.1.1	6/9/92 0630	6/9/92 1830	

REMARKS: 00-08
1) D/G 2-2 OOS Bump D/G 2-1 and OST 2.36.7 1/8 HRS
2) WITH AN OFFSITE AND D/G INOPER BUMP D/G 2-1 AND do OST 2.36.7 1/8 HRS. EITHER D/G OR X-FORMER ... BE OPER ON 6/9/92 @ 1830 OR BE IN COLD S/D WITHIN NEXT 36 HRS

REMARKS: 08-16

REMARKS: 16-24

(Example)
FIGURE NO. 48.1.C-2
(BACK)

Assistant Nuclear Shift Supervisor
SHIFT TURNOVER CHECKLIST

BVPS Unit No. 2

		0800	1600	2400
1. Oncoming and offgoing shift foreman conduct a walkdown of the control boards observing evolutions in progress, unusual equipment or systems status and any unusual alarms or indications or status lights.		☐	☐	☐
2. Review previous shift narrative logs. (oncoming)		☐	☐	☐
3. Discuss any identified trends that require special attention.		☐	☐	☐
4. Discuss any temporary logs, parameter trending or temporary procedures in effect.		☐	☐	☐
5. Review any MSPs, OSTs, BVTs, PMPs (or other procedures effecting control room indications) in progress or scheduled (oncoming).		☐	☐	☐
6. Discuss any gas or liquid discharge in progress.		☐	☐	☐
7. List on reverse any technical specification action items in effect (by offgoing). Review list (oncoming).		☐	☐	☐
8. Verify normal shift complement and emergency squad requirements are met (oncoming).		☐	☐	☐
9. Review the Station Equipment Status Board (oncoming).		☐	☐	☐
10. Review the ESF Mimic Print for out of normal conditions (oncoming).		☐	☐	☐
11. Discuss status of procedures in progress, being turned over.		☐	☐	☐
12.				
a. Circle the priority train[14]	N/A for all modes other than Modes 5 and 6	A or B	A or B	A or B
b. Verify normal and emerg. power to priority train	N/A for all Modes other than Modes 5 and 6	N E ☐ ☐	N E ☐ ☐	N E ☐ ☐
13. The Nuclear Control operators narrative log; S1-4, 5, 6; has been reviewed to assure all significant items have been listed with adequate description.		☐	☐	☐
14. Oncoming foremen, log 5 qualified fire brigade members on shift in foreman's log book. (Use the fire brigade qualification log supplied by OPS Support Group.)		☐	☐	☐
15. Identify "Off-Log Only" clearance that need reported to maintenance for signoff each morning. (by off-going)		☐		
16. If the Condensate Polishing Building Operator is stationed, then Knife Switch [1822] in Ann Bay 17 is open. If the Condensate Polishing Building Operator is not stationed, then Knife Switch [1822] is verified closed. (Unit 2 only)		☐	☐	☐

	(Offgoing)	(Oncoming)
0800	_____ (Signature)	_____ (Signature)
1600	_____ (Signature)	_____ (Signature)
2400	_____ (Signature)	_____ (Signature)

17. The oncoming ANSS has reviewed the approved Control Room copy of the OST schedule.

0800 _____ Signature 1600 _____ Signature 2400 _____ Signature

(Example) FIGURE NO. 48.1.C-2 (FRONT)

Beaver Valley Power Station	Unit 1/2	1/2.48.1
CONDUCT OF OPERATIONS		Issue 3 Revision 13
ORGANIZATIONAL AND RESPONSIBILITIES OF THE OPERATIONS GROUP		Page C 7 of 29

SHIFT TURNOVER AND RELIEF

TECH SPEC ACTION ITEMS IN EFFECT (Special Surveillance Below)

Component/ System	T.S. No.	Date/Time Applied	Date/Time Due	Date/Time Complete
D/G 2-2	3.8.1.1	6/7/92 1100	6/10/92 ~~1100~~ 1830	
SSST 2A	3.8.1.1	6/9/92 0630	6/9/92 1830	

REMARKS: 00-08

1) D/G 2-2 OOS Bump D/G 2-1 and OST 2.36.7 1/8 HRS
2) WITH AN OFFSITE AND D/G INOPER BUMP D/G 2-1 AND DO OST 2.36.7 1/8 HRS. EITHER D/G OR X-FORMER MUST BE OPER ON 6/9/92 @ 1830 OR BE IN COLD S/D WITHIN NEXT 36 HRS.

REMARKS: 08-16

REMARKS: 16-24

(Example)
FIGURE NO. 48.1.C-2
(BACK)

BVPS - O.M. 2.54.2

S1-5

DUQUESNE LIGHT COMPANY
Beaver Valley Unit No. 2
NUCLEAR CONTROL OPERATORS REPORT

Date _____
0800-1600

Plant Status - 0801

Operating Mode 1
Generator Gross MW 640
Controlling Rod Bank D
RCS Pressure 2240 PSIG Tavg 573 F
Boric Acid to Blender Flow (2CHS-FQ113) 934282
Total Makeup Flow (2CHS-FQ168) 785414

Boron Concentration 240 PPM
Reactor Power 99.5 (%, AMP, CPS)
Height 228 STEPS

OMCN 2-91-052

TIME

0715 TURNOVER COMPLETE
0815 DILUTE 200 GAL
1001 STARTED 2QSS-P21B PER OST 2.13.2
1045 STOPPED 2QSS-P21B
1100 UI REPORTS TR26 HAS HIGH SILICA. CONTACT CHEM BEFORE TAKING DEMIN WATER
1200 STARTED D/G 2-2 FOR OPERABILITY CHECK
- D/G WOULD NOT COME UP TO FULL SPEED, PER MAINT FUEL ~~RACKS~~ RACKS SEEM TO BE THE PROBLEM. S/D
- D/G MAINT & VENDOR INVESTIGATING
1350 BUMPED 2-1 D/G PER TS 3.8.1.1
- OST 2.36.7 COMPLETE
1355 DILUTED 200 GAL
1405 STARTED "B" CNMT AIR COMP S/D THE "A" TO SUPPORT MAINT (MINOR ADJUSTMENTS WITH V'NDOR PRESENT)
1450 SECURED "B" CNMT AIR COMP STARTED THE "A". PER MAINT COMP IS RUNNING GOOD.
1455 CP OPER PROCESSING WATER STARTED CP AIR COMP

Relieved by _____ at _____
Oncoming RO

_____
RO (0800-1600)

Controlled keys tranferred to and
Relieved by _____ at _____
Oncoming PO

_____
PO (0800-1600)

_____
ANSS Review (0800-1600)

ISSUE 1
REVISION 1

S1-2

DUQUESNE LIGHT COMPANY
Beaver Valley Unit Number 2
NSS OPERATING REPORT

DATE _____
0800-1600

Plant Status - 0801

MODE 1 *RCS PRESSURE 2240 PSIG *RCS TAVG 573 F *(LOG ONLY IF NOT MODE 1)

RX POWER LEVEL 100 (%, AMP, CPS) GENERATOR GROSS MWe 640 NET 800

(LOG IF PLANT CONDITIONS WARRANT)

TEMPERATURES: Hotwell ____ Ambient ____ River ____ COND VACUUM ____ "Hg

S/G CATIONS: A .30 B .31 C .31 SAMPLE TIME 1117

0645 ASSUMED THE SHIFT

1100 UI REPORTS 1WT-TK-26 HAS HIGH SILICA. F LOGAR
- TO ORDER ARROW UNITS. CHEM REQUESTS NOTIFICATION
- IF DEMIN WATER IS NEEDED.

1200 STARTED D/G 2-2. D/G WOULD'NT COME UP
- TO SPEED SEEMS TO BE A FUEL RACK PROBLEM.
- SHUTDOWN THE GEN. MAINT & VENDOR ARE INVESTIGATING

1350 BUMPED D/G 2-1
- OST 2.36.7 SAT } TS 3.8.1.1

1450 MAINT ADJUSTED "A" CNMT AIR COMP WITH
VENDOR. RESTARTED COMP. LOOKS GOOD.

Relieved by _____ at _____
(Oncoming NSS)

_____
NSS 0800-1600

Time: 1425

CIS No: 02

BEAVER VALLEY POWER STATION
1992 EMERGENCY PREPAREDNESS EXERCISE
CUE INFORMATION SHEET

Message for: Control Room (please announce over Page Party)

Message: "This is a drill" The Annual Exercise for BVPS Unit 2 has begun. Page Party line #2 and Pax 5313 are reserved for drill related conversations. "This is a drill" (repeat)

FOR CONTROLLERS USE ONLY

Cont Notes: This message should be read over the station Page Party system with the Unit 1/2 cross connect switch engaged.

Actions Exp: Message to be read to both Units.

Time: 1430

CIS No: 03

BEAVER VALLEY POWER STATION
1992 EMERGENCY PREPAREDNESS EXERCISE
CUE INFORMATION SHEET

Message for: Control Room

Message: The OST on the 2-2 diesel for operability check has commenced.

FOR CONTROLLERS USE ONLY

Cont Notes: None

Actions Exp: Establish contact with the operator at the diesel.

Time: 1445

CIS No: 04

BEAVER VALLEY POWER STATION
1992 EMERGENCY PREPAREDNESS EXERCISE
CUE INFORMATION SHEET

Message for: Beaver County Emergency Services Center to BVPS

Message: This is a drill. The Midland Water Treatment Plant has just had a chlorine spill. A chlorine cloud is escaping from the plant. The release appears to be drifting up-river toward the Beaver Valley Power Station. Beaver County Haz-Mat is enroute. This is a drill.

FOR CONTROLLERS USE ONLY

Cont Notes: Provide information as necessary. The source of the release is a 150# cylinder. Approximatly 1100-1200 cubic feet of chlorine has been released.

Actions Exp: Call BVPS Control Room and inform them of the leak.

Time: 1505

CIS No: 05

BEAVER VALLEY POWER STATION
1992 EMERGENCY PREPAREDNESS EXERCISE
CUE INFORMATION SHEET

Message for: Beaver County EMA to BVPS Control Room

Message: This is a drill. The Chlorine release from the Midland water treatment plant has stopped. The cloud is moving up-river and is quickly dissapating. This is a drill.

FOR CONTROLLERS USE ONLY

Cont Notes: Provide information to BVPS.

Actions Exp: Prepare for termination of the Unusual Event.

Time: 1510

CIS No: 06X

BEAVER VALLEY POWER STATION
1992 EMERGENCY PREPAREDNESS EXERCISE
CUE INFORMATION SHEET

Message for: To NSS

Message: Declare an Unusual Event based on EPP/I-1, TAB 18, "Toxic/ Flammable Gases", Criterion C"

FOR CONTROLLERS USE ONLY

Cont Notes: To be used only if the emergency has not been called by 1510. If discussions are underway for declaration this CIS may be held for an additional time period.

Actions Exp: Declare U.E. and direct appropriate notifications to commence.

Time: 1515

CIS No: 07

BEAVER VALLEY POWER STATION
1992 EMERGENCY PREPAREDNESS EXERCISE
CUE INFORMATION SHEET

Message for: Operator at the 2-2 diesel.

Message: You have just experienced an explosion which started a fire on the diesel. The source of the explosion appeared to be between the excitor and the generator. You have removed all personnel from the area. All personnel are accounted for with no injuries present.

FOR CONTROLLERS USE ONLY

Cont Notes: Operator may chose to manually actuate the Cardox system. Cardox will not manually actuate on this attempt.

Actions Exp: Contact the Control Room with the information.

CIS 07

1515 hrs.

ADDITIONAL INFORMATION:

1) 2FPD-ContPNL2-6 is in lock out position for work on the timers (there is no auto-discharge in lock out position)

2) 2FPD-TK 22 and 2FPD-TK 23 are OOS with outlet valves closed due to leaking AOV's.

3) 2FPD-TK-24 is in service.

4) 2FPD-AOV-222 doesn't open when 2FPD-AOV-211 is manually opened (2FPD-AOV-222 is the master valve for 2FPD-TK-24)

5) The generator portion of the Diesel generator has been destroyed (the destruction of the generator causes the sound of the explosion).

6) Parts of the generator have ruptured the fuel oil Day Tank causing a fire in the west end of the room.

Time: 1515

CIS No: 08

BEAVER VALLEY POWER STATION
1992 EMERGENCY PREPAREDNESS EXERCISE
CUE INFORMATION SHEET

Message for: Control Room

Message: The following Annunciators are in alarm:
- ANN-A8-5E Diesel Gen 2-2 local panel trouble
- ANN-A11-1E Emergency Diesel Generator Bldg 2-2 room fire
- Honeywell early detection warning system

FOR CONTROLLERS USE ONLY

Cont Notes: A Fire and Explosion has occurred in the 2-2 diesel generator building.

Actions Exp: Per alarm response procedures.

Time: 1527

CIS No: 09

BEAVER VALLEY POWER STATION
1992 EMERGENCY PREPAREDNESS EXERCISE
CUE INFORMATION SHEET

Message for: Brigade Captain

Message: Smoke is coming from under the door. The door is hot to the touch. The Cardox system has not actuated as of this time.

FOR CONTROLLERS USE ONLY

Cont Notes: Descibe additional information as requested. Cardox actuation may be permitted after the Alert announcement over the page or 10 minutes after fire fighting begins.

Actions Exp: Assess and respond to the fire as the situation warrants.

CIS 09

1527 hrs.

ADDITIONAL INFORMATION:

1) I&C reports that 2FPD-AOV-222 is inoperable (2FPD-TK-24 master valve).

2) Operations will need to unisolate 2FPD-TK-22 and 2FPD-TK-23

3) Manual fire fighting will be needed to fight the fire (1.5 inch fire hose) due to the failure of the Cardox System.

Time: 1540

CIS No: 10X

BEAVER VALLEY POWER STATION
1992 EMERGENCY PREPAREDNESS EXERCISE
CUE INFORMATION SHEET

Message for: Emergency Director in Control Room

Message: Declare an Alert based on EPP/I-1 Tab 26, "Explosion", Criterion A or TAB 25, "Fire", Criterion A.

FOR CONTROLLERS USE ONLY

Cont Notes: To be used only if the emergency has not been called by 1540. If discussion are underway for declaration this CIS may be held for and additional time period.

Actions Exp: Declare an Alert and direct the Emergency Communicator to commence approprate notifications.

Time: 1545*

CIS No: 11

BEAVER VALLEY POWER STATION
1992 EMERGENCY PREPAREDNESS EXERCISE
CUE INFORMATION SHEET

Message for: Emergency Squad/Damage Assessment Team

Message: See the attached information for damage to the general area. Additional information may be obtained from the controller in the area.

FOR CONTROLLERS USE ONLY

Cont Notes: Provide this CIS only after attempts have been made for damage assessment.

Actions Exp: Evaluate and report equipment damage to the Control Room.

Time: 1550*

CIS No: 12

BEAVER VALLEY POWER STATION
1992 EMERGENCY PREPAREDNESS EXERCISE
CUE INFORMATION SHEET

Message for: Fire Brigade at Diesel Generator Bldg

Message: The fire in the Diesel Generator Bldg is extinguished. No flames are visible but, smoke is still in the area.

FOR CONTROLLERS USE ONLY

Cont Notes: Provide observable information as requested. This CIS may be used once the Alert has been declared and the brigade has taken proper actions to extinguish the fire.

Actions Exp: Review damage and report to the Control Room.

Time: 1630

CIS No: 13

BEAVER VALLEY POWER STATION
1992 EMERGENCY PREPAREDNESS EXERCISE
CUE INFORMATION SHEET

Message for: Laborer at the fuel pool door.

Message: You have been dusting pipes in the fuel pool heat exchanger area. You have fallen and broken a pipe which is spraying water. You have a cut on your left arm which is bleeding and you think your arm is broken.

FOR CONTROLLERS USE ONLY

Cont Notes: Provide additional information as necessary.

Actions Exp: None

Time: 1631

CIS No: 14

BEAVER VALLEY POWER STATION
1992 EMERGENCY PREPAREDNESS EXERCISE
CUE INFORMATION SHEET

Message for: CAS

Message: You have received an alarm on door F 35-1.

FOR CONTROLLERS USE ONLY

Cont Notes: The injured laborer has exited the fuel pool area via this door.

Actions Exp: Dispatch a response guard to the area to investigate.

Time: 1642

CIS No: 15

BEAVER VALLEY POWER STATION
1992 EMERGENCY PREPAREDNESS EXERCISE
CUE INFORMATION SHEET

Message for: E. Squad at injured man

Message: The controller has information on the condition of the injured man. This will be provided upon request.

FOR CONTROLLERS USE ONLY

Cont Notes: Provide only such information as specifically requested and only if earned by actions.

Actions Exp: 1. Give first aid as needed.
2. Contact the Control Room and request an ambulance.
3. Determine that the man is contaminated and can not be deconned and that offsite support wuill be required.
4. Remove injured man from the area.

Time: 1645

CIS No: 16

BEAVER VALLEY POWER STATION
1992 EMERGENCY PREPAREDNESS EXERCISE
CUE INFORMATION SHEET

Message for: Control Room

Message: The following Annunciators are in alarm:
- ANN-A11-9G Fuel Building sump level high

FOR CONTROLLERS USE ONLY

Cont Notes: Water leaking from the broken line at the heat exchanger area caused by the injured man.

Actions Exp: Per alarm response procedures. Contact the E. squad or dispatch an operator for alarm verification.

Time: 1645

CIS No: 17

BEAVER VALLEY POWER STATION
1992 EMERGENCY PREPAREDNESS EXERCISE
CUE INFORMATION SHEET

Message for: Anyone near the roll-up steel door at the fuel pool area.

Message: "This is a drill" You are observing a stream of water coming from under the rolling steel door. It is heading for the storm sewer in the north yard. "this is a drill"

FOR CONTROLLERS USE ONLY

Cont Notes: Hand this CIS to anyone in the vicinity of the rolling steel door.

Actions Exp: Contact the Control Room or E. Squad if still at scene.

Time: 1703*

CIS No: 18

BEAVER VALLEY POWER STATION
1992 EMERGENCY PREPAREDNESS EXERCISE
CUE INFORMATION SHEET

Message for: Ambulance crew

Message: The controller has information on the condition of the injured man. This information will be provided upon request.

FOR CONTROLLERS USE ONLY

Cont Notes: Provide only information that is specifically requested and earned by actions.

Actions Exp: Provide advanced medical treatment.

Time: 1710

CIS No: 19

BEAVER VALLEY POWER STATION
1992 EMERGENCY PREPAREDNESS EXERCISE
CUE INFORMATION SHEET

Message for: All Controllers

Message: Advise key coordinators in your area that time is now available for lunch rotation.

FOR CONTROLLERS USE ONLY

Cont Notes: none

Actions Exp: Lunch rotation should commence.

Time: 1740*

CIS No: 20

BEAVER VALLEY POWER STATION
1992 EMERGENCY PREPAREDNESS EXERCISE
CUE INFORMATION SHEET

Message for: Medical [illegible] at the Hospital

Message: The controller has information on the condition of the injured man. This information will be provided upon request.

FOR CONTROLLERS USE ONLY

Cont Notes: Provide only information that is specifically requested and earned by actions.

Actions Exp: Provide advanced medical treatment.

Time: 1749

CIS No: 21

BEAVER VALLEY POWER STATION
1992 EMERGENCY PREPAREDNESS EXERCISE
CUE INFORMATION SHEET

Message for: Control Room

Message: The following Annunciators are in alarm:
- ANN-A6-10A SG feed pump 21 A/B auto-stop.
- ANN-A6-2E 4160V pump motor overcurrent trip.
- ANN-A8-1A 4160V USServ Tfmr supply ACB overcurrent trip.

CRT Reads: Y0438D (SG 21B feed PP trip)
Y2905D (4kV bus 2D ACB 342D OC Alarm)

FOR CONTROLLERS USE ONLY

Cont Notes: Loss of "D" bus on overcurrent relays for 2B main feed pump inboard motor.

Actions Exp: Per alarm response procedures.

Time: 1751

CIS No: 22

BEAVER VALLEY POWER STATION
1992 EMERGENCY PREPAREDNESS EXERCISE
CUE INFORMATION SHEET

Message for: Control Room

Message: The following Annunciators are in alarm:
- ANN-A2-3H Safety System train A trouble
- ANN-A5-C2 SG 21A level low-low reactor trip
- ANN-A5-C3 SG 21B level low-low reactor trip
- ANN-A5-C4 SG 21C level low-low reactor trip
CRT Reads: Y5172D (Turb DR AFW PP Tripped FWE*P22)

FOR CONTROLLERS USE ONLY

Cont Notes: ATWS with terry turbine overspeed trip. Benchboard attempts for Reactor trip unsuccessfull.

Actions Exp: Per alarm response procedures.

Time: 1751

CIS No: 23

BEAVER VALLEY POWER STATION
1992 EMERGENCY PREPAREDNESS EXERCISE
CUE INFORMATION SHEET

Message for: OSC personnel dispatched to the Terry Turbine

Message: A speed control problem caused the Terry Turbine to trip. The linkage is still connected and visually is undamaged.

FOR CONTROLLERS USE ONLY

Cont Notes: Trip due to overspeed, governer not controlling. The trip/throttle valve slams shut and the stems seize on a bushing holding the valve closed.

Actions Exp: Report findings to the OSC.

Time: 1757

CIS No: 24

BEAVER VALLEY POWER STATION
1992 EMERGENCY PREPAREDNESS EXERCISE
CUE INFORMATION SHEET

Message for: Operator in Switchgear

Message: You have been successfull in tripping the reactor trip breakers.

FOR CONTROLLERS USE ONLY

Cont Notes: None

Actions Exp: Notify the Control Room.

Time: 1757

CIS No: 25

BEAVER VALLEY POWER STATION
1992 EMERGENCY PREPAREDNESS EXERCISE
CUE INFORMATION SHEET

Message for: Control Room

Message: The following Annunciators are in alarm:
- ANN-A5-6D Turbine trip due to reactor trip
- All rod bottom lights are lit.

FOR CONTROLLERS USE ONLY

Cont Notes: Reactor trip due to successfull operator actions in switchgear.

Actions Exp: Per alarm response procedures.

Time: 1802

CIS No: 26

BEAVER VALLEY POWER STATION
1992 EMERGENCY PREPAREDNESS EXERCISE
CUE INFORMATION SHEET

Message for: Control Room

Message: The following Annunciators are in alarm:
Reflash- ANN-A6-11A AFW pump auto-start/auto-stop.
CRT reads: Y0423D (AFW PP 23A)

FOR CONTROLLERS USE ONLY

Cont Notes: "A" Aux feedwater pump trip. No Aux Feed water available.

Actions Exp: Per alarm response procedures.

Time: 1803

CIS No: 27

BEAVER VALLEY POWER STATION
1992 EMERGENCY PREPAREDNESS EXERCISE
CUE INFORMATION SHEET

Message for: OSC personnel dispatched to the "A" Aux. Feedwater pump

Message: No relay indication. Controller will provide additional data upon request.

FOR CONTROLLERS USE ONLY

Cont Notes: Breaker trips spuriously and will not reclose. If relay or motor checked, no problems. When breaker racked out, loose parts and a burnt smell are noticable. Trip coil

Actions Exp: shorts/burns to apply constant trip signal. When racking in replacement breaker, it jams. At 1955 the breaker unjams. The pump can now be placed in service upon notifying the OSC and the Control Room.

Time: 1803

CIS No: 27

BEAVER VALLEY POWER STATION
1992 EMERGENCY PREPAREDNESS EXERCISE
CUE INFORMATION SHEET

Message for: OSC personnel dispatched to the "A" Aux. Feedwater pump

Message: No relay indication. Controller will provide additional data upon request.

FOR CONTROLLERS USE ONLY

Cont Notes: Breaker trips spuriously and will not reclose. If relay or motor checked, no problems. When breaker racked out, loose parts and a burnt smell are noticable. Trip coil

Actions Exp: shorts/burns to apply constant trip signal. When racking in replacement breaker, it jams. At 1955 the breaker unjams. The pump can now be placed in service upon notifying the OSC and the Control Room.

Time: 1805

CIS No: 28

BEAVER VALLEY POWER STATION
1992 EMERGENCY PREPAREDNESS EXERCISE
CUE INFORMATION SHEET

Message for: Control Room

Message: The following Annunciators are in alarm:
- ANN-A7-7D SSServ Tfmr 2A/2B undervoltage
CRT Reads: V2816D (SS Serv Tfmr 2B Volt).

FOR CONTROLLERS USE ONLY

Cont Notes: SSST 2B trip causing total loss of normal 4kV bus's C and D. Note: ERF diesel and bus's G and H are operable.

Actions Exp: Per alarm response procedures.

Time: 1809*

CIS No: 29

BEAVER VALLEY POWER STATION
1992 EMERGENCY PREPAREDNESS EXERCISE
CUE INFORMATION SHEET

Message for: OSC personnel dispatched to the SST "B"

Message: The following relays have tripped: 51-209G, 251-209G (ground "X" windings.
At the Transformer: No visual signs of damage, oil circulation pumps are running but no flow is indicated. Last weeks oil samples not analyzed yet, no problems from old samples.

FOR CONTROLLERS USE ONLY

Cont Notes: The impeller on an oil transfer pump disintigrates. The metal in the oil causes arcing, a transfer to ground and a trip.

Actions Exp: Report findings to the OSC.

Time: 1810

CIS No: 30

BEAVER VALLEY POWER STATION
1992 EMERGENCY PREPAREDNESS EXERCISE
CUE INFORMATION SHEET

Message for: Control Room

Message: The following Annunciators are in alarm:
- ANN-A12-1D Safety Injection signal
- ANN-A5-5F Manual SI actuation from main control board.

FOR CONTROLLERS USE ONLY

Cont Notes: Manual SI with CIA actuation.

Actions Exp: Per alarm response procedures.

Time: 1812

CIS No: 31

BEAVER VALLEY POWER STATION
1992 EMERGENCY PREPAREDNESS EXERCISE
CUE INFORMATION SHEET

Message for: Control Room

Message: The following Annunciators are in alarm:
- ANN-A2-3D Charging pump auto-start/auto-stop.
CRT Reads: Y0117D (CHG PP 21C (o) stop/start)

FOR CONTROLLERS USE ONLY

Cont Notes: C charging pump trip. Total loss of SI capability.

Actions Exp: Per alarm response procedures.

Time: 1815*

CIS No: 32

BEAVER VALLEY POWER STATION
1992 EMERGENCY PREPAREDNESS EXERCISE
CUE INFORMATION SHEET

Message for: OSC personnel dispatched to the "C" charging pump

Message: There is oil on the floor and a major oil leak coming from the speed increaser. The housing is cracked and hot to the touch.

FOR CONTROLLERS USE ONLY

Cont Notes: The loss of oil caused bearing temperatures to rise, and the gear seizes up in a catastrophic failure. Failure of the pump occurs at 1812.

Actions Exp: Report to the OSC that the pump is unrepairable.

Time: 1815

CIS No: 33

BEAVER VALLEY POWER STATION
1992 EMERGENCY PREPAREDNESS EXERCISE
CUE INFORMATION SHEET

Message for: Radiological Operations Center

Message: You have just received a call from the hospital that the injured man is resting comfortably and will be discharged in about a half hour.

FOR CONTROLLERS USE ONLY

Cont Notes: none

Actions Exp: Inform emergency organization.

Time: 1820

CIS No: 34X

BEAVER VALLEY POWER STATION
1992 EMERGENCY PREPAREDNESS EXERCISE
CUE INFORMATION SHEET

Message for: Emergency Director in TSC

Message: Declare a Site Area Emergency based on EPP/I-1 Tab 14, "Protection System Failure", Criterion A.

FOR CONTROLLERS USE ONLY

Cont Notes: To be used only if the emergency has not been called by 1820. If discussion are underway for declaration this CIS may be held for and additional time period.

Actions Exp: Declare an SAE and direct the appropriate notifications to be commenced.

Time: 1936

CIS No: 35

BEAVER VALLEY POWER STATION
1992 EMERGENCY PREPAREDNESS EXERCISE
CUE INFORMATION SHEET

Message for: Control Room

Message: The following Annunciators are in alarm:
-ANN A4 5A Radiation Monitoring System Trouble

FOR CONTROLLERS USE ONLY

Cont Notes: Containment Radiation monitor 2RMR RQ 201 is in Alert alarm due to the PRT rupture disk.

Actions Exp: Per alarm response procedures.

Time: 1951

CIS No: 36

BEAVER VALLEY POWER STATION
1992 EMERGENCY PREPAREDNESS EXERCISE
CUE INFORMATION SHEET

Message for: Control Room

Message: The following Annunciators are in alarm:
-ANN-A4-5C Radiation Level HI

FOR CONTROLLERS USE ONLY

Cont Notes: 2RMR RQ 201 and 204 are in HI alarm due to fuel damage.

Actions Exp: Per alarm response procedures.

Time: 1954

CIS No: 37

BEAVER VALLEY POWER STATION
1992 EMERGENCY PREPAREDNESS EXERCISE
CUE INFORMATION SHEET

Message for: Control Room

Message: The following Annunciators are in alarm:
-ANN-A4-5C Radiation Level HI

FOR CONTROLLERS USE ONLY

Cont Notes: 2RMR RQ 202A is in HI alarm due to fuel damage.

Actions Exp: Per alarm response procedures.

Time: 2000

CIS No: 38

BEAVER VALLEY POWER STATION
1992 EMERGENCY PREPAREDNESS EXERCISE
CUE INFORMATION SHEET

Message for: Maintenance repair team at the "A" Aux Feedwater pump

Message: You have been successfull in your repair efforts.

FOR CONTROLLERS USE ONLY

Cont Notes: Ensure the Control Room is notified by the repair team or the OSC.

Actions Exp: Contact the Control Room or the OSC to notify the Control Room.

Time: 2003

CIS No: 39

BEAVER VALLEY POWER STATION
1992 EMERGENCY PREPAREDNESS EXERCISE
CUE INFORMATION SHEET

Message for: Control Room

Message: The following Annunciators are in alarm:

PSMS display Reads: page 6 detail data-SG safety valve status loop C SV101C open.
-ANN-A4-5A Radiation Monitoring System Trouble
-ANN-A4-5C Radiation Monitoring Level HI

FOR CONTROLLERS USE ONLY

Cont Notes: C S/G tube rupture. Leak is 3500 GPM at 2235 PSIG. 2RMR RQ 202B and 2RMR RQ 206 are in Alert, 2RMR RQ 207 and 2MSS RQ 101C are in HI alarm due to fuel damage and release.

Actions Exp: Per alarm response procedures.

Time: 2021

CIS No: 40

BEAVER VALLEY POWER STATION
1992 EMERGENCY PREPAREDNESS EXERCISE
CUE INFORMATION SHEET

Message for: Control Room

Message: The following Annunciators are in alarm:
- ANN-A1-4A Accumulator level/press high/low

FOR CONTROLLERS USE ONLY

Cont Notes: Accumulators have commenced injecting.

Actions Exp: Per alarm response procedures.

Time: 2030

CIS No: 41X

BEAVER VALLEY POWER STATION
1992 EMERGENCY PREPAREDNESS EXERCISE
CUE INFORMATION SHEET

Message for: Emergency Director in the TSC

Message: A General Emergency should be declared based on EPP/I-1, TAB 6, "Primary to Secondary Leakage", Criterion A.

FOR CONTROLLERS USE ONLY

Cont Notes: This CIS is to be used only if the General Emergency is not called by 2030 hrs. However, if discussions are underway, this CIS may be held.

Actions Exp: The Emergency Director Should declare the emergency, in conjunction with the ERM and direct the appropriate notifications.

Time: 2130

CIS No: 42

BEAVER VALLEY POWER STATION
1992 EMERGENCY PREPAREDNESS EXERCISE
CUE INFORMATION SHEET

Message for: Control Room

Message: The following Annunciators are in alarm:
PSMS Display Reads: page 6 detail data-SG safety valve status loop C SV101C closed.

FOR CONTROLLERS USE ONLY

Cont Notes: The code safety valve reseats. The radioactive release to the environment ends.

Actions Exp: Per alarm response procedures.

Time: 2131

CIS No: 43

BEAVER VALLEY POWER STATION
1992 EMERGENCY PREPAREDNESS EXERCISE
CUE INFORMATION SHEET

Message for: Maintenance repair team at the "A" Charging pump.

Message: You have been successfull in your repairs of the pump.

FOR CONTROLLERS USE ONLY

Cont Notes: Ensure that the information is forwarded to the Control Room or the OSC.

Actions Exp: Contact the Control Room or the OSC with the information

Time: 2150

CIS No: 44

BEAVER VALLEY POWER STATION
1992 EMERGENCY PREPAREDNESS EXERCISE
CUE INFORMATION SHEET

Message for: ERF Controllers

Message: Inform players to begin termination/recovery discussions.

FOR CONTROLLERS USE ONLY

Cont Notes: Provide this CIS only if discussions are not underway

Actions Exp: Players should commence discussions.

Time: 2200

CIS No: 45

BEAVER VALLEY POWER STATION
1992 EMERGENCY PREPAREDNESS EXERCISE
CUE INFORMATION SHEET

Message for: All Controllers

Message: Terminate the exercise and continue clean-up and records collection. Request all players return supplies to appropriate locations. Issue exercise termination over 2's and Rad curcuits.

FOR CONTROLLERS USE ONLY

Cont Notes: This CIS is to be handed out only when the EOF lead Controller determines that the conditions for the exercise termination have been meet.

Actions Exp: Notify all personnel via communications systems.

Prepared Plant Data

Section VI

(Part C)

Plant Operations

Section VI

(Part C.1)

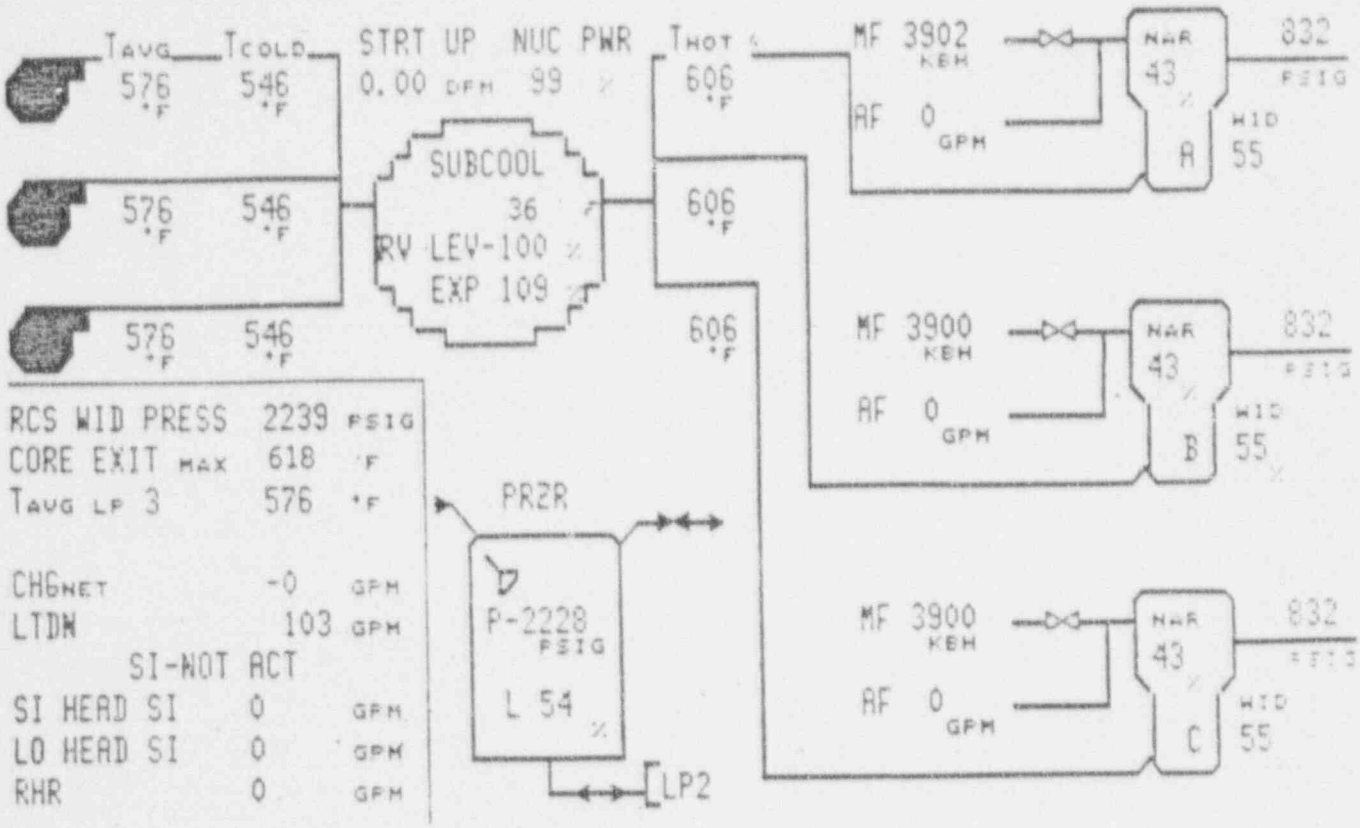

CONTAINMENT				ELECTRICAL			
Press. (PSIA)	9.74	Temp. (F)	94.3	SSST 2A	OOS	SSST 2B	OK
RHS	AVAIL	Sump (In)	0.0	2 AE	OK	2 DF	OK
Quench Spray	AVAIL	Recirc Spray	AVAIL	2 N	OK	2 P	OK
HHSI	AVAIL	CIA	NO	DG 2-1	AVAIL	DG 2-2	OOS
LHSI	AVAIL	CIB	NO	Batteries	OK	Vital Buses	OK

Time 1430

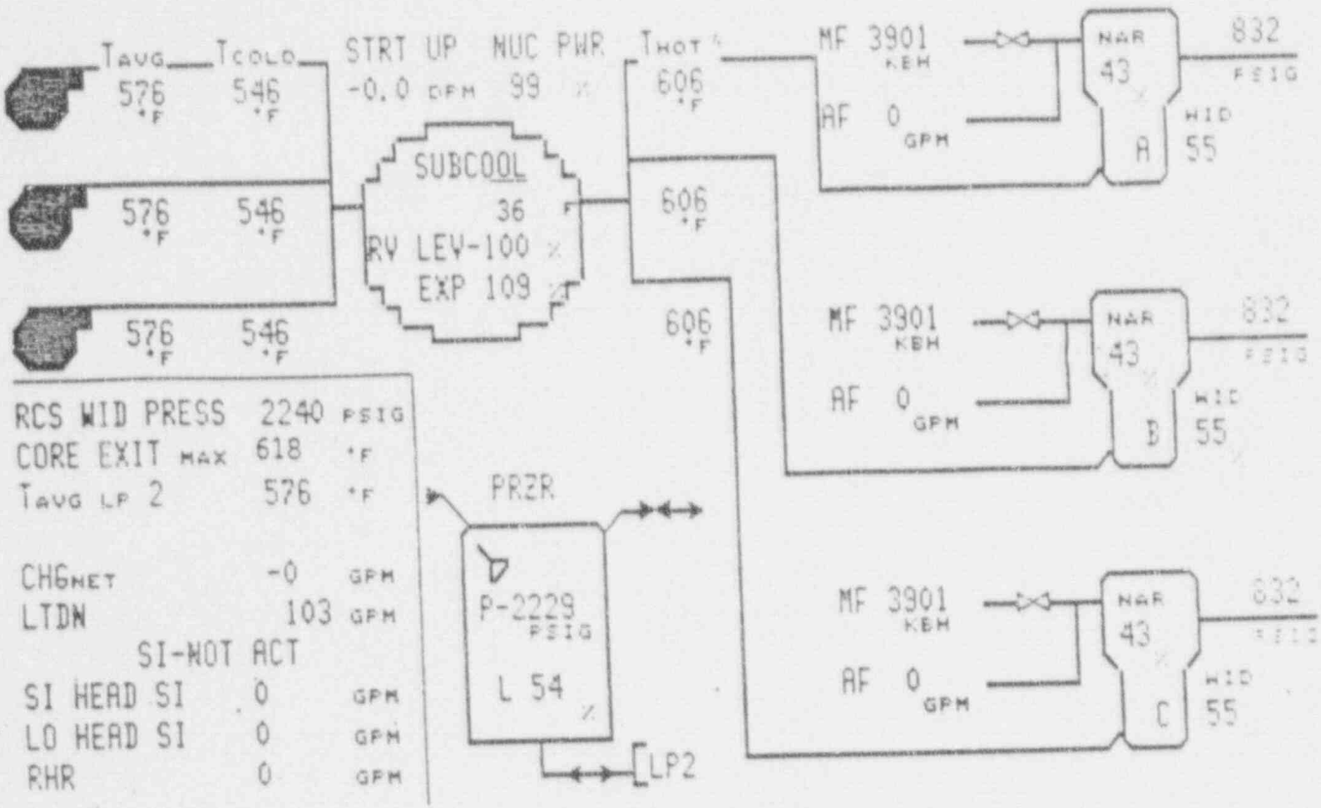

CONTAINMENT				ELECTRICAL			
Press. (PSIA)	9.74	Temp. (F)	94.4	SSST 2A	OOS	SSST 2B	OK
RHS	AVAIL	Sump (In)	0.0	2 AE	OK	2 DF	OK
Quench Spray	AVAIL	Recirc Spray	AVAIL	2 N	OK	2 P	OK
HHSI	AVAIL	CIA	NO	DG 2-1	AVAIL	DG 2-2	OOS
LHSI	AVAIL	CIB	NO	Batteries	OK	Vital Buses	OK

Time 1433

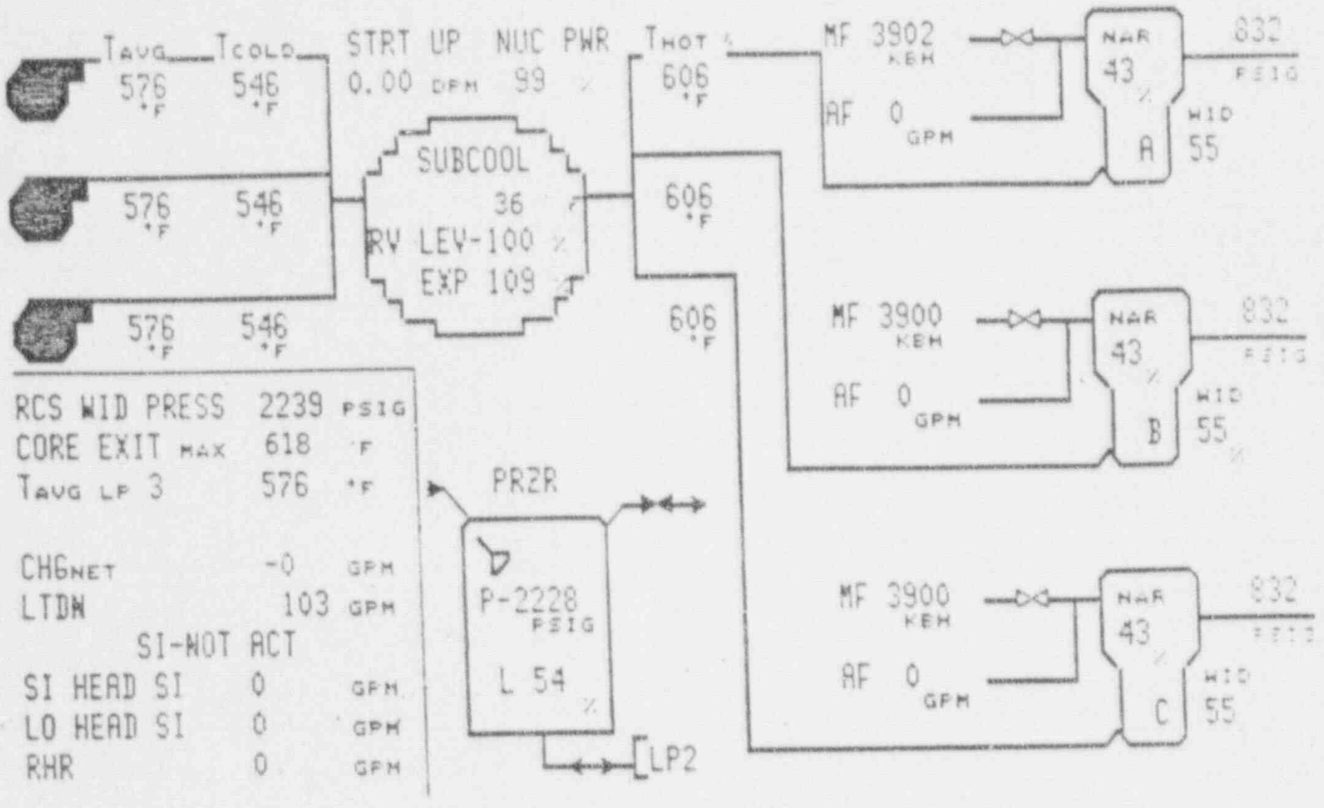

CONTAINMENT				ELECTRICAL			
Press. (PSIA)	9.74	Temp. (F)	94.3	SSST 2A	OOS	SSST 2B	OK
RHS	AVAIL	Sump (In)	0.0	2 AE	OK	2 DF	OK
Quench Spray	AVAIL	Recirc Spray	AVAIL	2 N	OK	2 P	OK
HHSI	AVAIL	CIA	NO	DG 2-1	AVAIL	DG 2-2	OOS
LHSI	AVAIL	CIB	NO	Batteries	OK	Vital Buses	OK

Time 1436

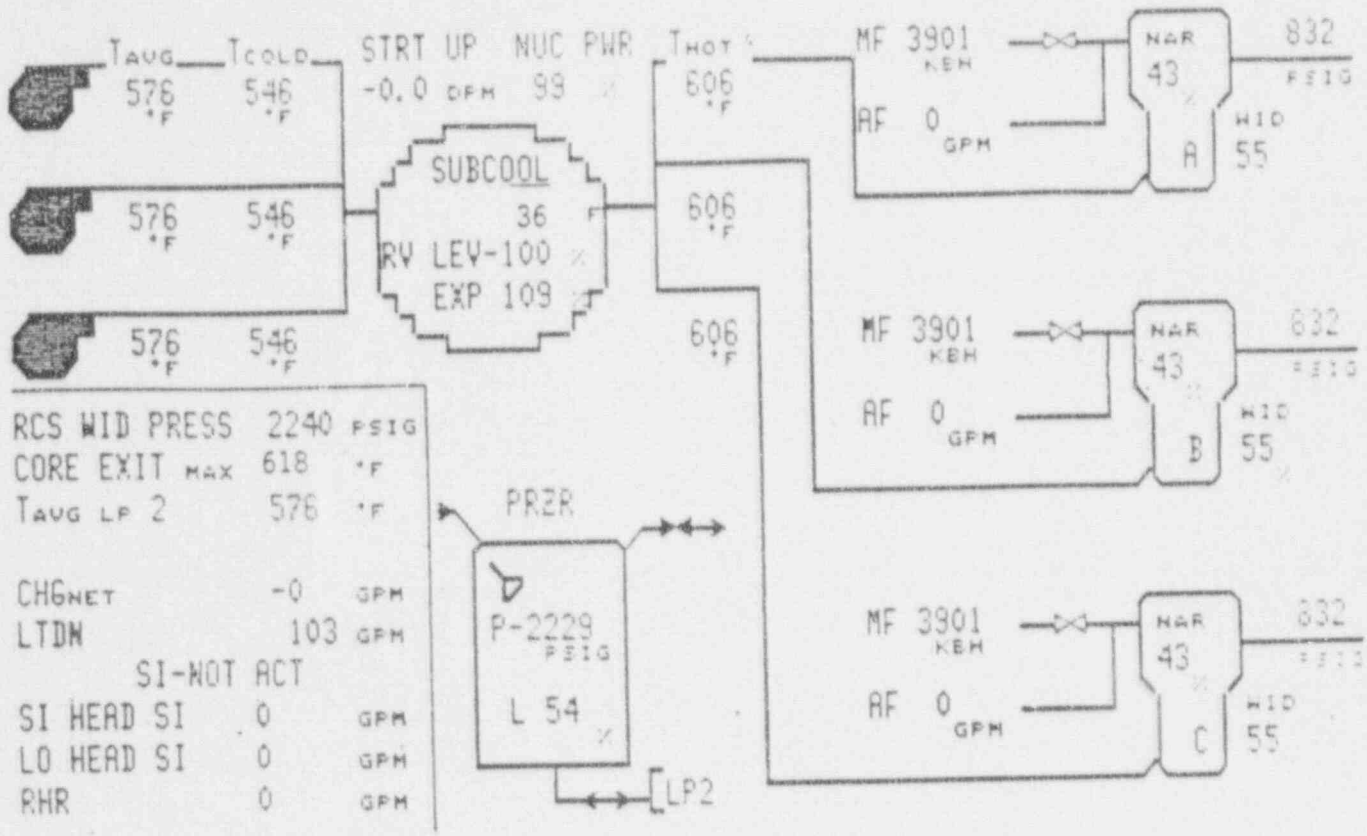

CONTAINMENT				ELECTRICAL			
Press. (PSIA)	9.74	Temp. (F)	94.4	SSST 2A	OOS	SSST 2B	OK
RHS	AVAIL	Sump (In)	0.0	2 AE	OK	2 DF	OK
Quench Spray	AVAIL	Recirc Spray	AVAIL	2 N	OK	2 P	OK
HHSI	AVAIL	CIA	NO	DG 2-1	AVAIL	DG 2-2	OOS
LHSI	AVAIL	CIB	NO	Batteries	OK	Vital Buses	OK

Time 1439

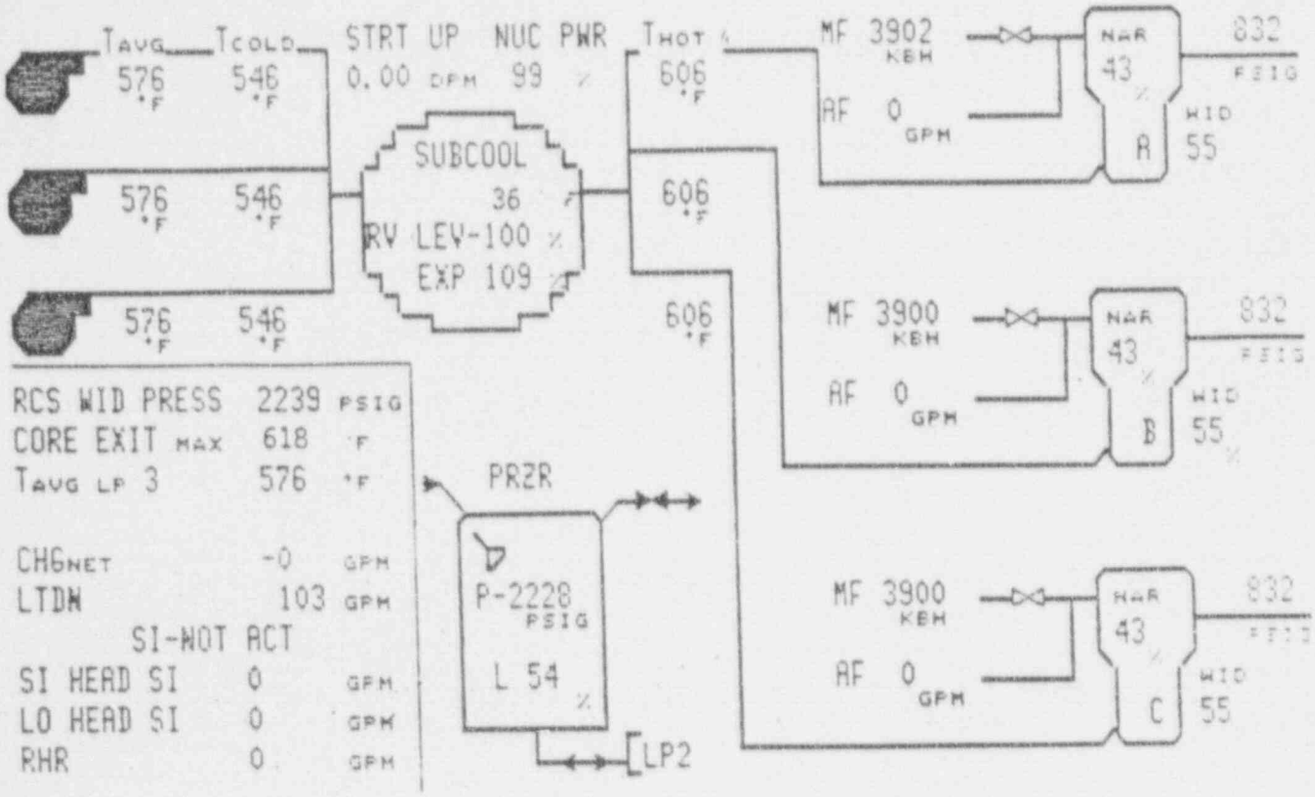

CONTAINMENT				ELECTRICAL			
Press. (PSIA)	9.74	Temp. (F)	94.3	SSST 2A	OOS	SSST 2B	OK
RHS	AVAIL	Sump (In)	0.0	2 AE	OK	2 DF	OK
Quench Spray	AVAIL	Recirc Spray	AVAIL	2 N	OK	2 P	OK
HHSI	AVAIL	CIA	NO	DG 2-1	AVAIL	DG 2-2	OOS
LHSI	AVAIL	CIB	NO	Batteries	OK	Vital Buses	OK

Time 1442

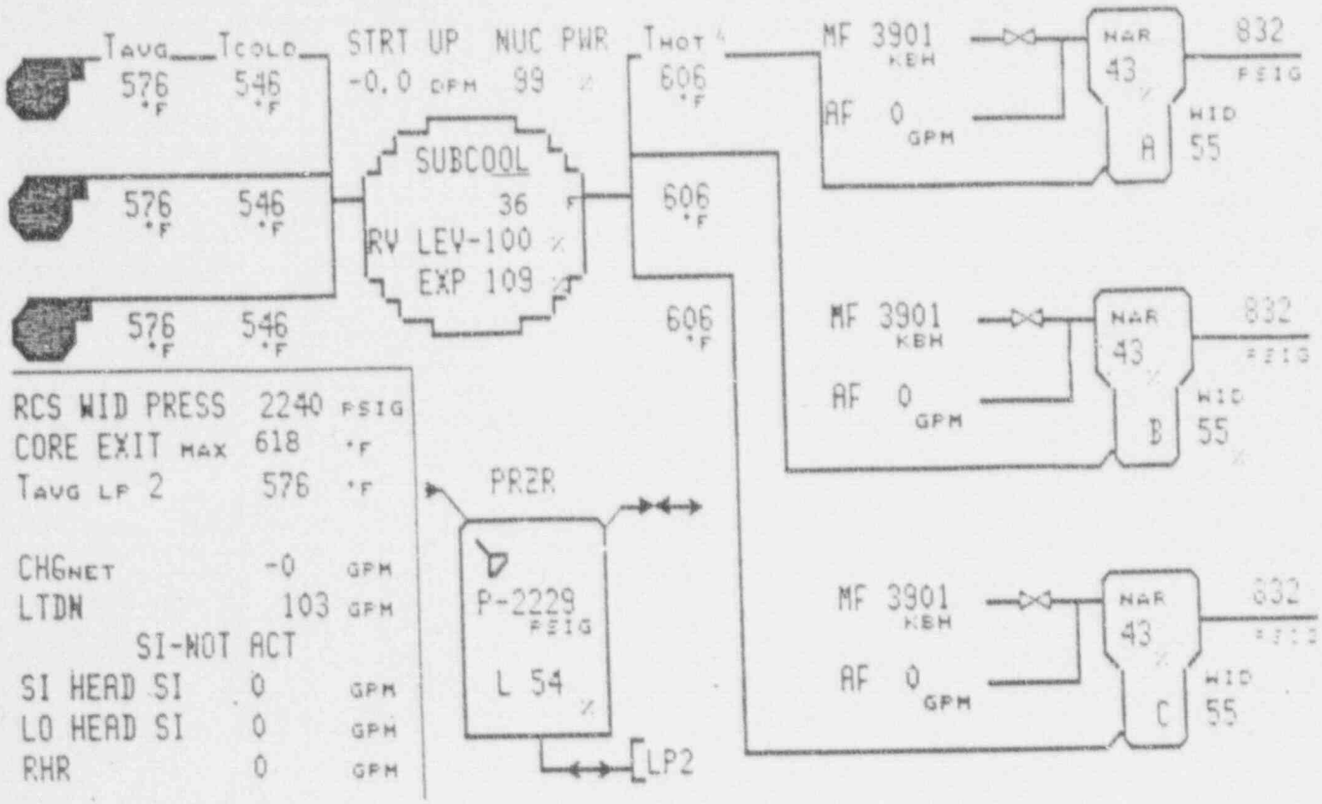

CONTAINMENT				ELECTRICAL			
Press. (PSIA)	9.74	Temp. (F)	94.4	SSST 2A	OOS	SSST 2B	OK
RHS	AVAIL	Sump (In)	0.0	2 AE	OK	2 DF	OK
Quench Spray	AVAIL	Recirc Spray	AVAIL	2 N	OK	2 P	OK
HHSI	AVAIL	CIA	NO	DG 2-1	AVAIL	DG 2-2	OOS
LHSI	AVAIL	CIB	NO	Batteries	OK	Vital Buses	OK

Time 1445

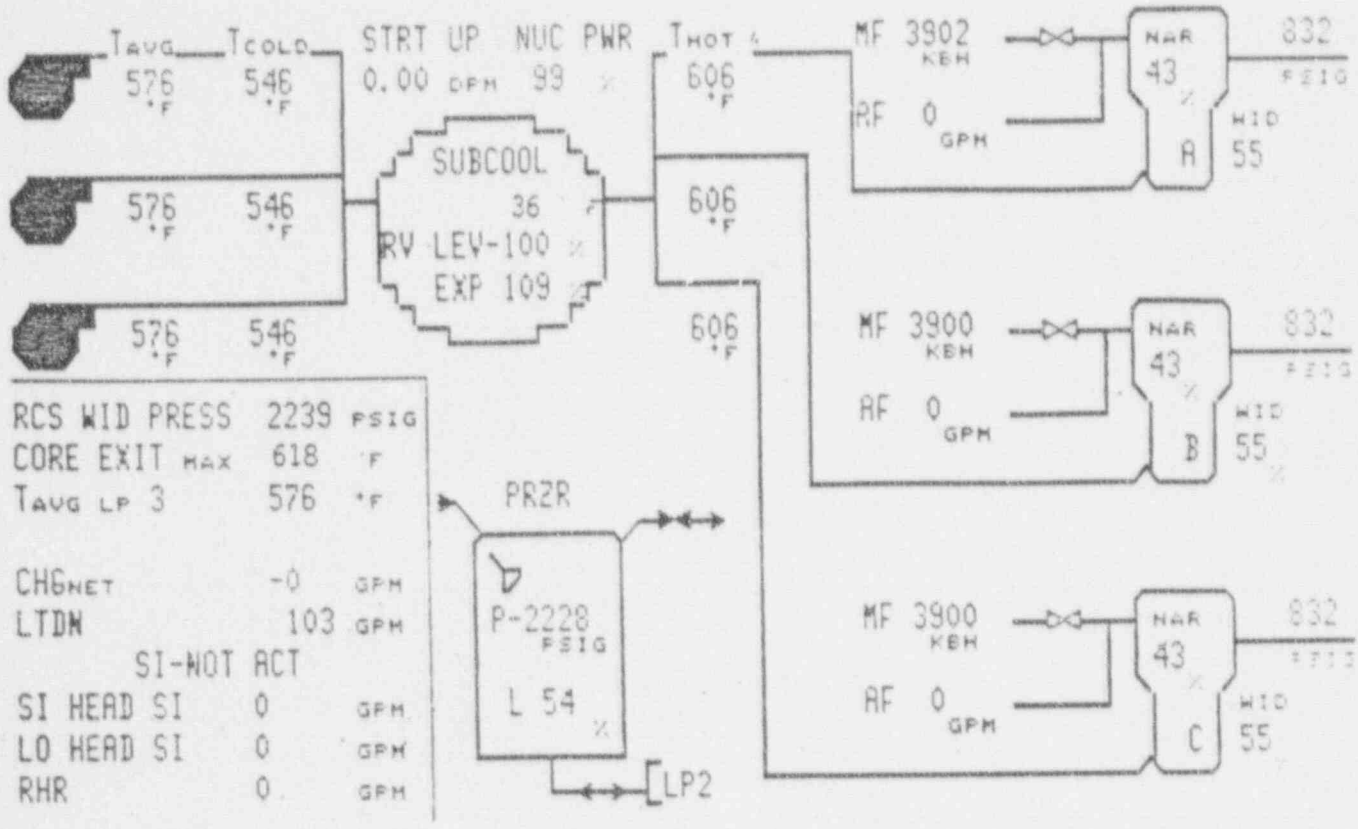

CONTAINMENT				ELECTRICAL			
Press. (PSIA)	9.74	Temp. (F)	94.3	SSST 2A	OOS	SSST 2B	OK
RHS	AVAIL	Sump (In)	0.0	2 AE	OK	2 DF	OK
Quench Spray	AVAIL	Recirc Spray	AVAIL	2 N	OK	2 P	OK
HHSI	AVAIL	CIA	NO	DG 2-1	AVAIL	DG 2-2	OOS
LHSI	AVAIL	CIB	NO	Batteries	OK	Vital Buses	OK

Time 1448

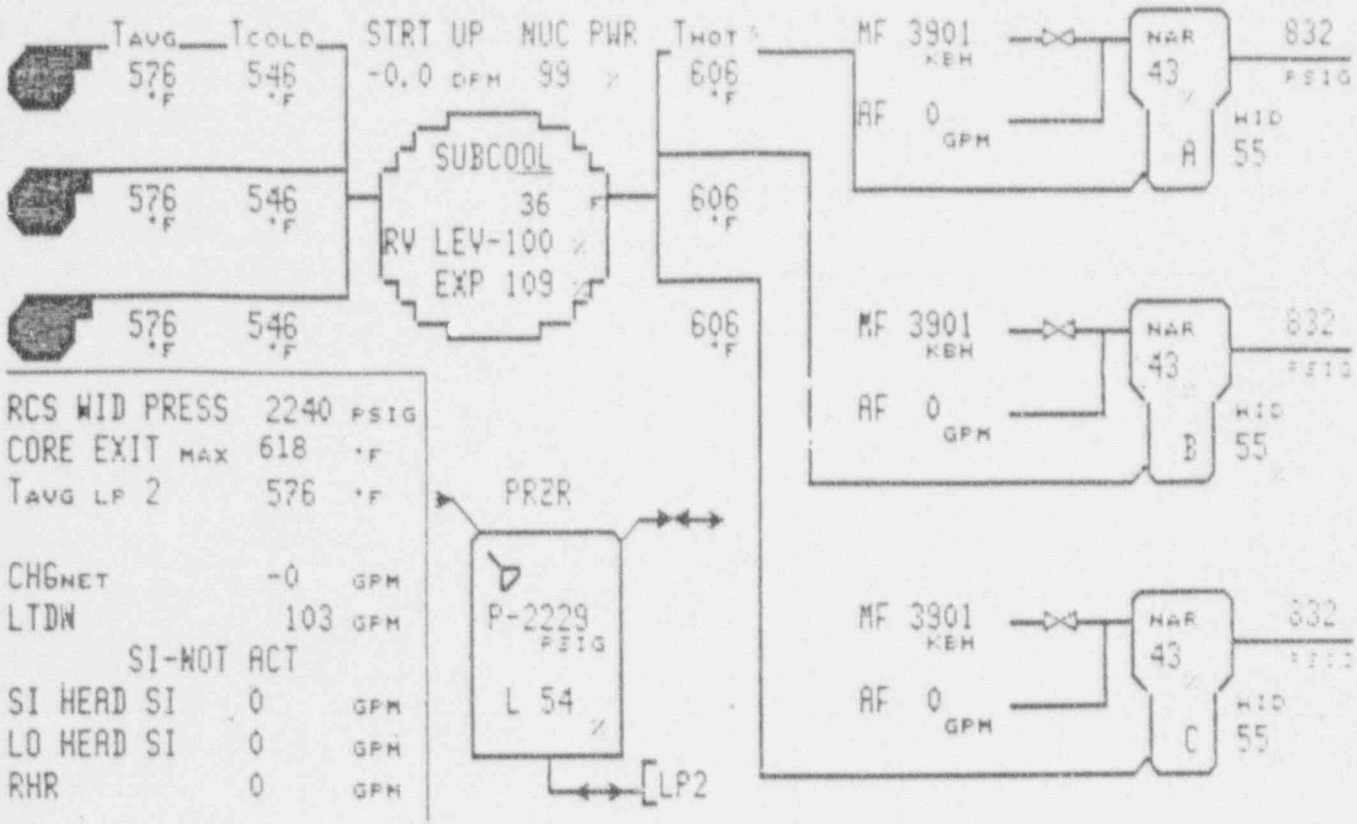

CONTAINMENT				ELECTRICAL			
Press. (PSIA)	9.74	Temp. (F)	94.4	SSST 2A	OOS	SSST 2B	OK
RHS	AVAIL	Sump (In)	0.0	2 AE	OK	2 DF	OK
Quench Spray	AVAIL	Recirc Spray	AVAIL	2 N	OK	2 P	OK
HHSI	AVAIL	CIA	NO	DG 2-1	AVAIL	DG 2-2	OOS
LHSI	AVAIL	CIB	NO	Batteries	OK	Vital Buses	OK

Time 1451

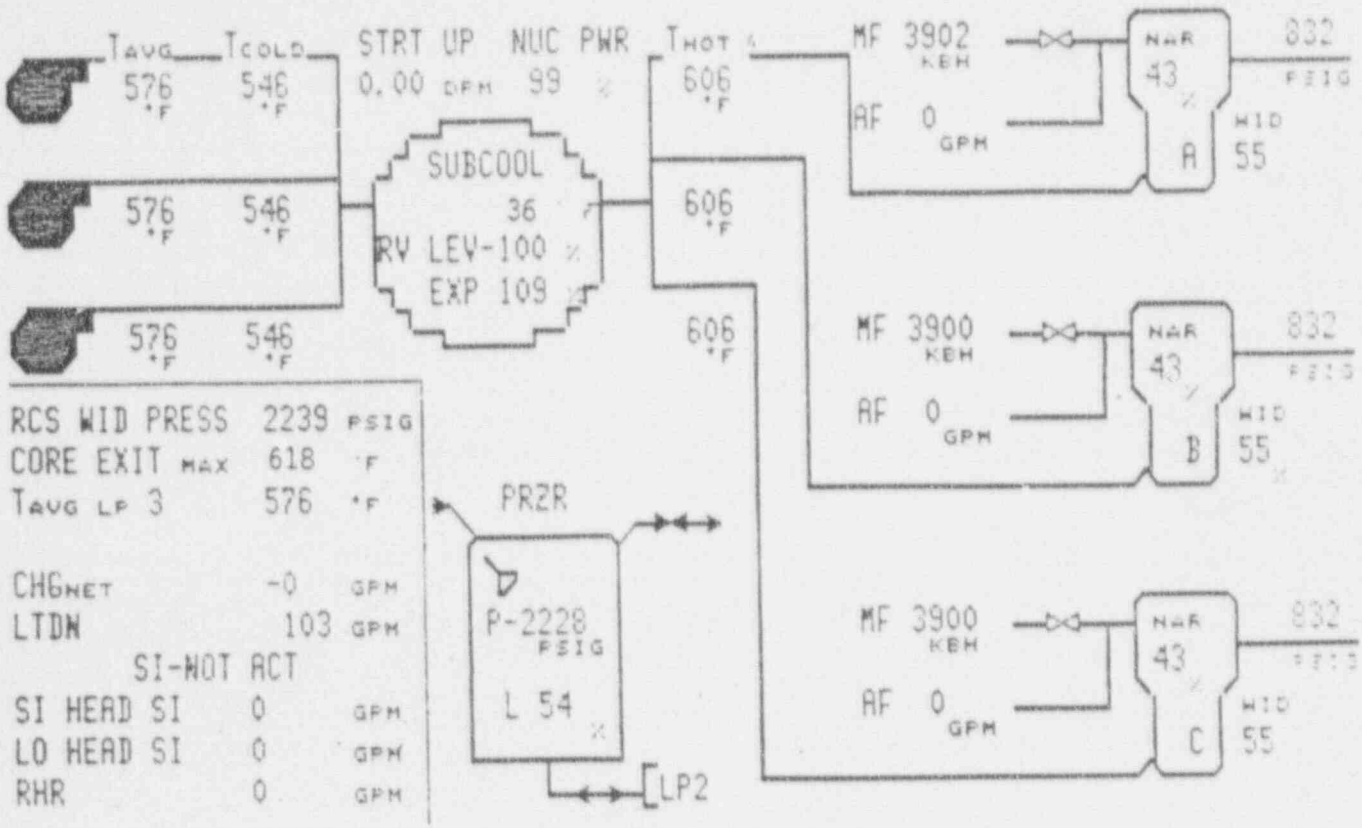

CONTAINMENT				ELECTRICAL			
Press. (PSIA)	9.74	Temp. (F)	94.3	SSST 2A	OOS	SSST 2B	OK
RHS	AVAIL	Sump (In)	0.0	2 AE	OK	2 DF	OK
Quench Spray	AVAIL	Recirc Spray	AVAIL	2 N	OK	2 P	OK
HHSI	AVAIL	CIA	NO	DG 2-1	AVAIL	DG 2-2	OOS
LHSI	AVAIL	CIB	NO	Batteries	OK	Vital Buses	OK

Time 1454

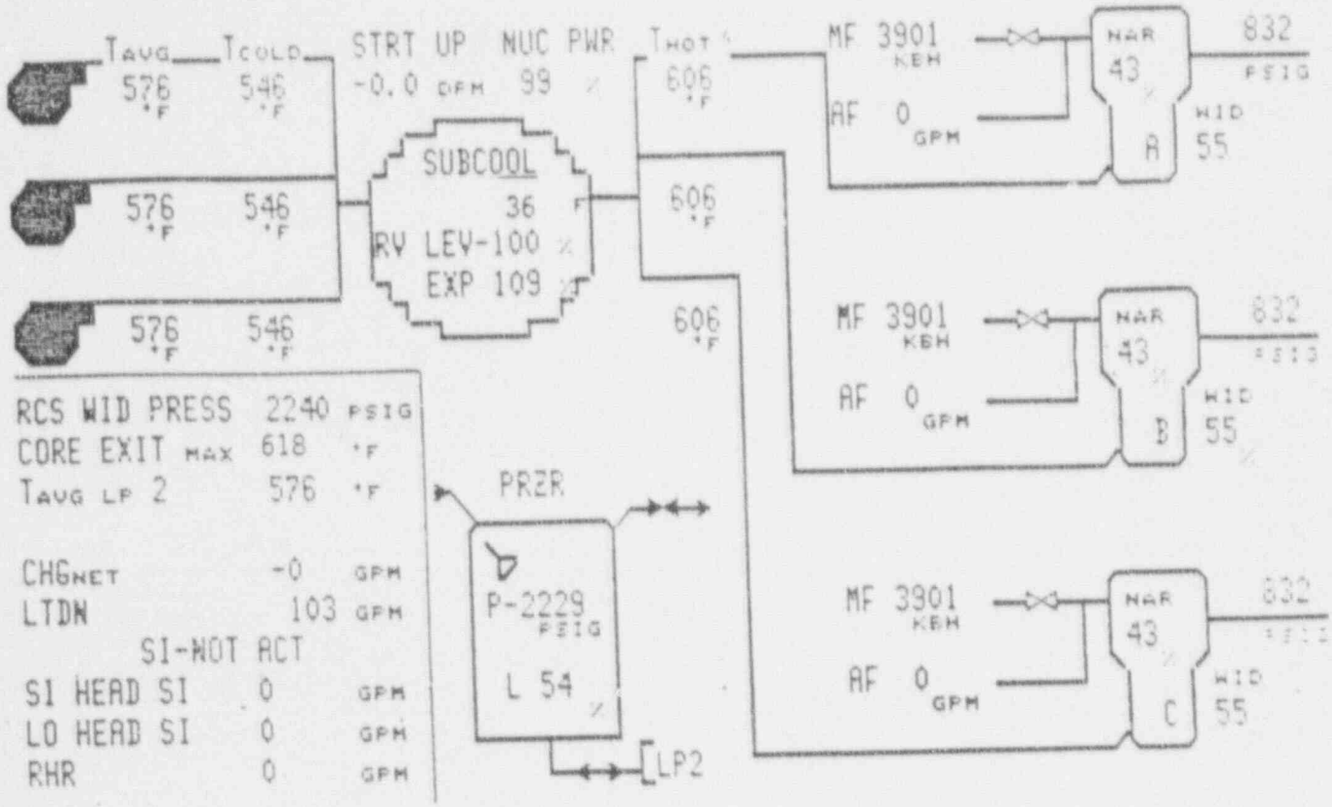

CONTAINMENT				ELECTRICAL			
Press. (PSIA)	9.74	Temp. (F)	94.4	SSST 2A	OOS	SSST 2B	OK
RHS	AVAIL	Sump (In)	0.0	2 AE	OK	2 DF	OK
Quench Spray	AVAIL	Recirc Spray	AVAIL	2 N	OK	2 P	OK
HHSI	AVAIL	CIA	NO	DG 2-1	AVAIL	DG 2-2	OOS
LHSI	AVAIL	CIB	NO	Batteries	OK	Vital Buses	OK

Time 1457

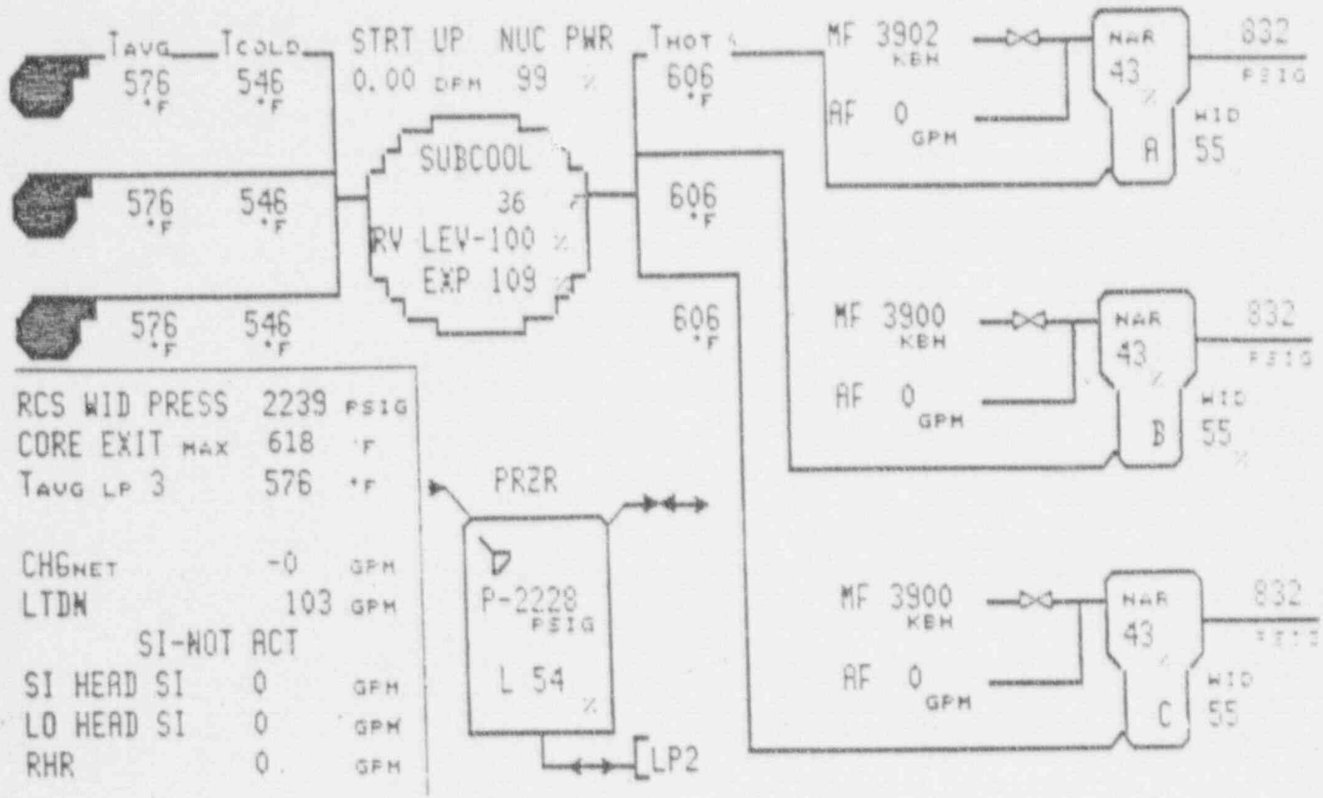

CONTAINMENT				ELECTRICAL			
Press. (PSIA)	9.74	Temp. (F)	94.3	SSST 2A	OOS	SSST 2B	OK
RHS	AVAIL	Sump (In)	0.0	2 AE	OK	2 DF	OK
Quench Spray	AVAIL	Recirc Spray	AVAIL	2 N	OK	2 P	OK
HHSI	AVAIL	CIA	NO	DG 2-1	AVAIL	DG 2-2	OOS
LHSI	AVAIL	CIB	NO	Batteries	OK	Vital Buses	OK

Time 1500

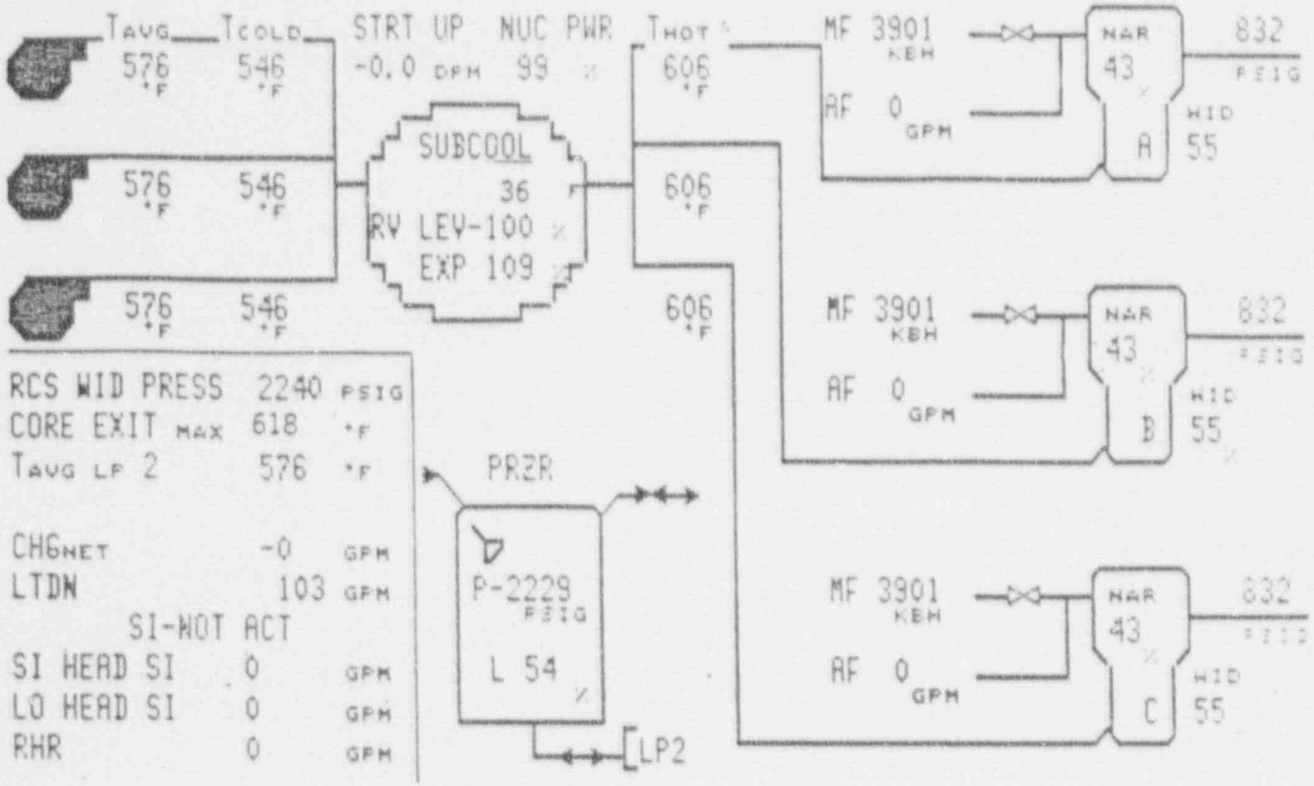

CONTAINMENT				ELECTRICAL			
Press. (PSIA)	9.74	Temp. (F)	94.4	SSST 2A	OOS	SSST 2B	OK
RHS	AVAIL	Sump (In)	0.0	2 AE	OK	2 DF	OK
Quench Spray	AVAIL	Recirc Spray	AVAIL	2 N	OK	2 P	OK
HHSI	AVAIL	CIA	NO	DG 2-1	AVAIL	DG 2-2	OOS
LHSI	AVAIL	CIB	NO	Batteries	OK	Vital Buses	OK

Time 1503

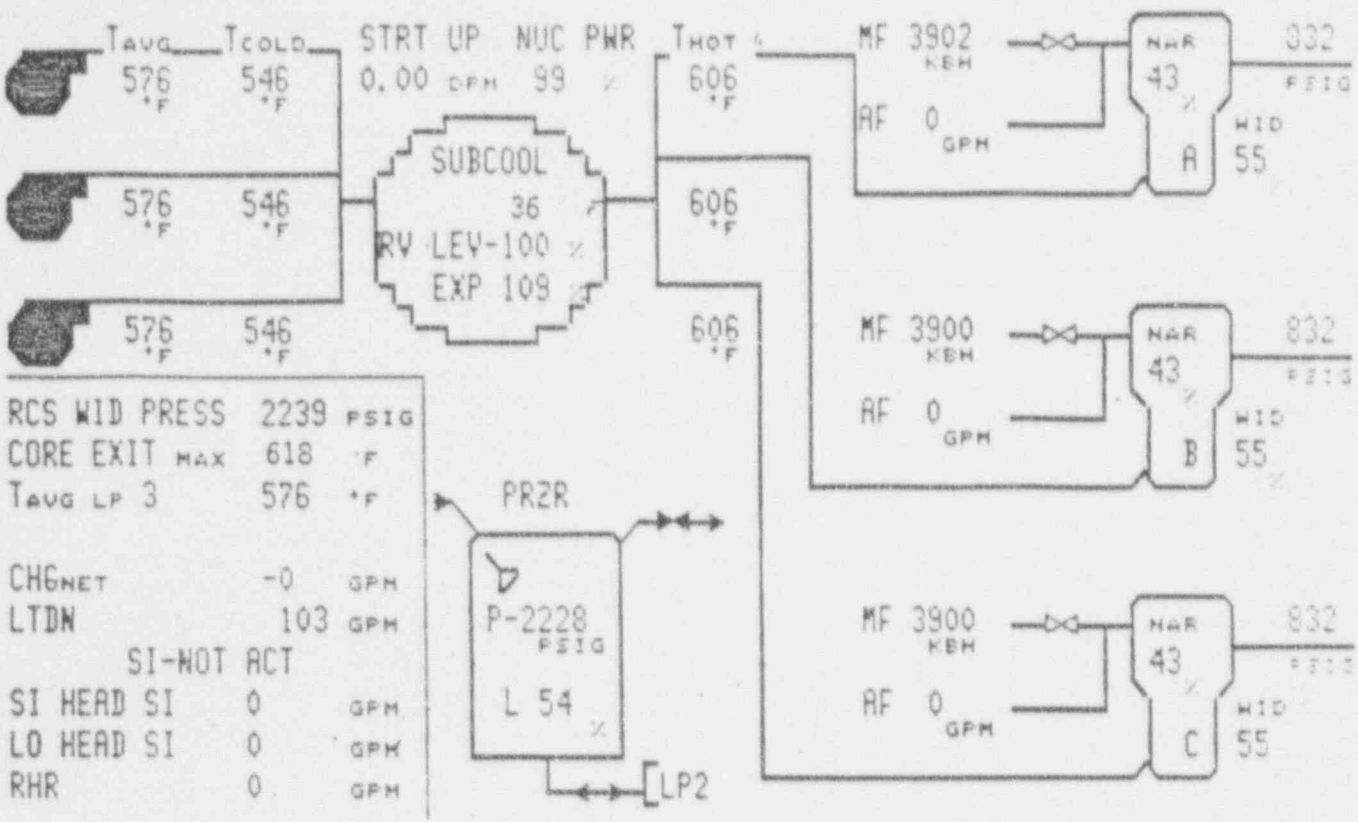

CONTAINMENT				ELECTRICAL			
Press. (PSIA)	9.74	Temp. (F)	94.3	SSST 2A	OOS	SSST 2B	OK
RHS	AVAIL	Sump (In)	0.0	2 AE	OK	2 DF	OK
Quench Spray	AVAIL	Recirc Spray	AVAIL	2 N	OK	2 P	OK
HHSI	AVAIL	CIA	NO	DG 2-1	AVAIL	DG 2-2	OOS
LHSI	AVAIL	CIB	NO	Batteries	OK	Vital Buses	OK

Time 1506

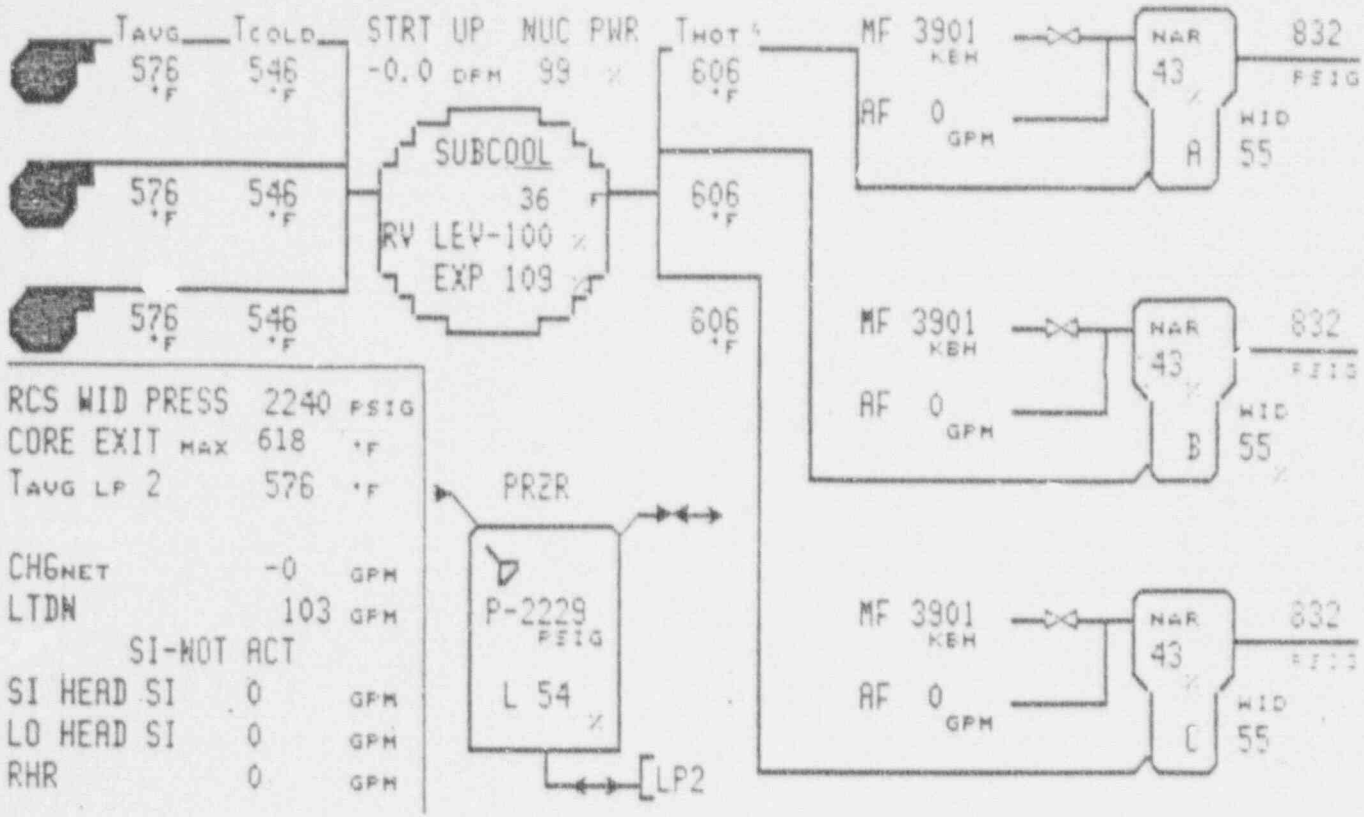

CONTAINMENT				ELECTRICAL			
Press. (PSIA)	9.74	Temp. (F)	94.4	SSST 2A	OOS	SSST 2B	OK
RHS	AVAIL	Sump (In)	0.0	2 AE	OK	2 DF	OK
Quench Spray	AVAIL	Recirc Spray	AVAIL	2 N	OK	2 P	OK
HHSI	AVAIL	CIA	NO	DG 2-1	AVAIL	DG 2-2	OOS
LHSI	AVAIL	CIB	NO	Batteries	OK	Vital Buses	OK

Time 1509

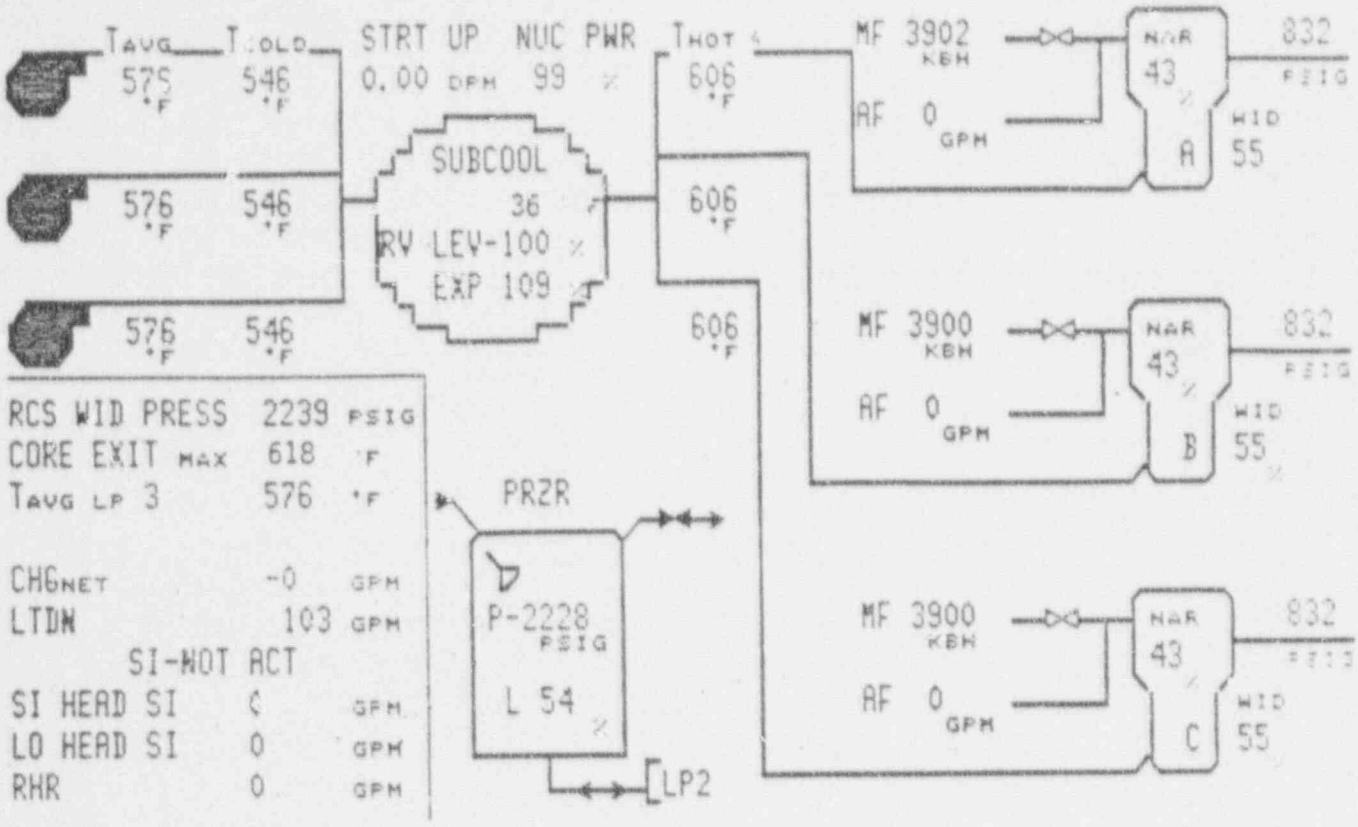

CONTAINMENT				ELECTRICAL			
Press. (PSIA)	9.74	Temp. (F)	94.3	SSST 2A	OOS	SSST 2B	OK
RHS	AVAIL	Sump (In)	0.0	2 AE	OK	2 DF	OK
Quench Spray	AVAIL	Recirc Spray	AVAIL	2 N	OK	2 P	OK
HHSI	AVAIL	CIA	NO	DG 2-1	AVAIL	DG 2-2	OOS
LHSI	AVAIL	CIB	NO	Batteries	OK	Vital Buses	OK

Time 1512

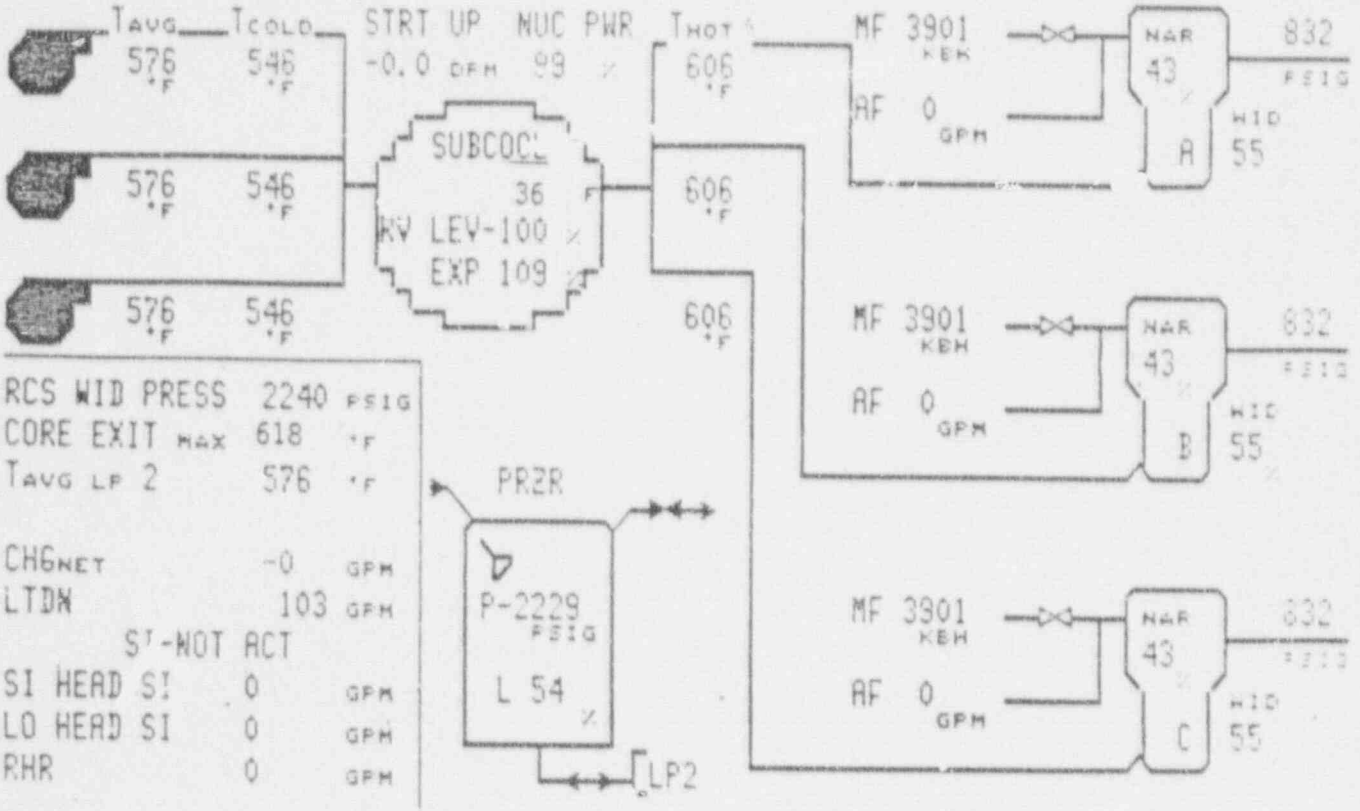

CONTAINMENT				ELECTRICAL			
Press. (PSIA)	9.74	Temp. (F)	94.4	SSST 2A	OOS	SSST 2B	OK
RHS	AVAIL	Sump (In)	0.0	2 AE	OK	2 DF	OK
Quench Spray	AVAIL	Recirc Spray	AVAIL	2 N	OK	2 P	OK
HHSI	AVAIL	CIA	NO	DG 2-1	AVAIL	DG 2-2	OOS
LHSI	AVAIL	CIB	NO	Batteries	OK	Vital Buses	OK

Time 1515

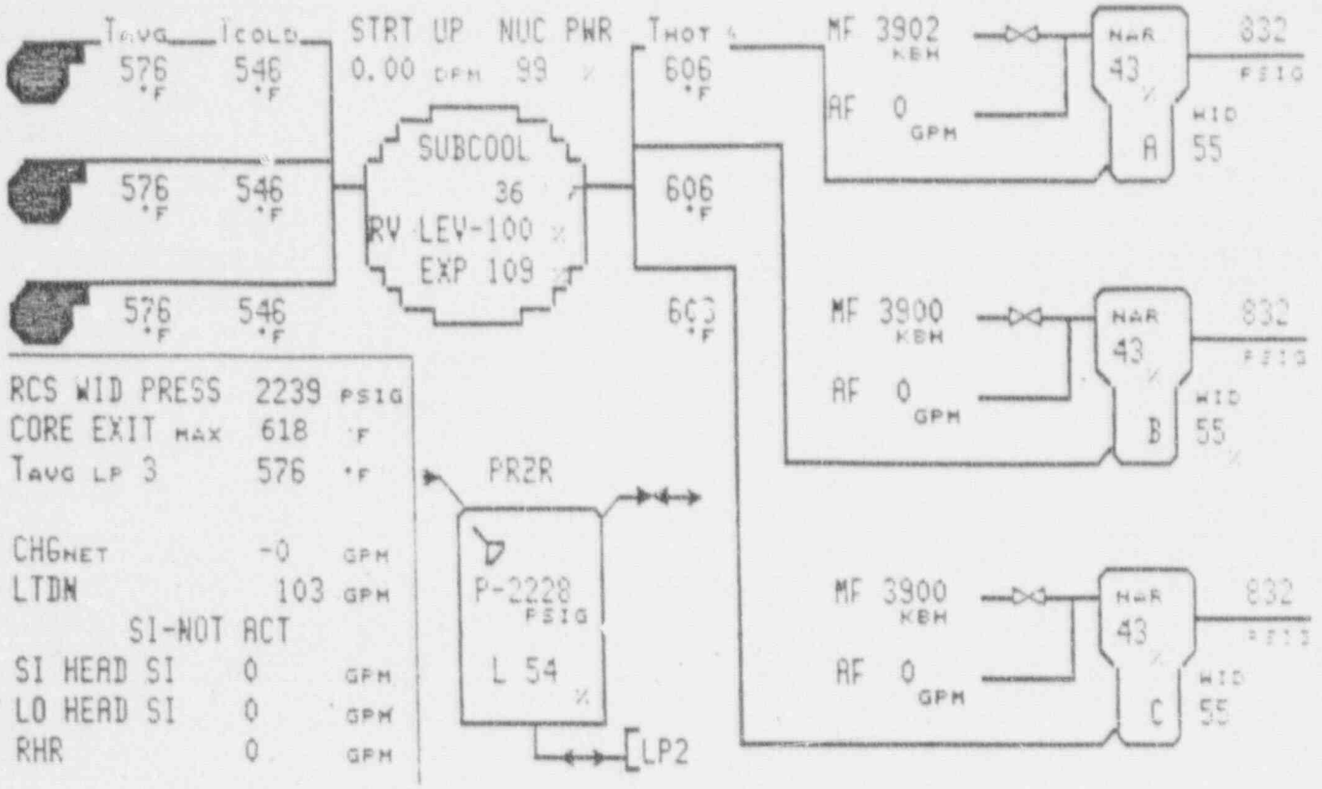

CONTAINMENT				ELECTRICAL			
Press. (PSIA)	9.74	Temp. (F)	94.3	SSST 2A	OOS	SSST 2B	OK
RHS	AVAIL	Sump (In)	0.0	2 AE	OK	2 DF	OK
Quench Spray	AVAIL	Recirc Spray	AVAIL	2 N	OK	2 P	OK
HHSI	AVAIL	CIA	NO	DG 2-1	AVAIL	DG 2-2	OOS
LHSI	AVAIL	CIB	NO	Batteries	OK	Vital Buses	OK

Time 1518

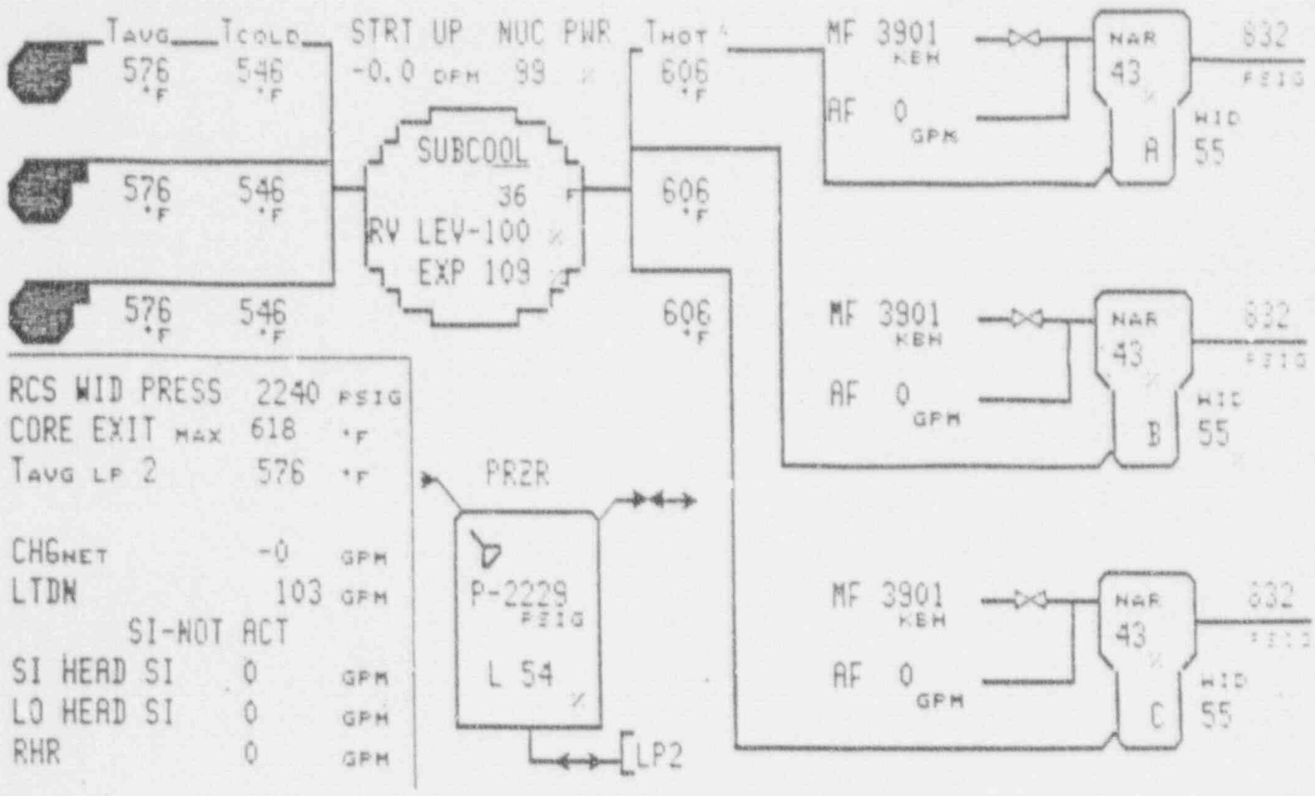

CONTAINMENT				ELECTRICAL			
Press. (PSIA)	9.74	Temp. (F)	94.4	SSST 2A	OOS	SSST 2B	OK
RHS	AVAIL	Sump (In)	0.0	2 AE	OK	2 DF	OK
Quench Spray	AVAIL	Recirc Spray	AVAIL	2 N	OK	2 P	CK
HHSI	AVAIL	CIA	NO	DG 2-1	AVAIL	DG 2-2	OOS
LHSI	AVAIL	CIB	NO	Batteries	OK	Vital Buses	OK

Time 1521

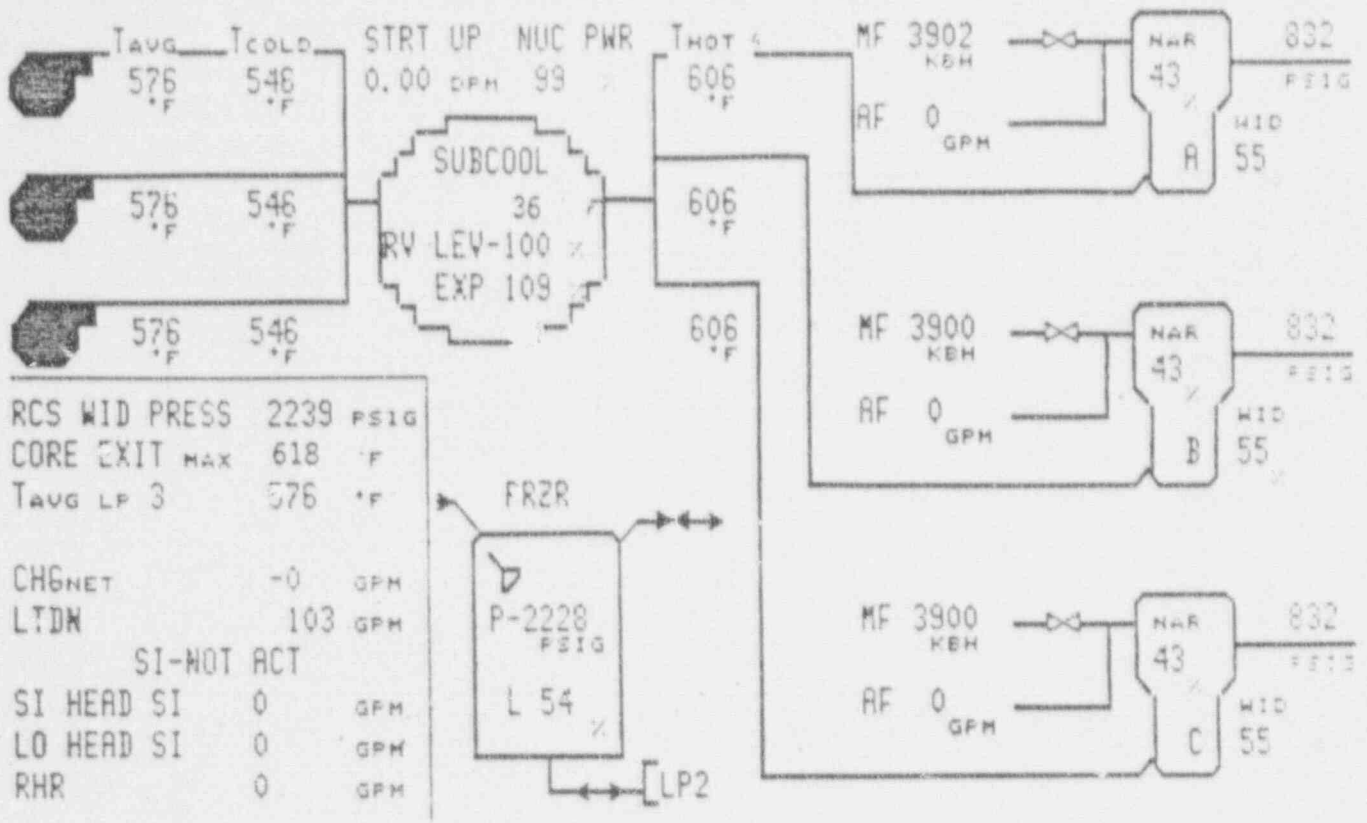

CONTAINMENT				ELECTRICAL			
Press. (PSIA)	9.74	Temp. (F)	94.3	SSST 2A	OOS	SSST 2B	OK
RHS	AVAIL	Sump (In)	0.0	2 AE	OK	2 DF	OK
Quench Spray	AVAIL	Recirc Spray	AVAIL	2 N	OK	2 P	OK
HHSI	AVAIL	CIA	NO	DG 2-1	AVAIL	DG 2-2	OOS
LHSI	AVAIL	CIB	NO	Batteries	OK	Vital Buses	OK

Time 1524

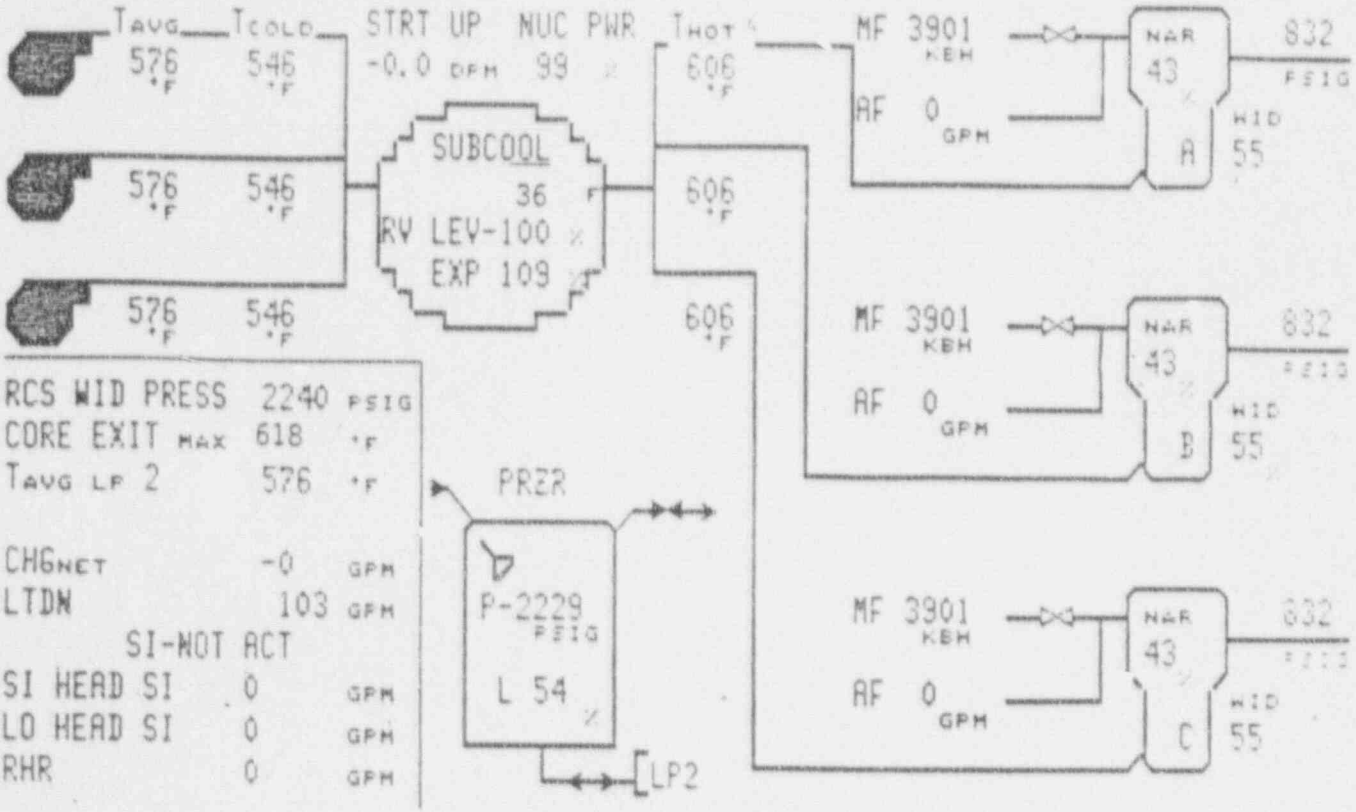

CONTAINMENT				ELECTRICAL			
Press. (PSIA)	9.74	Temp. (F)	94.4	SSST 2A	OOS	SSST 2B	OK
RHS	AVAIL	Sump (In)	0.0	2 AE	OK	2 DF	OK
Quench Spray	AVAIL	Recirc Spray	AVAIL	2 N	OK	2 P	OK
HHSI	AVAIL	CIA	NO	DG 2-1	AVAIL	DG 2-2	OOS
LHSI	AVAIL	CIB	NO	Batteries	OK	Vital Buses	OK

Time 1527

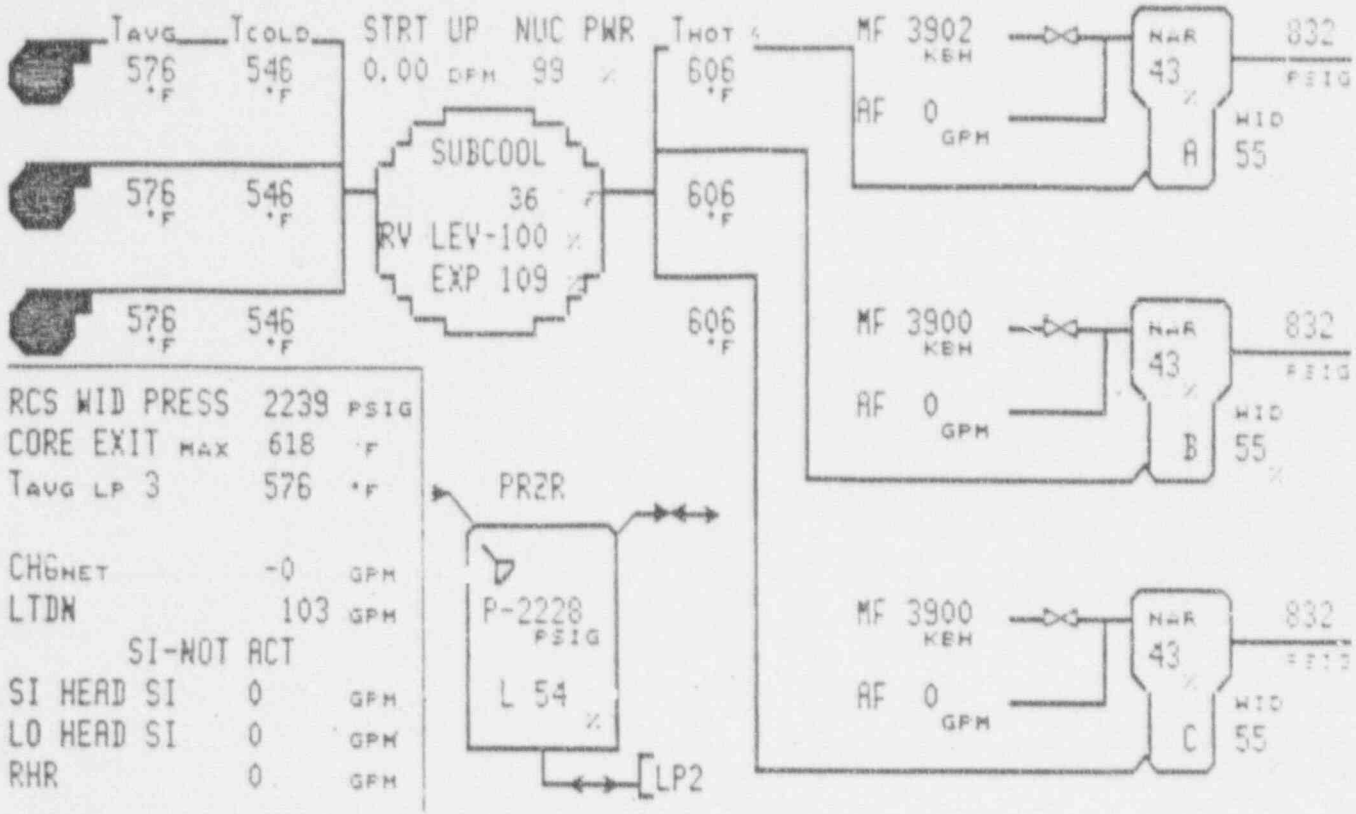

CONTAINMENT				ELECTRICAL			
Press. (PSIA)	9.74	Temp. (F)	94.3	SSST 2A	OOS	SSST 2B	OK
RHS	AVAIL	Sump (In)	0.0	2 AE	OK	2 DF	OK
Quench Spray	AVAIL	Recirc Spray	AVAIL	2 N	OK	2 P	OK
HHSI	AVAIL	CIA	NO	DG 2-1	AVAIL	DG 2-2	OOS
LHSI	AVAIL	CIB	NO	Batteries	OK	Vital Buses	OK

Time 1530

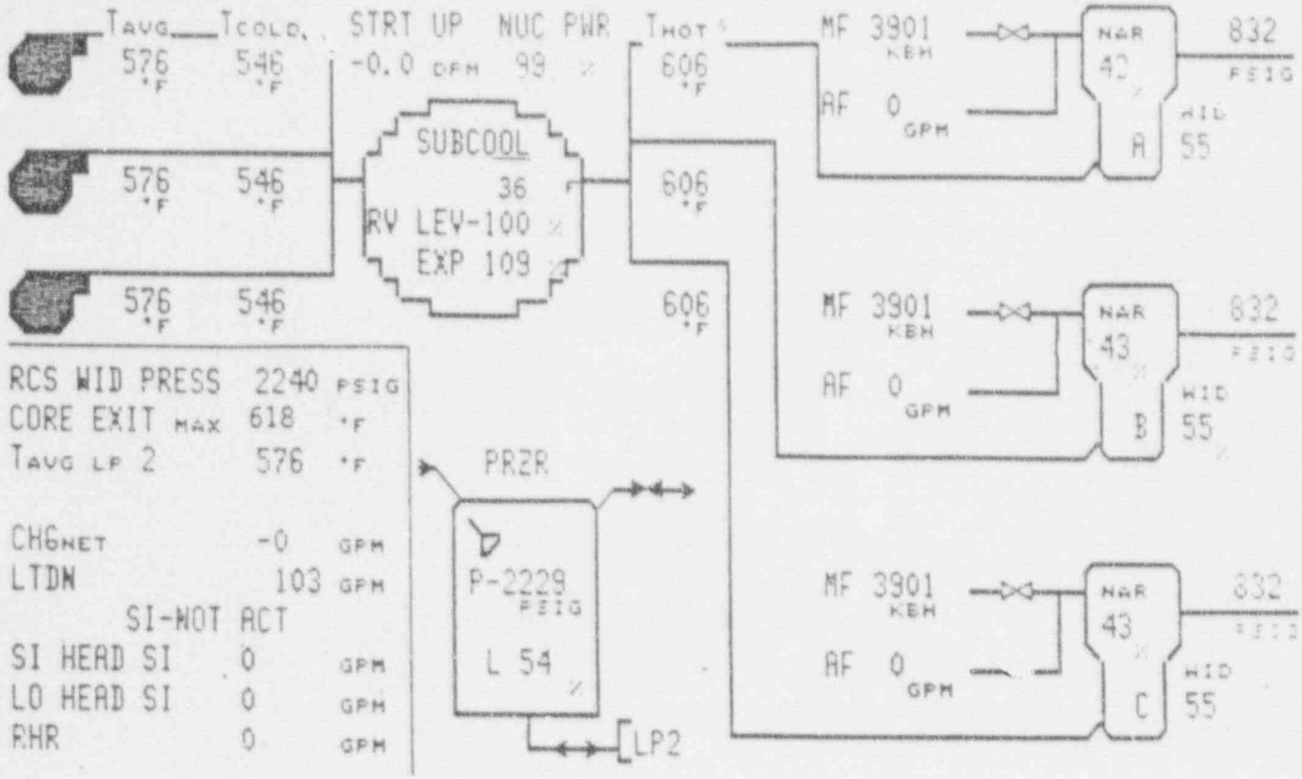

CONTAINMENT				ELECTRICAL			
Press. (PSIA)	9.74	Temp. (F)	94.4	SSST 2A	OOS	SSST 2B	OK
RHS	AVAIL	Sump (In)	0.0	2 AE	OK	2 DF	OK
Quench Spray	AVAIL	Recirc Spray	AVAIL	2 N	OK	2 P	OK
HHSI	AVAIL	CIA	NO	DG 2-1	AVAIL	DG 2-2	OOS
LHSI	AVAIL	CIB	NO	Batteries	OK	Vital Buses	OK

Time 1533

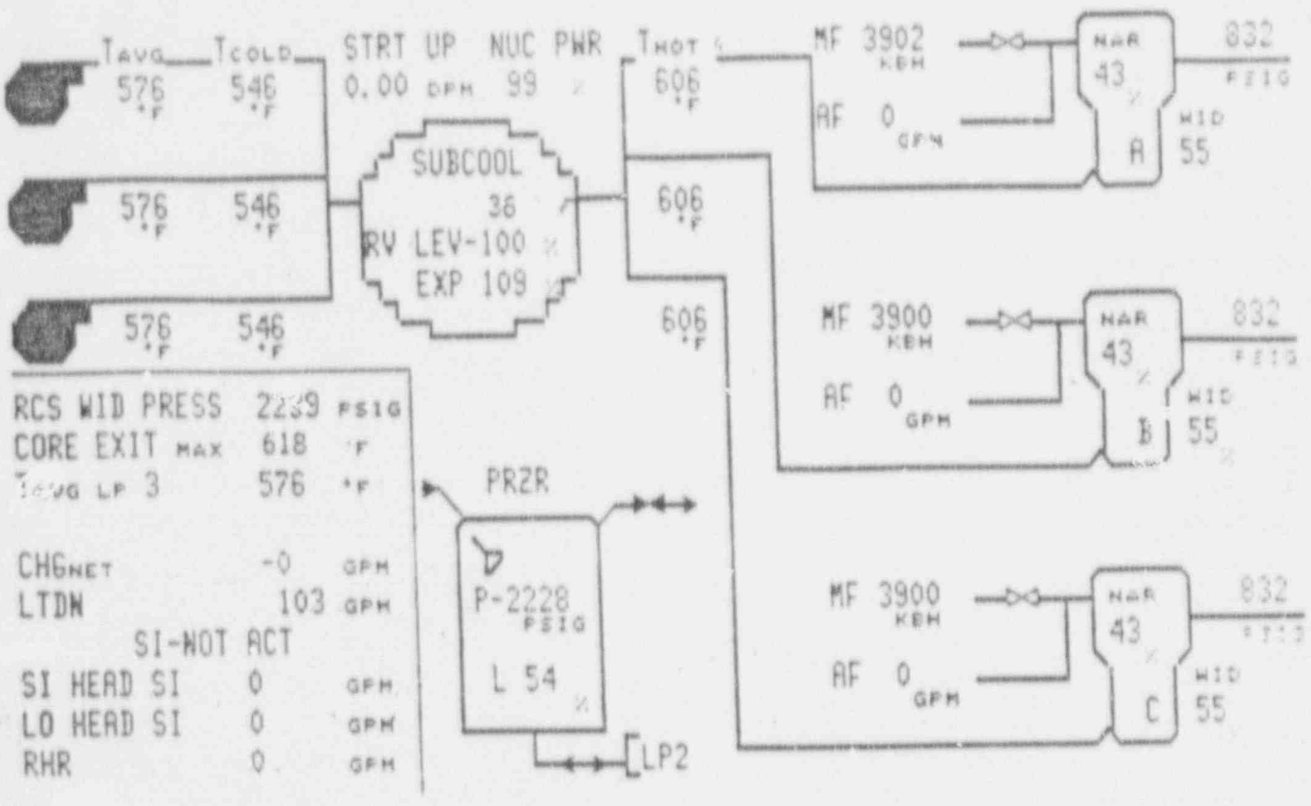

CONTAINMENT				ELECTRICAL			
Press. (PSIA)	9.74	Temp. (F)	94.3	SSST 2A	OOS	SSST 2B	OK
RHS	AVAIL	Sump (In)	0.0	2 AE	OK	2 DF	OK
Quench Spray	AVAIL	Recirc Spray	AVAIL	2 N	OK	2 P	OK
HHSI	AVAIL	CIA	NO	DG 2-1	AVAIL	DG 2-2	OOS
LHSI	AVAIL	CIB	NO	Batteries	OK	Vital Buses	OK

Time 1536

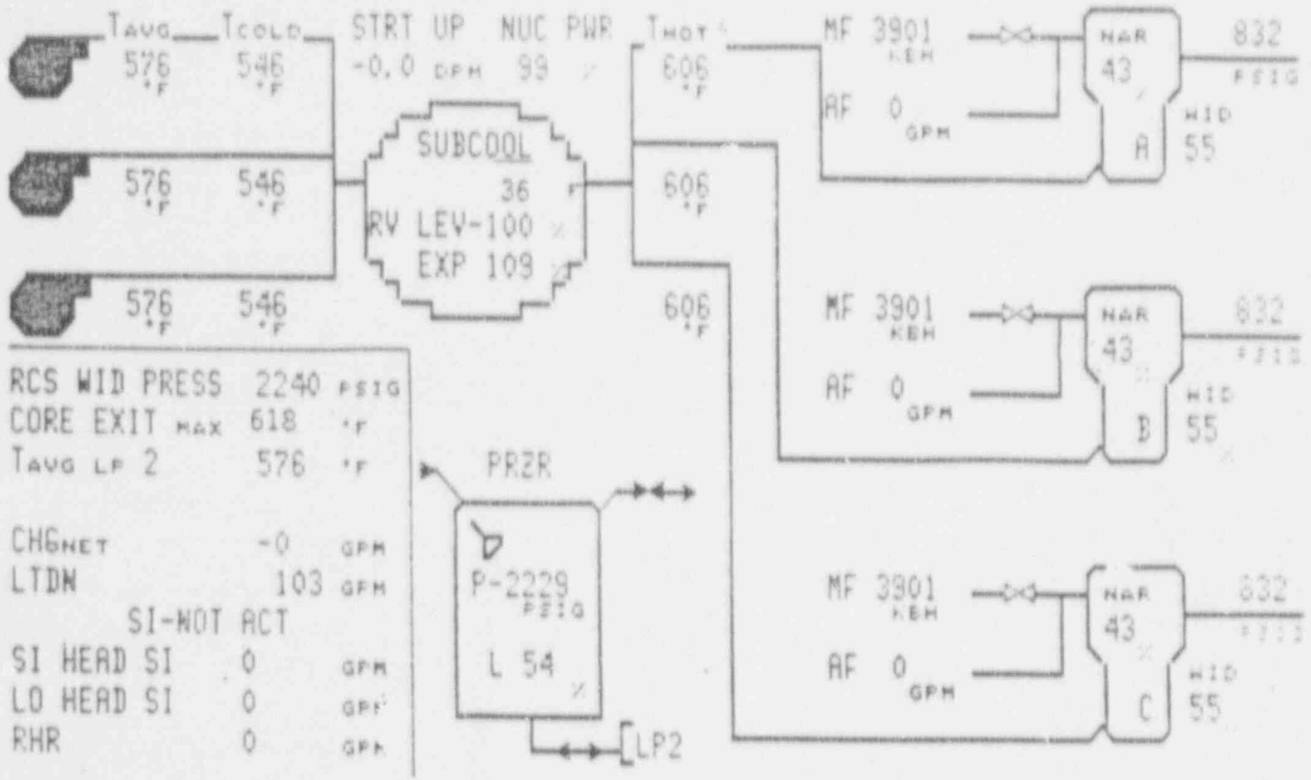

CONTAINMENT				ELECTRICAL			
Press. (PSIA)	9.74	Temp. (F)	94.4	SSST 2A	OOS	SSST 2B	OK
RHS	AVAIL	Sump (In)	0.0	2 AE	OK	2 DF	OK
Quench Spray	AVAIL	Recirc Spray	AVAIL	2 N	OK	2 P	OK
HHSI	AVAIL	CIA	NO	DG 2-1	AVAIL	DG 2-2	OOS
LHSI	AVAIL	CIB	NO	Batteries	OK	Vital Buses	OK

Time 1539

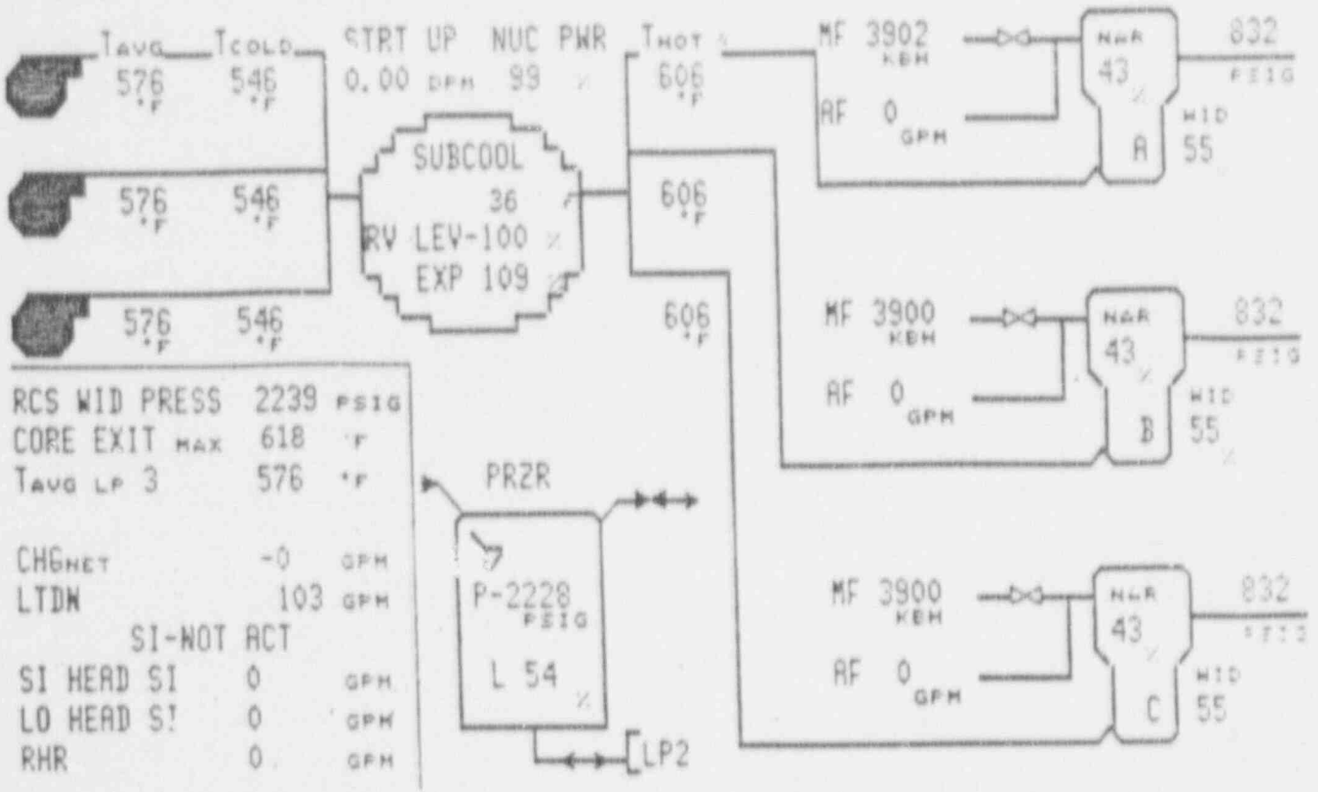

CONTAINMENT				ELECTRICAL			
Press. (PSIA)	9.74	Temp. (F)	94.3	SSST 2A	OOS	SSST 2B	OK
RHS	AVAIL	Sump (In)	0.0	2 AE	OK	2 DF	OK
Quench Spray	AVAIL	Recirc Spray	AVAIL	2 N	OK	2 P	OK
HHSI	AVAIL	CIA	NO	DG 2-1	AVAIL	DG 2-2	OOS
LHSI	AVAIL	CIB	NO	Batteries	OK	Vital Buses	OK

Time 1542

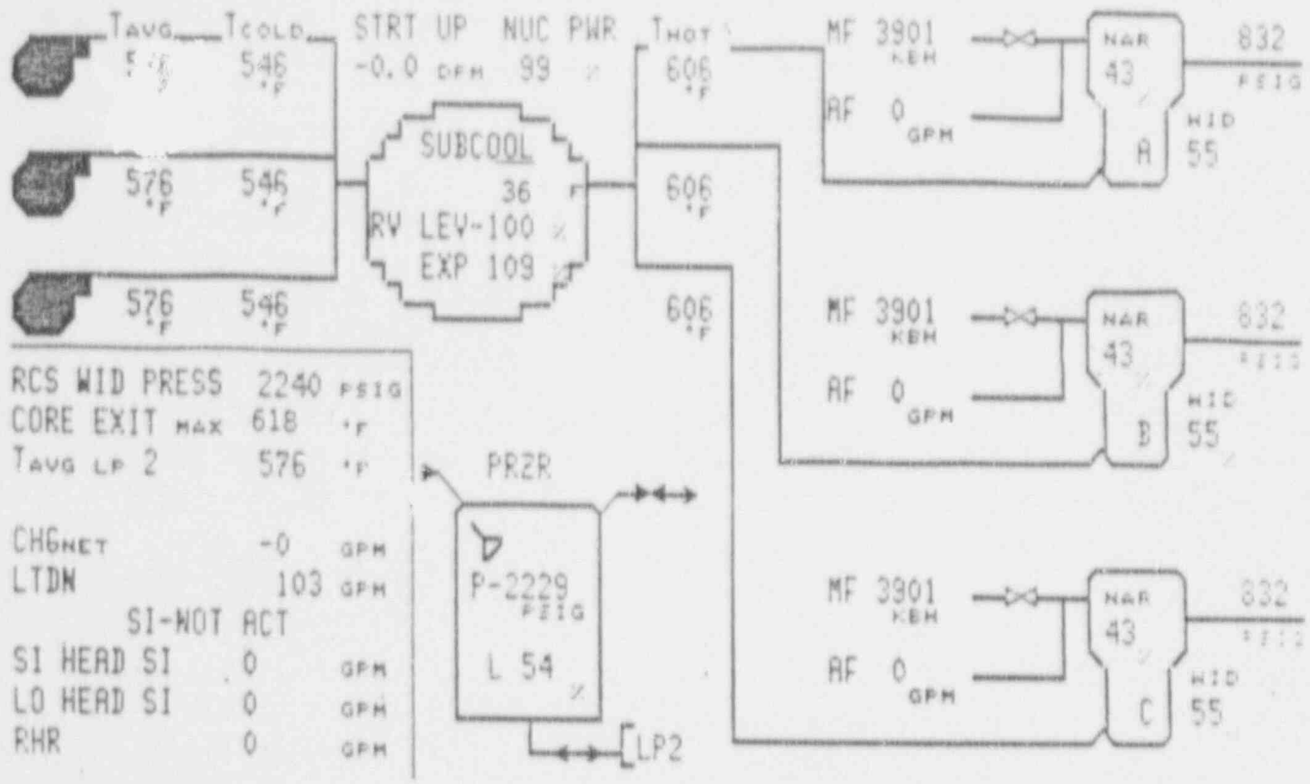

CONTAINMENT				ELECTRICAL			
Press. (PSIA)	9.74	Temp. (F)	94.4	SSST 2A	OOS	SSST 2B	OK
RHS	AVAIL	Sump (In)	0.0	2 AE	OK	2 DF	OK
Quench Spray	AVAIL	Recirc Spray	AVAIL	2 N	OK	2 P	OK
HHSI	AVAIL	CIA	NO	DG 2-1	AVAIL	DG 2-2	OOS
LHSI	AVAIL	CIB	NO	Batteries	OK	Vital Buses	OK

Time 1545

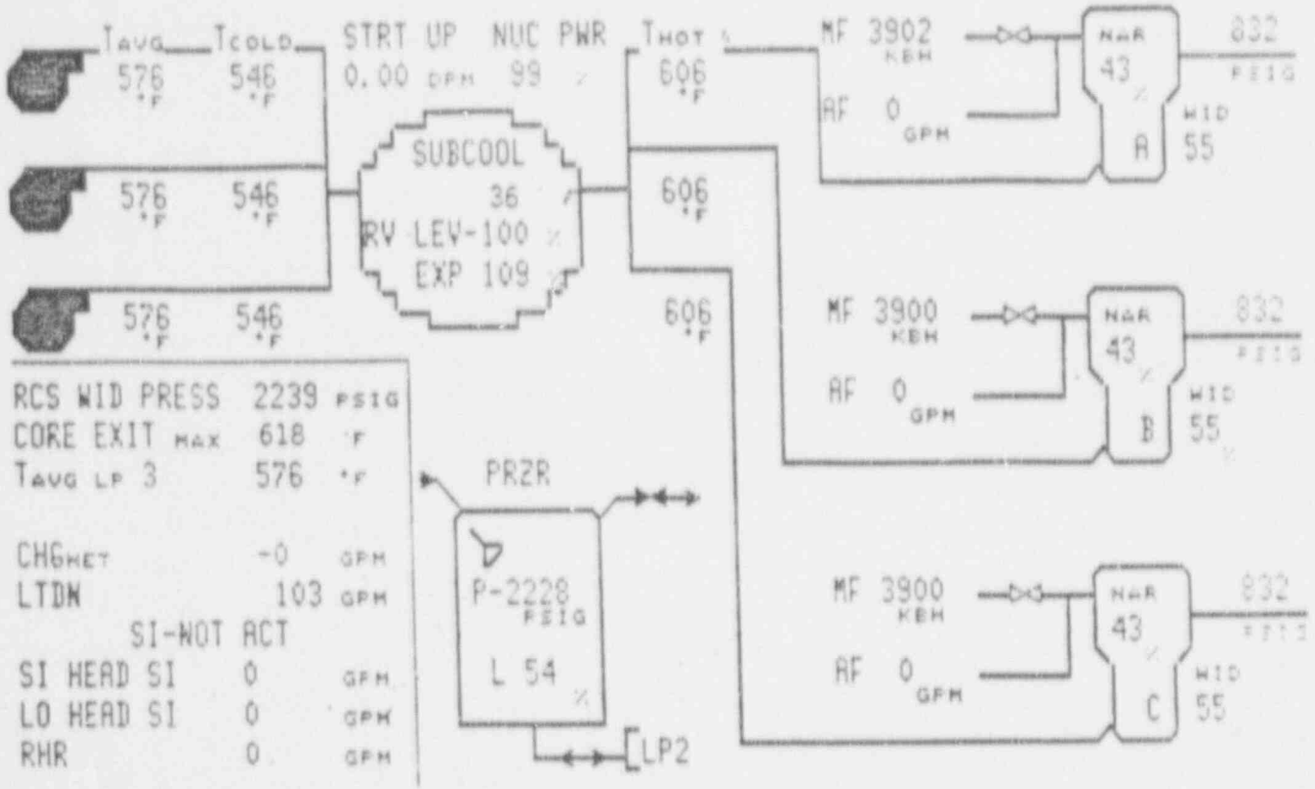

CONTAINMENT				ELECTRICAL			
Press. (PSIA)	8.74	Temp. (F)	94.3	SSST 2A	OOS	SSST 2B	OK
RHS	AVAIL	Sump (In)	0.0	2 AE	OK	2 DF	OK
Quench Spray	AVAIL	Recirc Spray	AVAIL	2 N	OK	2 P	OK
HHSI	AVAIL	CIA	NO	DG 2-1	AVAIL	DG 2-2	OOS
LHSI	AVAIL	CIB	NO	Batteries	OK	Vital Buses	OK

Time 1548

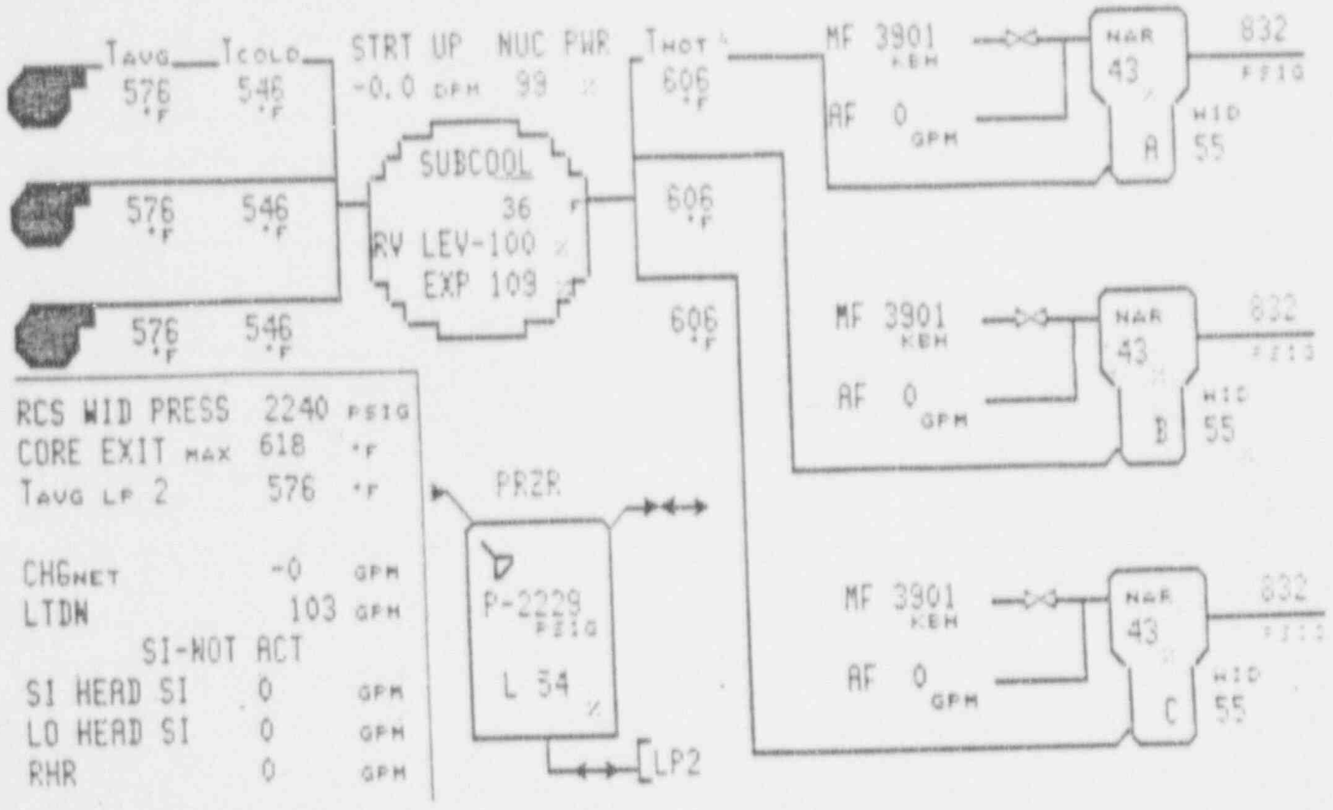

CONTAINMENT				ELECTRICAL			
Press. (PSIA)	9.74	Temp. (F)	94.4	SSST 2A	OOS	SSST 2B	OK
RHS	AVAIL	Sump (In)	0.0	2 AE	OK	2 DF	OK
Quench Spray	AVAIL	Recirc Spray	AVAIL	2 N	OK	2 P	OK
HHSI	AVAIL	CIA	NO	DG 2-1	AVAIL	DG 2-2	OOS
LHSI	AVAIL	CIB	NO	Batteries	OK	Vital Buses	OK

Time 1551

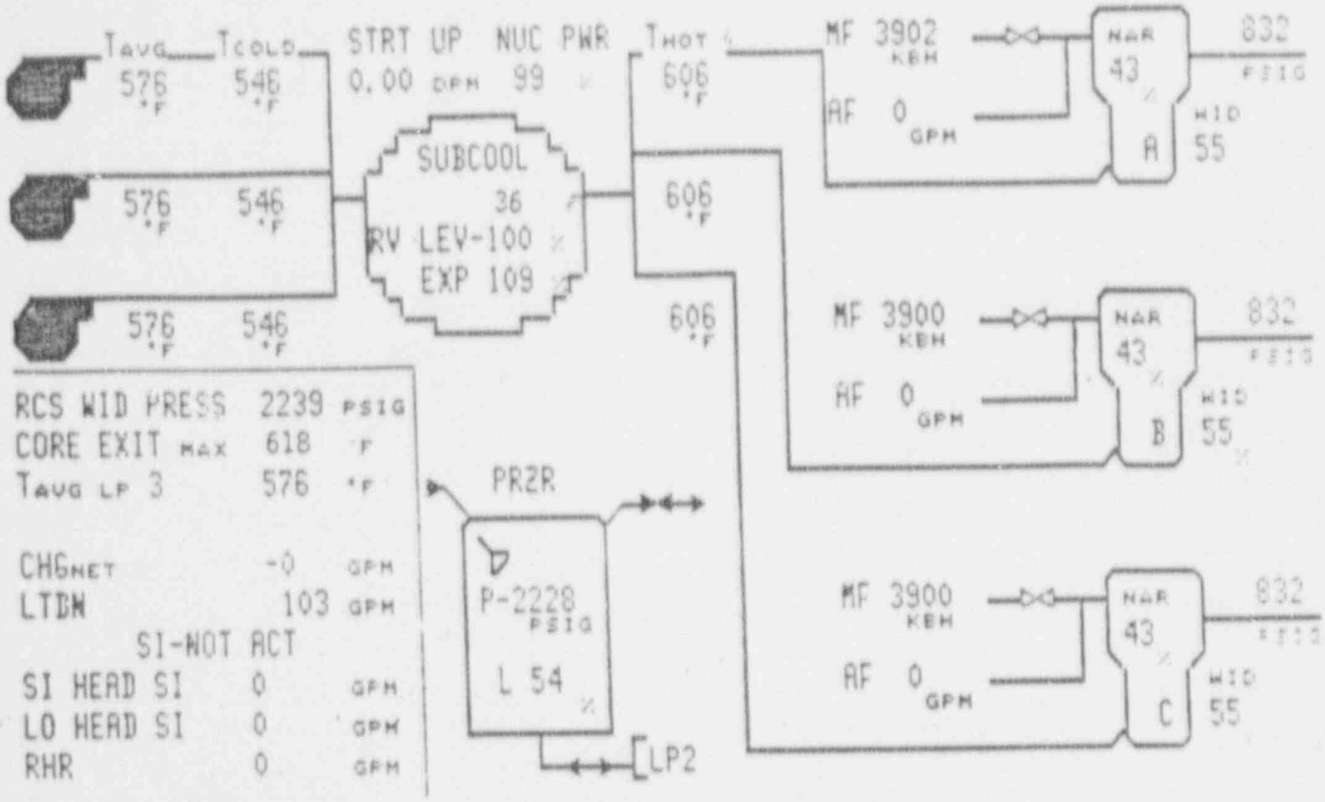

CONTAINMENT				ELECTRICAL			
Press. (PSIA)	9.74	Temp. (F)	94.3	SSST 2A	OOS	SSST 2B	OK
RHS	AVAIL	Sump (In)	0.0	2 AE	OK	2 DF	OK
Quench Spray	AVAIL	Recirc Spray	AVAIL	2 N	OK	2 P	OK
HHSI	AVAIL	CIA	NO	DG 2-1	AVAIL	DG 2-2	OOS
LHSI	AVAIL	CIB	NO	Batteries	OK	Vital Buses	OK

Time 1554

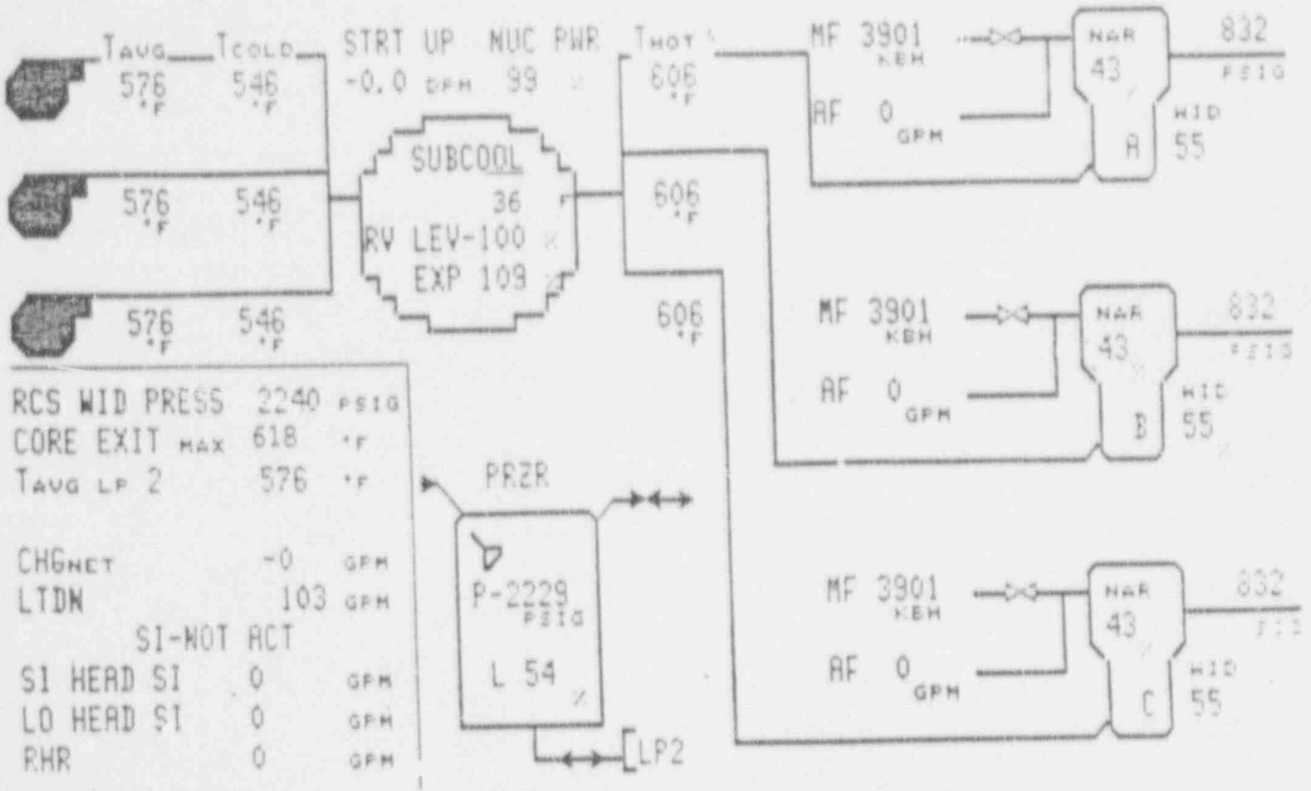

CONTAINMENT				ELECTRICAL			
Press. (PSIA)	9.74	Temp. (F)	94.4	SSST 2A	OOS	SSST 2B	OK
RHS	AVAIL	Sump (In)	0.0	2 AE	OK	2 DF	OK
Quench Spray	AVAIL	Recirc Spray	AVAIL	2 N	OK	2 P	OK
HHSI	AVAIL	CIA	NO	DG 2-1	AVAIL	DG 2-2	OOS
LHSI	AVAIL	CIB	NO	Batteries	OK	Vital Buses	OK

Time 1557

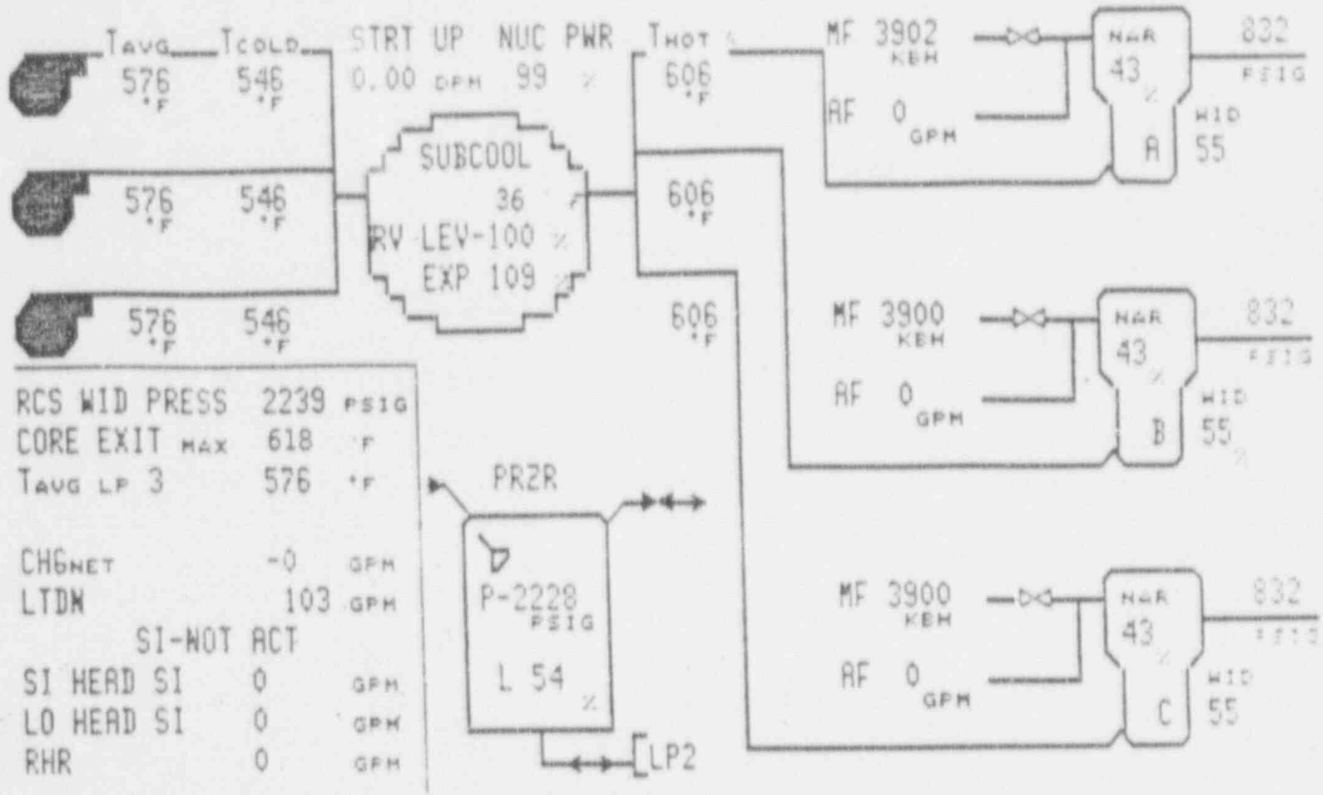

CONTAINMENT				ELECTRICAL			
Press. (PSIA)	9.74	Temp. (F)	94.3	SSST 2A	OOS	SSST 2B	OK
RHS	AVAIL	Sump (In)	0.0	2 AE	OK	2 DF	OK
Quench Spray	AVAIL	Recirc Spray	AVAIL	2 N	OK	2 P	OK
HHSI	AVAIL	CIA	NO	DG 2-1	AVAIL	DG 2-2	OOS
LHSI	AVAIL	CIB	NO	Batteries	OK	Vital Buses	OK

Time 1600

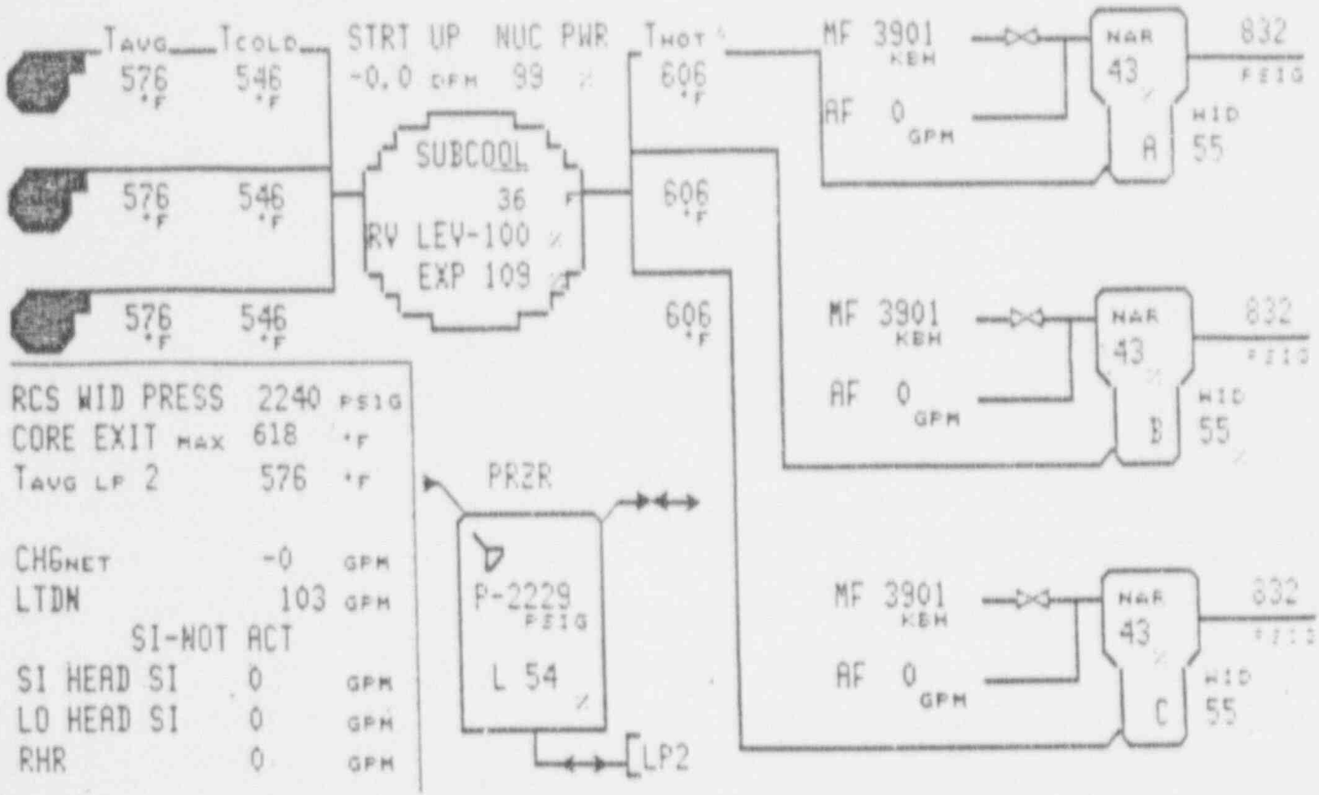

CONTAINMENT				ELECTRICAL			
Press. (PSIA)	9.74	Temp. (F)	94.4	SSST 2A	OOS	SSST 2B	OK
RHS	AVAIL	Sump (In)	0.0	2 AE	OK	2 DF	OK
Quench Spray	AVAIL	Recirc Spray	AVAIL	2 N	OK	2 P	OK
HHSI	AVAIL	CIA	NO	DG 2-1	AVAIL	DG 2-2	OOS
LHSI	AVAIL	CIB	NO	Batteries	OK	Vital Buses	OK

Time 1603

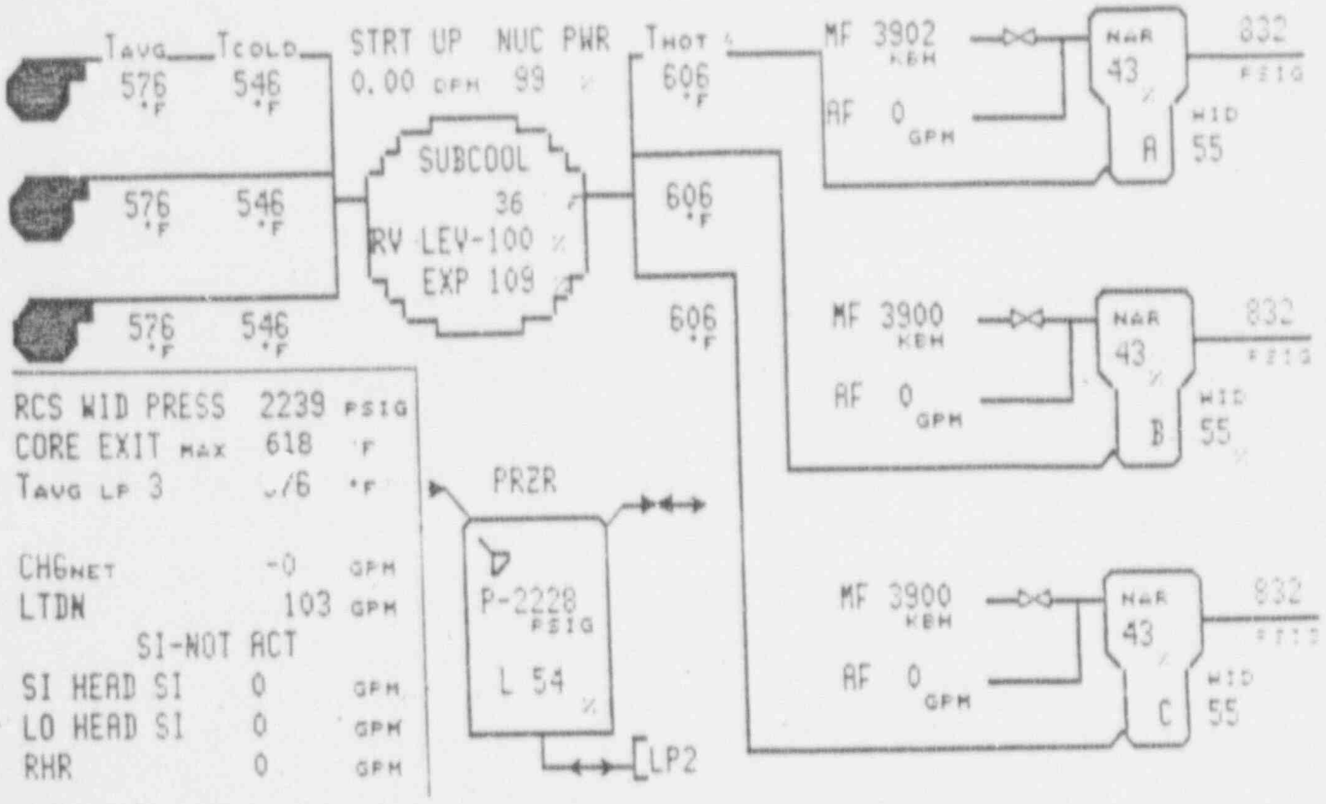

CONTAINMENT				ELECTRICAL			
Press. (PSIA)	9.74	Temp. (F)	94.3	SSST 2A	OOS	SSST 2B	OK
RHS	AVAIL	Sump (In)	0.0	2 AE	OK	2 DF	OK
Quench Spray	AVAIL	Recirc Spray	AVAIL	2 N	OK	2 P	OK
HHSI	AVAIL	CIA	NO	DG 2-1	AVAIL	DG 2-2	OOS
LHSI	AVAIL	CIB	NO	Batteries	OK	Vital Buses	OK

Time 1606

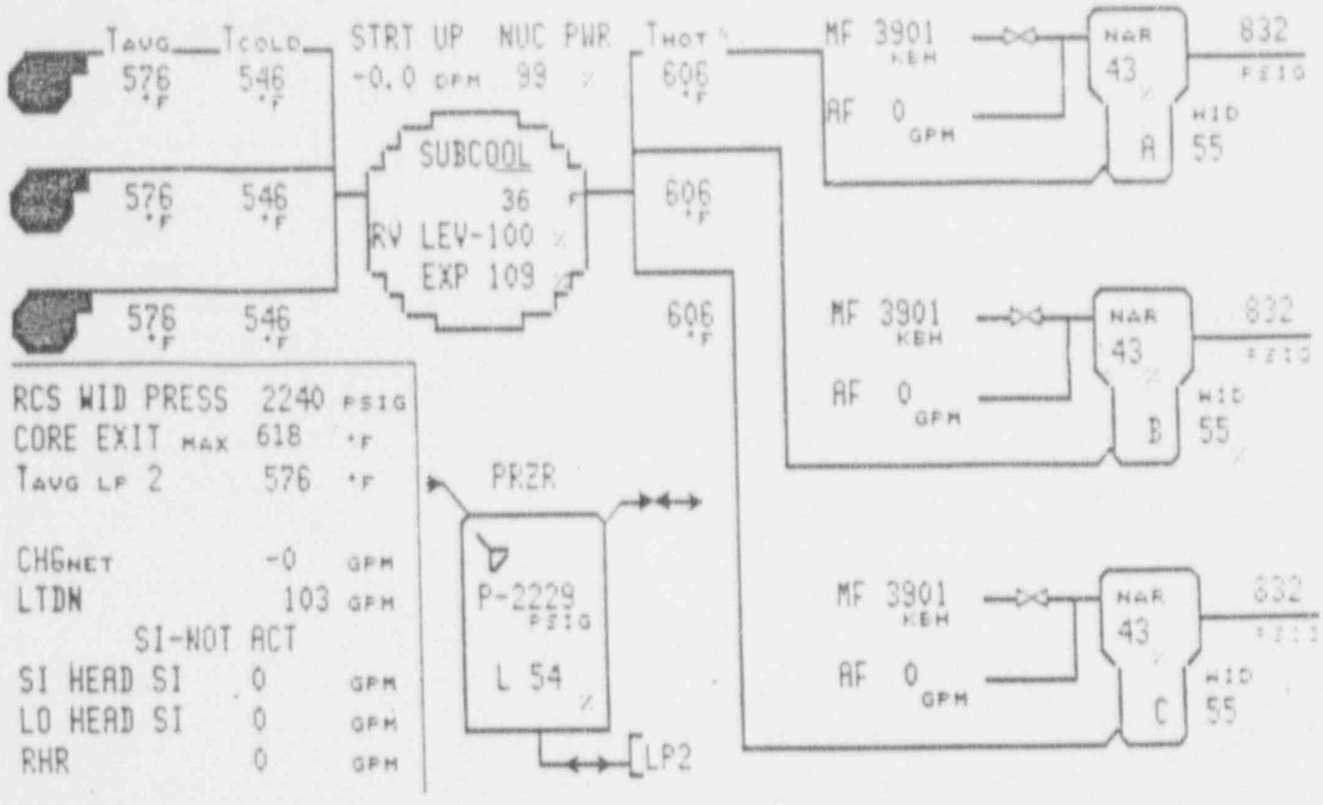

CONTAINMENT				ELECTRICAL			
Press. (PSIA)	9.74	Temp. (F)	94.4	SSST 2A	OOS	SSST 2B	OK
RHS	AVAIL	Sump (In)	0.0	2 AE	OK	2 DF	OK
Quench Spray	AVAIL	Recirc Spray	AVAIL	2 N	OK	2 P	OK
HHSI	AVAIL	CIA	NO	DG 2-1	AVAIL	DG 2-2	OOS
LHSI	AVAIL	CIB	NO	Batteries	OK	Vital Buses	OK

Time 1609

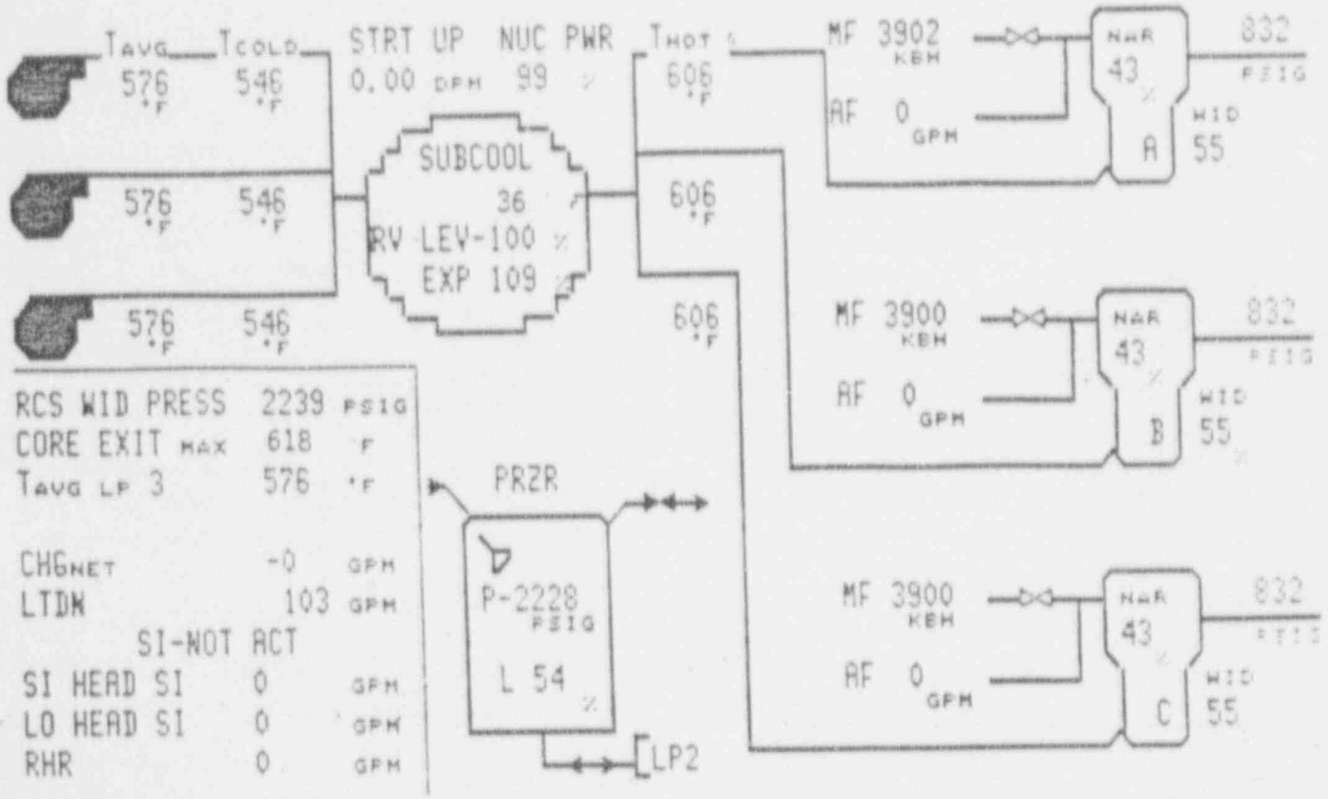

CONTAINMENT				ELECTRICAL			
Press. (PSIA)	9.74	Temp. (F)	94.3	SSST 2A	OOS	SSST 2B	OK
RHS	AVAIL	Sump (In)	0.0	2 AE	OK	2 DF	OK
Quench Spray	AVAIL	Recirc Spray	AVAIL	2 N	OK	2 P	OK
HHSI	AVAIL	CIA	NO	DG 2-1	AVAIL	DG 2-2	OOS
LHSI	AVAIL	CIB	NO	Batteries	OK	Vital Buses	OK

Time 1612

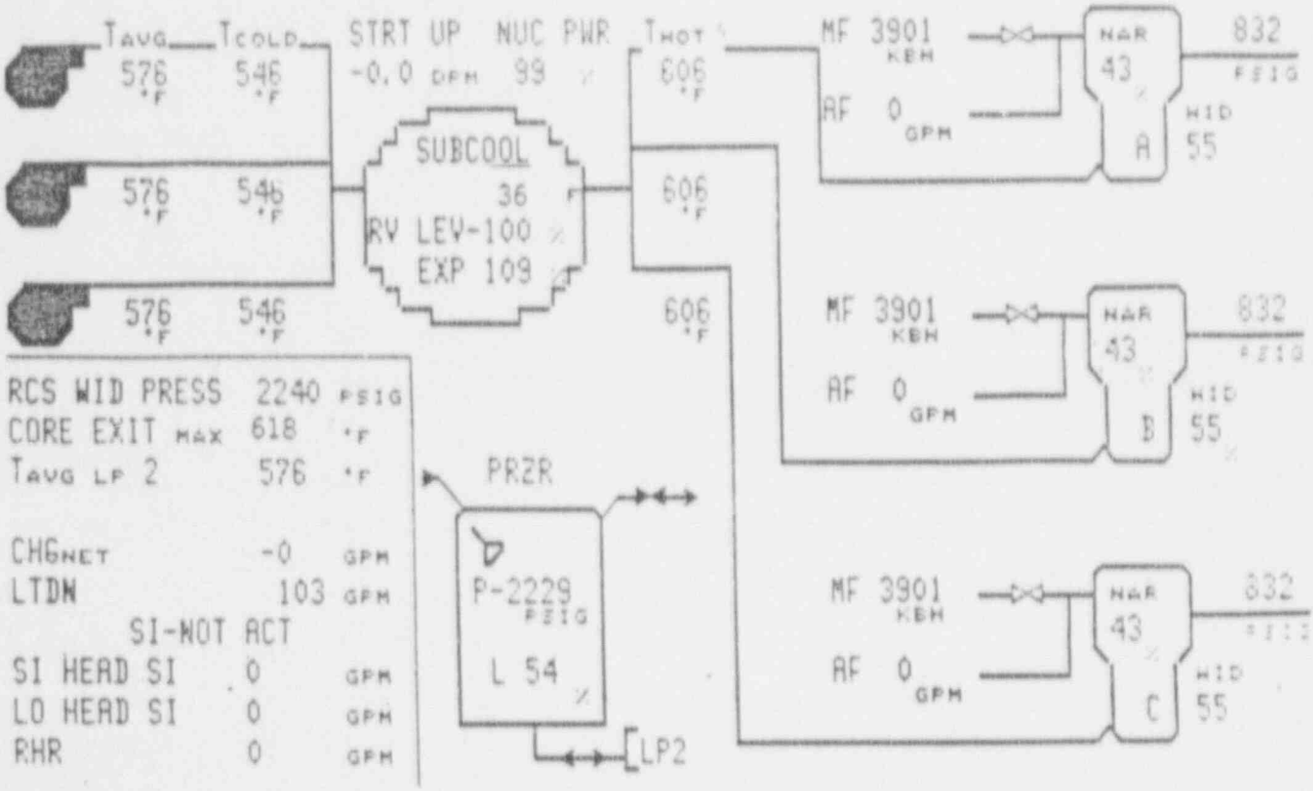

CONTAINMENT				ELECTRICAL			
Press. (PSIA)	9.74	Temp. (F)	94.4	SSST 2A	OOS	SSST 2B	OK
RHS	AVAIL	Sump (In)	0.0	2 AE	OK	2 DF	OK
Quench Spray	AVAIL	Recirc Spray	AVAIL	2 N	OK	2 P	OK
HHSI	AVAIL	CIA	NO	DG 2-1	AVAIL	DG 2-2	OOS
LHSI	AVAIL	CIB	NO	Batteries	OK	Vital Buses	OK

Time 1615

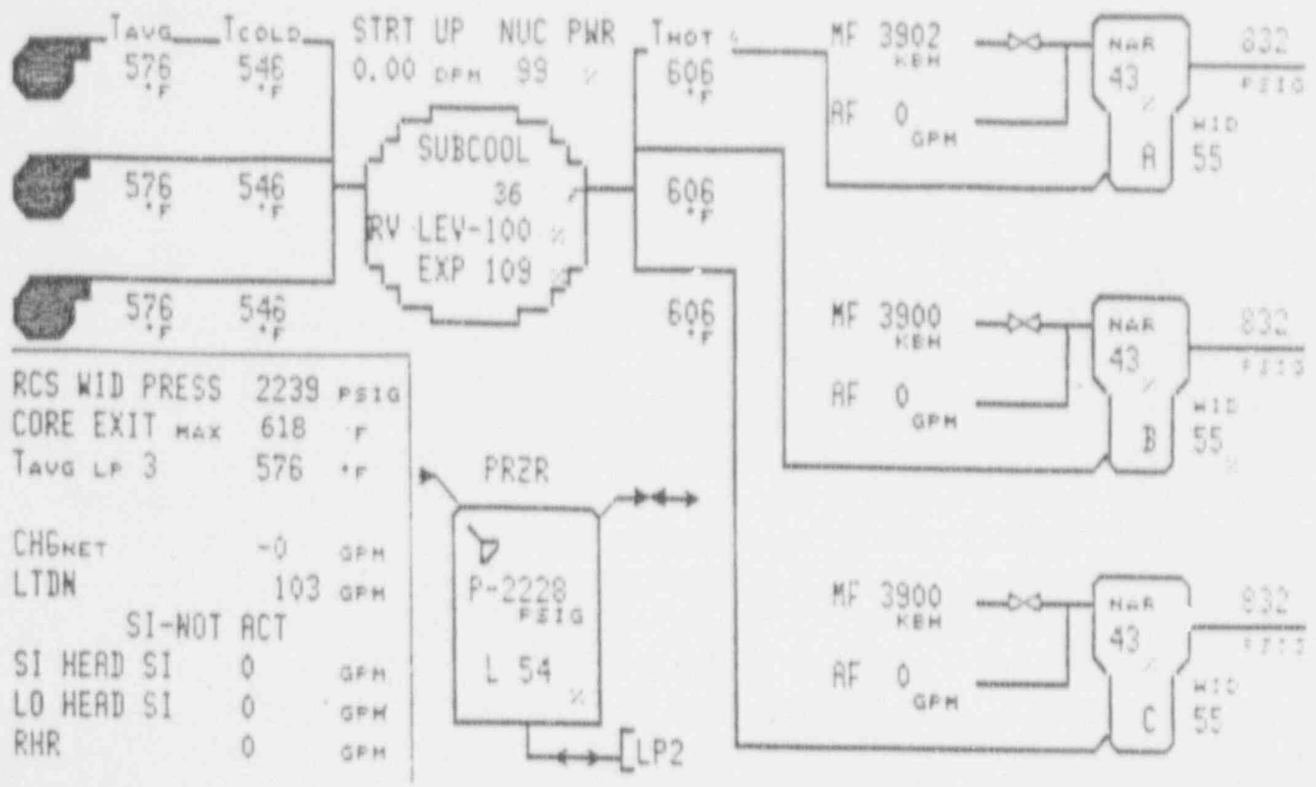

CONTAINMENT				ELECTRICAL			
Press. (PSIA)	9.74	Temp. (F)	94.3	SSST 2A	OOS	SSST 2B	OK
RHS	AVAIL	Sump (In)	0.0	2 AE	OK	2 DF	OK
Quench Spray	AVAIL	Recirc Spray	AVAIL	2 N	OK	2 P	OK
HHSI	AVAIL	CIA	NO	DG 2-1	AVAIL	DG 2-2	OOS
LHSI	AVAIL	CIB	NO	Batteries	OK	Vital Buses	OK

Time 1618

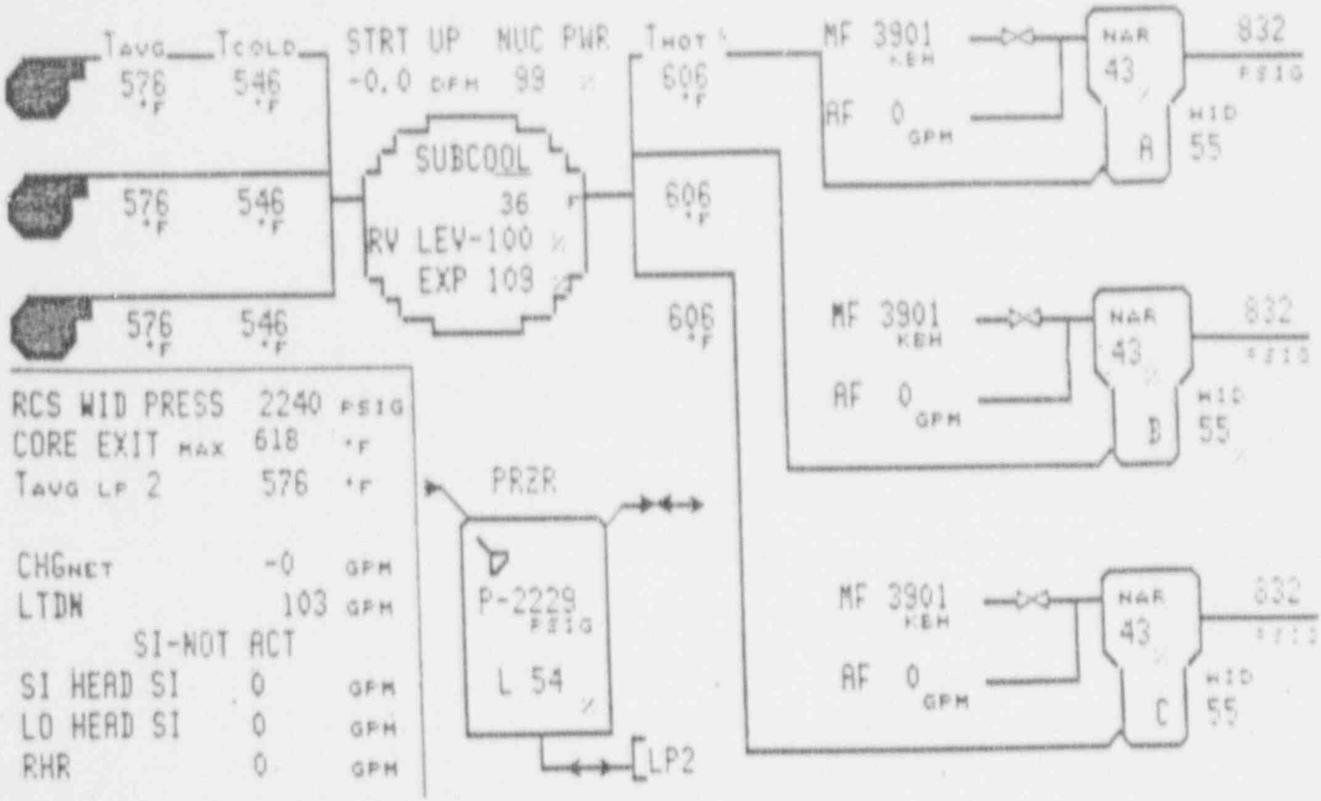

CONTAINMENT				ELECTRICAL			
Press. (PSIA)	9.74	Temp. (F)	94.4	SSST 2A	OOS	SSST 2B	OK
RHS	AVAIL	Sump (In)	0.0	2 AE	OK	2 DF	OK
Quench Spray	AVAIL	Recirc Spray	AVAIL	2 N	OK	2 P	OK
HHSI	AVAIL	CIA	NO	DG 2-1	AVAIL	DG 2-2	OOS
LHSI	AVAIL	CIB	NO	Batteries	OK	Vital Buses	OK

Time 1621

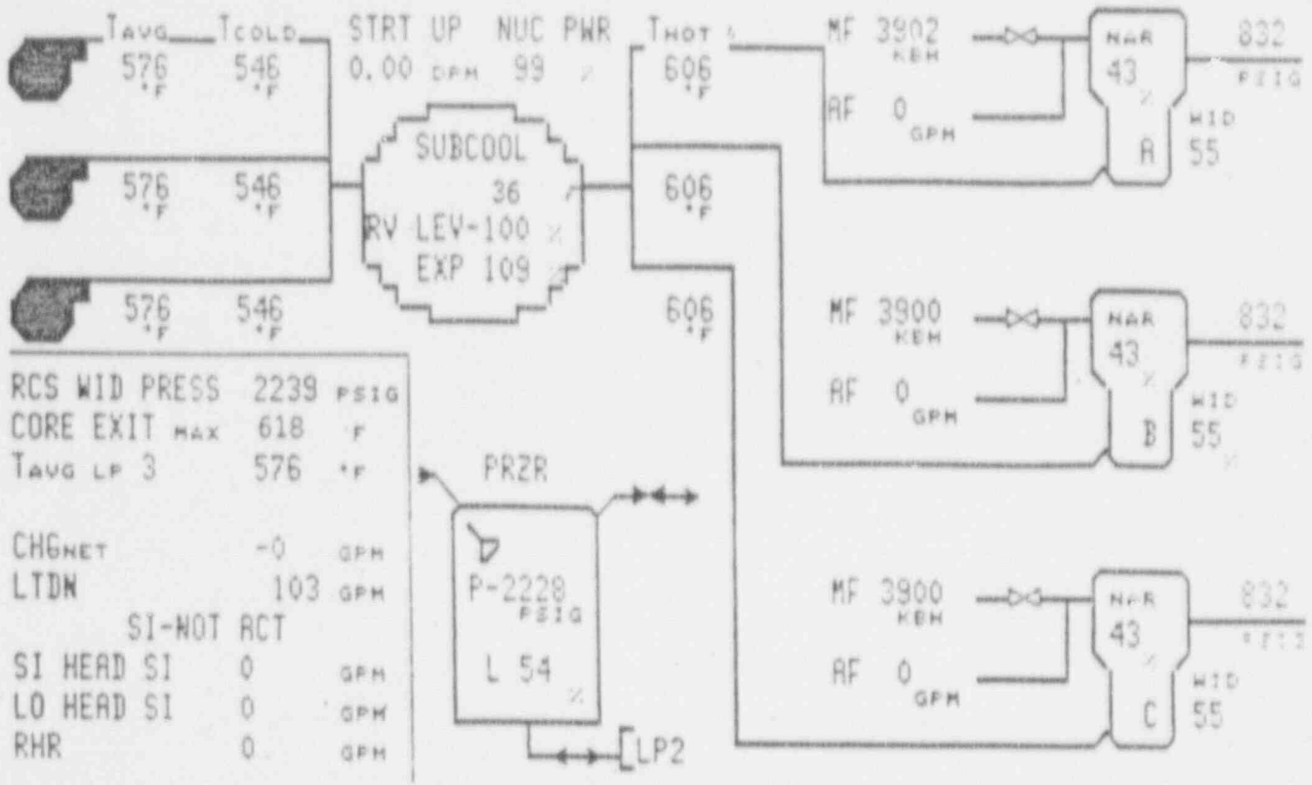

CONTAINMENT				ELECTRICAL			
Press. (PSIA)	9.74	Temp. (F)	94.3	SSST 2A	OOS	SSST 2B	OK
RHS	AVAIL	Sump (In)	0.0	2 AE	OK	2 DF	OK
Quench Spray	AVAIL	Recirc Spray	AVAIL	2 N	OK	2 P	OK
HHSI	AVAIL	CIA	NO	DG 2-1	AVAIL	DG 2-2	OOS
LHSI	AVAIL	CIB	NO	Batteries	OK	Vital Buses	OK

Time 1624

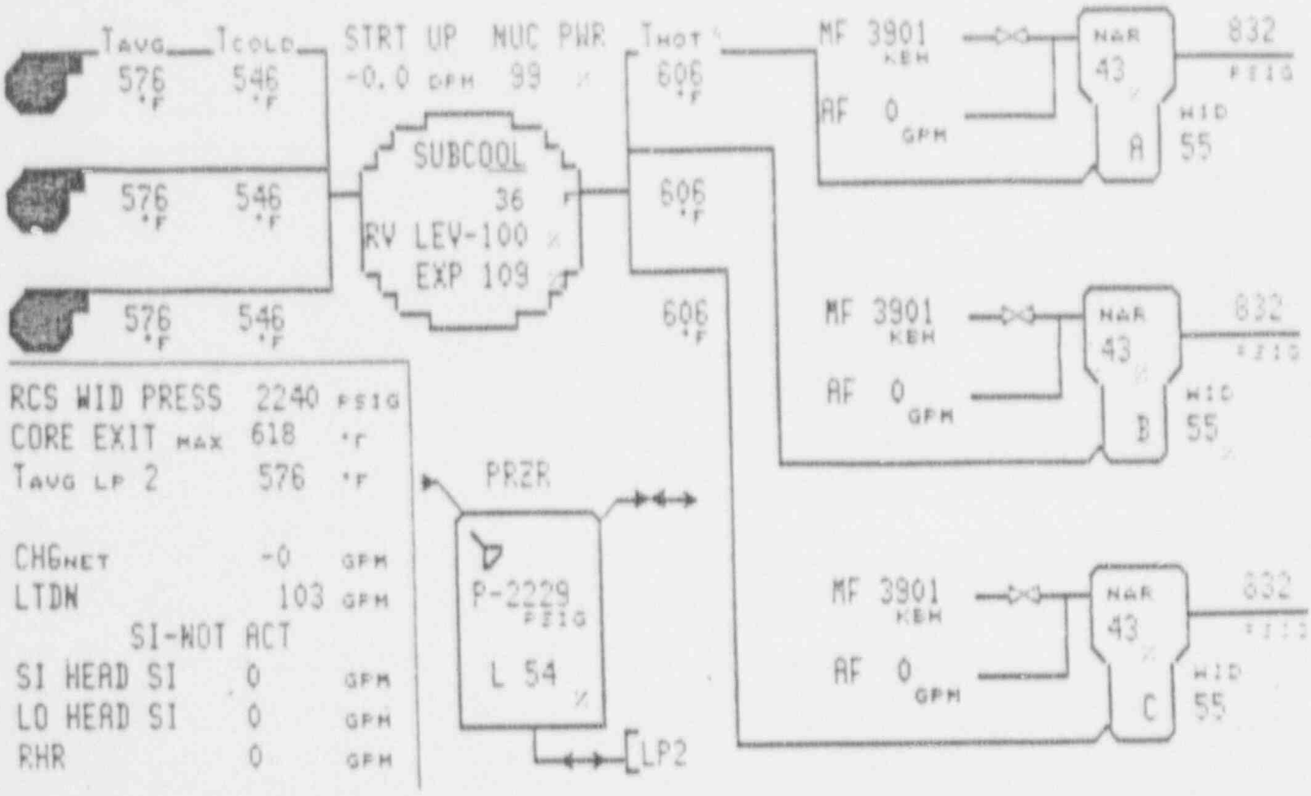

CONTAINMENT				ELECTRICAL			
Press. (PSIA)	9.74	Temp. (F)	94.4	SSST 2A	OOS	SSST 2B	OK
RHS	AVAIL	Sump (In)	0.0	2 AE	OK	2 DF	OK
Quench Spray	AVAIL	Recirc Spray	AVAIL	2 N	OK	2 P	OK
HHSI	AVAIL	CIA	NO	DG 2-1	AVAIL	DG 2-2	OOS
LHSI	AVAIL	CIB	NO	Batteries	OK	Vital Buses	OK

Time 1627

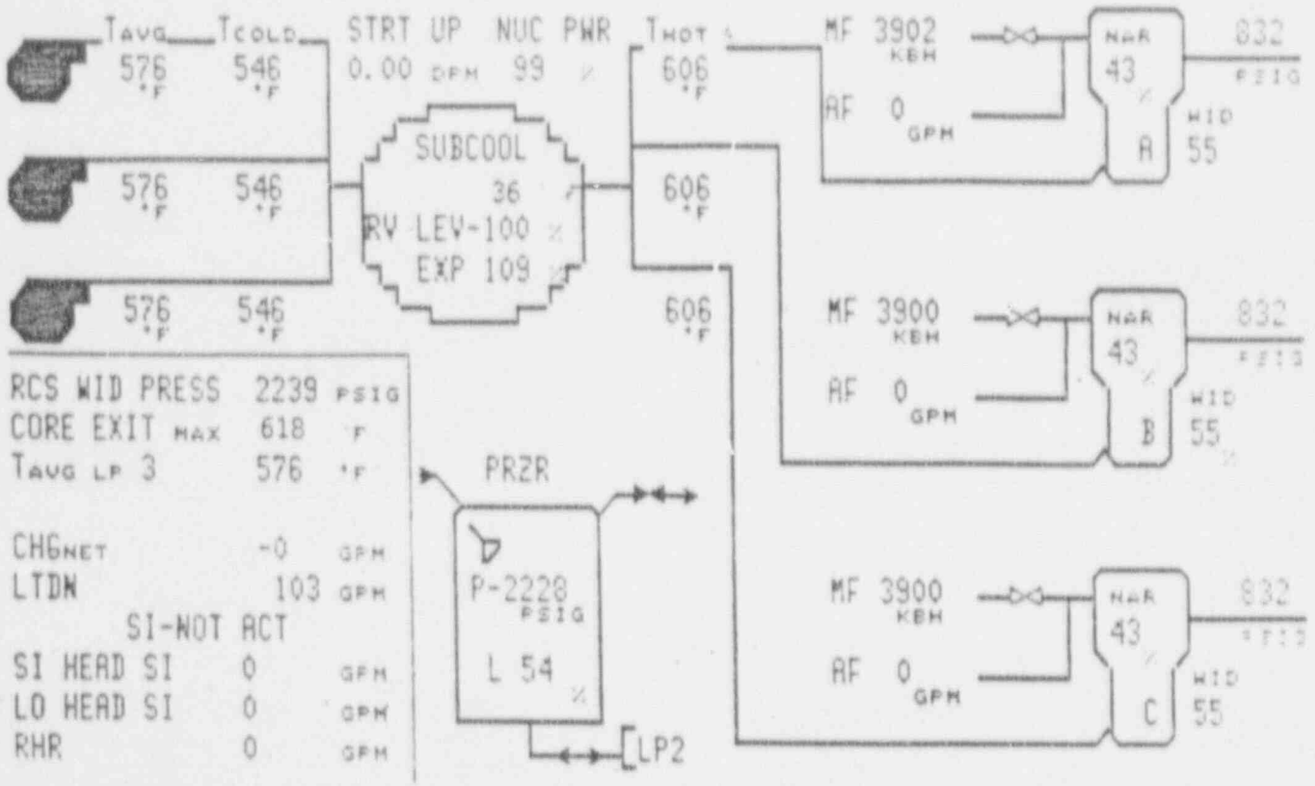

CONTAINMENT				ELECTRICAL			
Press. (PSIA)	9.74	Temp. (F)	94.3	SSST 2A	OOS	SSST 2B	OK
RHS	AVAIL	Sump (In)	0.0	2 AE	OK	2 DF	OK
Quench Spray	AVAIL	Recirc Spray	AVAIL	2 N	OK	2 P	OK
HHSI	AVAIL	CIA	NO	DG 2-1	AVAIL	DG 2-2	OOS
LHSI	AVAIL	CIB	NO	Batteries	OK	Vital Buses	OK

Time 1630

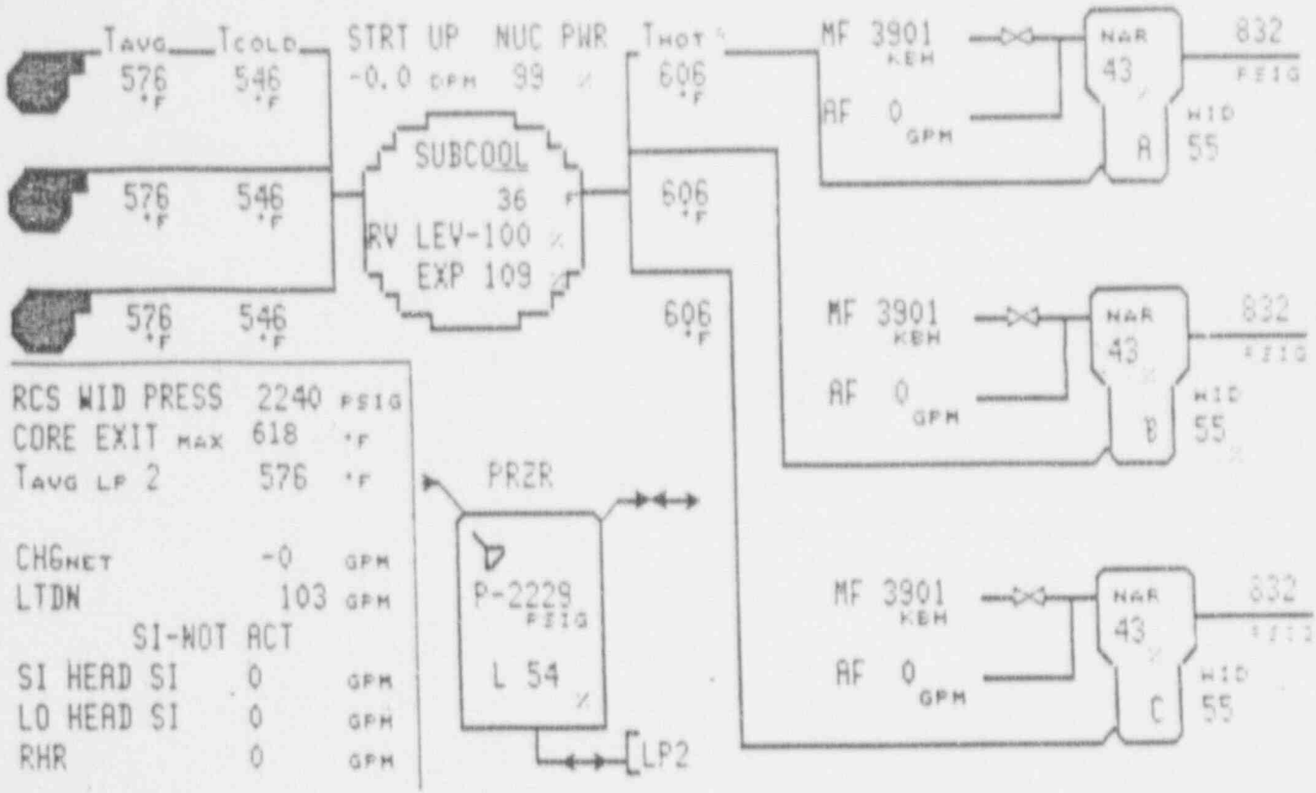

CONTAINMENT				ELECTRICAL			
Press. (PSIA)	9.74	Temp. (F)	94.4	SSST 2A	OOS	SSST 2B	OK
RHS	AVAIL	Sump (In)	0.0	2 AE	OK	2 DF	OK
Quench Spray	AVAIL	Recirc Spray	AVAIL	2 N	OK	2 P	OK
HHSI	AVAIL	CIA	NO	DG 2-1	AVAIL	DG 2-2	OOS
LHSI	AVAIL	CIB	NO	Batteries	OK	Vital Buses	OK

Time 1633

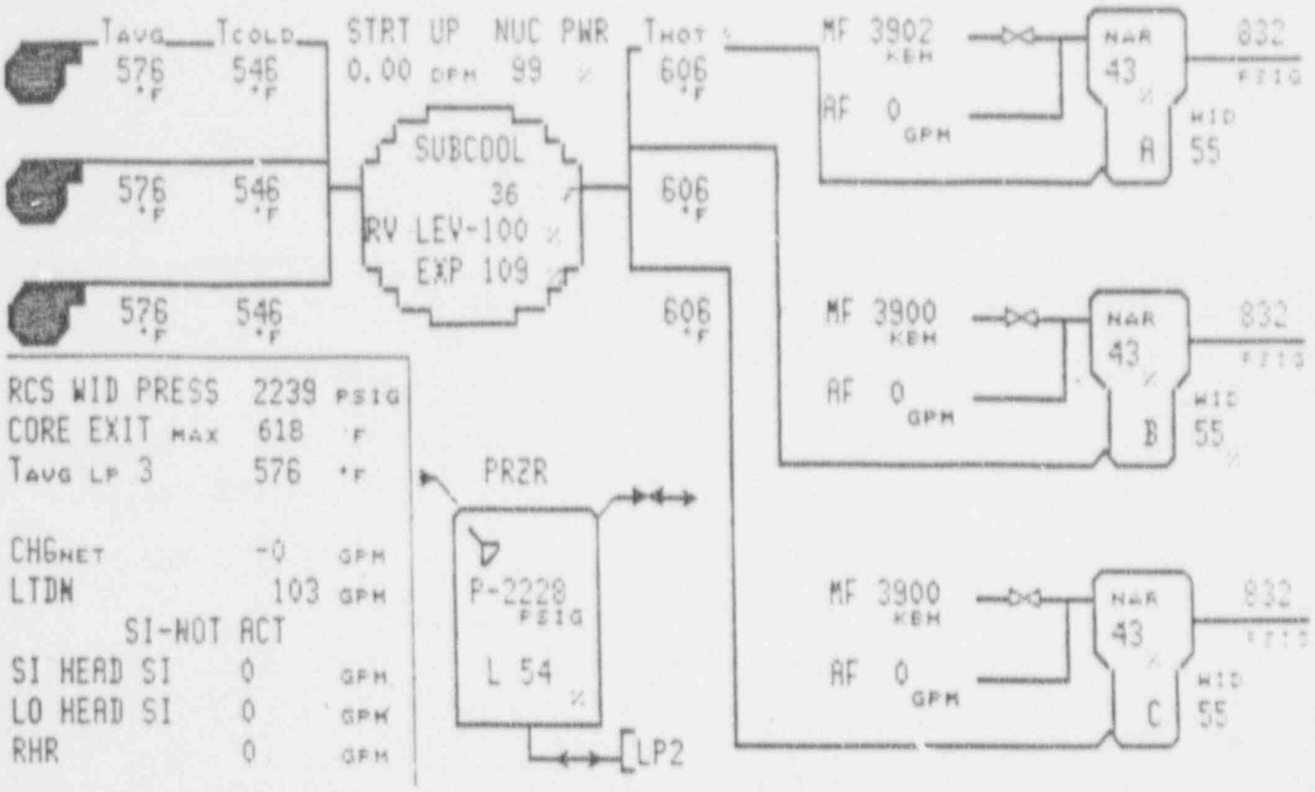

CONTAINMENT				ELECTRICAL			
Press. (PSIA)	9.74	Temp. (F)	94.3	SSST 2A	OOS	SSST 2B	OK
RHS	AVAIL	Sump (In)	0.0	2 AE	OK	2 DF	OK
Quench Spray	AVAIL	Recirc Spray	AVAIL	2 N	OK	2 P	OK
HHSI	AVAIL	CIA	NO	DG 2-1	AVAIL	DG 2-2	OOS
LHSI	AVAIL	CIB	NO	Batteries	OK	Vital Buses	OK

Time 1636

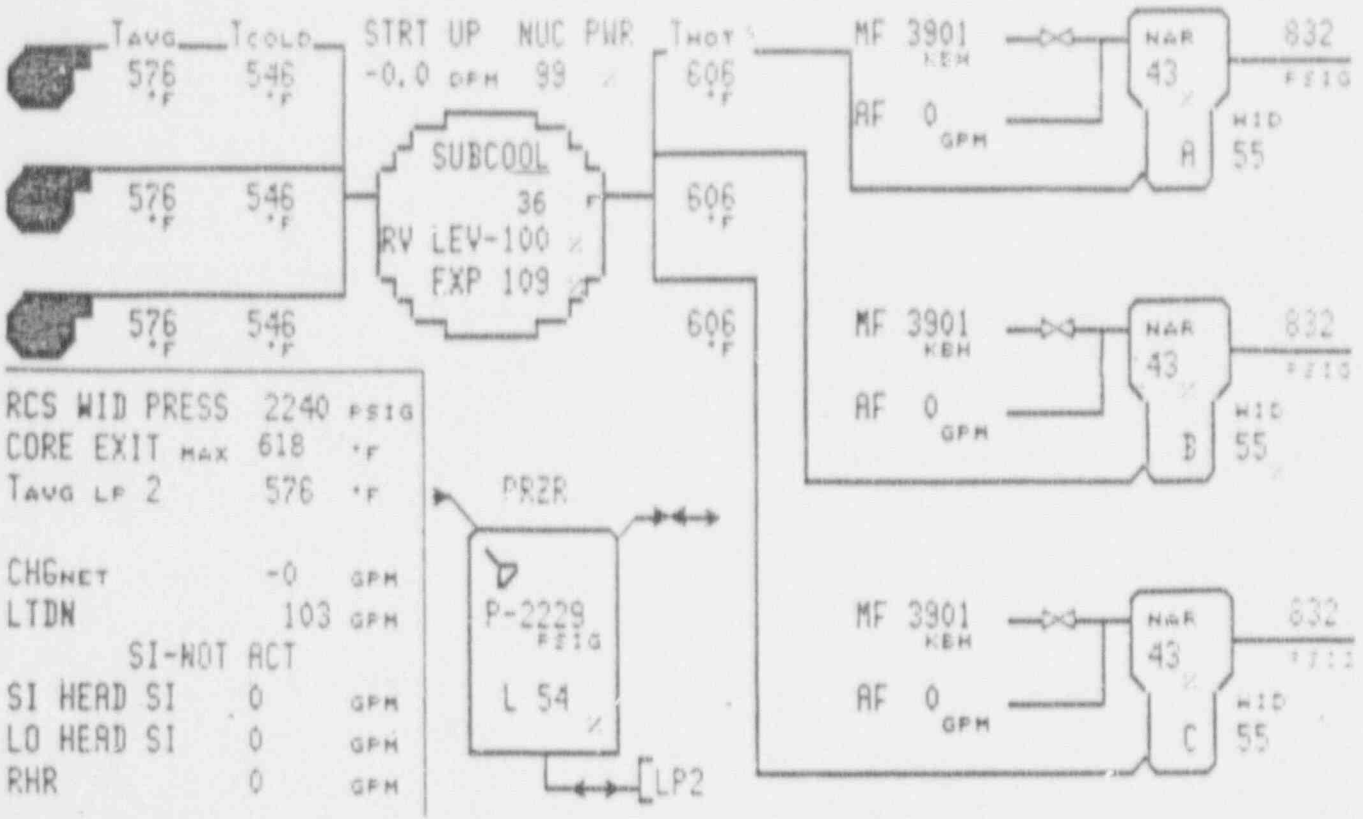

CONTAINMENT				ELECTRICAL			
Press. (PSIA)	9.74	Temp. (F)	94.4	SSST 2A	OOS	SSST 2B	OK
RHS	AVAIL	Sump (In)	0.0	2 AE	OK	2 DF	OK
Quench Spray	AVAIL	Recirc Spray	AVAIL	2 N	OK	2 P	OK
HHSI	AVAIL	CIA	NO	DG 2-1	AVAIL	DG 2-2	OOS
LHSI	AVAIL	CIB	NO	Batteries	OK	Vital Buses	OK

Time 1639

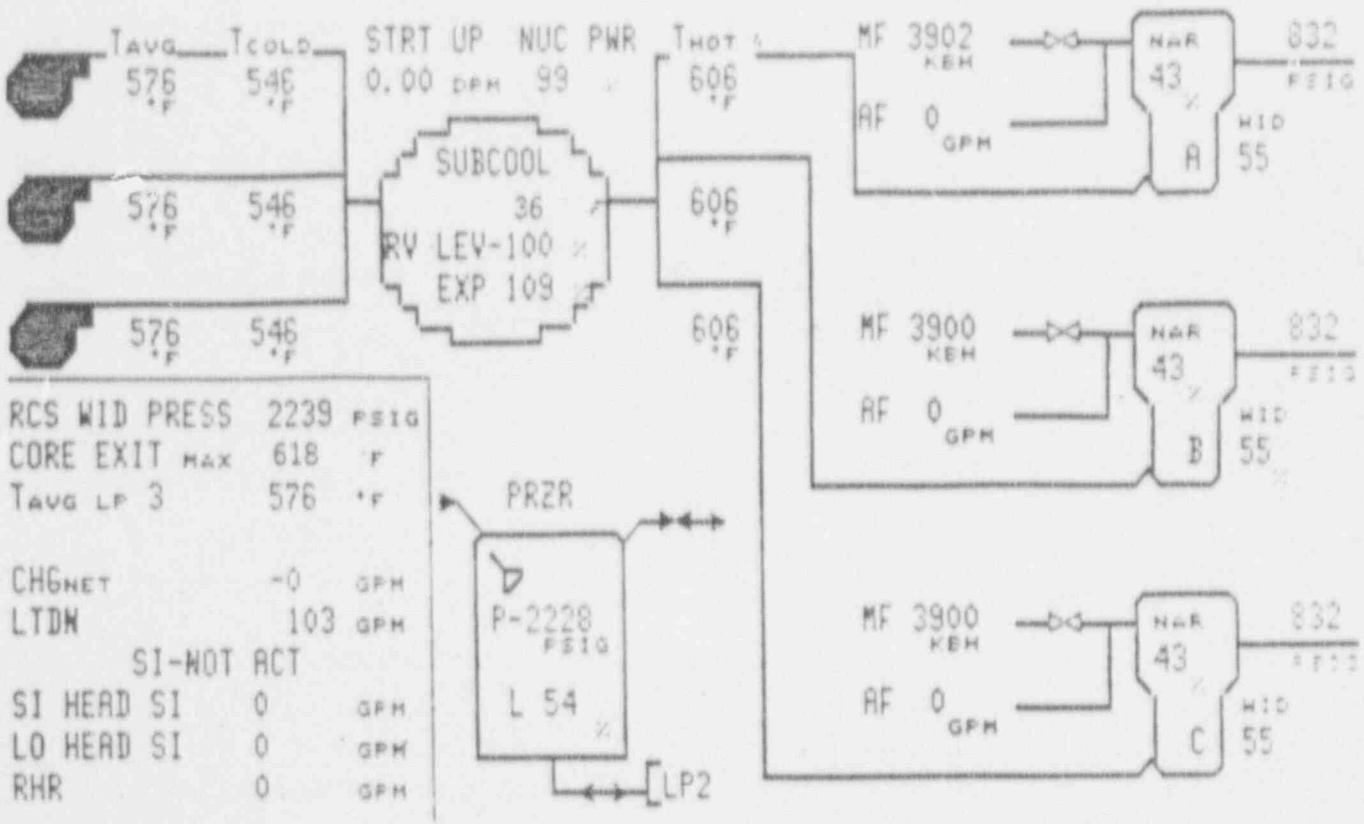

CONTAINMENT				ELECTRICAL			
Press. (PSIA)	9.74	Temp. (F)	94.3	SSST 2A	OOS	SSST 2B	OK
RHS	AVAIL	Sump (In)	0.0	2 AE	OK	2 DF	OK
Quench Spray	AVAIL	Recirc Spray	AVAIL	2 N	OK	? P	OK
HHSI	AVAIL	CIA	NO	DG 2-1	AVAIL	DG 2-2	OOS
LHSI	AVAIL	CIB	NO	Batteries	OK	Vital Buses	OK

Time 1642

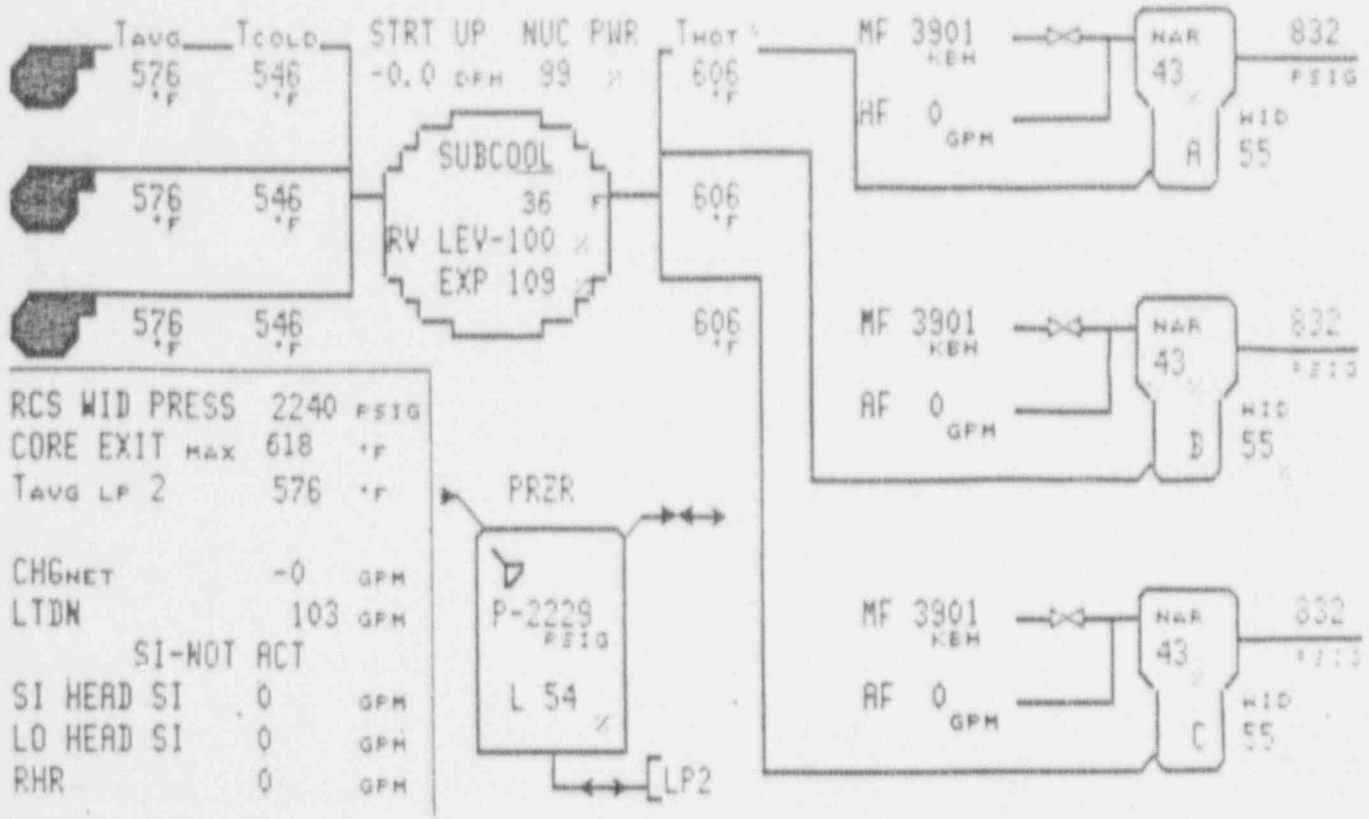

CONTAINMENT				ELECTRICAL			
Press. (PSIA)	9.74	Temp. (F)	94.4	SSST 2A	OOS	SSST 2B	OK
RHS	AVAIL	Sump (In)	0.0	2 AE	OK	2 DF	OK
Quench Spray	AVAIL	Recirc Spray	AVAIL	2 N	OK	2 P	OK
HHSI	AVAIL	CIA	NO	DG 2-1	AVAIL	DG 2-2	OOS
LHSI	AVAIL	CIB	NO	Batteries	OK	Vital Buses	OK

Time 1645

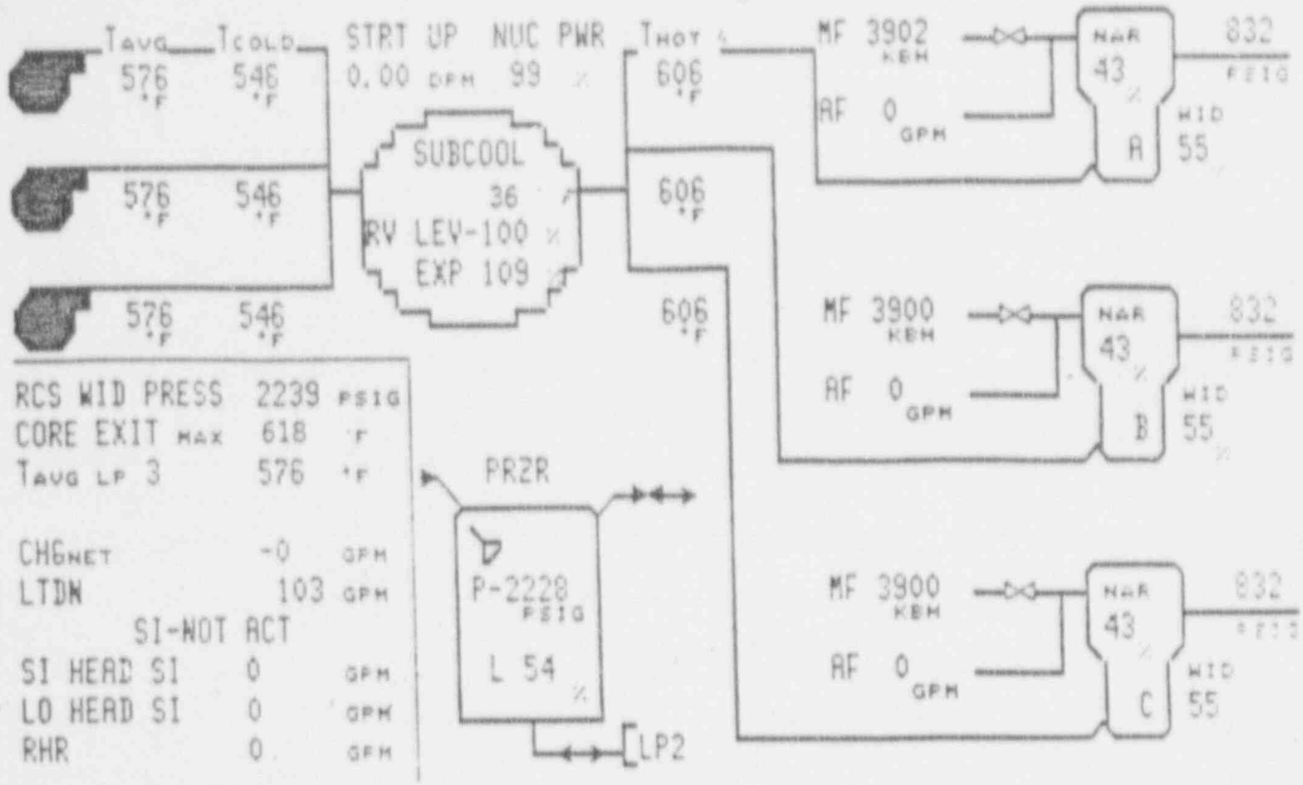

CONTAINMENT				ELECTRICAL			
Press. (PSIA)	9.74	Temp. (F)	94.3	SSST 2A	OOS	SSST 2B	OK
RHS	AVAIL	Sump (In)	0.0	2 AE	OK	2 DF	OK
Quench Spray	AVAIL	Recirc Spray	AVAIL	2 N	0.	2 P	OK
HHSI	AVAIL	CIA	NO	DG 2-1	AVAIL	DG 2-2	OOS
LHSI	AVAIL	CIB	NO	Batteries	OK	Vital Buses	OK

Time 1645

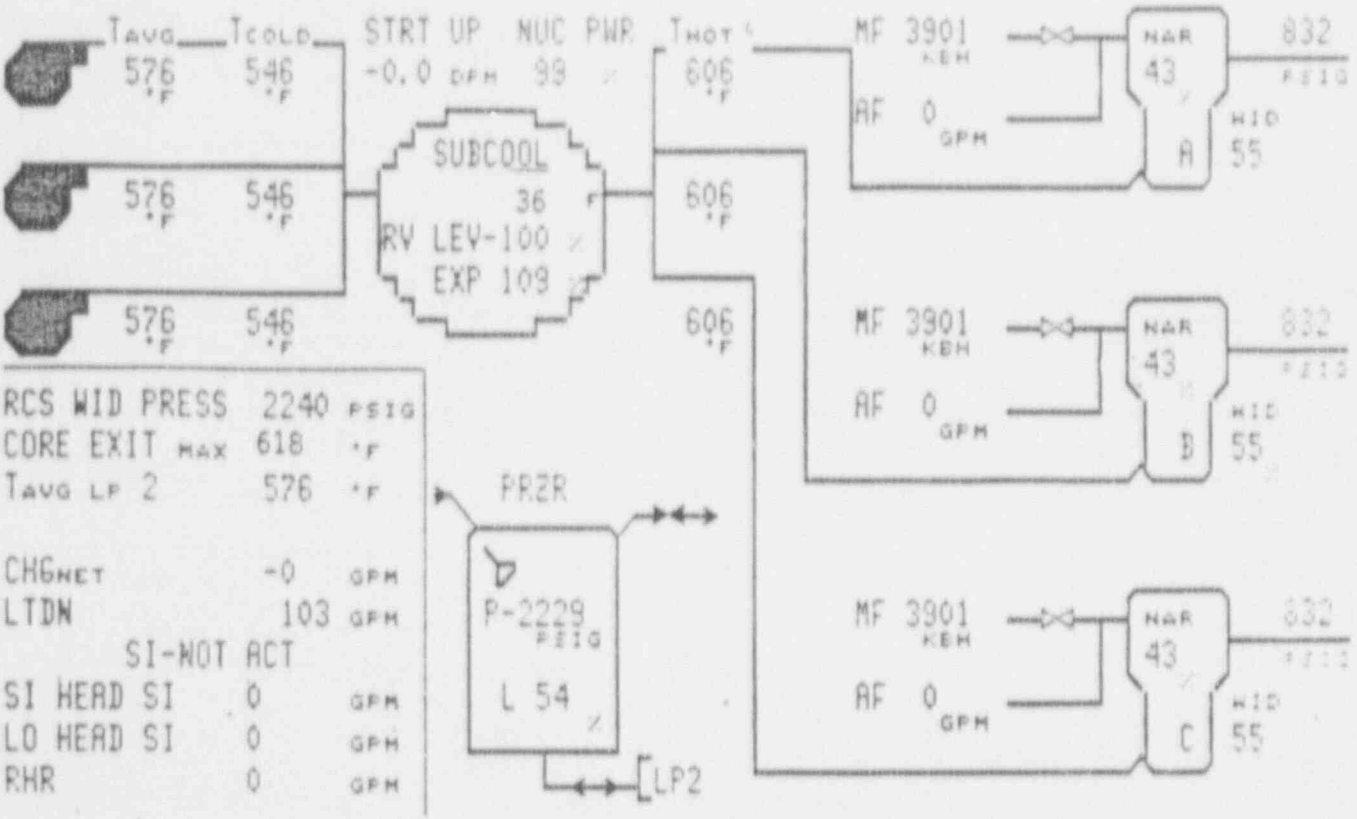

CONTAINMENT				ELECTRICAL			
Press. (PSIA)	9.74	Temp. (F)	94.4	SSST 2A	OOS	SSST 2B	OK
RHS	AVAIL	Sump (In)	0.0	2 AE	OK	2 DF	OK
Quench Spray	AVAIL	Recirc Spray	AVAIL	2 N	OK	2 P	OK
HHSI	AVAIL	CIA	NO	DG 2-1	AVAIL	DG 2-2	OOS
LHSI	AVAIL	CIB	NO	Batteries	OK	Vital Buses	OK

Time 1651

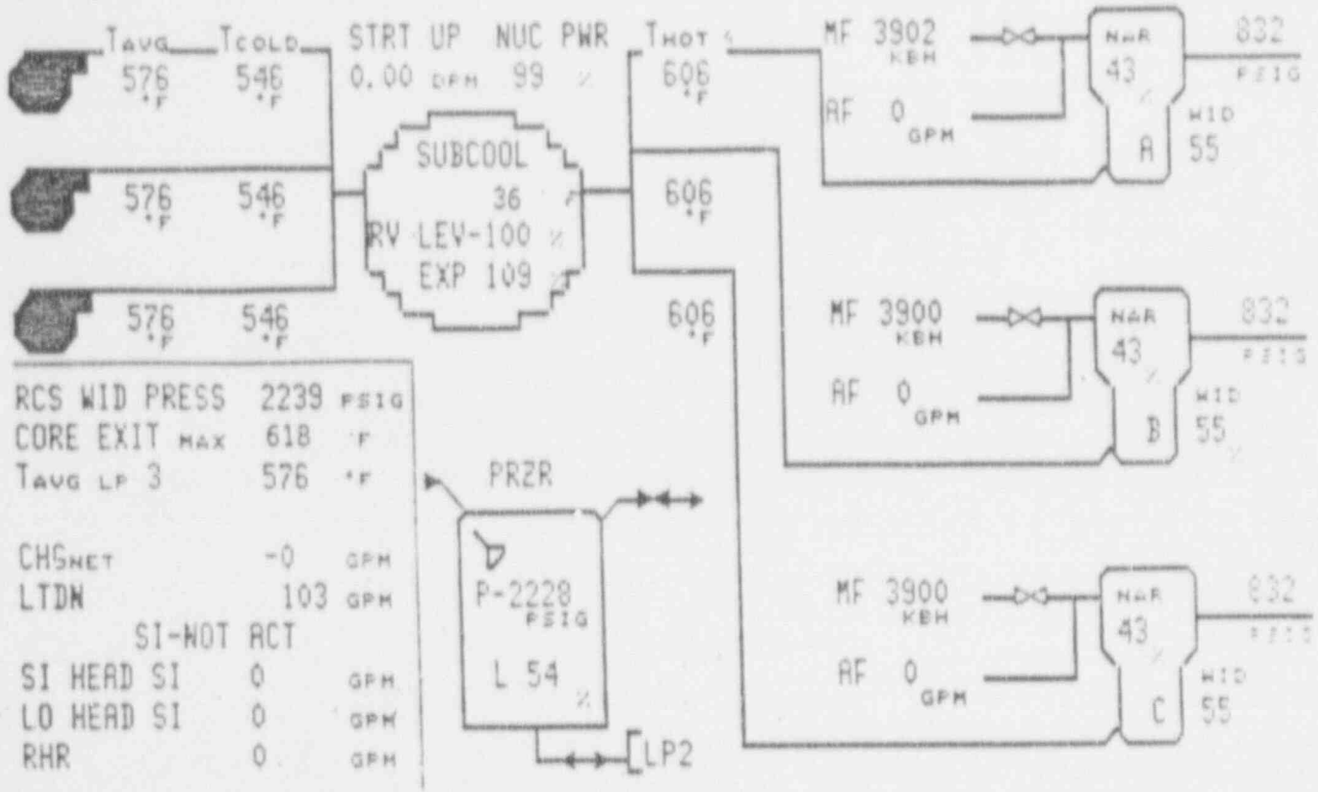

CONTAINMENT				ELECTRICAL			
Press. (PSIA)	9.74	Temp. (F)	94.3	SSST 2A	OOS	SSST 2B	OK
RHS	AVAIL	Sump (In)	0.0	2 AE	OK	2 DF	OK
Quench Spray	AVAIL	Recirc Spray	AVAIL	2 N	OK	2 P	OK
HHSI	AVAIL	CIA	NO	DG 2-1	AVAIL	DG 2-2	OOS
LHSI	AVAIL	CIB	NO	Batteries	OK	Vital Buses	OK

Time 1654

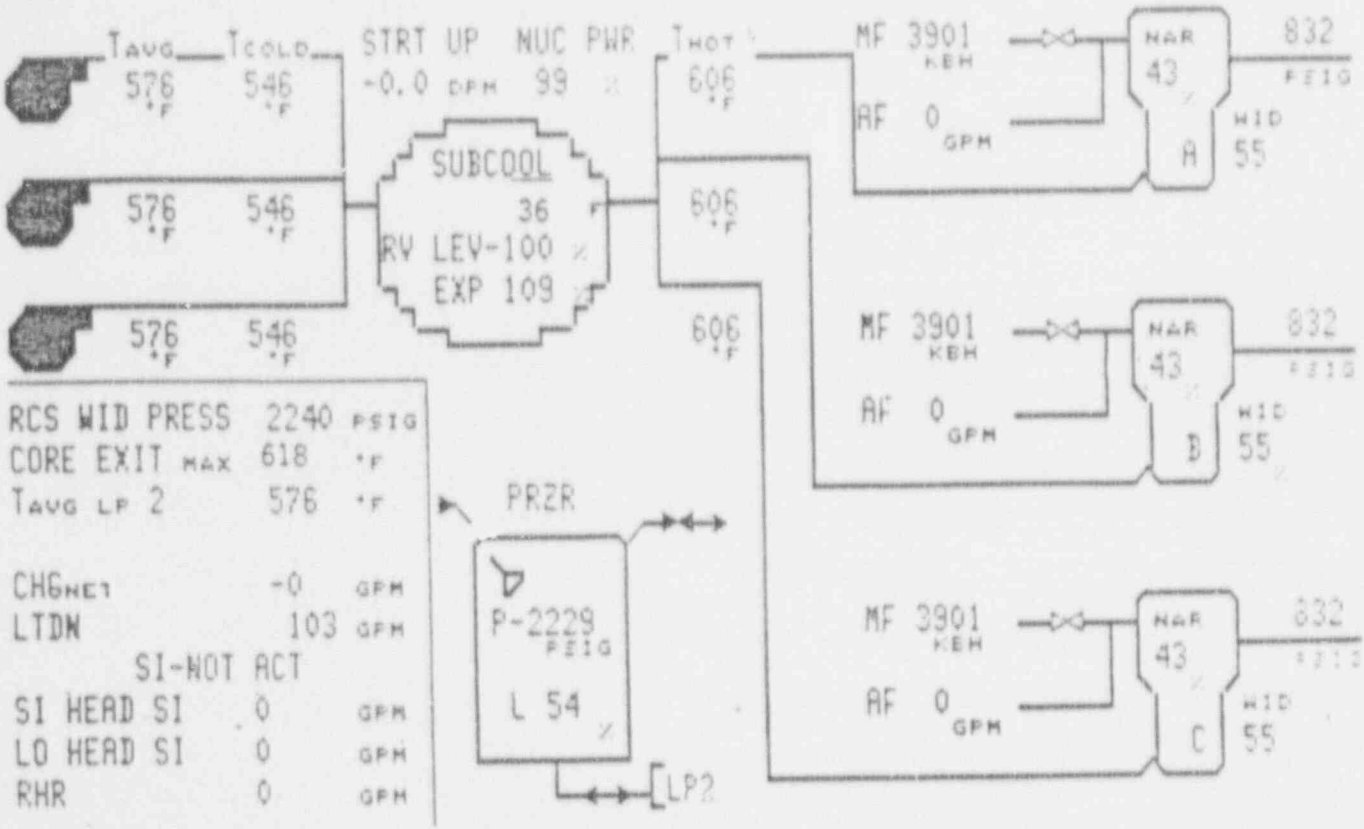

CONTAINMENT				ELECTRICAL			
Press. (PSIA)	9.74	Temp. (F)	94.4	SSST 2A	OOS	SSST 2B	OK
RHS	AVAIL	Sump (In)	0.0	2 AE	OK	2 DF	OK
Quench Spray	AVAIL	Recirc Spray	AVAIL	2 N	OK	2 P	OK
HHSI	AVAIL	CIA	NO	DG 2-1	AVAII	DG 2-2	OOS
LHSI	AVAIL	CIB	NO	Batteries	OK	Vital Buses	OK

Time 1657

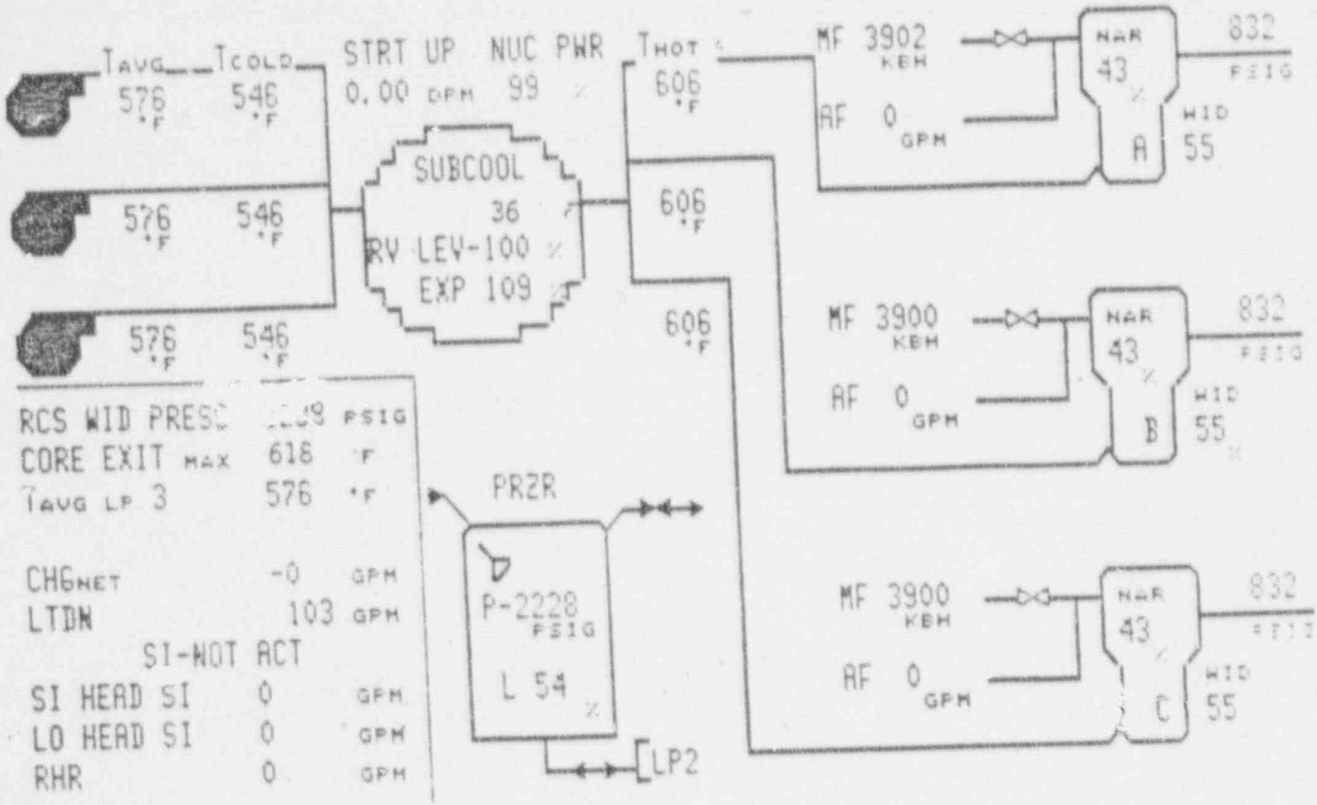

CONTAINMENT				ELECTRICAL			
Press. (PSIA)	9.74	Temp. (F)	94.3	SSST 2A	OOS	SSST 2B	OK
RHS	AVAIL	Sump (In)	0.0	2 AE	OK	2 DF	OK
Quench Spray	AVAIL	Recirc Spray	AVAIL	2 N	OK	2 P	OK
RHSI	AVAIL	CIA	NO	DG 2-1	AVAIL	DG 2-2	OOS
LHSI	AVAIL	CIB	NO	Batteries	OK	Vital Buses	OK

Time 1700

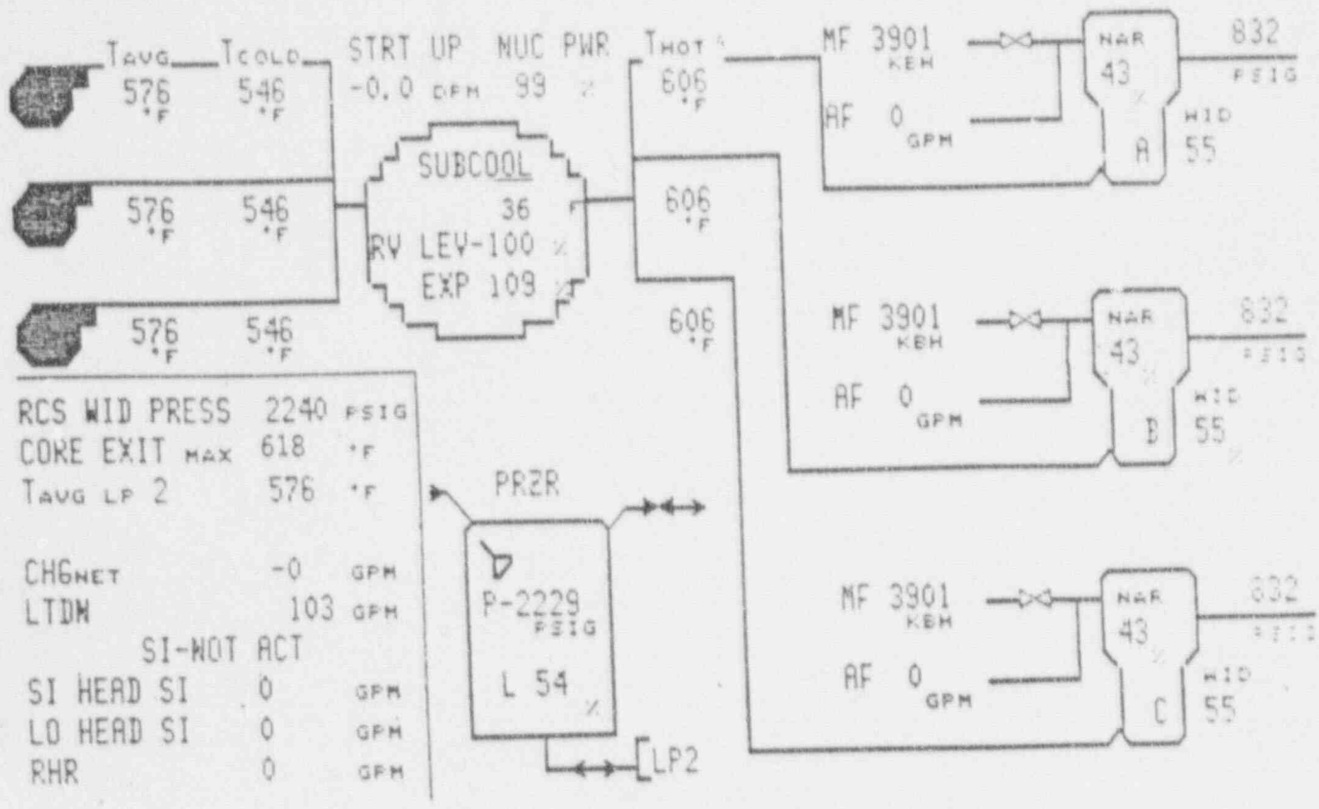

CONTAINMENT				ELECTRICAL			
Press. (PSIA)	9.74	Temp. (F)	94.4	SSST 2A	OOS	SSST 2B	OK
RHS	AVAIL	Sump (In)	0.0	2 AE	OK	2 DF	OK
Quench Spray	AVAIL	Recirc Spray	AVAIL	2 N	OK	2 P	OK
HHSI	AVAIL	CIA	NO	DG 2-1	AVAIL	DG 2-2	OOS
LHSI	AVAIL	CIB	NO	Batteries	OK	Vital Buses	OK

Time 1703

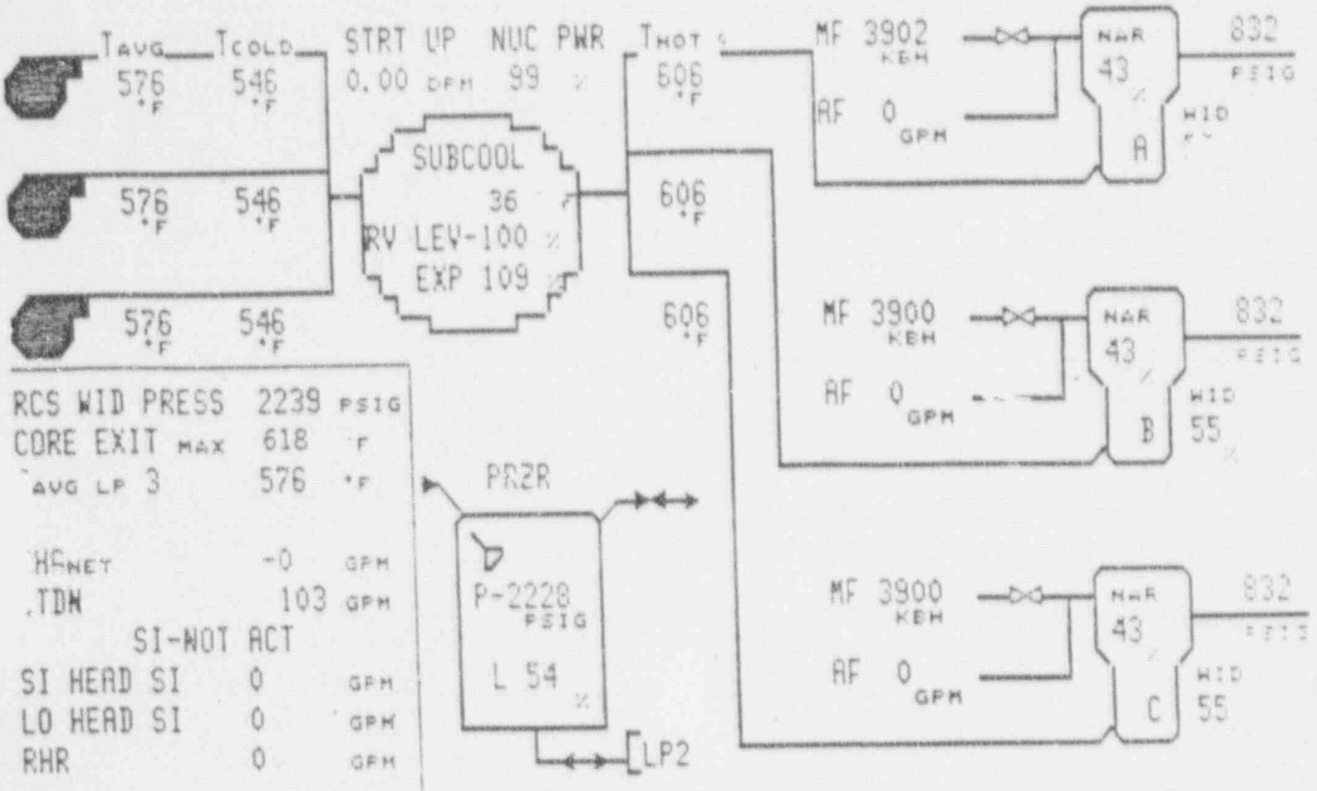

CONTAINMENT				ELECTRICAL			
Press. (PSIA)	9.74	Temp. (F)	94.3	SSST 2A	OOS	SSST 2B	OK
RHS	AVAIL	Sump (In)	0.0	2 AE	OK	2 DF	OK
Quench Spray	AVAIL	Recirc Spray	AVAIL	2 N	OK	2 P	OK
HHSI	AVAIL	CIA	NO	DG 2-1	AVAIL	DG 2-2	OOS
LHSI	AVAIL	CIB	NO	Batteries	OK	Vital Buses	OK

Time 1706

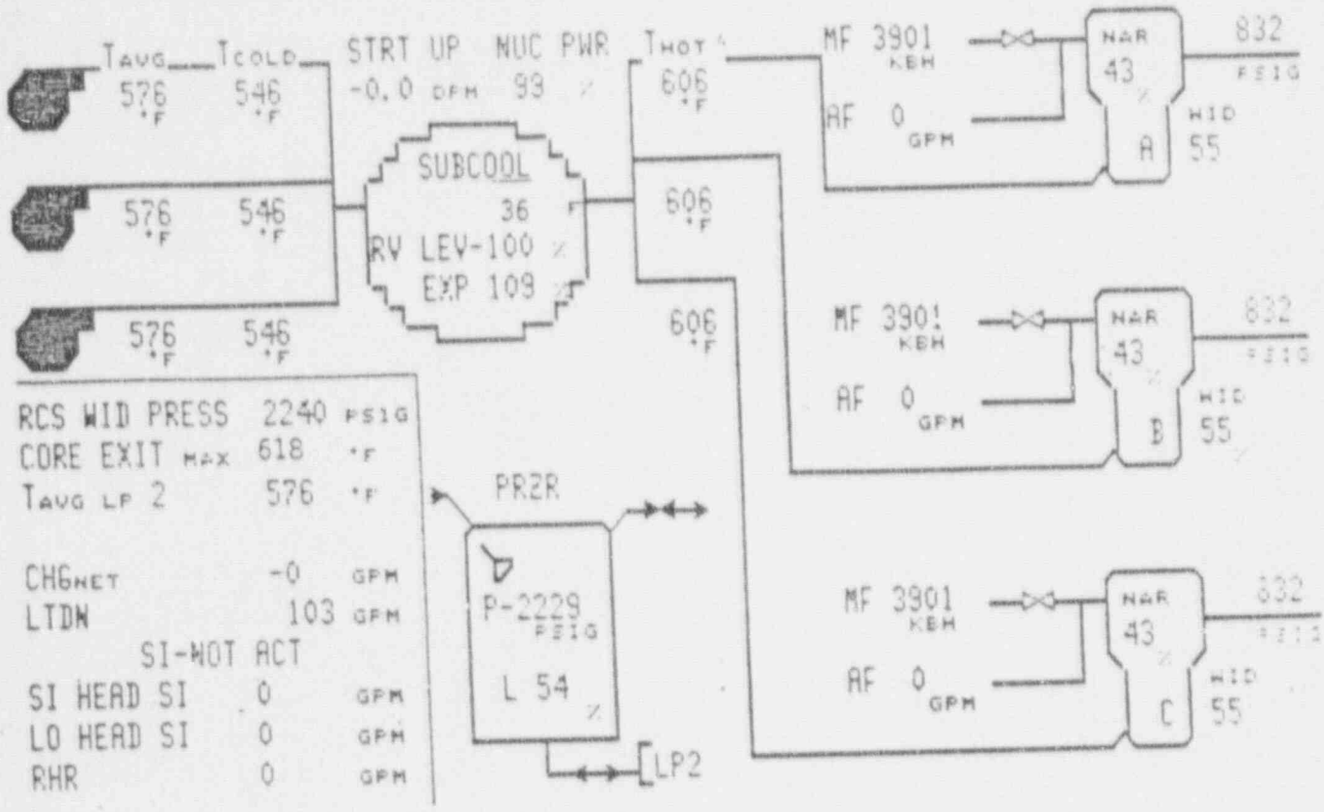

CONTAINMENT				ELECTRICAL			
Press. (PSIA)	9.74	Temp. (F)	94.4	SSST 2A	OOS	SSST 2D	OK
RHS	AVAIL	Sump (In)	0.0	2 AE	OK	2 DF	OK
Quench Spray	AVAIL	Recirc Spray	AVAIL	2 N	OK	2 P	OK
HHSI	AVAIL	CIA	NO	DG 2-1	AVAIL	DG 2-2	OOS
LHSI	AVAIL	CIB	NO	Batteries	OK	Vital Buses	OK

Time 1709

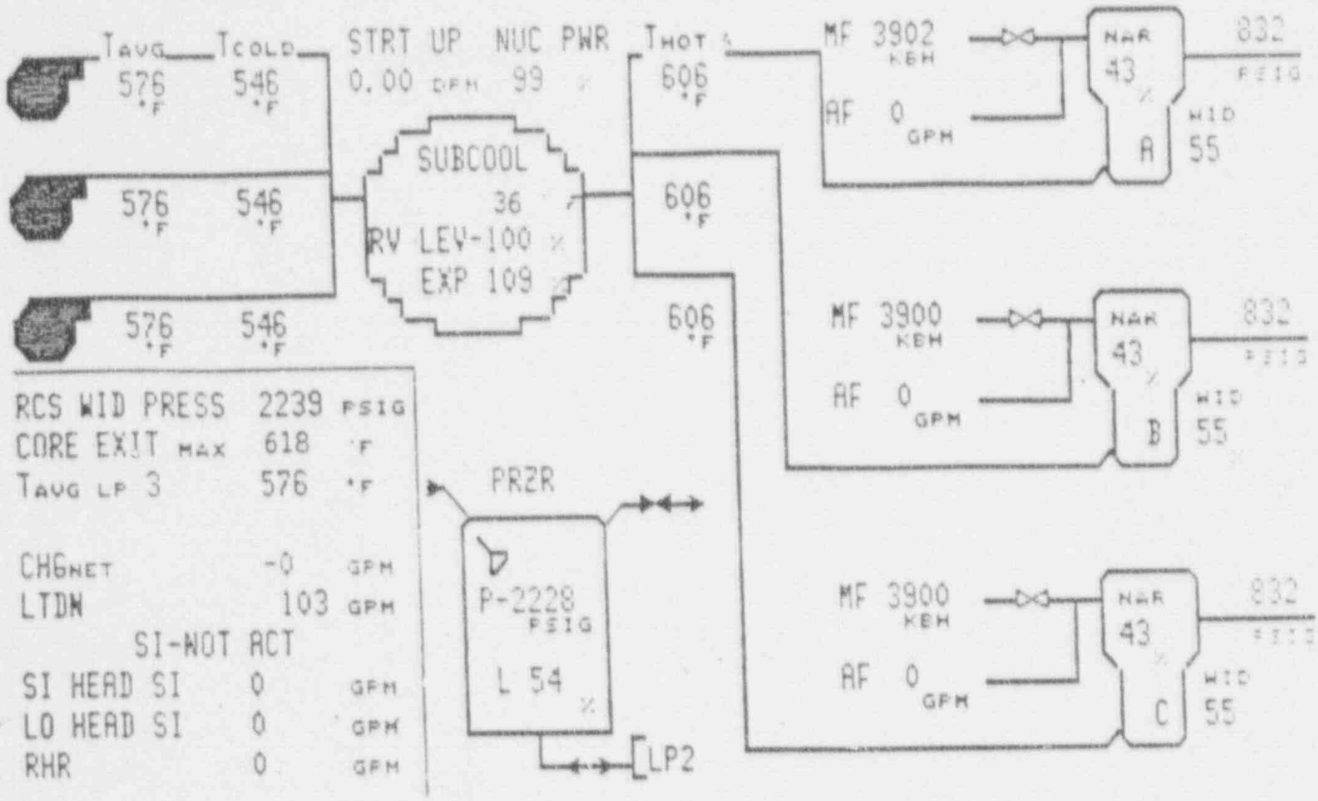

CONTAINMENT				ELECTRICAL			
Press. (PSIA)	9.74	Temp. (F)	94.3	SSST 2A	OOS	SSST 2B	OK
RHS	AVAIL	Sump (In)	0.0	2 AE	OK	2 DF	OK
Quench Spray	AVAIL	Recirc Spray	AVAIL	2 N	OK	2 P	OK
HHSI	AVAIL	CIA	NO	DG 2-1	AVAIL	DG 2-2	OOS
LHSI	AVAIL	CIB	NO	Batteries	OK	Vital Buses	OK

Time 1712

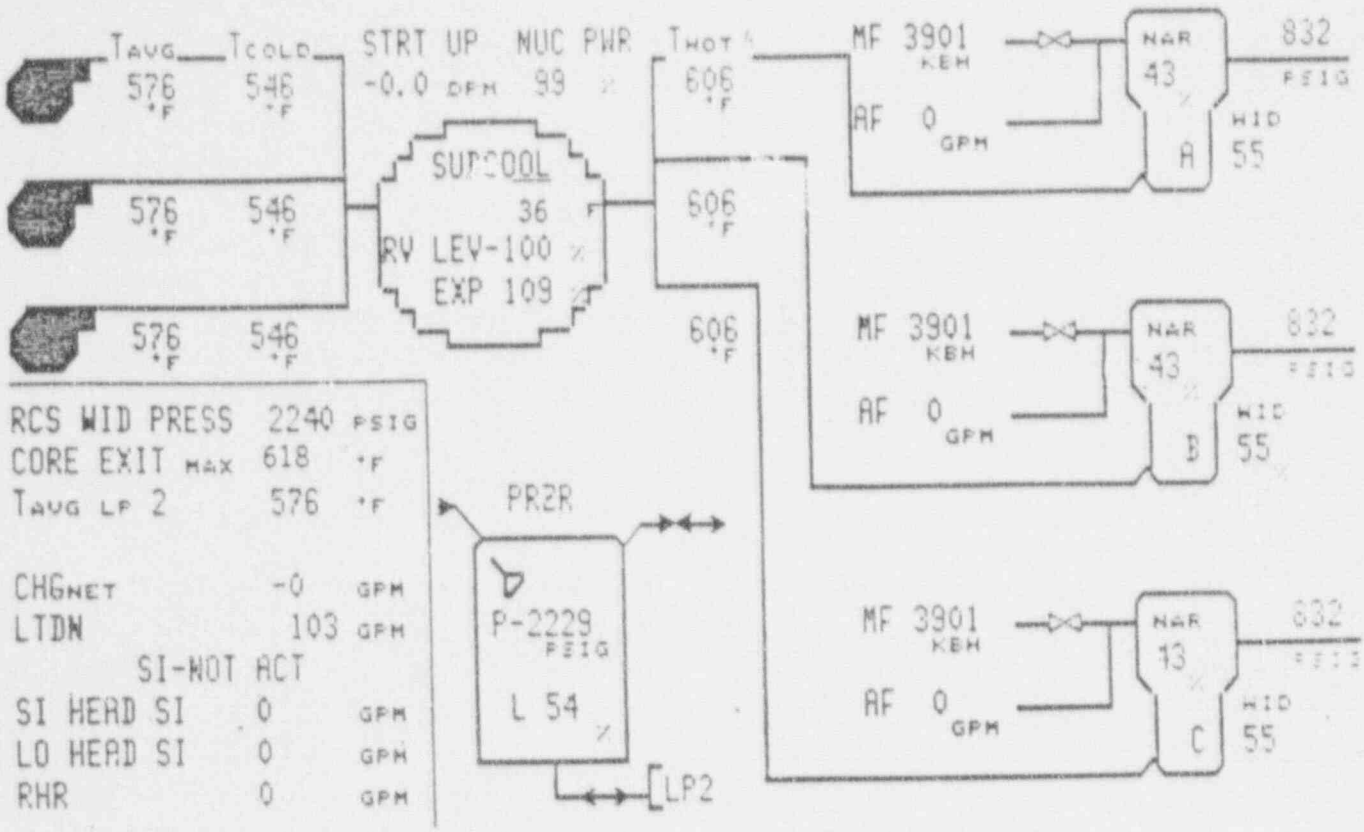

CONTAINMENT				ELECTRICAL			
Press. (PSIA)	9.74	Temp. (F)	94.4	SSST 2A	OOS	SSST 2B	OK
RHS	AVAIL	Sump (In)	0.0	2 AE	OK	2 DF	OK
Quench Spray	AVAIL	Recirc Spray	AVAIL	2 N	OK	2 P	OK
HHSI	AVAIL	CIA	NO	DG 2-1	AVAIL	DG 2-2	OOS
LHSI	AVAIL	CIB	NO	Batteries	OK	Vital Buses	OK

Time 1715

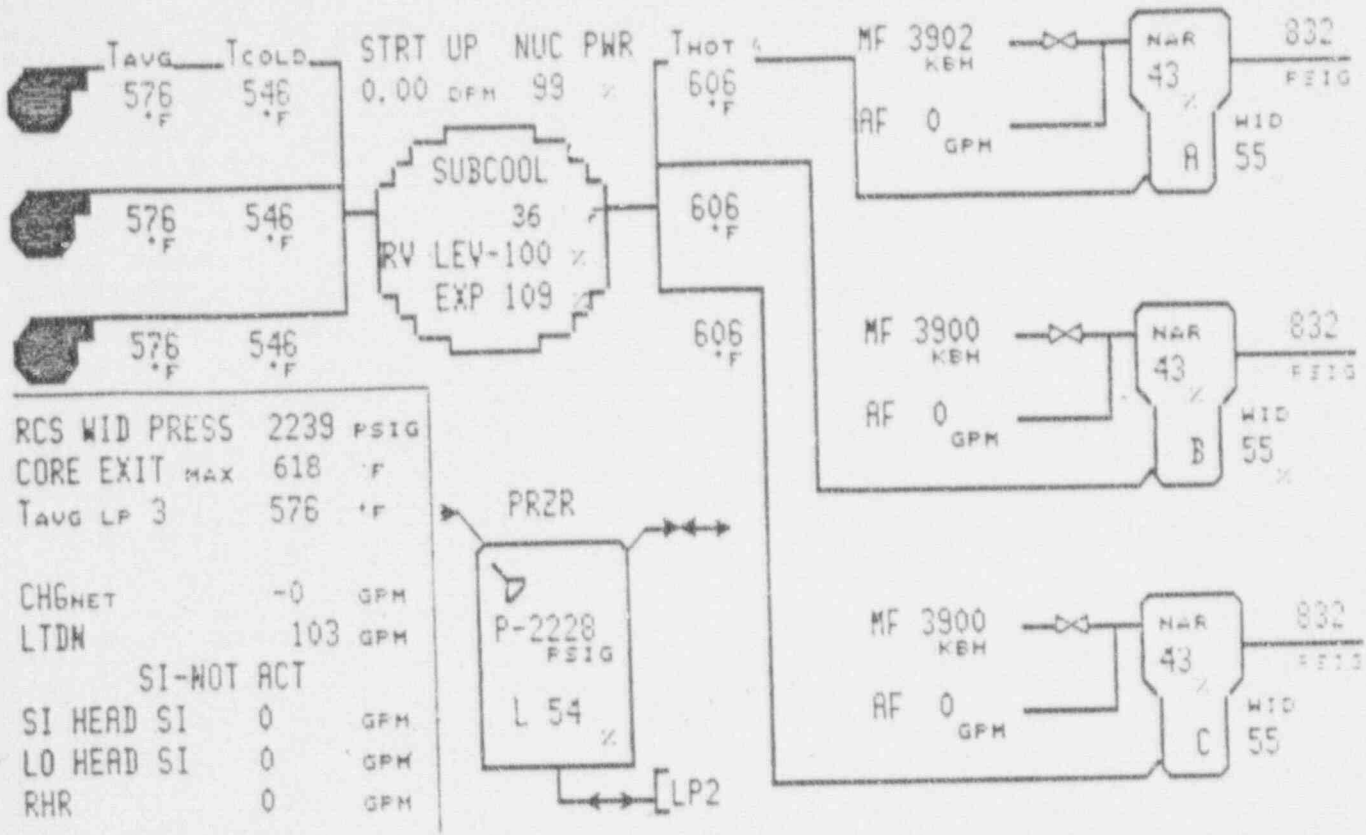

CONTAINMENT				ELECTRICAL			
Press. (PSIA)	9.74	Temp. (F)	94.3	SSST 2A	OOS	SSST 2B	OK
RHS	AVAIL	Sump (In)	0.0	2 AE	OK	2 DF	OK
Quench Spray	AVAIL	Recirc Spray	AVAIL	2 N	OK	2 P	OK
HHSI	AVAIL	CIA	NO	DG 2-1	AVAIL	DG 2-2	OOS
LHSI	AVAIL	CIB	NO	Batteries	OK	Vital Buses	OK

Time 1718

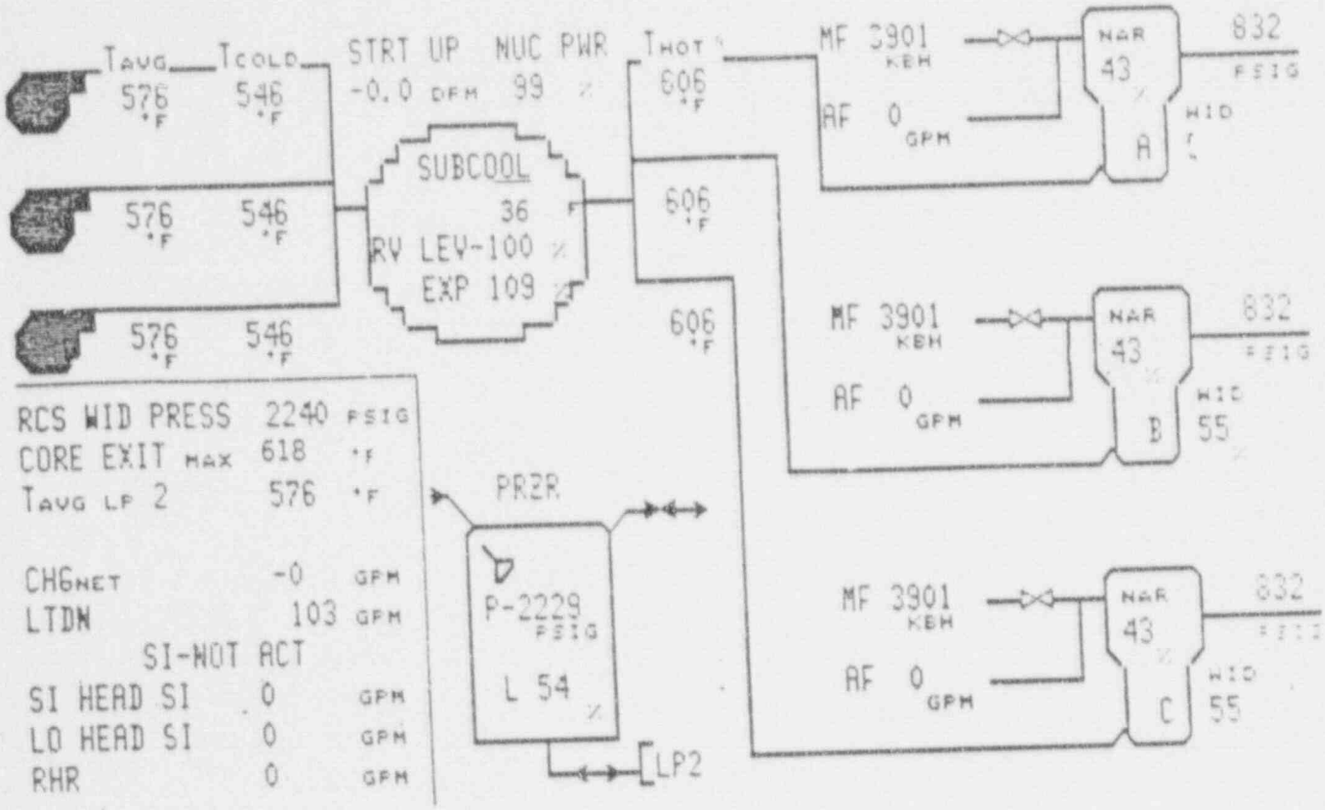

CONTAINMENT				ELECTRICAL			
Press. (PSIA)	9.74	Temp. (F)	94.4	SEST 2A	OOS	SSST 2B	OK
RHS	AVAIL	Sump (In)	0.0	2 AE	OK	2 DF	OK
Quench Spray	AVAIL	Recirc Spray	AVAIL	2 N	OK	2 P	OK
HHSI	AVAIL	CIA	NO	DG 2-1	AVAIL	DG 2-2	OOS
LHSI	AVAIL	CIB	NO	Batteries	OK	Vital Buses	OK

Time 1721

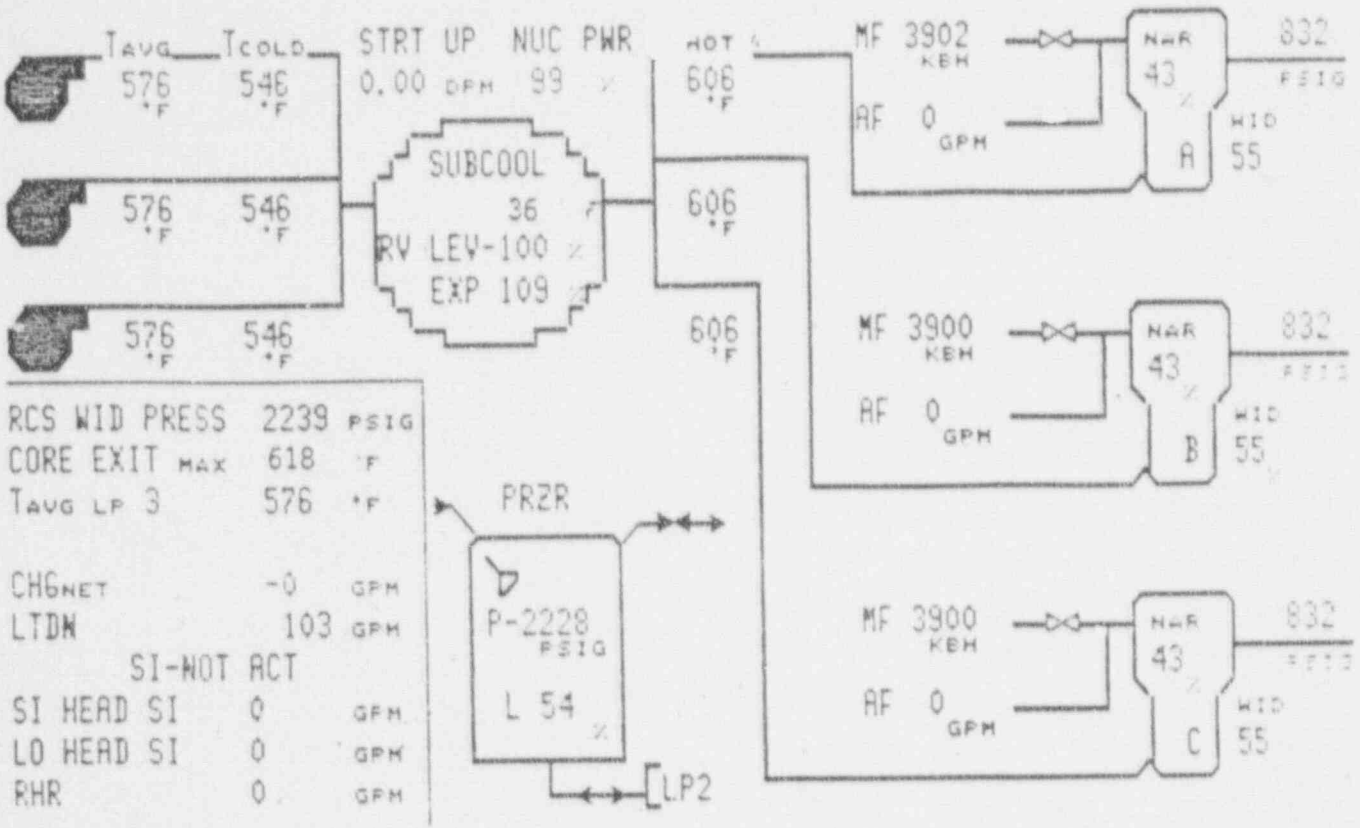

CONTAINMENT				ELECTRICAL			
Press. (PSIA)	9.74	Temp. (F)	94.3	SSST 2A	OOS	SSST 2B	OK
RHS	AVAIL	Sump (In)	0.0	2 AE	OK	2 DF	OK
Quench Spray	AVAIL	Recirc Spray	AVAIL	2 N	OK	2 P	OK
HHSI	AVAIL	CIA	NO	DG 2-1	AVAIL	DG 2-2	OOS
LHSI	AVAIL	CIB	NO	Batteries	OK	Vital Buses	OK

Time 1724

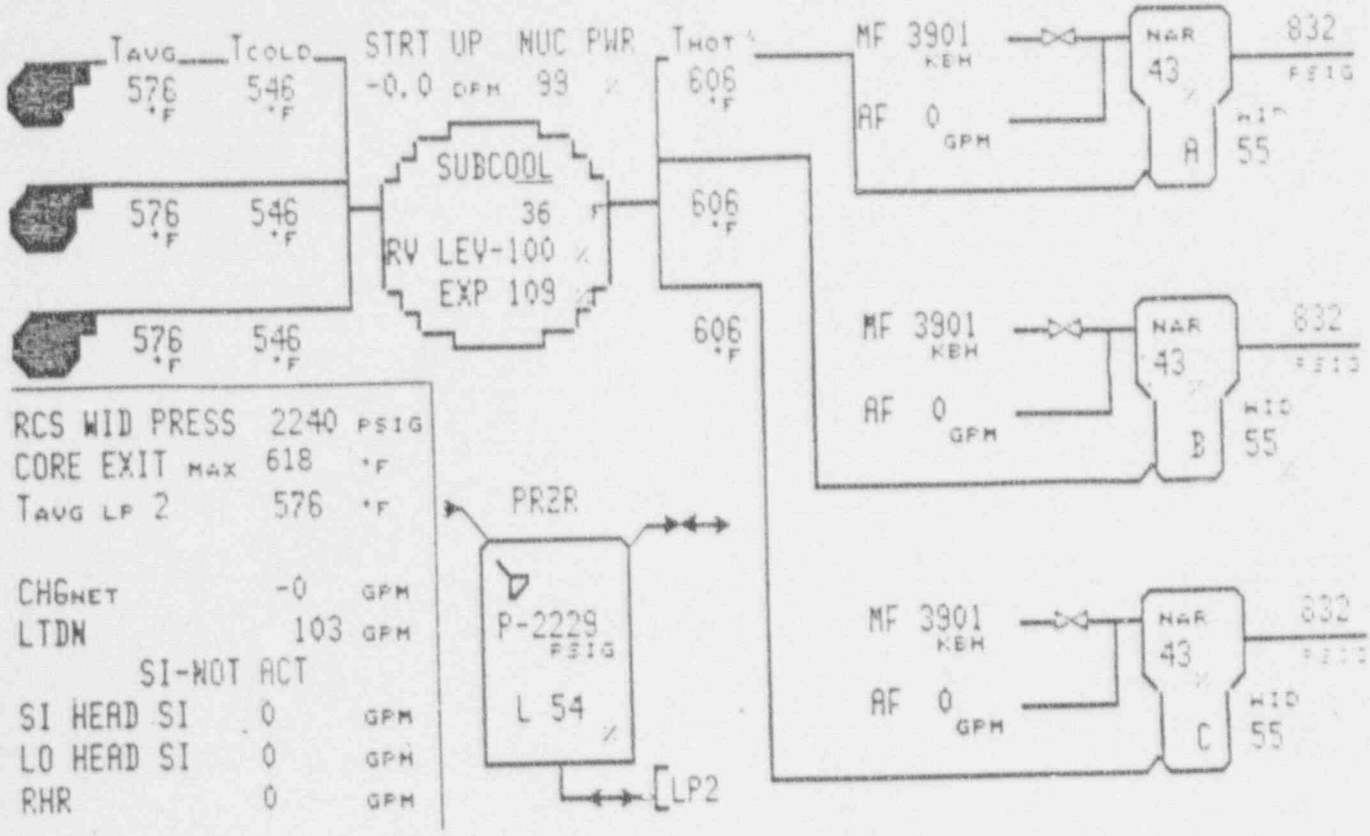

CONTAINMENT				ELECTRICAL			
Press. (PSIA)	9.74	Temp. (F)	94.4	SSST 2A	OOS	SSST 2B	OK
RHR	AVAIL	Sump (In)	0.0	2 AE	OK	2 DF	OK
Quench Spray	AVAIL	Recirc Spray	AVAIL	2 N	OK	2 P	OK
HHSI	AVAIL	CIA	NO	DG 2-1	AVAIL	DG 2-2	OOS
LHSI	AVAIL	CIB	NO	Batteries	OK	Vital Buses	OK

Time 1727

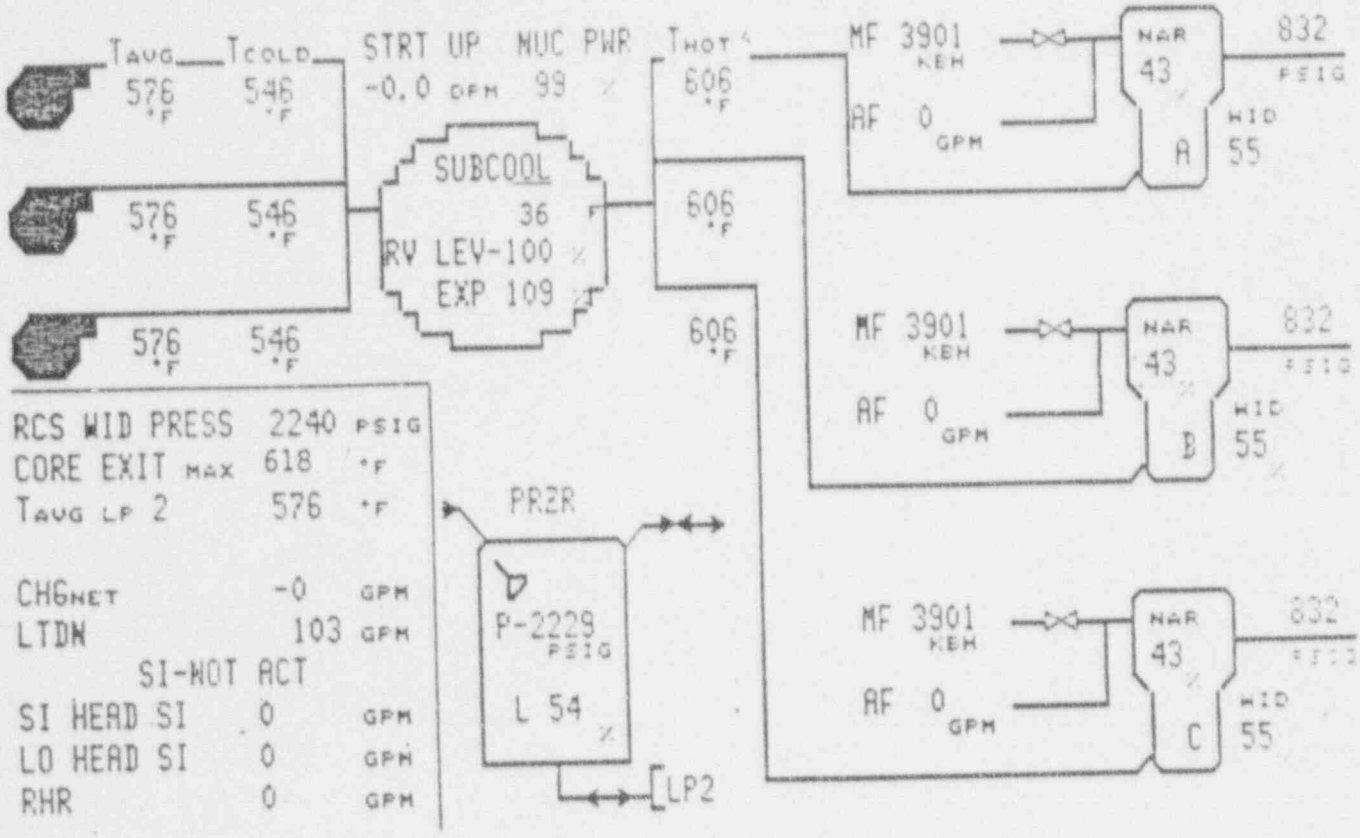

CONTAINMENT				ELECTRICAL			
Press. (PSIA)	9.74	Temp. (F)	94.4	SSST 2A	OOS	SSST 2B	OK
RHS	AVAIL	Sump (In)	0.0	2 AE	OK	2 DF	OK
Quench Spray	AVAIL	Recirc Spray	AVAIL	2 N	OK	2 P	OK
HHSI	AVAIL	CIA	NO	DG 2-1	AVAIL	DG 2-2	OOS
LHSI	AVAIL	CIB	NO	Batteries	OK	Vital Buses	OK

Time 1730

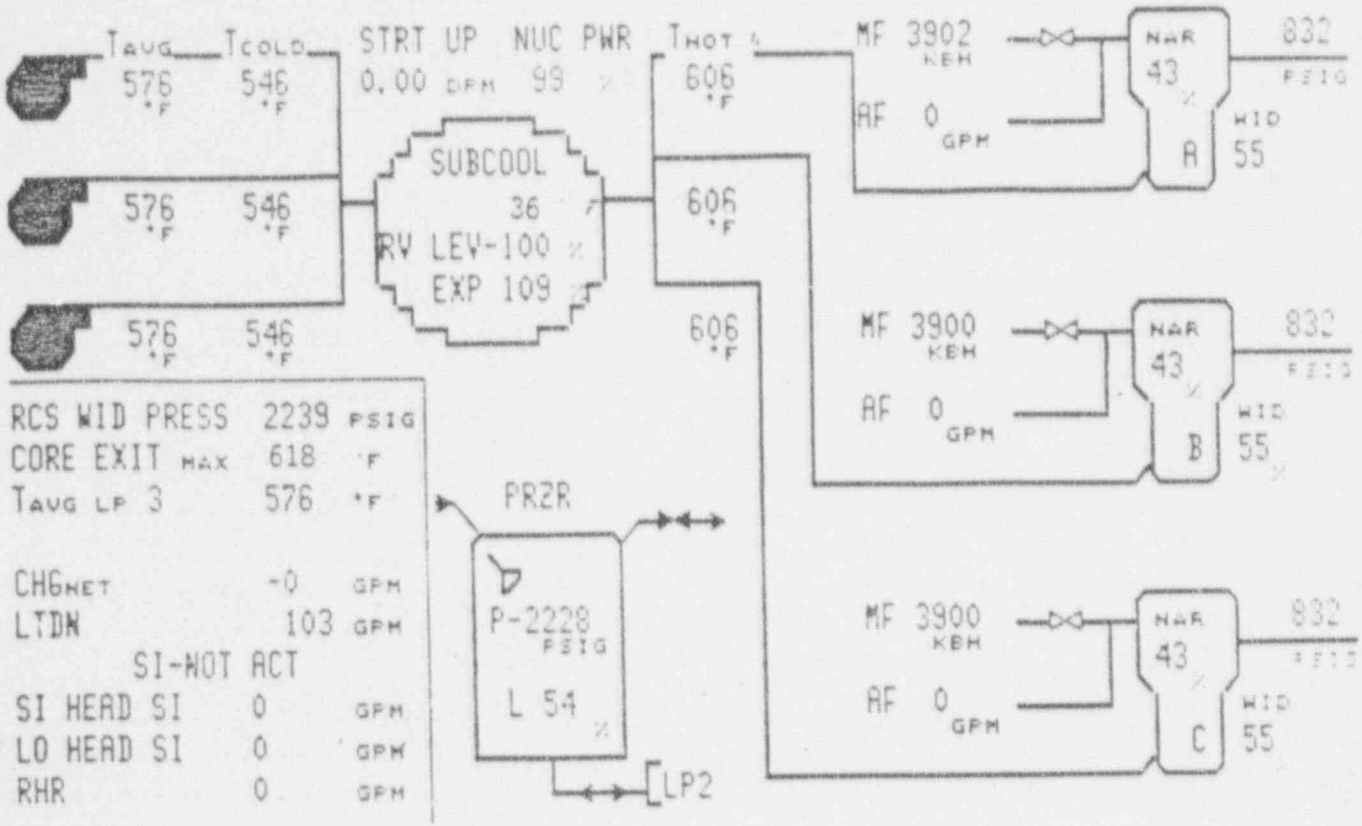

CONTAINMENT				ELECTRICAL			
Press. (PSIA)	9.74	Temp. (F)	94.3	SSST 2A	OOS	SSST 2B	OK
RHS	AVAIL	Sump (In)	0.0	2 AE	OK	2 DF	OK
Quench Spray	AVAIL	Recirc Spray	AVAIL	2 N	OK	2 P	OK
HHSI	AVAIL	CIA	NO	DG 2-1	AVAIL	DG 2-2	OOS
LHSI	AVAIL	CIB	NO	Batteries	OK	Vital Buses	OK

Time 1733

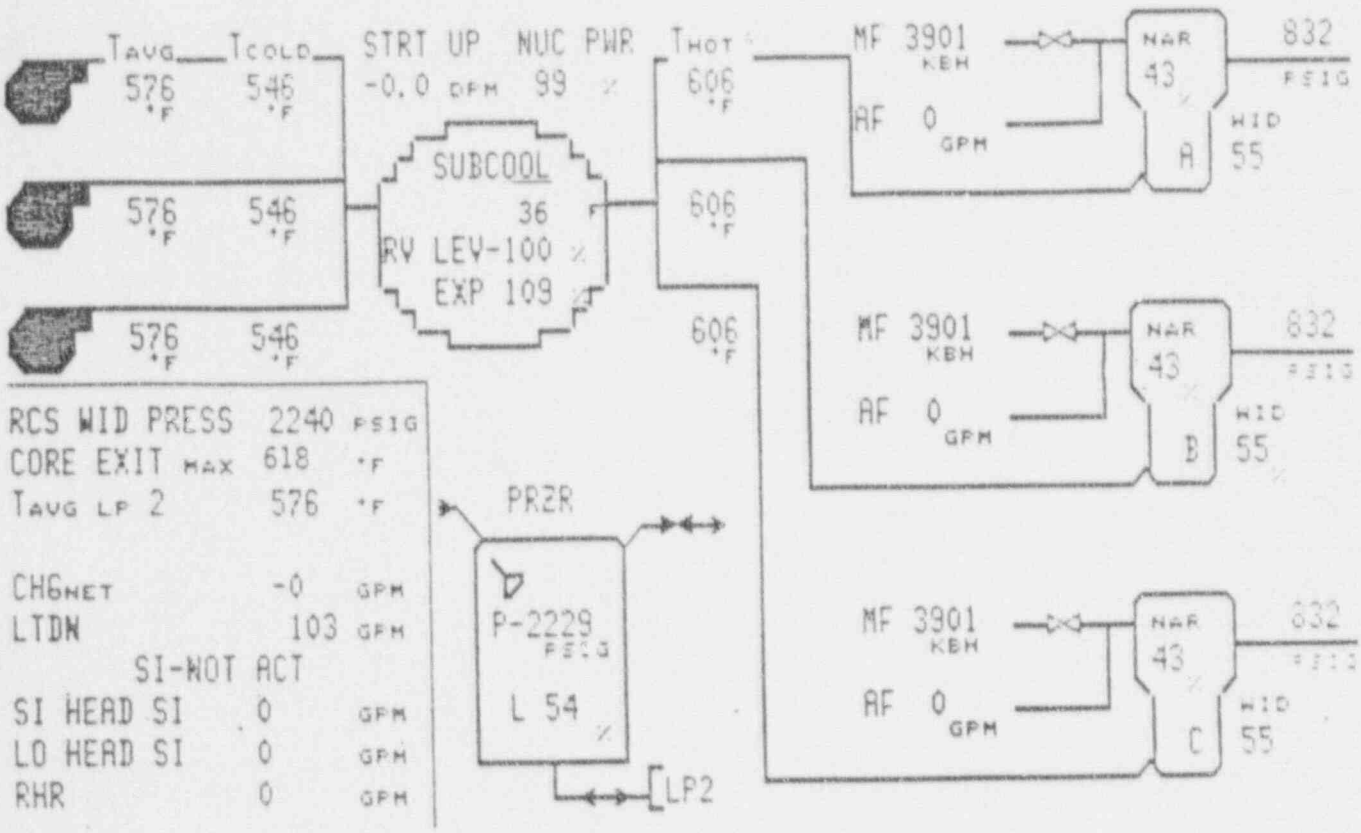

CONTAINMENT				ELECTRICAL			
Press. (PSIA)	9.74	Temp. (F)	94.4	SSST 2A	OOS	SSST 2B	OK
RHS	AVAIL	Sump (In)	0.0	2 AE	OK	2 DF	OK
Quench Spray	AVAIL	Recirc Spray	AVAIL	2 N	OK	2 P	OK
HHSI	AVAIL	CIA	NO	DG 2-1	AVAIL	DG 2-2	OOS
LHSI	AVAIL	CIB	NO	Batteries	OK	Vital Buses	OK

Time 1736

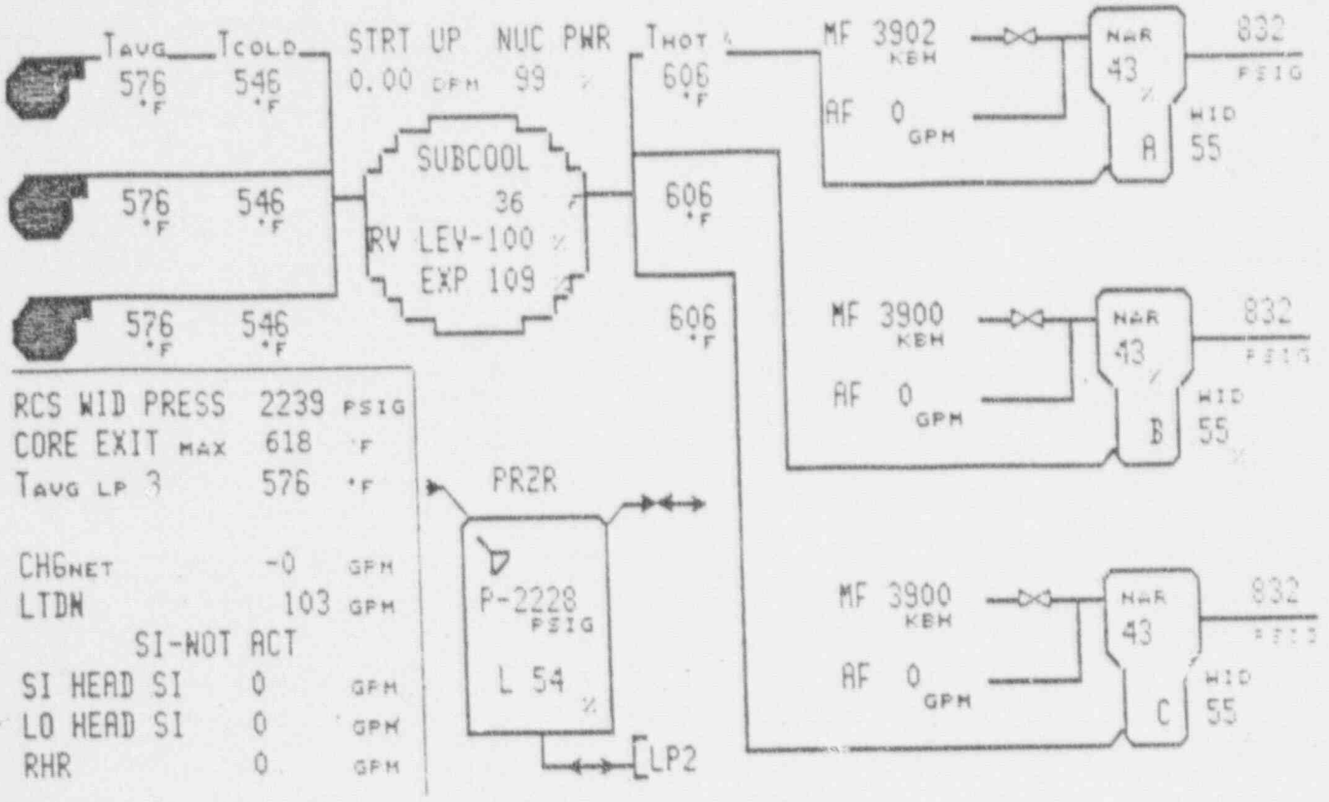

CONTAINMENT				ELECTRICAL			
Press. (PSIA)	9.74	Temp. (F)	94.3	SSST 2A	OOS	SSST 2B	OK
RHS	AVAIL	Sump (In)	0.0	2 AE	OK	2 DF	OK
Quench Spray	AVAIL	Recirc Spray	AVAIL	2 N	OK	2 P	OK
HHSI	AVAIL	CIA	NO	DG 2-1	AVAIL	DG 2-2	OOS
LHSI	AVAIL	CIB	NO	Batteries	OK	Vital Buses	OK

Time 1739

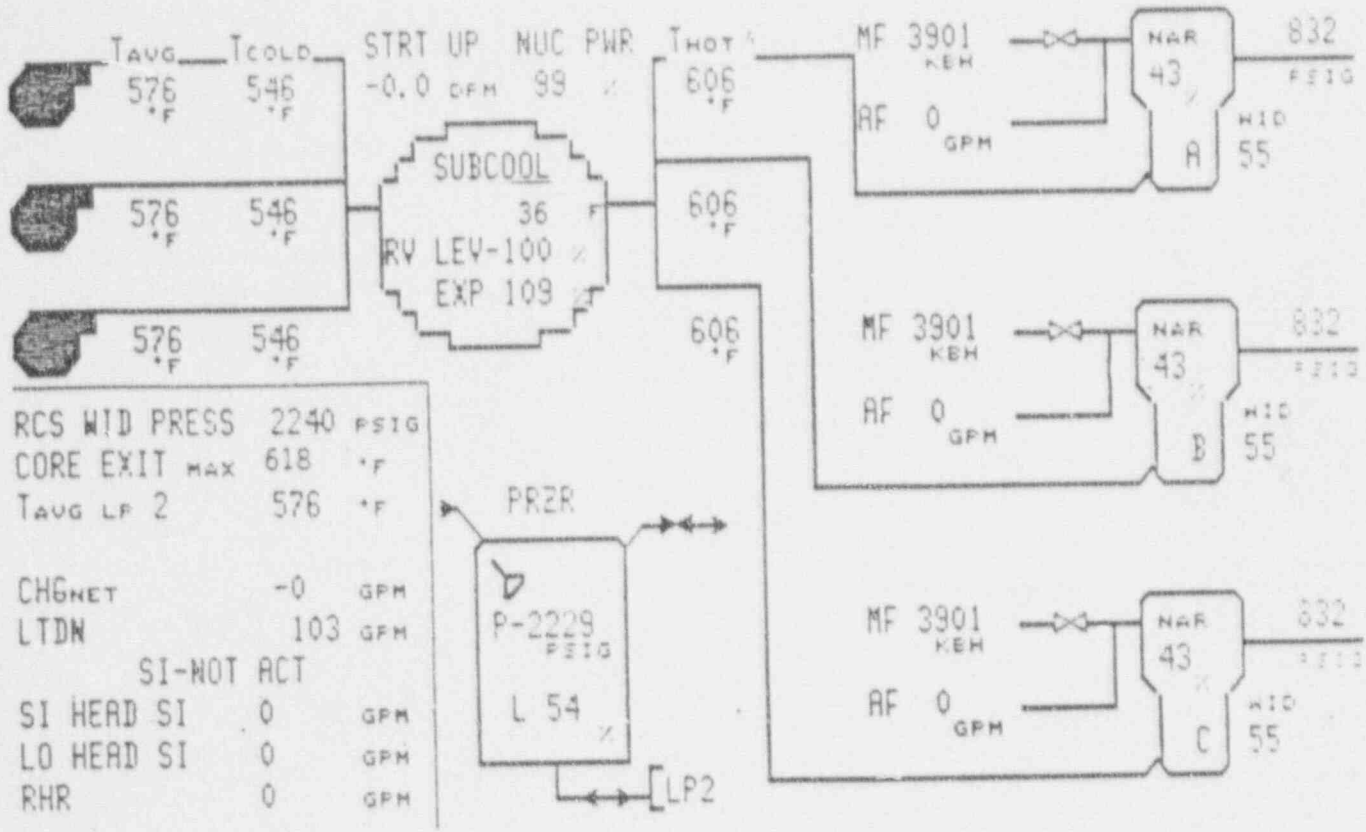

CONTAINMENT				ELECTRICAL			
Press. (PSIA)	9.74	Temp. (F)	94.4	SSST 2A	OOS	SSST 2B	OK
RHS	AVAIL	Sump (In)	0.0	2 AE	OK	2 DF	Ok
Quench Spray	AVAIL	Recirc Spray	AVAIL	2 N	OK	2 P	OK
HHSI	AVAIL	CIA	NO	DG 2-1	AVAIL	DG 2-2	OOS
LHSI	AVAIL	CIB	NO	Batteries	OK	Vital Buses	OK

Time 1742

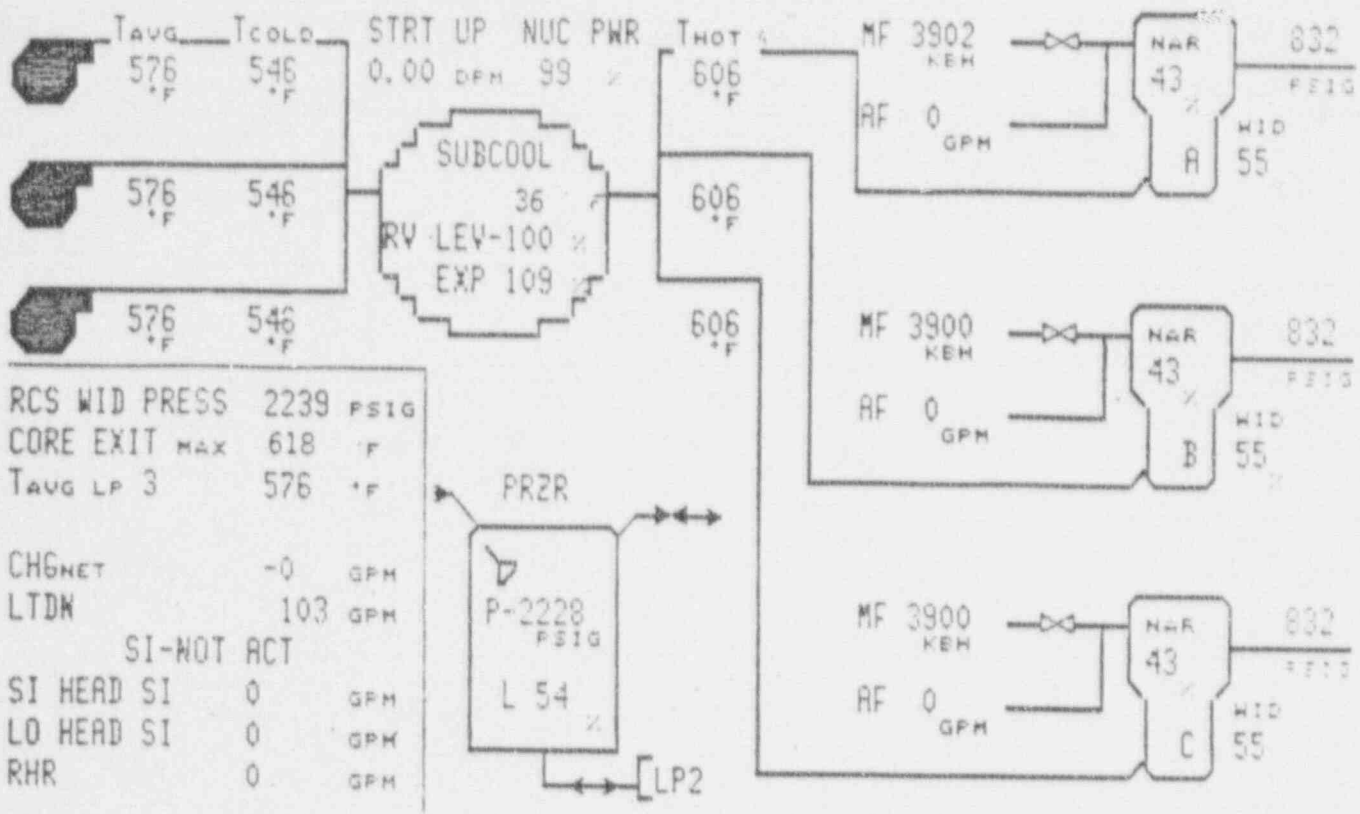

CONTAINMENT				ELECTRICAL			
Press. (PSIA)	9.74	Temp. (F)	94.3	SSST 2A	OOS	SSST 2B	OK
RHS	AVAIL	Sump (In)	0.0	2 AE	OK	2 DF	OK
Quench Spray	AVAIL	Recirc Spray	AVAIL	2 N	OK	2 P	OK
HHSI	AVAIL	CIA	NO	DG 2-1	AVAIL	DG 2-2	OOS
LHSI	AVAIL	CIB	NO	Batteries	OK	Vital Buses	OK

Time 1745

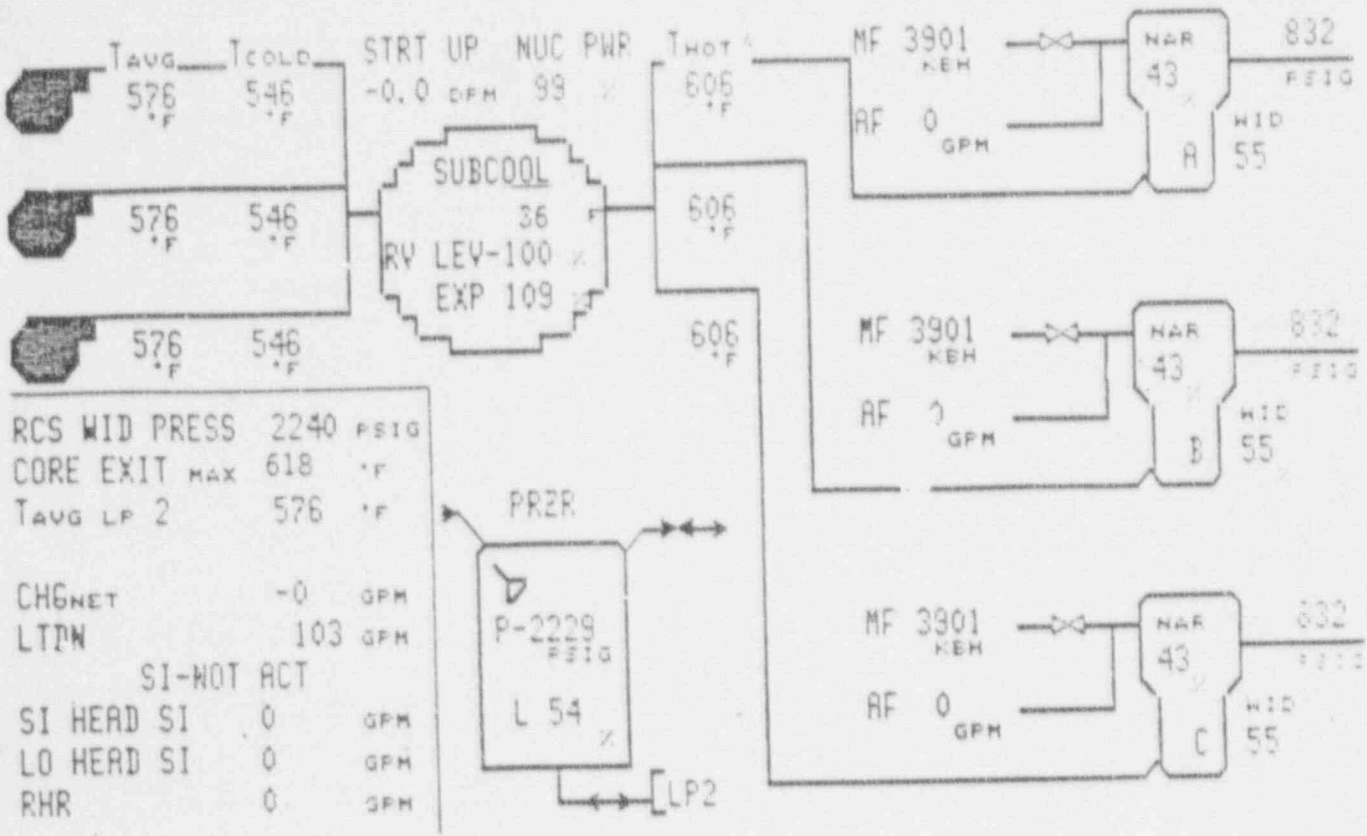

CONTAINMENT				ELECTRICAL			
Press. (PSIA)	9.74	Temp. (F)	94.4	SSST 2A	OOS	SSST 2B	OK
RHS	AVAIL	Sump (In)	0.0	2 AE	OK	2 DF	OK
Quench Spray	AVAIL	Recirc Spray	AVAIL	2 N	OK	2 P	OK
HHSI	AVAIL	CIA	NO	DG 2-1	AVAIL	DG 2-2	OOS
LHSI	AVAIL	CIB	NO	Batteries	OK	Vital Buses	OK

Time 1748

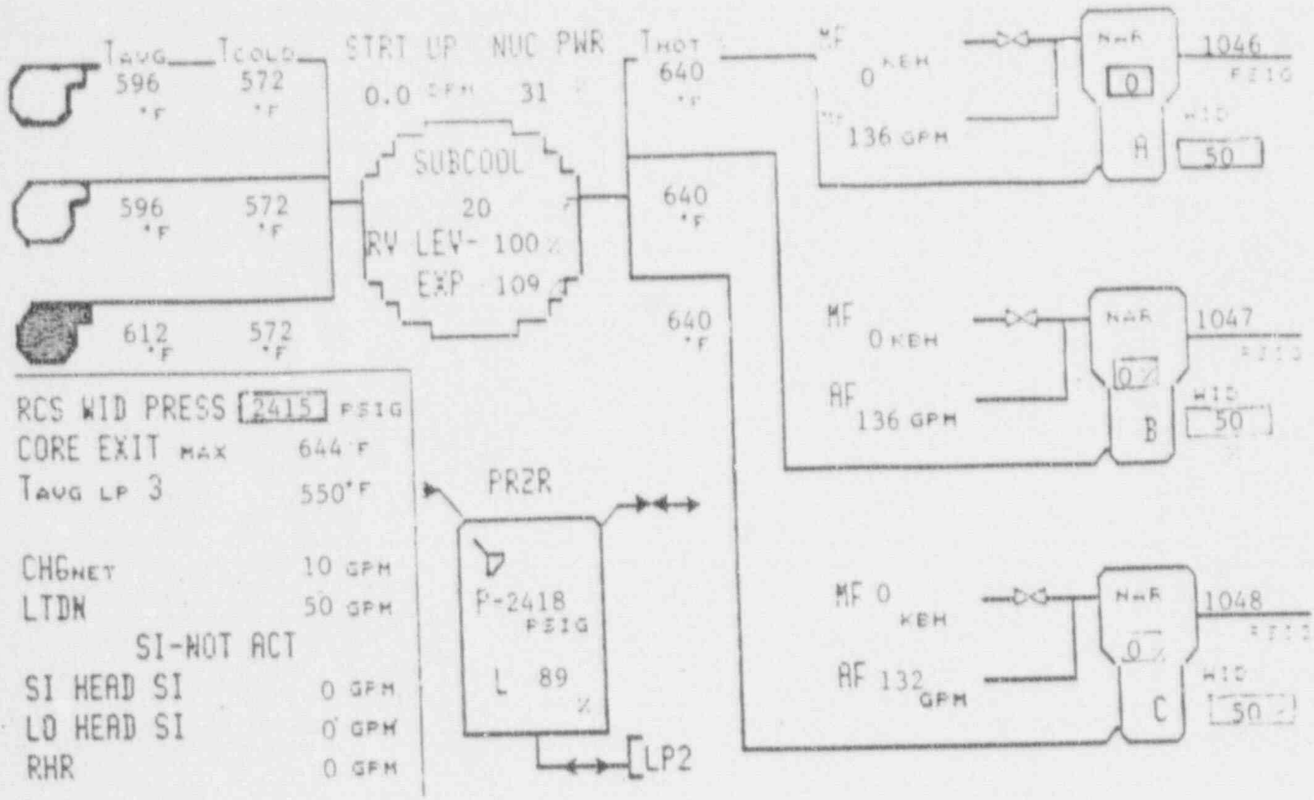

CONTAINMENT				ELECTRICAL			
Press. (PSIA)	9.74	Temp. (F)	94.4	SSST 2A	OOS	SSST 2B	OK
RHS	AVAIL	Sump (In)	0.0	2 AE	OK	2 DF	OOS
Quench Spray	AVAIL	Recirc Spray	AVAIL	2 N	OK	2 P	OOS
HHSI	AVAIL	CIA	NO	DG 2-1	AVAIL	DG 2-2	OOS
LHSI	AVAIL	CIB	NO	Batteries	OK	Vital Buses	OK

Time 1751

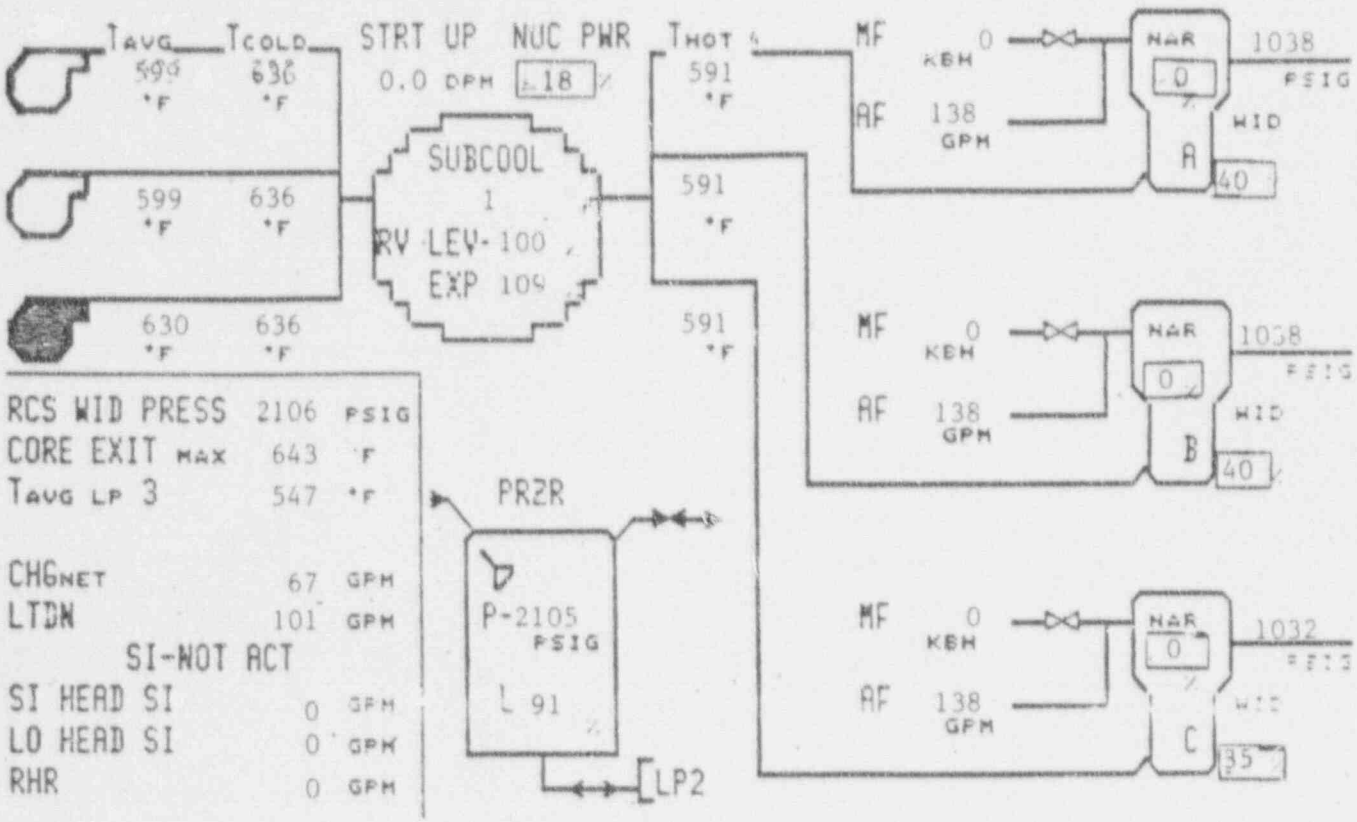

CONTAINMENT				ELECTRICAL			
Press. (PSIA)	9.74	Temp. (F)	94.4	SSST 2A	OOS	SSST 2B	OK
RHS	AVAIL	Sump (In)	0.0	2 AE	OK	2 DF	OOS
Quench Spray	AVAIL	Recirc Spray	AVAIL	2 N	OK	2 P	OOS
HHSI	AVAIL	CIA	NO	DG 2-1	RUN	DG 2-2	OOS
LHSI	AVAIL	CIB	NO	Batteries	OK	Vital Buses	OK

Time 1754

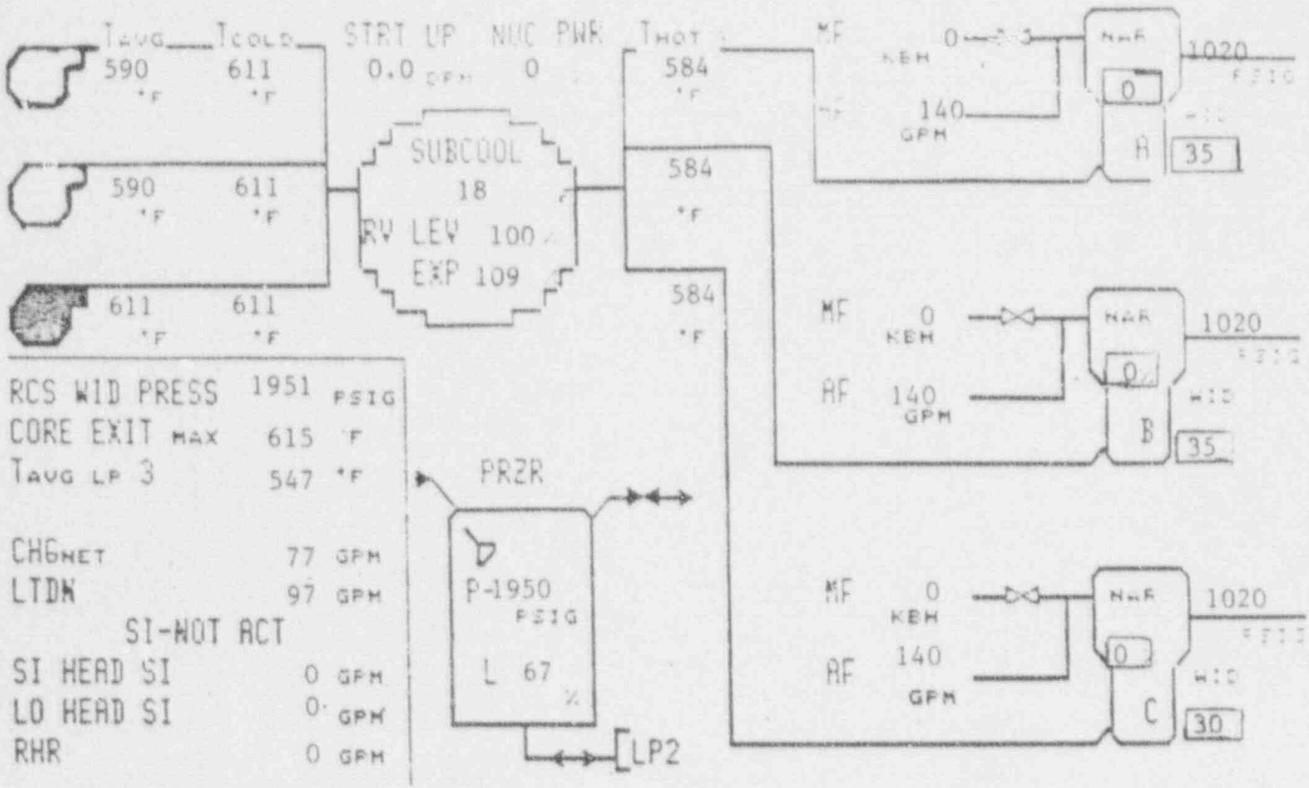

CONTAINMENT				ELECTRICAL			
Press. (PSIA)	9.74	Temp. (F)	94.4	SSST 2A	OOS	SSST 2B	OK
RHS	AVAIL	Sump (In)	0.0	2 AE	OK	2 DF	OOS
Quench Spray	AVAIL	Recirc Spray	AVAIL	2 N	OK	2 P	OOS
HHSI	AVAIL	CIA	NO	DG 2-1	RUN	DG 2-2	OOS
LHSI	AVAIL	CIB	NO	Batteries	OK	Vital Buses	OK

Time 1757

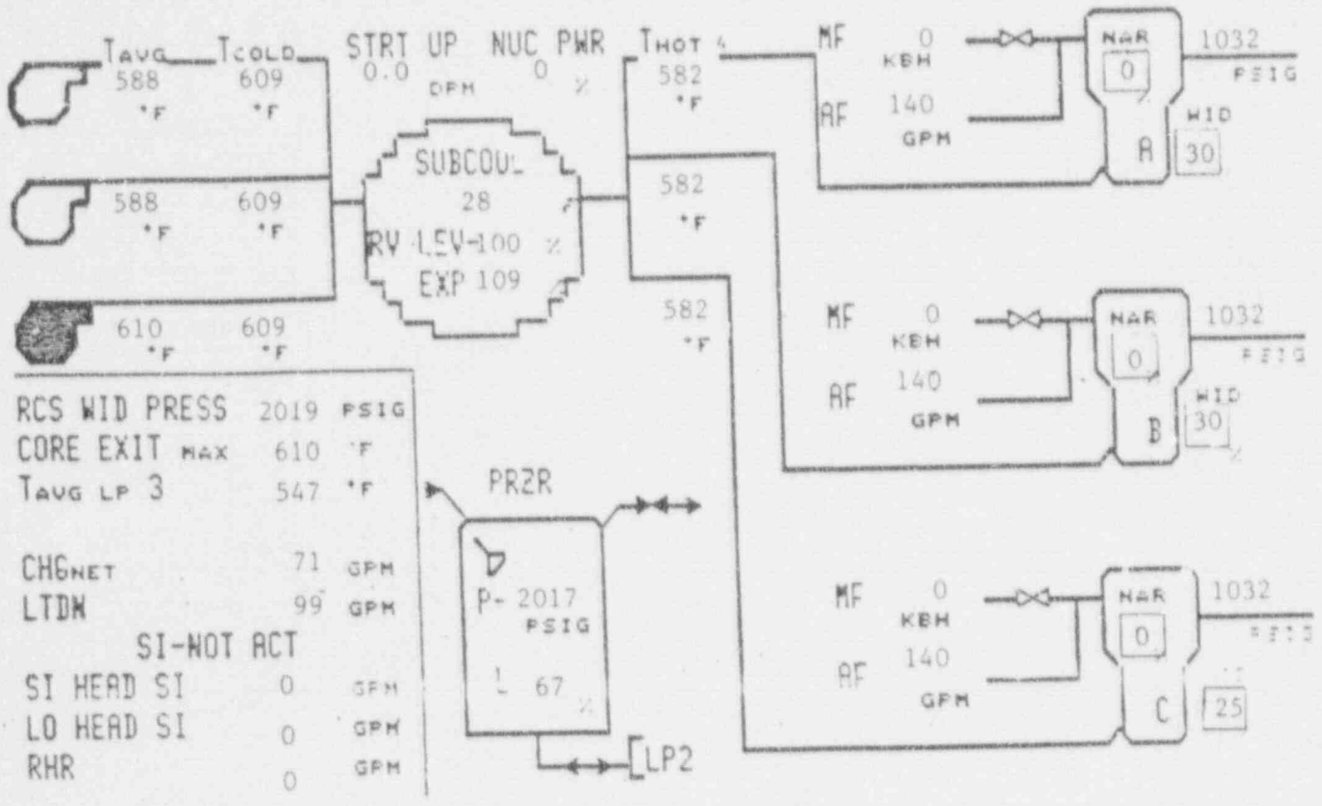

CONTAINMENT				ELECTRICAL			
Press. (PSIA)	9.7	Temp. (F)	94.4	SSST 2A	OOS	SSST 2B	OK
RHS	AVAIL	Sump (In)	0.0	2 AE	OK	2 DF	OOS
Quench Spray	AVAIL	Recirc Spray	AVAIL	2 N	OK	2 P	OOS
HHSI	AVAIL	CIA	NO	DG 2-1	RUN	DG 2-2	OOS
LHSI	AVAIL	CIB	NO	Batteries	OK	Vital Buses	OK

Time 1800

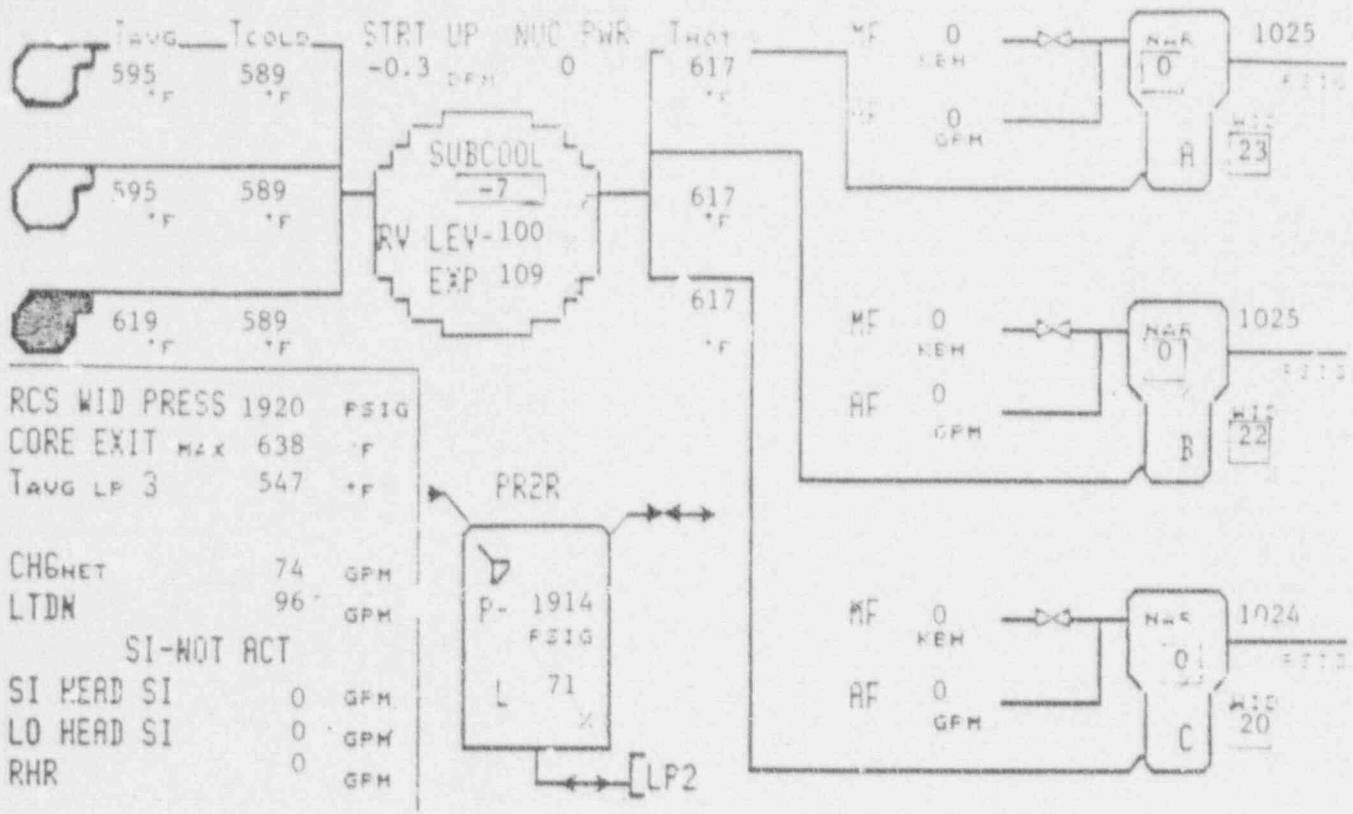

CONTAINMENT				ELECTRICAL			
Press. (PSIA)	9.74	Temp. (F)	94.4	SSST 2A	OOS	SSST 2B	OK
RHS	AVAIL	Sump (In)	0.0	2 AE	OK	2 DF	OOS
Quench Spray	AVAIL	Recirc Spray	AVAIL	2 N	OK	2 P	OOS
HHSI	AVAIL	CIA	NO	DG 2-1	RUN	DG 2-2	OOS
LHSI	AVAIL	CIB	NO	Batteries	OK	Vital Buses	OK

Time 1803

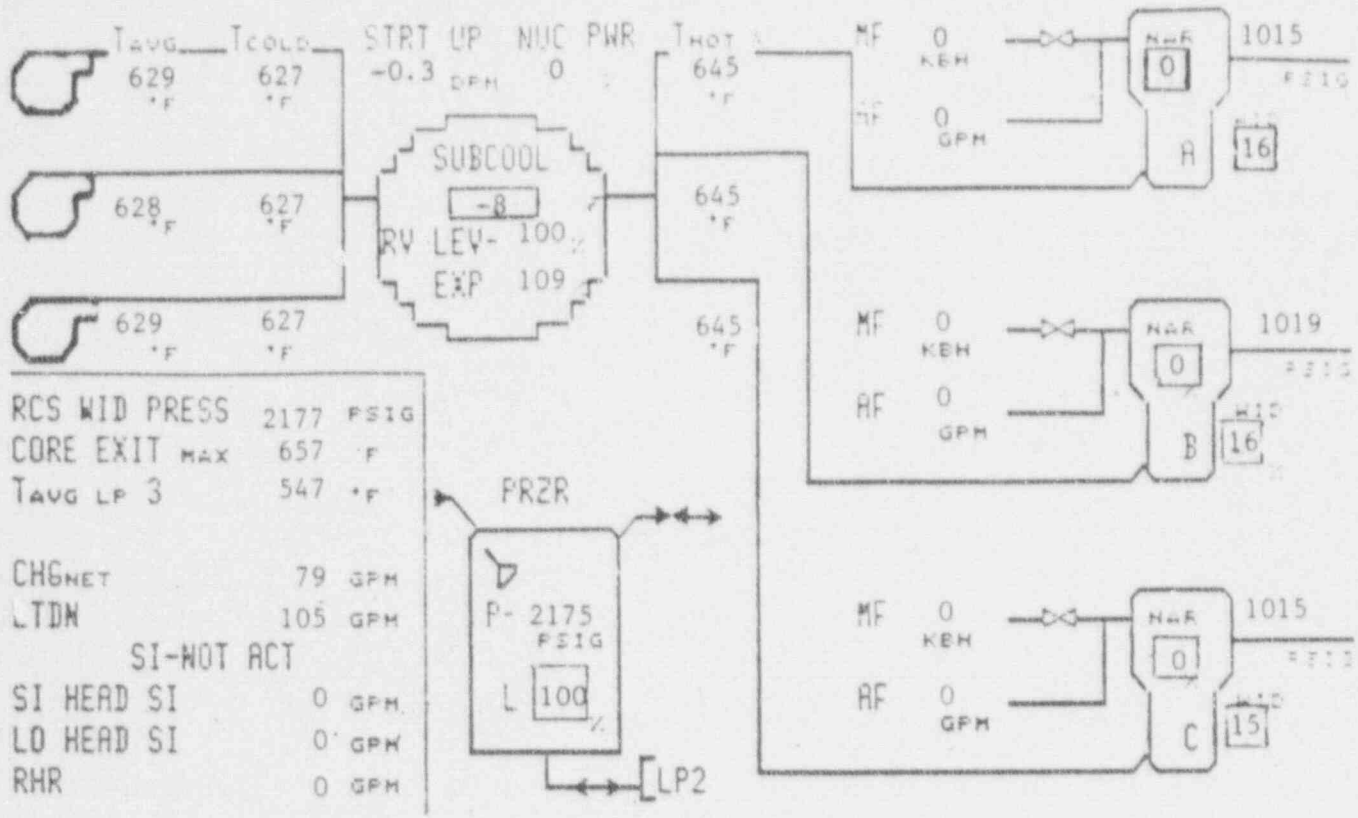

CONTAINMENT				ELECTRICAL			
Press. (PSIA)	9.74	Temp. (F)	94.4	SSST 2A	OOS	SSST 2B	OOS
RHS	AVAIL	Sump (In)	0.0	2 AE	OK	2 DF	OOS
Quench Spray	AVAIL	Recirc Spray	AVAIL	2 N	OK	2 P	OOS
HHSI	AVAIL	CIA	NO	DG 2-1	RUN	DG 2-2	OOS
LHSI	AVAIL	CIB	NO	Batteries	OK	Vital Buses	OK

Time 1800

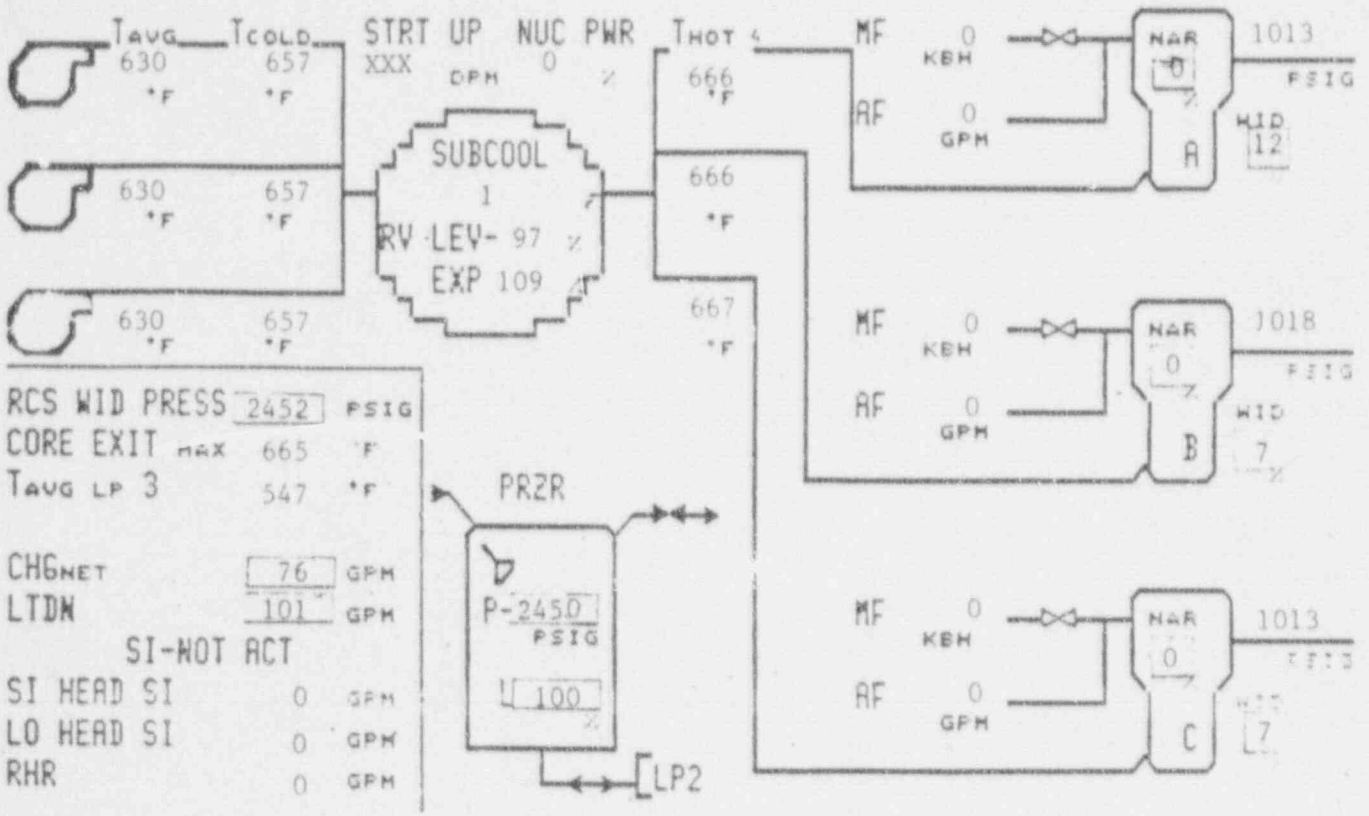

CONTAINMENT				ELECTRICAL			
Press. (PSIA)	9.74	Temp. (F)	94.4	SSST 2A	OOS	SSST 2B	OOS
RHS	AVAIL	Sump (In)	0.0	2 AE	OK	2 DF	OOS
Quench Spray	AVAIL	Recirc Spray	AVAIL	2 N	OK	2 P	OOS
HHSI	AVAIL	CIA	NO	DG 2-1	RUN	DG 2-2	OOS
LHSI	AVAIL	CIB	NO	Batteries	OK	Vital Buses	OK

Time 1809

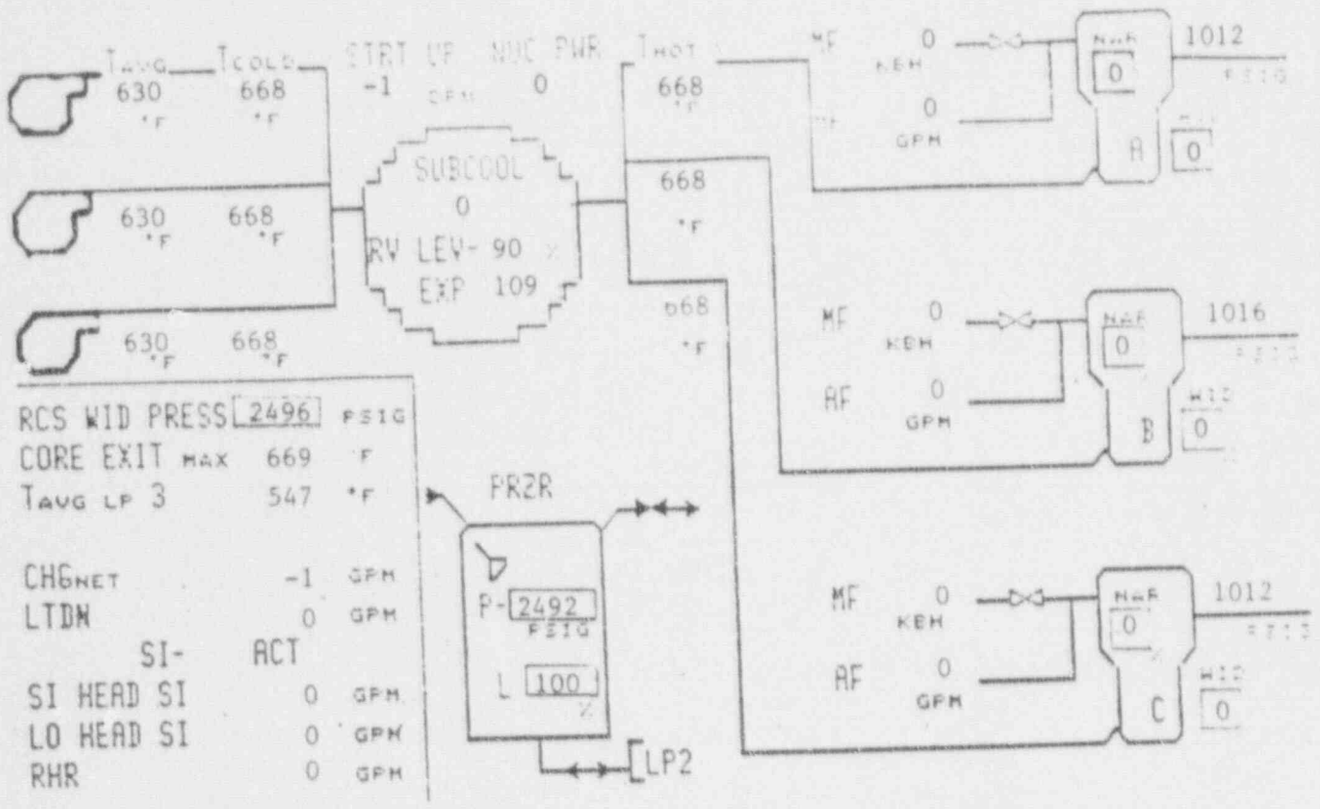

CONTAINMENT				ELECTRICAL			
Press. (PSIA)	9.74	Temp. (F)	94.4	SSST 2A	OOS	SSST 2B	OOS
RHS	AVAIL	Sump (In)	0.0	2 AE	OK	2 DF	OOS
Quench Spray	AVAIL	Recirc Spray	AVAIL	2 N	OK	2 P	OOS
HHSI	YES	CIA	YES	DG 2-1	RUN	DG 2-2	OOS
LHSI	YES	CIB	NO	Batteries	OK	Vital Buses	OK

Time 1812

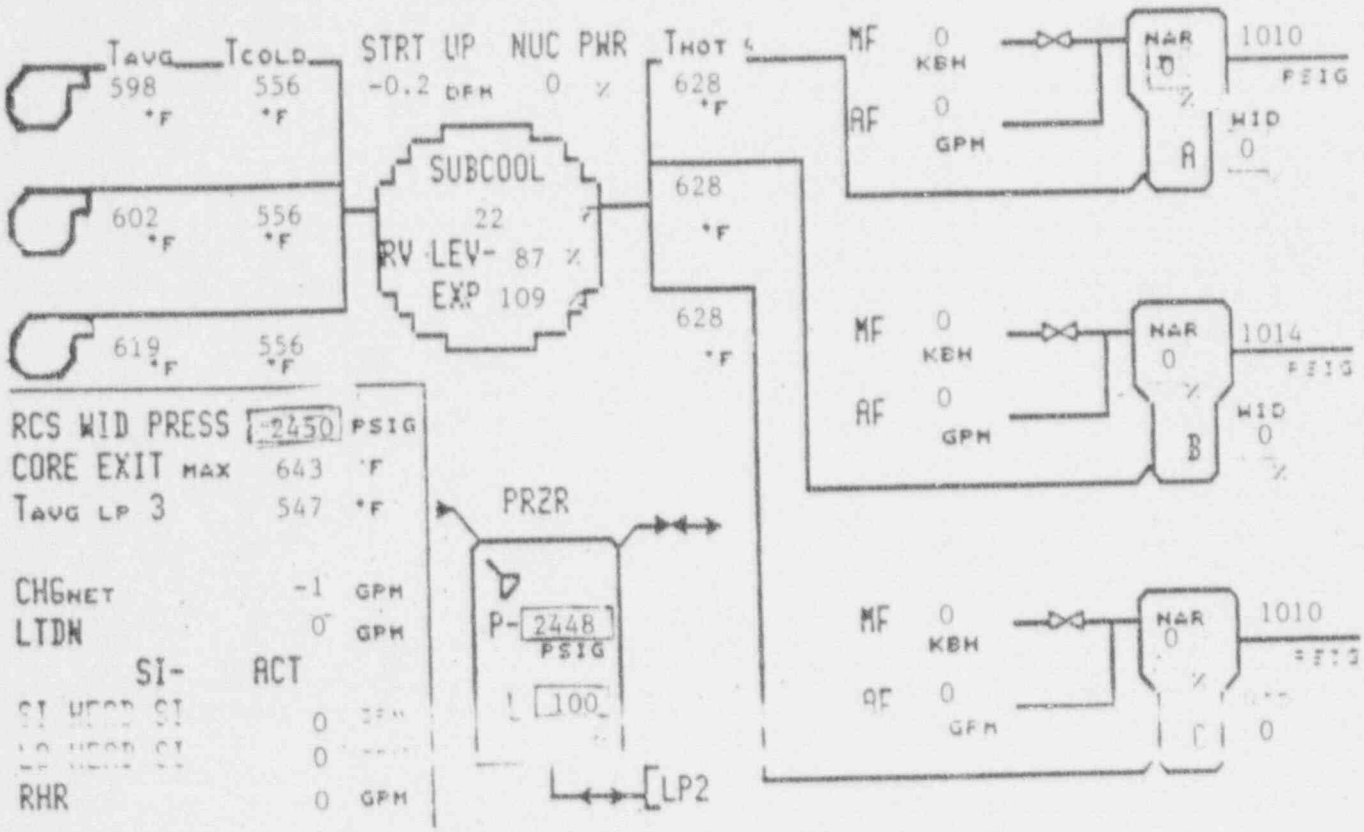

CONTAINMENT				ELECTRICAL			
Press. (PSIA)	9.82	Temp. (F)	95.2	SSST 2A	OOS	SSST 2B	OOS
RHS	AVAIL	Sump (In)	0.0	2 AE	OK	2 DF	OOS
Quench Spray	AVAIL	Recirc Spray	AVAIL	2 N	OK	2 P	OOS
HHSI	YES	CIA	YES	DG 2-1	RUN	DG 2-2	OOS
LHSI	YES	CIB	NO	Batteries	OK	Vital Buses	OK

Time 1815

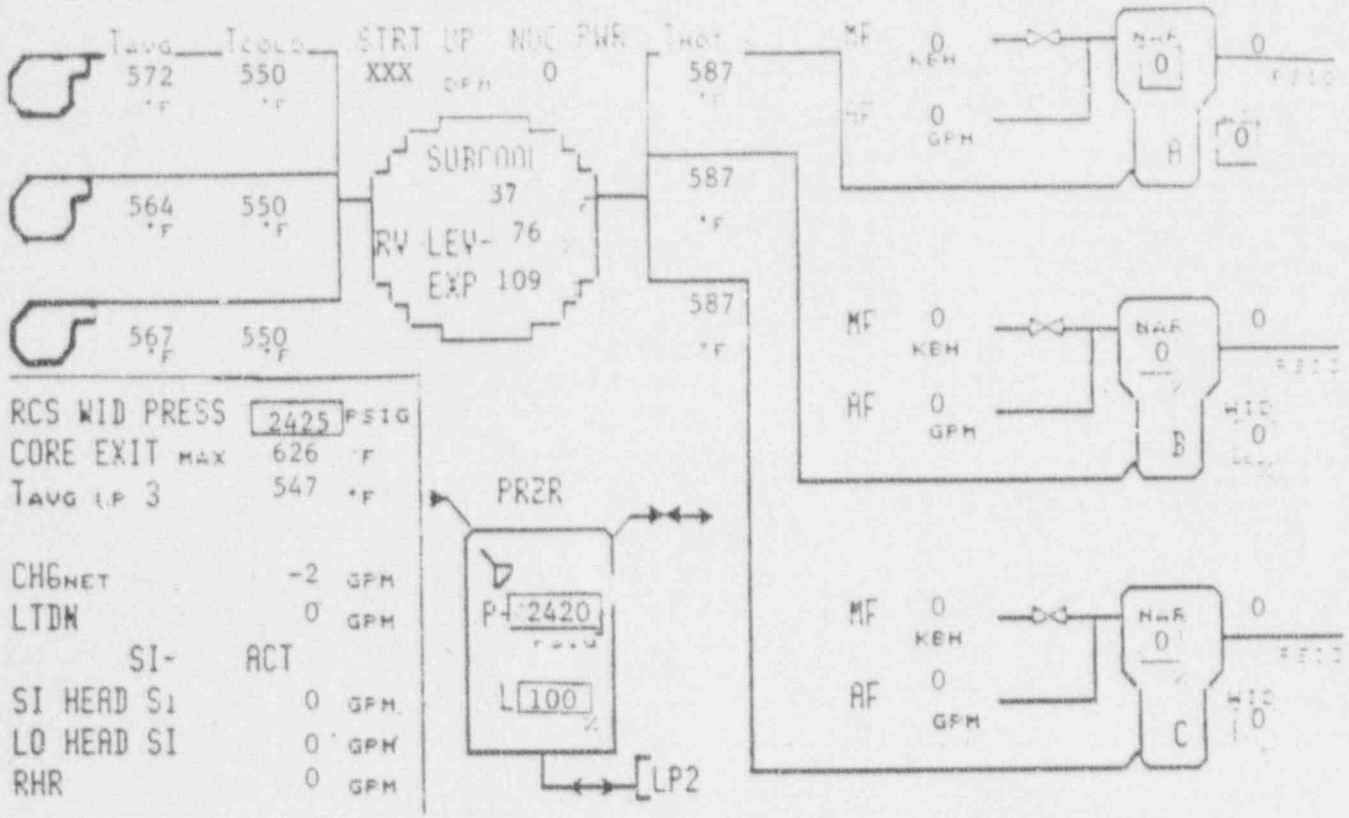

CONTAINMENT				ELECTRICAL			
Press. (PSIA)	9.89	Temp. (F)	96.0	SSST 2A	OOS	SSST 2B	OOS
RHS	AVAIL	Sump (In)	0.0	2 AE	OK	2 DF	OOS
Quench Spray	AVAIL	Recirc Spray	AVAIL	2 N	OK	2 P	OOS
HHSI	YES	CIA	YES	DG 2-1	RUN	DG 2-2	OOS
LHSI	YES	CIB	NO	Batteries	OK	Vital Buses	OK

Time 1818

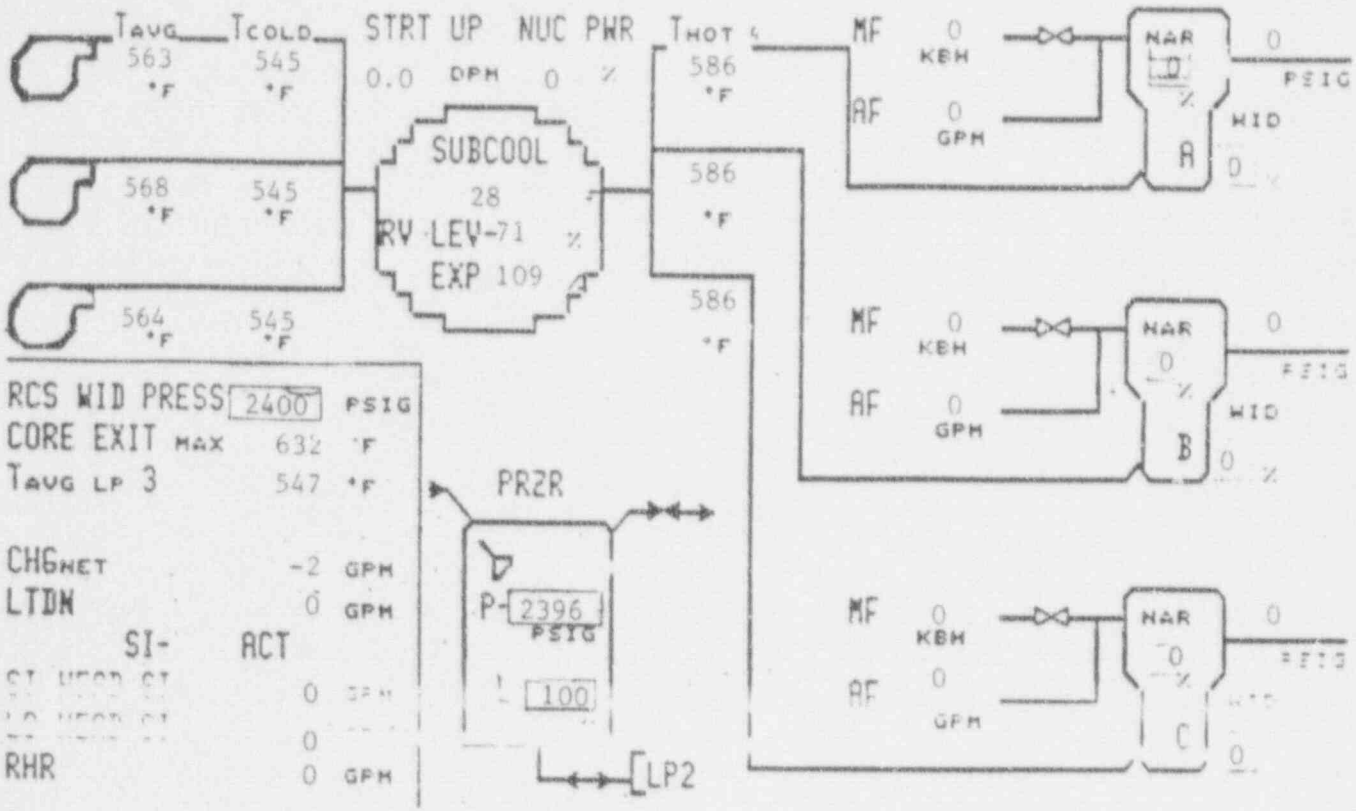

CONTAINMENT				ELECTRICAL			
Press. (PSIA)	9.96	Temp. (F)	96.7	SSST 2A	OOS	SSST 2B	OOS
RHS	AVAIL	Sump (In)	0.0	2 AE	OK	2 DF	OOS
Quench Spray	AVAIL	Recirc Spray	AVAIL	2 N	OK	2 P	OOS
HHSI	YES	CIA	YES	DG 2-1	RUN	DG 2-2	OOS
LHSI	YES	CIB	NO	Batteries	OK	Vital Buses	OK

Time 1821

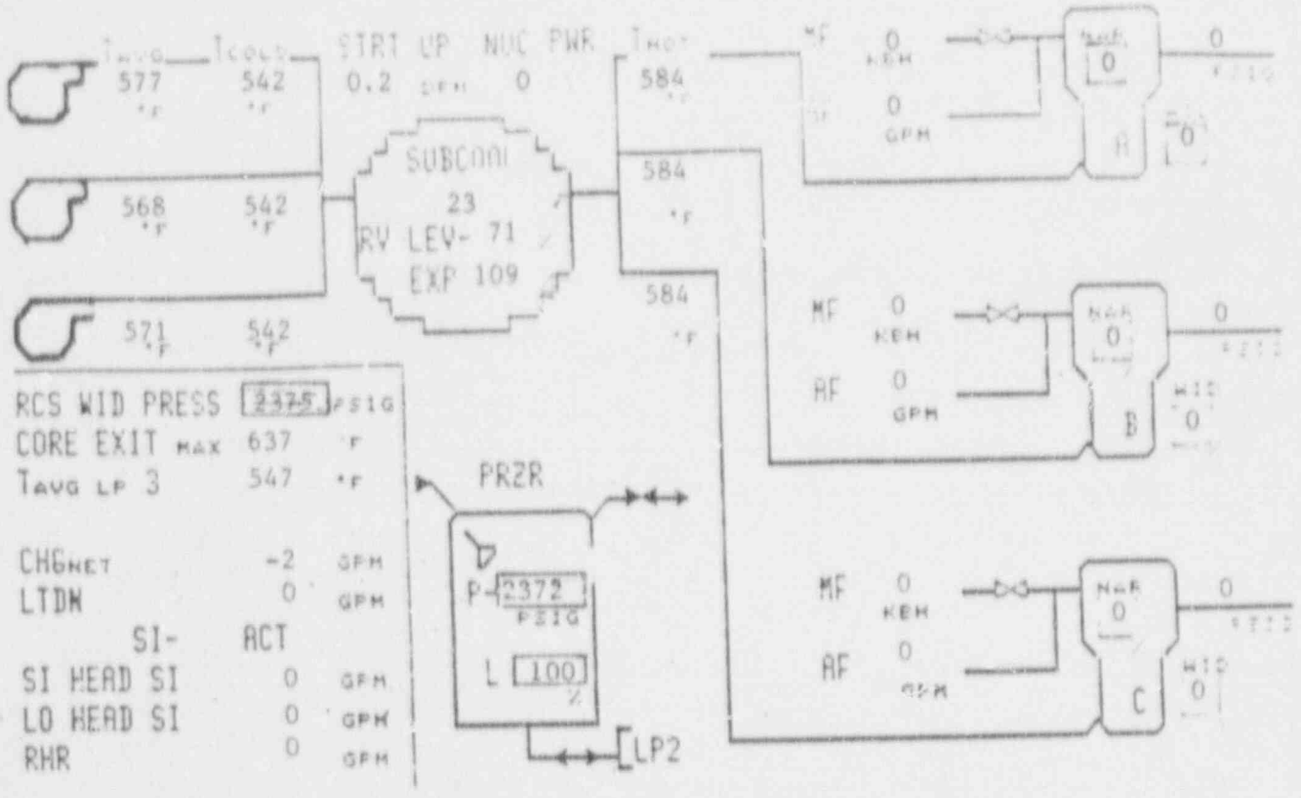

CONTAINMENT				ELECTRICAL			
Press. (PSIA)	10.02	Temp. (F)	97.4	SSST 2A	OOS	SSST 2B	OOS
RHS	AVAIL	Sump (In)	0.0	2 AE	OK	2 DF	OOS
Quench Spray	AVAIL	Recirc Spray	AVAIL	2 N	OK	2 P	OOS
HHSI	YES	CIA	YES	DG 2-1	RUN	DG 2-2	OOS
LHSI	YES	CIB	NO	Batteries	OK	Vital Buses	OK

Time 1824

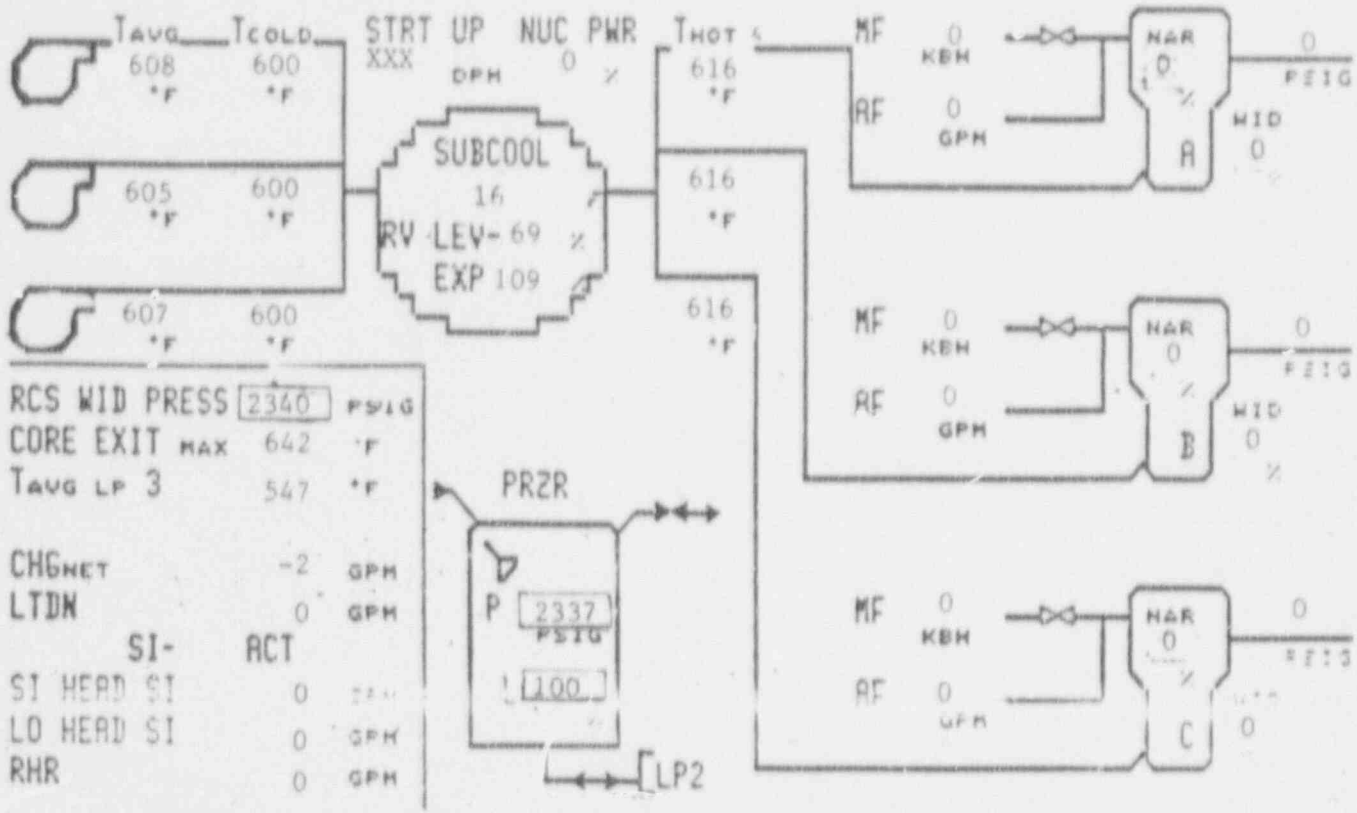

CONTAINMENT				ELECTRICAL			
Press. (PSIA)	10.08	Temp. (F)	98.1	SSST 2A	OOS	SSST 2B	OOS
RHS	AVAIL	Sump (In)	0.0	2 AE	OK	2 DF	OOS
Quench Spray	AVAIL	Recirc Spray	AVAIL	2 N	OK	2 P	OOS
HHSI	YES	CIA	YES	DG 2-1	RUN	DG 2-2	OOS
LHSI	YES	CIB	NO	Batteries	OK	Vital Buses	OK

Time 1827

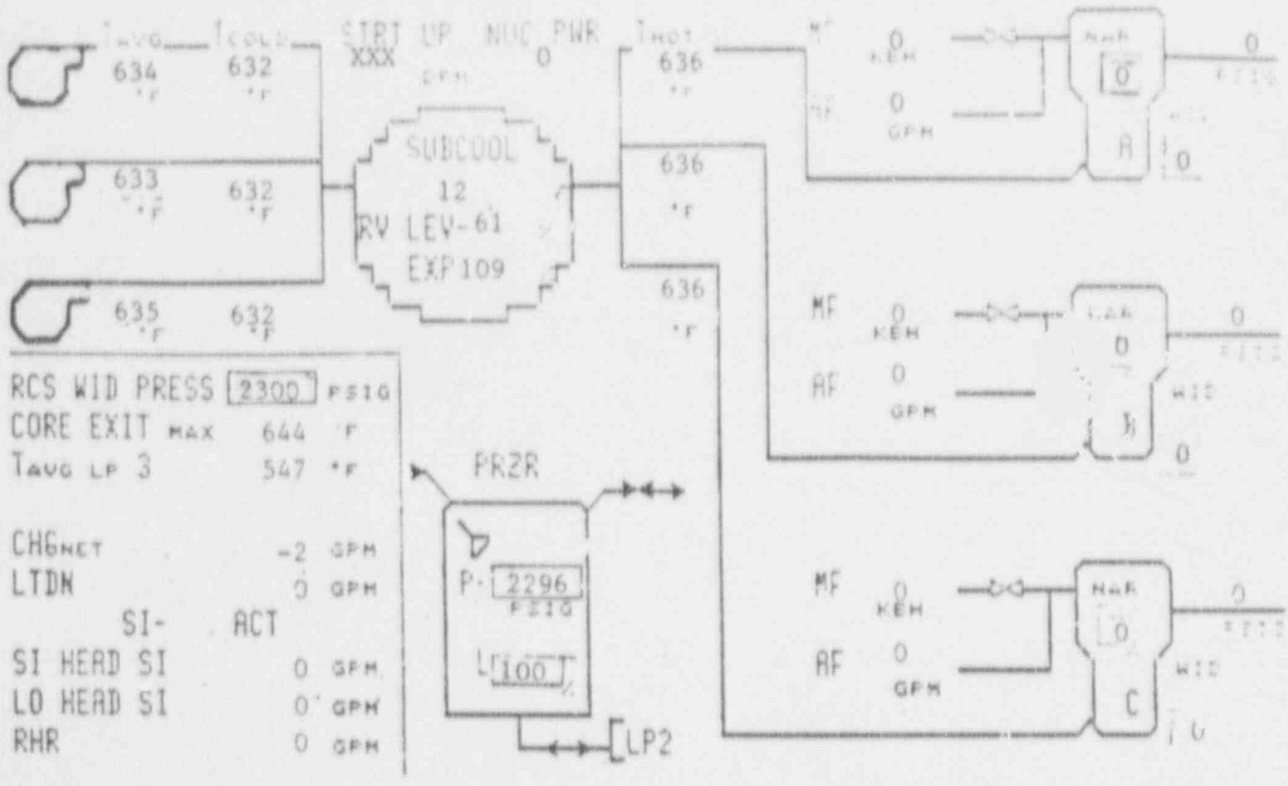

CONTAINMENT				ELECTRICAL			
Press. (PSIA)	10.14	Temp. (F)	98.8	SSST 2A	OOS	SSST 2B	OOS
RHS	AVAIL	Sump (In)	0.0	2 AE	OK	2 DF	OOS
Quench Spray	AVAIL	Recirc Spray	AVAIL	2 N	OK	2 P	OOS
HHSI	YES	CIA	YES	DG 2-1	RUN	DG 2-2	OOS
LHSI	YES	CIB	NO	Batteries	OK	Vital Buses	OK

Time 1830

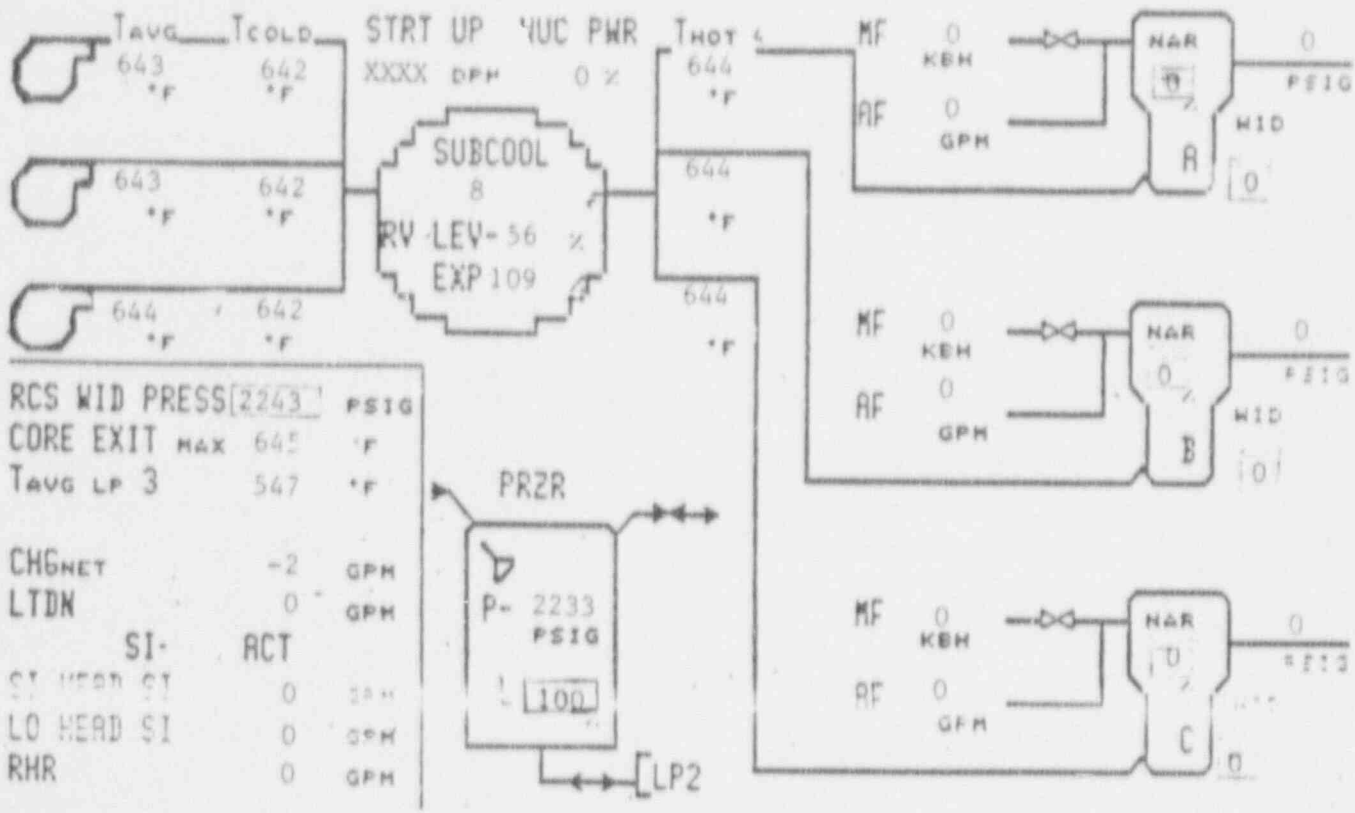

CONTAINMENT				ELECTRICAL			
Press. (PSIA)	10.18	Temp. (F)	99.5	SSST 2A	OOS	SSST 2B	OOS
RHS	AVAIL	Sump (In)	0.0	2 AE	OK	2 DF	OOS
Quench Spray	AVAIL	Recirc Spray	AVAIL	2 N	OK	2 P	OOS
HHSI	YES	CIA	YES	DG . 1	RUN	DG 2-2	OOS
LHSI	YES	CIB	NO	Batteries	OK	Vital Buses	OK

Time 1833

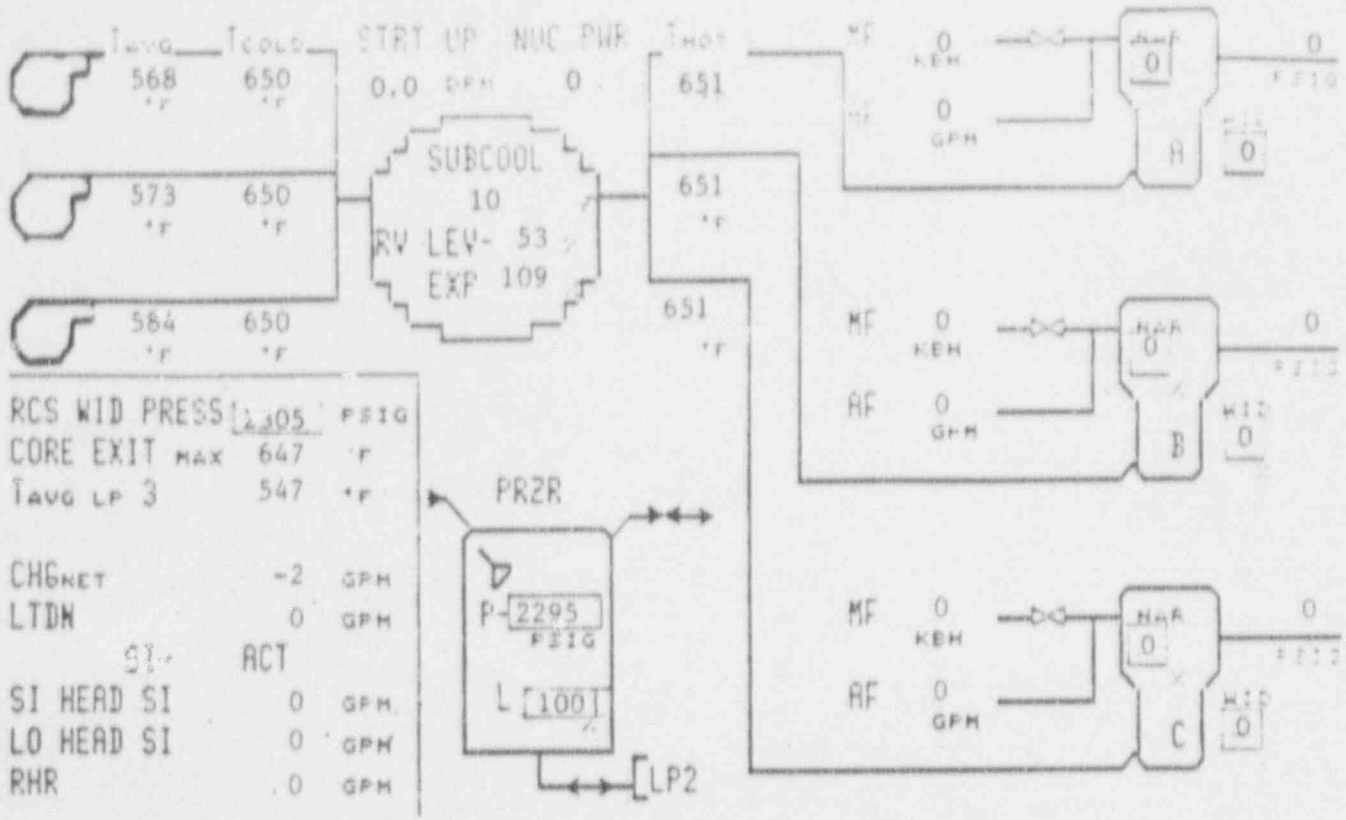

CONTAINMENT				ELECTRICAL			
Press. (PSIA)	10.24	Temp. (F)	100.1	SSST 2A	OOS	SSST 2B	OOS
RHS	AVAIL	Sump (In)	0.0	2 AE	OK	2 DF	OOS
Quench Spray	AVAIL	Recirc Spray	AVAIL	2 N	OK	2 P	OOS
HHSI	YES	CIA	YES	DG 2-1	RUN	DG 2-2	OOS
LHSI	YES	CIB	NO	Batteries	OK	Vital Buses	OK

Time 1836

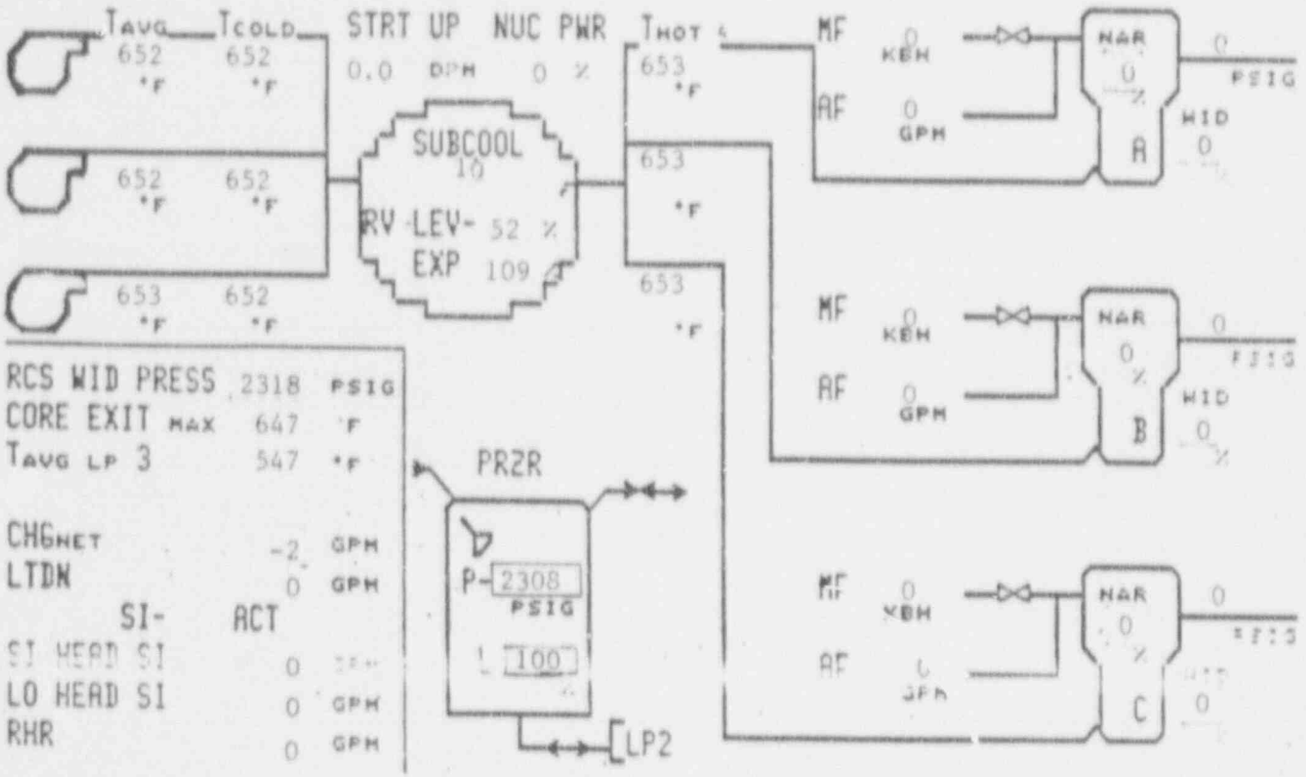

CONTAINMENT				ELECTRICAL			
Press. (PSIA)	10.29	Temp. (F)	100.7	SSST 2A	OOS	SSST 2B	OOS
RHS	AVAIL	Sump (In)	0.0	2 AE	OK	2 DF	OOS
Quench Spray	AVAIL	Recirc Spray	AVAIL	2 N	OK	2 P	OOS
HHSI	YES	CIA	YES	DG 2-1	RUN	DG 2-2	OOS
LHSI	YES	CIB	NO	Batteries	OK	Vital Buses	OK

Time 1839

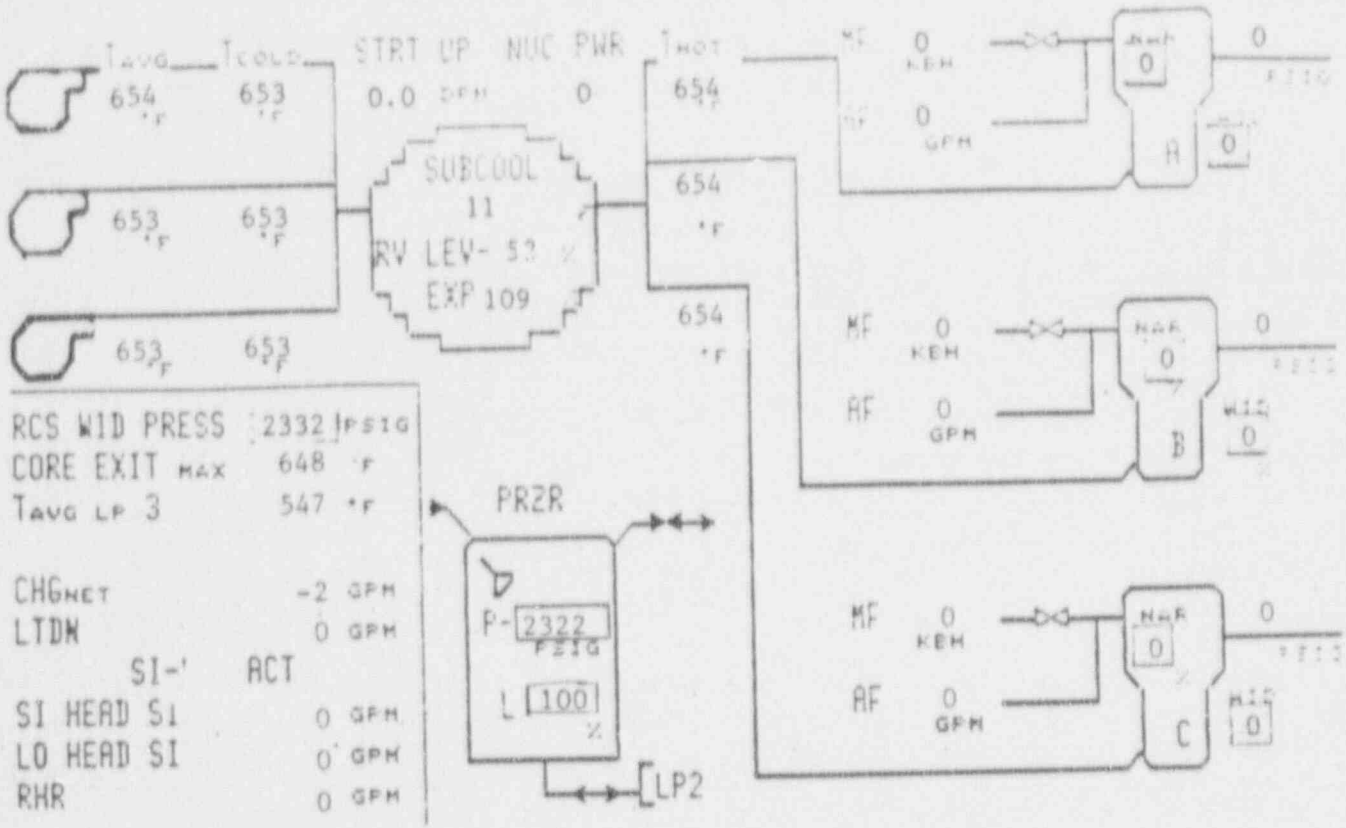

CONTAINMENT				ELECTRICAL			
Press. (PSIA)	10.34	Temp. (F)	101.3	SSST 2A	OOS	SSST 2B	OOS
RHS	AVAIL	Sump (In)	0.0	2 AE	OK	2 DF	OOS
Quench Spray	AVAIL	Recirc Spray	AVAIL	2 N	OK	2 P	OOS
HHSI	YES	CIA	YES	DG 2-1	RUN	DG 2-2	OOS
LHSI	YES	CIB	NO	Batteries	OK	Vital Buses	OK

Time 1842

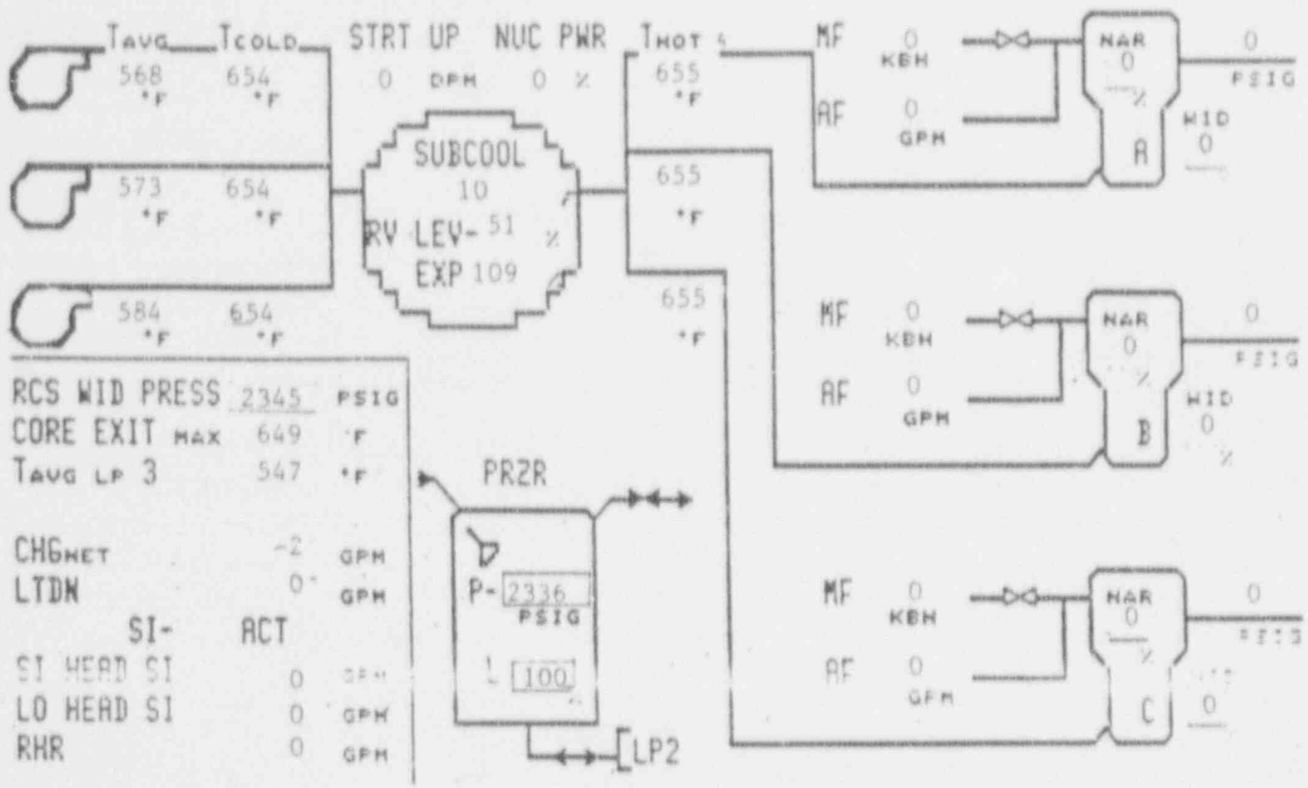

CONTAINMENT				ELECTRICAL			
Press. (PSIA)	10.38	Temp. (F)	101.8	SSST 2A	OOS	SSST 2B	OOS
RHS	AVAIL	Sump (In)	0.1	2 AE	OK	2 DF	OOS
Quench Spray	AVAIL	Recirc Spray	AVAIL	2 N	OK	2 P	OOS
HHSI	YES	CIA	YES	DG 2-1	RUN	DG 2-2	OOS
LHSI	YES	CIB	NO	Batteries	OK	Vital Buses	OK

Time 1845

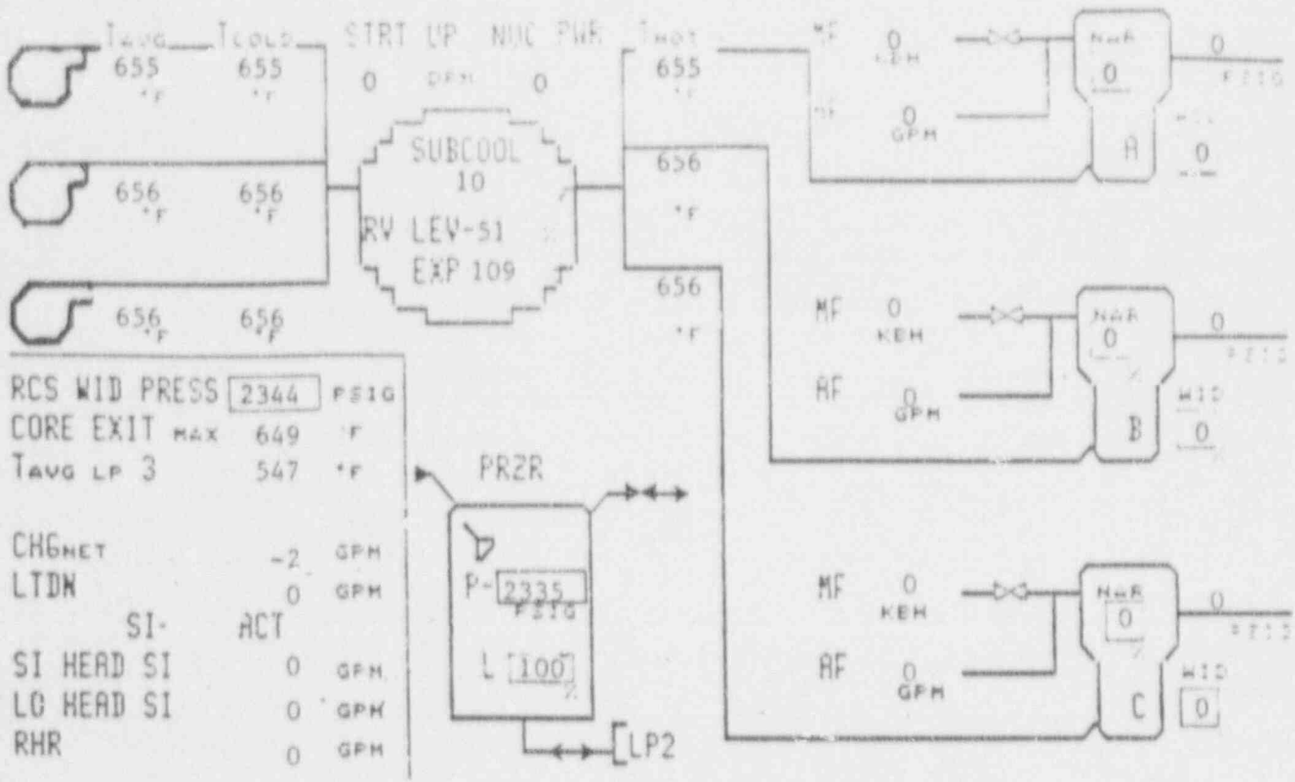

CONTAINMENT				ELECTRICAL			
Press. (PSIA)	10.41	Temp. (F)	102.2	SSST 2A	OOS	SSST 2B	OOS
RHS	AVAIL	Sump (In)	0.1	2 AE	OK	2 DF	OOS
Quench Spray	AVAIL	Recirc Spray	AVAIL	2 N	OK	2 P	OOS
HHSI	YES	CIA	YES	DG 2-1	RUN	DG 2-2	OOS
LHSI	YES	CIB	NO	Batteries	OK	Vital Buses	OK

Time 1848

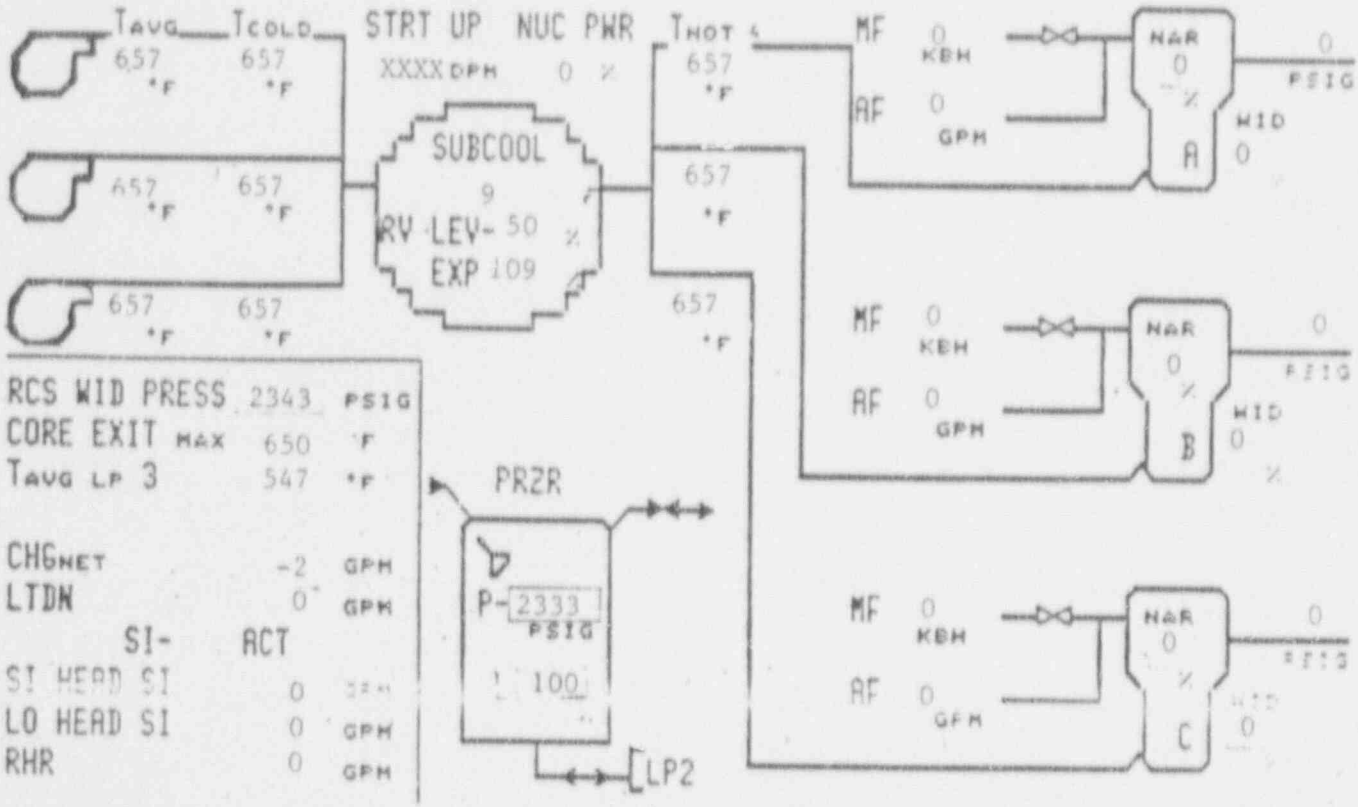

CONTAINMENT				ELECTRICAL			
Press. (PSIA)	10.43	Temp. (F)	102.6	SSST 2A	OOS	SSST 2B	OOS
RHS	AVAIL	Sump (In)	0.1	2 AE	OK	2 DF	OOS
Quench Spray	AVAIL	Recirc Spray	AVAIL	2 N	OK	2 P	OOS
HHSI	YES	CIA	YES	DG 2-1	RUN	DG 2-2	OOS
LHSI	YES	CIB	NO	Batteries	OK	Vital Buses	OK

Time 1851

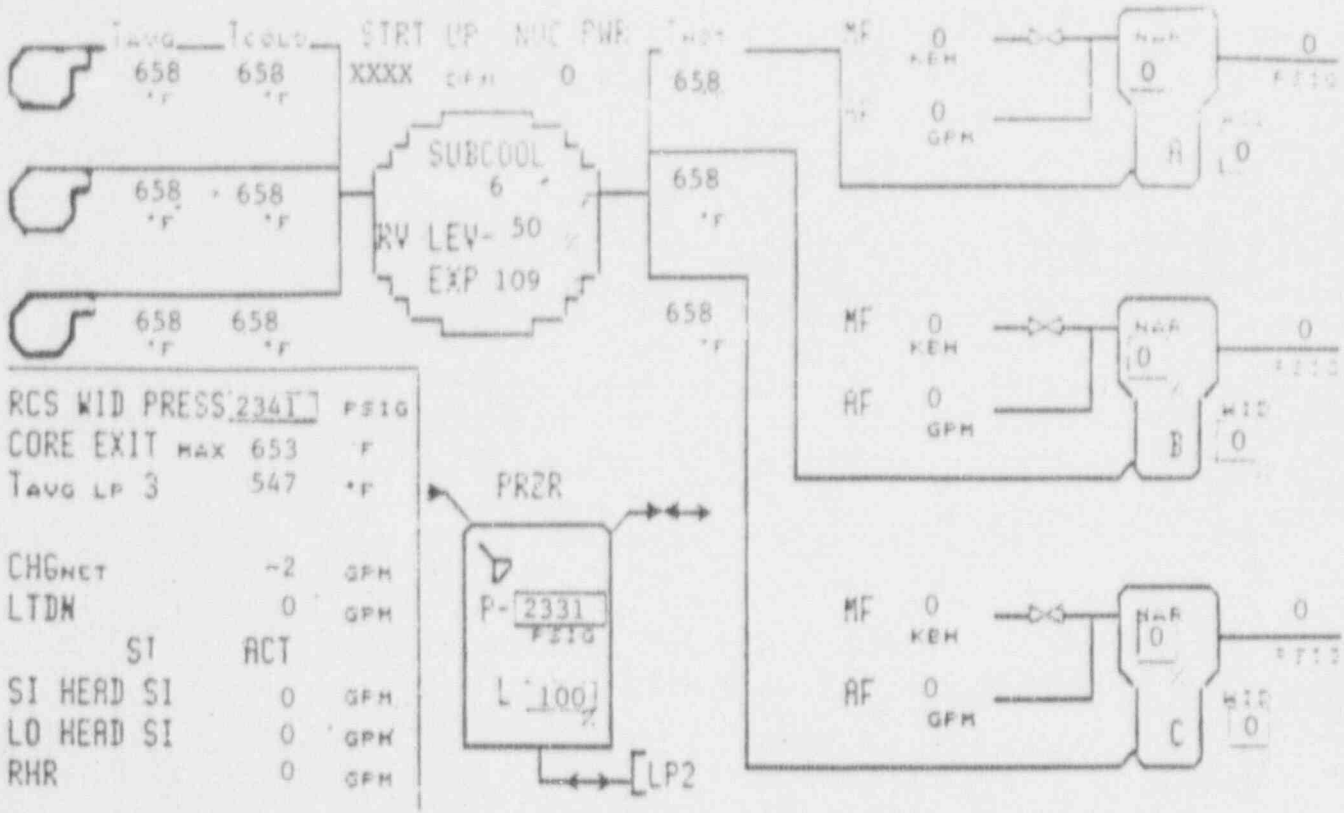

CONTAINMENT				ELECTRICAL			
Press. (PSIA)	10.44	Temp. (F)	102.8	SSST 2A	OOS	SSST 2B	OOS
RHS	AVAIL	Sump (In)	0.1	2 AE	OK	2 DF	OOS
Quench Spray	AVAIL	Recirc Spray	AVAIL	2 N	OK	2 P	OOS
HHSI	YES	CIA	YES	DG 2-1	RUN	DG 2-2	OOS
LHSI	YES	CIB	NO	Batteries	OK	Vital Buses	OK

Time 1854

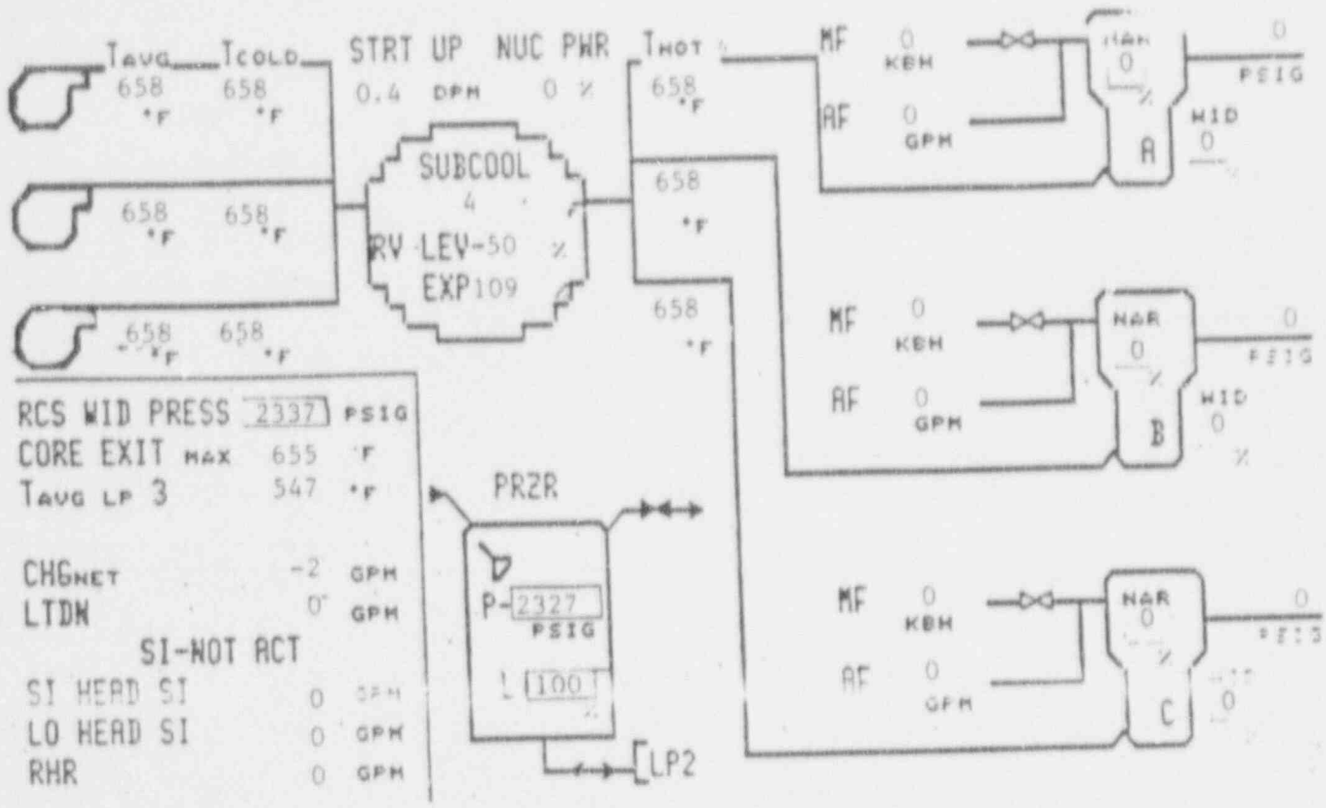

CONTAINMENT				ELECTRICAL			
Press. (PSIA)	10.45	Temp. (F)	102.9	SSST 2A	OOS	SSST 2B	OOS
RHS	AVAIL	Sump (In)	0.1	2 AE	OK	2 DF	OOS
Quench Spray	AVAIL	Recirc Spray	AVAIL	2 N	OK	2 P	OOS
HHSI	YES	CIA	YES	DG 2-1	RUN	DG 2-2	OOS
LHSI	YES	CIB	NO	Batteries	%	Vital Buses	OK

Time 1857

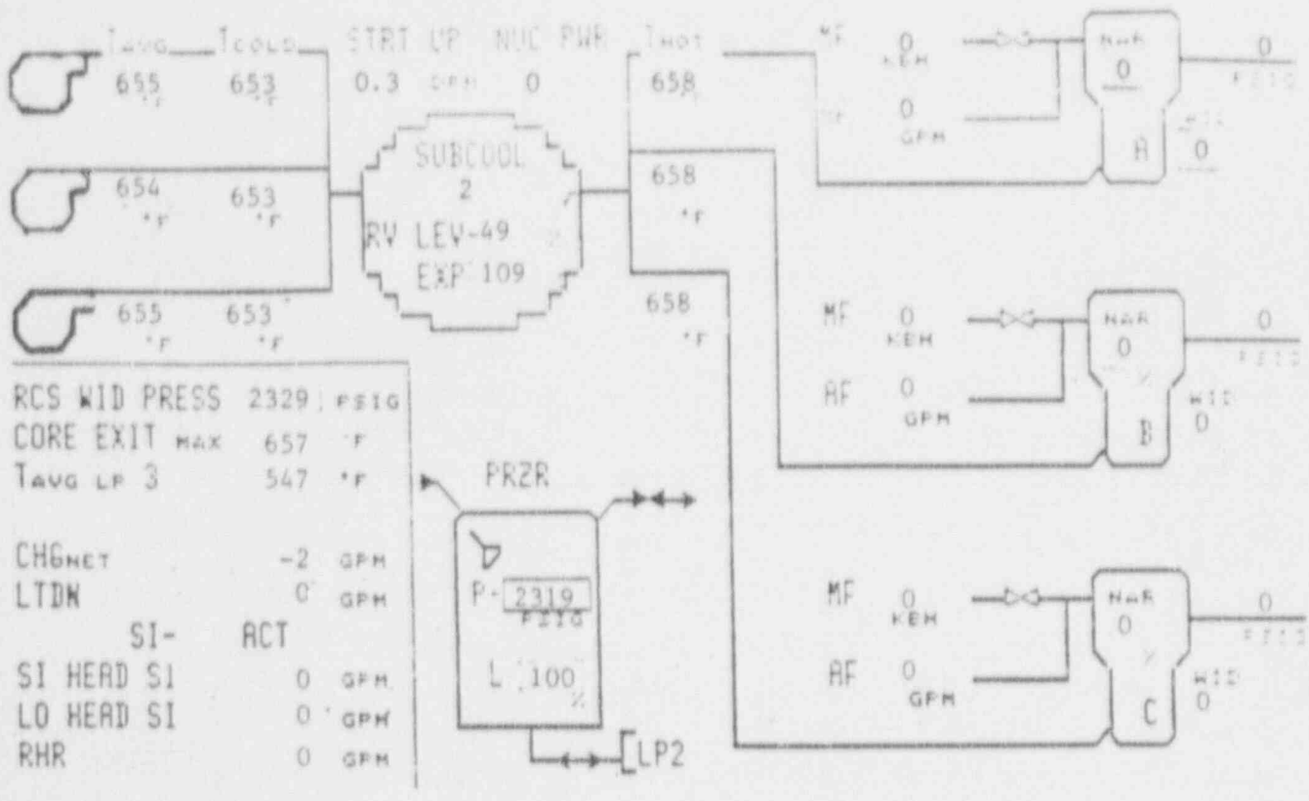

CONTAINMENT				ELECTRICAL			
Press. (PSIA)	10.45	Temp. (F)	102.9	SSST 2A	OOS	SSST 2B	OOS
RHS	AVAIL	Sump (In)	0.1	2 AE	OK	2 DF	OOS
Quench Spray	AVAIL	Recirc Spray	AVAIL	2 N	OK	2 P	OOS
HHSI	YES	CIA	YES	DG 2-1	RUN	DG 2-2	OOS
LHSI	YES	CIB	NO	Batteries	OK	Vital Buses	OK

Time 1900

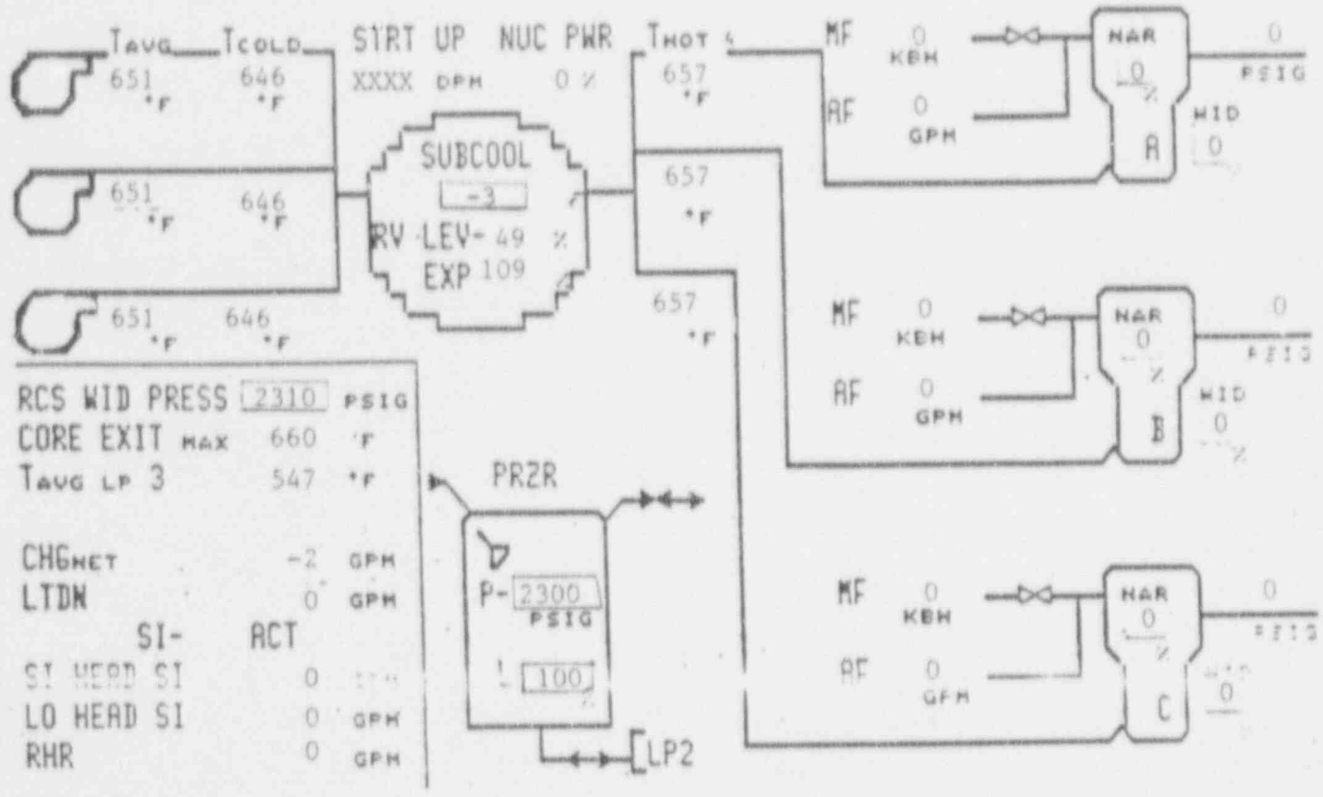

CONTAINMENT				ELECTRICAL			
Press. (PSIA)	10.46	Temp. (F)	103.0	SSST 2A	OOS	SSST 2B	OOS
RHS	AVAIL	Sump (In)	0.1	2 AE	OK	2 DF	OOS
Quench Spray	AVAIL	Recirc Spray	AVAIL	2 N	OK	2 P	OOS
HHSI	YES	CIA	YES	DG 2-1	RUN	DG 2-2	OOS
LHSI	YES	CIB	NO	Batteries	OK	Vital Buses	OK

Time 1903

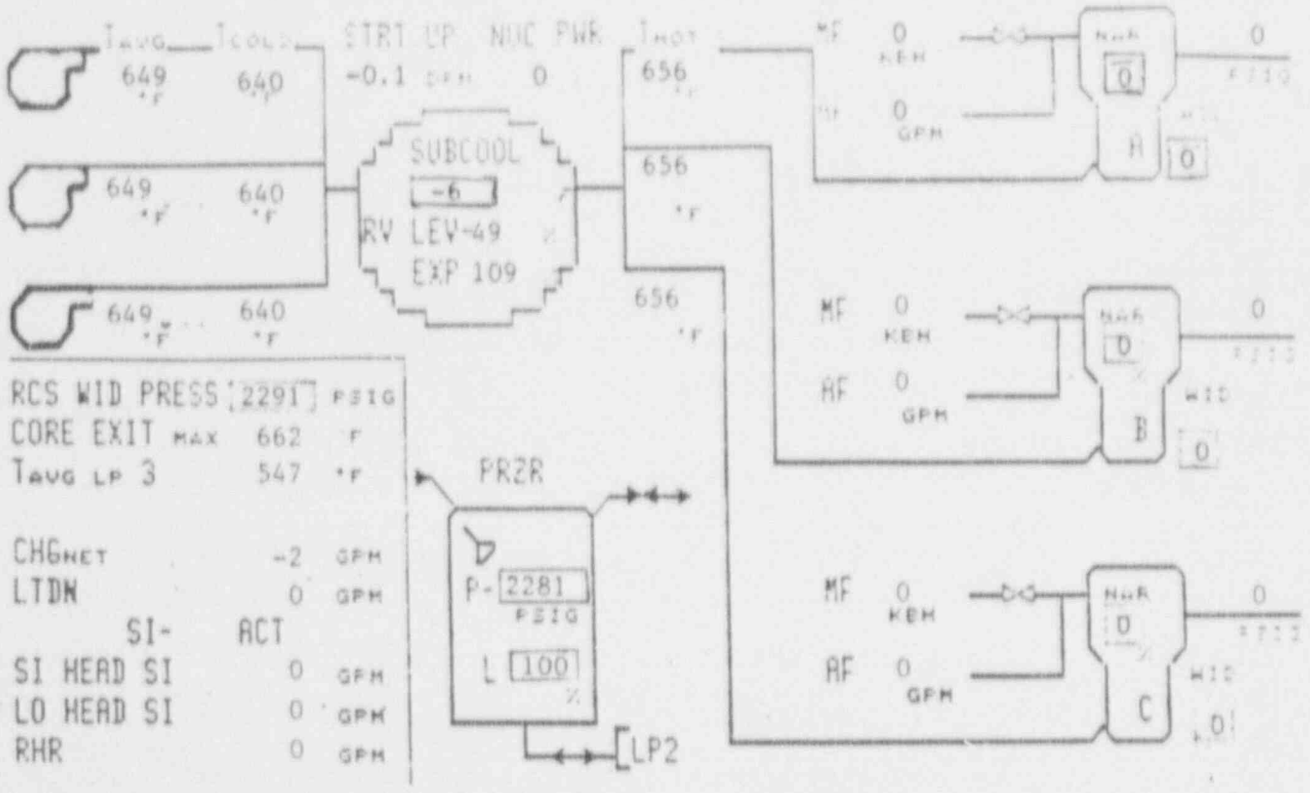

CONTAINMENT				ELECTRICAL			
Press. (PSIA)	10.45	Temp. (F)	102.9	SSST 2A	OOS	SSST 2B	OOS
RHS	AVAIL	Sump (In)	0.1	2 AE	OK	2 DF	OOS
Quench Spray	AVAIL	Recirc Spray	AVAIL	2 N	OK	2 P	OOS
HHSI	YES	CIA	YES	DG 2-1	RUN	DG 2-2	OOS
LHSI	YES	CIB	NO	Batteries	OK	Vital Buses	OK

Time 1906

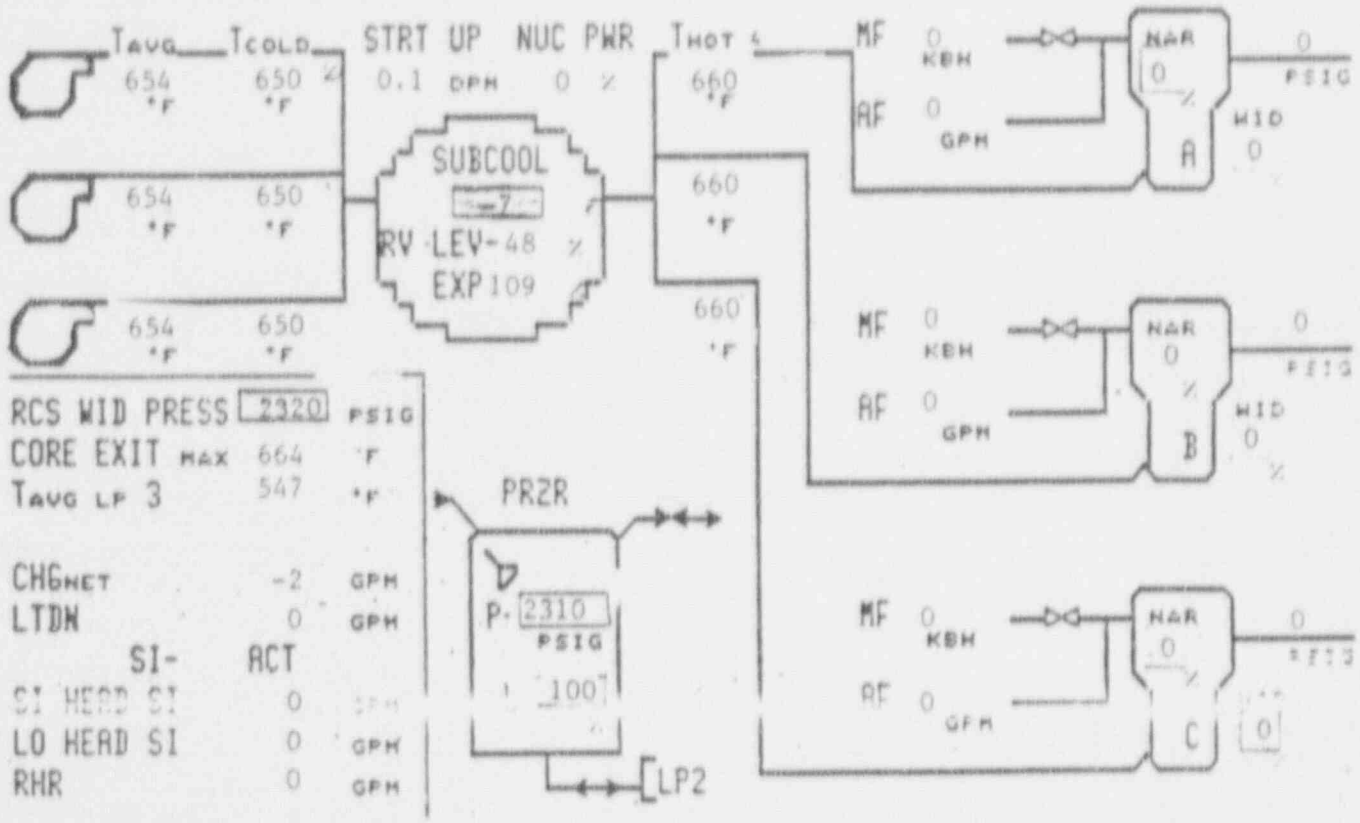

CONTAINMENT				ELECTRICAL			
Press. (PSIA)	10.46	Temp. (F)	103.0	SSST 2A	OOS	SSST 2B	OOS
RHS	AVAIL	Sump (In)	0.1	2 AE	OK	2 DF	OOS
Quench Spray	AVAIL	Recirc Spray	AVAIL	2 N	OK	2 P	OOS
HHSI	YES	CIA	YES	DG 2-1	RUN	DG 2-2	OOS
LHSI	YES	CIB	NO	Batteries	OK	Vital Buses	OK

Time 1909

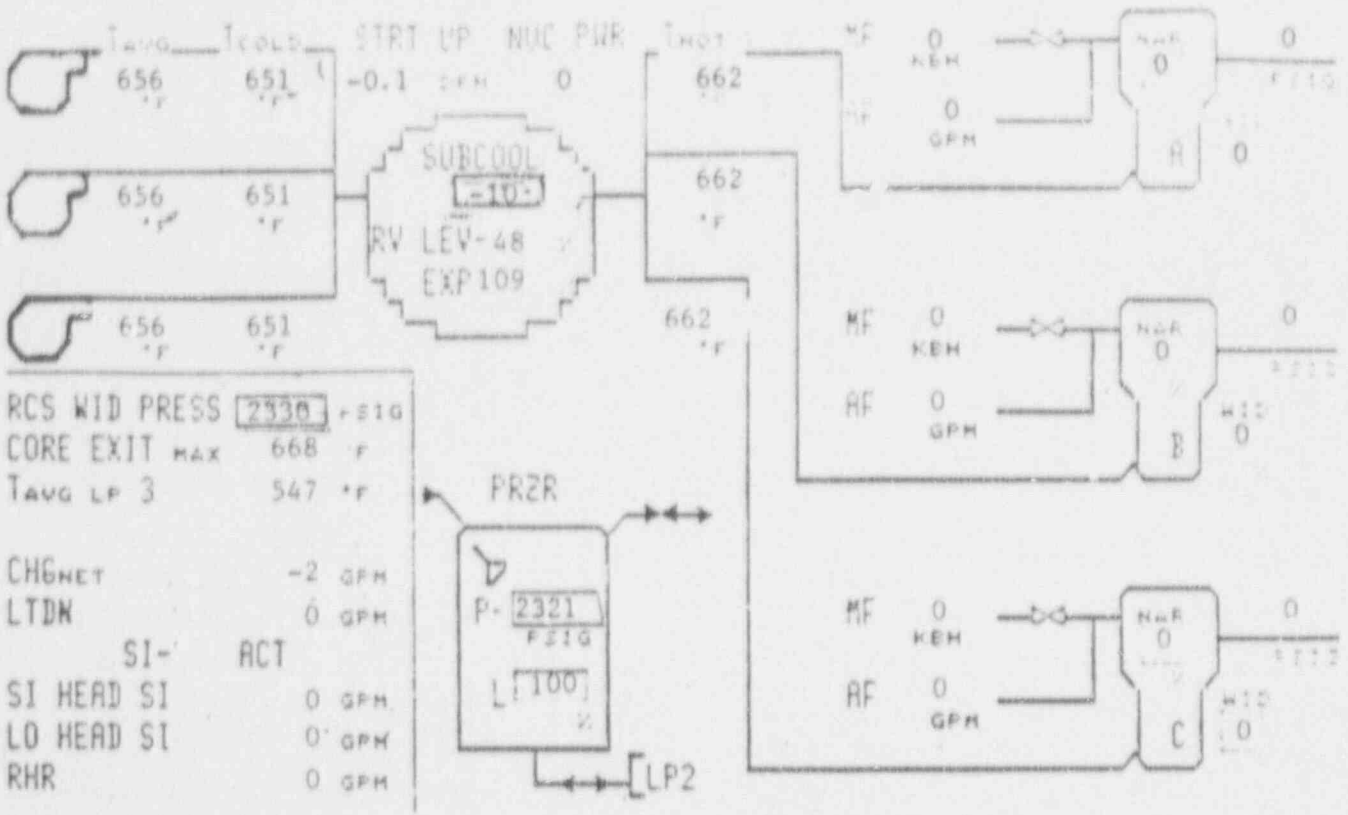

CONTAINMENT				ELECTRICAL			
Press. (PSIA)	10.45	Temp. (F)	102.9	SSST 2A	OOS	SSST 2B	OOS
RHS	AVAIL	Sump (In)	0.1	2 AE	OK	2 DF	OOS
Quench Spray	AVAIL	Recirc Spray	AVAIL	2 N	OK	2 P	OOS
HHSI	YES	CIA	YES	DG 2-1	RUN	DG 2-2	OOS
LHSI	YES	CIB	NO	Batteries	OK	Vital Buses	OK

Time 1912

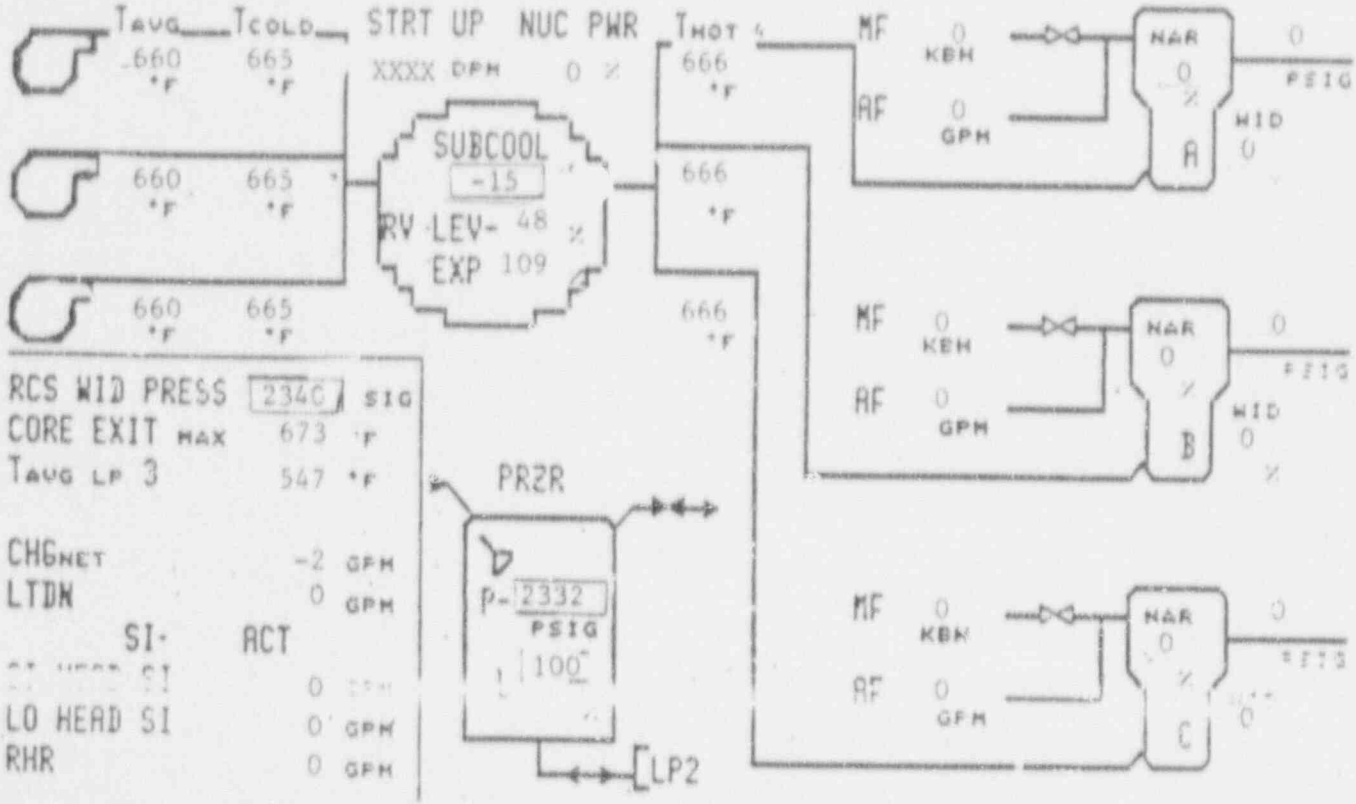

CONTAINMENT				ELECTRICAL			
Press. (PSIA)	10.46	Temp. (F)	103.0	SSST 2A	OOS	SSST 2B	OOS
RHS	AVAIL	Sump (In)	0.1	2 AE	OK	2 DF	OOS
Quench Spray	AVAIL	Recirc Spray	AVAIL	2 N	OK	2 P	OOS
HHSI	YES	CIA	YES	DG 2-1	RUN	DG 2-2	OOS
LHSI	YES	CIB	NO	Batteries	OK	Vital Buses	OK

Time 1915

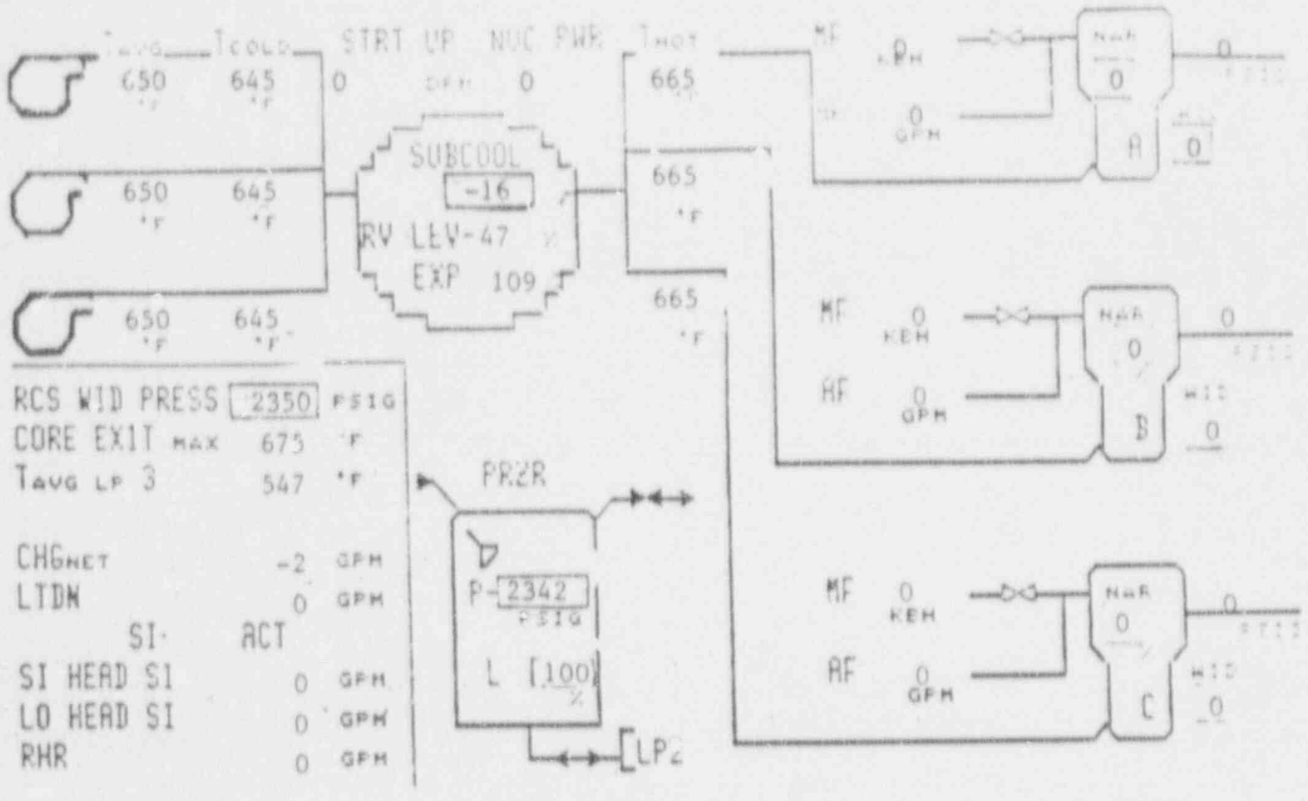

CONTAINMENT				ELECTRICAL			
Press. (PSIA)	10.45	Temp. (F)	102.9	SSST 2A	OOS	SSST 2B	OOS
RHS	AVAIL	Sump (In)	0.1	2 AE	OK	2 DF	OOS
Quench Spray	AVAIL	Recirc Spray	AVAIL	2 N	OK	2 P	OOS
HHSI	YES	CIA	YES	DG 2-1	RUN	DG 2-2	OOS
LHSI	YES	CIB	NO	Batteries	OK	Vital Buses	OK

Time 1918

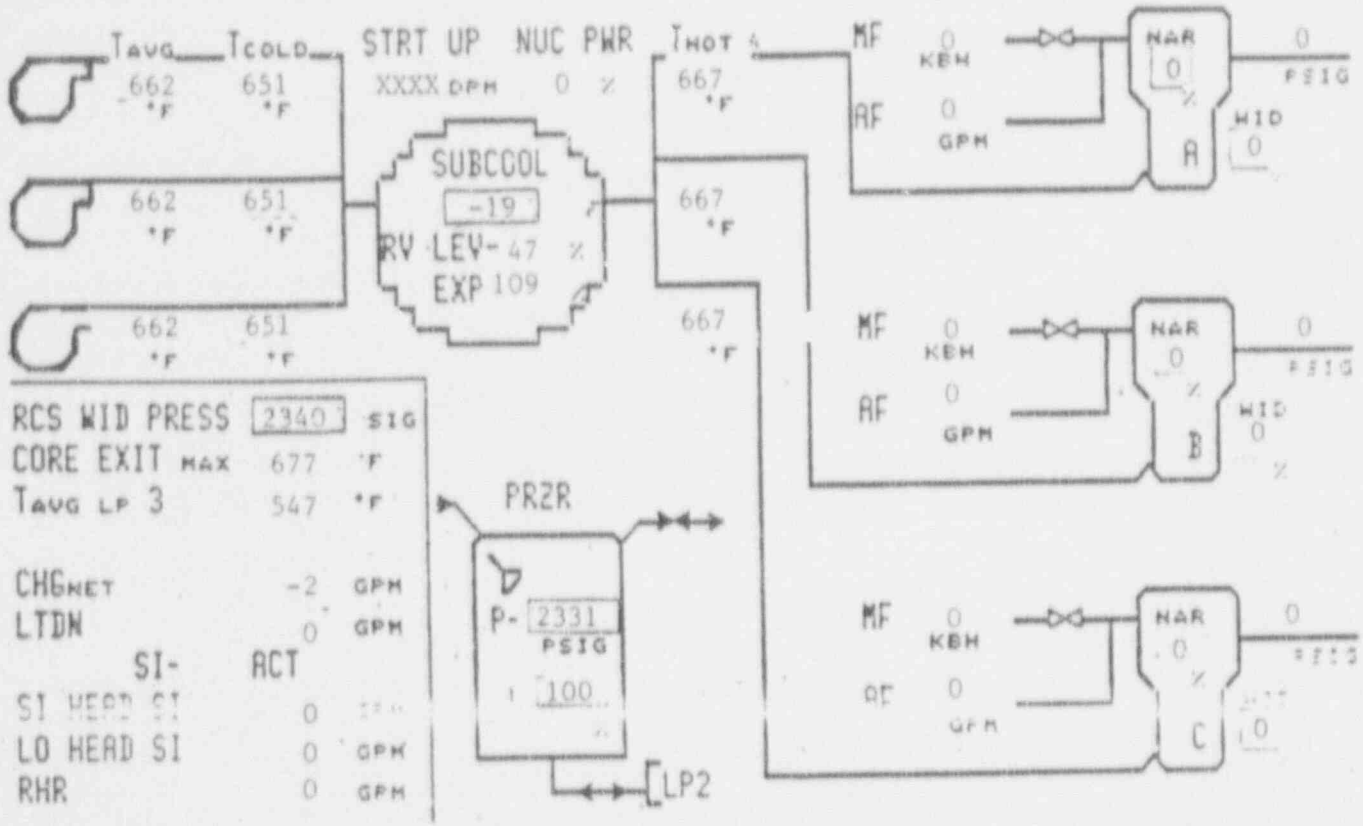

CONTAINMENT				ELECTRICAL			
Press. (PSIA)	10.46	Temp. (F)	103.0	SSST 2A	OOS	SSST 2B	OOS
RHS	AVAIL	Sump (In)	0.1	2 AE	OK	2 DF	OOS
Quench Spray	AVAIL	Recirc Spray	AVAIL	2 N	OK	2 P	OOS
HHSI	YES	CIA	YES	DG 2-1	RUN	DG 2-2	OOS
LHSI	YES	CIB	NO	Batteries	OK	Vital Buses	OK

Time 1921

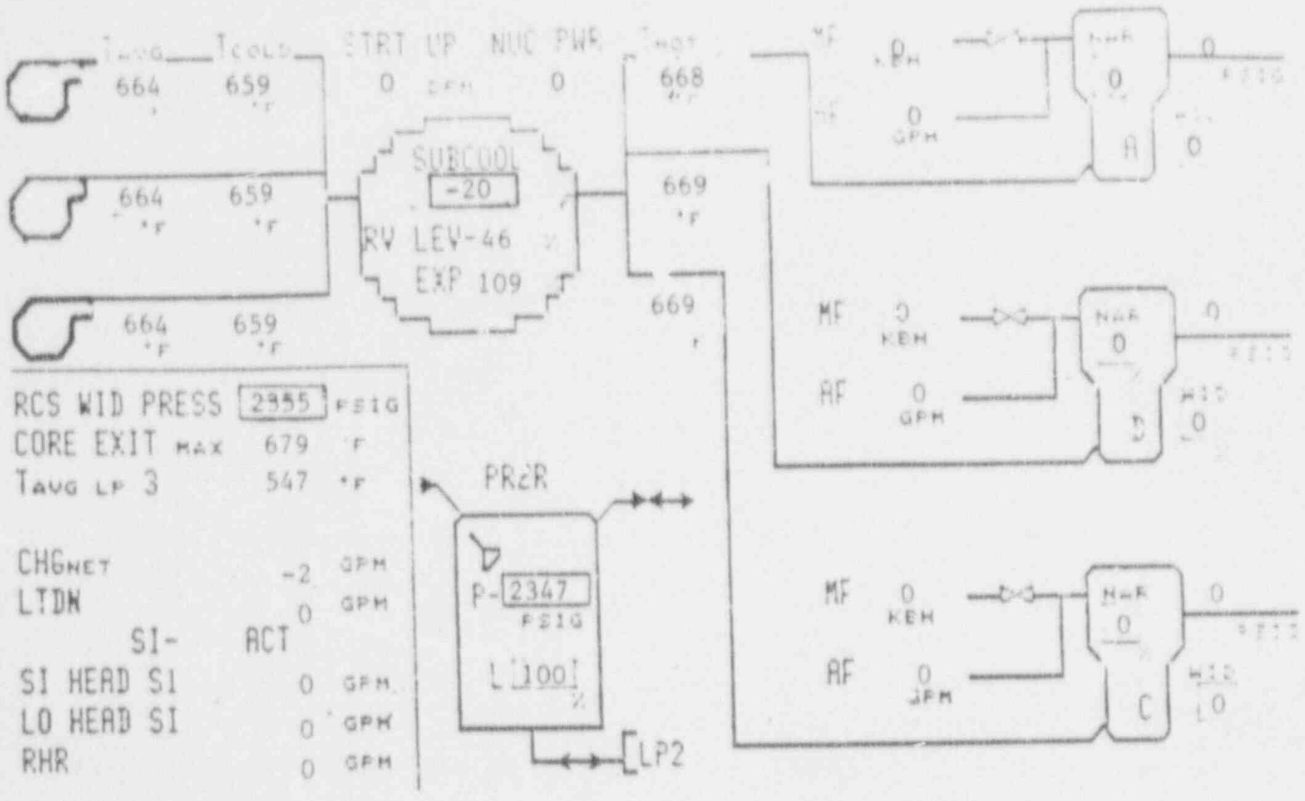

CONTAINMENT				ELECTRICAL			
Press. (PSIA)	10.45	Temp. (F)	102.9	SSST 2A	OOS	SSST 2B	OOS
RHS	AVAIL	Sump (In)	0.1	2 AE	OK	2 DF	OOS
Quench Spray	AVAIL	Recirc Spray	AVAIL	2 N	OK	2 P	OOS
HHSI	YES	CIA	YES	DG 2-1	RUN	D. 2-2	OOS
LHSI	YES	CIB	NO	Batteries	OK	Vital Buses	OK

Time 1924

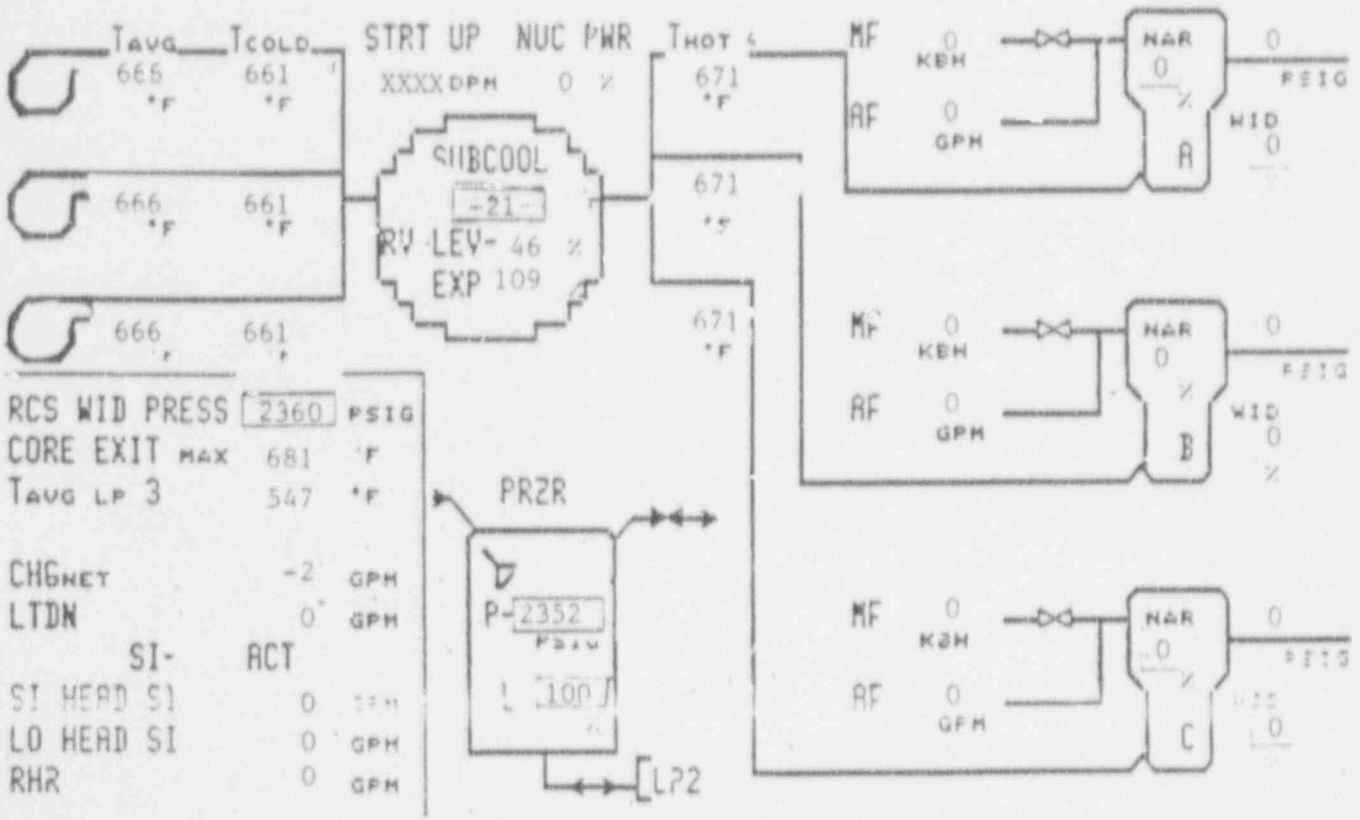

CONTAINMENT				ELECTRICAL			
Press. (PSIA)	10.46	Temp. (F)	103.0	SSST 2A	OOS	SSST 2B	OOS
RHS	AVAIL	Sump (In)	0.1	2 AE	OK	2 DF	OOS
Quench Spray	AVAIL	Recirc Spray	AVAIL	2 N	OK	2 P	OOS
HHSI	YES	CIA	YES	DG 2-1	RUN	DG 2-2	OOS
LHSI	YES	CIB	NO	Batteries	OK	Vital Buses	OK

Time 1927

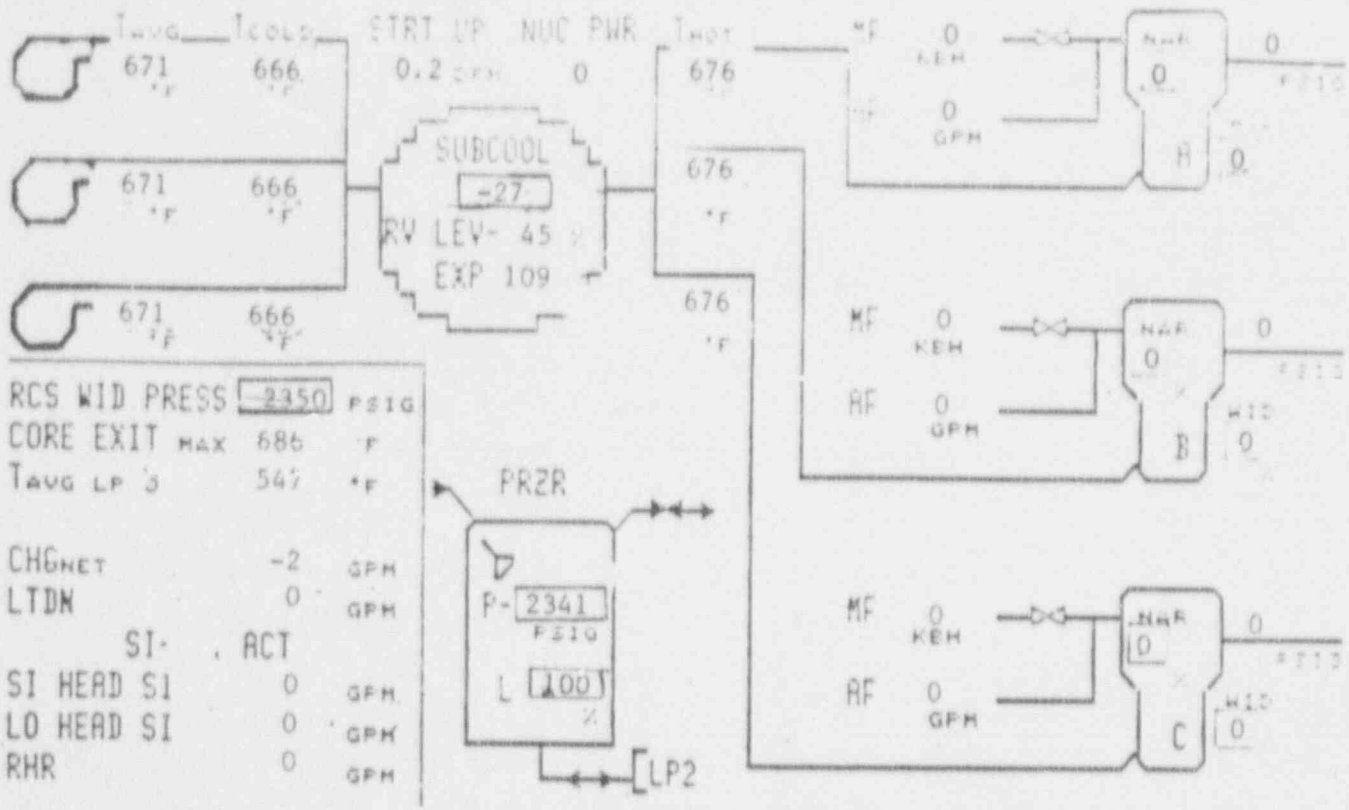

CONTAINMENT				ELECTRICAL			
Press. (PSIA)	10.45	Temp. °F	102.9	SEST 2A	OOS	SSST 2B	OOS
RHS	AVAIL	Sump (In)	0.1	2 AE	OK	2 DT	OOS
Quench Spray	AVAIL	Recirc Spray	AVAIL	2 N	OK	2 P	OOS
HKSI	YES	CIA	YES	DG 2-1	RUN	DG 2-2	OOS
LHSI	YES	CIB	NO	Batteries	OK	Vital Buses	OK

Time 1930

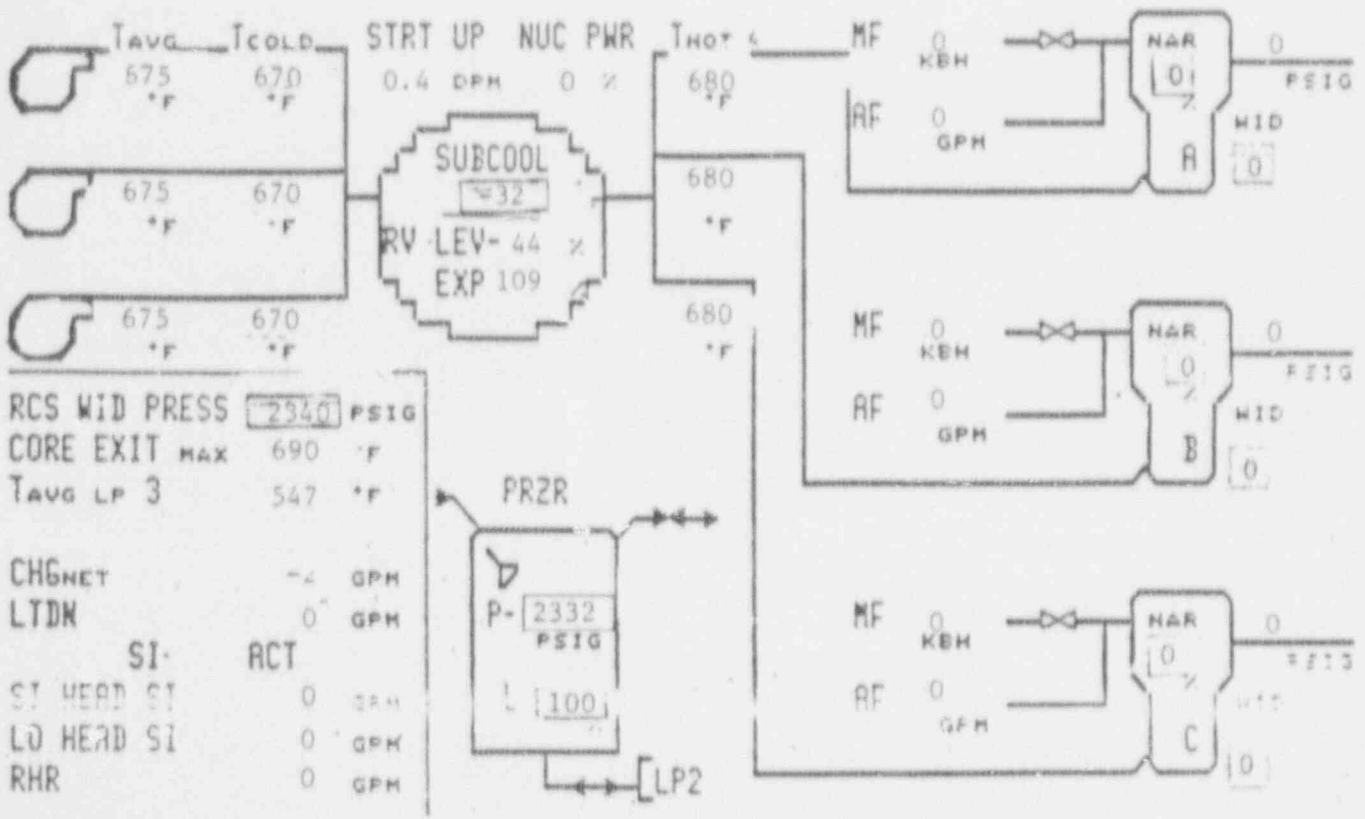

CONTAINMENT				ELECTRICAL			
Press. (PSIA)	10.46	Temp. (F)	103.0	SSST 2A	OOS	SSST 2B	OOS
RHS	AVAIL	Sump (In)	0.1	2 AE	OK	2 DF	OOS
Quench Spray	AVAIL	Recirc Spray	AVAIL	2 N	OK	2 P	OOS
HHSI	YES	CIA	YES	DG 2-1	RUN	DG 2-2	OOS
LHSI	YES	CIB	NO	Batteries	OK	Vital Buses	OK

Time 1933

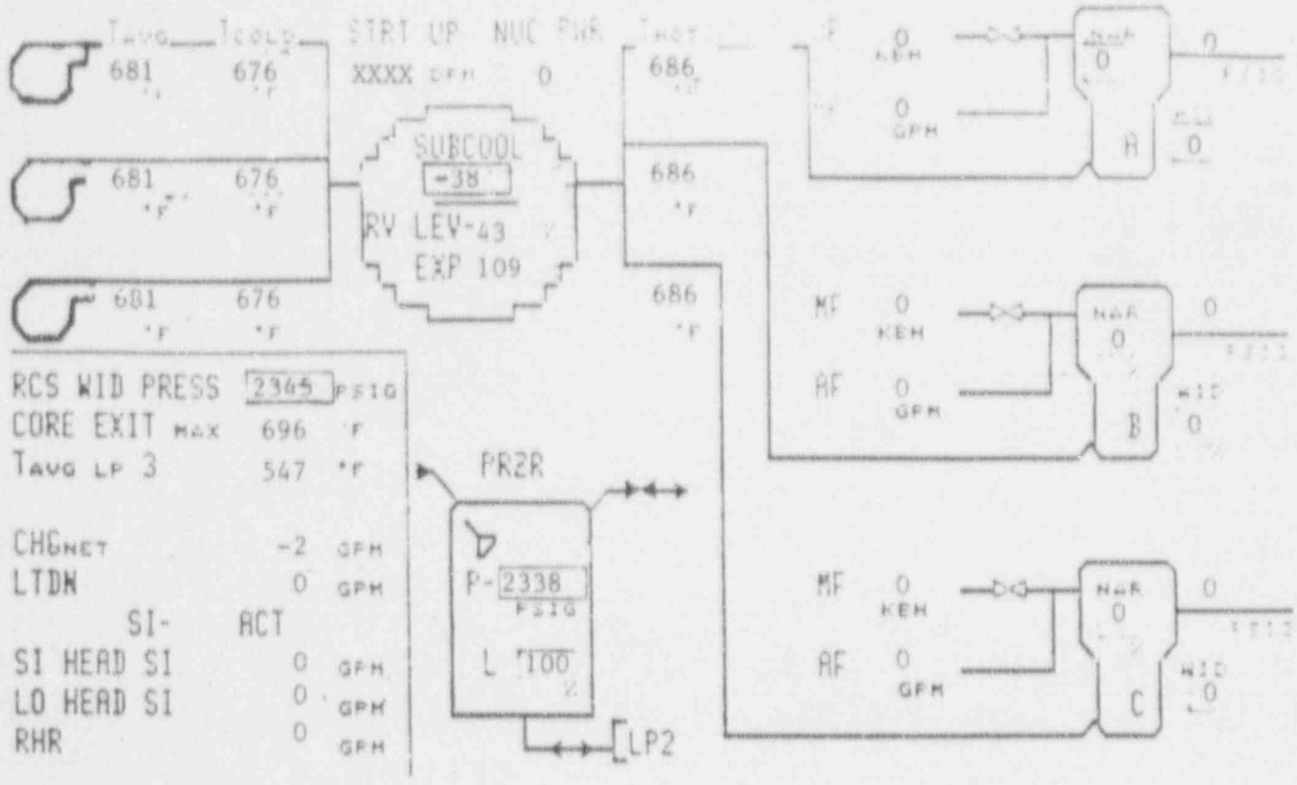

CONTAINMENT				ELECTRICAL			
Press. (PSIA)	10.45	Temp. (F)	102.9	SSST 2A	OOS	SSST 2B	OOS
RHS	AVAIL	Sump (In)	0.1	2 AE	OK	2 DF	OOS
Quench Spray	AVAIL	Recirc Spray	AVAIL	2 N	OK	2 P	OOS
HHSI	YES	CIA	YES	DG 2-1	RUN	DG 2-2	OOS
LHSI	YES	CIB	NO	Batteries	OK	Vital Buses	OK

Time 1936

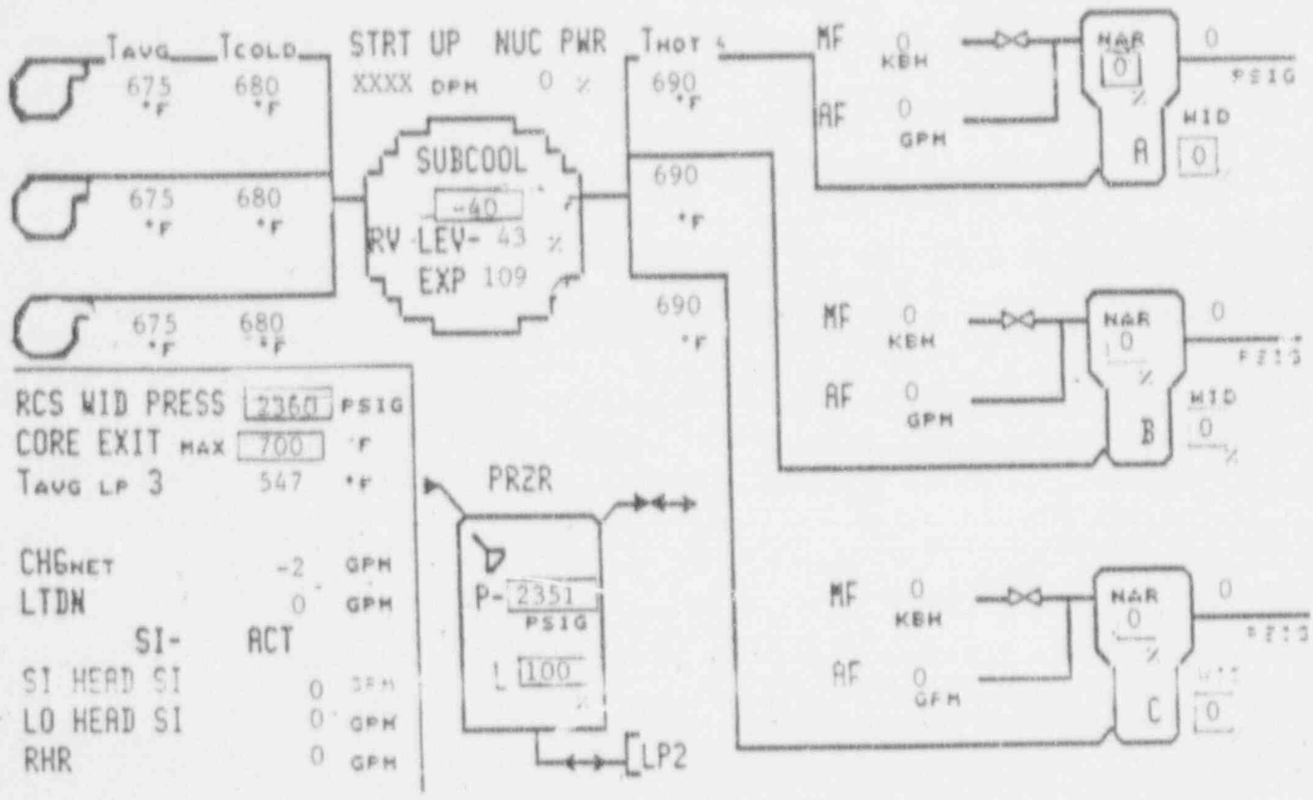

CONTAINMENT				ELECTRICAL			
Press. (PSIA)	10.46	Temp. (F)	103.0	SSST 2A	OOS	SSST 2B	OOS
RHS	AVAIL	Sump (In)	0.1	2 AE	OK	2 DF	OOS
Quench Spray	AVAIL	Recirc Spray	AVAIL	2 N	OK	2 P	OOS
HHSI	YES	CIA	YES	DG 2-1	RUN	DG 2-2	OOS
LHSI	YES	CIB	NO	Batteries	OK	Vital Buses	OK

Time 1939

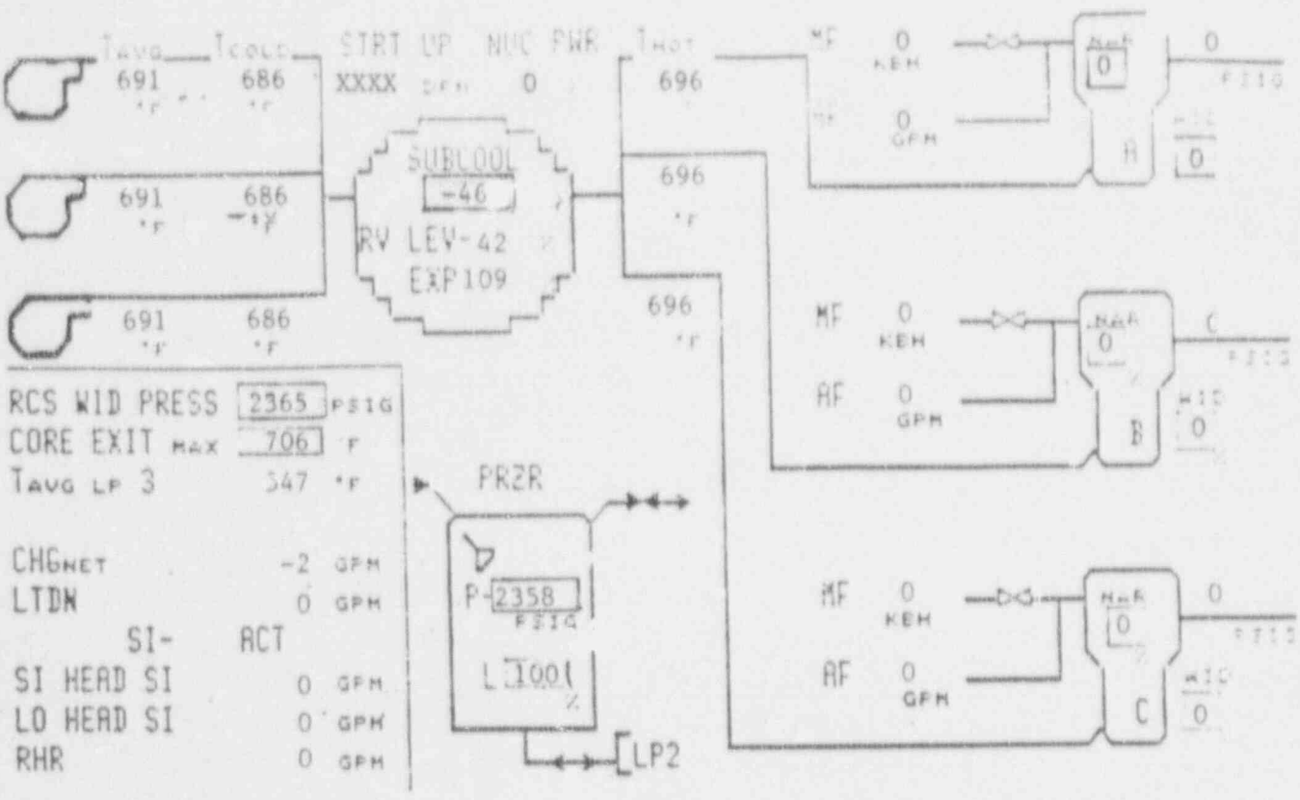

CONTAINMENT				ELECTRICAL			
Press. (PSIA)	10.45	Temp. (F)	102.9	SSST 2A	OOS	SSST 2B	OOS
RHS	AVAIL	Sump (In)	0.1	2 AE	OK	2 DF	OOS
Quench Spray	AVAIL	Recirc Spray	AVAIL	2 N	OK	2 P	OOS
HHSI	YES	CIA	YES	DG 2-1	RUN	DG 2-2	OOS
LHSI	YES	CIB	NO	Batteries	OK	Vital Buses	OK

Time 1942

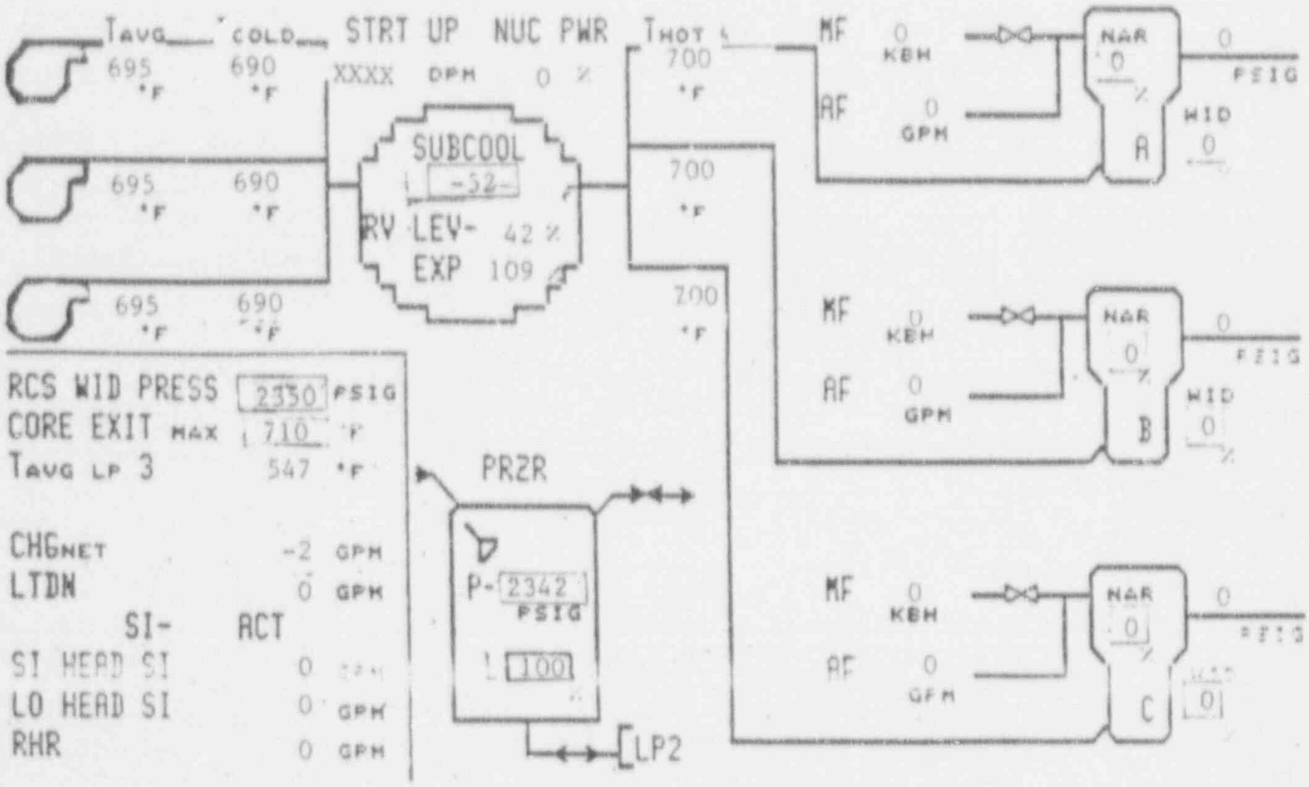

CONTAINMENT				ELECTRICAL			
Press. (PSIA)	10.46	Temp. (F)	103.0	SSST 2A	OOS	SSST 2B	OOS
RHS	AVAIL	Sump (In)	0.1	2 AE	OK	2 DF	OOS
Quench Spray	AVAIL	Recirc Spray	AVAIL	2 N	OK	2 P	OOS
HHSI	YES	CIA	YES	DG 2-1	RUN	DG 2-2	OOS
LHSI	YES	CIB	NO	Batteries	OK	Vital Buses	OK

Time 1945

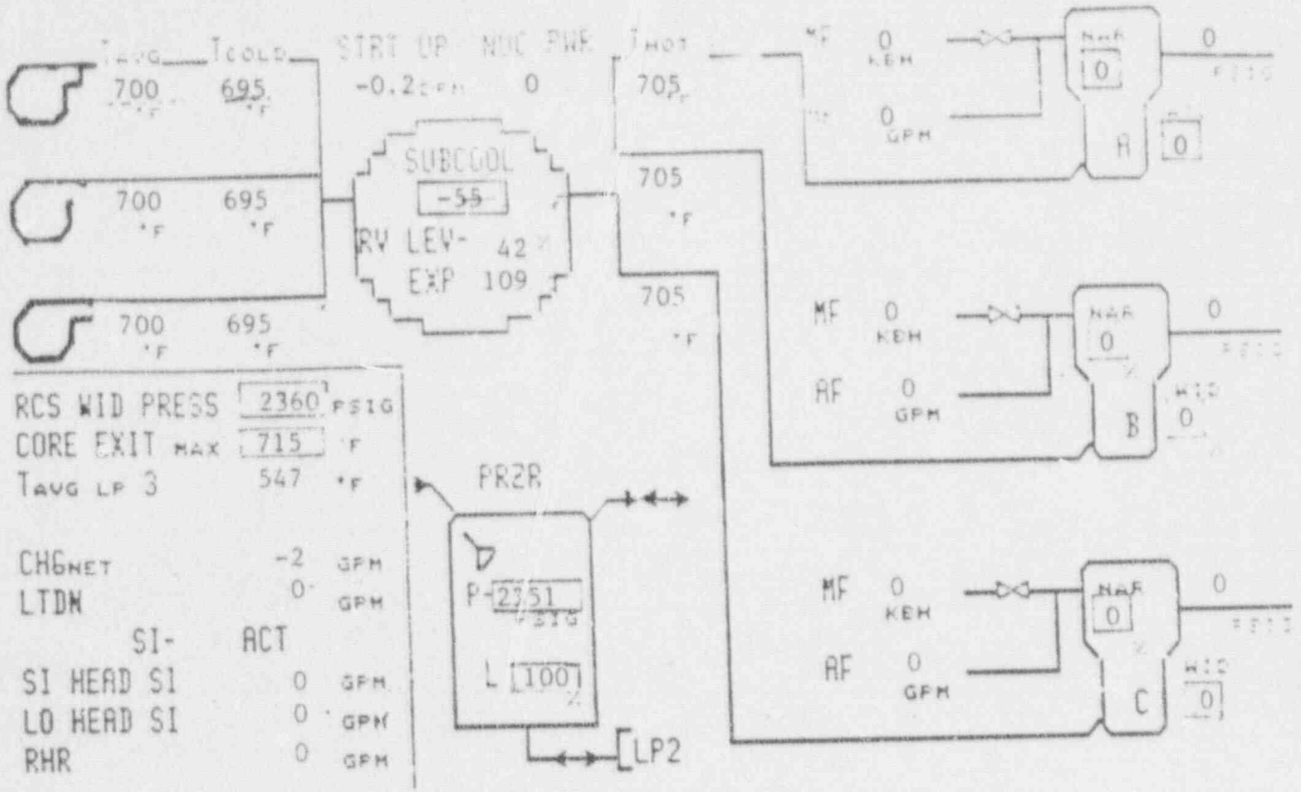

CONTAINMENT				ELECTRICAL			
Press. (PSIA)	10.45	Temp. (F)	102.9	SSST 2A	OOS	SSST 2B	OOS
RHS	AVAIL	Sump (In)	0.1	2 AE	OK	2 DF	OOS
Quench Spray	AVAIL	Recirc Spray	AVAIL	2 N	OK	2 P	OOS
RHSI	YES	CIA	YES	DG 2-1	RUN	DG 2-2	OOS
LHSI	YES	CIB	NO	Batteries	OK	Vital Buses	OK

Time 1948

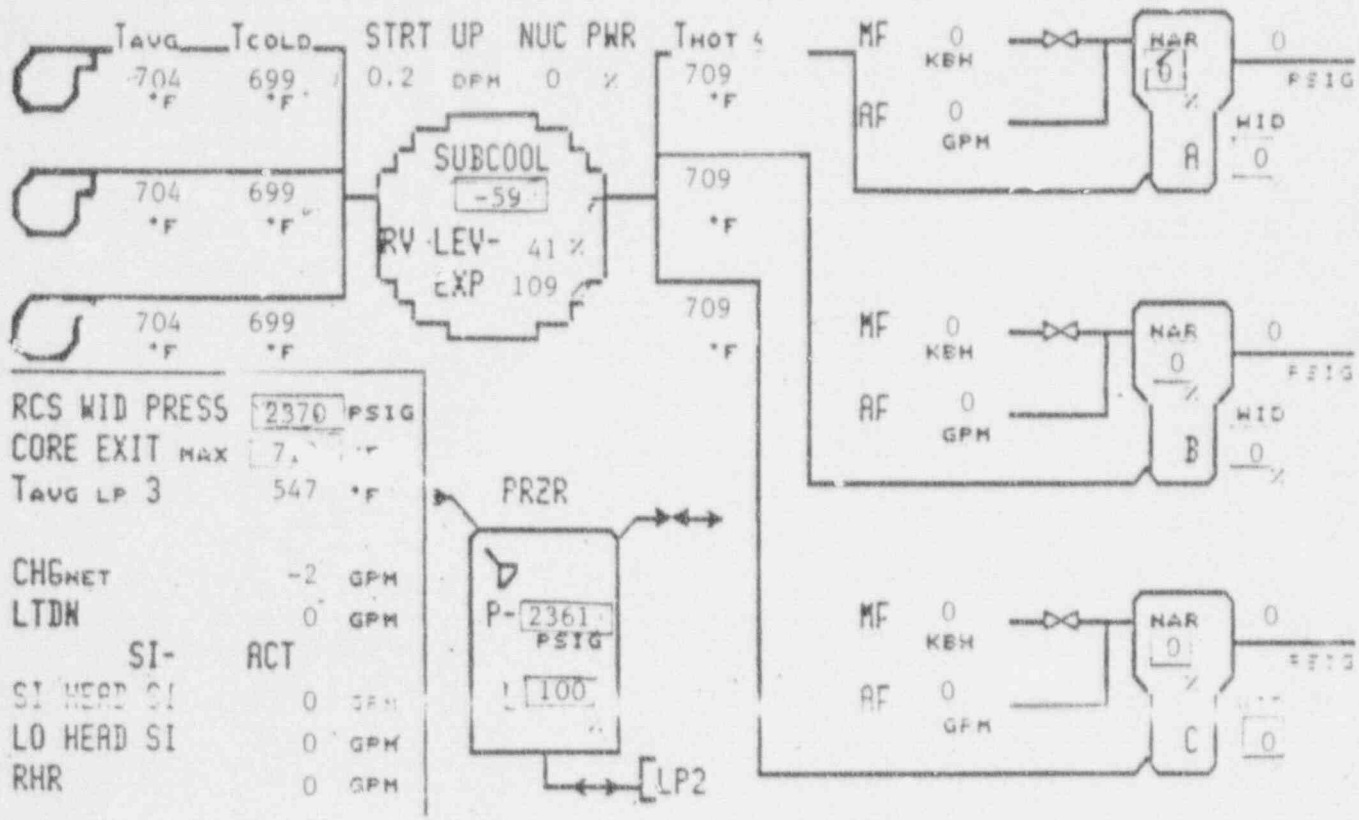

CONTAINMENT				ELECTRICAL			
Press. (PSIA)	10.46	Temp. (F)	103.0	SSST 2A	OOS	SSST 2B	OOS
RHS	AVAIL	Sump (In)	0.1	2 A	OK	2 DF	OOS
Quench Spray	AVAIL	Recirc Spray	AVAIL	2 N	OK	2 P	OOS
HHSI	YES	CIA	YES	DG 2-1	RUN	DG 2-2	OOS
LHSI	YES	CIB	NO	Batteries	OK	Vital Buses	OK

Time 1951

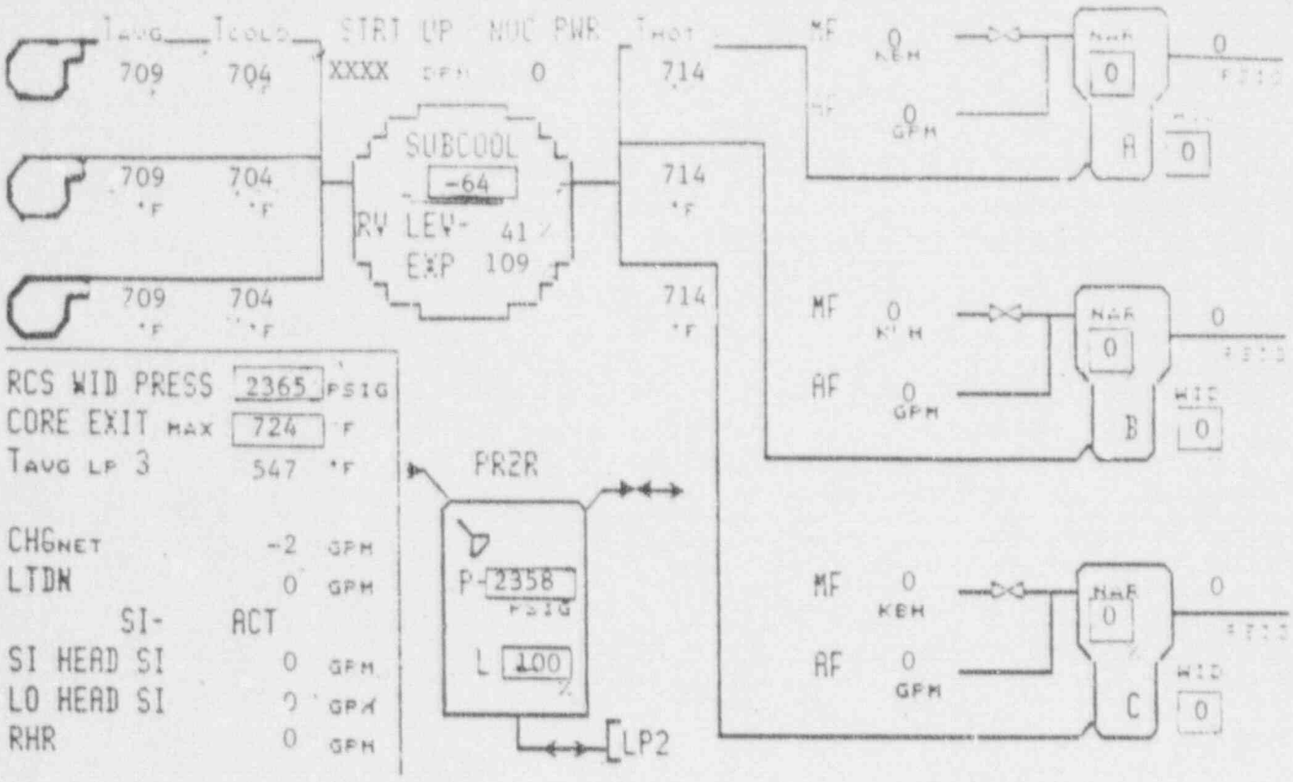

CONTAINMENT				ELECTRICAL			
Press. (PSIA)	10.45	Temp. (F)	102.9	SSST 2A	OOS	SSST 2B	OOS
RHS	AVAIL	Sump (In)	0.1	2 AE	OK	2 DF	OOS
Quench Spray	AVAIL	Recirc Spray	AVAIL	2 N	OK	2 P	OOS
HHSI	YES	CIA	YES	DG 2-1	RUN	DG 2-2	OOS
LHSI	YES	CIB	NO	Batteries	OK	Vital Buses	OK

Time 1954

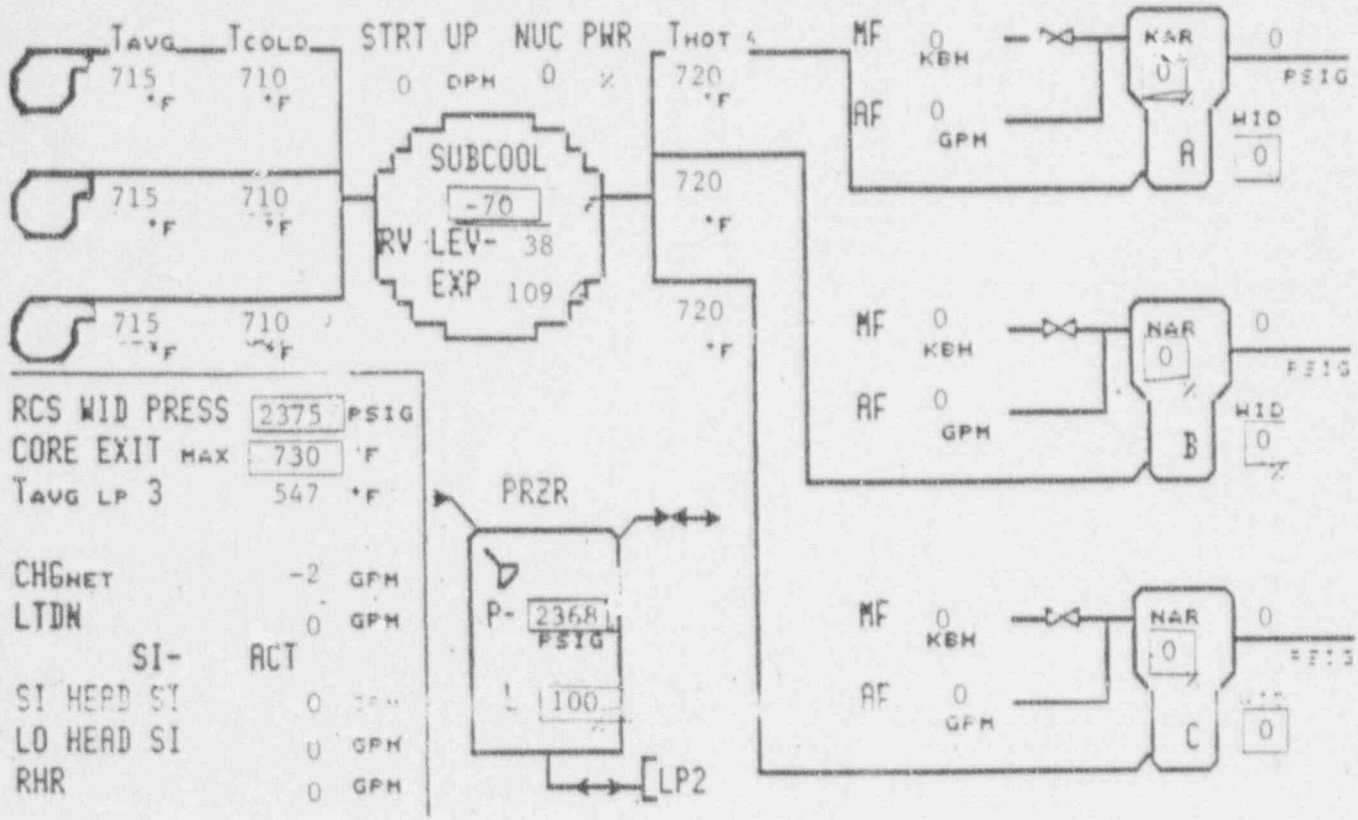

CONTAINMENT				ELECTRICAL			
Press. (PSIA)	10.46	Temp. (F)	103.0	SSST 2A	OOS	SSST 2B	OOS
RHS	AVAIL	Sump (In)	0.1	2 AE	OK	2 DF	OOS
Quench Spray	AVAIL	Recirc Spray	AVAIL	2 N	OK	2 P	OOS
HHSI	YES	CIA	YES	DG 2-1	RUN	DG 2-2	OOS
LHSI	YES	CIB	NO	Batteries	OK	Vital Buses	OK

Time 1957

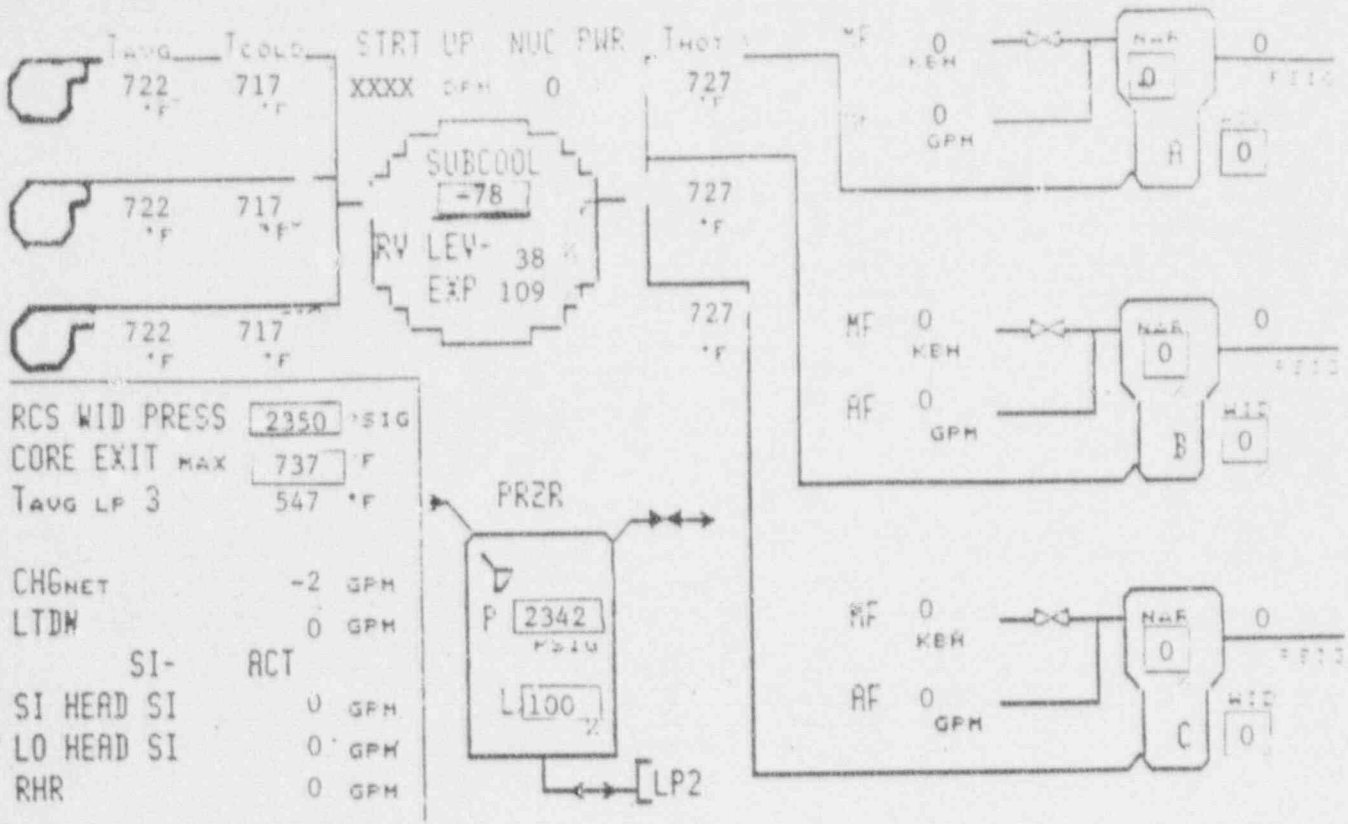

CONTAINMENT				ELECTRICAL			
Press. (PSIA)	10.45	Temp. (F)	102.9	SSST 2A	OOS	SSST 2B	OOS
RHS	AVAIL	Sump (In)	0.2	2 AE	OK	2 DF	OOS
Quench Spray	AVAIL	Recirc Spray	AVAIL	2 N	OK	2 P	OOS
HHSI	YES	CIA	YES	DG 2-1	RUN	DG 2-2	OOS
LHSI	YES	CIB	NO	Batteries	OK	Vital Buses	OK

Time 2000

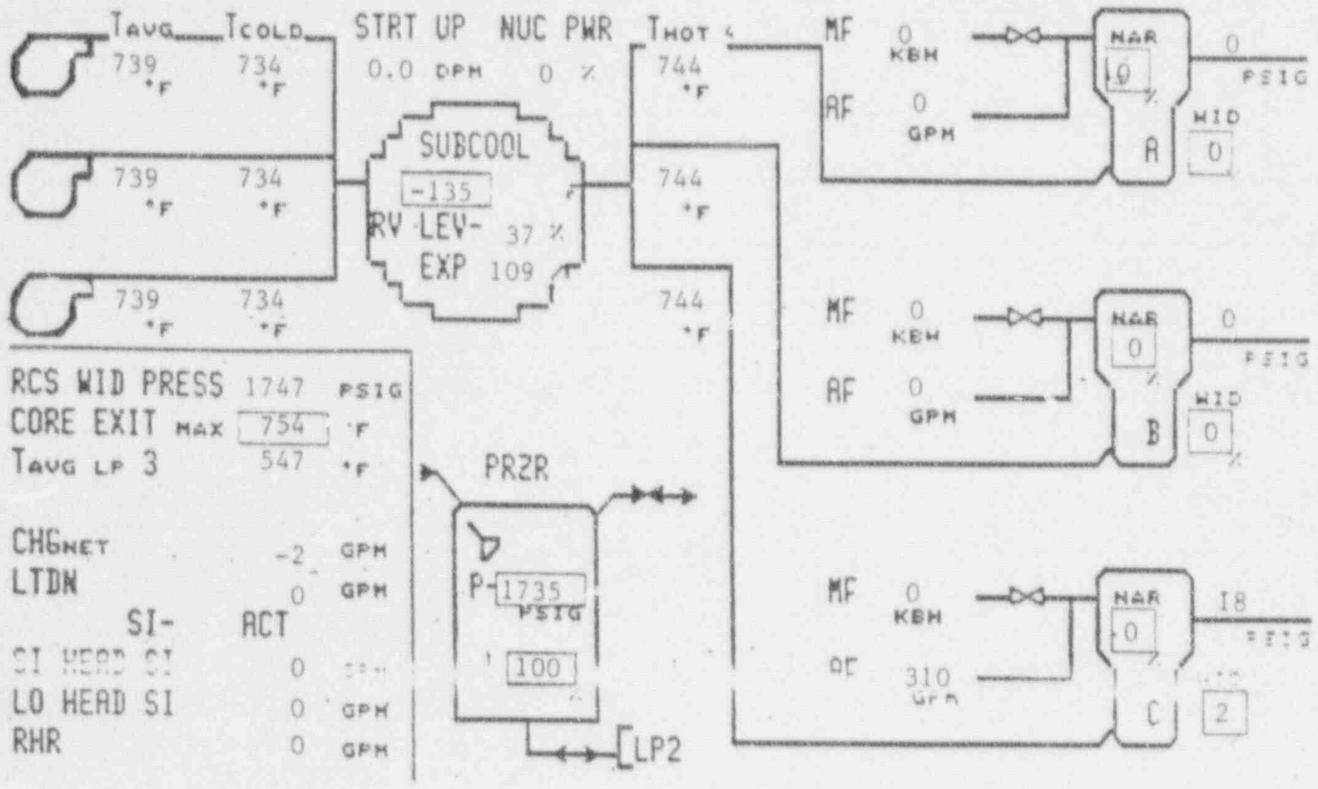

CONTAINMENT				ELECTRICAL			
Press. (PSIA)	10.46	Temp. (F)	103.0	SSST 2A	OOS	SSST 2B	OOS
RHS	AVAIL	Sump (In)	0.2	2 AE	OK	2 DF	OOS
Quench Spray	AVAIL	Recirc Spray	AVAIL	2 N	OK	2 P	OOS
HHSI	YES	CIA	YES	DG 2-1	RUN	DG 2-2	OOS
LHSI	YES	CIB	NO	Batteries	OK	Vital Buses	OK

Time 2003

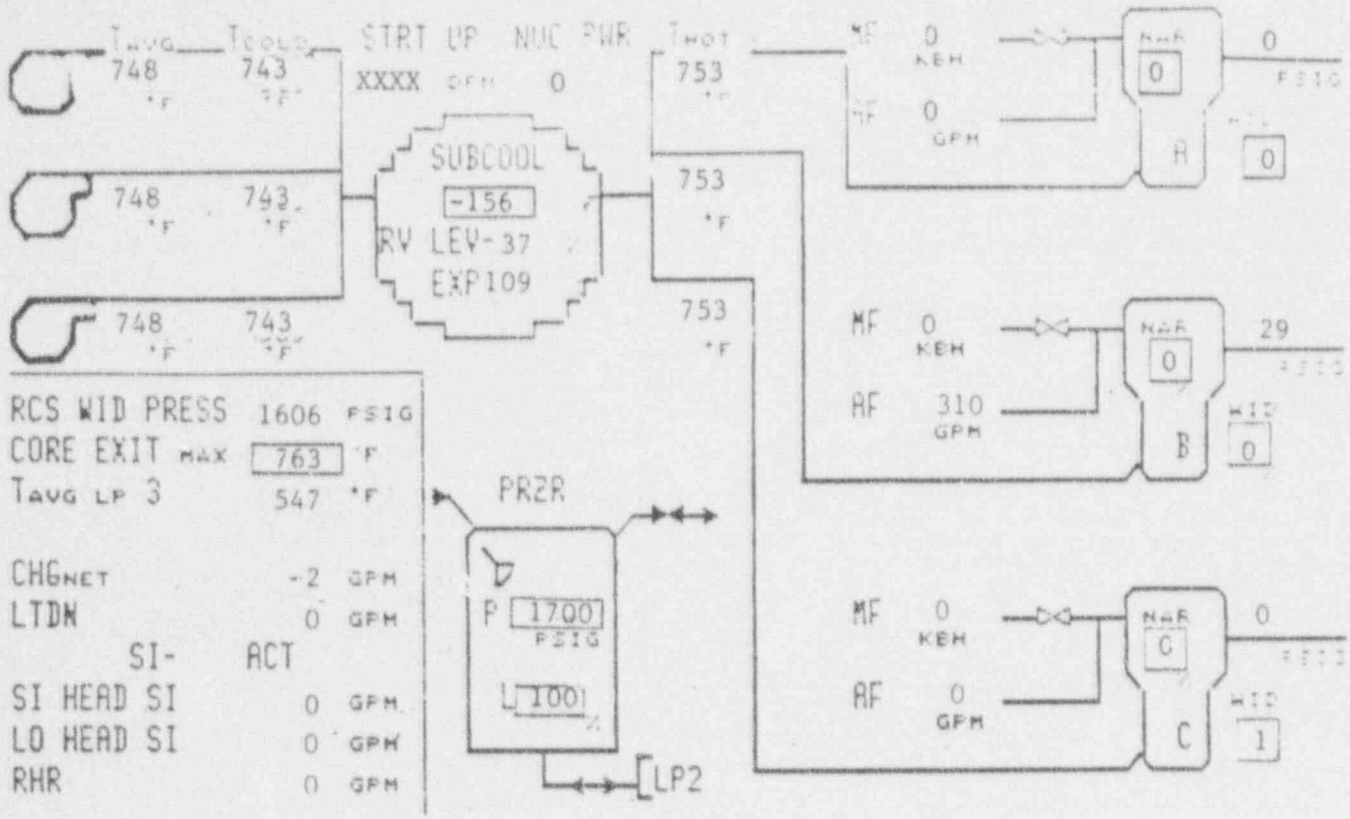

CONTAINMENT				ELECTRICAL			
Press. (PSIA)	10.46	Temp. (F)	102.9	SSST 2A	OOS	SSST 2B	OOS
RHS	AVAIL	Sump (In)	0.2	2 AE	OK	2 DF	OOS
Quench Spray	AVAIL	Recirc Spray	AVAIL	2 N	OK	2 P	OOS
HHSI	YES	CIA	YES	DG 2-1	RUN	DG 2-2	OOS
LHSI	YES	CIB	NO	Batteries	OK	Vital Buses	OK

Time 2006

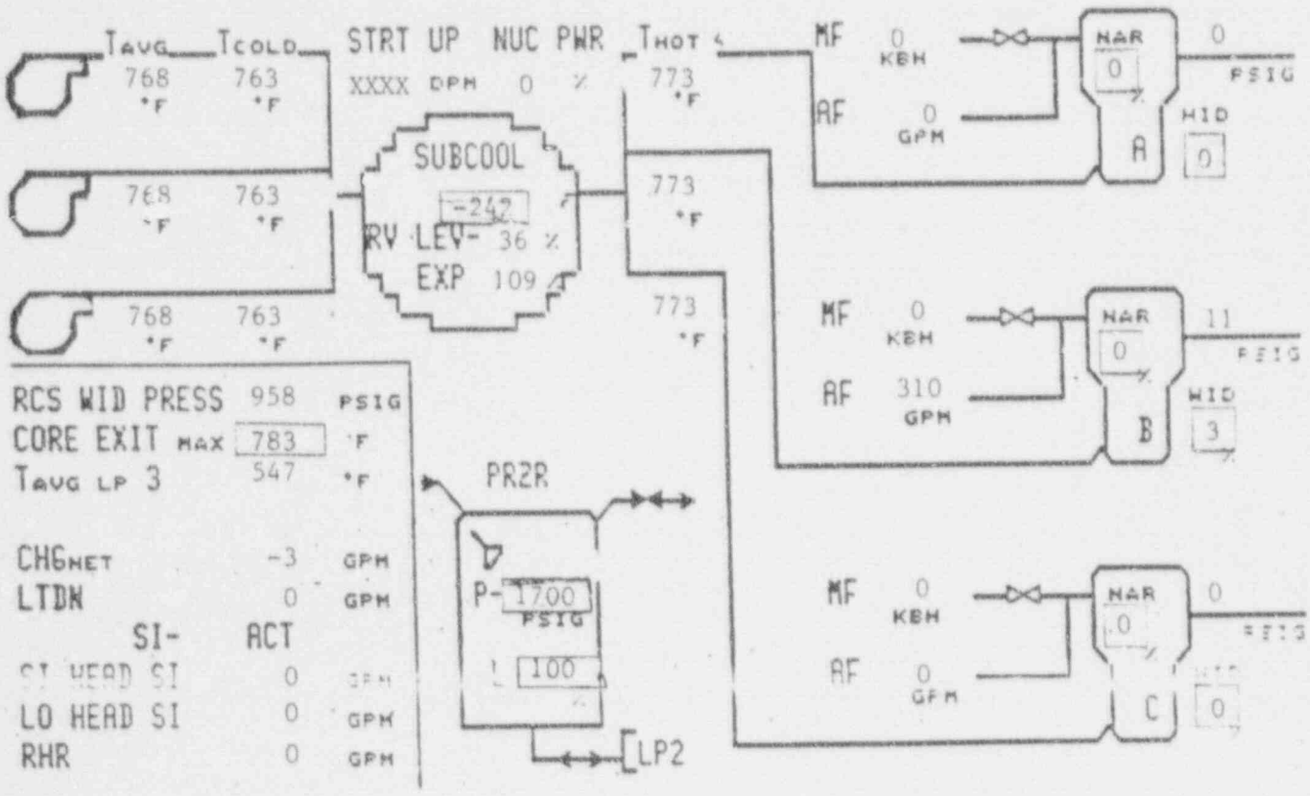

CONTAINMENT				ELECTRICAL			
Press. (PSIA)	10.46	Temp. (F)	103.0	SSST 2A	OOS	SSST 2B	OOS
RHS	AVAIL	Sump (In)	0.2	2 AE	OK	2 DF	OOS
Quench Spray	AVAIL	Recirc Spray	AVAIL	2 N	OK	2 P	OOS
HHSI	YES	CIA	YES	DG 2-1	RUN	DG 2-2	OOS
LHSI	YES	CIB	NO	Batteries	OK	Vital Buses	OK

Time 2009

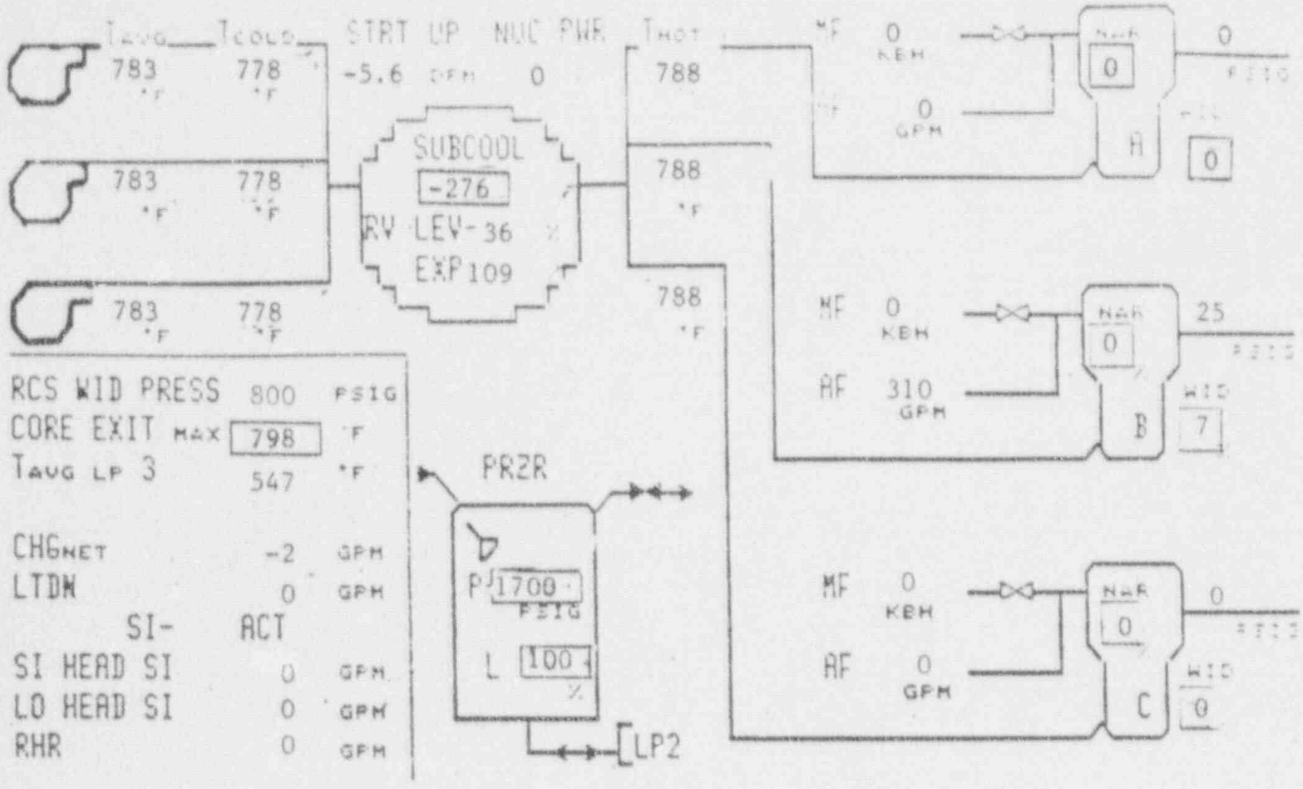

CONTAINMENT				ELECTRICAL			
Press. (PSIA)	10.45	Temp. (F)	102.9	SSST 2A	OOS	SSST 2B	OOS
RHS	AVAIL	Sump (In)	0.2	2 AE	OK	2 DF	OOS
Quench Spray	AVAIL	Recirc Spray	AVAIL	2 N	OK	2 P	OOS
HHSI	YES	CIA	YES	DG 2-1	RUN	DG 2-2	OOS
LHSI	YES	CIB	NO	Batteries	OK	Vital Buses	OK

Time 2012

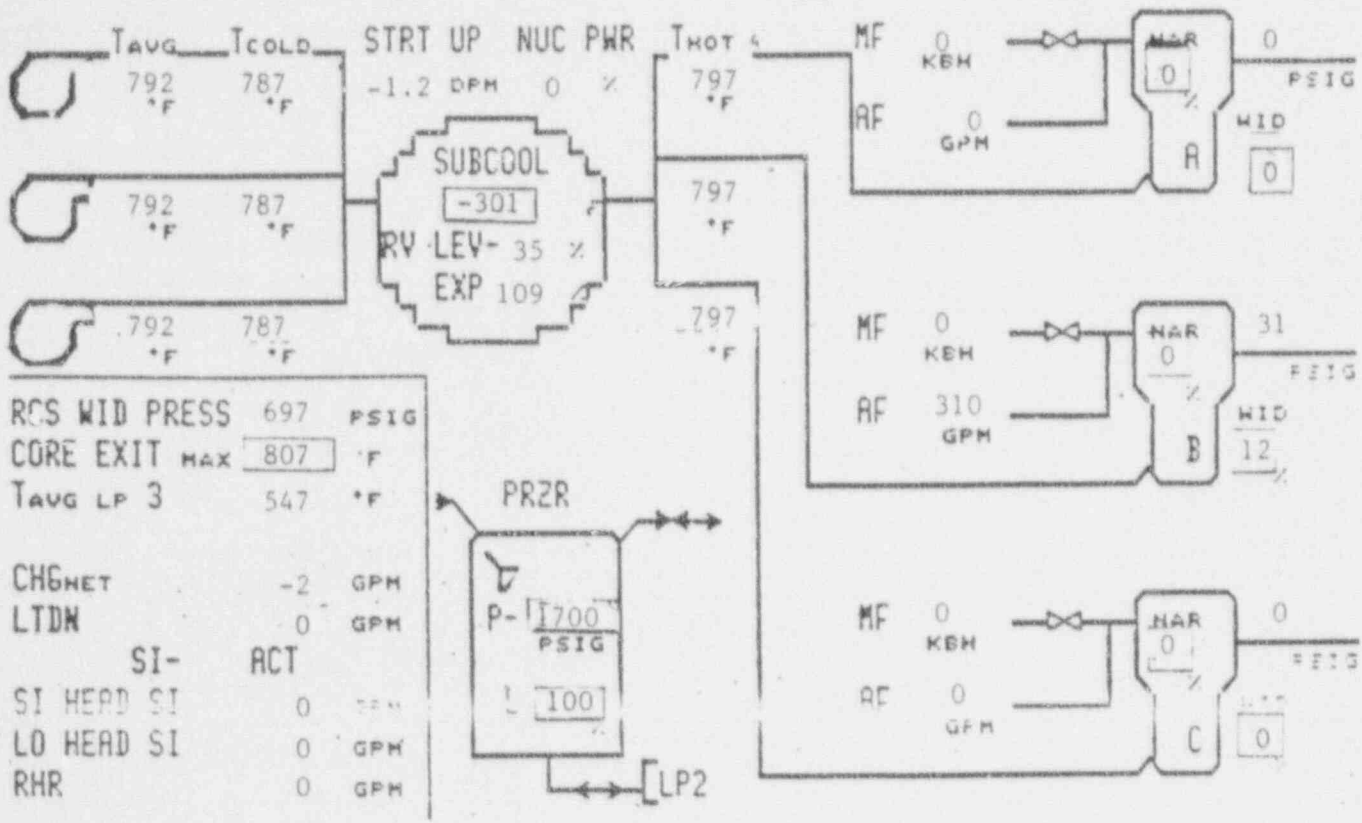

CONTAINMENT				ELECTRICAL			
Press. (PSIA)	10.46	Temp. (F)	103.0	SSST 2A	OOS	SSST 2B	OOS
RHS	AVAIL	Sump (In)	0.2	2 AE	OK	2 DF	OOS
Quench Spray	AVAIL	Recirc Spray	AVAIL	2 N	OK	2 P	OOS
HHSI	YES	CIA	YES	DG 2-1	RUN	DG 2-2	OOS
LHSI	YES	CIB	NO	Batteries	OK	Vital Buses	OK

Time 2015

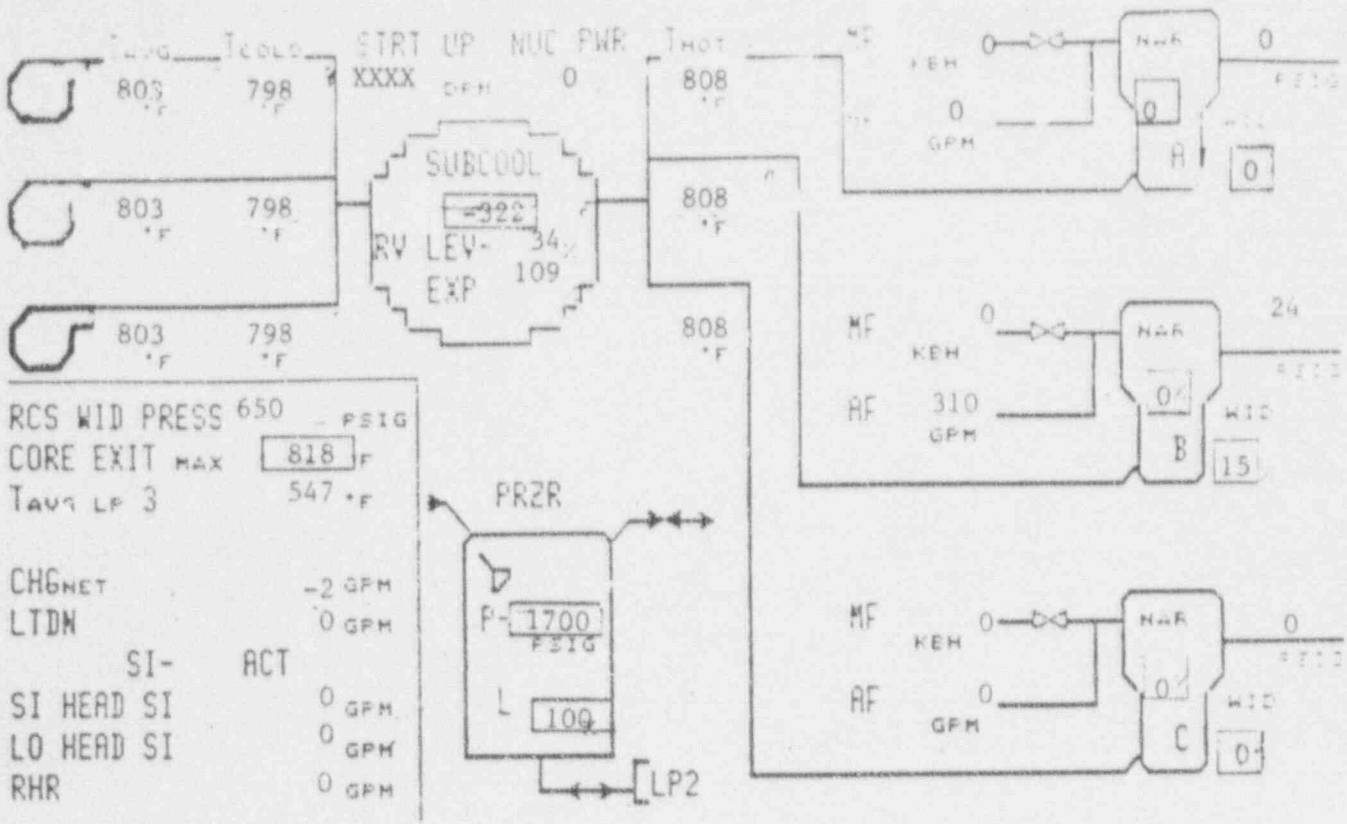

CONTAINMENT				ELECTRICAL			
Press. (PSIA)	10.45	Temp. (F)	102.9	SSST 2A	OOS	SSST 2B	OOS
RHS	AVAIL	Sump (In)	0.2	2 AE	OK	2 DF	OOS
Quench Spray	AVAIL	Recirc Spray	AVAIL	2 N	OK	2 P	OOS
HHSI	YES	CIA	YES	DG 2-1	RUN	DG 2-2	OOS
LHSI	YES	CIB	NO	Batteries	OK	Vital Buses	OK

Time 2018

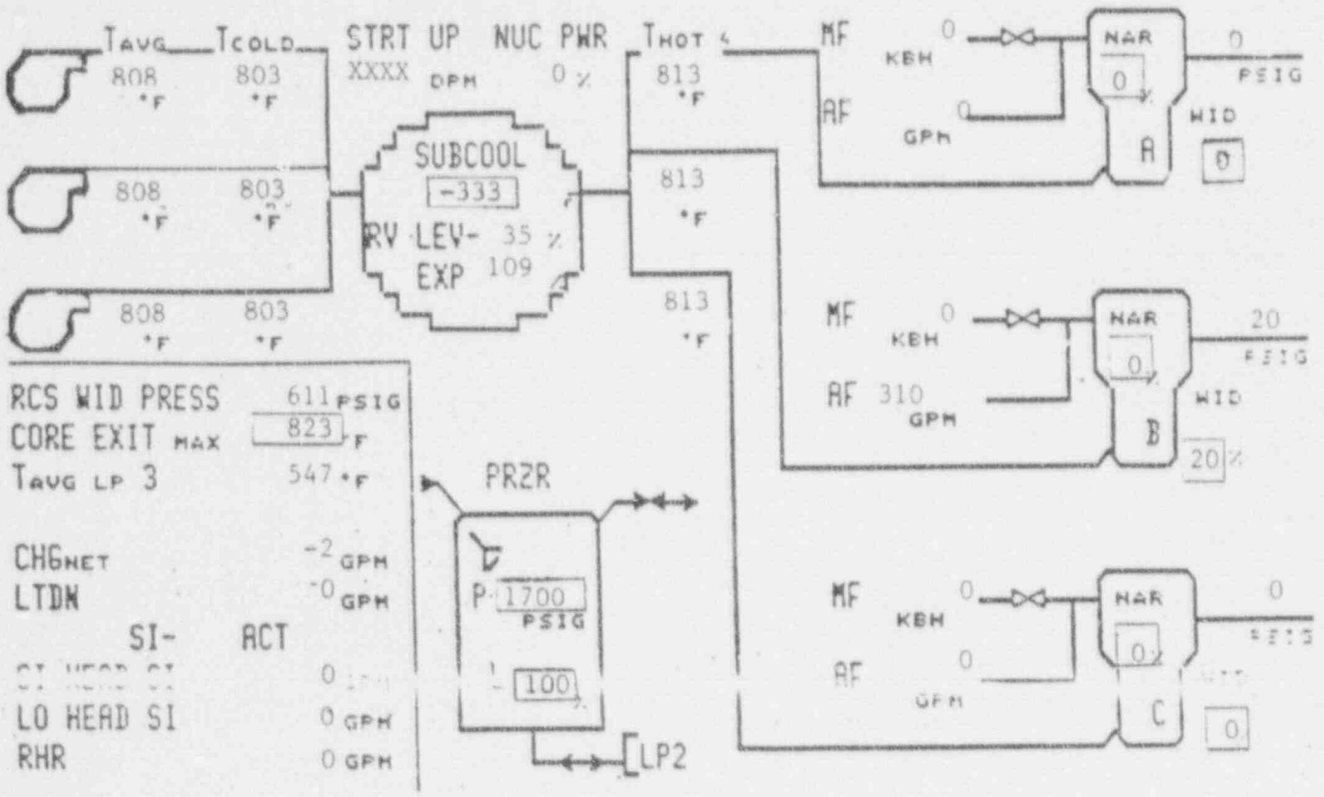

CONTAINMENT				ELECTRICAL			
Press. (PSIA)	10.46	Temp. (F)	103.0	SSST 2A	OOS	SSST 2B	OOS
RHS	AVAIL	Sump (In)	0.2	2 AE	OK	2 DF	OOS
Quench Spray	AVAIL	Recirc Spray	AVAIL	2 N	OK	2 P	OOS
HHSI	YES	CIA	YES	DG 2-1	RUN	DG 2-2	OOS
LHSI	YES	CIB	NO	Batteries	OK	Vital Buses	OK

Time 2021

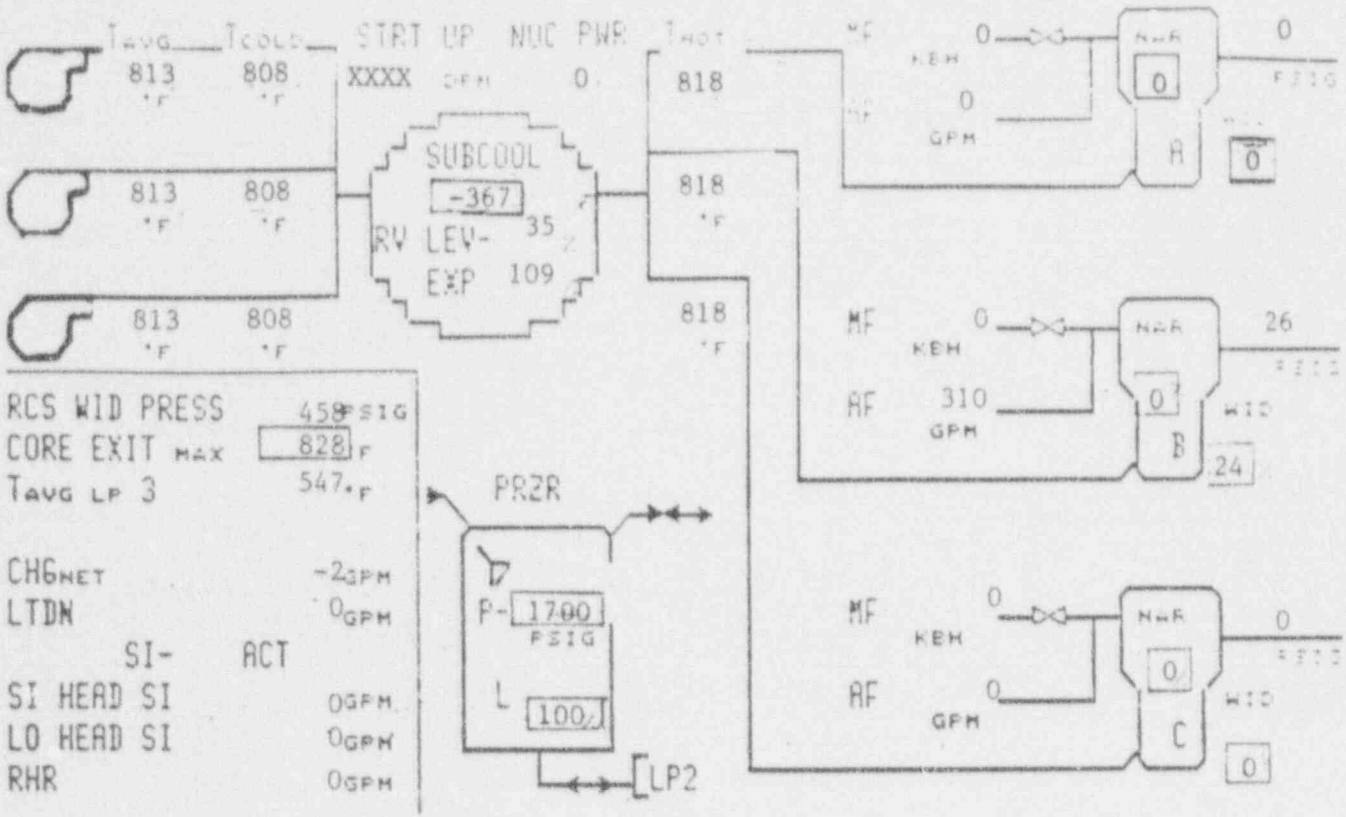

CONTAINMENT				ELECTRICAL			
Press. (PSIA)	10.45	Temp. (F)	102.9	SSST 2A	OOS	SSST 2B	OOS
RHS	AVAIL	Sump (In)	0.2	2 AE	OK	2 DF	OOS
Quench Spray	AVAIL	Recirc Spray	AVAIL	2 N	OK	2 P	OOS
HHSI	YES	CIA	YES	DG 2-1	RUN	DG 2-2	OOS
LHSI	YES	CIB	NO	Batteries	OK	Vital Buses	OK

Time 2024

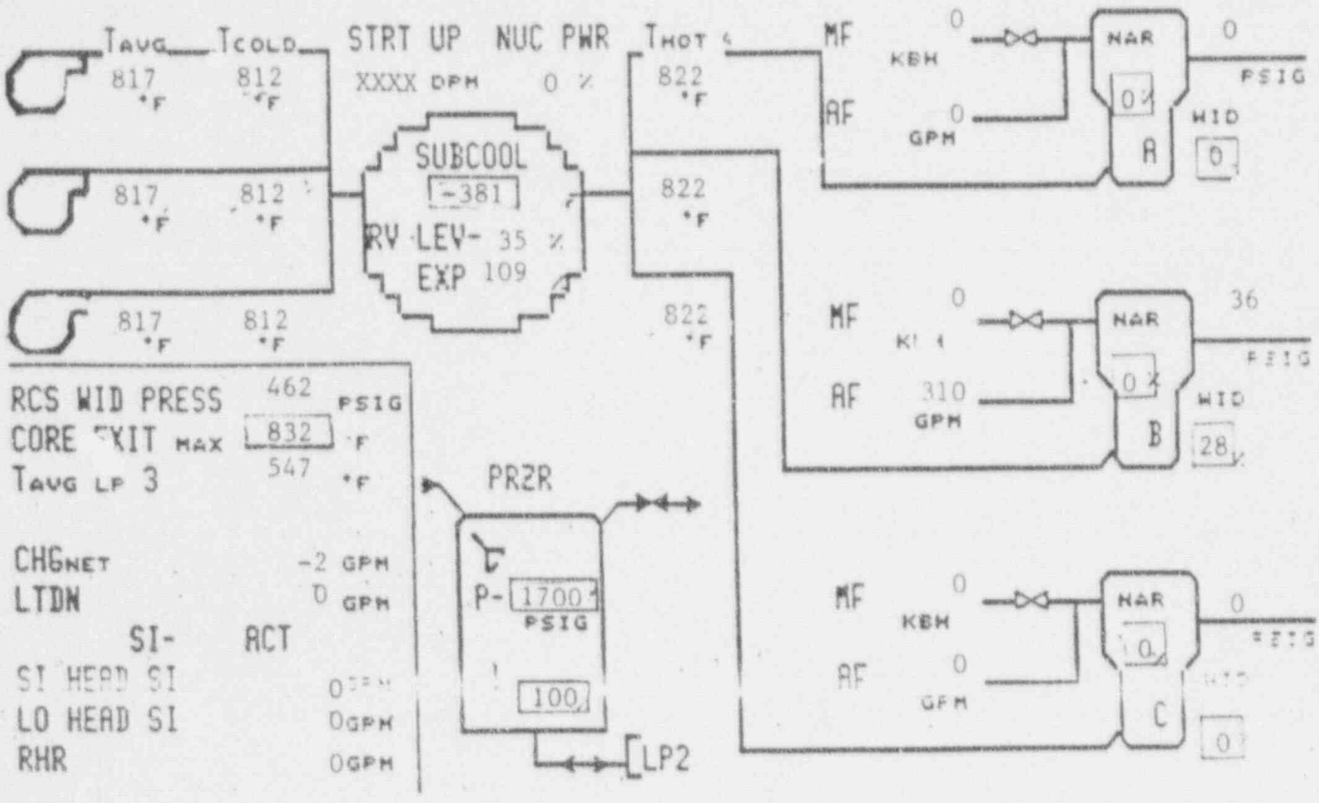

+------------+
|CONTAINMENT|
+------------+

Press. (PSIA)	10.46	Temp. (F)	103.0
RHS	AVAIL	Sump (In)	0.2
Quench Spray	AVAIL	Recirc Spray	AVAIL
HHSI	YES	CIA	YES
LHSI	YES	CIB	NO

+-----------+
|ELECTRICAL|
+-----------+

SSST 2A	OOS	SSST 2B	OOS
2 AE	OK	2 DF	OOS
2 N	OK	2 P	OOS
DG 2-1	RUN	DG 2-2	OOS
Batteries	OK	Vital Buses	OK

+============+
| Time 2027 |
+============+

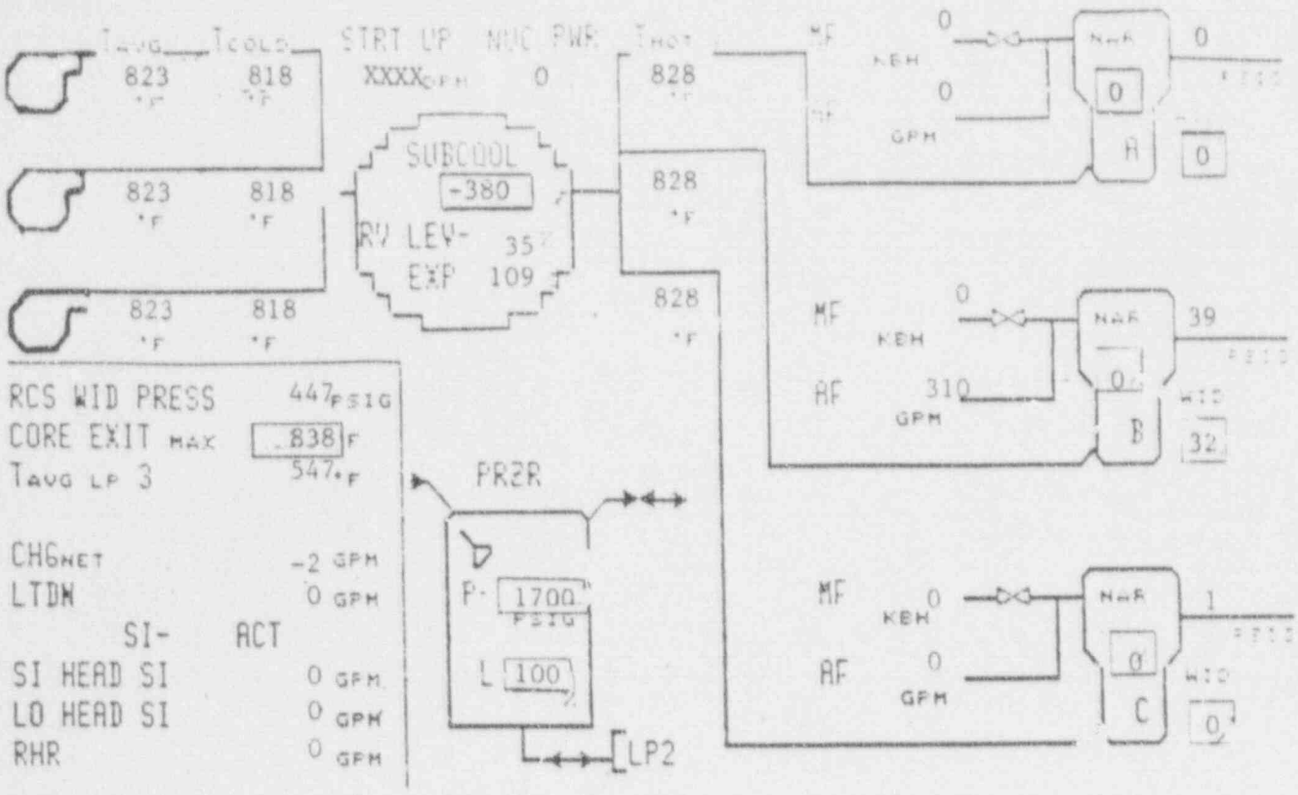

CONTAINMENT				ELECTRICAL			
Press. (PSIA)	10.46	Temp. (F)	102.9	SSST 2A	OOS	SSST 2B	OOS
RHS	AVAIL	Sump (In)	0.2	2 AE	OK	2 DF	OOS
Quench Spray	AVAIL	Recirc Spray	AVAIL	2 N	OK	2 P	OOS
HHSI	YES	CIA	YES	DG 2-1	RUN	DG 2-2	OOS
LHSI	YES	CIB	NO	Batteries	OK	Vital Buses	OK

Time 2030

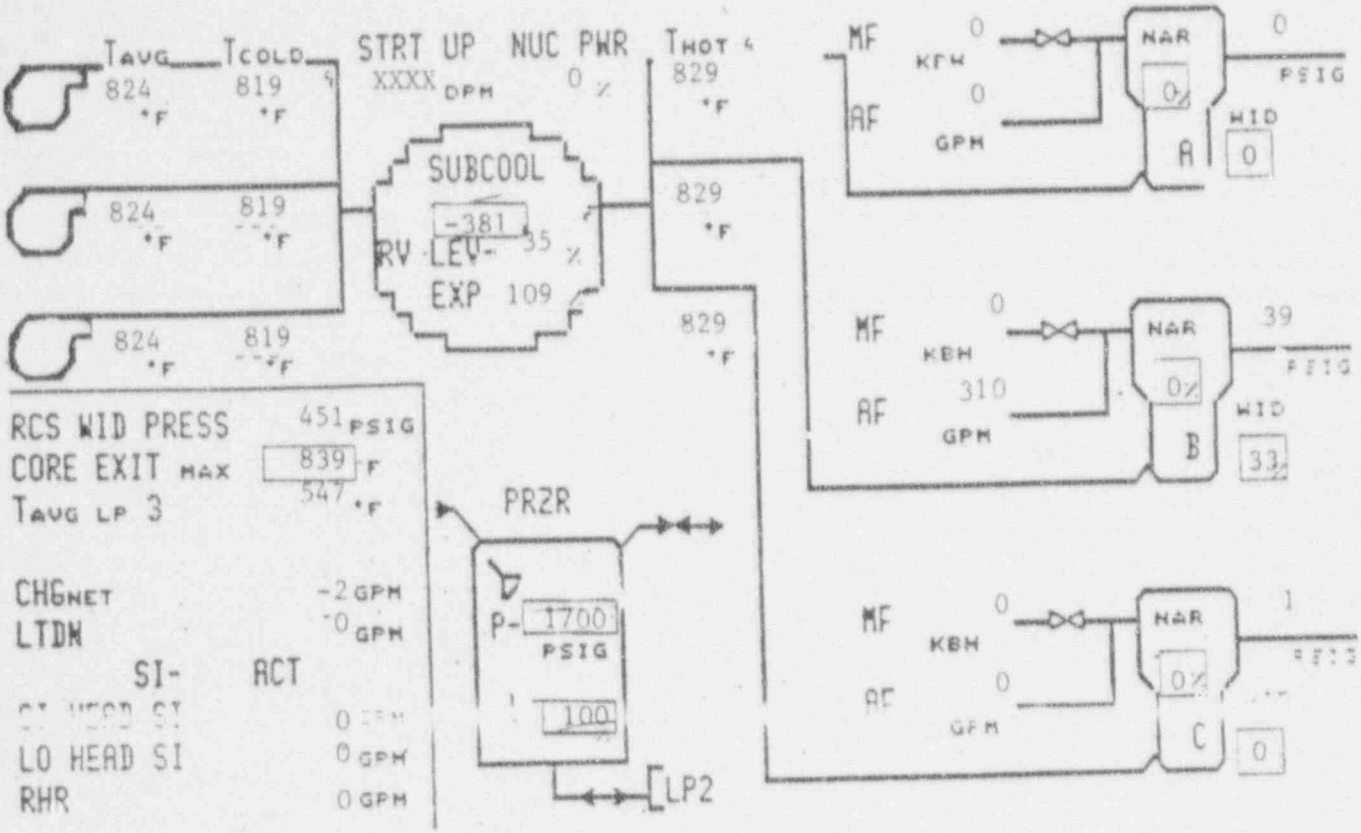

CONTAINMENT				ELECTRICAL			
Press. (PSIA)	10.46	Temp. (F)	103.0	SSST 2A	OOS	SSST 2B	OOS
RHS	AVAIL	Sump (In)	0.2	2 AE	OK	2 DF	OOS
Quench Spray	AVAIL	Recirc Spray	AVAIL	2 N	OK	2 P	OOS
HHSI	YES	CIA	YES	DG 2-1	RUN	DG 2-2	OOS
LHSI	YES	CIB	NO	Batteries	OK	Vital Buses	OK

Time 2033

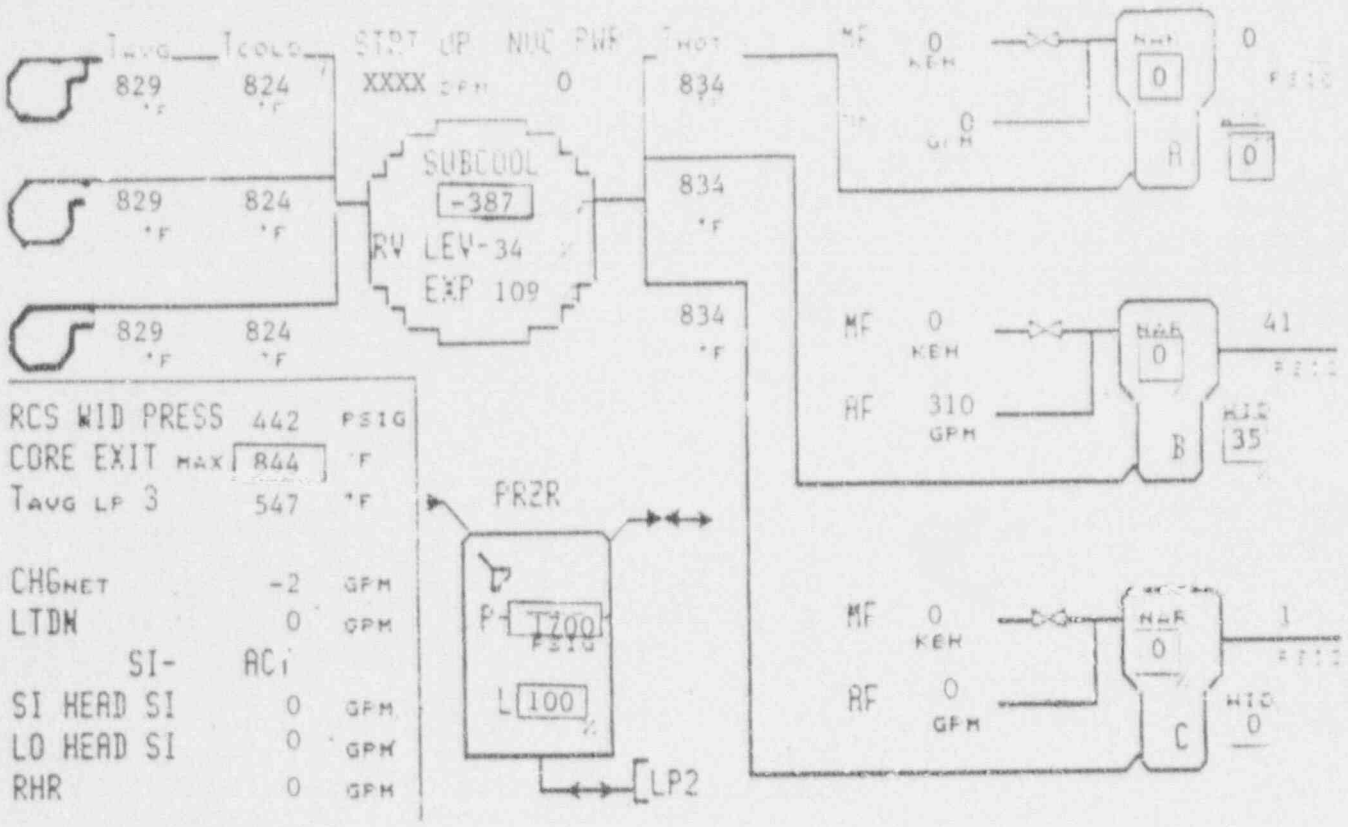

CONTAINMENT				ELECTRICAL			
Press. (PSIA)	10.45	Temp. (F)	102.9	SSST 2A	OOS	SSST 2B	OOS
RHS	AVAIL	Sump (In)	0.2	2 AE	OK	2 DF	OOS
Quench Spray	AVAIL	Recirc Spray	AVAIL	2 N	OK	2 P	OOS
HHSI	YES	CIA	YES	DG 2-1	RUN	DG 2-2	OOS
LHSI	YES	CIB	NO	Batteries	OK	Vital Buses	OK

Time 2036

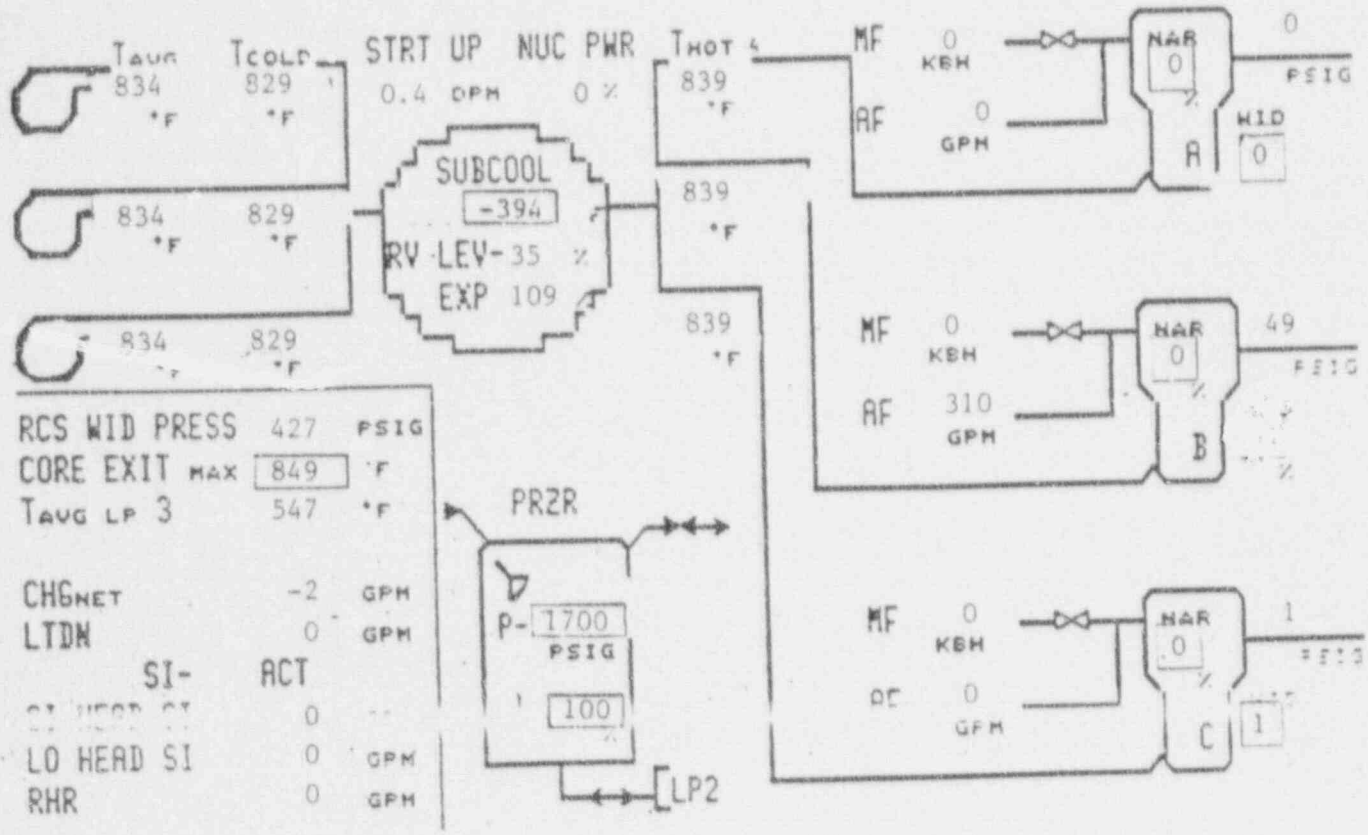

CONTAINMENT				ELECTRICAL			
Press. (PSIA)	10.46	Temp. (F)	103.0	SSST 2A	OOS	SSST 2B	OOS
RHS	AVAIL	Sump (In)	0.2	2 AE	OK	2 DF	OOS
Quench Spray	AVAIL	Recirc Spray	AVAIL	2 N	OK	2 P	OOS
HHSI	YES	CIA	YES	DG 2-1	RUN	DG 2-2	OOS
LHSI	YES	CIB	NO	Batteries	OK	Vital Buses	OK

Time 2039

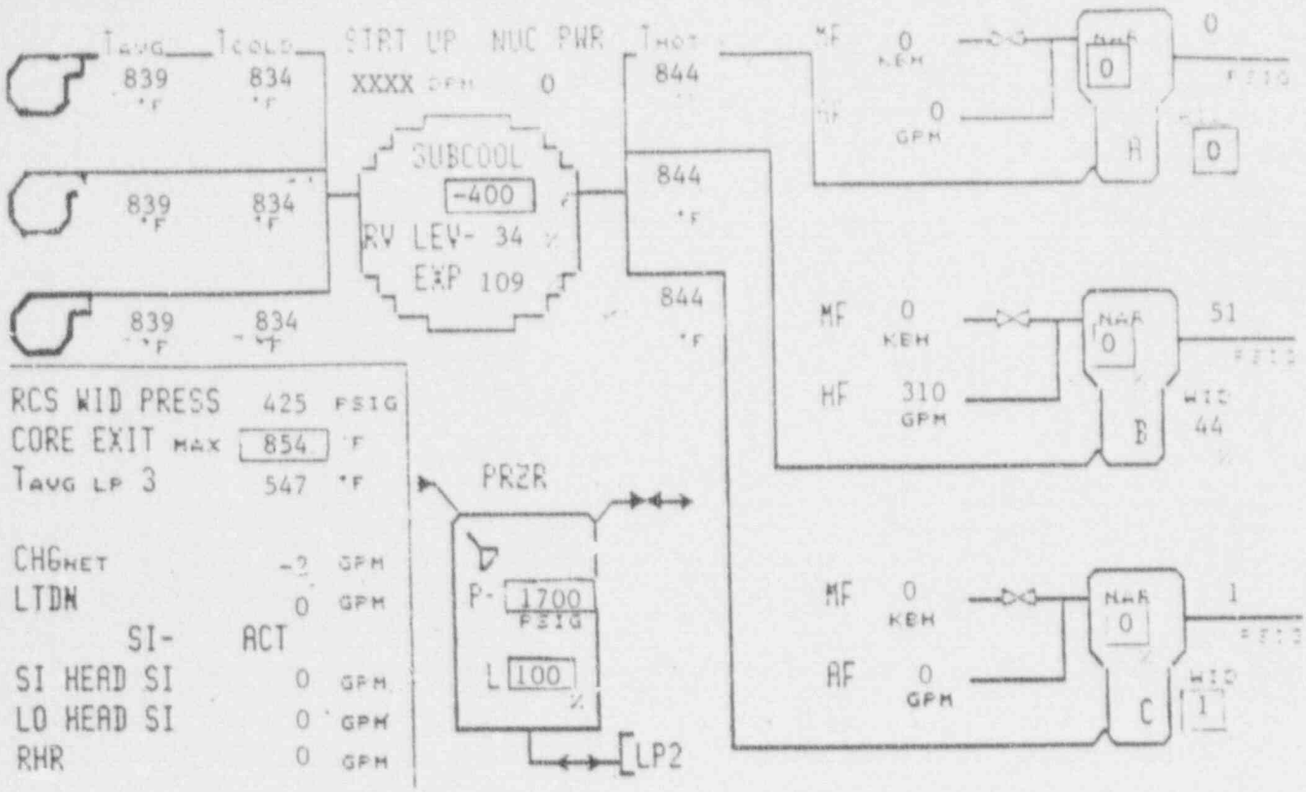

CONTAINMENT				ELECTRICAL			
Press. (PSIA)	10.45	Temp. (F)	102.9	SSST 2A	OOS	SSST 2B	OOS
RHS	AVAIL	Sump (In)	0.2	2 AE	OK	2 DF	OOS
Quench Spray	AVAIL	Recirc Spray	AVAIL	2 N	OK	2 P	OOS
HHSI	YES	CIA	YES	DG 2-1	RUN	DG 2-2	OOS
LHSI	YES	CIB	NO	Batteries	OK	Vital Buses	OK

Time 2042

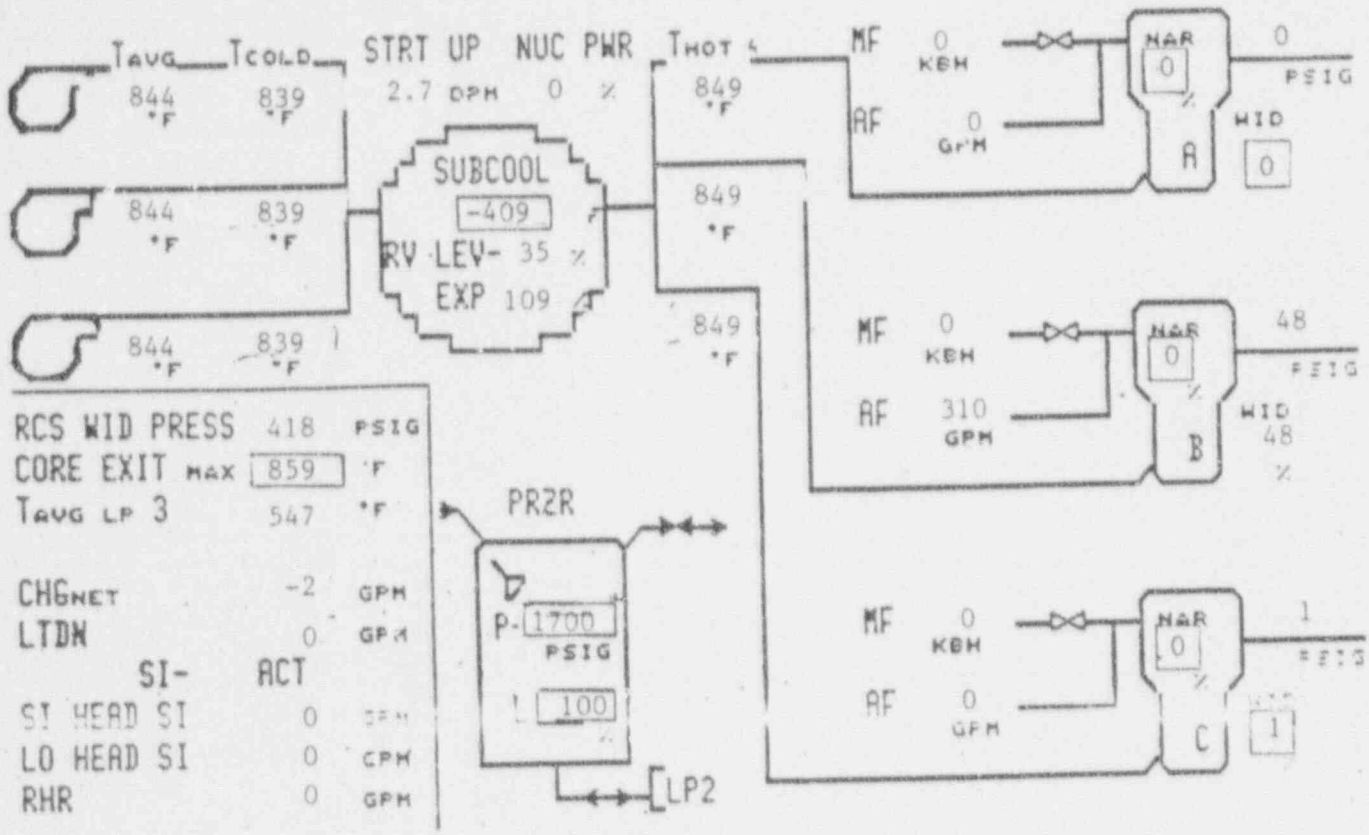

CONTAINMENT				ELECTRICAL			
Press. (PSIA)	10.46	Temp. (F)	103.0	SSST 2A	OOS	SSST 2B	OOS
RHS	AVAIL	Sump (In)	0.2	2 AE	OK	2 DF	OOS
Quench Spray	AVAIL	Recirc Spray	AVAIL	2 N	OK	2 P	OOS
HHSI	YES	CIA	YES	DG 2-1	RUN	DG 2-2	OOS
LHSI	YES	CIB	NO	Batteries	OK	Vital Buses	OK

Time 2045

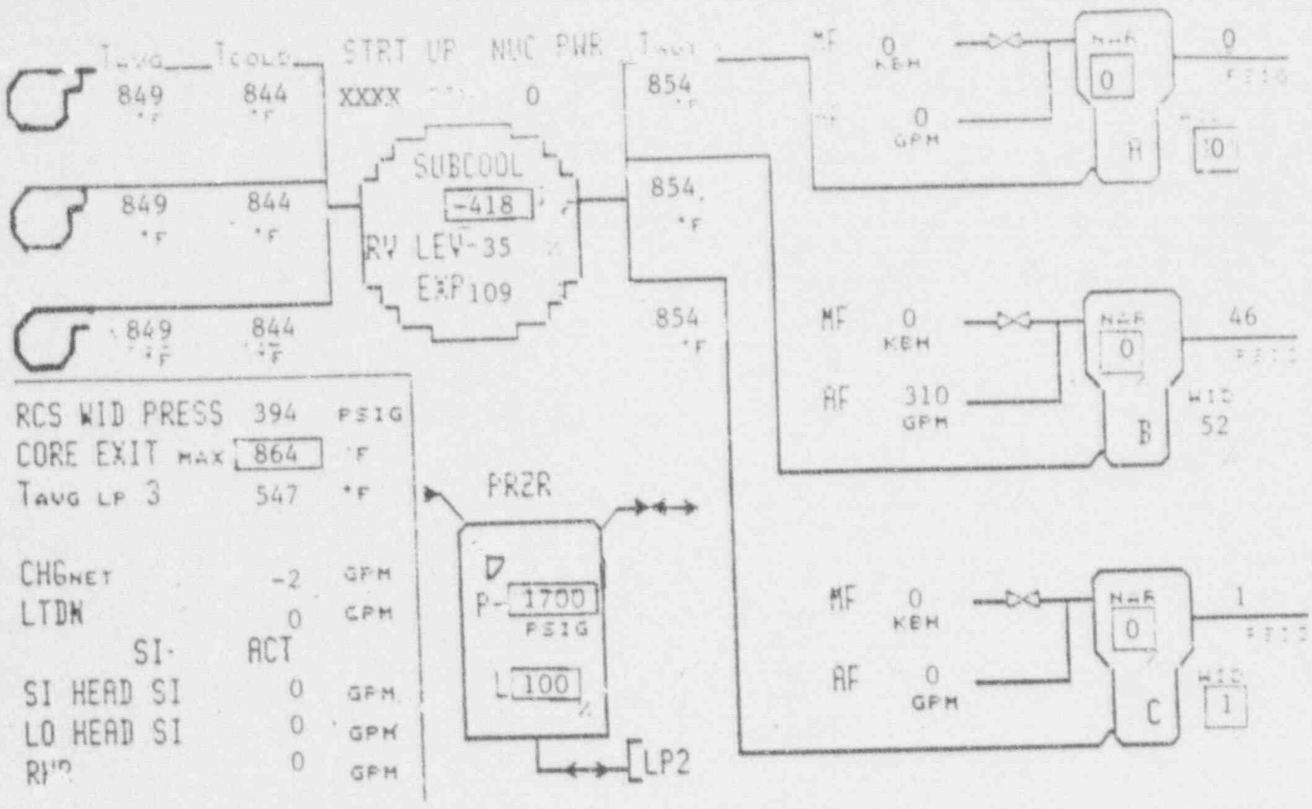

CONTAINMENT				ELECTRICAL			
Press. (PSIA)	10.45	Temp. (F)	102.9	SSST 2A	OOS	SSST 2B	OOS
RHS	AVAIL	Sump (In)	0.2	2 AE	OK	2 DF	OOS
Quench Spray	AVAIL	Recirc Spray	AVAIL	2 N	OK	2 P	OOS
HHSI	YES	CIA	YES	DG 2-1	RUN	DG 2-2	OOS
LHSI	YES	CIB	NO	Batteries	OK	Vital Buses	OK

Time 2048

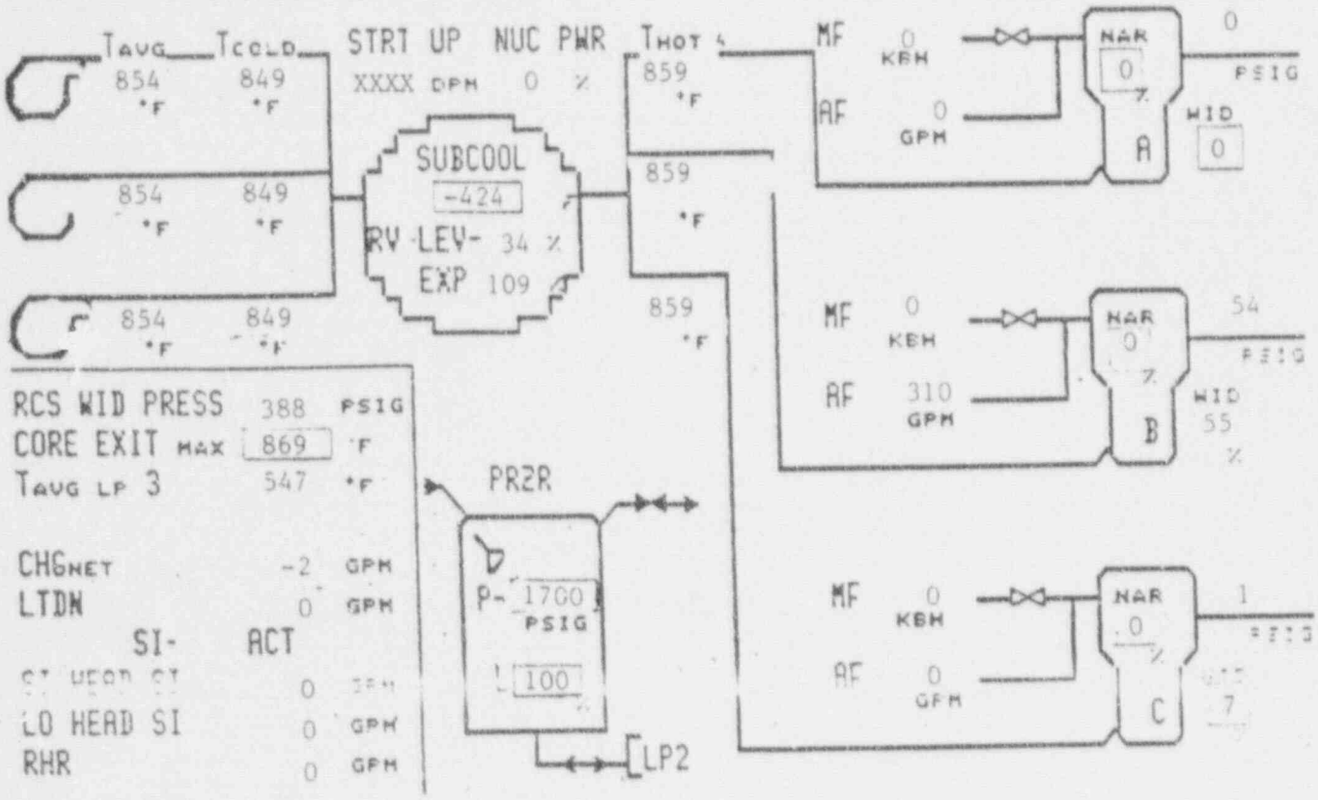

CONTAINMENT				ELECTRICAL			
Press. (PSIA)	10.46	Temp. (F)	103.0	SSST 2A	OOS	SSST 2B	OOS
RHS	AVAIL	Sump (In)	0.2	2 AE	OK	2 DF	OOS
Quench Spray	AVAIL	Recirc Spray	AVAIL	2 N	OK	2 P	OOS
HHSI	YES	CIA	YES	DG 2-1	RUN	DG 2-2	OOS
LHSI	YES	CIB	NO	Batteries	OK	Vital Buses	OK

Time 2051

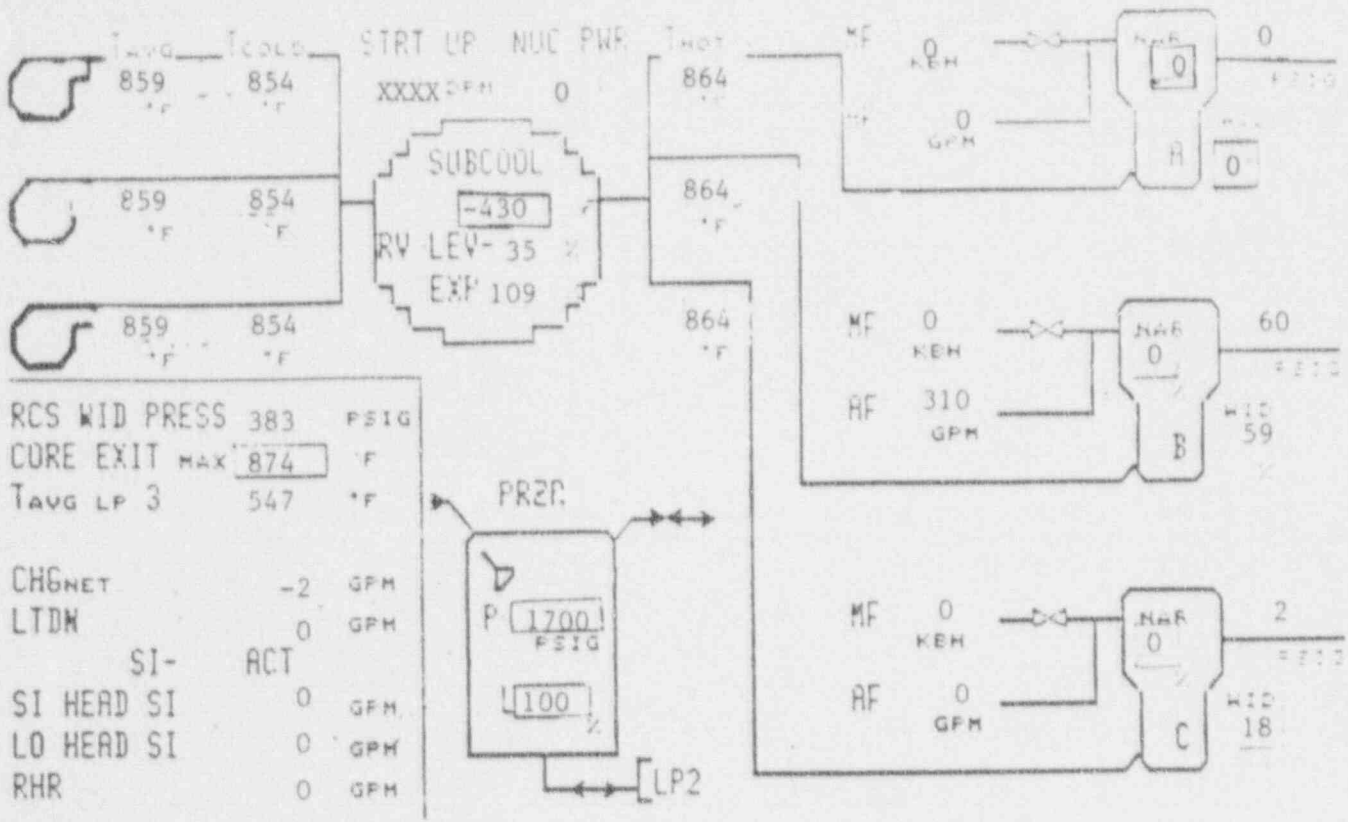

CONTAINMENT				ELECTRICAL			
Press. (PSIA)	10.45	Temp. (F)	102.9	SSST 2A	OOS	SSST 2B	OOS
RHS	AVAIL	Sump (In)	0.2	2 AE	OK	2 DF	OOS
Quench Spray	AVAIL	Recirc Spray	AVAIL	2 N	OK	2 P	OOS
HHSI	YES	CIA	YES	DG 2-1	RUN	DG 2-2	OOS
LHSI	YES	CIB	NO	Batteries	OK	Vital Buses	OK

Time 2054

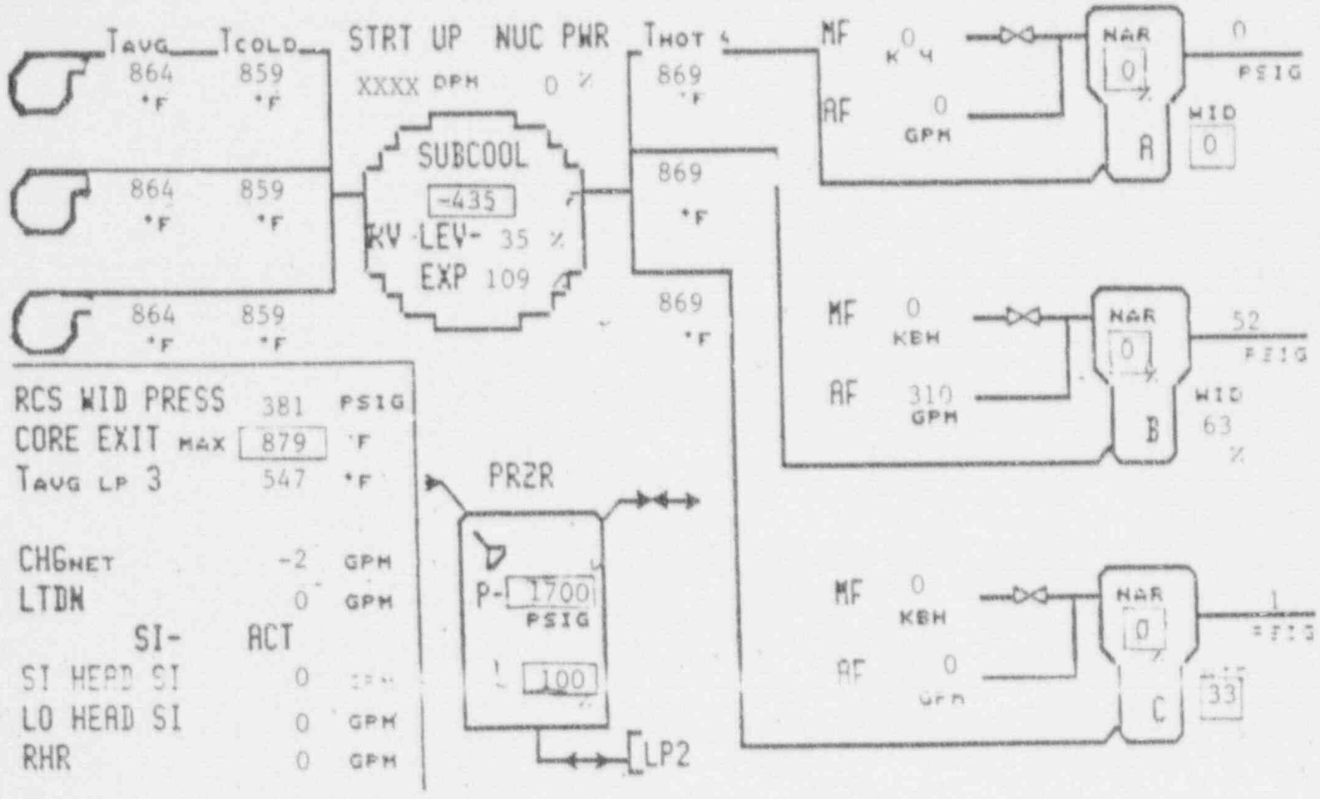

CONTAINMENT				ELECTRICAL			
Press. (PSIA)	10.46	Temp. (F)	103.0	SSST 2A	OOS	SSST 2B	OOS
RHS	AVAIL	Sump (In)	0.2	2 AE	OK	2 DF	OOS
Quench Spray	AVAIL	Recirc Spray	AVAIL	2 N	OK	2 P	OOS
HHSI	YES	CIA	YES	DG 2-1	RUN	DG 2-2	OOS
LHSI	YES	CIB	NO	Batteries	OK	Vital Buses	OK

Time 2057

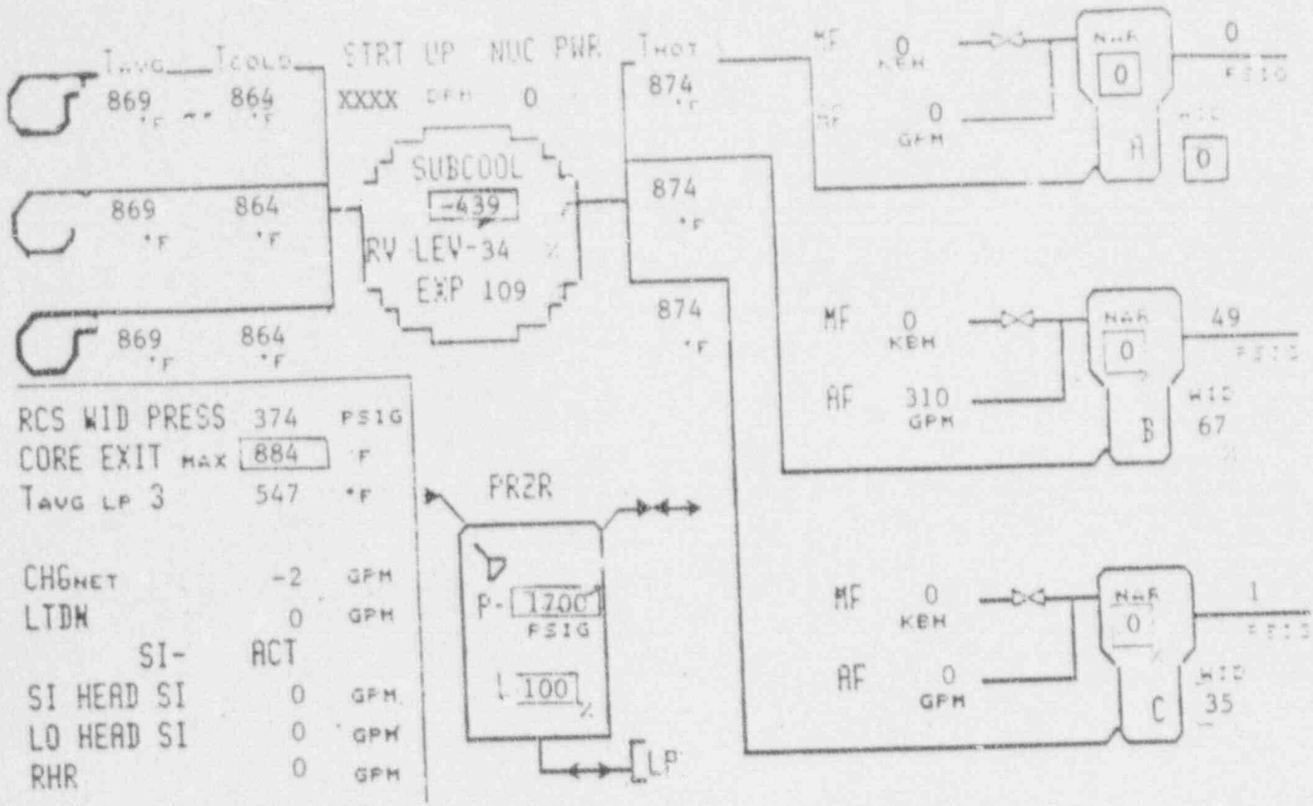

CONTAINMENT				ELECTRICAL			
Press. (PSIA)	10.45	Temp. (F)	102.9	SSST 2A	OOS	SSST 2B	OOS
RHS	AVAIL	Sump (In)	0.2	2 AE	OK	2 DF	OOS
Quench Spray	AVAIL	Recirc Spray	AVAIL	2 N	OK	2 P	OOS
HHSI	YES	CIA	YES	DG 2-1	RUN	DG 2-2	OOS
LHSI	YES	CIB	NO	Batteries	OK	Vital Buses	OK

Time 2100

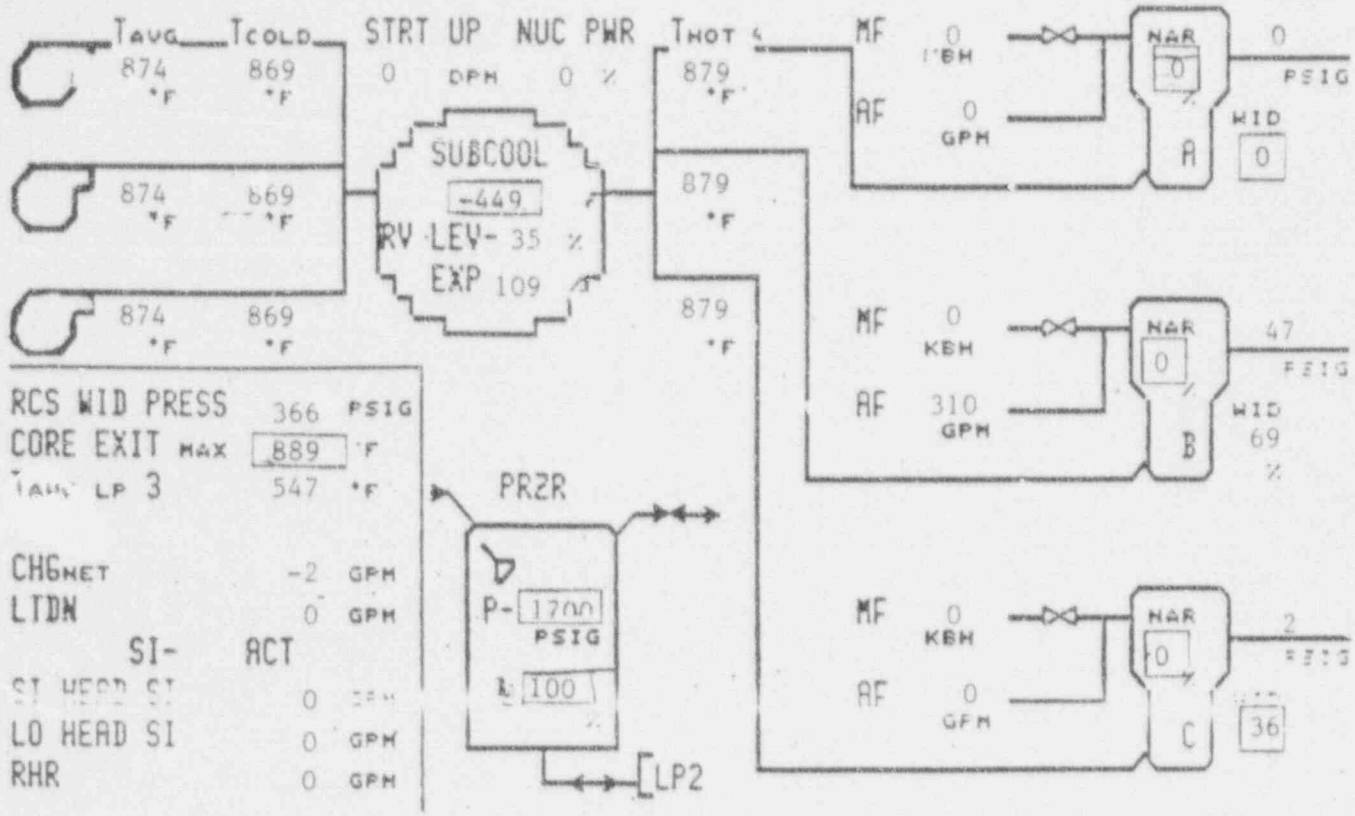

CONTAINMENT				ELECTRICAL			
Press. (PSIA)	10.46	Temp. (F)	103.0	SSST 2A	OOS	SSST 2B	OOS
RHS	AVAIL	Sump (In)	0.2	2 AE	OK	2 DF	OOS
Quench Spray	AVAIL	Recirc Spray	AVAIL	2 N	OK	2 P	OOS
HHSI	YES	CIA	YES	DG 2-1	RUN	DG 2-2	OOS
LHSI	YES	CIB	NO	Batteries	OK	Vital Buses	OK

Time 2103

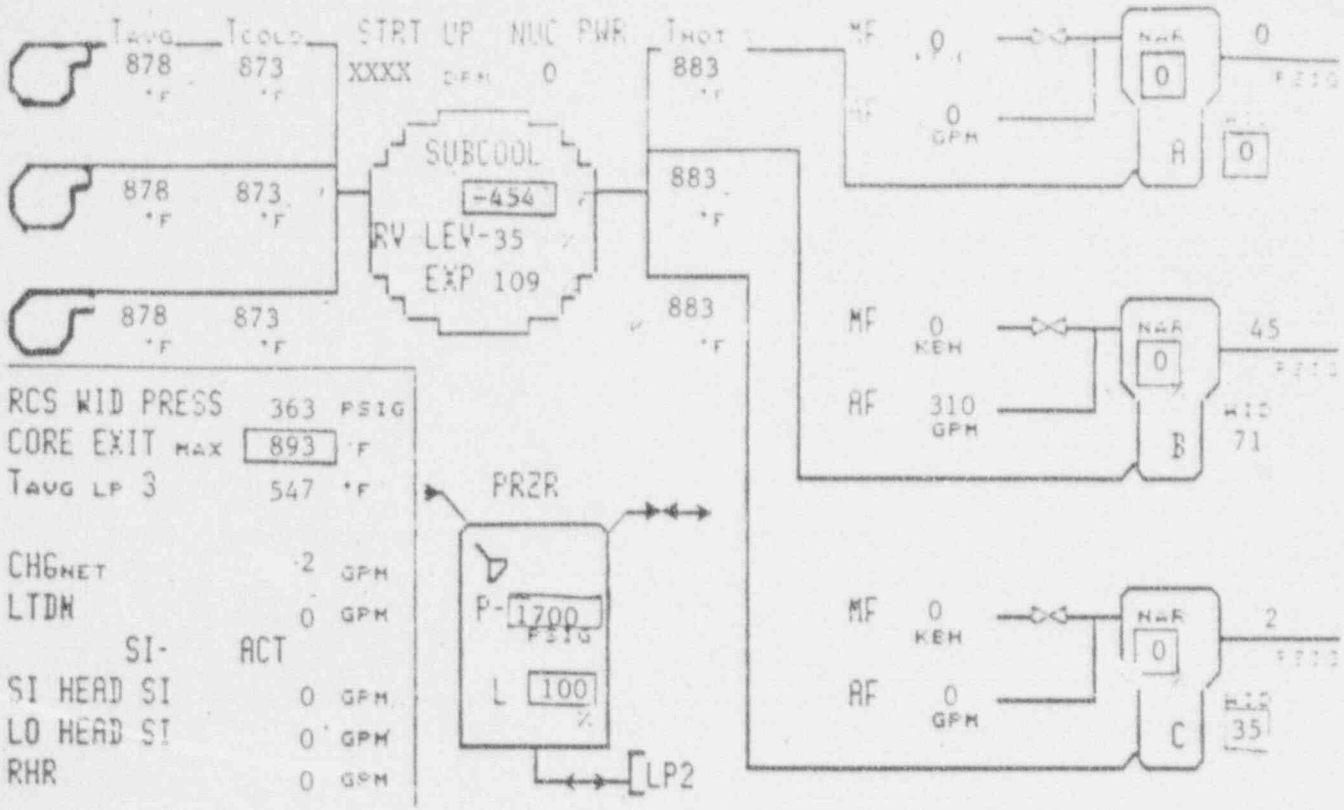

CONTAINMENT				ELECTRICAL			
Press. (PSIA)	10.45	Temp. (F)	102.9	SSST 2A	OOS	SSST 2B	OOS
RHS	AVAIL	Sump (In)	0.2	2 AE	OK	2 DF	OOS
Quench Spray	AVAIL	Recirc Spray	AVAIL	2 N	OK	2 P	OOS
HHSI	YES	CIA	YES	DG 2-1	RUN	DG 2-2	OOS
LHSI	YES	CIB	NO	Batteries	OK	Vital Buses	OK

Time 2106

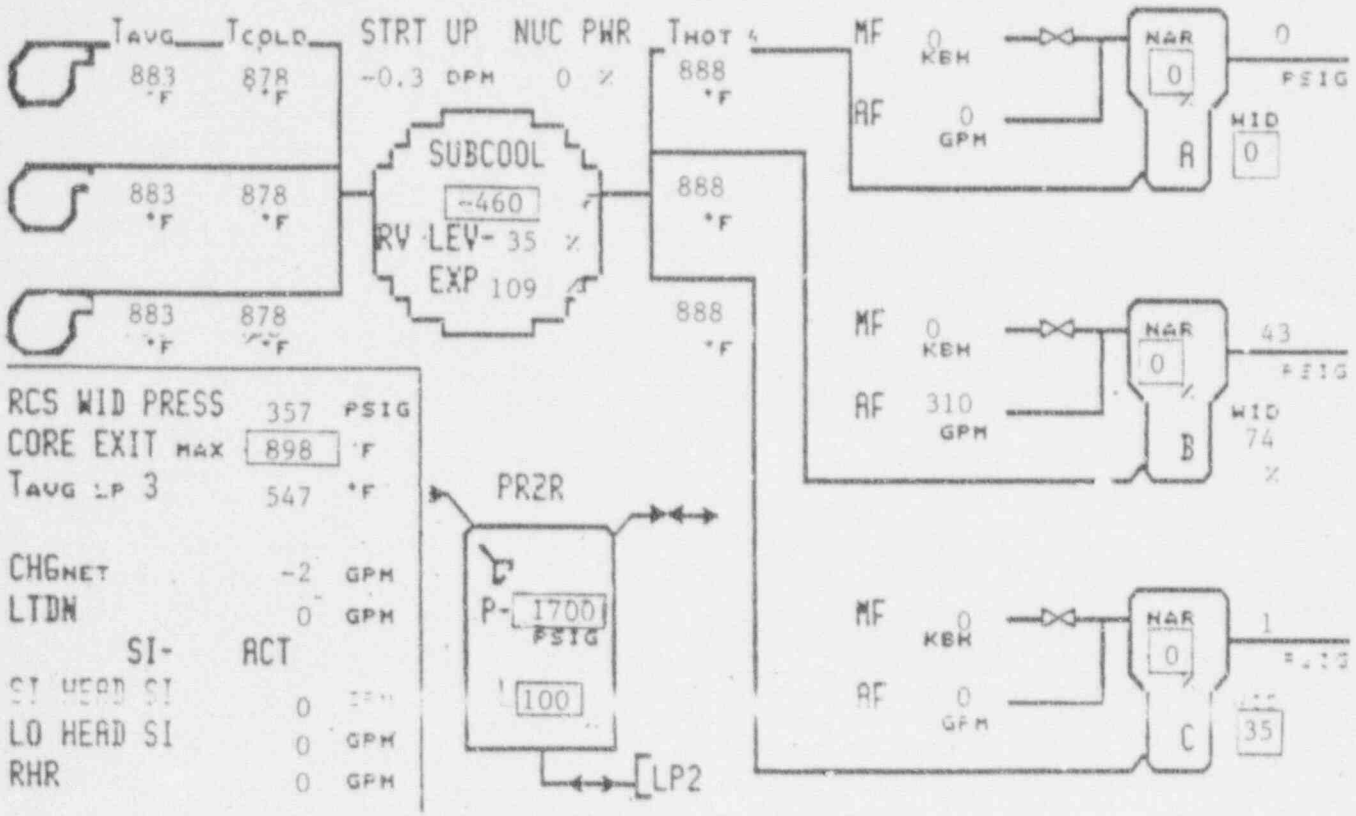

CONTAINMENT				ELECTRICAL			
Press. (PSIA)	10.46	Temp. (F)	103.0	SSST 2A	OOS	SSST 2B	OOS
RHS	AVAIL	Sump (In)	0.2	2 AE	OK	2 DF	OOS
Quench Spray	AVAIL	Recirc Spray	AVAIL	2 N	OK	2 P	OOS
HHSI	YES	CIA	YES	DG 2-1	RUN	DG 2-2	OOS
LHSI	YES	CIB	NO	Batteries	OK	Vital Buses	OK

Time 2109

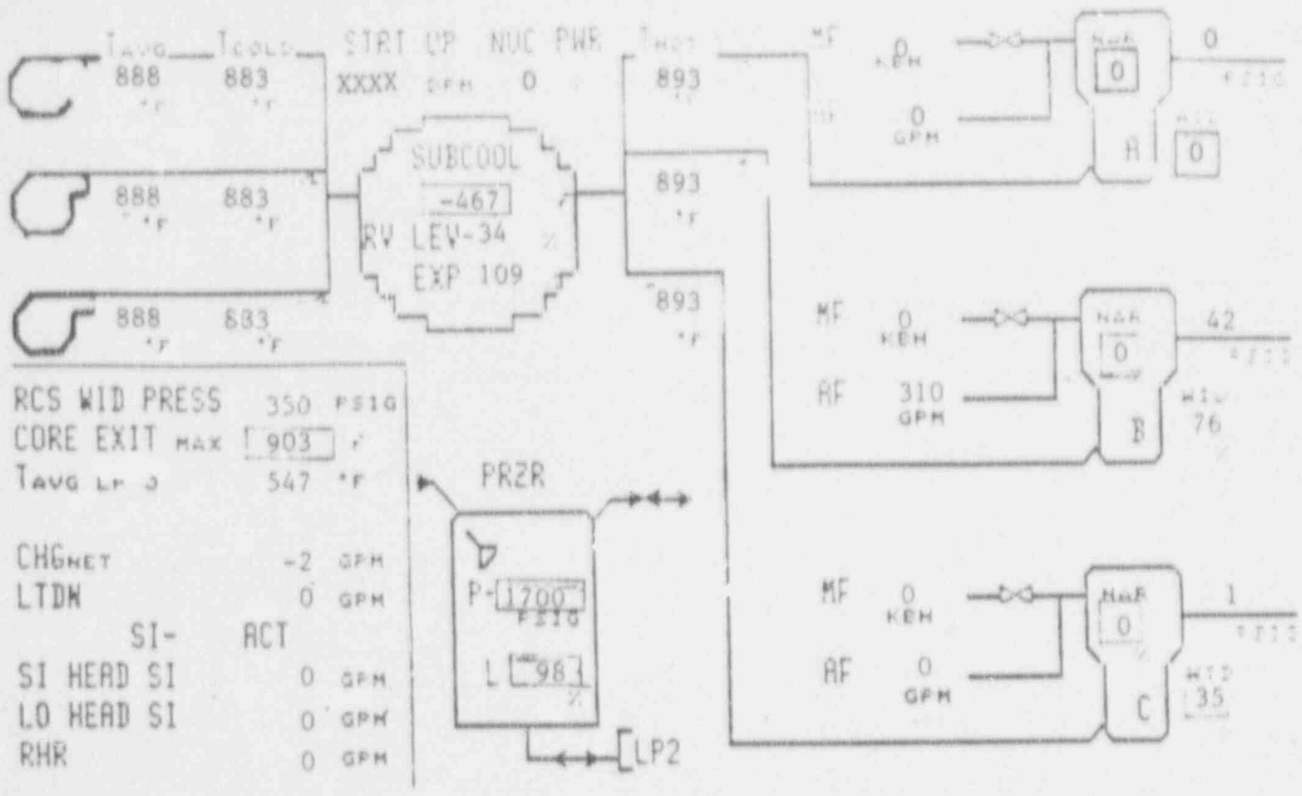

CONTAINMENT				ELECTRICAL			
Press. (PSIA)	10.45	Temp. (F)	102.9	SSST 2A	OOS	SSST 2B	OOS
RHS	AVAIL	Sump (In)	0.2	2 AE	OK	2 F	OOS
Quench Spray	AVAIL	Recirc Spray	AVAIL	2 N	OK	2 P	OOS
HHSI	YES	CIA	YES	DG 2-1	RUN	DG 2-2	OOS
LHSI	YES	CIB	NO	Batteries	OK	Vital Buses	OK

Time 2112

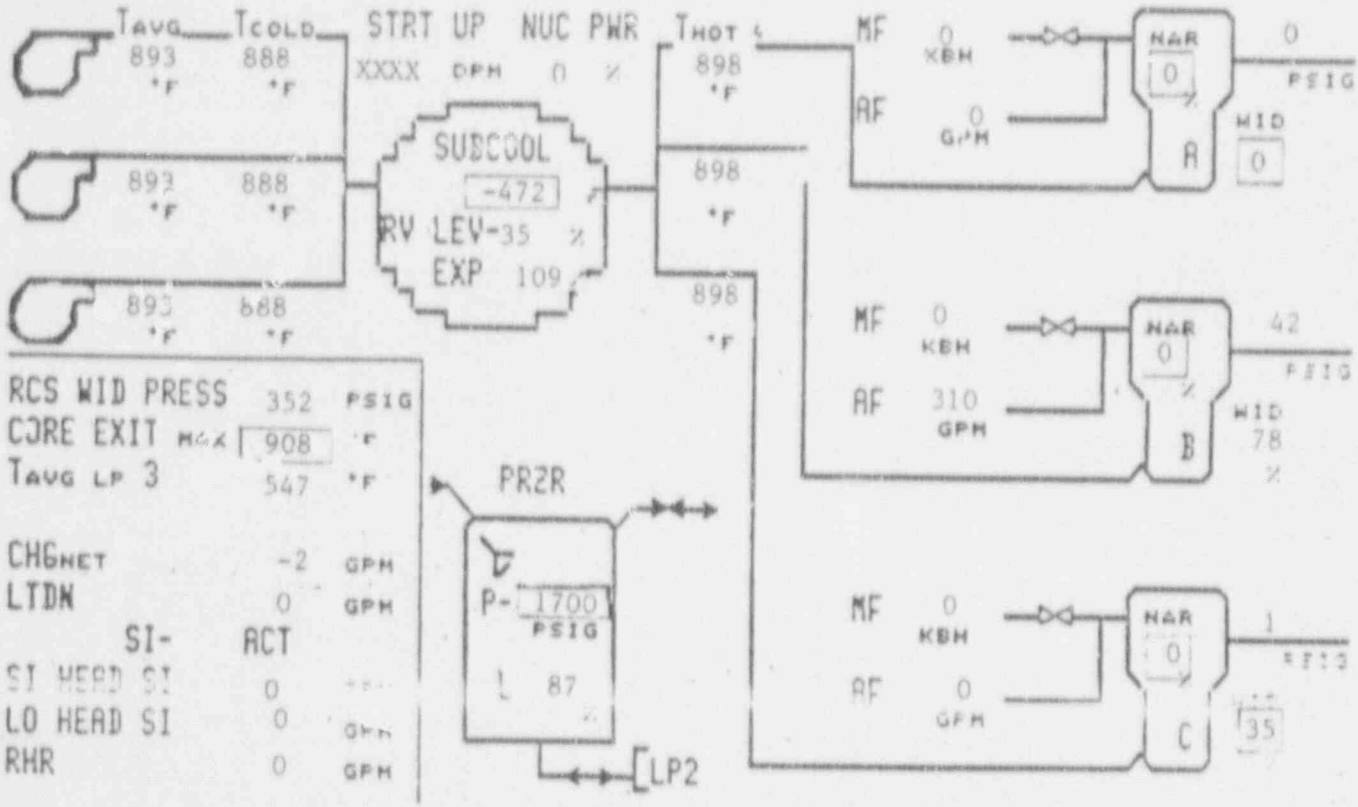

CONTAINMENT				ELECTRICAL			
Press. (PSIA)	10.46	Temp. (F)	103.0	SSST 2A	OOS	SSST 2B	OOS
RHS	AVAIL	Sump (In)	0.2	2 AE	OK	2 DF	OOS
Quench Spray	AVAIL	Recirc Spray	AVAIL	2 N	OK	2 P	OOS
HHSI	YES	CIA	YES	DG 2-1	RUN	DG 2-2	OOS
LHSI	YES	CIB	NO	Batteries	OK	Vital Buses	OK

Time 2115

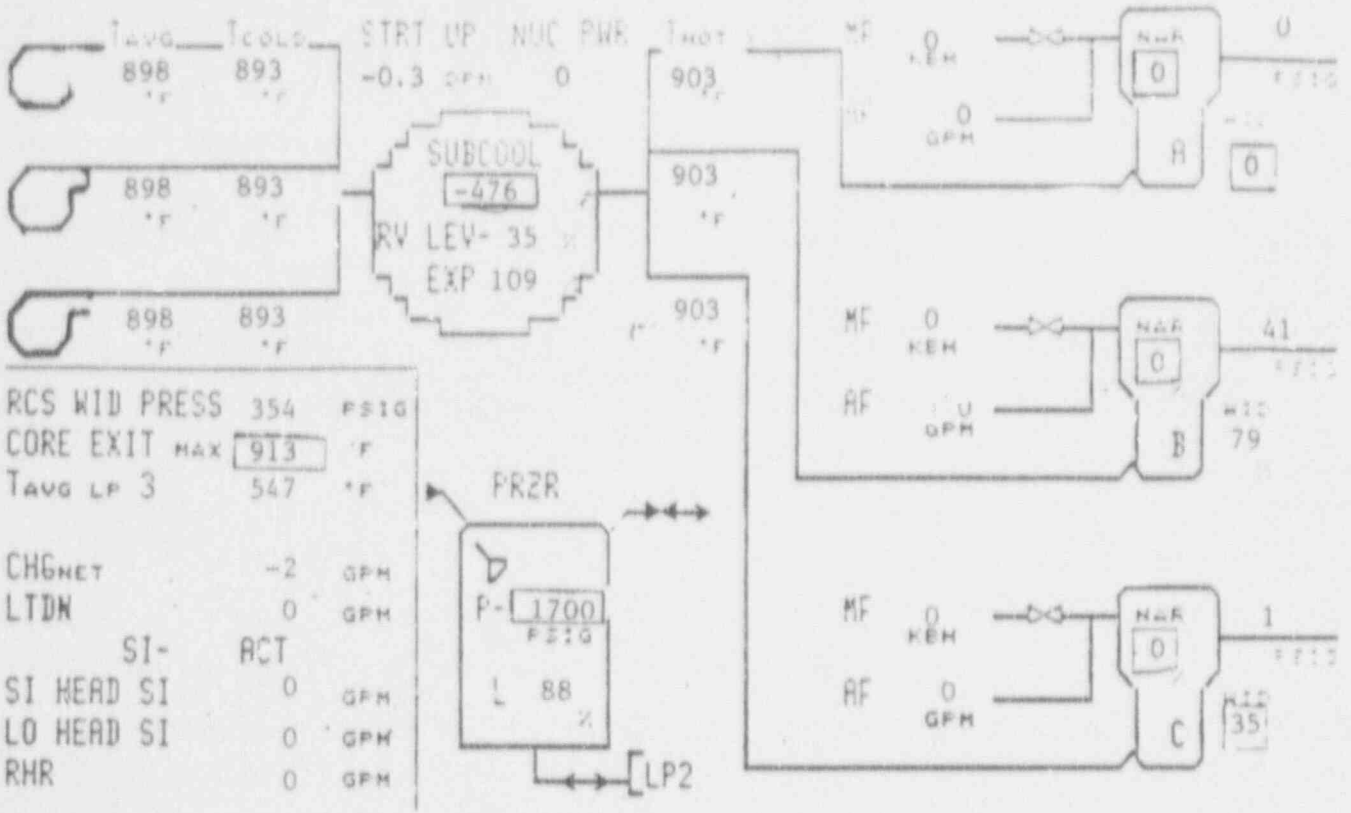

CONTAINMENT				ELECTRICAL			
Press. (PSIA)	10.45	Temp. (F)	102.9	SSST 2A	OOS	SSST 2B	OOS
RHS	AVAIL	Sump (In)	0.2	2 AE	OK	2 DF	OOS
Quench Spray	AVAIL	Recirc Spray	AVAIL	2 N	OK	2 P	OOS
HHSI	YES	CIA	YLS	DG 2-1	RUN	DG 2-2	OOS
LHSI	YES	CIB	NO	Batteries	OK	Vital Buses	OK

Time 2118

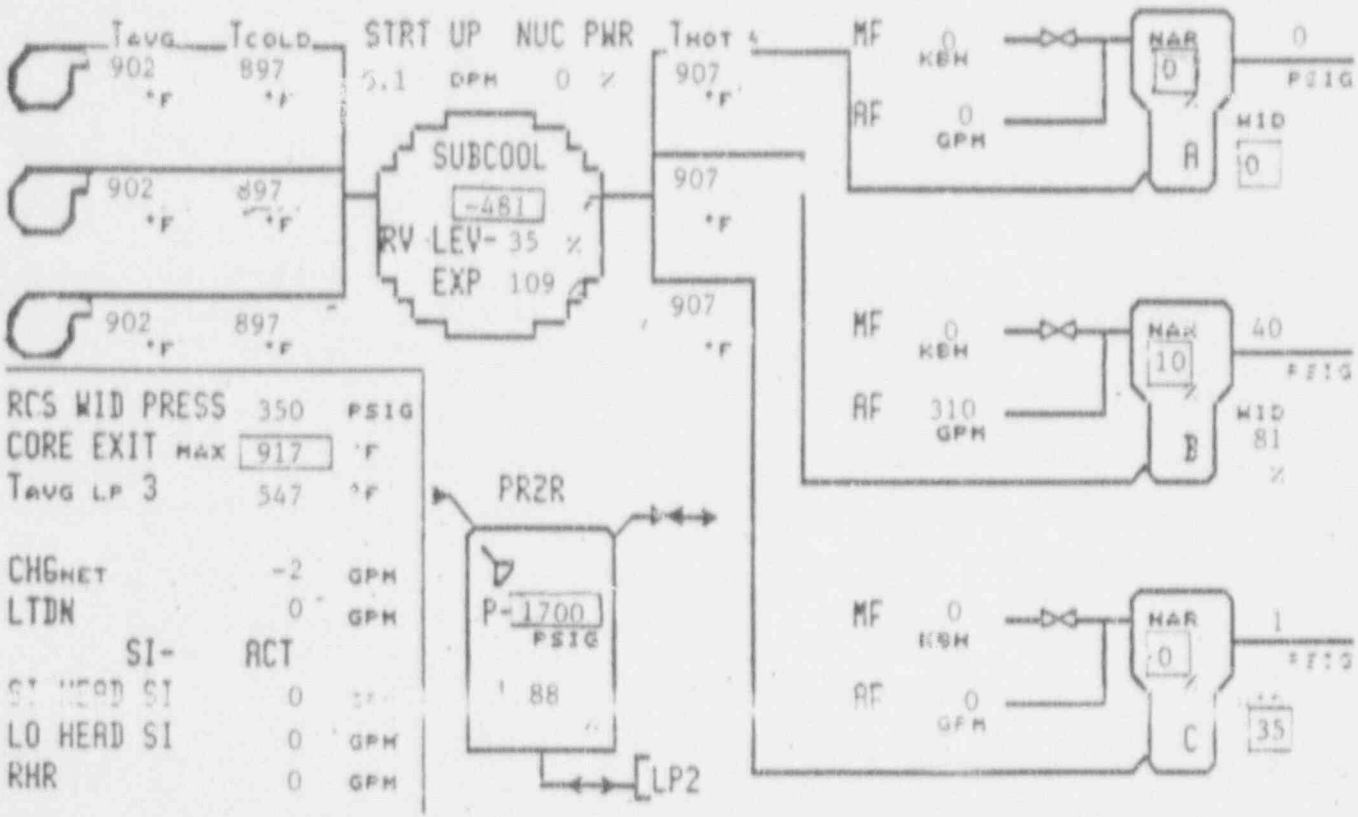

CONTAINMEN.				ELECTRICAL			
Press. (PSIA)	10.46	Temp. (F)	103.0	SSST 2A	OOS	SSST 2B	OOS
RHS	AVAIL	Sump (In)	0.2	2 AE	OK	2 DF	OOS
Quench Spray	AVAIL	Recirc Spray	AVAIL	2 N	OK	2 P	OOS
HHSI	YES	CIA	YES	DG 2-1	RUN	DG 2-2	OOS
LHSI	YES	CIB	NO	Batteries	OK	Vital Buses	OK

Time 2121

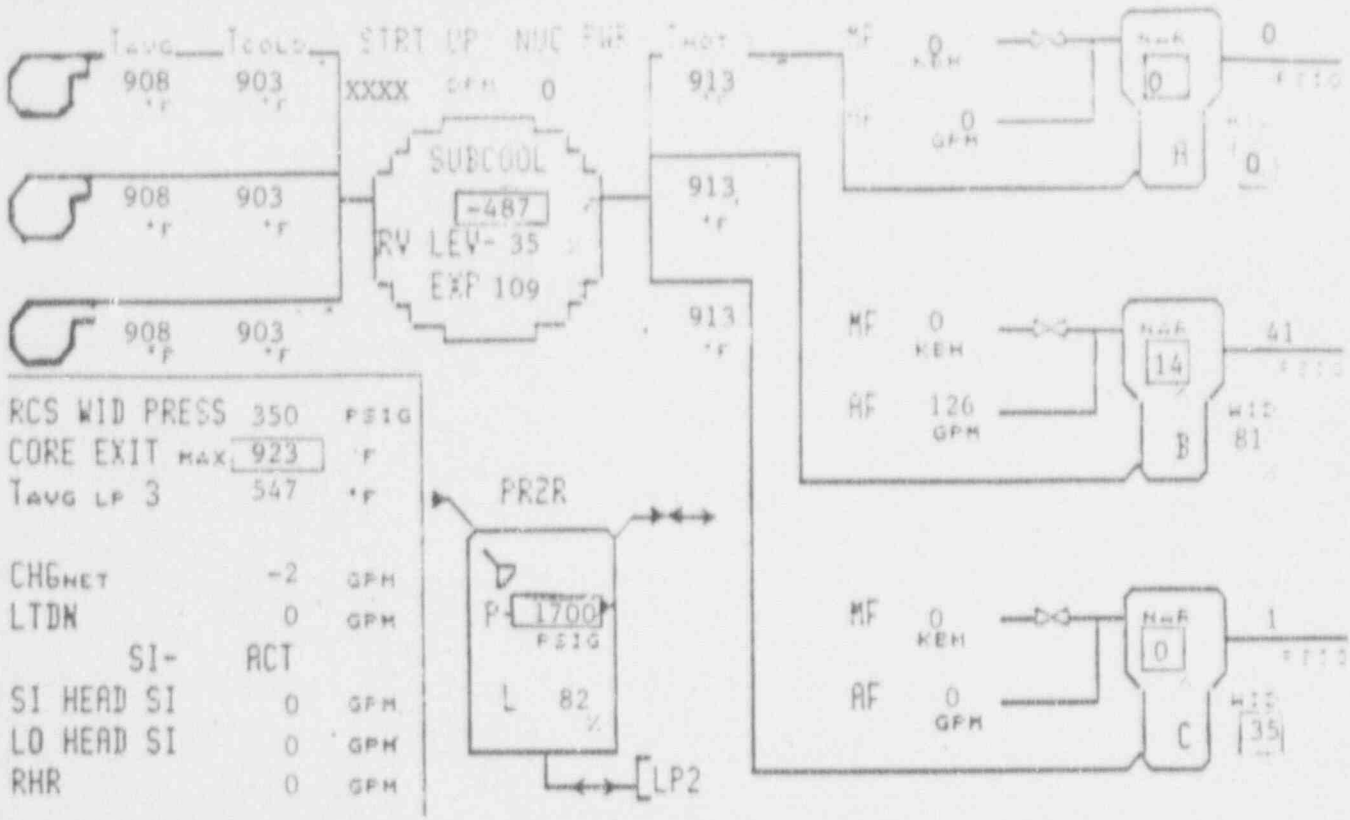

CONTAINMENT				ELECTRICAL			
Press. (PSIA)	10.45	Temp. (F)	102.9	SSST 2A	OOS	SSST 2B	OOS
RHS	AVAIL	Sump (In)	0.2	2 AE	OK	2 DF	OOS
Quench Spray	AVAIL	Recirc Spray	AVAIL	2 N	OK	2 P	OOS
HHSI	YES	CIA	YES	DG 2-1	RUN	DG 2-2	OOS
LHSI	YES	CIB	NO	Batteries	OK	Vital Buses	OK

Time 2124

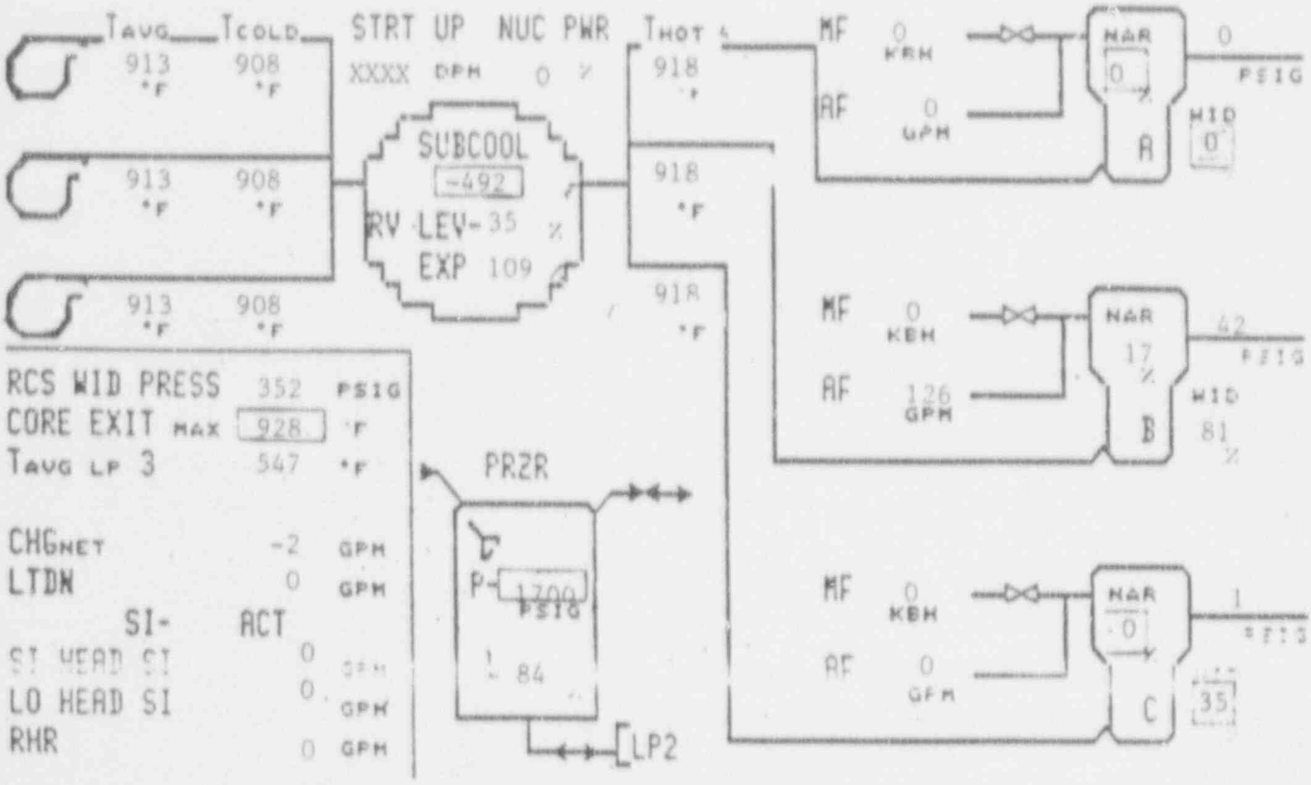

CONTAINMENT				ELECTRICAL			
Press. (PSIA)	10.46	Temp. (F)	103.0	SSST 2A	OOS	SSST 2B	OOS
RHS	AVAIL	Sump (In)	0.2	2 AE	OK	2 DF	OOS
Quench Spray	AVAIL	Recirc Spray	AVAIL	2 N	OK	2 P	OOS
HHSI	YES	CIA	YES	DG 2-1	RUN	DG 2-2	OOS
LHSI	YES	CIB	NO	Batteries	OK	Vital Buses	OK

Time 2127

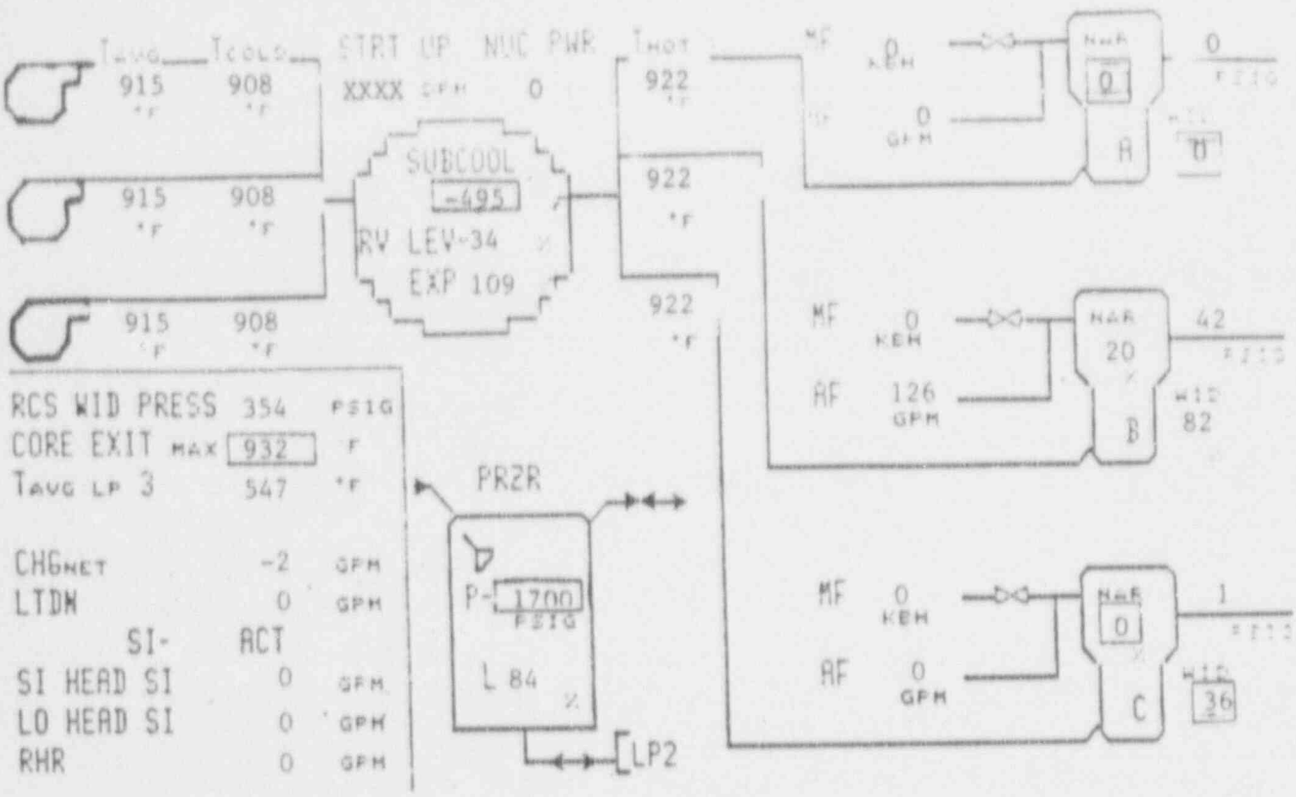

CONTAINMENT				ELECTRICAL			
Press. (PSIA)	10.45	Temp. (F)	102.9	SSST 2A	OOS	SSST 2B	OOS
RHS	AVAIL	Sump (In)	0.2	2 AE	OK	2 DF	OOS
Quench Spray	AVAIL	Recirc Spray	AVAIL	2 N	OK	2 P	OOS
HHSI	YES	CIA	YES	DG 2-1	RUN	DG 2-2	OOS
LHSI	YES	CIB	NO	Batteries	OK	Vital Buses	OK

Time 2130

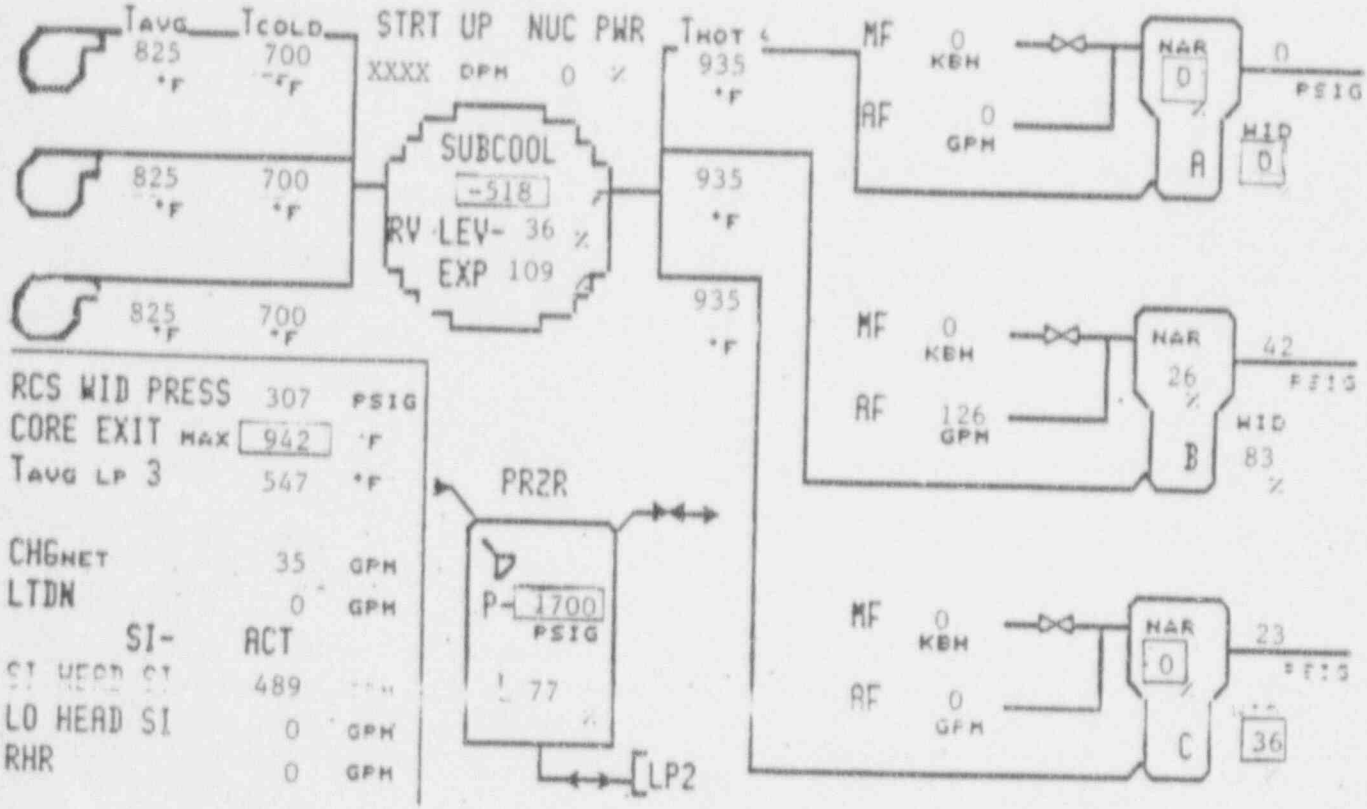

CONTAINMENT				ELECTRICAL			
Press. (PSIA)	10.46	Temp. (F)	103.0	SSST 2A	OOS	SSST 2B	OOS
RHS	AVAIL	Sump (In)	0.2	2 AE	OK	2 DF	OOS
Quench Spray	AVAIL	Recirc Spray	AVAIL	2 N	OK	2 P	OOS
HHSI	YES	CIA	YES	DG 2-1	RUN	DG 2-2	OOS
LHSI	YES	CIB	NO	Batteries	OK	Vital Buses	OK

Time 2133

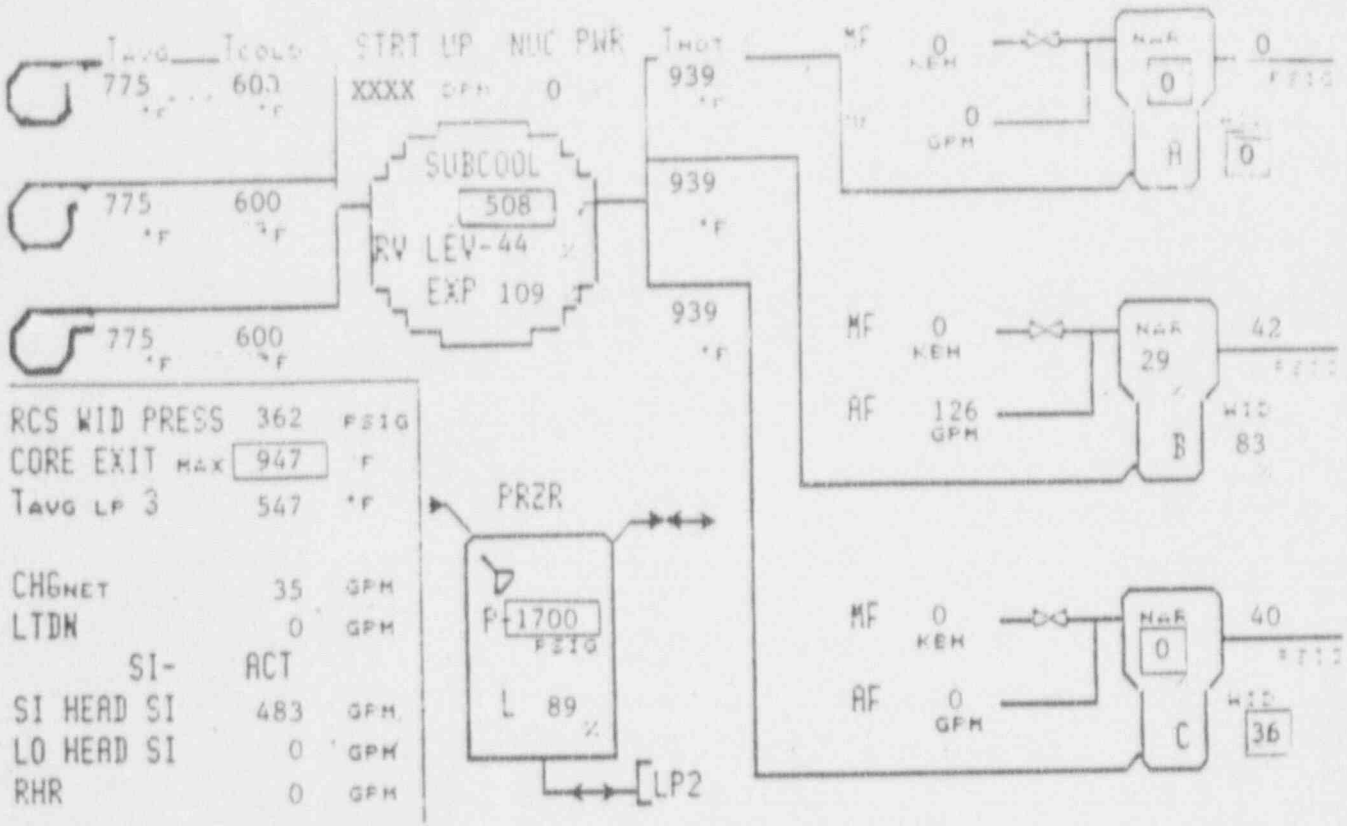

CONTAINMENT				ELECTRICAL			
Press. (PSIA)	10.45	Temp. (F)	102.9	SSST 2A	OOS	SSST 2B	OOS
RHS	AVAIL	Sump (In)	0.2	2 AE	OK	2 DF	OOS
Quench Spray	AVAIL	Recirc Spray	AVAIL	2 N	OK	2 P	OOS
HHSI	YES	CIA	YES	DG 2-1	RUN	DG 2-2	OOS
LHSI	YES	CIB	NO	Batteries	OK	Vital Buses	OK

Time 2136

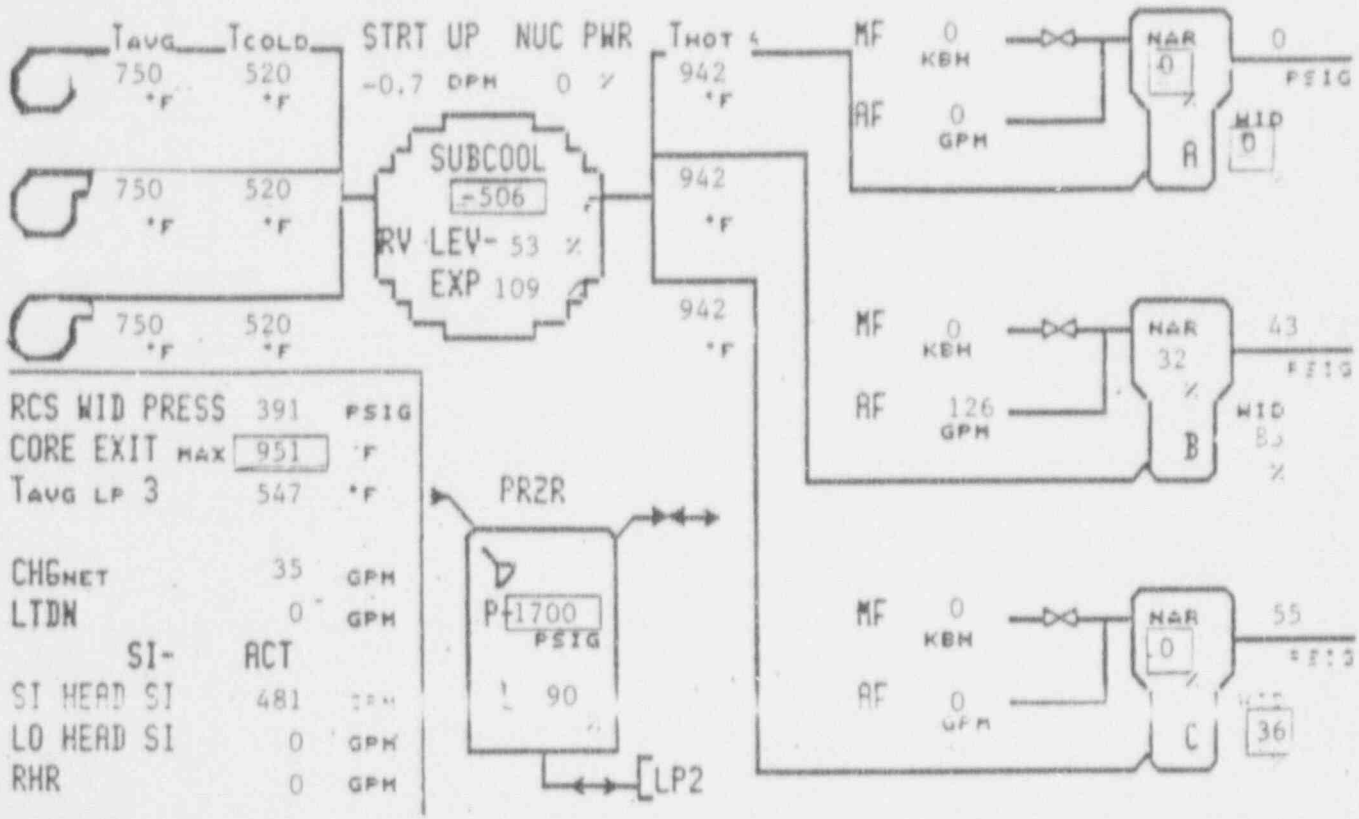

CONTAINMENT				ELECTRICAL			
Press. (PSIA)	10.46	Temp. (F)	103.0	SSST 2A	OOS	SSST 2B	OOS
RHS	AVAIL	Sump (In)	0.2	2 AE	OK	2 DF	OOS
Quench Spray	AVAIL	Recirc Spray	AVAIL	2 N	OK	2 P	OOS
HHSI	YES	CIA	YES	DG 2-1	RUN	DG 2-2	OOS
LHSI	YES	CIB	NO	Batteries	OK	Vital Buses	OK

Time 2139

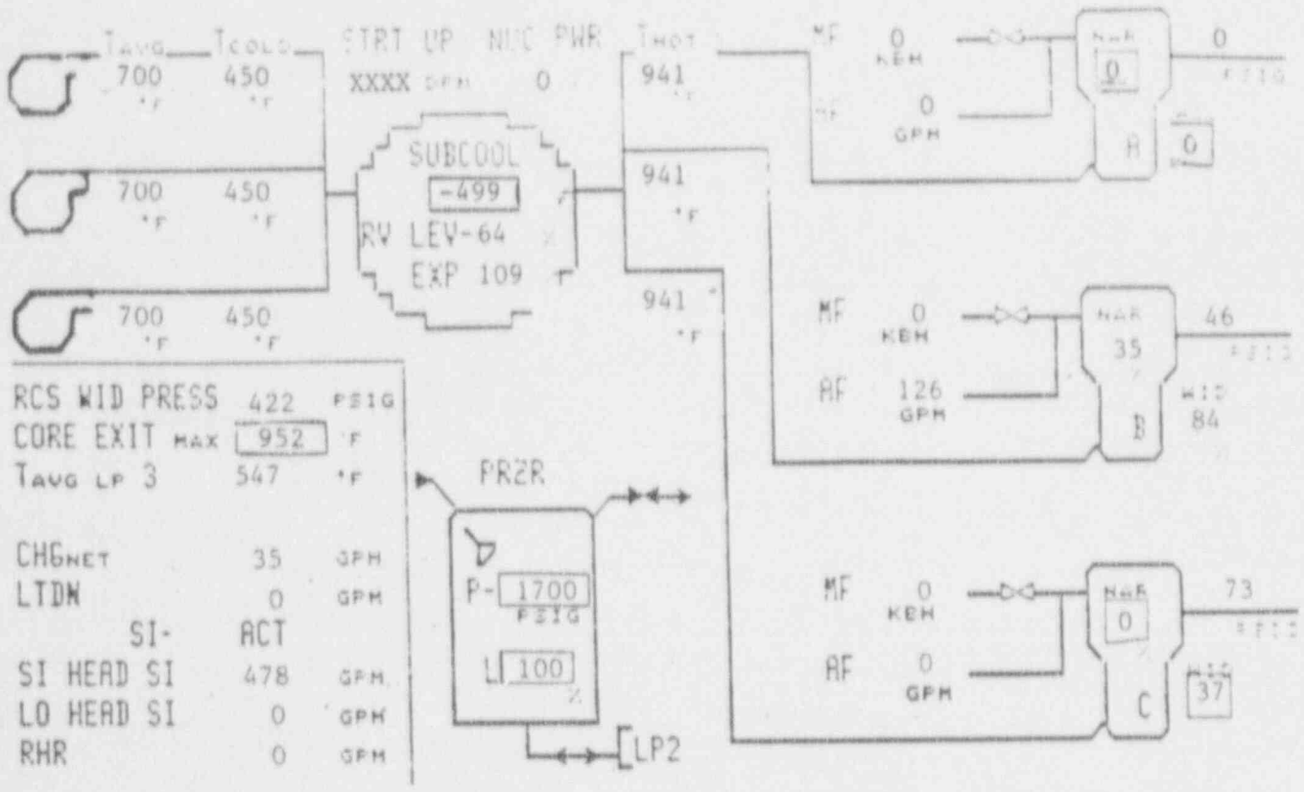

CONTAINMENT				ELECTRICAL			
Press. (PSIA)	10.45	Temp. (F)	102.9	SSST 2A	OOS	SSST 2B	OOS
RHS	AVAIL	Sump (In)	0.2	2 AE	OK	2 DF	OOS
Quench Spray	AVAIL	Recirc Spray	AVAIL	2 N	OK	2 P	OOS
HHSI	YES	CIA	YES	DG 2-1	RUN	DG 2-2	OOS
LHSI	YES	CIB	NO	Batteries	OK	Vital Buses	OK

Time 2142

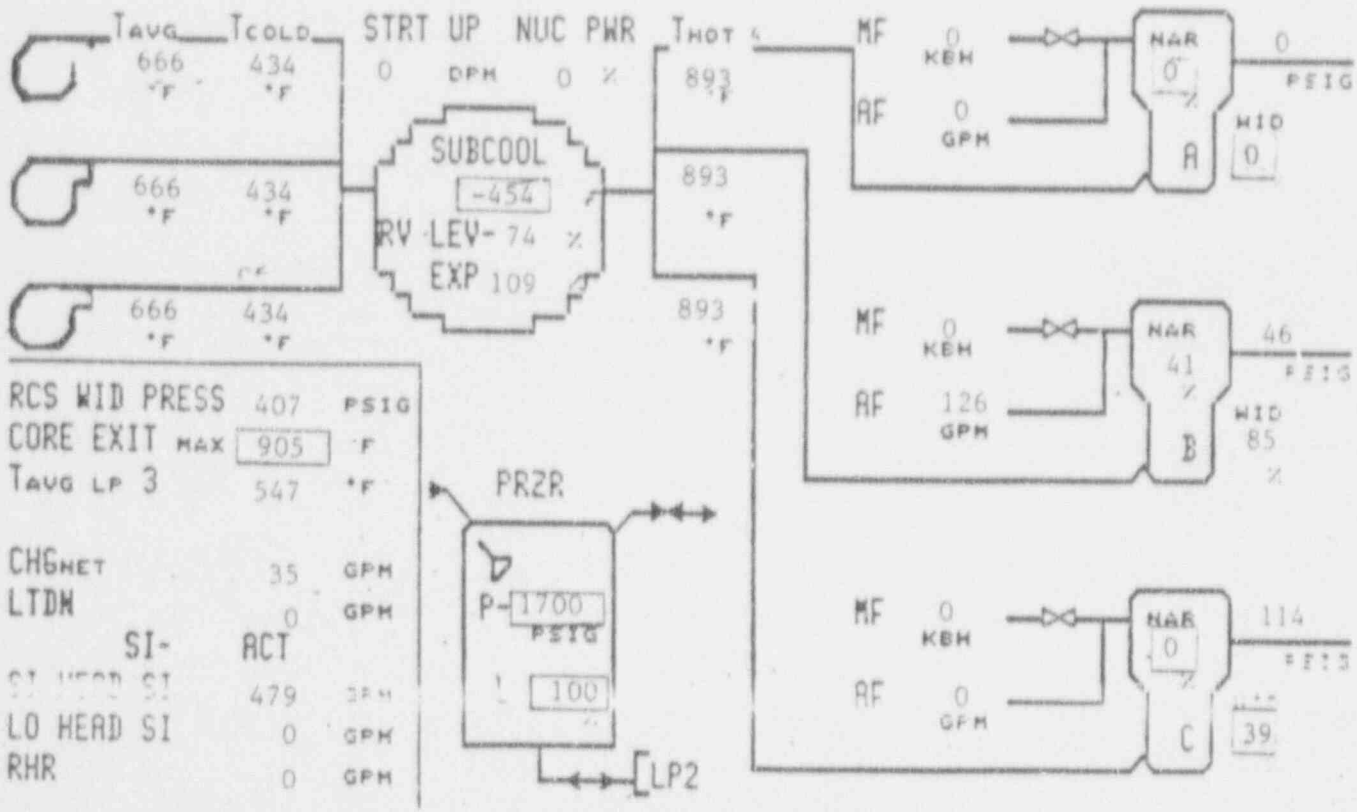

CONTAINMENT				ELECTRICAL			
Press. (PSIA)	10.46	Temp. (F)	103.0	SSST 2A	OOS	SSST 2B	OOS
RHS	AVAIL	Sump (In)	0.2	2 AE	OK	2 DF	OOS
Quench Spray	AVAIL	Recirc Spray	AVAIL	2 N	OK	2 P	OOS
HHSI	YES	CIA	YES	DG 2-1	RUN	DG 2-2	OOS
LHSI	YES	CIB	NO	Batteries	OK	Vital Buses	OK

Time 2145

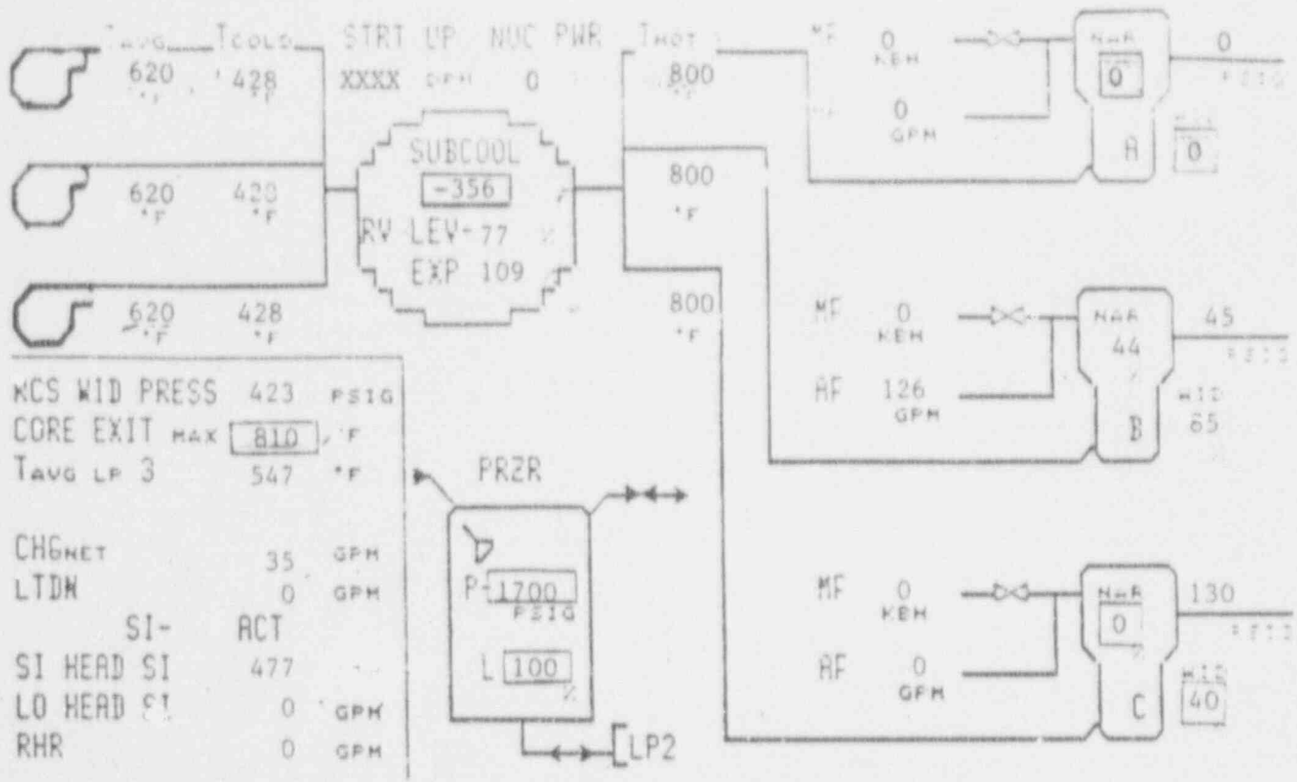

CONTAINMENT				ELECTRICAL			
Press. (PSIA)	10.45	Temp. (F)	102.9	SSST 2A	OOS	SSST 2B	OOS
RHS	AVAIL	Sump (In)	0.2	2 AE	OK	2 DF	OOS
Quench Spray	AVAIL	Recirc Spray	AVAIL	2 N	OK	2 P	OOS
HHSI	YES	CIA	YES	DG 2-1	RUN	DG 2-2	OOS
LHSI	YES	CIB	NO	Batteries	OK	Vital Buses	OK

Time 2148

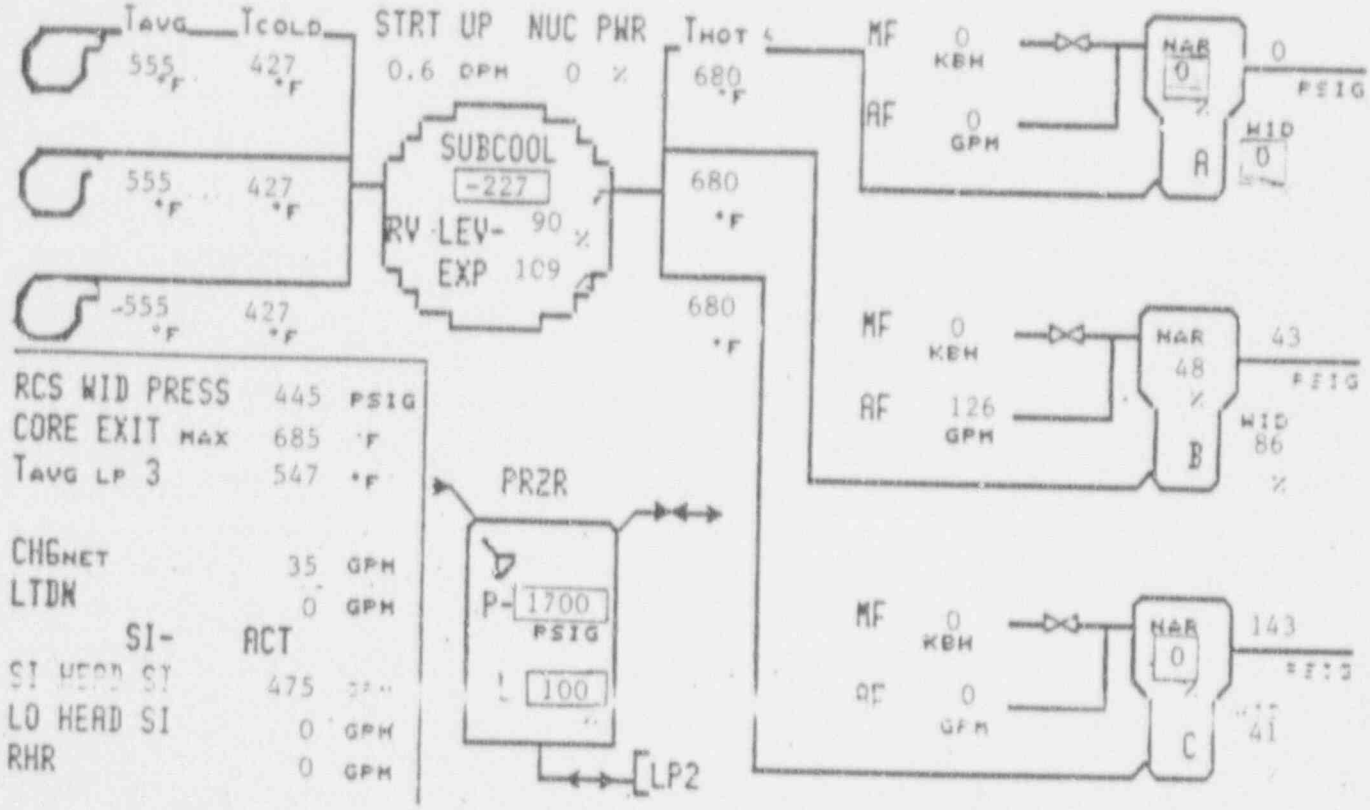

CONTAINMENT				ELECTRICAL			
Press. (PSIA)	10.46	Temp. (F)	103.0	SFST 2A	OOS	SSST 2B	OOS
RHS	AVAIL	Sump (In)	0.2	2 AE	OK	2 DF	OOS
Quench Spray	AVAIL	Recirc Spray	AVAIL	2 N	OK	2 P	OOS
HHSI	YES	CIA	YES	DG 2-1	RUN	DG 2-2	OOS
LHSI	YES	CIB	NO	Batteries	OK	Vital Buses	OK

Time 2151

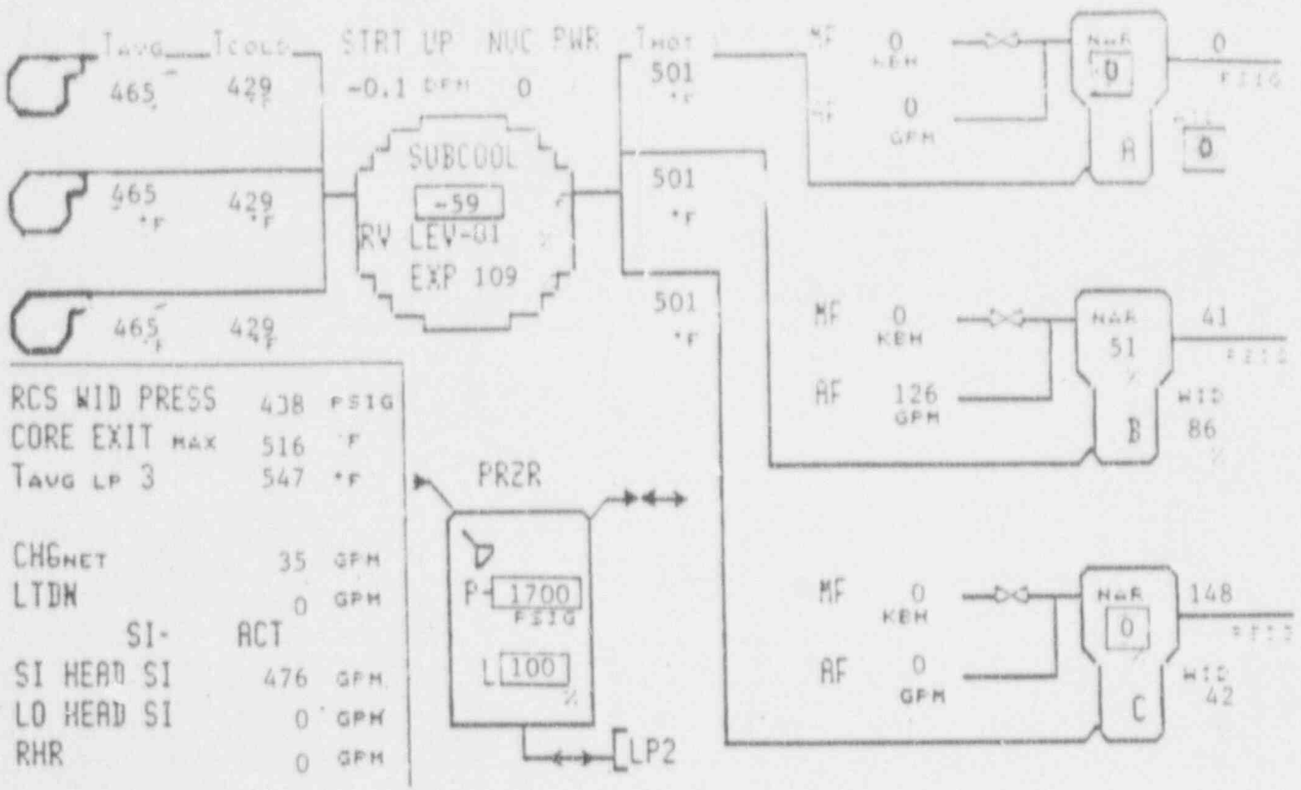

CONTAINMENT				ELECTRICAL			
Press. (PSIA)	10.45	Temp. (F)	102.9	SSST 2A	OOS	SSST 2B	OOS
RHS	AVAIL	Sump (In)	0.2	2 AE	OK	2 DF	OOS
Quench Spray	AVAIL	Recirc Spray	AVAIL	2 N	OK	2 P	OOS
HHSI	YES	CIA	YES	DG 2-1	RUN	DG 2-2	OOS
LHSI	YES	CIB	NO	Batteries	OK	Vital Buses	OK

Time 2154

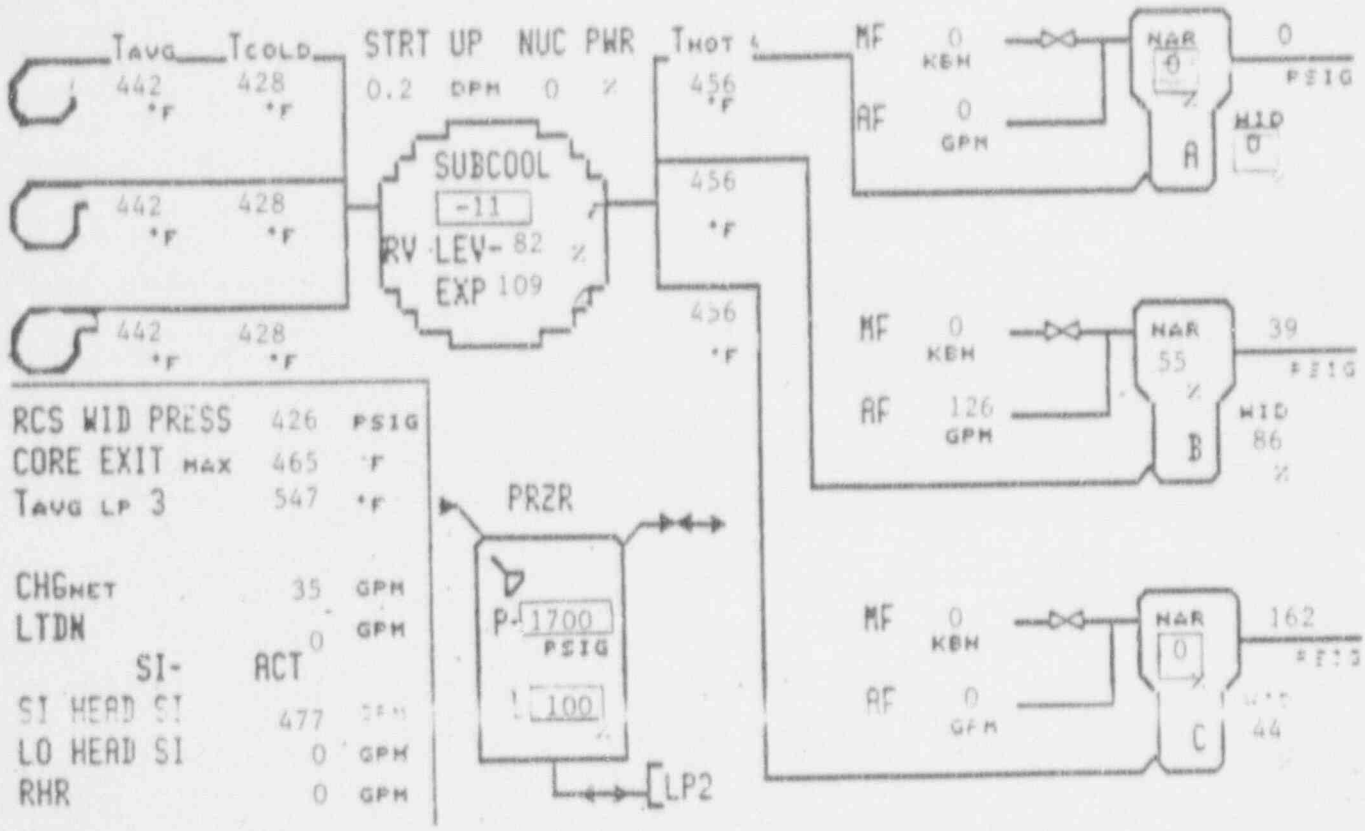

CONTAINMENT				ELECTRICAL			
Press. (PSIA)	10.46	Temp. (F)	103.0	SSST 2A	OOS	SSST 2B	OOS
RHS	AVAIL	Sump (In)	0.2	2 AE	OK	2 DF	OOS
Quench Spray	AVAIL	Recirc Spray	AVAIL	2 N	OK	2 P	OOS
HHSI	YES	CIA	YES	DG 2-1	RUN	DG 2-2	OOS
LHSI	YES	CIB	NO	Batteries	OK	Vital Buses	OK

Time 2157

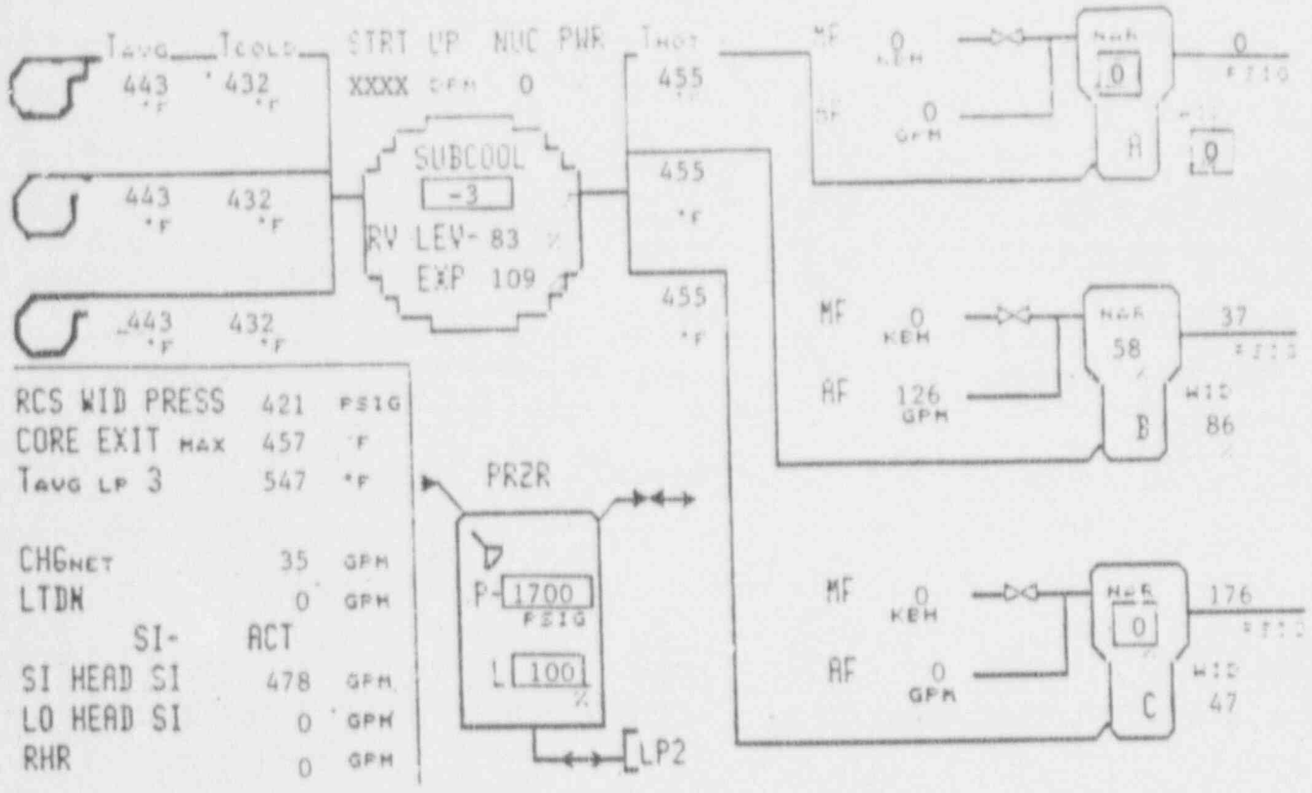

CONTAINMENT				ELECTRICAL			
Press. (PSIA)	10.45	Temp. (F)	102.9	SSST 2A	OOS	SSST 2B	OOS
RHS	AVAIL	Sump (In)	0.2	2 AE	OK	2 DF	OOS
Quench Spray	AVAIL	Recirc Spray	AVAIL	2 N	OK	2 P	OOS
HHSI	YES	CIA	YES	DG 2-1	RUN	DG 2-2	OOS
LHSI	YES	CIB	NO	Batteries	OK	Vital Buses	OK

Time 2200

Plant Variable Computer

Data

Package

Section VI

(Part C.2)

THIS PAGE INTENTIONALLY BLANK

TIME	1430	1433	1436	1439	1442	1445	1448
RCS Hotleg A T0419A Deg. F	606	606	606	606	606	606	606
RCS Hotleg B T0439A Deg. F	806	606	606	606	606	606	606
RCS Hotleg C T0459A Deg. F	606	606	606	606	606	606	606
RCS Coldleg A T0406A Deg. F	546	546	546	546	546	546	546
RCS Coldleg B T0426A Deg. F	546	546	546	546	546	546	546
RCS Coldleg C T0446A Deg. F	546	546	546	546	546	546	546
RCS Flow A F0400C Percent	100	100	100	100	100	100	100
RCS Flow B F0421C Percent	100	100	100	100	100	100	100
RCS Flow C F0442C Percent	100	100	100	100	100	100	100
VCT Level L2704A Percent	40	40	40	40	40	40	40

RCS Group I

TIME	1430	1433	1436	1439	1442	1445	1448
Source Range N0031A CPS	STBY	STBY	STBY	STBY	STBY	STBY	STBY
Power Range N0051A Percent	99	99	99	99	99	99	99
T/C Peak MXICTX Deg. F	618	618	618	618	618	618	618
T/C Average AVICTCX Deg. F	597	596	597	596	597	596	597
Deg Subcooling UT1002 Deg. F	36	36	36	36	36	36	36
Inter Range N0035A AMPS	10E-3	10E-3	10E-3	10E-3	10E-3	10E-3	10E-3

RCS Group I

TIME	1430	1433	1436	1439	1442	1445	1448
SG Pressure A P0402A PSIG (STM OUT)	832	832	832	832	832	832	832
SG Pressure B P0422A PSIG (STM OUT)	832	832	832	832	832	832	832
SG Pressure C P0442A PSIG (STM OUT)	832	832	832	832	832	832	832
SG Level A L0403A (W.R.)	55	55	55	55	55	55	55
SG Level A L0402A (N.R.)	43	43	43	43	43	43	43
SG Level B L0423A (W.R.)	55	55	55	55	55	55	55
SG Level B L0422A (N.R.)	43	43	43	43	43	43	43
SG Level C L0443A (W.R.)	55	55	55	55	55	55	55
SG Level C L0442A (N.R.)	43	43	43	43	43	43	43

Steam Generator Group II

TIME	1430	1433	1436	1439	1442	1445	1448
Steam Flow A F0403C KBH	3902	3901	3902	3901	3902	3901	3902
Steam Flow B F0425C KBH	3900	3900	3900	3900	3900	3900	3900
Steam Flow C F0443C KBH	3900	3900	3900	3900	3900	3900	3900
PD Wtr Tk Lvl L0300A IN	340	340	340	340	340	340	340
Aux FD Flow A F0601C GPM	0	0	0	0	0	0	0
Aux FD Flow B F0602C GPM	0	0	0	0	0	0	0
Aux FD Flow C F0603C GPM	0	0	0	0	0	0	0

Steam Generator Group II

TIME	1430	1433	1436	1439	1442	1445	1448
Cont Pressure P1000A PSIA	9.74	9.74	9.74	9.74	9.74	9.74	9.74
Cont Temp T1016A DEG F	94.3	94.4	94.3	94.4	94.3	94.4	94.3
Cont Sump Lvl L0750A IN	0	0	0	0	0	0	0
Hydrogen Y0752A Percent	0	0	0	0	0	0	0

TIME	1430	1433	1436	1439	1442	1445	1448
SI Accum Lvl L0610A Percent	52	52	52	52	52	52	52
SI Accum Lvl L0620A Percent	52	52	52	52	52	52	52
SI Accum Lvl L0630A Percent	52	52	52	52	52	52	52
RWST Level L0500A IN	720	720	720	720	720	720	720

Safety Injection Group IV

TIME	1430	1433	1436	1439	1442	1445	1448
PZR Level L0480A Percent	54	54	54	54	54	54	54
PZR Temp (WTR) T0480A DEG F	651	650	651	650	651	650	651
PZR Temp (STM) T0481A DEG F	652	651	652	651	652	651	652
RCS Pressure P0103A PSIG	2239	2240	2239	2240	2239	2240	2239
PRT Level L0485A Percent	69	69	69	69	69	69	69
PZR Pressure P0480A PSIG	2228	2229	2228	2229	2228	2229	2228

Pressurizer Group V

TIME	1430	1433	1436	1439	1442	1445	1448
RCP 1A Y3421D On/Off	ON	ON	ON	ON	ON	ON	ON
RCP 1B Y3422D On/Off	ON	ON	ON	ON	ON	ON	ON
RCP 1C Y3423D On/Off	ON	ON	ON	ON	ON	ON	ON
MSIV Position OR001X O/C	OPEN	OPEN	OPEN	OPEN	OPEN	OPEN	OPEN
MSIV Position OR003X O/C	OPEN	OPEN	OPEN	OPEN	OPEN	OPEN	OPEN
MSIV Position OR005X O/C	OPEN	OPEN	OPEN	OPEN	OPEN	OPEN	OPEN

RCP/MSIV Group VI

TIME	1430	1433	1436	1439	1442	1445	1448
Battery 1 V0774A Volts	130	131	131	130	130	130	130
Battery 2 V0775A Volts	130	130	131	130	130	130	130
Battery 3 V0776A Volts	130	130	130	131	130	130	131
Battery 4 V0777A Volts	131	130	130	130	130	130	130
Battery 5 V0778A Volts	130	130	130	130	130	130	130

Battery Group VII

TIME	1430	1433	1436	1439	1442	1445	1448
VENT VENT PART)019A CI/CC	5.5E-10	5.5E-10	5.5E-10	5.5E-10	5.5E-10	5.5E-10	5.5E-10
ENT VENT GAS R0020A UCI/CC	1.98E-6	1.98E-6	1.98E-6	1.98E-6	1.98E-6	1.98E-6	1.98E-6
ELEV REL RATE R0093A UCI/SEC	1.89E1	1.89E1	1.89E1	1.89E1	1.89E1	1.89E1	1.89E1
ELEV REL PART R0015A UCI/CC	1.6E-10	1.6E-10	1.6E-10	1.6E-10	1.6E-10	1.6E-10	1.6E-10
ELEV REL GAS L R0016A UCI/CC	6.98E-7	6.98E-7	6.98E-7	6.98E-7	6.98E-7	6.98E-7	6.98E-7
ELEV REL GAS M R0017A UCI/CC	1.94E-4	1.94E-4	1.94E-4	1.94E-4	1.94E-4	1.94E-4	1.94E-4
ELEV REL GAS H R0018A UCI/CC	4.85E-2	4.85E-2	4.85E-2	4.85E-2	4.85E-2	4.85E-2	4.85E-2
MAIN STM ACT R0088A UCI/CC	4.93E-3	4.93E-3	4.93E-3	4.93E-3	4.93E-3	4.93E-3	4.93E-3
MAIN STM ACT R0089A UCI/CC	4.00E-3	4.00E-3	4.00E-3	4.00E-3	4.00E-3	4.00E-3	4.00E-3
MAIN STM ACT R0090A UCI/CC	4.25E-3	4.25E-3	4.25E-3	4.25E-3	4.25E-3	4.25E-3	4.25E-3

Effluent Group VIII

TIME	1430	1433	1436	1439	1442	1445	1448
MN STM REL RT R0091A UCI/SEC	0.0	0.0	0.0	0.0	0.0	0.0	0.0
MN STM REL RT R0098A UCI/SEC	0.0	0.0	0.0	0.0	0.0	0.0	0.0
MN STM REL RT R0099A UCI/SEC	0.0	0.0	0.0	0.0	0.0	0.0	0.0

Effluent Group VIII

TIME	1430	1433	1436	1439	1442	1445	1448
FHB VENT PART R0025A UCI/CC	2.0E-10	2.0E-10	2.0E-10	2.0E-10	2.0E-10	2.0E-10	2.0E-10
FHB VENT GAS R0026A UCI/CC	3.59E-6	3.59E-6	3.59E-6	3.59E-6	3.59E-6	3.59E-6	3.59E-6
PAB 718'A PART R0050A UCI/CC	1.7E-10	1.7E-10	1.7E-10	1.7E-10	1.7E-10	1.7E-10	1.7E-10
PAB 718'A GAS R0051A UCI/CC	1.45E-6	1.45E-6	1.45E-6	1.45E-6	1.45E-6	1.45E-6	1.45E-6
PAB 718'B PART R0052A UCI/CC	2.2E-10	2.2E-10	2.2E-10	2.2E-10	2.2E-10	2.2E-10	2.2E-10
PAB 718'B GAS R0053A UCI/CC	2.25E-6	2.25E-6	2.25E-6	2.25E-6	2.25E-6	2.25E-6	2.25E-6
PAB 718'C PART R0054A UCI/CC	2.1E-10	2.1E-10	2.1E-10	2.1E-10	2.1E-10	2.1E-10	2.1E-10
PAB 718'C GAS R0055A UCI/CC	1.46E-6	1.46E-6	1.46E-6	1.46E-6	1.46E-6	1.46E-6	1.46E-6
PAB 735'A PART R0056A UCI/CC	1.9E-10	1.9E-10	1.9E-10	1.9E-10	1.9E-10	1.9E-10	1.9E-10
PAB 735'A GAS R0057A UCI/CC	1.58E-6	1.58E-6	1.58E-6	1.58E-6	1.58E-6	1.58E-6	1.58E-6

TIME	1430	1433	1436	1439	1442	1445	1448
PAB 735'B PART R0058A UCI/CC	1.7E-10	1.7E-10	1.7E-10	1.7E-10	1.7E-10	1.7E-10	1.7E-10
PAB 735'B GAS R0059A UCI/CC	1.25E-6	1.25E-6	1.25E-6	1.25E-6	1.25E-6	1.25E-6	1.25E-6
PAB 755'A PART R0060A UCI/CC	1.8E-10	1.8E-10	1.8E-10	1.8E-10	1.8E-10	1.8E-10	1.8E-10
PAB 755'A GAS R0061A UCI/CC	1.37E-6	1.37E-6	1.37E-6	1.37E-6	1.37E-6	1.37E-6	1.37E-6
PAB 755'B PART R0062A UCI/CC	3.2E-10	3.2E-10	3.2E-10	3.2E-10	3.2E-10	3.2E-10	3.2E-10
PAB 755'B GAS R0063A UCI/CC	1.39E-6	1.39E-6	1.39E-6	1.39E-6	1.39E-6	1.39E-6	1.39E-6
RCB PART R0068A UCI/CC	6.8E-10	6.8E-10	6.8E-10	6.8E-10	6.8E-10	6.8E-10	6.8E-10
RCB GAS R0069A UCI/CC	9.55E-6	9.55E-6	9.55E-6	9.55E-6	9.55E-6	9.55E-6	9.55E-6
LK COL VENT PT R0077A UCI/CC	3.1E-10	3.1E-10	3.1E-10	3.1E-10	3.1E-10	3.1E-10	3.1E-10
LK COL VENT GS R0078A UCI/CC	2.54E-6	2.54E-6	2.54E-6	2.54E-6	2.54E-6	2.54E-6	2.54E-6

Airborne Group IX

TIME	1430	1433	1436	1439	1442	1445	1448
RX CLNT LTDN L R0003A UCI/CC	7.33E-1	7.33E-1	7.33E-1	7.33E-1	7.33E-1	7.33E-1	7.33E-1
RX CLNT LTDN H R0002A UCI/CC	1.05E0	1.05E0	1.05E0	1.05E0	1.05E0	1.05E0	1.05E0
SG BLDN SAMPLE R0079A UCI/CC	1.00E-5	1.00E-5	1.00E-5	1.00E-5	1.00E-5	1.00E-5	1.00E-5

Process Liquid Group X

TIME	1430	1433	1436	1439	1442	1445	1448
AIR EJ DISCH R0001A UCI/CC	2.59E-7	2.59E-7	2.59E-7	2.59E-7	2.59E-7	2.59E-7	2.59E-7
AIR EJ DEL EXH R0010A UCI/CC	3.35E-7	3.35E-7	3.35E-7	3.35E-7	3.35E-7	3.35E-7	3.35E-7

Process Gas Group XI

TIME	1430	1433	1436	1439	1442	1445	1448
FUEL BLD BRDGE R0024A MR/HR	8.03E-2	8.03E-2	8.03E-2	8.03E-2	8.03E-2	8.03E-2	8.03E-2
AUX BLDG 710' R0042A MR/HR	3.60E-2	3.60E-2	3.60E-2	3.60E-2	3.60E-2	3.60E-2	3.60E-2
AUX BLDG 710' R0043A MR/HR	2.14E-1	2.14E-1	2.14E-1	2.14E-1	2.14E-1	2.14E-1	2.14E-1
AUX BLDG 710' R0044A MR/HR	2.54E-2	2.54E-2	2.54E-2	2.54E-2	2.54E-2	2.54E-2	2.54E-2
AUX BLDG 735' R0045A MR/HR	3.54E-2	3.54E-2	3.54E-2	3.54E-2	3.54E-2	3.54E-2	3.54E-2
AUX BLDG 735' R0046A MR/HR	2.56E-2	2.56E-2	2.56E-2	2.56E-2	2.56E-2	2.56E-2	2.56E-2
AUX BLDG 755' R0047A MR/HR	1.77E-2	1.77E-2	1.77E-2	1.77E-2	1.77E-2	1.77E-2	1.77E-2
AUX BLDG 755' R0048A MR/HR	4.46E-2	4.46E-2	4.46E-2	4.46E-2	4.46E-2	4.46E-2	4.46E-2
AUX BLDG 755' R0049A MR/HR	9.17E-2	9.17E-2	9.17E-2	9.17E-2	9.17E-2	9.17E-2	9.17E-2
AUX BLDG 773' R0040A MR/HR	1.77E-2	1.77E-2	1.77E-2	1.77E-2	1.77E-2	1.77E-2	1.77E-2

Area Group XII

TIME	1430	1433	1436	1439	1442	1445	1448
PAB CHEM SM RM R0041A MR/HR	4.15E-1	4.15E-1	4.15E-1	4.15E-	4.15E-1	4.15E-1	4.15E-1
RCB LO RNG R0070A MR/HR	2.60E-1	2.60E-1	2.60E-1	2.60E-1	2.60E-1	2.60E-1	2.60E-1
PERSONNEL HATC R0071A MR/HR	1.05E-1	1.05E-1	1.05E-1	1.05E-1	1.05E-1	1.05E-1	1.05E-1
PERSONNEL HATC R0072A MR/HR	4.75E0	4.75E0	4.75E0	4.75E0	4.75E0	4.75E0	4.75E0
RCB HI RNG R0086A R/HR	8.29E-1	8.29E-1	8.29E-1	8.29E-1	8.29E-1	8.29E-1	8.29E-1
RCB HI RNG R0087A R/HR	8.58E-1	8.58E-1	8.58E-1	8.58E-1	8.58E-1	8.58E-1	8.58E-1

Area Group XII

TIME	1451	1454	1457	1500	1503	1506	1509
RCS Hotleg A T0419A Deg. F	606	606	606	606	606	606	606
RCS Hotleg B T0439A Deg. F	606	606	606	606	606	606	606
RCS Hotleg C T0459A Deg. F	606	606	606	606	606	606	606
RCS Coldleg A T0406A Deg. F	546	546	546	546	546	546	546
RCS Coldleg B T0426A Deg. F	546	546	546	546	546	546	546
RCS Coldleg C T0446A Deg. F	546	546	546	546	546	546	546
RCS Flow A F0400C Percent	100	100	100	100	100	100	100
RCS Flow B F0421C Percent	100	100	100	100	100	100	100
RCS Flow C F0442C Percent	100	100	100	100	100	100	100
VCT Level L2704A Percent	40	40	40	40	40	40	40

RCS Group I

TIME	1451	1454	1457	1500	1503	1506	1509
Source Range N0031A CPS	STBY	STBY	STBY	STBY	STBY	STBY	STBY
Power Range N0051A Percent	99	99	99	99	99	99	99
T/C Peak MXICTX Deg. F	618	618	618	618	618	618	618
T/C Average AVICTCX Deg. F	596	597	596	597	597	597	596
Deg Subcooling UT1002 Deg. F	36	36	36	36	36	36	36
Inter Range N0035A AMPS	10E-3	10E-3	10E-3	10E-3	10E-3	10E-3	10E-3

RCS Group I

TIME	1451	1454	1457	1500	1503	1506	1509
SG Pressure A P0402A PSIG (STM OUT)	832	832	832	832	832	832	832
SG Pressure B P0422A PSIG (STM OUT)	832	832	832	832	832	832	832
SG Pressure C P0442A PSIG (STM OUT)	832	832	832	832	832	832	832
SG Level A L0403A (W.R.)	55	55	55	55	55	55	55
SG Level A L0402A (N.R.)	43	43	43	43	43	43	43
SG Level B L0423A (W.R.)	55	55	55	55	55	55	55
SG Level B L0422A (N.R.)	43	43	43	43	43	43	43
SG Level C L0443A (W.R.)	55	55	55	55	55	55	55
SG Level C L0442A (N.R.)	43	43	43	43	43	43	43

Steam Generator Group II

TIME	1451	1454	1457	1500	1503	1506	1509
Steam Flow A F0403C KBH	3901	3902	3901	3902	3902	3902	3901
Steam Flow B F0425C KBH	3900	3900	3900	3900	3900	3900	3900
Steam Flow C F0443C KBH	3900	3900	3900	3900	3900	3900	3900
PD Wtr Tk Lvl L0300A IN	340	340	340	340	340	340	340
Aux FD Flow A F0601C GPM	0	0	0	0	0	0	0
Aux FD Flow B F0602C GPM	0	0	0	0	0	0	0
Aux FD Flow C F0603C GPM	0	0	0	0	0	0	0

Steam Generator Group II

TIME	1451	1454	1457	1500	1503	1506	1509
Cont Pressure P1000A PSIA	9.74	9.74	9.74	9.74	9.74	9.74	9.74
Cont Temp T1016A DEG F	94.4	94.3	94.4	94.3	94.3	94.3	94.4
Cont Sump Lvl L0750A IN	0	0	0	0	0	0	0
Hydrogen Y0752A Percent	0	0	0	0	0	0	0

Containment Group III

TIME	1451	1454	1457	1500	1503	1506	1509
SI Accum Lvl L0610A Percent	52	52	52	52	52	52	52
SI Accum Lvl L0620A Percent	52	52	52	52	52	52	52
SI Accum Lvl L0630A Percent	52	52	52	52	52	52	52
RWST Level L0500A IN	720	720	720	720	720	720	720

Safety Injection Group IV

TIME	1451	1454	1457	1500	1503	1506	1509
PZR Level L0480A Percent	54	54	54	54	54	54	54
PZR Temp (WTR) T0480A DEG F	650	651	650	651	651	651	650
PZR Temp (STM) T0481A DEG F	651	652	651	652	652	652	651
RCS Pressure P0103A PSIG	2240	2239	2240	2239	2239	2239	2240
PRT Level L0485A Percent	69	69	69	69	69	69	69
PZR Pressure P0480A PSIG	2229	2228	2229	2228	2228	2228	2229

Pressurizer Group V

TIME	1451	1454	1457	1500	1503	1506	1509
RCP 1A Y3421D On/Off	ON	ON	ON	ON	ON	ON	ON
RCP 1B Y3422D On/Off	ON	ON	ON	ON	ON	ON	ON
RCP 1C Y3423D On/Off	ON	ON	ON	ON	ON	ON	ON
MSIV Position OR001X O/C	OPEN	OPEN	OPEN	OPEN	OPEN	OPEN	OPEN
MSIV Position OR003X O/C	OPEN	OPEN	OPEN	OPEN	OPEN	OPEN	OPEN
MSIV Position OR005X O/C	OPEN	OPEN	OPEN	OPEN	OPEN	OPEN	OPEN

RCP/MSIV Group VI

TIME	1451	1454	1457	1500	1503	1506	1509
Battery 1 V0774A Volts	130	130	130	130	130	130	130
Battery 2 V0775A Volts	130	130	130	130	130	130	130
Battery 3 V0776A Volts	130	130	130	130	130	130	130
Battery 4 V0777A Volts	130	130	131	130	130	130	130
Battery 5 V0778A Volts	130	130	130	130	130	130	130

Battery Group VII

TIME	1451	1454	1457	1500	1503	1506	1509
VENT VENT PART R0019A UCI/CC	5.5E-10	5.5E-10	5.5E-10	5.5E-10	5.5E-10	5.5E-10	5.5E-10
VENT VENT GAS R0020A UCI/CC	1.98E-6	1.98E-6	1.98E-6	1.98E-6	1.98E-6	1.98E-6	1.98E-6
ELEV REL RATE R0[illegible]A UCI/SEC	1.89E1	1.89E1	1.89E1	1.89E1	1.89E1	1.89E1	1.89E1
ELEV REL PART R0015A UCI/CC	1.6E-10	1.6E-10	1.6E-10	1.6E-10	1.6E-10	1.6E-10	1.6E-10
ELEV REL GAS L R0016A UCI/CC	6.98E-7	6.98E-7	6.98E-7	6.98E-7	6.98E-7	6.98E-7	6.98E-7
ELEV REL GAS M R0017A UCI/CC	1.94E-4	1.94E-4	1.94E-4	1.94E-4	1.94E-4	1.94E-4	1.94E-4
ELEV REL GAS H R0018A UCI/CC	4.85E-2	4.85E-2	4.85E-2	4.85E-2	4.85E-2	4.85E-2	4.85E-2
MAIN STM ACT R0088A UCI/CC	4.93E-3	4.93E-3	4.93E-3	4.93E-3	4.93E-3	4.93E-3	4.93E-3
MAIN STM ACT R0089A UCI/CC	4.00E-3	4.00E-3	4.00E-3	4.00E-3	4.00E-3	4.00E-3	4.00E-3
MAIN STM ACT R0090A UCI/CC	4.25E-3	4.25E-3	4.25E-3	4.25E-3	4.25E-3	4.25E-3	4.25E-3

Effluent Group VIII

TIME	1451	1454	1457	1500	1503	1506	1509
MN STM REL RT R0091A UCI/SEC	0.0	0.0	0.0	0.0	0.0	0.0	0.0
MN STM REL RT R0098A UCI/SEC	0.0	0.0	0.0	0.0	0.0	0.0	0.0
MN STM REL RT R0099A UCI/SEC	0.0	0.0	0.0	0.0	0.0	0.0	0.0

Effluent Group VIII

TIME	1451	1454	1457	1500	1503	1506	1509
FHB VENT PART R0025A UCI/CC	2.0E-10	2.0E-10	2.0E-10	2.0E-10	2.0E-10	2.0E-10	2.0E-10
FHB VENT GAS R0026A UCI/CC	3.59E-6	3.59E-6	3.59E-6	3.59E-6	3.59E-6	3.59E-6	3.59E-6
PAB 718'A PART R0050A UCI/CC	1.7E-10	1.7E-10	1.7E-10	1.7E-10	1.7E-10	1.7E-10	1.7E-10
PAB 718'A GAS R0051A UCI/CC	1.45E-6	1.45E-6	1.45E-6	1.45E-6	1.45E-6	1.45E-6	1.45E-6
PAB 718'B PART R0052A UCI/CC	2.2E-10	2.2E-10	2.2E-10	2.2E-10	2.2E-10	2.2E-10	2.2E-10
PAB 718'B GAS R0053A UCI/CC	2.25E-6	2.25E-6	2.25E-6	2.25E-6	2.25E-6	2.25E-6	2.25E-6
PAB 718'C PART R0054A UCI/CC	2.1E-10	2.1E-10	2.1E-10	2.1E-10	2.1E-10	2.1E-10	2.1E-10
PAB 718'C GAS R0055A UCI/CC	1.46E-6	1.46E-6	1.46E-6	1.46E-6	1.46E-6	1.46E-6	1.46E-6
PAB 735'A PART R0056A UCI/CC	1.9E-10	1.9E-10	1.9E-10	1.9E-10	1.9E-10	1.9E-10	1.9E-10
PAB 735'A GAS R0057A UCI/CC	1.58E-6	1.58E-6	1.58E-6	1.58E-6	1.58E-6	1.58E-6	1.58E-6

Airborne Group IX

TIME	1451	1454	1457	1500	1503	1506	1509
PAB 735'B PART R0058A UCI/CC	1.7E-10	1.7E-10	1.7E-10	1.7E-10	1.7E-10	1.7E-10	1.7E-10
PAB 735'B GAS R0059A UCI/CC	1.25E-6	1.25E-6	1.25E-6	1.25E-6	1.25E-6	1.25E-6	1.25E-6
PAB 755'A PART R0060A UCI/CC	1.8E-10	1.8E-10	1.8E-10	1.8E-10	1.8E-10	1.8E-10	1.8E-10
PAB 755'A GAS R0061A UCI/CC	1.37E-6	1.37E-6	1.37E-6	1.37E-6	1.37E-6	1.37E-6	1.37E-6
PAB 755'B PART R0062A UCI/CC	3.2E-10	3.2E-10	3.2E-10	3.2E-10	3.2E-10	3.2E-10	3.2E-10
PAB 755'B GAS R0063A UCI/CC	1.39E-6	1.39E-6	1.39E-6	1.39E-6	1.39E-6	1.39E-6	1.39E-6
RCB PART R0068A UCI/CC	6.8E-10	6.8E-10	6.8E-10	6.8E-10	6.8E-10	6.8E-10	6.8E-10
RCB GAS R0069A UCI/CC	9.55E-6	9.55E-6	9.55E-6	9.55E-6	9.55E-6	9.55E-6	9.55E-6
LK COL VENT PT R0077A UCI/CC	3.1E-10	3.1E-10	3.1E-10	3.1E-10	3.1E-10	3.1E-10	3.1E-10
LK COL VENT GS R0078A UCI/CC	2.54E-6	2.54E-6	2.54E-6	2.54E-6	2.54E-6	2.54E-6	2.54E-6

TIME	1451	1454	1457	1500	1503	1506	1509
RX CLNT LTDN L R0003A UCI/CC	7.33E-1	7.33E-1	7.33E-1	7.33E-1	7.33E-1	7.33E-1	7.33E-1
RX CLNT LTDN H R0002A UCI/CC	1.05E0	1.05E0	1.05E0	1.05E0	1.05E0	1.05E0	1.05E0
SG BLDN SAMPLE R0079A UCI/CC	1.00E-5	1.00E-5	1.00E-5	1.00E-5	1.00E-5	1.00E-5	1.00E-5

Process Liquid Group X

TIME	1451	1454	1457	1500	1503	1506	1509
AIR EJ DISCH R0001A UCI/CC	2.59E-7	2.59E-7	2.59E-7	2.59E-7	2.59E-7	2.59E-7	2.59E-7
AIR EJ DEL EXH R0010A UCI/CC	3.35E-7	3.35E-7	3.35E-7	3.35E-7	3.35E-7	3.35E-7	3.35E-7

Process Gas Group XI

TIME	1451	1454	1457	1500	1503	1506	1509
FUEL BLD BRDGE R0024A MR/HR	8.03E-2	8.03E-2	8.03E-2	8.03E-2	8.03E-2	8.03E-2	8.03E-2
AUX BLDG 710' R0042A MR/HR	3.60E-2	3.60E-2	3.60E-2	3.60E-2	3.60E-2	3.60E-2	3.60E-2
AUX BLDG 710' R0043A MR/HR	2.14E-1	2.14E-1	2.14E-1	2.14E-1	2.14E-1	2.14E-1	2.14E-1
AUX BLDG 710' R0044A MR/HR	2.54E-2	2.54E-2	2.54E-2	2.54E-2	2.54E-2	2.54E-2	2.54E-2
AUX BLDG 735' R0045A MR/HR	3.54E-2	3.54E-2	3.54E-2	3.54E-2	3.54E-2	3.54E-2	3.54E-2
AUX BLDG 735' R0046A MR/HR	2.56E-2	2.56E-2	2.56E-2	2.56E-2	2.56E-2	2.56E-2	2.56E-2
AUX BLDG 755' R0047A MR/HR	1.77E-2	1.77E-2	1.77E-2	1.77E-2	1.77E-2	1.77E-2	1.77E-2
AUX BLDG 755' R0048A MR/HR	4.46E-2	4.46E-2	4.46E-2	4.46E-2	4.46E-2	4.46E-2	4.46E-2
AUX BLDG 755' R0049A MR/HR	9.17E-2	9.17E-2	9.17E-2	9.17E-2	9.17E-2	9.17E-2	9.17E-2
AUX BLDG 773' R0040A MR/HR	1.77E-2	1.77E-2	1.77E-2	1.77E-2	1.77E-2	1.77E-2	1.77E-2

Area Group XII

TIME	1451	1454	1457	1500	1503	1506	1509
PAB CHEM SM RM R0041A MR/HR	4.15E-1	4.15E-1	4.15E-1	4.15E-1	4.15E-1	4.15E-1	4.15E-1
RCB LO RNG R0070A MR/HR	2.60E-1	2.60E-1	2.60E-1	2.60E-1	2.60E-1	2.60E-1	2.60E-1
PERSONNEL HATC R0071A MR/HR	1.05E-1	1.05E-1	1.05E-1	1.05E-1	1.05E-1	1.05E-1	1.05E-1
PERSONNEL HATC R0072A MR/HR	4.75E0	4.75E0	4.75E0	4.75E0	4.75E0	4.75E0	4.75E0
RCB HI RNG R0086A R/HR	8.29E-1	8.29E-1	8.29E-1	8.29E-1	8.29E-1	8.29E-1	8.29E-1
RCB HI RNG R0087A R/HR	8.58E-1	8.58E-1	8.58E-1	8.58E-1	8.58E-1	8.58E-1	8.58E-1

Area Group XII

1

IMAGE EVALUATION TEST TARGET (MT-3)

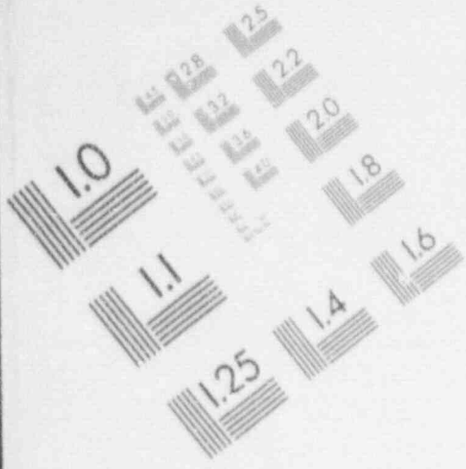

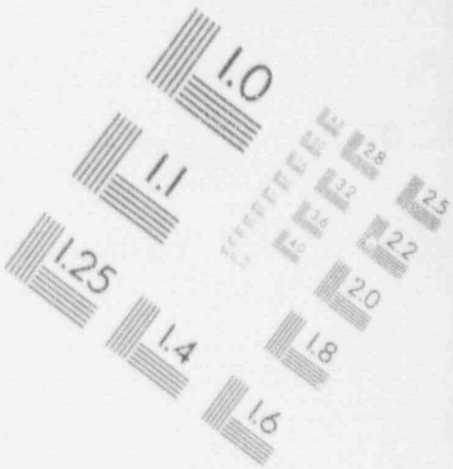

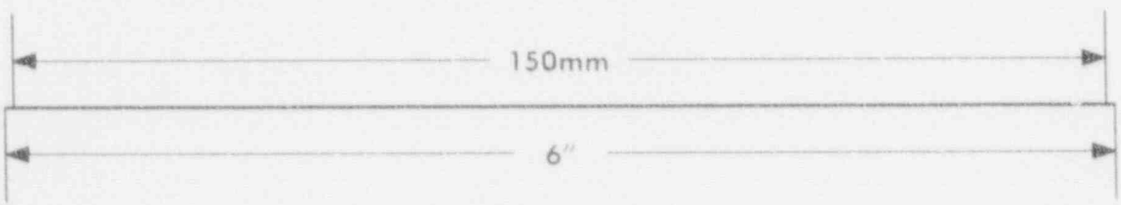

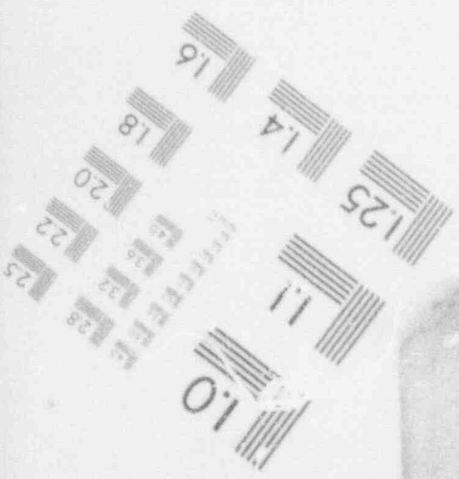

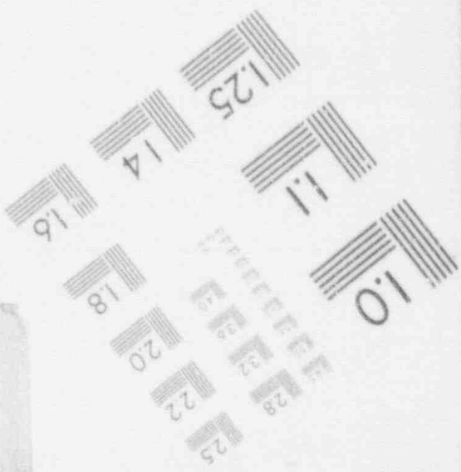

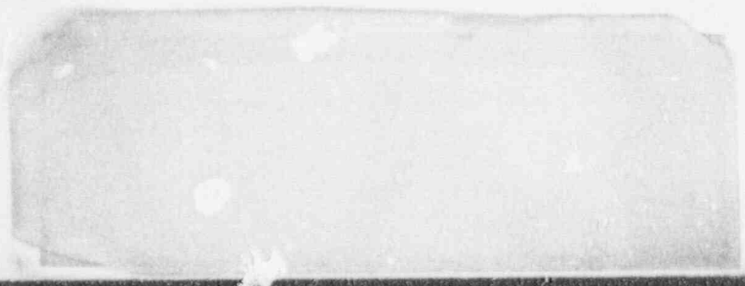

TIME	1512	1515	1518	1521	1524	1527	1530
RCS Hotleg A T0419A Deg. F	606	606	606	606	606	606	606
RCS Hotleg B T0439A Deg. F	606	606	606	606	606	606	606
RCS Hotleg C T0459A Deg. F	606	606	606	606	606	606	606
RCS Coldleg A T0406A Deg. F	546	546	546	546	546	546	546
RCS Coldleg B T0426A Deg. F	546	546	546	546	546	546	546
RCS Coldleg C T0446A Deg. F	546	546	546	546	546	546	546
RCS Flow A F0400C Percent	100	100	100	100	100	100	100
RCS Flow B F0421C Percent	100	100	100	100	100	100	100
RCS Flow C F0442C Percent	100	100	100	100	100	100	100
VCT Level L2704A Percent	40	40	40	40	40	40	40

RCS Group I

TIME	1512	1515	1518	1521	1524	1527	1530
Source Range N0031A CPS	STBY	STBY	STBY	STBY	STBY	STBY	STBY
Power Range N0051A Percent	99	99	99	99	99	99	99
T/C Peak MXICTX Deg. F	618	61	618	618	618	618	618
T/C Average AVICTCX Deg. F	597	596	597	596	597	596	597
Deg Subcooling UT1002 Deg. F	36	36	36	36	36	36	36
Inter Range N0035A AMPS	10E-3	10E-3	10E-3	10E-3	10E-3	10E-3	10E-3

RCS Group I

TIME	1512	1515	1518	1521	1524	1527	1530
SG Pressure A P0402A PSIG (STM OUT)	832	832	832	832	832	832	832
SG Pressure B P0422A PSIG (STM OUT)	832	832	832	832	832	832	832
SG Pressure C P0442A PSIG (STM OUT)	832	832	832	832	832	832	832
SG Level A L0403A (W.R.)	55	55	55	55	55	55	55
SG Level A L0402A (N.R.)	43	43	43	43	43	43	43
SG Level B L0423A (W.R.)	55	55	55	55	55	55	55
SG Level B L0422A (N.R.)	43	43	43	43	43	43	43
SG Level C L0443A (W.R.)	55	55	55	55	55	55	55
SG Level C L0442A (N.R.)	43	43	43	43	43	43	43

Steam Generator Group II

TIME	1512	1515	1518	1521	1524	1527	1530
Steam Flow A F0403C KBH	3902	3901	3902	3901	3902	3901	3902
Steam Flow B F0425C KBH	3900	3900	3900	3900	3900	3900	3900
Steam Flow C F0443C KBH	3900	3900	3900	3900	3900	3900	3900
PD Wtr Tk Lvl L0300A IN	340	340	340	340	340	340	340
Aux FD Flow A F0601C GPM	0	0	0	0	0	0	0
Aux FD Flow B F0602C GPM	0	0	0	0	0	0	0
Aux FD Flow C F0603C GPM	0	0	0	0	0	0	0

Steam Generator Group II

TIME	1512	1515	1518	1521	1524	1527	1530
Cont Pressure P1000A PSIA	9.74	9.74	9.74	9.74	9.74	9.74	9.74
Cont Temp T1016A DEG F	94.3	94.4	94.3	94.4	94.3	94.4	94.3
Cont Sump Lvl L0750A IN	0	0	0	0	0	0	0
Hydrogen Y0752A Percent	0	0	0	C	0	0	0

Containment Group III

TIME	1512	1515	1518	1521	1524	1527	1530
SI Accum Lvl L0610A Percent	52	52	52	52	52	52	52
SI Accum Lvl L0620A Percent	52	52	52	52	52	52	52
SI Accum Lvl L0630A Percent	52	52	52	52	52	52	52
RWST Level L0500A IN	720	720	720	720	720	720	720

Safety Injection Group IV

TIME	1512	1515	1518	1521	1524	1527	1530
PZR Level L0480A Percent	54	54	54	54	54	54	54
PZR Temp (WTR) T0480A DEG F	651	650	651	650	651	650	651
PZR Temp (STM) T0481A DEG F	652	651	652	651	652	651	652
RCS Pressure P0103A PSIG	2239	2240	2239	2240	2239	2240	2239
PRT Level L0485A Percent	69	69	69	69	69	69	69
PZR Pressure P0480A PSIG	2228	2229	2228	2229	2228	2229	2228

Pressurizer Group V

TIME	1512	1515	1518	1521	1524	1527	1530
RCP 1A Y3421D On/Off	ON	ON	ON	ON	ON	ON	ON
RCP 1B Y3422D On/Off	ON	ON	ON	ON	ON	ON	ON
RCP 1C Y3423D On/Off	ON	ON	ON	ON	ON	ON	ON
MSIV Position OR001X O/C	OPEN	OPEN	OPEN	OPEN	OPEN	OPEN	OPEN
MSIV Position OR003X O/C	OPEN	OPEN	OPEN	OPEN	OPEN	OPEN	OPEN
MSIV Position OR005X O/C	OPEN	OPEN	OPEN	OPEN	OPEN	OPEN	OPEN

RCP/MSIV Group VI

TIME	1512	1515	1518	1521	1524	1527	1530
Battery 1 V0774A Volts	130	131	130	130	131	130	130
Battery 2 V0775A Volts	130	130	130	130	131	130	130
Battery 3 V0776A Volts	130	130	130	130	130	130	130
Battery 4 V0777A Volts	130	130	130	130	130	130	130
Battery 5 V0778A Volts	130	130	130	130	130	130	130

Battery Group VII

TIME	1512	1515	1518	1521	1524	1527	1530
VENT VENT PART R0019A UCI/CC	5.5E-10	5.5E-10	5.5E-10	5.5E-10	5.5E-10	5.5E-10	5.5E-10
VENT VENT GAS R0020A UCI/CC	1.98E-6	1.98E-6	1.98E-6	1.98E-6	1.98E-6	1.98E-6	1.98E-6
ELEV REL RATE R0093A UCI/SEC	1.89E1	1.89E1	1.89E1	1.89E1	1.89E1	1.89E1	1.89E1
ELEV REL PART R0015A UCI/CC	1.6E-10	1.6E-10	1.6E-10	1.6E-10	1.6E-10	1.6E-10	1.6E-10
ELEV REL GAS L R0016A UCI/CC	6.98E-7	6.98E-7	6.98E-7	6.98E-7	6.98E-7	6.98E-7	6.98E-7
ELEV REL GAS M R0017A UCI/CC	1.94E-4	1.94E-4	1.94E-4	1.94E-4	1.94E-4	1.94E-4	1.94E-4
ELEV REL GAS H R0018A UCI/CC	4.85E-2	4.85E-2	4.85E-2	4.85E-2	4.85E-2	4.85E-2	4.85E-2
MAIN STM ACT R0088A UCI/CC	4.93E-3	4.93E-3	4.93E-3	4.93E-3	4.93E-3	4.93E-3	4.93E-3
MAIN STM ACT R0089A UCI/CC	4.00E-3	4.00E-3	4.00E-3	4.00E-3	4.00E-3	4.00E-3	4.00E-3
MAIN STM ACT R0090A UCI/CC	4.25E-3	4.25E-3	4.25E-3	4.25E-3	4.25E-3	4.25E-3	4.25E-3

Effluent Group VIII

TIME	1512	1515	1518	1521	1524	1527	1530
MN STM REL RT R0091A UCI/SEC	0.0	0.0	0.0	0.0	0.0	0.0	0.0
MN STM REL RT R0098A UCI/SEC	0.0	0.0	0.0	0.0	0.0	0.0	0.0
MN STM REL RT R0099A UCI/SEC	0.0	0.0	0.0	0.0	0.0	0.0	0.0

Effluent Group VIII

TIME	1512	1515	1518	1521	1524	1527	1530
FHB VENT PART R0025A UCI/CC	2.0E-10	2.0E-10	2.0E-10	2.0E-10	2.0E-10	2.0E-10	2.0E-10
FHB VENT GAS R0026A UCI/CC	3.59E-6	3.59E-6	3.59E-6	3.59E-6	3.59E-6	3.59E-6	3.59E-6
PAB 718'A PART R0050A UCI/CC	1.7E-10	1.7E-10	1.7E-10	1.7E-10	1.7E-10	1.7E-10	1.7E-10
PAB 718'A GAS R0051A UCI/CC	1.45E-6	1.45E-6	1.45E-6	1.45E-6	1.45E-6	1.45E-6	1.45E-6
PAB 718'B PART R0052A UCI/CC	2.2E-10	2.2E-10	2.2E-10	2.2E-10	2.2E-10	2.2E-10	2.2E-10
PAB 718'B GAS R0053A UCI/CC	2.25E-6	2.25E-6	2.25E-6	2.25E-6	2.25E-6	2.25E-6	2.25E-6
PAB 718'C PART R0054A UCI/CC	2.1E-10	2.1E-10	2.1E-10	2.1E-10	2.1E-10	2.1E-10	2.1E-10
PAB 718'C GAS R0055A UCI/CC	1.46E-6	1.46E-6	1.46E-6	1.46E-6	1.46E-6	1.46E-6	1.46E-6
PAB 735'A PART R0056A UCI/CC	1.9E-10	1.9E-10	1.9E-10	1.9E-10	1.9E-10	1.9E-10	1.9E-10
PAB 735'A GAS R0057A UCI/CC	1.58E-6	1.58E-6	1.58E-6	1.58E-6	1.58E-6	1.58E-6	1.58E-6

TIME	1512	1515	1518	1521	1524	1527	1530
PAB 735'B PART R0058A UCI/CC	1.7E-10	1.7E-10	1.7E-10	1.7E-10	1.7E-10	1.7E-10	1.7E-10
PAB 735'B GAS R0059A UCI/CC	1.25E-6	1.25E-6	1.25E-6	1.25E-6	1.25E-6	1.25E-6	1.25E-6
PAB 755'A PART R0060A UCI/CC	1.8E-10	1.8E-10	1.8E-10	1.8E-10	1.8E-10	1.8E-10	1.8E-10
PAB 755'A GAS R0061A UCI/CC	1.37E-6	1.37E-6	1.37E-6	1.37E-6	1.37E-6	1.37E-6	1.37E-6
PAB 755'B PART R0062A UCI/CC	3.2E-10	3.2E-10	3.2E-10	3.2E-10	3.2E-10	3.2E-10	3.2E-10
PAB 755'B GAS R0063A UCI/CC	1.39E-6	1.39E-6	1.39E-6	1.39E-6	1.39E-6	1.39E-6	1.39E-6
RCB PART R0068A UCI/CC	6.8E-10	6.8E-10	6.8E-10	6.8E-10	6.8E-10	6.8E-10	6.8E-10
RCB GAS R0069A UCI/CC	9.55E-6	9.55E-6	9.55E-6	9.55E-6	9.55E-6	9.55E-6	9.55E-6
LK COL VENT PT R0077A UCI/CC	3.1E-10	3.1E-10	3.1E-10	3.1E-10	3.1E-10	3.1E-10	3.1E-10
LK COL VENT GS R0078A UCI/CC	2.54E-6	2.54E-6	2.54E-6	2.54E-6	2.54E-6	2.54E-6	2.54E-6

Airborne Group IX

TIME	1512	1515	1518	1521	1524	1527	1530
RX CLNT LTDN L R0003A UCI/CC	7.33E-1	7.33E-1	7.33E-1	7.33E-1	7.33E-1	7.33E-1	7.33E-1
RX CLNT LTDN H R0002A UCI/CC	1.05E0	1.05E0	1.05E0	1.05E0	1.05E0	1.05E0	1.05E0
SG BLDN SAMPLE R0079A UCI/CC	1.00E-5	1.00E-5	1.00E-5	1.00E-5	1.00E-5	1.00E-5	1.00E-5

Process Liquid Group X

TIME	1512	1515	1518	1521	1524	1527	1530
AIR EJ DISCH R0001A UCI/CC	2.59E-7	2.59E-7	2.59E-7	2.59E-7	2.59E-7	2.59E-7	2.59E-7
AIR EJ DEL EXH R0010A UCI/CC	3.35E-7	3.35E-7	3.35E-7	3.35E-7	3.35E-7	3.35E-7	3.35E-7

Process Gas Group XI

TIME	1512	1515	1518	1521	1524	1527	1530
FUEL BLD BRDGE R0024A MR/HR	8.03E-2	8.03E-2	8.03E-2	8.03E-2	8.03E-2	8.03E-2	8.03E-2
AUX BLDG 710' R0042A MR/HR	3.60E-2	3.60E-2	3.60E-2	3.60E-2	3.60E-2	3.60E-2	3.60E-2
AUX BLDG 710' R0043A MR/HR	2.14E-1	2.14E-1	2.14E-1	2.14E-1	2.14E-1	2.14E-1	2.14E-1
AUX BLDG 710' R0044A MR/HR	2.54E-2	2.54E-2	2.54E-2	2.54E-2	2.54E-2	2.54E-2	2.54E-2
AUX BLDG 735' R0045A MR/HR	3.54E-2	3.54E-2	3.54E-2	3.54F-2	3.54E-2	3.54E-2	3.54E-2
AUX BLDG 735' R0046A MR/HR	2.56E-2	2.56E-2	2.56E-2	2.56E-2	2.56E-2	2.56E-2	2.56E-2
AUX BLDG 755' R0047A MR/HR	1.77E-2	1.77E-2	1.77E-2	1.77E-2	1.77E-2	1.77E-2	1.77E-2
AUX BLDG 755' R0048A MR/HR	4.46E-2	4.46E-2	4.46E-2	4.46E-2	4.46E-2	4.46E-2	4.46E-2
AUX BLDG 755' R0049A MR/HR	9.17E-2	9.17E-2	9.17E-2	9.17E-2	9.17E-2	9.17E-2	9.17E-2
AUX BLDG 773' R0040A MR/HR	1.77E-2	1.77E-2	1.77E-2	1.77E-2	1.77E-2	1.77E-2	1.77E-2

Area Group XII

TIME	1512	1515	1518	1521	1524	1527	1530
PAB CHEM SM RM R0041A MR/HR	4.15E-1	4.15E-1	4.15E-1	4.15E-1	4.15E-1	4.15E-1	4.15E-1
RCB LO RNG R0070A MR/HR	2.60E-1	2.60E-1	2.60E-1	2.60E-1	2.60E-1	2.60E-1	2.60E-1
PERSONNEL HATC R0071A MR/HR	1.05E-1	1.05E-1	1.05E-1	1.05E-1	1.05E-1	1.05E-1	1.05E-1
PERSONNEL HATC R0072A MR/HR	4.75E0	4.75E0	4.75E0	4.75E0	4.75E0	4.75E0	4.75E0
RCB HI RNG R0086A R/HR	8.29E-1	8.29E-1	8.29E-1	8.29E-1	8.29E-1	8.29E-1	8.29E-1
RCB HI RNG R0087A R/HR	8.58E-1	8.58E-1	8.58E-1	8.58E-1	8.58E-1	8.58E-1	8.58E-1

Area Group XII

TIME	1533	1536	1539	1542	1545	1548	1551
RCS Hotleg A T0419A Deg. F	606	606	606	606	606	606	606
RCS Hotleg B T0439A Deg. F	606	606	606	606	606	606	606
RCS Hotleg C T0459A Deg. F	606	606	606	606	606	606	606
RCS Coldleg A T0406A Deg. F	546	546	546	546	546	546	546
RCS Coldleg B T0426A Deg. F	546	546	546	546	546	546	546
RCS Coldleg C T0446A Deg. F	546	546	546	546	546	546	546
RCS Flow A F0400C Percent	100	100	100	100	100	100	100
RCS Flow B F0421C Percent	100	100	100	100	100	100	100
RCS Flow C F0442C Percent	100	100	100	100	100	100	100
VCT Level L2704A Percent	40	40	40	40	40	40	40

RCS Group I

TIME	1533	1536	1539	1542	1545	1548	1551
Source Range N0031A CPS	STBY	STBY	STBY	STBY	STBY	STBY	STBY
Power Range N0051A Percent	99	99	99	99	99	99	99
T/C Peak MXICTX Deg. F	618	618	618	618	618	618	618
T/C Average AVICTCX Deg. F	596	597	596	597	596	597	596
Deg Subcooling UT1002 Deg. F	36	36	36	36	36	36	36
Inter Range N0035A AMPS	10E-3	10E-3	10E-3	10E-3	10E-3	10E-3	10E-3

RCS Group I

TIME	1533	1536	1539	1542	1545	1548	1551
SG Pressure A P0402A PSIG (STM OUT)	832	832	832	832	832	832	832
SG Pressure B P0422A PSIG (STM OUT)	832	832	832	832	832	832	832
SG Pressure C P0442A PSIG (STM OUT)	832	832	832	832	832	832	832
SG Level A L0403A (W.R.)	55	55	55	55	55	55	55
SG Level A L0402A (N.R.)	43	43	43	43	43	43	43
SG Level B L0423A (W.R.)	55	55	55	55	55	55	55
SG Level B L0422A (N.R.)	43	43	43	43	43	43	43
SG Level C L0443A (W.R.)	55	55	55	55	55	55	55
SG Level C L0442A (N.R.)	43	43	43	43	43	43	43

Steam Generator Group II

TIME	1533	1536	1539	1542	1545	1548	1551
Steam Flow A F0403C KBH	3901	3902	3901	3902	3901	3902	3901
Steam Flow B F0425C KBH	3900	3900	3900	3900	3900	3900	3900
Steam Flow C F0443C KBH	3900	3900	3900	3900	3900	3900	3900
PD Wtr Tk Lvl L0300A IN	340	340	340	340	340	340	340
Aux FD Flow A F0601C GPM	0	0	0	0	0	0	0
Aux FD Flow B F0602C GPM	0	0	0	0	0	0	0
Aux FD Flow C F0603C GPM	0	0	0	0	0	0	0

Steam Generator Group II

TIME	1533	1536	1539	1542	1545	1548	1551
Cont Pressure P1000A PSIA	9.74	9.74	9.74	9.74	9.74	9.74	9.74
Cont Temp T1016A DEG F	94.4	94.3	94.4	94.3	94.4	94.3	94.4
Cont Sump Lvl L0750A IN	0	0	0	0	0	0	0
Hydrogen Y0752A Percent	0	0	0	0	0	0	0

Containment Group III

TIME	1533	1536	1539	1542	1545	1548	1551
SI Accum Lvl L0610A Percent	52	52	52	52	52	52	52
SI Accum Lvl L0620A Percent	52	52	52	52	52	52	52
SI Accum Lvl L0630A Percent	52	52	52	52	52	52	52
RWST Level L0500A IN	720	720	720	720	720	720	720

Safety Injection Group IV

TIME	1533	1536	1539	1542	1545	1548	1551
PZR Level L0480A Percent	54	54	54	54	54	54	54
PZR Temp (WTR) T0480A DEG F	650	651	650	651	650	651	650
PZR Temp (STM) T0481A DEG F	651	652	651	652	651	652	651
RCS Pressure P0103A PSIG	2240	2239	2240	2239	2240	2239	2240
PRT Level L0485A Percent	69	69	69	69	69	69	69
PZR Pressure P0480A PSIG	2229	2228	2229	2228	2229	2228	2229

Pressurizer Group V

TIME	1533	1536	1539	1542	1545	1548	1551
RCP 1A Y3421D On/Off	ON	ON	ON	ON	ON	ON	ON
RCP 1B Y3422D On/Off	ON	ON	ON	ON	ON	ON	ON
RCP 1C Y3423D On/Off	ON	ON	ON	ON	ON	ON	ON
MSIV Position OR001X O/C	OPEN	OPEN	OPEN	OPEN	OPEN	OPEN	OPEN
MSIV Position OR003X O/C	OPEN	OPEN	OPEN	OPEN	OPEN	OPEN	OPEN
MSIV Position OR005X O/C	OPEN	OPEN	OPEN	OPEN	OPEN	OPEN	OPEN

RCP/MSIV Group VI

TIME	1533	1536	1539	1542	1545	1548	1551
Battery 1 V0774A Volts	130	130	130	130	130	130	130
Battery 2 V0775A Volts	130	130	130	130	130	130	130
Battery 3 V0776A Volts	130	130	130	130	130	130	130
Battery 4 V0777A Volts	130	131	130	130	130	130	130
Battery 5 V0778A Volts	130	130	131	130	130	130	130

Battery Group VII

TIME	1533	1536	1539	1542	1545	1548	1551
VENT VENT PART R0019A UCI/CC	5.5E-10	5.5E-10	5.5E-10	5.5E-10	5.5E-10	5.5E-10	5.5E-10
VENT VENT GAS R0020A UCI/CC	1.98E-6	1.98E-6	1.98E-6	1.98E-6	1.98E-6	1.98E-6	1.98E-6
ELEV REL RATE R0093A UCI/SEC	1.89E1	1.89E1	1.89E1	1.89E1	1.89E1	1.89E1	1.89E1
ELEV REL PART R0015A UCI/CC	1.6E-10	1.6E-10	1.6E-10	1.6E-10	1.6E-10	1.6E-10	1.6E-10
ELEV REL GAS L R0016A UCI/CC	6.98E-7	6.98E-7	6.98E-7	6.98E-7	6.98E-7	6.98E-7	6.98E-7
ELEV REL GAS M R0017A UCI/CC	1.94E-4	1.94E-4	1.94E-4	1.94E-4	1.94E-4	1.94E-4	1.94E-4
ELEV REL GAS H R0018A UCI/CC	4.85E-2	4.85E-2	4.85E-2	4.85E-2	4.85E-2	4.85E-2	4.85E-2
MAIN STM ACT R0088A UCI/CC	4.93E-3	4.93E-3	4.93E-3	4.93E-3	4.93E-3	4.93E-3	4.93E-3
MAIN STM ACT R0089A UCI/CC	4.00E-3	4.00E-3	4.00E-3	4.00E-3	4.00E-3	4.00E-3	4.00E-3
MAIN STM ACT R0090A UCI/CC	4.25E-3	4.25E-3	4.25E-3	4.25E-3	4.25E-3	4.25E-3	4.25E-3

Effluent Group VIII

TIME	1533	1536	1539	1542	1545	1548	1551
MN STM REL RT R0091A UCI/SEC	0.0	0.0	0.0	0.0	0.0	0.0	0.0
MN STM REL RT R0098A UCI/SEC	0.0	0.0	0.0	0.0	0.0	0.0	0.0
MN STM REL RT R0099A UCI/SEC	0.0	0.0	0.0	0.0	0.0	0.0	0.0

Effluent Group VIII

TIME	1533	1536	1539	1542	1545	1548	155?
FHB VENT PART R0025A UCI/CC	2.0E-10	2.0E-10	2.0E-10	2.0E-10	2.0E-10	2.0E-10	2.0E-10
FHB VENT GAS R0026A UCI/CC	3.59E-6	3.59E-6	3.59E-6	3.59E-6	3.59E-6	3.59E-6	3.59E-6
PAB 718'A PART R0050A UCI/CC	1.7E-10	1.7E-10	1.7E-10	1.7E-10	.7E-10	1.7E-10	1.7E-10
PAB 718'A GAS R0051A UCI/CC	1.45E-6	1.45E-6	1.45E-6	1.45E-6	1.45E-6	1.45E-6	1.45E-6
PAB 718'B PART R0052A UCI/CC	2.2E-10	2.2E-10	2.2E-10	2.2E-10	2.2E-10	2.2E-10	2.2E-10
PAB 718'B GAS R0053A UCI/CC	2.25E-6	2.25E-6	2.25E-6	2.25E-6	2.25E-6	2.25E-6	2.25E-6
PAB 718'C PART R0054A UCI/CC	2.1E-10	2.1E-10	2.1E-10	2.1E-10	2.1E-10	2.1E-10	2.1E-10
PAB 718'C GAS R0055A UCI/CC	1.46E-6	1.46E-6	1.46E-6	1.46E-6	1.46E-6	1.46E-6	1.46E-6
PAB 735'A PART R0056A UCI/CC	9E-10	1.9E-10	1.9E-10	1.9E-10	1.9E-10	1.9E-10	1.9E-10
PAB 735'A GAS R0057A UCI/CC	1.58E-6	1.58E-6	1.58E-6	1.58E-6	1.58E-6	1.58E-6	1.58E-6

TIME	1533	1536	1539	1542	1545	1548	1551
PAB 735'B PART R0058A UCI/CC	1.7E-10	1.7E-10	1.7E-10	1.7E-10	1.7E-10	1.7E-10	1.7E-10
PAB 735'B GAS R0059A UCI/CC	1.25E-6	1.25E-6	1.25E-6	1.25E-6	1.25E-6	1.25E-6	1.25E-6
PAB 755'A PART R0060A UCI/CC	1.8E-10	1.8E-10	1.8E-10	1.8E-10	1.8E-10	1.8E-10	1.8E-10
PAB 755'A GAS R0061A UCI/CC	1.37E-6	1.37E-6	1.37E-6	1.37E-6	1.37E-6	1.37E-6	1.37E-6
PAB 755'B PART R0062A UCI/CC	3.2E-10	3.2E-10	3.2E-10	3.2E-10	3.2E-10	3.2E-10	3.2E-10
PAB 755'B GAS R0063A UCI/CC	1.39E-6	1.39E-6	1.39E-6	1.39E-6	1.39E-6	1.39E-6	1.39E-6
RCB PART R0068A UCI/CC	6.8E-10	6.8E-10	6.8E-10	6.8E-10	6.8E-10	6.8E-10	6.8E-10
RCB GAS R0069A UCI/CC	9.55E-6	9.55E-6	9.55E-6	9.55E-6	9.55E-6	9.55E-6	9.55E-6
LK COL VENT PT R0077A UCI/CC	3.1E-10	3.1E-10	3.1E-10	3.1E-10	3.1E-10	3.1E-10	3.1E-10
LK COL VENT GS R0078A UCI/CC	2.54E-6	2.54E-6	2.54E-6	2.54E-6	2.54E-6	2.54E-6	2.54E-6

Airborne Group IX

TIME	1533	1536	1539	1542	1545	1548	1551
RX CLNT LTDN L R0003A UCI/CC	7.33E-1	7.33E-1	7.33E-1	7.33E-1	7.33E-1	7.33E-1	7.33E-1
RX CLNT LTDN H R0002A UCI/CC	1.05E0	1.05E0	1.05E0	1.05E0	1.05E0	1.05E0	1.05E0
SG BLDN SAMPLE R0079A UCI/CC	1.00E-5	1.00E-5	1.00E-5	1.00E-5	1.00E-5	1.00E-5	1.00E-5

Process Liquid Group X

TIME	1533	1536	1539	1542	1545	1548	1551
AIR EJ DISCH R0001A UCI/CC	2.59E-7	2.59E-7	2.59E-7	2.59E-7	2.59E-7	2.59E-7	2.59E-7
AIR EJ DEL EXH R0010A UCI/CC	3.35E-7	3.35E-7	3.35E-7	3.35E-7	3.35E-7	3.35E-7	3.35E-7

Process Gas Group XI

TIME	1533	1536	1539	1542	1545	1548	1551
FUEL BLD BRDGE R0024A MR/HR	8.03E-2	8.03E-2	8.03E-2	8.03E-2	8.03E-2	8.03E-2	8.03E-2
AUX BLDG 710' R0042A MR/HR	3.60E-2	3.60E-2	3.60E-2	3.60E-2	3.60E-2	3.60E-2	3.60E-2
AUX BLDG 710' R0043A MR/HR	2.14E-1	2.14E-1	2.14E-1	2.14E-1	2.14E-1	2.14E-1	2.14E-1
AUX BLDG 710' R0044A MR/HR	2.54E-2	2.54E-2	2.54E-2	2.54E-2	2.54E-2	2.54E-2	2.54E-2
AUX BLDG 735' R0045A MR/HR	3.54E-2	3.54E-2	3.54E-2	3.54E-2	3.54E-2	3.54E-2	3.54E-2
AUX BLDG 735' R0046A MR/HR	2.56E-2	2.56E-2	2.56E-2	2.56E-2	2.56E-2	2.56E-2	2.56E-2
AUX BLDG 755' R0047A MR/HR	1.77E-2	1.77E-2	1.77E-2	1.77E-2	1.77E-2	1.77E-2	1.77E-2
AUX BLDG 755' R0048A MR/HR	4.46E-2	4.46E-2	4.46E-2	4.46E-2	4.46E-2	4.46E-2	4.46E-2
AUX BLDG 755' R0049A MR/HR	9.17E-2	9.17E-2	9.17E-2	9.17E-2	9.17E-2	9.17E-2	9.17E-2
AUX BLDG 773' R0040A MR/HR	1.77E-2	1.77E-2	1.77E-2	1.77E-2	1.77E-2	1.77E-2	1.77E-2

Area Group XII

TIME	1533	1536	1539	1542	1545	1548	1551
PAB CHEM SM RM R0041A MR/HR	4.15E-1	4.15E-1	4.15E-1	4.15E-1	4.15E-1	4.15E-1	4.15E-1
RCB LO RNG R0070A MR/HR	2.60E-1	2.60E-1	2.60E-1	2.60E-1	2.60E-1	2.60E-1	2.60E-1
PERSONNEL HATC R0071A MR/HR	1.05E-1	1.05E-1	1.05E-1	1.05E-1	1.05E-1	1.05E-1	1.05E-1
PERSONNEL HATC R0072A MR/HR	4.75E0	4.75E0	4.75E0	4.75E0	4.75E0	4.75E0	4.75E0
RCB HI RNG R0086A R/HR	8.29E-1	8.29E-1	8.29E-1	8.29E-1	8.29E-1	8.29E-1	8.29E-1
RCB HI RNG R0087A R/HR	8.58E-1	8.58E-1	8.58E-1	8.58E-1	8.58E-1	8.58E-1	8.58E-1

TIME	1554	1557	1600	1603	1606	1609	1612
RCS Hotleg A T0419A Deg. F	606	606	606	606	606	606	606
RCS Hotleg B T0439A Deg. F	606	606	606	606	606	606	606
RCS Hotleg C T0459A Deg. F	606	606	606	606	606	606	606
RCS Coldleg A T0406A Deg. F	546	546	546	546	546	546	546
RCS Coldleg B T0426A Deg. F	546	546	546	546	546	546	546
RCS Coldleg C T0446A Deg. F	546	546	546	546	546	546	546
RCS Flow A F0400C Percent	100	100	100	100	100	100	100
RCS Flow B F0421C Percent	100	100	100	100	100	100	100
RCS Flow C F0442C Percent	100	100	100	100	100	100	100
VCT Level L2704A Percent	40	40	40	40	40	40	40

RCS Group I

TIME	1554	1557	1600	1603	1606	1609	1612
Source Range N0031A CPS	STBY	STBY	STBY	STBY	STBY	STBY	STBY
Power Range N0051A Percent	99	99	99	99	99	99	99
T/C Peak MXICTX Deg. F	618	618	618	618	618	618	618
T/C Average AVICTCX Deg. F	597	596	597	596	597	596	597
Deg Subcooling UT1002 Deg. F	36	36	36	36	36	36	36
Inter Range N0035A AMPS	10E-3	10E-3	10E-3	10E-3	10E-3	10E-3	10E-3

RCS Group I

TIME	1554	1557	1600	1603	1606	1609	1612
SG Pressure A P0402A PSIG (STM OUT)	832	832	832	832	832	832	832
SG Pressure B P0422A PSIG (STM OUT)	832	832	832	832	832	832	832
SG Pressure C P0442A PSIG (STM OUT)	832	832	832	832	832	832	832
SG Level A L0403A (W.R.)	55	55	55	55	55	55	55
SG Level A L0402A (N.R.)	43	43	43	43	43	43	43
SG Level B L0423A (W.R.)	55	55	55	55	55	55	55
SG Level B L0422A (N.R.)	43	43	43	43	43	43	43
SG Level C L0443A (W.R.)	55	55	55	55	55	55	55
SG Level C L0442A (N.R.)	43	43	43	43	43	43	43

Steam Generator Group II

TIME	1554	1557	1600	1603	1606	1609	1612
Steam Flow A F0403C KBH	3902	3901	3902	3901	3902	3901	3902
Steam Flow B F0425C KBH	3900	3900	3900	3900	3900	3900	3900
Steam Flow C F0443C KBH	3900	3900	3900	3900	3900	3900	3900
PD Wtr Tk Lvl L0300A IN	340	340	340	340	340	340	340
Aux FD Flow A F0601C GPM	0	0	0	0	0	0	0
Aux FD Flow B F0602C GPM	0	0	0	0	0	0	0
Aux FD Flow C F0603C GPM	0	0	0	0	0	0	0

Steam Generator Group II

TIME	1554	1557	1600	1603	1606	1609	1612
Cont Pressure P1000A PSIA	9.74	9.74	9.74	9.74	9.74	9.74	9.74
Cont Temp T1016A DEG F	94.3	94.4	94.4	94.4	94.3	94.4	94.3
Cont Sump Lvl L0750A IN	0	0	0	0	0	0	0
Hydrogen Y0752A Percent	0	0	0	0	0	0	0

Containment Group III

TIME	1554	1557	1600	1603	1606	1609	1612
SI Accum Lvl L0610A Percent	52	52	52	52	52	52	52
SI Accum Lvl L0620A Percent	52	52	52	52	52	52	52
SI Accum Lvl L0630A Percent	52	52	52	52	52	52	52
RWST Level L0500A IN	720	720	720	720	720	720	720

Safety Injection Group IV

TIME	1554	1557	1600	1603	1606	1609	1612
PZR Level L0480A Percent	54	54	54	54	54	54	54
PZR Temp (WTR) T0480A DEG F	651	650	651	650	651	650	651
PZR Temp (STM) T0481A DEG F	652	651	652	651	652	651	652
RCS Pressure P0103A PSIG	2239	2240	2239	2240	2239	2240	2239
PRT Level L0485A Percent	69	69	69	69	69	69	69
PZR Pressure P0480A PSIG	2228	2229	2228	2229	2228	2229	2228

Pressurizer Group V

TIME	1554	1557	1600	1603	1606	1609	1612
RCP 1A Y3421D On/Off	ON	ON	ON	ON	ON	ON	ON
RCP 1B Y3422D On/Off	ON	ON	ON	ON	ON	ON	ON
RCP 1C Y3423D On/Off	ON	ON	ON	ON	ON	ON	ON
MSIV Position OR001X O/C	OPEN	OPEN	OPEN	OPEN	OPEN	OPEN	OPEN
MSIV Position OR003X O/C	OPEN	OPEN	OPEN	OPEN	OPEN	OPEN	OPEN
MSIV Position OR005X O/C	OPEN	OPEN	OPEN	OPEN	OPEN	OPEN	OPEN

RCP/MSIV Group VI

TIME	1554	1557	1600	1603	1606	1609	1612
Battery 1 V0774A Volts	130	130	130	130	130	130	130
Battery 2 V0775A Volts	130	130	130	130	130	130	130
Battery 3 V0776A Volts	130	130	130	130	130	130	130
Battery 4 V0777A Volts	131	130	130	130	130	131	130
Battery 5 V0778A Volts	131	130	130	130	1303	131	130

Battery Group VII

TIME	1554	1557	1600	1603	1606	1609	1612
VENT VENT PART R0019A UCI/CC	5.5E-10	5.5E-10	5.5E-10	5.5E-10	5.5E-10	5.5E-10	5.5E-10
VENT VENT GAS R0020A UCI/CC	1.98E-6	1.98E-6	1.98E-6	1.98E-6	1.98E-6	1.98E-6	1.98E-6
ELEV REL RATE R0093A UCI/SEC	1.89E1	1.89E1	1.89E1	1.89E1	1.89E1	1.89E1	1.89E1
ELEV REL PART R0015A UCI/CC	1.6E-10	1.6E-10	1.6E-10	1.6E-10	1.6E-10	1.6E-10	1.6E-10
ELEV REL GAS L R0016A UCI/CC	6.98E-7	6.98E-7	6.98E-7	6.98E-7	6.98E-7	6.98E-7	6.9[illegible]-7
ELEV REL GAS M R0017A UCI/CC	1.94E-4	1.94E-4	1.94E-4	1.94E-4	1.94E-4	1.94E-4	1.94E-4
ELEV REL GAS H R0018A UCI/CC	4.85E-2	4.85E-2	4.85E-2	4.85E-2	4.85E-2	4.85E-2	4.85E-2
MAIN STM ACT R0088A UCI/CC	4.93E-3	4.93E-3	4.93E-3	4.93E-3	4.93E-3	4.93E-3	4.93E-3
MAIN STM ACT R0089A UCI/CC	4.00E-3	4.00E-3	4.00E-3	4.00E-3	4.00E-3	4.00E-3	4.00E-3
MA[illegible] STM ACT R0090A UCI/CC	4.25E-3	4.25E-3	4.25E-3	4.25E-3	4.25E-3	4.25E-3	4.25E-3

Effluent Group VIII

TIME	1554	1557	1600	1603	1606	1609	1612
MN STM REL RT R0091A UCI/SEC	0.0	0.0	0.0	0.0	0.0	0.0	0.0
MN STM REL RT R0098A UCI/SEC	0.0	0.0	0.0	0.0	0.0	0.0	0.0
MN STM REL RT R0099A UCI/SEC	0.0	0.0	0.0	0.0	0.0	0.0	0.0

Effluent Group VIII

TIME	1554	1557	1600	1603	1606	1609	1612
FHB VENT PART R0025A UCI/CC	2.0E-10	2.0E-10	2.0E-10	2.0E-10	2.0E-10	2.0E-10	2.0E-10
FHB VENT GAS R0026A UCI/CC	3.59E-6	3.59E-6	3.59E-6	3.59E-6	3.59E-6	3.59E-6	3.59E-6
PAB 718'A PART R0050A UCI/CC	1.7E-10	1.7E-10	1.7E-10	1.7E-10	1.7E-10	1.7E-10	1.7E-10
PAB 718'A GAS R0051A UCI/CC	1.45E-6	1.45E-6	1.45E-6	1.45E-6	1.45E-6	1.45E-6	1.45E-6
PAB 718'B PART R0052A UCI/CC	2.2E-10	2.2E-10	2.2E-10	2.2E-10	2.2E-10	2.2E-10	2.2E-10
PAB 718'B GAS R0053A UCI/CC	2.25E-6	2.25E-6	2.25E-6	2.25E-6	2.25E-6	2.25E-6	2.25E-6
PAB 718'C PART R0054A UCI/CC	2.1E-10	2.1E-10	2.1E-10	2.1E-10	2.1E-10	2.1E-10	2.1E-10
PAB 718'C GAS R0055A UCI/CC	1.46E-6	1.46E-6	1.46E-6	1.46E-6	1.46E-6	1.46E-6	1.46E-6
PAB 735'A PART R0056A UCI/CC	1.9E-10	1.9E-10	1.9E-10	1.9E-10	1.9E-10	1.9E-10	1.9E-10
PAB 735'A GAS R0057A UCI/CC	1.58E-6	1.58E-6	1.58E-6	1.58E-6	1.58E-6	1.58E-6	1.58E-6

Airborne Group IX

TIME	1554	1557	1600	1603	1606	1609	1612
PAB 735'B PART R0058A UCI/CC	1.7E-10	1.7E-10	1.7E-10	1.7E-10	1.7E-10	1.7E-10	1.7E-10
PAB 735'B GAS R0059A UCI/CC	1.25E-6	1.25E-6	1.25E-6	1.25E-6	1.25E-6	1.25E-6	1.25E-6
PAB 755'A PART R0060A UCI/CC	1.8E-10	1.8E-10	1.8E-10	1.8E-10	1.8E-10	1.8E-10	1.8E-10
PAB 755'A GAS R0061A UCI/CC	1.37E-6	1.37E-6	1.37E-6	1.37E-6	1.37E-6	1.37E-6	1.37E-6
PAB 755'B PART R0062A UCI/CC	3.2E-10	3.2E-10	3.2E-10	3.2E-10	3.2E-10	3.2E-10	3.2E-10
PAB 755'B GAS R0063A UCI/CC	1.39E-6	1.39E-6	1.39E-6	1.39E-6	1.39E-6	1.39E-6	1.39E-6
RCB PART R0068A UCI/CC	6.8E-10	6.8E-10	6.8E-10	6.8E-10	6.8E-10	6.8E-10	6.8E-10
RCB GAS R0069A UCI/CC	9.55E-6	9.55E-6	9.55E-6	9.55E-6	9.55E-6	9.55E-6	9.55E-6
LK COL VENT PT R0077A UCI/CC	3.1E-10	3.1E-10	3.1E-10	3.1E-10	3.1E-10	3.1E-10	3.1E-10
LK COL VENT GS R0078A UCI/CC	2.54E-6	2.54E-6	2.54E-6	2.54E-6	2.54E-6	2.54E-6	2.54E-6

TIME	1554	1557	1600	1603	1606	1609	1612
RX CLNT LTDN L R0003A UCI/CC	7.33E-1	7.33E-1	7.33E-1	7.33E-1	7.33E-1	7.33E-1	7.33E-1
RX CLNT LTDN H R0002A UCI/CC	1.05E0	1.05E0	1.05E0	1.05E0	1.05E0	1.05E0	1.05E0
SG BLDN SAMPLE R0079A UCI/CC	1.00E-5	1.00E-5	1.00E-5	1.00E-5	1.00E-5	1.00E-5	1.00E-5

Process Liquid Group X

TIME	1554	1557	1600	1603	1606	1609	1612
AIR EJ DISCH R0001A UCI/CC	2.59E-7	2.59E-7	2.59E-7	2.59E-7	2.59E-7	2.59E-7	2.59E-7
AIR EJ DEL EXH R0010A UCI/CC	3.35E-7	3.35E-7	3.35E-7	3.35E-7	3.35E-7	3.35E-7	3.35E-7

Process Gas Group XI

TIME	1554	1557	1600	1603	1606	1609	1612
FUEL BLD BRDGE R0024A MR/HR	8.03E-2	8.03E-2	8.03E-2	8.03E-2	8.03E-2	8.03E-2	8.03E-2
AUX BLDG 710' R0042A MR/HR	3.60E-2	3.60E-2	3.60E-2	3.60E-2	3.60E-2	3.60E-2	3.60E-2
AUX BLDG 710' R0043A MR/HR	2.14E-1	2.14E-1	2.14E-1	2.14E-1	2.14E-1	2.14E-1	2.14E-1
AUX BLDG 710' R0044A MR/HR	2.54E-2	2.54E-2	2.54E-2	2.54E-2	2.54E-2	2.54E-2	2.54E-2
AUX BLDG 735' R0045A MR/HR	3.54E-2	3.54E-2	3.54E-2	3.54E-2	3.54E-2	3.54E-2	3.54E-2
AUX BLDG 735' R0046A MR/HR	2.56E-2	2.56E-2	2.56E-2	2.56E-2	2.56E-2	2.56E-2	2.56E-2
AUX BLDG 755' R0047A MR/HR	1.77E-2	1.77E-2	1.77E-2	1.77E-2	1.77E-2	1.77E-2	1.77E-2
AUX BLDG 755' R0048A MR/HR	4.46E-2	4.46E-2	4.46E-2	4.46E-2	4.46E-2	4.46E-2	4.46E-2
AUX BLDG 755' R0049A MR/HR	9.17E-2	9.17E-2	9.17E-2	9.17E-2	9.17E-2	9.17E-2	9.17E-2
AUX BLDG 773' R0040A MR/HR	1.77E-2	1.77E-2	1.77E-2	1.77E-2	1.77E-2	1.77E-2	1.77E-2

Area Group XII

TIME	1554	1557	1600	1603	1606	1609	1612
PAB CHEM SM RM R0041A MR/HR	4.15E-1	4.15E-1	4.15E-1	4.15E-1	4.15E-1	4.15E-1	4.15E-1
RCB LO RNG R0070A MR/HR	2.60E-1	2.60E-1	2.60E-1	2.60E-1	2.60E-1	2.60E-1	2.60E-1
PERSONNEL HATC R0071A MR/HR	1.05E-1	1.05E-1	1.05E-1	1.05E-1	1.05E-1	1.05E-1	1.05E-1
PERSONNEL HATC R0072A MR/HR	4.75E0	4.75E0	4.75E0	4.75E0	4.75E0	4.75E0	4.75E0
RCB HI RNG R0086A R/HR	8.29E-1	8.29E-1	8.29E-1	8.29E-1	8.29E-1	8.29E-1	8.29E-1
RCB HI RNG R0087A R/HR	8.58E-1	8.58E-1	8.58E-1	8.58E-1	8.58E-1	8.58E-1	8.58E-1

Area Group XII

TIME	1615	1618	1621	1624	1627	1630	1633
RCS Hotleg A T0419A Deg. F	606	606	606	606	606	606	606
RCS Hotleg B T0439A Deg. F	606	606	606	606	606	606	606
RCS Hotleg C T0459A Deg. F	606	606	606	606	606	606	606
RCS Coldleg A T0406A Deg. F	546	546	546	546	546	546	546
RCS Coldleg B T0426A Deg. F	546	546	546	546	546	546	546
RCS Coldleg C T0446A Deg. F	546	546	546	546	546	546	546
RCS Flow A F0400C Percent	100	100	100	100	100	100	100
RCS Flow B F0421C Percent	100	100	100	100	100	100	100
RCS Flow C F0442C Percent	100	100	100	100	100	100	100
VCT Level L2704A Percent	40	40	40	40	40	40	40

RCS Group I

TIME	1615	1618	1621	1624	1627	1630	1633
Source Range N0031A CPS	STBY	STBY	STBY	STBY	STBY	STBY	STBY
Power Range N0051A Percent	99	99	99	99	99	99	99
T/C Peak MXICTX Deg. F	618	618	618	618	618	618	618
T/C Average AVICTCX Deg. F	597	596	597	596	597	596	597
Deg Subcooling UT1002 Deg. F	36	36	36	36	36	36	36
Inter Range N0035A AMPS	10E-3	10E-3	10E-3	10E-3	10E-3	10E-3	10E-3

TIME	1615	1618	1621	1624	1627	1630	1633
SG Pressure A P0402A PSIG (STM OUT)	832	832	832	832	832	832	832
SG Pressure B P0422A PSIG (STM OUT)	832	832	832	832	832	832	832
SG Pressure C P0442A PSIG (STM OUT)	832	832	832	832	832	832	832
SG Level A L0403A (W.R.)	55	55	55	55	55	55	55
SG Level A L0402A (N.R.)	43	43	43	43	43	43	43
SG Level B L0423A (W.R.)	55	55	55	55	55	55	55
SG Level B L0422A (N.R.)	43	43	43	43	43	43	43
SG Level C L0443A (W.R.)	55	55	55	55	55	55	55
SG Level C L0442A (N.R.)	43	43	43	43	43	43	43

Steam Generator Group II

TIME	1615	1618	1621	1624	1627	1630	1633
Steam Flow A F0403C KBH	3902	3901	3902	3901	3902	3901	3902
Steam Flow B F0425C KBH	3900	3900	3900	3900	3900	3900	3900
Steam Flow C F0443C KBH	3900	3900	3900	3900	3900	3900	3900
PD Wtr Tk Lvl L0300A IN	340	340	340	340	340	340	340
Aux FD Flow A F0601C GPM	0	0	0	0	0	0	0
Aux FD Flow B F0602C GPM	0	0	0	0	0	0	0
Aux FD Flow C F0603C GPM	0	0	0	0	0	0	0

Steam Generator Group II

TIME	1615	1618	1621	1624	1627	1630	1633
Cont Pressure P1000A PSIA	9.74	9.74	9.74	9.74	9.74	9.74	9.74
Cont Temp T1016A DEG F	94.3	94.4	94.3	94.4	94.3	94.4	94.3
Cont Sump Lvl L0750A IN	0	0	0	0	0	0	0
Hydrogen Y0752A Percent	0	0	0	0	0	0	0

Containment Group III

TIME	1615	1618	1621	1624	1627	1630	1633
SI Accum Lvl L0610A Percent	52	52	52	52	52	52	52
SI Accum Lvl L0620A Percent	52	52	52	52	52	52	52
SI Accum Lvl L0630A Percent	52	52	52	52	52	52	52
RWST Level L0500A IN	720	720	720	720	720	720	720

Safety Injection Group IV

TIME	1615	1618	1621	1624	1627	1630	1633
PZR Level L0480A Percent	54	54	54	54	54	54	54
PZR Temp (WTR) T0480A DEG F	651	650	651	650	651	650	651
PZR Temp (STM) T0481A DEG F	652	651	652	651	652	651	652
RCS Pressure P0103A PSIG	2239	2240	2239	2240	2239	2240	2239
PRT Level L0485A Percent	69	69	69	69	69	69	69
PZR Pressure P0480A PSIG	2228	2229	2228	2229	2228	2229	2228

Pressurizer Group V

TIME	1615	1618	1621	1624	1627	1630	1633
RCP 1A Y3421D On/Off	ON	ON	ON	ON	ON	ON	ON
RCP 1B Y3422D On/Off	ON	ON	ON	ON	ON	ON	ON
RCP 1C Y3423D On/Off	ON	ON	ON	ON	ON	ON	ON
MSIV Position OR001X O/C	OPEN	OPEN	OPEN	OPEN	OPEN	OPEN	OPEN
MSIV Position OR003X O/C	OPEN	OPEN	OPEN	OPEN	OPEN	OPEN	OPEN
MSIV Position OR005X O/C	OPEN	OPEN	OPEN	OPEN	OPEN	OPEN	OPEN

RCP/MSIV Group VI

TIME	1615	1618	1621	1624	1627	1630	1633
Battery 1 V0774A Volts	130	130	130	130	130	130	130
Battery 2 V0775A Volts	130	130	130	130	130	130	130
Battery 3 V0776A Volts	130	130	130	130	130	130	130
Battery 4 V0777A Volts	130	130	130	130	130	130	130
Battery 5 V0778A Volts	131	130	130	130	130	130	130

Battery Group VII

TIME	1615	1618	1621	1624	1627	1630	1633
VENT VENT PART R0019A UCI/CC	5.5E-10	5.5E-10	5.5E-10	5.5E-10	5.5E-10	5.5E-10	5.5E-10
VENT VENT GAS R0020A UCI/CC	1.98E-6	1.98E-6	1.98E-6	1.98E-6	1.98E-6	1.98E-6	1.98E-6
ELEV REL RATE R0093A UCI/SEC	1.89E1	1.89E1	1.89E1	1.89E1	1.89E1	1.89E1	1.89E1
ELEV REL PART R0015A UCI/CC	1.6E-10	1.6E-10	1.6E-10	1.6E-10	1.6E-10	1.6E-10	1.6E-10
ELEV REL GAS L R0016A UCI/CC	6.98E-7	6.98E-7	6.98E-7	6.98E-7	6.98E-7	6.98E-7	6.98E-7
ELEV REL GAS M R0017A UCI/CC	1.94E-4	1.94E-4	1.94E-4	1.94E-4	1.94E-4	1.94E-4	1.94E-4
ELEV REL GAS H R0018A UCI/CC	4.85E-2	4.85E-2	4.85E-2	4.85E-2	4.85E-2	4.85E-2	4.85E-2
MAIN STM ACT R0088A UCI/CC	4.93E-3	4.93E-3	4.93E-3	4.93E-3	4.93E-3	4.93E-3	4.93E-3
MAIN STM ACT R0089A UCI/CC	4.00E-3	4.00E-3	4.00E-3	4.00E-3	4.00E-3	4.00E-3	4.00E-3
MAIN STM ACT R0090A UCI/CC	4.25E-3	4.25E-3	4.25E-3	4.25E-3	4.25E-3	4.25E-3	4.25E-3

Effluent Group VIII

TIME	1615	1618	1621	1624	1627	1630	1633
MN STM REL RT R0091A UCI/SEC	0.0	0.0	0.0	0.0	0.0	0.0	0.0
MN STM REL RT R0098A UCI/SEC	0.0	0.0	0.0	0.0	0.0	0.0	0.0
MN STM REL RT R0099A UCI/SEC	0.0	0.0	0.0	0.0	0.0	0.0	0.0

Effluent Group VIII

TIME	1615	1618	1621	1624	1627	1630	1633
FHB VENT PART R0025A UCI/CC	2.0E-10	2.0E-10	2.0E-10	2.0E-10	2.0E-10	2.0E-10	2.0E-10
FHB VENT GAS RJ026A UCI/CC	3.59E-6	3.59E-6	3.59E-6	3.59E-6	3.59E-6	3.59E-6	3.59E-6
PAB 718'A PART R0050A UCI/CC	1.7E-10	1.7E-10	1.7E-10	1.7E-10	1.7E-10	1.7E-10	1.7E-10
PAB 718'A GAS R0051A UCI/CC	1.45E-6	1.45E-6	1.45E-6	1.45E-6	1.45E-6	1.45E-6	1.45E-6
PAB 718'B PART R0052A UCI/CC	2.2E-10	2.2E-10	2.2E-10	2.2E-10	2.2E-10	2.2E-10	2.2E-10
PAB 718'B GAS R0053A UCI/CC	2.25E-6	2.25E-6	2.25E-6	2.25E-6	2.25E-6	2.25E-6	2.25E-6
PAB 718'C PART R0054A UCI/CC	2.1E-10	2.1E-10	2.1E-10	2.1E-10	2.1E-10	2.1E-10	2.1E-10
PAB 718'C GAS R0055A UCI/CC	1.46E-6	1.46E-6	1.46E-6	1.46E-6	1.46E-6	1.46E-6	1.46E-6
PAB 735'A PART R0056A UCI/CC	1.9E-10	1.9E-10	1.9E-10	1.9E-10	1.9E-10	1.9E-10	1.9E-10
PAB 735'A GAS R0057A UCI/CC	1.58E-6	1.58E-6	1.58E-6	1.58E-6	1.58E-6	1.58E-6	1.58E-6

Airborne Group IX

TIME	1615	1618	1621	1624	1627	1630	1633
PAB 735'B PART R0058A UCI/CC	1.7E-10	1.7E-10	1.7E-10	1.7E-10	1.7E-10	1.7E-10	1.7E-10
PAB 735'B GAS R0059A UCI/CC	1.25E-6	1.25E-6	1.25E-6	1.25E-6	1.25E-6	1.25E-6	1.25E-6
PAB 755'A PART R0060A UCI/CC	1.8E-10	1.8E-10	1.8E-10	1.8E-10	1.8E-10	1.8E-10	1.8E-10
PAB 755'A GAS R0061A UCI/CC	1.37E-6	1.37E-6	1.37E-6	1.37E-6	1.37E-6	1.37E-6	1.37E-6
PAB 755'B PART R0062A UCI/CC	3.2E-10	3.2E-10	3.2E-10	3.2E-10	3.2E-10	3.2E-10	3.2E-10
PAB 755'B GAS R0063A UCI/CC	1.39E-6	1.39E-6	1.39E-6	1.39E-6	1.39E-6	1.39E-6	1.39E-6
RCB PART R0068A UCI/CC	6.8E-10	6.8E-10	6.8E-10	6.8E-10	6.8E-10	6.8E-10	6.8E-10
RCB GAS R0069A UCI/CC	9.55E-6	9.55E-6	9.55E-6	9.55E-6	9.55E-6	9.55E-6	9.55E-6
LK COL VENT PT R0077A UCI/CC	3.1E-10	3.1E-10	3.1E-10	3.1E-10	3.1E-10	3.1E-10	3.1E-10
LK COL VENT GS R0078A UCI/CC	2.54E-6	2.54E-6	2.54E-6	2.54E-6	2.54E-6	2.54E-6	2.54E-6

Airborne Group IX

TIME	1615	1618	1621	1624	1627	1630	1633
RX CLNT LTDN L R0003A UCI/CC	7.33E-1	7.33E-1	7.33E-1	7.33E-1	7.33E-1	7.33E-1	7.33E-1
RX CLNT LTDN H R0002A UCI/CC	1.05E0	1.05E0	1.05E0	1.05E0	1.05E0	1.05E0	1.05E0
SG BLDN SAMPLE R0079A UCI/CC	1.00E-5	1.00E-5	1.00E-5	1.00E-5	1.00E-5	1.00E-5	1.00E-5

Process Liquid Group X

TIME	1615	1618	1621	1624	1627	1630	1633
AIR EJ DISCH R0001A UCI/CC	2.59E-7	2.59E-7	2.59E-7	2.59E-7	2.59E-7	2.59E-7	2.59E-7
AIR EJ DEL EXH R0010A UCI/CC	3.35E-7	3.35E-7	3.35E-7	3.35E-7	3.35E-7	3.35E-7	3.35E-7

Process Gas Group XI

TIME	1615	1618	1621	1624	1627	1630	1633
FUEL BLD BRDGE R0024A MR/HR	8.03E-2	8.03E-2	8.03E-2	8.03E-2	8.03E-2	8.03E-2	8.03E-2
AUX BLDG 710' R0042A MR/HR	3.60E-2	3.60E-2	3.60E-2	3.60E-2	3.60E-2	3.60E-2	3.60E-2
AUX BLDG 710' R0043A MR/HR	2.14E-1	2.14E-1	2.14E-1	2.14E-1	2.14E-1	2.14E-1	2.14E-1
AUX BLDG 710' R0044A MR/HR	2.54E-2	2.54E-2	2.54E-2	2.54E-2	2.54E-2	2.54E-2	2.54E-2
AUX BLDG 735' R0045A MR/HR	3.54E-2	3.54E-2	3.54E-2	3.54E-2	3.54E-2	3.54E-2	3.54E-2
AUX BLDG 735' R0046A MR/HR	2.56E-2	2.56E-2	2.56E-2	2.56E-2	2.56E-2	2.56E-2	2.56E-2
AUX BLDG 755' R0047A MR/HR	1.77E-2	1.77E-2	1.77E-2	1.77E-2	1.77E-2	1.77E-2	1.77E-2
AUX BLDG 755' R0048A MR/HR	4.46E-2	4.46E-2	4.46E-2	4.46E-2	4.46E-2	4.46E-2	4.46E-2
AUX BLDG 755' R0049A MR/HR	9.17E-2	9.17E-2	9.17E-2	9.17E-2	9.17E-2	9.17E-2	9.17E-2
AUX BLDG 773' R0040A MR/HR	1.77E-2	1.77E-2	1.77E-2	1.77E-2	1.77E-2	1.77E-2	1.77E-2

Area Group XII

TIME	1615	1618	1621	1624	1627	1630	1633
PAB CHEM SM RM R0041A MR/HR	4.15E-1	4.15E-1	4.15E-1	4.15E-1	4.15E-1	4.15E-1	4.15E-1
RCB LO RNG R0070A MR/HR	2.60E-1	2.60E-1	2.60E-1	2.60E-1	2.60E-1	2.60E-1	2.60E-1
PERSONNEL HATC R0071A MR/HR	1.05E-1	1.05E-1	1.05E-1	1.05E-1	1.05E-1	1.05E-1	1.05E-1
PERSONNEL HATC R0072A MR/HR	4.75E0	4.75E0	4.75E0	4.75E0	4.75E0	4.75E0	4.75E0
RCB HI RNG R0086A R/HR	8.29E-1	8.29E-1	8.29E-1	8.29E-1	8.29E-1	8.29E-1	8.29E-1
RCB HI RNG R0087A R/HR	8.58E-1	8.58E-1	8.58E-1	8.58E-1	8.58E-1	8.58E-1	8.58E-1

Area Group XII

TIME	1636	1639	1642	1645	1648	1651	1654
RCS Hotleg A T0419A Deg. F	606	606	606	606	606	606	606
RCS Hotleg B T0439A Deg. F	606	606	606	606	606	606	606
RCS Hotleg C T0459A Deg. F	606	606	606	606	606	606	606
RCS Coldleg A T0406A Deg. F	546	546	546	546	546	546	546
RCS Coldleg B T0426A Deg. F	546	546	546	546	546	546	546
RCS Coldleg C T0446A Deg. F	546	546	546	546	546	546	546
RCS Flow A F0400C Percent	100	100	100	100	100	100	100
RCS Flow B F0421C Percent	100	100	100	100	100	100	100
RCS Flow C F0442C Percent	100	100	100	100	100	100	100
VCT Level L2704A Percent	40	40	40	40	40	40	40

RCS Group I

TIME	1636	1639	1642	1645	1648	1651	1654
Source Range N0031A CPS	STBY	STBY	STBY	STBY	STBY	STBY	STBY
Power Range N0051A Percent	99	99	99	99	99	99	99
T/C Peak MXICTX Deg. F	618	618	618	618	618	618	618
T/C Average AVICTCX Deg. F	596	597	596	597	596	597	596
Deg Subcooling UT1002 Deg. F	36	36	36	36	36	36	36
Inter Range N0035A AMPS	10E-3	10E-3	10E-3	10E-3	10E-3	10E-3	10E-3

RCS Group I

TIME	1636	1639	1642	1645	1648	1651	1654
SG Pressure A P0402A PSIG (STM OUT)	832	832	832	832	832	832	832
SG Pressure B P0422A PSIG (STM OUT)	832	832	832	832	832	832	832
SG Pressure C P0442A PSIG (STM OUT)	832	832	832	832	832	832	832
SG Level A L0403A (W.R.)	55	55	55	55	55	55	55
SG Level A L0402A (N.R.)	43	43	43	43	43	43	43
SG Level B L0423A (W.R.)	55	55	55	55	55	55	55
SG Level B L0422A (N.R.)	43	43	43	43	43	43	43
SG Level C L0443A (W.R.)	55	55	55	55	55	55	55
SG Level C L0442A (N.R.)	43	43	43	43	43	43	43

Steam Generator Group II

TIME	1636	1639	1642	1645	1648	1651	1654
Steam Flow A F0403C KBH	3901	3902	3901	3902	3901	3902	3901
Steam Flow B F0425C KBH	3900	3900	3900	3900	3900	3900	3900
Steam Flow C F0443C KBH	3900	3900	3900	3900	3900	3900	3900
PD Wtr Tk Lvl L0300A IN	340	340	340	340	340	340	340
Aux FD Flow A F0601C GPM	0	0	0	0	0	0	0
Aux FD Flow B F0602C GPM	0	0	0	0	0	0	0
Aux FD Flow C F0603C GPM	0	0	0	0	0	0	0

Steam Generator Group II

TIME	1636	1639	1642	1645	1648	1651	1654
Cont Pressure P1000A PSIA	9.74	9.74	9.74	9.74	9.74	9.74	9.74
Cont Temp T1016A DEG F	94.4	94.3	94.4	94.3	94.4	94.3	94.4
Cont Sump Lvl L0750A IN	0	0	0	0	0	0	0
Hydrogen Y0752A Percent	0	0	0	0	0	0	0

Containment Group III

TIME	1636	1639	1642	1645	1648	1651	1654
SI Accum Lvl L0610A Percent	52	52	52	52	52	52	52
SI Accum Lvl L0620A Percent	52	52	52	52	52	52	52
SI Accum Lvl L0630A Percent	52	52	52	52	52	52	52
RWST Level L0500A IN	720	720	720	720	720	720	720

Safety Injection Group IV

TIME	1636	1639	1642	1645	1648	1651	1654
PZR Level L0480A Percent	54	54	54	54	54	54	54
PZR Temp (WTR) T0480A DEG F	650	651	650	651	650	651	650
PZR Temp (STM) T0481A DEG F	651	652	651	652	651	652	651
RCS Pressure P0103A PSIG	2240	2239	2240	2239	2240	2239	2240
PRT Level L0485A Percent	69	69	69	69	69	69	69
PZR Pressure P0480A PSIG	2229	2228	2229	2228	2229	2228	2229

Pressurizer Group V

TIME	1636	1639	1642	1645	1648	1651	1654
RCP 1A Y3421D On/Off	ON	ON	ON	ON	ON	ON	ON
RCP 1B Y3422D On/Off	ON	ON	ON	ON	ON	ON	ON
RCP 1C Y3423D On/Off	ON	ON	ON	ON	ON	ON	ON
MSIV Position OR001X O/C	OPEN	OPEN	OPEN	OPEN	OPEN	OPEN	OPEN
MSIV Position OR003X O/C	OPEN	OPEN	OPEN	OPEN	OPEN	OPEN	OPEN
MSIV Position OR005X O/C	OPEN	OPEN	OPEN	OPEN	OPEN	OPEN	OPEN

RCP/MSIV Group VI

TIME	1636	1639	1642	1645	1648	1651	1654
Battery 1 V0774A Volts	130	130	130	130	130	130	130
Battery 2 V0775A Volts	130	130	130	130	130	130	130
Battery 3 V0776A Volts	130	131	130	130	130	130	130
Battery 4 V0777A Volts	130	130	130	130	130	130	130
Battery 5 V0778A Volts	130	130	130	130	130	130	130

Battery Group VII

TIME	1636	1639	1642	1645	1648	1651	1654
VENT VENT PART R0019A UCI/CC	5.5E-10	5.5E-10	5.5E-10	5.5E-10	5.5E-10	5.5E-10	5.5E-10
VENT VENT GAS R0020A UCI/CC	1.98E-6	1.98E-6	1.98E-6	1.98E-6	1.98E-6	1.98E-6	1.98E-6
ELEV REL RATE R0093A UCI/SEC	1.89E1	1.89E1	1.89E1	1.89E1	1.89E1	1.89E1	1.89E1
ELEV REL PART R0015A UCI/CC	1.6E-10	1.6E-10	1.6E-10	1.6E-10	1.6E-10	1.6E-10	1.6E-10
ELEV REL GAS L R0016A UCI/CC	6.98E-7	6.98E-7	6.98E-7	6.98E-7	6.98E-7	6.98E-7	6.98
ELEV REL GAS M R0017A UCI/CC	1.94E-4	1.94E-4	1.94E-4	1.94E-4	1.94E-4	1.94E-4	1.94E-4
ELEV REL GAS H R0018A UCI/CC	4.85E-2	4.85E-2	4.85E-2	4.85E-2	4.85E-2	4.85E-2	4.85E-2
MAIN STM ACT R0088A UCI/CC	4.93E-3	4.93E-3	4.93E-3	4.93E-3	4.93E-3	4.93E-3	4.93E-3
MAIN STM ACT R0089A UCI/CC	4.00E-3	4.00E-3	4.00E-3	4.00E-3	4.00E-3	4.00E-3	4.00E-3
MAIN STM ACT R0090A UCI/CC	4.25E-3	4.25E-3	4.25E-3	4.25E-3	4.25E-3	4.25E-3	4.25E-3

Effluent Group VIII

TIME	1636	1639	1642	1645	1648	1651	1654
MN STM REL RT R0091A UCI/SEC	0.0	0.0	0.0	0.0	0.0	0.0	0.0
MN STM REL RT R0098A UCI/SEC	0.0	0.0	0.0	0.0	0.0	0.0	0.0
MN STM REL RT R0099A UCI/SEC	0.0	0.0	0.0	0.0	0.0	0.0	0.0

Effluent Group VIII

TIME	1636	1639	1642	1645	1648	1651	1654
FHB VENT PART R0025A UCI/CC	2.0E-10	2.0E-10	2.0E-10	2.0E-10	2.0E-10	2.0E-10	2.0E-10
FHB VENT GAS R0026A UCI/CC	3.59E-6	3.59E-6	3.59E-6	3.59E-6	3.59E-6	3.59E-6	3.59E-6
PAB 718'A PART R0050A UCI/CC	1.7E-10	1.7E-10	1.7E-10	1.7E-10	1.7E-10	1.7E-10	1.7E-10
PAB 718'A GAS R0051A UCI/CC	1.45E-6	1.45E-6	1.45E-6	1.45E-6	1.45E-6	1.45E-6	1.45E-6
PAB 718'B PART R0052A UCI/CC	2.2E-10	2.2E-10	2.2E-10	2.2E-10	2.2E-10	2.2E-10	2.2E-10
PAB 718'B GAS R0053A UCI/CC	2.25E-6	2.25E-6	2.25E-6	2.25E-6	2.25E-6	2.25E-6	2.25E-6
PAB 718'C PART R0054A UCI/CC	2.1E-10	2.1E-10	2.1E-10	2.1E-10	2.1E-10	2.1E-10	2.1E-10
PAB 718'C GAS R0055A UCI/CC	1.46E-6	1.46E-6	1.46E-6	1.46E-6	1.46E-6	1.46E-6	1.46E-6
PAB 735'A PART R0056A UCI/CC	1.9E-10	1.9E-10	1.9E-10	1.9E-10	1.9E-10	1.9E-10	1.9E-10
PAB 735'A GAS R0057A UCI/CC	1.58E-6	1.58E-6	1.58E-6	1.58E-6	1.58E-6	1.58E-6	1.58E-6

Airborne Group IX

TIME	1636	1639	1642	1645	1648	1651	1654
PAB 735'B PART R0058A UCI/CC	1.7E-10	1.7E-10	1.7E-10	1 7E-10	1.7E-10	1.7E-10	1.7E-10
PAB 735'B GAS R0059A UCI/CC	1.25E-6	1.25E-6	1.25E-6	1.25E-6	1.25E-6	1.25E-6	1.25E-6
PAB 755'A PART R0060A UCI/CC	1.8E-10	1.8E-10	1.8E-10	1.8E-10	1.8E-10	1.8E-10	1.8E-10
PAB 755'A GAS R0061A UCI/CC	1.37E-6	1.37E-6	1.37E-6	1.37E-6	1.37E-6	1.37E-6	1.37E-6
PAB 755'B PART R0062A UCI/CC	3.2E-10	3.2E-10	3.2E-10	3.2E-10	3.2E-10	3.2E-10	3.2E-10
PAB 755'B GAS R0063A UCI/CC	1.39E-6	1.39E-6	1.39E-6	1.39E-6	1.39E-6	1.39E-6	1.39E-6
RCB PART R0068A UCI/CC	6.8E-10	6.8E-10	6.8E-10	6.8E-10	6.8E-10	6.8E-10	6.8E-10
RCB GAS R0069A UCI/CC	9.55E-6	9.55E-6	9.55E-6	9.55E-6	9.55E-6	9.55E-6	9.55E-6
LK COL VENT PT R0077A UCI/CC	3.1E-10	3.1E-10	3.1E-10	3.1E-10	3.1E-10	3.1E-10	3.1E-10
LK COL VENT GS R0078A UCI/CC	2.54E-6	2.54E-6	2.54E-6	2.54E-6	2.54E-6	2.54E-6	2.54E-6

TIME	1636	1639	1642	1645	1648	1651	1654
RX CLNT LTDN L R0003A UCI/CC	7.33E-1	7.33E-1	7.33E-1	7.33E-1	7.33E-1	7.33E-1	7.33E-1
RX CLNT LTDN H R0002A UC1/CC	1.05E0	1.05E0	1.05E0	1.05E0	1.05E0	1.05E0	1.05E0
SG BLDN SAMPLE R0079A UCI/CC	1.00E-5	1.00E-5	1.00E-5	1.00E-5	1.00E-5	1.00E-5	1.00E-5

Process Liquid Group X

TIME	1636	1639	1642	1645	1648	1651	1654
AIR EJ DISCH R0001A UCI/CC	2.59E-7	2.59E-7	2.59E-7	2.59E-7	2.59E-7	2.59E-7	2.59E-7
AIR EJ DEL EXH R0010A UCI/CC	3.35E-7	3.35E-7	3.35E-7	3.35E-7	3.35E-7	3.35E-7	3.35E-7

Process Gas Group XI

TIME	1636	1639	1642	1645	1648	1651	1654
FUEL BLD BRDGE R0024A MR/HR	8.03E-2	8.03E-2	8.03E-2	8.03E-2	8.03E-2	8.03E-2	8.03E-2
AUX BLDG 710' R0042A MR/HR	3.60E-2	3.60E-2	3.60E-2	3.60E-2	3.60E-2	3.60E-2	3.60E-2
AUX BLDG 710' R0043A MR/HR	2.14E-1	2.14E-1	2.14E-1	2.14E-1	2.14E-1	2.14E-1	2.14E-1
AUX BLDG 710' R0044A MR/HR	2.54E-2	2.54E-2	2.54E-2	2.54E-2	2.54E-2	2.54E-2	2.54E-2
AUX BLDG 735' R0045A MR/HR	3.54E-2	3.54E-2	3.54E-2	3.54E-2	3.54E-2	3.54E-2	3.54E-2
AUX BLDG 735' R0046A MR/HR	2.56E-2	2.56E-2	2.56E-2	2.56E-2	2.56E-2	2.56E-2	2.56E-2
AUX BLDG 755' R0047A MR/HR	1.77E-2	1.77E-2	1.77E-2	1.77E-2	1.77E-2	1.77E-2	1.77E-2
AUX BLDG 755' R0048A MR/HR	4.46E-2	4.46E-2	4.46E-2	4.46E-2	4.46E-2	4.46E-2	4.46E-2
AUX BLDG 755' R0049A MR/HR	9.17E-2	9.17E-2	9.17E-2	9.17E-2	9.17E-2	9.17E-2	9.17E-2
AUX BLDG 773' R0040A MR/HR	1.77E-2	1.77E-2	1.77E-2	1.77E-2	1.77E-2	1.77E-2	1.77E-2

Area Group XII

TIME	1636	1639	1642	1645	1648	1651	1654
PAR CHEM SM RM R0041A MR/HR	4.15E-1	4.15E-1	4.15E-1	4.15E-1	4.15E-1	4.15E-1	4.15E-1
RCB LO RNG R0070A MR/HR	2.60E-1	2.60E-1	2.60E-1	2.60E-1	2.60E-1	2.60E-1	2.60E-1
PERSONNEL HATC R0071A MR/HR	1.05E-1	1.05E-1	1.05E-1	1.05E-1	1.05E-1	1.05E-1	1.05E-1
PERSONNEL HATC R0072A MR/HR	4.75E0	4.75E0	4.75E0	4.75E0	4.75E0	4.75E0	4.75E0
RCB HI RNG R0086A R/HR	8.29E-1	8.29E-1	8.29E-1	8.29E-1	8.29E-1	8.29E-1	8.29E-1
RCB HI RNG R0087A R/HR	8.58E-1	8.58E-1	8.58E-1	8.58E-1	8.58E-1	8.58E-1	8.58E-1

Area Group XII

TIME	1657	1700	1703	1706	1709	1712	1715
RCS Hotleg A T0[illegible]9A Deg. F	606	606	606	606	606	606	606
RCS Hotleg B T0439A Deg. F	606	606	606	606	606	606	606
RCS Hotleg C T0459A Deg. F	606	606	606	606	606	606	606
RCS Coldleg A T0406A Deg. F	546	546	546	546	546	546	546
RCS Coldleg B T0426A Deg. F	546	546	546	546	546	546	546
RCS Coldleg C T0446A Deg. F	546	546	546	546	546	546	546
RCS Flow A F0400C Percent	100	100	100	100	100	100	100
RCS Flow B F0421C Percent	100	100	100	100	100	100	100
RCS Flow C F0442C Percent	100	100	100	100	100	100	100
VCT Level L2704A Percent	40	40	40	40	40	40	40

RCS Group I

TIME	1657	1700	1703	1706	1709	1712	1715
Source Range N0031A CPS	STBY	STBY	STBY	STBY	STBY	STBY	STBY
Power Range N0051A Percent	99	99	99	99	99	99	99
T/C Peak MXJCTX Deg. F	618	618	618	618	618	618	618
T/C Average AVICTCX Deg. F	597	596	597	596	597	596	597
Deg Subcooling UT1002 Deg. F	36	36	36	36	36	36	36
Inter Range N0035A AMPS	10E-3	10E-3	10E-3	10E-3	10E-3	10E-3	10E-3

RCS Group I

TIME	1657	1700	1703	1706	1709	1712	1715
SG Pressure A P0402A PSIG (STM OUT)	832	832	832	832	832	832	832
SG Pressure B P0422A PSIG (STM OUT)	832	832	832	832	832	832	832
SG Pressure C P0442A PSIG (STM OUT)	832	832	832	832	832	832	832
SG Level A L0403A (W.R.)	55	55	55	55	55	55	55
SG Level A L0402A (N.R.)	43	43	43	43	43	43	43
SG Level B L0423A (W.R.)	55	55	55	55	55	55	55
SG Level B L0422A (N.R.)	43	43	43	43	43	43	43
SG Level C L0443A (W.R.)	55	55	55	55	55	55	55
SG Level C L0442A (N.R.)	43	43	43	43	43	43	43

Steam Generator Group II

TIME	1657	1700	1703	1706	1709	1712	1715
Steam Flow A F0403C KBH	3902	3901	3902	3901	3902	3901	3901
Steam Flow B F0425C KBH	3900	3900	3900	3900	3900	3900	3900
Steam Flow C F0443C KBH	3900	3900	3900	3900	3900	3900	3900
PD Wtr Tk Lvl L0300A IN	340	340	340	340	340	340	340
Aux FD Flow A F0601C GPM	0	0	0	0	0	0	0
Aux FD Flow B F0602C GPM	0	0	0	0	0	0	0
Aux FD Flow C F0603C GPM	0	0	0	0	0	0	0

Steam Generator Group II

TIME	1657	1700	1703	1706	1709	1712	1715
Cont Pressure P1000A PSIA	9.74	9.74	9.74	9.74	9.74	9.74	9.74
Cont Temp T1016A DEG F	94.3	94.4	94.3	94.3	94.3	94.4	94.3
Cont Sump Lvl L0750A IN	0	0	0	0	0	0	0
Hydrogen Y0752A Percent	0	0	0	0	0	0	0

Containment Group III

TIME	1657	1700	1703	1706	1709	1712	1715
SI Accum Lvl L0610A Percent	52	52	52	52	52	52	52
SI Accum Lvl L0620A Percent	52	52	52	52	52	52	52
SI Accum Lvl L0630A Percent	52	52	52	52	52	52	52
RWST Level L0500A IN	720	720	720	720	720	720	720

Safety Injection Group IV

TIME	1657	1700	1703	1706	1709	1712	1715
PZR Level L0480A Percent	54	54	54	54	54	54	54
PZR Temp (WTR) T0480A DEG F	651	650	651	650	651	650	651
PZR Temp (STM) T0481A DEG F	652	651	652	651	652	651	652
RCS Pressure P0103A PSIG	2239	2240	2239	2240	2239	2240	2239
PRT Level L0485A Percent	69	69	69	69	69	69	69
PZR Pressure P0480A PSIG	2228	2229	2228	2229	2228	2229	2228

Pressurizer Group V

TIME	1657	1700	1703	1706	1709	1712	1715
RCP 1A Y3421D On/Off	ON	ON	ON	ON	ON	ON	ON
RCP 1B Y3422D On/Off	ON	ON	ON	ON	ON	ON	ON
RCP 1C Y3423D On/Off	ON	ON	ON	ON	ON	ON	ON
MSIV Position OR001X O/C	OPEN	OPEN	OPEN	OPEN	OPEN	OPEN	OPEN
MSIV Position OR003X O/C	OPEN	OPEN	OPEN	OPEN	OPEN	OPEN	OPEN
MSIV Position OR005X O/C	OPEN	OPEN	OPEN	OPEN	OPEN	OPEN	OPEN

RCP/MSIV Group VI

TIME	1657	1700	1703	1706	1709	1712	1715
Battery 1 V0774A Volts	130	130	130	130	130	130	130
Battery 2 V0775A Volts	130	130	130	130	130	130	130
Battery 3 V0776A Volts	130	130	130	130	130	130	130
Battery 4 V0777A Volts	130	130	130	130	130	130	130
Battery 5 V0778A Volts	130	131	130	130	130	130	130

Battery Group VII

TIME	1657	1700	1703	1706	1709	1712	1715
VENT VENT PART R0019A UCI/CC	5.5E-10	5.5E-10	5.5E-10	5.5E-10	5.5E-10	5.5E-10	5.5E-10
VENT VENT GAS R0020A UCI/CC	1.98E-6	1.98E-6	1.98E-6	1.98E-6	1.98E-6	1.98E-6	1.98E-6
ELEV REL RATE R0093A UCI/SEC	1.89E1	1.89E1	1.89E1	1.89E1	1.89E1	1.89E1	1.89E1
ELEV REL PART R0015A UCI/CC	1.6E-10	1.6E-10	1.6E-10	1.6E-10	1.6E-10	1.6E-10	1.6E-10
ELEV REL GAS L R0016A UCI/CC	6.98E-7	6.98E-7	6.98E-7	6.98E-7	6.98E-7	6.98E-7	6.98E-7
ELEV REL GAS M R0017A UCI/CC	1.94E-4	1.94E-4	1.94E-4	1.94E-4	1.94E-4	1.94E-4	1.94E-4
ELEV REL GAS H R0018A UCI/CC	4.85E-2	4.85E-2	4.85E-2	4.85E-2	4.85E-2	4.85E-2	4.85E-2
MAIN STM ACT R0088A UCI/CC	4.93E-3	4.93E-3	4.93E-3	4.93E-3	4.93E-3	4.93E-3	4.93E-3
MAIN STM ACT R0089A UCI/CC	4.00E-3	4.00E-3	4.00E-3	4.00E-3	4.00E-3	4.00E-3	4.00E-3
MAIN STM ACT R0090A UCI/CC	4.25E-3	4.25E-3	4.25E-3	4.25E-3	4.25E-3	4.25E-3	4.25E-3

Effluent Group VIII

TIME	1657	1700	1703	1706	1709	1712	1715
MN STM REL RT R0091A UCI/SEC	0.0	0.0	0.0	0.0	0.0	0.0	0.0
MN STM REL RT R0098A UCI/SEC	0.0	0.0	0.0	0.0	0.0	0.0	0.0
MN STM REL RT R0099A UCI/SEC	0.0	0.0	0.0	0.0	0.0	0.0	0.0

Effluent Group VIII

TIME	1657	1700	1703	1706	1709	1712	1715
FHB VENT PART R0025A UCI/CC	2.0E-10	2.0E-10	2.0E-10	2.0E-10	2.0E-10	2.0E-10	2.0E-10
FHB VENT GAS R0026A UCI/CC	3.59E-6	3.59E-6	3.59E-6	3.59E-6	3.59E-6	3.59E-6	3.59E-6
PAB 718'A PART R0050A UCI/CC	1.7E-10	1.7E-10	1.7E-10	1.7E-10	1.7E-10	1.7E-10	1.7E-10
PAB 718'A GAS R0051A UCI/CC	1.45E-6	1.45E-6	1.45E-6	1.45E-6	1.45E-6	1.45E-6	1.45E-6
PAB 718'B PART R0052A UCI/CC	2.2E-10	2.2E-10	2.2E-10	2.2E-10	2.2E-10	2.2E-10	2.2E-10
PAB 718'B GAS R0053A UCI/CC	2.25E-6	2.25E-6	2.25E-6	2.25E-6	2.25E-6	2.25E-6	2.25E-6
PAB 718'C PART R0054A UCI/CC	2.1E-10	2.1E-10	2.1E-10	2.1E-10	2.1E-10	2.1E-10	2.1E-10
PAB 718'C GAS R0055A UCI/CC	1.46E-6	1.46E-6	1.46E-6	1.46E-6	1.46E-6	1.46E-6	1.46E-6
PAB 735'A PART R0056A UCI/CC	1.9E-10	1.9E-10	1.9E-10	1.9E-10	1.9E-10	1.9E-10	1.9E-10
PAB 735'A GAS R0057A UCI/CC	1.58E-6	1.58E-6	1.58E-6	1.58E-6	1.58E-6	1.58E-6	1.58E-6

TIME	1657	1700	1703	1706	1709	1712	1715
PAB 735'B PART R0058A UCI/CC	1.7E-10	1.7E-10	1.7E-10	1.7E-10	1.7E-10	1.7E-10	1.7E-10
PAB 735'B GAS R0059A UCI/CC	1.25E-6	1.25E-6	1.25E-6	1.25E-6	1.25E-6	1.25E-6	1.25E-6
PAB 755'A PART R0060A UCI/CC	1.8E-10	1.8E-10	1.8E-10	1.8E-10	1.8E-10	1.8E-10	1.8E-10
PAB 755'A GAS R0061A UCI/CC	1.37E-6	1.37E-6	1.37E-6	1.37E-6	1.37E-6	1.37E-6	1.37E-6
PAB 755'B PART R0062A UCI/CC	3.2E-10	3.2E-10	3.2E-10	3.2E-10	3.2E-10	3.2E-10	3.2E-10
PAB 755'B GAS R0063A UCI/CC	1.39E-6	1.39E-6	1.39E-6	1.39E-6	1.39E-6	1.39E-6	1.39E-6
RCB PART R0068A UCI/CC	6.8E-10	6.8E-10	6.8E-10	6.8E-10	6.8E-10	6.8E-10	6.8E-10
RCB GAS R0069A UCI/CC	9.55E-6	9.55E-6	9.55E-6	9.55E-6	9.55E-6	9.55E-6	9.55E-6
LK COL VENT PT R0077A UCI/CC	3.1E-10	3.1E-10	3.1E-10	3.1E-10	3.1E-10	3.1E-10	3.1E-10
LK COL VENT GS R0078A UCI/CC	2.54E-6	2.54E-6	2.54E-6	2.54E-6	2.54E-6	2.54E-6	2.54E-6

Airborne Group IX

TIME	1657	1700	1703	1706	1709	1712	1715
RX CLNT LTDN L R0003A UCI/CC	7.33E-1	7.33E-1	7.33E-1	7.33E-1	7.33E-1	7.33E-1	7.33E-1
RX CLNT LTDN H R0002A UCI/CC	1.05E0	1.05E0	1.05E0	1.05E0	1.05E0	1.05E0	1.05E0
SG BLDN SAMPLE R0079A UCI/CC	1.00E-5	1.00E-5	1.00E-5	1.00E-5	1.00E-5	1.00E-5	1.00E-5

Process Liquid Group X

TIME	1657	1700	1703	1706	1709	1712	1715
AIR EJ DISCH R0001A UCI/CC	2.59E-7	2.59E-7	2.59E-7	2.59E-7	2.59E-7	2.59E-7	2.59E-7
AIR EJ DEL EXH R0010A UCI/CC	3.35E-7	3.35E-7	3.35E-7	3.35E-7	3.35E-7	3.35E-7	3.35E-7

Process Gas Group XI

TIME	1657	1700	1703	1706	1709	1712	1715
FUEL BLD BRDGE R0024A MR/HR	8.03E-2	8.03E-2	8.03E-2	8.03E-2	8.03E-2	8.03E-2	8.03E-2
AUX BLDG 710' R0042A MR/HR	3.60E-2	3.60E-2	3.60E-2	3.60E-2	3.60E-2	3.60E-2	3.60E-2
AUX BLDG 710' R0043A MR/HR	2.14E-1	2.14E-1	2.14E-1	2.14E-1	2.14E-1	2.14E-1	2.14E-1
AUX BLDG 710' R0044A MR/HR	2.54E-2	2.54E-2	2.54E-2	2.54E-2	2.54E-2	2.54E-2	2.54E-2
AUX BLDG 735' R0045A MR/HR	3.54E-2	3.54E-2	3.54E-2	3.54E-2	3.54E-2	3.54E-2	3.54E-2
AUX BLDG 735' R0046A MR/HR	2.56E-2	2.56E-2	2.56E-2	2.56E-2	2.56E-2	2.56E-2	2.56E-2
AUX BLDG 755' R0047A MR/HR	1.77E-2	1.77E-2	1.77E-2	1.77E-2	1.77E-2	1.77E-2	1.77E-2
AUX BLDG 755' R0048A MR/HR	4.46E-2	4.46E-2	4.46E-2	4.46E-2	4.46E-2	4.46E-2	4.46E-2
AUX BLDG 755' R0049A MR/HR	9.17E-2	9.17E-2	9.17E-2	9.17E-2	9.17E-2	9.17E-2	9.17E-2
AUX BLDG 773' R0040A MR/HR	1.77E-2	1.77E-2	1.77E-2	1.77E-2	1.77E-2	1.77E-2	1.77E-2

Area Group XII

TIME	1657	1700	1703	1706	1709	1712	1715
PAB CHEM SM RM R0041A MR/HR	4.15E-1	4.15E-1	4.15E-1	4.15E-1	4.15E-1	4.15E-1	4.15E-1
RCB LO RNG R0070A MR/HR	2.60E-1	2.60E-1	2.60E-1	2.60E-1	2.60E-1	2.60E-1	2.60E-1
PERSONNEL HATC R0071A MR/HR	1.05E-1	1.05E-1	1.05E-1	1.05E-1	1.05E-1	1.05E-1	1.05E-1
PERSONNEL HATC R0072A MR/HR	4.75E0	4.75E0	4.75E0	4.75E0	4.75E0	4.75E0	4.75E0
RCB HI RNG R0086A R/HR	8.29E-1	8.29E-1	8.29E-1	8.29E-1	8.29E-1	8.29E-1	8.29E-1
RCB HI RNG R0087A R/HR	8.58E-1	8.58E-1	8.58E-1	8.58E-1	8.58E-1	8.58E-1	8.58E-1

Area Group XII

TIME	1718	1721	1724	1727	1730	1733	1736
RCS Hotleg A T0419A Deg. F	606	606	606	606	606	606	606
RCS Hotleg B T0439A Deg. F	606	606	606	606	606	606	606
RCS Hotleg C T0459A Deg. F	606	606	606	606	606	606	606
RCS Coldleg A T0406A Deg. F	546	546	546	546	546	546	546
RCS Coldleg B T0426A Deg. F	546	546	546	546	546	546	546
RCS Coldleg C T0446A Deg. F	546	546	546	546	546	546	546
RCS Flow A F0400C Percent	100	100	100	100	100	100	100
RCS Flow B F0421C Percent	100	100	100	100	100	100	100
RCS Flow C F0442C Percent	100	100	100	100	100	100	100
VCT Level L2704A Percent	40	40	40	40	40	40	40

RCS Group I

TIME	1718	1721	1724	1727	1730	1733	1736
Source Range N0031A CPS	STBY	STBY	STBY	STBY	STBY	STBY	STBY
Power Range N0051A Percent	99	99	99	99	99	99	99
T/C Peak MXICTX Deg. F	618	618	618	618	618	618	618
T/C Average AVICTCX Deg. F	596	597	596	597	596	596	596
Deg Subcooling UT1002 Deg. F	36	36	36	36	36	36	36
Inter Range N0035A AMPS	10E-3	10E-3	10E-3	10E-3	10E-3	10E-3	10E-3

RCS Group I

TIME	1718	1721	1724	1727	1730	1733	1736
SG Pressure A P0402A PSIG (STM OUT)	832	832	832	832	832	832	832
SG Pressure B P0422A PSIG (STM OUT)	832	832	832	832	832	832	832
SG Pressure C P0442A PSIG (STM OUT)	832	832	832	832	832	832	832
SG Level A L0403A (W.R.)	55	55	55	55	55	55	55
SG Level A L0402A (N.R.)	43	43	43	43	43	43	43
SG Level B L0423A (W.R.)	55	55	55	55	55	55	55
SG Level B L0422A (N.R.)	43	43	43	43	43	43	43
SG Level C L0443A (W.R.)	55	55	55	55	55	55	55
SG Level C L0442A (N.R.)	43	43	43	43	43	43	43

Steam Generator Group II

TIME	1718	1721	1724	1727	1730	1733	1736
Steam Flow A F0403C KBH	3901	3902	3901	3902	3901	3902	3901
Steam Flow B F0425C KBH	3900	3900	3900	3900	3900	3900	3900
Steam Flow C F0443C KBH	3900	3900	3900	3900	3900	3900	3900
PD Wtr Tk Lvl L0300A IN	340	340	340	340	340	340	340
Aux FD Flow A F0601C GPM	0	0	0	0	0	0	0
Aux FD Flow B F0602C GPM	0	0	0	0	0	0	0
Aux FD Flow C F0603C GPM	0	0	0	0	0	0	0

Steam Generator Group II

TIME	1718	1721	1724	1727	1730	1733	1736
Cont Pressure P1000A PSIA	9.74	9.74	9.74	9.74	9.74	9.74	9.74
Cont Temp T1016A DEG F	94.4	94.3	94.4	94.3	94.4	94.3	94.4
Cont Sump Lvl L0750A IN	0	0	0	0	0	0	0
Hydrogen Y0752A Percent	0	0	0	0	0	0	0

Containment Group III

TIME	1718	1721	1724	1727	1730	1733	1736
SI Accum Lvl L0610A Percent	52	52	52	52	52	52	52
SI Accum Lvl L0620A Percent	52	52	52	52	52	52	52
SI Accum Lvl L0630A Percent	52	52	52	52	52	52	52
RWST Level L0500A IN	720	720	720	720	720	720	720

Safety Injection Group IV

TIME	1718	1721	1724	1727	1730	1733	1736
PZR Level L0480A Percent	54	54	54	54	54	54	54
PZR Temp (WTR) T0480A DEG F	650	651	650	651	650	651	650
PZR Temp (STM) T0481A DEG F	651	652	651	652	651	652	651
RCS Pressure P0103A PSIG	2240	2239	2240	2239	2240	2239	2240
PRT Level L0485A Percent	69	69	69	69	69	69	69
PZR Pressure P0480A PSIG	2229	2228	2229	2228	2229	2228	2229

Pressurizer Group V

TIME	1718	1721	1724	1727	1730	1733	1736
RCP 1A Y3421D On/Off	ON	ON	ON	ON	ON	ON	ON
RCP 1B Y3422D On/Off	ON	ON	ON	ON	ON	ON	ON
RCP 1C Y3423D On/Off	ON	ON	ON	ON	ON	ON	ON
MSIV Position OR001X O/C	OPEN	OPEN	OPEN	OPEN	OPEN	OPEN	OPEN
MSIV Position OR003X O/C	OPEN	OPEN	OPEN	OPEN	OPEN	OPEN	OPEN
MSIV Position OR005X O/C	OPEN	OPEN	OPEN	OPEN	OPEN	OPEN	OPEN

RCP/MSIV Group VI

TIME	1718	1721	1724	1727	1730	1733	1736
Battery 1 V0774A Volts	130	130	130	130	130	130	130
Battery 2 V0775A Volts	130	130	130	130	130	130	130
Battery 3 V0776A Volts	130	130	130	130	130	130	131
Battery 4 V0777A Volts	130	130	130	130	130	130	130
Battery 5 V0778A Volts	131	130	130	130	130	130	130

Battery Group VII

TIME	1718	1721	1724	1727	1730	1733	1736
VENT VENT P R0019A UCI/CC	5.5E-10	5.5E-10	5.5E-10	5.5E-10	5.5E-10	5.5E-10	5.5E-10
VEN. VENT GAS R0020A UCI/CC	1.98E-6	1.98E-6	1.98E-6	1.98E-6	1.98E-6	1.98E-6	1.98E-6
ELEV REL RATE R0093A UCI/SEC	1.89E1	1.89E1	1.89E1	1.89E1	1.89E1	1.89E1	1.89E1
ELEV REL PART R0015A UCI/CC	1.6E-10	1.6E-10	1.6E-10	1.6E-10	1.6E-10	1.6E-10	1.6E-10
ELEV REL GAS L R0016A UCI/CC	6.98E-7	6.98E-7	6.98E-7	6.98E-7	6.98E-7	6.98E-7	6.98E-7
ELEV REL GAS M R0017A UCI/CC	1.94E-4	1.94E-4	1.94E-4	1.94E-4	1.94E-4	1.94E-4	1.94E-4
ELEV REL GAS H R0018A UCI/CC	4.85E-2	4.85E-2	4.85E-2	4.85E-2	4.85E-2	4.85E-2	4.85E-2
MAIN STM ACT R0088A UCI/CC	4.93E-3	4.93E-3	4.93E-3	4.93E-3	4.93E-3	4.93E-3	4.93E-3
MAIN STM ACT R0089A UCI/CC	4.00E-3	4.00E-3	4.00E-3	4.00E-3	4.00E-3	4.00E-3	4.00E-3
MAIN STM ACT R0090A UCI/CC	4.25E-3	4.25E-3	4.25E-3	4.25E-3	4.25E-3	4.25E-3	4.25E-3

Effluent Group VIII

TIME	1718	1721	1724	1727	1730	1733	1736
MN STM REL RT R0091A UCI/SEC	0.0	0.0	0.0	0.0	0.0	0.0	0.0
MN STM REL RT R0098A UCI/SEC	0.0	0.0	0.0	0.0	0.0	0.0	0.0
MN STM REL RT R0099A UCI/SEC	0.0	0.0	0.0	0.0	0.0	0.0	0.0

Effluent Group VIII

TIME	1718	1721	1724	1727	1730	1733	1736
FHB VENT PART R0025A UCI/CC	2.0E-10	2.0E-10	2.0E-10	2.0E-10	2.0E-10	2.0E-10	2.0E-10
FHB VENT GAS R0026A UCI/CC	3.59E-6	3.59E-6	3.59E-6	3.59E-6	3.59E-6	3.59E-6	3.59E-6
PAB 718'A PART R0050A UCI/CC	1.7E-10	1.7E-10	1.7E-10	1.7E-10	1.7E-10	1.7E-10	1.7E-10
PAB 718'A GAS R[illegible]	1.45E-6	1.45E-6	1.45E-6	1.45E-6	1.45E-6	1.45E-6	1.45E-6
PAB 718'B PART R[illegible]	2.2E-10	2.2E-10	2.2E-10	2.2E-10	2.2E-10	2.2E-10	2.2E-10
PAB 718'B GAS R0053A UCI/CC	2.25E-6	2.25E-6	2.25E-6	2.25E-6	2.25E-6	2.25E-6	2.25E-6
PAB 718'C PART R0054A UCI/CC	2.1E-10	2.1E-10	2.1E-10	2.1E-10	2.1E-10	2.1E-10	2.1E-10
PAB 718'C GAS R0055A UCI/CC	1.46E-6	1.46E-6	1.46E-6	1.46E-6	1.46E-6	1.46E-6	1.46E-6
PAB 735'A PART R0056A UCI/CC	1.9E-10	1.9E-10	1.9E-10	1.9E-10	1.9E-10	1.9E-10	1.9E-10
PAB 735'A GAS R0057A UCI/CC	1.58E-6	1.58E-6	1.58E-6	1.58E-6	1.58E-6	1.58E-6	1.58E-6

Airborne Group IX

TIME	1718	1721	1724	1727	1730	1733	1736
PAB 735'B PART R0058A UCI/CC	1.7E-10	1.7E-10	1.7E-10	1.7E-10	1.7E-10	1.7E-10	1.7E-10
PAB 735'B GAS R0059A UCI/CC	1.25E-6	1.25E-6	1.25E-6	1.25E-6	1.25E-6	1.25E-6	1.25E-6
PAB 755'A PART R0060A UCI/CC	1.8E-10	1.8E-10	1.8E-10	1.8E-10	1.8E-10	1.8E-10	1.8E-10
PAB 755'A GAS R0061A UCI/CC	1.37E-6	1.37E-6	1.37E-6	1.37E-6	1.37E-6	1.37E-6	1.37E-6
PAB 755'B PART R0062A UCI/CC	3.2E-10	3.2E-10	3.2E-10	3.2E-10	3.2E-10	3.2E-10	3.2E-10
PAB 755'B GAS R0063A UCI/CC	1.39E-6	1.39E-6	1.39E-6	1.39E-6	1.39E-6	1.39E-6	1.39E-6
RCB PART R0068A UCI/CC	6.8E-10	6.8E-10	6.8E-10	6.8E-10	6.8E-10	6.8E-10	6.8E-10
RCB GAS R0069A UCI/CC	9.55E-6	9.55E-6	9.55E-6	9.55E-6	9.55E-6	9.55E-6	9.55E-6
LK COL VENT PT R0077A UCI/CC	3.1E-10	3.1E-10	3.1E-10	3.1E-10	3.1E-10	3.1E-10	3.1E-10
LK COL VENT GS R0078A UCI/CC	2.54E-6	2.54E-6	2.54E-6	2.54E-6	2.54E-6	2.54E-6	2.54E-6

Airborne Group IX

TIME	1718	1721	1724	1727	1730	1733	1736
RX CLNT LTDN L R0003A UCI/CC	7.33E-1	7.33E-1	7.33E-1	7.33E-1	7.33E-1	7.33E-1	7.33E-1
RX CLNT LTDN H R0002A UCI/CC	1.05E0	1.05E0	1.05E0	1.05E0	1.05E0	1.05E0	1.05E0
SG BLDN SAMPLE R0079A UCI/CC	1.00E-5	1.00E-5	1.00E-5	1.00E-5	1.00E-5	1.00E-5	1.00E-5

Process Liquid Group X

TIME	1718	1721	1724	1727	1730	1733	1736
AIR EJ DISCH R0001A UCI/CC	2.59E-7	2.59E-7	2.59E-7	2.59E-7	2.59E-7	2.59E-7	2.59E-7
AIR EJ DEL EXH R0010A UCI/CC	3.35E-7	3.35E-7	3.35E-7	3.35E-7	3.35E-7	3.35E-7	3.35E-7

Process Gas Group XI

TIME	1718	1721	1724	1727	1730	1733	1736
FUEL BLD BRDGE R0024A MR/HR	8.03E-2	8.03E-2	8.03E-2	8.03E-2	8.03E-2	8.03E-2	8.03E-2
AUX BLDG 710' R0042A MR/HR	3.60E-2	3.60E-2	3.60E-2	3.60E-2	3.60E-2	3.60E-2	3.60E-2
AUX BLDG 710' R0043A MR/HR	2.14E-1	2.14E-1	2.14E-1	2.14E-1	2.14E-1	2.14E-1	2.14E-1
AUX BLDG 710' R0044A MR/HR	2.54E-2	2.54E-2	2.54E-2	2.54E-2	2.54E-2	2.54E-2	2.54E-2
AUX BLDG 735' R0045A MR/HR	3.54E-2	3.54E-2	3.54E-2	3.54E-2	3.54E-2	3.54E-2	3.54E-2
AUX BLDG 735' R0046A MR/HR	2.56E-2	2.56E-2	2.56E-2	2.56E-2	2.56E-2	2.56E-2	2.56E-2
AUX BLDG 755' R0047A MR/HR	1.77E-2	1.77E-2	1.77E-2	1.77E-2	1.77E-2	1.77E-2	1.77E-2
AUX BLDG 755' R0048A MR/HR	4.46E-2	4.46E-2	4.46E-2	4.46E-2	4.46E-2	4.46E-2	4.46E-2
AUX BLDG 755' R0049A MR/HR	9.17E-2	9.17E-2	9.17E-2	9.17E-2	9.17E-2	9.17E-2	9.17E-2
AUX BLDG 773' R0040A MR/HR	1.77E-2	1.77E-2	1.77E-2	1.77E-2	1.77E-2	1.77E-2	1.77E-2

Area Group XII

TIME	1718	1721	1724	1727	1730	1733	1736
PAB CHEM SM RM R0041A MR/HR	4.15E-1	4.15E-1	4.15E-1	4.15E-1	4.15E-1	4.15E-1	4.15E-1
RCB LO RNG R0070A MR/HR	2.60E-1	2.60E-1	2.60E-1	2.60E-1	2.60E-1	2.60E-1	2.60E-1
PERSONNEL HATC R0071A MR/HR	1.05E-1	1.05E-1	1.05E-1	1.05E-1	1.05E-1	1.05E-1	1.05E-1
PERSONNEL HATC R0072A MR/HR	4.75E0	4.75E0	4.75E0	4.75E0	4.75E0	4.75E0	4.75E0
RCB HI RNG R0086A R/HR	8.29E-1	8.29E-1	8.29E-1	8.29E-1	8.29E-1	8.29E-1	8.29E-1
RCB HI RNG R0087A R/HR	8.58E-1	8.58E-1	8.58E-1	8.58E-1	8.58E-1	8.58E-1	8.58E-1

Area Group XII

TIME	1739	1742	1745	1748	1751	1754	1757
RCS Hotleg A T0419A Deg. F	606	606	606	606	640	591	584
RCS Hotleg B T0439A Deg. F	606	606	606	606	640	591	584
RCS Hotleg C T0459A Deg. F	606	606	606	606	640	591	584
RCS Coldleg A T0406A Deg. F	546	546	546	546	572	636	611
RCS Coldleg B T0426A Deg. F	546	546	546	546	572	636	611
RCS Coldleg C T0446A Deg. F	546	546	546	546	572	636	611
RCS Flow A F0400C Percent	100	100	100	100	0	15	15
RCS Flow B F0421C Percent	100	100	100	100	0	15	15
RCS Flow C F0442C Percent	100	100	100	100	100	130	130
VCT Level L2704A Percent	40	40	40	40	42	44	44

RCS Group I

TIME	1739	1742	1745	1748	1751	1754	1757
Source Range N0031A CPS	STBY	STBY	STBY	STBY	1.00	1.00	1.00
Power Range N0051A Percent	99	99	99	99	31	18	0
T/C Peak MXICTX Deg. F	618	618	618	618	644	643	615
T/C Average AVICTCX Deg. F	597	596	597	596	630	630	599
Deg Subcooling UT1002 Deg. F	36	36	36	36	20	1	18
Inter Range N0035A AMPS	10E-3	10E-3	10E-3	10E-3	10E-3	10E-3	10E-5

RCS Group I

TIME	1739	1742	1745	1748	1751	1754	1757
SG Pressure A P0402A PSIG (STM OUT)	832	832	832	832	1046	1038	1020
SG Pressure B P0422A PSIG (STM OUT)	832	832	832	832	1047	1038	1020
SG Pressure C P0442A PSIG (STM OUT)	832	832	832	832	1048	1032	1020
SG Level A L0403A (W.R.)	55	55	55	55	50	40	35
SG Level A L0402A (N.R.)	43	43	43	43	0	0	0
SG Level B L0423A (W.R.)	55	55	55	55	50	40	35
SG Level B L0422A (N.R.)	43	43	43	43	0	0	0
SG Level C L0443A (W.R.)	55	55	55	55	50	35	30
SG Level C L0442A (N.R.)	43	43	43	43	0	0	0

Steam Generator Group II

TIME	1739	1742	1745	1748	1751	1754	1757
Steam Flow A F0403C KBH	3902	3901	3902	3901	400	400	400
Steam Flow B F0425C KBH	3900	3900	3900	3900	400	400	400
Steam Flow C F0443C KBH	3900	3900	3900	3900	400	400	400
PD Wtr Tk Lvl L0300A IN	340	340	340	340	340	337	334
Aux FD Flow A F0601C GPM	0	0	0	0	136	138	140
Aux FD Flow B F0602C GPM	0	0	0	0	136	138	140
Aux FD Flow C F0603C GPM	0	0	0	0	132	138	140

Steam Generator Group II

TIME	1739	1742	1745	1748	1751	1754	1757
Cont Pressure P1000A PSIA	9.74	9.74	9.74	9.74	9.74	9.74	9.74
Cont Temp T1016A DEG F	94.3	94.4	94.3	94.4	94.4	94.4	94.4
Cont Sump Lvl L0750A IN	0	0	0	0	0	0	0
Hydrogen Y0752A Percent	0	0	0	0	0	0	0

Containment Group III

TIME	1739	1742	1745	1748	1751	1754	1757
SI Accum Lvl L0610A Percent	52	52	52	52	52	52	52
SI Accum Lvl L0620A Percent	52	52	52	52	52	52	52
SI Accum Lvl L0630A Percent	52	52	52	52	52	52	52
RWST Level L0500A IN	720	720	720	720	720	720	720

Safety Injection Group IV

TIME	1739	1742	1745	1748	1751	1754	1757
PZR Level L0480A Percent	54	54	54	54	89	91	67
PZR Temp (WTR) T0480A DEG F	651	650	651	650	663	643	632
PZR Temp (STM) T0481A DEG F	652	651	652	651	664	645	633
RCS Pressure P0103A PSIG	2239	2240	2239	2240	2415	2106	1951
PRT Level L0485A Percent	69	69	69	69	73	76	80
PZR Pressure P0480A PSIG	2228	2229	2228	2229	2418	2105	1950

Pressurizer Group V

TIME	1739	1742	1745	1748	1751	1754	1757
RCP 1A Y3421D On/Off	ON	ON	ON	ON	OFF	OFF	OFF
RCP 1B Y3422D On/Off	ON	ON	ON	ON	OFF	OFF	OFF
RCP 1C Y3423D On/Off	ON	ON	ON	ON	ON	ON	ON
MSIV Position OR001X O/C	OPEN	OPEN	OPEN	OPEN	OPEN	OPEN	OPEN
MSIV Position OR003X O/C	OPEN	OPEN	OPEN	OPEN	OPEN	OPEN	OPEN
MSIV Position OR005X O/C	OPEN	OPEN	OPEN	OPEN	OPEN	OPEN	OPEN

RCP/MSIV Group VI

TIME	1739	1742	1745	1748	1751	1754	1757
Battery 1 V0774A Volts	130	130	130	130	130	130	130
Battery 2 V0775A Volts	130	130	130	130	130	130	130
Battery 3 V0776A Volts	130	130	130	130	130	130	130
Battery 4 V0777A Volts	130	131	131	130	130	130	130
Battery 5 V0778A Volts	130	130	130	131	130	130	130

Battery Group VII

TIME	1739	1742	1745	1748	1751	1754	1757
VENT VENT PART R0019A UCI/CC	5.5E-10	5.5E-10	5.5E-10	5.5E-10	5.5E-10	5.5E-10	5.5E-10
VENT VENT GAS R0020A UCI/CC	1.98E-6	1.98E-6	1.98E-6	1.98E-6	1.98E-6	1.98E-6	1.98E-6
ELEV REL RATE R0093A UCI/SEC	1.89E1	1.89E1	1.89E1	1.89E1	1.89E1	1.89E1	1.89E1
ELEV REL PART R0015A UCI/CC	1.6E-10	1.6E-10	1.6E-10	1.6E-10	1.6E-10	1.6E-10	1.6E-10
ELEV REL GAS L R0016A UCI/CC	6.98E-7	6.98E-7	6.98E-7	6.98E-7	6.98E-7	6.98E-7	6.98E-7
ELEV REL GAS M R0017A UCI/CC	1.94E-4	1.94E-4	1.94E-4	1.94E-4	1.94E-4	1.94E-4	1.94E-4
ELEV REL GAS H R0018A UCI/CC	4.85E-2	4.85E-2	4.85E-2	4.85E-2	4.85E-2	4.85E-2	4.85E-2
MAIN STM ACT R0088A UCI/CC	4.93E-3	4.93E-3	4.93E-3	4.93E-3	4.93E-3	4.93E-3	4.93E-3
MAIN STM ACT R0089A UCI/CC	4.00E-3	4.00E-3	4.00E-3	4.00E-3	4.00E-3	4.00E-3	4.00E-3
MAIN STM ACT R0090A UCI/CC	4.25E-3	4.25E-3	4.25E-3	4.25E-3	4.25E-3	4.25E-3	4.25E-3

Effluent Group VIII

TIME	1739	1742	1745	1748	1751	1754	1757
MN STM REL RT R0091A UCI/SEC	0.0	0.0	0.0	0.0	0.0	0.0	0.0
MN STM REL RT R0098A UCI/SEC	0.0	0.0	0.0	0.0	0.0	0.0	0.0
MN STM REL RT R0099A UCI/SEC	0.0	0.0	0.0	0.0	0.0	0.0	0.0

Effluent Group VIII

TIME	1739	1742	1745	1748	1751	1754	1757
FHB VENT PART R0025A UCI/CC	2.0E-10	2.0E-10	2.0E-10	2.0E-10	2.0E-10	2.0E-10	2.0E-10
FHB VENT GAS R0026A UCI/CC	3.59E-6	3.59E-6	3.59E-6	3.59E-6	3.59E-6	3.59E-6	3.59E-6
PAB 718'A PART R0050A UCI/CC	1.7E-10	1.7E-10	1.7E-10	1.7E-10	1.7E-10	1.7E-10	1.7E-10
PAB 718'A GAS R0051A UCI/CC	1.45E-6	1.45E-6	1.45E-6	1.45E-6	1.45E-6	1.45E-6	1.45E-6
PAB 718'B PART R0052A UCI/CC	2.2E-10	2.2E-10	2.2E-10	2.2E-10	2.2E-10	2.2E-10	2.2E-10
PAB 718'B GAS R0053A UCI/CC	2.25E-6	2.25E-6	2.25E-6	2.25E-6	2.25E-6	2.25E-6	2.25E-6
PAB 718'C PART R0054A UCI/CC	2.1E-10	2.1E-10	2.1E-10	2.1E-10	2.1E-10	2.1E-10	2.1E-10
PAB 718'C GAS R0055A UCI/CC	1.46E-6	1.46E-6	1.46E-6	1.46E-6	1.46E-6	1.46E-6	1.46E-6
PAB 735'A PART R0056A UCI/CC	1.9E-10	1.9E-10	1.9E-10	1.9E-10	1.9E-10	1.9E-10	1.9E-10
PAB 735'A GAS R0057A UCI/CC	1.58E-6	1.58E-6	1.58E-6	1.58E-6	1.58E-6	1.58E-6	1.58E-6

Airborne Group IX

TIME	1739	1742	1745	1748	1751	1754	1757
PAB 735'B PART R0058A UCI/CC	1.7E-10	1.7E-10	1.7E-10	1.7E-10	1.7E-10	1.7E-10	1.7E-10
PAB 735'B GAS R0059A UCI/CC	1.25E-6	1.25E-6	1.25E-6	1.25E-6	1.25E-6	1.25E-6	1.25E-6
PAB 755'A PART R0060A UCI/CC	1.8E-10	1.8E-10	1.8E-10	1.8E-10	1.8E-10	1.8E-10	1.8E-10
PAB 755'A GAS R0061A UCI/CC	1.37E-6	1.37E-6	1.37E-6	1.37E-6	1.37E-6	1.37E-6	1.37E-6
PAB 755'B PART R0062A UCI/CC	3.2E-10	3.2E-10	3.2E-10	3.2E-10	3.2E-10	3.2E-10	3.2E-10
PAB 755'B GAS R0063A UCI/CC	1.39E-6	1.39E-6	1.39E-6	1.39E-6	1.39E-6	1.39E-6	1.39E-6
RCB PART R0068A UCI/CC	6.8E-10	6.8E-10	6.8E-10	6.8E-10	6.8E-10	6.8E-10	6.8E-10
RCB GAS R0069A UCI/CC	9.55E-6	9.55E-6	9.55E-6	9.55E-6	9.55E-6	9.55E-6	9.55E-6
LK COL VENT PT R0077A UCI/CC	3.1E-10	3.1E-10	3.1E-10	3.1E-10	3.1E-10	3.1E-10	3.1E-10
LK COL VENT GS R0078A UCI/CC	2.54E-6	2.54E-6	2.54E-6	2.54E-6	2.54E-6	2.54E-6	2.54E-6

TIME	1739	1742	1745	1748	1751	1754	1757
RX CLNT LTDN L R0003A UCI/CC	7.33E-1	7.33E-1	7.33E-1	7.33E-1	7.33E-1	7.33E-1	7.33E-1
RX CLNT LTDN H R0002A UCI/CC	1.05E0	1.05E0	1.05E0	1.05E0	1.05E0	1.05E0	1.05E0
SG BLDN SAMPLE R0079A UCI/CC	1.00E-5	1.00E-5	1.00E-5	1.00E-5	1.00E-5	1.00E-5	1.00E-5

Process Liquid Group X

TIME	1739	1742	1745	1748	1751	1754	1757
AIR EJ DISCH R0001A UCI/CC	2.59E-7	2.59E-7	2.59E-7	2.59E-7	2.59E-7	2.59E-7	2.59E-7
AIR EJ DEL EXH R0010A UCI/CC	3.35E-7	3.35E-7	3.35E-7	3.35E-7	3.35E-7	3.35E-7	3.35E-7

Process Gas Group XI

TIME	1739	1742	1745	1748	1751	1754	1757
FUEL BLD BRDGE R0024A MR/HR	8.03E-2	8.03E-2	8.03E-2	8.03E-2	8.03E-2	8.03E-2	8.03E-2
AUX BLDG 710' R0042A MR/HR	3.60E-2	3.60E-2	3.60E-2	3.60E-2	3.60E-2	3.50E-2	3.60E-2
AUX BLDG 710' R0043A MR/HR	2.14E-1	2.14E-1	2.14E-1	2.14E-1	2.14E-1	2.14E-1	2.14E-1
AUX BLDG 710' R0044A MR/HR	2.54E-2	2.54E-2	2.54E-2	2.54E-2	2.54E-2	2.54E-2	2.54E-2
AUX BLDG 735' R0045A MR/HR	3.54E-2	3.54E-2	3.54E-2	3.51E-2	3.54E-2	3.54E-2	3.54E-2
AUX BLDG 735' R0046A MR/HR	2.56E-2	2.56E-2	2.56E-2	2.56E-2	2.56E-2	2.56E-2	2.56E-2
AUX BLDG 755' R0047A MR/HR	1.77E-2	1.77E-2	1.77E-2	1.77E-2	1.77E-2	1.77E-2	1.77E-2
AUX BLDG 755' R0048A MR/HR	4.46E-2	4.46E-2	4.46E-2	4.46E-2	4.46E-2	4.46E-2	4.46E-2
AUX BLDG 755' R0049A MR/HR	9.17E-2	9.17E-2	9.17E-2	9.17E-2	9.17E-2	9.17E-2	9.17E-2
AUX BLDG 773' R0040A MR/HR	1.77E-2	1.77E-2	1.77E-2	1.77E-2	1.77E-2	1.77E-2	1.77E-2

Area Group XII

TIME	1739	1742	1745	1748	1751	1754	1757
PAB CHEM SM RM R0041A MR/HR	4.15E-1	4.15E-1	4.15E-1	4.15E-1	4.15E-1	4.15E-1	4.15E-1
RCB LO RNG R0070A MR/HR	2.60E-1	2.60E-1	2.60E-1	2.60E-1	2.60E-1	2.60E-1	2.60E-1
PERSONNEL HATC R0071A MR/HR	1.05E-1	1.05E-1	1.05E-1	1.05E-1	1.05E-1	1.05E-1	1.05E-1
PERSONNEL HATC R0072A MR/HR	4.75E0	4.75E0	4.75E0	4.75E0	4.75E0	4.75E0	4.75E0
RCB HI RNG R0086A R/HR	8.29E-1	8.29E-1	8.29E-1	8.29E-1	8.29E-1	8.29E-1	8.29
RCB HI RNG R0087A R/HR	8.58E-1	8.58E-1	8.58E-1	8.58E-1	8.58E-1	8.58E-1	8.58E-1

Area Group XII

TIME	1800	1803	1806	1809	1812	1815	1818
RCS Hotleg A T0419A Deg. F	582	617	645	666	668	628	587
RCS Hotleg B T0439A Deg. F	582	617	645	666	668	628	587
RCS Hotleg C T0459A Deg. F	582	617	645	667	668	628	587
RCS Coldleg A T0406A Deg. F	609	589	627	657	668	556	550
RCS Coldleg B T0426A Deg. F	609	589	627	657	668	556	550
RCS Coldleg C T0446A Deg. F	609	589	627	657	668	556	550
RCS Flow A F0400C Percent	15	15	0	0	0	0	0
RCS Flow B F0421C Percent	15	15	0	0	0	0	0
RCS Flow C F0442C Percent	130	130		0	0	0	0
VCT Level L2704A Percent	44	44	45	47	47	47	47

RCS Group I

TIME	1800	1803	1806	1809	1812	1815	1818
Source Range N0031A CPS	1.00	1.00	10E4	7E3	4E3	2.13E3	2.13E3
Power Range N0051A Percent	0	0	0	0	0	0	0
T/C Peak MXICTX Deg. F	610	638	657	665	669	643	626
T/C Average AVICTCX Deg. F	596	624	642	650	654	628	608
Deg Subcooling UT1002 Deg. F	28	-7	-8	1	0	22	37
Inter Range N0035A AMPS	6.6E-7	3.3E-8	10E-9	10E-10	10E-11	10E-11	10E-11

RCS Group I

TIME	1800	1803	1806	1809	1812	1815	1818
SG Pressure A P0402A PSIG (STM OUT)	1032	1025	1015	1013	1012	1010	0
SG Pressure B P0422A PSIG (STM OUT)	1032	1025	1019	1018	1016	1014	0
SG Pressure C P0442A PSIG (STM OUT)	1032	1024	1015	1013	1012	1010	0
SG Level A L0403A (W.R.)	30	23	16	12	0	0	0
SG Level A L0402A (N.R.)	0	0	0	0	0	0	0
SG Level B L0423A (W.R.)	30	22	16	7	0	0	0
SG Level B L0422A (N.R.)	0	0	0	0	0	0	0
SG Level C L0443A (W.R.)	25	20	15	7	0	0	0
SG Level C L0442A (N.R.)	0	0	0	0	0	0	0

Steam Generator Group II

TIME	1800	1803	1806	1809	1812	1815	1818
Steam Flow A F0403C KBH	400	50	50	50	0	0	0
Steam Flow B F0425C KBH	400	50	50	50	0	0	0
Steam Flow C F0443C KBH	400	50	50	50	0	0	0
PD Wtr Tk Lvl L0300A IN	331	328	328	328	328	328	328
Aux FD Flow A F0601C GPM	140	0	0	0	0	0	0
Aux FD Flow B F0602C GPM	140	0	0	0	0	0	0
Aux FD Flow C F0603C GPM	140	0	0	0	0	0	0

Steam Generator Group II

TIME	1800	1803	1806	1809	1812	1815	1818
Cont Pressure P1000A PSIA	9.74	9.74	9.74	9.74	9.74	9.82	9.89
Cont Temp T1016A DEG F	94.4	94.4	94.4	94.4	94.4	95.2	96.0
Cont Sump Lvl L0750A IN	0	0	0	0	0	0	0
Hydrogen Y0752A Percent	0	0	0	0	0	0	0

Containment Group III

TIME	1800	1803	1806	1809	1812	1815	1818
SI Accum Lvl L0610A Percent	52	52	52	52	52	52	52
SI Accum Lvl L0620A Percent	52	52	52	52	52	52	52
SI Accum Lvl L0630A Percent	52	52	52	52	52	52	52
RWST Level L0500A IN	720	720	720	720	720	720	720

Safety Injection Group IV

TIME	1800	1803	1806	1809	1812	1815	1818
PZR Level L0480A Percent	67	71	100	100	100	100	100
PZR Temp (WTR) T0480A DEG F	637	630	645	665	668	665	663
PZR Temp (STM) T0481A DEG F	638	631	647	667	670	666	664
RCS Pressure P0103A PSIG	2019	1920	2177	2452	2496	2450	2425
PRT Level L0485A Percent	84	88	91	93	95	100	100
PZR Pressure P0480A PSIG	2017	1914	2175	2450	2492	2448	2420

Pressurizer Group V

TIME	1800	1803	1806	1809	1812	1815	1818
RCP 1A Y3421D On/Off	OFF	OFF	OFF	OFF	OFF	OFF	OFF
RCP 1B Y3422D On/Off	OFF	OFF	OFF	OFF	OFF	OFF	OFF
RCP 1C Y3423D On/Off	ON	ON	OFF	OFF	OFF	OFF	OFF
MSIV Position OR001X O/C	OPEN	OPEN	OPEN	OPEN	OPEN	OPEN	CLOSED
MSIV Position OR003X O/C	OPEN	OPEN	OPEN	OPEN	OPEN	OPEN	CLOSED
MSIV Position OR005X O/C	OPEN	OPEN	OPEN	OPEN	OPEN	OPEN	CLOSED

RCP/MSIV Group VI

TIME	1800	1803	1806	1809	1812	1815	1818
Battery 1 V0774A Volts	130	130	130	130	130	130	130
Battery 2 V0775A Volts	130	130	130	130	130	130	130
Battery 3 V0776A Volts	130	130	130	130	130	130	130
Battery 4 V0777A Volts	130	130	130	130	130	130	130
Battery 5 V0778A Volts	130	130	130	130	130	130	130

Battery Group VII

TIME	1800	1803	1806	1809	1812	1815	1818
VENT VENT PART R0019A UCI/CC	5.5E-10	5.5E-10	5.5E-10	5.5E-10	5.5E-10	5.5E-10	5.5E-10
VENT VENT GAS R0020A UCI/CC	1.98E-6	1.98E-6	1.98E-6	1.98E-6	1.98E-6	1.98E-6	1.98E-6
ELEV REL RATE R0093A UCI/SEC	1.89E1	1.89E1	1.89E1	1.89E1	1.89E1	1.89E1	1.89E1
ELEV REL PART R0015A UCI/CC	1.6E-10	1.6E-10	1.6E-10	1.6E-10	1.6E-10	1.6E-10	1.6E-10
ELEV REL GAS L R0016A UCI/CC	6.98E-7	6.98E-7	6.98E-7	6.98E-7	6.98E-7	6.98E-7	6.98E-7
ELEV REL GAS M R0017A UCI/CC	1.94E-4	1.94E-4	1.94E-4	1.94E-4	1.94E-4	1.94E-4	1.94E-4
ELEV REL GAS H R0018A UCI/CC	4.85E-2	4.85E-2	4.85E-2	4.85E-2	4.85E-2	4.85E-2	4.85E-2
MAIN STM ACT R0088A UCI/CC	4.93E-3	4.93E-3	4.93E-3	4.93E-3	4.93E-3	4.93E-3	4.93E-3
MAIN STM ACT R0089A UCI/CC	4.00E-3	4.00E-3	4.00E-3	4.00E-3	4.00E-3	4.00E-3	4.00E-3
MAIN STM ACT R0090A UCI/CC	4.25E-3	4.25E-3	4.25E-3	4.25E-3	4.25E-3	4.25E-3	4.25E-3

Effluent Group VIII

TIME	1800	1803	1806	1809	1812	1815	1818
MN STM REL RT R0091A UCI/SEC	0.0	0.0	0.0	0.0	0.0	0.0	0.0
MN STM REL RT R0098A UCI/SEC	0.0	0.0	0.0	0.0	0.0	0.0	0.0
MN STM REL RT R0099A UCI/SEC	0.0	0.0	0.0	0.0	0.0	0.0	0.0

Effluent Group VIII

TIME	1800	1803	1806	1809	1812	1815	1818
FHB VENT PART R0025A UCI/CC	2.0E-10	2.0E-10	2.0E-10	2.0E-10	2.0E-10	2.0E-10	2.0E-10
FHB VENT GAS R0026A UCI/CC	3.59E-6	3.59E-6	3.59E-6	3.59E-6	3.59E-6	3.59E-6	3.59E-6
PAB 718'A PART R0050A UCI/CC	1.7E-10	1.7E-10	1.7E-10	1.7E-10	1.7E-10	1.7E-10	1.7E-10
PAB 718'A GAS R0051A UCI/CC	1.45E-6	1.45E-6	1.45E-6	1.45E-6	1.45E-6	1.45E-6	1.45E-6
PAB 718'B PART R0052A UCI/CC	2.2E-10	2.2E-10	2.2E-10	2.2E-10	2.2E-10	2.2E-10	2.2E-10
PAB 718'B GAS R0053A UCI/CC	2.25E-6	2.25E-6	2.25E-6	2.25E-6	2.25E-6	2.25E-6	2.25E-6
PAB 718'C PART R0054A UCI/CC	2.1E-10	2.1E-10	2.1E-10	2.1E-10	2.1E-10	2.1E-10	2.1E-10
PAB 718'C GAS R0055A UCI/CC	1.46E-6	1.46E-6	1.46E-6	1.46E-6	1.46E-6	1.46E-6	1.46E-6
PAB 735'A PART R0056A UCI/CC	1.9E-10	1.9E-10	1.9E-10	1.9E-10	1.9E-10	1.9E-10	1.9E-10
PAB 735'A GAS R0057A UCI/CC	1.58E-6	1.58E-6	1.58E-6	1.58E-6	1.58E-6	1.58E-6	1.58E-6

TIME	1800	1803	1806	1809	1812	1815	1818
PAB 735'B PART R0058A UCI/CC	1.7E-10	1.7E-10	1.7E-10	1.7E-10	1.7E-10	1.7E-10	1.7E-10
PAB 735'B GAS R0059A UCI/CC	1.25E-6	1.25E-6	1.25E-6	1.25E-6	1.25E-6	1.25E-6	1.25E-6
PAB 755'A PART R0060A UCI/CC	1.8E-10	1.8E-10	1.8E-10	1.8E-10	1.8E-10	1.8E-10	1.8E-10
PAB 755'A GAS R0061A UCI/CC	1.37E-6	1.37E-6	1.37E-6	1.37E-6	1.37E-6	1.37E-6	1.37E-6
PAB 755'B PART R0062A UCI/CC	3.2E-10	3.2E-10	3.2E-10	3.2E-10	3.2E-10	3.2E-10	3.2E-10
PAB 755'B GAS R0063A UCI/CC	1.39E-6	1.39E-6	1.39E-6	1.39E-6	1.39E-6	1.39E-6	1.39E-6
RCB PART R0068A UCI/CC	6.8E-10	6.8E-10	6.8E-10	6.8E-10	6.8E-10	6.7E-10	6.5E-10
RCB GAS R0069A UCI/CC	9.55E-6	9.55E-6	9.55E-6	9.55E-6	9.55E-6	9.33E-6	9.12E-6
LK COL VENT PART R0077A UCI/CC	3.1E-10	3.1E-10	3.1E-10	3.1E-10	3.1E-10	3.1E-10	3.1E-10
LK COL VENT GS R0078A UCI/CC	2.54E-6	2.54E-6	2.54E-6	2.54E-6	2.54E-6	2.54E-6	2.54E-6

TIME	1800	1803	1806	1809	1812	1815	1818
RX CLNT LTDN L R0003A UCI/CC	7.33E-1	7.33E-1	7.33E-1	7.33E-1	7.33E-1	7.16E-1	7.00E-1
RX CLNT LTDN H R0002A UCI/CC	1.05E0	1.05E0	1.05E0	1.05E0	1.05E0	1.03E0	1.00E0
SG BLDN SAMPLE R0079A UCI/CC	1.00E-5	1.00E-5	1.00E-5	1.00E-5	1.00E-5	1.00E-5	1.00E-5

Process Liquid Group X

TIME	1800	1803	1806	1809	1812	1815	1818
AIR EJ DISCH R0001A UCI/CC	2.59E-7	2.59E-7	2.59E-7	2.59E-7	2.59E-7	2.59E-7	2.59E-7
AIR EJ DEL EXH R0010A UCI/CC	3.35E-7	3.35E-7	3.35E-7	3.35E-7	3.35E-7	3.35E-7	3.35E-7

Process Gas Group XI

TIME	1800	1803	1806	1809	1812	1815	1818
FUEL BLD BRDGE R0024A MR/HR	8.03E-2	8.03E-2	8.03E-2	8.03E-2	8.03E-2	8.03E-2	8.03E-2
AUX BLDG 710' R0042A MR/HR	3.60E-2	3.60E-2	3.60E-2	3.60E-2	3.60E-2	3.60E-2	3.60E-2
AUX BLDG 710' R0043A MR/HR	2.14E-1	2.14E-1	2.14E-1	2.14E-1	2.14E-1	2.14E-1	2.14E-1
AUX BLDG 710' R0044A MR/HR	2.54E-2	2.54E-2	2.54E-2	2.54E-2	2.54E-2	2.54E-2	2.54E-2
AUX BLDG 735' R0045A MR/HR	3.54E-2	3.54E-2	3.54E-2	3.54E-2	3.54E-2	3.54E-2	3.5[redacted]2
AUX BLDG 735' R0046A MR/HR	2.56E-2	2.56E-2	2.56E-2	2.56E-2	2.56E-2	2.56E-2	2.56E-2
AUX BLDG 755' R0047A MR/HR	1.77E-2	1.77E-2	1.77E-2	1.77E-2	1.77E-2	1.77E-2	1.77E-2
AUX BLDG 755' R0048A MR/HR	4.46E-2	4.46E-2	4.46E-2	4.46E-2	4.46E-2	4.46E-2	4.46E-2
AUX BLDG 755' R0049A MR/HR	9.17E-2	9.17E-2	9.17E-2	9.17E-2	9.17E-2	9.17E-2	9.17E-2
AUX BLDG 773' R0040A MR/HR	1.77E-2	1.77E-2	1.77E-2	1.77E-2	1.77E-2	1.77E-2	1.77E-2

Area Group XII

TIME	1800	1803	1806	1809	1812	1815	1818
PAB CHEM SM RM R0041A MR/HR	4.15E-1	4.15E-1	4.15E-1	4.15E-1	4.15E-1	4.15E-1	4.15E-1
RCB LO RNG R0070A MR/HR	2.60E-1	2.60E-1	2.60E-1	2.60E-1	2.60E-1	2.60E-1	1.66E0
PERSONNEL HATC R0071A MR/HR	1.05E-1	1.05E-1	1.05E-1	1.05E-1	1.05E-1	1.05E-1	1.05E-1
PERSONNEL HATC R0072A MR/HR	4.75E0	4.75E0	4.75E0	4.75E0	4.75E0	4.75E0	4.75E0
RCB HI RNG R0086A R/HR	8.29E-1	8.29E-1	8.29E-1	8.29E-1	8.29E-1	8.29E-1	8.29E-1
RCB HI RNG R0087A R/HR	8.58E-1	8.58E-1	8.58E-1	8.58E-1	8.58E-1	8.58E-1	8.58E-1

Area Group XII

TIME	1821	1824	1827	1830	1833	1836	1839
RCS Hotleg A T0419A Deg. F	586	584	616	636	644	651	653
RCS Hotleg B T0439A Deg. F	586	584	616	636	644	651	653
RCS Hotleg C T0459A Deg. F	586	584	616	636	644	651	653
RCS Coldleg A T0406A Deg. F	545	542	600	632	642	650	652
RCS Coldleg B T0426A Deg. F	545	542	600	632	642	650	652
RCS Coldleg C T0446A Deg. F	545	542	600	632	642	650	652
RCS Flow A F0400C Percent	0	0	0	0	0	0	0
RCS Flow B F0421C Percent	0	0	0	0	0	0	0
RCS Flow C F0442C Percent	0	0	0	0	0	0	0
VCT Level L2704A Percent	47	47	47	47	47	47	47

RCS Group I

TIME	1821	1824	1827	1830	1833	1836	1839
Source Range N0031A CPS	2.13E3	2.13E3	2.13E3	2.13E3	2.13E3	2.13E3	2.13E3
Power Range N0051A Percent	0	0	0	0	0	0	0
T/C Peak MXICTX Deg. F	632	637	642	644	645	647	647
T/C Average AVICTCX Deg. F	611	618	624	627	630	631	632
Deg Subcooling UT1002 Deg. F	28	23	16	12	8	10	10
Inter Range N0035A AMPS	10E-11	10E-11	10E-11	10E-11	10E-11	10E-11	10E-11

RCS Group I

TIME	1821	1824	1827	1830	1833	1836	1839
SG Pressure A P0402A PSIG (STM OUT)	0	0	0	0	0	0	0
SG Pressure B P0422A PSIG (STM OUT)	0	0	0	0	0	0	0
SG Pressure C P0442A PSIG (STM OUT)	0	0	0	0	0	0	0
SG Level A L0403A (W.R.)	0	0	0	0	0	0	0
SG Level A L0402A (N.R.)	0	0	0	0	0	0	0
SG Level B L0423A (W.R.)	0	0	0	0	0	0	0
SG Level B L0422A (N.R.)	0	0	0	0	0	0	0
SG Level C L0443A (W.R.)	0	0	0	0	0	0	0
SG Level C L0442A (N.R.)	0	0	0	0	0	0	0

Steam Generator Group II

TIME	1821	1824	1827	1830	1833	1836	1839
Steam Flow A F0403C KBH	0	0	0	0	0	0	0
Steam Flow B F0425C KBH	0	0	0	0	0	0	0
Steam Flow C F0443C KBH	0	0	0	0	0	0	0
PD Wtr Tk Lvl L0300A IN	328	328	328	328	328	328	328
Aux FD Flow A F0601C GPM	0	0	0	0	0	0	0
Aux FD Flow B F0602C GPM	0	0	0	0	0	0	0
Aux FD Flow C F0603C GPM	0	0	0	0	0	0	0

Steam Generator Group II

TIME	1821	1824	1827	1830	1833	1836	1839
Cont Pressure P1000A PSIA	9.96	10.02	10.08	10.14	10.19	10.24	10.29
Cont Temp T1016A DEG F	96.7	97.4	98.1	98.8	99.5	100.1	100.7
Cont Sump Lvl L0750A IN	0	0	0	0	0	0	0
Hydrogen Y0752A Percent	0	0	0	0	0	0	0

Containment Group III

TIME	1821	1824	1827	1830	1833	1836	1839
SI Accum Lvl L0610A Percent	52	52	52	52	52	52	52
SI Accum Lvl L0620A Percent	52	52	52	52	52	52	52
SI Accum Lvl L0630A Percent	52	52	52	52	52	52	52
RWST Level L0500A IN	720	720	720	720	720	720	720

TIME	1821	1824	1827	1830	1833	1836	1839
PZR Level L0480A Percent	100	100	100	100	100	100	100
PZR Temp (WTR) T0480A DEG F	662	660	658	656	1	655	656
PZR Temp (STM) T0481A DEG F	664	662	659	657	652	657	658
RCS Pressure P0103A PSIG	2400	2375	2340	2300	2243	2305	2318
PRT Level L0485A Percent	100	100	100	100	100	100	100
PZR Pressure P0480A PSIG	2396	2372	2337	2296	2233	2295	2308

Pressurizer Group V

TIME	1821	1824	1827	1830	1833	1836	1839
RCP 1A Y3421D On/Off	OFF	OFF	OFF	OFF	OFF	OFF	OFF
RCP 1B Y3422D On/Off	OFF	OFF	OFF	OFF	OFF	OFI	OFF
RCP 1C Y3423D On/Off	OFF	OFF	OFF	OFF	OFF	OFF	OFF
MSIV Position OR001X O/C	CLOSED	CLOSED	CLOSED	CLOSED	CLOSED	CLOSED	CLOSED
MSIV Position OR003X O/C	CLOSED	CLOSED	CLOSED	CLOSED	CLOSED	CLOSED	CLOSED
MSIV Position OR005X O/C	CLOSED	CLOSED	CLOSED	CLOSED	CLOSED	CLOSED	CLOSED

RCP/MSIV Group Vi

TIME	1821	1824	1827	1830	1833	1836	1839
Battery 1 V0774A Volts	130	130	130	130	130	130	130
Battery 2 V0775A Volts	130	130	130	130	130	130	130
Battery 3 V0776A Volts	130	130	130	130	130	130	130
Battery 4 V0777A Volts	130	130	130	130	130	130	130
Battery 5 V0778A Volts	130	130	130	130	130	130	130

Battery Group VII

TIME	1821	1824	1827	1830	1833	1836	1839
VENT VENT PART R0019A UCI/CC	5.5E-10	5.5E-10	5.5E-10	5.5E-10	5.5E-10	5.5E-10	5.5E-10
VENT VENT GAS R0020A UCI/CC	1.98E-6	1.98E-6	1.98E-6	1.98E-6	1.98E-6	1.98E-6	1.98E-6
ELEV REL RATE R0093A UCI/SEC	1.89E1	1.89E1	1.89E1	1.89E1	1.89E1	1.89E1	1.89E1
ELEV REL PART R0015A UCI/CC	1.6E-10	1.6E-10	1.6E-10	1.6E-10	1.6E-10	1.6E-10	1.6E-10
ELEV REL GAS L R0016A UCI/CC	6.98E-7	6.98E-7	6.98E-7	6.93E-7	6.98E-7	6.98E-7	6.98E-7
ELEV REL GAS M R0017A UCI/CC	1.94E-4	1.94E-4	1.94E-4	1.94E-4	1.94E-4	1.94E-4	1.94E-4
ELEV REL GAS H R0018A UCI/CC	4.85E-2	4.85E-2	4.85E-2	4.85E-2	4.85E-2	4.85E-2	4.85E-2
MAIN STM ACT R0088A UCI/CC	4.93E-3	4.93E-3	4.93E-3	4.93E-3	4.93E-3	4.93E-3	4.93E-3
MAIN STM ACT R0089A UCI/CC	4.00E-3	4.00E-3	4.00E-3	4.00E-3	4.00E-3	4.00E-3	4.00E-3
MAIN STM ACT R0090A UCI/CC	4.25E-3	4.25E-3	4.25E-3	4.25E-3	4.25E-3	4.25E-3	4.25E-3

Effluent Group VIII

TIME	1821	1824	1827	1830	1833	1836	1839
MN STM REL RT R0091A UCI/SEC	0.0	0.0	0.0	0.0	0.0	0.0	0.0
MN STM REL RT R0098A UCI/SEC	0.0	0.0	0.0	0.0	0.0	0.0	0.0
MN STM REL RT R0099A UCI/SEC	0.0	0.0	0.0	0.0	0.0	0.0	0.0

Effluent Group VIII

TIME	1821	1824	1827	1830	1833	1836	1839
FHB VENT PART R0025A UCI/CC	2.0E-10	2.0E-10	2.0E-10	2.0E-10	2.0E-10	2.0E-10	2.0E-10
FHB VENT GAS R0026A UCI/CC	3.59E-6	3.59E-6	3.59E-6	3.59E-6	3.59E-6	3.59E-6	3.59E-6
PAB 718'A PART R0050A UCI/CC	1.7E-10	1.7E-10	1.7E-10	1.7E-10	1.7E-10	1.7E-10	1.7E-10
PAB 718'A GAS R0051A UCI/CC	1.45E-6	1.45E-6	1.45E-6	1.45E-6	1.45E-6	1.45E-6	1.45E-6
PAB 718'B PART R0052A UCI/CC	2.2E-10	2.2E-10	2.2E-10	2.2E-10	2.2E-10	2.2E-10	2.2E-10
PAB 718'B GAS R0053A UCI/CC	2.25E-6	2.25E-6	2.25E-6	2.25E-6	2.25E-6	2.25E-6	2.25E-6
PAB 718'C PART R0054A UCI/CC	2.1E-10	2.1E-10	2.1E-10	2.1E-10	2.1E-10	2.1E-10	2.1E-10
PAB 718'C GAS R0055A UCI/CC	1.46E-6	1.46E-6	1.46E-6	1.46E-6	1.46E-6	1.46E-6	1.46E-6
PAB 735'A PART R0056A UCI/CC	1.9E-10	1.9E-10	1.9E-10	1.9E-10	1.9E-10	1.9E-10	1.9E-10
PAB 735'A GAS R0057A UCI/CC	1.58E-6	1.58E-6	1.58E-6	1.58E-6	1.58E-6	1.58E-6	1.58E-6

Airborne Group IV

TIME	1821	1824	1827	1830	1833	1836	1839
PAB 735'B PART R0058A UCI/CC	1.7E-10	1.7E-10	1.7E-10	1.7E-10	1.7E-10	1.7E-10	1.7E-10
PAB 735'B GAS R0059A UCI/CC	1.25E-6	1.25E-6	1.25E-6	1.25E-6	1.25E-6	1.25E-6	1.25E-6
PAB 755'A PART R0060A UCI/CC	1.8E-10	1.8E-10	1.8E-10	1.8E-10	1.8E-10	1.8E-10	1.8E-10
PAB 755'A GAS R0061A UCI/CC	1.37E-6	1.37E-6	1.37E-6	1.37E-6	1.37E-6	1.37E-6	1.37E-6
PAB 755'B PART R0062A UCI/CC	3.2E-10	3.2E-10	3.2E-10	3.2E-10	3.2E-10	3.2E-10	3.2E-10
PAB 755'B GAS R0063A UCI/CC	1.39E-6	1.39E-6	1.39E-6	1.39E-6	1.39E-6	1.39E-6	1.39E-6
RCB PART R0068A UCI/CC	6.4E-10	6.2E-10	6.1E-10	6.0E-10	5.8E-10	5.7E-10	5.6E-10
RCB GAS R0069A UCI/CC	8.91E-6	8.70E-6	8.50E-6	8.31E-6	8.11E-6	7.93E-6	7.75E-6
LK COL VENT PT R0077A UCI/CC	3.1E-10	3.1E-10	3.1E-10	3.1E-10	3.1E-10	3.1E-10	3.1E-10
LK COL VENT GS R0078A UCI/CC	2.54E-6	2.54E-6	2.54E-6	2.54E-6	2.54E-6	2.54E-6	2.54E-6

Airborne Group IX

TIME	1821	1824	1827	1830	1833	1836	1839
RX CLNT LTDN L R0003A UCI/CC	6.84E-1	6.68E-1	6.52E-1	6.37E-1	6.23E-1	6.08E-1	5.95E-1
RX CLNT LTDN H R0002A UCI/CC	9.79E-1	9.57E-1	9.35E-1	9.13E-1	8.92E-1	8.72E-1	8.52E-1
SG BLDN SAMPLE R0079A UCI/CC	1.00E-5	1.00E-5	1.00E-5	1.00E-5	1.00E-5	1.00E-5	1.00E-5

Process Liquid Group X

TIME	1821	1824	1827	1830	1833	1836	1839
AIR EJ DISCH R0001A UCI/CC	2.59E-7	2.59E-7	2.59E-7	2.59E-7	2.59E-7	2.59E-7	2.59E-7
AIR EJ DEL EXH R0010A UCI/CC	3.35E-7	3.35E-7	3.35E-7	3.35E-7	3.35E-7	3.35E-7	3.35E-7

Process Gas Group XI

TIME	1821	1824	1827	1830	1833	1836	1839
FUEL BLD BRDGE R0024A MR/HR	8.03E-2	8.03E-2	8.03E-2	8.03E-2	8.03E-2	8.03E-2	8.03E-2
AUX BLDG 710' R0042A MR/HR	3.60E-2	3.60E-2	3.60E-2	3.60E-2	3.60E-2	3.60E-2	3.60E-2
AUX BLDG 710' R0043A MR/HR	2.14E-1	2.14E-1	2.14E-1	2.14E-1	2.14E-1	2.14E-1	2.14E-1
AUX BLDG 710' R0044A MR/HR	2.54E-2	2.54E-2	2.54E-2	2.54E-2	2.54E-2	2.54E-2	2.54E-2
AUX BLDG 735' R0045A MR/HR	3.54E-2	3.54E-2	3.54E-2	3.54E-2	3.54E-2	3.54E-2	3.54E-2
AUX BLDG 735' R0046A MR/HR	2.56E-2	2.56E-2	2.56E-2	2.56E-2	2.56E-2	2.56E-2	2.56E-2
AUX BLDG 755' R0047A MR/HR	1.77E-2	1.77E-2	1.77E-2	1.77E-2	1.77E-2	1.77E-2	1.77E-2
AUX BLDG 755' R0048A MR/HR	4.46E-2	4.46E-2	4.46E-2	4.46E-2	4.46E-2	4.46E-2	4.46E-2
AUX BLDG 755' R0049A MR/HR	9.17E-2	9.17E-2	9.17E-2	9.17E-2	9.17E-2	9.17E-2	9.17E-2
AUX BLDG 773' R0040A MR/HR	1.77E-2	1.77E-2	1.77E-2	1.77E-2	1.77E-2	1.77E-2	1.77E-2

Area Group XII

TIME	1821	1824	1827	1830	1833	1836	1839
PAB CHEM SM RM R0041A MR/HR	4.15E-1	4.15E-1	4.15E-1	4.15E-1	4.15E-1	4.15E-1	4.15E-1
RCB LO RNG R0070A MR/HR	3.06E0	4.46E0	5.86E0	7.26E0	8.66E0	1.01E1	1.15E1
PERSONNEL HATC R0071A MR/HR	1.05E-1	1.05E-1	1.05E-1	1.05E-1	1.05E-1	1.05E-1	1.05E-1
PERSONNEL HATC R0072A MR/HR	4. [illegible]E0	4.75E0	4.75E0	4.75E0	4.74E0	4.74E0	4.74E0
RCB HI RNG R0086A R/HR	8.29E-1	8.29E-1	8.29E-1	8.29E-1	8.29E-1	8.29E-1	8.29[illegible]
RCB HI RNG R0087A R/HR	8.58E-1	8.58E-1	8.58E-1	8.58E-1	8.58E-1	8.58E-1	8.58E-1

Area Group XII

TIME	1842	1845	1848	1851	1854	1857	1900
RCS Hotleg A T0419A Deg. F	654	655	655	657	658	658	658
RCS Hotleg B T0439A Deg. F	654	655	656	657	658	658	658
RCS Hotleg C T0459A Deg. F	654	655	656	657	658	658	658
RCS Coldleg A T0406A Deg. F	653	654	655	657	658	658	653
RCS Coldleg B T0426A Deg. F	653	654	656	657	658	658	653
RCS Coldleg C T0446A Deg. F	653	654	656	657	658	658	653
RCS Flow A F0400C Percent	0	0	0	0	0	0	0
RCS Flow B F0421C Percent	0	0	0	0	0	0	0
RCS Flow F0442C Percent	0	0	0	0	0	0	0
VCT Level L2704A Percent	47	47	47	47	47	47	47

RCS Group I

TIME	1842	1845	1848	1851	1854	1857	1900
Source Range N0031A CPS	2.13E3	2.13E3	2.13E3	2.13E3	2.13E3	2.13E3	2.13E3
Power Range N0051A Percent	0	0	0	0	0	0	0
T/C Peak MXICTX Deg. F	648	649	649	650	653	655	657
T/C Average AVICTCX Deg. F	632	633	634	635	638	640	641
Deg Subcooling UT1002 Deg. F	11	10	10	9	6	4	2
Inter Range N0035A AMPS	10E-11	10E-11	10E-11	10E-11	10E-11	10E-11	10E-11

RCS Group I

TIME	1842	1845	1848	1851	1854	1857	1900
SG Pressure A P0402A PSIG (STM OUT)	0	0	0	0	0	0	0
SG Pressure B P0422A PSIG (STM OUT)	0	0	0	0	0	0	0
SG Pressure C P0442A PSIG (STM OUT)	0	0	0	0	0	0	0
SG Level A L0403A (W.R.)	0	0	0	0	0	0	0
SG Level A L0402A (N.R.)	0	0	0	0	0	0	0
SG Level B L0423A (W.R.)	0	0	0	0	0	0	0
SG Level B L0422A (N.R.)	0	0	0	0	0	0	0
SG Level C L0443A (W.R.)	0	0	0	0	0	0	0
SG Level C L0442A (N.R.)	0	0	0	0	0	0	0

Steam Generator Group II

TIME	1842	1845	1848	1851	1854	1857	1900
Steam Flow A F0403C KBH	0	0	0	0	0	0	0
Steam Flow B F0425C KBH	0	0	0	0	0	0	0
Steam Flow C F0443C KBH	0	0	0	0	0	0	0
PD Wtr Tk Lvl L0300A TN	328	328	328	328	328	328	328
Aux FD Flow A F0601C GPM	0	0	0	0	0	0	0
Aux FD Flow B F0602C GPM	0	0	0	0	0	0	0
Aux FD Flow C F0603C GPM	0	0	0	0	0	0	0

Steam Generator Group II

TIME	1842	1845	1848	1851	1854	1857	1900
Cont Pressure P1000A PSIA	10.34	10.38	10.41	10.43	10.44	10.45	10.45
Cont Temp T1016A DEG F	101.3	101.8	102.2	102.6	102.8	102.9	102.9
Cont Sump Lvl L0750A IN	0	0.1	0.1	0.1	0.1	0.1	0.1
Hydrogen Y0752A Percent	0	0	0	0	0	0	0

Containment Group III

TIME	1842	1845	1848	1851	1854	1857	1900
SI Accum Lvl L0610A Percent	52	52	52	52	52	52	52
SI Accum Lvl L0620A Percent	52	52	52	52	52	52	52
SI Accum Lvl L0630A Percent	52	52	52	52	52	52	52
RWST Level L0500A IN	720	720	720	720	720	720	720

Safety Injection Group IV

TIME	1842	1845	1848	1851	1854	1857	1900
PZR Level L0480A Percent	100	100	100	100	100	100	100
PZR Temp (WTR) T0480A DEG F	657	658	658	658	657	657	656
PZR Temp (STM) T0481A DEG F	658	660	659	659	658	658	658
RCS Pressure P0103A PSIG	2332	2345	2344	2343	2341	2337	2329
PRT Level L0485A Percent	100	100	100	100	100	100	100
PZR Pressure P0480A PSIG	2322	2336	2335	2333	2331	2327	2319

Pressurizer Group V

TIME	1842	1845	1848	1851	1854	1857	1900
RCP 1A Y3421D On/Off	OFF	OFF	OFF	OFF	OFF	OFF	OFF
RCP 1B Y3422D On/Off	OFF	OFF	OFF	OFF	OFF	OFF	OFF
RCP 1C Y3423D On/Off	OFF	OFF	OFF	OFF	OFF	OFF	OFF
MSIV Position OR001X O/C	CLOSED	CLOSED	CLOSED	CLOSED	CLOSED	CLOSED	CLOSED
MSIV Position OR003X O/C	CLOSED	CLOSED	CLOSED	CLOSED	CLOSED	CLOSED	CLOS
MSIV Position OR005X O/C	CLOSED	CLOSED	CLOSED	CLOSED	CLOSED	CLOSED	CLOSED

RCP/MSIV Group VI

TIME	1842	1845	1848	1851	1854	1857	1900
Battery 1 V0774A Volts	130	130	130	130	130	130	130
Battery 2 V0775A Volts	130	130	130	130	130	130	130
Battery 3 V0776A Volts	130	130	130	130	130	130	130
Battery 4 V0777A Volts	130	130	130	130	130	130	130
Battery 5 V0778A Volts	130	130	130	130	130	130	130

Battery Group VII

TIME	1842	1845	1848	1851	1854	1857	1900
VENT VENT PART R0019A UCI/CC	5.5E-10	5.5E-10	5.5E-10	5.5E-10	5.5E-10	5.5E-10	5.5E-10
VENT VENT GAS R0020A UCI/CC	1.98E-6	1.98E-6	1.98E-6	1.98E-6	1.98E-6	1.98E-6	1.98E-6
ELEV REL RATE R0093A UCI/SEC	1.89E1	1.89E1	1.89E1	1.89E1	1.89E1	1.89E1	1.89E1
ELEV REL PART R0015A UCI/CC	1.6E-10	1.6E-10	1.6E-10	1.6E-10	1.6E-10	1.6E-10	1.6E-10
ELEV REL GAS L R0016A UCI/CC	6.98E-7	6.98E-7	6.98E-7	6.98E-7	6.98E-7	6.98E-7	6.98
ELEV REL GAS M R0017A UCI/CC	1.94E-4	1.94E-4	1.94E-4	1.94E-4	1.94E-4	1.94E-4	1.94E-4
ELEV REL GAS H R0018A UCI/CC	4.85E-2	4.85E-2	4.85E-2	4.85E-2	4.85E-2	4.85E-2	4.85E-2
MAIN STM ACT R0088A UCI/CC	4.93E-3	4.93E-3	4.93E-3	4.93E-3	4.93E-3	4.93E-3	4.93E-3
MAIN STM ACT R0089A UCI/CC	4.00E-3	4.00E-3	4.00E-3	4.00E-3	4.0E-3	4.0E-3	4.0E-3
MAIN STM ACT R0090A UCI/CC	4.25E-3	4.25E-3	4.25E-3	4.25E-3	4.25E-3	4.25E-3	4.25E-3

Effluent Group VIII

TIME	1842	1845	1848	1851	1854	1857	1900
MN STM REL RT R0091A UCI/SEC	0.0	0.0	0.0	0.0	0.0	0.0	0.0
MN STM REL RT R0098A UCI/SEC	0.0	0.0	0.0	0.0	0.0	0.0	0.0
MN STM REL RT R0099A UCI/SEC	0.0	0.0	0.0	0.0	0.0	0.0	0.0

Effluent Group VIII

TIME	1842	1845	1848	1851	1854	1857	1900
FHB VENT PART R0025A UCI/CC	2.0E-10	2.0E-10	2.0E-10	2.0E-10	2.0E-10	2.0E-10	2.0E-10
FHB VENT GAS R0026A UCI/CC	3.59E-6	3.59E-6	3.59E-6	3.59E-6	3.59E-6	3.59E-6	3.59E-6
PAB 718'A PART R0050A UCI/CC	1.7E-10	1.7E-10	1.7E-10	1.7E-10	1.7E-10	1.7E-10	1.7E-10
PAB 718'A GAS R0051A UCI/CC	1.45E-6	1.45E-6	1.45E-6	1.45E-6	1.45E-6	1.45E-6	1.45E-6
PAB 718'B PART R0052A UCI/CC	2.2E-10	2.2E-10	2.2E-10	2.2E-10	2.2E-10	2.2E-10	2.2E-10
PAB 718'B GAS R0053A UCI/CC	2.25E-6	2.25E-6	2.25E-6	2.25E-6	2.25E-6	2.25E-6	2.25E-6
PAB 718'C PART R0054A UCI/CC	2.1E-10	2.1E-10	2.1E-10	2.1E-10	2.1E-10	2.1E-10	2.1E-10
PAB 718'C GAS R0055A UCI/CC	1.46E-6	1.46E-6	1.46E-6	1.46E-6	1.46E-6	1.46E-6	1.46E-6
PAB 735'A PART R0056A UCI/CC	1.9E-10	1.9E-10	1.9E-10	1.9E-10	1.9E-10	1.9E-10	1.9E-10
PAB 735'A GAS R0057A UCI/CC	1.58E-6	1.58E-6	1.58E-6	1.58E-6	1.58E-6	1.58E-6	1.58E-6

Airborne Group IX

TIME	1842	1845	1848	1851	1854	1857	1900
PAB 735'B PART R0058A UCI/CC	1.7E-10	1.7E-10	1.7E-10	1.7E-10	1.7E-10	1.7E-10	1.7E-10
PAB 735'B GAS R0059A UCI/CC	1.25E-6	1.25E-6	1.25E-6	1.25E-6	1.25E-6	1.25E-6	1.25E-6
PAB 755'A PART R0060A UCI/CC	1.8E-10	1.8E-10	1.8E-10	1.8E-10	1.8E-10	1.8E-10	1.8E-10
PAB 755'A GAS R0061A UCI/CC	1.37E-6	1.37E-6	1.37E-6	1.37E-6	1.37E-6	1.37E-6	1.37E-6
PAB 755'B PART R0062A UCI/CC	3.2E-10	3.2E-10	3.2E-10	3.2E-10	3.2E-10	3.2E-10	3.2E-10
PAB 755'B GAS R0063A UCI/CC	1.39E-6	1.39E-6	1.39E-6	1.39E-6	1.39E-6	1.39E-6	1.39E-6
RCB PART R0068A UCI/CC	5.4E-10	5.3E-10	5.2E-10	5.1E-10	4.9E-10	4.8E-10	4.7E-10
RCB GAS R0069A UCI/CC	7.57E-6	7.39E-6	7.22E-6	7.06E-6	6.9E-6	6.7E-6	6.6E-6
LK COL VENT PT R0077A UCI/CC	3.1E-10	3.1E-10	3.1E-10	3.1E-10	3.1E-10	3.1E-10	3.1E-10
LK COL VENT GS R0078A UCI/CC	2.54E-6	2.54E-6	2.54E-6	2.54E-6	2.54E-6	2.54E-6	2.54E-6

Airborne Group IX

TIME	1842	1845	1848	1851	1854	1857	1900
RX CLNT LTDN L R0003A UCI/CC	5.81E-1	5.67E-1	5.54E-1	5.42E-1	5.29E-1	5.17E-1	5.05E-1
RX CLNT LTDN H R0002A UCI/CC	8.32E-1	8.13E-1	7.94E-1	7.76E-1	7.58E-1	7.41E-1	7.24E-1
SG BLDN SAMPLE R0079A UCI/CC	1.00E-5	1.00E-5	1.00E-5	1.00E-5	1.00E-5	1.00E-5	1.00E-5

Process Liquid Group X

TIME	1842	1845	1848	1851	1854	1857	1900
AIR EJ DISCH R0001A UCI/CC	2.59E-7	2.59E-7	2.59E-7	2.59E-7	2.59E-7	2.59E-7	2.59E-7
AIR EJ DEL EXH R0010A UCI/CC	3.35E-7	3.35E-7	3.35E-7	3.35E-7	3.35E-7	3.35E-7	3.35E-7

Process Gas Group XI

TIME	1842	1845	1848	1851	1854	1857	1900
FUEL BLD BRDGE R0024A MR/HR	8.03E-2	8.03E-2	8.03E-2	8.03E-2	8.03E-2	8.03E-2	8.03E-2
AUX BLDG 710' R0042A MR/HR	3.60E-2	3.60E-2	3.60E-2	3.60E-2	3.60E-2	3.60E-2	3.60E-2
AUX BLDG 710' R0043A MR/HR	2.14E-1	2.14E-1	2.14E-1	2.14E-1	2.14E-1	2.14E-1	2.14E-1
AUX BLDG 710' R0044A MR/HR	2.54E-2	2.54E-2	2.54E-2	2.54E-2	2.54E-2	2.54E-2	2.54E-2
AUX BLDG 735' R0045A MR/HR	3.54E-2	3.54E-2	3.54E-2	3.54E-2	3.54E-2	3.54E-2	3.54E-2
AUX BLDG 735' R0046A MR/HR	2.56E-2	2.56E-2	2.56E-2	2.56E-2	2.56E-2	2.56E-2	2.56E-2
AUX BLDG 755' R0047A MR/HR	1.77E-2	1.77E-2	1.77E-2	1.77E-2	1.77E-2	1.77E-2	1.77E-2
AUX BLDG 755' R0048A MR/HR	4.46E-2	4.46E-2	4.46E-2	4.46E-2	4.46E-2	4.46E-2	4.46E-2
AUX BLDG 755' R0049A MR/HR	9.17E-2	9.17E-2	9.17E-2	9.17E-2	9.17E-2	9.17E-2	9.17E-2
AUX BLDG 773' R0040A MR/HR	1.77E-2	1.77E-2	1.77E-2	1.77E-2	1.77E-2	1.77E-2	1.77E-2

Area Group XII

TIME	1842	1845	1848	1851	1854	1857	1900
PAB CHEM SM RM R0041A MR/HR	4.15E-1	4.15E-1	4.15E-1	4.15E-1	4.15E-1	4.15E-1	4.15E-1
RCB LO RNG R0070A MR/HR	1.29E1	1.43E1	1.57E1	1.71E1	1.85E1	1.99E1	2.13E1
PERSONNEL HATC [illegible]71A MR/HR	1.05E-1	1.05E-1	1.05E-1	1.05E-1	1.05E-1	1.05E-1	1.05E-1
PERSONNEL HATC R0072A MR/HR	4.74E0	4.74E0	4.74E0	4.74E0	4.75E0	4.75E0	4.75E0
RCB HI RNG R0086A R/HR	8.29E-1	8.29E-1	8.29E-1	8.29E-1	8.29E-1	8.29E-1	8.29E-1
RCB HI RNG R0087A R/HR	8.58E-1	8.58E-1	8.58E-1	8.58E-1	8.58E-1	8.58E-1	8.58E-1

Area Group XII

TIME	1903	1906	1909	1912	1915	1918	1921
RCS Hotleg A T0419A Deg. F	657	656	660	662	666	665	667
RCS Hotleg B T0439A Deg. F	657	656	660	662	666	665	667
RCS Hotleg C T0459A Deg. F	657	656	660	662	666	665	667
RCS Coldleg A T0406A Deg. F	646	640	650	651	665	645	651
RCS Coldleg B T0426A Deg. F	646	640	650	651	665	645	651
RCS Coldleg C T0446A Deg. F	646	640	650	651	665	645	651
RCS Flow A F0400C Percent	0	0	0	0	0	0	0
RCS Flow B F0421C Percent	0	0	0	0	0	0	0
RCS Flow C F0442C Percent	0	0	0	0	0	0	0
VCT Level L2704A Percent	47	47	47	47	47	47	47

RCS Group I

TIME	1903	1906	1909	1912	1915	1918	1921
Source Range N0031A CPS	2.13E3	2.13E3	2.13E3	2.13E3	2.13E3	2.13E3	2.13E3
Power Range N0051A Percent	0	0	0	0	0	0	0
T/C Peak MXICTX Deg. F	660	662	664	668	673	675	677
T/C Average AVICTCX Deg. F	642	645	648	652	658	661	662
Deg Subcooling UT1002 Deg. F	-3	-6	-7	-10	-15	-16	-19
Inter Range N0035A AMPS	10E-11	10E-11	10E-11	10E-11	10E-11	10E-11	10E-11

RCS Group I

TIME	1903	1906	1909	1912	1915	1918	1921
SG Pressure A P0402A PSIG (STM OUT)	0	0	0	0	0	0	0
SG Pressure B P0422A PSIG (STM OUT)	0	0	0	0	0	0	0
SG Pressure C P0442A PSIG (STM OUT)	0	0	0	0	0	0	0
SG Level A L0403A (W.R.)	0	0	0	0	0	0	0
SG Level A L0402A (N.R.)	0	0	0	0	0	0	0
SG Level B L0423A (W.R.)	0	0	0	0	0	0	0
SG Level B L0422A (N.R.)	0	0	0	0	0	0	0
SG Level C L0443A (W.R.)	0	0	0	0	0	0	0
SG Level C L0442A (N.R.)	0	0	0	0	0	0	0

Steam Generator Group II

TIME	1903	1906	1909	1912	1915	1918	1921
Steam Flow A F0403C KBH	0	0	0	0	0	0	0
Steam Flow B F0425C KBH	0	0	0	0	0	0	0
Steam Flow C F0443C KBH	0	0	0	0	0	0	0
PD Wtr Tk Lvl L0300A IN	328	328	328	328	328	328	328
Aux FD Flow A F0601C GPM	0	0	0	0	0	0	0
Aux FD Flow B F0602C GPM	0	0	0	0	0	0	0
Aux FD Flow C F0603C GPM	0	0	0	0	0	0	0

Steam Generator Group II

TIME	1903	1906	1909	1912	1915	1918	1921
Cont Pressure P1000A PSIA	10.46	10.45	10.46	10.45	10.46	10.45	10.46
Cont Temp T1016A DEG F	103.0	102.9	103.0	102.9	103.0	102.9	103.0
Cont Sump Lvl L0750A IN	0.1	0.1	0.1	0.1	0.1	0.1	0.1
Hydrogen Y0752A Percent	0	0	0	0	0	0	0

Containment Group III

TIME	1903	1906	1909	1912	1915	1918	1921
SI Accum Lvl L0610A Percent	52	52	52	52	52	52	52
SI Accum Lvl L0620A Percent	52	52	52	52	52	52	52
SI Accum Lvl L0630A Percent	52	52	52	52	52	52	52
RWST Level L0500A IN	720	720	720	720	720	720	720

Safety Injection Group IV

TIME	1903	1906	1909	1912	1915	1918	1921
PZR Level L0480A Percent	100	100	100	100	100	100	100
PZR Temp (WTR) T0480A DEG F	656	655	656	656	658	658	658
PZR Temp (STM) T0481A DEG F	657	656	657	658	659	660	661
RCS Pressure P0103A PSIG	2310	2291	2320	2330	2340	2350	2340
PRT Level L0485A Percent	100	100	100	100	100	100	100
PZR Pressure P0480A PSIG	2300	2281	2310	2321	2332	2342	2331

Pressurizer Group V

TIME	1903	1906	1909	1912	1915	1918	1921
RCP 1A Y3421D On/Off	OFF	OFF	OFF	OFF	OFF	OFF	OFF
RCP 1B Y3422D On/Off	OFF	OFF	OFF	OFF	OFF	OFF	OFF
RCP 1C Y3423D On/Off	OFF	OFF	OFF	OFF	OFF	OFF	OFF
MSIV Position OR001X O/C	CLOSED	CLOSED	CLOSED	CLOSED	CLOSED	CLOSED	CLOSED
MSIV Position OR003X O/C	CLOSED	CLOSED	CLOSED	CLOSED	CLOSED	CLOSED	CLOSED
MSIV Position OR005X O/C	CLOSED	CLOSED	CLOSED	CLOSED	CLOSED	CLOSED	CLOSED

RCP/MSIV Group VI

TIME	1903	1906	1909	1912	1915	1918	192
Battery 1 V0774A Volts	130	130	130	130	130	130	130
Battery 2 V0775A Volts	130	130	130	130	130	130	130
Battery 3 V0776A Volts	130	130	130	130	130	130	130
Battery 4 V0777A Volts	130	130	130	130	130	130	130
Battery 5 V0778A Volts	130	130	130	130	130	130	130

Battery Group VII

TIME	1903	1906	1909	1912	1915	1918	1921
VENT VENT PART R0019A UCI/CC	5.5E-10	5.5E-10	5.5E-10	5.5E-10	5.5E-10	5.5E-10	5.5E-10
VENT VENT GAS R0020A UCI/CC	1.98E-6	1.98E-6	1.98E-6	1.98E-6	1.98E-6	1.98E-6	1.98E-6
ELEV REL RATE R0093A UCI/SEC	1.89E1	1.89E1	1.89E1	1.89E1	1.89E1	1.89E1	1.89E1
ELEV REL PART R0015A UCI/CC	1.6E-10	1.6E-10	1.6E-10	1.6E-10	1.6E-10	1.6E-10	1.6E-10
ELEV REL G L R0016A UCI/CC	6.98E-7	6.98E-7	6.98E-7	6.98E-7	6.98E-7	6.98E-7	6.98E-7
ELEV REL GAS M R0017A UCI/CC	1.94E-4	1.94E-4	1.94E-4	1.94E-4	1.94E-4	1.94E-4	1.94E-4
ELEV REL GAS H R0018A UCI/CC	4.85E-2	4.85E-2	4.85E-2	4.85E-2	4.85E-2	4.85E-2	4.85E-2
MAIN STM ACT R0088A UCI/CC	4.93E-3	4.93E-3	4.93E-3	4.93E-3	4.93E-3	4.93E-3	4.93E-3
MAIN STM ACT R0089A UCI/CC	4.0E-3	4.0E-3	4.0E-3	4.0E-3	4.00E-3	4.00E-3	4.00E-3
MAIN STM ACT R0090A UCI/CC	4.25E-3	4.25E-3	4.25E-3	4.25E-3	4.25E-3	4.25E-3	4.25E-3

Effluent Group VIII

TIME	1903	1906	1909	1912	1915	1918	1921
MN STM REL RT R0091A UCI/SEC	0.0	0.0	0.0	0.0	0.0	0.0	0.0
MN STM REL RT R0098A UCI/SEC	0.0	0.0	0.0	0.0	0.0	0.0	0.0
MN STM REL RT R0099A UCI/SEC	0.0	0.0	0.0	0.0	0.0	0.0	0.0

Effluent Group VIII

TIME	1903	1906	1909	1912	1915	1918	1921
FHB VENT PART R0025A UCI/CC	2.0E-10	2.0E-10	2.0E-10	2.0E-10	2.0E-10	2.0E-10	2.0E-10
FHB VENT GAS R0026A UCI/CC	3.59E-6	3.59E-6	3.59E-6	3.59E-6	3.59E-6	3.59E-6	3.59E-6
PAB 718'A PART R0050A UCI/CC	1.7E-10	1.7E-10	1.7E-10	1.7E-10	1.7E-10	1.7E-10	1.7E-10
PAB 718'A GAS R0051A UCI/CC	1.45E-6	1.45E-6	1.45E-6	1.45E-6	1.45E-6	1.45E-6	1.45E-6
PAB 718'B PART R0052A UCI/CC	2.2E-10	2.2E-10	2.2E-10	2.2E-10	2.2E-10	2.2E-10	2.2E-10
PAB 718'B GAS R0053A UCI/CC	2.25E-6	2.25E-6	2.25E-6	2.25E-6	2.25E-6	2.25E-6	2.25E-6
PAB 718'C PART R0054A UCI/CC	2.1E-10	2.1E-10	2.1E-10	2.1E-10	2.1E-10	2.1E-10	2.1E-10
PAB 718'C GAS R0055A UCI/CC	1.46E-6	1.46E-6	1.46E-6	1.46E-6	1.46E-6	1.46E-6	1.46E-6
PAB 735'A PART R0056A UCI/CC	1.9E-10	1.9E-10	1.9E-10	1.9E-10	1.9E-10	1.9E-10	1.9E-10
PAB 735'A GAS R0057A UCI/CC	1.58E-6	1.58E-6	1.58E-6	1.58E-6	1.58E-6	1.58E-6	1.58E-6

TIME	1903	1906	1909	1912	1915	1918	1921
PAB 735'B PART R0058A UCI/CC	1.7E-10	1.7E-10	1.7E-10	1.7E-10	1.7E-10	1.7E-10	1.7E-10
PAB 735'B GAS R0059A UCI/CC	1.25E-6	1.25E-6	1.25E-6	1.25E-6	1.25E-6	1.25E-6	1.25E-6
PAB 755'A PART R0060A UCI/CC	1.8E-10	1.8E-10	1.8E-10	1.8E-10	1.8E-10	1.8E-10	1.8E-10
PAB 755'A GAS R0061A UCI/CC	1.37E-6	1.37E-6	1.37E-6	1.37E-6	1.37E-6	1.37E-6	1.37E-6
PAB 755'B PART R0062A UCI/CC	3.2E-10	3.2E-10	3.2E-10	3.2E-10	3.2E-10	3.2E-10	3.2E-10
PAB 755'B GAS R0063A UCI/CC	1.39E-6	1.39E-6	1.39E-6	1.39E-6	1.39E-6	1.39E-6	1.39E-6
RCB PART R0068A UCI/CC	4.6E-10	4.5E-10	4.4E-10	4.3E-10	4.2E-10	4.1E-10	4.0E-10
RCB GAS R0069A UCI/CC	6.4E-10	6.3E-10	6.1E-10	6.0E-10	5.86E-6	5.72E-6	5.59E-6
LK COL VENT PT R0077A UCI/CC	3.1E-10	3.1E-10	3.1E-10	3.1E-10	3.1E-10	3.1E-10	3.1E-10
LK COL VENT GS R0078A UCI/CC	2.54E-6	2.54E-6	2.54E-6	2.54E-6	2.54E-6	2.54E-6	2.54E-6

TIME	1903	1906	1909	1912	1915	1918	1921
RX CLNT LTDN L R0003A UCI/CC	4.94E-1	4.82E-1	4.71E-1	4.60E-1	4.50E-1	4.39E-1	4.29E-1
RX CLNT LTDN H R0002A UCI/CC	7.07E-1	6.91E-1	6.75E-1	6.59E-1	6.49E-1	6.29E-1	6.15E-1
SG BLDN SAMPLE R0079A UCI/CC	1.00E-5	1.00E-5	1.00E-5	1.00E-5	1.00E-5	1.00E-5	1.00E-5

Process Liquid Group X

TIME	1903	1906	1909	1912	1915	1918	1921
AIR EJ DISCH R0001A UCI/CC	2.59E-7	2.59E-7	2.59E-7	2.59E-7	2.59E-7	2.59E-7	2.59E-7
AIR EJ DEL EXH R0010A UCI/CC	3.35E-7	3.35E-7	3.35E-7	3.35E-7	3.35E-7	3.35E-7	3.35E-7

Process Gas Group XI

TIME	1903	1906	1909	1912	1915	1918	1921
FUEL BLD BRDGE R0024A MR/HR	8.03E-2	8.03E-2	8.03E-2	8.03E-2	8.03E-2	8.03E-2	8.03E-2
AUX BLDG 710' R0042A MR/HR	3.60E-2	3.60E-2	3.60E-2	3.60E-2	3.60E-2	3.60E-2	3.60E-2
AUX BLDG 710' R0043A MR/HR	2.14E-1	2.14E-1	2.14E-1	2.14E-1	2.14E-1	2.14E-1	2.14E-1
AUX BLDG 710' R0044A MR/HR	2.54E-2	2.54E-2	2.54E-2	2.54E-2	2.54E-2	2.54E-2	2.54E-2
AUX BLDG 735' R0045A MR/HR	3.54E-2	3.54E-2	3.54E-2	3.54E-2	3.54E-2	3.54E-2	3.54E-2
AUX BLDG 735' R0046A MR/HR	2.56E-2	2.56E-2	2.56E-2	2.56E-2	2.56E-2	2.56E-2	2.56E-2
AUX BLDG 755' R0047A MR/HR	1.77E-2	1.77E-2	1.77E-2	1.77E-2	1.77E-2	1.77E-2	1.77E-2
AUX BLDG 755' R0048A MR/HR	4.46E-2	4.46E-2	4.46E-2	4.46E-2	4.46E-2	4.46E-2	4.46E-2
AUX BLDG 755' R0049A MR/HR	9.17E-2	9.17E-2	9.17E-2	9.17E-2	9.17E-2	9.17E-2	9.17E-2
AUX BLDG 773' R0040A MR/HR	1.77E-2	1.77E-2	1.77E-2	1.77E-2	1.77E-2	1.77E-2	1.77E-2

Area Group XII

TIME	1903	1906	1909	1912	1915	1918	1921
PAB CHEM SM RM R0041A MR/HR	4.15E-1	4.15E-1	4.15E-1	4.15E-1	4.15E-1	4.15E-1	4.15E-1
RCB LO RNG R0070A MR/HR	2.27E1	2.41E1	2.55E1	2.69E1	2.83E1	2.97E1	3.11E1
PERSONNEL HATC R0071A MR/HR	1.05E-1	1.05E-1	1.05E-1	1.05E-1	1.05E-1	1.05E-1	1.05E-1
PERSONNEL HATC R0072A MR/HR	4.75E0	4.75E0	4.75E0	4.75E0	4.75E0	4.75E0	4.75E0
RCB HI RNG R0086A R/HR	8.29E-1	8.29E-1	8.29E-1	8.29E-1	8.29E-1	8.29E-1	8.29E-1
RCB HI RNG R0087A R/HR	8.58E-1	8.58E-1	8.58E-1	8.58E-1	8.58E-1	8.58E-1	8.58E-1

Area Group XII

TIME	1924	1927	1930	1933	1936	1939	1942
RCS Hotleg A T0419A Deg. F	668	671	676	680	686	690	696
RCS Hotleg B T0439A Deg. F	669	671	676	680	686	690	696
RCS Hotleg C T0459A Deg. F	669	671	676	680	686	690	696
RCS Coldleg A T0406A Deg. F	659	661	666	670	676	680	686
RCS Coldleg B T0426A Deg. F	659	661	666	670	676	680	686
RCS Coldleg C T0446A Deg. F	659	661	666	670	676	680	686
RCS Flow A F0400C Percent	0	0	0	0	0	0	0
RCS Flow B F0421C Percent	0	0	0	0	0	0	0
RCS Flow C F0442C Percent	0	0	0	0	0	0	0
VCT Level L2704A Percent	47	47	47	47	47	47	47

RCS Group I

TIME	1924	1927	1930	1933	1936	1939	1942
Source Range N0031A CPS	2.13E3	2.13E3	2.13E3	2.13E3	2.13E3	2.13E3	2.13E3
Power Range N0051A Percent	0	0	0	0	0	0	0
T/C Peak MXICTX Deg. F	679	681	686	690	696	700	706
T/C Average AVICTCX Deg. F	664	666	670	673	681	684	691
Deg Subcooling UT1002 Deg. F	-20	-21	-27	-32	-38	-40	-46
Inter Range N0035A AMPS	10E-11	10E-11	10E-11	10E-11	10E-11	10E-11	10E-11

RCS Group I

TIME	1924	1927	1930	1933	1936	1939	1942
SG Pressure A P0402A PSIG (STM OUT)	0	0	0	0	0	0	0
SG Pressure B P0422A PSIG (STM OUT)	0	0	0	0	0	0	0
SG Pressure C P0442A PSIG (STM OUT)	0	0	0	0	0	0	0
SG Level A L0403A (W.R.)	0	0	0	0	0	0	0
SG Level A L0402A (N.R.)	0	0	0	0	0	0	0
SG Level B L0423A (W.R.)	0	0	0	0	0	0	0
SG Level B L0422A (N.R.)	0	0	0	0	0	0	0
SG Level C L0443A (W.R.)	0	0	0	0	0	0	0
SG Level C L0442A (N.R.)	0	0	0	0	0	0	0

Steam Generator Group II

TIME	1924	1927	1930	1933	1936	1939	1942
Steam Flow A F0403C KBH	0	0	0	0	0	0	0
Steam Flow B F0425C KBH	0	0	0	0	0	0	0
Steam Flow C F0443C KBH	0	0	0	0	0	0	0
PD Wtr Tk Lvl L0300A IN	328	328	328	328	328	328	328
Aux FD Flow A F0601C GPM	0	0	0	0	0	0	0
Aux FD Flow B F0602C GPM	0	0	0	0	0	0	0
Aux FD Flow C F0603C GPM	0	0	0	0	0	0	0

Steam Generator Group II

TIME	1924	1927	1930	1933	1936	1939	1942
Cont Pressure P1000A PSIA	10.45	10.46	10.45	10.46	10.45	10.46	10.45
Cont Temp T1016A DEG F	102.9	103.0	102.9	103.0	102.9	103.0	102.9
Cont Sump Lvl L0750A IN	0.1	0.1	0.1	0.1	0.1	0.1	0.1
Hydrogen Y0752A Percent	0	0	0	0	0	0	0

TIME	1924	1927	1930	1933	1936	1939	1942
SI Accum Lvl L0610A Percent	52	52	52	52	52	52	52
SI Accum Lvl L0620A Percent	52	52	52	52	52	52	52
SI Accum Lvl L0630A Percent	52	52	52	52	52	52	52
RWST Level L0500A IN	720	720	720	720	720	720	720

Safety Injection Group IV

TIME	1924	1927	1930	1933	1936	1939	1942
PZR Level L0480A Percent	100	100	100	100	100	100	100
PZR Temp (WTR) T0480A DEG F	658	659	658	658	657	658	659
PZR Temp (STM) T0481A DEG F	660	660	660	659	660	659	660
RCS Pressure P0103A PSIG	2355	2360	2350	2340	2345	2360	2365
PRT Level L0485A Percent	100	100	100	100	100	100	100
PZR Pressure P0480A PSIG	2347	2352	2341	2332	2338	2351	2358

Pressurizer Group V

TIME	1924	1927	1930	1933	1936	1939	1942
RCP 1A Y3421D On/Off	OFF	OFF	OFF	OFF	OFF	OFF	OFF
RCP 1B Y3422D On/Off	OFF	OFF	OFF	OFF	OFF	OFF	OFF
RCP 1C Y3423D On/Off	OFF	OFF	OFF	OFF	OFF	OFF	OFF
MSIV Position OR001X O/C	CLOSED	CLOSED	CLOSED	CLOSED	CLOSED	CLOSED	CLOSED
MSIV Position OR003X O/C	CLOSED	CLOSED	CLOSED	CLOSED	CLOSED	CLOSED	CLOSED
MSIV Position OR005X O/C	CLOSED	CLOSED	CLOSED	CLOSED	CLOSED	CLOSED	CLOSED

RCP/MSIV Group VI

TIME	1924	1927	1930	1933	1936	1939	1942
Battery 1 V0774A Volts	130	130	130	130	130	130	130
Battery 2 V0775A Volts	130	130	130	130	130	130	130
Battery 3 V0776A Volts	130	130	130	130	130	130	130
Battery 4 V0777A Volts	130	130	130	130	130	130	130
Battery 5 V0778A Volts	130	130	130	130	130	130	130

Battery Group VII

TIME	1924	1927	1930	1933	1936	1939	1942
VENT VENT PART R0019A UCI/CC	5.5E-10	5.5E-10	5.5E-10	5.5E-10	5.5E-10	5.5E-10	5.5E-10
VENT VENT GAS R0020A UCI/CC	1.98E-6	1.98E-6	1.98E-6	1.98E-6	1.98E-6	1.98E-6	1.98E-6
ELEV REL RATE R0093A UCI/SEC	1.89E1	1.89E1	1.89E1	1.89E1	1.89E1	1.89E1	1.89E1
ELEV REL PART R0015A UCI/CC	1.6E-10	1.6E-10	1.6E-10	1.6E-10	1.6E-10	1.6E-10	1.6E-10
ELEV REL GAS L R0016A UCI/CC	6.98E-7	6.98E-7	6.98E-7	6.98E-7	6.98E-7	6.98E-7	6.98E-7
ELEV REL GAS M R0017A UCI/CC	1.94E-4	1.94E-4	1.94E-4	1.94E-4	1.94E-4	1.94E-4	1.94E-4
ELEV REL GAS H R0018A UCI/CC	4.85E-2	4.85E-2	4.85E-2	4.85E-2	4.85E-2	4.85E-2	4.85E-2
MAIN STM ACT R0088A UCI/CC	4.93E-3	4.93E-3	4.93E-3	4.93E-3	4.93E-3	4.93E-3	4.93E-3
MAIN STM ACT R0089A UCI/CC	4.00E-3	4.00E-3	4.00E-3	4.00E-3	4.00E-3	4.00E-3	4.00E-3
MAIN STM ACT R0090A UCI/CC	4.25E-3	4.25E-3	4.25E-3	4.25E-3	4.25E-3	4.25E-3	4.25E-3

Effluent Group VIII

TIME	1924	1927	1930	1933	1936	1939	1942
MN STM REL RT R0091A UCI/SEC	0.0	0.0	0.0	0.0	0.0	0.0	0.0
MN STM REL RT R0098A UCI/SEC	0.0	0.0	0.0	0.0	0.0	0.0	0.0
MN STM REL RT R0099A UCI/SEC	0.0	0.0	0.0	0.0	0.0	0.0	0.0

Effluent Group VIII

TIME	1924	1927	1930	1933	1936	1939	1942
FHB VENT PART R0025A UCI/CC	2.0E-10	2.0E-10	2.0E-10	2.0E-10	2.0E-10	2.0E-10	2.0E-10
FHB VENT GAS R0026A UCI/CC	3.59E-6	3.59E-6	3.59E-6	3.59E-6	3.59E-6	3.59E-6	3.59E-6
PAB 718'A PART R0050A UCI/CC	1.7E-10	1.7E-10	1.7E-10	1.7E-10	1.7E-10	1.7E-10	1.7E-10
PAB 718'A GAS R0051A UCI/CC	1.45E-6	1.45E-6	1.45E-6	1.45E-6	1.45E-6	1.45E-6	1.45E-6
PAB 718'B PART R0052A UCI/CC	2.2E-10	2.2E-10	2.2E-10	2.2E-10	2.2E-10	2.2E-10	2.2E-10
PAB 718'B GAS R0053A UCI/CC	2.25E-6	2.25E-6	2.25E-6	2.25E-6	2.25E-6	2.25E-6	2.25E-6
PAB 718'C PART R0054A UCI/CC	2.1E-10	2.1E-10	2.1E-10	2.1E-10	2.1E-10	2.1E-10	2.1E-10
PAB 718'C GAS R0055A UCI/CC	1.46E-6	1.46E-6	1.46E-6	1.46E-6	1.46E-6	1.46E-6	1.46E-6
PAB 735'A PART R0056A UCI/CC	1.9E-10	1.9E-10	1.9E-10	1.9E-10	1.9E-10	1.9E-10	1.9E-10
PAB 735'A GAS R0057A UCI/CC	1.58E-6	1.58E-6	1.58E-6	1.58E-6	1.58E-6	1.58E-6	1.58E-6

TIME	1924	1927	1930	1933	1936	1939	1942
PAB 735'B PART R0058A UCI/CC	1.7E-10	1.7E-10	1.7E-10	1.7E-10	1.7E-10	1.7E-10	1.7E-10
PAB 735'B GAS R0059A UCI/CC	1.25E-6	1.25E-6	1.25E-6	1.25E-6	1.25E-6	1.25E-6	1.25E-6
PAB 755'A PART R0060A UCI/CC	1.8E-10	1.8E-10	1.8E-10	1.8E-10	1.8E-10	1.8E-10	1.8E-10
PAB 755'A GAS R0061A UCI/CC	1.37E-6	1.37E-6	1.37E-6	1.37E-6	1.37E-6	1.37E-6	1.37E-6
PAB 755'B PART R0062A UCI/CC	3.2E-10	3.2E-10	3.2E-10	3.2E-10	3.2E-10	3.2E-10	3.2E-10
PAB 755'B GAS R0063A UCI/CC	1.39E-6	1.39E-6	1.39E-6	1.39E-6	1.39E-6	1.39E-6	1.39E-6
RCB PART R0068A UCI/CC	3.9E-10	3.8E-10	3.7E-10	3.7E-10	3.6E-10	3.5E-10	3.4E-10
RCB GAS R0069A UCI/CC	5.46E-6	5.34E-6	5.22E-6	5.10E-6	4.98E-6	4.86E-6	4.75E-6
LK COL VENT PT R0077A UCI/CC	3.1E-10	3.1E-10	3.1E-10	3.1E-10	3.1E-10	3.1E-10	3.1E-10
LK COL VENT GS R0078A UCI/CC	2.54E-6	2.54E-6	2.54E-6	2.54E-6	2.54E-6	2.54E-6	2.54E-6

Airborne Group IX

TIME	1924	1927	1930	1933	1936	1939	1942
RX CLNT LTDN L R0003A UCI/CC	4.19E-1	4.10E-1	4.00E-1	3.91E-1	3.82E-1	3.73E-1	3.65E-1
RX CLNT LTDN H R0002A UCI/CC	6.01E-1	5.87E-1	5.73E-1	5.60E-1	5.47E-1	5.35E-1	5.22E-1
SG BLDN SAMPLE R0079A UCI/CC	1.00E-5	1.00E-5	1.00E-5	1.00E-5	1.00E-5	1.00E-5	1.00E-5

Process Liquid Group X

TIME	1924	1927	1930	1933	1936	1939	1942
AIR EJ DISCH R0001A UCI/CC	2.59E-7	2.59E-7	2.59E-7	2.59E-7	2.59E-7	2.59E-7	2.59E-7
AIR EJ DEL EXH R0010A UCI/CC	3.35E-7	3.35E-7	3.35E-7	3.35E-7	3.35E-7	3.35E-7	3.35E-7

Process Gas Group XI

TIME	1924	1927	1930	1933	1936	1939	1942
FUEL BLD BRDGE R0024A MR/HR	8.03E-2	8.03E-2	8.03E-2	8.03E-2	8.03E-2	8.03E-2	8.03E-2
AUX BLDG 710' R0042A MR/HR	3.60E-2	3.60E-2	3.60E-2	3.60E-2	3.60E-2	3.60E-2	3.60E-2
AUX BLDG 710' R0043A MR/HR	2.14E-1	2.14E-1	2.14E-1	2.14E-1	2.14E-1	2.14E-1	2.14E-1
AUX BLDG 710' R0044A MR/HR	2.54E-2	2.54E-2	2.54E-2	2.54E-2	2.54E-2	2.54E-2	2.54E-2
AUX BLDG 735' R0045A MR/HR	3.54E-2	3.54E-2	3.54E-2	3.54E-2	3.54E-2	3.54E-2	3.54E-2
AUX BLDG 735' R0046A MR/HR	2.56E-2	2.56E-2	2.56E-2	2.56E-2	2.56E-2	2.56E-2	2.56E-2
AUX BLDG 755' R0047A MR/HR	1.77E-2	1.77E-2	1.77E-2	1.77E-2	1.77E-1	1.77E-2	1.77E-2
AUX BLDG 755' R0048A MR/HR	4.46E-2	4.46E-2	4.46E-2	4.46E-2	4.46E-2	4.46E-2	4.46E-2
AUX BLDG 755' R0049A MR/HR	9.17E-2	9.17E-2	9.17E-2	9.17E-2	9.17E-2	9.17E-2	9.17E-2
AUX BLDG 773' R0040A MR/HR	1.77E-2	1.77E-2	1.77E-2	1.77E-2	1.7	1.77E-2	1.77E-2

Area Group XII

TIME	1924	1927	1930	1933	1936	1939	1942
PAB CHEM SM RM R0041A MR/HR	4.15E-1	4.15E-1	4.15E-1	4.15E-1	4.15E-1	4.15E-1	4.15E-1
RCB LO RNG R0070A MR/HR	3.25E1	3.39E1	3.53E1	3.67E1	3.81E1	3.95E1	4.09E1
PERSONNEL HATC R0071A MR/HR	1.05E-1	1.05E-1	1.05E-1	1.05E-1	1.05E-1	1.05E-1	1.05E-1
PERSONNEL HATC R0072A MR/HR	4.75E0	4.75E0	4.75E0	4.75E0	4.75E0	4.75E0	4.75E0
RCB HI RNG R0086A R/HR	8.29E-1	8.29E-1	8.29E-1	8.29E-1	8.29E-1	8.29E-1	8.29E-1
RCB HI RNG R0087A R/HR	8.58E-1	8.58E-1	8.58E-1	8.58E-1	8.58E-1	8.58E-1	8.58E-1

Area Group XII

TIME	1945	1948	1951	1954	1957	2000	2003
RCS Hotleg A T0419A Deg. F	700	705	709	714	720	727	744
RCS Hotleg B T0439A Deg. F	700	705	709	714	720	727	744
RCS Hotleg C T0459A Deg. F	700	705	709	714	720	727	744
RCS Coldleg A T0406A Deg. F	690	695	699	704	710	717	734
RCS Coldleg B T0426A Deg. F	690	695	699	704	710	717	734
RCS Coldleg C T0446A Deg. F	690	695	699	704	710	717	734
RCS Flow A F0400C Percent	0	0	0	0	0	0	0
RCS Flow B F0421C Percent	0	0	0	0	0	0	0
RCS Flow C F0442C Percent	0	0	0	0	0	0	0
VCT Level L2704A Percent	47	47	47	47	47	47	47

RCS Group I

TIME	1945	1948	1951	1954	1957	2000	2003
Source Range N0031A CPS	2.13E3	2.13E-3	2.13E3	2.13E3	2.13E3	2.13E3	2.13E3
Power Range N0051A Percent	0	0	0	0	0	0	0
T/C Peak MXICTX Deg. F	710	715	719	725	730	737	754
T/C Average AVICTCX Deg. F	694	699	704	710	715	724	739
Deg Subcooling UT1002 Deg. F	-52	-55	-59	-64	-70	-78	-135
Inter Range N0035A AMPS	10E-11	10E-11	10E-11	10E-11	10E-11	10E-11	10E-11

RCS Group I

TIME	1945	1948	1951	1954	1957	2000	2003
SG Pressure A P0402A PSIG (STM OUT)	0	0	0	0	0	0	0
SG Pressure B P0422A PSIG (STM OUT)	0	0	0	0	0	0	0
SG Pressure C P0442A PSIG (STM OUT)	0	0	0	0	0	0	18
SG Level A L0403A (W.R.)	0	0	0	0	0	0	18
SG Level A L0402A (N.R.)	0	0	0	0	0	0	18
SG Level B L0423A (W.R.)	0	0	0	0	0	0	18
SG Level B L0422A (N.R.)	0	0	0	0	0	0	18
SG Level C L0443A (W.R.)	0	0	0	0	0	0	2
SG Level C L0442A (N.R.)	0	0	0	0	0	0	0

Steam Generator Group II

TIME	1945	1948	1951	1954	1957	2000	2003
Steam Flow A F0403C KBH	0	0	0	0	0	0	0
Steam Flow B F0425C KBH	0	0	0	0	0	0	0
Steam Flow C F0443C KBH	0	0	0	0	0	0	450
PD Wtr Tk Lvl L0300A IN	328	328	328	328	328	328	328
Aux FD Flow A F0601C GPM	0	0	0	0	0	0	0
Aux FD Flow B F0602C GPM	0	0	0	0	0	0	0
Aux FD Flow C F0603C GPM	0	0	0	0	0	0	310

Steam Generator Group II

TIME	1945	1948	1951	1954	1957	2000	2003
Cont Pressure P1000A PSIA	10.46	10.45	10.46	10.45	10.46	10.45	10.46
Cont Temp T1016A DEG F	103.0	102.9	103.0	102.9	103.0	102.9	103.0
Cont Sump Lvl L0750A IN	0.1	0.1	0.1	0.1	0.1	0.2	0.2
Hydrogen Y0752A Percent	0	0	0	0	0	0	0

Containment Group III

TIME	1945	1948	1951	1954	1957	2000	2003
[illegible] Lvl Pe[illegible]	52	52	52	52	52	52	52
[illegible] Lvl	52	52	52	52	52	52	52
[illegible]um Lvl L0630A Percent	52	52	52	52	52	52	52
RWST Level L0500A IN	720	720	720	720	720	720	720

Safety Injection Group IV

TIME	1945	1948	1951	1954	1957	2000	2003
PZR Level L0480A Percent	100	100	100	100	100	100	100
PZR Temp (WTR) T0480A DEG F	658	658	659	659	659	658	615
PZR Temp (STM) T0481A DEG F	659	659	660	660	660	659	616
RCS Pressure P0103A PSIG	2350	2360	2370	2365	2375	2350	1747
PRT Level L0485A Percent	100	100	100	100	100	100	100
PZR Pressure P0480A PSIG	2342	2351	2361	2358	2368	2342	1735

Pressurizer Group V

TIME	1945	1948	1951	1954	1957	2000	2003
RCP 1A Y3421D On/Off	OFF	OFF	OFF	OFF	OFF	OFF	OFF
RCP 1B Y3422D On/Off	OFF	OFF	OFF	OFF	OFF	OFF	OFF
RCP 1C Y3423D On/Off	OFF	OFF	OFF	OFF	OFF	OFF	OFF
MSIV Position OR001X O/C	CLOSED	CLOSED	CLOSED	CLOSED	CLOSED	CLOSED	CLOSED
MSIV Position OR003X O/C	CLOSED	CLOSED	CLOSED	CLOSED	CLOSED	CLOSED	CLOSED
MSIV Position OR005X O/C	CLOSED	CLOSED	CLOSED	CLOSED	CLOSED	CLOSED	CLOSED

RCP/MSIV Group VI

TIME	1945	1948	1951	1954	1957	2000	2003
Battery 1 V0774A Volts	130	130	130	130	130	130	130
Battery 2 V0775A Volts	130	130	130	130	130	130	130
Battery 3 V0776A Volts	130	130	130	130	130	130	130
Battery 4 V0777A Volts	130	130	130	130	130	130	130
Battery 5 V0778A Volts	130	130	130	130	130	130	130

Battery Group VII

TIME	1945	1948	1951	1954	1957	2000	2003
VENT VENT PART R0019A UCI/CC	5.5E-10	5.5E-10	5.5E-10	5.5E-10	5.5E-10	5.5E-10	5.5E-10
VENT VENT GAS R0020A UCI/CC	1.98E-6	1.98E-6	1.98E-6	1.98E-6	1.98E-6	1.98E-6	1.98E-6
ELEV REL RATE R0093A UCI/SEC	1.89E1	1.89E1	1.89E1	1.89E1	1.89E1	1.89E1	1.89E1
ELEV REL PART R0015A UCI/CC	1.6E-10	1.6E-10	1.6E-10	1.6E-10	1.6E-10	1.6E-10	1.6E-10
ELEV REL GAS L R0016A UCI/CC	6.98E-7	6.98E-7	6.98E-7	6.98E-7	6.98E-7	6.98E-7	6.98E-7
ELEV REL GAS M R0017A UCI/CC	1.94E-4	1.94E-4	1.94E-4	1.94E-4	1.94E-4	1.94E-4	1.94E-4
ELEV REL GAS H R0018A UCI/CC	4.85E-2	4.85E-2	4.85E-2	4.85E-2	4.85E-2	4.85E-2	4.85E-2
MAIN STM ACT R0088A UCI/CC	4.93E-3	4.93E-3	4.93E-3	4.93E-3	4.93E-3	4.93E-3	4.93E-3
MAIN STM ACT R0089A UCI/CC	4.00E-3	4.00E-3	4.00E-3	4.00E-3	4.00E-3	4.00E-3	4.00E-3
MAIN STM ACT R0090A UCI/CC	4.25E-3	4.25E-3	4.25E-3	4.25E-3	4.25E-3	4.25E-3	2.5E0

Effluent Group VIII

TIME	1945	1948	1951	1954	1957	2000	2003
MN STM REL RT R0091A UCI/SEC	0.0	0.0	0.0	0.0	0.0	0.0	0.0
MN STM REL RT R0098A UCI/SEC	0.0	0.0	0.0	0.0	0.0	0.0	0.0
MN STM REL RT R0099A UCI/SEC	0.0	0.0	0.0	0.0	0.0	0.0	3.59E6

Effluent Group VIII

TIME	1945	1948	1951	1954	1957	2000	2003
FHB VENT PART R0025A UCI/CC	2.0E-10	2.0E-10	2.0E-10	2.0E-10	2.0E-10	2.0E-10	2.0E-10
FHB VENT GAS R0026A UCI/CC	3.59E-6	3.59E-6	3.59E-6	3.59E-6	3.59E-6	3.59E-6	3.59E-6
PAB 718'A PART R0050A UCI/CC	1.7E-10	1.7E-10	1.7E-10	1.7E-10	1.7E-10	1.7E-10	1.7E-10
PAB 718'A GAS R0051A UCI/CC	1.45E-6	1.45E-6	1.45E-6	1.45E-6	1.45E-6	1.45E-6	1.45E-6
PAB 718'B PART R0052A UCI/CC	2.2E-10	2.2E-10	2.2E-10	2.2E-10	2.3E-10	2.3E-10	2.3E-10
PAB 718'B GAS R0053A UCI/CC	2.25E-6	2.25E-6	2.25E-6	2.25E-6	2.25E-6	2.25E-6	2.25E-6
PAB 718'C PART R0054A UCI/CC	2.1E-10	2.1E-10	2.1E-10	2.1E-10	2.1E-10	2.1E-10	2.1E-10
PAB 718'C GAS R0055A UCI/CC	1.46E-6	1.46E-6	1.46E-6	1.46E-6	1.46E-6	1.46E-6	1.46E-6
PAB 735'A PART R0056A UCI/CC	1.9E-10	1.9E-10	1.9E-10	1.9E-10	1.9E-10	1.9E-10	1.9E-10
PAB 735'A GAS R0057A UCI/CC	1.58E-6	1.58E-6	1.58E-6	1.58E-6	1.58E-6	1.58E-6	1.58E-6

TIME	1945	1948	1951	1954	1957	2000	2003
PAB 735'B PART R0058A UCI/CC	1.7E-10	1.7E-10	1.7E-10	1.7E-10	1.7E-10	1.7E-10	1.7E-10
PAB 735'B GAS R0059A UCI/CC	1.25E-6	1.25E-6	1.25E-6	1.25E-6	1.25E-6	1.25E-6	1.25E-6
PAB 755'A PART R0060A UCI/CC	1.8E-10	1.8E-10	1.8E-10	1.8E-10	1.8E-10	1.8E-10	1.8E-10
PAB 755'A GAS R0061A UCI/CC	1.37E-6	1.37E-6	1.37E-6	1.37E-6	1.37E-6	1.37E-6	1.37E-6
PAB 755'B PART R0062A UCI/CC	3.2E-10	3.2E-10	3.2E-10	3.2E-10	3.2E-10	3.2E-10	3.2E-10
PAB 755'B GAS R0063A UCI/CC	1.39E-6	1.39E-6	1.39E-6	1.39E-6	1.39E-6	1.39E-6	1.39E-6
RCB PART R0068A UCI/CC	3.3E-10	3.3E-10	3.2E-10	3.1E-10	3.0E-10	3.0E-10	2.9E-10
RCB GAS R0069A UCI/CC	4.64E-6	4.54E-6	4.43E-6	4.43E-6	4.23E-6	4.13E-6	4.04E-6
LK COL VENT PT R0077A UCI/CC	3.1E-10	3.1E-10	3.1E-10	3.1E-10	3.1E-10	3.1E-10	3.1E-10
LK COL VENT GS R0078A UCI/CC	2.54E-6	2.54E-6	2.54E-6	2.54E-6	2.54E-6	2.54E-6	2.54E-6

Airborne Group IX

TIME	1945	1948	1951	1954	1957	2000	2003
RX CLNT LTDN L R0003A UCI/CC	3.56E-1	3.48E-1	3.40E-1	3.32E-1	3.25E-1	3.17E-1	3.10E-1
RX CLNT LTDN H R0002A UCI/CC	5.10E-1	4.99E-1	4.87E-1	4.76E-1	4.65E-1	4.54E-1	4.44E-1
SG BLDN SAMPLE R0079A UCI/CC	1.00E-5	1.00E-5	1.00E-5	1.00E-5	1.00E-5	1.00E-5	1.00E-5

Process Liquid Group X

TIME	1945	1948	1951	1954	1957	2000	2003
AIR EJ DISCH R0001A UCI/CC	2.59E-7	2.59E-7	2.59E-7	2.59E-7	2.59E-7	2.59E-7	2.59E-7
AIR EJ DEL EXH R0010A UCI/CC	3.35E-7	3.35E-7	3.35E-7	3.35E-7	3.35E-7	3.35E-7	3.35E-7

Process Gas Group XI

TIME	1945	1948	1951	1954	1957	2000	2003
FUEL BLD BRDGE R0024A MR/HR	8.03E-2	8.03E-2	8.03E-2	8.03E-2	8.03E-2	8.03E-2	8.03E-2
AUX BLDG 710' R0042A MR/HR	3.60E-2	3.60E-2	3.60E-2	3.60E-2	3.60E-2	3.60E-2	3.60E-2
AUX BLDG 710' R0043A MR/HR	2.14E-1	2.14E-1	2.14E-1	2.14E-1	2.14E-1	2.14E-1	2.14E-1
AUX BLDG 710' R0044A MR/HR	2.54E-2	2.54E-2	2.54E-2	2.54E-2	2.54E-1	2.54E-1	2.54E-1
AUX BLDG 735' R0045A MR/HR	3.54E-2	3.54E-2	3.54E-2	3.54E-2	3.54E-2	3.54E-2	3.54E-2
AUX BLDG 735' R0046A MR/HR	2.56E-2	2.56E-2	2.56E-2	2.56E-2	2.56E-2	2.56E-2	2.56E-2
AUX BLDG 755' R0047A MR/HR	1.77E-2	1.77E-2	1.77E-2	1.77E-2	1.77E-2	1.77E-2	1.77E-2
AUX BLDG 755' R0048A MR/HR	4.46E-2	4.46E-2	4.46E-2	4.46E-2	4.46E-2	4.46E-2	4.46E-2
AUX BLDG 755' R0049A MR/HR	9.17E-2	9.17E-2	9.17E-2	9.17E-2	9.17E-2	9.17E-2	9.17E-2
AUX BLDG 773' R0040A MR/HR	1.77E-2	1.77E-2	1.77E-2	1.77E-2	1.77E-2	1.77E-2	1.77E-2

Area Group XII

TIME	1945	1948	1951	1954	1957	2000	2003
PAB CHEM SM RM R0041A MR/HR	4.15E-1	4.15E-1	4.15E-1	4.15E-1	4.15E-1	4.15E-1	4.15E-1
RCB LO RNG R0070A MR/HR	4.23E1	4.37E1	1.15E2	4.50E4	6.00E4	7.00E4	1.00E5
PERSONNEL HATC R0071A MR/HR	1.05E-1	1.05E-1	1.05E-1	1.43E2	2.00E2	2.43E2	5.71E2
PERSONNEL HATC R0072A MR/HR	4.75E0	4.75E0	4.75E0	1.52E2	2.12E2	2.58E2	6.06E2
RCB HI RNG R0086A R/HR	8.29E-1	8.29E-1	9.95E-1	5.00E1	7.00E1	8.5E1	2.0
RCB HI RNG R0087A R/HR	8.58E-1	8.58E-1	1.10E0	4.87E1	6.84E1	7.24E1	3.50E2

TIME	2006	2009	2012	2015	2018	2021	2024
RCS Hotleg A T0419A Deg. F	753	773	788	797	808	813	818
RCS Hotleg B T0439A Deg. F	753	773	788	797	808	813	818
RCS Hotleg C T0459A Deg. F	753	773	788	797	808	813	818
RCS Coldleg A T0406A Deg. F	743	763	778	787	798	803	808
RCS Coldleg B T0426A Deg. F	743	763	778	787	798	803	808
RCS Coldleg C T0446A Deg. F	743	763	778	787	798	803	808
RCS Flow A F0400C Percent	0	0	0	0	0	0	0
RCS Flow B F0421C Percent	0	0	0	0	0	0	0
RCS Flow C F0442C Percent	0	0	0	0	0	0	0
VCT Level L2704A Percent	47	47	47	47	47	47	47

RCS Group I

TIME	2006	2009	2012	2015	2018	2021	2024
Source Range N0031A CPS	2.13E3	2.13E3	2.13E3	2.13E3	2.13E3	2.13E3	2.13E3
Power Range N0051A Percent	0	0	0	0	0	0	0
T/C Peak MXICTX Deg. F	763	783	798	807	818	823	828
T/C Average AVICTCX Deg. F	748	768	783	792	803	809	813
Deg Subcooling UT1002 Deg. F	-156	-242	-276	-301	-322	-333	-367
Inter Range N0035A AMPS	10E-11	10E-11	10E-11	10E-11	10E-11	10E-11	10E-11

RCS Group I

TIME	2006	2009	2012	2015	2018	2021	2024
SG Pressure A P0402A PSIG (STM OUT)	0	0	0	0	0	0	0
SG Pressure B P0422A PSIG (STM OUT)	29	11	25	31	24	20	26
SG Pressure C P0442A PSIG (STM OUT)	0	0	0	0	0	0	0
SG Level A L0403A (W.R.)	0	0	0	0	0	0	0
SG Level A L0402A (N.R.)	0	0	0	0	0	0	0
SG Level B L0423A (W.R.)	0	3	7	12	15	20	24
SG Level B L0422A (N.R.)	0	0	0	0	0	0	0
SG Level C L0443A (W.R.)	1	0	0	0	0	0	0
SG Level C L0442A (N.R.)	0	0	0	0	0	0	0

Steam Generator Group II

TIME	2006	2009	2012	2015	2018	2021	2024
Steam Flow A F0403C KBH	0	0	0	0	0	0	0
Steam Flow B F0425C KBH	350	350	350	350	350	350	350
Steam Flow C F0443C KBH	450	450	450	450	450	450	450
PD Wtr Tk Lvl L0300A IN	326	323	321	318	316	313	311
Aux FD Flow A F0601C GPM	0	0	0	0	0	0	0
Aux FD Flow B F0602C GPM	310	310	310	310	310	310	310
Aux FD Flow C F0603C GPM	0	0	0	0	0	0	0

Steam Generator Group II

TIME	2006	2009	2012	2015	2018	2021	2024
Cont Pressure P1000A PSIA	10.45	10.46	10.45	10.46	10.45	10.46	10.45
Cont Temp T1016A DEG F	102.9	103.0	102.9	103.0	102.9	103.0	102.9
Cont Sump Lvl L0750A IN	0.2	0.2	0.2	0.2	0.2	0.2	0.2
Hydrogen Y0752A Percent	0	0	0	0	0	0	0

Containment Group III

TIME	2006	2009	2012	2015	2018	2021	2024
SI Accum Lvl L0610A Percent	52	52	52	52	52	52	0
SI Accum Lvl L0620A Percent	52	52	52	52	52	52	0
SI Accum Lvl L0630A Percent	52	52	52	52	52	52	0
RWST Level L0500A IN	720	720	720	720	720	720	720

Safety Injection Group IV

TIME	2006	2009	2012	2015	2018	2021	2024
PZR Level L0480A Percent	100	100	100	100	100	100	100
PZR Temp (WTR) T0480A DEG F	605	537	516	500	519	520	521
PZR Temp (STM) T0481A DEG F	606	538	516	501	520	521	522
RCS Pressure P0103A PSIG	1606	958	800	697	818	823	828
PRT Level L0485A Percent	100	100	100	100	100	100	100
PZR Pressure P0480A PSIG	1595	941	782	673	812	818	825

Pressurizer Group V

TIME	2006	2009	2012	2015	2018	2021	2024
RCP 1A Y3421D On/Off	OFF	OFF	OFF	OFF	OFF	OFF	OFF
RCP 1B Y3422D On/Off	OFF	OFF	OFF	OFF	OFF	OFF	OFF
RCP 1C Y3423D On/Off	OFF	OFF	OFF	OFF	OFF	OFF	OFF
MSIV Position OR001X O/C	CLOSED	CLOSED	CLOSED	CLOSED	CLOSED	CLOSED	CLOSED
MSIV Position OR003X O/C	CLOSED	CLOSED	CLOSED	CLOSED	CLOSED	CLOSED	CLOSED
MSIV Position OR005X O/C	CLOSED	CLOSED	CLOSED	CLOSED	CLOSED	CLOSED	CLOSED

RCP/MSIV Group VI

TIME	2006	2009	2012	2015	2018	2021	2024
Battery 1 V0774A Volts	130	130	130	130	130	130	130
Battery 2 V0775A Volts	130	130	130	130	130	130	130
Battery 3 V0776A Volts	130	130	130	130	130	130	130
Battery 4 V0777A Volts	130	130	130	130	130	130	130
Battery 5 V0778A Volts	130	130	130	130	130	130	130

Battery Group VII

TIME	2006	2009	2012	2015	2018	2021	2024
VENT VENT PART R00.9A UCI/CC	5.5E-10	5.5E-10	5.5E-10	5.5E-10	5.5E-10	5.5E-10	5.5E-10
VENT VENT GAS R0020A UCI/CC	1.98E-6	1.98E-6	1.98E-6	1.98E-6	1.98E-6	1.98E-6	1.98E-6
ELEV REL RATE R0093A UCI/SEC	1.89E1	1.89E1	1.89E1	1.89E1	1.89E1	1.89E1	1.89E1
ELEV REL PART R0015A UCI/CC	1.6E-10	1.6E-10	1.6E-10	1.6E-10	1.6E-10	1.6E-10	1.6E-10
ELEV REL GAS L R0016A UCI/CC	6.98E-7	6.98E-7	6.98E-7	6.98E-7	6.98E-7	6.98E-7	6.98E-7
ELEV REL GAS M R0017A UCI/CC	1.94E-4	1.94E-4	1.94E-4	1.94E-4	1.94E-4	1.94E-4	1.94E-4
ELEV REL GAS H R0018A UCI/CC	4.85E-2	4.85E-2	4.85E-2	4.85E-2	4.85E-2	4.85E-2	4.85E-2
MAIN STM ACT R0088A UCI/CC	4.93E-3	4.93E-3	4.93E-3	4.93E-3	4.93E-3	4.93E-3	4.93E-3
MAIN STM ACT R0089A UCI/CC	4.00E-3	4.00E-3	4.00E-3	4.00E-3	4.00E-3	4.00E-3	4.00E-3
MAIN STM ACT R0090A UCI/CC	2.5E0	2.5E0	2.5E0	2.5E0	2.5E0	2.5E0	2.5E0

Effluent Group VIII

TIME	2006	2009	2012	2015	2018	2021	2024
MN STM REL RT R0091A UCI/SEC	0.0	0.0	0.0	0.0	0.0	0.0	0.0
MN STM REL RT R0098A UCI/SEC	0.0	0.0	0.0	0.0	0.0	0.0	0.0
MN STM REL RT R0099A UCI/SEC	3.59E6	3.59E6	3.59E6	3.59E6	3.59E6	3.59E6	3.59E6

Effluent Group VIII

TIME	2006	2009	2012	2015	2018	2021	2024
FHB VENT PART R0025A UCI/CC	2.0E-10	2.0E-10	2.0E-10	2.0E-10	2.0E-10	2.0E-10	2.0E-10
FHB VENT GAS R0026A UCI/CC	3.59E-6	3.59E-6	3.59E-6	3.59E-6	3.59E-6	3.59E-6	3.59E-6
PAB 718'A PART R0050A UCI/CC	1.7E-10	1.7E-10	1.7E-10	1.7E-10	1.7E-10	1.7E-10	1.7E-10
PAB 718'A GAS R0051A UCI/CC	1.45E-6	1.45E-6	1.45E-6	1.45E-6	1.45E-6	1.45E-6	1.45E-6
PAB 718'B PART R0052A UCI/CC	2.3E-10	2.3E-10	2.3E-10	2.3E-10	2.2E-10	2.2E-10	2.2E-10
PAB 718'B GAS R0053A UCI/CC	2.25E-6	2.25E-6	2.25E-6	2.25E-6	2.25E-6	2.25E-6	2.25E-6
PAB 718'C PART R0054A UCI/CC	2.1E-10	2.1E-10	2.1E-10	2.1E-10	2.1E-10	2.1E-10	2.1E-10
PAB 718'C GAS R0055A UCI/CC	1.46E-6	1.46E-6	1.46E-6	1.46E-6	1.46E-6	1.46E-6	1.46E-6
PAB 735'A PART R0056A UCI/CC	1.9E-10	1.9E-10	1.9E-10	1.9E-10	1.9E-10	1.9E-10	1.9E-10
PAB 735'A GAS R0057A UCI/CC	1.58E-6	1.58E-6	1.58E-6	1.58E-6	1.58E-6	1.58E-6	1.58E-6

Airborne Group IX

TIME	2006	2009	2012	2015	2018	2021	2024
PAB 735'B PART R0058A UCI/CC	1.7E-10	1.7E-10	1.7E-10	1.7E-10	1.7E-10	1.7E-10	1.7E-10
PAB 735'B GAS R0059A UCI/CC	1.25E-6	1.25E-6	1.25E-6	1.25E-6	1.25E-6	1.25E-6	1.25E-6
PAB 755'A PART R0060A UCI/CC	1.8E-10	1.8E-10	1.8E-10	1.8E-10	1.8E-10	1.8E-10	1.8E-10
PAB 755'A GAS R0061A UCI/CC	1.37E-6	1.37E-6	1.37E-6	1.37E-6	1.37E-6	1.37E-6	1.37E-6
PAB 755'B PART R0062A UCI/CC	3.2E-10	3.2E-10	3.2E-10	3.2E-10	3.2E-10	3.2E-10	3.2E-10
PAB 755'B GAS R0063A UCI/CC	1.39E-6	1.39E-6	1.39E-6	1.39E-6	1.39E-6	1.39E-6	1.39E-6
RCB PART R0068A UCI/CC	2.8E-10	2.8E-10	2.7E-10	2.6E-10	2.6E-10	2.6E-10	2.6E-10
RCB GAS R0069A UCI/CC	3.94E-6	3.85E-6	3.77E-6	3.68E-6	3.64E-6	3.60E-6	3.56E-6
LK COL VENT PT R0077A UCI/CC	3.1E-10	3.1E-10	3.1E-10	3.1E-10	3.1E-10	3.1E-10	3.1E-10
LK COL VENT GS R0078A UCI/CC	2.54E-6	2.54E-6	2.54E-6	2.54E-6	2.5E-10	2.5E-10	2.5E-10

TIME	2006	2009	2012	2015	2018	2021	2024
RX CLNT LTDN L R0003A UCI/CC	3.03E-1	2.96E-1	2.89E-1	2.82E-1	2.79E-1	2.76E-1	2.73E-1
RX CLNT LTDN H R0002A UCI/CC	4.34E-1	4.24E-1	4.14E-1	4.04E-1	4.00E-1	3.91E-1	3.82E-1
SG BLDN SAMPLE R0079A UCI/CC	1.00E-5	1.00E-5	1.00E-5	1.00E-5	1.00E-5	1.00E-5	1.00E-5

Process Liquid Group X

TIME	2006	2009	2012	2015	2018	2021	2024
AIR EJ DISCH R0001A UCI/CC	2.59E-7	2.59E-7	2.59E-7	2.59E-7	2.59E-7	2.59E-7	2.59E-7
AIR EJ DEL EXH R0010A UCI/CC	3.35E-7	3.35E-7	3.35E-7	3.35E-7	3.35E-7	3.35E-7	3.35E-7

Process Gas Group XI

TIME	2006	2009	2012	2015	2018	2021	2024
FUEL BLD BRDGE R0024A MR/HR	8.03E-2	8.03E-2	8.03E-2	8.03E-2	8.03E-2	8.03E-2	8.03E-2
AUX BLDG 710' R0042A MR/HR	3.60E-2	3.60E-2	3.60E-2	3.60E-2	3.60E-2	3.60E-2	3.60E-2
AUX BLDG 710' R0043A MR/HR	2.14E-1	2.14E-1	2.14E-1	2.14E-1	2.14E-1	2.14E-1	2.14E-1
AUX BLDG 710' R0044A MR/HR	2.54E-1	2.54E-1	2.54E-1	2.54E-1	2.54E-2	2.54E-2	2.54E-2
AUX BLDG 735' R0045A MR/HR	3.54E-2	3.54E-2	3.54E-2	3.54E-2	3.54E-2	3.54E-2	3.54E-2
AUX BLDG 735' R0046A MR/HR	2.56E-2	2.56E-2	2.56E-2	2.56E-2	2.56E-2	2.56E-2	2.56E-2
AUX BLDG 755' R0047A MR/HR	1.77E-2	1.77E-2	1.77E-2	1.77E-2	1.77E-2	1.77E-2	1.77E-2
AUX BLDG 755' R0048A MR/HR	4.46E-2	4.46E-2	4.46E-2	4.46E-2	4.46E-2	4.46E-2	4.46E-2
AUX BLDG 755' R0049A MR/HR	9.17E-2	9.17E-2	9.17E-2	9.17E-2	9.17E-2	9.17E-2	9.17E-2
AUX BLDG 773' R0040A MR/HR	1.77E-2	1.77E-2	1.77E-2	1.77E-2	1.77E-2	1.77E-2	1.77E-2

Area Group XII

TIME	2006	2009	2012	2015	2018	2021	2024
PAB CHEM SM RM R0041A MR/HR	4.15E-1	4.15E-1	4.15E-1	4.15E-1	4.15E-1	4. . -1	4.15E-1
RCB LO RNG R0070A MR/HR	1.00E5	1.00E5	1.00E5	1.00E5	1.00E5	1.00E5	1.00E5
PERSONNEL HATC R0071A MR/HR	5.77E2	5.83E2	5.89E2	5.95E2	6.01E2	6.07E2	6.13E2
PERSONNEL HATC R0072A MR/HR	6.12E2	6.18E2	6.24E2	6.31E2	6.37E2	6.43E2	6.50E2
RCB HI RNG R0086A R/HR	2.02E2	2.04E2	2.06E2	2.08E2	2.10E2	2.12E2	2.14E2
RCB HI RNG R0087A R/HR	3.54E2	3.57E2	3.61E2	3.64E2	3.68E2	3.72E2	3.75E2

Area Group XII

TIME	2027	2030	2033	2036	2039	2042	2045
RCS Hotleg A T0419A Deg. F	822	828	829	834	839	844	849
RCS Hotleg B T0439A Deg. F	822	828	829	834	839	844	849
RCS Hotleg C T0459A Deg. F	822	828	829	834	839	844	849
RCS Coldleg A T0406A Deg. F	812	818	819	824	829	834	839
RCS Coldleg B T0426A Deg. F	812	818	819	824	829	834	839
RCS Coldleg C T0446A Deg. F	812	818	819	824	829	834	839
RCS Flow A F0400C Percent	0	0	0	0	0	0	0
RCS Flow B F0421C Percent	0	0	0	0	0	0	0
RCS Flow C F0442C Percent	0	0	0	0	0	0	0
VCT Level L2704A Percent	47	47	47	47	47	47	47

RCS Group I

TIME	2027	2030	2033	2036	2039	2042	2045
Source Range N0031A CPS	2.13E3	2.13E3	2.13E3	2.13E3	2.13E3	2.13E3	2.13E3
Power Range N0051A Percent	0	0	0	0	0	0	0
T/C Peak MXICTX Deg. F	838	838	839	844	849	854	859
T/C Average AVICTCX Deg. F	818	825	825	829	836	841	846
Deg Subcooling UT1002 Deg. F	-381	-380	-381	-387	-394	-400	-409
Inter Range N0035A AMPS	10E-11	10E-11	10E-11	10E-11	10E-11	10E-11	10E-11

RCS Group I

TIME	2027	2030	2033	2036	2039	2042	2045
SG Pressure A P0402A PSIG (STM OUT)	0	0	0	0	0	0	0
SG Pressure B P0422A PSIG (STM OUT)	36	39	39	41	49	51	48
SG Pressure C P0442A PSIG (STM OUT)	0	1	1	1	1	1	1
SG Level A L0403A (W.R.)	0	0	0	0	0	0	0
SG Level A L0402A (N.R.)	0	0	0	0	0	0	0
SG Level B L0423A (W.R.)	28	32	33	35	41	44	48
SG Level B L0422A (N.R.)	0	0	0	0	0	0	0
SG Level C L0443A (W.R.)	0	0	0	0	1	1	1
SG Level C L0442A (N.R.)	0	0	0	0	0	0	0

Steam Generator Group II

TIME	2027	2030	2033	2036	2039	2042	2045
Steam Flow A F0403C KBH	0	0	0	0	0	0	0
Steam Flow B F0425C KBH	350	350	350	350	350	350	350
Steam Flow C F0443C KBH	450	450	450	450	450	450	450
PD Wtr Tk Lvl L0300A IN	308	306	303	301	298	296	293
Aux FD Flow A F0601C GPM	0	0	0	0	0	0	0
Aux FD Flow B F0602C GPM	310	310	310	310	310	310	310
Aux FD Flow C F0603C GPM	0	0	0	0	0	0	0

Steam Generator Group II

TIME	2027	2030	2033	2036	2039	2042	2045
Cont Pressure P1000A PSIA	10.46	10.45	10.46	10.45	10.46	10.45	10.46
Cont Temp T1016A DEG F	103.0	102.9	103.0	102.9	103.0	102.9	103.0
Cont Sump Lvl L0750A IN	0.2	0.2	0.2	0.2	0.2	0.2	0.2
Hydrogen Y0752A Percent	0	0	0	0	0	0	0

TIME	2027	2030	2033	2036	2039	2042	2045
SI Accum Lvl L0610A Percent	0	0	0	0	0	0	0
SI Accum Lvl L0620A Percent	0	0	0	0	0	0	0
SI Accum Lvl L0630A Percent	0	0	0	0	0	0	0
RWST Level L0500A IN	720	720	720	730	720	720	720

Safety Injection Group IV

TIME	2027	2030	2033	2036	2039	2042	2045
PZR Level L0480A Percent	100	100	100	100	100	100	100
PZR Temp (WTR) T0480A DEG F	522	523	523	524	450	447	446
PZR Temp (STM) T0481A DEG F	523	524	524	525	451	448	447
RCS Pressure P0103A PSIG	832	838	839	844	427	425	418
PRT Level L0485A Percent	100	100	100	100	100	100	100
PZR Pressure P0480A PSIG	829	835	837	842	426	424	418

Pressurizer Group V

TIME	2027	2030	2033	2036	2039	2042	2045
RCP 1A Y3421D On/Off	OFF	OFF	OFF	OFF	OFF	OFF	OFF
RCP 1B Y3422D On/Off	OFF	OFF	OFF	OFF	OFF	OFF	OFF
RCP 1C Y3423D On/Off	OFF	OFF	OFF	OFF	OFF	OFF	OFF
MSIV Position OR001X O/C	CLOSED	CLOSED	CLOSED	CLOSED	CLOSED	CLOSED	CLOSED
MSIV Position OR003X O/C	CLOSED	CLOSED	CLOSED	CLOSED	CLOSED	CLOSED	CLOSED
MSIV Position OR005X O/C	CLOSED	CLOSED	CLOSED	CLOSED	CLOSED	CLOSED	CLOSED

RCP/MSIV Group VI

TIME	2027	2030	2033	2036	2039	2042	2045
Battery 1 V0774A Volts	130	130	130	130	130	130	130
Battery 2 V0775A Volts	130	130	130	130	130	130	130
Battery 3 V0776A Volts	130	130	130	130	130	130	130
Battery 4 V0777A Volts	130	130	130	130	130	130	130
Battery 5 V0778A Volts	130	130	130	130	130	130	130

Battery Group VII

TIME	2027	2030	2033	2036	2039	2042	2045
VENT VENT PART R0019A UCI/CC	5.5E-10	5.5E-10	5.5E-10	5.5E-10	5.5E-10	5.5E-10	5.5E-10
VENT VENT GAS R0020A UCI/CC	1.98E-6	1.98E-6	1.98E-6	1.98E-6	1.98E-6	1.98E-6	1.98E-6
ELEV REL RATE R0093A UCI/SEC	1.89E1	1.89E1	1.89E1	1.89E1	1.89E-6	1.89E-6	1.89E-6
ELEV REL PART R0015A UCI/CC	1.6E-10	1.6E-10	1.6E-10	1.6E-10	1.6E-10	1.6E-10	1.6E-10
ELEV REL GAS L R0016A UCI/CC	6.98E-7	6.98E-7	6.98E-7	6.98E-7	6.98E-7	6.98E-7	6.98E-7
ELEV REL GAS M R0017A UCI/CC	1.94E-4	1.94E-4	1.94E-4	1.94E-4	1.94E-4	1.94E-4	1.94E-4
ELEV REL GAS H R0018A UCI/CC	4.85E-2	4.85E-2	4.85E-2	4.85E-2	4.85E-2	4.85E-2	4.85E-2
MAIN STM ACT R0088A UCI/CC	4.93E-3	4.93E-3	4.93E-3	4.93E-3	4.93E-3	4.93E-3	4.93E-3
MAIN STM ACT R0089A UCI/CC	4.00E-3	4.00E-3	4.00E-3	4.00E-3	4.00E-3	4.00E-3	4.00E-3
MAIN STM ACT R0090A UCI/CC	2.5E0	2.5E0	2.5E0	2.5E0	2.5E0	2.5E0	2.5E0

Effluent Group VIII

TIME	2027	2030	2033	2036	2039	2042	2045
MN STM REL RT R0091A UCI/SEC	0.0	0.0	0.0	0.0	0.0	0.0	0.0
MN STM REL RT R0098A UCI/SEC	0.0	0.0	0.0	0.0	0.0	0.0	0.0
MN STM REL RT R0099A UCI/SEC	3.59E6	3.59E6	3.59E6	3.59E6	3.59E6	3.59E6	3.59E6

Effluent Group VIII

TIME	2027	2030	2033	2036	2039	2042	2045
FHB VENT PART R0025A UCI/CC	2.0E-10	2.0E-10	2.0E-10	2.0E-10	2.0E-10	2.0E-10	2.0E-10
FHB VENT GAS R0026A UCI/CC	3.59E-6	3.59E-6	3.59E-6	3.59E-6	3.59E-6	3.59E-6	3.59E-6
PAB 718'A PART R0050A UCI/CC	1.7E-10	1.7E-10	1.7E-10	1.7E-10	1.7E-10	1.7E-10	1.7E-10
PAB 718'A GAS R0051A UCI/CC	1.45E-6	1.45E-6	1.45E-6	1.45E-6	1.45E-6	1.45E-6	1.45E-6
PAB 718'B PART R0052A UCI/CC	2.2E-10	2.2E-10	2.2E-10	2.2E-10	2.2E-10	2.2E-10	2.2E-10
PAB 718'B GAS R0053A UCI/CC	2.25E-6	2.25E-6	2.25E-6	2.25E-6	2.25E-6	2.25E-6	2.25E-6
PAB 718'C PART R0054A UCI/CC	2.1E-10	2.1E-10	2.1E-10	2.1E-10	2.1E-10	2.1E-10	2.1E-10
PAB 718'C GAS R0055A UCI/CC	1.46E-6	1.46E-6	1.46E-6	1.46E-6	1.46E-6	1.46E-6	1.46E-6
PAB 735'A PART R0056A UCI/CC	1.9E-10	1.9E-10	1.9E-10	1.9E-10	1.9E-10	1.9E-10	1.9E-10
PAB 735'A GAS R0057A UCI/CC	1.58E-6	1.58E-6	1.58E-6	1.58E-6	1.58E-6	1.58E-6	1.58E-6

TIME	2027	2030	2033	2036	2039	2042	2045
PAB 735'B PART R0058A UCI/CC	1.7E-10	1.7E-10	1.7E-10	1.7E-10	1.7E-10	1.7E-10	1.7E-10
PAB 735'B GAS R0059A UCI/CC	1.25E-6	1.25E-6	1.25E-6	1.25E-6	1.25E-6	1.25E-6	1.25E-6
PAB 755'A PART R0060A UCI/CC	1.8E-10	1.8E-10	1.8E-10	1.8E-10	1.8E-10	1.8E-10	1.8E-10
PAB 755'A GAS R0061A UCI/CC	1.37E-6	1.37E-6	1.37E-6	1.37E-6	1.37E-6	1.37E-6	1.37E-6
PAB 755'B PART R0062A UCI/CC	3.2E-10	3.2E-10	3.2E-10	3.2E-10	3.2E-10	3.2E-10	3.2E-10
PAB 755'B GAS R0063A UCI/CC	1.39E-6	1.39E-6	1.39E-6	1.39E-6	1.39E-6	1.39E-6	1.39E-6
RCB PART R0068A UCI/CC	2.5E-10	2.5E-10	2.5E-10	2.4E-10	2.4E-10	2.4E-10	2.4E-10
RCB GAS R0069A UCI/CC	3.52E-6	3.48E-6	3.44E-6	3.40E-6	3.37E-6	3.33E-6	3.29E-6
LK COL VENT PT R0077A UCI/CC	3.1E-10	3.1E-10	3.1E-10	3.1E-10	3.1E-10	3.1E-10	3.1E-10
LK COL VENT GS R0078A UCI/CC	2.5E-10	2.5E-10	2.5E-10	2.5E-10	2.54E-6	2.54E-6	2.54E-6

Airborne Group IX

TIME	2027	2030	2033	2036	2039	2042	2045
RX CLNT LTDN L R0003A UCI/CC	2.70E-1	2.67E-1	2.64E-1	2.61E-1	2.58E-1	2.56E-1	2.53E-1
RX CLNT LTDN H R0002A UCI/CC	3.73E-1	3.64E-1	3.56E-1	3.48E-1	3.40E-1	3.32E-1	3.24E-1
SG BLDN SAMPLE R0079A UCI/CC	1.00E-5	1.00E-5	1.00E-5	1.00E-5	1.00E-5	1.00E-5	1.00E-5

Process Liquid Group X

TIME	2027	2030	2033	2036	2039	2042	2045
AIR EJ DISCH R0001A UCI/CC	2.59E-7	2.59E-7	2.59E-7	2.59E-7	2.59E-7	2.59E-7	2.59E-7
AIR EJ DEL EXH R0010A UCI/CC	3.35E-7	3.35E-7	3.35E-7	3.35E-7	3.35E-7	3.35E-7	3.35E-7

Process Gas Group XI

TIME	2027	2030	2033	2036	2039	2042	2045
FUEL BLD ERDGE R0024A MR/HR	8.03E-2	8.03E-2	8.03E-2	8.03E-2	8.03E-2	8.03E-2	8.03E-2
AUX BLDG 710' R0042A MR/HR	3.60E-2	3.60E-2	3.60E-2	3.60E-2	3.60E-2	3.60E-2	3.60E-2
AUX BLDG 710' R0043A MR/HR	2.14E-1	2.14E-1	2.14E-1	2.14E-1	2.14E-1	2.14E-1	2.14E-1
AUX BLDG 710' R0044A MR/HR	2.54E-2	2.54E-2	2.54E-2	2.54E-2	2.54E-2	2.54E-2	2.54E-2
AUX BLDG 735' R0045A MR/HR	3.54E-2	3.54E-2	3.54E-2	3.54E-2	3.54E-2	3.54E-2	3.54E-2
AUX BLDG 735' R0046A MR/HR	2.56E-2	2.56E-2	2.56E-2	2.56E-2	2.56E-2	2.56E-2	2.56E-2
AUX BLDG 755' R0047A MR/HR	1.77E-2	1.77E-2	1.77E-2	1.77E-2	1.77E-2	1.77E-2	1.77E-2
AUX BLDG 755' R0048A MR/HR	4.46E-2	4.46E-2	4.46E-2	4.46E-2	4.46E-2	4.46E-2	4.46E-2
AUX BLDG 755' R0049A MR/HR	9.17E-2	9.17E-2	9.17E-2	9.17E-2	9.17E-2	9.17E-2	9.17E-2
AUX BLDG 773' R0040A MR/HR	1.77E-2	1.77E-2	1.77E-2	1.77E-2	1.77E-2	1.77E-2	1.77E-2

Area Group XII

TIME	2027	2030	2033	2036	2039	2042	2045
PAB CHEM SM RM R0041A MR/HR	4.15E-1	4.15E-1	4.15E-1	4.15E-1	4.15E-1	4.15E-1	4.15E-1
RCB LO RNG R0070A MR/HR	1.00E5	1.00E5	1.00E5	1.00E5	1.00E5	1.00E5	1.00E5
PERSONNEL HATC R0071A MR/HR	6.19E2	6.25E2	6.31E2	6.38E2	6.44E2	6.50E2	6.57E2
PERSONNEL HATC R0072A MR/HR	6.56E2	6.63E2	6.69E2	6.76E2	6.83E2	6.90E2	6.97E2
RCB HI RNG R0086A R/HR	2.17E2	2.19E2	2.21E2	2.23E2	2.25E2	2.28E2	2.30E2
RCB HI RNG R0087A R/HR	3.79E2	3.83E2	3.87E2	3.90E2	3.94E2	3.98E2	4.02E2

Area Group XII

TIME	2048	2051	2054	2057	2100	2103	2106
RCS Hotleg A T0419A Deg. F	854	859	864	869	874	879	883
RCS Hotleg B T0439A Deg. F	854	859	864	869	874	879	883
RCS Hotleg C T0459A Deg. F	854	859	864	869	874	879	883
RCS Coldleg A T0406A Deg. F	844	849	854	859	864	869	873
RCS Coldleg B T0426A Deg. F	844	849	854	859	864	869	873
RCS Coldleg C T0446A Deg. F	844	849	854	859	864	869	873
RCS Flow A F0400C Percent	0	0	0	0	0	0	0
RCS Flow B F0421C Percent	0	0	0	0	0	0	0
RCS Flow C F0442C Percent	0	0	0	0	0	0	0
VCT Level L2704A Percent	47	47	47	47	47	47	47

RCS Group I

TIME	2048	2051	2054	2057	2100	2103	2106
Source Range N0031A CPS	2.13E3	2.13E3	2.13E3	2.13E3	2.13E3	2.13E3	2.13E3
Power Range N0051A Percent	0	0	0	0	0	0	0
T/C Peak MXICTX Deg. F	864	869	874	879	884	889	893
T/C Average AVICTCX Deg. F	852	857	862	868	874	879	883
Deg Subcooling UT1002 Deg. F	-418	-424	-430	-435	-439	-449	-45
Inter Range N0035A AMPS	10E-11	10E-11	10E-11	10E-11	10E-11	10E-11	10E-11

RCS Group I

TIME	2048	2051	2054	2057	2100	2103	2106
SG Pressure A P0402A PSIG (STM OUT)	0	0	0	0	0	0	0
SG Pressure B P0422A PSIG (STM OUT)	46	54	60	52	49	47	45
SG Pressure C P0442A PSIG (STM OUT)	1	1	2	1	1	2	2
SG Level A L0403A (W.R.)	0	0	0	0	0	0	0
SG Level A L0402A (N.R.)	0	0	0	0	0	0	0
SG Level B L0423A (W.R.)	52	55	59	63	67	69	71
SG Level B L0422A (N.R.)	0	0	0	0	0	0	0
SG Level C L0443A (W.R.)	1	7	18	33	35	36	35
SG Level C L0442A (N.R.)	0	0	0	0	0	0	0

Steam Generator Group II

TIME	2048	2051	2054	2057	2100	2103	2106
Steam Flow A F0403C KBH	0	0	0	0	0	0	0
Steam Flow B F0425C KBH	350	350	350	350	350	350	350
Steam Flow C F0443C KBH	450	450	450	450	450	450	450
PD Wtr Tk Lvl L0300A IN	291	288	286	283	281	279	276
Aux FD Flow A F0601C GPM	0	0	0	0	0	0	0
Aux FD Flow B F0602C GPM	310	310	310	310	310	310	310
Aux FD Flow C F0603C GPM	0	0	0	0	0	0	0

Steam Generator Group II

TIME	2048	2051	2054	2057	2100	2103	2106
Cont Pressure P1000A PSIA	10.45	10.46	10.45	10.46	10.45	10.46	10.45
Cont Temp T1016A DEG F	102.9	103.0	102.9	103.0	102.9	103.0	102.9
Cont Sump Lvl L0750A IN	0.2	0.2	0.2	0.2	0.2	0.2	0.2
Hydrogen Y0752A Percent	0	0	0	0	0	0	0

TIME	2048	2051	2054	2057	2100	2103	2106
SI Accum Lvl L0610A Percent	0	0	0	0	0	0	0
SI Accum Lvl L0620A Percent	0	0	0	0	0	0	0
SI Accum Lvl L0630A Percent	0	0	0	0	0	0	0
RWST Level L0500A IN	720	720	720	720	720	720	720

Safety Injection Group IV

TIME	2048	2051	2054	2057	2100	2103	2106
PZR Level L0480A Percent	100	100	100	100	100	100	100
PZR Temp (WTR) T0480A DEG F	444	442	442	441	438	437	436
PZR Temp (STM) T0481A DEG F	445	443	443	442	438	437	436
RCS Pressure P0103A PSIG	394	388	383	381	374	366	363
PRT Level L0485A Percent	100	100	100	100	100	100	100
PZR Pressure P0480A PSIG	393	387	382	380	373	365	362

Pressurizer Group V

TIME	2048	2051	2054	2057	2100	2103	2106
RCP 1A Y3421D On/Off	OFF	OFF	OFF	OFF	OFF	OFF	OFF
RCP 1B Y3422D On/Off	OFF	OFF	OFF	OFF	OFF	OFF	OFF
RCP 1C Y3423D On/Off	OFF	OFF	OFF	OFF	OFF	OFF	OFF
MSIV Position OR001X O/C	CLOSED	CLOSED	CLOSED	CLOSED	CLOSED	CLOSED	CLOSED
MSIV Position OR003X O/C	CLOSED	CLOSED	CLOSED	CLOSED	CLOSED	CLOSED	CLOSED
MSIV Position OR005X O/C	CLOSED	CLOSED	CLOSED	CLOSED	CLOSED	CLOSED	CLOSED

RCP/MSIV Group VI

TIME	2048	2051	2054	2057	2100	2103	2106
Battery 1 V0774A Volts	130	130	130	130	130	130	130
Battery 2 V0775A Volts	130	130	130	130	130	130	130
Battery 3 V0776A Volts	130	130	130	130	130	130	130
Battery 4 V0777A Volts	130	130	130	130	130	130	130
Battery 5 V0778A Volts	130	130	130	130	130	130	130

Battery Group VII

TIME	2048	2051	2054	2057	2100	2103	2106
VENT VENT PART R0019A UCI/CC	5.5E-10	5.5E-10	5.5E-10	5.5E-10	5.5E-10	5.5E-10	5.5E-10
VENT VENT GAS R0020A UCI/CC	1.98E-6	1.98E-6	1.98E-6	1.98E-6	1.98E-6	1.98E-6	1.98E-6
ELEV REL RATE R0093A UCI/SEC	1.89E-6	1.89E-6	1.89E-6	1.89E-6	1.89E1	1.89E1	1.89E1
ELEV REL PART R0015A UCI/CC	1.6E-10	1.6E-10	1.6E-10	1.6E-10	1.6E-10	1.6E-10	1.6E-10
ELEV REL GAS L R0016A UCI/CC	6.98E-7	6.98E-7	6.98E-7	6.98E-7	6.98E-7	6.98E-7	6.98E-7
ELEV REL GAS M R0017A UCI/CC	1.94E-4	1.94E-4	1.94E-4	1.94E-4	1.94E-4	1.94E-4	1.94E-4
ELEV REL GAS H R0018A UCI/CC	4.85E-2	4.85E-2	4.85E-2	4.85E-2	4.85E-2	4.85E-2	4.85E-2
MAIN STM ACT R0088A UCI/CC	4.93E-3	4.93E-3	4.93E-3	4.93E-3	4.93E-3	4.93E-3	4.93E-3
MAIN STM ACT R0089A UCI/CC	4.00E-3	4.00E-3	4.00E-3	4.00E-3	4.00E-3	4.00E-3	4.00E-3
MAIN STM ACT R0090A UCI/CC	2.5E0	2.5E0	2.5E0	2.5E0	2.5E0	2.5E0	2.5E0

Effluent Group VIII

TIME	2048	2051	2054	2057	2100	2103	2106
MN STM REL RT R0091A UCI/SEC	0.0	0.0	0.0	0.0	0.0	0.0	0.0
MN STM REL RT R0098A UCI/SEC	0.0	0.0	0.0	0.0	0.0	0.0	0.0
MN STM REL RT R0099A UCI/SEC	3.59E6	3.59E6	3.59E6	3.59E6	3.59E6	3.59E6	3.59E6

Effluent Group VIII

TIME	2048	2051	2054	2057	2100	2103	2106
FHB VENT PART R0025A UCI/CC	2.0E-10	2.0E-10	2.0E-10	2 0E-10	2.0E-10	2.0E-10	2.0E-10
FHB VENT GAS R0026A UCI/CC	3.59E-6	3.59E-6	3.59E-6	3.59E-6	3.59E-6	3.59E-6	3.59E-6
PAB 718'A PART R0050A UCI/CC	1.7E-10	1.7E-10	1.7E-10	1.7E-10	1.7E-10	1.7E-10	1.7E-10
PAB 718'A GAS R0051A UCI/CC	1.45E-6	1.45E-6	1.45E-6	1.45E-6	1.45E-6	1.45E-6	1.45E-6
PAB 718'B PART R0052A UCI/CC	2.2E-10	2.2E-10	2.2E-10	2.2E-10	2.2E-10	2.2E-10	2.2E-10
PAB 718'B GAS R0053A UCI/CC	2.25E-6	2.25E-6	2.25E-6	2.25E-6	2.25E-6	2.25E-6	2.25E-6
PAB 718'C PART R0054A UCI/CC	2.1E-10	2.1E-10	2.1E-10	2.1E-10	2.1E-10	2.1E-10	2.1E-10
PAB 718'C GAS R0055A UCI/CC	1.46E-6	1.46E-6	1.46E-6	1.46E-6	1.46E-6	1.46E-6	1.46E-6
PAB 735'A PART R0056A UCI/CC	1.9E-10	1.9E-10	1.9E-10	1.9E-10	1.9E-10	1.9E-10	1.9E-10
PAB 735'A GAS R0057A UCI/CC	1.58E-6	1.58E-6	1.58E-6	1.58E-6	1.58E-6	1.58E-6	1.58E-6

TIME	2048	2051	2054	2057	2100	2103	2106
PAB 735'B PART R0058A UCI/CC	1.7E-10	1.7E-10	1.7E-10	1.7E-10	1.7E-10	1.7E-10	1.7E-10
PAB 735'B GAS R0059A UCI/CC	1.25E-6	1.25E-6	1.25E-6	1.25E-6	1.25E-6	1.25E-6	1.25E-6
PAB 755'A PART R0060A UCI/CC	1.8E-10	1.8E-10	1.8E-10	1.8E-10	1.8E-10	1.8E-10	1.8E-10
PAB 755'A GAS R0061A UCI/CC	1.37E-6	1.37E-6	1.37E-6	1.37E-6	1.37E-6	1.37E-6	1.37E-6
PAB 755'B PART R0062A UCI/CC	3.2E-10	3.2E-10	3.2E-10	3.2E-10	3.2E-10	3.2E-10	3.2E-10
PAB 755'B GAS R0063A UCI/CC	1.39E-6	1.39E-6	1.39E-6	1.39E-6	1.39E-6	1.39E-6	1.39E-6
RCB PART R0068A UCI/CC	2.3E-10	2.3E-10	2.3E-10	2.3E-10	2.2E-10	2.2E-10	2.2E-10
RCB GAS R0069A UCI/CC	3.26E-6	3.22E-6	3.19E-6	3.15E-6	3.12E-6	3.08E-6	3.05E-6
LK COL VENT PT R0077A UCI/CC	3.1E-10	3.1E-10	3.1E-10	3.1E-10	3.1E-10	3.1E-10	3.1E-10
LK COL VENT GS R0078A UCI/CC	2.54E-6	2.54E-6	2.54E-6	2.54E-6	2.54E-6	2.54E-6	2.54E-6

Airborne Group IX

TIME	2048	2051	2054	2057	2100	2103	2106
RX CLNT LTDN L R0003A UCI/CC	2.50E-1	2.47E-1	2.45E-1	2.42E-1	2.39E-1	2.37E-1	2.34E-1
RX CLNT LTDN H R0002A UCI/CC	3.17E-1	3.10E-1	3.03E-1	2.96E-1	2.89E-1	2.82E-1	2.76E-1
SG BLDN SAMPLE R0079A UCI/CC	1.00E-5	1.00E-5	1.00E-5	1.00E-5	1.00E-5	1.00E-5	1.00E-5

Process Liquid Group X

TIME	2048	2051	2054	2057	2100	2103	2106
AIR EJ DISCH R0001A UCI/CC	2.59E-7	2.59E-7	2.59E-7	2.59E-7	2.59E-7	2.59E-7	2.59E-7
AIR EJ DEL EXH R0010A UCI/CC	3.35E-7	3.35E-7	3.35E-7	3.35E-7	3.35E-7	3.35E-7	3.35E-7

TIME	2048	2051	2054	2057	2100	2103	2106
FUEL BLD BRDGE R0024A MR/HR	8.03E-2	8.03E-2	8.03E-2	8.03E-2	8.03E-2	8.03E-2	8.03E-2
AUX BLDG 710' R0042A MR/HR	3.60E-2	3.60E-2	3.60E-2	3.60E-2	3.60E-2	3.60E-2	3.60E-2
AUX BLDG 710' R0043A MR/HR	2.14E-1	2.14E-1	2.14E-1	2.14E-1	2.14E-1	2.14E-1	2.14E-1
AUX BLDG 710' R0044A MR/HR	2.54E-2	2.54E-2	2.54E-2	2.54E-2	2.54E-2	2.54E-2	2.54E-2
AUX BLDG 735' R0045A MR/HR	3.54E-2	3.54E-2	3.54E-2	3.54E-2	3.54E-2	3.54E-2	3.54E-2
AUX BLDG 735' R0046A MR/HR	2.56E-2	2.56E-2	2.56E-2	2.56E-2	2.56E-2	2.56E-2	2.56E-2
AUX BLDG 755' R0047A MR/HR	1.77E-2	1.77E-2	1.77E-2	1.77E-2	1.77E-2	1.77E-2	1.77E-2
AUX BLDG 755' R0048A MR/HR	4.46E-2	4.46E-2	4.46E-2	4.46E-2	4.46E-2	4.46E-2	4.46E-2
AUX BLDG 755' R0049A MR/HR	9.17E-2	9.17E-2	9.17E-2	9.17E-2	9.17E-2	9.17E-2	9.17E-2
AUX BLDG 773' R0040A MR/HR	1.77E-2	1.77E-2	1.77E-2	1.77E-2	1.77E-2	1.77E-2	1.77E-2

Area Group XII

TIME	2048	2051	2054	2057	2100	2103	2106
PAB CHEM SM RM R0041A MR/HR	4.15E-1	4.15E-1	4.15E-1	4.15E-1	4.15E-1	4.15E-1	4.15E-1
RCB LO RNG R0070A MR/HR	1.00E5	1.00E5	1.00E5	1.00E5	1.00E5	1.00E5	1.00E5
PERSONNEL HATC R0071A MR/HR	6.63E2	6.70E2	6.77E2	6.84E2	6.90E2	6.97E3	7.04E2
PERSONNEL HATC R0072A MR/HR	7.04E2	7.11E2	7.18E2	7.25E2	7.32E2	7.40E2	7.47E2
RCB HI RNG R0086A R/HR	2.32E2	2.35E2	2.37E2	2.39E2	2.42E2	2.44E2	2.46E2
RCB HI RNG R0087A R/HR	4.06E2	4.10E2	4.15E2	4.19E2	4.23E2	4.27E2	4.31E2

Area Group XII

TIME	2109	2112	2115	2118	2121	2124	2127
RCS Hotleg A T0419A Deg. F	888	893	898	903	907	913	918
RCS Hotleg B T0439A Deg. F	888	893	898	903	907	913	918
RCS Hotleg C T0459A Deg. F	888	893	898	903	907	913	918
RCS Coldleg A T0406A Deg. F	878	883	888	893	897	903	908
RCS Coldleg B T0426A Deg. F	878	883	888	893	897	903	908
RCS Coldleg C T0446A Deg. F	878	883	888	893	897	903	908
RCS Flow A F0400C Percent	0	0	0	0	0	0	0
RCS Flow B F0421C Percent	0	0	0	0	0	0	0
RCS Flow C F0442C Percent	0	0	0	0	0	0	0
VCT Level L2704A Percent	47	47	47	47	47	47	47

RCS Group I

TIME	2109	2112	2115	2118	2121	2124	2127
Source Range N0031A CPS	2.13E3	2.13E3	2.13E3	2.13E3	2.13E3	2.13E3	2.13E3
Power Range N0051A Percent	0	0	0	0	0	0	0
T/C Peak MXICTX Deg. F	898	903	908	913	917	923	928
T/C Average AVICTCX Deg. F	888	893	898	903	907	913	916
Deg Subcooling UT1002 Deg. F	-460	-467	-472	-476	-481	-487	-492
Inter Range N0035A AMPS	10E-11	10E-11	10E-11	10E-11	10E-11	10E-11	10E-11

RCS Group I

TIME	2109	2112	2115	2118	2121	2124	2127
SG Pressure A P0402A PSIG (STM OUT)	0	0	0	0	0	0	0
SG Pressure B P0422A PSIG (STM OUT)	43	42	42	41	40	41	42
SG Pressure C P0442A PSIG (STM OUT)	1	1	1	1	1	1	1
SG Level A L0403A (W.R.)	0	0	0	0	0	0	0
SG Level A L0402A (N.R.)	0	0	0	0	0	0	0
SG Level B L0423A (W.R.)	74	76	78	79	81	81	81
SG Level B L0422A (N.R.)	0	0	0	0	10	14	17
SG Level C L0443A (W.R.)	35	35	35	35	35	35	35
SG Level C L0442A (N.R.)	0	0	0	0	0	0	0

Steam Generator Group II

TIME	2109	2112	2115	2118	2121	2124	2127
Steam Flow A F0403C KBH	0	0	0	0	0	0	0
Steam Flow B F0425C KBH	350	350	350	350	350	200	150
Steam Flow C F0443C KBH	450	450	450	450	450	450	450
PD Wtr Tk Lvl L0300A IN	274	271	269	266	264	262	261
Aux FD Flow A F0601C GPM	0	0	0	0	0	0	0
Aux FD Flow B F0602C GPM	310	310	310	310	310	126	126
Aux FD Flow C F0603C GPM	0	0	0	0	0	0	0

Steam Generator Group II

TIME	2109	2112	2115	2118	2121	2124	2127
Cont Pressure P1000A PSIA	10.46	10.45	10.46	10.45	10.46	10.45	10.46
Cont Temp T1016A DEG F	103.0	102.9	103.0	102.9	103.0	102.9	103.0
Cont Sump Lvl L0750A IN	0.2	0.2	0.2	0.2	0.2	0.2	0.2
Hydrogen Y0752A Percent	0	0	0	0	0	0	0

Containment Group III

TIME	2109	2112	2115	2118	2121	2124	2127
SI Accum Lvl L0610A Percent	0	0	0	0	0	0	C
SI Accum Lvl L0620A Percent	0	0	0	0	0	0	0
SI Accum Lvl L0630A Percent	0	0	0	0	0	0	0
RWST Level L0500A IN	720	720	720	720	720	720	720

Safety Injection Group IV

TIME	2109	2112	2115	2118	2121	2124	2127
PZR Level L0480A Percent	100	98	87	88	88	82	84
PZR Temp (WTR) T0480A DEG F	433	432	432	433	432	432	433
PZR Temp (STM) T0481A DEG F	433	432	432	433	433	433	434
RCS Pressure P0103A PSIG	357	350	352	354	350	350	353
PRT Level L0485A Percent	100	100	100	100	100	100	100
PZR Pressure P0480A PSIG	356	349	352	355	350	350	351

Pressurizer Group V

TIME	2109	2112	2115	2118	2121	2124	2127
RCP 1A Y3421D On/Off	OFF	OFF	OFF	OFF	OFF	OFF	OFF
RCP 1B Y3422D On/Off	OFF	OFF	OFF	OFF	OFF	OFF	OFF
RCP 1C Y3423D On/Off	OFF	OFF	OFF	OFF	OFF	OFF	OFF
MSIV Position OR001X O/C	CLOSED	CLOSED	CLOSED	CLOSED	CLOSED	CLOSED	CLOSED
MSIV Position OR003X O/C	CLOSED	CLOSED	CLOSED	CLOSED	CLOSED	CLOSED	CLOSED
MSIV Position OR005X O/C	CLOSED	CLOSED	CLOSED	CLOSED	CLOSED	CLOSED	CLOSED

RCP/MSIV Group VI

TIME	2109	2112	2115	2118	2121	2124	2127
Battery 1 V0774A Volts	[illegible]	130	130	130	130	130	130
Battery 2 V0775A Volts	130	130	130	130	130	130	130
Battery 3 V0776A Volts	130	130	130	130	130	130	130
Battery 4 V0777A Volts	130	130	130	130	130	130	130
Battery 5 V0778A Volts	130	130	130	130	130	130	130

Battery Group VII

TIME	2109	2112	2115	2118	2121	2124	2127
VENT VENT PART R0019A UCI/CC	5.5E-10	5.5E-10	5.5E-10	5.5E-10	5.5E-10	5.5E-10	5.5E-10
VENT VENT GAS R0020A UCI/CC	1.98E-6	1.98E-6	1.98E-6	1.98E-6	1.98E-6	1.98E-6	1.98E-6
ELEV REL RATE R0093A UCI/SEC	1.89E1	1.89E1	1.89E1	1.89E1	1.89E-6	1.89E-6	1.89E-6
ELEV REL PART R0015A UCI/CC	1.6E-10	1.6E-10	1.6E-10	1.6E-10	1.6E-10	1.6E-10	1.6E-10
ELEV REL GAS L R0016A UCI/CC	6.98E-7	6.98E-7	6.98E-7	6.98E-7	6.98E-7	6.98E-7	6.98E-7
ELEV REL GAS M R0017A UCI/CC	1.94E-4	1.94E-4	1.94E-4	1.94E-4	1.94E-4	1.94E-4	1.94E-4
ELEV REL GAS H R0018A UCI/CC	4.85E-2	4.85E-2	4.85E-2	4.85E-2	4.85E-2	4.85E-2	4.85E-2
MAIN STM ACT R0088A UCI/CC	4.93E-3	4.93E-3	4.93E-3	4.93E-3	4.93E-3	4.93E-3	4.93E-3
MAIN STM ACT R0089A UCI/CC	4.00E-3	4.00E-3	4.00E-3	4.00E-3	4.00E-3	00E-3	4.00E-3
MAIN STM ACT R0090A UCI/CC	2.5E0	2.5E0	2.5E0	2.5E0	2.5E0	2.5E0	2.5E0

Effluent Group VIII

TIME	2109	2112	2115	2118	2121	2124	2127
MN STM REL RT R0091A UCI/SEC	0.0	0.0	0.0	0.0	0.0	0.0	0.0
MN STM REL RT R0098A UCI/SEC	0.0	0.0	0.0	0.0	0.0	0.0	0.0
MN STM REL RT R0099A UCI/SEC	3.59E6	3.59E6	3.59E6	3.59E6	3.59E6	3.59E6	3.59E6

Effluent Group VIII

TIME	2109	2112	2115	2118	2121	2124	2127
FHB VENT PART R0025A UCI/CC	2.0E-10	2.0E-10	2.0E-10	2.0E-10	2.0E-10	2.0E-10	2.0E-10
FHB VENT GAS R0026A UCI/CC	3.59E-6	3.59E-6	3.59E-6	3.59E-6	3.59E-6	3.59E-6	3.59E-6
PAB 718'A PART R0050A UCI/CC	1.7E-10	1.7E-10	1.7E-10	1.7E-10	1.7E-10	1.7E-10	1.7E-10
PAB 718'A GAS R0051A UCI/CC	1.45E-6	1.45E-6	1.45E-6	1.45E-6	1.45E-6	1.45E-6	1.45E-6
PAB 718'B PART R0052A UCI/CC	2.2E-10	2.2E-10	2.2E-10	2.2E-10	2.2E-10	2.2E-10	2.2E-10
PAB 718'B GAS R0053A UCI/CC	2.25E-6	2.25E-6	2.25E-6	2.25E-6	2.25E-6	2.25E-6	2.25E-6
PAB 718'C PART R0054A UCI/CC	2.1E-10	2.1E-10	2.1E-10	2.1E-10	2.1E-10	2.1E-10	2.1E-10
PAB 718'C GAS R0055A UCI/CC	1.46E-6	1.46E-6	1.46E-6	1.46E-6	1.46E-6	1.46E-6	1.46E-6
PAB 735'A PART R0056A UCI/CC	1.9E-10	1.9E-10	1.9E-10	1.9E-10	1.9E-10	1.9E-10	1.9E-10
PAB 735'A GAS R0057A UCI/CC	1.58E-6	1.58E-6	1.58E-6	1.58E-6	1.58E-6	1.58E-6	1.58E-6

TIME	2109	2112	2115	2118	2121	2124	2127
PAB 735'B PART R0058A UCI/CC	1.7E-10	1.7E-10	1.7E-10	1.7E-10	1.7E-10	1.7E-10	1.7E-10
PAB 735'B GAS R0059A UCI/CC	1.25E-6	1.25E-6	1.25E-6	1.25E-6	1.25E-6	1.25E-6	1.25E-6
PAB 755'A PART R0060A UCI/CC	1.8E-10	1.8E-10	1.8E-10	1.8E-10	1.8E-10	1.8E-10	1.8E-10
PAB 755'A GAS R0061A UCI/CC	1.37E-6	1.37E-6	1.37E-6	1.37E-6	1.37E-6	1.37E-6	1.37E-6
PAB 755'B PART R0062A UCI/CC	3.2E-10	3.2E-10	3.2E-10	3.2E-10	3.2E-10	3.2E-10	3.2E-10
PAB 755'B GAS R0063A UCI/CC	1.39E-6	1.39E-6	1.39E-6	1.39E-6	1.39E-6	1.39E-6	1.39E-6
RCB PART R0068A UCI/CC	2.2E-10	2.1E-10	2.1E-10	2.1E-10	2.1E-10	2.0E-10	2.0E-10
RCB GAS R0069A UCI/CC	3.01E-6	2.98E-6	2.95E-6	2.92E-6	2.88E-6	2.85E-6	2.82E-6
LK COL VENT PT R0077A UCI/CC	3.1E-10	3.1E-10	3.1E-10	3.1E-10	3.1E-10	3.1E-10	3.1E-10
LK COL VENT GS R0078A UCI/CC	2.54E-6	2.54E-6	2.54E-6	2.54E-6	2.54E-6	2.54E-6	2.54E-6

TIME	2109	2112	2115	2118	2121	2124	2127
RX CLNT LTDN L R0003A UCI/CC	2.31E-1	2.29E-1	2.26E-1	2.24E-1	2.21E-1	2.19E-1	2.17E-1
RX CLNT LTDN H R0002A UCI/CC	2.69E-1	2.63E-1	2.57E-1	2.51E-1	2.45E-1	2.40E-1	2.34E-1
SG BLDN SAMPLE R0079A UCI/CC	1.00E-5	1.00E-5	1.00E-5	1.00E-5	1.00E-5	1.00E-5	1.00E-5

Process Liquid Group X

TIME	2109	2112	2115	2118	2121	2124	2127
AIR EJ DISCH R0001A UCI/CC	2.59E-7	2.59E-7	2.59E-7	2.59E-7	2.59E-7	2.59E-7	2.59E-7
AIR EJ DEL EXH R0010A UCI/CC	3.35E-7	3.35E-7	3.35E-7	3.35E-7	3.35E-7	3.35E-7	3.35E-7

Process Gas Group XI

TIME	2109	2112	2115	2118	2121	2124	2127
FUEL BLD BRDGE R0024A MR/HR	8.03E-2	8.03E-2	8.03E-2	8.03E-2	8.03E-2	8.03E-2	8.03E-2
AUX BLDG 710' R0042A MR/HR	3.60E-2	3.60E-2	3.60E-2	3.60E-2	3.60E-2	3.60E-2	3.60E-2
AUX BLDG 710' R0043A MR/HR	2.14E-1	2.14E-1	2.14E-1	2.14E-1	2.14E-1	2.14E-1	2.14E-1
AUX BLDG 710' R0044A MR/HR	2.54E-2	2.54E-2	2.54E-2	2.54E-2	2.54E-2	2.54E-2	2.54E-2
AUX BLDG 735' R0045A MR/HR	3.54E-2	3.54E-2	3.54E-2	3.54E-2	3.54E-2	3.54E-2	3.54E-2
AUX BLDG 735' R0046A MR/HR	2.56E-2	2.56E-2	2.56E-2	2.56E-2	2.56E-2	2.56E-2	2.56E-2
AUX BLDG 755' R0047A MR/HR	1.77E-2	1.77E-2	1.77E-2	1.77E-2	1.77E-2	1.77E-2	1.77E-2
AUX BLDG 755' R0048A MR/HR	4.46E-2	4.46E-2	4.46E-2	4.46E-2	4.46E-2	4.46E-2	4.46E-2
AUX BLDG 755' R0049A MR/HR	9.17E-2	9.17E-2	9.17E-2	9.17E-2	9.17E-2	9.17E-2	9.17E-2
AUX BLDG 773' F0040A MR/HR	1.77E-2	1.77E-2	1.77E-2	1.77E-2	1.77E-2	1.77E-2	1.77E-2

Area Group XII

TIME	2109	2112	2115	2118	2121	2124	2127
AB CHEM SM RM R0041A MR/HR	4.15E-1	4.15E-1	4.15E-1	4.15E-1	4.15E-1	4.15E-1	4.15E-1
RC LO RNG R0070A MR/HR	1.00E5	1.00E5	1.00E5	1.00E5	1.00E5	1.00E5	1.00E5
PERSONNEL HATC R0071A MR/HR	7.11E2	7.18E2	7.26E2	7.33E2	7.40E2	7.48E2	7.55E2
PERSONNEL HATC R0072A MR/HR	7.54E2	7.62E2	7.70E2	7.77E2	7.85E2	7.93E2	8.01E2
RCB HI RNG R0086A R/HR	2.49E2	2.51E2	2.54E2	2.59E2	2.59E2	2.62E2	2.6[illegible]
RCB HI RNG R0087A R/HR	4.36E2	4.40E2	4.44E2	4.49E2	4.53E2	4.58E2	4.62E2

Area Group XII

TIME	2130	2133	2136	2139	2142	2145	2148
RCS Hotleg A T0415A Deg. F	922	935	939	942	941	893	800
RCS Hotleg B T0439A Deg. F	922	935	939	942	941	893	800
RCS Hotleg C T0459A Deg. F	922	935	939	942	941	893	800
RCS Coldleg A T0406A Deg. F	908	700	600	520	450	434	428
RCS Coldleg B T0426A Deg. F	903	700	600	520	450	434	428
RCS Coldleg C T0446A Deg. F	908	700	600	520	450	434	428
RCS Flow A F0400C Percent	0	0	0	0	0	0	0
RCS Flow B F0421C Percent	0	0	0	0	0	0	0
RCS Flow C F0442C Percent	0	0	0	0	0	0	0
VCT Level L2704A Percent	47	47	47	47	47	47	47

RCS Group I

TIME	2130	2133	2136	2139	2142	2145	2148
Source Range N0031A CPS	2.13E3	2.13E3	2.13E3	2.13E3	2.13E3	2.13E3	2.13E3
Power Range N0051A Percent	0	0	0	0	0	0	0
T/C Peak MXICTX Deg. F	932	942	947	951	952	905	810
T/C Average AVICTCX Deg. F	918	928	933	937	937	875	780
Deg Subcooling UT1002 Deg. F	-495	-518	-508	-506	-499	-454	-358
Inter Range N0035A AMPS	10E-11	0E-11	10E-11	10E-11	10E-11	10E-11	10E-11

RCS Group I

TIME	2130	2133	2136	2139	2142	2145	2148
SG Pressure A P0402A PSIG (STM OUT)	0	0	0	0	0	0	0
SG Pressure B P0422A PSIG (STM OUT)	42	42	42	43	46	46	45
SG Pressure C P0442A PSIG (STM OUT)	1	23	40	55	73	114	130
SG Level A L0403A (W.R.)	0	0	0	0	0	0	0
SG Level A L0402A (N.R.)	0	0	0	0	0	0	0
SG Level B L0423A (W.R.)	82	83	83	83	84	85	85
SG Level B L0422A (N.R.)	20	26	29	32	35	14	44
SG Level C L0443A (W.R.)	36	36	36	36	37	39	40
SG Level C L0442A (N.R.)	0	0	0	0	0	0	0

Steam Generator Group II

TIME	2130	2133	2136	2139	2142	2145	2148
Steam Flow A F0403C KBH	0	0	0	0	0	0	0
Steam Flow B F0425C KBH	150	150	150	150	150	150	150
Steam Flow C F0443C KBH	450	450	450	450	450	450	450
PD Wtr Tk Lvl L0300A IN	260	259	258	257	257	256	255
Aux FD Flow A F0601C GPM	0	0	0	0	0	0	0
Aux FD Flow B F0602C GPM	126	126	126	126	126	126	126
Aux FD Flow C F0603C GPM	0	0	0	0	0	0	0

Steam Generator Group II

TIME	2130	2133	2136	2139	2142	2145	2148
Cont Pressure P1000A PSIA	10.45	10.46	10.45	10.46	10.45	10.46	10.45
Cont Temp T1016A DEG F	102.9	103.0	102.9	103.0	102.9	103.0	102.9
Cont Sump Lvl L0750A IN	0.2	0.2	0.2	0.2	0.2	0.2	0.2
Hydrogen Y0752A Percent	0	0	0	0	0	0	0

Containment Group 1II

TIME	2130	2133	2136	2139	2142	2145	2148
SI Accum Lvl L0610A Percent	0	0	0	0	0	0	0
SI Accum Lvl L0620A Percent	0	0	0	0	0	0	0
SI Accum Lvl L0630A Percent	0	0	0	0	0	0	0
RWST Level L0500A IN	720	720	719	718	717	715	714

Safety Injection Group IV

TIME	2130	2133	2136	2139	2142	2145	2148
PZR Level L0480A Percent	84	77	89	90	100	100	100
PZR Temp (WTR) T0480A DEG F	434	420	436	442	449	445	449
PZR Temp (STM) T0481A DEG F	435	422	437	442	449	445	449
RCS Pressure P0103A PSIG	354	307	362	391	422	407	423
PRT Level L0485A Percent	100	100	100	100	100	100	100
PZR Pressure P0480A PSIG	353	305	360	389	420	405	422

Pressurizer Group V

TIME	2130	2133	2136	2139	2142	2145	2148
RCP 1A Y3421D On/Off	OFF	OFF	OFF	OFF	OFF	OFF	OFF
RCP 1B Y3422D On/Off	OFF	OFF	OFF	OFF	OFF	OFF	OFF
RCP 1C Y3423D On/Off	OFF	OFF	OFF	OFF	OFF	OFF	OFF
MSIV Position OR001X O/C	CLOSED	CLOSED	CLOSED	CLOSED	CLOSED	CLOSED	CLOSED
MSIV Position OR003X O/C	CLOSED	CLOSED	CLOSED	CLOSED	CLOSED	CLOSED	CLOSED
MSIV Position OR005X O/C	CLOSED	CLOSED	CLOSED	CLOSED	CLOSED	CLOSED	CLOSED

RCP/MSIV Group VI

TIME	2130	2133	2136	2139	2142	2145	2148
Battery 1 V0774A Volts	130	130	130	130	130	130	130
Battery 2 V0775A Volts	130	130	130	130	130	130	130
Battery 3 V0776A Volts	130	130	130	130	130	130	130
Battery 4 V0777A Volts	130	130	130	130	130	130	130
Battery 5 V0778A Volts	130	130	130	130	130	130	130

Battery Group VII

TIME	2130	2133	2136	2139	2142	2145	2148
VENT VENT PART R0019A UCI/CC	5.5E-10	5.5E-10	5.5E-10	5.5E-10	5.5E-10	5.5E-10	5.5E-10
VENT VENT GAS R0020A UCI/CC	1.98E-6	1.98E-6	1.98E-6	1.98E-6	1.98E-6	1.98E-6	1.98E-6
ELEV REL RATE R0093A UCI/SEC	1.89E-6	1.89E-6	1.89E-6	1.89E-6	1.89E1	1.89E1	1.89E1
ELEV REL PART R0015A UCI/CC	1.6E-10	1.6E-10	1.6E-10	1.6E-10	1.6E-10	1.6E-10	1.6E-10
ELEV REL GAS L R0016A UCI/CC	6.98E-7	6.98E-7	6.98E-7	6.98E-7	6.98E-7	6.98E-7	6.98E-7
ELEV REL GAS M R0017A UCI/CC	1.94E-4	1.94E-4	1.94E-4	1.94E-4	1.94E-4	1.94E-4	1.94E-4
ELEV REL GAS H R0018A UCI/CC	4.85E-2	4.85E-2	4.85E-2	4.85E-2	4.85E-2	4.85E-2	4.85E-2
MAIN STM ACT R0088A UCI/CC	4.93E-3	4.93E-3	4.93E-3	4.93E-3	4.93E-3	4.93E-3	4.93E-3
MAIN STM ACT R0089A UCI/CC	4.00E-3	4.00E-3	4.00E-3	4.00E-3	4.00E-3	4.00E-3	4.00E-3
MAIN STM ACT R0090A UCI/CC	2.5E0	2.5E0	2.5E0	2.5E0	2.5E0	2.5E0	2.5E0

Effluent Group VIII

TIME	2130	2133	2136	2139	2142	2145	2148
MN STM REL RT R0091A UCI/SEC	0.0	0.0	0.0	0.0	0.0	0.0	0.0
MN STM REL RT R0098A UCI/SEC	0.0	0.0	0.0	0.0	0.0	0.0	0.0
MN STM REL RT R0099A UCI/SEC	0.0	0.0	0.0	0.0	0.0	0.0	0.0

Effluent Group VIII

TIME	2130	2133	2136	2139	2142	2145	2148
FHB VENT PART R0025A UCI/CC	2.0E-10	2.0E-10	2.0E-10	2.0E-10	2.0E-10	2.0E-10	2.0E-10
FHB VENT GAS R0026A UCI/CC	3.59E-6	3.59E-6	3.59E-6	3.59E-6	3.59E-6	3.59E-6	3.59E-6
PAB 718'A PART R0050A UCI/CC	1.7E-10	1.7E-10	1.7E-10	1.7E-10	1.7E-10	1.7E-10	1.7E-10
PAB 718'A GAS R0051A UCI/CC	1.45E-6	1.45E-6	1.45E-6	1.45E-6	1.45E-6	1.45E-6	1.45E-6
PAB 718'B PART R0052A UCI/CC	2.2E-10	2.2E-10	2.2E-10	2.2E-10	2.2E-10	2.2E-10	2.2E-10
PAB 718'B GAS R0053A UCI/CC	2.25E-6	2.25E-6	2.25E-6	2.25E-6	2.25E-6	2.25E-6	2.25E-6
PAB 718'C PART R0054A UCI/CC	2.1E-10	2.1E-10	2.1E-10	2.1E-10	2.1E-10	2.1E-10	2.1E-10
PAB 718'C GAS R0055A UCI/CC	1.46E-6	1.46E-6	1.46E-6	1.46E-6	1.46E-6	1.46E-6	1.46E-6
PAB 735'A PART R0056A UCI/CC	1.9E-10	1.9E-10	1.9E-10	1.9E-10	1.9E-9	1.9E-9	1.9E-9
PAB 735'A GAS R0057A UCI/CC	1.58E-6	1.58E-6	1.58E-6	1.58E-6	1.58E-6	1.58E-6	1.58E-6

TIME	2130	2133	2136	2139	2142	2145	2148
PAB 735'B PART R0058A UCI/CC	1.7E-10	1.7E-10	1.7E-10	1.7E-10	1.7E-10	1.7E-10	1.7E-10
PAB 735'B GAS R0059A UCI/CC	1.25E-6	1.25E-6	1.25E-6	1.25E-6	1.25E-6	1.25E-6	1.25E-6
PAB 755'A PART R0060A UCI/CC	1.8E-10	1.8E-10	1.8E-10	1.8E-10	1.8E-10	1.8E-10	1.8E-10
PAB 755'A GAS R0061A UCI/CC	1.37E-6	1.37E 6	1.37E-6	1.37E-6	1.37E-6	1.37E-6	1.37E-6
PAB 755'B PART R0062A UCI/CC	3.2E-10	3.2E-10	3.2E-10	3.2E-10	3.2E-10	3.2E-10	3.2E-10
PAB 755'B GAS R0063A UCI/CC	1.39E-6	1.39E-4	1.39E-6	1.39E-6	1.39E-6	1.39E-6	1.39E-6
RCB PART R0068A UCI/CC	2.0E-10	2.0E-10	2.0E-10	1.9E-10	1.9E-10	1.9E-10	1.9E-10
RCB GAS R0069A UCI/CC	2.79E-6	2.76E-6	2.73E-6	2.70E-6	2.67E-6	2.64E-6	2.61E-6
LK COL VENT PT R0077A UCI/CC	3.1E-10	3.1E-10	3.1E-10	3.1E-	3.1E-10	3.1E-10	3.1E-10
LK COL VENT GS R0078A UCI/CC	2.54E-6	2.54E-6	2.54E-6	2.54E-6	2.54E-6	2.54E-6	2.54E-6

Airborne Group IX

TIME	2130	2133	2136	2139	2142	2145	2148
RX CLNT LTDN L R0003A UCI/CC	2.14E-1	2.12E-1	2.09E-1	2.07E-1	2.05E-1	2.03E-1	2.00E-1
X CLNT LTDN H R0002A UCI/CC	2.29E-1	2.24E-1	2.18E-1	2.13E-1	2.09E-1	2.04E-1	1.99E-1
SG BLDN SAMPLE R0079A UCI/CC	1.00E-5	1.00E-5	1.00E-5	1.00E-5	1.00E-5	1.00E-5	1.00E-5

Process Liquid Group X

TIME	2130	2133	2136	2139	2142	2145	2148
AIR EJ DISCH R0001A UCI/CC	2.59E-7	2.59E-7	2.59E-7	2.59E-7	2.59E-7	2.59E-7	2.59E-7
AIR EJ DEL EXH R0010A UCI/CC	3.35E-7	3.35E-7	3.35E-7	3.35E-7	3.35E-7	3.35E-7	3.35E-7

Process Gas Group XI

TIME	2130	2133	2136	2139	2142	2145	2148
FUEL BLD BRDGE R0024A MR/HR	8.03E-2	8.03E-2	8.03E-2	8.03E-2	8.03E-2	8.03E-2	8.03E-2
AUX BLDG 710' R0042A MR/HR	3.60E-2	3.60E-2	3.60E-2	3.60E-2	3.60E-2	3.60E-2	3.60E-2
AUX BLDG 710' R0043A MR/HR	2.14E-1	2.14E-1	2.14E-1	2.14E-1	2.14E-1	2.14E-1	2.14E-1
AUX BLDG 710' R0044A MR/HR	2.54E-2	2.54E-2	2.54E-2	2.54E-2	2.54E-2	2.54E-2	2.54E-2
AUX BLDG 735' R0045A MR/HR	3.54E-2	3.54E-2	3.54E-2	3.54E-2	3.54E-2	3.54E-2	3.54E-2
AUX BLDG 735' R0046A MR/HR	2.56E-2	2.56E-2	2.56E-2	2.56E-2	2.56E-2	2.56E-2	2.56E-2
AUX BLDG 755' R0047A MR/HR	1.77E-2	1.77E-2	1.77E-2	1.77E-2	1.77E-2	1.77E-2	1.77E-2
AUX BLDG 755' R0048A MR/HR	4.46E-2	4.46E-2	4.46E-2	4.46E-2	4.46E-2	4.46E-2	4.46E-2
AUX BLDG 755' R0049A MR/HR	9.17E-2	9.17E-2	9.17E-2	9.17E-2	9.17E-2	9.17E-2	9.17E-2
AUX BLDG 773' R0040A MR/HR	1.77E-2	1.77E-2	1.77E-2	1.77E-2	1.77E-2	1.77E-2	1.77E-2

Area Group XII

TIME	2130	2133	2136	2139	2142	2145	2148
PAB CHEM SM RM R0041A MR/HR	4.15E-1	4.15E-1	4.15E-1	4.15E-1	4.15E-1	4.15E-1	4.15E-1
RCB LO RNG R0070A MR/HR	1.00E5	1.00E5	1.00E5	1.00E5	1.00E5	1.00E5	1.00E5
PERSONNEL HATC R0071A MR/HR	7.63E2	7.6E2	7.58E2	7.56E2	7.53E2	7.51E2	7.49E2
PERSONNEL HATC R0072A MR/HR	8.09E2	8.06E2	8.04E2	8.02E2	7.99E2	7.97E2	7.94E2
RCB HI RNG R0086A R/HR	2.67E2	2.66E2	2.65E2	2.65E2	2.64E2	2.63E2	2.62E2
RCB HI RNG R0087A R/HR	4.67E2	4.56E2	4.46E2	4.36E2	4.26E2	4.16E2	4.06E2

Area Group XII

TIME	2151	2154	2157	2200			
RCS Hotleg A T0419A Deg. F	680	501	456	455			
RCS Hotleg B T0439A Deg. F	680	501	456	455			
RCS Hotleg C T0459A Deg. F	680	501	456	455			
RCS Coldleg A T0406A Deg. F	427	429	428	432			
RCS Coldleg B T0426A Deg. F	427	429	428	432			
RCS Coldleg C T0446A Deg. F	427	429	428	432			
RCS Flow A F0400C Percent	0	0	0	0			
RCS Flow B F0421C Percent	0	0	0	0			
RCS Flow C F0442C Percent	0	0	0	0			
VCT Level L2704A Percent	47	47	47	47			

RCS Group I

TIME	2151	2154	2157	2200			
Source Range N0031A CPS	2.13E3	2.13E3	2.13E3	2.13E3			
Power Range N0051A Percent	0	0	0	0			
T/C Peak MXICTX Deg. F	685	516	465	457			
T/C Average AVICTCX Deg. F	635	475	463	454			
Deg Subcooling UT1002 Deg. F	-227	-59	-11	-3			
Inter Range N0035A AMPS	10E-11	10E-11	10E-11	10E-11			

RCS Group I

TIME	2151	2154	2157	2200			
SG Pressure A P0402A PSIG (STM OUT)	0	0	0	0			
SG Pressure B P0422A PSIG (STM OUT)	3	41	39	37			
SG Pressure C P0442A PSIG (STM OUT)	143	148	162	176			
SG Level A L0403A (W.R.)	0	0	0	0			
SG Level A L0402A (N.R.)	0	0	0	0			
SG Level B L0423A (W.R.)	86	86	86	86			
SG Level B L0422A (N.R.)	48	51	55	58			
SG Level C L0443A (W.R.)	41	41	44	47			
SG Level C L0442A (N.R.)	0	0	0	0			

Steam Generator Group II

TIME	2151	2154	2157	2200			
Steam Flow A F0403C KBH	0	0	0	0			
Steam Flow B F0425C KBH	150	150	150	150			
Steam Flow C F0443C KBH	450	450	450	450			
PD Wtr Tk Lvl L0300A IN	254	253	252	251			
Aux FD Flow A F0601C GPM	0	0	0	0			
Aux FD Flow B F0602C GPM	126	126	126	126			
Aux FD Flow C F0603C GPM	0	0	0	0			

Steam Generator Group II

TIME	2151	2154	2157	2200			
Cont Pressure P1000A PSIA	10.46	10.45	10.46	10.45			
Cont Temp T1016A DEG F	103.0	102.9	103.0	102.9			
Cont Sump Lvl L0750A IN	0.2	0.2	0.2	0.2			
Hydrogen Y0752A Percent	0	0	0	0			

Containment Group III

TIME	2151	2154	2157	2200			
SI Accum Lvl L0610A Percent	0	0	0	0			
SI Accum Lvl L0620A Percent	0	0	0	0			
SI Accum Lvl L0630A Percent	0	0	0	0			
RWST Level L0500A IN	713	712	711	710			

Safety Injection Group IV

TIME	2151	2154	2157	2200			
PZR Level L0480A Percent	100	100	100	100			
PZR Temp (WTR) T0480A DEG F	456	452	450	449			
PZR Temp (STM) T0481A DEG F	456	452	450	449			
RCS Pressure P0103A PSIG	445	438	426	421			
PRT Level L0485A Percent	100	100	100	100			
PZR Pressure P0480A PSIG	446	438	425	421			

Pressurizer Group V

TIME	2151	2154	2157	2200			
RCP 1A Y3421D On/Cff	OFF	OFF	OFF	OFF			
RCP 1B Y3422D On/Off	OFF	OFF	OFF	OFF			
RCP 1C Y3423D On/Off	OFF	OFF	OFF	OFF			
MSIV Position OR001X O/C	CLOSED	CLOSED	CLOSED	CLOSED			
MSIV Position OR003X O/C	CLOSED	CLOSED	CLOSED	CLOSED			
MSIV Position OR005X O/C	CLOSED	CLOSED	CLOSED	CLOSED			

RCP/MSIV Group VI

TIME	2151	2154	2157	2200			
Battery 1 V0774A Volts	130	130	130	130			
Battery 2 V0775A Volts	130	130	130	130			
Battery 3 V0776A Volts	130	130	130	130			
Battery 4 V0777A Volts	130	130	130	130			
Battery 5 V0778A Volts	130	130	130	130			

Battery Group VII

TIME	2151	2154	2157	2200			
VENT VENT PART R0019A UCI/CC	5.5E-10	5.5E-10	5.5E-10	5.5E-10			
VENT VENT GAS R0020A UCI/CC	1.98E-6	1.98E-6	1.98E-6	1.98E-6			
ELEV REL RATE R0093A UCI/SEC	1.89E1	1.89E1	1.89E1	1.89E1			
ELEV REL PART R0015A UCI/CC	1.6E-10	1.6E-10	1.6E-10	1.6E-10			
ELEV REL GAS L R0016A UCI/CC	6.98E-7	6.98E-7	6.98E-7	6.98E-7			
ELEV REL GAS M R0017A UCI/CC	1.94E-4	1.94E-4	1.94E-4	1.94E-4			
ELEV REL GAS H R0018A UCI/CC	4.85E-2	4.85E-2	4.85E-2	4.85E-2			
MAIN STM ACT R0088A UCI/CC	4.93E-3	4.93E-3	4.93E-3	4.93E-3			
MAIN STM ACT R0089A UCI/CC	4.00E-3	4.00E-3	4.00E-3	4.00E-3			
MAIN STM ACT R0090A UCI/CC	2.5E0	2.5E0	2.5E0	2.5E0			

Effluent Group VIII

TIME	2151	2154	2157	2200			
MN STM REL RT R0091A UCI/SEC	0.0	0.0	0.0	0.0			
MN STM REL RT R0098A UCI/SEC	0.0	0.0	0.0	0.0			
MN STM REL RT R0099A UCI/SEC	0.0	0.0	0.0	0.0			

Effluent Group VIII

TIME	2151	2154	2157	2200			
FHB VENT PART R0025A UCI/CC	2.0E-10	2.0E-10	2.0E-10	2.0E-10			
FHB VENT GAS R0026A UCI/CC	3.59E-6	3.59E-6	3.59E-6	3.59E-6			
PAB 718'A PART R0050A UCI/CC	1.7E-10	1.7E-10	1.7E-10	1.7E-10			
PAB 718'A GAS R0051A UCI/CC	1.45E-6	1.45E-6	1.45E-6	1.45E-6			
PAB 718'B PART R0052A UCI/CC	2.2E-10	2.2E-10	2.2E-10	2.2E-10			
PAB 718'B GAS R0053A UCI/CC	2.25E-6	2.25E-6	2.25E-6	2.25E-6			
PAB 718'C PART R0054A UCI/CC	2.1E-10	2.1E-10	2.1E-10	2.1E-10			
PAB 718'C GAS R0055A UCI/CC	1.46E-6	1.46E-6	1.46E-6	1.46E-6			
PAB 735'A PART R0056A UCI/CC	1.9E-9	1.9E-9	1.9E-9	1.9E-9			
PAB 735'A GAS R0057A UCI/CC	1.58E-6	1.58E-6	1.58E-6	1.58E-6			

TIME	2151	2154	2157	2200			
PAB 735'B PART R0058A UCI/CC	1.7E-10	1.7E-10	1.7E-10	1.7E-10			
PAB 735'B GAS R0059A UCI/CC	1.25E-6	1.25E-6	1.25E-6	1.25E-6			
PAB 755'A PART R0060A UCI/CC	1.8E-10	1.8E-10	1.8E-10	1.8E-10			
PAB 755'A GAS R0061A UCI/CC	1.37E-6	1.37E-6	1.37E-6	1.37E-6			
PAB 755'B PART R0062A UCI/CC	3.2E-10	3.2E-10	3.2E-10	3.2E-10			
PAB 755'B GAS R0063A UCI/CC	1.39E-6	1.39E-6	1.39E-6	1.39E-6			
RCB PART R0068A UCI/CC	1.9E-10	1.8E-10	1.8E-10	1.8E-10			
RCB GAS R0069A UCI/CC	2.58E-6	2.55E-6	2.53E-6	2.50E-6			
LK COL VENT PT R0077A UCI/CC	3.1E-10	3.1E-10	3.1E-10	3.1E-10			
LK COL VENT GS R0078A UCI/CC	2.54E-6	2.54E-6	2.54E-6	2.54E-6			

Airborne Group IX

TIME	2151	2154	2157	2200			
CLNT LTDN L C03A CC	1.98E-1	1.96E-1	1.94E-1	1.92E-1			
RX CLNT LTDN H R0002A UCI/CC	1.94E-1	1.90E-1	1.86E-1	1.81E-1			
SG BLDN SAMPLE R0079A UCI/CC	1.00E-5	1.00E-5	1.00E-5	1.00E-5			

Process Liquid Group X

TIME	2151	2154	2157	2200			
AIR EJ DISCH R0001A UCI/CC	2.59E-7	2.59E-7	2.59E-7	2.59E-7			
AIR EJ DEL EXH R0010A UCI/CC	3.35E-7	3.35E-7	3.35E-7	3.35E-7			

Process Gas Group XI

TIME	2151	2154	2157	2300			
FUEL BLD BRDGE R0024A MR/HR	8.03E-2	8.03E-2	8.03E-2	8.03E-2			
AUX BLDG 710' R0042A MR/HR	3.60E-2	3.60E-2	3.60E-2	3.60E-2			
AUX BLDG 710' R0043A MR/HR	2.14E-1	2.14E-1	2.14E-1	2.14E-1			
AUX BLDG 710' R0044A MR/HR	2.54E-2	2.54E-2	2.54E-2	2.54E-2			
AUX BLDG 735' R0045A MR/HR	3.54E-2	3.54E-2	3.54E-2	3.54E-2			
AUX BLDG 735' R0046A MR/HR	2.56E-2	2.56E-2	2.56E-2	2.56E-2			
AUX BLDG 755' R0047A MR/HR	1.77E-2	1.77E-2	1.77E-2	1.77E-2			
AUX BLDG 755' R0048A MR/HR	4.46E-2	4.46E-2	4.46E-2	4.46E-2			
AUX BLDG 755' R0049A MR/HR	9.17E-2	9.17E-2	9.17E-2	9.17E-2			
AUX BLDG 773' R0040A MR/HR	1.77E-2	1.77E-2	1.77E-2	1.77E-2			

Area Group XII

TIME	2151	2154	2157	2200			
PAB CHEM SM RM R0041A MR/HR	4.15E-1	4.15E-1	4.15E-1	4.15E-1			
RCB LO RNG R0070A MR/HR	1.00E5	1.00E5	1.00E5	1.00E5			
PERSONNEL HATC R0071A MR/HR	7.47E2	7.44E2	7.42E2	7.40E2			
PERSONNEL HATC R0072A MR/HR	7.92E2	7.90E2	7.87E2	7.85E2			
RCB HI RNG R0086A R/HR	2.61E2	2.61E2	2.60E2	2.59E2			
RCB HI RNG R0087A R/HR	3.97E2	3.88E2	3.79E2	3.70E2			

Area Group XII

In-Plant Rad Level

Data

Package

Section VI

(Part C.3)

BVPS UNIT NO. 2 DIGITAL RADIATION MONITORING SYSTEM (DRMS)

	MONITORING	FUNCTION		MONITOR LOCATION
1.	2ARC-RQI100	AIR EJECTOR DISCHARGE	(GAS)	752-6 TURB. BLDG.
2.	2CCP-RQI100	COMPONENT COOLING WATER	(LIQUID)	718-6 AUX. BLDG.
3.	2CHS-RQI100	REACTOR COOLANT LETDOWN HIGH/LOW	(LIQUID)	718-6 AUX. BLDG.
4.	2CNA-RQI100	AUXILIARY STEAM CONDENSATE	(LIQUID)	718-6 AUX. BLDG.
5.	2CNA-RQI101	EVAPORATION REBOILER CONDENSATE	(LIQUID)	722-6 WASTE HNDLG.
6.	2GWS-RQI102	GASEOUS WASTE SURGE TK TRANSFER LINE	(GAS)	735-6 AUX. BLDG.
7.	2GWS-RQI102	AIR EJECTOR DELAY BED EXHAUST	(GAS)	755-6 AUX. BLDG.
8.	2GWS-RQI103	AERATED VENT TRANSFER LINE	(GAS)	735-6 AUX. BLDG.
9.	2GWS-RQI104	WASTE GAS STORAGE TANK	(GAS)	735-6 DECON BLDG.
10.	2HVL-RQI112	CONDENSATE POLISHING VENT STACK	(GAS & PARTICULATE)	794-6 COND. POL.
11.	2HVR*RQ104A	CONTAINMENT PURGE	(GAS)	782-CNMT.
12.	2HVR*RQ104B	CONTAINMENT PURGE	(GAS)	782 CNMT.
13.	2HVS-RQI101	VENTILATION VENT	(GAS & PARTICULATE)	773-6 AUX. BLDG.
14.	2HVS-RQI109A	ELEVATED RELEASE (PARTICULATE)	(PARTICULATE)	773-6 AUX. BLDG.
15.	2HVS*RQI109B	ELEVATED RELEASE (COND)	(GAS)	773-6 AUX. BLDG.
16.	2HVS*RQI109C	ELEVATED RELEASE (GASEOUS)	(GAS)	773-6 AUX. BLDG.
17.	2MSS*RQI101A	MAIN STEAM LINE	(STEAM)	745-6 SERVICE BLDG.
18.	2MSS*RQI101B	MAIN STEAM LINE	(STEAM)	745-6 SERVICE BLDG.
19.	2MSS*RQI101C	MAIN STEAM LINE	(STEAM)	745-6 SERVICE BLDG.
20.	2RMC*RQ201	CONTROL ROOM AREA		CONTROL BLDG.
21.	2RMC*RQ202	CONTROL ROOM AREA		CONTROL BLDG.
22.	2RMC-RQI301	CONTROL ROOM AIRBORNE	(GAS & PARTICULATE)	CONTROL BLDG.
23.	2RMF-RQ201	NEW FUEL STORAGE AREA		755-4 FUEL BLDG.
24.	2RMF-RQ202	FUEL PIT BRIDGE		FUEL BLDG.
25.	2RMF-RQI301	FUEL BUILDING VENTILATION	(GAS & PARTICULATE	766-4 FUEL BLDG.
26.	2RMJ-RQ201	WASTE HANDLING - 722 AREA		722-6 WASTE HANDLING
27.	2RMJ-RQ202	WASTE HANDLING - 755 AREA		WASTE HANDLING
28.	2RMJ-RL202	WASTE HANDLING - 755 AREA		WASTE HANDLING
29.	2RMJ-RQ203	WASTE HANDLING - 735 AREA		WASTE BLDG.
30.	2RMJ-RL203	WASTE HANDLING - 735 AREA		WASTE HANDLING
31.	2RMJ-RQ204	WASTE HANDLING - 735 AREA		WASTE HANDLING
32.	2RMJ-RQI301	WASTE HANDLING BUILDING	(GAS & PARTICULATE)	733-6 AUX. BLDG.
33.	2RML-RQ201	CONDENSATE POLISHING - 722 AREA		722-6 COND. POL.
34.	2RML-RQ202	CONDENSATE POLISHING - 735 AREA		735-5 COND. POL.
35.	2RML-RQ203	CONDENSATE POLISHING - 752 AREA		752-6 COND. POL.

BVPS UNIT NO. 2 DIGITAL RADIATION MONITORING SYSTEM (DRMS) (Continued)

MONITORING		FUNCTION		MONITOR LOCATION
36.	2RML-RQ204	CONDENSATE POLISHING - 744 AREA		744-6 COND. POL.
37.	2RML-RQ205	CONDENSATE POLISHING - 735 AREA		735-6 COND. POL.
38.	2RML-RQ206	CONDENSATE POLISHING - 735 AREA		735-6 COND. POL.
39.	2RML-RQI301	CONDENSATE POLISHING BLDG. AIRBORNE	(GAS & PARTICULATE)	794-6 COND. POL.
40.	2RMP-RQ201	AUXILIARY BUILDING - 710 AREA		718-6 AUX. BLDG.
41.	2RMP-RQ202	AUXILIARY BUILDING - 710 AREA		718-6 AUX. BLDG.
42.	2RMP-RQ203	AUXILIARY BUILDING - 710 AREA		718-6 AUX. BLDG.
43.	2RMP-RQ204	AUXILIARY BUILDING - 735 AREA		735-6 AUX. BLDG.
44.	2RMP-RQ205	AUXILIARY BUILDING - 735 AREA		735-6 AUX. BLDG.
45.	2RMP-RQ206	AUXILIARY BUILDING - 735 AREA		755-6 AUX. BLDG.
46.	2RMP-RQ207	AUXILIARY BUILDING - 755 AREA		755-6 AUX. BLDG.
47.	2RMP-RQ208	AUXILIARY BUILDING - 755 AREA		755-6 AUX. BLDG.
48.	2RMP-RQ209	AUXILIARY BUILDING - 773 AREA		733-6 AUX. BLDG.
49.	2RMP-RQ210	AUX. BLDG. SAMPLE ROOM AREA		718-6 AUX. BLDG.
50.	2RMP-RL210	AUX. BLDG. SAMPLE ROOM AREA		718-6 AUX. BLDG.
	2RMP-RQI1300	AUXILIARY BUILDING 718A	(GAS & PARTICULATE)	735-6 AUX. BLDG.
	2RMP-RQI1302	AUXILIARY BUILDING 718B	(GAS & PARTICUALTE)	735-6 AUX. BLDG.
53.	2RMP-RQI1304	AUXILIARY BUILDING 718C	(GAS & PARTICULATE)	735-6 AUX. BLDG.
54.	2RMP-RQI1306	AUXILIARY BUILDING 735A	(GAS & PARTICULATE)	735-6 AUX. BLDG.
55.	2RMP-RQI1308	AUXILIARY BUILDING 735B	(GAS & PARTICULATE)	735-6 AUX. BLDG.
56.	2RMP-RQI1310	AUXILIARY BUILDING 755A	(GAS & PARTICULATE)	755-6 AUX. BLDG.
57.	2RMP-RQI1312	AUXILIARY BUILDING 755B	(GAS & PARTICULATE)	755-6 AUX. BLDG.
58.	2RMQ-RQ201	DECONTAMINATION AREA		749-6 DECON. BLDG.
59.	2RMQ-RQI301	DECONTAMINATION BUILDING	(GAS & PARTICULATE)	766-4 FUEL BLDG.
60.	2RMQ-RQI303	WASTE GAS STORAGE VAULT	(GAS & PARTICULATE)	735-6 DECON. BLDG.
61.	2RMR-RQ201	REACTOR CONTAINMENT LOW RANGE		722 CONTAINMENT
62.	2RMR-RL201	REACTOR CONTAINMENT LOW RANGE		722 CONTAINMENT
63.	2RMR-RQ202A	OUTSIDE PERSONNEL HATCH AREA		711-10 CABLE VAULT & ROD CONT.
64.	2RMR-RQ202B	OUTSIDE PERSONNEL HATCH AREA		711-10 CABLE VAULT & ROD CONT.
65.	2RMR-RL202	OUTSIDE PERSONNEL HATCH AREA		711-10 CABLE VAULT & ROD CONT.
66.	2RMR-RQ203	MANIPULATOR CRANE	CONTAINMENT	CONTAINMENT
67.	2RMR-RL203	MANIPULATOR CRANE		CONTAINMENT

BVPS UNIT NO. 2 DIGITAL RADIATION MONITORING SYSTEM (DRMS) (Continued)

MONITORING		FUNCTION		MONITOR LOCATION
68.	2RMC-RQ202A	U2 CONTROL ROOM		CONTROL ROOM
69.	2RMC-RQ202B	U2 CONTROL ROOM		CONTROL ROOM
70.	2RMR-RQ204	INCORE INSTRUMENTATION AREA		743-4 CONTAINMENT
71.	2RMR-RL204	INCORE INSTRUMENTATION AREA		743-4 CONTAINMENT
72.	2RMR-RQ205A	SAFEGUARDS RECOMBINER AREA		742-0 SAFEGUARDS
73.	2RMR-RQ205B	SAFEGUARDS RECOMBINER AREA		742-0 SAFEGUARDS
74.	2RMR*RQ206	INCONTAINMENT HIGH RANGE		CONTAINMENT
75.	2RMR*RL206	INCONTAINMENT HIGH RANGE		CONTAINMENT
76.	2RMR*RL207	INCONTAINMENT HIGH RANGE		CONTAINMENT
77.	2RMR*RL207	INCONTAINMENT HIGH RANGE		CONTAINMENT
78.	2RMR-RQI301	LEAK COLLECTION VENTILATION	(GAS & PARTICULATE)	773-6 AUX. BLDG.
79.	2RMR-RQI303	CONTAINMENT AIRBORNE	(GAS & PARTICUALTE)	738-10 CABLE VAULT & ROD CONT.
80.	2RMS-RQ221	SPARE		
81.	2RMS-RQ222	SPARE		
82.	2RMS-RQ223	PRIMARY ACCESS FACILITY AREA		
83.	2RMS-RQ224	SPARE		
84.	2SGC-RQI100	LIQUID WASTE PROCESS EFFLUENT	(LIQUID)	718-6 AUX. BLDG.
85.	2SSR-RQI100	STEAM GENERATOR BLOWDOWN	(LIQUID)	718-6 AUX. BLDG.
86.	2SWS*RQI100A	RECIRC. SPRAY Hx SW	(LIQUID)	759-0 DIESEL GEN.
87.	2SWS*RQI100B	RECIRC. SPRAY Hx SW	(LIQUID)	759-0 DIESEL GEN.
88.	2SWS*RQI100C	RECIRC. SPRAY Hx SW	(LIQUID)	759-0 DIESEL GEN.
89.	2SWS*RQI100D	RECIRC. SPRAY Hx SW	(LIQUID)	759-0 DIESEL GEN.
90.	2SWS*RQI101	COMPONENT COOLING SW	(LIQUID)	710-6 AUX. BLDG.
91.	2SWS-RQI102	COMPONENT COOLING Hx SW	(LIQUID)	710-6 AUX. BLDG.

DRMS
1430 to 1800 hrs.

AREA	MONITORS	UNITS	
2RMC	#RQ 201	mR/hr	1.69E-02
2RMC	#RQ 202	mR/hr	3.78E-02
2RMF	RQ 201	mR/hr	1.33E-01
2RMF	RQ 202	mR/hr	8.03E-02
2RMJ	RQ 201	mR/hr	7.71E-01
2RMJ	RQ 202	mR/hr	4.18E-01
2RMJ	RQ 203	mR/hr	1.69E-02
2RMJ	RQ 204	mR/hr	1.28E-01
2RML	RQ 201	mR/hr	2.72E-05
2RML	RQ 202	mR/hr	8.54E-03
2RML	RQ 203	mR/hr	6.88E-02
2RML	RQ 204	mR/hr	3.51E-02
2RML	RQ 205	mR/hr	3.85E-01
2RML	RQ 206	mR/hr	8.92E-06
2RMP	RQ 201	mR/hr	3.60E-02
2RMP	RQ 202	mR/hr	2.14E-01
2RMP	RQ 203	mR/hr	2.54E-02
2RMP	RQ 204	mR/hr	3.54E-02
2RMP	RQ 205	mR/hr	2.56E-02
2RMP	RQ 206	mR/hr	1.77E-02
2RMP	RQ 207	mR/hr	4.46E-02
2RMP	RQ 208	mR/hr	9.17E-02
2RMP	RQ 209	mR/hr	1.77E-02
2RMP	RQ 210	mR/hr	4.15E-01
2RMQ	RQ 201	mR/hr	3.48E-02
2RMR	RQ 201	mR/hr	2.60E-01
2RMR	#RQ 202A	mR/hr	1.05E-01
2RMR	#RQ 202B	mR/hr	4.75E+00
2RMR	RQ 203	mR/hr	6.67E+01
2RMR	RQ 204	mR/hr	8.66E+00
2RMR	RQ 205A	mR/hr	6.45E-02
2RMR	RQ 205B	mR/hr	0.00E+00
2RMR	#RQ 206	R/hr	8.29E-01
2RMR	#RQ 207	R/hr	8.58E-01
2RMS	RQ 223	mR/hr	3.45E-02

PROCESS GAS		UNITS	
2ARC	RQ 100	uCi/cc	2.59E-07
2GWS	RQ 101	uCi/cc	1.40E-02
2GWS	RQ 102A	uCi/cc	3.35E-07
2GWS	RQ 103	uCi/cc	0.00E+00
2GWS	RQ 104	uCi/cc	7.84E-04
PROCESS LIQ.			
2CCP	RQ 100	uCi/cc	3.40E-07
2CHS	RQ 101A	uCi/cc	7.33E-01
2CHS	RQ 101B	uCi/cc	1.05E+00
2CNA	RQ 100	uCi/cc	1.07E-06
2CNA	RQ 101	uCi/cc	3.93E-07
2SSR	RQ 100	uCi/cc	1.00E-05
2SWS	#RQ 100A	uCi/cc	1.55E-04
2SWS	#RQ 100B	uCi/cc	2.05E-04
2SWS	#RQ 100C	uCi/cc	1.67E-04
2SWS	#RQ 100D	uCi/cc	1.21E-01
2SWS	RQ 101	uCi/cc	6.02E-07

DRMS
1430 to 1800 hrs.

EFFLU. MONITORS	UNITS	
2HVL RQ 112A	uCi/cc	1.83E-10
2HVL RQ 112B	uCi/cc	3.18E-05
2HVS RQ 101A	uCi/cc	5.58E-10
2HVS RQ 101B	uCi/cc	1.98E-06
2HVS #RQ 109	uCi/sec	1.89E+01
2HVS RQ 109A	uCi/cc	1.65E-10
2HVS #RQ 109B	uCi/cc	6.98E-07
2HVS #RQ 109C	uCi/cc	1.94E-04
2HVS #RQ 109D	uCi/cc	4.85E-02
2MSS #RQ 101A	uCi/cc	4.93E-03
Eff chan	uCi/sec	0.00E+00
2MSS #RQ 101B	uCi/cc	4.00E-03
Eff chan	uCi/sec	0.00E+00
2MSS #RQ 101C	uCi/cc	4.25E-03
Eff chan	uCi/sec	0.00E+00
2RMQ RQ 301A	uCi/cc	6.97E-10
2RMQ RQ 301B	uCi/cc	2.23E-06
2RMQ RQ 303A	uCi/cc	2.27E-10
2RMQ RQ 303B	uCi/cc	2.42E-06
2SGC RQ 100	uCi/cc	6.41E-05
2SWS RQ 102	uCi/cc	0.00E+00
AIRBORNE MON.		
2RMC RQ 301A	uCi/cc	1.21E-10
2RMC RQ 301B	uCi/cc	1.96E-06
2RMF RQ 301A	uCi/cc	2.03E-10
2RMF RQ 301B	uCi/cc	3.59E-06
2RMJ RQ 301A	uCi/cc	2.96E-10
2RMJ RQ 301B	uCi/cc	1.42E-06
2RML RQ 301A	uCi/cc	2.95E-10
2RML RQ 301B	uCi/cc	2.28E-06
2RMP RQ 300A	uCi/cc	1.73E-10
2RMP RQ 300B	uCi/cc	1.45E-06
2RMP RQ 302A	uCi/cc	2.22E-10
2RMP RQ 302B	uCi/cc	2.25E-06
2RMP RQ 304A	uCi/cc	2.19E-10
2RMP RQ 304B	uCi/cc	1.46E-06
2RMP RQ 306A	uCi/cc	1.94E-10
2RMP RQ 306B	uCi/cc	1.58E-06
2RMP RQ 308A	uCi/cc	1.75E-10
2RMP RQ 308B	uCi/cc	1.25E-06
2RMP RQ 310A	uCi/cc	1.83E-10
2RMP RQ 310B	uCi/cc	1.37E-06
2RMP RQ 312A	uCi/cc	3.29E-10
2RMP RQ 312B	uCi/cc	1.39E-06
2RMR RQ 301A	uCi/cc	3.10E-10
2RMR RQ 301B	uCi/cc	2.54E-06
2RMR #RQ 303A	uCi/cc	6.84E-10
2RMR #RQ 303B	uCi/cc	9.55E-06

DRMS
1800 to 2200 hrs.

EFFLU. MONITORS	UNITS	
2HVL RQ 112A	uCi/cc	1.83E-10
2HVL RQ 112B	uCi/cc	3.18E-05
2HVS RQ 101A	uCi/cc	5.58E-10
2HVS RQ 101B	uCi/cc	1.98E-06
2HVS #RQ 109	uCi/sec	1.89E+01
2HVS RQ 109A	uCi/cc	1.65E-10
2HVS #RQ 109B	uCi/cc	6.98E-07
2HVS #RQ 109C	uCi/cc	1.94E-04
2HVS #RQ 109D	uCi/cc	4.85E-02
2MSS #RQ 101A	uCi/cc	4.93E-03
Eff chan	uCi/sec	0.00E+00
2MSS #RQ 101B	uCi/cc	4.00E-03
Eff chan	uCi/sec	0.00E+00
2RMQ RQ 301A	uCi/cc	6.97E-10
2RMQ RQ 301B	uCi/cc	2.23E-06
2RMQ RQ 303A	uCi/cc	2.27E-10
2RMQ RQ 303B	uCi/cc	2.42E-06
2SGC RQ 100	uCi/cc	6.41E-05
2SWS RQ 102	uCi/cc	0.00E+00
AIRBORNE MON.		
2RMC RQ 301A	uCi/cc	1.21E-10
2RMC RQ 301B	uCi/cc	1.96E-06
2RMF RQ 301A	uCi/cc	2.03E-10
2RMF RQ 301B	uCi/cc	3.59E-06
2RMJ RQ 301A	uCi/cc	2.96E-10
2RMJ RQ 301B	uCi/cc	1.42E-06
2RML RQ 301A	uCi/cc	2.95E-10
2RML RQ 301B	uCi/cc	2.38E-06
2RMP RQ 300A	uCi/cc	1.73E-10
2RMP RQ 300B	uCi/cc	1.45E-06
2RMP RQ 302A	uCi/cc	2.22E-10
2RMP RQ 302B	uCi/cc	2.25E-06
2RMP RQ 304A	uCi/cc	2.19E-10
2RMP RQ 304B	uCi/cc	1.46E-06
2RMP RQ 306A	uCi/cc	1.94E-10
2RMP RQ 306B	uCi/cc	1.58E-06
2RMP RQ 308A	uCi/cc	1.75E-10
2RMP RQ 308B	uCi/cc	1.25E-06
2RMP RQ 310A	uCi/cc	1.83E-10
2RMP RQ 310B	uCi/cc	1.37E-06
2RMP RQ 312A	uCi/cc	3.29E-10
2RMP RQ 312B	uCi/cc	1.39E-06
2RMR RQ 301A	uCi/cc	3.10E-10
2RMR RQ 301B	uCi/cc	2.54E-06

AREA MONITORS	UNITS	
2RMC #RQ 201	mR/hr	1.69E-02
2RMC #RQ 202	mR/hr	3.78E-02
2RMF RQ 201	mR/hr	1.33E-01
2RMF RQ 202	mR/hr	8.03E-02
2RMJ RQ 201	mR/hr	7.71E-01
2RMJ RQ 202	mR/hr	4.18E-01
2RMJ RQ 203	mR/hr	1.69E-02
2RMJ RQ 204	mR/hr	1.28E-01
2RML RQ 201	mR/hr	2.72E-05
2RML RQ 202	mR/hr	8.54E-03
2RML RQ 203	mR/hr	6.88E-02
2RML RQ 204	mR/hr	3.51E-02
2RML RQ 205	mR/hr	3.85E-01
2RML RQ 206	mR/hr	8.92E-06
2RMP RQ 201	mR/hr	3.60E-02
2RMP RQ 202	mR/hr	2.14E-01
2RMP RQ 203	mR/hr	2.54E-02
2RMP RQ 204	mR/hr	3.54E-02
2RMP RQ 205	mR/hr	2.56E-02
2RMP RQ 206	mR/hr	1.77E-02
2RMP RQ 207	mR/hr	4.46E-02
2RMP RQ 208	mR/hr	9.17E-02
2RMP RQ 209	mR/hr	1.77E-02
2RMP RQ 210	mR/hr	4.15E-01
2RMQ RQ 201	mR/hr	3.48E-02
2RMR RQ 205A	mR/hr	6.45E-02
2RMR RQ 205B	mR/hr	0.00E+00
2RMS RQ 223	mR/hr	3.45E-02

PROCESS GAS	UNITS	
2ARC RQ 100	uCi/cc	2.59E-07
2GWS RQ 101	uCi/cc	1.40E-02
2GWS RQ 102A	uCi/cc	3.35E-07
2GWS RQ 103	uCi/cc	0.00E+00
2GWS RQ 104	uCi/cc	7.84E-04
PROCESS LIQ.		
2CCP RQ 100	uCi/cc	3.40E-07
2CNA RQ 100	uCi/cc	1.07E-06
2CNA RQ 101	uCi/cc	3.93E-07
2SSR RQ 100	uCi/cc	1.00E-05
2SWS #RQ 100A	uCi/cc	1.55E-04
2SWS #RQ 100B	uCi/cc	2.05E-04
2SWS #RQ 100C	uCi/cc	1.67E-04
2SWS #RQ 100D	uCi/cc	1.21E-01
2SWS RQ 101	uCi/cc	6.02E-07

DRMS
1800 to 2200 hrs.

TIME>		1800	1803	1806	1809	1812	1815	1818	1821
AREA MONITORS	UNITS								
2RMR RQ 201	mR/hr	2.60E-01	2.60E-01	2.60E-01	2.60E-01	2.60E-01	2.60E-01	1.66E+00	3.06E+00
2RMR #RQ 202A	mR/hr	1.05E-01	1.05E-01	1.05E-01	1.05E-01	1.05E-01	1.05E-01	1.05E-01	1.05E-01
2RMR #RQ 202B	mR/hr	4.75E+00	4.75E+00	4.75E+00	4.75E+00	4.75E+00	4.75E+00	4.75E+00	4.75E+00
2RMR RQ 203	mR/hr	6.67E+01	6.67E+01	6.67E+01	6.67E+01	6.67E+01	6.67E+01	6.78E+01	6.89E+01
2RMR RQ 204	mR/hr	8.66E+00	8.66E+00	8.66E+00	8.66E+00	8.66E+00	8.66E+00	9.55E+00	1.04E+01
2RMR #RQ 206	R/hr	8.29E-01	8.29E-01	8.29E-01	8.29E-01	8.29E-01	8.29E-01	8.29E-01	8.29E-01
2RMR #RQ 207	R/hr	8.58E-01	8.58E-01	8.58E-01	8.58E-01	8.58E-01	8.58E-01	8.58E-01	8.58E-01
EFFLU.MONITORS	UNITS								
2MSS #RQ 101C	uCi/cc	4.25E-03	4.25E-03	4.25E-03	4.25E-03	4.25E-03	4.25E-03	4.25E-03	4.25E-03
Eff chan	uCi/sec	0.00E+00	0.00E+00	0.00E+00	0.00E+00	0.00E+00	0.00E+00	0.00E+00	0.00E+00
AIRBORNE MON.									
2RMR #RQ 303A	uCi/cc	6.84E-10	6.84E-10	6.84E-10	6.84E-10	6.84E-10	6.68E-10	6.53E-10	6.38E-10
2RMR #RQ 303B	uCi/cc	9.55E-06	9.55E-06	9.55E-06	9.55E-06	9.55E-06	9.33E-06	9.12E-06	8.91E-06
PROCESS LIQ.									
2CHS RQ 101A	uCi/cc	7.33E-01	7.33E-01	7.33E-01	7.33E-01	7.33E-01	7.16E-01	7.00E-01	6.84E-01
2CHS RQ 101B	uCi/cc	1.05E+00	1.05E+00	1.05E+00	1.05E+00	1.05E+00	1.03E+00	1.00E+00	9.79E-01

TIME>	1824	1827	1830	1833	1836	1839	1842	1845	1848
AREA MONITORS									
2RMR RQ 201	4.46E+00	5.86E+00	7.26E+00	8.66E+00	1.01E+01	1.15E+01	1.29E+01	1.43E+01	1.57E+01
2RMR #RQ 202A	1.05E-01	1.05E-01	1.05E-01	1.05E-01	1.05E-01	1.05E-01	1.05E-01	1.05E-01	1.05E-01
2RMR #RQ 202B	4.75E+00	4.75E+00	4.75E+00	4.75E+00	4.75E+00	4.75E+00	4.75E+00	4.75E+00	4.75E+00
2RMR RQ 203	7.00E+01	7.11E+01	7.21E+01	7.32E+01	7.43E+01	7.54E+01	7.65E+01	7.76E+01	7.87E+01
2RMR RQ 204	1.13E+01	1.22E+01	1.31E+01	1.40E+01	1.49E+01	1.58E+01	1.67E+01	1.76E+01	1.85E+01
2RMR #RQ 206	8.29E-01	8.29E-01	8.29E-01	8.29E-01	8.29E-01	8.29E-01	8.29E-01	8.29E-01	8.29E-01
2RMR #RQ 207	8.58E-01	8.58E-01	8.58E-01	8.58E-01	8.58E-01	8.58E-01	8.58E-01	8.58E-01	8.58E-01
EFFLU.MONITORS									
2MSS #RQ 101C	4.25E-03	4.25E-03	4.25E-03	4.25E-03	4.25E-03	4.25E-03	4.25E-03	4.25E-03	4.25E-03
Eff chan	0.00E+00	0.00E+00	0.00E+00	0.00E+00	0.00E+00	0.00E+00	0.00E+00	0.00E+00	0.00E+00
AIRBORNE MON.									
2RMR #RQ 303A	6.23E-10	6.09E-10	5.95E-10	5.81E-10	5.68E-10	5.55E-10	5.42E-10	5.30E-10	5.17E-10
2RMR #RQ 303B	8.70E-06	8.50E-06	8.31E-06	8.11E-06	7.93E-06	7.75E-06	7.57E-06	7.39E-06	7.22E-06
PROCESS LIQ.									
2CHS RQ 101A	6.68E-01	6.52E-01	6.37E-01	6.23E-01	6.08E-01	5.95E-01	5.81E-01	5.67E-01	5.54E-01
2CHS RQ 101B	9.57E-01	9.35E-01	9.13E-01	8.92E-01	8.72E-01	8.52E-01	8.32E-01	8.13E-01	7.94E-01

DRMS
1800 to 2200 hrs.

TIME>	1851	1854	1857	1900	1903	1906	1909	1912	1915
AREA MONITORS									
2RMR RQ 201	1.71E+01	1.85E+01	1.99E+01	2.13E+01	2.27E+01	2.41E+01	2.55E+01	2.69E+01	2.83E+01
2RMR #RQ 202A	1.05E-01	1.05E-01	1.05E-01	1.05E-01	1.05E-01	1.05E-01	1.05E-01	1.05E-01	1.05E-01
2RMR #RQ 202B	4.75E+00	4.75E+00	4.75E+00	4.75E+00	4.75E+00	4.75E+00	4.75E+00	4.75E+00	4.75E+00
2RMR RQ 203	7.98E+01	8.09E+01	8.20E+01	8.30E+01	8.41E+01	8.52E+01	8.63E+01	8.74E+01	8.85E+01
2RMR RQ 204	1.93E+01	2.02E+01	2.11E+01	2.20E+01	2.29E+01	2.38E+01	2.47E+01	2.56E+01	2.65E+01
2RMR #RQ 206	8.29E-01	8.29E-01	8.29E-01	8.29E-01	8.29E-01	8.29E-01	8.29E-01	8.2[illegible]-01	8.29E-01
2RMR #RQ 207	8.58E-01	8.58E-01	8.58E-01	8.58E-01	8.58E-01	8.58E-01	8.58E-01	8.5[illegible]-01	8.58E-01
EFFLU.MONITORS									
2MSS #RQ 101C	4.25E-03	4.25E-03	4.25E-03	4.25E-03	4.25E-03	4.25E-03	4.25E-03	4.25E-03	4.25E-03
Eff chan	0.00E+00	0.00E+00	0.00E+00	0.00E+00	0.00E+00	0.00E+00	0.00E+00	0.00E+00	0.00E+00
AIRBORNE MON.									
2RMR #RQ 303A	5.05E-10	4.94E-10	4.82E-10	4.71E-10	4.61E-10	4.50E-10	4.40E-10	4.29E-10	4.20E-10
2RMR #RQ 303B	7.06E-06	6.89E-06	6.74E-06	6.58E-06	6.43E-06	6.28E-06	6.14E-06	6.00E-06	5.86E-06
PROCESS LIQ.									
2CHS RQ 101A	5.42E-01	5.29E-01	5.17E-01	5.05E-01	4.94E-01	4.82E-01	4.71E-01	4.60E-01	4.50E-01
2CHS RQ 101B	7.76E-01	7.58E-01	7.41E-01	7.24E-01	7.07E-01	6.91E-01	6.75E-01	6.59E-01	6.44E-01

TIME>	1918	1921	1924	1927	1930	1933	1936	1939	1942
AREA MONITORS									
2RMR RQ 201	2.97E+01	3.11E+01	3.25E+01	3.39E+01	3.53E+01	3.67E+01	3.81E+01	3.95E+01	4.09E+01
2RMR #RQ 202A	1.05E-01	1.05E-01	1.05E-01	1.05E-01	1.05E-01	1.05E-01	1.05E-01	1.05E-01	1.05E-01
2RMR #RQ 202B	4.75E+00	4.75E+00	4.75E+00	4.75E+00	4.75E+00	4.75E+00	4.75E+00	4.75E+00	4.75E+00
2RMR RQ 203	8.96E+01	9.07E+01	9.18E+01	9.29E+01	9.39E+01	9.50E+01	9.61E+01	9.72E+01	9.83E+01
2RMR RQ 204	2.73E+01	2.82E+01	2.91E+01	3.00E+01	3.09E+01	3.18E+01	3.27E+01	3.36E+01	3.45E+01
2RMR #RQ 206	8.29E-01	8.29E-01	8.29E-01	8.29E-01	8.29E-01	8.29E-01	8.29E-01	8.29E-01	8.29E-01
2RMR #RQ 207	8.58E-01	8.58E-01	8.58E-01	8.58E-01	8.58E-01	8.58E-01	8.58E-01	8.58E-01	8.58E-01
EFFLU.MONITORS									
2MSS #RQ 101C	4.25E-03	4.25E-03	4.25E-03	4.25E-03	4.25E-03	4.25E-03	4.25E-03	4.25E-03	4.25E-03
Eff chan	0.00E+00	0.00E+00	0.00E+00	0.00E+00	0.00E+00	0.00E+00	0.00E+00	0.00E+00	0.00E+00
AIRBORNE MON.									
2RMR #RQ 303A	4.10E-10	4.01E-10	3.91E-10	3.82E-10	3.74E-10	3.65E-10	3.57E-10	3.48E-10	3.40E-10
2RMR #RQ 303B	5.72E-06	5.59E-06	5.46E-06	5.34E-06	5.22E-06	5.10E-06	4.98E-06	4.86E-06	4.75E-06
PROCESS LIQ.									
2CHS RQ 101A	4.39E-01	4.29E-01	4.19E-01	4.10E-01	4.00E-01	3.91E-01	3.82E-01	3.73E-01	3.65E-01
2CHS RQ 101B	6.29E-01	6.15E-01	6.01E-01	5.87E-01	5.73E-01	5.60E-01	5.47E-01	5.35E-01	5.22E-01

DRMS
1800 to 2200 hrs.

TIME>	1945	1948	1951	1954	1957	2000	2003	2006	2009
AREA MONITORS									
2RMR RQ 201	4.23E+01	4.37E+01	1.15E+02	4.50E+04	6.00E+04	7.00E+04	1.00E+05	1.00E+05	1.00E+05
2RMR #RQ 202A	1.05E-01	1.05E-01	1.05E-01	1.43E+02	2.00E+02	2.43E+02	5.71E+02	5.77E+02	5.83E+02
2RMR #RQ 202B	4.75E+00	4.75E+00	4.75E+00	1.52E+02	2.12E+02	2.58E+02	6.06E+02	6.12E+02	6.18E+02
2RMR RQ 203	9.94E+01	1.00E+02	2.00E+02	4.00E+02	1.00E+04	1.00E+04	1.00E+04	1.00E+04	1.00E+04
2RMR RQ 204	3.54E+01	3.62E+01	1.00E+02	3.50E+04	5.20E+04	6.50E+04	1.00E+05	1.00E+05	1.00E+05
2RMR #RQ 206	8.29E-01	8.29E-01	9.95E-01	5.00E+01	7.00E+01	8.50E+01	2.00E+02	2.02E+02	2.04E+02
2RMR #RQ 207	8.58E-01	8.78E-01	1.10E+00	4.87E+01	6.84E+01	7.24E+01	3.50E+02	3.54E+02	3.57E+02
EFFLU.MONITORS									
2MSS #RQ 101C	4.25E-03	4.25E-03	4.2[illegible]-03	4.25E-03	4.25E-03	4.25E-03	2.50E+00	2.50E+00	2.50E+00
Eff chan	0.00E+00	0.00E+00	0.00E+00	0.00E+00	0.00E+00	0.00E+00	3.59E+06	3.59E+06	3.59E+06
AIRBORNE MON.									
2RMR #RQ 303A	3.32E-10	3.25E-10	3.17E-10	3.10E-10	3.03E-10	2.96E-10	2.89E-10	2.83E-10	2.76E-10
2RMR #RQ 303B	4.64E-06	4.54E-06	4.43E-06	4.33E-06	4.23E-06	4.13E-06	4.04E-06	3.94E-06	3.85E-06
PROCESS LIQ.									
2DHS RQ 101A	3.56E-01	3.48E-01	3.40E-01	3.32E-01	3.25E-01	3.17E-01	3.10E-01	3.03E-01	2.96E-01
2DHS RQ 101B	5.10E-01	4.99E-01	4.87E-01	4.76E-01	4.65E-01	4.54E-01	4.44E-01	4.34E-01	4.24E-01

TIME>	2012	2015	2018	2021	2024	2027	2030	2033	2036
AREA MONITORS									
2RMR RQ 201	1.00E+05	1.00E+05	1.00E+05	1.00E+05	1.00E+05	1.00E+05	1.00E+05	1.00E+05	1.00E+05
2RMR #RQ 202A	5.89E+02	5.95E+02	6.01E+02	6.07E+02	6.13E+02	6.19E+02	6.25E+02	6.31E+02	6.38E+02
2RMR #RQ 202B	6.24E+02	6.31E+02	6.37E+02	6.43E+02	6.50E+02	6.56E+02	6.63E+02	6.69E+02	6.76E+02
2RMR RQ 203	1.00E+04	1.00E+04	1.00E+04	1.00E+04	1.00E+04	1.00E+04	1.00E+04	1.00E+04	1.00E+04
2RMR RQ 204	1.00E+05	1.00E+05	1.00E+05	1.00E+05	1.00E+05	1.00E+05	1.00E+05	1.00E+05	1.00E+05
2RMR #RQ 206	2.06E+02	2.08E+02	2.16E+02	2.12E+02	2.14E+02	2.17E+02	2.19E+02	2.21E+02	2.23E+02
2RMR #RQ 207	3.61E+02	3.64E+02	3.68E+02	3.72E+02	3.75E+02	3.79E+02	3.83E+02	3.87E+02	3.90E+02
EFFLU.MONITORS									
2MSS #RQ 101C	2.50E+00	2.50E+00	2.50E+00	2.50E+00	2.50E+00	2.50E+00	2.50E+00	2.50E+00	2.50E+00
Eff chan	3.59E+06	3.59E+06	3.59E+06	3.59E+06	3.59E+06	3.59E+06	3.59E+06	3.59E+06	3.59E+06
AIRBORNE MON.									
2RMR #RQ 303A	2.70E-10	2.63E-10	2.61E-10	2.58E-10	2.55E-10	2.52E-10	2.49E-10	2.47E-10	2.44E-10
2RMR #RQ 303B	3.77E-06	3.66E-06	3.64E-06	3.60E-06	3.56E-06	3.52E-06	3.48E-06	3.44E-06	3.40E-06
PROCESS LIQ.									
2DHS RQ 101A	2.89E-01	2.82E-01	2.79E-01	2.76E-01	2.73E-01	2.70E-01	2.67E-01	2.64E-01	2.61E-01
2DHS RQ 101B	4.14E-01	4.04E-01	4.00E-01	3.91E-01	3.82E-01	3.73E-01	3.64E-01	3.56E-01	3.48E-01

DRMS
1800 to 2200 hrs.

TIME>	2039	2042	2045	2048	2051	2054	2057	2100	2103
AREA MONITORS									
2RMR RQ 201	1.00E+05	1.00E+05	1.00E+05	1.00E+05	1.00E+05	1.00E+05	1.00E+05	1.00E+05	1.00E+05
2RMR #RQ 202A	6.44E+02	6.50E+02	6.57E+02	6.63E+02	6.70E+02	6.77E+02	6.84E+02	6.90E+02	6.97E+02
2RMR #RQ 202B	6.93E+02	6.90E+02	6.97E+02	7.04E+02	7.11E+02	7.18E+02	7.25E+02	7.32E+02	7.40E+02
2RMR RQ 203	1.00E+04	1.00E+04	1.00E+04	1.00E+04	1.00E+04	1.00E+04	1.00E+04	1.00E+04	1.00E+04
2RMR RQ 204	1.00E+05	1.00E+05	1.00E+05	1.00E+05	1.00E+05	1.00E+05	1.00E+05	1.00E+05	1.00E+05
2RMR #RQ 206	2.25E+02	2.20E+02	2.30E+02	2.32E+02	2.35E+02	2.37E+02	2.39E+02	2.42E+02	2.44E+02
2RMR #RQ 207	3.94E+02	3.90E+02	4.02E+02	4.06E+02	4.10E+02	4.15E+02	4.19E+02	4.23E+02	4.27E+02
EFFLU.MONITORS									
2MSS #RQ 101C	2.50E+00	2.50E+00	2.50E+00	2.50E+00	2.50E+00	2.50E+00	2.50E+00	2.50E+00	2.50E+00
Eff chan	3.59E+06	3.59E+06	3.59E+06	3.59E+06	3.59E+06	3.59E+06	3.59E+06	3.59E+06	3.59E+06
AIRBORNE MON.									
2RMR #RQ 303A	2.41E-10	2.39E-10	2.36E-10	2.33E-10	2.31E-10	2.28E-10	2.26E-10	2.23E-10	2.21E-10
2RMR #RQ 303B	3.37E-06	3.33E-06	3.29E-06	3.26E-06	3.22E-06	3.19E-06	3.15E-06	3.12E-06	3.08E-06
PROCESS LIQ.									
2CHS RQ 101A	2.58E-01	2.56E-01	2.53E-01	2.50E-01	2.47E-01	2.45E-01	2.42E-01	2.39E-01	2.37E-01
2CHS RQ 101B	3.40E-01	3.32E-01	3.24E-01	3.17E-01	3.10E-01	3.03E-01	2.96E-01	2.89E-01	2.82E-01

TIME>	2106	2109	2112	2115	2118	2121	2124	2127	2130
AREA MON. ORS									
2RMR RQ 201	1.00E+05	1.00E+05	1.00E+05	1.00E+05	1.00E+05	1.00E+05	1.00E+05	1.00E+05	1.00E+05
2RMR #RQ 202A	7.04E+02	7.11E+02	7.18E+02	7.26E+02	7.33E+02	7.40E+02	7.48E+02	7.55E+02	7.63E+02
2RMR #RQ 202B	7.47E+02	7.54E+02	7.62E+02	7.70E+02	7.77E+02	7.85E+02	7.93E+02	8.01E+02	8.09E+02
2RMR RQ 203	1.00E+04	1.00E+04	1.00E+04	1.00E+04	1.00E+04	1.00E+04	1.00E+04	1.00E+04	1.00E+04
2RMR RQ 204	1.00E+05	1.00E+05	1.00E+05	1.00E+05	1.00E+05	1.00E+05	1.00E+05	1.00E+05	1.00E+05
2RMR #RQ 206	2.46E+02	2.49E+02	2.51E+02	2.54E+02	2.56E+02	2.59E+02	2.62E+02	2.64E+02	2.67E+02
2RMR #RQ 207	4.31E+02	4.36E+02	4.40E+02	4.44E+02	4.49E+02	4.53E+02	4.58E+02	4.62E+02	4.67E+02
EFFLU.MONITORS									
2MSS #RQ 101C	2.50E+00	2.50E+00	2.50E+00	2.50E+00	2.50E+00	2.50E+00	2.50E+00	2.50E+00	2.50E+00
Eff chan	3.59E+06	3.59E+06	3.59E+06	3.59E+06	3.59E+06	3.59E+06	3.59E+06	3.59E+06	0.00E+00
AIRBORNE MON.									
2RMR #RQ 303A	2.18E-10	2.16E-10	2.14E-10	2.11E-10	2.09E-10	2.07E-10	2.04E-10	2.02E-10	2.00E-10
2RMR #RQ 303B	3.05E-06	3.01E-06	2.98E-06	2.95E-06	2.92E-06	2.88E-06	2.85E-06	2.82E-06	2.79E-06
PROCESS LIQ.									
2CHS RQ 101A	2.34E-01	2.31E-01	2.29E-01	2.26E-01	2.24E-01	2.21E-01	2.19E-01	2.17E-01	2.14E-01
2CHS RQ 101B	2.76E-01	2.69E-01	2.63E-01	2.57E-01	2.51E-01	2.45E-01	2.40E-01	2.34E-01	2.29E-01

DRMS
1800 to 2200 hrs.

TIME>	2133	2136	2139	2142	2145	2148	2151	2154	2157	2200
AREA MONITORS										
2RMR RO 201	1.00E+05	1.00E+05	1.00E+05	1.00E+05	1.00E+05	1.00E+05	1.00E+05	1.00E+05	1.00E+05	1.00E+05
2RMR #RO 202A	2.60E+02	2.58E+02	2.56E+02	2.53E+02	2.51E+02	2.49E+02	2.47E+02	2.44E+02	2.42E+02	2.40E+02
2RMR #RO 202B	8.06E+02	8.04E+02	8.02E+02	7.99E+02	7.97E+02	7.94E+02	7.92E+02	7.90E+02	7.87E+02	7.85E+02
2RMR RO 203	1.00E+04	1.00E+04	1.00E+04	1.00E+04	1.00E+04	1.00E+04	1.00E+04	1.00E+04	1.00E+04	1.00E+04
2RMR RO 204	1.00E+05	1.00E+05	1.00E+05	1.00E+05	1.00E+05	1.00E+05	1.00E+05	1.00E+05	1.00E+05	1.00E+05
2RMR #RO 206	2.66E+02	2.65E+02	2.65E+02	2.64E+02	2.63E+02	2.62E+02	2.61E+02	2.61E+02	2.60E+02	2.59E+02
2RMR #RO 207	4.56E+02	4.46E+02	4.36E+02	4.26E+02	4.16E+02	4.06E+02	3.97E+02	3.88E+02	3.79E+02	3.70E+02
EFFLU.MONITORS										
2MSS #RO 101C	2.50E+00	2.50E+00	2.50E+00	2.50E+00	2.50E+00	2.50E+00	2.50E+00	2.50E+00	2.50E+00	2.50E+00
Eff chan	0.00E+00	0.00E+00	0.00E+00	0.00E+00	0.00E+00	0.00E+00	0.00E+00	0.00E+00	0.00E+00	0.00E+00
AIRBORNE MON.										
2RMR #RO 303A	1.99E-10	1.95E-10	1.93E-10	1.91E-10	1.89E-10	1.87E-10	1.85E-10	1.83E-10	1.81E-10	1.79E-10
2RMR #RO 303B	2.76E-06	2.73E-06	2.70E-06	2.67E-06	2.64E-06	2.61E-06	2.58E-06	2.55E-06	2.53E-06	2.50E-06
PROCESS LIQ.										
2DHS RO 101A	2.12E-01	2.09E-01	2.07E-01	2.05E-01	2.03E-01	2.00E-01	1.98E-01	1.96E-01	1.94E-01	1.92E-01
2DHS RO 101B	2.24E-01	2.18E-01	2.13E-01	2.09E-01	2.04E-01	1.99E-01	1.94E-01	1.90E-01	1.86E-01	1.81E-01

MAIN STEAM VALVE ROOM-773'
2003 to 2200 hrs

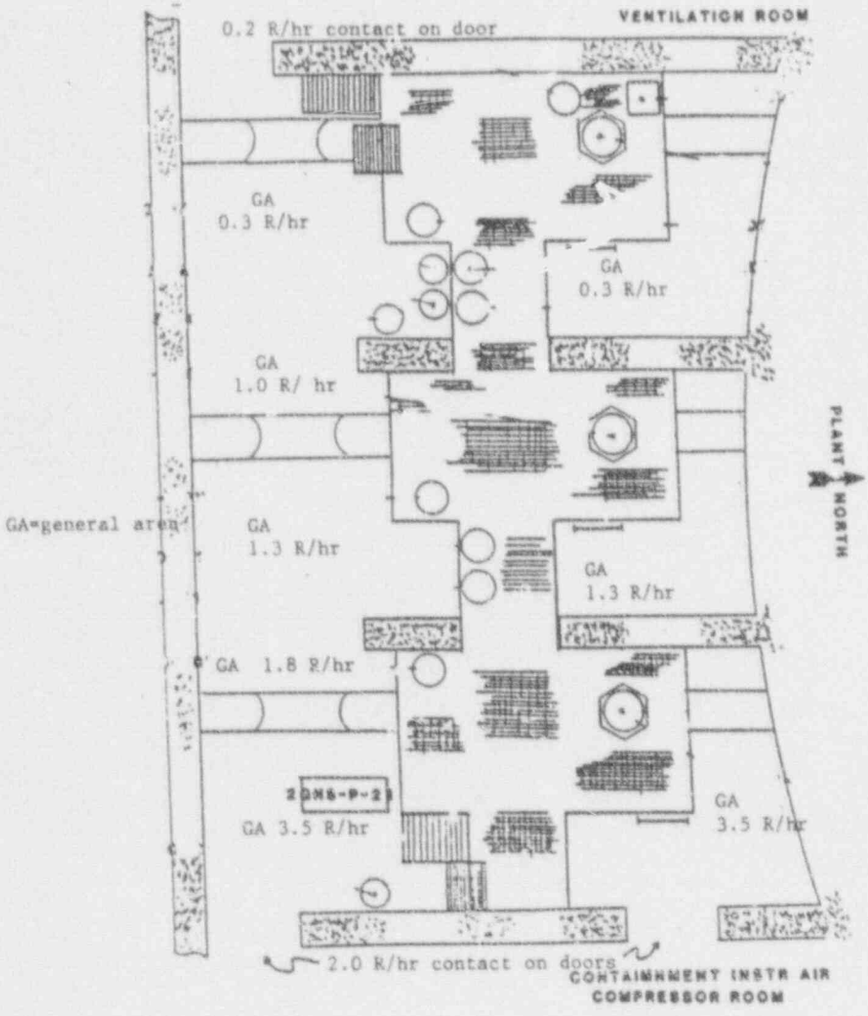

MAIN STEAM VALVE ROOM-788'
2003 to 2200 hrs

DOSE RATE	DISTANCE
55 R/hr	3'
31 R/hr	4'
20 R/hr	5'
14 R/hr	6'
10 R/hr	7'
7.8 R/hr	8'
6.1 R/hr	9'
5.0 R/hr	10'
2.2 R/hr	15'
1.3 R/hr	20'
0.6 R/hr	30'

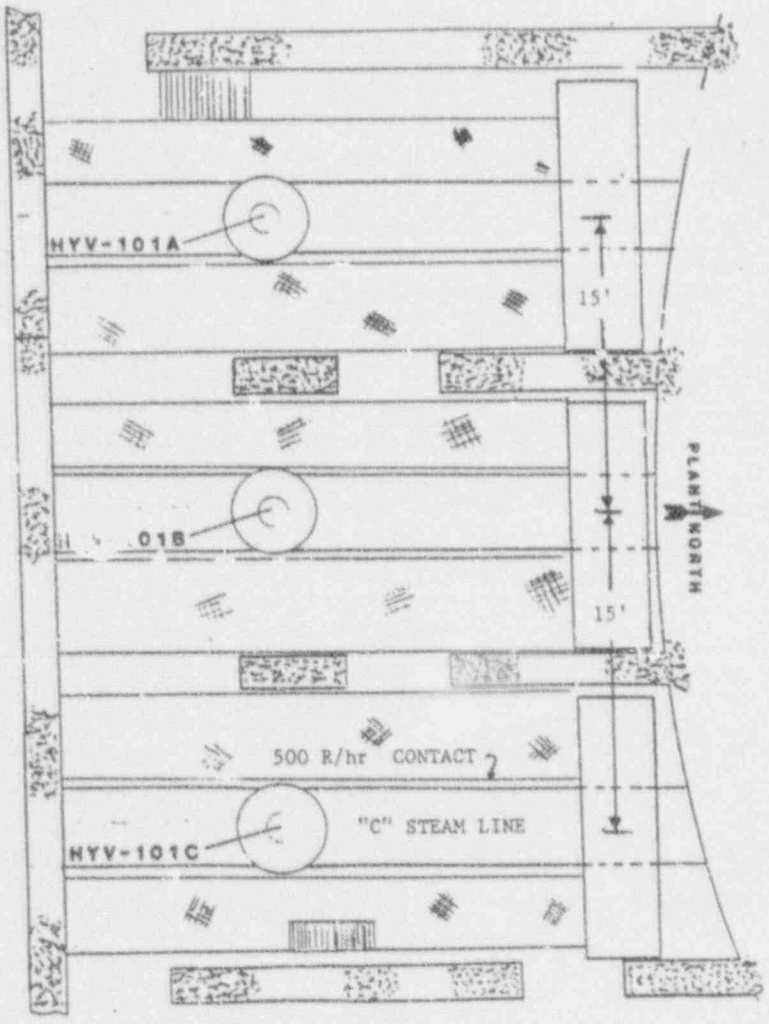

NORTH YARD PLUME DOSE RATES
2003 to 2130 hrs

Location	Dose Rate (mR/hr)
A	15
B	12
C	10
D	8
E	6
F	5
G	2
H	1
I	<1

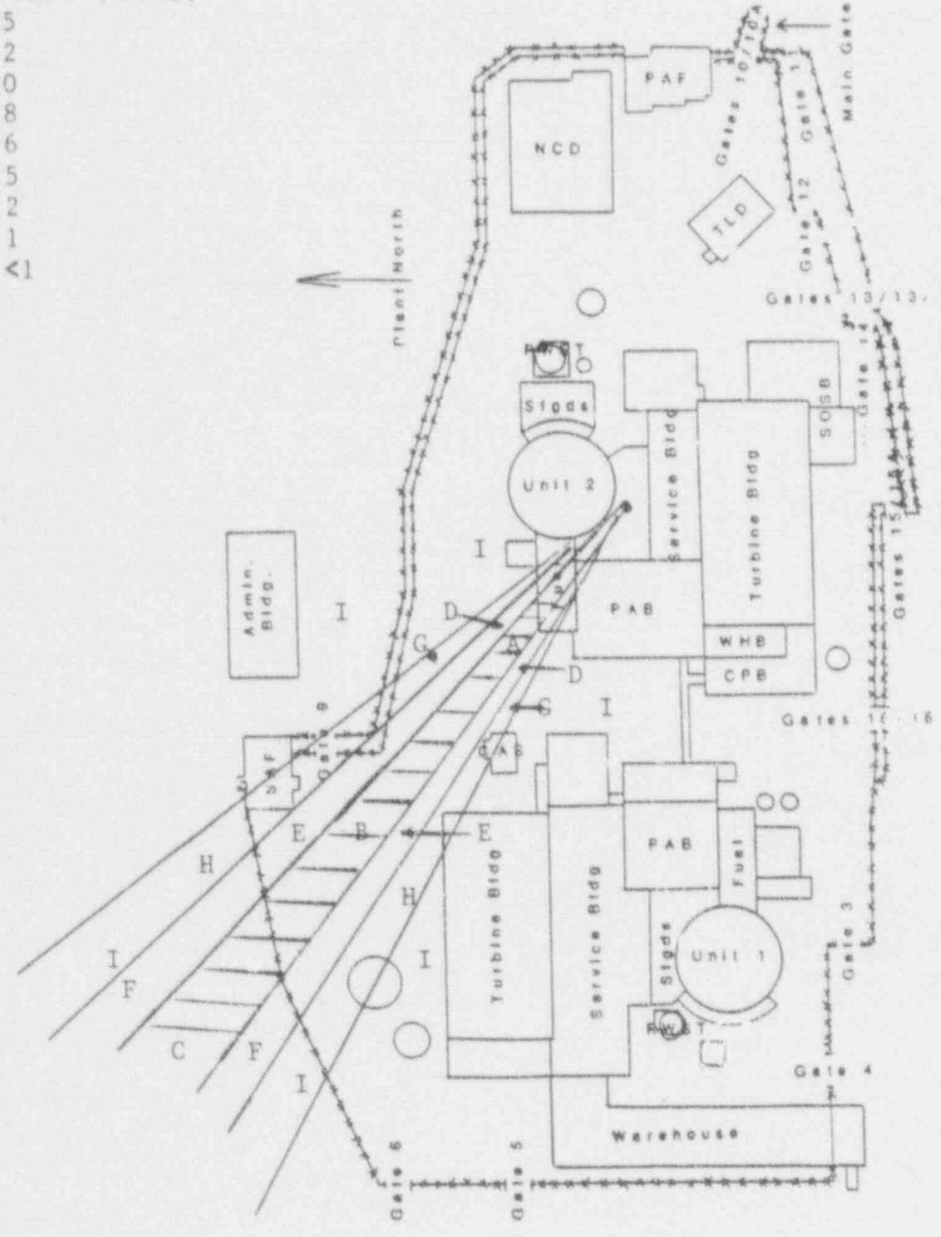

Plume is overhead in this area
Readings are outdoors only
No open window/closed window difference

EQUIPMENT HATCH DOSE RATES
2000 to 2030 hrs.

All dose rates in mR/hr
No open window/closed window difference

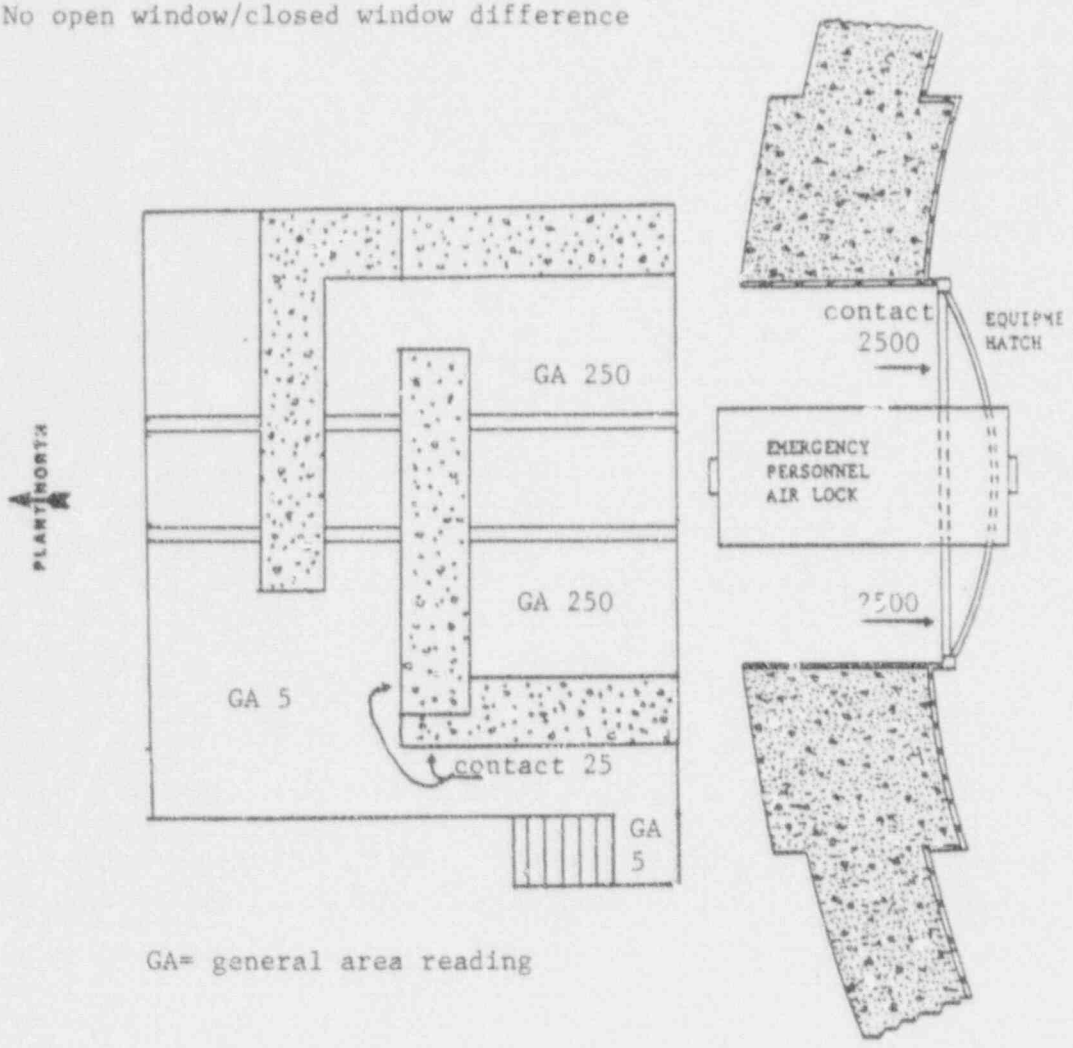

GA= general area reading

EQUIPMENT HATCH DOSE RATES
2030 to 2100 hrs.

All dose rates in mR/hr
No open window/closed window difference

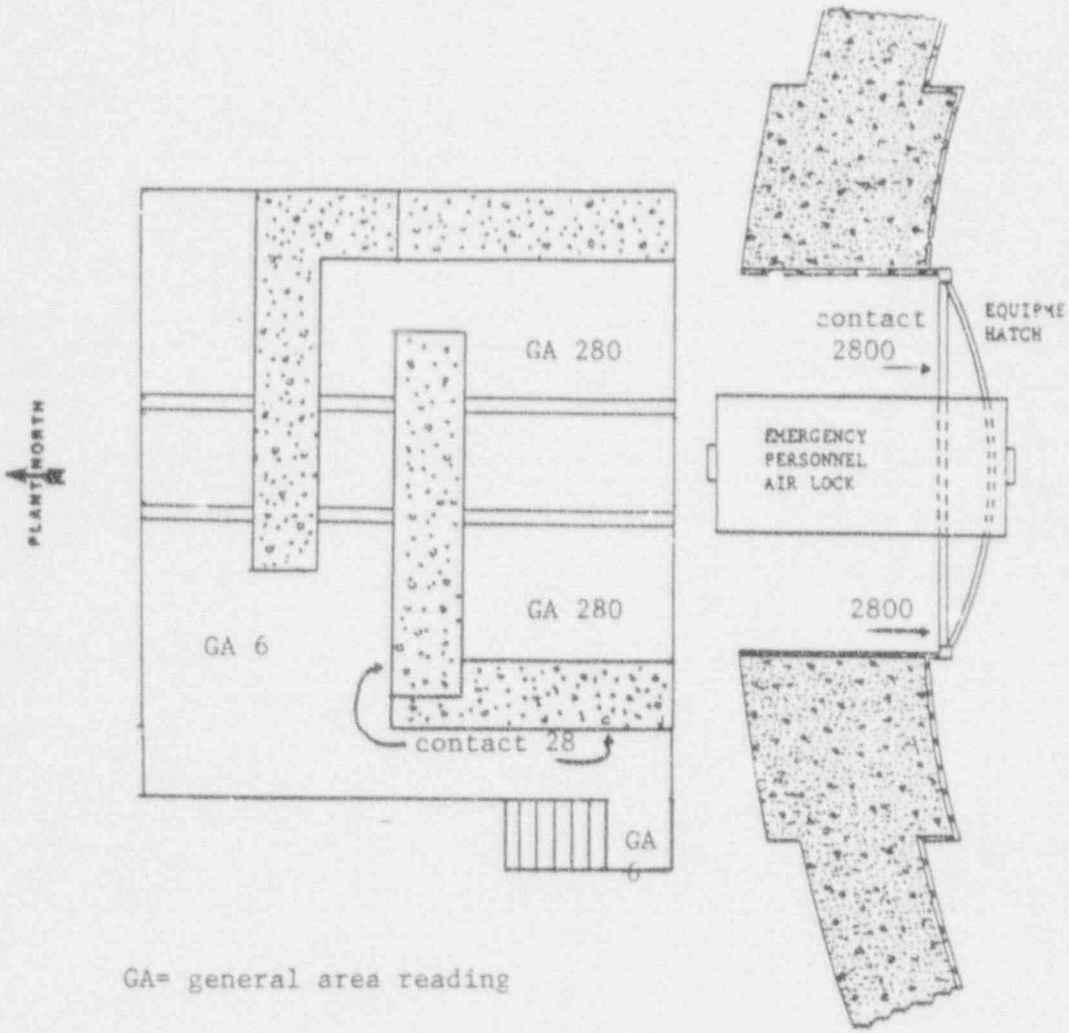

GA= general area reading

EQUIPMENT HATCH DOSE RATES
2100 to 2130 hrs.

All dose rates in mR/hr
No open window/closed window difference

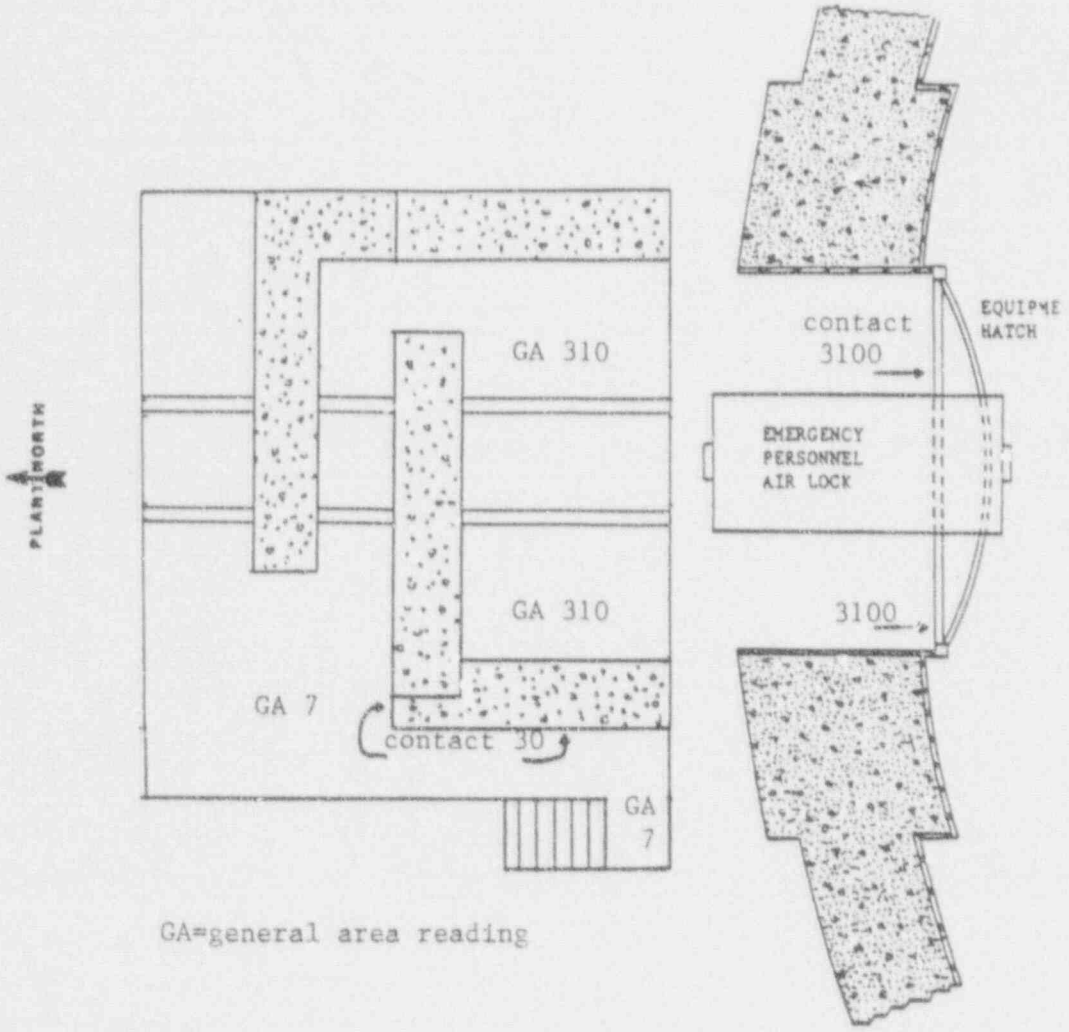

GA=general area reading

EQUIPMENT HATCH DOSE RATES
2130 to 2200 hrs.

All dose rates in mR/hr
No open window/closed window difference

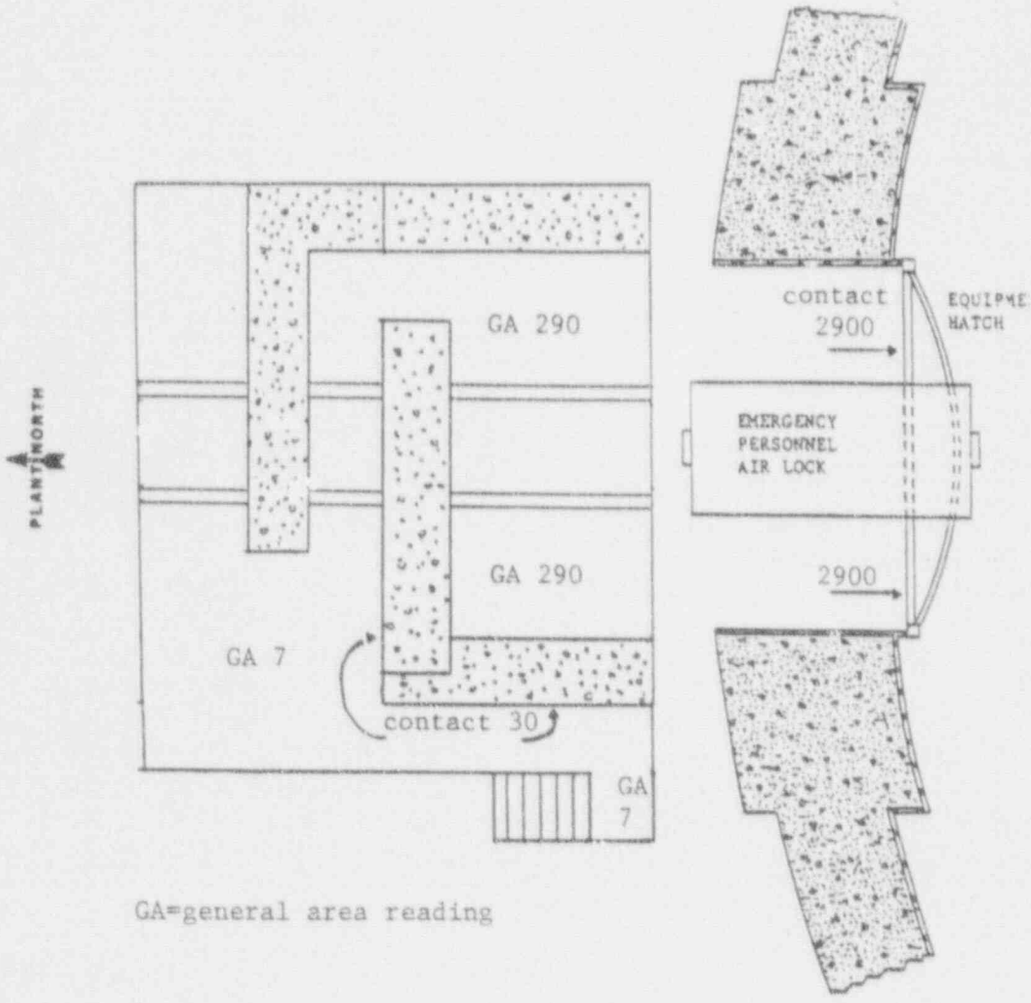

GA=general area reading

FUEL HANDLING BUILDING
SPILL DATA

The following are for liquid samples taken inside the Fuel Building:

Liquid isotopic:
Co 57 8.13E-6 uCi/ml
Co 58 3.34E-4 uCi/ml
Co 60 1.30E-3 uCi/ml
Ag 110m 5.67E-5 uCi/ml
Sb 122 3.79E-4 uCi/ml
Sb 125 1.76E-4 uCi/ml
Sr 92 1.51E-5 uCi/ml
Cs 134 2.95E-4 uCi/ml
Cs 137 6.63E-4 uCi/ml
Nb 97 5.46E-5 uCi/ml

The following are for catch basin samples taken at the north yard catch basin (CB 19) nearest the Fuel Building roll-up door.

Liquid isotopic:
Co 57 8.13E-9 uCi/ml
Co 58 3.34E-7 uCi/ml
Co 60 1.30E-6 uCi/ml
Ag 110m 5.67E-8 uCi/ml
Sb 122 3.79E-7 uCi/ml
Sb 125 1.76E-7 uCi/ml
Sr 92 1.51E-8 uCi/ml
Cs 134 2.95E-7 uCi/ml
Cs 137 6.63E-7 uCi/ml
Nb 97 5.46E-8 uCi/ml

The following are for samples taken at the outfall of the catch basin system whether or not the spill reaches the basin.

Liquid isotopic: no isotopes identified due to dilution.

CONTROLLER NOTE - For your information only: The leak rate for this accident is estimated to be 25 gpm. The total volume of the spill can be estimated by multiplying the number of minutes from the time the leak starts (1630 hrs.) until operators close the valves to isolate the temperature indicator.

FUEL HANDLING BUILDING
SPILL DATA

FUEL HANDLING BUILDING EL. 729'
F.P. HEAT EXCHANGER PUMPS

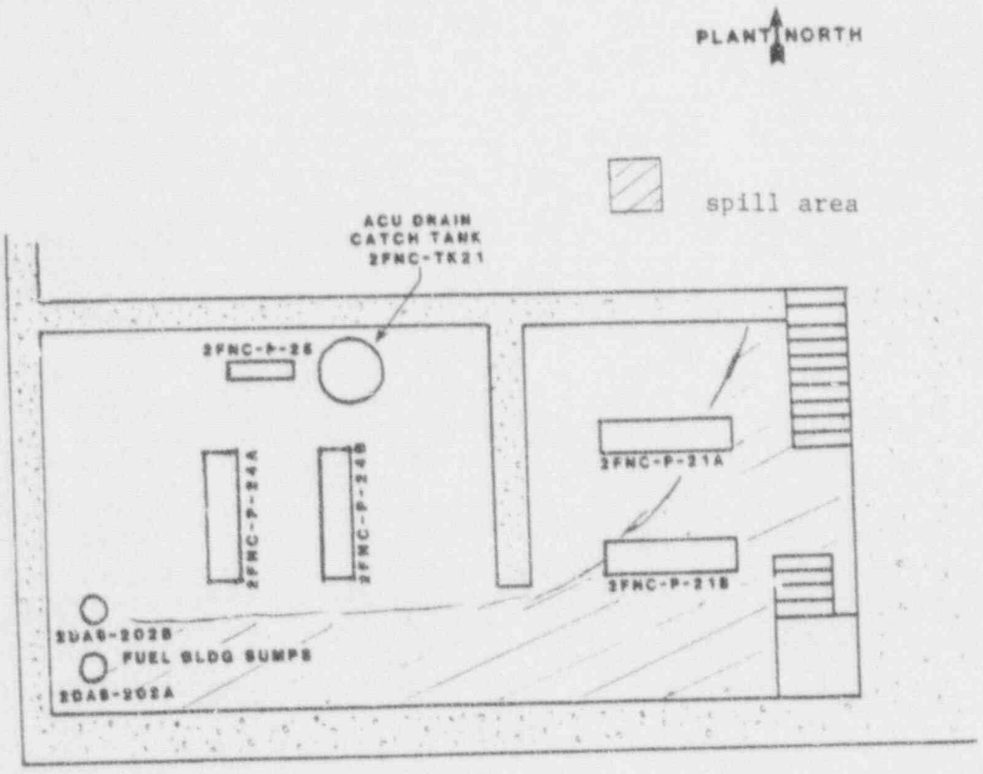

Initial smears taken on the dry side of the dry/wet boundry will read 10000 cpm/100 cm2. After the water is removed, those areas that were wet will read 500 cpm/100 cm2 and will require a clean mopping to be less than 100 cpm/100 cm2.

Reading with an HP 210 type probe and a RM 14 or E 140 N type frisker.

1

IMAGE EVALUATION TEST TARGET (MT-3)

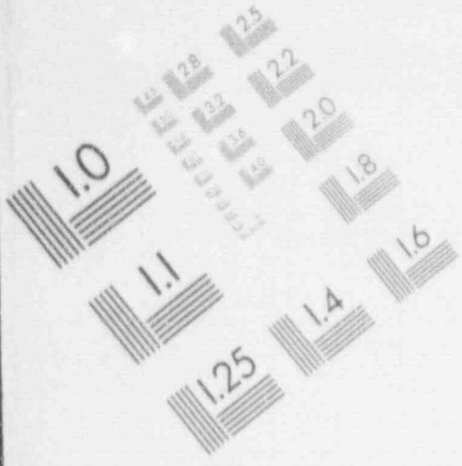

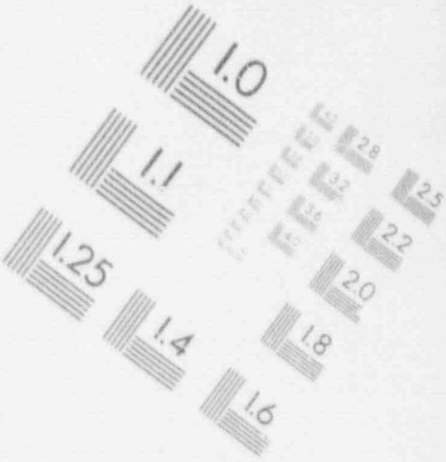

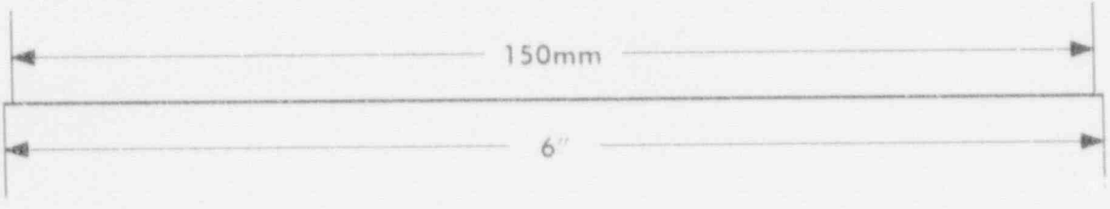

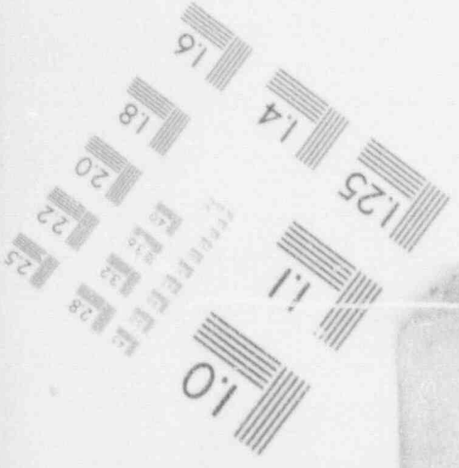

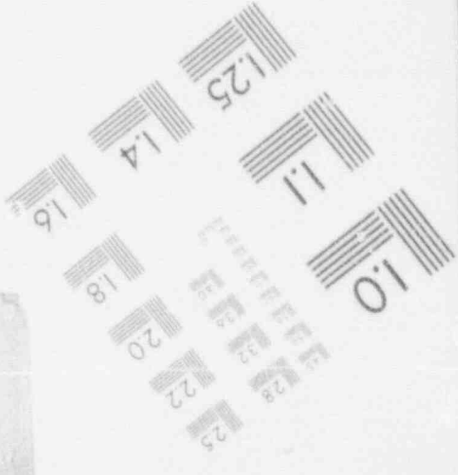

FUEL HANDLING BUILDING
SPILL DATA

FUEL HANDLING BUILDING EL. 735' 6"

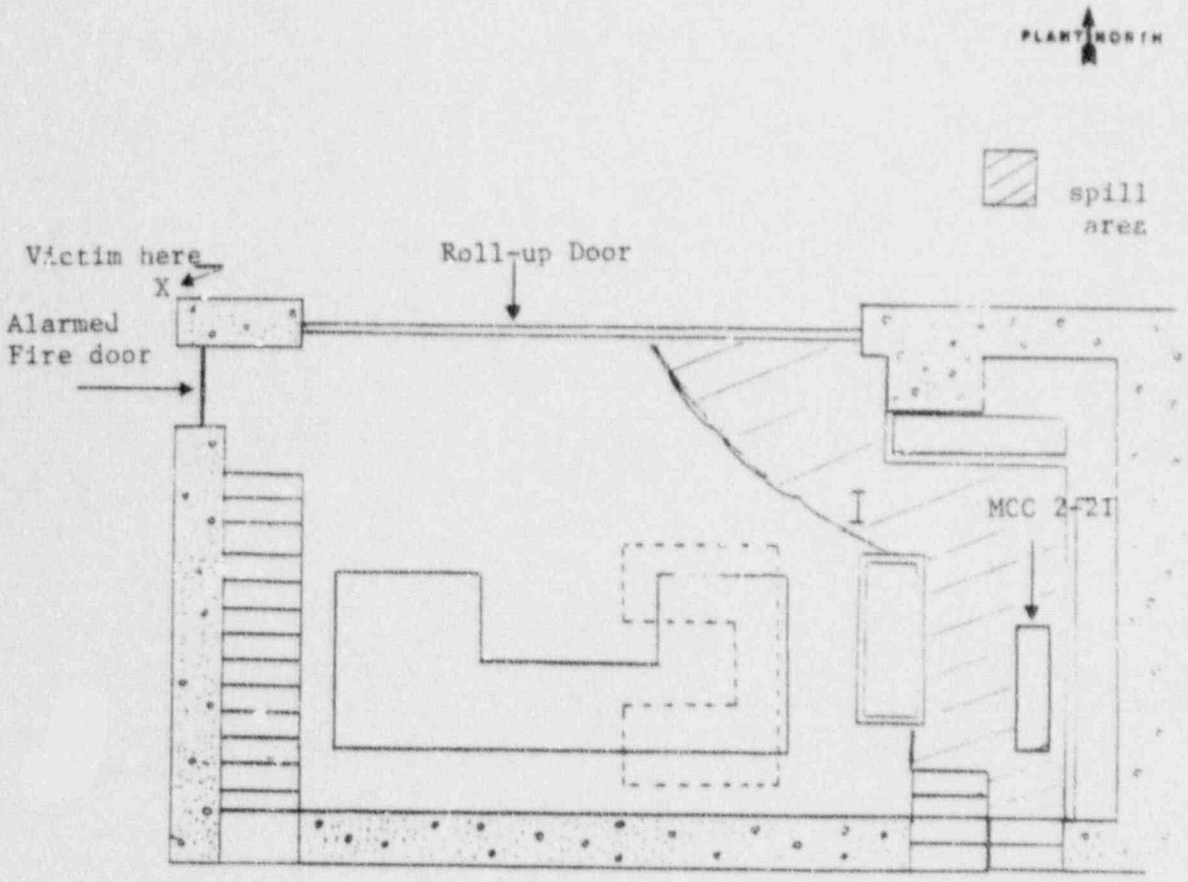

Initial smears taken on the dry side of the dry/wet boundry will read 10000 cpm/100 cm2. After the water is removed, those areas that were wet will read 500 cpm/100 cm2 and will require a clean mopping to be less than 100 cpm/100 cm2.

Reading with an HP 210 type probe and a RM 14 or E 140 N type frisker.

FUEL HANDLING BUILDING
SPILL DATA

FUEL HANDLING BUILDING EL. 739'
FUEL POOL HEAT EXCHANGERS

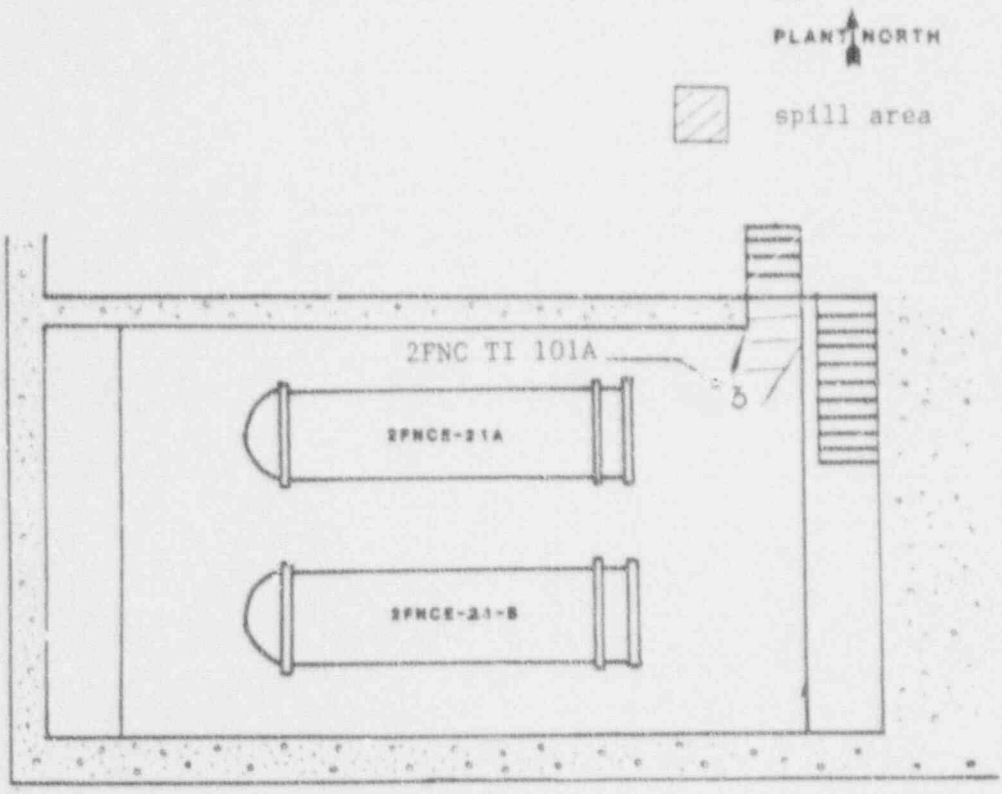

Initial smears taken on the dry side of the dry/wet boundry will read 10000 cpm/100 cm2. After the water is removed, those areas that were wet will read 500 cpm/100 cm2 and will require a clean mopping to be less than 100 cpm/100 cm2.

Reading with an HP 210 type probe and a RM 14 or E 140 N type frisker.

FUEL HANDLING BUILDING
SPILL DATA

TIME: 1650 hrs

spill area

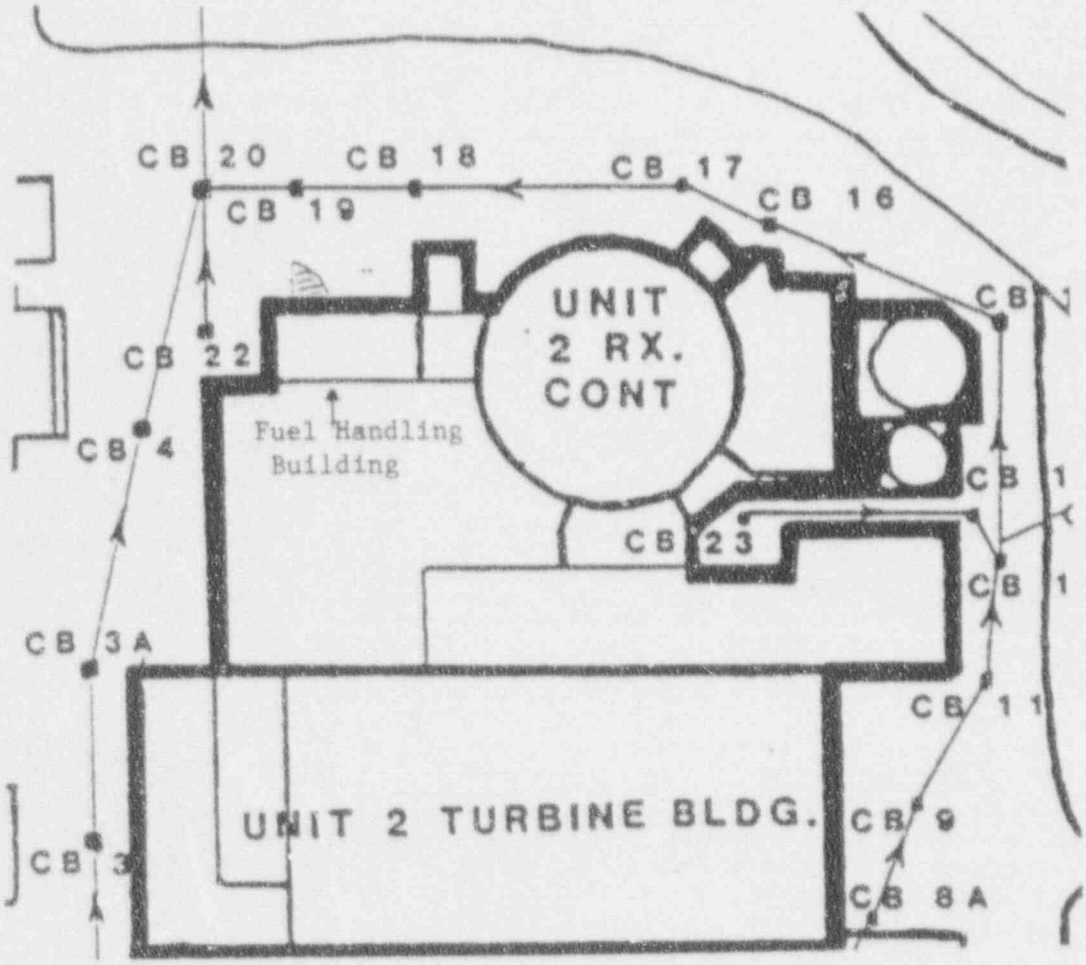

Smears taken on the dry side of the dry/wet boundry will show 8000 cpm/100 cm2. After the area is washed down there will be no detectable removable contamination. However, there will be 500 cpm by direct frisk due to contamination retain in the porous asphalt and concrete.

All readings taken with an HP 210 type probe and an RM 14 or E 140N type frisker.

FUEL HANDLING BUILDING
SPILL DATA

TIME: 1655 hrs

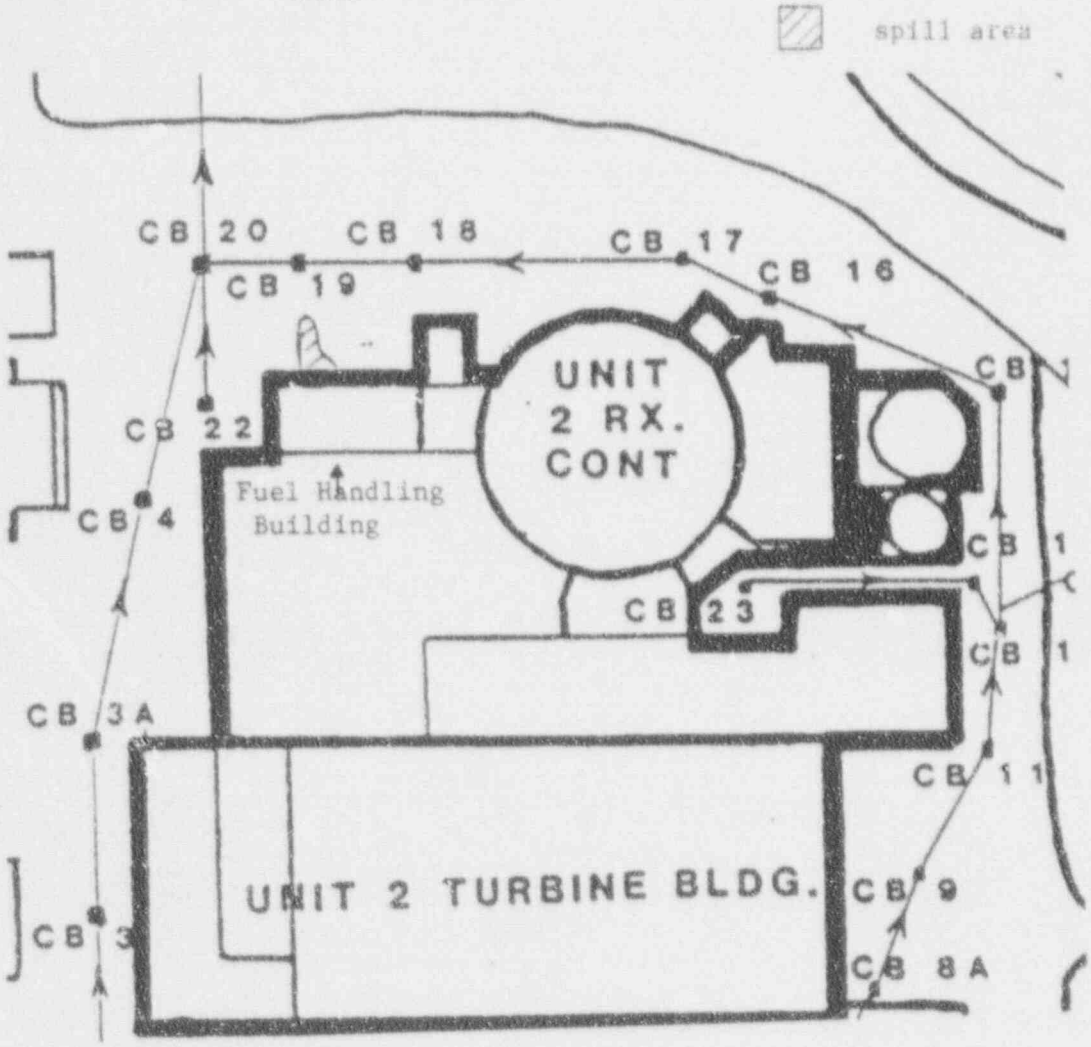

Smears taken on the dry side of the dry/wet boundry will show 8000 cpm/100 cm2. After the area is washed down there will be no detectable removable contamination. However, there will be 500 cpm by direct frisk due to contamination retain in the porous asphalt and concrete.

All readings taken with an HP 210 type probe and an RM 14 or E 140N type frisker.

FUEL HANDLING BUILDING
SPILL DATA

TIME: 1700 hrs

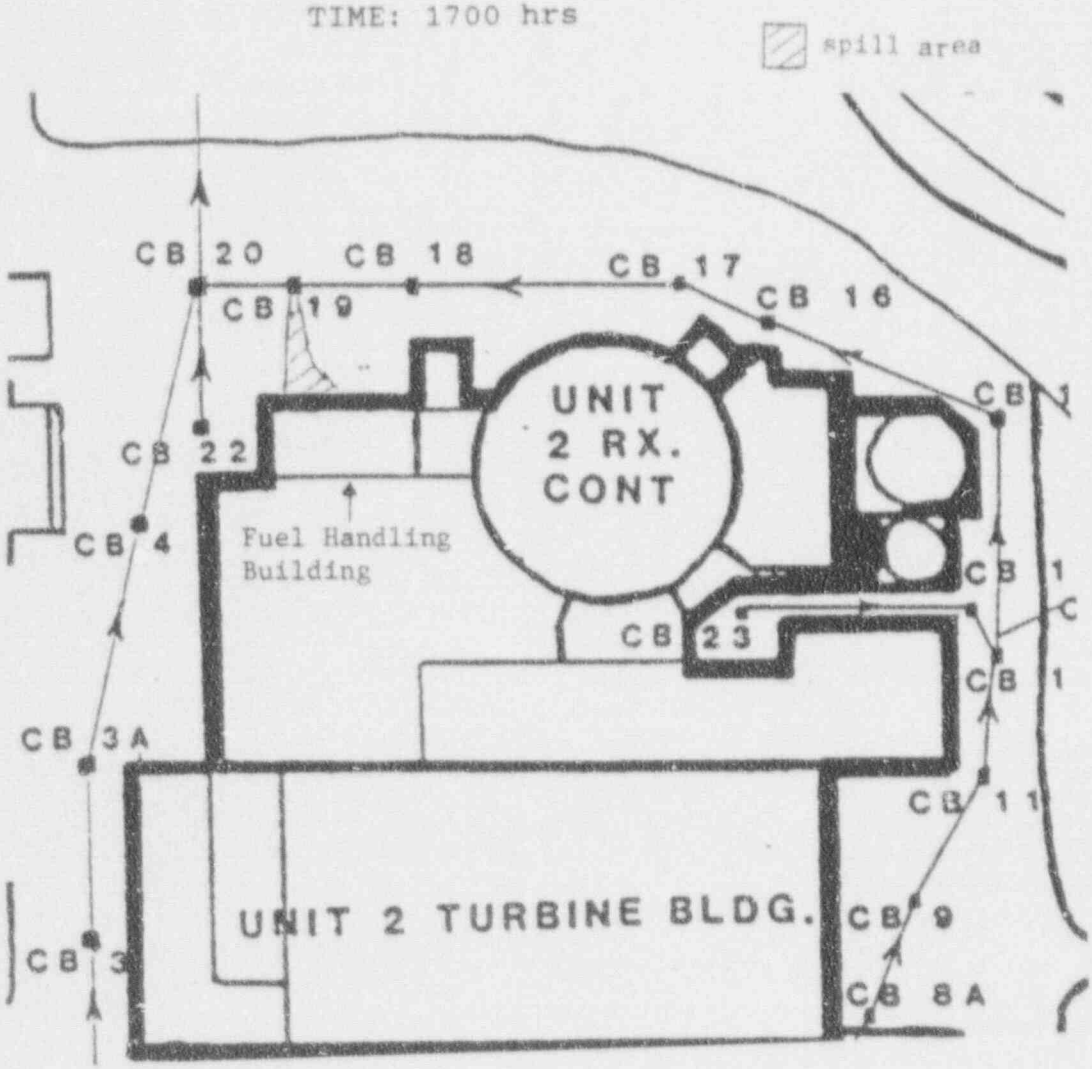

Smears taken on the dry side of the dry/wet boundry will show 8000 cpm/100 cm2. After the area is washed down there will be no detectable removable contamination. However, there will be 500 cpm by direct frisk due to contamination retain in the porous asphalt and concrete.

All readings taken with an HP 210 type probe and an RM 14 or E 140N type frisker.

Radiochemical Analysis

Data

Package

Section VII

(Part C.4)

Radiochemistry Data

(Activities are in uCi/g)

Isotope	Normal Operating Activity	Post Trip Activity
I-131	1.872 E-4	1.582 E-3
I-132	5.227 E-3	1.046 E-2
I-133	2.547 E-3	2.[illegible] E-3
I-134	9.252 E-3	1.[illegible] E-2
I-135	4.930 E-3	1.127 E-2
Ar-41	1.179 E-1	4.909 E-1
Kr-85M	1.503 E-3	6.213 E-3
Kr-87	3.212 E-3	2.332 E-2
Kr-88	3.938 E-3	3.261 E-2
Xe-133	2.794 E-3	5.851 E-3
Xe-133M	5.309 E-4	6.540 E-4
Xe-135	7.906 E-3	6.936 E-2
Xe-135M	1.226 E-2	1.481 E-1
Be- 7	1.690 E-4	5.848 E-4
F-18	7.985 E-2	1.165 E-1
Na-24	1.242 E-3	1.061 E-2
Cr-51	2.476 E-3	3.281 E-2
Mn-54	3.361 E-4	1.192 E-2
Mn-56	4.146 E-3	1.086 E-2
Co-58	2.303 E-3	1.828 E-2
Fe-59	1.829 E-4	1.028 E-3
Co-60	2.770 E-4	3.722 E-3
Rb-88	1.044 E-2	2.035 E-2
Zr-95	1.221 E-3	1.307 E-2
Nb-95	1.628 E-3	1.702 E-2
Mo-99	1.506 E-4	4.522 E-4
Tc-99m	1.506 E-4	4.522 E-4
Cs-137	4.033 E-6	4.564 E-6
Cs-138	1.255 E-2	2.268 E-2

Post Accident Sampling System (PASS) Data

NO PASS DATA WILL BE PROVIDED DURING THE ANNUAL EXERCISE.

A PASS Drill was conducted during 2/92 and documentation is available upon request.

In reality, chemistry would not take a PASS sample until core conditions would have stabilized (6-8 hrs. after damage). It then requires approximately three (3) hrs. to obtain an actual sample. Since the Exercise ends two (2) hrs. after core damage occurs, a PASS sample would not be available prior to the conclusion of the Exercise.

If a PASS sample is requested, all actions associated with taking the sample will be simulated in real time.

Weather

Data

Package

Section VI

METEOROLOGICAL DATA (For June 9, 1992)

Time	150' Wind Direction	500' Wind Direction	35' Wind Speed (mph)	500' Wind Speed (mph)	Delta T 150'-35'	Stability Class	35' Ambient Temperature (Degrees F)	Sky Condition
1400	275	275	10	12	0.2	E	76	Cloudy
1415	275	275	10	12	0.2	E	76	Cloudy
1430	275	270	10	12	0.2	E	76	Cloudy
1445	275	270	10	12	0.2	E	76	Cloudy
1500	270	270	10	10	0.2	E	77	Cloudy
1515	270	270	8	10	0.4	E	77	Cloudy
1530	270	265	8	10	0.4	E	77	Cloudy
1545	270	265	8	10	0.4	E	77	Cloudy
1600	265	265	8	10	0.4	E	76	Cloudy
1615	265	265	8	10	0.6	E	76	Cloudy
1630	265	260	8	10	0.6	E	76	Cloudy
1645	265	250	8	10	0.6	E	78	Cloudy
1700	260	240	8	10	0.6	E	75	Cloudy
1715	250	220	10	13	0.6	E	75	Cloudy
1730	240	200	12	16	0.8	E	75	Cloudy
1745	220	180	14	19	0.8	E	75	Cloudy
1800	200	160	16	22	0.8	E	74	Cloudy
1815	180	140	18	21	0.8	E	74	Cloudy
1830	160	120	15	17	1.0	FG	74	Cloudy
1845	140	105	12	13	1.0	FG	74	Cloudy
1900	120	95	9	11	1.0	FG	73	Cloudy
1915	105	90	7	9	1.2	FG	73	Cloudy
1930	95	95	5	7	1.2	FG	73	Cloudy
1945	90	90	5	7	1.2	FG	72	Cloudy
2000	90	85	5	7	1.2	FG	72	Cloudy
2015	95	90	5	7	1.2	FG	72	Cloudy
2030	90	85	5	7	1.2	FG	71	Cloudy
2045	95	95	5	4	1.2	FG	71	Cloudy
2100	90	90	2.5	4	1.2	FG	70	Cloudy
2115	95	85	2.5	4	1.2	FG	70	Cloudy
2130	90	95	2.5	4	1.2	FG	69	Cloudy
2145	95	90	2.5	4	1.2	FG	68	Cloudy
2200	90	85	2.5	4	1.2	FG	68	Cloudy

NWS FORECAST FOR 1400 - 2200 hrs: Breezy warm and cloudy with temperatures in the low 80's by afternoon. Continued cloudy and warm with slowing winds from the east expected this evening.

NWS FORECAST AFTER 2200 hrs: Winds from the northwest, and scattered showers are expected around midnight. Clearing skies expected by morning

Dose Assessment

Data

Package

Section VII

(Part C.6)

Dose Projections

The Atmospheric Radioactive Effluent Release Assessment System (ARERAS) is the computer hardware by which dose projections are primarily done at BVPS Units #1 & 2, with hand calculations being the backup method. ARERAS runs the Meteorological Information and Dose Assessment System (MIDAS) software which calculates the dose projection results.

MIDAS has access to real-time site meteorology, real-time gaseous effluent radiation monitor data, environmental Rueter-Stokes monitors, and accident assessment files to determine projected doses from any release point at either BVPS Unit #1 or #2.

For the Fuel Pool leak to the Ohio River, liquid dose projections can be calculated on MIDAS. It will be determined that the release has exceeded the NRC MPC limits (but not the EPA MPC limits) and if the release time is greater than 15 minutes, it will meet Unusual Event criteria (an Unusual Event will not be declared, but this information should be included on the next Follow-up Notification). Also, Radcon should call and dispatch teams to the Midland Water Treatment Plant.

For this Exercise, the radioactive release will occur from the Steam Generator Tube Rupture (SGTR) via the Code Safety to the environment. The postulated location of the tube rupture is near the base of the tube sheet in the "C" Steam Generator. Due condensation, the small amount of water remaining in the bottom of the Steam Generator and the location of the tube rupture a small fraction of the expected partitioning will occur. Approximately 7-10 times the calculated amount of Iodine will be released to the environment (7-10 times the amount calculated on MIDAS or EPP/IP 2.6.1 "Dose Projection - Backup Methods").

A MIDAS dose projection has been included as an example of the MIDAS format for presenting data. This data was developed using a SGTR Accident, 2.5 uCi/cc on 2MSS-RQ-101C, a windspeed of 5 MPH, FG stability and a wind direction from 90 degrees.

The MIDAS "Class A Model" or hand calculations may be used during the exercise for a quick accident assessment.

Due to time constrictions and demand on the computer system, the "MIDAS Class B" model may not be used. If the Class B model is demonstrated, it will be late in the exercise and the data provided for the Class A model will be sufficient for the Class B model.

EPP/IP-2.7
Attachments 2,3,7,8
Equivalent

DUQUESNE LIGHT COMPANY
Beaver Valley Power Station

UNIT 2

LIQUID RELEASE ASSESSMENT

Nuclide	Concentration,uCi/cc Input	Decayed	NRC MPC Fraction	EPA MPC Fraction
CO-57	8.130E-06	8.109E-06	2.027E-02	8.109E+00
CO-58	3.340E-04	3.307E-04	3.638E+00	1.091E+03
CO-60	1.300E-03	1.300E-03	4.288E+01	1.300E+04
CS-134	2.950E-04	2.947E-04	3.242E+01	3.831E+03
CS-137	6.630E-04	6.630E-04	3.315E+01	3.315E+03
FE-55	1.800E-06	1.799E-06	2.338E-03	8.994E-01
H-3	1.520E-01	1.520E-01	5.015E+01	7.599E+03
		TOTAL	1.623E+02	2.884E+04
		DILUTED TOTAL	1.623E+02	3.031E-02

Release Start:
Release Stop: UNTERMINATED
Release Duration: 999 Minutes

Sample Time:
Sample Location: Tank or Piping
Decay Period: 1440 Minutes

Release Rate: 2.500E+01 gpm
C.T. Blowdown U1,U2: 0.0 0.0 gpm
Ohio River Flow: 2.379E+07 gpm

****
* USNRC MPC AT ENTRY TO RIVER EXCEEDED - DECLARE *
* UNUSUAL EVENT IF RELEASE DURATION EXCEEDS 15 *
* MINUTES. *
****

NOTE: See Procedure EPP/IP-2.7.1 For Action to be Taken if There is More Than One Release Onsoing. This Procedure Must be Repeated for Each Such Release Point.

Calculated By	Checked By/
	Date/Time

This is BLUE Paper

MIDIAS - Monitor Inputs

```
**********************************************************************************
SITE: BV  UNIT: U2          ACRISX SUMMARY PRINT              BVPS VERSION 1.3
ACCIDENT TYPE: STEAM GENERATOR TUBE RUPTURE
 "MANUAL ENTRY OF MET"
 "MANUAL ENTRY OF RELEASE DATA"
**********************************************************************************
 EFFLUENT DATA SUMMARY:     TIME OF RUN: 920303  0938
 ----------------------
```

MONITOR ID	CURRENT READING	UNITS	CONV FACTOR TO UCI/CC	CURRENT READING TOTAL (UCI/CC)	FLOW (CFM) OR (LB/HR)	MONITOR VALUE Q NOBL GAS (UCI/SEC)	MONITOR VALUE Q IODINE (UCI/SEC)
HVS-101A	0.0E+00	B	0.0E+00	0.0E+00	0.0E+00	0.0E+00	0.0E+00
HVS-101B	0.0E+00	B	0.0E+00	0.0E+00	0.0E+00	0.0E+00	0.0E+00
HVL-112A	0.0E+00	B	0.0E+00	0.0E+00	0.0E+00	0.0E+00	0.0E+00
HVL-112B	0.0E+00	B	0.0E+00	0.0E+00	0.0E 00	0.0E+00	0.0E+00
HVS*109A	0.0E+00	B	0.0E+00	0.0E+00	0.0E 10	0.0E+00	0.0E+00
HVS*109L	0.0E+00	B	0.0E+00	0.0E+00	0.0E 00	0.0E+00	0.0E+00
HVS*109M	0.0E+00	B	0.0E+00	0.0E+00	0.0E+00	0.0E+00	0.0E+00
HVS*109H	0.0E+00	B	0.0E+00	0.0E+00	0.0E+00	0.0E+00	0.0E+00
RMQ-303A	0.0E+00	B	0.0E+00	0.0E+00	0.0E+00	0.0E+00	0.0E+00
RMQ-303B	0.0E+00	B	0.0E+00	0.0E+00	0.0E+00	0.0E+00	0.0E+00
RMQ-301A	0.0E+00	B	0.0E+00	0.0E+00	0.0E+00	0.0E+00	0.0E+00
RMQ-301B	0.0E+00	B	0.0E+00	0.0E+00	0.0E+00	0.0E+00	0.0E+00
MSS*101A	0.0E+00	B	0.0E+00	0.0E+00	0.0E+00	0.0E+00	0.0E+00
MSS*101B	0.0E+00	B	0.0E+00	0.0E+00	0.0E+00	0.0E+00	0.0E+00
MSS*101C	2.5E+00	B	2.0E+00	4.9E+00	6.1E+03	1.4E+07	6.7E+04

UNIT DESIGNATOR FOR CURRENT READING
A = CPM, B = UCI/CC, C = UCI/SEC, D = MREM/HR, E = REM/HR

MIDIAS - SGTR Isotope

RELEASE PT	1	2	3	4
LOCATION	VENT VEN	SLCRS	DECON/WG	MAIN STM
MONITORS	HUL-112B HUL-112A HUS-101B HUS-101A	HUS*109H HUS*109M HUS*109L HUS*109A	RMQ-301B RMQ-301A RMQ-303B RMQ-303A	MSS*101C MSS*101B MSS*101A
EXIT VEL- FLOW(CFM)	2.56E+04	5.70E+04	8.70E+03	6.10E+03
ACC. TYPE		1, 2, 3 4, 5, 6 8,	10,	7, 9,
TOTAL RELEASE (UCI/SEC)	0.00E+00	0.00E+00	0.00E+00	1.41E+07
KR85M	0.00E+00	0.00E+00	0.00E+00	5.54E+05
KR85	0.00E+00	0.00E+00	0.00E+00	3.07E+06
KR87	0.00E+00	0.00E+00	0.00E+00	2.79E+05
KR88	0.00E+00	0.00E+00	0.00E+00	8.20E+05
KR89	0.00E+00	0.00E+00	0.00E+00	3.74E+03
XE131M	0.00E+00	0.00E+00	0.00E+00	2.99E+04
XE133M	0.00E+00	0.00E+00	0.00E+00	8.53E+05
XE133	0.00E+00	0.00E+00	0.00E+00	7.28E+06
XE135M	0.00E+00	0.00E+00	0.00E+00	1.43E+05
XE135	0.00E+00	0.00E+00	0.00E+00	8.71E+05
XE137	0.00E+00	0.00E+00	0.00E+00	7.20E+03
XE138	0.00E+00	0.00E+00	0.00E+00	8.39E+04
I131	0.00E+00	0.00E+00	0.00E+00	1.81E+04
I133	0.00E+00	0.00E+00	0.00E+00	4.87E+04
TOT NOBLE	0.00E+00	0.00E+00	0.00E+00	1.40E+07
TOT PART	0.00E+00	0.00E+00	0.00E+00	0.00E+00
TOT IODINE	0.00E+00	0.00E+00	0.00E+00	6.69E+04

MIDIAS - Whole Body Plume Map

SITE: BEAVER VALLEY UNIT: TWO 3/ 3/92 09:43

MANUAL ENTRY OF MET
MANUAL ENTRY OF RELEASE DATA AND ACCIDENT TYPE MCA SCALE: 1.00 MILES

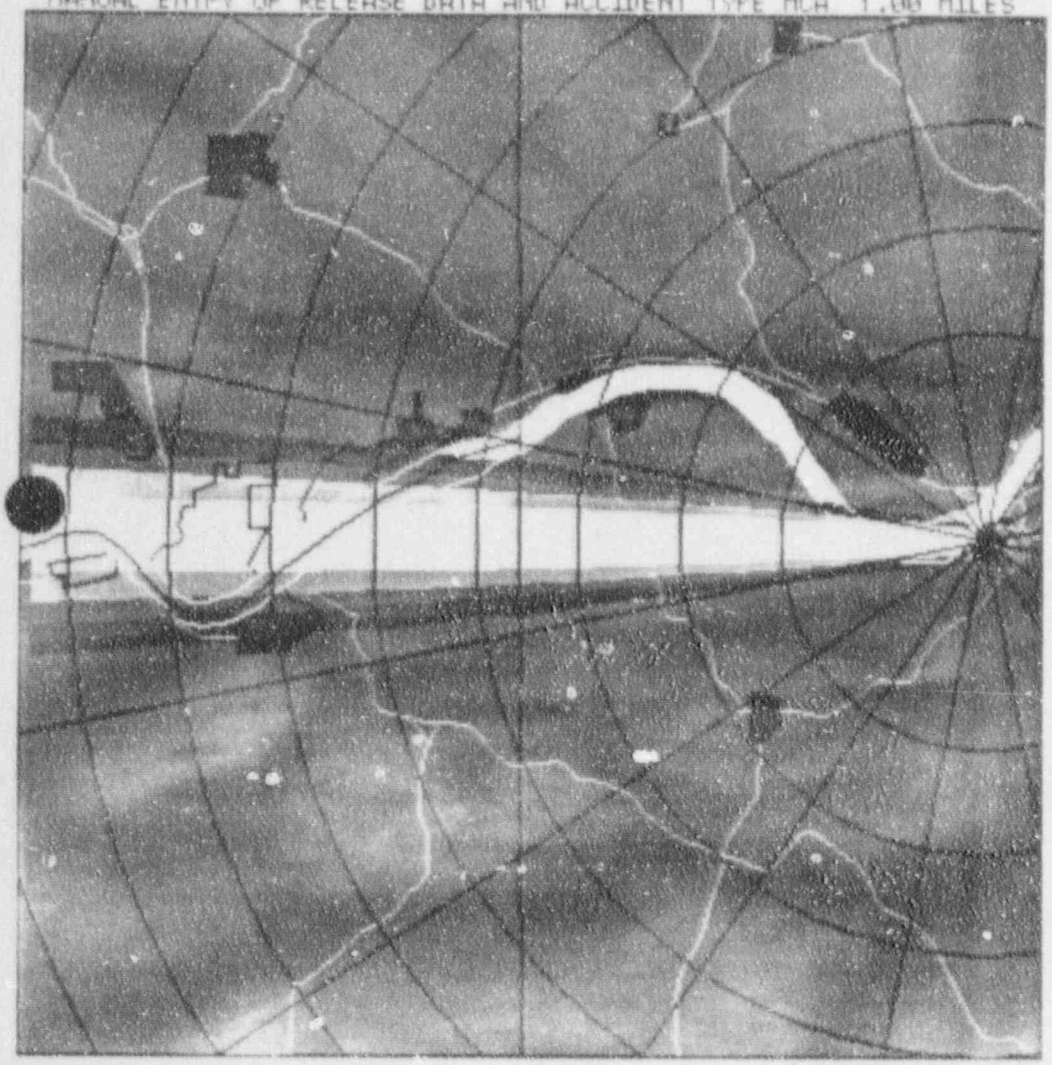

TIME AFTER ACCIDENT 0.0 HOURS
GAMMA DOSE (ADJ. FACTOR) 1.00
DATE OF MET 9203030938
RELEASE PT 4
SPEED(MPH) 5
DIR FROM 90
VERT STAB F(D)
HORIZ STAB F(D)
RELEASE TYPE GND
EXFL CFM/1000 6
MIXED MODE 0.00
PLUME HGT(FT) 0
PEAK (REM/HR) 2.88E-01
DST TO PK 6.1E+02(M)/ 0.4(MI)
TERRAIN AT PEAK(FT) 0.00E+00
DECAYED RELEASE(CI/SEC) 1.41E+01

CONTOUR LEGEND

3.0E-01
3.0E-02
3.0E-03
3.0E-04
3.0E-05
3.0E-06
3.0E-07

ISOTOPIC	REL. CI/SEC
XE133	7.29E+00
KR85	3.07E+00
XE135	8.71E-01
XE133M	8.53E-01
KR88	8.20E-01
KR85M	5.54E-01
KR87	2.79E-01
XE135M	1.43E-01
I131	1.81E-02
I133	4.87E-02

*** EAL IS: SITE EMERGENCY ***

MIDIAS - Dose Summary

DOSE RESULTS OFFSITE BY RELEASE PT(REM/HR)	VENT VEN RPT1	SLCRS RPT2	DECON/WG RPT3	MAIN STM RPT4	TOTALS
PEAK W BOD FOR EACH RP	0.0E+00	0.0E+00	0.0E+00	3.0E-01	
DIST TO PEAK(FT)	0.0E+00	0.0E+00	0.0E+00	2.0E+03	
W BOD AT TOTAL PK LOC	0.0E+00	0.0E+00	0.[illegible]E+00	3.0E-01	3.0E-01
DIST TO TOT PK WBOD(FT)	0.0E+00	0.0E+00	0.[illegible]E+00	2.0E+03	2.0E+03
W BOD SITE BOUNDARY	0.0E+00	0.0E+00	0.0E+00	3.0E-01	3.0E-01
W BOD AT 2 MILES	0.0E+00	0.0E+00	0.0E+00	5.6E-02	5.6E-02
W BOD AT 5 MILES	0.0E+00	0.0E+00	0.0E+00	1.7E-02	1.7E-02
W BOD AT 10 MILES	0.0E+00	0.0E+00	0.0E+00	7.1E-03	7.1E-03
PK THYRD FOR EACH RP	0.0E+00	0.0E+00	0.0E+00	1.0E+01	
DIST TO PEAK(FT)	0.0E+00	0.0E+00	0.0E+00	2.0E+03	
THYRD AT TOTAL PK LOC	0.0E+00	0.0E+00	0.0E+00	1.0E+01	1.0E+01
DIST TO TOT PK THYR(FT)	0.0E+00	0.0E+00	0.0E+00	2.0E+03	2.0E+03
THYRD SITE BOUNDARY	0.0E+00	0.0E+00	0.0E+00	1.0E+01	1.0E+01
THYRD AT 2 MILES	0.0E+00	0.0E+00	0.0E+00	2.1E+00	2.1E+00
THYRD AT 5 MILES	0.0E+00	0.0E+00	0.0E+00	6.9E-01	6.9E-01
THYRD AT 10 MILES	0.0E+00	0.0E+00	0.0E+00	3.3E-01	3.3E-01

Field Monitoring

Data

Package

Section VI

(Part C.7)

FIELD MONITORING DATA (For SGTR)

Closed Window Whole Body Dose Rate (mR/hr)

		Distance (miles)														
Time	* EAB	1.0	1.5	2.0	2.5	3.0	3.5	4.0	4.5	5.0	5.5	6.0	6.5	7.0	7.5	8.0
1954	--	--	--	--	--	--	--	--	--	--	--	--	--	--	--	--
2000	--	--	--	--	--	--	--	--	--	--	--	--	--	--	--	--
2006	5	--	--	--	--	--	--	--	--	--	--	--	--	--	--	--
2012	5	93	--	--	--	--	--	--	--	--	--	--	--	--	--	--
2018	5	93	63	--	--	--	--	--	--	--	--	--	--	--	--	--
2024	5	93	63	33	--	--	--	--	--	--	--	--	--	--	--	--
2030	5	93	63	33	25	--	--	--	--	--	--	--	--	--	--	--
2036	5	93	63	33	25	17	--	--	--	--	--	--	--	--	--	--
2042	5	93	63	33	25	17	14	--	--	--	--	--	--	--	--	--
2048	5	93	63	33	25	17	14	11	--	--	--	--	--	--	--	--
2054	5	93	63	33	25	17	14	11	10	--	--	--	--	--	--	--
+ 2100	5	93	63	33	25	17	14	11	10	9	--	--	--	--	--	--
2112	5	93	63	33	25	17	14	11	10	9	7	--	--	--	--	--
2124	5	93	63	33	25	17	14	11	10	9	7	6	--	--	--	--
2136	5	93	63	33	25	17	14	11	10	9	7	6	6	--	--	--
2142	5	93	63	33	25	17	14	11	10	9	7	6	6	--	--	--
2148	--	93	63	33	25	17	14	11	10	9	7	6	6	5	--	--
2154	--	93	63	33	25	17	14	11	10	9	7	6	6	5	--	--
2200	--	--	63	33	25	17	14	11	10	9	7	6	6	5	4	--

- EXERCISE ENDS -

+ Winds Stall to 2.5 mph

* Dose rate due to shine from the overhead plume (on-site only). The plume is at ground level at all other distances.

Note: OPEN WINDOW reading is 2 times the CLOSED WINDOW reading.

FIELD MONITORING DATA (For SGTR)

Air Sample Data for Silver Zeolite (ncpm)

Distance (miles)

Time	EAB	1.0	1.5	2.0	2.5	3.0	3.5	4.0	4.5	5.0	5.5	6.0	6.5	7.0	7.5
1954	--	--	--	--	--	--	--	--	--	--	--	--	--	--	--
2000	--	--	--	--	--	--	--	--	--	--	--	--	--	--	--
2006	--	--	--	--	--	--	--	--	--	--	--	--	--	--	--
2012	--	**	--	--	--	--	--	--	--	--	--	--	--	--	--
2018	--	**	**	--	--	--	--	--	--	--	--	--	--	--	--
2024	--	**	**	**	--	--	--	--	--	--	--	--	--	--	--
2030	--	**	**	**	**	--	--	--	--	--	--	--	--	--	--
2036	--	**	**	**	**	**	--	--	--	--	--	--	--	--	--
2042	--	**	**	**	**	**	42000	--	--	--	--	--	--	--	--
2048	--	**	**	**	**	**	42000	35000	--	--	--	--	--	--	--
2054	--	**	**	**	**	**	42000	35000	30500	--	--	--	--	--	--
+ 2100	--	**	**	**	**	**	42000	35000	30500	26000	--	--	--	--	--
2112	--	**	**	**	**	**	42000	35000	30500	26000	23500	--	--	--	--
2124	--	**	**	**	**	**	42000	35000	30500	26000	23500	21000	--	--	--
2136	--	**	**	**	**	**	42000	35000	30500	26000	23500	21000	19500	--	--
2142	--	**	**	**	**	**	42000	35000	30500	26000	23500	21000	19500	--	--
2148	--	**	**	**	**	**	42000	35000	30500	26000	23500	21000	19500	18000	--
2154	--	**	**	**	**	**	42000	35000	30500	26000	23500	21000	19500	18000	--
2200	--	--	**	**	**	**	42000	35000	30500	26000	23500	21000	19500	18000	17000

- EXERCISE ENDS -

+ Winds Stall to 2.5 mph

** E-140N with HP-210 probe is OFF-SCALE

Note: Background for all air samples = 200 cpm

Note: Data given is for 10 minute air samples using Ag(Ze) cartridges

SGTR PLUME
LOCATION AT 2012

SGTR PLUME
LOCATION AT 2018

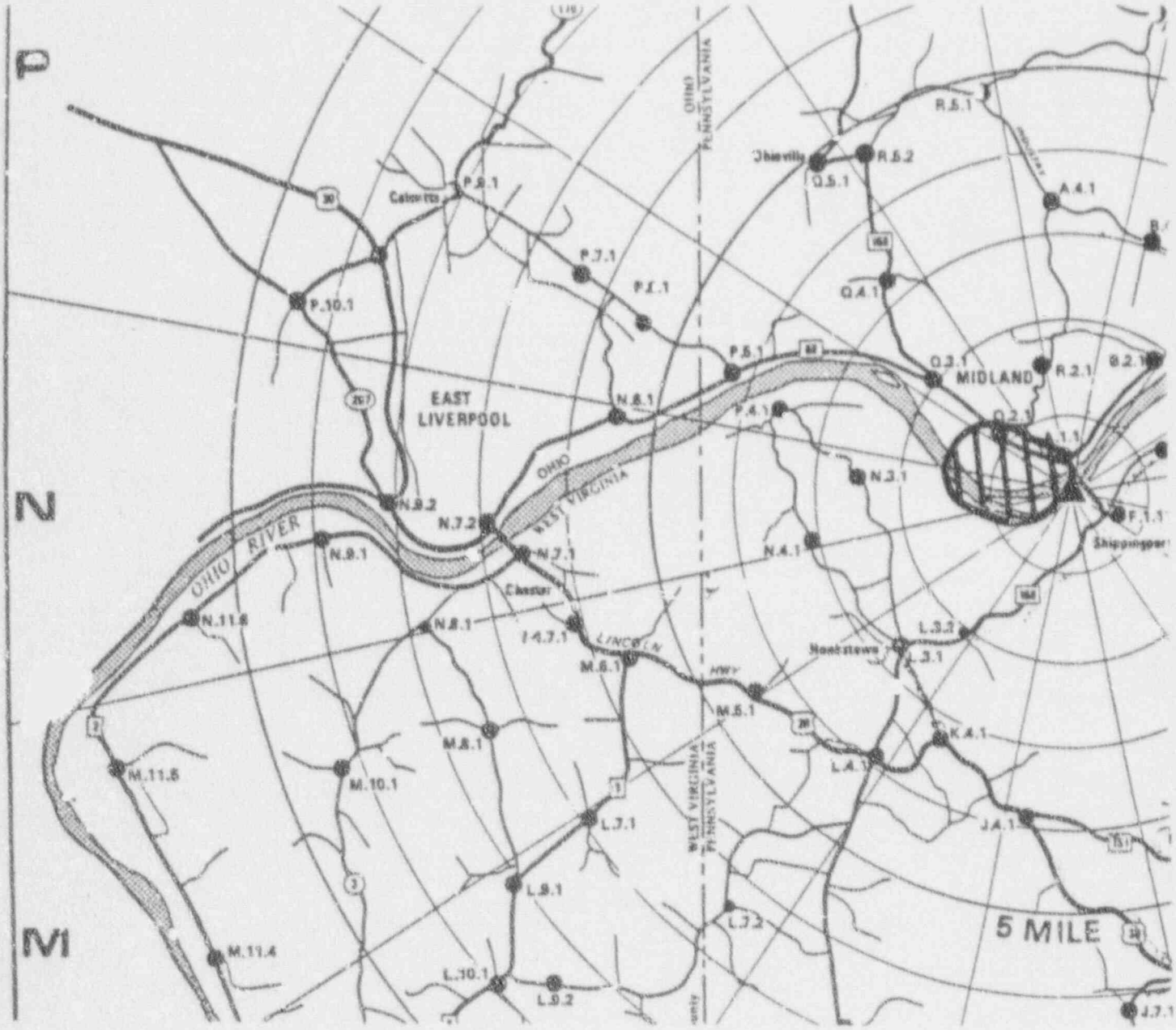

SGTR PLUME
LOCATION AT 2024

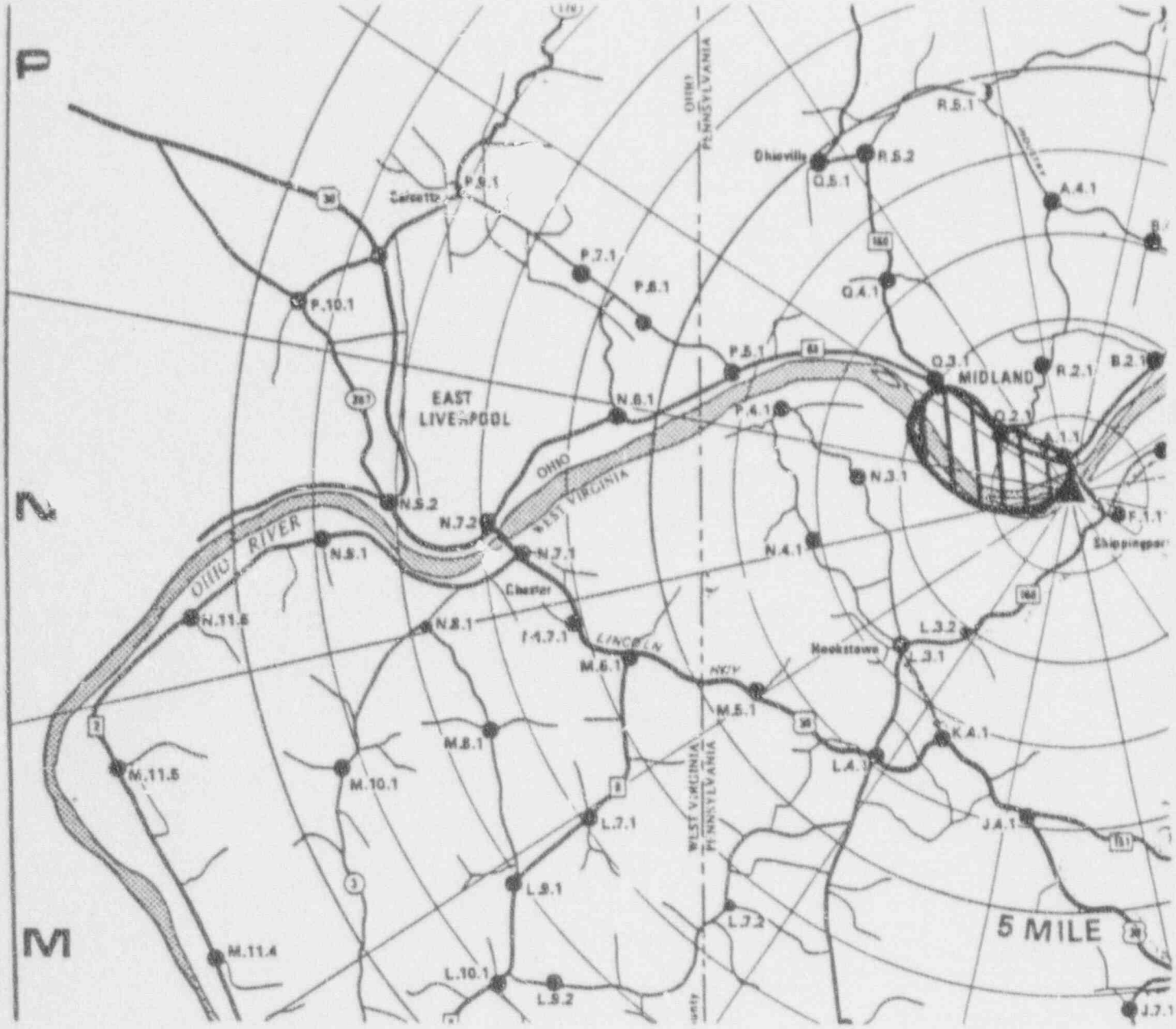

SGTR PLUME
LOCATION AT 2030

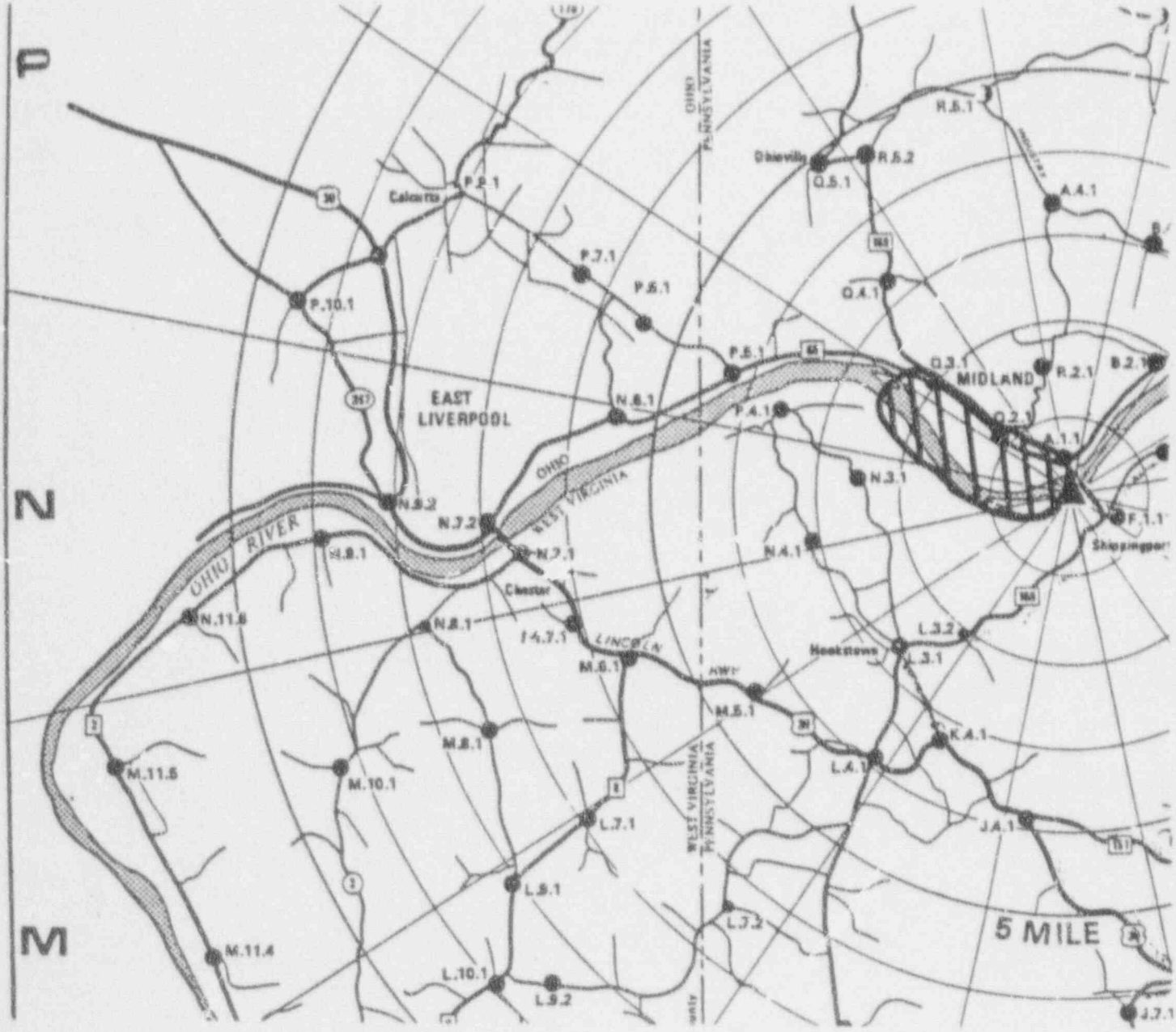

SGTR PLUME
LOCATION AT 2036

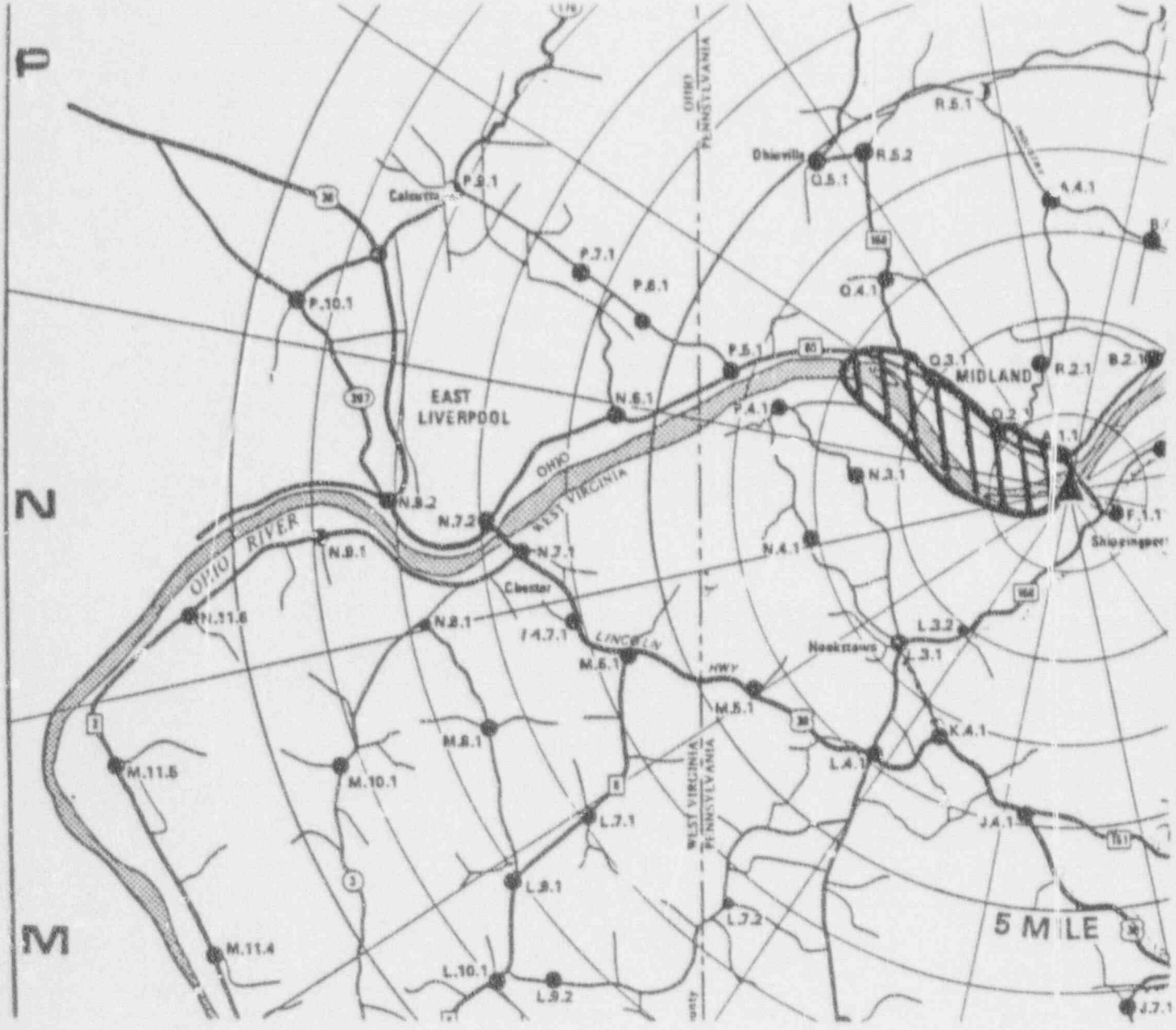

SGTR PLUME
LOCATION AT 2042

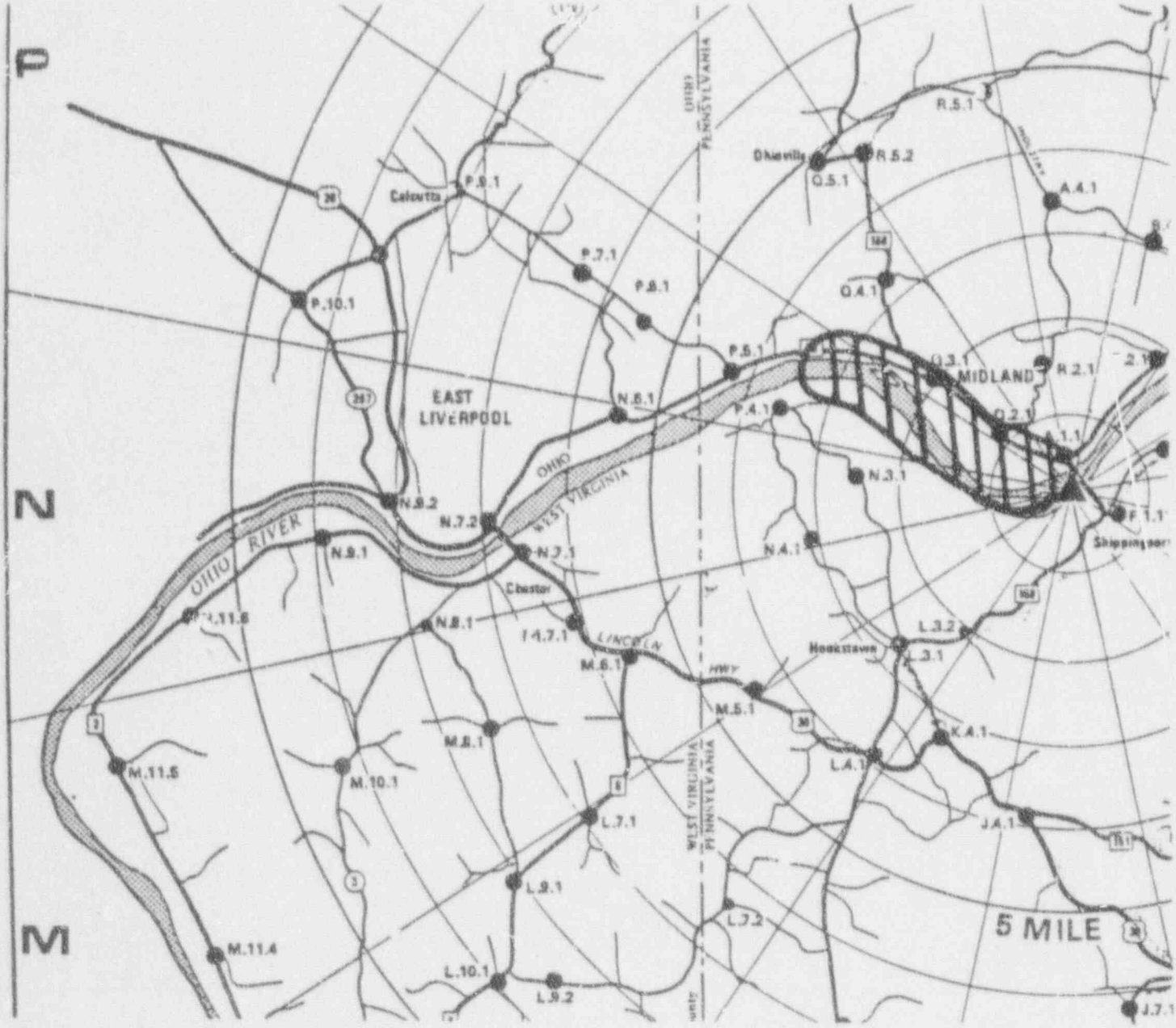

SGTR PLUME
LOCATION AT 2048

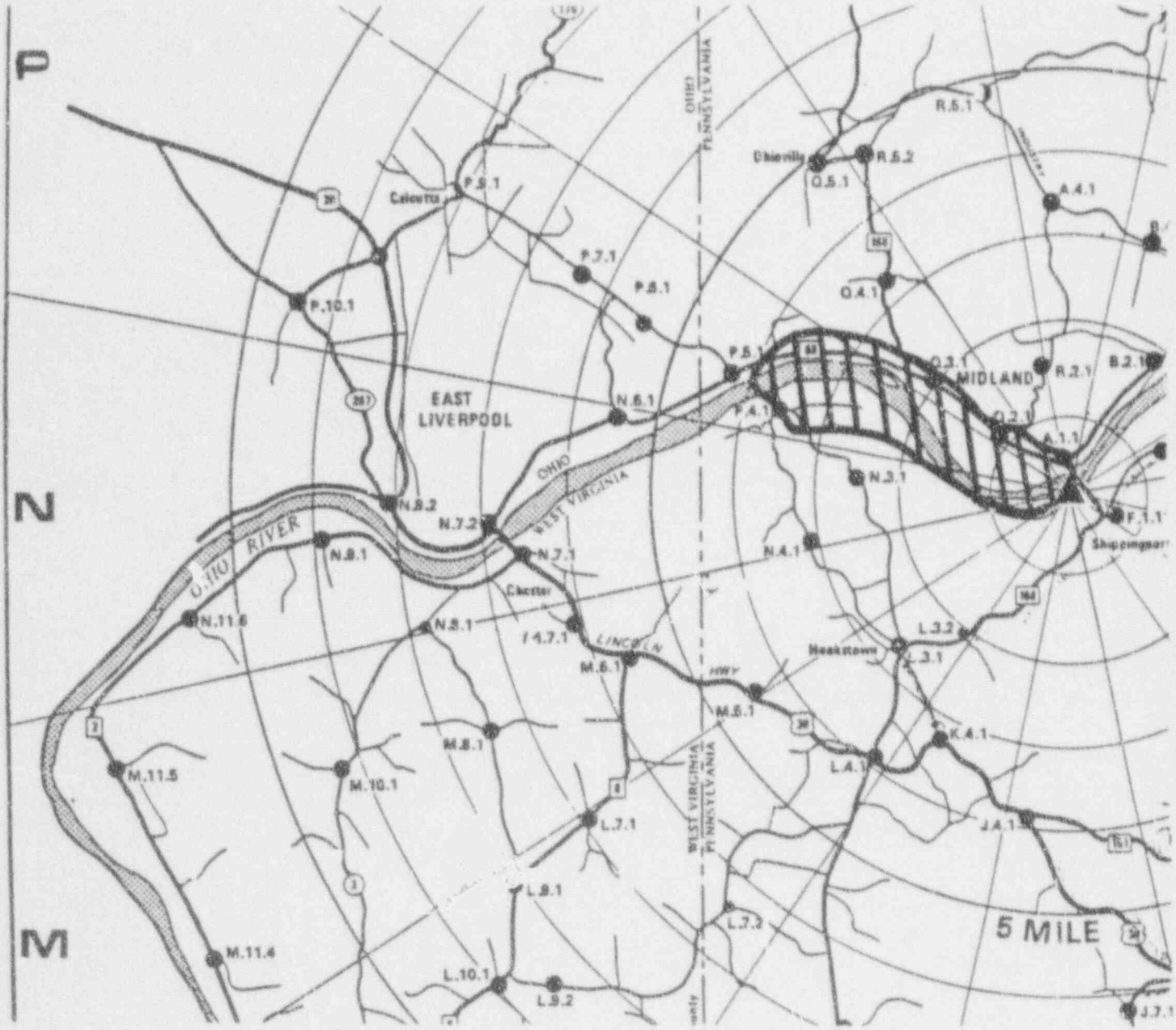

SGTR PLUME
LOCATION AT 2054

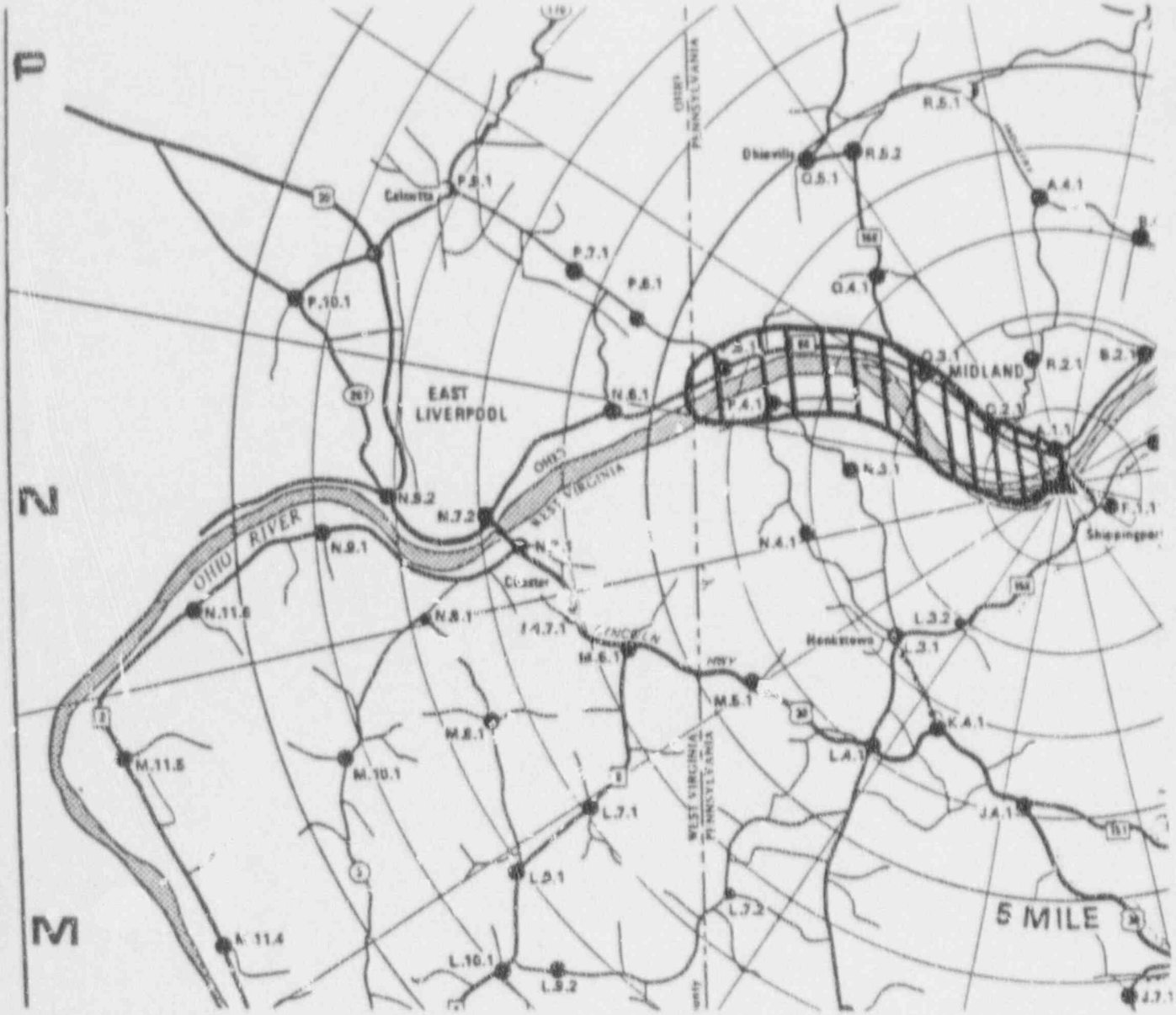

SGTR PLUME
LOCATION AT 2100

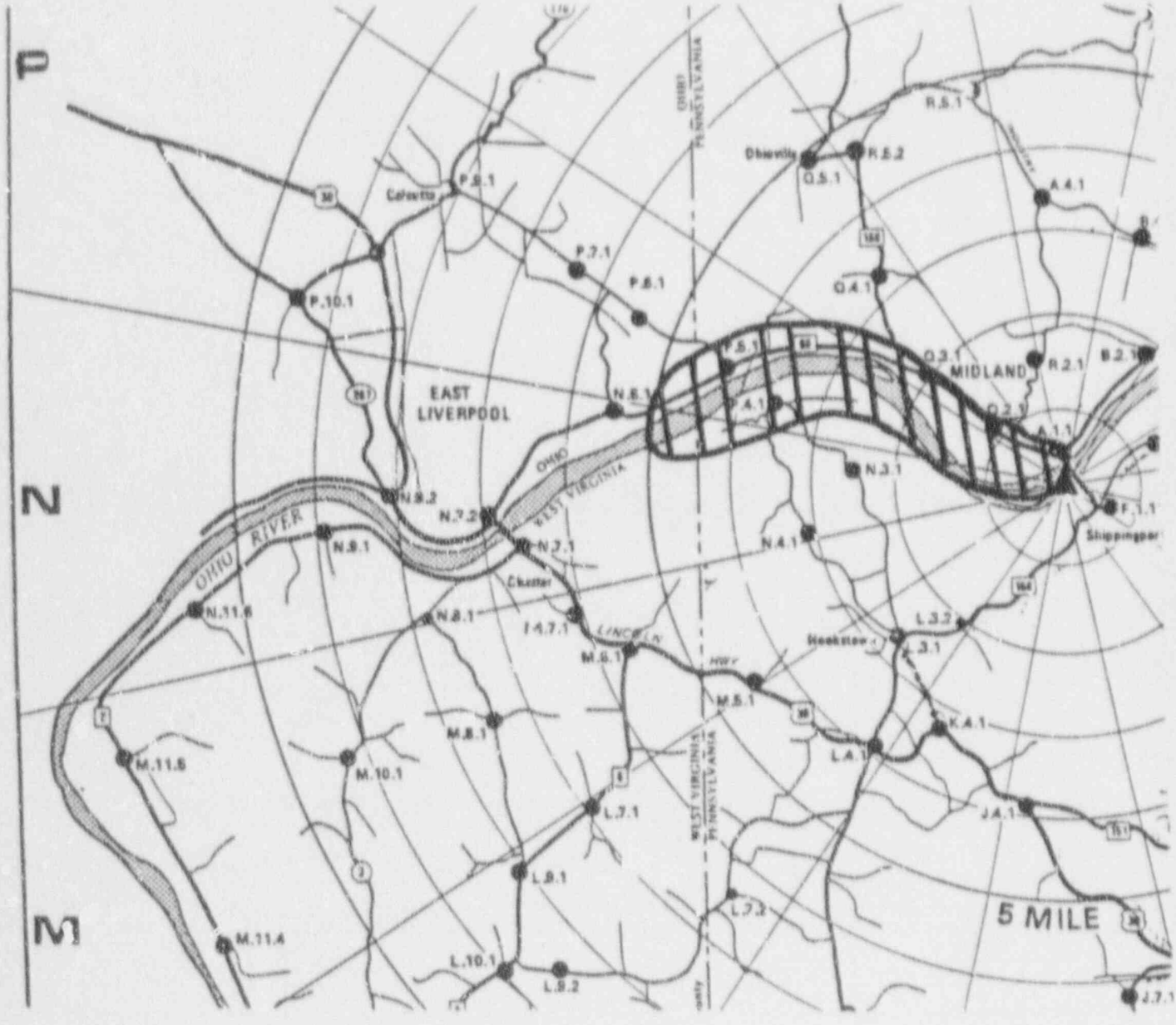

SGTR PLUME
LOCATION AT 2112

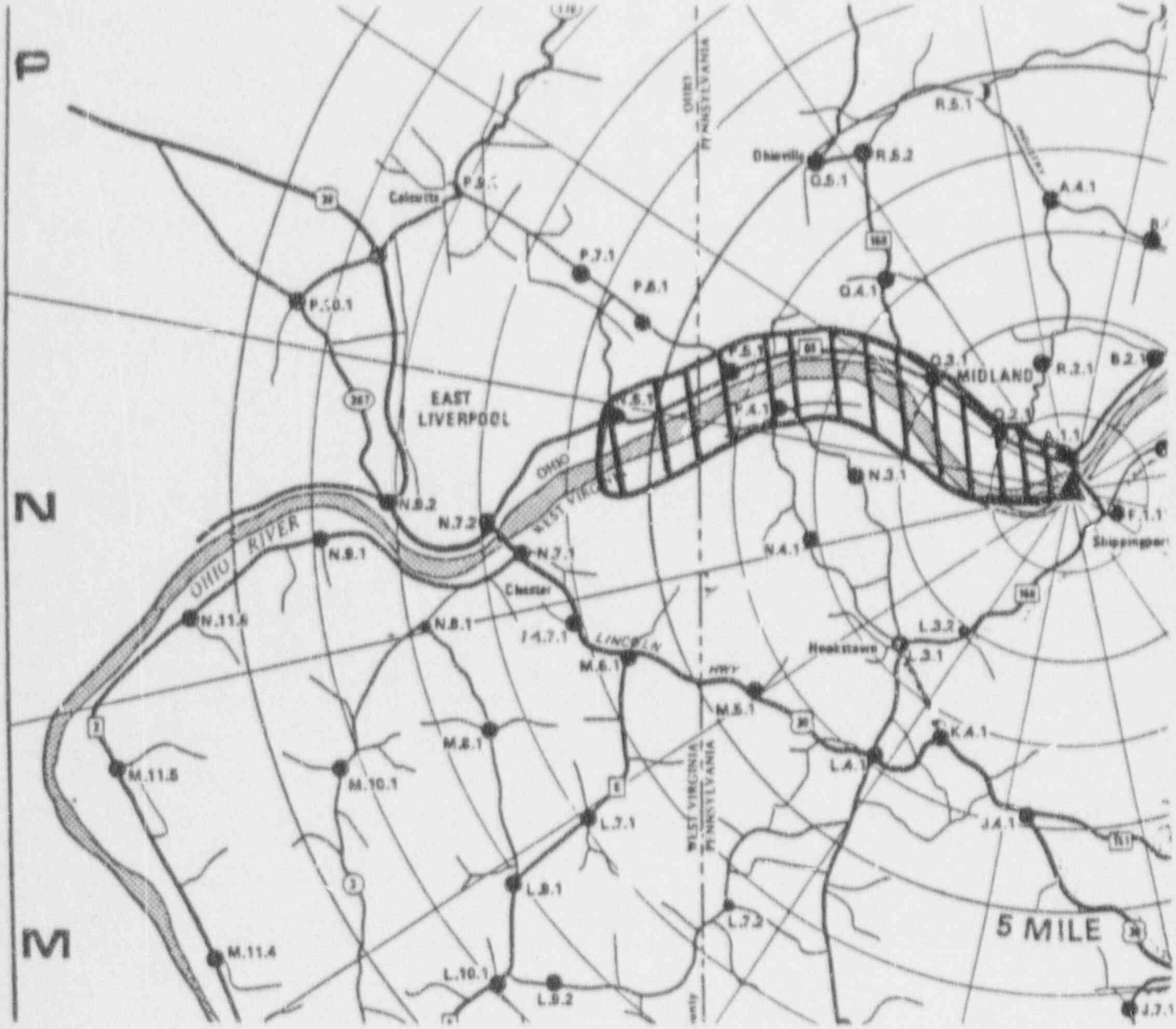

SGTR PLUME
LOCATION AT 2124

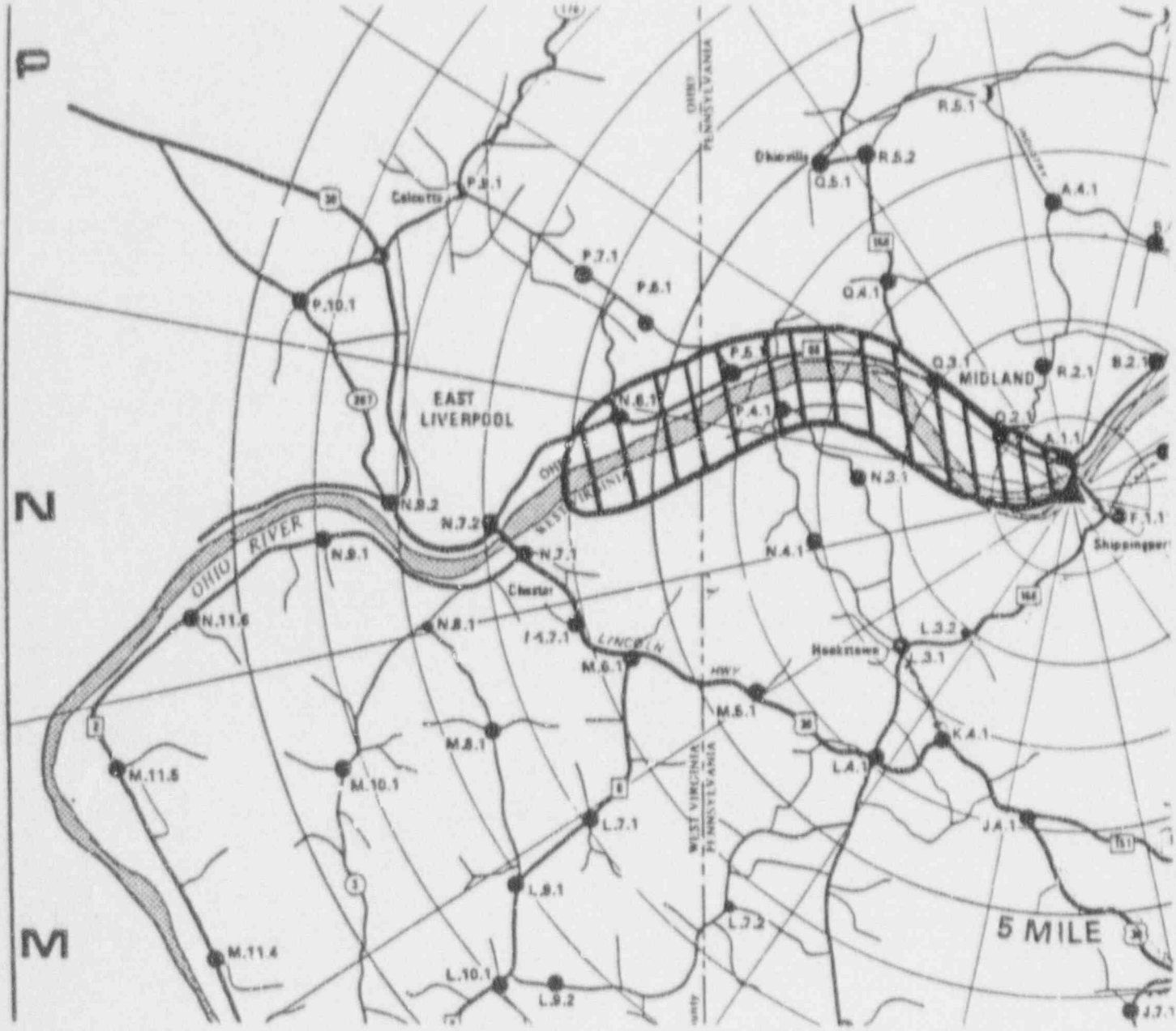

SGTR PLUME
LOCATION AT 2136

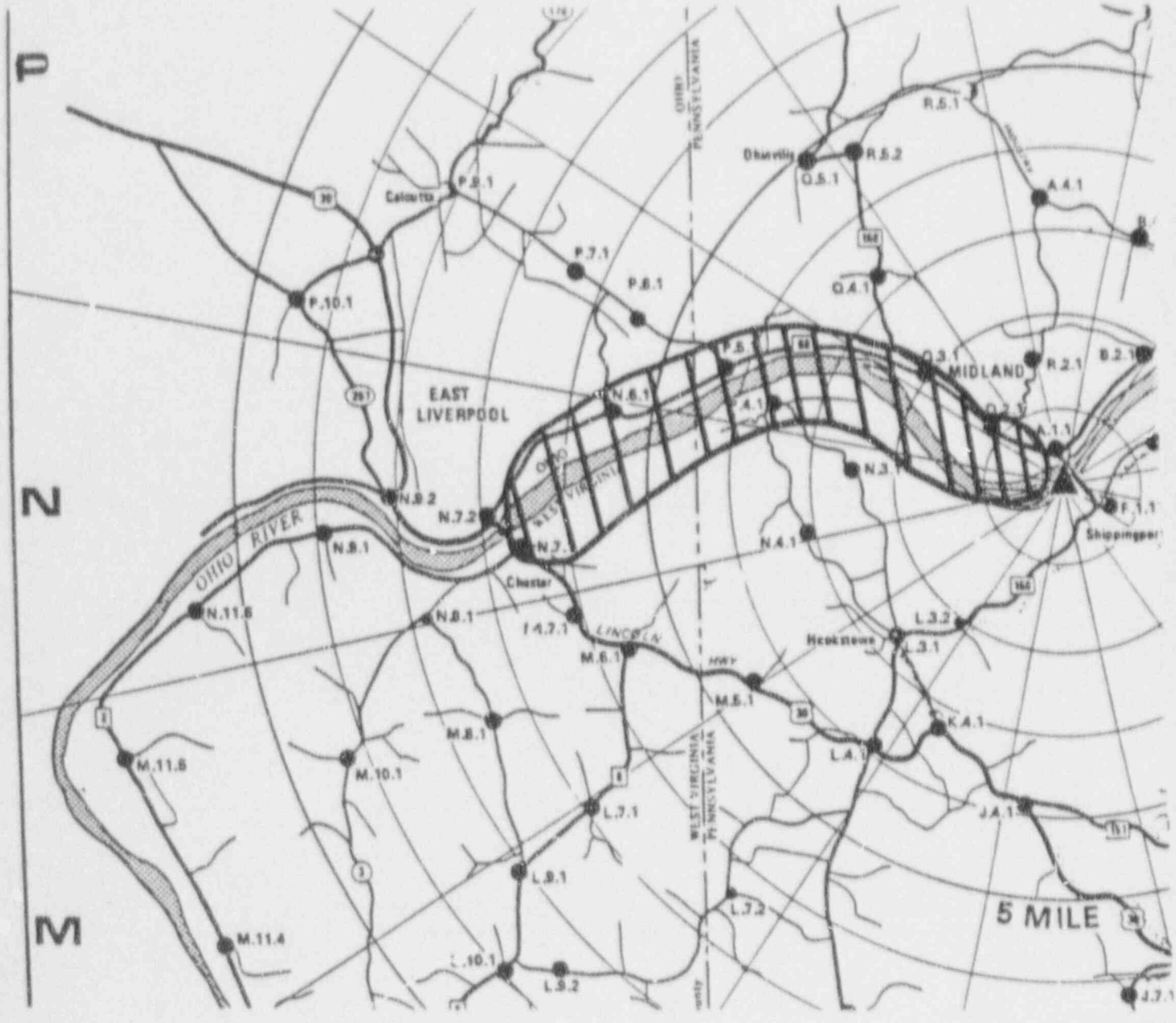

SCTR PLUME
LOCATION AT 2142

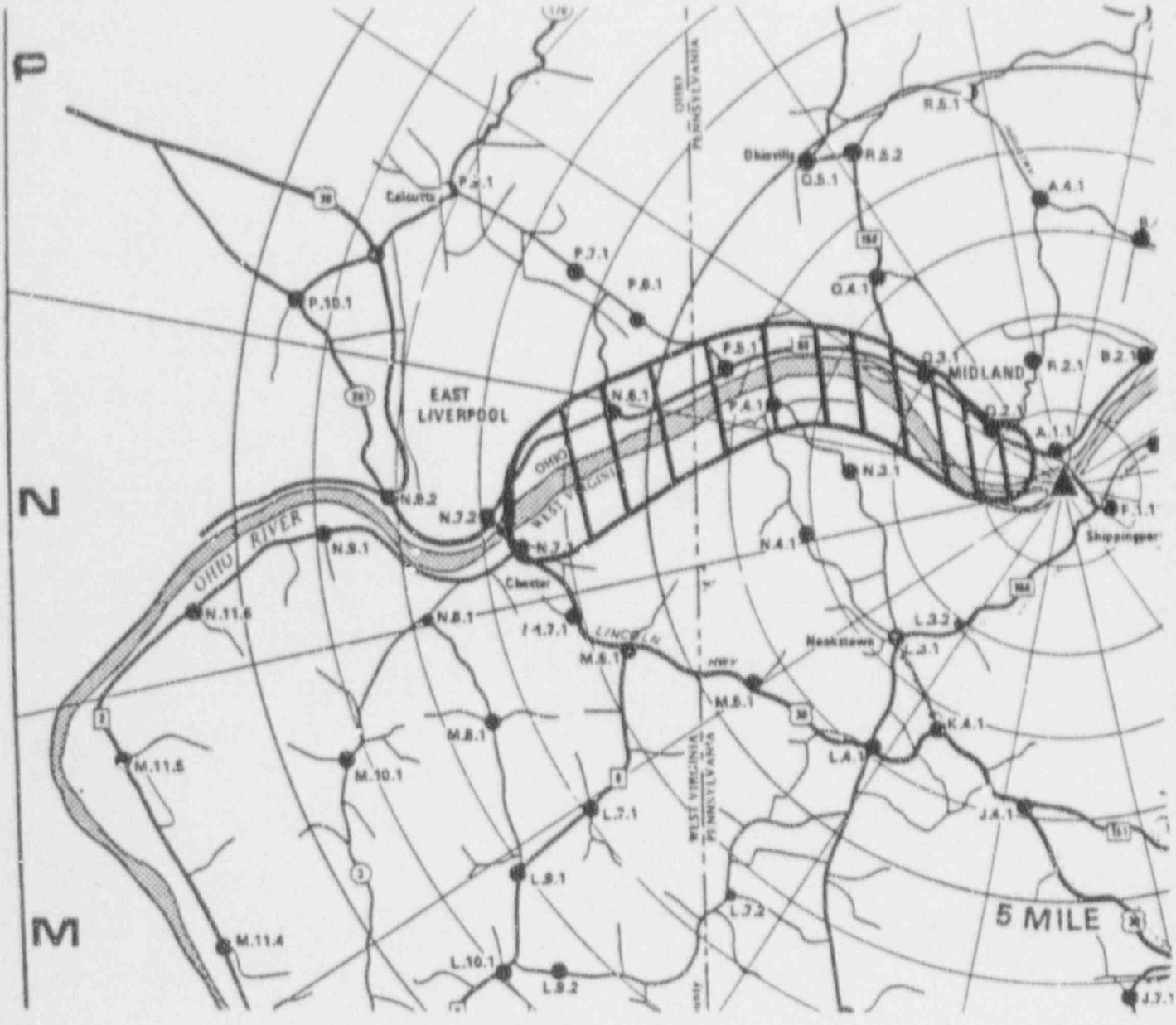

SGTR PLUME
LOCATION AT 2148

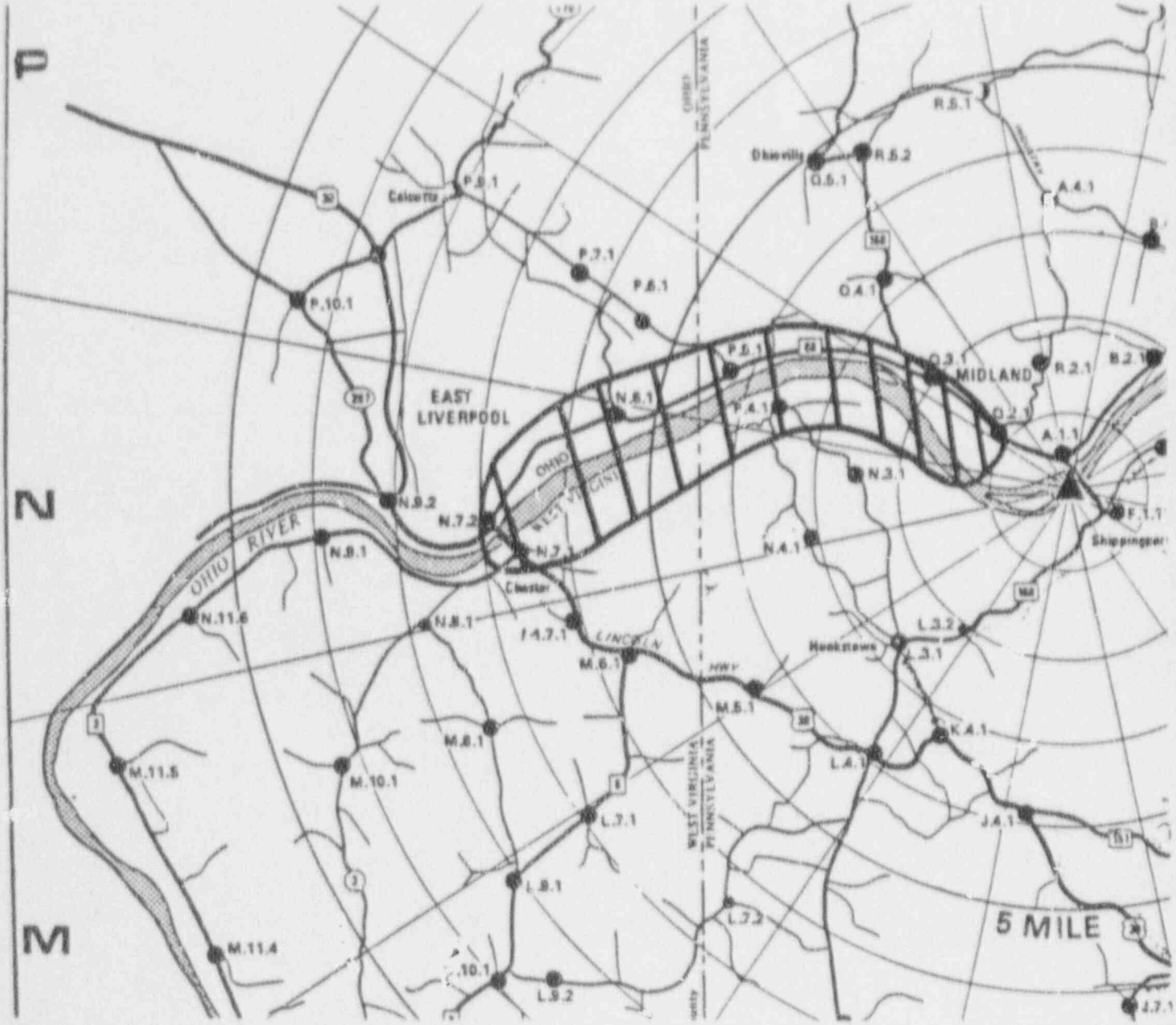

SGTR PLUME
LOCATION AT 2154

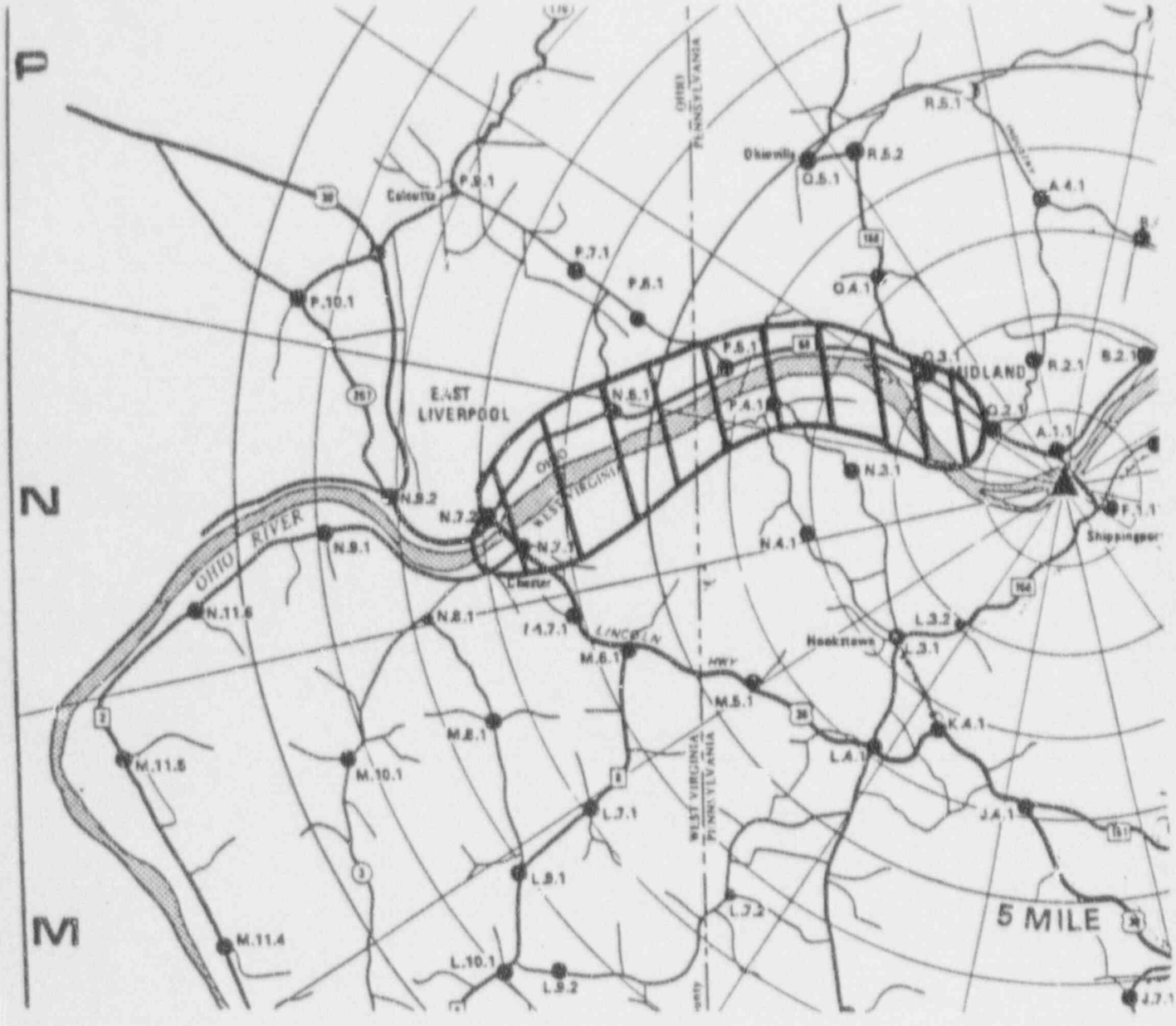

SGTR PLUME
LOCATION AT 2200

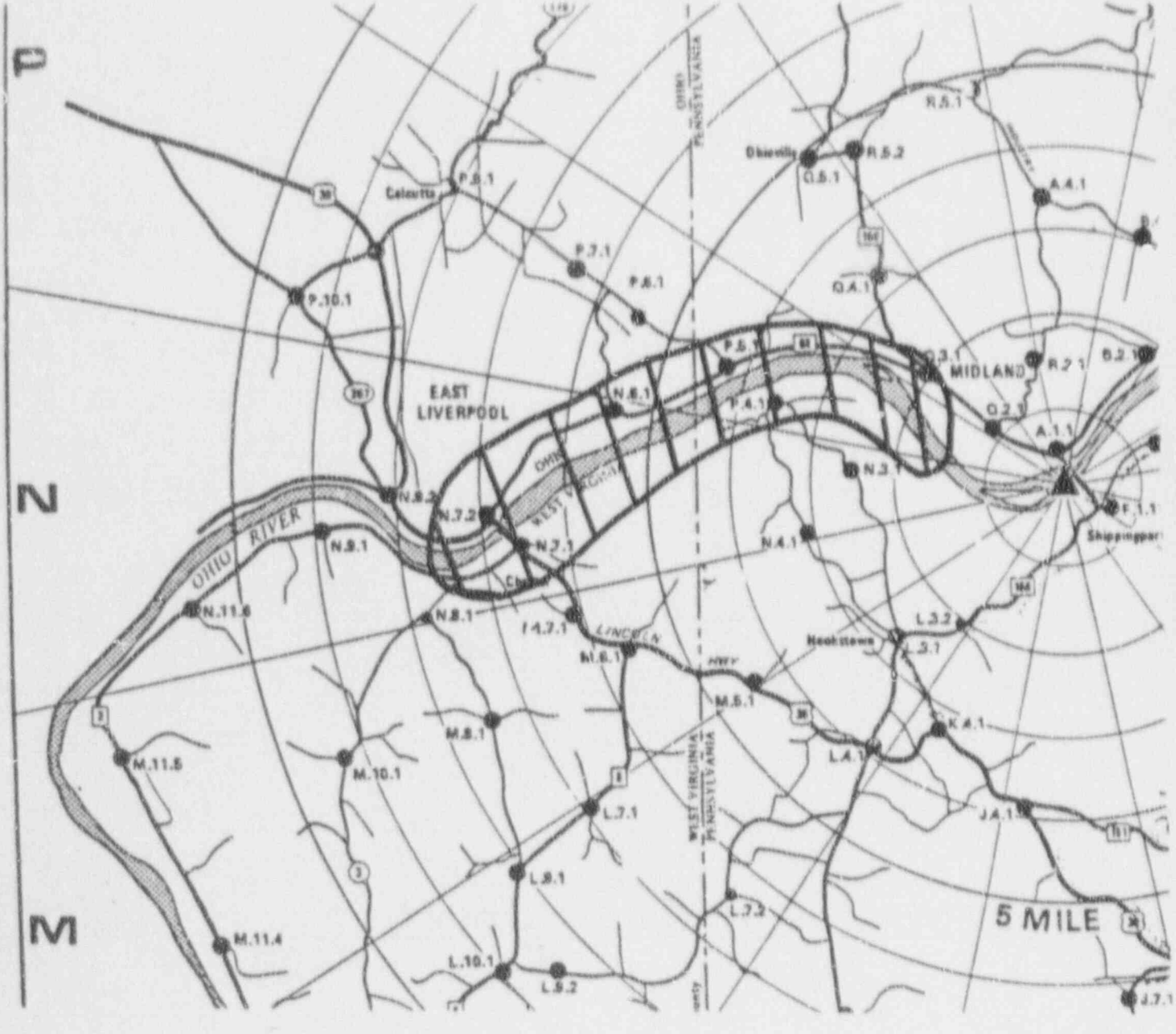

Injured Person Medical

Data

Package

Section VI

(Part C.8)

Section VI

Injured Person
Medical Response Data

Section VI

NOTE: It is not the intention of Duquesne Light to critique the hospital staff on the use of proper medical procedures for the patient described. Controllers are trained and familiar with hospital procedures concerning the handling of contaminated and irradiated persons and will concentrate their actions in this area. Medical information is provided to enhance the realism of the drill.

Also note that all messages by phone or radio will be annotated before and after with "This is a Drill".

CONTAMINATED/INJURED PERSON
&
LIQUID ISOTOPIC DATA

TIME: 1630 hrs.

EVENT: A laborer is working on a small ladder dusting piping associated with 2FNC-E-21A (the A train fuelpool heat exchanger). The worker slips and as he falls, his foot hits 2FNC- TI- 101A (the inlet temperature indicator for the exchanger). The blow breaks the temperature indicator and fuel pool water begins spraying out at a rate of approximately 25 gallons per minute. As he continues to fall, he strikes his left arm on the broken pipe, gashing his forearm. He lands on his feet and left arm; this causes a simple fracture of both forearm bones just above the wrist. Because of the spraying water and the injuries, he exits the building via the firedoor into the North Yard. The opening of the door causes a security alarm in the Central Alarm Station (CAS) and Security calls for a Response Guard to investigate. The officer finds the individual setting on the ground, wet, bleeding and very shaken. The Guard calls CAS, which notifies the Control Room that there is an injured person in the North Yard. (NOTE: The Response Guard may call the Control Room directly.) The Control Room activates the Emergency Squad. Although upset and in pain and chilled from being wet, the victim is fully alert.

Vital Signs for the Emergency Squad:

Approx. Time:	1642 hrs.
Respiration:	24
Pulse:	140
Skin:	pale
Pupils:	equal and reactive
Blood Pressure:	110/70
Contamination:	See body map

CONTAMINATED/INJURED PERSON
&
LIQUID ISOTOPIC DATA

Vital Signs for EMTs and Hospital:

All vital signs will be as actually read when taken.

See map contamination data.

The following are for liquid samples taken inside the Fuel Building:

Liquid isotopic:

Co 57	8.13E-6 uCi/ml
Co 58	3.34E-4 uCi/ml
Co 60	1.30E-3 uCi/ml
Ag 110m	5.67E-5 uCi/ml
Sb 122	3.79E-4 uCi/ml
Sb 125	1.76E-4 uCi/ml
Sr 92	1.51E-5 uCi/ml
Cs 134	2.95E-4 uCi/ml
Cs 137	6.63E-4 uCi/ml
Nb 97	5.46E-5 uCi/ml

CONTAMINATED/INJURED PERSON

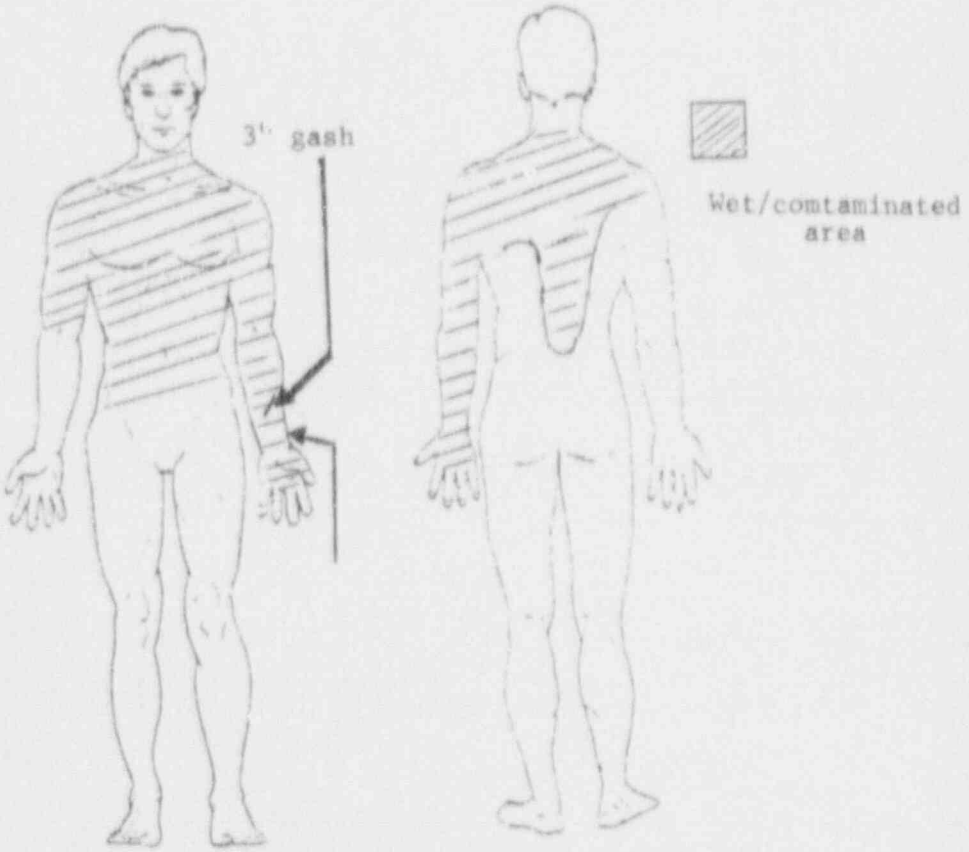

Shaded area will show 1500 cpm by direct frisk with an HP 210 type probe

CONTAMINATED/INJURED PERSON

FUEL HANDLING BUILDING EL. 735' 6"

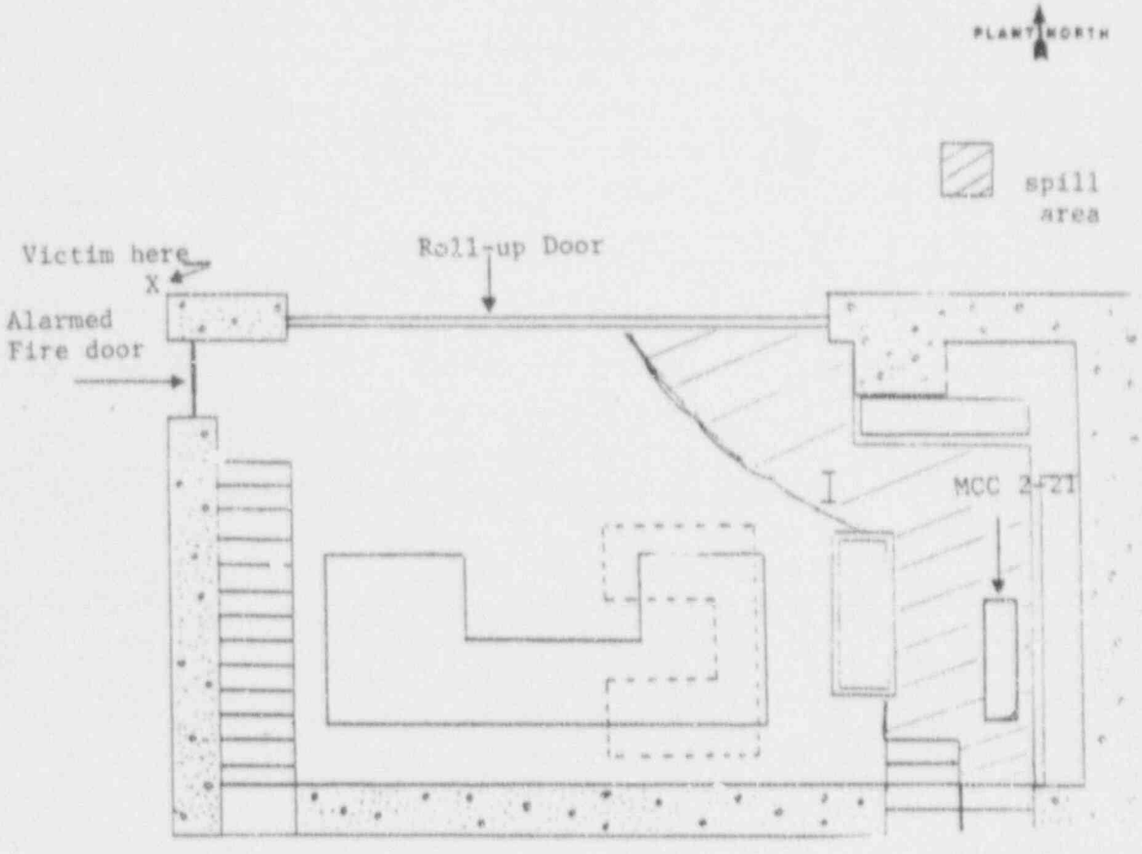

Miscellaneous

Section VII

(Part C.11)

Duquesne Light Company
Beaver Valley Power Station
P.O. Box 4
Shippingport, PA 15077

CONTACTS

Hal Szklinski
412-393-5772

Glenn McKee
412-393-5778

TRAVEL INFORMATION

Major Airports

Pittsburgh, PA

Motels

Willows
Industry, PA
412-643-4500

Quality Inn Airport
Coraopolis, PA
412-264-7900

Royce Airport
Coraopolis, PA
412-262-2400

Holiday Inn Airport
Coraopolis, PA
412-771-6500

Airport Hilton
Imperial, PA
412-262-3800

E. L. Motor Lodge
2340 Dresden Avenue
East Liverpool, OH
216-386-5858

PLANT: BEAVER VALLEY LOCATION: SHIPPINGPORT, PA

LICENSEE: DUQUESNE LIGHT CO.

DIRECTIONS FROM GREATER PITTSBURGH INTERNATIONAL AIRPORT:

North on Route 60. North 8 miles2 - Exit Aliquippa, left on Green Garden Road-Road changes names, cross Rt. 18 (on an angle) continue past Bruce Mansfield Coal Plant (3 Cooling Towers). 1 Mile past Coal Plant, turn in Beaver Valley Power Station Entrance, past bridge.

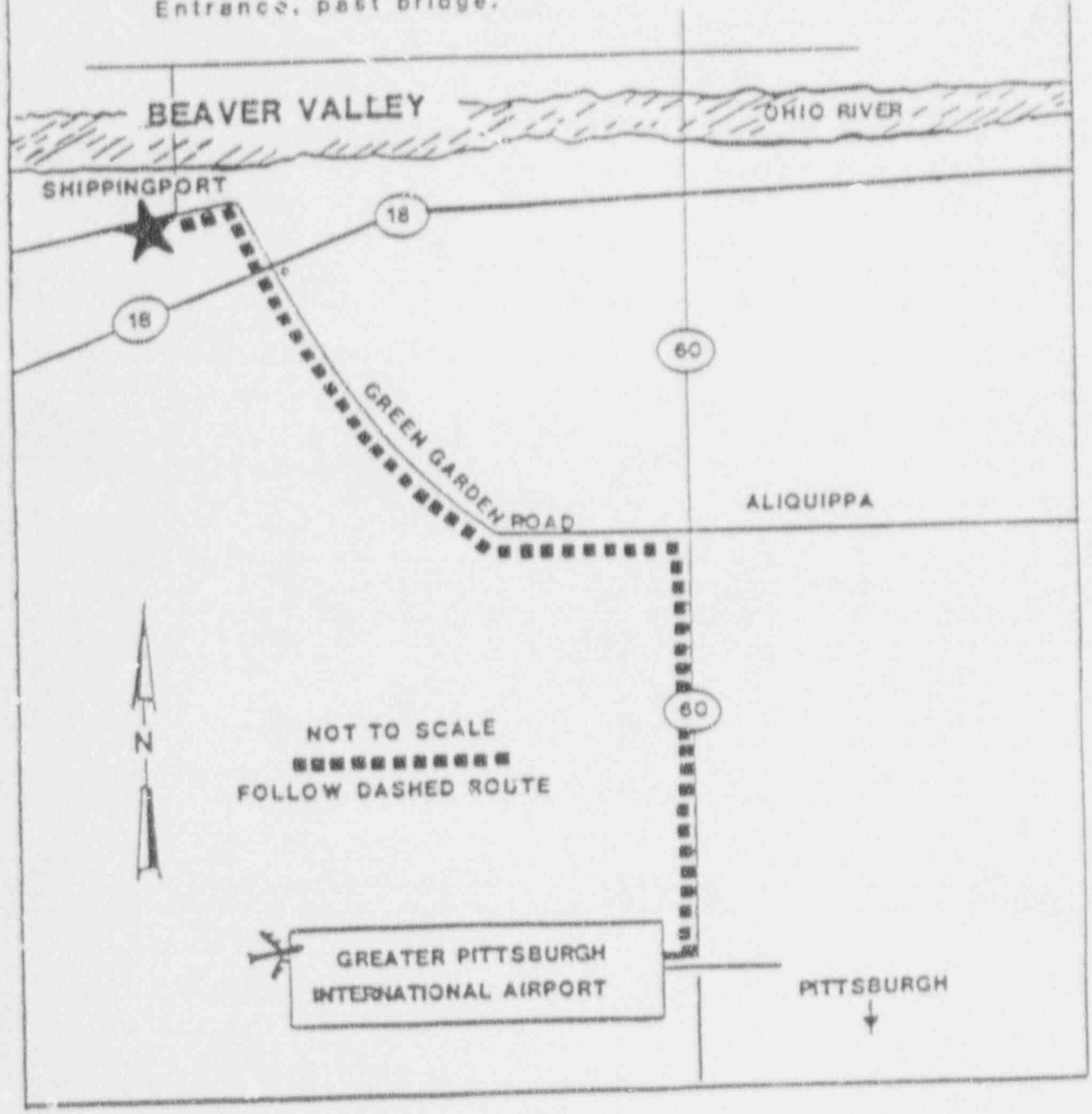

BVPS SITE MAP

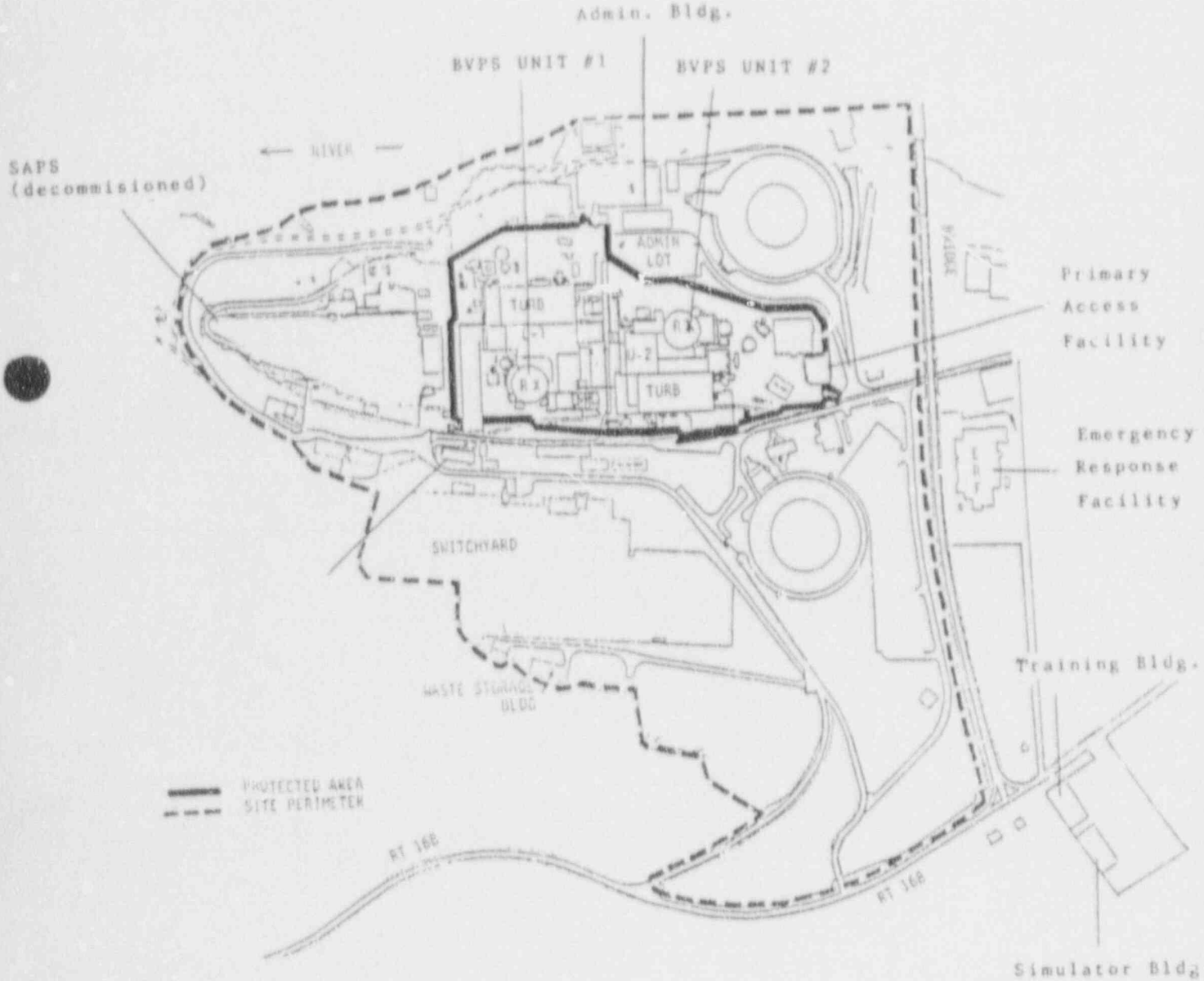

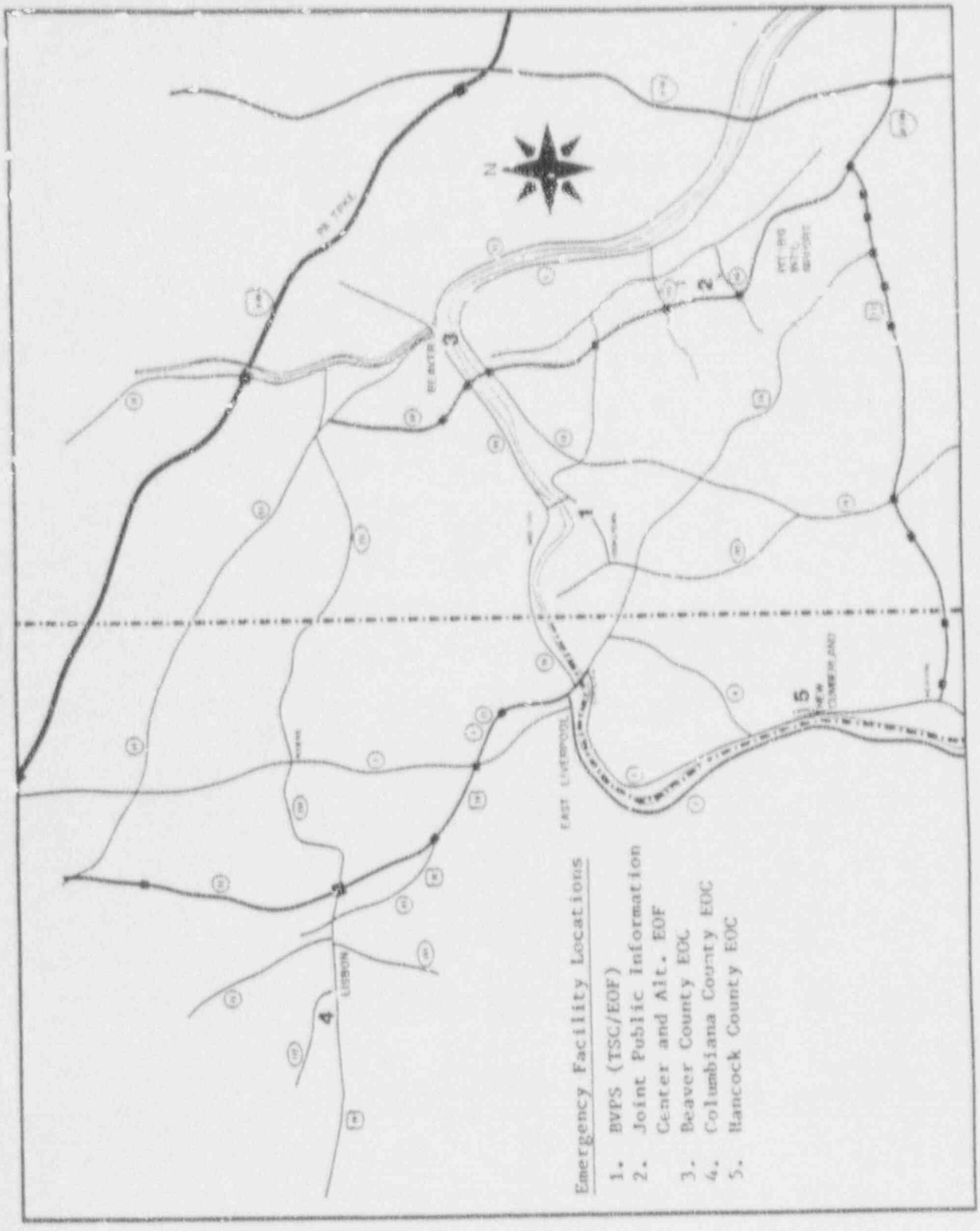
N
1
2
3
4
5
LISBON
EAST LIVERPOOL
Emergency Facility Locations
1. BVPS (TSC/EOF)
2. Joint Public Information Center and Alt. EOF
3. Beaver County EOC
4. Columbiana County EOC
5. Hancock County EOC

RADIOLOGICAL OPERATIONS CENTER (ROC)
(735')

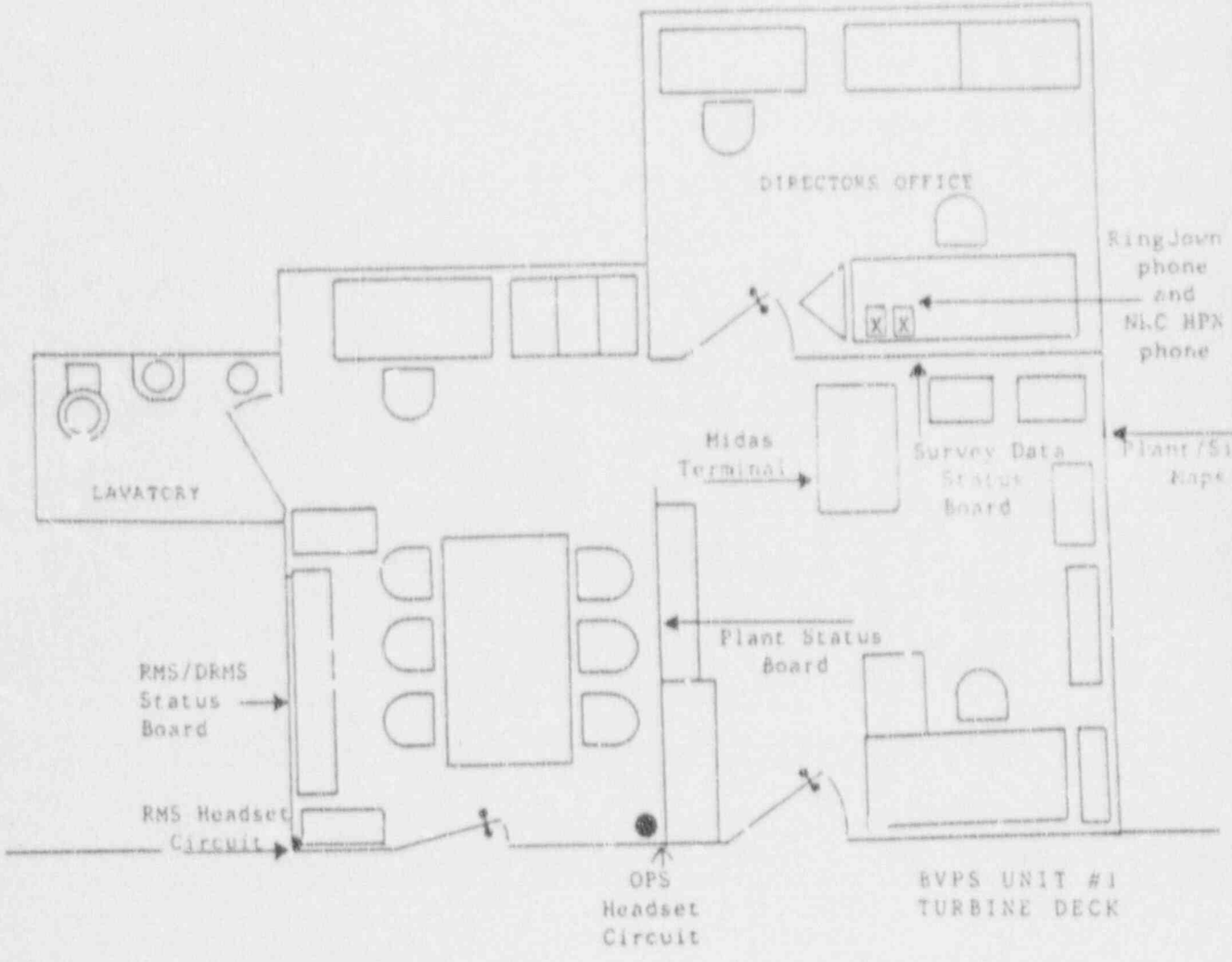

OPERATIONS SUPPORT CENTER (OSC)
(692')

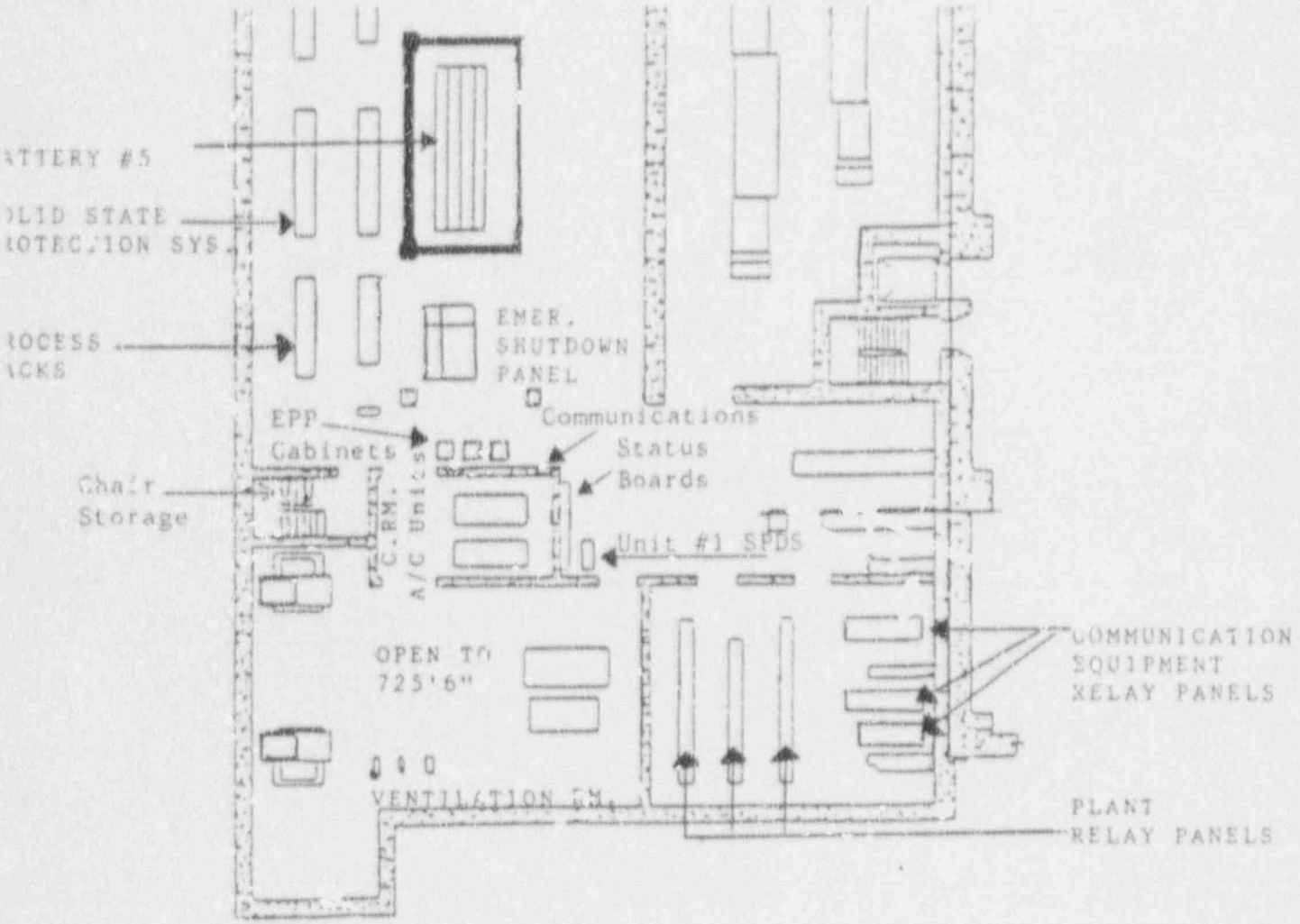

EMERGENCY RESPONSE FACILITY (ERF)

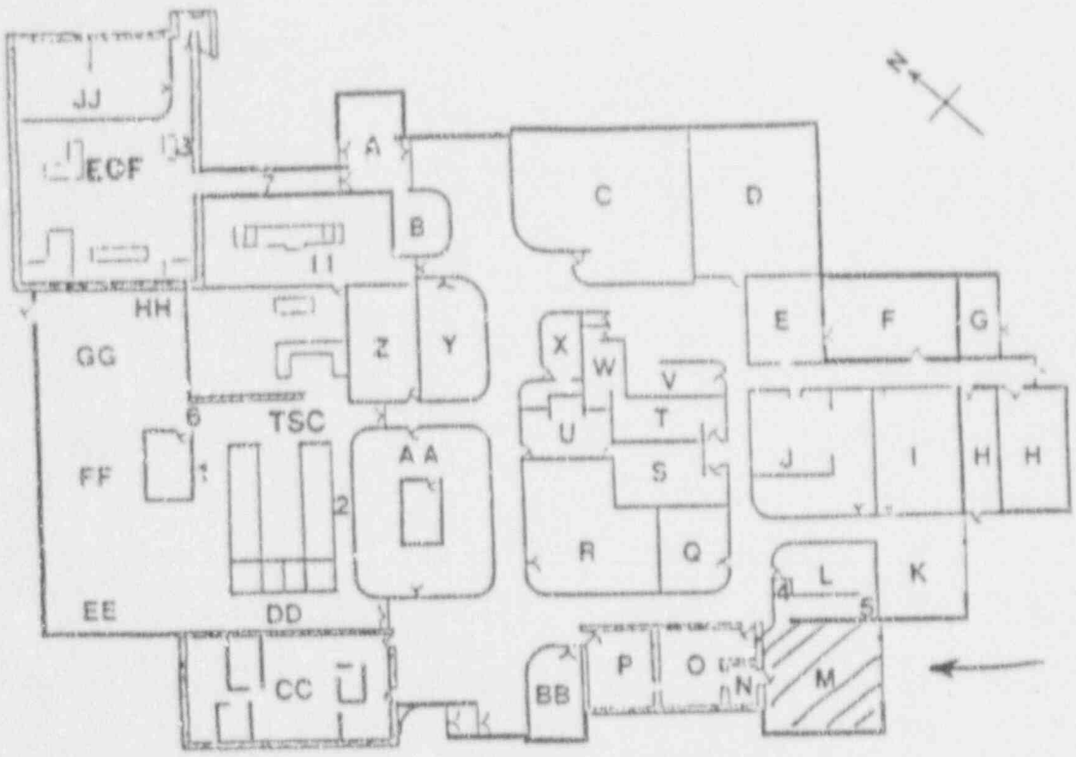

AREA DESIGNATIONS

A. Non-Emergency Entrance
B. Computer Group Office
C. Engineering
D. Office/Conference Room
E. Electrical Distribution Room
F. Equipment Court
G. Water Treatment Room
H. Electrical Control Room
H. Switchgear Room
I. UPS Battery Room
J. Mechanical Equipment Room
K. Service Dock
L. Decon Room/Showers
M. Garage/Emergency Entrance
N. Irradiation Facility
O. Chemistry Sample Prep Room
P. Chemistry Counting Room
Q. Xerox Room
R. Records Room
S. Men's Sleeping Area
T. Women's Sleeping Area
U. Men's Restroom
V. Kitchen and Lunch Room
W. Women's Restroom
X. Medical Room
Y. Communications Equipment Room
Z. Engineering Manager's Office
AA. Engineering Management Services/NRC Area
BB. Radcon Files
CC. Dosimetry Area
DD. Communications Area
EE. Environmental Station/LLEA
FF. Rad Health Services/LLEA
GG. Radiological Engineering
HH. Halon Storage/LLEA
II. Computer Room
JJ. Comp. Maint./Conf. Room

EPP CABINETS

1. TSC Cabinets 1,2,3
2. TSC Cabinets 4-10
3. EOF Cabinets 1,2,3
4. Access Area/Ram Van Supplies
5. Personnel Decon Cabinet & Decon Kit #2
6. Break Glass Box
7. EOF Air Sample Equip. Cart

ERF EMERGENCY ACCESS AREA

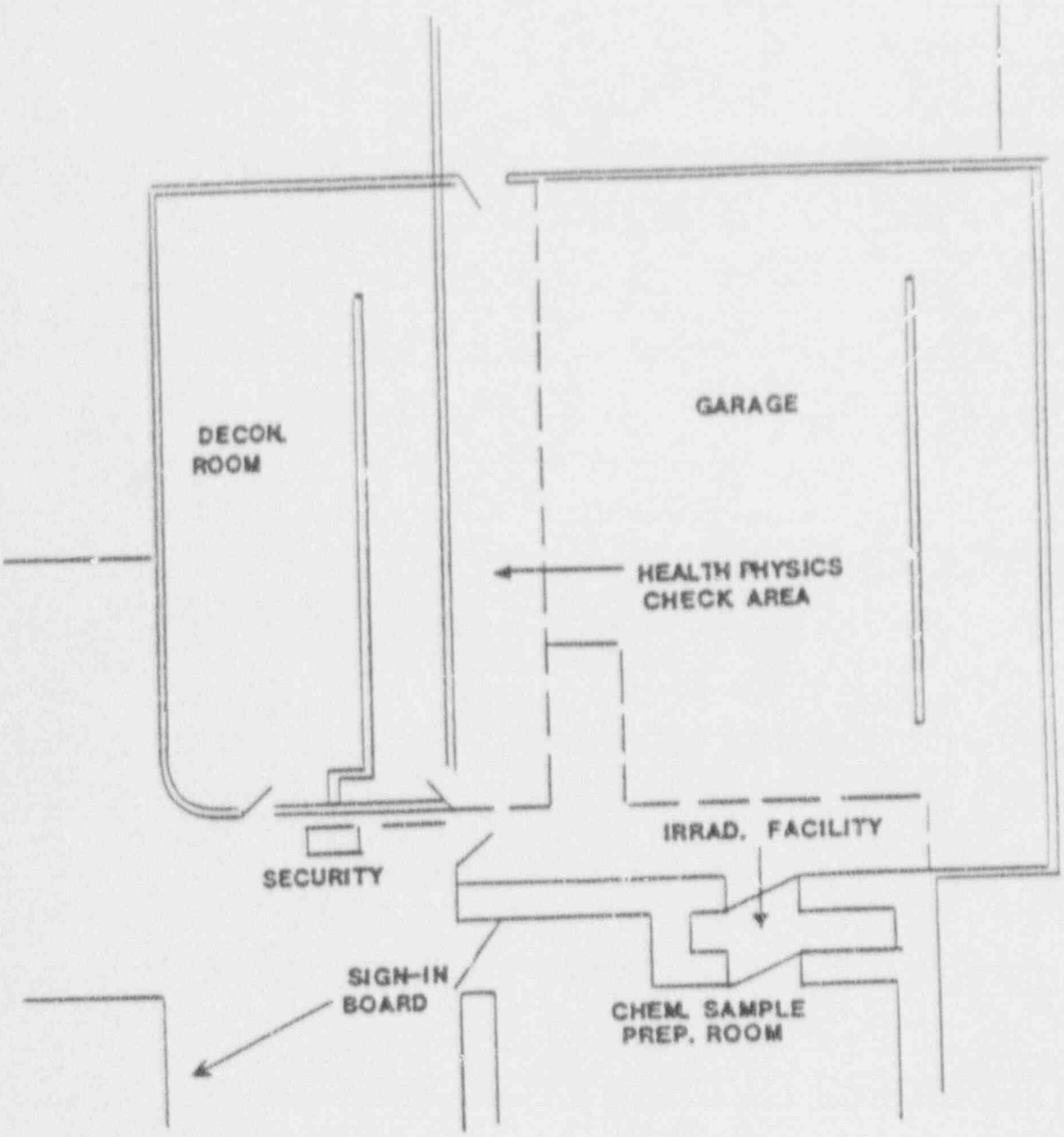

JOINT PUBLIC INFORMATION CENTER

AND ALTERNATE EOF

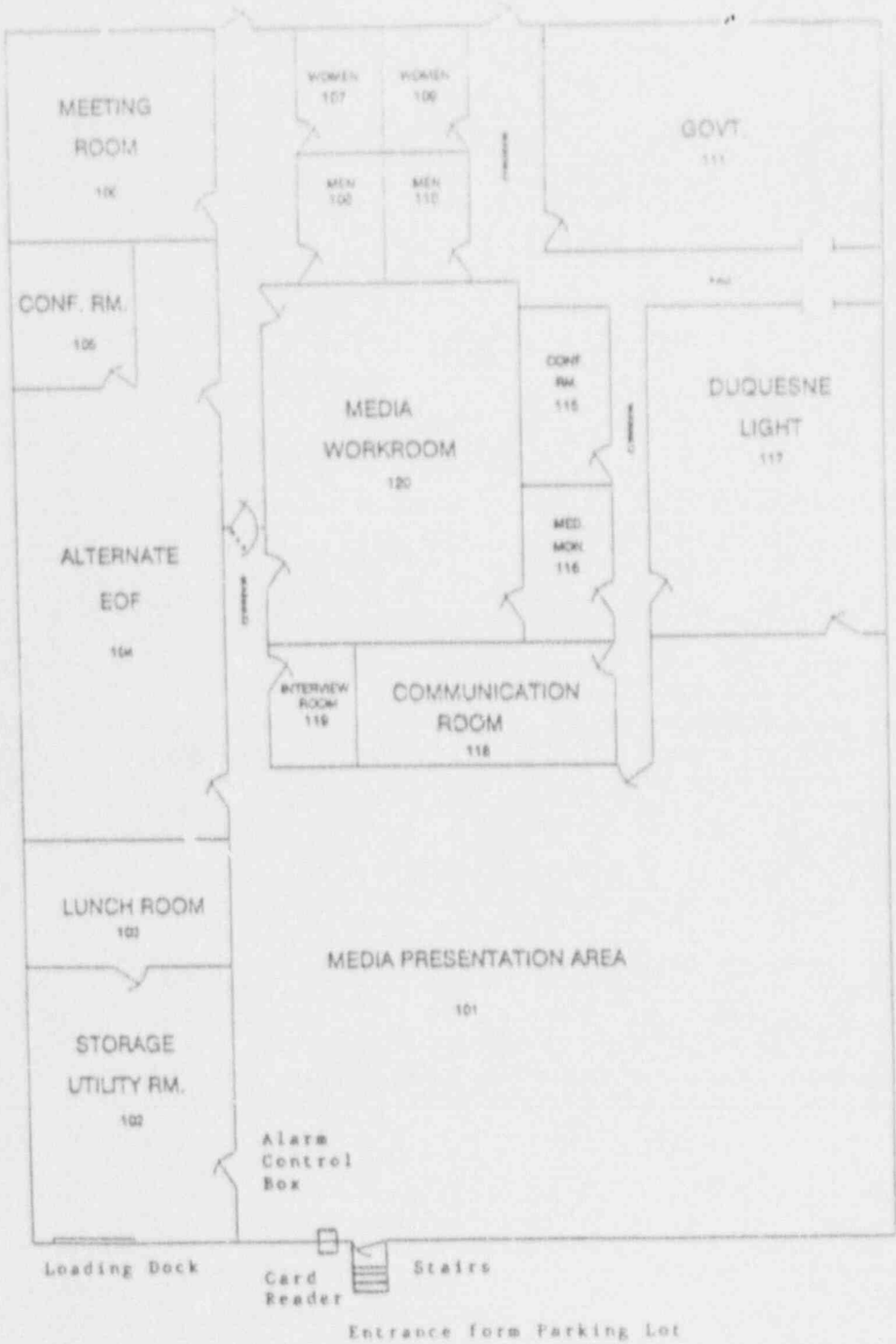

DIRECTIONS TO THE JOINT PUBLIC INFORMATION CENTER

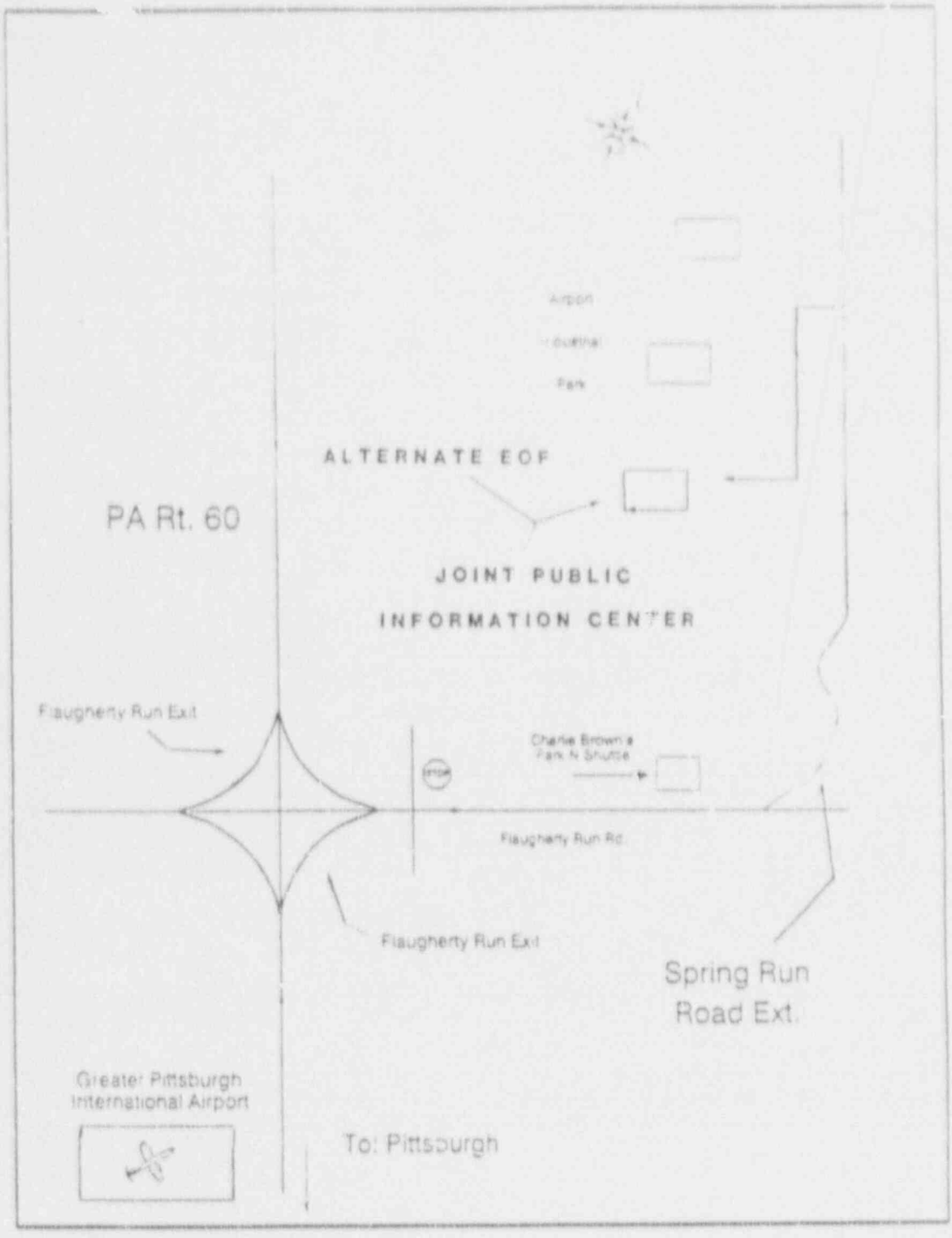

BVPS-2 EFFLUENT RELEASE PATHWAYS

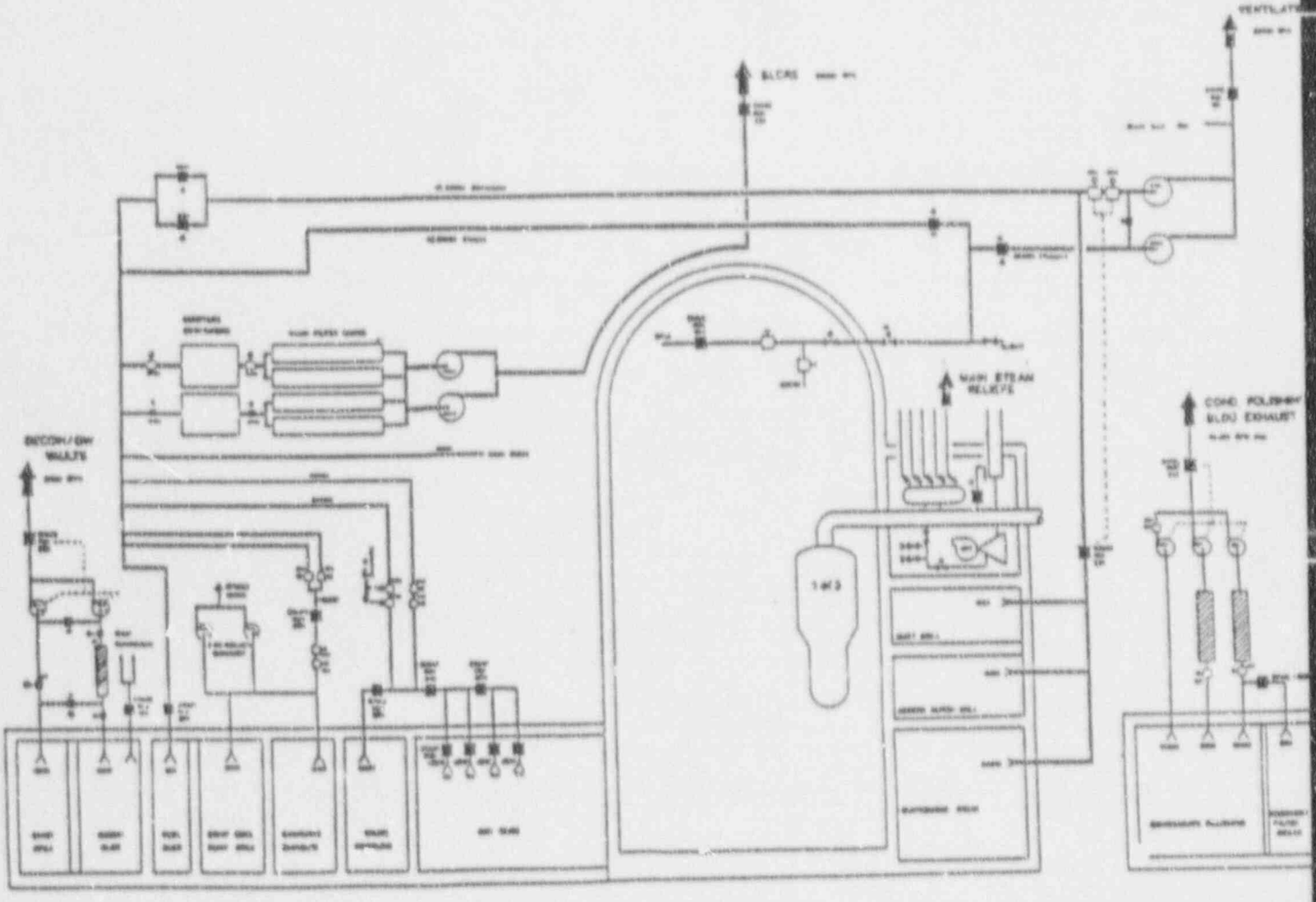

DAILY TRAINING ROSTER
FORM 037-20383 (3-85)

DUQUESNE LIGHT COMPANY
BEAVER VALLEY POWER STATION
TRAINING SECTION

NUM. OF	RECORD TYPE	SEQ#	DATE RECORD RATE MO. | DAY | YR.	KEY TO	COURSE CODE KEY DATE
194	04 | 001 | 006	1	| |	014	

COURSE TITLE: _____

STARTING TIME	:
ENDING TIME	:

PLEASE PRINT

INSTRUCTOR: _____

PAGE _____ of _____

LAST NAME	INITIAL 1ST	INITIAL 2ND	JOB TITLE	DP.Co. EMP. NO.	ORG CO.	COMPANY IF OTHER THAN DLCo.	CO. CODE	SOCIAL SECURITY NUMBER	SIGNATURE	
										01
										02
										03
										04
										05
										06
										07
										08
										09
										10
										11
										12
										13
										14
										15
										16

INSTRUCTOR'S COMMENTS:

INSTRUCTOR SIGNATURE: _____

Duquesne Light Company

Corporate Communication

Data

Package

Section VII

(Part C.10)

CORPORATE COMMUNICATIONS QUESTIONS

A significant aspect of emergency response is to provide the news media with accurate and timely information about the incident. Public perception and reaction is influenced by the information relayed to them. To ensure that the Emergency Response Organization is prepared to deal with the media during an incident at the Beaver Valley Power Station, the exercise provides certain elements that test Public Information activities. During the course of this exercise, the Joint Public Information Center (JPIC) will be activated and exercised.

The following pages denote questions that controllers can use. The questions are grouped by time in relation to the events specified in the Exercise Scenario. Space is provided for controllers to make notes on the response. Controllers need not use only the questions herein; indeed, some free play is encouraged. Always precede questions with "This is a drill."

DUQUESNE LIGHT COMPANY

Nuclear Communication Department

PUBLIC INFORMATION SCENARIO

The scenario for the public information portion of the emergency exercise must be as realistic as possible. Based upon actual experience, a large barrage of questions by the general public, media and industry organizations begin to occur during the Alert declaration.

Questions must be realistic and should lag the on-site sequence of events by several minutes to allow for news dissemination by the utility.

Once the Joint Public Information Center is activated, it is expected that the largest number of media inquiries will originate from news organizations outside the EPZ who will not send representatives to the JPIC.

This scenario was developed based upon the aforementioned assumptions.

Duquesne Light Company
Nuclear Communications
1992 EPP Drill Questions

A significant aspect of emergency response is to provide the news media with accurate and timely information about the incident. Public perception and reaction is influenced by the information relayed to them. To ensure that the Emergency Response Organization is prepared to deal with the media during an incident at the Beaver Valley Power Station, the exercise provides certain elements that test Public Information activities. During the course of this exercise, the Joint Public Information Center (JPIC) will be activated and exercised.

Once the Joint Public Information Center is activated, it is expected that the largest number of media inquiries will originate from news organizations outside the EPZ who will not send representatives to the JPIC. Based upon actual experience, a barrage of questions by the general public, media and industry organizations begin to occur during the Alert declaration.

The scenario for the public information portion of the emergency exercise must be as realistic as possible. Questions must be realistic and should lag the onsite sequence of events to allow for news dissumination by the utility. The following pages contain questions that controllers use. Controllers need not use only the questions herein; some free play is encouraged. Controllers will preface all questions with the words, "This is a drill."

Callers will begin to make these telephone calls after the initial news release is issued. Calls will be spaced out periodically throughout the drill. Questions will be asked following the Emergency Action Level indicated.

Nuclear Communications
1992 EPP Drill Questions

MEMBERS OF THE PUBLIC:

Unusual Event:

* My husband works at Beaver Valley. Is he in danger from the chlorine leak?

Alert:

* My name is _____. Why was an ambulance sent to the site? My husband works there and I fear he may be hurt. I can't get him on the phone. What should I do?

* I heard a radio announcement about some sort of accident at the nuke plant. Is that true? How come my emergency radio that I got from the County hasn't come on yet with information about this accident?

* This is Tom McMullen in Senator Wofford's office here in Washington, D.C. The senator has asked us to keep him updated on the situation there in western Pennsylvania. What's the status there now? Can someone periodically call the senator's office and keep him updated? How can the senator contact Mr. Von Schack if he needs to?

Site Area Emergency:

* I work in Pittsburgh but I live in Midland. With an accident at the nuclear plant this morning, can I go home after work?

* I live in Monroeville. Should I be doing anything like evacuating or something with that accident at the nuclear plant?

* I was planning to go out today and do some fishing on the Ohio River. How long will it be before it's safe for me to go fishing? I heard that there's radiation coming out of the nuke plant.

Nuclear Communications
1992 EPP Drill Questions

MEMBERS OF THE PUBLIC: (Continued)

Site Area Emergency: (Continued)

* What are the local government officials doing in response to the accident there at your nuclear power plant?

* This is George Smith, Principal of Beaver High School. Some of my staff are getting pretty nervous about being this close to the nuclear plant after that accident this morning. What's the situation now? Do you think it would be advisable to let school out and get the students back home? Who would recommend this to us down here if it becomes advisable? What's their phone number?

* Would you please tell me what's going on at the nuclear plant? I heard that all the employees are leaving because there is going to be a meltdown. I've been trying to get through to my husband (he works at Unit 1) but he doesn't answer his telephone. His name is Gary. Can you help me get through to him? What should I do?

* My kid goes to East Liverpool schools. I tried to get her to leave so we can get away from your radiation that you are releasing, but the principal wouldn't let me take her. Why don't you call him and tell him what's really going on so he will change his mind?

* Hello, my name is Susan Garrett and I live in Philadelphia. I have a sister who lives in Beaver Falls, PA. Ever since I heard about this nuclear plant accident, I've been trying to get her on the phone but she doesn't answer. Do you know if she's alright? Well, can you try to get in touch with her and ask her to call me? I'm terribly concerned about her.

General Emergency:

* My child has been vomiting all morning. Vomiting is a sign of radiation sickness, right? Has my child been irradiated by your plant? She was feeling well before your accident.

Nuclear Communications
1992 EPP Drill Questions

MEMBERS OF THE PUBLIC: (Continued)

General Emergency: (Continued)

* What kind of radiation are you releasing down there anyway? Can you guarantee that this radiation won't harm me?

* This is Craig Moses from the American Red Cross. Can we be of help?

* My neighbor just told me I'm to leave my house because of your nuclear plant. Where am I supposed to go? I live in East Liverpool, Ohio.

* I want to complain about your nuclear plant out there releasing all that radiation on us without us being able to do anything about it. What's the name of your company's president? What's his phone number?

* I live just up the road from Shippingport. How do I protect my cattle here at my farm from all the radiation that you are releasing?

* I've been listening to the radio about the nuclear plant accident. My mother is 86 years old and can't hear well enough to listen to a radio or TV. I'm sure that she couldn't have heard anything about what's going on there. Can someone go to her home in Midland and tell her about these precautions that have been given about staying indoors until the radiation blows over? Why not?!

Nuclear Communications
1992 EPP Drill Questions

MEDIA:

Unusual Event:

* This is _____ from the News. Is the nuclear plant in danger from the chlorine leak in Midland? How do you know?

Alert:

* This is _____ from the Beaver County Tribune. We have a report of an ambulance being called to the nuclear plant site. Has there been an accident? What were the injuries? Who can I call to get more information?

* This is _____ from the Pittsburgh Press. I would like to know the status of the man who was injured at your plant? He is contaminated, what does that mean?

* This is _____ from CCLT-TV of Steubenville, Ohio. I just received information about an emergency at Beaver Valley Power Station. What are the details? Any injuries? Who? What can I send a reporter and photographer out at the site?

* This is _____ from the Monroeville Herald. I understand there was an injury at your plant. What was the injured man doing at the time of his injury? Was he wearing any protective gear?

* This is _____ from the Pittsburgh Record. I've gotten a report that an emergency has been declared at the Shippingport Atomic Power Station. Is this report correct? How many people are involved? Is any radiation leakage involved?

* This is _____ from KDKB-TV in Pittsburgh. What's happening at the nuclear power plant? Is any radioactive material involved? Should we make a broadcast on the emergency system?

Nuclear Communications
1992 EPP Drill Questions

MEDIA: (Continued)

Alert: (Continued)

* This is _____ from WPTT-TV. Would you be available for an update on our live broadcast in 10 minutes to explain what happened at Shippingport today? (Caller: If answer is yes, take their phone number and call them back in 10 minutes.)

* This is _____ from the Pittsburgh Post-newspaper. Is something unusual going on out at the atomic power plants? Can we send a camera team out to the scene? Can we fly over the area? Is there anything to see from the air? Where can we land out helicopter?

* This is _____ from KDKB-TV again. I'd like an update on the emergency at the power plant. When is the accident going to be terminated? What do we tell our listeners?

* This is _____ from WTAZ-radio. I'd like a report on the accident at the nuclear power plant in Shippingport. Is this where I can get information on the incident? Who is this speaking? I'd like to get this on tape, is that OK? Please summarize what has happened and what actions are being taken by your company to control the situation.

* This is _____ from the International Wire Service. How large is the nuclear power plant that had the accident? When did it go into operation? What kind of nuclear power plant is it? Who built your plant? Are they assisting you in this emergency?

* What caused you to declare the Alert emergency at Beaver Valley this morning? How does this relate to the man who was injured?

Nuclear Communications
1992 EPP Drill Questions

MEDIA: (Continued)

Site Area Emergency:

* This is _____ from KQVT-radio. I understand that there has been a severe accident at Shippingport. Where can I go to get more information? Can you fax me directions?

* I am _____ from the Hookstown Crier. What are the radiation levels in Hookstown from this accident? Is that safe? What are unsafe levels? What are the normal levels of radiation released from the plant?

* This is _____ from WNBC in New York. I want to interview your CEO of your company to explain this incident for national coverage. When can we do the interview? That's too late for our news deadline. We must do it now. (Don't take no or later for an answer).

* this is _____ from the LJGT-radio. A few of our listeners have just called and said that all the employees of all three Beaver Valley nuclear power plants are being evacuated, they thought due to a danger of a plant meltdown. It should pretty serious. Is it true? What is going on out there? Who is going to run the plants that are not damaged? How are those workers protected? I doubt that you can make them stay if there is actually radiation being leaked?

General Emergency:

* This is _____ from the Associated Press. I need an update on the situation at the Beaver Valley Power Station. Has there been confirmation of any releases of radiation into the environment? How much? What measures are being taken to control the release? Is this affecting any of the plant employees?

Nuclear Communications
1992 EPP Drill Questions

MEDIA: (Continued)

General Emergency: (Continued)

* This is _____ from WCBS-TV in Cleveland. We've gotten an AP wire story about the accident at Beaver Valley. How much radiation has been released and where is it heading? Is the plant shut down? How come you don't take better measures to prevent this radiation leaka ?

* What's going on at your nuclear plant? What's the chance that the radiation will get into the Ohio River. This is _____ from WPOT-TV. Is evacuation of people living near the plant being considered? Why? (or Why not?) When will you know?

* This is _____ from WGHT-radio. Why wasn't the plant shut down earlier than now? What is the status of your other plant?

* This is _____ from WAVD-radio. We would like to interview one of your company management people about your accident. Could you please get them on the phone?

* This is the Columbus News. When will be your next press conference? Where is it being held?

* This is WCBS-TV in Cleveland. I'd like an update on the nuclear meltdown at the Beaver Valley Power Plant. Which company runs this plant? We understand that the Beaver Valley Power Plant is one of the main reasons for why Ohio Edison rates here in Ohio has increased? Will this accident cause them to go higher? Can you guarantee that? What's your name.

* This is _____ from the Beaver Falls Times. Well, I see Duquesne Light has done it again. This will surely raise your rates again. How much of the environment have you crapped up again? Who is responsible for cleaning up all the land down-wind of your radiation leakage? What are you going to do about cleaning things up?

Nuclear Communications
1992 EPP Drill Questions

MEDIA: (Continued)

General Emergency: (Continued)

* This is _____ from the Associated Press. We have some of our staff headed for your JPIC. They're not familiar with the Pittsburgh region. Can you give us directions to the JPIC and to the power plant site?

* My name is _____ and I'm from the Othello Outlook Newspaper. I want to talk to someone who knows what type of radiation has been released. They say it's a radiation cloud, is that true? What does it look like? How can you tell it apart from regular clouds? How far can this cloud possibly travel? How can people that far away know what effect it will have on them?

* This is _____ from the Greensburg Chronicle. I'd like to get a picture of the Beaver Valley Power Plant. Is the area closed because of the accident? Can I get an interview of a utility person on site?

* This is _____ from KDKB-TV again. I'm getting ready for our news broadcast and I'd like an update on the accident at the nuke plant. What's the situation now? Hurry up, I have only two more minutes.

* This is _____ from the Farmers Journal. I'm interested in getting more information about the radiation that has gotten out as a result of the nuclear power plant accident. How much radiation was leaked? How long will it stay on the ground? Will it get onto the crops in that area? If so, what should local farmers do to protect their livestock?

Nuclear Communications
1992 EPP Drill Questions

FINANCIAL:

Alert:

* This is the Wall Street Journal. Would you please send us your press releases?

Site Area Emergency:

* I'm from Fobes Financial Magazine. I need to talk to one of your finance folks about the accident. Do you have someone there who can tell me if the company will continue to pay its dividend over the next three months?

* This is _____ from E. F. Button. How much will this accident cost your company? What are any other financial implications of this event?

* This is _____ from the N.Y. Business Times. How do you feel that the accident will affect the institutional shareholders?

General Emergency:

* This is _____ from the Wall Street Journal in New York. We have technical information about the accident at your plant. What I'd like to know is your assessment of the impact of this accident on your price of the DQE stock price? Do you think that this accident will affect your future dividends?

* This is _____ from the Pittsburgh News. What impact does your liability under the Price-Anderson Act have regarding your assets and this accident?

* This is _____ from the Boston Business Tips. How does Price-Anderson work for this accident? Who can explain this to me? How do I find out? Every time I call I never get a straight answer?

Nuclear Communications
1992 ET Drill Questions

INDUSTRY:

Alert:

* This is _____ from INPO. Why haven't you issued any information on the Nuclear Network on this accident? When will you issue something to INPO?

* This is _____ from the Nuclear News. Why is the Alert not a danger to the safety of the public? I don't understand.

Site Area Emergency:

* This is the plant manager from the Perry Nuclear Power Plant. How can we help you? Who can I call to offer our assistance?

* This is the Corporate Communications Department at Toledo Edison. Would you send us your news releases on the accident at your plant today?

* This is Centerior Energy. Please call us with any information you may have for this emergency. (Caller: Give them your phone number and ask for updates. Don't take no for an answer. Tell them the CEO insists that you get these updates and remind them that Centerior Energy owns part of that plant.)

General Emergency:

* This is _____ plant manager for the Bruce Mansfield power stations. Should we shut down our plants? Should we evacuate our employees? Who will notify me if we need to and how?

* This is the secretary for the CEO of the Ohio Edison Company. Our CEO would like to talk to your CEO. How can I arrange this discussion?

Nuclear Communications
1992 EPP Drill Questions

INDUSTRY: (Continued)

General Emergency: (Continued)

* This is the control room at the Limerick Nuclear Power Station. We heard a rumor of a radiation leak heading in this direction. You guys haven't reported anything on this. What's the situation?

* This is the plant manager of the Arco Plant just down the road from Shippingport. I heard a radio report of an accident at the power plant. What's the situation there? Should we shutdown or do anything?

* This is _____ from the Governor's Office out here at the Pittsburgh Airport. I just got off a plane and I need someone to come and take me to your JPIC. When will someone come pick me up?

* This is _____ from Substations. I have men working in the switchyard down at Beaver Valley. Should I recall these men? Who is in charge of letting me know what I should be doing in regards to the nuclear accident?

Controller/Observer

Conduct

Section VIII

(Part A)

Section VII

EXERCISE CONTROLLER/OBSERVER CONDUCT

A. Each controller/observer should be familiar with the following:

1. The basic objectives of the exercise.

2. The assumptions and precautions being taken.

3. The exercise scenario, including the initiating events and the expected course of action to be taken.

4. The various locations that will be involved and the specific items to be observed when at those locations.

5. The purpose and importance of the evaluation checklist, chronological record sheets, and controller/observer summary sheet.

B. A summary and description of the controller's/observer's assigned location, including an onsite controller organization, exercise evaluation checklist, and chronological record sheet is provided within this packet.

C. Controllers/observers are assigned to various locations and are to be at their initial locations as indicated in Section I "Overall Schedule of Events."

D. If controllers are to provide information via "Cue Information Sheets" (e.g., initiating events, instrument readings, monitoring results, etc.) to the exercise participants, the information must be provided exactly as and when prescribed.

E. Controllers/observers shall maintain an accurate chronological record of activities for the locations observed. The record should show the actual start and stop time, brief description of the event or occurrence with the result or action taken, and pertinent comments or suggestions.

Exercise Evaluation

Criteria

Section VIII

(Part B)

Section VIII

EXERCISED EVALUATION CRITERIA

To ensure validity of the evaluation, all exercise controllers/observers must utilize the same grading criteria. The following grading standards should be utilized:

A. Recording Times of Actions

1. For calculating elapsed times, evaluators will be given the actual time the exercise is initiated. This will be T = 0 on all reports. All elapsed time calculations will be based on this time regardless of when the separate evaluated activities are initiated.

2. An emergency center will be deemed to be in service when its personnel accountability check is completed and reported or when the center has sufficient manpower present to carry out its mission. (NOTE: A formal announcement should be made.)

3. Controllers/observers shall use the Chronological Events Summary during the course of the exercise to take notes on the time and events and shall be the primary evaluation record. It is intended to be used to compliment the evaluation forms upon completion of the exercise. The form calls for the actual and elapsed times, the initial discoveries, the resultant activity, and evaluator comments.

B. Evaluation Standards

The system below should be used by the controller/observer to evaluate assigned areas pertaining to the emergency response. A dual purpose will be served by this rating system. First, the capability of each facility or response area will be evaluated and second, the system will provide a vehicle for guiding and directing improvement. The rating scale is as follows:

1. "5" = Excellent - Personnel and equipment always functioned without error the first time, every time. There were no problems encountered and all personnel and equipment functioned at a level much greater than could reasonably be anticipated.

2. "4" = Good - Personnel and equipment generally performed better than expected. Any errors or problems were minor and easily correctable.

3. "3" = Satisfactory - Personnel and equipment performed according to expectations, with few minor exceptions. Any errors noted were not severe and could be corrected without undue labor or expense.

4. "2" = Poor - Personnel and equipment generally performed below expectations and there were several significant deficiencies noted. The area's ability to carry out its functions was diminished.

5. "1" = Failure - Personnel and equipment consistently failed to perform as required and there were serious deficiencies noted which severely impaired the ability of the area to carry out its functions.

6. "N" - Not Observed - Through no fault of the exercise.

Categories for Evaluation

A number of areas have been designated for monitor evaluation. These areas will be further defined in the various packets. Each controller/observer will be required to rate pertinent actions in the following areas:

A. Activation and Response

B. Communications/Dissemination of Information

C. Procedures

D. Direction and Control

E. Material and Equipment

F. Protective Measures

G. Access Control

H. Recommendations

Exercise Chronological

Record

Sheets

Section VIII

(Part C)

Section VIII

EXERCISE CHRONOLOGICAL RECORD SHEET

Evaluator:_____ Location:_____ Dat_____

Time Event

Controller Free Play

Section VI

(Part B)

Section VI

Controller Free Play

As stated previously, free play is an essential part of conducting an emergency exercise. The exercise package must be designed to allow for various response actions to occur in a naturally spawned progression. For this reason, various datum must be provided to the exercise controllers so that they are in a position to feed bits of information to the exercise participants when they ask for it. For obvious reasons, most of the data pertaining to the emergency cannot be directly read from the plant instruments or gages, thus the need for data sheets, tables, charts and diagrams which allow the exercise controller to play the part of the normally used instruments and gages.

Not all parameters, however, can be derived or listed that may be questioned at some point in time during conduct of the exercise. To combat this problem, the exercise coordinators have attempted to place knowledgeable individuals in specific locations (see Section I, Controllers and Locations) to answer those questions that may not have been provided on the data sheets or cue cards.

These simulated readings, events and conditions are provided throughout the course of the exercise to trigger the exercise actions. The exercise play will depend upon responses, decisions and implementing actions taken by the exercise players, particularly the management and operations groups. This free play method will allow for testing of vital key elements of the various Emergency Plans involved, as well as to exercise personnel judgement and spontaneous response to realistic situations, the ability to reach decisions on appropriate courses of action, and the actual implementation of these decisions.

Section VI

Controller Free Play (continued)

The pre-prepared data included in this section has been broken down into the following areas:

* Plant Operations
* PVC Data
* In-Plant Radiation Levels
* Radiochemical Analysis Data
* Weather Data
* Dose Assessment Data
* Field Monitoring Data
* Injured Persons Medical Data
* Corporate Communications Information
* Ingestion Exercise Data

NOTE: Controllers may find it necessary to free play data not provided in the following data sheets. Controllers, however, must insure that the overall scenario direction remains intact.

EXERCISE EVALUATION CRITERIA

To ensure validity of the evaluation, all exercise controllers/observers must utilize the same grading criteria. The following grading standards should be utilized:

A. Recording Times of Actions

1. For calculating elapsed times, evaluators will be given the actual time the exercise is initiated. This will be T = 0 on all reports. All elapsed time calculations will be based on this time regardless of when the separate evaluated activities are initiated.

2. An emergency center will be deemed to be in service when its personnel accountability check is completed and reported or when the center has sufficient manpower present to carry out its mission. (NOTE: A formal announcement should be made.)

3. Controllers/observers shall use the Chronological Events Summary during the course of the primary evaluation record. It is intended to be used to compliment the evaluation forms upon completion of the exercise. The form calls for the actual and elapsed times, the intial discoveries, the resultant activity, and evaluator comments.

B. Evaluation Standards

The system below should be used by the controller/observer to evaluate assigned areas pertaining to the emergency response. A dual purpose will be served by this rating system. First, the capability of each facility or response area will be evaluated and second, the system will provide a vehicle for guiding and directing improvement. The rating scale is as follows:

1. Excellent - Personnel and equipment always functioned without error the first time, every time. There were no problems encountered and all personnel and equipment functioned at a level much greater than could reasonably be anticipated.

2. Good - Personnel and equipment generally performed better than expected. Any errors or problems were minor and easily correctable.

3. Satisfactory - Personnel and equipment performed according to expectations, with few minor exceptions. Any errors noted were not severe and could be corrected without undue labor or expense.

4. Poor - Personnel and equipment generally performed below expectations and there were several significant deficiencies noted. The area's ability to carry out its functions was diminished.

EXERCISE EVALUATION CRITERIA (continued)

5. Failure - Personnel and equipment consistently failed to perform as required and there were serious deficiencies noted which severely impaired the ability of the area to carry out its functions.

C. Categories for Evaluation

A number of areas have been designated for monitor evaluation. These areas will be further defined in the various packets. Each controller/observer will be required to rate pertinent actions in the following areas as applicable:

1. Activation and Response
2. Communications/Dissemination of Information
3. Procedures
4. Direction and Control
5. Material and Equipment
6. Protective Measures
7. Access Control
8. Recommendations

EXERCISE CONTROLLER/OBSERVER CONDUCT

A. Each controller/observer should be familiar with the following:

1. The basic objectives of the exercise.

2. The assumptions and precautions being taken.

3. The exercise scenario, including the initiating events and the expected course of action to be taken.

4. The various locations that will be involved and the specific items to be observed when at those locations.

5. The purpose and importance of the evaluation checklist, chronological record sheets and controller/observer summary sheet.

B. A summary and description of the controller's/observer's assigned location, including an onsite controller organization chart, exercise evaluation checklist, and chronological record sheet is provided within this packet.

C. Controllers/observers are assigned to various locations and are to be at their initial locations as indicated in Section I "Overall Schedule of Events."

D. If controllers are to provide information via "Cue Information Sheets", (e.g., initiating events, instrument readings, monitoring results, etc.) to the exercise participants, the information must be provided exactly as and when prescribed.

E. Controllers/observers shall maintain an accurate chronological record of activities for the locations observed. The record should show the actual start and stop time, brief description of the event or occurrence with the result or action taken, and pertinent comments or suggestions.

F. Controllers/observers should offer no information, advice or assistance to the exercise participants. Any such requests should be respectfully declined. Controllers shall only interpose themselves if the participants are taking an action that will cause the exercise to go far afield of the anticipated time schedule and/or outcome.

Examples or problems requiring such interpositions may include: an engineering calculation/projection that is so grossly inaccurate that an action level other than the one postulated for the scenario would be instituted, or an activity is taking so much longer than predicted that the exercise scenario is in danger of not progressing as postulated, etc.

EXERCISE CONTROLLER/OBSERVER CONDUCT (continued)

Notes have been placed in the body of the scenario that direct the controller to be aware of these types of situations.

A lead exercise controller has been designated for the On-shift and, On-site Exercise Organizations. Those controllers responsible for "Cue Information Sheets" or "Cue Signs" should coordinate their action times closely with the Lead Controllers. Provisions will be available for necessary communications with these designated individuals should scenario variations warrant.

G. The controller/observer must remain cognizant of all the events and circumstances at their assigned locations. These should include but not be limited to: Participants' actions and reactions, communications methods and record keeping, chain of command, equipment performance and the overall ability to interface with other emergency facilities.

H. Significant items, both major deficiencies and strong performance points, should be highlighted upon occurrence and condensed for the Controller/Observer Summary Sheets with emphasis on the items C 1-8 in the Exercise Evaluation Criteria. It is very important for controller/observers to offer recommended solutions to deficiencies.

EXERCISE EVALUATION CRITERIA
FOR
HOSPITALS

Location:

Aliquippa Hospital
or
Beaver County Medical Center

Function:

1. To render emergency medical care to a contaminated/injured individual while minimizing the radiological consequence to the patient, facility and care providers.

Personnel and Duties

1. Emergency Room Staff - provide necessary medical care and decontamination.

2. Radcon Technician, Radcon Foreman - provide advice to medical staff regarding levels of contamination, maintaining exposures ALARA, aid in preventing the spread of contamination, overseeing the handling of radioactive waste.

NOTE: It is not the intent of this package to evaluate the medical practice of the hospital but only their management of the radiological situation.

HOSPITAL EVALUATION

A. Communications Rating: Ex. Good Sat. Poor Fail

1. Was the call from the utility received in a timely manner so as to allow adequate area preparation?

2. Did the hospital make a return call to verify the source?

3. Did the utility communicator give adequate information especially regarding the nature of the injuries, the approximate levels of contamination, estimated arrival time, etc.?

4. Was there an adequate exchange of information between the emergency room personnel and the RadTech?

B. Activation and Response Rating: Ex. Good Sat. Poor Fail

1. Was the controlled area established in time to receive the victim?

2. Was the controlled area properly established so as to minimize the spread of contamination or prevent the contamination of permanently installed equipment/material?

3. Did the personnel show adequate knowledge of, and demonstrate good techniques to prevent the spread of contamination to clean areas of the victim?

4. Did the personnel show adequate knowledge of how to remove the patient from the controlled area at the end of the treatment?

5. Were personnel able to remove protective clothing in such a way so as to minimize the chance of contaminating themselves or of spreading contamination?

C. Equipment Rating: Ex. Good Sat. Poor Fail

1. Were all the necessary materials (relating to handling contaminated personnel) available and in sufficient quantity?

2. Did the personnel have and use dosimetry?

D. Health Physics Support Rating: Ex. Good Sat. Poor Fail

1. Did the Rad Tech demonstrate adequate knowledge of his/her function in advising the hospital on contamination levels, etc?

2. Did the Rad Tech insure that good ALARA and contamination control practices were followed (i.e., checking dosimeters periodically, surveying items prior to release, bagging waste, etc.)?

3. Did a Rad Con Supervisor accompany the victim?

4. Did the supervisor keep plant management advised as to the condition of the victim?

Z. Summary

1. Describe any problems by the area being evaluated, a brief description of the problem, its outcome or effect and any recommended corrective courses of action to mitigate or correct the problem.

2. Completely fill out the summary evaluation form, sign it and promptly return it as directed.

3. Critiques of the exercise will be held for all participants, evaluators and NRC personnel (if applicable) that want to attend. Locations and times will be announced.

EXERCISE EVALUATION CRITERIA
FOR
EMERGENCY SQUAD

Location:

Beaver Valley Power Station

On-site locations

Functions:

To provide first aid to plant personnel, search and rescue, and onsite fire fighting (group also called Fire Brigade in this function).

Personnel and Duties:

All assigned personnel are trained in fire fighting and first aid.

Specific duties: Operators - To assess the operational impact of deenergizing circuits, stopping pumps, etc.

RadCon: To assess radiological conditions.

Chemistry: To assess chemical hazzards.

EMERGENCY SQUAD

A. Activation and Response — Rating: Ex. Good Sat. Poor Fail

1. Was the activation/initiating efficient and organized?
2. Were personnel familiar with their responsibilities respond in a timely manner?
3. Was the person in charge clearly identifiable?
4. Was the squads response time to the assembly point timely?

B. Communications/Dissemination of Information — Rating: Ex. Good Sat. Poor Fail

1. Were personnel familiar with communications available (radio, PAX, etc.)?
2. Were communications adequate?
3. Were communications to the Control Room for updates timely?
4. Were appropriate communications techniques (no abbreviations, phonetic alphabetic, sign-on, sign-off, etc.) followed?
5. Were communications prefaced with "This is a drill"?
6. Was the Emergency Squad briefed upon arrival at the assembly point?

C. Procedures — Rating: Ex. Good Sat. Poor Fail

1. Were personnel generally familiar with the relevant procedures?
2. Were procedures followed?
3. Were personnel so overwhelmed with procedural requirements that they were distracted from the appropriate response?
4. Were the procedures appropriate?
5. Was the overall level of competency and state of training adequate? (NOTE: Any shortcomings or exceptional performance observed should be detailed in the Event Summary Sheets.)

D. Direction and Control Rating: Ex. Good Sat. Poor Fail

1. Was the information flow from the squad to the Control Room, timely, complete and accurate?

2. Could the response be categorized as a team effort or a group of individual efforts?

E. Material and Equipment Rating: Ex. Good Sat. Poor Fail

1. Was all of the required material and equipment available?

2. Was the equipment functional?

3. Did personnel check to ensure that all equipment was available and functional early in the activation process?

4. If equipment was inoperable or failed in use, were appropriate actions taken to resolve the deficiency (spares or back-up equipment)?

6. Were there any situations in which additional equipment or materials, or different types of equipment could have made the activity more effective? If so, please detail.

7. Were there resource materials readily available to access the emergency situation and to plan corrective actions - maps, reference books, copies of the emergency plans and procedures?

F. Protective Measures Rating: Ex. Good Sat. Poor Fail

1. Were appropriate protective measures implemented for squad personnel?

2. Did personnel properly wear protective clothing, dosimetry, respirators, if necessary?

3. Were appropriate contamination controls observed?

4. Were squad personnel kept apprised of area radiological conditions, if necessary?

5. Were activities conducted with regard to personnel safety, consistent wth the need to complete the activity?

G. Summary

1. Describe any problems noted by the area being evaluated, a description of the problem, its outcome or effect, and any recommended corrective courses of action to mitigate or correct the deficiency.

2. Completely fill out the evaluation form, sign it, and promptly return it as directed.

3. Critiques of the exercise will be held for all participants, evaluators, and NRC personnel (if applicable) that want to attend. Locations and times will be provided.

EXERCISE EVALUATION CRITERIA
FOR
FIELD MONITORING TEAMS

Location:

Offsite areas within the 10 mile Emergency Planning Zone (EPZ).

Function:

Offsite radiological surveying to confirm dose projections regarding any radiological release.

Personnel and Duties:

Radiation Control Technicians (RCT): Operate survey meters, air samplers, gather liquid samples, etc and do field evaluations on the samples. Relay those results to appropriate plant management. Keep records of time, locations, sample count results, etc.

FIELD MONITORING TEAMS EVALUATION

A. Activation and Response Rating: Ex. Good Sat. Poor Fail

1. Was activation efficient and organized?
2. Were personnel familiar with their responsibilities and respond in a timely manner?
3. Did one team member assume the role as the team leader?
4. Did the team receive an adequate briefing prior to departure?

B. Communications/Dissemination of Information Rating: Ex. Good Sat. Poor Fail

1. Was the mobile radio operable?
2. Were communications adequate?
3. Were accurate logs kept and sample data properly recorded?
4. Were teams kept informed of activities/plant status?
5. Were appropriate communication techniques followed? (No abbreviations, phonetic alphabet, "This is a drill", etc.)
6. Was there a two-way exchange of information such that th personnel observed understood the changing situation and were ab.e to perform tasks in the context of the changing situation?

C. Procedures Rating: Ex. Good Sat. Poor Fail

1. Were personnel generally familiar with the relevant procedures?
2. Were procedures followed?
3. Were the procedures appropriate?
4. Was the overall level of competency and state of training adequate? (NOTE: Any shortcomings or exceptional performance should be detailed in the Controller/Observer Summary Sheets.

FMT 2

D. Direction and Control Rating: Ex. Good Sat. Poor Fail

1. Was adequate and timely guidance provided by management?

2. Were the teams reminded to periodically check their pocket dosimeter readings?

E. Material and Equipment Rating: Ex. Good Sat. Poor Fail

1. Was a vehicle readily available for the teams use?

2. Did the vehicle meet the teams needs?

3. Was all of the other required material and equipment available?

4. Was the equipment functional?

5. Did the personnel check to ensure that all equipment was available and functional early in the activation process? (NOTE: This includes establishing radio contact.)

6. If equipment was inoperable or failed in use, were appropriate actions taken to resolve the deficiency? (e.g., back-ups or spares)

F. Protective Measures Rating: Ex. Good Sat. Poor Fail

1. Did personnel properly wear protective clothing, dosimetry, respirators?

2. Were appropriate contamination controls observed?

3. Was the normal radiological controls program appropriately modified to contend with the emergency radiological conditions?

G. Summary

1. Describe any problems noted with the field monitoring teams, a description of the problem, its outcome or effect, and any recommended corrective courses of action to mitigate or correct the deficiency.

2. Completely fill out the summary evaluation form, sign it, and promptly return it as directed.

FMT 3

3. Critiques of the exercise will be held for all participants, evaluators, and NRC personnel (if applicable) that want to attend. Locations and times will be provided.

EXERCISE EVALUATION CRITERIA
FOR
PLANT CONTROL ROOM

Location:

Beaver Valley Power Station
Service Building

Functions:

1. Perform immediate actions for the safe and proper operation of the plant.
2. Assess information available from valid indications and initially classify the situation.
3. Provide initial notifications and maintain information flow to emergency support centers, when they are established.
4. Perform offsite dose projection and provide directions for offsite monitoring until the TSC/EOF is activated.
5. Make recommendations to offsite agencies regarding protective and other actions.
6. Perform supplementary actions to regain control of the plant.

Personnel and Duties:

1. Nuclear Shift Supervisor - NSS - As senior licensed operator on shift, performs all functions in accordance with approved procedures. During an emergency, the NSS assumes the role of the Emergency Director until properly relieved by the designated Emergency Director.
2. Nuclear Shift Operating Foreman - NSOF - Performs the duties of the Operations Coordinator during the initial stages of an emergency. Performs the duties of Emergency Squad Chief.
3. Nuclear Shift Supervisor Administrative Assistant - During the initial stages of an emergency serves as the Communication and Records Coordinator.
4. Radcon Technician - Initial dose projections will be calculated during the early stages of an accident.
5. Other Personnel
   a. Nuclear Control Operators (2)

EXERCISE EVALUATION CRITERIA
FOR
PLANT CONTROL ROOM (continued)

b. Shift Technical Advisor

c. Startup Operators or Nuclear Operators (2)

CR 2

CONTROL ROOM EVALUATION

A. Activation and Response Rating: Ex. Good Sat. Poor Fail

1. Was activation/initiating efficient and organized?
2. Were personnel familiar with their responsibilities and did they respond in a timely manner?
3. Was the person in charge clearly identifiable?
4. Was the transfer of responsibilities accomplished efficiently and effectively?
5. Were all persons made aware when transfers were completed?
6. Were personnel able to quickly diagnose problems and develop suggestions for alternative solutions.

B. Communications/Dissemination of Information Rating: Ex. Good Sat. Poor Fail

1. Were all required and specified communication circuits operable?
2. Were personnel familiar with communications available and the intended use of each?
3. Were communications adequate?
4. Were there sufficient personnel to conduct communications tasks?
5. Was incoming information effectively and efficiently distributed to appropriate personnel?
6. Were periodic update announcements made via Page Party or face-to-face?
7. Did communicators keep accurate logs?
8. Did persons in charge spend an inordinate amount of time on communications, such that their attention was diverted from the incident?

9. Were offsite personnel kept informed of activities/plant status?

10. Were logs used effectively by personnel to review past events to trend data?

11. Were appropriate communications techniques (no abbreviations, phonetic alphabet, sign-on, sign-off, etc.) followed?

C. Procedures Rating: Ex. Good Sat. Poor Fail

1. Were personnel able to perform the relevant procedures?

2. Were procedures followed?

3. Were the procedures adequate?

D. Direction and Control Rating: Ex. Good Sat. Poor Fail

1. Was the information flow from the plant to senior management, timely, complete and accurate?

2. Did the Emergency Director become too deeply involved in a specific activity to the exclusion of other activities?

3. Could the response be categorized as a team effort or a group of individual efforts?

4. Was there an effective mechanism for resolving differences of opinions regarding technical issues or actions to be taken?

5. Was there excessive noise and loitering in response facilities?

E. Material and Equipment Rating: Ex. Good Sat. Poor Fail

1. Was all of the required materials and equipment available?

2. Was the equipment functional?

3. Did personnel check to ensure that all equipment was available and functional early in the activation process?

4. If equipment was inoperative or failed in use, were appropriate actions taken to resolve deficiency (e.g., spares or backups, etc.)?

5. Were there any situations where the lack of equipment or materials, or inoperative equipment, or lack of ability to operate the equipment, prevent personnel from performing assigned task? (If so, please detail)

6. Were there any situations in which additional equipment or materials, or different types of equipment could have made the activity more effective (Explain)?

7. Could the area support the personnel assigned to it?

8. Were there resource materials readily available to assess the emergency situation and to plan corrective actions (maps, reference books, copies of emergency plans and procedures)?

F. Protective Measures Rating: Ex. Good Sat. Poor Fail

1. Were appropriate protective measures implemented for plant personnel?

2. Were appropriate contamination controls observed?

3. Were all in-plant activities conducted with regard to personnel safety, consistent with the need to complete activity?

G. Access Control Rating: Ex. Good Sat. Poor Fail

1. Was an appropriate security posture established against unauthorized personnel?

2. Were incoming support personnel (fire-fighters, ambulances, others) provided appropriate access in a timely manner?

3. Was there an identification system developed and used that effectively identified authorized personnel and their duties?

H. Summary

1. Describe any problems noted by the area evaluated, a brief description of the problem, its outcome or effect, and any recommended corrective courses of action to mitigate or correct the problem.

2. Completely fill out the summary evaluation form, sign it, promptly return it as directed.

3. Critiques of the exercise will be held for all participants, evaluators, and NRC personnel (if applicable) that want to attend. Locations and times will be provided.

EXERCISE EVALUATION CRITERIA
FOR
ENVIRONMENTAL ASSESSMENT AND DOSE PROJECTIONS AREA

Location:

Beaver Valley Power Station
Emergency Response Facility (ERF)

Functions:

1. Assess environmental conditions.
2. Coordinate radiological monitoring activities.
3. Recommend implementation of offsite emergency actions.

Personnel and Duties:

1. Environmental Assessment and Dose Projections Coordinator - Responsible for performing dose calculations and providing the Emergency Director with technical advice concerning radiological assessment and recommendations for offsite protective actions.
2. Other personnel:
   a. Field team communicator
   b. Assistant EA and DP Coordinator
   c. Status board keepers and communicators

ENVIRONMENTAL ASSESSMENT AND DOSE PROJECTION AREA

A. Activations and Response Rating: Ex. Good Sat. Poor Fail

1. Was activation efficient and organized?
2. Were personnel familiar with their responsibilities and respond in a timely manner?
3. Was the person in charge clearly identifiable?
4. Was the transfer of responsibilities from the CR accomplished efficiently and effectively?
5. Did EA and DP personnel adequately direct the Field Monitoring Teams (FMTs) so as to locate and define the plume?
6. Did EA and DP adequately instruct FMTs as to the disposition of samples that were taken?
7. Were recommendations to senior management timely?

B. Communications/Dissemination of Information Rating: Ex. Good Sat. Poor Fail

1. Were all required and specified communication circuits operable?
2. Were communications adequate?
3. Was incoming information effectively and efficiently distributed to appropriate personnel?
4. Were accurate logs kept, and were the status boards kept updated?
5. Were offsite teams kept informed of activities/plant status?
6. Were appropriate communication techniques (no abbreviations, phonetic alphabet, etc.) followed?
7. Was there a two-way exchange of information such that the personnel observed understood the changing situation and were able to perform their tasks in the context of the changing situation and to effectively contribute to overall assessment and mitigation.

C. Procedures Rating: Ex. Good Sat. Poor Fail

1. Were personnel generally familiar with the relevant procedures?

2. Were procedures followed?

3. Were personnel overwhelmed with procedural requirements?

4. Were the procedures appropriate?

5. Was the overall level of competency and staff training adequate. (NOTE: Any shortcomings or exceptional performance should be detailed in the Event Summary Sheet.)

D. Direction and Control Rating: Ex. Good Sat. Poor Fail

1. Was adequate and timely guidance provided by the senior management?

2. Could the response be categorized as a team effort or a group of individual efforts?

3. Was there excessive noise and loitering in the response facility?

E. Material and Equipment Rating: Ex. Good Sat. Poor Fail

1. Was all of the required material and equipment available?

2. Was the equipment functional?

3. Did personnel check to ensure that all equipment was available and functional early in the activation process?

4. If equipment was inoperable or failed in use, were appropriate actions taken to resolve the deficiency.

5. Were there any situations where the lack of equipment and materials, or inoperative equipment, or lack of ability to operate the equipment, prevent personnel from performing assigned tasks? If so, please detail.

6. Were there any situations in which additional equipment or materials, or different types of equipment could have made the activity more effective? If so, please detail.

7. Could the area support the personnel assigned to it?

Were there resource materials (plans, procedures, maps, emergency situation and to plan corrective actions, maps, reference books, copies of emergency plans and procedures?

F. Protective Measures Rating: Ex. Good Sat. Poor Fail

1. Were field personnel properly directed to wear protective clothing, dosimetry, respirators when appropriate?

2. Were Field Monitoring Teams periodically reminded to check their dosimeters?

3. Were appropriate contamination controls observed?

4. Was the normal radiological controls program appropriately modified to contend with the emergency radiological conditions?

5. Were field teams directed to take KI when appropriate?

G. Summary

1. Describe any problems noted by the area evaluated, a brief description of the problem, its outcome or effect, and any recommended corrective courses of action to mitigate or correct the problem.

2. Completely fill out the summary evaluation form, sign it, and promptly return it as directed.

Critiques of the exercise will be held for all participants, evaluators, and NRC personnel (if applicable) that want to attend. Locations and times will be provided.

EXERCISE EVALUATION CRITERIA
FOR
CHEMISTRY

Location:

Beaver Valley Power Station

Chemistry

Function:

1. Responsible for conducting all in-plant sampling as requested by the Emergency Director.

2. Also responsible for chemical analysis done on and offsite, including environmental samples.

Personnel and Duties:

1. Chemistry Coordinator (in TSC)

2. Chemists, Chem Analysts (in-plant)

CHEMISTRY

A. Activation and Response Rating: Ex. Good Sat. Poor Fail

1. Was activation/initiation efficient and organized?

2. Were personnel familiar with their responsibilities and did they

person in liable

B. Communications/Dissemination of Information Rating: Ex. Good Sat. Poor ...

1. Were all required and specified communication circuits operable?

2. Were personnel familiar with communications available and the intended use of each?

3. Were communications adequate?

4. Were there sufficient personnel to conduct communication tasks?

5. Was incoming information effectively and efficiently distributed to appropriate personnel?

6. Did communicators keep accurate logs?

7. Were logs used effectively by personnel to review past events to trend data?

8. Were appropriate communications techniques (no abbreviations, phonetic alphabet, sign-on, sign-off, etc.) followed?

C. Procedures Rating: Ex. Good Sat. Poor Fail

1. Were personnel generally familiar with the relevant procedures?

2. Were procedures followed?

3. Were the procedures appropriate?

4. What was your overall assessment of the level of competency and state of training (NOTE: If shortcomings or exceptional performance was observed, provide specific details in the Chronological Event Summary Sheet.)

C 2

D. Direction and Control Rating: Ex. Good Sat. Poor Fail

1. Could the response be categorized as a team effort or a group of individual efforts?

2. Was there an effective mechanism for resolving differences of opinions regarding technical issues or actions to be taken?

3. Was there excessive noise and loitering in the response facility ?

E. Material and Equipment Rating: Ex. Good Sat. Poor Fail

1. Was all of the required material and equipment available?

2. Was the equipment functional?

3. Did personnel check to ensure that all equipment was available and functional early in the activation process?

4. Were there any situations in which additional equipment or materials or different types of equipment could have made the ·ivity more effective? (If so, please detail.)

5. Could the area support the personnel assigned to it?

F Protective Measures Rating: Ex. Good Sat. Poor Fail

1. Were appropriate protective measures implemented for plant personnel?

2. Was appropriate contamination controls observed?

3. Were all in-plant activities conducted with regard to personnel safety, consistent with the need to complete the activity?

4. Was the normal radiological controls program appropriately modified to contend with the emergency radiological conditions?

G. Summary

1. Describe any problems noted by the area being evaluated, a brief description of the problem, its outcome or effect, and any recommended corrective courses of action to mitigate or correct the problem.

2. Completely fill out the summary evaluation form, sign it, promptly return it as directed.

3. Critiques of the exercise will be held for all participants, evaluators, and NRC personnel (if applicable) that want to attend. Locations and times will be provided.

C 3

EXERCISE EVALUATION CRITERIA
FOR
OPERATIONAL SUPPORT CENTER (OSC)

Location:

Beaver Valley Power Station
Near shutdown panel below Control Room (Unit 1)

Function:

1. Provide a location where plant logistic support can be coordinated during an emergency.

2. Restrict Control Room access to those support personnel specifically requested by the Shift Supervisor.

Personnel and Duties:

1. Operational Support Center Supervisor - Responsible for the activation and operation of the OSC.

   a. Plant Maintenance Personnel - Responsible for plant repairs

2. Other personnel:

   a. Radcon Operations Center - if unstable conditions exist in the service building.

OPERATIONAL SUPPORT CENTER EVALUATION

A. Activation and Response — Rating: Ex. Good Sat. Poor Fail

1. Was the activation/initiating efficient and organized?
2. Were personnel familiar with their responsibilities and respond in a timely manner?
3. Was the person in charge clearly identifiable?
4. Was there adequate numbers of personnel from all necessary crafts (electricians, mechanics, etc.)

B. Communications/Dissemination of Information — Rating: Ex. Good Sat. Poor Fail

1. Were all required and specified communications circuits operable?
2. Were personnel familiar with communications available and the intended use of each?
3. Were communications adequate?
4. Were there sufficient personnel to conduct communications tasks?
5. Was incoming information effectively and efficiently distributed to appropriate personnel?
6. Were periodic updates made by the Supervisor?
7. Were accurate logs kept?
8. Were the status boards kept updated?
9. Did the OSC Coordinator track entry teams - recording such information as who was on the team, what the job assignment was, time dispatched, etc.?
10. Were the correct dedicated lines used and did non-emergency communications interfere with emergency transmission?

11. Were logs used effectively by personnel to review past events and to trend data?

12. Were appropriate communications techniques (no abbreviations, phonetic alphabetic, sign-on, sign-off, etc.) followed?

C. Procedures Rating: Ex. Good Sat. Poor Fail

1. Were personnel generally familiar with the relevant procedures?

2. Were procedures followed?

3. Were personnel overwhelmed with procedural requirements?

4. Were the procedures appropriate?

5. Were emergency procedures developed as necessary and was there adequate discussion as to the consequences of their implementation?

6. Was the overall level of competency and state of training adequate? (NOTE: Any shortcomings or exceptional performance observed should be detailed in the Event Summary Sheets.)

D. Direction and Control Rating: Ex. Good Sat. Poor Fail

1. Was the information flow from the plant to the facilities, timely, complete and accurate?

2. Could the response be categorized as a team effort or a group of individual efforts?

3. Was there an effective mechanism for resolving differences of opinion regarding technical issues and action to be taken?

4. Was there excessive noise and loitering in the response facility?

E. Material And Equipment Rating: Ex. Good Sat. Poor Fail

1. Was all of the required material and equipment available?

2. Was the equipment functional?

3. Did personnel check to ensure that all equipment was available and functional early in the activation process?

4. If equipment was inoperable or failed in use, were appropriate actions taken to resolve the deficiency (spares or back-up equipment)?

5. Were there any situations in which the lack of equipment and materials, or inoperative equipment, or a lack of ability to operate the equipment, prevented personnel from pre-assigned tasks? If so, please detail.

6. Were there any situations in which additional equipment or materials, or different types of equipment could have made the activity more effective? If so, please detail.

7. Could the area support the personnel assigned to it?

8. Were there resource materials readily available to access the emergency situation and to plan corrective actions - maps, reference books, copies of the emergency plans and procedures?

F. Protective Measures Rating: Ex. Good Sat. Poor Fail

1. Were appropriate protective measures implemented for OSC personnel?

2. Did personnel properly wear protective clothing, dosimetry, respirators?

3. Were appropriate contamination controls observed?

4. Were OSC personnel kept apprised of in-plant radiological conditions?

5. Were all in-plant activities conducted with regard to personnel safety, consistent with the need to complete the activity?

6. Did the OSC Coordinator track entry team members exposure or request this information from the ROC?

G. Access Control Rating: Ex. Good Sat. Poor Fail

1. Was there appropriate measures established against unnecessary personnel entering in the area?

2. Was there an identifiable system developed and used that effectively identified authorized personnel and their duties?

H. Summary

1. Describe any problems noted by the area being evaluated, a description of the problem, its outcome or effect, and any recommended corrective courses of action to mitigate or correct the deficiency.

2. Completely fill out the summary evaluation form, sign it, and promptly return it as directed.

3. Critiques of the exercise will be held for all participants, evaluators, and NRC personnel (if applicable) that want to attend. Locations and times will be provided.

EXERCISE EVALUATION CRITERIA
FOR
TECHNICAL SUPPORT CENTER (TSC)

Location:

Beaver Valley Power Station
Emergency Response Facility (ERF)

Function:

1. Provide plant management and technical support to the plant operations personnel during emergency conditions.

2. Relieve the reactor operators of peripheral duties and communications not directly related to reactor system manipulations.

3. Prevent congestion in the Control Room.

4. Perform EOF functions for the Alert Emergency Class and for the Site Area and General Emergency Class until the EOF is functional.

Personnel and Duties:

1. Emergency Director - Responsible for the command and control of all accident mitigation actions on site.

2. Radiological Controls Coordinator - Responsible for onsite radiological controls and personnel monitoring.

3. Environmental Assessment and Dose Projection Coordinator - Responsible for dose projections and offsite monitoring along with radiological assessment, sample coordination and the interface with DER/BRP. (Operates out of the EOF area)

4. Operations Coordinator - Acts as management representative in the Control Room. All directives pertaining to operation of the plant, from management will go to the NSS via the Operations Coordinator.

5. Communications and Records Coordinator - Coordinates all communications and maintain records.

6. Other personnel:

   a. Chemistry Coordinator

   b. Security Coordinator (CAS)

EXERCISE EVALUATION CRITERIA
FOR
TECHNICAL SUPPORT CENTER (TSC) (continued)

c. Security Liaison

d. Operations Support Center Coordinator

e. Technical Support Coordinator

f. Maintenance Coordinator

g. Assistant to Emergency Director

h. TSC Communications, Records, Engineering Assistants

i. Computer Coordinator

TECHNICAL SUPPORT CENTER EVALUATION

A. Activation and Response Rating: Ex. Good Sat. Poor Fail

1. Was activation/initiating efficient and organized?
2. Were personnel familiar with their responsibilities and respond in a timely manner?
3. Was the person in charge clearly identifiable?
4. Were the transfers of responsibilities accomplished efficiently and effectively?
5. Were all participants made aware the transfers had occurred? (NOTE: A formal announcement should be made.)

B. Communications/Dissemination of Information Rating: Ex. Good Sat. Poor Fail

1. Were all required and specified communication circuits operable?
2. Were all personnel familiar with communications available and the intended use of each?
3. Were communications adequate?
4. Were there sufficient personnel to conduct communication tasks?
5. Was incoming information effectively and efficiently distributed to appropriate personnel?
6. Were periodic update announcements made via Intercom or face-to-face?
7. Did communicators keep accurate logs?
8. Were the status boards kept updated?
9. Did persons in charge spend an inordinate amount of time on communications, such that their attention was diverted from the incident?

10. Were there periodic reports from the various response facilities to the TSC?

11. Were private and dedicated lines used as effectively as possible?

12. Were logs used effectively by personnel to review past events and to trend data?

13. Was information provided to the Emergency News Center in a timely manner?

14. Were appropriate communication techniques (no abbreviations, phonetic alphabet, sign-on sign-off, etc.) followed?

15. Was there a two-way exchange of information such that the personnel observed understood the changing situation and were able to perform their tasks in the context of the changing situation and to effectively contribute to overall assessment and mitigation?

C. Procedures Rating: Ex. Good Sat. Poor Fail

1. Were personnel generally familiar with the relevant procedures?

2. Were procedures followed?

3. Were procedures and tech specs compatible?

4. Were personnel so overwhelmed with procedural requirements that they were distracted from the appropriate response?

5. Were the procedures appropriate?

6. Was the overall level of competency and training satisfactory? (NOTE: Shortcomings or exceptional performance should be detailed in the Chronological Events Summary.)

D. Direction and Control Rating: Ex. Good Sat. Poor Fail

1. Was the information flow from the plant to senior management, timely, complete and adequate?

2. Did the individual emergency supervisors keep the Emergency Director apprised of significant events within their sphere of concern?

3. Did the Emergency Director effectively delegate responsibilities to the individual coordinators?

4. Did the Emergency Director become too deeply involved in a specific activity to the exclusion of other activities?

5. Could the response be categorized as a team effort or a group of individual efforts?

6. Were interfaces with outside technical groups effective?

7. Was there an effective mechanism for resolving differences of opinion regarding technical issues and actions to be taken?

8. Was there excessive noise and loitering in the response facility?

E. Material and Equipment Rating: Ex. Good Sat. Poor Fail

1. Was all of the required material and equipment available?

2. Was the equipment functional?

3. Did the personnel check to ensure that all equipment was available and functional early in the activation process?

4. If equipment was inoperative or failed in use, were appropriate actions taken to resolve deficiency (spare and back-ups, etc.)

5. Were there any situations in which the lack of equipment and materials, or inoperative equipment, or a lack of ability to operate the equipment prevented personnel from performing assigned tasks? (If so, please detail)

6. Were there any situations in which additional equipment or materials, or different types of equipment could have made the activity more effective?

7. Could the area support the personnel assigned to it?

8. Were there resource materials readily available to assess the emergency situation and to plan corrective action - maps, reference books, copies of emergency plans and procedures?

F. Protective Measures Rating: Ex. Good Sat. Poor Fail

1. Were appropriate protective measures implemented for plant personnel?

2. Were appropriate contamination controls observed?

3. Were TSC personnel kept apprised of in-plant radiological conditions?

4. Were all in-plant activities conducted with regard to personnel safety, consistent with the need to complete the activity?

5. Was the normal radiological controls program appropriately modified to contend with the emergency radiological conditions?

G. Access Control Rating: Ex. Good Sat. Poor Fail

1. Was an appropriate security posture established against unauthorized personnel?

2. Was there an identification system developed and used that effectively identified authorized personnel and their duties?

H. Summary

1. Describe any problems noted by area being evaluated, a description of the problem, its outcome or effect, and any recommended corrective courses of action to mitigate or correct the deficiency.

2. Completely fill out the summary evaluation form, sign it, and promptly return it as directed.

3. Critiques of the exercise will be held for all participants, evaluators, and NRC personnel (if applicable) that want to attend. Location and times will be provided.

EXERCISE EVALUATION CRITERIA
FOR
IN PLANT RADCON

Location:

Beaver Valley Power Station Unit 1 or Unit 2
Various locations in plant or onsite

Function:

1. Provide overall radiological protection for plant personnel.

Personnel and Duties:

1. Entry Radiation Control Foreman (RCF) - Establishes a control point and provides the final review to ensure that entry teams are properly briefed and equipped.

2. Radiation Work Permit (RWP) RCF - Oversees the writing and issuance of routine and emergency RWPs.

3. Radiation Control Technicians (RCTs) - Accompany and provide radiological guidance for entry teams, enforce and control exposure limits, gather radiological survey data, count samples, etc.

IN PLANT RADCON

A. Activation and Response — Rating: Ex. Good Sat. Poor Fail

1. Were sufficient Radiation Control Technicians (RCTs) available to support all phases of the emergency radiological response?
2. Was there prompt activation of the plant entry control and emergency radiological work permit function?
3. Did RadCon foreman in charge of entry and Radiological Work Permits (RWPs) show adequate record keeping (logs and / or status boards as appropriate)?
4. Did RCTs show proper survey techniques and handling of samples (smears, liquids, air samples, etc.)
5. Were survey results (counting of smears, etc.) obtained promptly and forwarded to the ROC?
6. Was sample counting conducted with due concern to background levels?
7. Was adequate dose tracking demonstrated with exposure information sent to appropriate locations (ROC, OSC, etc.)

B. Communications/Dissemination of Information — Rating: Ex. Good Sat. Poor Fail

1. Were RCTs in the plant/field adequately updated on changing plant conditions?
2. Were communication (radio, PAX, Page Party) formal, clear, concise and without abbreviations?
3. Did entry and RWP foreman and RCTs pass important information back to the Radiological Operations Center (ROC)?

C. Procedures — Rating: Ex. Good Sat. Poor Fail

1. Were personnel generally familiar with procedures?
2. Were procedures followed?
3. Were procedures appropriate?
4. Were procedures modified if necessary and was there adequate discussion of the consequences of such modifications?

D. Direction and Control Rating: Ex. Good Sat. Poor Fail

1. Did entry and RWP foreman clearly communicate requirements and precautions to RCTs and entry teams?

2. Did RCTs give adequate radiological guidance to the personnel to whom they were providing coverage?

3. Was there adequate debriefing of entry teams in order to gather information regarding in-plant conditions?

E. Material and Equipment Rating: Ex. Good Sat. Poor Fail

1. Was all required material and equipment available?

2. Were instruments functional and with current calibrations?

3. Were field instruments properly response checked prior to use?

4. Were field instruments selected with proper attention as to range for expected dose rates, environmental conditions, etc?

F. Protective Measures Rating: Ex. Good Sat. Poor Fail

1. Did personnel properly use respirators, Anti-Cs, dosimetry, etc.?

2. Did RCTs demonstrate adequate exposure and contamination control?

3. Were high range dosimeters used, as necessary, and properly positioned?

G. Access Control Rating: Ex. Good Sat. Poor Fail

1. Was entry into effected area properly controlled?

2. Were support personnel (firemen, ambulance crews, etc.) coming onsite quickly assigned dosimetry and provided appropriate escort?

H. Summary

1. Describe any problems noted by the area being evaluated, a brief description of the problem, its outcome or effect, and any recommended corrective courses of action to mitigate or correct the problem.

2. Completely fill out the summary evaluation form, sign it, and promptly return it as directed.

3. Critiques of the exercise will be held for all participants, evaluators, and NRC personnel (if applicable) that want to attend. Locations and times will be provided.

CONTROLLER EVALUATION FORM

JOINT PUBLIC INFORMATION CENTER

DATE: _____

EVALUATOR: _____ (print)

_____ (sign)

OVERALL EVALUATION:

Good _____
Sat. _____
Unsat. _____

* *

I. ACTIVATION AND RESPONSE:
(Circle One)

Category Evaluation
Good Sat. Unsat.

A. Time Manager arrived: _____

B. Time communications manned: _____

C. Time JPIC fully functional: _____

D. Was the JPIC activated at the appropriate time? YES NO

_____

_____

II. COMMUNICATIONS: (Circle One)	Category Evaluation Good	Sat.	Unsat.
A. Was communications equipment tested and operable as appropriate?	YES	NO	
B. Were correct communications procedures and techniques utilized?			
1. Audible and understandable?	YES	NO	
2. Concise?	YES	NO	
3. Formal?	YES	NO	
4. Accurate?	YES	NO	
5. Timely?	YES	NO	
6. Identities ascertained and logged?	YES	NO	
7. Abbreviations and acronyms minimized?	YES	NO	
8. Messages preceded by "This is a drill"?	YES	NO	
9. Information updates frequent enough?	YES	NO	

III. PROCEDURES (Circle One)

		Category Evaluation Good	Sat.	Unsat.
A.	Did the Manager maintain overall control of information released to the media (public) through the JPIC?	YES	NO	
B.	Was the dissemination of information to the media:			
1.	Swift?	YES	NO	
2.	Orderly?	YES	NO	
3.	Accurate?	YES	NO	
4.	Technically interpreted?	YES	NO	
5.	Significant?	YES	NO	
6.	Candid?	YES	NO	
C.	Was rumor control in the JPIC adequate?	YES	NO	N/A
D.	Did the Manager ensure:			
1.	Smooth operation of the JPIC-EOF communications link?	YES	NO	
2.	That media services were properly handled?	YES	NO	

E. Were news releases prepared:

1.	Accurately?	YES	NO
2.	Timely?	YES	NO

F. Were news releases:

1.	Approved prior to release?	YES	NO
2.	Distributed properly?	YES	NO

G. Was the media briefing schedule:

1.	Timely?	YES	NO
2.	Adequate?	YES	NO
3.	Publicized?	YES	NO
4.	Adhered to?	YES	NO

H. Were responses to public inquiry adequately handled? YES NO N/A

I. Was rumor control properly addressed? YES NO N/A

J. Was security enforced properly at JPIC?

1. Personnel registered? YES NO
2. Personnel controlled? YES NO
3. Number of personnel controlled? YES NO

K. Was recordkeeping of data/event logs performed?

1. Timely? YES NO
2. Accurately? YES NO

L. Was documentation properly controlled? YES NO

M. Were status boards maintained current? YES NO N/A

N. Were news releases coordinated between JPIC, the State, and the County? YES NO N/A

IV. EQUIPMENT AND MATERIALS (Circle One)

Category Evaluation: Good Sat. Unsat.

A. Were supplies adequately stocked? YES NO

B. Was emergency equipment inventoried:

1. Before use? YES NO

2. After use? YES NO

C. Was equipment tested to be operational, as applicable? YES NO

D. Were staff members familiar with the equipment which they were responsible for operating? YES NO

E. Was damaged/missing equipment repaired/ replaced, as appropriate? YES NO

V. INTERFACE:
(Circle One)

	Category Evaluation		
	Good	Sat.	Unsat.
A. Was the information flow between the staff adequate?		YES	NO
B. Was the information flow between emergency response facilities adequate?		YES	NO

VI. ADDITIONAL COMMENTS:

EXERCISE EVALUATION CRITERIA
FOR
EMERGENCY OPERATIONS FACILITY (EOF)

Location:

Beaver Valley Power Station

Emergency Response Facility (ERF)

Functions:

1. Management of overall licensee emergency response.
2. Coordination of radiological and environmental assessment.
3. Determination of recommended public protective actions.
4. Coordination of emergency response activities with Federal, State, and local agencies.

Personnel and Duties:

1. Emergency/Recovery Manager - Responsible for the overall activation and operation of the EOF and for recommending offsite protective actions.
2. Offsite Agency Liaison - Responsible for acting as a liaison with the Nuclear Regulatory Commission concerning Operating License commitments and serving as a liaison between the utility and the representatives of the state and local governments in the EOF.
3. Engineering Manager - Responsible for directing the engineering efforts related to the emergency response and for short-term modifications to plant systems to mitigate the accident.
4. Support Services Manager - Acts as a liaison with outside groups in providing transportation, food, manpower, equipment, supplies and other logistical support for emergency personnel.

5. Other personnel:

a. Assistant to Emergency/Recovery Manager

b. Environmental Assessment and Dose Projection Coordinator

c. Technical Spokesperson

d. Corporate Communications Coordinator

e. Assistants in Communications Records and Engineering

EOF 2

EMERGENCY OPERATIONS FACILITY EVALUATION

A. Activation and Response Rating: Ex. Good Sat. Poor Fail

1. Was the activation efficient and organized?
2. Were personnel familiar with their responsibilities and respond in a timely manner?
3. Was the person in charge clearly identifiable?
4. Were the transfers of responsibilities from the TSC accomplished efficiently and effectively?
5. Were all personnel made aware when transfers had occurred?

B. Communications/Dissemination of Information Rating: Ex. Good Sat. Poor Fail

1. Were all required and specified communication circuits operable?
2. Were personnel familiar with communications available and the intended use of each?
3. Were communications adequate?
4. Were there sufficient personnel to conduct communication tasks?
5. Was incoming information effectively and efficiently distributed to appropriate personnel?
6. Were periodic updates provided by the facility director?
7. Did personnel keep accurate logs?
8. Were the status boards kept updated?
9. Did persons in charge spend an inordinate amount of time on communications, such that their attention was diverted from the incident?

10. Were there periodic reports from the various response facilities to the EOF?

11. Were offsite personnel kept informed of activities/plant status?

12. Were the private lines and communications systems used as intended? Did non-emergency communications interfere with emergency transmissions?

13. Were logs and status boards used effectively by personnel to review past events and to trend data?

14. Was information provided to the Emergency News Center in a timely manner?

15. Were appropriate communications techniques (no abbreviations, phonetic alphabet, sign-on, sign-off, etc.) followed?

C. Procedures Rating: Ex. Good Sat. Poor Fail

1. Were personnel generally familiar with the relevant procedures?

2. Were procedures followed?

3. Were personnel so overwhelmed with procedural requirements that they were distracted from the appropriate response?

5. Was the overall level of competency and state of training adequate? (NOTE: Shortcomings and exceptional performance observed should be noted in detail in the Event Summary Sheet.)

D. Direction and Control Rating: Ex. Good Sat. Poor Fail

1. Was the information flow from the plant to senior management, timely, complete and accurate?

2. Was adequate and timely guidance provided by the senior management?

3. Did the emergency supervisors keep the Emergency/Recovery Manager apprised of significant events within their sphere of concern?

4. Did the Emergency/Recovery Manager effectively delegate responsibilities to the individual coordinators?

5. Did the Emergency/Recovery Manager become too deeply involved in a specific activity to the exclusion of other activities?

6. Could the response be categorized as a team effort or a group of individual efforts?

7. Were interfaces with outside groups effective?

8. Was there an effective mechanism for resolving differences of opinion regarding technical issues and actions to be taken?

9. Was there excessive noise and loitering in the EOF?

E. Material and Equipment Rating: Ex. Good Sat. Poor Fail

1. Was all of the required material and equipment available?

2. Was the equipment functional?

3. Did personnel check to ensure that all equipment was available and functional early in the activation process?

4. If the equipment was inoperative or failed in use, were appropriate actions taken to resolve the deficiency (e.g., spare or backup, equipment etc.)?

5. Were there any situations in which additional equipment or materials, or different types of equipment could have made the activity more effective? If so, please detail.

6. Were there any situations in which the lack of equipment of materials, or inoperative equipment, or lack of ability to operate the equipment, prevented personnel from performing assigned tasks?

7. Could the area support the personnel assigned to it?

8. Were there resource materials readily available to assess the emergency situation and to plan corrective actions - maps, reference books, copies of emergency plans and procedures?

F. Access Control Rating: Ex. Good Sat Poor Fail

1. Was an appropriate security posture established against unauthorized personnel?

2. Was there an identification system developed and used that effectively identified authorized personnel and their duties?

G. Summary

1. Describe any problems noted by the area being evaluated, a brief description of the problem, its outcome or effect, and any recommended corrective courses of action to mitigate to correct the problem.

2. Completely fill out the summary evaluation form, sign it, and promptly return it as directed.

3. Critiques of the exercise will be held for all participants, evaluators, and NRC personnel (if applicable) that want to attend. Locations and times will be provided.

EXERCISE EVALUATE CRITERIA
FOR
OFFSITE COMMUNICATION

Location:

Control Room, ERF

Functions:

1. Provide initial and follow-up modifications to offsite agencies.

Personnel and Duties:

1. Communications and Records Coordinator: Provide overall direction and control for notifications to offsite agencies, ensure proper approval and completeness of notification forms prior to release, act as a communicator as necessary. (Other duties described under TSC and Control Room evaluation)

2. Communicators: Make initial and follow-up notification phone calls to offsite agencies. Receive calls from offsite agencies and supply information regarding follow-up notification forms.

OC 1

OFFSITE COMMUNICATIONS

A. Activation and Response — Rating: Ex. Good Sat. Poor Fail

1. Were ERF offsite communications personnel available in a timely manner so as to not delay the activation of ERF functions?
2. Were personnel familiar with their duties?
3. Was the person in charge clearly identifiable?

B. Communication/Dissemination of Information — Rating: Ex. Good Sat. Poor Fail

1. Were personnel familiar with the equipment?
2. Were the initial notifications completed within specified time limits?
3. Were follow-up notifications made on a periodic basis and for changing conditions not requiring an initial notification?
4. Were appropriate communications techniques used (no use of accronyms, abbreviations, etc.)? Was "This is a drill" used before and after each communication?
5. Were forms properly filled out and approved before being given to communicators?
6. Was the transfer of the offsite communication responsibility from the Control Room to the ERF completed in an efficient manner without loss of information?

C. Procedures — Rating: Ex. Good Sat. Poor Fail

1. Were personel generally familiar with relevant procedures?
2. Were procedures followed?
3. Were procedures appropriate?
4. Was the overall level of competency and state of training adequate? (NOTE: Any shortcomings or exceptional performance observed should be detailed in the Event Summary Sheets)

D. Direction and Control Rating: Ex. Good Sat. Poor Fail

1. Were communicators given adequate guidance by the Communications and Records Coordinator?

E. Material and Equipment Rating: Ex. Good Sat. Poor Fail

1. Were the proper forms available and in adequate quantity?

2. Did equipment function properly?

3. Were autodialers preprogramed and were the phone numbers correct?

OC 3

EXERCISE EVALUATION CRITERIA
FOR
RADIOLOGICAL OPERATIONS CENTER (ROC)

Location:

Beaver Valley Power Station
Radcon Foreman's Office - Turbine Building (735') Unit 1

Function:

1. Central location for coordinating the activities of Radcon technicians within the plant.

Personnel and Duties:

1. ROC Coordinator - Receives direction from the Radcon Coordinator located in the TSC. Is the liaison between the Rad Techs and the TSC?

2. Radcon Technicians - Activated as needed. Rad Techs provide support for inplant radiation monitoring as well as for emergency squad surveys inplant and accompanying offsite support vehicles and personnel.

RADCON OPERATORS CENTER

A. Activation and Response Rating: Ex. Good Sat. Poor Fail

1. Was activation/initiating efficient and organized?

2. Were personnel familiar with their responsibilities and did they respond in a timely manner?

B. Communications/Dissemination of Information Rating: Ex. Good Sat. Poor Fail

1. Were all required and specified communication circuits operable?

2. Were personnel familiar with communications available and the intended use of each?

3. Were communications adequate?

4. Were there sufficient personnel to conduct communication tasks?

5. Were periodic updates made? Were briefings made to facility personnel?

6. Were logs/status boards used effectively by personnel to review past events and to trend data?

7. Were appropriate communications techniques followed? (i.e., no abbreviations)

C. Procedures Rating: Ex. Good Sat. Poor Fail

1. Were personnel generally familiar with the relevant procedures?

2. Were procedures followed?

3. Were the procedures and the tech specs in agreement?

4. Were the procedures appropriate?

ROC 2

5. What was your overall assessment of the level of competency and state of training of the personnel observed? (NOTE: If a shortcoming or exceptional performance was observed, provide specific details in the Chronological Event Summary Sheet)

D. Direction and Control Rating: Ex. Good Sat. Poor Fail

1. Was the information flow from the plant to senior management, timely, complete and accurate?
2. Could the response be categorized as a team effort as opposed to a group of individual efforts?
3. Was there excessive noise and loitering in the facilities?
4. Was the person in charge clearly identifiable?

E. Material and Equipment Rating: Ex. Good Sat. Poor Fail

1. Was all of the required materials and equipment available?
2. Was the equipment functional?
3. Did personnel check to ensure that all equipment was available and functional early in the activation process?
4. If equipment was inoperable, were appropriate actions taken to resolve the deficiency?
5. Could the area support the personnel assigned to it?
6. Was there resources readily available to assess the emergency situation and to plan corrective actions?

F. Protective Measures Rating: Ex. Good Sat. Poor Fail

1. Did ROC personnel properly evaluate the need for protective clothing, dosimetry, respirators?
2. Were appropriate contamination controls implemented?

3. Were areas properly assessed before personnel were sent to enter the area?

4. Were all in-plant activities conducted with regard to personnel safety, consistent with the need to complete the activity? Did entry teams receive adequate briefings?

5. Was the normal radiological controls program appropriately modified to contend with the emergency radiological conditions?

6. Was there adequate dose tracking both pre and post entry?

7. Was there adequate attention paid to habitability surveys of various emergency centers?

G. Access Control Rating: Ex. Good Sat. Poor Fail

1. Were incoming personnel (fire-fighters, ambulances, etc.) provided appropriate escort?

H. Summary

1. Describe any problems noted by the area being evaluated, a brief description of the problem, its outcome or effect, and any recommended corrective courses of action to mitigate or correct the problem.

2. Completely fill out the summary evaluation form, sign it, and promptly return it as directed.

3. Critiques of the exercise will be held for all participants, evaluators, and NRC personnel (if applicable) that want to attend. Locations and times will be provided.

Critique Agenda

Section VIII

(Part A)

Section VIII

CRITIQUE AGENDA

In order to ensure that planning programs are upgraded or problem items addressed, the Nuclear Regulatory Commission and Federal Emergency Management Agency require that a critique be held following each [illegible] drill or exercise. The critique is a review session [illegible] a meeting style for both the exercise participant [illegible]. The critique provides a forum for the comm[illegible] the individuals involved to be openly aired in the [illegible] of constructive criticism and suggestions for improvement.

The following is a guideline agenda for the station's critique of the exercise.

Subject: 1992 Beaver Valley Power Station Ingestion Zone Annual Exercise Critique.

Objective: To allow for discussion and comment on the general outcome of the exercise and to identify action items for necessary improvements.

Topics:

- Introduction - To be given by critique chairperson.
- Overview of Outcome - Should not exceed 10 minutes for any one (1) area, be it Operations, TSC, EOF, onsite RadCon, etc. (including the utility or NRC at a joint critique).
- Specific problems (Facilities and equipment, communications, personnel response, etc.) - Should not exceed 20 minutes for any one (1) area.
- Scenario problems (too short, too long, not enough information) - Should be brief and to the point.
- Summary - To be provided by chairperson.

NOTE: At all critiques, ensure that the notes and materials used by the exercise controllers/observers are collected by a requisite representative of either the utility, Federal, State or local agencies. These should be used not only for documentation purposes, but also to assist in the preparation of formal written critiques and scenarios following the open meetings.

References

Section VIII

(Part B)

Section VIII

References

*Beaver Valley Power Station, Emergency Preparedness Plan and Implementing Procedures.

*Beaver Valley Power Station Operating Manuals

53A Emergency Operating Procedures
53C Abnormal Operating

Normal Operating Procedures
Chapter 11 "Safety Injection"
Chapter 55 "Surveillance Tests"
Chapter 56 "Personal Injury"
Annunciator response procedures (various chapters)

*Radiation Control Manual Chapters 1-5

*Beaver Valley Power Station Security Manual

*Beaver County Emergency Response Plan

*Columbiana County Emergency Response Plan

*Hancock County Emergency Response Plan

*West Virginia Radiological Emergency Plan for the Beaver Valley Power Station.

*Commonwealth of Pennsylvania Disaster Operations Plan Annex E

*The Ohio Plan for Response to Radiation Emergencies at Licensed Nuclear Facilities.

Acknowledgements

Section IX

Section VIII

Acknowledgements

The 1992 Annual Exercise Scenario was prepared by the following Duquesne Light Scenario Development Committee members:

Duquesne Light	Department
A. Beckert	Training
D. Carothers	Maintenance
N. DiPietro	Security
D. Feigley	Training
R. J. Freund	RadCon
M. Hamel	Computer Group
D. Haser	Operations
R. Kahler	Simulator
J. Kalinyak	Chemistry
F. Liptak	Chemistry
A. Lonnett	RadCon
L. Marciniak	Maintenance
G. A. McKee	E.P.P.
R. L. Moser	E.P.P.
W. Nealon	Maintenance
W. Pulling	Engineering
B. Silk	Operations
J. Sloan	Computer Group
B. Sommer	Operations
H. I. Szklinski	E.P.P.
K. Troxler	Engineering