NUREG/CR-3489
EI-1077

Assessment of Retrieval Alternatives for the Geologic Disposal of Nuclear Waste

Prepared by F. S. Kendorski, D. F. Hambley, P. L. Wilkey

Engineers International, Inc.

Prepared for
U.S. Nuclear Regulatory
Commission

Availability of Reference Materials Cited in NRC Publications

Most documents cited in NRC publications will be available from one of the following sources:

1. The NRC Public Document Room, 1717 H Street, N.W.
   Washington, DC 20555
2. The NRC/GPO Sales Program, U.S. Nuclear Regulatory Commission,
   Washington, DC 20555
3. The National Technical Information Service, Springfield, VA 22161

Although the listing that follows represents the majority of documents cited in NRC publications, it is not intended to be exhaustive.

Referenced documents available for inspection and copying for a fee from the NRC Public Document Room include NRC correspondence and internal NRC memoranda; NRC Office of Inspection and Enforcement bulletins, circulars, information notices, inspection and investigation notices; Licensee Event Reports; vendor reports and correspondence; Commission papers; and applicant and licensee documents and correspondence.

The following documents in the NUREG series are available for purchase from the NRC/GPO Sales Program: formal NRC staff and contractor reports, NRC-sponsored conference proceedings, and NRC booklets and brochures. Also available are Regulatory Guides, NRC regulations in the *Code of Federal Regulations*, and *Nuclear Regulatory Commission Issuances*.

Documents available from the National Technical Information Service include NUREG series reports and technical reports prepared by other federal agencies and reports prepared by the Atomic Energy Commission, forerunner agency to the Nuclear Regulatory Commission.

Documents available from public and special technical libraries include all open literature items, such as books, journal and periodical articles, and transactions. *Federal Register* notices, federal and state legislation, and congressional reports can usually be obtained from these libraries.

Documents such as theses, dissertations, foreign reports and translations, and non-NRC conference proceedings are available for purchase from the organization sponsoring the publication cited.

Single copies of NRC draft reports are available free upon written request to the Division of Technical Information and Document Control, U.S. Nuclear Regulatory Commission, Washington, DC 20555.

Copies of industry codes and standards used in a substantive manner in the NRC regulatory process are maintained at the NRC Library, 7920 Norfolk Avenue, Bethesda, Maryland, and are available there for reference use by the public. Codes and standards are usually copyrighted and may be purchased from the originating organization or, if they are American National Standards, from the American National Standards Institute, 1430 Broadway, New York, NY 10018.

GPO Printed copy price: $11.00

NUREG/CR-3489
EI-1077

ASSESSMENT OF RETRIEVAL ALTERNATIVES FOR THE GEOLOGIC DISPOSAL OF NUCLEAR WASTE

Final Report

Manuscript Completed: April 1984
Date Published: May 1984

F.S. Kendorski, D.F. Hambley, and P.L. Wilkey

with contributions by:

M.A. Mahtab R.G. Post

Consultants,

and

D.J. Aucutt C.H. Baker
M.F. Dunn M.S. Ma
C. Mark A. Mukherjee
S.K. Mukherjee J.G. Patricio
M.O. Rahim V. Rajaram
M.M. Singh A.A. Sobek

Staff

Engineers International, Inc.
98 E. Naperville Road
Westmont, Illinois 60559

Prepared for
Division of Waste Management
Office of Nuclear Material Safety and Safeguards
U.S. Nuclear Regulatory Commission
Washington, D.C. 20555
NRC FIN B7327

ABSTRACT

The United States government has established a policy enacted by the National Nuclear Waste Policy Act of 1982 and regulated by Title 10, Code of Federal Regulations, Part 60, that establishes goals and an institutional framework for the isolation of nuclear waste in deep, stable geologic formations.

To isolate the waste, repositories contain multiple barriers consisting of engineered features as well as the natural geologic environment. The uncertainties at almost every step in the investigation, design, and construction of repositories necessitate maintaining the option of retrieving the emplaced waste until it can be established that successful isolation is likely.

For this work, repository conceptual designs reviewed were limited to realistic concepts in geologic media - basalt, tuff, and salt - presently (1983) undergoing design studies by DOE. Fifteen design concepts were reviewed in detail that were derived from released DOE conceptual designs and designs hybridized by assembling key features from various concepts into a new concept.

Retrieval in most concepts is not a simple reversal of waste emplacement. As a result of this study, several concerns have been identified. Technological concerns are associated with backfilled storage rooms and retrieval of breached canisters. The concerns related to backfill are the technology for precooling backfill that has been heated to well above 212°F, remining of hot backfill that has not been precooled by some means, and monitoring radioactivity.

Retrieval systems currently incorporated into DOE designs were found inadequate for handling breached canisters or those which have become bound in the storage holes. Short holes containing single canisters could be overcored but equipment needs to be developed which can overcore large diameter holes. Safety concerns common to all repository concepts are protection of personnel from heat, traffic congestion due to local retrieval, and deterioration of ground support. Radionuclide release concerns are with the radiation and radionuclides which would be released into the air and water present in a storage room if there were a canister breach. The confinement ventilation circuit airflows provided in the DOE conceptual designs are at best just adequate for retrieval and are inadequate for retrieval from backfilled rooms.

TABLE OF CONTENTS

LIST OF FIGURES

FIGURE NO.

LIST OF FIGURES (continued)

FIGURE NO.

LIST OF FIGURES (continued)

FIGURE NO.

LIST OF FIGURES (continued)

FIGURE NO.

LIST OF FIGURES (continued)

FIGURE NO.

LIST OF TABLES

TABLE NO.

LIST OF TABLES (continued)

TABLE NO.

ACKNOWLEDGEMENTS

The authors would like to acknowledge the guidance received from Lawrence Chase, Seth M. Coplan, John T. Greeves, H. J. Miller, David H. Tiktinsky, and Robert J. Wright of the Engineering Branch, Division of Waste Management of the U. S. Nuclear Regulatory Commission, and Cindy Fleenor, Contract Administrator, of the Division of Contracts, U. S. Nuclear Regulatory Commission. In addition, the staffs at the Office of Nuclear Waste Isolation, Rockwell Hanford Operations, and Sandia National Laboratories assisted by furnishing available information and documents. The assistance and hard work of the numerous contributors listed on the title page are also greatly appreciated. Prof. Jaak J. K. Daemen of the University of Arizona provided comments on the final manuscript. Thanks are due also to Catherine Kantowski for her attention to detail in compiling the manuscript, and to Dr. Madan M. Singh, President of Engineers International, Inc., under whose overall direction the project was pursued.

EXECUTIVE SUMMARY

The primary method for high-level nuclear waste disposal being considered by the U. S. Department of Energy (DOE) is placement of canistered high-level wastes in stable, geologic formations deep underground. Mined repositories would be constructed in the geologic formations to store the canisters in boreholes drilled either into the floor or sidewalls of horizontal underground rooms mined in the geologic formations, or the canisters could be placed directly in the rooms. The report deals with the retrieval of the canistered waste packages, more specifically, with the assessment of retrieval alternatives under varying operational modes ranging from merely remining to retrieve an emplaced package to retreiving a number of emplaced packages under both difficult and severe conditions and environments.

The major objective of the report is to allow the Nuclear Regulatory Commission (NRC) to identify very early in the design process any retrievability approaches that could ultimately prove to be unsatisfactory from a licensing standpoint, and to identify sound technical approaches for the retrievability issues specified in the report.

Other objectives of this report are to update and increase the data base by providing assessments of various retrieval alternatives for geologic repositories and to review and identify the range of alternative repository design and operational/retrieval modes being considered by the DOE. The report contains the range of alternatives identified and proposes a select few of the alternative repository concepts that bound and are representative of this range. The report also contains an assessment of the basic technologies upon which the alternative operational/retrieval modes are based, and the degree to which each relies on straightforward extensions or transfers of these technologies.

The concerns and conclusions presented in this report can be used by the designers and other involved or interested parties for the next phases of repository design and prelicensing processes, to provide for the option of waste retrieval and for assessing alternatives to retreival concepts.

Introduction

This report presents the results of Task 1, "Assessment of Retrieval Alternatives for the Geologic Disposal of Nuclear Waste," of U. S. Nuclear Regulatory Commission Contract NRC-02-82-031, "Assessment of Waste Retrieval Alternatives." The purpose of this project was to provide technical assistance to the NRC on designs and design elements in DOE proposals for the geologic disposal of nuclear waste to permit the NRC to identify very early in the design process any approaches to the required retrievability of waste that could prove unsatisfactory from a licensing standpoint, and to allow all involved parties to identify sound technical approaches to meeting the retrievability requirements of 10CFR60.

The uncertainties at almost every step in the investigation, design, and construction of geologic repositories for nuclear waste result in the necessity to maintain the option of retrieving the emplaced waste, until such time as the likely success of the isolation of the waste can be established.

The nuclear waste is packaged in canisters and transported deep underground in geologic repositories for disposal in boreholes drilled either into the floor or sidewalls of horizontal underground rooms, or placement directly in the rooms. Rooms are then either left open and partially or completely ventilated until permanent closure and then backfilled, or immediately filled with backfill and permanently closed. To retrieve the waste canisters, the backfill, if present, must be re-excavated, and the waste canisters located and retrieved. The radioactivity and heat generated by the canisters cause retrieval in some designs to be quite complicated and potentially hazardous. Also, the difficulties of the underground environment must be considered.

Retrieval must be maintained as an option, but must not dictate repository design if complexity increases substantially as a result. On the other hand, retrieval must not be precluded in the design, but must be practicable even if with difficulty.

Approach

Repository designs by DOE have been produced for several years, and many different concepts have been developed. Also, different geologic media are proposed for repository sites, each with alternative designs. For this work, the intent of the NRC was to limit the investigations to realistic concepts in geologic media presently (1983) under detailed design investigation in the United States. Therefore, concepts in basalt, tuff, and bedded salt were selected, while those in granite were not studied.

Of the numerous designs available, those selected for review in detail for their retrievability characteristics were derived from two main sources:

- DOE conceptual designs already released
- Designs hybridized by Engineers International, Inc (EI) from released DOE designs to study important features not presently encompassed by one single design, but which possess characteristics that could well be proposed in the ongoing design process.

Concepts were chosen or hybridized on the basis of the following key features:

- Geologic media
- Canister storage location and attitude
- Backfill timing - whether immediately following waste emplacement or at permanent closure
- Ventilation conditions - with delayed backfilling, whether the storage rooms are left open and ventilated or are bulkheaded off.

In all, seven concepts were developed and reviewed in basalt, six in tuff, and two in salt. These concepts are, along with their Appendix designation for the detailed review and their characteristics, as follows:

- First Basalt Concept (Appendix 10.1): vertical holes, backfilling at permanent closure, rooms open and ventilated
- Second Basalt Concept (Appendix 10.2): vertical holes, backfilling at permanent closure, rooms bulkheaded with only leakage air allowed to enter
- Third Basalt Concept (Appendix 10.3): vertical holes, immediate backfilling and bulkheading, no ventilation in backfilled rooms
- Fourth Basalt Concept (Appendix 10.4): horizontal holes, backfilling at permanent closure, rooms open and ventilated
- Fifth Basalt Concept (Appendix 10.5): horizontal holes, backfilling at permanent closure, rooms bulkheaded with only leakage air allowed to enter
- Sixth Basalt Concept (Appendix 10.6): horizontal holes, immediate backfilling and bulkheading, no ventilation in backfilled room
- Seventh Basalt Concept (Appendix 10.7): canisters laid horizontally in the rooms, surrounded by shaped bentonite blocks (in-room or in-vault storage), immediate backfilling and bulkheading, no ventilation in backfilled rooms
- First Tuff Concept (Appendix 10.8): vertical holes, backfilling at permanent closure, rooms open and ventilated

- Second Tuff Concept (Appendix 10.9): vertical holes, backfilling at permanent closure, rooms bulkheaded with only leakage air allowed to enter
- Third Tuff Concept (Appendix 10.10): vertical holes, immediate backfilling and bulkheading, no ventilation in backfilled rooms
- Fourth Tuff Concept (Appendix 10.11): horizontal holes, backfilling at permanent closure, rooms open and ventilated
- Fifth Tuff Concept (Appendix 10.12): horizontal holes, backfilling at permanent closure, rooms bulkheaded with only leakage air allowed to enter
- Sixth Tuff Concept (Appendix 10.13): horizontal holes, immediate backfilling and bulkheading, no ventilation in backfilled rooms
- First Salt Concept (Appendix 10.14): immediate backfilling and bulkheading, no ventilation in backfilled rooms
- Second Salt Concept (Appendix 10.15): backfilling some time after waste storage is completed.

DOE designs are continually evolving, and the efforts in the various geologic media differ substantially. As a result, an attempt was made to select design concepts whose reviews will be widely applicable to reasonably anticipated DOE designs. Also, the DOE work is ongoing, and reviewed concepts may differ substantially from designs actually submitted for licensing, but important repository features will have already been reviewed for retrievability. Due to this ongoing nature of the DOE designs, it was necessary to review only designs available in the first half of 1982 to provide the NRC with a timely project product. Designs available in this time period are presented in AESD-TME-3113, RHO-BWI-C-116, RHO-BWI-CD-35, RHO-BW-SA-273 P, 78-56-R, 78-57-RE, 78-58-R and Stearns-Roger (1978). At the time of project initiation, much less design detail information was available for tuff, than for basalt and salt, so many basalt concept features were "transplanted" into tuff concepts. The differences in the rock mass properties of basalt and tuff will lead to differences in design approach and design details.

Retrievability Design Impacts

The exercise of the retrieval option, clearly, has a major impact on many repository systems. The waste canisters which have been emplaced in either boreholes or vaults in the rooms, must now be removed. Such actions may require precooling of backfill, remining, resupport, and cleanup of storage rooms; remining of placed backfill; decontamination; re-arrangement of ventilation systems; modification to equipment; locating and reaching waste canisters; removing potentially breached canisters; and decontamination and transport of waste. The waste canisters are radioactive and heat-generating, complicating their removal and handling. The exhausting mine air and ground water provide a potential direct radionuclide release path to the environment which must be considered. The thermal effects of waste storage result in major impacts of retrieval operations on the repository facilities and systems for backfill, excavation, ground control, and ventilation, and necessitate the use of either extensive precooling or special equipment for high temperature and possible radioactive environments.

Thermal Effects

The primary effect of elevated temperatures in basalt and tuff (aside from environmental problems of the heat itself) is to induce thermal stresses. Thermal stresses are superimposed on existing gravitational, tectonic, and excavation-induced stresses to increase the state of stress around storage holes and rooms. Thermal stresses are also time-dependent.

The chances of a canister binding in a storage hole during retrieval due to thermal decrepitation or rock movement initiated by higher stresses will be greatest and would cause the most difficulties with the long horizontal holes. A bound canister in a single hole could be overcored, but overcoring canisters wedged deep in a horizontal hole is not within present technology. Routine use of hole liners and provision of a large annulus between the canister and the hole wall would help minimize the effects of instability of the storage holes.

The stability of the rooms themselves is also a point of concern. During the retrieval period, heat and thermal stresses may result in further loosening of rock around the rooms in hard rock (basalt and tuff) repositories and may also cause some deterioration of the rock mass reinforcement and support system. These problems could be worse if the rooms are bulkheaded or backfilled because of the higher temperature and humidity that may exist.

In the case of salt, the three main areas in which thermal effects are of most concern are magnified creep rates, brine migration, and effects of temperature on machinery and personnel. Salt creep affects retrieval in closure of the storage holes around the canisters, horizontal and vertical closure of the storage room, and closure of the main entries. The effect of thermal load from nuclear waste will be to increase the closure rates experienced in each of the above three areas. The immediate effect of waste emplacement will be the imparting of thermal stresses. Once the salt temperature has increased and becomes nearly constant, the importance of thermal stresses will be lessened. However, the high temperature conditions will result in greatly increased steady-state creep rates.

Backfill

In hard rock (basalt and tuff) repositories which are backfilled with a mixture of crushed rock and bentonite, the difficulties encountered in retrieval will depend on the extent to which backfilling operations have progressed. Backfill gradually heats up, and to be remined, it must be precooled, or special equipment designed for remining hot material. If the retrieval decision is made in the early stages of filling, remining should prove relatively easy. The water which will be present in the fill may be released as steam due to a possible drop in pressure when the bulkhead is breached. Whether the possible pressure release and steam formation will cause a flow of fill material is not presently known. The accompanying dehydration might result in breakdown of the fill to powder thereby adversely affecting remining. These problems will be more acute in case of the vault concept in basalt because the canisters will tend to settle as dehydration proceeds, making accurate canister location more difficult. Also, the room's backfill above the bentonite blocks will tend to settle. Such settlement could reduce roof support.

In salt, creep closure is assumed to reduce original room sizes, which will apply pressure, resulting in near-total reconstitution of the salt backfill into solid salt. High temperature conditions will also prevail at this time unless the backfill and surrounding salt is cooled prior to remining. Special remining equipment will be required for hot backfill. Air pockets and brine inclusions under high pressure may create hazardous conditions. Also, high temperature creep may cause waste packages to migrate from their original locations and require relocating. The backfill can potentially be contaminated due to leaking radionuclides from breached canisters and will require careful handling.

Excavation Systems

Bulkhead removal, overcoring breached canisters, remining backfill, and removal of bentonite blocks are operations that may be necessary for the retrieval of waste canisters. These systems become much more complex if contaminated backfill material requires excavation, handling, and disposal. If canisters cannot be merely lifted or slid out of the holes, a possible canister retrieval excavation system common to all repository options other than vault storage is overcoring. A breached canister may be retrieved by overcoring equipment that removes both the canister and a portion of the surrounding rock to help reduce radionuclide release. This operation first requires the canister to be accurately located.

To retrieve multiple canisters in holes would probably require overcoring the canisters one at a time. This would require cutting through any sleeves or liners in the holes to retreive each canister. Such down hole cutting equipment operating in an exterior annulus may not be currently available. Furthermore, the bottom of the overcore barrel and the top of the hole would then be open. Overcoring does not appear to be practical under present technology for holes longer than about 20 ft (the practical length of an overcore barrel).

Should neither simple removal nor overcoring be possible, remining parallel to a placement hole is possible, though potentially hazardous, hot, and slow.

Ground Control

Over a possibly decades-long retrievability period some deterioration of the rock mass, rock support, and rock reinforcement can be expected. In backfilled rooms, the roof may come to rest on the backfill and settle or fall when the backfill is removed, creating a safety problem during remining. In open or bulkheaded rooms the roof can be resupported and any falls occurring during the retrieval period can be cleaned upon re-entry. However, the introduction of cool, moist ventilating air during re-entry of the bulkheaded rooms may trigger further roof falls by causing either expansion or contraction of various geologic constituents. With accessible ventilated rooms, the support systems can be inspected and remedial measures carried out as problems are discovered.

Depending on the post-emplacement environment and thermal loads, groundwater can seep towards the room and result in a pore water pressure buildup behind structural linings. Such pore pressures could lead to shotcrete deterioration.

High in situ stresses, including horizontal stresses, may be encountered especially if the repository is located at great depth. The shape of the opening and the orientation of the rooms may be adjusted in response to the measured in situ stress field. If high stresses are encountered, then careful preplanning, such as minimizing cut-outs in the room sidewalls, may be necessary. Cut-outs are commonly used for local transformer vaults, explosives magazines, materials storage, and many other service functions, but they can seriously affect room stability by inadvertently concentrating stress.

Slow, continual creep of salt is not a safety hazard, although it may affect repository functions over a period of time. Salt creep may indirectly cause pillar slabbing, pillar expansion, floor heave, and roof slabbing. Therefore, the use of some combination of roof bolts, stress-relieving, steel arch canopies, and other techniques should be successful in temporarily controlling local unstable conditions. Safe working conditions should be possible to achieve during retrieval. Creep rates of heated salt still present a significant concern for retrieval.

Ventilation

The airflows required for precooling prior to retrieval exceed those provided for retrieval in some of the various DOE conceptual designs, leading to the desirability of increased airflow or other precooling efforts. However, in the case of a program of retrieval of all emplaced waste, no other operations would be taking place and, therefore, the total capacity of the combined mine (or development) and confinement ventilation circuits could be marshalled if necessary. In the case of retrieval of only a fraction of the emplaced waste, the required airflow could be obtained by a temporary shutdown of storage activities, with most available air diverted to retrieval operations.

The design concepts under consideration used only air precooling of rooms and backfill. Other means of precooling using fluids of higher heat capacity are not considered herein but may be useful in lowering backfill and room temperatures prior to retreival.

The two ventilation circuits planned for most modular repositories (entirely separate development (mine) air circuit and confinement (waste) air circuit) have been designed by DOE to avoid connections between the two circuits. However, some leakage will still occur. Leakage has been planned to be from the mine circuit to the confinement circuit; however, some of this leakage may occur from the mine exhaust to the confinement intakes. As the mine exhaust air will contain dust and fumes, leakage into the confinement intakes is not desirable, but the airflows are small compared to those into which the leakage is occurring and thus contaminants (such as blasting fumes, diesel emissions, and dust) will be readily diluted. In repository concepts that have been bulkheaded, precooling of the rooms to begin retrieval is necessary. In backfilled rooms, much cooling air is required at the working face during remining.

Facilities

If mining development and waste emplacement are concurrent operations, then the reason for choosing full and complete retrieval will most likely preclude additional repository development. In the modular concept of repository operations, development is entirely separated from emplacement (confinement operations) to the extent that equipment for each system would use different haulageways and hoisting shafts. However, in immediate-backfill options, facilities such as haulageways, loading bins, skips, and other equipment used to handle mined rock may be affected by local retrieval, as the mined backfill will need to be transported and stored by these facilities.

The area most likely affected by local or partial retrieval will be the shaft area where full transfer casks will be handled, hoisted, and lowered, and mined rock will be hoisted. Retrieved canisters may be breached compounding the congestion. Canister handling facilities at the surface are capable of handling breached canisters from local retrieval operations, at rates slower than the normal canister handling rate. Full retrieval, if prepared for, should offer no particular operational problems.

Repository design concepts considered here use existing shafts and accessways to retreive wastes. The option of creating separate new facilities for retreival may be viable and requires further consideration.

Equipment Systems

Regardless of which waste storage operation is used, the equipment necessary for retrieval will need to meet certain criteria for maximum efficiency. Principal areas of concern in equipment systems are heat effects on cutting bits, hydraulic hoses, fittings, and tires. Special high-temperature modifications in these areas are needed to maintain equipment operation in such an environment. Rubber tire high-temperature performance is more limited, and if rock temperatures are too great, then equipment may best be rail or crawler (track) mounted. The need for special high temperature equipment may be lessened by more intensive precooling or a longer retreival time-frame.

Remote control systems may be incorporated where hostile retrieval environments exist. Remote-control is a developing technology and considerable research is required to develop a reliable system, but the results will greatly increase personnel safety. The greatest disadvantage occurs when a machine brecks down in place. Machine retrieval for repair will require another remote system, or personnel in protective suits.

Special Equipment Requirements for High Temperature and Radioactive Environments

For human entry, temperatures beyond 106°F (at 100% humidity) are excessive and extraordinary measures for cooling are necessary. For equipment, temperatures beyond approximately 250°F begin to require extraordinary materials and fittings for such items as hoses and tires. When temperatures exceed 400°F to 500°F, technology is very limited, and operations become extremely difficult.

Extremely high temperatures due to canisters in storage rooms will not be encountered during retrieval as long as rooms are kept open and are well-ventilated during the storage period. Enclosed air-conditioned cabs can provide a safe environment for operators. Equipment shielding will be required for handling breached canisters, along with necessary decontamination equipment for area cleanup. Radiation protection suits are available for personnel should they ever be required to leave the confines of the operating equipment in a contaminated area. These can be supplied with internal cooling devices if necessary.

Personnel protection from the hostile room environment is most important during bulkhead removal when bulkheaded storage option is employed. The main hazard is the initial exposure to a hot air discharge which may occur as the room is opened. In order to lessen the impact, holes may be drilled to replace the hot air with cooler air prior to breachng the bulkhead.

Remining hot backfilled storage rooms presents the most hostile environment for retrieval. Extensive cooling of the backfill and surrounding rock will be necessary or excavation equipment will require components to withstand the high ambient temperatures. Remote control systems may be the best way to protect personnel during remining.

Adequacy of Retrieval Designs

Local retrieval of canisters will probably take place concurrently with storage operations. Unless equipment is retained solely for retrieval, the storage equipment will be used, thus slowing the normal storage rate. Retrieval of breached canisters will require "hot cell" or shielded equipment along with decontamination equipment for the exposed storage area. While specific provisions for such equipment have not been made in repository conceptual designs, such equipment is within current technology.

Under full retrieval conditions, the retrieval process becomes the sole repository operation and will not interfere with other functions. If any canisters are breached, the retrieval may be more complex due to contamination. The special equipment required could be ordered to meet operation requirements rather than using a small fleet of stand-by equipment. Generally, a repository committed to one operation at a time (canister storage only or canister retrieval only) makes for a more efficient operation than if local retrieval is concurrent with repository development and canister storage operations. However, as mentioned, equipment for operating in high temperature environments and remining hot and contaminated backfill does not presently exist, nor have the systems for extensive precooling of the rock or backfill while maintaining isolation capabilities been proposed or designed. The design concepts present some severe technical and safety concerns.

Areas of Concern

Waste canister storage options have several common factors. Ground support for rooms consisting of grouted roof bolts and a shotcrete lining is one common factor. Considerable buildup of heat in the storage room from waste canisters is another, although heat increases with storage time and the expected range can be from 80° to 300°F depending on the storage option used. The heat effects on roof bolts over decades are unknown, particularly because roof bolts have only been in common use for about 25 years. The effectiveness of rock bolt and shotcrete support systems at temperatures of 200°F and above requires verification.

The overcoring procedure is another area where technology has not been proved or developed for larger holes. This concept has many advantages, but the feasibility of overcoring 48-in.-diameter holes needs to be proven. An added requirement is keeping overcoring equipment operable within the confines of storage room dimensions.

Another related system where technology may be deficient is in developing a canister locating method that could detect a canister and define the orientation behind many feet of rock or backfill material. A system of this kind is necessary if the overcoring technique is to be successful.

Technological concerns associated with backfilled storage rooms are concerned with remining hot backfill cooling of backfill and surround rock, and monitoring radioactivity in the room. Monitoring may not be possible, but would provide invaluable information about storage effectiveness and aid in making a decision about retrieval. Remining of backfill presents a serious technological concern. Depending on the elapsed time since canister and backfill placement, temperatures at the backfill/wall rock interface of up to 300°F are predicted.

There are potential difficulties in providing a satisfactory environment for personnel during remining due to not high temperatures and radiation. Removal of the hot backfill is therefore best done by remote- or semi-remote-control machinery. The latter refers to an operator being located away from the machine but close enough that the face operations are clearly visible.

Safety concerns common to retrieval operations in all repository concepts are personnel protection from heat, traffic congestion due to local retrieval, and deteriorated ground support. Retrieval operations may take place in ambient temperatures of 100°F or higher. For personnel safety, cabs must be well sealed and have dependable air-conditioning systems. Heat buildup in rock, moisture from the ventilation system, and other factors can adversely affect ground support systems, creating loose rock in the roof and walls.

One possible reason for retrieval is failure of the waste package, with consequent release of radionuclides. Radionuclides of most concern are the volatile and mobile species present in sufficient concentrations to be problematical. These include gaseous tritium and krypton-85, and mobile carbon-14. Gaseous and volatile radionuclides may be released into the emplacement hole while soluble radionuclides may be carried away by any water that is present in the emplacement hole. Removal by aqueous solution requires the presence of water in liquid form; that is, the temperature must be less than the boiling point for the repository pressure conditions. For open, ventilated, and for bulkheaded, unbackfilled rooms, this pressure will be approximately one atmosphere and aqueous transport of radionuclides will occur only if the water temperature is less than 212°F.

Retrieval operations will most assuredly encounter difficulties in performing the task. Equipment and materials must be available for many anticipated contingencies. Canister orientation must be evaluated to assure retrieval is a shielded operation. The many safeguards, checks, and testing procedures may occasionally cause slowdowns, especially if breached canisters are involved. Unexpected roof cleaning or other maintenance operations may present logistical problems for personnel and equipment.

Conclusions

For all hole storage concepts in hard rock (basalt and tuff), the fundamental problems are retrieval of canisters that are physically disrupted (breached) and of canisters which have become bound in the hole due to hole closure, corrosion, or some other reason. In these cases, the transporter/transfer cask combination is inadequate for retrieval. With short holes containing single canisters, overcoring may be possible. However equipment to overcore large (48-in.-diameter) holes in this restricted area and environment requires extensive modification or development. Alternatively, numerous small holes can be drilled around the perimeter to free the canisters. The latter operation will require tight control and extensive monitoring to assure personnel safety in the event of an undetected canister breach. With long horizontal holes, retrieval in these cases could be accomplished using a transporter/transfer cask combination at each end of the hole, using one to push canisters toward the other. This would require reaming rooms equal in size to the storage rooms to accomodate the transporter/transfer cask.

If canisters are intact retrieval is least troublesome when rooms are open and ventilated. Ground support can be inspected and rehabilitated as necessary. In hard rock (basalt and tuff), the transporter used for placement can also be used for retrieval except in the cases discussed in the previous paragraph. In salt, overcoring is desirable for all canisters because hole closure will likely have occurred.

Retrieval from bulkheaded but unbackfilled rooms in hard rock, requires breaching the bulkheads and precooling. Once cooling has occurred, ground support can be inspected and rehabilitated and then retrieval operations carried out, using the transporter/transfer cask combination in hard rock and the overcoring machine in salt.

Retrieval from backfilled rooms requires breaching the bulkheads, removal of the backfill at high temperature, and precooling. A second alternative is to design a precooling system to be installed with initial backfill placement or prior to retreival. This system could then be used to lower the rock and backfill temperatures and lessen the use of remote control and high temperature equipment. Because of the potentially hostile environment, remining may be performed by remote- or semi-remote-control equipment. Except for haulage equipment, technology for remote- or semi-remote-control mining is low and extensive development is required before such systems can be considered viable. Assuming rooms have been reopened and precooled, retrieval itself would proceed as in previous options.

Retrieval is most difficult with the in-room (vault) storage concept. As presently designed, the airway which would be created by remining of the backfill between the bentonite blocks and the room perimeter is not sufficiently large to allow precooling of the rooms prior to retrieval in the desired time frame. Temperatures in the rock and the bentonite blocks within the retrieval period will be as much as 430°F. While this temperature may not be sufficient to cause bentonite to physically degrade, vaporization of the water may result with the bentonite becoming either a powder or a gel depending on the pressure conditions. The bentonite behavior is temperature and pressure dependent. The actual performance will depend on the time of retreival, and ambient conditions. In either case retrieval of the canisters will be difficult and due to the hostile environment should be done by remote-control. As with backfill removal, the level of technology for such equipment is low and extensive development is required.

Ventilation of the repository during retrieval is required not only to provide air for personnel and equipment, but also for precooling. The ventilation air also provides a rapid and direct potential radionuclide pathway to the environment. Most design alternatives require use of the entire airflow available (or even more) to precool. The required filtering of this air to minimize radionuclide releases to the environment imposes constraints on the exhaust ventilation fans that must be considered in design. Should the airflow be halted or diminished, and precooling be an assumed prerequisite to retrieval, retrieval becomes much more difficult and lengthy delays will occur and increased costs will be realized. Supplemental non-air cooling systems not yet considered or design may have to be installed.

Water that is found in the retrieval area may well be contaminated, but apparently at low levels. Should more water or more contamination than expected be encountered, a serious radionuclide release problem could develop as water intrusions could overwhelm the repository water-handling systems. Great care must be taken in realistically assessing water problems.

With reference to Final Rule 10CFR60 retrieval must satisfy the following three criteria:

- Allow retrieval of all waste to meet repository performance objectives of isolating the waste during retrieval (60.111b, 60.133c)

- Allow the safe conduct of retrieval operations (60.111b, 60.131b, 60.133e)

- Allow the repository operations of removal of damaged or suspect canisters without compromising the repository performance objectives of isolating the waste (60.111a, 60.111b).

Depending on the details of the particular repository design concept considered, these retrievability criteria are not met in the following instances:

- If canisters are broken and breached, or bound in the storage hole, proposed systems and equipment are inadequate to retrieve the waste, and safe conduct of the possible alternative operations to retrieve the waste (overcoring or remining) has not been demonstrated and is not considered within present technology and possibly not within timely projections of present technology

- If storage rooms have been backfilled following placement of wastes, and if backfill temperatures have risen to approximately 250°F or higher, no proposed conceptual design equipment or systems are within the present technology and possibly not within timely projections of present technology that would allow demonstration of the safe conduct of remining backfill to retrieve the canisters. The second option of precooling the backfill and surrounding rock has yet to be suggested or designed and may not be within current technology

- If breached canisters are present, the proposed design concepts do not allow demonstration of the safe conduct of identifying and locating breached canisters, and do not allow demonstration of waste isolation performance objectives for releases into the ventilation air and mine water. Ventilation systems are marginally adequate without consideration of meeting radionuclide release requirements and safe conduct of retrieval in an elevated temperature environment. Water handling systems are inadequately detailed and water inflow quantities sufficiently unpredictable to allow demonstration of meeting radionuclide release requirements and safe conduct of retrieval.

1.0 INTRODUCTION

Disposal of nuclear waste in repositories mined deep in geologic formations has been tentatively chosen by the U. S. Government as the most appropriate long-term solution to the increasing problem of nuclear waste. The National Nuclear Waste Policy Act of 1982 and Title 10, Code of Federal Regulations, Part 60, established goals and the regulatory and institutional framework for the nation's nuclear waste policy. The nuclear waste, mostly spent reactor fuel, is to be delivered to the repository site, packaged in canisters, transported deep underground, and placed in boreholes or vaults for permanent disposal. Since many uncertainties exist in almost every step of the process, some allowance must be made to retrieve the waste should geologic disposal be found inadequate, superior disposal technology be developed, or another use for the waste is found. Thus nuclear waste disposal must allow retrieval of that waste in a reasonable and sound fashion.

1.1 Radioactive Wastes

Underground (geologic) repositories will contain "High-level radioactive wastes" or "HLW," and other radioactive materials. HLW as defined in the Final Rule 10CFR60.2 means "(1) irradiated reactor fuel, (2) liquid wastes resulting from the operations of the first cycle solvent extraction system, or equivalent, and the concentrated wastes from subsequent extraction cycles, or equivalent, in a facility for reprocessing irradiated reactor fuel, and (3) solids into which such liquid wastes have been converted." The other radioactive materials could include transuranic (TRU) waste and some of the more hazardous "Low Level Wastes (LLW)." TRU waste "means radioactive half-lives exceeding five years, in quantities greater than 10 nCi/g (4,536 nCi/lb). LLW is any radioactive discard which is not included in the above definitions nor is a radioactive mill tailing.

Geologic repositories are proposed for permanent storage of HLW and TRU wastes and perhaps some LLW. TRU and most LLW do not emit high levels of penetrating radiation or generate appreciable heat. On the other hand, HLW contains so much radioactive material that it requires heavy shielding to protect nearby personnel and generates sufficient heat to require cooling. Two forms of HLW will be stored in the repositories:

- Spent fuel, which consists of intact irradiated fuel assemblies
- Commercial high-level waste (CHLW) which consists of reprocessed spent fuel which has been solidified within a borosilicate glass matrix before being canistered.

In this study spent fuel is of predominant concern because it is more radioactive, remains radioactive longer, and exists in larger quantities.

Radioactive materials provide many benefits, with electric power generation being foremost. In nuclear power plants, heat from the fission of certain radionuclides is used to produce steam that powers turbines to generate electrical energy. The three major fissionable isotopes are uranium-235, plutonium-239, and uranium-233. Only uranium-235 occurs naturally and forms the basic fuel for power generation. Plutonium-239 is formed in a nuclear reactor by absorption of excess neutrons released by the fission of uranium-235 in uranium-238, and uranium-233 is formed in a similar manner from natural thorium.

The chain reaction process in low enriched fuels requires low energy neutrons, while the fission process produces neutrons with quite high energies. Thus, these energetic neutrons must be slowed down by collisions with light nuclei in a moderator material such as hydrogen, deuterium, or carbon. For a reactor to operate with uranium enrichments as low as natural uranium, the more efficient moderators, deuterium or carbon, must be used. The natural uranium reactors use heavy water or graphite moderators. In the United States, the hydrogen in ordinary "light" water is used. These light water reactors, "LWR's," have two basic designs:

- Pressurized Water Reactor (PWR)
- Boiling Water Reactor (BWR).

In the PWR, the coolant-moderator is maintained in a liquid state throughout the primary loop. The water is allowed to boil in the core of the BWR and these differences in the moderator and power density result in different fuel assembly designs and eventually amounts of radioactivity in the fuels from these two reactor designs.

Eventually the fissioning process consumes the available fissionable isotopes and the fuel is "spent," and will no longer support a chain reaction in the reactor. This spent fuel contains most of the original uranium-238, about a fourth of the original uranium-235, and about as much plutonium-239 and heavier isotopes, as well as the highly radioactive fragments from the fission process, as the fission products. The uranium and plutonium isotopes can be separated from each other as well as from the fission products and high transuranium elements by chemical processing. No domestic chemical processing of spent commercial fuel has been carried out from 1972 to the date of this report and only pilot plant operations were carried out before then in the United States. Thus large quantities of spent fuels exist, but only very small amounts of wastes from the processing of spent commercial fuels exist here today.

1.2 Licensing Requirements for Repositories

Disposal of commercial nuclear waste is subject to the jurisdiction of three Federal government agencies:

- Department of Energy (DOE)
- Environmental Protection Agency (EPA)
- Nuclear Regulatory Commission (NRC).

The responsibilities of the respective organizations may be summarized as follows:

- DOE - responsible for design and operation of all Federal nuclear facilities including underground repositories for nuclear waste
- EPA - responsible for setting generally applicable standards for radiation in the environment
- NRC - responsible for implementing EPA standards, issuing licenses, assuring that public health and safety is protected, and reviewing and processing License Applications.

The function of a HLW geologic repository is to contain the waste by a system of natural and engineered barriers so that the EPA radionuclide release rates and time restrictions are satisfied. With reference to disposal of HLW in underground repositories, no final EPA standard is presently (1983) in force, so that NRC rules and technical criteria have been promulgated to be compatible with the draft EPA rules. Performance prediction would entail many calculations, some of which would be complex and uncertain. To reduce some of the uncertainties in the calculation of overall repository performance, the engineered features at the repository have been divided into two major barriers, the waste package and the underground facility, and performance objectives have been established for each. These performance objectives have been promulgated in Final Rule 10CFR60 (21 June 1983) which define the criteria that must be satisfied if a proposed repository is to be licensed by the NRC. (Inasmuch as this project work was begun in early 1982 and concluded in mid-1983 with manuscript revisions continuing into early 1984, 10CFR60 changed several times. Initially the 08 July 1981 version was referenced, but later work was revised to comply with the Final Rule of 21 June 1983. The Final Rule provisions are therefore referenced in this report.)

While limiting values are prescribed for various components of the engineered barriers, the intent is to ensure that releases of radionuclides to the accessible environment are practically minimized, but more fundamentally they must meet EPA standards. Conversely, if it is demonstrated that the EPA release standards for the environment can be met, although the prescribed criteria for the waste package and the barriers themselves have not, then the design may still be acceptable. That is, individual repository components may not function as a totally satisfactory separate barrier, but the overall radionuclide release rate to the environment can still be within EPA limits.

Underground construction and mining operations fall under the jurisdiction of the Department of Labor for worker health and safety. The two chief agencies responsible are the Occupational Safety and Health Administration (OSHA) for construction, and the Mine Safety and Health Administration (MSHA) for mining, respectively. DOE is not, per se, subject to Department of Labor (OSHA and MSHA) worker health and safety jurisdiction. However, 10CFR60.131 requires that adequate safety provisions be included in repository design and operation, that are essentially equivalent to OSHA and MSHA. It should be noted that DOE's own safety regulations (AEC, 1974) require that DOE facilities be designed, constructed, and operated in compliance with applicable OSHA and MSHA standards, which have been essentially incorporated by reference in DOE's safety standards. (When asked for a copy of DOE's construction safety regulations for DOE facilities, DOE supplied us with the referenced 1974 AEC document, which, we assume, has not yet (1983) been renamed as a DOE document.)

1.3 Retrievability

An underground repository consists of a number of rooms in which the waste is stored in vertical holes in the floor, horizontal holes in the walls, or within the room itself. The rooms are connected to the surface by a system of entries and shafts. The rooms, entries, and shafts are driven by conventional excavation methods, namely:

- Drill-and-blast
- Continuous boring (continuous miner, roadheader, etc.).

Canisters are placed in transfer casks and then taken underground through the waste handling shaft. Once underground, the transfer casks are moved from the shaft conveyance to a transporter, upon which they are taken to the storage area and placed in the prescribed storage position. To retrieve a canister would in general terms involve a reversal of this process.

The performance objectives stipulated in Final Rule 10CFR60.111 include a provision that waste packages be retrievable which reads as follows:

> "(b) Retrievability of waste. (1) The geologic repository operations area shall be designed to preserve the option of waste retrieval throughout the period during which wastes are being emplaced and, thereafter, until the completion of a performance confirmation program and Commission review of the information obtained from such a program. To satisfy this objective, the geologic repository operations area shall be designed so that any or all of the emplaced waste could be retrieved on a reasonable schedule starting at any time up to 50 years after waste emplacement operations are initiated, unless a different time period is approved or specified by the Commission. This different time period may be established on a case-by-case basis consistent with the emplacement schedule and the planned performance confirmation program.
>
> "(2) This requirement shall not preclude decisions by the Commission to allow backfilling part or all of, or permanent closure of the geologic repository operation area prior to the end of the period of design for retrievability.
>
> "(3) For purposes of this paragraph, a reasonable schedule for retrieval is one that would permit retrieval in about the same time as that devoted to construction of the geologic repository operations area and the emplacement of wastes."

In addition, 10CFR60.133 requires that the underground facility be designed to permit retrieval of waste in accordance with the performance objectives of Section 60.111.

There are two distinct modes of retrieval:

- "Full Retrieval (sometimes termed "Mass Retrieval")," by which all the waste in the repository is removed
- "Local Retrieval," by which a limited number of canisters may require retrieval.

While repository designs must allow for retrievability, the requirement for retrievability must not dictate repository design if the effect would be to greatly increase the complexity of the facility. Retrieval, while not intended to be easy, must be a planned contingency not eliminated or precluded by the design.

Recognizing that alternative technical approaches to retrieval vary widely and that some doubt exists as to the feasibility of some of the retrieval plans, the NRC initiated this study as an assessment of retrievability for alternative modes of repository operations and different geologic media.

2.0 TECHNICAL APPROACH

Repository design concepts reviewed in this study are based upon material available in the first half of 1982, and therefore may differ substantially from DOE designs submitted for licensing. Since that time much more repository conceptual design work has been released, especially for tuff, but in order to complete a thorough and timely project product, fundamental design concepts after mid-1982 were not reviewed. Obvious improvements presented later were, however, incorporated if practicable in the project work, such as transporter machine designs. However, the aim of this work was to develop and review repository systems and subsystems (and not total integrated repository designs) that will be widely applicable to reasonably anticipated DOE designs. Likewise, the evaluations which comprise this work were carried out before 10CFR60 was finalized; hence, the 08 July 1981 Proposed Rule was initially used.

2.1 Geologic Media Considered

On a world-wide basis, a number of different geologic materials have been considered for disposal of nuclear waste including granite ("crystalline" rock), shale, clays, domed salt, bedded salt, basalt, and tuff. In the United States, current work is related to potential sites in basalt, tuff, and bedded and domal salt. Granite is being considered as a potential medium for second generation repositories.

The proposed basalt site is the Basalt Waste Isolation Project (BWIP) located on the Hanford Reservation in the State of Washington. The work at this site is managed for DOE by Rockwell Hanford Operations of Rockwell International, Inc., with the conceptual design for the underground repository being prepared by a joint venture of Kaiser Engineers and Parsons Brinckerhoff Quade and Douglas. The Site Characterization Report (SCR) for BWIP was submitted to NRC in November 1982, and therefore, design work is relatively advanced (1983). The proposed horizon for the repository was the Umtanum Flow of the Grande Ronde Series, at a depth of about 3,700 ft.

The proposed site for the repository in tuff is at Yucca Mountain adjacent to the Nevada Test Site. This site is managed by the Nevada Office of the DOE with design investigations being carried out by Sandia National Laboratories (SNL). There are four candidate horizons currently being considered for the repository (NVO-196-30, 1982):

- Topopah Spring Member, depth 1,200 ft
- Calico Hills Tuffs, depth 1,600 ft

- Bullfrog Member, depth 2,500 ft
- Tram Unit, depth 3,100 ft.

Conversations with the NRC Program Manager for tuff have indicated that the presently (1983) preferred candidate horizon is the Topopah Spring Member.

Several sites have been identified for proposed repositories for commercial wastes in bedded or domal salt on non-Federal lands in Louisiana, Mississippi, Texas, and Utah. The DOE does operate the Waste Isolation Pilot Project (WIPP) in bedded salt in New Mexico; however, this site is for defense wastes and is not subject to NRC jurisdiction. In the 1960's, extensive research was performed in the Permian Basin in Kansas, especially the Lyons Salt Mine as a part of Project Salt Vault. A conceptual design for a nuclear waste repository in salt was prepared by Kaiser Engineers (78-57-RE, 1978).

2.2 Selection of Concepts to be Studied

All selected concepts are based on published and released DOE documents that are at various stages of later modification. No new design concepts were generated. Some total concepts were assembled from portions of other published concepts. Some difficulties discussed in this report are already (1983) being ameliorated or eliminated as the program progresses.

As discussed in Section 1.3, the concepts being considered by the DOE for the various geologic media were reviewed and the range of these concepts was identified by EI and presented to the NRC. Based on this identification, certain alternatives were chosen by the NRC and EI together for detailed study. The design concepts for detailed review were defined as those which appear safe and feasible, and have been developed to a stage where costs could be assigned if desired. A total of 15 concepts - seven in basalt, six in tuff, and two in salt - were selected for detailed study. The selected concepts for basalt, tuff, and salt are summarized in Tables 1a, 1b, and 1c, respectively. Brief descriptions for each concept are presented in subsequent paragraphs. Appendices 10.1 through 10.15 describe developed repository concepts and retrievability considerations in detail. All concepts involve room-and-pillar mining or more accurately, a series of rather widely-spaced, separate drifts or rooms.

Two backfill placement scenarios were considered:

- Backfill as soon as room canister storage has been completed
- Delayed backfill.

Table 1a Matrix of Identified Alternatives - Basalt

Storage Hole Orientation and Spacing; Canister Configuration	Storage Room Dimensions	Backfill Timing	Status of Ventilation During Retrieval Option Period	Status of Ground Support During Retrieval Option Period	Handling and Re-Excavation Equipment Requirements	Remarks
BASALT						
1. single row, 4 ft diameter vertical holes, 12 ft pitch; single canister per hole	14 ft wide 20 ft high 3,574 ft long	*^{1}at permanent closure	Ventilation provided- rooms open	Rehabilitated as necessary	Same as placement equipment	Costly ventilation
		^{2}at permanent closure	Just enough leakage to allow monitoring- rooms bulkheaded off	Monitored, entry may have to be rehabilitated if necessary	Same as placement equipment plus roof bolting and shotcreting equipment	
		^{3}as soon as storage of HLW in room completed	None	Monitored but no access	Need equipment capable of mining a pilot at elevated temperatures	
2. single row, 2 ft diameter horizontal holes, multiple canisters per hole	placement rooms: 31 ft wide 16.4 ft high 575 ft long	^{4}at permanent closure	Ventilation provided- rooms open	Rehabilitated as necessary	Same as placement equipment	Costly ventilation
	Reaming rooms: 9.8 ft wide 16.4 ft high 575 ft long	^{5}at permanent closure	Just enough leakage to allow monitoring- rooms bulkheaded off	Monitored, entry may have to be rehabilitated if necessary	Same as placement equipment plus roof bolting and shotcreting equipment	
		^{6}as soon as storage of HLW in room completed	None	Monitored but no access	Need equipment capable of mining a pilot at elevated temperatures	
3. Canisters laid within compacted bentonite blocks, horizontally and transverse to room axis; canister pitch 9.5 ft, self-shielding canister 3.3 ft diameter	20.5 ft wide 10 ft high 3,592 ft long	^{7}immediate	None	Not available	Same as placement equipment except for thermal shielding requirements; also need machine for removing backfill	

*all superscripts are concepts nos.

Table 1b Matrix of Identified Alternatives - Tuff

Storage Hole Orientation and Spacing; Canister Configuration	Storage Room Dimensions	Backfill Timing	Status of Ventilation During Retrieval Option Period	Status of Ground Support During Retrieval Option Period	Handling and Re-Excavation Equipment Requirements	Remarks
TUFF						
1. single row, 4 ft diameter vertical holes, 12 ft pitch; single canister per hole	14 ft wide 20 ft high 3,574 ft long	*^{1}at permanent closure	Ventilation provided- rooms open	Rehabilitated as necessary	Same as placement equipment	Costly ventilation
		^{2}at permanent closure	Just enough leakage to allow monitoring- rooms bulkheaded off	Monitored, entry may have to be rehabilitated, if necessary	Same as placement equipment plus roof bolting and shotcreting equipment	
		^{3}as soon as storage of HLW in room completed	None	Monitored but no access	Need equipment capable of mining a pilot at elevated temperatures	
2. single row, 2 ft diameter horizontal holes, 8.4 ft pitch; multiple canisters per hole	placement rooms: 31 ft wide 16.4 ft high 575 ft long	^{4}at permanent closure	Ventilation provided- rooms open	Rehabilitated as necessary	Same as placement equipment	Costly ventilation
	Reaming rooms: 9.8 ft wide 16.4 ft high 575 ft long	^{5}at permanent closure	Just enough leakage to allow monitoring- rooms bulkheaded off	Monitored, entry may have to be rehabilitated if necessary	Same as placement equipment plus roof bolting and shotcreting equipment	
		^{6}as soon as storage of HLW in room completed	None	Monitored but no access	Need equipment capable of mining a pilot at elevated temperatures	

*all superscripts are concepts nos.

Table 1c Matrix of Identified Alternatives - <u>Salt</u>

Storage Hole Orientation and Spacing; Canister Configuration	Storage Room Dimensions	Backfill Timing	Status of Ventilation During Retrieval Option Period	Status of Ground Support During Retrieval Option Period	Handling and Re-Excavation Equipment Requirements	Remarks
<u>SALT</u>						
two rows unshielded vertical holes 4 ft pitch 5.5 ft spacing between rows	17.5 ft wide 19 ft high 4,000 ft long (in 1,000 ft sections)	*^{1}immediately after room filled with waste	None	Monitored but not accessible	Equipment capable of remining at elevated temperatures	
		^{2}subsequent to waste emplacement but prior to permanent closure	ventilate until such time as rooms filled	Rehabilitated as necessary while open; monitored but inaccessible thereafter	Same as placement prior to filling; need remining equipment thereafter	May need to overmine somewhat to allow for creep closure

*all superscripts are concepts nos.

In the case of delayed backfill placement there are two sub-alternatives based on the extent of ventilation:

- Leave the rooms open and ventilated to maintain a temperature between 80°F and 106°F
- Bulkhead the rooms so that the only airflow in the rooms is due to leakage through the bulkheads.

Without reference to specific geologic media, three basic storage configurations can be identified in the various Conceptual Design Reports (CDRs):

- Canisters in vertical holes in the floors of the rooms
- Canisters in horizontal holes in the pillars between rooms
- Canisters laid in the rooms themselves (in-room or in-vault storage).

In the case of basalt, the three basic storage configurations can be further described according to hole configuration and spacing, room dimensions, and areal thermal loadings. These details can be outlined as follows (the design documents, overall areal thermal loading, and room dimensions are given in parentheses):

- Single row, four-ft-diameter vertical holes, 12-ft center-to-center hole spacing within a row, single canister per hole (RHO-BWI-C-116, 43.6 kW/acre, rooms 14-ft wide by 20-ft high by 3,574-ft long)
- Single row in each wall, 2-ft-diameter horizontal holes, 8.4-ft center-to-center hole spacing, 6 canisters per hole (RHO-BWI-CD-35, 50 kW/acre, placement rooms 31-ft wide by 16.4-ft high by 575-ft long, reaming rooms 9.8-ft wide by 13.0-ft high by 575-ft long)
- Canisters laid between compacted bentonite blocks, horizontally, and transverse to room-axis, 9.5-ft center-to-center canister spacing (Westinghouse Report No. AESD-TME-3113, 61.5 kW/acre with 30-year-old waste, rooms 20.5-ft wide by 10-ft high by 3,591-ft long).

Given the three basic storage configurations, a total of seven concepts have been obtained by selecting different combinations of the backfill timing and the amount of ventilation provided. The concepts are outlined as follows:

- First Basalt Concept (Appendix 10.1): vertical holes, backfilling at permanent closure, rooms open and ventilated

- Second Basalt Concept (Appendix 10.2): vertical holes, backfilling at permanent closure, rooms bulkheaded with only leakage air allowed to enter
- Third Basalt Concept (Appendix 10.3): vertical holes, immediate backfilling and bulkheading, no ventilation in filled rooms
- Fourth Basalt Concept (Appendix 10.4): horizontal holes, backfilling at permanent closure, rooms open and ventilated
- Fifth Basalt Concept (Appendix 10.5): horizontal holes, backfilling at permanent closure, rooms bulkheaded with only leakage air allowed to enter
- Sixth Basalt Concept (Appendix 10.6): horizontal holes, immediate backfilling and bulkheading, no ventilation in filled room
- Seventh Basalt Concept (Appendix 10.7): canisters laid horizontally in the rooms, surrounded by shaped bentonite blocks (in-room or in-vault storage).

In the case of tuff, six concepts were selected for review. The design investigations for tuff are currently (1983) being conducted by SNL for the DOE. Therefore, no detailed design concepts for tuff were available during the time frame of the Contract for this work. The six tuff concepts were assumed to have the same layouts as the respective borehole storage concepts in basalt - that is, the same room dimensions, hole dimensions, and hole spacings (pitch). Differences in the host rock characteristics will lead to differences in the tuff design from those evaluated here. The concepts evaluated however are viable as general design concepts. The six tuff concepts are, therefore:

- First Tuff Concept (Appendix 10.8): vertical holes, backfilling at permanent closure, rooms open and ventilated
- Second Tuff Concept (Appendix 10.9): vertical holes, backfilling at permanent closure, rooms bulkheaded with only leakage air allowed to enter
- Third Tuff Concept (Appendix 10.10): vertical holes, immediate backfilling and bulkheading, no ventilation in filled rooms
- Fourth Tuff Concept (Appendix 10.11): horizontal holes, backfilling at permanent closure, rooms open and ventilated
- Fifth Tuff Concept (Appendix 10.12): horizontal holes, backfilling at permanent closure, rooms bulkheaded with only leakage air allowed to enter

- Sixth Tuff Concept (Appendix 10.13): horizontal holes, immediate backfilling and bulkheading, no ventilation in filled rooms.

In the case of salt, the following hole configuration and spacing was selected (the design documents, overall, areal thermal loading and room dimensions are given in parentheses):

- Two rows of 20-in.-diameter vertical holes containing single canisters, 4-ft center-to-center hole spacing within each row (hole-pitch), 5.5-ft center-to-center spacing between rows (Kaiser Engineers Report No. 78-57-RE, 60 kW/acre, storage rooms 17.5-ft wide, 19-ft high and 4,000-ft long).

The two concepts were then chosen by varying the backfill timing, as follows:

- First Salt Concept (Appendix 10.14): immediate backfilling and bulkheading, no ventilation in filled rooms
- Second Salt Concept (Appendix 10.15): backfilling some time after waste storage is completed.

In the second salt concept, backfilling of rooms would likely occur when room closure has reduced headroom so that there is no longer clearance for inspection vehicles and equipment.

3.0 GENERALIZED RETRIEVABILITY IMPACTS ON AND INTERACTIONS WITH REPOSITORY SYSTEMS

The exercise of retrieval clearly has a major impact on many repository systems. The waste canisters have been emplaced in either boreholes or vaults in the rooms, and now must be removed. Such actions may require remining, resupport, and clean up of storage rooms; remining of placed backfill; decontamination; re-arrangement of ventilation systems; modification to equipment; locating and reaching waste canisters; removing potentially breached canisters; and decontamination and transport of waste. Inasmuch as the waste canisters are radioactive and heat-generating, their removal and handling is now complicated. The exhausting mine air and water provide potential direct radionuclide release paths to the environment, which must be considered.

For hard rock (tuff and basalt) concepts, systems for retrieval are essentially similar, but differ whether used in open rooms, bulkheaded rooms, backfilled rooms, or vault storage rooms. Salt concepts, on the other hand, require very different systems than in hard rock, so are discussed separately in the following paragraphs, where appropriate. No comparisons of feasibility among media have been made or intended.

The following discussion <u>generalizes</u> retreival considerations for repositories. <u>Detailed</u> discussions for specific design concepts may be found in Appendices 10.1 through 10.15.

3.1 Excavation Systems

Bulkhead removal, overcoring breached canisters, remining backfill, and removal of bentonite blocks are operations that may be necessary for the retrieval of waste canisters stored according to suggested repository options. These systems become much more complex if contaminated backfill material must be excavated, handled, and disposed. To provide original equipment clearances, and to eliminate unstable backfill or loose rock requires remining to approximately original room dimensions.

The canister retrieval excavation system common to all repository options other than vault storage is overcoring. A breached canister may be retrieved by overcoring equipment that removes both the canister and a portion of the surrounding rock to help reduce radionuclide release. Technology for overcoring long, large diameter holes does not exist at present. This operation first requires the canister to be accurately located. Vertically stored canisters, being singly placed in relatively short holes, are easier to retrieve than those placed horizontally.

To retrieve multiple canisters in holes would probably require overcoring the canisters one at a time. This would require cutting through any sleeves or liners in the holes to retrieve each canister. Such down hole cutting equipment operating in an exterior annulus is not currently available. Furthermore, the bottom of the overcore barrel and the top of the hole would then be open. Thus overcoring would result in liberation of radiation and radionuclides. Hence overcoring does not appear to be practical for holes longer than about 20 ft, the practical length of an overcore barrel. Room dimension restrictions could further reduce the practical length.

The feasibility of overcoring also depends on the diameter of the storage hole. Overcoring of large diameter holes, especially horizontal, will require machines with large torque, pull down, and cutting-removal (compressed air) capacities. Hence overcoring would appear practical for holes up to 24-in.-diameter but would be difficult for larger holes. Large diameter cores can be retrieved for intact rock using calyx methods. Such methods are not feasible with the presence of the canister. In addition, while design of such machines is within current technology, large overcoring machines are not currently available, to our knowledge.

3.1.1 Excavation Systems in Open Rooms

In the open storage room repository option, access to stored canisters is immediate and does not require rock excavation systems for waste retrieval unless an overcoring method, as previously described, is chosen. Preparation prior to retrieval is therefore minimal.

3.1.2 Excavation Systems in Bulkheaded Rooms

Excavation systems for bulkheaded storage rooms require bulkhead removal operations and precooling before retrieval equipment can operate. Bulkhead design details are not generally provided by DOE, (such as in documents RHO-BWI-CD-35 and RHO-BWI-C-116) but because of the bulkhead purpose to prevent ventilation system heat and air loss overload, it need not be a substantial structure. Bulkhead removal can be done in several ways including blasting and mechanical breaking. It is assumed that the bulkhead will be a non-flammable concrete structure and its removal may be tedious but within present technology. Such "demolition" methods are in common use in the construction industry in urban environments.

3.1.3 Excavation Systems in Immediately Backfilled Rooms

This storage concept requires the backfilling of rooms and panels immediately after waste storage has been completed. Retrieval of stored canisters, therefore, requires remining the backfill material.

This is the most complex operation affecting retrievability. Difficulties of extensive remining of backfill are:

- Strength of the backfill material
- Likely deteriorated roof support
- A temperature in the backfill material approaching 300°F
- The possible occurrence of steam in the backfill.

Backfill excavation can be done by full face advance, pilot and slash, or by hydraulic means. The worst conditions may be full retrieval after 50 years, at which time backfill temperature would be at a maximum (300°F). Elevated temperatures will require special excavation equipment or an extensive precooling system both of which will be subject to radionuclide safety and isolation requirements. The backfill may undergo chemical alteration, but its compressive strength is unlikely to exceed 1,500 psi. These conditions permit excavation by continuous miners or roadheaders. In immediately backfilled basalt and tuff concepts, the backfill will be contained within bulkheads and hence it will be necessary to breach these structures which will probably be thick and competent in order to withstand possible pressure from the expanding backfill as well as from any steam or moisture present.

Whatever excavation or precooling system is chosen, great care is needed not to excessively disturb canisters or storage hole systems such as grout, hole shield plugs, or canister grappling knobs that could complicate retrieval, lead to a breach or create a preferential pathway. Potential damage is increased if room floor heave has taken place thereby shifting the location and orientation of canisters.

3.1.4 Excavation Systems in Vault Storage Rooms

With vault storage (AESD-TME-3113), the developed drift becomes the storage area. Bentonite blocks house the waste canisters and immediate backfilling eliminates the void between the blocks and the drift perimeter.

This backfilling and block arrangement is what must be removed (probably with great difficulty) in order to retrieve a canister. Excavation must not damage the bentonite blocks complicating their removal. Backfill excavation above and to the sides of bentonite blocks will either be labor-intensive, or require very special remote control equipment. Excavation will be difficult due to the presence of heated backfill material, stored canisters, and deteriorated roof support. This concept assumes that retrieval will be the opposite of the emplacement operations and should not require equipment modification. Experience and testing may prove differently. For example, in a meeting between representatives of EI and Federal Bentonite, EI learned that under certain temperature and pressure conditions, the bentonite may become a gel thus hampering retrieval (Hambley, 1983b).

3.1.5 Excavation Systems in Salt

Repositories in salt present complex retrieval operations due to salt's mechanical properties and the possible presence of brine. Common excavating techniques can be used for remining salt backfill, although the presence of high pressure brine pockets can be hazardous. Due to anticipated extensive creep during a precooling period, remining may include overmining the storage room to compensate for creep, thus maintaining minimum equipment clearance requirements. The creep movement implies movement of canisters from their initial storage locations. If canisters have moved about significantly, locating them could be difficult. Once located, canister retrieval would necessitate overcoring techniques.

These salt excavation system estimates are based on retrieval after backfill has become reconstituted to virgin salt characteristics by a room volume reduction of 32% caused by creep (see Appendix 10.14). Immediate retrieval after backfill is the least complex situation, whereas retrieval at some substantially longer time period will similarly be intermediate in complexity between the two aforementioned extremes.

3.2 Equipment Systems

Regardless of which waste storage operation is used, the equipment necessary for retrieval will need to meet certain criteria for maximum efficiency. Principal areas of concern in equipment systems are heat effects on cutting bits, hydraulic hoses, fittings, and tires. Special high-temperature modifications in these areas are needed to maintain equipment operation in such an environment. Rubber tire high-temperature performance is more limited, and if rock temperatures are too great, then equipment may best be rail or crawler (track) mounted.

Remote control systems may be incorporated where these exist. A hostile environment can be considered conditions of high air temperature, high rock and backfill temperatures, excessive humidity, and possible presence of radionuclides and beta and gamma radiation. This is a still-developing technology area and much research needs to be done to develop a reliable system, but personnel safety is greatly increased. The greatest disadvantage occurs when a machine breaks down in place. Machine recovery for repair will require another remote system, or personnel in protective suits. Precooling of the rock or backfill will lessen the need for remote control or high temperature equipment.

With mining development completed, the only active operations are those involved with canister storage. Different levels of retrievability vary greatly in their impact on repository operation. For example, local retrieval could take place during storage operations, most likely using the same equipment, thereby slowing the storage rate. "Hot cell" or shielded equipment will be used for retrieval of breached canisters. Decontamination equipment will also be necessary. Transporting breached canisters to the surface for repair will require use of the shaft crane, hoist, and surface handling facilities thus interfering with their normal operations. Full retrieval can be more systematic for a full storage room or the full repository, starting retrieval with the oldest storage rooms. An operating schedule can be defined, as no interference from other operations should exist.

It should be noted that in the following discussion, basalt and tuff concepts use open, bulkheaded, and backfilled design alternatives, while salt concepts use only backfilled alternatives.

3.2.1 Equipment Systems in Open Storage Rooms

Open storage rooms (that is, those not bulkheaded or backfilled) do not require special equipment systems for retrieval. Canisters are readily accessible for both local and full retrieval in a storage room. Open rooms do not require precooling, as continued ventilation maintains a suitable thermal environment. If breached canisters are present, however, then shielded equipment must be used for retrieval, along with decontamination equipment to clean exposed surfaces. This storage option does not require equipment modification. Emplacement equipment can be used for retrieval.

3.2.2 Equipment Systems in Bulkheaded Rooms

Equipment systems and the retrieval environment for bulkheaded storage rooms are similar to those in open rooms, after bulkhead removal and precooling. The requirements for equipment shielding, and the impact of local and full retrieval are the same as those discussed in Section 3.2.1. Retrieval can be accomplished with emplacement equipment, provided that overcoring is not necessary.

3.2.3 Equipment Systems for Backfilled Storage Rooms

This storage option has the greater impact on equipment systems. Remining backfill will be performed in an environment characterized by very high rock, backfill, and air temperatures. To combat this problem, equipment can be rail or crawler mounted, be outfitted with hydraulic oil coolers and special hydraulic hoses, and use carbide cutting bits. After mining and precooling, canister retrieval could be performed with less specialized equipment. Unless overcoring is necessary the canister could be removed by the emplacement equipment. Precooling of the rock and backfill will lessen the need for remote control or high temperature equipment.

3.2.4 Equipment Systems for Vault Storage

In this option, waste canisters are stored within segmented bentonite blocks. The space between the blocks and the drift perimeter is backfilled. Equipment necessary to both place and remove backfill has yet to be developed. Removal of the bentonite blocks is expected to be difficult, since depending on the moisture conditions, it may become either powder or a solidified gel (according to information supplied to EI by Federal Bentonite at an informal meeting, Hambley, 1983b). Nevertheless the environment during the retrieval operation should be similar to that in other backfilled cases, that is, locally excessive heat and steam pockets may exist. Consequently, the equipment will need either high-temperature or cooling system modifications. If emplacement equipment were so modified, then it could be used for retrieval as well. This storage option will not require overcoring, as canisters are laid horizontally rather than being placed in holes.

3.2.5 Equipment Systems for Salt

Canister retrieval in salt is complicated due to extensive rock creep. Rock creep can move the canister and/or change its orientation. This occurrence necessitates the need for sophisticated locating equipment so that overcoring can be accomplished efficiently and without hazard. Locating systems are of critical importance in salt storage, whereas other necessary equipment systems, to combat heat for example, can be more common. It must be noted that the degree of required complexity and sophistication for equipment systems in salt is directly related to the time span between storage and retrieval.

3.3 Facilities

If mining development and waste emplacement are concurrent operations, then the reason for choosing full retrieval will most likely preclude additional mining. The modular concept of repository operations would keep the two systems entirely separated to the extent that equipment for each system would use different haulageways and hoisting shafts. However, in the immediate backfill option, facilities such as haulageways, loading bins, skips, and other equipment used to handle mined rock may be affected by local retrieval, as the mined backfill will need to be transported and stored by these facilities.

The area most likely affected by local retrieval will be the shaft area where full transfer casks will be handled, hoisted and lowered, and mined rock will be hoisted. Retrieved canisters may be breached thus compounding the impending congestion. Canister handling facilities at the surface are capable of handling breached canisters from local retrieval operations, albeit slower than their normal canister handling production rate. Full retrieval, if prepared for, should offer no particular operational problems.

3.3.1 Open Room Storage Effects on Facilities

Open storage rooms require minimum facilities for canister storage. Upon full retrieval, facilities used for mining, such as haulageways and mined rock handling equipment, will be dismantled or otherwise inoperative. Stockpiles and other surface facilities should be unaffected by retrieval operations. Local retrieval may slow or even stop normal productivity of canister handling, particularly if breached canisters are involved. Full retrieval, if prepared for, should present few operational problems.

3.3.2 Bulkheaded Storage Room Effects on Facilities

Bulkheaded rooms require additional facilities to handle bulkhead construction and removal. Support equipment may interfere with development mining if done concurrently. After bulkhead removal, retrieval impacts on facilities are those discussed for open room storage.

3.3.3 Backfilled Storage Room Effects on Facilities

There are several effects of the backfilled storage and retrieval concept on repository facilities. First, the waste handling shaft will be needed for hoisting retrieved canisters. Second, an extra system is needed to dispose of excavated backfill, especially if it is contaminated. Uncontaminated backfill, could be used in another panel where storage is taking place, provided its properties have not changed deleteriously.

Hoisting contaminated backfill will require the shaft to be on the confinement ventilation system to prevent contamination. Therefore local retrieval operations could cause logistical problems in the repository.

3.3.4 Vault Storage Effects on Facilities

Vault storage rooms require minimum facilities for canister storage. Effects should be similar to bulkheaded rooms. However, the situation is compounded by bentonite handling. Contaminated bentonite must be treated accordingly; that operation having to be worked within the repository scheme. Therefore, local retrieval has more effects than systematic full retrieval. The quantity of backfill used in the space between storage blocks and the drift walls and roof should not be large and can probably be handled underground. Handling of bentonite will be difficult whether it is in the form of powder or a gel.

3.3.5 Salt Effects on Facilities

Retrieval impacts on repository facilities in salt are similar to those discussed in Sections 3.3.3 where immediate backfill is employed. Basic repository effects are due to disposal of contaminated backfill and use of the waste handling shaft, thus precluding its normal operation in the case of local retrieval.

3.4 Ventilation Requirements

The ventilation of nuclear waste repositories is dominated by the considerations for heat. The heat arises from two sources: in situ rock temperature and thermal loading from waste canisters. Many mining operations throughout the world operate in rock temperatures up to about 140°F by either cooling the intake air or limiting worker exposure time, or sometimes both. Temperatures above this level are at the limits of ordinary ventilation technology for a continual basis. Air temperatures should not exceed 106°F to avoid heat stroke in miners and generally should be kept at 80°F at 100% humidity as a maximum. Most underground operations are at near 100% humidity owing to ground water and diesel equipment. Unless such temperatures can be achieved through already-developed mine ventilation technology, extensive precooling, refrigeration, and worker protection is necessary. For temperatures higher than about 212°F to 250°F, mining equipment has not yet been developed.

The waste packages generate heat which is transferred to the surrounding material such as rock and backfill. This heat is transferred away from the canisters by:

- Thermal conduction within the rock mass
- Convection and radiation from the rock to the air in the rooms.

The quantity of heat removed from the rock by the convective action of air circulating within a room depends on:

- The temperature differential between the rock and air
- The allowable temperature rise of the air

- The airflow and, hence, air velocity

- The length of the room

- The dimensions of the room

- The water conditions.

Where the airflow is negligible, the temperature of the air will increase until the air and rock temperatures are the same. Further heat will be conducted away from the openings into the rock mass. Thus the temperature of the rock at the perimeter of the opening would increase to a maximum, at which point it would remain nearly constant if the heat flux were constant. However, the heat radiated by the waste packages decreases with time as the radionuclides decay to more stable isotopes, and thus the temperature will decrease from the maximum. The maximum temperature and the time at which it is reached depends on the heat load and the conductivity of the rock; however, for the heat loads under consideration, at present, the maximum would occur within the retrieval period.

Where there is a flow of air whose temperature is less than that of the surrounding rock, the resulting heat transfer will reduce the temperature of the rock. For a given situation, there will be an air velocity at which the heat transfer is optimized.

Based on idealized model studies performed by DOE contractors for the various host geologic media, the maximum temperature at the perimeter of the opening, for repositories having gross thermal loadings of approximately 50 kW/acre and extraction ratios not exceeding 20%, will occur between 30 and 100 years after emplacement (RHO-BWI-C-116, 78-57-RE, AESD-TME-3113). Therefore, the temperature of the rock at the perimeter of the opening will approach or reach the predicted maximum within the maximum 50-year retrievability period. In any case, the induced rock temperature during this period will equal or exceed the original in situ rock temperature.

The magnitude of the temperature under which retrieval is to be performed is partially a function of the waste storage time and is partially dependent upon the physical situation of the rooms or panels, that is, whether the rooms or panels are:

- Open and ventilated
- Bulkheaded but unbackfilled
- Backfilled.

In the following sections, the impact of retrievability on a repository ventilation system will be discussed for each of the three cases listed above.

3.4.1 Rooms Open and Ventilated

In this case, rooms are continuously ventilated by the confinement ventilation circuit from the time that waste placement is initiated. With continuous airflow, heat is continuously extracted from the rock, and the rise in temperature at the perimeter of the opening, resulting from the heat radiated from the waste, is less than if the rooms were not ventilated.

For the concept of open, ventilated rooms to be practicable the air temperature must be sufficiently low to allow human occupancy and work. Thus, the air temperature at the exhaust end of the rooms must not exceed 106°F. The air velocity in a heading should generally fall between 50 and 100 fpm. Given that the room cross-sections for the various repository layouts range from 260 ft^2 to 460 ft^2, the required airflow per room will range from 13,000 to 23,000 cfm and 26,000 to 46,000 for velocities of 50 fpm and 100 fpm, respectively.

The total airflow required will depend on the total number of rooms in a given repository. For repository designs which contain about 130 rooms, the total required confinement circuit airflow ranges from 1,700,000 cfm for velocities of 50 fpm and room cross-sections of 260 ft^2, to 6,000,000 cfm for velocities of 100 fpm and room cross-sections of 460 ft^2.

Air velocities in the shafts should not exceed 3,000 fpm for practical reasons; the airflow of 6,000,000 cfm given above would thus require a shaft having an internal diameter of not less than 50.5 ft. While relatively shallow shafts (depths less than 1,000 ft) having diameters up to 60 ft have been sunk, the largest shafts for depths in excess of 1,000 ft have diameters of about 40 ft. Thus, additional shafts (rather than larger shafts) would likely be required for airflows in excess of about 3,750,000 cfm.

Mine fans are manufactured with capacities up to 2,000,000 cfm. There are existing mines, notably Denison Mines Ltd. in Ontario, Canada, and Jim Walters Resources, Inc., in Alabama, which circulate airflows in excess of 2,500,000 cfm underground. In a telephone call to the Mine Engineer at Denison, it was learned that the current mine intake capacity is 4.6 million cfm, and is to be increased to 5.8 million cfm in the near future, whereby one raise alone will handle 2.5 million cfm (Hambley, 1983a). Therefore, the airflows required for a fully open and ventilated repository are large, but their use is within current technology.

Studies are required to determine the reduction in the maximum rock temperature resulting from the continuous convective heat removal by the ventilating air, as well as the most efficient and cost-effective airflows for such applications.

3.4.2 Rooms Bulkheaded but Not Backfilled

The concept of rooms bulkheaded but not backfilled applies to repositories in basalt and tuff. Repositories situated in salt are not planned to be bulkheaded but not backfilled. In this repository concept, only minimal air leakage is permitted for the purpose of radiation level monitoring within the room or panel. The small airflow which would leak through the bulkheads would extract relatively insignificant quantities of heat from the rock. However, the low air velocity implies that the air temperature in the closed-off rooms or panels will approach that of the surrounding rock. Thus, precooling will be required before retrieval can be performed.

The time required to cool the rock to an acceptable temperature by means of airflow heat transfer depends on a number of factors which were discussed in previous paragraphs. Several methods exist for estimating cooling requirements (Hartman, Mutmansky, and Wang, 1982), one of which, the method of Starfield (1966), was used by EI to determine cooling requirements.

In the design reports, the airflows required for precooling are based on the maximum rock temperature for the period up to 25 years after emplacement, whereas 10CFR60 requires that waste packages could be retrievable substantially longer after emplacement. The thermal studies presented in the design reports do, however, include rock temperatures for periods of up to 50 years after emplacement, requiring larger, but acceptable airflows for cooling.

To ensure that local retrieval does not interrupt storage operations, it may be necessary to increase the confinement airflows from those specified in the design reports. This may also necessitate slight initial design size increases in the confinement air intake and exhaust shafts, or additional shafts.

3.4.3 Rooms Backfilled

In order to obtain a flow-through ventilation circuit, backfill material must be excavated. Where the waste packages are stored in boreholes, the backfill material can be excavated to provide the flow-through ventilation circuit to precool the rock prior to retrieval. Any released vapor from contained water in the backfill will have to be carried away by this ventilating air. Where the waste packages are placed in the rooms, their removal will be necessary as the backfill removal progresses.

To determine the ventilation quantities required for cooling during the backfill removal, the heading can be considered as a dead-end development heading in hot rock. A method of estimating the heat pick-up by the air is given by Whillier and Ramsden (1976). Based on this method, Patterson (1982) has derived a formula to determine the optimum airflow for development headings. It is assumed that air is supplied to the face through duct work and exhausted through the full cross-section of the heading. The optimum airflow varies with the daily advance rate of the heading, the heading perimeter, the difference between the rock and air temperatures, and the inverse of the aerostatic resistance of the air supply ducting.

The rate of daily remining advance is an important parameter but is difficult to predict. A reasonable estimate for mining backfill material is about 180 ft/day if an extensible-conveyor muck haulage system is employed. In the in-room, or in-vault, storage concept, where canister retrieval must proceed simultaneously with backfill removal, a rate of perhaps 45 ft/day may be practicable. Using these rates, the physical dimensions of the various repository layouts, and the thermal properties of the various geologic media, the optimum airflow is found to range from 95,000 to 300,000 cfm, if 48-in. diameter steel ductwork is employed. However, given that the static pressure limit for most fans is about 10 in. (water gauge), and that the length of the ducting would range from about 500 to 3,900 ft, the maximum airflow which could be supplied by the duct would range from 90,400 cfm for a 500-ft length to 32,400 cfm for a 3,900-ft length. Consequently, the required airflows given above cannot be supplied through the ductwork. This implies that while some cooling could be provided, it would not be sufficient to allow human entry into the room being remined except with adequate protection from the high temperature by air-conditioned vehicles or suits. In addition, personnel must be protected from penetrating radiation by shielding the canisters during removal and transport. Releases of airborne radionuclides will require proper respiratory protection. Backfill removal at high temperature, then, must be by semi-remote control or remote control if releases of radionuclides occur.

Design concepts evaluated used only air cooling of retrieval rooms, other methods have not yet been proposed or design but may warranted investigation in order to limit the need for high temperature or remote control equipment.

In the hole storage concepts, precooling could be performed once a connection between the intake and exhaust airways is re-established. For the horizontal hole concepts in basalt and tuff, precooling could be accomplished in about nine days using 94,100 cfm of air assuming the repository layout given in RHO-BWI-CD-35. For the vertical hole concepts, precooling could be accomplished in about 101 days using airflows ranging from 199,000 cfm to 263,000 cfm depending on the geologic medium.

In summary, the airflows required for precooling exceed those provided for retrieval in the various conceptual designs. However, in the case of full retrieval, no other operations would be taking place and, therefore, the total capacity of the combined mine (or development) and confinement ventilation circuits could be marshalled if necessary. In the case of local retrieval, the required airflow could be obtained by a temporary shutdown of storage activities, with that air diverted to retrieval operations.

3.4.4 Pressure Differentials Between Mine and Confinement Circuits

The two ventilation systems for the repository (development or mine air and confinement air) have been designed by DOE to avoid connections between the two circuits. However, some leakage will still occur. In one design (RHO-BWI-C-116, 1982), leakage has been planned to be from the mine circuit to the confinement circuit, in order to have uncontaminated air leak into contaminated air, rather than the reverse. This is accomplished by maintaining the air pressures always higher in the mine circuit where it nears the confinement circuit. Computer modeling during our review verified the validity of this plan, but showed that some leakage may occur from the mine exhaust to the confinement intakes. As the mine exhaust air will contain dust and fumes, leakage into the confinement intakes is not desirable. However, the airflow in the confinement intake will greatly exceed the leakage airflow, diluting the contaminants. The leakage can be eliminated by having airtight bulkheads keyed well into the rock.

3.5 Backfill

Backfill in a storage room is to be designed to provide an engineered barrier between waste packages and the biosphere, such that radionuclide migration is minimized, ground water flow to and from the repository is retarded, and long-term isolation (at least 1,000 years) of the nuclear waste is maintained. Since ground water is the main transporting agent for radionuclides and the corrosive agent for waste packages, one of the major functions of backfill is to retard ground water migration. The backfill must also be capable of retarding radionuclide migration through adsorption, since the possibility of radionuclide leakage from damaged canisters cannot be precluded.

3.5.1 Characteristics of Backfilling Materials

Materials for backfill suggested in the design reports are as follows:

- A mixture of 75% crushed rock and 25% bentonite for repositories in hard rock (basalt and tuff.) (In tuff, the backfill composition has been assumed by EI since no conceptual design report had (1983) yet been produced)

- Crushed salt for repositories in salt.

An assessment of the impacts of retrievability on backfill necessitates a discussion of fill material properties. Fill material properties for hard rock repositories are obviously different from those for salt, and will therefore be discussed separately.

3.5.1.1 Characteristics of Fill Materials for Hard Rock Repositories

Backfill material properties which affect backfill performance and retrievability include:

- High water sorption capacity and swelling pressure
- Low hydraulic conductivity
- High thermal conductivity
- High chemical, physical, and mechanical stability
- High ion sorption and exchange potentials.

The inherent hydrated structure of bentonite allows absorption of water and swelling to over 7 times its dry weight, beyond which bentonite becomes a thixotropic gel. However, if it is confined and no volumetric change is allowed, a swelling pressure of 218 to 725 psi develops resulting in enhanced local fill compaction and attendant low hydraulic conductivity (RHO-BWI-ST-7). Confinement may be achieved by filling the rooms at a high density (about 130 pcf) and subsequently sealing them with bulkheads. This high placement density along with the inherently low permeability of bentonite would give the backfill mixture a hydraulic conductivity 6.56 x 10^{-11} fps. This value is sufficiently low for repository conditions.

A temperature rise tends to drive moisture out of the bentonite, and, in lower internal pressure areas, steam or vapor may migrate, reducing the thermal conductivity. Under confinement (as mentioned above), vapor prossures may be high enough to prevent steam formation. Steam may form once the bulkheads are breached for remining, creating difficult conditions. Thus, presence of a certain amount of water aids backfill performance, but adversely affects retrievability. Discussions between EI and a bentonite supplier (Hambley, 1983b) revealed that certain bentonites do not degrade until 1,117°F (although design reports mention 212°F). As repository temperatures do not approach this higher temperature, chemical instability may be unlikely.

The foregoing discussion is based on presently available information. Since bentonite has not previously been used for extended time periods under the assumed repository conditions, in situ testing of its performance will be required.

Crushed basalt and bentonite possess sufficient ion exchange capability to adsorb radionuclides (RHO-BWI-ST-7). The most critical radionuclides with regard to radioactive contamination of a water supply are cesium and strontium, and can be adsorbed by the fill.

Sodium bentonite is to be the type of bentonite proposed for use. It can be pressed into blocks at water contents between 8 and 10%. This property is of particular importance in the vault concept in basalt where canisters are to be placed within mating blocks of bentonite.

3.5.1.2 Characteristics of Fill Material for Salt Repositories

Backfill material (crushed salt) properties affecting backfill performance and retrievability include:

- Creep closure
- Brine migration phenomena.

Creep closure of mined rooms under high temperature conditions significantly affects the mechanical properties of the salt backfill. The backfill will be placed at a density of 100 pcf and 90% of the rooms will be filled (78-56-R). Since the density of salt in situ is 134 pcf, a calculation shows the total voids volume is 32%. Pressure generated by room closure due to creep will gradually reduce this void space and will increase the backfill density until the latter approaches that of reconstituted salt.

The main driving force behind creep is lithostatic pressure, and closure rates are accelerated almost tenfold due at a temperature of 200°F compared to those at normal ambient temperatures. Creep closure phenomena constitute a possible retrieval hazard in that waste packages may migrate from their original positions. Adequate instrumentation is necessary to relocate waste packages for retrieval. With increasing compression and consolidation over a retrievability period of perhaps decades, the permeability of the backfill will decrease and, in the limit, it is possible that some air will be trapped in the consolidated backfill. This trapped air will be under lithostatic pressure corresponding to the depth of the repository. During remining, the reconstituted salt may become outburst-prone and present hazardous conditions.

The water content of the backfill will probably be higher than the surrounding salt owing to the higher permeability of the fill, the presence of moisture in the ventilating air, and the phenomenon of brine migration. While single phase brine inclusions migrate toward a heat source, two-phase brine inclusions (brine and vapor) tend to move away from a heat source (waste packages). Any leaking radionuclides that may become trapped within these inclusions will be transported away from the storage hole. The concentrations of the radionuclides would not constitute a hazard with respect to the penetrating radiation but would be considerably in excess of 10CFR20 limits so that it is necessary to ensure that this water does not reach potable water supplies.

3.5.2 Effect of Different Retrieval Scenarios on Backfill

3.5.2.1 Backfill in Basalt and Tuff (Hard Rock) Repositories

Based on backfill material characteristics previously presented, four scenarios of retrieval will be addressed in the following paragraphs to assess their impacts. It is assumed that bulkheads are designed to withstand any pressure due to backfill, water, or steam.

3.5.2.1.1 Retrieval at Start of Filling

Retrieval may be required just before backfilling operations are scheduled to start. Significant problems are not anticipated in this scenario. Continuation of development and storage operations will depend upon the reason for retrieval and whether full or local retrieval is undertaken. In the case of local retrieval, it will be necessary either to procure new machinery for retrieval, or to curtail the rate of placement to accommodate retrieval operations.

3.5.2.1.2 Retrieval While Backfilling is in Progress

In this scenario, backfilling operations continue for about 20 years and retrieval may be necessary at anytime during that period. The difficulties encountered in retrieval will depend on the extent to which backfilling operations have progressed.

If the retrieval decision is made in the early stages of filling, remining should prove relatively easy. The water which will be present in the fill, may be released as steam due to a drop in pressure when the bulkhead is breached. Whether this pressure release and steam formation will cause a flow of fill material is not presently known. The accompanying dehydration will probably result in breakdown of the fill to powder thereby adversely affecting remining.

These problems will be more acute in case of the vault concept in basalt because the canisters will tend to settle as dehydration proceeds, making it more difficult to locate them. Also, the tunnel backfill above the bentonite will tend to settle. Such settlement could reduce roof support.

As before, continuation of development and placement operations will depend upon the reason for retrieval and whether local or total retrieval is undertaken. This retrieval scenario is also important in cases where rooms are backfilled at permanent closure, because retrieval may be required at any time during backfilling operations.

3.5.2.1.3 Retrieval Immediately After Backfilling is Complete

If retrieval is to take place immediately following completion of backfilling operations, the problems mentioned in the previous subsection will be accentuated. This scenario is applicable only to the immediate filling and vault (in basalt) concepts. As mentioned earlier, steam release when the bulkheads are removed may cause flow and breakdown of fill.

3.5.2.1.4 Retrieval 50 Years After Completion of Backfilling

This retrieval scenario is applicable only to the immediate filling and vault (in basalt) concepts. All of the problems outlined previously will be significantly increased during the decades-long period yielding the worst retrieval scenario. Whether the backfill in a room will become saturated within decades is not presently known. If saturation does occur, apart from steam release when the bulkhead is breached, the backfill may be in the form of a thixotropic gel and may be prone to flow.

The situation will be worse in the vault concept in basalt where if the water is driven off and the bentonite becomes a powder, the canisters will tend to settle making it difficult to locate them. Also, the room backfill above the bentonite will tend to fall or settle, reducing the roof support. Extreme care will need to be exercised in retrieving canisters in such a situation. Alternatively, under high pressure, compressed bentonite blocks may unify into a hardened gel, thus making retrieval difficult. It was suggested to EI by a bentonite supplier that resin impregnated silica sand blocks would be more likely to retain their integrity under repository temperature and pressure conditions and as such might be preferable to bentonite in such an application. However, research to verify this is required.

3.5.2.2 Backfill Material in Salt Repositories

Based on the characteristics of salt backfill presented earlier, the effects of three retrieval scenarios will be addressed in the following paragraphs.

3.5.2.2.1 Retrieval Immediately Following Backfilling

In this scenario it is assumed that very little creep closure will take place. Mechanical properties of the backfill and temperature conditions will essentially be similar to those at the time of emplacement. Special remining equipment will not be necessary, unless it is desired to overmine the existing rooms.

3.5.2.2.2 Retrieval with Backfill Partially Reconstituted

In this scenario, it is expected that partial creep closure will occur, however the reduction in room size will not reach 32% required for complete reconstitution (See Section 3.5.1.2). In this case, it is anticipated that some remining of virgin salt will be required to restore rooms to their original size. A "mixed face" consisting of a perimeter of creeped salt with an interior of partially reconstituted backfill will require remining. However, no special problems are foreseen.

3.5.2.2.3 Retrieval With Backfill Totally Reconstituted

In this scenario, it is assumed that creep closure will reduce original room sizes in excess of 32%, resulting in near total reconstitution of the backfill into solid salt. High temperature conditions (200°F) will also prevail at this time (78-56-R). Without general rock and backfill precooling, special remining equipment as described in Section 3.7, "Requirements for Special Equipment for High Temperature and Radioactive Environment," will be required. It is anticipated that air pockets and brine inclusions under high pressure will create hazardous conditions. Also, waste packages may have migrated from their original locations as a result of high temperature creep and will require relocating. The backfill can potentially be contaminated due to leaking radionuclides from breached canisters and will require careful handling.

It must be noted that the creep rate will depend on the degree of consolidation, and hence the stiffness of the backfill. As the backfill consolidates, the stiffness will increase and the creep rate will diminish, other things being equal. Hence, total reconstitution of the backfill may not take place within a decade-long period.

3.6 Thermal Effects

Decay of the radionuclides contained in the the waste packages generates heat, which gradually increases rock temperatures in the repository, and affects retrieval.

The overall thermal load on the repository is determined by the areal extent of the repository, the canister spacing, the age of the waste and the type of the waste (PWR or BWR). All radionuclides ultimately decay to stable isotopes. The number of disintegrations and the heat produced in a canister decrease with time. Thus, the heat produced will be maximum at the time of emplacement. The initial (maximum) heat load for a canister containing 10 year old waste is 0.58 kW for each PWR spent fuel assembly and 0.19 kW for each BWR assembly present in the canister.

Computer codes, including the SUPER 5, COYOTE, ADINAT, and HEATING 5 programs, have been used to predict repository temperatures for several time periods and repository conditions (RHO-BWI-C-116; 78-56-R; SAND 82-0170). Important input parameters for these predictions include thermal loading, thermal conductivity of the rock, and the presence of ventilating air or backfill in the storage rooms. If the rooms are open and ventilated storage room temperatures will be cooler than in backfilled rooms. Open rooms allow ventilating air to remove some of the heat generated by the waste. Specific temperature predictions for specific repository designs can be found in the Appendices to this report (Sections 10.1 through 10.15). Further simulations are needed to predict repository temperatures over longer time periods, and to determine the effect of open, ventilated rooms on rock temperatures.

Elevated temperatures will have different effects on retrieval in hard rock than in salt, and these effects will, therefore, be discussed separately.

3.6.1 Thermal Effects - Hard Rock

The primary effect of elevated temperatures in basalt and tuff is the imparting of thermal stresses. Thermal stresses may be added to (superimposed on) existing gravitational, tectonic, and excavation-induced stresses to estimate the state of stress in the intact and fractured rock mass around storage holes and rooms. Elevated temperatures will also have effects on backfill, machinery, and personnel, but these are discussed elsewhere (see Sections 3.5, "Backfill", 3.1: Excavation Systems", and 3.7 "Requirements for Special Equipment for High Temperature and Radioactive Environments").

Thermal stresses will affect three distinct areas:

- Very-near-field effects which have the most direct impact on retrievability since it can lead to decrepitation of the borehole wall and jamming of the canister upon retrieval
- Near-field effects which impact retrievability indirectly by its potential for creating storage room instability
- Far-field effects which have minimal, if any, impact on retrievability since the stability of the entries and shafts would not, in general, be affected by this thermal loading.

The canister storage holes used in a hard rock repository will either be vertical holes containing one canister per hole or be long horizontal holes containing several canisters each.

In the very-near-field, the chances of a canister jamming due to thermal decrepitation or rock movement initiated by higher stresses will be greatest and would cause the most difficulties with the long horizontal holes. A jammed canister in a single hole would be overcored, but it would be very difficult to overcore canisters wedged deep in a horizontal hole. The routine use of hole liners and provision of a large annulus between the canister and the hole wall as proposed in the SCR (DOE/RL 82-3) will help minimize the effects of instability of the storage holes.

In the near-field the stability of the rooms themselves is also a point of concern. During the retrieval period, heat and thermal stresses may result in further loosening of rock around the rooms and may also cause some deterioration of the rock mass reinforcement and support system. These problems could be worse if the rooms are bulkheaded or backfilled because of the higher temperature and humidity that would exist. Some resupport of the rooms may therefore be necessary before retrieval, but it seems unlikely that major room stability problems will be encountered, as only rock loosening is anticipated.

3.6.2 Thermal Effects - Salt

In the case of salt, there are three main areas in which thermal effects are of most concern:

- Magnified creep rates
- Brine migration
- Effects of temperature on machinery and personnel.

The first two of these three areas are discussed in this section, the third is discussed elsewhere (see Sections 3.1 , "Excavation Systems" and 3.7," Requirements for Special Equipment for High Temperature and Radioactive Environments").

3.6.2.1 Creep of Salt

The most important mechanical property of salt is creep. Salt creep occurs naturally underground and causes joints and fractures within the salt mass to heal after their creation. When a mine opening is excavated in salt, the salt responds initially with rapid "stress-relief" creep (Baar, 1977). The creep rate then reduces with time until a stage of constant-rate steady state creep is reached. The driving force behind salt creep is the lithostatic overburden pressure.

Studies of salt creep have found that creep rates are determined primarily by the salt material properties, the applied load, and the temperature. Increases in salt temperature have been found to dramatically increase creep rates. According to laboratory tests performed in conjunction with Project Salt Vault (ORNL-4555) the effect of temperature on creep rates can be described by:

$$(E_2/E_1) \propto (T_2/T_1)^{9.5} \qquad (1)$$

where

E_1 = initial creep rate, in./in.-hr

E_2 = creep rate at second temperature, in./in.-hr

T_1 = initial temperature, °K

T_2 = second temperature, °K.

Equation (1) implies that if repository temperatures increased by 100°F (from 83°F, the expected ambient rock temperature in a repository in salt to 183°F, a reasonable rock temperature during the retrieval period,), and if everything else remained constant, then creep rates would increase five-fold. It must be emphasized, however, that Equation (1) is based on laboratory testing of salt from one location and was not confirmed by in situ testing. Other tests conducted during Project Salt Vault also found that thermal stresses caused by the emplacement of a heat source increased creep rates as much as tenfold even before the temperature of the salt mass had risen appreciably (ORNL-4555).

The creep rates expected in a repository are of critical importance to repository design and retrieval. Although several "constitutive equations" for salt creep have been derived from laboratory data, they do not correlate very well when used in computer simulations of repository-scale rock behavior (SAND79-1199). Moreover, the experience of Canadian deep (about 3,000 to 4,000 ft) potash mines indicates that laboratory creep testing results may be very misleading when applied to mine design (Mraz, 1973 and 1978; Baar, 1977). There is a major need for large scale, long duration, in situ creep testing before creep predictions may be used with confidence in the design of a repository.

Salt creep affects retrieval in three distinct areas:

- Very-near-field, closure of the storage hole around the canisters
- Near-field, horizontal and vertical closure of the storage room
- Intermediate-field, closure of the main entries.

The effect of thermal load from nuclear waste will be to increase the closure rates experienced in each of the above three areas. The immediate effect of waste emplacement will be the imparting of thermal stresses. Once the salt temperature has increased and is nearly constant, the importance of thermal stresses will be lessened. However, the high temperature conditions will result in greatly increased steady-state creep rates.

The potential effects of creep on different repository and retrieval functions over the field of the repository are summarized in Table 2 and discussed in more detail in the following paragraphs.

3.6.2.1.1 Very-Near-Field Effects

The creep of the salt around the storage hole is expected to close any annulus and completely encase the canister in salt by the end of the retrieval period. Therefore, retrieval by some overcoring method (such as the one described in SAND79-1239) is indicated. Moreover, the canisters will be subjected to a radial stress that approximate the sum of lithostatic and thermal stresses. Therefore the canisters should be designed to withstand the high radial loads.

Another very-near-field thermal effect may be displacement of the canisters due to floor heave or buckling. Floor movements may be very substantial during the retrieval period, making an accurate canister locating device necessary for retrieval.

Table 2 Effects of Salt Creep on Retrieval

Location	Phenomena	Effect
Very-Near-Field (Storage hole)	1. Closure of storage hole around canister	1. Retrieval system must be designed to retrieve canisters encased in salt
	2. Displacement of canister	2. Canisters must be designed to withstand high radial loads
	3. Brine migration to canister	3. Canisters must be locatable
		4. Safety precautions against encountering pockets of fluid or gas at high pressure or corroded canisters
Near - Field (Room)	1. (Backfilled Concept) Recompaction of backfill	1. Condition of backfill affects remining method
	2. (Backfilled Concept) Closure after remining	2. Large closures after remining may limit time available for retrieval
	3. (Open Concept) Closure of open rooms	3. Excessive closure of the open rooms during the retrieval period would necessitate backfilling; moderate closures could result in remining or floor trimming
	4. Local instability of roof, pillars and floor	4. Large closures may accelerate slabbing and buckling type failures, making room less safe
Intermediate-Field (Main entries)	1. Closure of main entries and increasing temperatures over the active life of repository	1. Necessity for major maintenance including remining to keep main entries open

3.6.2.1.2 Near-Field Effects

The effects of creep on storage rooms will differ according to whether the rooms are backfilled immediately after waste storage or left open and ventilated.

If the rooms are backfilled, creep occurring during the retrieval period will gradually recompress the backfill. The choice of the remining system at the time of retrieval may be affected by the backfill conditions such as degree of consolidation.

If the storage rooms are left open and ventilated during retrieval, the salt temperature rise will not be as great as if the rooms were backfilled. Thermal stresses may, however, be important in increasing creep rates. If excessive creep threatens to prevent access to the open rooms or causes subsidence and fracturing of overlying strata, it may be necessary to backfill the rooms before permanent closure. If only moderate creep occurs, then some minimal remining and floor trimming may be all that is required to allow equipment access for retrieval.

3.6.2.1.3 Intermediate-Field Effects

During the active life of the repository, including the specified retrieval period, it will be necessary to keep the main entries open for movement of workers, material, and ventilating air. It is likely that serious creep closures will occur in the main entries over this time period, particularly if the temperature of the salt around the main entries is increasing. Even if the temperature of the salt pillars protecting the main entries does not increase appreciably, creep rates could still increase somewhat as the main entries will form an "abutment zone" carrying some of the overburden load of the yielded, high temperature pillars in the waste storage area. A main-entry maintenance program for the life of the repository would control these closures.

3.6.2.2 Brine Migration

The presence of a thermal gradient through the salt will cause brine inclusions to migrate up the temperature gradient toward the waste canisters (ONWI-208, ORNL 5818, ORNL 5526). Brine migration occurs because the solubility of salt increases with temperature. Migration begins with the solutioning of salt by the included brine on the warmer face of the inclusion and the deposition of salt on the cooler side. The volume of the inclusion remains nearly constant and movement of the inclusion toward the heat source results. (If, however, the temperature approaches the boiling point of the brine a two-phase system (vapor/liquid) system is formed, This two-phase system will tend to migrate down the temperature gradient and away from the canisters.)

The rate and quantity of brine inflow to a borehole containing a canister will be a function of:

- Thermal load
- Temperature and thermal properties of the salt
- Solubility of the salt with temperature
- Salt purity
- Number and size of brine inclusions
- Amount of disturbance caused by installation of the borehole
- Geometry of the borehole.

The inflow rate will decrease over the course of the retrieval period as the distance for migration increases and the thermal gradient decreases. Recently, at Sandia and elsewhere, workers have measured and calculated inflows for varying thermal loads and borehole geometries (ORNL 5818). The results of this research are computer programs that will be used to model the brine migration. During in situ testing, the rates and quantities of inflow for the actual thermal loading and borehole configuration can be measured and compared with those generated by the computer programs. Proper use of in situ testing and computer programs should result in average inflow estimates for the expected repository conditions.

3.7 Special Equipment Requirements for High Temperature and Radioactive Environments

For human entry, temperatures beyond 106°F (at 100% humidity) are excessive and extraordinary measures for cooling are necessary. For equipment, temperatures beyond approximately 250°F begin to require extraordinary materials and fittings, such items as hoses and tires. When temperatures exceed 400°F to 500°F, technology is very limited, and operations become extremely difficult.

3.7.1 Special Equipment Requirements for Open Storage Rooms

Extremely high temperatures due to canisters in storage rooms will not be encountered during retrieval as long as rooms are kept open and are well ventilated during the storage period. Temperatures are expected to reach 106°F, assuming canisters remain intact (RHO-BWI-C-116). Enclosed air-conditioned cabs can provide a safe environment for operators. Equipment shielding will be required for handling breached canisters, along with necessary decontamination equipment for area clean-up in the room and elsewhere. Radiation protection suits are available for personnel should they ever be required to leave the confines of operating equipment in a contaminated area. These can be supplied with internal cooling devices if necessary. Equipment requirements are within the realm of present technology.

3.7.2 Special Equipment Requirements for Bulkheaded Storage Rooms

Personnel protection from a hostile environment is most important during bulkhead removal when this storage option is employed. The main hazard is the initial exposure to a hot air rush which may escape as the room is opened. By creating holes through the bulkhead and exchanging cool air for hot air, the hot air rush can be considerably lessened. Precooling can improve the environment for retrieval operations although shielded equipment and decontamination equipment will be needed if breached canisters are present. Enclosed air-conditioned cabs can provide further operator protection from heat. Radiation protection suits are available for personnel should they ever be required to leave the operating equipment in a contaminated area. These can be supplied with internal cooling devices if necessary.

3.7.3 Special Equipment Requirements for Backfilled Storage Rooms

Remining backfilled storage rooms presents the most hostile environment for retrieval. Excavation equipment will require components to withstand the high ambient temperatures (as discussed in Section 3.1.3). Remote control systems may be the best way to protect personnel during remining. A semi-remote system where operators stay within sight of operating equipment may be acceptable if radiation levels are low. However, neither remote not semi-remote control systems are fully developed. Reliability of enclosed equipment cabs, and air-conditioning systems are extremely critical in the expected 300°F environment during retrieval after the maximum canister storage time of 50 years. Decontamination equipment will be necessary if breached canisters exist, and all backfill handling systems must be decontaminated if backfill has been contaminated with radionuclides. Methods as yet not proposed or designed for precooling the room backfill and surrounding rock may lessen the need for special equipment for mining while increasing the need for special equipment for precooling.

3.7.4 Special Equipment Requirements for Vault Storage

Retrieval in vault storage is similar to remining backfill and, therefore, equipment requirements are the same. Remining consists of removing bentonite storage blocks and the backfill between the blocks and the room perimeter. Ambient temperatures can reach levels expected for backfilled storage rooms. All associated equipment needs heat-combating components and enclosed operator cabs with air-conditioning systems for personnel protection. Equipment must be shielded in case of breached canisters and decontamination equipment is needed if backfill or bentonite blocks have been contaminated with to radiation. Special precooling equipment may also be employed to lessen the need for high temperature equipment.

3.7.5 Special Equipment Requirements in Salt

Canister retrieval in salt requires remining of backfill, and therefore, equipment modifications parallel those discussed in Section 3.1.3. The proposed personnel protection equipment should prove adequate for any high pressure vapor or steam that may vent from brine pockets.

3.8 Ground Support

The purpose of ground support is to maintain the structural integrity of the underground excavation and to provide safe working conditions. Ground support techniques used in hard rock are different from those used in salt deposits as described below.

3.8.1 Ground Support - Hard Rock

In hard rock, ground support reinforces the "loosened zone" of rock that forms around an opening. A support system consisting of roof bolts and shotcrete has been proposed for a waste repository in basalt (RHO-BWI-C-116).

Resin grouted bolts are not presently acceptable for use in bulkheaded or backfilled repository rooms because the rock temperatures of 212°F and higher, exceed the maximum service temperature of resin grout (Weast, 1983). The practicability of resin grouted bolts in ventilated rooms depends on the reduction in temperature from the aforementioned values which results from cooling by the airflow. Experience is lacking regarding the stability of any bolt rock system over a period of several decades. Experience with concretes at elevated temperatures (Troxell, Davis, and Kelly, 1968) indicates that for simple temperature increases to 212°F relatively minor strength losses occur due to loss of both free and combined moisture. Above 212°F, more significant strength losses occur in the repository maximum temperature ranges up to, say 400°F, but amount to 10% reduction, or less. However, if the concrete is heated and then cooled, strength losses approach 25% or more at 400°F. Two considerations may minimize such strength losses. Using lean mixes and limestone, expanded slag, or similar aggregates minimize heat effects in this range. We suspect that the important cement grout, shotcrete and concrete considerations for repository temperatures hinge on minimizing the water content and matching the thermal expansion and chemistry of cements and aggregates.

Nevertheless, over a decades-long period some deterioration of the rock reinforcement and the rock mass from thermal effects, long term rock deformations, and corrosion can be expected. In backfilled rooms, the weakened roof may come to rest on the backfill and settle or fall when the backfill is removed, creating a safety problem during remining. In open or bulkheaded rooms the roof can be resupported and any falls occurring during the retrieval period can be cleaned upon re-entry. However, the introduction of cool, moist ventilating air during re-entry of the bulkheaded rooms may trigger further roof falls by causing either expansion or contraction of various geologic constituents. With accessible ventilated rooms, the support systems can be inspected and remedial measures carried out as problems are discovered.

Seepage of ground water toward the openings may occur depending on post-emplacement environments and thermal loads if the repository is located beneath the water table. With time the seepage could result in a pore water pressure build-up on the shotcrete liner, if not provided with drains into the room. Rock mass grouting at the time of room construction could minimize deterioration by seepage and chemical action.

High in situ stresses, including horizontal stresses, may be encountered at any depth. The shape of the opening and the orientation of the rooms may be adjusted in response to the measured in situ stress field. If high stresses are encountered, then careful preplanning, such as minimizing cut-outs in the room sidewalls, may be necessary. Cut-outs are commonly used for local transformer vaults, explosives magazines, materials storage, and many other service functions, but they can seriously affect room stability by inadvertently concentrating stress.

3.8.2 Ground Support - Salt

Slow, continual creep of salt is not a safety hazard, although it may affect repository functions over a period of time. Salt creep may indirectly cause two types of local instability that can create safety problems. The first of these unstable conditions is referred to as pillar slabbing. This phenomenon is very common in salt and potash mines, and can be especially hazardous where pillars are high.

The second, and perhaps more serious, safety concerns are when thin bands of shale or clay are present near an opening in bedded salt. These discontinuities act as slip planes along which thicker beds of salt in the roof or floor can separate from the salt mass and buckle into the opening. In Canadian potash mines it has been observed that "even minor variations in depth and spacing of clay seams and partings above and below the area extracted have very significant effects on the competency of openings" (Jones and Prugger, 1982).

In the conceptual design report (Kaiser Engineers, 1978), it is stated that resin roof bolts and steel sets will be used to control excessive deformations in the storage rooms. Based upon our analysis of the available literature, it does not appear that these ground control techniques would be very effective. Roof bolting is used in a number of U. S. salt mines (Y/OWI/SUB-77/16523/2; Plumeau and Peterson, 1981), and in large storage caverns in domal salt.

In domal salt, resin bolts up to 20-ft long are used to control pillar slabbing. Roof bolting can be an effective ground control tool where full salt extraction is practiced and when bolts are installed in shale or other elastic roof rock. Even under these circumstances, however, salt pillar creep can crush the shale roof despite the presence of bolts (Plumeau and Peterson, 1981).

Roof bolts are less successful in roofs consisting primarily of salt. In one instance, tensioned roof bolts were able to control the buckling of a 2-ft-thick salt layer in the roof, (ORNL 4555), but in other cases roof bolting was completely ineffective in controlling roof buckling (Prugger, 1979).

The reason that roof bolts are not especially effective in salt mine roofs can be explained by the creep behavior of salt. In a fractured rock mass in hard rock, roof bolts act to knit together the loosened zone that is formed around the excavation. In massive evaporite rocks, however, local instability is caused by creep. The zone of creep extends far beyond the reach of standard roof bolts.

In Canadian potash mines, the most effective means of controlling roof problems has been found through experience to be the application of the "Stress Control Method" (Serata, 1976; Prugger, 1979; Baar, 1977). In a typical application of the Stress Control Method, two rooms are driven at opposite ends of a panel and their roofs are allowed to fail by buckling. The horizontal stresses are then forced higher in the strata, above the immediate roof. The zone between the first two entries is thus stress relieved, and further entries can then be driven in this zone with minimal roof problems (Prugger, 1979).

It is important to note that while proper application of the Stress Control Method can control roof instability, it does not control creep. Horizontal pillar expansion and floor heave are still significant problems in main entries driven in stress-relieved ground (Jones and Prugger, 1982).

Where neither roof bolting nor the Stress Control Method are fully successful in preventing ground failure, steel arch canopies, such as those sometimes used to rehabilitate high roof falls in coal mines (Chlumecky, 1981), may provide safe conditions for retrieval operations. Steel arch canopies do not support the roof but instead protect workers from falling rock.

Therefore, the use of some combination of roof bolts, the Stress Control Method, steel arch canopies, and other techniques should be successful in temporarily controlling local unstable conditions such as roof buckling and pillar slabbing. It should be possible to achieve safe working conditions during retrieval. It does not appear that any of the currently available roof control techniques have been successful in controlling creep of salt. Creep rates of heated salt still present a significant problem for retrievability.

3.9 Effects of High In Situ Stress

The stability of an underground opening and its condition during retrieval operations are dictated by the properties of the surrounding rock mass and the state of stress in that rock mass. The state of stress in any medium is usually represented by three orthogonal stress vectors. In many geologic environments, these vectors are oriented so that one is vertical, and the other two lie in a horizontal plane. These three vectors are commonly known as the three principal stresses. The orientation and magnitude of the three principal stresses will dictate the stress condition in the rock mass surrounding an opening, as will the geometric shape of the opening itself.

In hard rocks, using elastic theory, and known or assumed stress conditions, rock mass properties, and opening geometry, the stress condition and concentration around the boundary of the opening can be determined. In the absence of any detailed information on the in situ stress conditions, underground openings are designed on the basis of simple gravity loading. Should the actual stress state differ substantially from that due to gravity, the opening orientation or geometry may require alteration.

No stress data have yet (1983) been reported for Yucca Mountain. However, high horizontal stresses are inferred at BWIP (DOE/RL 82-3, 1982). Should high horizontal stresses exist, it is possible to choose an opening geometry and orientation that will minimize the effect of the stresses. In addition, the effect of closely spaced joints in the rock around an opening is to redistribute the stresses and reduce the actual stress concentration factors from their theoretical values. The stability of rooms and other openings for the design of a HLW repository must be assessed not only on the existence of high horizontal stresses but also the thermal stresses generated by the waste.

3.9.1 Excavation Considerations Under High Horizontal Stresses

The use of a modified elliptical or ovaloidal opening with the long axis parallel to the maximum horizontal stress can minimize stress effects better than a vertical horseshoe opening. According to Boundary Element Model analyses presented by Hoek and Brown (1980), a large region of tensile stress develops in the sidewall of a horseshoe opening when the ratio of horizontal to vertical stress equals two. In contrast, no zone of tension develops in either an ovaloidal or a rectangular opening in the same stress field. The maximum compressive stress developed around other areas of an ovaloid and rectangle is also less than for a horseshoe-shaped opening in the same stress field.

The modified elliptical or ovaloid rooms will be easier to excavate than either an ellipse or a true ovaloid. The flat floor and the relatively vertical walls will facilitate the movement of equipment and the drilling of horizontal canister emplacement holes.

Drilling and blasting is the most likely means of excavating the rooms. A controlled blasting technique will minimize the extent of the loosened zone around the opening which invariably results from blasting. An extensive loosened zone may be difficult to support or reinforce, and hence is undesirable. The presence of some loosened zone, however, if it is adequately reinforced, can have the beneficial effect of reducing the stress concentrations at the skin of the opening. The broken and disturbed rock of the loosened zone cannot support high stresses as it has a low strength. Stress concentrations are not as great in a controlled loosened zone as in intact rock, since the stress is redistributed over a wider, but weaker, area, and hence, the likelihood of bursts or other distress is less.

The Conceptual Design Report (CDR) (RHO-BWI-C-116, 1982) for BWIP mentions that a Tunnel Boring Machine (TBM) is under consideration for excavating the placement rooms. At present, it does not seem that the use of a TBM would provide any advantage over a drill and blast system. Since no machine capable of continuously excavating a non-circular shape in hard rock is known to exist, in order to excavate the modified ovaloidal shape, a TBM would have to excavate the room in two passes. A pillar would have to be left between passes for the TBM's side thrusters to act upon while excavating the second pass. Once the second pass had been excavated, blasting would be necessary to remove the pillar and to trim the roof and floor. Alternatively, two (or more) TBM's in tandem could excavate a noncircular, flat ovaloid, but a mechanical breaker or saw would have to be incorporated to remove the resulting cusps on the floor and ceiling. While feasible, no such machine exists for hard rock applications. Also, because the TBM creates a minimal zone of loosened rock, stress concentrations at the skin of the opening may approach their higher theoretical values. Spalling might then result, especially with the application of thermal stress. Much further study appears to be indicated before the TBM could be considered a viable excavation option.

Minimal ground support is planned for the repository openings in hard rock. The major purpose of ground support is to reinforce the loosened zone that will form around the opening. By minimizing stress concentrations, the modified ovaloid opening will reduce or eliminate additional local rock failure caused by high stress. The rock reinforcement, wire mesh, and shotcrete, proposed in the BWIP CDR (RHO-BWI-C-116, 1982) could provide adequate reinforcement for the loosened zone created by blasting. No special difficulties are foreseen in installing the planned rock reinforcement, wire mesh, and shotcrete, in the modified ovaloidal openings, since there are adequate clearances, and no unusual geometries.

Waste emplacement holes will be drilled from each room. The shift from the horseshoe to the modified ovaloid opening substantially reduces the headroom in the emplacement room, but does increase the horizontal working space. This aids horizontal hole concepts, but may create clearance difficulties for vertical hole concepts.

3.9.2 Retrievability Effects

The stability of the emplacement hole is the primary constraint on repository design, and their stability can be examined using elastic theory. Data on the measured in situ stress field is supplied in the BWIP SCR, and the maximum stress occurring at the boundary of the emplacement holes can be determined using the Kirsch equation which is given in polar coordinate form below (Hoek and Brown, 1980):

$$\sigma_\theta = \sigma_v \left[(1+k) - 2(1-k)\cos 2\theta\right] \qquad (2)$$

where

σ_θ = induced tangential stress

σ_v = vertical in situ stress

k = ratio of horizontal to vertical in situ stress.

In the case of the roof of the opening, $\theta = 0$, and Equation (2) reduces to (where σ_H is the horizontal stress):

$$\sigma_\theta = 3\sigma_H - \sigma_v. \tag{3}$$

As the emplacement holes are oriented parallel to the maximum horizontal stress, the minimum horizontal in situ stress is the applied σ_E. Using BWIP SCR data, a numerical example will be discussed below. Values for the in situ stresses given in the SCR are:

$$\sigma_v = 4{,}370 \text{ psi}$$

$$\sigma_{H\ (min)} = 6{,}120 \text{ psi}$$

$$\sigma_{H\ (max)} = 8{,}740 \text{ psi.}$$

The maximum compressive stress in the emplacement hole due to excavation, σ_{EX}, is:

$$\sigma_{EX} = 3(6{,}120) - 4{,}370$$

$$= 13{,}990 \text{ psi.}$$

After emplacement, heat generated by the waste induces thermal stresses in the rock. The magnitude of the thermal stresses can be calculated using the equation below (in two dimensions) (Timoshenko and Goodier, 1970):

$$\sigma_{TH} = \frac{E\ \alpha\ \Delta T}{1-\nu}$$

where

σ_{TH} = thermal stress

E = in situ Young's modulus of basalt

α = thermal expansion coefficient

ΔT = temperature increase

ν = Poisson's ratio.

Using values given in the BWIP SCR:

$$E = 5.5 \times 10^6 \text{ psi}$$

$$\alpha = 4.14 \times 10^{-6} \text{ in./in./°F}$$

$$\nu = 0.26$$

$$T_{initial} = 135°F$$

$$T_{maximum} = 435°F$$

and

$$\sigma_{TH} = (5.5 \times 10^{6}) \times (4.14 \times 10^{-6}) \times$$

$$(435 - 135)/(1 - 0.26)$$

$$= 9{,}230 \text{ psi.}$$

The thermal stress is superimposed over the excavation-induced stress at the crown of the emplacement hole that was calculated earlier:

$$\sigma_{PEAK} = \sigma_{EX} + \sigma_{TH}$$

$$= 13{,}990 + 9{,}230$$

$$= 23{,}220 \text{ psi.}$$

These peak stresses can be compared to the strength of the basalt to determine the factors of safety of the emplacement hole. The rock strength given in the SCR is 29,000 psi, and the safety factors are:

$$SF_{EX} = \frac{29{,}000}{13{,}990} = 2.07$$

$$SF_{PEAK} = \frac{29{,}000}{23{,}220} = 1.25.$$

The analysis presented above is based on the assumptions that the rock mass is behaving as a perfectly elastic medium, and that the compressive strength of basalt samples tested in the laboratory adequately represents the in situ rock mass strength of the basalt. Both of these assumptions may not be accurate. The presence of jointing in the rock mass suggests that the stress concentration around the borehole will probably not reach the values calculated above. However, the in situ rock mass strength is considerably less than the laboratory strength, and therefore, it is possible that some local fracturing of the rock around the waste emplacement hole could occur. More important is the possibility that movement of blocks of rock along previously-existing joints could be initiated by the high stresses. If no hole liner is used, rock movement could damage the canisters or wedge them in the hole, adversely affecting retrievability.

Because of the importance of emplacement hole stability to retrievability, a detailed study of the expected stresses and deformations appears warranted. The recommended areas of study include:

- A more accurate assessment of the excavation and thermal stresses around emplacement holes should be performed using realistic properties of the rock mass, including joints, and taking into account non-elastic behavior

- Joint orientations and spacings should be mapped, and an analysis of potential wedge failures should be performed

- Finally, a full-scale heater test in an emplacement borehole at the repository horizon is necessary to show that retrieval will be possible from such holes in the actual stress field.

The stability of the rooms themselves is also a point of concern. During the retrieval period, heat and thermal stresses may result in further loosening of rock around the rooms and may also cause some deterioration of the rock mass reinforcement and support system. Some resupport of the rooms may therefore be necessary before retrieval, but it seems unlikely that major room stability problems will be encountered. If high stresses are confirmed in situ, then care will have to be taken to carefully pre-plan or minimize cut-outs in the room sidewalls. Such sidewall cut-outs are commonly used for local transformer vaults, magazines, materials storage, lunch rooms, and many other service functions. Excavation cut-outs that may perhaps be necessary to mount the emplacement hole drill and to allow room for this operation, must be carefully considered. Such service cut-outs can seriously affect room stability by inadvertently concentrating stress.

4.0 ADEQUACY OF INCORPORATED RETRIEVAL SYSTEMS OR ALLOWANCES

4.1 Description of Repository Retrieval Systems

Before the adequacy of the retrieval systems which are incorporated into the repositories can be discussed, it is necessary to briefly describe the systems themselves.

In the conceptual designs, it has generally been assumed that retrieval is a reversal of emplacement and that emplacement equipment could be used (RHO-BWI-CD-35; RHO-BWI-C-116; 78-57-RE). However, the retrieval periods considered in the designs were 25 years or less, with only a five-year period considered for salt. In addition, two storage configurations were employed for salt:

- A steel sleeve in the hole with an air gap between the canister top and the hole plug during the five-year period
- An unsleeved hole which is backfilled after canister placement, for the remainder of the 25-year storage period.

As studied by EI, the retrievability period was extended possibly to the decades-long period required by 10CFR60. For hard rock (basalt and tuff), the only alteration concerned the peak rock temperature which is greater for the decades-long period than 25 years. For salt, the backfilled hole configuration was chosen for study and it was assumed that overcoring would be required for retrieval.

In general terms, the retrieval operations for hole storage in hard rock would consist of the following steps, assuming the rooms were freely accessible:

- Align the transporter with the hole
- Place shield over the hole and remove the hole plug
- Align transfer cask with the hole and place it against the shield
- Open shield doors and extend grapple engage canister
- Retract grapple until canister is inside transfer cask
- Close shield doors and retract transfer cask from the hole
- Replace hole plug and retract shield
- Transport transfer cask and retrieved canister to the shaft.

For retrieval from holes in salt, the procedure would consist of the following steps, assuming the rooms are freely accessible:

- Align retrieval machine with the hole
- Place floor shield over hole and remove hole plug
- Align drill with the hole and drill to within 4 in. of the canister top
- Install overcoring barrel and commence overcoring
- Continue overcoring until barrel extends one foot below bottom of canister
- Set inclined cutters to sever the core from the surrounding rock
- Retract the core barrel and contained canister
- Transport the filled overcore barrel to the shaft.

Retrieval in the vault storage concept in basalt would be carried out as follows:

- Remove the backfill in some way between the bentonite and the walls and roof of the storage room
- Send a specially-designed machine in to remove bentonite blocks over and beside canister
- Send in forklift-type machine to remove canister and transport to the shaft
- Send a specially-designed machine in to remove bentonite block which was located under the canister.

4.2 Local Retrieval

Local retrieval is recovering one or a few canisters in a storage room or panel for reasons such as detected leakage, quality assurance inspection, quality control errors, and others. With multi-canister horizontal holes, a breach in any canister could result in retrieval and decontamination of all of the canisters in the hole.

If local retrieval of canisters is necessary, it will probably take place concurrently with storage operations. Unless equipment is retained solely for retrieval, the storage equipment will be used, thus slowing the normal storage rate. Retrieval of breached canisters will require "hot cell" or shielded equipment along with decontamination equipment for the exposed storage area. While specific provisions for such equipment have not been made in repository conceptual designs, such equipment is within current technology.

4.2.1 Local Retrieval in Open Rooms

Open storage rooms have the advantage of allowing continuous monitoring for radiation and continued access to all canister storage locations. This situation facilitates retrieval because the operation is relatively simple and does not require remining or precooling. Retrieval can be accomplished readily with emplacement equipment. With vertical storage holes, the storage safety of canisters can be impaired by stresses induced by the presence of heavy equipment. Horizontal holes avoid this problem. In salt, creep may reduce the head room so that overmining is required to provide sufficient clearance for retrieval equipment. Also, floor heave may result in an uneven floor; leveling, through removal of humps, could be required to provide sufficiently large flat bearing surfaces for the retrieval equipment. While these considerations have not been addressed they are problems which can be solved without exceptional effort.

4.2.2 Local Retrieval in Bulkheaded Rooms

In bulkheaded rooms, all bulkheads need to be removed, followed by room precooling, should the retrieval decision be made. The rooms may be partially precooled with holes through the bulkhead prior to its removal. The same effort is required to remove one canister or several from a storage panel. If part of the storage room is retrieved because of breached canisters, the room most likely will not be re-bulkheaded until the canisters are replaced, leaving the room open until that time.

After bulkhead removal, the initial release of hot air from the panel may have adverse affects on the shotcrete linings of exhaust airways. Emplacement equipment can be used for retrieval after precooling. Precooling of rooms will require a supply of air greater than that used in normal storage activities. Conceptual designs generally provide air volumes adequate for retrieval although not for simultaneous storage and retrieval.

4.2.3 Local Retrieval in Backfilled Storage Rooms

Local retrieval of breached canisters from rooms backfilled immediately after storage is only a remote probability because the monitoring system cannot readily detect radionuclides under such conditions. If, however, canisters were suspected of leaking (from comparison with similar canisters in monitored storage), then the entire storage room would have to be retrieved by remining. This situation could exist if a canister manufacturing or design defect were detected.

It should be assumed that the backfill will contain radionuclides. It may be best to leave suspected breached canisters in place rather than risk repository contamination by retrieval. In this way, there might be local but isolated contamination, within allowable overall release rates. Backfill temperature will increase with time; therefore, retrieval will be more difficult with time because of equipment modifications needed to withstand the heat or due to the need for establishing the precooling configuration.

No presently proposed (1983) repository designs in hard rock consider remining of backfill to retrieve canisters. In salt, remining of backfill has not been considered in the conceptual designs although studies have been performed in which it is considered (78-56-R, 1978; Stearns-Roge, 1978). Remining of backfill can be done with standard equipment if retrieval is required shortly after emplacement - until such time as the temperature exceeds about 106°F. For temperatures between 106°F and about 250°F, normal equipment can be employed but air-conditioned cabs for the operators are required. Above 250°F, problems with equipment will also occur. Mining equipment for working in temperatures above 250°F is not well developed.

4.2.4 Local Retrieval in Vault Storage Rooms

Local retrieval in vault storage repositories presents the same operational problems as in immediately backfilled storage rooms. The environment during retrieval becomes more hazardous with storage time, and all canisters in a storage room must be retrieved to gain access to any breached canisters toward the far end. Local retrieval is a time consuming process, and its complexity could interfere with repository storage operations.

Radiation monitoring cannot be readily conducted in a backfilled room. Should the retrieval decision be made, because of suspected breached canisters, all canisters in the room would be retrieved. The result is a significant material handling problem.

The adequacy of the retrival systems is as discussed in Section 4.1.3, except that the system is predicated on having the bentonite blocks retaining their form, a situation that seems to be unlikely, based on information supplied by representatives of Federal Bentonite. Further research and development is required before this system can be considered practical, as DOE designs do not indicate any physical decrepitation of the bentonite blocks.

4.2.5 Local Retrieval in Salt

Retrieval in salt parallels the complexity of the operation in immediately backfilled storage rooms. The same problems discussed earlier (Section 4.1.3) are encountered but are made more complex by salt creep. Salt creep from heat buildup and pressure, can alter canister location and orientation. This condition makes retrieval by overcoring or by other methods very difficult unless special locating equipment can be developed. The complexity of the operation makes local retrieval a more remote possibility.

The adequacy of retrieval systems is as discussed in Section 4.1.3.

4.3 Full Retrieval

Full retrieval of canisters requires planning and preparation but should not be unreasonably difficult because all repository resources can be committed to the operation. Under full retrieval conditions, the retrieval process becomes the sole repository operation and will not interfere with other functions. If any canisters are breached, the retrieval may be more complex due to contamination. The special equipment required could be ordered to meet operation requirements rather than using a small fleet of stand-by equipment.

4.3.1 Full Retrieval in Open Storage Rooms

Full Retrieval in open rooms should not require special equipment unless the reasons for retrieval interfere during that operation. Such reasons may be excessive rock movement crushing canisters in place, or rapid deterioration of rock causing a need for roof support and associated equipment. Emplacement equipment could readily be used for retrieval.

4.3.2 Full Retrieval in Bulkheaded Storage Rooms

Full retrieval in bulkheaded storage rooms is identical to that in open rooms, after bulkhead removal and precooling. Initial retrieval preparation of this type creates additional load on the repository ventilation system. The release of heat from the storage room could have adverse affects on support linings in the exhaust airways. It may be wise to plan retrieval of one storage room at a time to help reduce ventilation impacts. Retrieval could be conducted at approximately the same rate as emplacement.

4.3.3 Full Retrieval in Backfilled Storage Rooms

Full retrieval in backfilled storage rooms requires special excavation equipment discussed in Sections 3.1.3 and 3.7.3. The backfill must be remined before canister retrieval, and many techniques can be used. Planning retrieval and choosing necessary equipment is dependent on how long canisters have been stored, because backfill temperature is a primary concern, as discussed in Section 4.1.3.

4.3.4 Full Retrieval in Vault Storage Rooms

Full retrieval in a vault storage system is more complex than retrieval in other cases. Complexity of its operation is dependent upon the temperature and hence on storage time, as well as on the physical state of the bentonite which could be either powder or a solidified gel depending on the temperature and moisture content.

4.3.5 Full Retrieval in Salt

Full retrieval in salt requires overmining the storage rooms during remining to compensate for rock creep during storage. Rock creep over the storage time period will most likely require overcoring as routine procedure because the storage hole orientation may have changed. Specific aspects of remining and retrieval have been addressed in Sections 3.1.5 and 3.2.5.

5.0 CONCERNS

5.1 Technological Concerns

For each repository option, areas where technology is lacking or incomplete is identified.

5.1.1 General Technological Concerns

Waste canister storage options have several common factors. Ground support for rooms consisting of grouted roof bolts and a shotcrete lining is one common factor. Considerable buildup of heat in the storage room from waste canisters is another, although heat increases with storage time and the expected range can be from 80° to 300°F depending on the storage option used. The heat effects on roof bolts over a decades-long period are unknown, particularly since roof bolts have only been in common use for about 25 years. The effectiveness of rock bolt and shotcrete support systems at temperatures of 200°F and above requires verification.

The overcoring procedure is another area where technology has not been proven. This concept has many advantages, but feasibility of overcoring 48-in.-diameter holes needs to be proven. An added requirement is keeping overcoring equipment operable within the confines of storage room dimensions.

Another related system where technology may be weak is in developing a canister locating method that could detect a canister and define its orientation behind many feet of rock or backfill material. A system of this kind is necessary if the overcoring technique is to be successful.

5.1.2 Technological Concerns in Open Room Storage

Other than general concerns discussed above, systems for retrieval in open storage rooms appear to be in the realm of current technology. Research and development in canister retrieval may be necessary to define the difficulty of removing the canister from its storage hole.

5.1.3 Technological Concerns in Bulkheaded Storage Rooms

This option presents technical concerns of a general nature as discussed in Section 5.1.1 and similar to those discussed in Section 5.1.2.

5.1.4 Technological Concerns in Backfilled Storage Rooms

Technological concerns associated with backfilled storage rooms deal with remining hot backfill, and monitoring radioactivity in the room. Monitoring may not be possible, but would provide invaluable information about storage effectiveness and aid in making a decision about retrieval.

Remining of backfill represents a serious technological concern. Depending on the elapsed time since canister and backfill placement, temperatures at the backfill/wall rock interface of up to 300°F are predicted.

In addition, solid radionuclides will be exposed as excavation proceeds, thus reducing self-shielding from the backfill and probably suspending the fines, contaminated with radionuclides, in the ventilation air. Since it may not be possible to predict beforehand if a particular canister has been breached, and since the activity of the gaseous radionuclides released by a single breached canister greatly exceeds the Maximum Permissible Concentration (MPC) in air stipulated in 10CFR60 for those radionuclides, it is prudent to assume that a highly radioactive environment will exist throughout the remining. Thus if workers are to be present at the face, they must either be within shielded enclosures or be provided with radiation-shielding suits. The latter, however, are only effective for up to two hours and so should be used only in emergencies.

Because of potential difficulties in providing a satisfactory environment for personnel near the face due to high temperatures and radiation, removal of unprecooled backfill is best done by remote or semi-remote control machinery; the latter referring to an operator being located away from the machine but close enough that the face operations are clearly visible.

Two methods of excavation lend themselves to remote- or semi-remote excavation:

- Mechanical excavation
- Hydraulic mining.

For mechanical excavation, full remote-control systems are poorly developed and much work is required before they could be considered practicable. Semi-remote control mechanical excavation systems are likewise poorly developed apart from mucking systems.

Semi-remote-control hydraulic mining systems are in use in some coal mines, notably at B.C. Coal in Sparwood, British Columbia, as well as some Japanese and Soviet mines. However, the presence of bentonite, which absorbs water, in the backfill material would make the effectiveness of the method suspect in a repository, unless very large quantities of water were employed. Such quantities of water would, however, require the provision of settling sumps as well as handling and decontamination systems. Considerable research is required before remote- or semi-remote-control mining systems can be considered viable for remining backfill from a repository.

An alternative technology that may be useful for cutting thin slots or kerfs in backfill to facilitate removal is the use of very thin, very high pressure, very low flow water jets. Such jets are used for cutting sheet metal, leather, plastic, rock slabs, and the like. However, no machine for the required productivity and environment has been developed to data.

The concept of establishing a precooling system in the backfill has not been suggested or designed by DOE. Such a system may have technological concerns to be addressed. If the precooling system is placed as pipes at initial backfilling, the interface of the pipe with the backfill is a potential preferential pathway requiring an engineered barrier. If the precooling system is established at the time of retrieval, the technology for drilling a long (4,000 ft) true horizontal hole must be clearly established.

5.1.5 Technological Concerns in Vault Storage Rooms

Vault storage shares the seam technological concerns as immediately backfilled rooms. Equipment must be protected from or resistant to heat, and a monitoring system is needed to evaluate storage effectiveness. In addition, development of bentonite blocks to withstand repository temperatures and moisture conditions for extended periods of time is needed.

5.1.6 Technological Concerns in Salt

The technological concerns perviously discussed are applicable to retrieval in salt. Expected salt creep could change canister orientation over a period of time. It is anticipated that the presence of high pressure steam from brine migration, because of backfill heating, may compound the retrieval operation concerns.

5.2 Safety Concerns

Safety concerns common to retrieval operaitons in all repository concepts are personnel protection from heat, traffic congestion due to local retrieval, and deteriorated ground support. Retrieval operations may take place in ambient temperatures of 100°F or higher. For personnel safety, it is imperative that cabs be well sealed and have dependable air-conditioning systems. Heat buildup in rock, moisture from the ventilation system, and other factors can adversely affect ground support systems, creating loose rock.

Local retrieval would probably take place concurrent with development of the repository and canister storage. The three ongoing systems, each with its own equipment, could create bottlenecks and traffic congestion at strategic repository locations such as haulroads or shafts. Interaction of these operations is even more critical if breached canisters are involved.

5.2.1 Safety Concerns in Open Storage Rooms

Open storage rooms provide an advantage of allowing access for periodic inspection of rock conditions. This helps eliminate one of the primary safety concerns. Safety hazards occurring from radionuclide release are discussed in Section 5.3.

5.2.2 Safety Concerns in Bulkheaded Storage Rooms

Bulkheaded storage rooms can be rehabilitated to safe conditions after bulkhead removal and precooling. Nevertheless some difficulties may occur in the interim. Precooling may induce thermal spalling of shotcrete and rock, creating ground control problems. Ventilaiton in the storage room may introduce moisture to the dry rock and cause deterioration of rock strength. These conditions can be long term and as such as be present throughout retrieval.

5.2.3 Safety Concerns in Backfilled Storage Rooms

Both backfill and the surrounding rock will be at elevated temperatures. Ventilation during remining and precooling can have adverse effects on ground control, as any sudden thermal change can cause thermal spalling and weakening of ground support similar to bulkheaded room retrieval. These adverse conditions are highly dependent upon how long the canisters have been stored.

As the temperature of the backfill increases, remining difficulties become extreme. Any radiological contamination significantly adds to the problems. Equipment, either remotely controlled or with cooled and shielded operator cabs, does not exist for mining work. If it did, the possibility of a power failure or mechanical breakdown in the backfill remining operation would lead to an extremely hazardous situation for personnel.

5.2.4 Safety Concerns in Vault Storage Rooms

Safety concerns parallel those to backfilled rooms discussed in Section 5.2.3

5.2.5 Safety Concerns in Salt

Many safety concerns in salt are identical to those presented in Section 5.2.3 for backfilled rooms. However, rock creep and the presence of brine pockets may be characteristic of salt. High pressure steam can fill the brine pockets and be released during remining and retrieval. Proper precautions will be necessary, although the extent of and pressure behind these brine pockets are site-specific.

5.3 Radionuclide Concerns

One possible reason for retrieval is failure of the waste package, with consequent release of radionuclides. Gaseous (tritium and krypton-85) and volatile (carbon-14) radionuclides may be released into the emplacement hole while soluble radionuclides may be carried away by any water that is present in the emplacement hole. Removal by aqueous solution requires the presence of water in liquid form; that is, the temperature must be less than the boiling point under the repository pressure conditions. For open, ventilated, and for bulkheaded, unbackfilled rooms, this pressure will be approximately one atmosphere and hence, aqueous transport of radionuclides will occur only if the water temperature is less than 212°F.

There are significant differences between the radionuclide concentrations in spent fuel and those in processed, vitrified CHLW. Reprocessing of spent fuel results in the release of all gaseous and many volatile radionuclides in addition to the removal of most of the uranium and plutonium isotopes. The isotopes which are unique to Spent Fuel are given in Table 3 where the activities and masses are given per pound of fuel assembly which includes the cladding and associated hardware.

Assessment of possible concerns due to radionuclides releases into air and into water shall be considered separately.

5.3.1 Releases into Air

Because reprocessing results in the release of gaseous and volatile isotopes, such isotopes will be contained exclusively in spent fuel. The three isotopes of interest are hydrogen-3 (tritium), carbon-14, and krypton-85.

The quantity of krypton-85 is large compared with that of either tritium or carbon-14. In addition, the carbon must be in a form that leads to volatile species upon reaction with water in order to be of concern. It is assumed that one-tenth of the krypton-85 is sufficiently near an exposed surface to be able to leave the fuel. If a breach occurs,

Table 3 Isotopes Unique to Spent Fuel (Post, 1982)

Isotope	Curies/lb	lb/lb
hydrogen-3	0.116	0.00
carbon-14	0.00049	0.00
krypton-85	1.15	0.00
uranium-238	0.00	0.616
uranium-236	0.00	0.002
uranium-235	0.00	0.005
neptumium-237	0.0000705	0.0002
plutonium-239	0.00882	0.003
plutonium-240	0.133	0.0012
plutonium-241	19.36	0.0007
americium-241	0.0532	0.00003

the concentrations of krypton-85 and tritium in air must not exceed 10 nCi/liter and 5 nCi/liter (0.35 nCi/ft^3 and 0.18 nCi/ft^3) respectively in order to satisfy 10CFR20.

Before methods of dealing with such releases can be discussed, it is necessary to indicate how the radionuclides released into the hole by a breached canister would be liberated into the rooms. There are three possibilities for release in unbackfilled rooms, namely:

- The hole plug and the backfill (if any) above the canister are not gas-tight
- Release occurs at retrieval if the doors in the floor shield are not closed tightly after removing the hole plug, in the case of retrieval in basalt and tuff
- In the case of salt, if the salt plug below the canister within the overcoring barrel is fractured, release will occur since the angled cutters do not close together completely.

If the hole plugs are not gas-tight then the volatile and gaseous radionuclides will be released into the room soon after the breach. The presence of radionuclides would be detected by instrumentation. Unless personnel happen to be present at the time of the release, these would not be a cause for alarm since ventilating air could be supplied to dilute the concentration to within acceptable limits. The time required for this dilution would depend on the air volume supplied and on the volume of the room, as shown in Figure 1 which was derived by EI.

If release occurs during the retrieval process, workers would be exposed. However, since the room will be ventilated, the gas would not diffuse to fill the whole room. Consequently, the dilution time would be less than if the room were unventilated, other things being equal.

In the case of retrieval by overcoring in salt, ventilating air would be provided so that, as in the previous situation, the effective volume into which the gas diffused would be significantly less than that of the room and hence the time required for dilution would be significantly less. In addition, if radionuclides are detected in the course of the overcoring process a system of collecting contaminated cuttings would be employed (SAND79-1239, 1979) which would also serve to draw off the radionuclides. As a precaution, this could be incorporated into the procedure automatically.

In backfilled rooms, if gaseous radioisotopes escaped into the backfill pore spaces, these gases would be liberated as the backfill was removed. Since the quantities of air would be limited to what

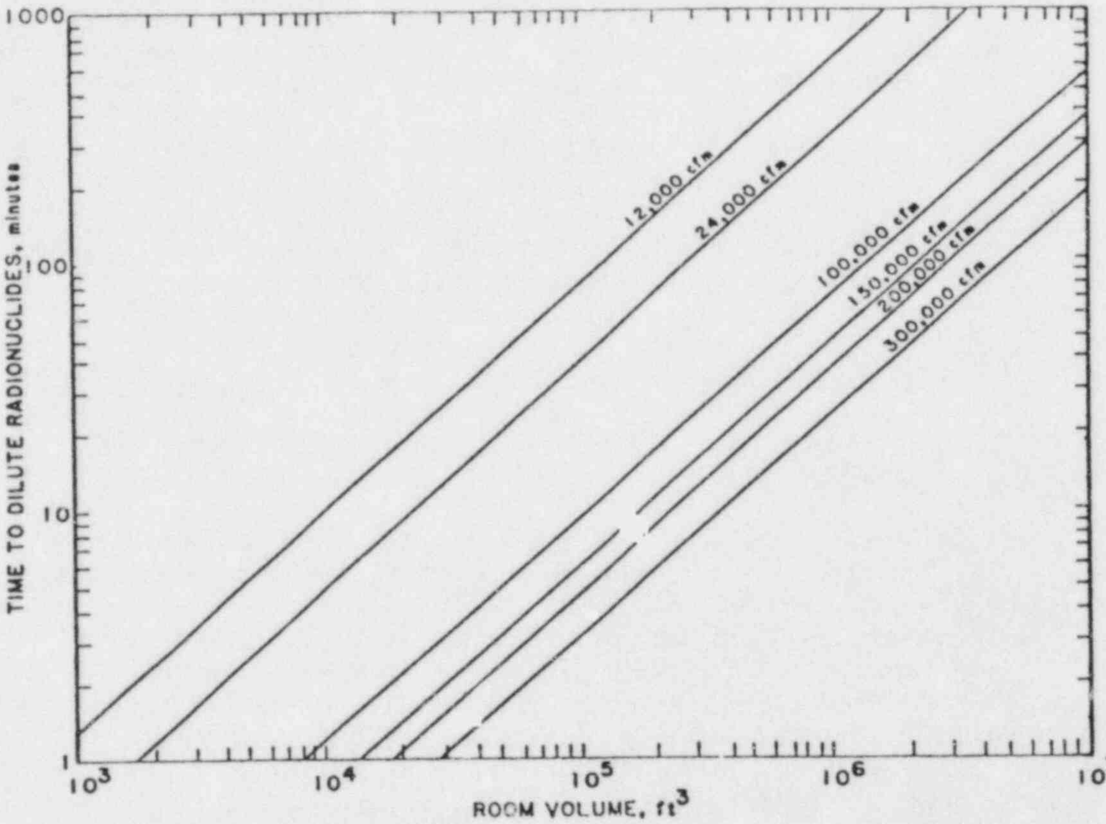

Figure 1 Time required to dilute Kr-85, from a breached canister containing three PWR fuel assemblies, to the Maximum Permissible Concentration (MPC) assuming 10% of the Kr-85 is liberated.

can be supplied by ducts, dilution would require more time than for other cases although the effective volume into which the gases were liberated would also be relatively small. This is another persuasive argument for developing and using remote methods for backfill removal.

Releases occurring at retrieval can be avoided by having radiation sensors in the hole. The gaseous radionuclides could then be drawn off prior to retrieval using millipore filters or a cryogenic absorption system. Both of these methods fall within existing technology.

5.3.2 Releases Into Water

With regard to the movement of radionuclides by aqueous transport, the water must be in the liquid state. Heat balance calculations show that the lower the initial temperature of the water, the smaller the flow that is required to remove the canister heat and the greater the concentration of dissolved solids in the water. Reduction of the surface temperature of the canister below 212°F would occur for almost any water inflow (Post, 1982).

Assuming the spent fuel assemblies in a canister were exposed to water, the rate of dissolution of the fuel would be about 0.0000264 lb/day, exposing an area of 183 in^2. This 0.0000264 lb/day contains about 0.5 mCi and would generate about 0.2 mR/hr at 4 ft from the canister. These radiation estimates are based on an average energy of 1 MeV for the gamma radiation and the dominant isotopes.

Water that has come in contact with a breached canister may percolate into the rooms. With open, ventilated rooms, this water will form small puddles on the floor. With bulkheaded, but unbackfilled, rooms, this water will vaporize upon entering the room. With backfilled rooms, the water will be contained in the backfill and will be liberated as the backfill is removed, at which time it will vaporize. Along with dissolved solids, this water may contain dissolved gaseous radionuclides which will be liberated when the water reaches the atmosphere. Thus water can transport gaseous radionuclides from a breached canister to the atmosphere. The solubility of krypton-85 in hot water is about 0.624 ft^3/100 gal (Weast, 1983), so that only about 1.5 gal of water is required to dissolve all the krypton-85 liberated by a breached canister.

Although the radiation emanating from water which has come in conduct with a breached canister is small in quantitiy, it is advisable that water collection and transport facilities be provided.

5.3.3 Radiation Detection Standards

The radiation levels measured during retrieval operations are not exceptional so that the standards used in the nuclear industry would prevail. Lower limits of 0.1 mR/hr and upper limits of a few kR/hr would be adequate. A system to detect radioactive krypton-85 in the ventilation air, in the storage holes, and in the ambient atmosphere for closed rooms will be required. This system should be capable of detecting krypton-85 levels below 100 pCi/liter (2.6 pCi/ft^3) (Post, 1982).

5.4 Operational Concerns

The difficulty of retrieval leads to several concerns about retrieval operations. Equipment and materials must be available for many anticipated contingencies. Canister orientation must be evaluated to assure retrieval is a shielded operation. The many safeguards, checks, and testing procedures may occasionally cause slow-downs in efficiency. This could be particularly true if breached canisters are involved. Unexpected roof cleaning or other maintenance operations may present logistics problems for personnel and equipment.

5.4.1 Operational Concerns in Open Storage Rooms

This less complex repository option does not have significant operational concerns different from those discussed above.

5.4.2 Operational Concerns in Bulkheaded Storage Rooms

An operational concern unique to this repository option is how to remove the bulkhead, and where to place the removed materials. These operations complicate local retrieval but are not too complex. Precooling equipment, when placed in the storage room or at an entrance, could hinder vehicular traffic and create bottlenecks.

5.4.3 Operational Concerns in Backfilled Storage Rooms

One of the biggest concerns, other than those previously discussed, is the handling of contaminated backfill during local retrieval. The material cannot be transported to another storage panel where backfilling is taking place, and it cannot be transported to the surface, without first being decontaminated as soon as possible with special equipment. This operation plus the remining and retrieval equipment could create congested work areas.

5.4.4 Operational Concerns in Vault Storage

Operational concerns in vault storage are similar to those occurring in backfilled rooms. One other potential area of concern is the bentonite block surrounding the canister. Retrieval will become inefficient if after a storage period the blocks decompose, making their removal with fork-lift type equipment impossible. Also, retrieval equipment can only enter one at a time, as there is no room for passing. This situation can be troublesome if equipment were to malfunction in the room.

5.4.5 Operational Concerns in Salt

The creep potential in salt presents one of the biggest concerns for retrieval. It is suspected that overmining the storage room will be necessary to maintain equipment clearance during retrieval. Furthermore, this overmining may need to be redone several times during the retrieval process. Floor heave and creep can alter the original canister orientation, thus requiring accurate locating equipment. Basically, retrieval in salt appears to be a lengthy process, and maintaining a schedule may require a larger equipment fleet and associated personnel. A separate operation is expected to keep main entries open for the possibly decades-long period for retrieval. Operational concerns in salt are spread throughout the repository and are not confined to storage rooms.

5.5 Other Concerns

Many other concerns involved with repository site characterization and operation are independent of the rock type selected, and can be discussed collectively.

One major area of concern is the geologic and hydrogeologic uncertainties at the selected repository horizon. The selected horizon characteristics, such as uniformity of thickness, uniformity of jointing, fault occurrence and potential, and ground water migration must be properly identified.

Another major concern is the proper assessment of the probability of breached canisters. The rate of corrosion, for example, depends on repository environment and ground water chemistry. These and other associated parameters are very difficult to ascertain.

6.0 CONCLUSIONS

For all hole storage concepts in hard rock (basalt and tuff), the fundamental concerns are retrieval of breached canisters and of canisters which have become bound in the hole due to hole closure, corrosion, or some other reasons. In these cases, the transporter/transfer cask combination is inadequate for retrieval. With short holes containing single canisters, overcoring may be possible. However, equipment to overcore large (48-in.-diameter) holes requires development. With long horizontal holes, retrieval could be accomplished using a transporter/transfer cask combination at each end of the hole, using one to push canisters toward the other. This would require reaming rooms equal in size to the storage rooms.

If canisters are intact, retrieval is the least troublesome when rooms are open and ventilated. Ground support can be inspected and rehabilitated as necessary. In hard rock (basalt and tuff) the transporter used for placement can also be used for retrieval except for the cases of breached and jammed canisters. In salt, overcoring is desirable for all canisters because hole closure from creep will likely have occurred.

Retrieval from bulkheaded but unbackfilled rooms in hard rock requires removing the bulkheads and precooling. Once cooling has occurred, ground support can be inspected and rehabilitated and then retrieval operations carried out, using the transporter/transfer cask combination in hard rock and the overcoring machine in salt.

Retrieval from backfilled rooms requires breaching the bulkheads, removal of the backfill at high temperature, and precooling. Alternatively, a system may be to developed to precool the rooms prior to breaching the bulkhead allowing remining of cooler backfill. Because of the potentially hostile environment, remining should be performed by remote- or semi-remote-control equipment. Except for haulage equipment, technology for remote- or semi-remote-control mining is low, and extensive development is required before such systems can be considered viable. Assuming rooms have been reopened and precooled, retrieval would proceed as in previous options.

Retrieval is most difficult with the in-room (vault) storage concept. As presently designed, the airway which would be created by remining of the backfill between the bentonite blocks and the room perimeter is not sufficiently large to allow precooling of the rooms prior to retrieval. Temperatures in the rock and the bentonite blocks, during a decades-long retrieval period, will be as much as 430°F. While this temperature is probably not sufficient to cause bentonite to physically degrade, vaporization of the water will result with the bentonite becoming either a powder or a gel depending on the pressure conditions. In either case, retrieval of the canisters will be difficult and due to the hostile environment should be done by remote-control. As with backfill removal, the level of technology for such equipment is low and extensive development is required.

Ventilation of the repository during retrieval is required not only to provide air for personnel and equipment, but also for precooling. Alternative methods and media for precoolingmay be developed. Most design alternatives require use of the entire airflow available or even more to precool. The required filtering of this air to minimize radionuclide releases to the environment imposes constraints on the exhaust ventilation fans that must be considered in design. Should the airflow be halted or diminished, and precooling be an assumed pre-requisite to retrieval, retrieval becomes much more difficult and lengthy delays will occur and increased complexity of operations will be realized.

Water that is found in the retrieval area may well be contaminated, but apparently at low levels. Should more water or more contamination than expected be encountered, a serious radionuclide release problem could develop as water intrusions could overwhelm the repository water-handling systems. Great care must be taken in realistically assessing water problems.

With reference to 10CFR60, retrieval must satisfy the following three criteria:

- Allow retrieval of all waste to meet repository performance objectives of isolating the waste during retrieval (60.111b, 60.133c)
- Allow the safe conduct of retrieval operations (60.111b, 60.133e1, 60.131b)
- Allow removal of damaged or suspect canisters without compromising the repository performance objectives of isolating the waste (60.111a, 60.111b).

Depending on the details of the particular repository design concept considered, these retrievability criteria are not met in the following instances:

- If canisters are broken and breached, or bound in the storage hole, proposed systems and equipment are inadequate to retrieve the waste, and safe conduct of the operations alternatively possible to retrieve the waste (overcoring or remining) has not been demonstrated and may not be considered within present technology or timely projections of present technology
- If storage rooms have been backfilled following placement of wastes, and if backfill temperatures have risen to approximately 250°F or higher, no proposed conceptual

design equipment or systems are within the present technology or timely projections of present technology that would allow demonstration of the safe conduct of remining backfill to retrieve the canisters. Precooling systems to lessen the need for high temperature backfill mining equipment have not been proposed, designed, developed, or demonstrated. The equipment may be within current technology but requires further substantiation.

If breached canisters are present, the proposed design concepts do not allow demonstration of the safe conduct of identifying and locating breached canisters, and do not allow demonstration of waste isolation performance objectives for releases into the ventilation air and mine water. Ventilation systems are marginally adequate without consideration of meeting radionuclide release requirements and safe conduct of retrieval in an elevated temperature environment. Water handling systems are inadequately detailed and water inflow quantities sufficiently unpredictable to allow demonstration of meeting radionuclide release requirements and safe conduct of retrieval.

7.0 CLOSURE

Based on the detailed assessments of retrievability performed in this study, more design investigations are required before repository retrieval systems will be wholly adequate. Areas which have been identified which would require further design review assessments for compliance with 10CFR60 are as follows (concerns are identified in approximately the same order as in Section 5.0):

- Uncertainties concerning stability of grouted rock bolt and shotcrete support systems over decades-long periods and at high (greater than 200°F) temperatures
  - Establish performance requirements and environment for ground control systems
  - Specify concrete mixture to be used including proportions of water and aggregates, and type of aggregates
  - Collect data on long-term performance
  - Demonstrate heat resistance of mixtures for grout and shotcrete
- Overcoring large diameter holes
  - Establish performance requirements for retrieval by overcoring
  - Design, build, and field test a machine for overcoring storage holes having diameters of 20 in. or greater. These machines must be dimensioned to fit repository rooms
- Canister orientation and location detector
  - Establish tolerances on canister orientation and location for retrieval
  - Design, build, and field test equipment that could detect a canister and its orientation behind many feet of rock or backfill material
- Temperature conditions in open, ventilated rooms
  - Perform near-field thermal analayses to determine temperatures for different airflows for a possibly decades-long retrievability period and hence find the minimum airflow required if the air at the intake end of a room is at 80°F and the air at the exhaust end is at no more than 106°F

- Conditions in backfilled rooms
  - Perform near-field thermal analyses to determine the temperatures in the backfill and surrounding rock during a decades-long retrievability period
  - Perform small model tests of different backfill mixtures subjected to repository stress, thermal, and hydrogeological conditions for periods up to several years to determine physical properties and behavior
  - Using results of the thermal modeling and model testing, develop performance requirements for remining hot backfill
- Development of remote- or semi-remote-control equipment for remining hot backfill
  - Based on the performance requirements determined from testing and modeling as described above, design a remote- or semi-remote-control mining machine
  - Build a prototype mining machine and test its effectiveness under typical repository conditions
- Development of precooling systems for backfilled rooms
  - Based on performance requirements determined from testing and modeling design a built-in or drilled precooling system
  - Build a heated repository demonstration room, backfill and demonstrated test, under repository conditions
- Corrosion of waste canisters, overpacks, and storage hole liners
  - Determine the depth to which corrosion would occur in a canister within a decades-long retrievability period for various construction materials under consideration
  - Determine probabilities for canister breach within a decades-long retrievability period
- Behavior of bentonite blocks when subjected to repository conditions
  - Determine expected conditions of bentonite blocks in the vault storage concepts

- Based on the condition of the bentonite blocks, develop a system that would allow retrieval from a backfilled vault

- Magnitude of salt creep
  - Perform large-scale, in situ testing of salt creep at elevated temperatures for multi-year periods
  - Based on this testing, develop a model to realistically predict creep closures at elevated temperatures

- Radionuclide retardation and adsorption properties of repository rock, joint fillings, and backfill mixtures
  - Perform studies of these properties under repository conditions

- Thermal spalling due to rapid cooling of hot rock
  - Perform studies to determine the effect on rock strength of different cooling rates
  - From these studies determine if proposed cooling rates (for example, cooling from about 280°F to 125°F in 9 days in RHO-BWI-C-116) could lead to problems of thermal spalling

- Potential for and magnitudes of radionuclide releases
  - Perform studies of fuel assembly solubility in water typical of that likely to be found in a given repository and hence determine releases into water if it contacted fuel assemblies as a result of canister breach
  - Based on probabilities of canister overpack and hole liner breaches determine from studies recommended above, estimated concentrations of radionuclides and levels of penetrating radiation which could be present in storage rooms

- Geologic and hydrogeologic uncertainties at the repository horizon
  - Identify characteristics of the selected horizon, such as uniformity of jointing, uniformity of thickness, fault occurrence and potential, and ground water migration, through development and exploration in the selected horizon.

In summary, many of the investigations, designs, and demonstrations discussed above are considered technically feasible, but may require excessively long lead times, undue complexity, exceedingly undesirable repository working environments, and diminished overall waste isolation.

8.0 REFERENCES

AEC, Chapter 0505, Atomic Energy Commission Manual, Chapter 0505, "Construction Safety Program," Atomic Energy Commission, 1974.

AESD-TME-3113, "Engineered Waste Package Conceptual Design, Defense High-Level Waste (Form 1), Commercial High-Level Waste (Form 1), and Spent Fuel (Form 2) Disposal in Basalt," Westinghouse Electric Corporation, 1981.

Anthony, T. R. and Cline, H. E., "Thermomigration of Liquid Droplets in Salt," in Proceedings, Fourth Symposium on Salt, Cleveland, Northern Ohio Geological Society, 1974, p. 313-321.

Baar, C. A., "Correct Interpretation of Data for Better Understanding of Salt Pillar Behavior in Mines," in Proceedings, Third Symposium on Salt, Cleveland, Northern Ohio Geological Society, 1970, p. 280-289.

Baar, C. A., Applied Salt Rock Mechanics 1, The In-Situ Behavior of Salt Rocks, New York: Elsevier Scientific, 1977, 294 p.

Barton, N., Lien, R. and Lunde, J., "Engineering Classification of Rock Masses for the Design of Tunnel Support," Publication No. 106, Oslo: Norwegian Geotechnical Institute, 48 p., 1974.

Bradshaw, R. L. and McClain, W. C., "Roof-Bolt Test and Application in Supporting A Two-Foot-Thick-Roof Bed," in Proceedings, 3rd Symposium on Salt, Cleveland, Northern Ohio Geological Society, 1970, p. 466-470.

Chlumecky, N., "Resupporting High Roof Falls," in Proceedings, 1st Conference on Ground Control in Mining, Morgantown, West Virginia University, 1981, p. 116-117.

DOE/RL 82-3, "Site Characterization Report for the Basalt Waste Isolation Project," Rockwell Hanford Operations, 3 vols., November 1982.

Durussel, E. N. and J. L. Muirhead, "Development of Electrical Equipment at Sherritt Gordon's Fox Mine," Engineering & Mining Journal, 182 (8), August 1981, p. 66-71.

EY-77-C-05-5367, "Conceptual Design Study No. 6, Thermal Analysis," Chide Consultants, March 1978.

FHWA-RD-75-95, "Drilling and Preparation of Reusable Long Range Horizontal Boreholes in Rock and in Gouge," (Harding, J. D., Rubin, L. P. and Still, W. L.), Foster Miller Associates, October 1975, 256 pp.

Foster, R. J., Physical Geology, Columbus, OH: Charles E. Merrill Publishing Co., 1971.

Gent, L. D., Boyd, James W., et al., "Automated Remotely Controlled Continuous Miners," Final Report on USBM Contract S0346123, OFR76-033, PB250556, John T. Boyd Co., June 1975, 89 p.

Hambley, D. F., 1983a, "Memorandum of Telephone Conversation with L. Hwozdyk, Mine Engineer, Denison Mines Ltd.," 27 July 1983.

Hambley, D. F., 1983b, "Minutes of Meeting with Bruce Beattie, Federal Bentonite," 04 February 1983.

Hansen, F. D. and Carter, N. L., "Creep of Rock Salt at Elevated Temperature," in *Proceedings, 21st Symposium on Rock Mechanics*, Rolla, MO, University of Missouri - Rolla, p. 227-234. 1980.

Hartman, H. L., Mutmansky, J. M., and Wang, Y. J (eds.), *Mine Ventilation and Air Conditioning*, Second Edition, New York: John Wiley and Sons, 1982, 791 p.

Hoek, E. and Brown, E. T., *Underground Rock Engineering*, Inst. of Min. and Met., London, 1980.

Holdoway, K. A. "Behavior of Fluid Inclusions in Salt During Heating and Irradiation," in *Proceedings, Fourth Symposium on Salt*, Cleveland, Northern Ohio Geological Society, 1974, p. 308-312.

Jones, P. R. and Prugger, F. F., "Underground Mining in Saskatchewan Potash," *Mining Engineering*, 34 (12), December 1982, p. 1677-1682.

Kupfer, D. H., "Problems Associated with Anomalous Zones in Louisiana Salt Stocks, USA," in *Proceedings, Fifth Symposium on Salt*, Cleveland, Northern Ohio Geological Society, 1980, p. 119-135.

Mraz D. F., "Behavior of Rooms and Pillars in Deep Potash Mines," *CIM Bulletin*, July 1973, p. 60-65.

Mraz, D. F., "Theoretical Predictions Confirmed by In-situ Rock Behavior in Deep Potash Mine," in *Proceedings, 19th U.S. Symposium on Rock Mechanics*, Reno, NV, University of Nevada-Reno, 1978, p. 468-475.

NUREG/CR-2352-1982 (SAND 81-2088), "Repository Site Definition in Basalt: Pasco Basin, Washington," (Guzowski, R. V., Nimick, F. B, Muller, A. B.), Sandia National Laboratories, March 1982.

NVO-196-30, "Nevada Nuclear Waste Storage Investigation Quarterly Report, January - March 1982," Nevada Operations Office, DOE June 1982.

OF 81-1349, "Stratigraphy and Structure of Volcanic Rocks in Drill Hole USW-G1, Yucca Mountain, Nye County, Nevada," (Spengler, R. W., Byers, Jr., F. M. and Warner, J. B.), US Geological Survey, 1981.

Olsson, W. A. and Teufel, L. W., "Effects of Water on the Mechanical Properties of Intact and Jointed Welded Tuff" (abstract) EOS, 61 (17), 1980, p. 372.

ONWI-119, "Gulf Coast Salt Domes, Geologic Area Characterization Report, North Louisiana Study Area," (Law Engineering Testing Company) Office of Nuclear Waste Isolation, July 1982.

ONWI-120, " Gulf Coast Salt Domes, Geologic Area Characterization Report, Mississippi Study Area, (Law Engineering Testing Company) Office of Nuclear Waste Isolation, July 1982.

ONWI-203, "Retrievability Technical Considerations," (Wilems, R. E., Arbital, J., Fowler, J., Mosier, J., Rickerstan, L. and Stevens, L.) Office of Nuclear Waste Isolation, September 1980.

ONWI-208, "Thermal Gradient Migration of Brine Inclusions in Salt," (Olander, D. R., Machiels, A. J. and Yagnik, S.) Office of Nuclear Waste Isolation, October 1980.

ORNL 4555, "Project Salt Vault: A Demonstration of the Disposal of High Activity Solidified Wastes in Underground Salt Mines," (Bradshaw, R. L. and McClain, W. C.), Oak Ridge National Laboratories, April 1971.

ORNL-5526, "Effects of Temperature, Temperature Gradients, Stress and Irradiation on Migration of Brine Inclusions in a Salt Repository," (Jenks, G. H.), Oak Ridge National Laboratories, July 1979.

ORNL-5818, "Brine Migration in Salt and Its Implications in the Geologic Disposal of Nuclear Waste," (Jenks, G. H., and Claiborne, H. C.), Oak Ridge National Laboratories, December 1981.

ORNL/CSD/TM-15, "Heating 5-AN IBM 360 Heat Conduction Program," (Turner, W. D., Elrod, D. C., and Simon-Tov I.I.), Oak Ridge National Laboratories, May 1977.

ORNL/TM-7201, "Expected Environments in High-Level Nuclear Waste and Spent Fuel Repositories in Salt," (Claiborne, H. C., Richerstein, L. D., and Graham, R. F.), Oak Ridge National Laboratories, Aug. 1980.

Patterson, A. M., "Existence of an Optimum Air Quantity in Hot Development Ends," J. Mine Vent. Soc. S. Afr., 35 (10), 1982, p. 89-93.

Pfeifle, T. W. and Senseny, P. E., "Steady-State Creep of Rock Salt in Geo-Engineering," Proceedings, 23rd U. S. Symposium on Rock Mechanics, New York, SME/AIME, 1982, p. 307-314.

Pierce, W. G. and Rich, E. I., "Summary of Rock Salt Deposits in United States as Possible Storage Sites for Radioactive Waste Material." U. S. Geol. Survey Bull. 1148, 1962.

Plumeau, D. B. and Peterson, G. B., "Abutment Pillar Notching Improves Abutment Tunnel Roof Rocks Conditions at the Cayuga Rock Salt Mine," in Proceedings, 1st Conference on Ground Control in Mining, Morgantown, West Virginia University, 1981, p. 35-43.

Post, R. G., report to Engineers International, Inc., "Radiation Environment During Retrieval," December 1982, 5 p.

Prugger, Fritz F., "The Operation of the Cominco Potash Mine with Special Consideration of Some Principles of Applied Rock Mechanics for Strata Control," in Proceedings, Fifth Symposium on Salt, Cleveland, Northern Ohio Geological Society, 1971, p. 319-332.

RHO-BW-ST-4, "Geologic Studies of the Columbia Plateau," (Myers, C. W. Price, S. M., et al.), Rockwell Hanford Operations, 1979.

RHO-BWI-C-116, "Engineering Study, Nuclear Waste Repository in Basalt, Project B-301," Kaiser Engineers, Inc., and Parsons Brickerhoff, Quade and Douglas, 1982.

BHO-BWI-CD-35, "Nuclear Waste Repository in Basalt, Project B-301, Preconceptual Design Report," Rockwell Hanford Operations, 1980.

RHO-BW-SA-273 P, "Basalt Waste Isolation Project, Repository Design-Exploratory Shaft Workshop," Richland, W.A., October 5-6, 1982.

RHO-BWI-ST-7, "Engineered Barrier Development for a Nuclear Waste Repository in Basalt: An Integration of Current Knowledge," (Antonnen, G. J., et al.) Rockwell Hanford Operations, 1980.

SAND 79-0625, "Pre-WIPP In-Situ Experiments in Salt, Part 1-Executive Summary," (Sattler, A. R.), Sandia National Laboratories, 1979.

SAND 79-1199, "Heated Mine Room and Pillar Secondary Creep Response," (Tillerson, J. R. and Dawson, P. R.), Sandia National Laboratories, 1979.

SAND 79-1239, "Retrieval of Canistered Waste at the Waste Isolation Pilot Plant," (Steinbaugh, R. E.) Sandia National Laboratories, 1979, 40 p.

SAND-80-0558, "Analysis of Steady State Creep of Southeastern New Mexico Bedded Salt," (Herrman, W., Wawersik, W. R. and Lawson, H. S.), Sandia National Laboratories, 1980.

SAND 80-1455, "Rock Mechanics Properties of Volcanic Tuffs from the Nevada Test Site," (Olsson, W. A. and Jones, H. K.) Sandia National Laboratories, 1980.

SAND 80-1464, "Evaluation of Tuff as a Medium for a Nuclear Waste Repository: Interim Status Report on the Properties of Tuff," (Johnstone, J. K. and Wolfsberg, K.), Sandia National Laboratories, 1980.

SAND 80-2639, "Thermal Analysis of Nuclear Waste Emplacement in Welded Tuff," (Langkopf, B. S.) Sandia National Laboratories, December 1981.

SAND 80-2813, "Preliminary Thermal Analyses for a Nuclear Waste Repository in Tuff," (D. K. Gartling et al.), Sandia National Laboratories, April 1981.

SAND 81-0629, "Thermomechanical Scoping Calculations for a High Level Nuclear Waste Repository in Tuff," (Johnson, R. L.) Sandia National Laboratories, 1981.

SAND 81-7073, "In Situ Permeability of Rock Salt," (Peterson, E. W., Lagus, P. L., Broce, R. D., and Lie, K.) Sandia National Laboratories, April 1981.

SAND 82-170, "Thermal Analysis for a Nuclear Waste Repository in Tuff Using USW-64 Borehole Data," (Johnson, R. L) Sandia National Laboratories, 1982.

SAND 82-0680, "Consolidation of Crushed Salt Backfill Under Conditions Appropriate to the WIPP," Sandia National Laboratories, 1982.

SAND 82-1723, "Uniaxial and Triaxial Compression Test Series on Topopah Spring Tuff," (Price, H. R., et al.) Sandia National Laboratories, 1982.

Serata, S., "Stress Control Technique - An Alternative to Roof Bolting" Mining Engineering, 28 (5) May 1976, p 51-56.

78-56-R, "Special Study No. 3, Retrieval from Backfilled Regions," Kaiser Engineers, September 1978.

78-57-RE, "Conceptual Design Report for a National Waste Terminal Storage Repository in a Bedded Salt Formation for Spent Unreprocessed Fuel," Kaiser Engineers, 1978.

78-58-R, "Conceptual Design Description Report for a National Waste Terminal Storage Repository in a Bedded Salt Formation for Spent Unreprocessed Fuel," Kaiser Engineers, 1978.

78-59-R, "Basis of Design Document and Conceptual Design Decisions for a National Waste Terminal Storage Repository in a Bedded Salt Formation for Spent Unreprocessed Fuel," Kaiser Engineers, 1978.

Shapiro, Fred C., Radwaste, New York: Random House, 1981, 288 pp.

Sons, Charlie, "Reducing Earthmover Tire Costs," Mining Engineering, 34 (1) January 1982, p. 27-30.

Starfield, A. M., "Tables for the Flow of Heat into a Rock Tunnel with Different Surface Heat Transfer Coefficients," J. South African Inst. Min. Met., 66 (12), 1966, p. 692-694.

Stearn-Roger Engineering Co. "National Waste Terminal Storage Repository No. 1, Waste Retrieval from Backfilled Regions," December 1978.

Sutherland, H. J. and Cave, S. P. "Argon Gas Permeability of New Mexico Rock Salt Under Hydrostatic Compression," International Journal of Rock Mechanics and Mining Sciences, 17 (5), October 1980, p. 281-288.

10CFR60, "Disposal of High Level Radioactive Wastes in Geologic Repositories," Nuclear Regulatory Commission, U. S. Code of Federal Regulations, July 8, 1981, June 21, 1983.

30CFR 55-57, Mine Safety and Health Administration, U. S. Code of Federal Regulations, January 1, 1980.

Timoshenko, S. P., and Goodier, J. N., Theory of Elasticity, Third Edition, McGraw-Hill Book Company, New York, 567 p., 1970.

Troxell, G. E., Davis, H. E., and Kelly, J. W., Composition and Properties of Concrete, 2nd Edition, New York: McGraw-Hill, 1968, 529 p.

UCRL 15141, "Review of Geotechnical Techniques for a Nuclear Waste Repository in Bedded Salt," International Engineering Co., 1979.

United States Bureau of Mines (USBM) A Dictionary of Mining Mineral and Related Terms, U. S. Department of the Interior, Washington, DC, 1968.

Wallgard, Gunnar, "Automated Underground Rail Haulage: How to Plan an Efficient System," Engineering and Mining Journal, 179 (4), April 1978, p 80-87,

Weast, R. C., (ed.) CRC Handbook of Chemistry and Physics, 63rd Edition, Boca Raton, FL: CRC Press Inc., 1982, 1371 p.

Whillier, A., and Ramsden, R., "Sources of Heat in Deep Mines and the Use of Mine Service Water for Cooling," in Proceedings, First Int'l Mine Ventilation Conference, Johannesburgh, 1976, p. 339-346.

10.1 Basalt Repository with Vertical Hole Storage, Continuous Ventilation, and Permanent Closure Backfilling

10.1.1 Basic Information

The first repository concept is in basalt, with vertical storage holes in the floor, continuous ventilation after waste emplacement, and backfilling at permanent closure. The first concept does not specifically appear in any DOE design, but has been hybridized from several designs and EI projections to assess retrievability of a viable overall system.

10.1.1.1 Definition of Repository Concept

The host geologic medium is basalt. Waste packages will be placed in 48-in.-diameter drillholes in the storage room floors. The rooms will not be backfilled until repository permanent closure, but will remain open and ventilated. The concept is similar to the reference repository in basalt (RHO-BWI-C-116, 1982) except that:

- Panels where waste storage has been completed will be open and ventilated rather than bulkheaded
- The concept will require confinement circuit airflows of about 3 million cfm and larger cross-sectional areas in confinement entries, returns, and shafts than those in the reference repository.

The emplaced canisters emit 1.74 kW/canister, which results in a thermal loading within a panel of 51.6 kW/acre, or 35.6 kW/acre for the entire repository.

10.1.1.2 Geologic Environment

10.1.1.2.1 Rock Unit

The proposed horizon for the nuclear waste reference repository in RFO-BWI-C-116 at the Basalt Waste Isolation Project (BWIP) is the Umtanum Flow of the Grande Ronde Basalt. Recent (1982) core drilling in the vicinity of the Reference Repository Location at BWIP indicates the Umtanum Flow interior may thin in places. Until the final decision is made concerning which flow will be proposed for the repository, the Umtanum Flow will be assumed for design review purposes.

The Umtanum Flow, a single basalt flow, has a typical cross-section which consists of (in descending order) the flow-top, the entablature, and the colonnade. The repository would be located in the entablature, whose thickness in boreholes has averaged 150 ft. The Umtanum Flow basalt is black to dark green in color, extremely fine-grained to glassy in texture, and composed principally of plagioclase, clinopyroxene, and glass with titano-magnetite and ilmenite as accessory minerals.

10.1.1.2.2 Rock Mass Properties

The rock mass properties of the Umtanum Flow are probably controlled by intraflow structures such as joints, vesicles, and flow-top breccias. Correlations of intraflow structures between 10 coreholes penetrating the Umtanum Flow (Myers et al., 1979) found a significant variation in the flow-top breccia thickness and columnar joint spacing. Rock mass properties can also be expected to vary. DOE designs anticipate a rock mass that responds well to tunneling, with minimal support required.

The mechanical and thermomechanical properties used for the conceptual repository design were based on generalized basalt properties. Most rock testing was performed on intact rock samples in the laboratory.

The lack of in situ rock mass data presently (1983) remains an issue to be resolved from further investigations at the Near Surface Test Facility (NSTF) and the future at-depth exploratory programs (ES-I and ES-II). Design parameters may be re-evaluated as data are developed from these test programs. Ranges for the properties based on data currently available are given in Table 10.1.1 (NUREG/CR-2352, 1982).

10.1.1.2.3 Hydrogeology

The hydrogeological data presently available do not fully define the ground water system. The data indicate that fractures and intraflow structures control the ground water flow at the repository site. The vertical hydraulic conductivities, as yet undetermined, strongly affect radionuclide migration into the accessible environment. Near-field ground water flow models which consider repository construction and waste emplacement are yet to be developed. The geochemical changes due to the introduction of nuclear wastes remain unclear.

The hydrogeologic data deficiencies will be addressed by on-going (1983) exploration programs. Tentative estimated hydrogeologic conditions for the Umtanum Flow before repository development and waste emplacement are (RHO-BWI-ST-7):

Table 10.1.1 Range of Rock Mechanics Properties of Hanford Basalt (NUREG/CR-2352, 1982)

	Intact	Fractured	Estimated In Situ
Compressive Strength (psi)	5,400 to 60,000	0 to 44,000	-
Tensile Strength (psi)	1,000 to 3,500	0 to 1,000	-
Young's Modulus (psi)	8.0 to 14.0 x 10^6	-	0.8 to 1.4 x 10^6
Poisson's Ratio	0.5 to 0.35	-	-
Thermal Conductivity (Btu/hr-ft°F)	0.484 to 1.45	-	-
Specific Heat (Btu/lb-°F)	0.175 to 0.28	-	-
Thermal Expansion (/°F)	2.22 to 4.11 x 10^{-6}	-	-

Hydraulic conductivity: 10^{-6} to 10^{-8} ft/sec; flow top
10^{-10} to 10^{-13} ft/sec; columnar zone

pH (at 149°F): 9.4 to 9.9

Eh: -0.36 to - 0.41 volts.

10.1.1.2.4 Seismicity

The proposed site is seismically quiet with only two Intensity VII (Modified Mercalli) earthquakes having been recorded since 1898. Seismic monitoring of the Columbia Plateau has determined that microearthquake (low magnitude) swarms typify the activity of the region (Myers et al., 1979).

10.1.1.3 Repository Construction and Layout

As shown in Figure 10.1.1, the repository will contain 22 storage panels, each of which, with the exception of the experimental panel, will comprise six rooms. The rooms will be 3,574 ft long and are to be connected by crosscuts on 890-ft-centers. Entries, rooms, and crosscuts will be driven by drill-and-blast methods. Table 10.1.2 gives dimensions of the various facilities. (Most dimensions are taken from RHO-BWI-C-116 (1982) except for the ventilaion shaft sizes, which were developed by EI.)

Five entries will connect the storage panels with five shafts to the surface. Each shaft will have a different dedicated function:

- Personnel and materials (service) shaft
- Basalt transport shaft
- Waste transport shaft
- Confinement air intake shaft
- Confinement air exhaust shaft.

The shafts will be sunk by conventional drill-and-blast methods, lined by steel and concrete to a depth of 1,900 ft, and lined with cast-iron segments backed by concrete to the final depth of about 3,800 ft.

Two potential sequences for repository development and waste placement are:

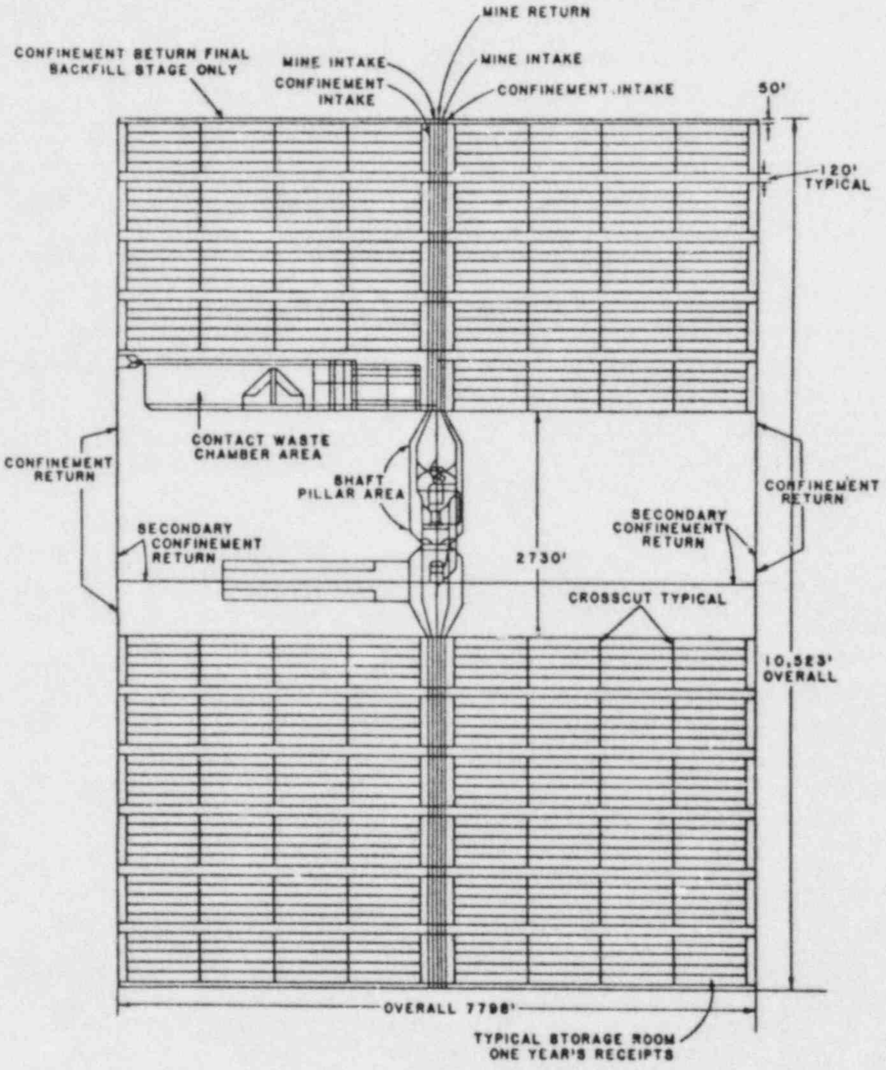

Figure 10.1.1 Repository layout for storage in vertical holes. (RHO-BWI-C-116, 1982)

Table 10.1.2 Dimensions of Repository Facilities

Facility	Dimensions
Personnel and Materials (Service) Shaft	16 ft inside diameter
Basalt Transport Shaft	14 ft inside diameter
Waste Transport Shaft	12 ft inside diameter
Confinement Air Intake Shaft	36 ft inside diameter
Confinement Air Exhaust Shaft	35 ft inside diameter
Confinement Air Intake and Accessways	32 ft wide by 16 ft high
Mine Intake Air and Accessways	18 ft wide by 17 ft high
Mine Exhaust Air and Accessways	18 ft wide by 17 ft high
Confinement Return Air and Accessways	32 ft wide by 16 ft high
Access Pillars	36 ft wide
Panels	3,577 ft by 614 ft
Storage Rooms	14 ft wide by 20 ft high
Crosscuts	14 ft wide by 20 ft high
Panel and Room Pillars	106 ft
Rib Pillars	100 ft
Storage Holes: for PWR	48-in. diameter by 19 ft deep
for BWR	48-in. diameter by 20 ft deep
Storage Hole Pitch	12 ft

- Repository development has been completed before waste storage begins

- Panel development and waste storage take place concurrently with both operations advancing at the rate of one panel per year.

The two sequences have very different requirements for ventilation and excavation systems, shaft facilities, and equipment quantities. The two sequences also affect retrieval considerations differently.

According to current assumed (1983) repository construction schedules, placement is required to begin within ten years of construction authorization. Assuming five years for shaft sinking and allowing for contract procurement for both the shafts and the underground development, pre-placement development must be completed within three years. Since PWR and BWR waste will be stored in separate panels (according to information supplied to EI by the NRC) and an available spare panel is desirable at all times, three panels must be ready for storage by year 10. Completion of three panels in three years would require a development rate of 5,500 tpd, on a five-day week basis.

If complete repository development must occur before placement, the required development rate is about 23,500 tpd. This option causes the following modifications to the facility dimensions given in Table 10.1.2:

- Basalt tranport shaft - 21-ft inside diameter

- No mine exhaust accessway

- Four intake accessways - 24-ft-wide by 12-ft-high

- Return accessways - 36-ft-wide by 18-ft-high.

In the reference repository description (RHO-BWI-C-116, 1982), development and storage proceed outward from the panels nearest the shaft pillar to those at the extremities of the repository. However, for the open, ventilated rooms concept, development and storage on a retreat basis from the repository extremities toward the shaft pillar is more practical, especially if complete development occurs prior to placement.

The mining cycle in a given heading would consist of (in order):

- Drill the round
- Load and blast the round
- Remove the broken muck
- Install ground support.

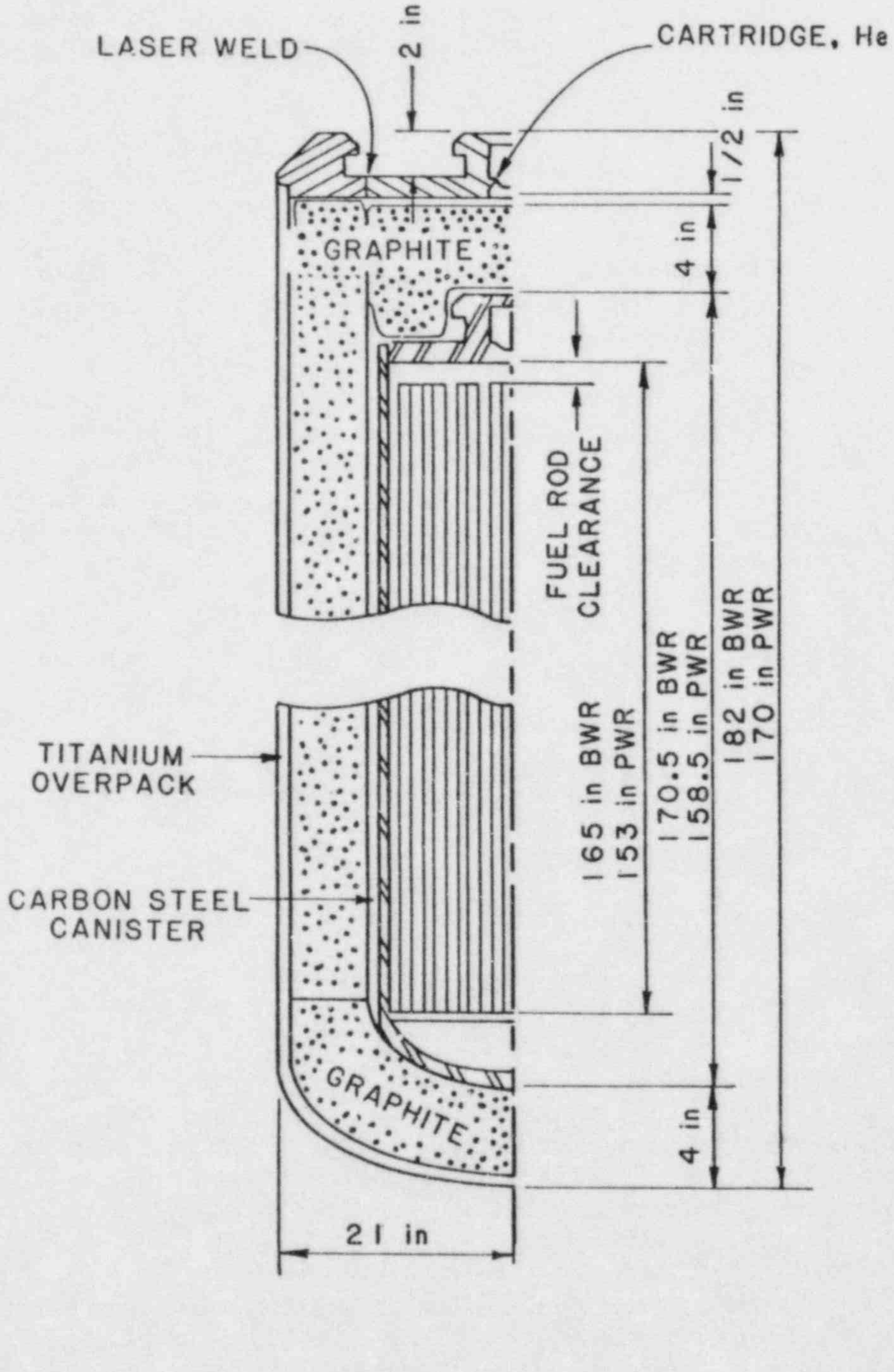

Figure 10.1.2 Waste package.
(RHO-BWI-C-116, 1982)

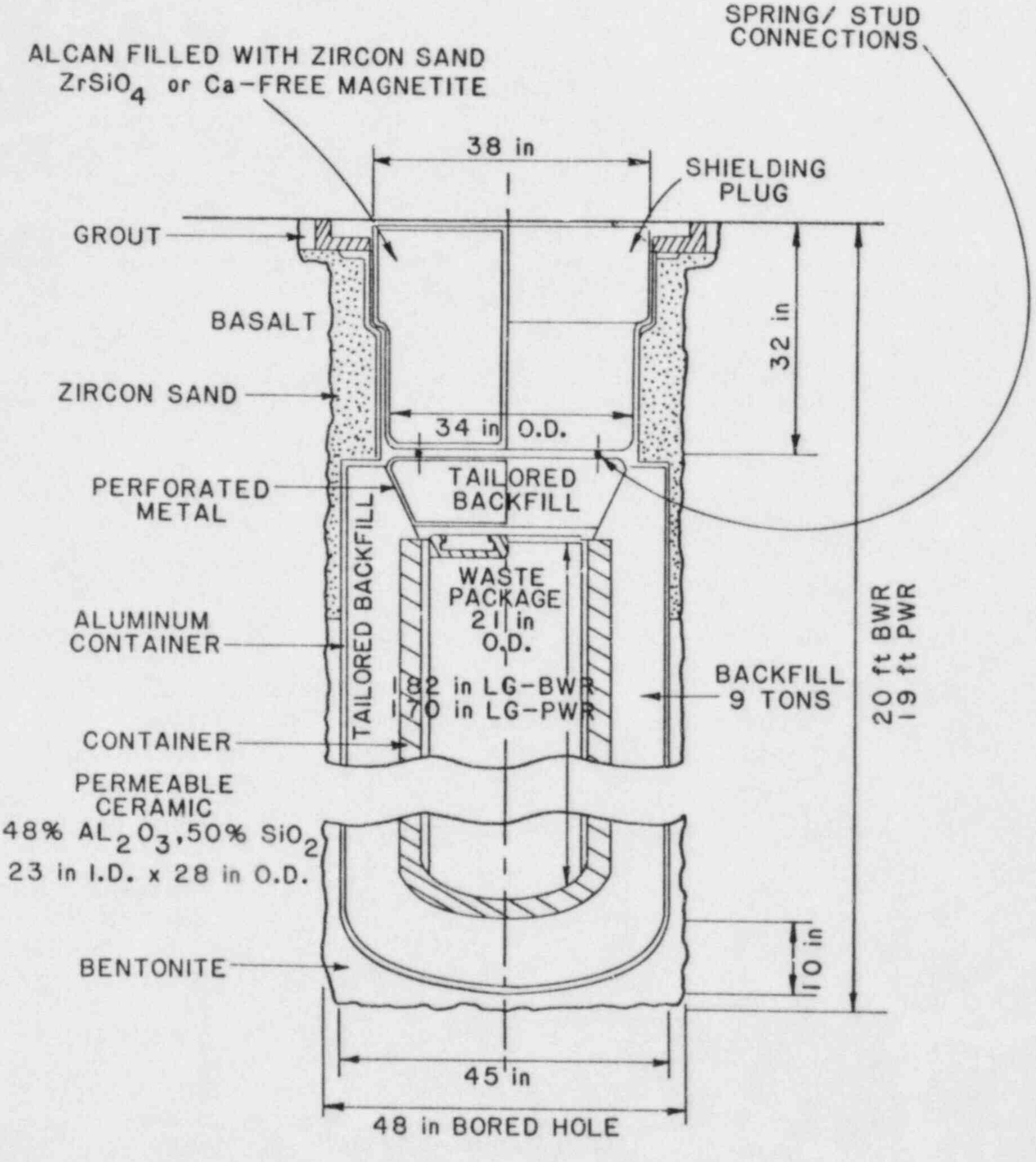

Figure 10.1.3 Storage position.
(RHO-BWI-C-116, 1982)

Although the rock is strong and competent, protection from minor local failures such as rock falls require rock reinforcement and support. A loosened rock zone surrounds openings excavated in rock. The loosened zone generally extends 5 to 10 ft outward regardless of the size of the opening, but can be as little as 3 ft where smooth blasting practices are employed. The loosened zone is generally sufficiently unstable to require some support in an otherwise competent rock mass. As an aid in estimating support requirements, the basalt has been classified according to the Q-system of Barton, Lien, and Lunde (1974), resulting in extreme Q-values of 4 and 95, with the most probable range being from 10 to 25 (RHO-BWI-C-116, 1982).

Barton, Lien, and Lunde (1974) indicate for repository-size openings in rock, with Q-value equal to 10 to 25, some spot bolting would be required. Since thermal stresses are not allowed for in the Q-system, the reference repository description (RHO-BWI-C-116, 1982) has planned systematic rock bolting on a 5-ft spacing together with a layer of shotcrete. The type and length of the bolts are not mentioned by RHO-BWI-C-116 (1982), nor is the thickness of the shotcrete.

With respect to groundwater, mining will tend to drain the repository horizon as the water will tend to flow toward the openings. However, due to the possible low permeability of the basalt, and resulting long travel times, only a fraction of the water contained in the Umtanum Flow is expected to be drained during mining.

10.1.1.4 Canister Placement and Arrangement

The waste package (Figure 10.1.2) consists of a carbon steel canister, surrounded by graphite fill material, and contained within a 21-in.-outside diameter titanium overpack. The packages will be placed in 48-in.-diameter holes drilled vertically along the centerline of storage room floors on 12-ft-centers. As shown in Figure 10.1.3, the hole is designed as a engineered barrier consisting of (starting at the outside) zircon sand and bentonite filler, an aluminum container surrounding tailored overpack, and a ceramic sleeve to support the tailored overpack. No mention is made in the reference repository description (RHO-BWI-C-116, 1982) of the method(s) used to place the filler, aluminum container, tailored overpack, and ceramic sleeve in the hole, and we assume the containers and sleeves are lowered into place while fill materials are poured or blown in.

10.1.1.5 Thermal Loading

As a result of decay of the radionuclides contained in the spent fuel, the waste packages radiate heat. Unreprocessed spent fuel contains fission products which are relatively short-lived and actinides which are generally quite long-lived. As the radionuclides decay to more stable isotopes, the number of disintegrations and resultant heat produced will decrease with time. The heat produced by a canister will be at a maximum at the time of emplacement.

A canister will contain either three Pressurized Water Reactor (PWR) or seven Boiling Water Reactor (BWR) spent fuel assemblies. Assuming 10-year-old waste, canisters will have initial maximum heat loads of 1.74 kW and 1.33 kW for PWR and BWR, respectively.

The areal extent of the repository, the canister spacing, the age of the waste, and the type of waste (PWR or BWR) determine the overall thermal load on the repository. To be conservative, all the waste is assumed to be 10-year-old PWR. In reality, waste type and age will vary, and actual panels are assumed to consist of waste of a uniform type and age to avoid uneven thermal loading within a room or panel.

The storage area consists of 22 panels occupying a total of 1,300 acres, or 59 acres per panel. Using 1.74 kW/canister and a storage complement of 1,750 canisters per panel, the heat load within a panel is 51.6 kW/acre. On the basis of the total area of 1,884 acres (which includes the shaft pillar and service areas) the overall heat load is 35.6 kW/acre.

10.1.1.6 Backfill Timing

Ultimately, a repository must be backfilled, with the backfill designed as a barrier (10CFR60.133). In this repository concept, backfill will not be placed until permanent closure. Remining of backfill for retrieval purposes is apparently not an issue in this open-room concept since the decision to permanently close nullifies the retrievability requirement.

Permanent closure will take about 20 years to complete, and a possibility exists that retrieval could be required for some reason during the permanent closure process, though the rule (10CFR60) does not require retrieval to be maintained as an option after initiation of permanent closure. Remining prior to retrieval will not be dealt with in this concept as the retrieval operations would be similar to those in concepts where backfill is placed as soon as storage in a panel has been completed.

10.1.1.7 Ventilation

Rooms are open (unbulkheaded) and ventilated after waste placement has been completed. The two potential development options:

- Develop and store waste simultaneously
- Develop whole repository prior to waste placement,

result in two alternative ventilation schemes. In the first case, two separate ventilation circuits are required:

- Mine (development) ventilation system
- Confinement (storage) ventilation system.

Since rooms will be developed only as they are required for placement, the airflow in the confinement circuit will begin at a small value and increase until the final value is reached. To ensure that leakage is minimized and is toward the confinement circuit, the size of the confinement entries and returns must increase as the confinement air flow increases.

If total repository development precedes placement, only one ventilation system is required. The airflow requirement will increase as panels are developed, to a maximum of about 1,500,000 cfm. Once storage is begun, the increased heat will increase the rock temperatures, so that increased airflows will be necessary in order to keep the air temperatures to less than 106°F. It is assumed that increasing the total airflow to 3,000,000 cfm will be sufficient for this purpose.

In the summer, the intake air may require precooling to maximize the convective heat removed from the rock. In winter, the intake air may need to be heated to ensure that the temperature exceeds 37°F to avoid icing. Heating could best be accomplished by extracting heat from the exhaust air using heat exchangers. The requirement for heating is not addressed in the reference repository description (RHO-BWI-C-116, 1982).

10.1.1.8 Retrieval Systems

A requirement of 10CFR60 is that repository operations must be designed so that any or all the of waste could be retrieved on a reasonable schedule. "Full Retrieval" (sometimes termed "Mass Retrieval") is removal of all waste. However, from time to time, retrieval on a limited basis may become necessary; for example, a few canisters, a single room, or a single panel. This scenario is designated as "Local Retrieval."

In addition to providing multiple barriers in the hole, the storage position, described in Section 10.1.3, has been designed to facilitate retrieval. In the present repository concept, storage rooms are open and ventilated, and air temperatures would remain workable. Equipment for high temperature operation would not be necessary for retrieval. The transporter (Figure 10.1.4) used to place the canisters in the holes could also be used for retrieval. The rubber-tired machine is powered by a 300-HP diesel engine and has a net vehicle weight of 39 tons. The transporter has a track width of 8.5 ft, a wheel-base of 20.5 ft, and has two operator cabs, one at each end, facing opposite directions.

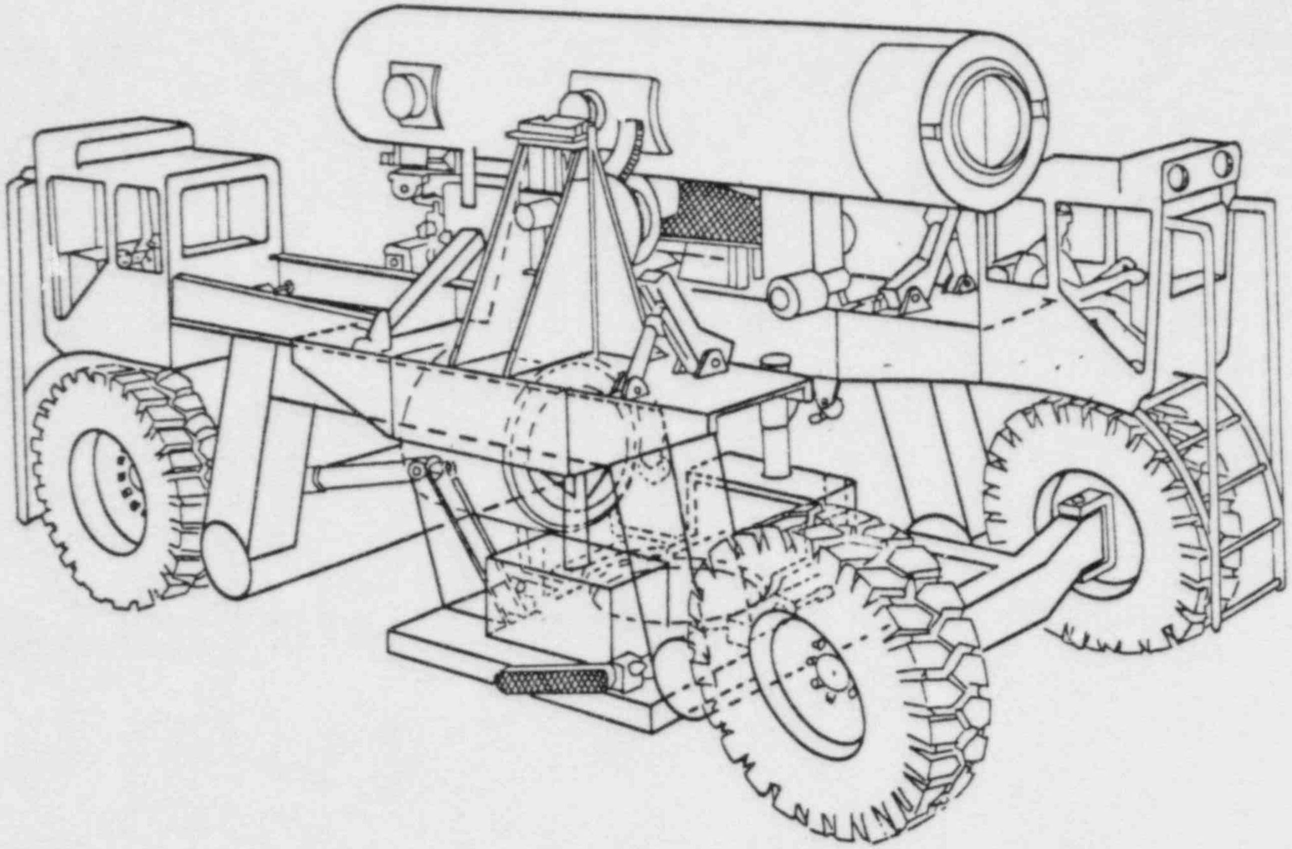

Figure 10.1.4 Transfer cask transporter.
(RHO-BWI-C-116, 1982)

The order of operations for retrieval using the transporter is (Table 10.1.3):

- The floor shield is placed over the storage hole
- The plug housing is placed over the floor shield
- The doors in the floor shield are opened and the storage hole plug is removed and stored in the plug housing which is rotated away from the hole after the floor shield doors have again been closed
- The transfer cask is lowered into position over the floor shield
- The doors on the floor shield and transfer cask are opened
- The grapple in the transfer cask is lowered to engage the top of the waste package
- The waste package is hoisted into the transfer cask
- The transfer cask shield doors and the floor shield doors are closed and the transfer cask is lifted and rotated to the horizontal traveling position
- The plug housing is placed over the floor shield
- The doors on the floor shield and plug housing are opened and the plug replaced in the hole
- The doors on the floor shield and plug housing are closed and the floor shield and plug housing moved to their traveling positions.

10.1.2 Interaction Between Retrieval and Repository Systems

10.1.2.1 Excavation Systems

Open storage rooms over the life of the repository do not require excavation prior to retrieval.

10.1.2.2 Equipment Systems

Retrievability impacts on equipment systems can best be identified with the aid of the flow chart shown in Figure 10.1.5. Each basic repository operation is given an identification number to facilitate

Table 10.1.3 Retrieval Conditions and Operations

(A) CANISTER, HOLE, WASTE PACKAGE

1. Waste Package: PWR - O.D.[1] - 21 in.
   L[2] - 170 in.

   BWR - O.D. - 21 in.
   L - 182 in.

   Non-Self-Shielding

   Titanium outer, graphite middle, carbon steel inner

2. Container: PWR - O.D. - 45 in.
   L - 196 in.

   BWR - O.D. - 45 in.
   L - 208 in.

   Aluminum outer, tailored backfill middle, ceramic inner

3. Hole: PWR - O.D. - 48 in.
   L - 19 ft

   BWR - O.D. - 48 in.
   L - 20 ft

   Hole is vertical. Hole is bored. 1 canister/hole.

4. Plug: Shielded, 38 in. wide x 32 in. high.

(B) PLACEMENT UNIT

1. Horizontal, longitudinal transporter
2. The transfer cask is shielded and has an internal hoist chain grapple.

(C) EMPLACEMENT SEQUENCE

1. Inspect and clean emplacement area
2. Align transporter with hole
3. Lower floor shield
4. Remove plug
5. Rotate cask 90° so that it is vertical
6. Open shielding doors
7. Lower waste package[3,4]
8. Retract grapple, close floor shield door[3]
9. Raise and reposition transfer cask[3]
10. Raise floor shield[3]
11. Remove transporter

(D) RETRIEVAL ENVIRONMENT

1. Temperature - 80° wet bulb (air)
2. Worst case is when canister has been in ground 50 years
3. Rock temperature will be less than 290°F
4. Ventilation at all times, so no pre-cooling will be necessary.
5. More information is needed on the temperature gradient between the canisters and the room for retrieval scenario.
6. All that is known now is that the wall rock temperature will be between 80°F and 290°F.
7. Water situation is also unknown. 100% humidity is probably ponding of water is possible.

(E) RETRIEVAL SEQUENCE

1. Radiation survey
2. Decontamination and clean-up
3. Identify canister
   Locate canister precisely
   Determine canister orientation[5]
4. Align shielded transporter with hole, vertically and horizontally[6,7]
5. Lower floor shield
6. Remove plug
7. Close floor shield doors
8. Rotate transfer cask 90° into position over floor shield
9. Open doors[8]
10. Place grapple[8,9]
11. Retrieve cask[8,9]
12. Close shield doors
13. Replace plug
14. Decontaminate retrieval area

(F) NOTES

[1] O.D. - Outside diameter

[2] L - Length

[3] Monitor for and protect against streaming radiation

[4] Misalignment could lead to damage of canister and required retrieval. Need to check for alignment.

[5] If canister is not retrievable by transporter, it must be retrieved by any means necessary. If the canister is OK, sequence continues with continual monitoring

[6] Transporter may need more shielding than is required for placement.

[7] Transporter may also have to be modified for high temperature operation

[8] Monitor for and protect against streaming radiation

[9] Provision is needed for handling of contaminated canister or for decontamination of canister to avoid contamination.

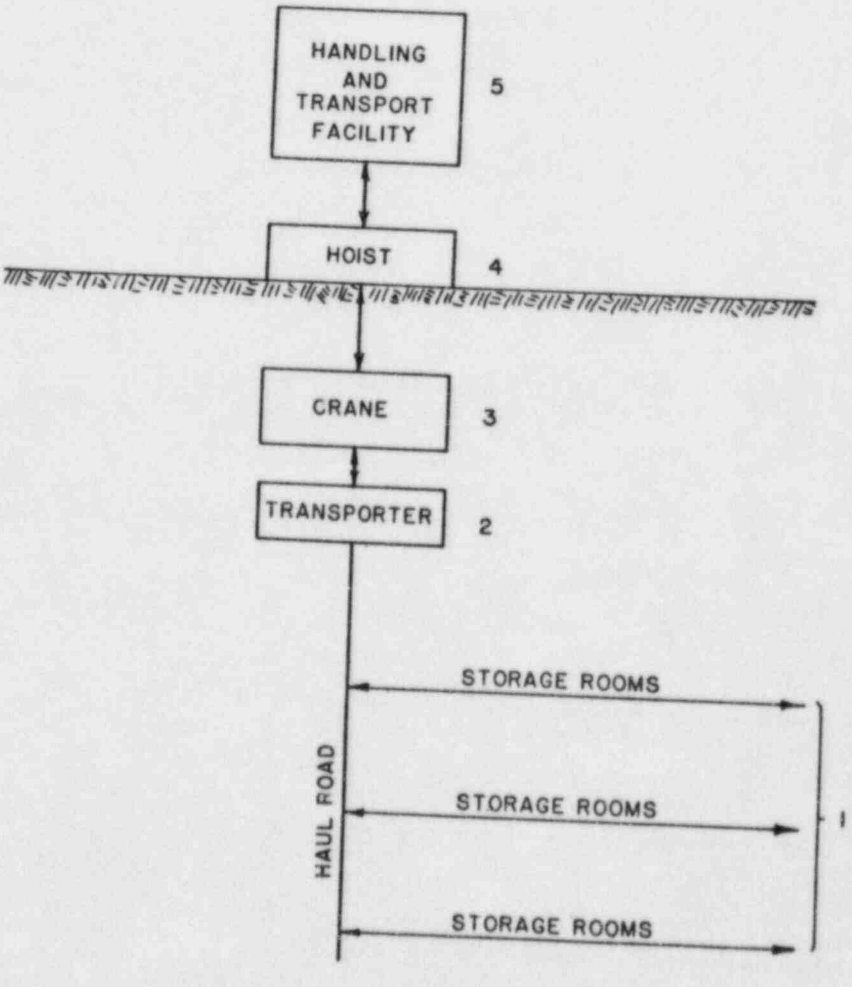

Figure 10.1.5 Schematic of waste handling operations.

identification of an event's impact on all systems. With mining development completed, the only active operations involve canister storage. Different levels of retrieval vary greatly in their impact on repository operations.

Local retrieval of canisters (for any reason), must take place concurrently with storage operations. Unless new equipment is obtained for the task, the storage equipment will have to be used, slowing the normal storage rate. Retrieval of breached canisters will require "hot cell" or shielded equipment along with decontamination equipment in the storage area. Transporting the canisters to the surface will require use of (Figure 10.1.5) the crane (3), hoist (4), and surface handling facilities (5). These systems will be unable to perform their normal operation for handling canisters and a delay in repository storage activities may well result.

Full retrieval of canisters can be planned systematically for a full storage room or full repository, starting with the oldest storage rooms. Because the same handling equipment will be used for the full retrieval operation, an operating schedule can be defined, with no interference from other operations. If any canisters are breached, the retrieval will be more complex due to contamination concerns. Special equipment will be used for the life of the breached canister retrieval operation.

The transporter is about 8.5-ft wide, the storage panel is 14 ft wide, leaving less than 3-ft clearance to the sidewall (or rib) on each side of the vehicle. Transport travel is over the centrally placed row of holes, straddling them with the wheels. The inside track of the vehicle is 6 ft, the holes to be straddled are 4 ft, leaving 1-ft clearance on either side. This small clearance does not leave much margin for error in steering the transporter. Any deviation of the vehicle could result in its tires running close to or over storage hole plugs. However, the pressure resulting from this travel will be about 70 psi and is unlikely to disturb the canister holes.

Retrievability requires removing the storage hole plug, grappling the canister, and lifting it into the transfer cask on the transporter vehicle. The lifting operations may be difficult if the canister binds against the hole lining - a potential situation if excessive lateral rock movement has occurred following loosening or decrepitation of rock around the hole.

The fill material in the hole can absorb some rock deformation and resulting side pressure, but the limits must be adequately identified through testing. Radial pressure on the canister may develop due to hole closure. The frictional resistance to pulling the canister will be a function of this radial pressure.

10.1.2.3 Facilities

Open storage rooms require minimum facilities for canister storage and retrieval. Facilities used in development of storage rooms, such as haulageways, loading bins, skips, and other equipment to handle mined rock, will be dismantled or inoperative during the canister storage/retrieval stages. Stockpiles and associated surface equipment should be unaffected by retrieval operations. Transfer cask handling facilities at the surface are capable of handling casks containing breached canisters from local retrieval operations, albeit at rates possibly slower than normal. Full retrieval, if prepared for, should offer no particular operational problems.

10.1.2.4 Ventilation Requirements

Continuous ventilation of the open rooms until the time of permanent closure results in continuous extraction of heat from the surrounding rock. As a result, rock temperatures at the perimeter of the openings will be less than those which would occur if the rooms were not ventilated. Air temperatures in the rooms will be planned to vary from 80°F at the intake and to about 106°F at the exhaust end. Since the air temperature range is equal to or less than that at waste placement, no special measures, such as air-conditioned cabs on vehicles, are required for retrieval, which were not already required for placement operations.

As a result of the auxiliary power supply and a fan set-up consisting of duplicate fans plus an identical backup unit which is not normally operating, neither power outages nor fan component failures will interrupt the supply of ventilating air. Retrieval operations would be carried out in rooms ventilated by the confinement ventilation circuit which provides a continuous supply of air to all rooms in which waste placement has occurred or is occurring (RHO-BWI-C-116, 1982). As a result, no changes are required in the ventilation system due to retrieval. For the option in which all development is completed prior to commencement of placement operations, all rooms are ventilated continuously by the confinement ventilation system. This ventilation system complies with 10CFR60.

10.1.2.5 Backfill

In the concept of open, ventilated rooms, backfill would not be placed until permanent closure. Thus the requirement for retrievability does not directly impact backfilling operations. However, full retrieval would impact backfilling because when all the waste is removed, isolation of the repository and hence backfilling is no longer required. In the case of local retrieval, when a room or panel is emptied of waste, backfill would still be required to ensure that the room or panel does not become a preferential pathway for radionuclide migration.

10.1.2.6 Thermal Effects

The thermal effects associated with nuclear waste disposal in an underground repository have significant impacts on the retrievability of the waste. A number of thermal analyses have been completed by BWIP to determine the practical waste storage geometry and repository layout which will preserve the isolation capability of the host rock formation. Thermal effects can be divided into three distinct areas:

- Very-near-field effects which have the most direct impact on retrievability since elevated temperatures can lead to decrepitation of the borehole wall and consequent binding of the canister
- Near-field effects which impact retrievability indirectly by increasing the potential for creating instability of the storage rooms
- Far-field effects which have minimal, if any, impact on retrievability since the stability of the entries and shafts would not, in general, be affected by the thermal loading.

Thermal effects of this storage concept have been determined by BWIP using the SUPER 5 and HEATING 5 computer codes using the assumed thermal loadings given in Section 10.1.1.5. Calculated peak temperatures in the repository for this storage concept, using an in situ basalt temperature of 134°F are (RHO-BWI-C-116, 1982):

- Waste form: 572°F
- Bentonite: 392°F
- Basalt around canister: 392°F
- Entries and shafts: 135°F.

The above-mentioned temperatures are well within the maximum temperature criteria established by BWIP, which are as follows:

- Basalt: 932°F
- Bentonite: 572°F
- Entries and shafts:
  158°F - operational phase
  212°F - retrieval phase
  302°F - terminal phase.

The waste package is always in quasi-steady-state equilibrium with the surrounding basalt because the heat capacity of the waste package is small compared to that of the surrounding basalt. A maximum rise in the basalt temperature at the inside surface of the borehole of about 260°F is fixed by the history of the decay heat released within the storage holes and by the storage configuration. The peak temperatures in the repository at 50 years after initial storage are:

- Waste Form: 464°F
- Bentonite: 396°F
- Basalt around canister: 396°F
- Entries and shafts: 154°F.

These temperatures are well within the maximum temperature riteria which were established by BWIP for preventing hole decrepitation and preserving the integrity of waste isolation. By preventing thermal decrepitation and providing a storage sleeve assembly around the waste package, retrievability should be ensured. The near-field effect of the temperature rise from 134°F to 154°F should still maintain a rock stress safety factor (RSSF) of over 2.0.

The primary uncertainity is the degree of variability of rock strength in the repository, which may result in areas of local overstress where rockfalls may occur. Since the rooms are open and ventilated, rockfalls, if they occur, can be easily handled without affecting the retrievability of waste packages, unless the rockfall damages the floor ring. If rockfalls damage floor rings, provisions for retrieval or repair may then be necessary.

10.1.2.7 Requirements for Special Equipment for High Temperature and Radioactive Environments

Due to continuous room ventilation, the room air temperatures vary from 80°F at the intake side to about 106°F at the exhaust side. Retrieval would take place at air temperatures as cool as, or cooler than, those during emplacement.

Provided that the waste package is intact, the transporter (whose operation was described in Section 10.1.1.8) can be used to retrieve it such that 10CFR60 standards are satisfied.

If, however, a waste package is damaged, then other measures may be required for retrieval. For example, if the titanium overpack splits upon retrieval, the transporter would pick up the top half of the overpack but leave the remainder of the overpack and the canister in the hole. Since the grapple in the transfer cask on the transporter is designed to engage the top of the titanium overpack, the transporter grapple cannot be used to retrieve the remainder of the waste package. If however, the grapple were magnitized and contained within a magnetized sleeve which would encircle the canister, this concern might be overcome. A damaged ceramic sleeve may bind against the waste package, impeding retrieval operations, and possibly requiring overcoring of the hole. In the case where overcoring is required, provisions for retrieval in the repository design are inadequate, and development of a machine for retrieval by other methods is required.

10.1.2.8 Ground Support

As discussed in Section 10.1.1.3, The Q-system (Barton, Lien, and Lunde, 1974) has been used to estimate ground support requirements. Since the Q-system data base does not include experience similar to repository conditions, the designers have specified ground support in excess of that suggested by the Q-system.

The effect of elevated rock temperatures on the stability of either resin bolts or shotcrete has not been thoroughly studied. The maximum continuous service temperature for polyester resins may be as low as 250°F. While with ventilated rooms, the rock temperature near the opening should be much less than this, it is necessary to verify that resin bolts would be acceptable. In addition, at temperatures commonly encountered in underground works, the use of resins in rock reinforcement has only occurred within the last 25 years. Experience is lacking regarding the stability of any type of rock bolts for a span of decades. Experience with concrete at elevated temperatures (Troxell, Davis, and Kelly, 1968, p. 248-250) indicates that for simple temperature increases to 212°F relatively minor strength losses occur due to loss of both free and contained moisture. Above 212°F more significant strength losses occur in the repository maximum temperature ranges up to, say 400°F, but amount to 10% reduction, or less. However, if the concrete is heated and then cooled, strength losses approach 25% or more at 400°F. Two considerations may minimize such strength losses. Using lean mixes and limestone, expanded slag, or similar aggregates minimize heat effects in this range. We suspect that the important cement grout, shotcrete, and concrete considerations for repository temperatures hinge on minimizing the water content and matching the thermal expansion and chemistry of cements and aggregates. Use of cement in the concrete grouted bolts would also limit difficulties which might occur due to differential thermal expansion of the steel and the bonding agent. Concrete has a coefficient of thermal expansion imtermediate between that of steel and basalt whereas resin has a much greater coefficient of thermal expansion than either steel or basalt.

In any case, over a decades-long period some deterioration of the rock reinforcement can be expected, and minor roof falls may result. In areas of deterioration, the debris removal and renewed rock support provided prior to commencement of retrieval operations must be planned. With accessible, ventilated rooms, the remedial measures can be carried out as the rock falls are discovered. A Load-Haul-Dump (LHD) vehicle and a roof-bolting jumbo would be required for resupport.

Seepage of ground water toward the openings will occur. With time the seepage could result in a build-up of pore water pressure on the shotcrete liner. Rock grouting at the time of construction of the rooms could minimize deterioration by seepage and chemical action.

Despite grouting efforts and shotcrete application to the repository walls, some ground water is likely to enter the repository during the operating period. Underground conditions could reasonably be expected to remain generally dry but some allowance for the presence of minor amounts of water during retrieval would be prudent. The postulated water inflow volume would slightly exceed the evaporating capability of the ventilation system, and would result in puddles on the repository floor.

10.1.2.9 Instrumentation

Repository performance monitoring ensures the safety criteria are not violated and the isolation capacity is maintained. The retrievability option mandates that significant changes in selected parameters, or deviations from expected behavior, be detected when they occur, and steps be taken to correct the problem or retrieve the waste to the surface. Categories requiring monitoring are:

- Hydrogeologic - water inflow
- Thermal - heat buildup
- Mechanical - stress build-up, rock deformations, and rock instability
- Radiological - activity levels.

Direct observation of subsurface conditions is also advisable. BWIP proposes a program of monitoring subsurface conditions by visual inspection and hands-on measurement within panels, with a minimum of instruments actually placed within the panels. This monitoring program is possible since the rooms will be left open and ventilated. Visual inspection and hands-on measurements are preferable to remote monitoring because instrumentation available at present is not reliable for periods in excess of about a decade, especially under the thermal conditions associated with the repository rooms. An experimental panel will be provided in the repository in which extensive verification and confidence testing will be performed. This panel will also provide an opportunity to study the reliability of instrumentation.

Thermal monitoring will primarily consist of thermocouples embedded in boreholes placed at intervals along storage rooms. Thermocouple signals will be collected at several spots and relayed to a central control console to detect abnormalities.

Hydrogeologic monitoring will consist of measuring the pressure of formation water in the vicinity of storage holes, in various accesses, and in basalt flows and interflows. High precision, durable pressure transducers will be placed between packers in boreholes. Water quantities entering individual panels will be monitored by devices measuring the humidity, temperature, and quantity of airflow through panels after waste emplacement.

Mechanical monitoring will consist of a network of geophones and seismographs to monitor rock noise and rock falls. The convergence of pre-established points in storage rooms and drifts will be measured. At a few selected locations, detailed evaluation of rock stability will be made using stressmeters and multiple-position borehole extensometers.

Ventilation conditions in the repository will be monitored to detect radiation levels, fire and smoke emergencies, and ventilation blockages caused by roof falls. Mobile radiation and thermal sensors in ventilation airways will permit continuous monitoring from a main surface control console. Flow direction, pressure, differential pressure, temperature will be monitored.

The retrievability requirement mandates repository monitoring for perhaps decades after initial waste placement. The following steps need to be taken to ensure the reliability of repository instrumentation:

- Develop geophones, stressmeters, multiple position borehole extensometers, piezometers, thermocouples, and ventilation instrumentation that will maintain their accuracy in the hot and humid environment expected in a repository

- Provide extensive verification of the reliability of instrumentation in the experimental panel established within the repository

- Ensure that inspection of the repository at predetermined intervals can be performed by robots or by personnel in air-conditioned suits or vehicles.

10.1.3 Adequacy of Incorporated Retrieval Systems or Allowances

10.1.3.1 Local Retrieval

Local retrieval may be necessary for quality assurance or quality control purposes, or due to a detected radionuclide release. A manufacturing error, for example, could have caused premature breakdown of overpacking for some canisters in a storage room. Open rooms allow using the same equipment for emplacement and retrieval procedures. Most likely the canister transporter and "hot cell" equipment will be necessary.

Equipment travel in a storage room creates a hazardous condition. Local retrieval implies recovering one or more canisters in a storage room, and traveling to the designated canister means approaching very near to or running over nearby canister holes. Because of storage room dimensions and equipment clearances, this occurrence is likely; however, since loads imposed by the tires will be only about 70 psi, no great damage to the holes or the contained waste packages is expected, except for perhaps minor damage to the floor rings.

During local retrieval, the equipment being used for storage may require use for retrieval. If the same equipment is used, storage activities will be slowed or stopped. Use of the crane, hoist, and surface handling facilities for handling retrieved waste will also slow storage activities. No equipment has presently been designed to overcore a 48-in.-diameter hole in a repository environment. Overcoring may be necessary if the canister to be retrieved has broken and cannot be retrieved intact. Overall, with workable temperatures and intact canisters, the local retrieval system is adequate. Further design and definition is required to facilitate breached canister retrieval.

10.1.3.2 Full Retrieval

Full retrieval of waste canisters will need planning and preparation but will not be necessarily difficult. Full retrieval planning is eased since all repository resources can be committed to the operations. For unforeseen reasons, underground storage may prove unsatisfactory in spite of an extensive site characterization program, leading to abandonment of the site. Full retrieval may require special equipment if the reasons for retrieval interfere, such as excessive rock movement crushing canisters, or rapid deterioration of rock causing need for roof support and scaling equipment.

During full retrieval, the equipment used must be dedicated to the waste ventilation circuit. The small clearances and small alignment tolerances will impede retrieval progress. The heavy equipment such as the transporter traveling near the floor rings may possibly cause damage to the rings or the canisters. The possibility of attempting to retrieve a canister which is bound in the hole by rock closure or which is broken into numerous pieces is high with full retrieval. The grappling equipment on the transporter may prove inadequate in this case requiring retrieval by overcoring. As stated in the local retrieval section, no equipment for large diameter overcoring has been developed. The systems incorporated for full retrieval are adequate except when a canister is bound in the hole or no longer intact.

10.1.4 Concerns

10.1.4.1 Technological Concerns

When panels are open and ventilated and single waste packages are stored in vertical holes, the main technological concern is the effect of the hot rock on the materials used in the ground support system, which will consist of rock bolts and shotcrete. Since the rock bolts will presumably be fully grouted to minimize the possibility of corrosion of the steel bars, the grout used must be resistant to high temperatures. At the temperatures normally encountered in mining and tunneling, polyester resins are used for the grout. The maximum continuous service temperature for such materials is about 250°F (Weast, 1983). The coefficient of thermal expansion of resin is greater than that of either basalt or steel. Differential thermal expansion may thus occur, reducing the effectiveness of the bolts. Use of Portland cement mixtures which minimize heat effects (Section 10.1.2.8) in both the shotcrete and the grouted bolts would reduce the uncertainty regarding stability of the support systems. The widespread use of shotcrete or grouted bolts, or both, as primary ground support is about 25 years old and experience is lacking regarding the condition of such support systems after decades even at normal temperatures.

Another technological concern is development of equipment for retrieval of breached canisters, especially those which have split into two or more pieces. If canisters have cracked but are otherwise intact, retrieval could be accomplished using the transporter with a transfer cask having an internal shielding sleeve. If the breached canister has separated into more than one piece, the surest method would be to overcore the hole. While overcoring is feasible, no equipment exists at present for overcoring 48-in.-diameter holes in repository environments. Overcoring would also require a room height in excess of the 20 ft assumed, since the holes are 20 ft deep and the overcore should penetrate at least 6 in. to 1 ft below the bottom of the hole.

10.1.4.2 Safety Concerns

As discussed under technological concerns, no experience with grouted bolt and shotcrete systems for decades-long periods exists. Since the panels are accessible and ventilated, ground support can be periodically inspected and rehabilitated as necessary.

10.1.4.3 Radionuclide Release Concerns

One possible reason for retrieval is failure of the waste package with consequent release of radionuclides. Gaseous and volatile radionuclides may be released into the emplacement hole while soluble radionuclides may be carried away by any water that is present in the emplacement hole. Removal by aqueous solution requires the presence of water in liquid form; that is, its temperature must be less than the boiling point for the repository pressure condiions. For open, ventilated rooms, this pressure will be approximately one atmosphere and, hence, aqueous transport of radionuclides will only occur if the water temperature does not exceed 212°F. Due to the cooling effect of the ventilating air the rock surrounding the opening should have a temperature considerably less than 212°F and hence water will be in a liquid state.

10.1.4.3.1 Releases Into Air

The gaseous and volatile radionuclides released from spent fuel consist primarily of hydrogen-3 (tritium), carbon-14, and krypton-85. The quantity of krypton-85 is large compared with that of either tritium or carbon-14. In addition the carbon-14 must be in a form that leads to volatile species upon reaction with water in order to be of concern. It is assumed that one tenth of the krypton-85 is sufficiently near an exposed surface to leave the fuel. If a breach occurs, the concentrations of krypton-85 and tritium in air must not exceed the EPA defined standards of 10 nCi/liter and 5 nCi/liter, respectively in order to satisfy 10CFR20 (These radioactivity concentration standards are defined by the EPA in metric units, the equivalent traditional units, for reference, are 0.35 nCi/ft^3 and 0.18 nCi/ft^3, respectively.)

Before methods of dealing with such releases can be discussed, it is necessary to indicate how the radionuclides released into the hole by a breached canister would be liberated into the rooms. There are two possiblities:

- The hole plug is not gas-tight
- Release occurs at retrieval if the doors in the floors shield are not closed tightly after removing the hole plug.

If the hole plugs are not gas-tight, then the volatile and gaseous radionuclides will be released into the room soon after the breach. If the hole plugs are gas-tight, then the gas pressure in a hole could very slightly increase but not to a level that might lead to difficulties.

In the former situation, the presence of radionuclides would be detected by instrumentation. Unless personnel happen to be present at the time of the release, there would not be cause for concern since ventilating air would dilute the concentration to within acceptable limits. The time required for this dilution depends on the airflow supplied and on the room volume, and is given in Figure 10.1.6.

If release occurs during the retrieval process, workers would be exposed. However, since the room will be ventilated, the gas would not diffuse to fill the whole room. Consequently, the dilution time would be less than if the room were unventilated, other things being equal.

Releases accurring at retrieval can be avoided by having radiation sensors in the hole. Any detected gaseous radionuclides would then be drawn off prior to retrieval using millipore filters or a cryogenic absorption system. Both of these methods fall within existing technology.

10.1.4.3.2 Releases into Water

With regard to the movement of radionuclides by aqueous transport, the water must be in the liquid state. Heat balance calculations show that the lower the initial temperature of the water, the smaller the flow that is required to remove the canister heat and the greater the concentration of dissolved solids in the water. Reduction of the surface temperature of the canister below 212°F would occur for almost any water flow (Post, 1982).

If water contacted a breached canister, the rate of dissolution would vary widely with the water composition and temperature. For a typical rate of 0.0000264 lb/day, the solution water would contain about 0.25 mCi/lb of water and one pound of this solution would generate 0.1 mR/hr at 4 ft. Thus it appears that intrusion of water into a defective package would provide a good index for the failure but would not introduce a significant radiation hazard to the operation (Post, 1982).

Although the rock surrounding the rooms will likely be grouted, some seepage will still occur, resulting in casual water (puddles) on the floors of the rooms. This water could be mildly contaminated and will likely be hot. Hence, collection and transport to pumping stations should be in closed pipelines or tanks.

10.1.4.3.3 Radiation Detection Standards

The radiation levels measured during retrieval operations are not exceptional so that the standards used in the nuclear industry would

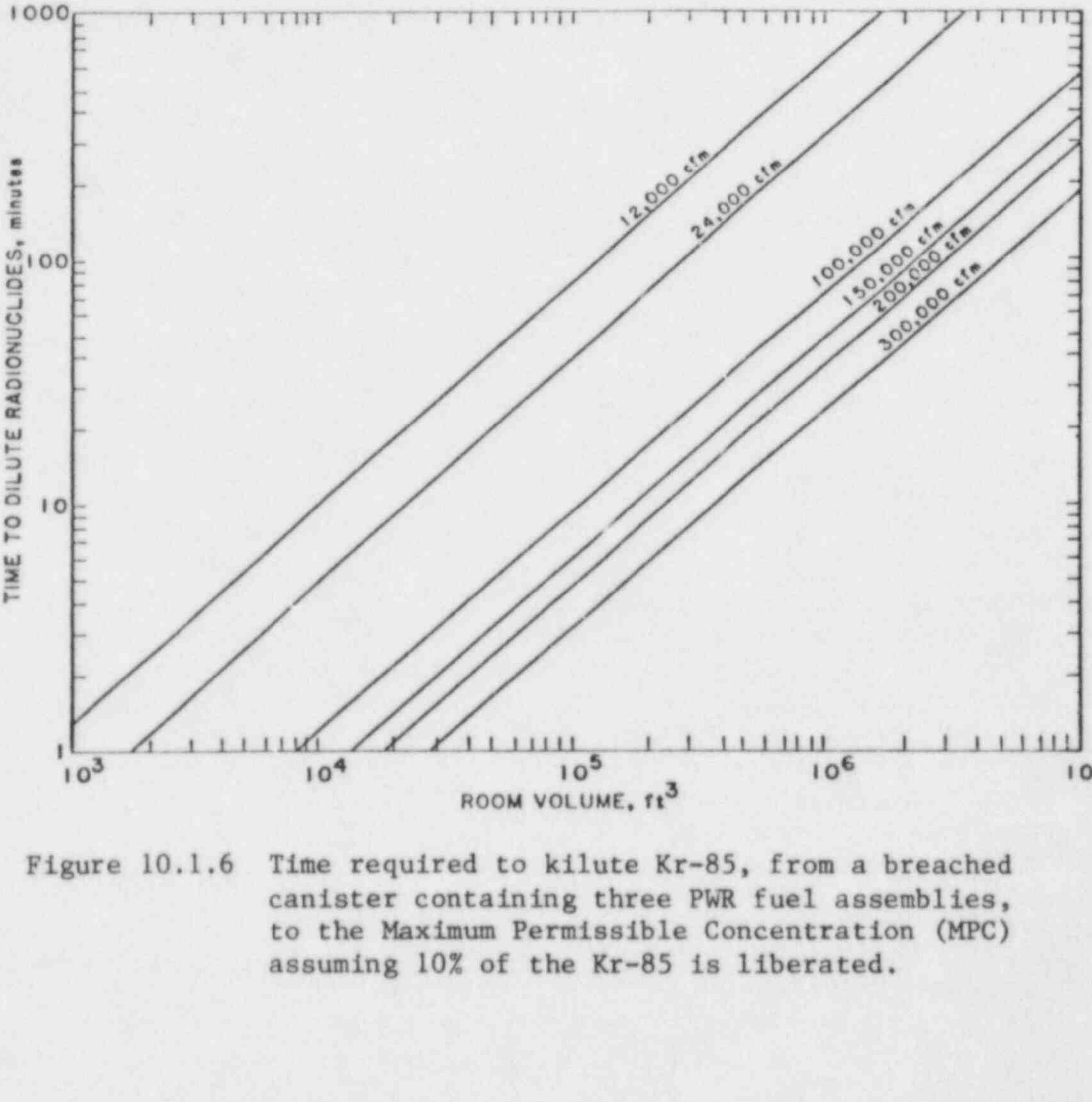

Figure 10.1.6 Time required to kilute Kr-85, from a breached canister containing three PWR fuel assemblies, to the Maximum Permissible Concentration (MPC) assuming 10% of the Kr-85 is liberated.

prevail. Lower limits of 0.1 mR/hr and upper limits of a few kR/hr would be adequate. A system to detect radioactive krypton-85 in the ventilation air and in the storage holes will be required. This system should be capable of detecting krypton-85 levels below 100 pCi/liter (2.6 Ci/ft^3) (Post, 1982).

10.1.4.4 Operational Concerns

Retrieval of breached canisters will require equipment other than the transporter and standard transfer cask. Retrieval could be accomplished by overcoring the holes containing breached canisters. However, room heights of at least 22 ft are required to accomodate the overcore upon retrieval. Alternatively a transfer cask having an internal shielded sleeve could be used where canisters are cracked but otherwise intact. To facilitate retrieval, all such equipment must be available in the repository.

With the small tolerances for alignment of the transfer cask with storage hole, precise positioning of the transporter over the hole may be difficult even with lasers. Positioning would be simplified if transporters were rail mounted.

Cooling of intake air will be required at room entries to ensure that its the temperature is less than 80°F. The area required for the coolers in the headings reduce the space available in the entrances to the rooms. Also the cooling units have a restricted life and will become less efficient with time.

10.1.4.5 Other Concerns

A fundamental concern related to a repository in basalt concerns the geologic/hydrogeologic uncertainty at the repository horizon. Among the concerns are the uniformity of the particular flow with regard to thickness, jointing, and fault occurrence. The in situ exploratory programs planned (1983) by DOE (ES-I and ES-II) are aimed at rectifying the lack of information about the geology/hydrogeology at the proposed repository horizon.

Another concern is the mechanism for and probability of canister breach. One possible mechanism is corrosion. The rate of corrosion will depend on the environmental conditions and the chemical composition of the ground water. Another possible mechanism is attempted retrieval of a canister upon which the hole has closed.

Physical disruption of canisters due to tectonic and thermal stress-induced rock mass failures in the storage hole is a serious concern.

10.1.5 Summary and Conclusions

The repository is located at a depth of 3,700 ft in the Umtanum Flow basalt of the Hanford Reservation, Washington. The repository will consist of 22 panels divided by a central pillar into two areas having 12 and 10 panels, respectively. Each panel is divided into six rooms (14 ft wide, 20 ft high, and 3,572 ft long) which are joined by crosscuts at 890-ft-centers.

The waste packages, which consist of the carbon-steel spent fuel canisters, graphite filler, and titanium overpack, are placed in 4-ft-diameter, sleeved holes, 12-ft on center in the floor of the rooms along the centerline. Based on a heat load of 1.74 kW/caniser at the time of placement, the panel thermal load is 51.6 kW/Acre.

Backfilling of the rooms would not taken place until the permanent closure of the repository. Rooms completely filled with waste would be constantly ventilated with sufficient quantities of air to provide a satisfactory environment for people to work.

Except in the case of a breached waste package, the retrievability requirement has only minor effects on the following repository systems:

- Re-execavation system - none required
- Equipment system - a Load-Haul-Dump unit and roof bolter need to be retained for clean-up of rock falls
- Facilities - local retrieval may impose adverse loads on the transportation system, confinement ventilation system, and development mining
- Ventilation requirements - no effect due to continuous ventilation
- Backfilling - none required until permanent closure.

Breached canister retrieval imposes additional requirements for the equipment systems and facilities system.

The concerns for the repository concept are detailed as follows:

- Technological Concerns:
  - Adequacy of the rock support system over a period of decades

- Safety Concerns:

  - Rockfalls resulting from deterioration of the roof support system

- Radionuclide Release Concerns:

  - Canister breaches would result in release of gaseous hydrogen-3 (tritium), krypton-85, and volatile carbon-14, of which krypton-85 would have the largest concentration

  - Diluting krypton-85 to the MPC given by 10CFR20 could take up to several hours for a release from a single breached waste package

  - The mechanisms for release of gaseous radionuclides from the storage hole to the floor shield at retrieval and aqueous transport (if hole liners corrode).

  - A system is required for detection of krypton-85 in ventilating air and in storage holes.

- Operational Concerns:

  - Retrieval of breached canisters by overcoring

  - Small alignment tolerances requiring precise positioning of the transporter

  - Large capacity heat exchangers limiting space in the room entrances.

- Other Concerns:

  - Geologic and hydrogeologic uncertainties

  - Undetermined probabilities and mechanism for canister breachs.

The general repository operations and retrieval systems are adequate. Further design and confirmation is required in the areas of hydrogeology and geology, long term adequacy of roof support, provisions for detecting and retrieving breached canisters, and the probabilities and mechanisms for breach. The repository concept meets the retrievability requirements of 10CFR60, except for systems to retrieve breached canisters.

10.2 Basalt Repository with Vertical Hole Storage, Immediately Bulkheaded Rooms, and Permanent Closure Backfilling

10.2.1 Basic Information

The second repository concept is in basalt, with vertical storage holes in the floor, rooms bulkheaded after waste placement, and backfilling at permanent closure. The concept is the same as that contained in the conceptual design report (RHO-BWI-C-116, 1982).

10.2.1.1 Definition of Repository Concept

The host geologic medium is basalt. Waste packages will be placed in 48-in.-diameter holes in the storage room floors. The panels will not be backfilled until permanent closure but will be bulkheaded as soon as waste emplacement has been completed.

The emplaced waste canister heat emission is 1.74 kW/canister, which results in a thermal load within a panel of 51.6 kW/acre, or 35.6 kW/acre for the entire repository.

10.2.1.2 Geologic Environment

10.2.1.2.1 Rock Unit

The proposed horizon for the nuclear waste reference repository in RHO-BWI-C-116 at the Hanford Reservation is the Umtanum Flow of the Grande Ronde Basalt. Recent (1982) core drilling in the vicinity of the Reference Repository Location at the Basalt Waste Isolation Project (BWIP) indicates the Umtanum Flow interior may thin in places. Until the final decision is made concerning which flow will be proposed for the repository, the Umtanum Flow will be assumed for design review purposes.

The Umtanum Flow, a single basalt flow, has a typical cross-section that consists of, in descending order, the flow-top, the entablature, and the colonnade. The repository would be located in the entablature, whose thickness in boreholes has averaged 150 ft. The Umtanum Flow basalt is black to dark green in color, extremely fine-grained to glassy in texture, and composed principally of plagioclase, clinopyroxene, and glass with titano-magnetite and ilmenite as accessory minerals.

10.2.1.2.2 Rock Mass Properties

The rock mass properties of the Umtanum Flow are probably controlled by intraflow structures such as joints, vesicles, flow-top breccias, and sedimentary interbeds. Correlations of intraflow structures between 10 boreholes penetrating the Umtanum Flow (Myers et al., 1979) indicate a significant variation in the flow-top breccia thickness and columnar joint spacing. Rock mass properties can be expected to vary. DOE designs anticipate a rock mass that responds well to tunneling with minimal support required.

The mechanical and thermomechanical properties used for the conceptual repository design were based on generalized basalt properties. Most rock testing was performed on intact rock samples in the laboratory.

The lack of in situ rock mass data presently (1983) remains an issue to be resolved from further investigations at the Near Surface Test Facility (NSTF) and the planned at-depth exploratory programs (ES-I and ES-II). Design parameters may be re-evaluated as data are developed from these test programs. Ranges for the properties based on data currently available are given in Table 10.2.1 (NUREG/CR-2352, 1982).

10.2.1.2.3 Hydrogeology

The available hydrogeological data do not fully define the ground water system. The data indicate fractures and intraflow structures control the ground water flow at the repository site. The vertical hydraulic conductivities, as yet undetermined, strongly affect radionuclide migration into the accessible environment.

Near-field ground water flow models which consider repository construction and waste emplacement are yet to be developed. The geochemical changes due to the introduction of nuclear wastes remain unclear. The hydrogeologic deficiencies will be addressed by ongoing (1983) exploration programs.

Tentative hydrogeologic and hydrochemical data for the Umtanum Flow appear as:

Hydraulic conductivity: 10^{-6} to 10^{-8} fps, flow top

10^{-10} to 10^{-13} fps, columnar zone

pH (at 149°F): 9.4 to 9.8

Eh: -0.36 to -0.41 volts.

Table 10.2.1 Range of Rock Mechanics Properties of Hanford Basalt (NUREG/CR-2352, 1982)

	Intact	Fractured	Estimated In Situ
Compressive Strength (psi)	5,400 to 60,000	0 to 44,000	-
Tensile Strength (psi)	1,000 to 3,500	0 to 1,000	-
Young's Modulus (psi)	8.0 to 14.0 x 10^6	-	0.8 to 1.4 x 10^6
Poisson's Ratio	0.5 to 0.35	-	-
Thermal Conductivity (Btu/hr-ft°F)	0.484 to 1.45	-	-
Specific Heat (Btu/lb-°F)	0.175 to 0.28	-	-
Thermal Expansion (/°F)	2.22 to 4.11 x 10^{-6}	-	-

10.2.1.2.4 Seismicity

The proposed site is seismically quiet, with only two Intensity VII (Modified Mercalli) earthquakes having been recorded since 1898. Seismic monitoring of the Columbia Plateau has determined that microearthquake (low magnitude) swarms typify the region (Myers et al., 1979).

10.2.1.3 Repository Construction and Layout

As shown in Figure 10.2.1, the repository will contain 22 storage panels. With the exception of the experimental panel, each panel comprises six rooms. The rooms are 3,574 ft long and connected by crosscuts on 890-ft-centers. Five entries connect the storage panels with five shafts to the surface. Entries, rooms, and crosscuts will be driven by drill-and-blast methods. Table 10.2.2 gives dimensions of the various facilities.

Each shaft will have a different dedicated function:

- Personnel and materials (service) shaft
- Basalt transport shaft
- Waste transport shaft
- Confinement air intake shaft
- Confinement air exhaust shaft.

The shafts will be sunk by conventional drill-and-blast methods, lined by steel and concrete to a depth of 1,900 ft, and lined with cast-iron segments backed by concrete to the final depth of about 3,800 ft.

Two potential sequences for repository development and waste placement, are:

- Repository development has been completed before waste storage begins
- Panel development and waste storage take place concurrently with both operations advancing at the rate of one panel per year.

The two sequences have very different requirements for ventilation and excavation systems, shaft facilities, and equipment quantities. The two sequences also affect retrieval considerations differently.

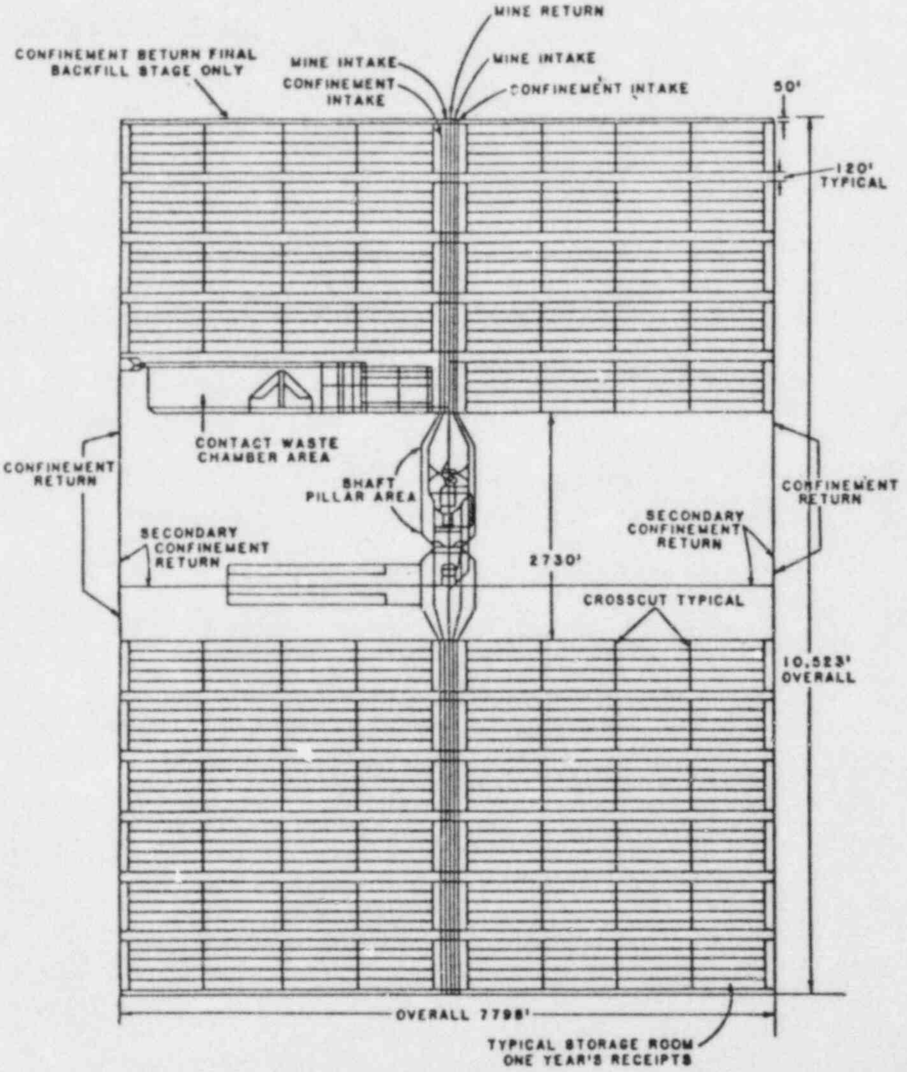

Figure 10.2.1 Repository layout for storage in vertical holes. (RHO-BWI-C-116, 1982)

Table 10.2.2 Dimensions of Repository Facilities

Facility	Dimensions
Personnel and Materials (Service) Shaft	16 ft inside diameter
Basalt Transport Shaft	14 ft inside diameter
Waste Transport Shaft	12 ft inside diameter
Confinement Air Intake Shaft	11 ft inside diameter
Confinement Air Exhaust Shaft	10 ft inside diameter
Confinement Air Intake and Accessways	13 ft wide by 12 ft high
Mine Intake Air and Accessways	18 ft wide by 17 ft high
Mine Exhaust Air and Accessways	18 ft wide by 17 ft high
Confinement Return Air and Accessways	13 ft wide by 12 ft high
Access Pillars	36 ft wide
Panels	3,577 ft by 614 ft
Storage Rooms	14 ft wide by 20 ft high
Crosscuts	14 ft wide by 20 ft high
Panel and Room Pillars	106 ft
Rib Pillars	100 ft
Storage Holes: for PWR	48-in. diameter by 19 ft deep
for BWR	48-in. diameter by 20 ft deep
Storage Hole Pitch	12 ft

According to current (1983) repository construction schedules, waste placement is required to begin within ten years of construction authorization. Assuming five years for shaft sinking and allowing for contract procurement for both the shafts and the underground development, pre-placement development must be completed within three years. Because the Pressurized Water Reactor (PWR) and Boiling Water Reactor (BWR) waste will be stored in separate panels (according to information supplied to EI by the NRC) and an available spare panel is desirable at all times, three panels must be ready for storage by year 10. To complete the three panels in three years requires a development rate of 5,500 tpd on a five-day week basis.

If complete repository development must occur before placement, the required development rate is about 23,500 tpd. This option causes the following modifications to the facility dimensions given in Table 10.2.2:

- Basalt transport shaft - 21-ft-inside diameter.

Development and storage proceed outward from the panels nearest the shaft pillar to those at the extremities of the repository. The mining cycle in a given heading would consist of (in order):

- Drill the round
- Load and blast the round
- Remove the broken muck
- Install ground support.

Although the rock is strong and competent, protection from minor local failures such as rockfalls requires rock reinforcement and support. A loosened zone surrounds openings excavated in rock, which is generally 5 ft to 10 ft deep regardless of the size of the opening, but can be as little as 3 ft where smooth blasting practices are employed. The loosened zone is generally sufficiently unstable to require some support where otherwise support may be unnecessary. As an aid in estimating support requirements, the basalt has been classified according to the Q-system of Barton, Lien, and Lunde (1974), resulting in extreme Q-values of 4 and 95, with the most probable range being from 10 to 25 (RHO-BWI-C-116, 1982).

Barton, Lien, and Lunde (1974) indicate that in repository-size openings in rock, with Q-values equal to 10 to 25, at most spot bolting would be required. Because thermal stresses are not allowed for in the classification, the reference repository description (RHO-BWI-C-116, 1982) has specified systematic rock bolting on a 5-ft spacing together with a layer of shotcrete. The type and length of the bolts are not mentioned (RHO-BWI-C-116, 1982), nor is the thickness of the shotcrete.

Mining will tend to drain the repository horizon as the water will tend to flow toward the openings. Because travel times are long, only a fraction of the water contained in the Umtanum Flow is expected to be drained during mining.

10.2.1.4 Canister Placement and Arrangement

The waste package (Figure 10.2.2) consists of a carbon steel canister, surrounded by graphite fill material, and contained within a 21-in. (outside diameter) titanium overpack. The packages will be placed in 48-in.-diameter holes drilled vertically along the centerline of storage room floors on 12-ft-centers. As shown in Figure 10.2.3, the hole is designed as a engineered barrier consisting of (starting at the outside) zircon sand and bentonite filler, an aluminum container surrounding tailored overpack and a ceramic sleeve to support the tailored overpack. No mention is made in reference repository description (RHO-BWI-C-116, 1982) of the method(s) used to place the filler, aluminum container, tailored overpack, and ceramic sleeve in the hole, and it is assumed that the sleeves and containers are lowered into place, while the fill materials would be poured or blown in.

10.2.1.5 Thermal Loading

As a result of decay of the radionuclides contained in the spent fuel, the waste packages radiate heat. Unreprocessed spent fuel contains fission products which are relatively short-lived and actinides which are generally quite long-lived. As the radionuclides decay to more stable isotopes, the number of disintegrations and resultant heat produced will decrease with time. The heat produced by a canister will be maximum at the time of emplacement.

A canister will contain either three PWR or seven BWR spent fuel assemblies. Assuming 10-year-old waste, canisters will have initial maximum heat loads of 1.74 kW and 1.33 kW for PWR and BWR, respectively.

The overall thermal load on the repository is determined from the areal extent of the repository, the canister spacing, the age of the waste, and the type of waste (PWR or BWR). To be conservative, all the waste is assumed to be 10-year-old PWR. Waste type and age will vary, and actual panels are assumed to consist of waste of a uniform type and age to avoid uneven thermal loading within a room or panel.

The storage area consists of 22 panels occupying a total of 1,300 acres, or 59 acres apiece. Using 1.74 kW/canister and a storage compliment of 1,750 canisters per panel, the heat load within a panel

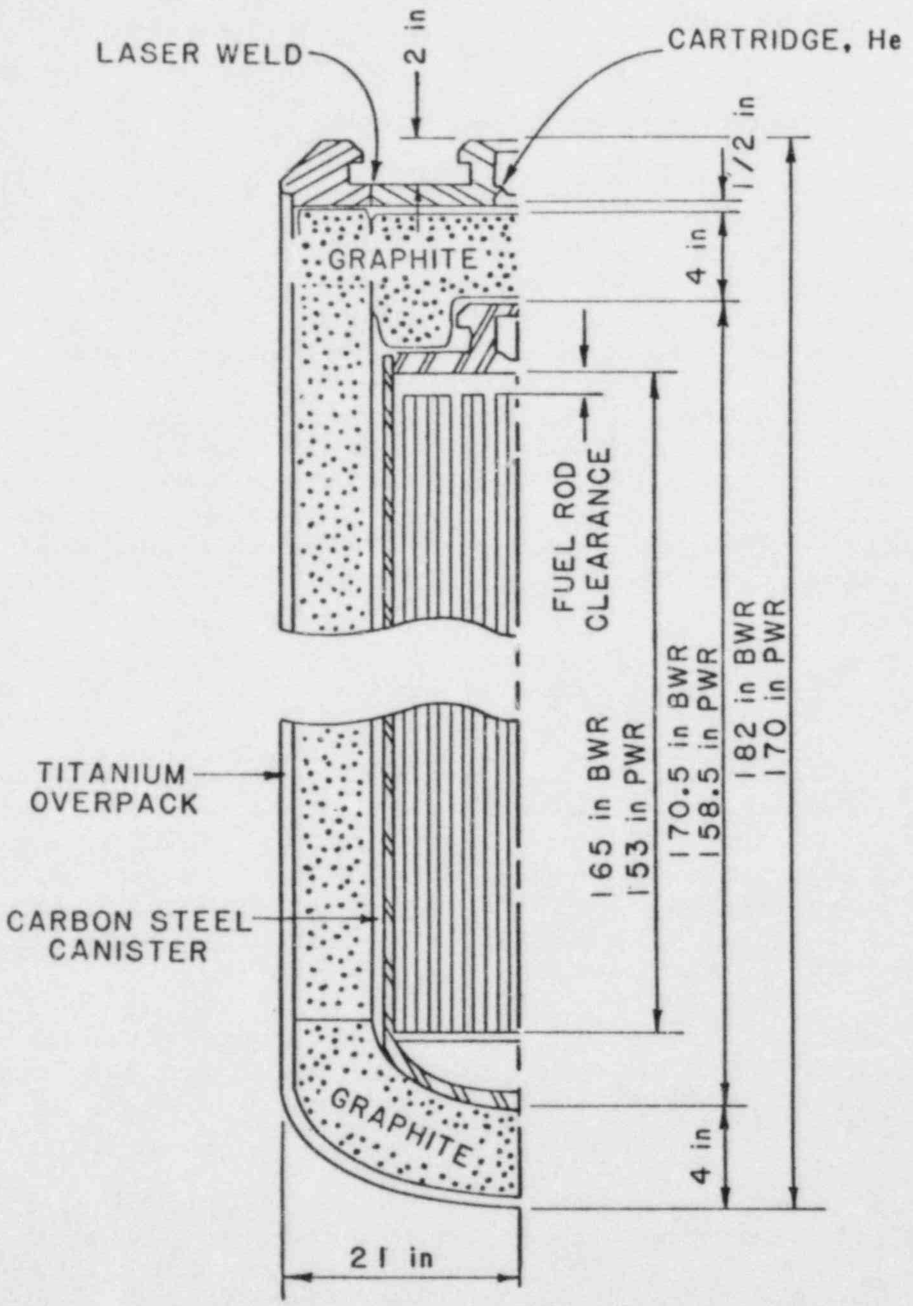

Figure 10.2.2 Waste package.
(RHO-BWI-C-116, 1982)

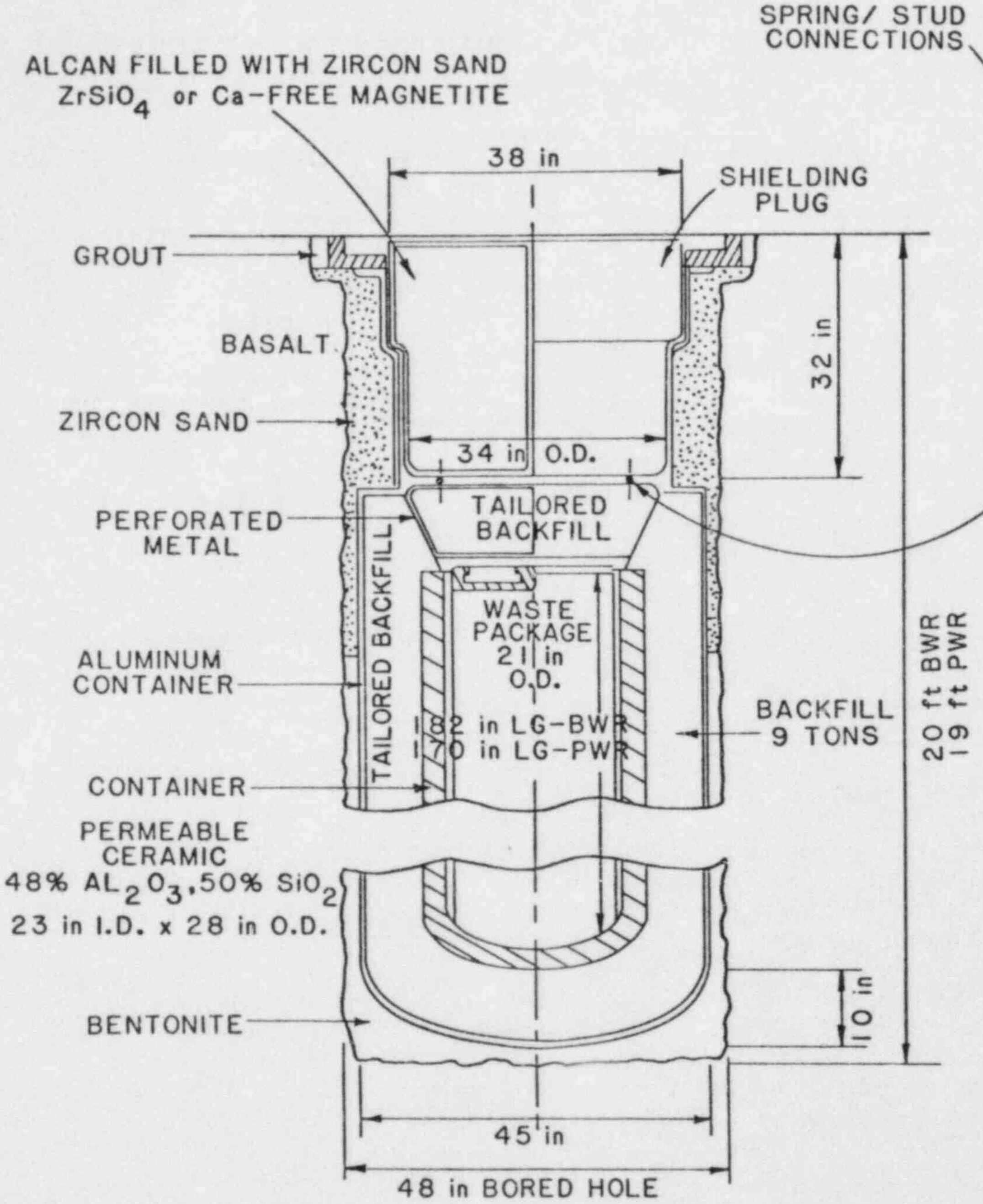

Figure 10.2-3 Storage position.
(RHO-BWI-C-116, 1982)

is 51.6 kW/acre. On the basis of the total area of 1,884 acres which includes the shaft pillar and service areas, the overall heat load is 35.6 kW/acre.

10.2.1.6 Backfill Timing

A repository must ultimately be backfilled, with the backfill designed as a barrier (10CFR60.133). In this repository concept, backfill will not be placed until permanent closure. Remining of backfill for retrieval purposes is apparently not an issue because the decision to permanently close nullifies the retrievability requirement.

Permanent closure will take about 20 years to complete, and a possibility exists that retrieval could be required for some reason during the permanent closure process, though the rule (10CFR60) does not require retreival to be maintained as an option after initiation of permanent closure. Remining prior to retrieval will not be dealt with in this concept, for the retrieval operations would be similar to those in concepts where backfill is placed concurrent with storage after a panel has been completed.

10.2.1.7 Ventilation

Panels are bulkheaded after waste placement has been completed. A small amount of air leakage through the bulkheads is allowed in order to monitor air quality within the isolated panels. The two potential development options:

- Develop and store waste simultaneously
- Develop whole repository prior to waste placement,

result in two potential ventilation schemes. In the first case, two separate ventilation circuits are required:

- Mine (development) ventilation system
- Confinement (storage) ventilation system.

Because panels will be developed only as they are required for placement and since panels are bulkheaded except during development or emplacement, the airflows required in the two ventilation circuits will remain constant over the life of the repository.

If total repository development precedes emplacement, only one ventilation system is required. Panels will be bulkheaded after development and reopened immediately prior to waste placement. Because panels are only open and ventilated during operations, the required airflows will not vary, depending on whether development or placing of waste is going on.

In the summer, the intake air may require precooling in order to maximize the convective heat removed from the rock. In winter, the intake air to may be need to be heated ensure that the temperature exceeds 37°F to avoid icing. Heating could best be accomplished by heat from the exhaust air using heat exchangers. The requirement for heating is not addressed in the reference repository description (RHO-BWI-C-116, 1982).

10.2.1.8 Retrieval Systems

A requirement of 10CFR60 is that repository operations must be designed so any or all of the of waste could be retrieved on a reasonable schedule "Full Retrieval" (sometimes termed "Mass Retrieval") is removal of all waste. Retrieval on a limited basis (a few canisters, a single room, or a single panel) may become necessary. The later scenario is designated as "Local Retrieval."

In addition to providing multiple barriers in the hole, the storage position, described in Section 10.1.3, has been designed to facilitate retrieval. Because storage rooms are not backfilled, the rooms can be precooled after removal of the bulkheads. Air temperatures would remain low enough for personnel to work, and equipment for high temperature operation would not be necessary for retrieval. The transporter (Figure 10.2.4) used to place the canisters in the holes could also be used for retrieval. The rubber-tired machine is powered by a 300-HP diesel engine and has a net vehicle weight of 39 tons. The transporter has a track width of 8.5 ft, a wheel-base of 20.5 ft, and two operator's cabs, one at each end facing opposite directions.

The order of operations for retrieval using the transporter is (Table 10.2.3):

- The floor shield is placed over the storage hole
- The plug housing is placed over the floor shield
- The doors in the floor shield are opened and the storage hole plug is removed and stored in the plug housing which is rotated away from the hole after the floor shield doors have again been closed
- The transfer cask is lowered into position over the floor shield
- The doors on the floor shield and transfer cask are opened

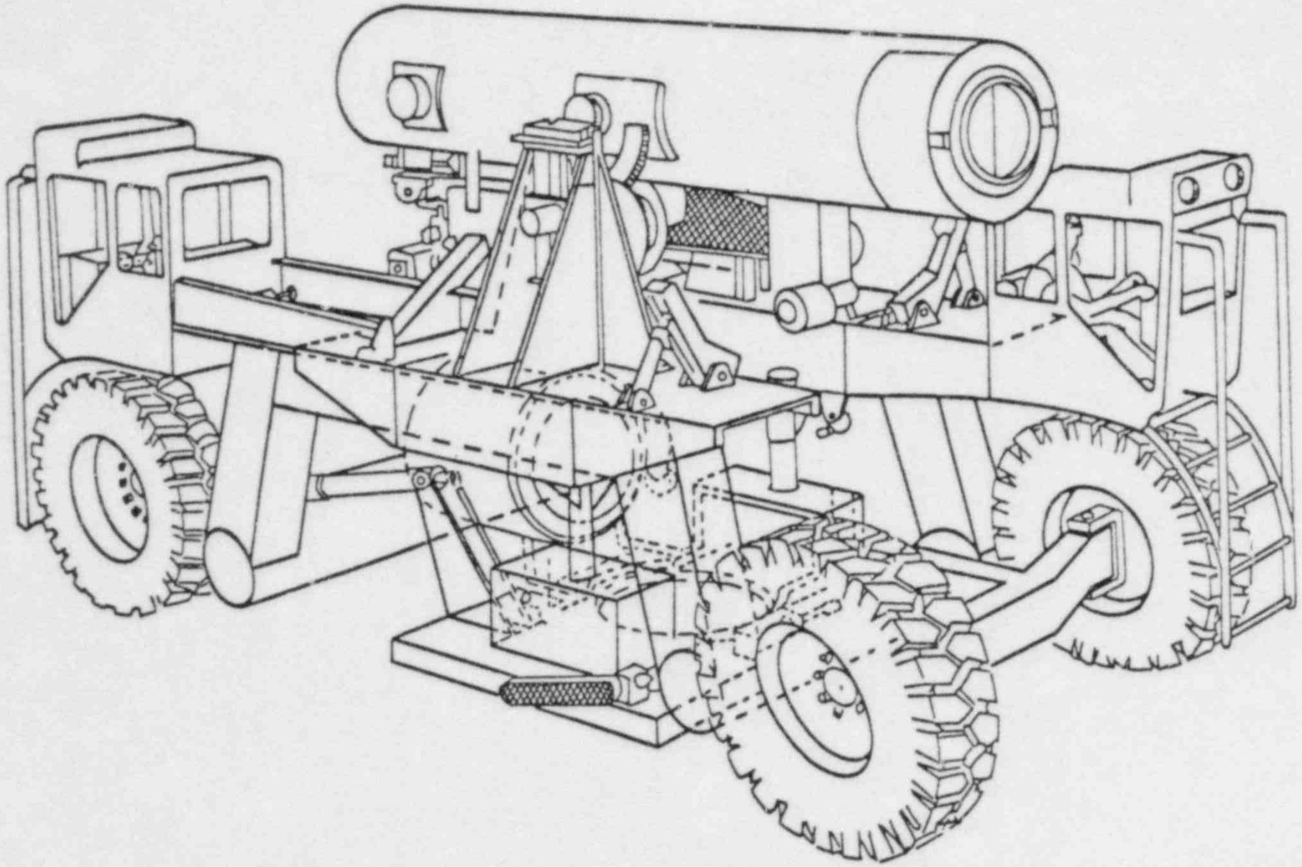

Figure 10.2.4 Transfer cask transporter.
(RHO-BWI-C-116, 1982)

Table 10.2.3 Retrieval Conditions and Operations

(A) CANISTER, HOLE, WASTE PACKAGE

1. Waste Package:
   PWR - O.D.[1] = 21 in.
   L[2] = 170 in.

   BWR - O.D. = 21 in.
   L = 182 in.

   Non-Self-Shielding

   Titanium outer, graphite middle, carbon steel inner
2. Container:
   PWR - O.D. = 45 in.
   L = 196 in.

   BWR - O.D. = 45 in.
   L = 208 in.

   Aluminum outer, tailored backfill middle, ceramic inner
3. Hole:
   PWR - O.D. = 48 in.
   L = 19 ft

   BWR - O.D. = 48 in.
   L = 20 ft

   Hole is vertical. Hole is bored. 1 canister/hole.
4. Plug: Shielded, 38 in. wide x 32 in. high.

(B) PLACEMENT UNIT

1. Horizontal, longitudinal transporter
2. The transfer cask is shielded and has an internal hoist chain grapple.

(C) EMPLACEMENT SEQUENCE

1. Inspect and clean emplacement area
2. Align transporter with hole
3. Lower floor shield
4. Remove plug
5. Rotate cask 90° so that it is vertical
6. Open shielding doors
7. Lower waste package[3,4]
8. Retract grapple, close floor shield door[3]
9. Raise and reposition transfer cask[3]
10. Raise floor shield[3]
11. Remove transporter

(D) RETRIEVAL ENVIRONMENT

1. Before pre-cooling, air temperature = 290°F and rock temperature = 290°F
2. After pre-cooling, air temperature = 80°F wet bulb
3. Worst case is when canister has been in ground 50 years
4. Rock temperature will be greater 290°F
5. More information is needed on the temperature gradient between the canister and the room for retrieval scenario.
6. All that is known now is that the wall rock temperature will be between 80°F and 290°F
7. Water situation is also unknown. 100% humidity is probable, ponding of water is possible

(E) RETRIEVAL SEQUENCE

1. Radiation survey
2. Filter contaminated hot room air
3. Pre-cool room
4. Decontamination and clean-up
5. Identify canister
   Locate canister precisely
   Determine canister orientation[5]
6. Align shielded transporter with hole, vertically and horizontally[6,7]
7. Lower floor shield
8. Remove plug
9. Close floor shield doors operation
10. Rotate transfer cask 90° into position over floor shield
11. Open doors[8]
12. Place grapple[8,9]
13. Retrieve cask[8,9]
14. Close shield doors
15. Replace plug
16. Decontaminate retrieval area

(F) NOTES

[1] O.D. - Outside diameter

[2] L - Length

[3] Monitor for and protect against streaming radiation

[4] Misalignment could lead to damage of canister and required retrieval. Need to check for alignment.

[5] If canister is not retrievable by transporter, it must be retrieved by any means necessary. If the canister is OK, sequence continues with container monitoring.

[6] Transporter may need more shielding than is required for placement.

[7] Transporter may also have to be modified for high temperature

[8] Monitor for and protect against streaming radiation

[9] Provision is needed for handling of contaminated canister or for decontamination of canister to avoid contamination.

- The grapple in the transfer cask is lowered to engage the top of the waste package
- The waste package is hoisted into the transfer cask
- The transfer cask shield doors and the floor shield doors are closed and the transfer cask is lifted and rotated to the horizontal traveling position
- The plug housing is placed over the floor shield
- The doors on the floor shield and plug housing are opened and the plug replaced in the hole
- The doors on the floor shield and plug housing are closed and the floor shield and plug housing moved to their traveling positions.

10.2.2 Interaction Between Retrieval and Repository Systems

10.2.2.1 Excavation Systems

The only excavation required prior to retrieval is removal of the bulkheads at the ends of a storage panel. Because the atmosphere in the panel will be hot, humid, and will possibly contain radionuclides, the bulkheads on the return side should be removed prior to those on the intake side.

The conceptual design report (RHO-BWI-C-116, 1982) gives no details concerning bulkhead construction. The preconceptual design report (CD-35) calls for 8-ft-thick concrete bulkheads that are keyed into the rock. With such airtight bulkheads, "windows" would be required in order to allow passage of the small airflows needed for monitoring air quality. The bulkheads should be able to:

- Withstand the horizontal and vertical deformations imposed by the surrounding rock
- Resist the temperature differential between the isolated panel and the ventilated airway
- Contain air and water contaminated with radionuclides from breached canisters (prevent uncontrolled air leakage and water seepage).

These criteria would be satisfied by 8-ft-thick concrete bulkheads. Even with a venting system or "windows," the bulkheads of the type postulated in RHO-BWI-CD-35 and as mentioned previously would contain the contaminants. The small airflows considered could transport only very limited quantities of contaminants.

Radioactive contaminants and seepage water would collect in an isolated panel over a period of time. Because of the elevated temperature, seepage water would be vaporized and some contaminants in the water may become airborne. Upon removal of the bulkheads, the hot, moist, and contaminated air would enter the confinement air return.

Bulkhead removal would require drilling and blasting of the concrete, and mucking out. The location, size and number of rebars used as reinforcement, and tiebacks must be known to plan the drilling. Prior to retrieval the rock condition must be inspected, the rock surfaced scaled, and rock support re-installed as necessary.

Bulkheads will not be used as retaining walls; therefore, other types of bulkheads that are equally effective but less substantial in construction could be used. Leak-proof bulkheads (composed of segments of which are easy to assemble, install, and remove) are available. These bulkheads have proven very effective as bulkheads for underground rescue chambers in coal mines where bulkheads must be leak-proof and explosion-proof. Such bulkheads would facilitate the retrieval effort.

Design of the bulkheads to periodically release contaminants to the main returns may be desirable. However, the type of vent system adopted could further complicate bulkhead removal operations.

If retrieval were found necessary while development of the repository is still in progress, retrieval operations will have a minor impact on development operations. While development and confinement activities have separate entries and ventilation systems, the two systems do interface in the shaft area. When retrieval operations are in progress, movement of vehicles and materials in the shaft areas needs to be coordinated between the two systems in order to minimize the probability of accidential meetings which could result in contamination of the development equipment.

10.2.2.2 Equipment Systems

Removal of the bulkheads will be necessary for canister retrieval. The bulkheads could be excavated by conventional drilling and blasting using an electric-hydraulic jumbo for drilling, and a Load-Haul-Dump (LHD) vehicle for mucking. Alternatively, mechanical-hydraulic breakers, as commonly used in demolition work, could be effectively utilized. The equipment may need to be decontaminated if exposed to contaminated air. The use of equipment from development operations is not contemplated for use during retrieval.

Retrieval after completion of development mining will also require the use of the equipment for removing the bulkheads. A set of excavation equipment dedicated to operations in the confinement ventilation system is necessary. Because the rooms will be precooled the use of modified or high-temperature equipment is not expected.

Retrievability impact on equipment systems can best be identified with the aid of the flow chart shown in Figure 10.2.5. Each basic repository operation is given an identification number to facilitate identification of an event's impact on all systems. With mining development completed, the only active operations involve canister storage. Different levels of retrievability vary greatly in their impact on repository operations.

Local retrieval of canisters, for any reason, must take place concurrently with storage operations. Unless new equipment is obtained for the task, the storage equipment will have to be used, slowing the normal storage rate. Retrieval of breached canisters will require "hot cell" or shielded equipment along with decontamination equipment in the storage area. Transporting the canisters to the surface (Figure 10.2.5) will require use of the crane (3), hoist (4), and surface handling facilities (5). These systems will be unable to perform their normal operation for handling canisters, resulting in a delay of repository storage activities. Ventilation constraints may also delay storage activities as discussed in 10.2.2.4.

Full retrieval of canisters can be planned systematically for a full storage room or full repository, starting with the oldest storage rooms. Because the same handling equipment will be used for the full retrieval operation, an operating schedule can be defined, with no interference from other operations. If any canisters are breached, the retrieval will be more complex due to contamination concerns. Special equipment will be used for the life of the breached canister retrieval operation.

The transporter is about 8-ft wide, the storage panel is 14-ft wide, leaving 3-ft clearance to the rib on each side of the vehicle. Transport travel is over the centrally-placed row of holes, straddling them with the tires. The inside track of the vehicle is 6 ft, the holes to be straddled are 4 ft, leaving 1 foot of clearance on either side. With the small clearance, it is likely that tires would make contact with the floor rings and storage hole plugs. Tire pressures would be about 70 psi. However, this is, not expected to cause significant damage.

Retrieval requires removing the hole plug, grappling the canister, and lifting it into the transfer cask on the transporter vehicle. The lifting operations may be difficult if the canister binds against the hole lining - a potential situation if any lateral rock movement has occurred.

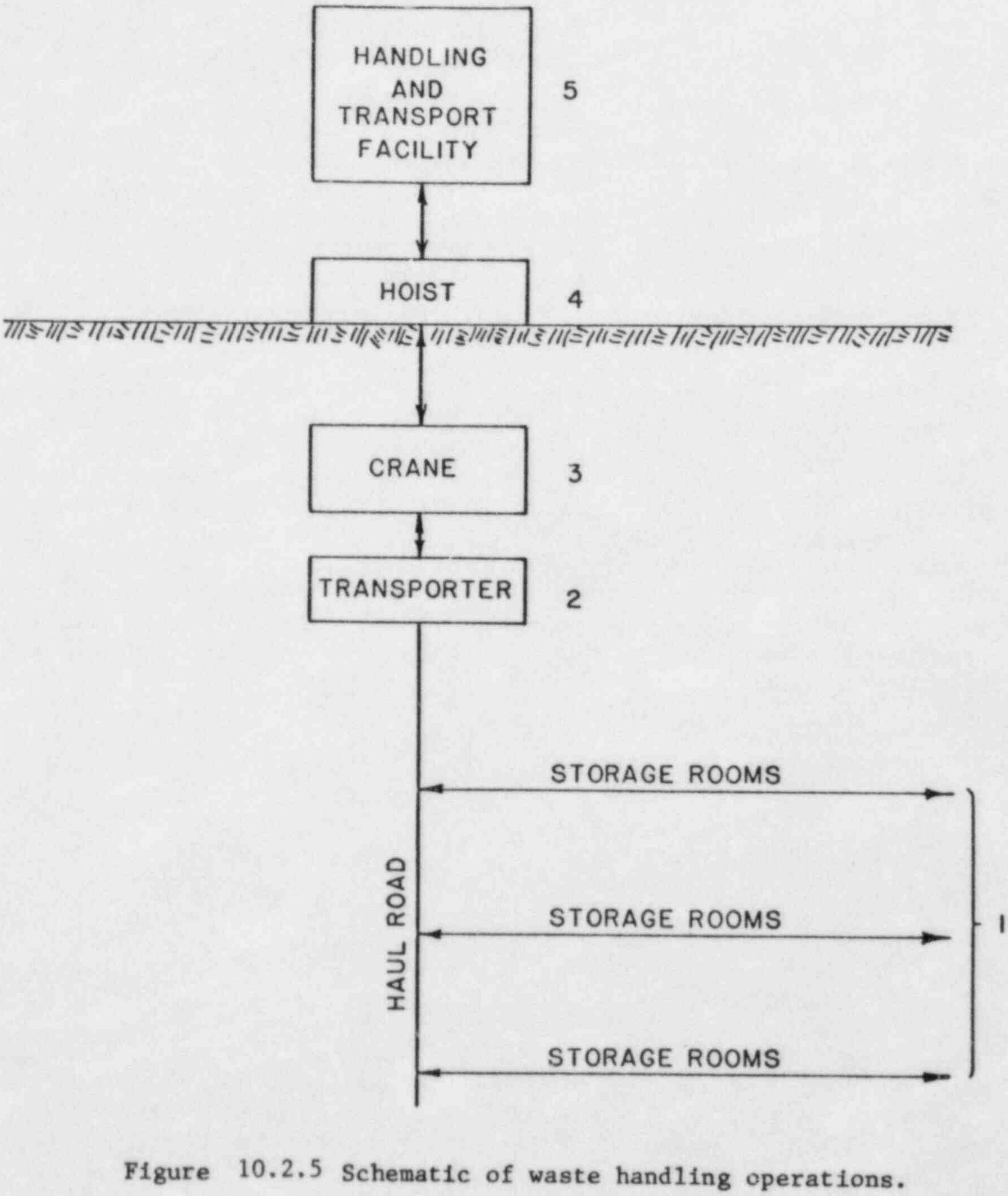

Figure 10.2.5 Schematic of waste handling operations.

The fill material in the hole lining can absorb some rock deformation and resulting side pressure, but the limits must be adequately identified through testing. Radial pressure on the canister may develop due to hole closure. The frictional resistance to pulling the canister will be a function of this radial pressure.

10.2.2.3 Facilities

Bulkheaded rooms would require additional facilities for canister storage and retrieval. After mining development has taken place and the waste stored, construction of the bulkheads and their removal would require the use of supporting equipment that may impede development mining if these processes take place concurrently. If spare equipment were available, the rate of development mining will not be adversely affected.

The concept of monitoring the bulkheaded rooms is sound but specific details are presently lacking. Monitoring would provide valuable information on cooling requirements and health and safety precautions that need to be taken during retrieval. Monitoring, however, would be unable to precisely locate the source of a radionuclide release unless specifically designed for this purpose. Consideration will have to be given to removing all the stored canisters from the panel if a breached canister is detected. Depending on the location of the affected panel, retrieval could adversely affect the materials handling/transportation system, confinement ventilation system, and development mining.

10.2.2.4 Ventilation Requirements

10.2.2.4.1 Ventilation Planning - Air Requirements During Local and Full Retrieval

The conceptual design (RHO-BWI-C-116, 1982) assumed a period of occasional (local) canister retrieval and a mass (full) retrieval period of up to 25 years.

Based upon diesel and electric vehicle requirements, personnel requirements, and cooling requirements (as well as potential air leakage), the following total airflows are supplied in the confinement ventilation system for emplacement and local retrieval (RHO-BWI-C-116, 1982):

• Waste handling (vehicles and personnel)	25,000 cfm
• Precooling prior to waste emplacement	8,000 cfm
• Precooling prior to retrieval	127,000 cfm
• Waste emplacement (vehicles and personnel)	41,000 cfm
• Leakage and short-circuiting	11,000 cfm;
• Total	212,000 cfm.

Presumably the airflow used for precooling would also be used for retrieval once the room is adequately cooled. For 50-year retrievability, the airflow required for precooling is 144,000 cfm for 9-day precooling. The total confinement air quantity is, therefore, 221,000 cfm assuming the same percentage leakage as above.

If full retrieval were initiated, presumably there will be no further development or placement operations in the repository. The mine (development) ventilation system would then be used to provide such additional airflows as are required.

During retrieval, transporters will frequently use the confinement returns for travelways. Since the temperature in the returns will likely exceed 106°F at 100% humidity - this is the air temperature at the outbye (exhaust) end of the storage and retrieval rooms - climate-controlled suits which incorporate radiation shielding should be provided in all vehicles so that personnel could walk away in the event of equipment failure. Under normal conditions worker protection would be provided by shielded, air-conditioned cabs.

10.2.2.4.2 Pressure Differentials Between Mine and Confinement Circuits

The two ventilation systems for the repository (development or mine air, and confinement air) have been designed by DOE to avoid connections between the two circuits. However, some leakage will still occur. In the design (RHO-BWI-C-116, 1982), leakage has been planned to be from the mine circuit to the confinement circuit, in order to have uncontaminated air leak into contaminated air, rather than the reverse. This is accomplished by maintaining the air pressures always higher in the mine circuit where it nears the confinement circuit. Computer modeling during our review verified the validity of this plan, but showed that some leakage may occur from the mine exhaust to the confinement intakes. As the mine exhaust air will contain dust and fumes, leakage into the confinement intakes is not desirable. The airflow in the confinement intake will greatly exceed the leakage airflow from the mine side, diluting the contaminants. The leakage can be eliminated by having airtight bulkheads keyed well into the rock.

10.2.2.5 Backfill

Panels are bulkheaded upon completion of emplacement; however, backfill is not placed until permanent closure. The requirement for retrievability does not directly impact backfilling operations. However, in the case of local retrieval, backfill might be required to ensure that the room or panel does not become a preferential pathway for radionuclide migration when emptied of waste.

10.2.2.6 Thermal Effects

The thermal effects associated with nuclear waste disposal in an underground repository have significant impacts on the retrievability of the waste. A number of thermal analyses have been completed by BWIP to determine the practical waste storage geometry and repository layout which will preserve the isolation capability of the host rock formation. Thermal effects can be divided into three distinct areas:

- Very-near-field effects which have the most direct impact on retrievability since elevated temperatures can lead to decrepitation of the borehole wall and binding of the canister
- Near-field effects which impact retrievability indirectly by increasing the potential for creating instability of the storage rooms
- Far-field effects which have minimal impact on retrievability since the stability of the entries and shafts would not be affected by the thermal loading.

Thermal effects of this storage concept have been determined by BWIP using the SUPER 5 and HEATING 5 computer codes using the assumed thermal loadings given in Section 10.2.1.4. Calculated peak temperatures in the repository for this storage concept, using an in situ basalt temperature of 134°F, are (RHO-BWI-C-116, 1982):

- Waste form: 572°F
- Bentonite: 392°F
- Basalt around canister: 392°F
- Entries and shafts: 135°F.

The above-mentioned temperatures are well within the maximum temperature criteria established by BWIP, which are as follows:

- Basalt: 932°F
- Bentonite: 572°F
- Entries and shafts:
  158°F - operational phase
  212°F - retrievable phase
  302°F - terminal phase.

The waste package is always in quasi-steady-state equilibrium with the surrounding basalt because the heat capacity of the waste package is small compared to that of the surrounding basalt. The maximum rise in the basalt temperature at the inside surface of the borehole is about 260°F. The temperature is fixed by the history of the decay heat released within the storage holes and by the storage configuration. The peak temperatures in the repository at 50 years after initial storage are:

- Waste form: 464°F
- Bentonite: 396°F
- Basalt around canister: 396°F
- Entries and shafts: 154°F.

These temperatures are well within the maximum temperature criteria established by BWIP for preventing hole decrepitation and preserving the integrity of waste isolation. By preventing thermal decrepitation and providing a storage sleeve assembly around the waste package, retrievability should be ensured. The near-field effect of the temperature rise from 134°F to 154°F should still maintain a rock stress safety factor (RSSF) of over 2.0 against stress-related failures.

The primary uncertainity is the degree of variability of rock strength in the repository, which may result in areas of local overstress where rockfalls may occur. Because the rooms are not backfilled, rockfalls can be easily handled without affecting the retrievability of waste packages, once bulkheads are breached and the rooms precooled. If a rockfall damages the floor ring, however, provisions for repair or special retrieval would then be necessary..

10.2.2.7 Requirements for Special Equipment for High Temperature and Radioactive Environments

Rooms are not backfilled in this concept; therefore, they can be precooled prior to initiation of retrieval activities. Provided a waste package is intact, the transporter (whose operation was described in Section 10.2.1.7) can be used for retrieval such that 10CFR60 standards are satisfied. High temperature equipment is not required.

If a waste package is damaged, then other measures may be required for retrieval. For example, if the titanium overpack is fractured and splits upon retrieval, the transporter would pick up the top half of the overpack but leave the remainder of the overpack and the canister in the hole. Because the grapple in the transfer cask (on the transporter) is designed to engage the top of the titanium overpack, it cannot be used to retrieve the remainder of the waste package. It is possible that the sleeve surrounding the waste package may also be damaged. If the damage could impede retrieval operations, it would likely be advisable to overcore the hole. In such case, provisions for retrieval in the repository design are inadequate and design of a special machine for retreival in such cases is then required.

10.2.2.8 Ground Support

As discussed in Section 10.2.1.3, the Q-system (Barton, Lien, and Lunde, 1974) has been used to estimate ground support requirements. The Barton, Lien, and Lunde (1974) data base does not include experience similar to repository conditions; therefore, the designers have specified ground support in excess of that suggested by the Q-system.

Resin-grouted bolts may not be acceptable for use in the repository rooms. The rock temperatures of 212°F, and greater, may exceed the maximum service temperature of resin grout. Experience is lacking regarding the stability of bolts in general for a period of decades. Experience with concretes at elevated temperatures (Troxell, Davis, and Kelly, 1968, p. 248-250) indicates that for simple temperature increases to 212°F relatively minor strength losses occur due to loss of both free and combined moisture. Above 212°F more significant strength losses occur in the repository maximum temperature ranges up to, say 400°F, but amount to 10% reduction, or less. However, if the concrete is heated and then cooled, strength losses approach 25% or more at 400°F. Two considerations may minimize such strength losses. Using lean mixes and limestone, expanded slag, or similar aggregates minimize heat effects in this range. We suspect that the important cement grout, shotcrete, and concrete considerations for repository temperatures hinge on minimizing the water content and matching the thermal expansion and chemistry of cements and aggregates. Concrete also has a coefficient of thermal expansion intermediate between that of steel and basalt limiting difficulties resulting from differential thermal expansion.

In any case, over a decades-long period, some deterioration of the rock reinforcement can be expected, and minor roof falls may result. In areas of deterioration, the debris must be removed and renewed rock support provided prior to commencement of retrieval operations. With bulkheaded rooms, the remedial measures can be carried out only after the rooms have been precooled. A LHD vehicle and a roof-bolting jumbo would be required for resupport operations.

Seepage of ground water toward the openings will occur. With time the seepage could result in a build-up of pore water pressure on the shotcrete liner. Rock mass grouting at the time of construction of the rooms could minimize deterioration by seepage and chemical action. Despite grouting efforts and shotcrete application to the repository walls, some ground water is likely to enter the repository during the operating period. Underground conditions could reasonably be expected to remain generally dry but some allowance for the presence of minor amounts of water during retrieval would be prudent. The postulated water inflow would slightly exceed the evaporating capability of the ventilation system, and would result in puddles on the repository floor.

10.2.2.9 Instrumentation

The performance of the repository has to be monitored to ensure that the safety criteria are not violated and that the isolation capacity is maintained. The retrievability option mandates that significant changes in selected parameters, or deviations from expected behavior, be detected when they occur, and steps be taken to correct the problem or retrieve the waste to the surface. Categories requiring monitoring are:

- Hydrogeologic - water inflow
- Thermal - heat build-up
- Mechanical - stress build-up, rock deformations, and rock instability
- Radiological - activity levels.

A monitoring program for subsurface conditions consisting of visual inspection where possible, and remote measurement within panels, will be initiated. Visual inspection and hands-on measurement are preferable to remote monitoring because instrumentation available at present is not reliable for periods in excess of about a decade, especially under the thermal conditions of the repository rooms. To evaluate the performance of the remote monitoring system, an experimental panel will be provided in the repository where extensive verification and confidence testing will be performed. This panel will also provide an opportunity to study the reliability of instrumentation.

Thermal monitoring will primarily consist of thermocouples embedded in boreholes drilled into the rock at intervals along storage rooms. Thermocouple signals will be collected at several spots and relayed to a central control console to detect abnormalities.

Hydrogeologic monitoring will consist of measuring the pressure of formation water in the vicinity of storage holes, in various accesses, and in basalt flows and interflows. High-precision, durable pressure transducers will be placed between packers in boreholes. Water quantities entering individual panels will be monitored by devices measuring the humidity and temperature of the air inside the panels.

Mechanical monitoring will consist of a network of geophones and seismographs to monitor rock noise and rockfalls. The closure of pre-established points in main entries will be measured. At a few selected locations outside the panels, detailed evaluation of rock stability will be made using stressmeters and multiple-position borehole extensometers.

Ventilation conditions in the repository will be monitored for radiation levels, fire and smoke emergencies, and ventilation blockages caused by rockfalls. Mobile radiation and thermal sensors in ventilation airways will permit continuous monitoring from a main surface control console. Flow direction, pressure, differential pressure, and temperature will be monitored.

The retrievability requirement mandates monitoring of the repository for perhaps decades after initial placement of the waste. The following steps need to be taken to ensure the reliability of instrumentation placed in the repository:

- Develop geophones, stressmeters, multiple-position borehole extensometers, piezometers, thermocouples, and ventilation instrumentation that will maintain their accuracy in the hot and humid environment expected in a repository
- Provide extensive verification of the reliability of instrumentation in the experimental panel established within the repository
- Ensure that inspection of the repository at predetermined intervals can be performed by robots or by personnel in air-conditioned suits or vehicles.

10.2.3 Adequacy of Incorporated Retrieval Systems or Allowances

10.2.3.1 Local Retrieval

Local retrieval may be necessary for quality assurance or quality control purposes, or due to a detected radionuclide release. A manufacturing error could cause premature breakdown of overpacking for some canisters in a storage room. Bulkheaded but unbackfilled rooms allow using the same equipment for emplacement and retrieval procedures provided precooling is carried out. Most likely the canister transporter and "hot cell" equipment will be necessary.

Equipment travel in a storage room creates hazardous conditions. Local retrieval involves recovering one or more canisters in a storage room. Traveling to the designated canister means approaching very near or running over surrounding canister holes. Because of storage room dimensions and equipment clearances, minor damage to the floor rings could result.

Local retrieval requires removing the bulkhead and precooling the room prior to retrieval. Equipment for removing the bulkhead and removing the debris will be required and dedicated to the confinement ventilation circuit. Rockfalls due to roof deterioration must be cleaned up and the roof resupported. LHD equipment and a roof bolter will be incorporated as part of the retrieval equipment system. The canister transport equipment being used for storage may be used for retrieval, so that a delay or stoppage in storage activities could result. Use of the crane, the hoist, and the surface facilities for handling retrieved waste will also slow storage progress (Figure 10.2.5). No equipment has presently been designed to overcore a 48-in.-diameter hole in a repository environment. Overcoring may be necessary if the canister to be retrieved has broken and cannot be retrieved intact. Overall, with incorporation of equipment to remove the bulkhead and support the roof, the local retrieval system is adequate except where canisters are no longer intact. Further design and definition is required to facilitate breached canister retrieval.

10.2.3.2 Full Retrieval

Full retrieval of waste canisters will need planning and preparation but will not be necessarily difficult. Full retrieval planning is eased because all repository resources can be committed to the operations. For unforeseen reasons underground storage may prove unsatisfactory leading to abandonment of the site. Full retrieval will require special equipment if the reasons for retrieval interfere, such as excessive rock movement crushing canisters, or rapid deterioration of rock causing need for roof support and scaling equipment.

Full retrieval will also require equipment for removing the bulkhead and resupporting the roof of the room. All equipment involved in full retrieval will be dedicated to the confinement ventilation system. Small clearances between the ribs and equipment and small alignment tolerances between the transporter and floor rings will impede retrieval progress. The heavy equipment traveling through the room may possibly cause damage to the floor rings or canisters. The possibilities during full retrieval of attempting to retrieve a canister which is bound in the hole by rock closure, or which is broken into numerous pieces are more likely. The grappling equipment on the transporter may prove inadequate in this case, requiring retrieval by overcoring. As stated in the section on local retrieval, no equipment for large-diameter overcoring has been developed for repository environments. The confinement ventilation system must be altered to be adequate for full retrieval. The exhaust shaft and return airways must be increased in size (or new shafts sunk) to handle adequate airflow during retrieval. The incorporated systems will be adequate for retrieval of intact canisters, provided the equipment for bulkhead removal and roof resupport are included, and the confinement ventilation exhaust and return airways are enlarged. The retrieval of breached and broken canisters requires further development in the area of overcoring equipment for repository environments.

10.2.4 Concerns

10.2.4.1 Technological Concerns

When panels are bulkheaded with trickle ventilation and single waste packages are stored in vertical holes, the main technological concern is the effect of the hot rock on the materials used in the ground support system, which will consist of rock bolts and shotcrete. The rock bolts will presumably be fully grouted to minimize the possibility of corrosion of the steel bars and the grout used must be functional at high temperatures. At the temperatures normally encountered in mining and tunneling, polyester resins are used for the grout. The stability of such materials at high temperatures is unknown. The coefficient of thermal expansion of resin is much greater than that of either basalt or steel. Differential thermal expansion may occur reducing the effectiveness of the bolts.

Use of Portland cement mixtures that minimize heat effects (Section 10.2.8) in both the shotcrete and the grouted bolts would reduce the uncertainty regarding stability of the support systems. The widespread use of shotcrete or grouted bolts, or both, as primary ground support is about 25 years old and experience is lacking regarding the condition of such support systems after decades even at normal temperatures.

Another technological concern is development of equipment for retrieval of breached canisters, especially those which have broken into two or more pieces. If canisters have cracked but are otherwise intact, retrieval could be accomplished using the transporter with a transfer cask having an internal shielding sleeve. If the breached canister has separated into more than one piece, the surest method would be to overcore the hole. While overcoring is feasible, no equipment exists at present for overcoring 48-in.-diameter holes in repository environments. Overcoring would also require a room height in excess of the 20 ft assumed, since the holes are 20 ft deep and the overcore should penetrate at least 6 in. to 1 foot below the bottom of the hole.

10.2.4.2 Safety Concerns

As discussed under technological concerns, no experience exists with grouted bolt and shotcrete systems for decades-long periods. The panels are accessible and ventilated and the ground support can be periodically inspected and rehabilitated as necessary. Safety concerns will occur in the event of radionuclide release; and will be discussed later.

10.2.4.3 Radionuclide Release Concerns

One of the possible reasons for retrieval is failure of the waste package, with consequent release of radionuclides. Gaseous and volatile radionuclides may be released into the emplacement hole while soluble radionuclides may be carried away by any water that is present in the emplacement hole. Removal by aqueous solution, requires the presence of water in liquid form; that is, its temperature must be less than the boiling point for the repository air pressure conditions.

10.2.4.3.1 Releases into Air

The gaseous and volatile isotopes which could be released by a breached canister are hydrogen-3 (tritium), carbon-14, and krypton-85. The quantity of krvpton-85 is large compared with that of either tritium or carbon-14. In addition, the carbon-14 must be in a form that leads to volatile species upon reaction with water in order to be of concern. It is assumed that one-tenth of the krypton-85 is sufficiently near an exposed surface to be able to leave the fuel. If a breach occurs, the concentration of krypton-85 and tritium in air must not exceed 10 nCi/liter and 5 nCi/liter, respectively, in order to satisfy 10CFR20. (These radioactivity concentrations standards are defined by the EPA in metric units, the equivalent traditional units, for reference, are 0.35 nCi/ft^3 and 0.18 nCi/ft^3, respectively.)

If storage hole plugs are gas-tight, release of gaseous radionuclides from a breached waste package will occur at retrieval. Otherwise, the radionuclides will leak through the plug into the air. Assuming the room was still bulkheaded and the breach was discovered due to radionuclides in the leakage air, retrieval of the breached canister would require removal of the bulkheads and precooling. The time required to reduce krypton-85 concentrations to the Maximum Permissible Concentration (MPC) given in 10CFR60 is shown in Figure 10.2.6 for different room volumes and airflows. In any case the time required for precooling greatly exceeds the time required to dilute the krypton-85.

Release occurring at retrieval can be avoided by having radiation sensors in the holes. The gaseous radionuclides could then be drawn off prior to retrieval using millipore filters or a cryogenic absorption system, both of which fall within existing technology.

10.2.4.3.2 Releases into Water

With regard to the movement of radionuclides by aqueous transport, the water must be in the liquid state. At a pressure of 1,600 psi, the boiling point of water is about 600°F, and since the rock temperature will be 300°F or less, pore water will be in the liquid state. Since the rooms are at atmospheric pressure, this water will vaporize as soon as it enters the room.

For water to transport radionuclides, it is necessary that water come into contact with a breached canister. This would require penetration of several layers of shielding and overpacks. Supposing this did happen, and water contacted a breached canister, the rate of dissolution of the spent fuel would vary widely depending on water composition and temperature. For a typical rate of 0.0000264 lb/day over an area of 183 in^2., the solution water would contain about 0.25 mCi/lb of water. This solution would generate about 0.1 mR/hr at 4 ft from the waste package.

Water could also dissolve gaseous radionuclides. Krypton-85 has a solubility of 0.628 ft^3/100 gal (Weast, 1983) in hot water so that only about 1.5 gal of water would required to dissolve the krypton-85 released by a single breach. Thus water which came into contact with a breached canister and then percolated into the room would release gaseous radionuclides as it entered the room. As in the case of direct releases to the air described in Section 10.2.4.3.1, the time required to dilute the krypton-85 to the MPC is much less than the precooling time.

Hence water intrusion would provide a good index to failure but would not by itself introduce significant hazards to the operations (Post, 1982).

10.2.4.3.3 Radiation Detection Standards

The radiation levels measured during retrieval operations are not exceptional so that the system standards used in the nuclear industry would prevail. Lower limits of 0.1 mR/hr and upper limits of a few

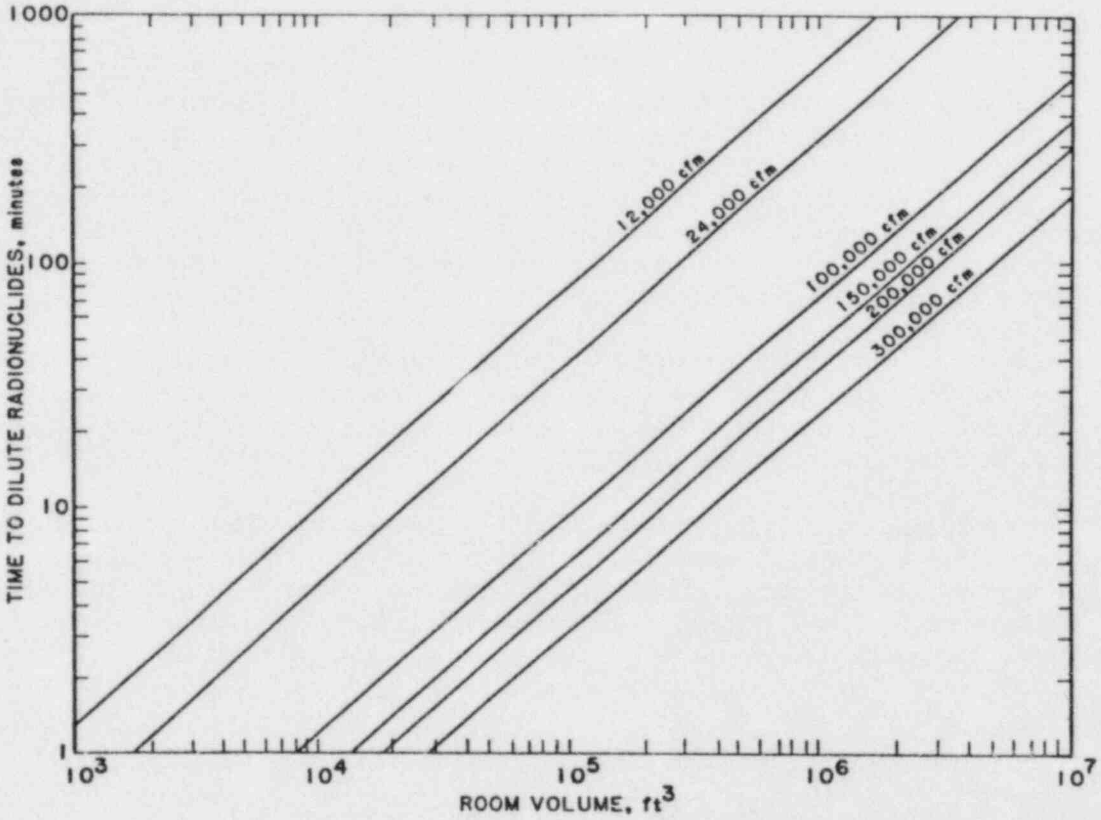

Figure 10.2.6 Time required to dilute Kr-85, from a breached canister containing three PWR fuel assemblies, to the Maximum Permissible Concentration (MPC) assuming 10% of the Kr-85 is liberated.

kR/hr would be adequate. A system to detect krypton-85 in the ventilating air and in the storage holes will be required. This system should be capable of detecting krypton-85 levels below 100 pCi/liter (2.6 pCi/ft^3) (Post, 1982).

10.2.4.4 Operational Concerns

Retrieval of breached canisters will require equipment other than the transporter and standard transfer cask. Retrieval could be accomplished by overcoring the holes containing breached canisters; however, room heights of at least 22 ft are required where canisters are cracked but otherwise intact, a transfer cask having an internal shielded sleeve could possibly be used. To facilitate retrieval, such equipment must be available.

Given the small tolerances for alignment of canisters and storage holes, precise positioning of the transporter over the hole may be difficult even with lasers. Positioning would be simplified if transporters were rail mounted.

The amount of cooling required will necessitate large capacity heat exchangers (cooling units). The area required for the coolers in the headings could significantly reduce the space available in the entrances to the rooms. Also the cooling units have a restricted life and will become less efficient with time.

10.2.4.5 Other Concerns

A fundamental concern related to a repository in basalt concerns the geologic/hydrogeologic uncertainty at the repository horizon. The uniformity of the particular basalt flow with regard to thickness, the uniformity of the jointing, and the occurrence of faults are major concerns. The further in situ exploratory programs planned (1983) by DOE (ES-I and ES-II) are aimed at rectifying the lack of information about the geology/hydrogeoology at the proposed repository horizon.

Another concern is the mechanism for and probability of canister breach. One possible mechanism is corrosion. The rate of corrosion will depend on the environmental conditions and the chemical composition of the ground water. Another possible mechanism is attempted retrieval of a canister upon which the hole has closed.

10.2.5 Summary and Conclusions

The repository is located at a depth of 3,700 ft in the Umtanum Flow basalt of the Hanford Reservation, Washington. The repository will

Retrieval after completion of development mining will also require the use of the equipment for removing the bulkheads. A set of excavation equipment dedicated to operations in the confinement ventilation system is necessary. Because the rooms will be precooled the use of modified or high-temperature equipment is not expected.

Retrievability impact on equipment systems can best be identified with the aid of the flow chart shown in Figure 10.2.5. Each basic repository operation is given an identification number to facilitate identification of an event's impact on all systems. With mining development completed, the only active operations involve canister storage. Different levels of retrievability vary greatly in their impact on repository operations.

Local retrieval of canisters, for any reason, must take place concurrently with storage operations. Unless new equipment is obtained for the task, the storage equipment will have to be used, slowing the normal storage rate. Retrieval of breached canisters will require "hot cell" or shielded equipment along with decontamination equipment in the storage area. Transporting the canisters to the surface (Figure 10.2.5) will require use of the crane (3), hoist (4), and surface handling facilities (5). These systems will be unable to perform their normal operation for handling canisters, resulting in a delay of repository storage activities. Ventilation constraints may also delay storage activities as discussed in 10.2.2.4.

Full retrieval of canisters can be planned systematically for a full storage room or full repository, starting with the oldest storage rooms. Because the same handling equipment will be used for the full retrieval operation, an operating schedule can be defined, with no interference from other operations. If any canisters are breached, the retrieval will be more complex due to contamination concerns. Special equipment will be used for the life of the breached canister retrieval operation.

The transporter is about 8-ft wide, the storage panel is 14-ft wide, leaving 3-ft clearance to the rib on each side of the vehicle. Transport travel is over the centrally-placed row of holes, straddling them with the tires. The inside track of the vehicle is 6 ft, the holes to be straddled are 4 ft, leaving 1 foot of clearance on either side. With the small clearance, it is likely that tires would make contact with the floor rings and storage hole plugs. Tire pressures would be about 70 psi. However, this is, not expected to cause significant damage.

Retrieval requires removing the hole plug, grappling the canister, and lifting it into the transfer cask on the transporter vehicle. The lifting operations may be difficult if the canister binds against the hole lining - a potential situation if any lateral rock movement has occurred.

postulated in RHO-BWI-CD-35 and as mentioned previously would contain the contaminants. The small airflows considered could transport only very limited quantities of contaminants.

Radioactive contaminants and seepage water would collect in an isolated panel over a period of time. Because of the elevated temperature, seepage water would be vaporized and some contaminants in the water may become airborne. Upon removal of the bulkheads, the hot, moist, and contaminated air would enter the confinement air return.

Bulkhead removal would require drilling and blasting of the concrete, and mucking out. The location, size and number of rebars used as reinforcement, and tiebacks must be known to plan the drilling. Prior to retrieval the rock condition must be inspected, the rock surfaced scaled, and rock support re-installed as necessary.

Bulkheads will not be used as retaining walls; therefore, other types of bulkheads that are equally effective but less substantial in construction could be used. Leak-proof bulkheads (composed of segments of which are easy to assemble, install, and remove) are available. These bulkheads have proven very effective as bulkheads for underground rescue chambers in coal mines where bulkheads must be leak-proof and explosion-proof. Such bulkheads would facilitate the retrieval effort.

Design of the bulkheads to periodically release contaminants to the main returns may be desirable. However, the type of vent system adopted could further complicate bulkhead removal operations.

If retrieval were found necessary while development of the repository is still in progress, retrieval operations will have a minor impact on development operations. While development and confinement activities have separate entries and ventilation systems, the two systems do interface in the shaft area. When retrieval operations are in progress, movement of vehicles and materials in the shaft areas needs to be coordinated between the two systems in order to minimize the probability of accidential meetings which could result in contamination of the development equipment.

10.2.2.2 Equipment Systems

Removal of the bulkheads will be necessary for canister retrieval. The bulkheads could be excavated by conventional drilling and blasting using an electric-hydraulic jumbo for drilling, and a Load-Haul-Dump (LHD) vehicle for mucking. Alternatively, mechanical-hydraulic breakers, as commonly used in demolition work, could be effectively utilized. The equipment may need to be decontaminated if exposed to contaminated air. The use of equipment from development operations is not contemplated for use during retrieval.

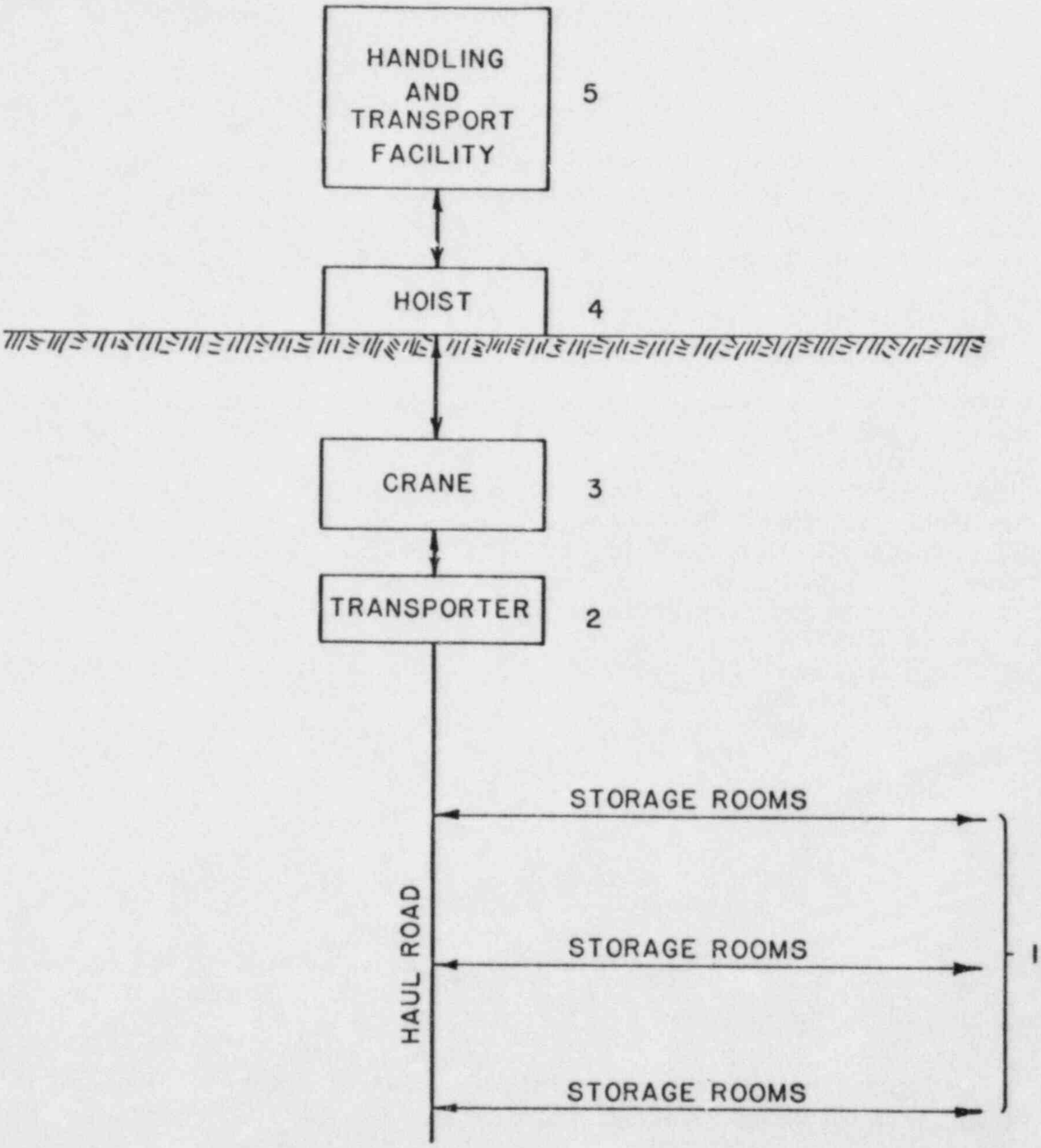

Figure 10.2.5 Schematic of waste handling operations.

The fill material in the hole lining can absorb some rock deformation and resulting side pressure, but the limits must be adequately identified through testing. Radial pressure on the canister may develop due to hole closure. The frictional resistance to pulling the canister will be a function of this radial pressure.

10.2.2.3 Facilities

Bulkheaded rooms would require additional facilities for canister storage and retrieval. After mining development has taken place and the waste stored, construction of the bulkheads and their removal would require the use of supporting equipment that may impede development mining if these processes take place concurrently. If spare equipment were available, the rate of development mining will not be adversely affected.

The concept of monitoring the bulkheaded rooms is sound but specific details are presently lacking. Monitoring would provide valuable information on cooling requirements and health and safety precautions that need to be taken during retrieval. Monitoring, however, would be unable to precisely locate the source of a radionuclide release unless specifically designed for this purpose. Consideration will have to be given to removing all the stored canisters from the panel if a breached canister is detected. Depending on the location of the affected panel, retrieval could adversely affect the materials handling/transportation system, confinement ventilation system, and development mining.

10.2.2.4 Ventilation Requirements

10.2.2.4.1 Ventilation Planning - Air Requirements During Local and Full Retrieval

The conceptual design (RHO-BWI-C-116, 1982) assumed a period of occasional (local) canister retrieval and a mass (full) retrieval period of up to 25 years.

Based upon diesel and electric vehicle requirements, personnel requirements, and cooling requirements (as well as potential air leakage), the following total airflows are supplied in the confinement ventilation system for emplacement and local retrieval (RHO-BWI-C-116, 1982):

Waste handling (vehicles and personnel)	25,000 cfm
Precooling prior to waste emplacement	8,000 cfm
Precooling prior to retrieval	127,000 cfm
Waste emplacement (vehicles and personnel)	41,000 cfm
Leakage and short-circuiting	11,000 cfm;
Total	212,000 cfm.

Presumably the airflow used for precooling would also be used for retrieval once the room is adequately cooled. For 50-year retrievability, the airflow required for precooling is 144,000 cfm for 9-day precooling. The total confinement air quantity is, therefore, 221,000 cfm assuming the same percentage leakage as above.

If full retrieval were initiated, presumably there will be no further development or placement operations in the repository. The mine (development) ventilation system would then be used to provide such additional airflows as are required.

During retrieval, transporters will frequently use the confinement returns for travelways. Since the temperature in the returns will likely exceed 106°F at 100% humidity - this is the air temperature at the outbye (exhaust) end of the storage and retrieval rooms - climate-controlled suits which incorporate radiation shielding should be provided in all vehicles so that personnel could walk away in the event of equipment failure. Under normal conditions worker protection would be provided by shielded, air-conditioned cabs.

10.2.2.4.2 Pressure Differentials Between Mine and Confinement Circuits

The two ventilation systems for the repository (development or mine air, and confinement air) have been designed by DOE to avoid connections between the two circuits. However, some leakage will still occur. In the design (RHO-BWI-C-116, 1982), leakage has been planned to be from the mine circuit to the confinement circuit, in order to have uncontaminated air leak into contaminated air, rather than the reverse. This is accomplished by maintaining the air pressures always higher in the mine circuit where it nears the confinement circuit. Computer modeling during our review verified the validity of this plan, but showed that some leakage may occur from the mine exhaust to the confinement intakes. As the mine exhaust air will contain dust and fumes, leakage into the confinement intakes is not desirable. The airflow in the confinement intake will greatly exceed the leakage airflow from the mine side, diluting the contaminants. The leakage can be eliminated by having airtight bulkheads keyed well into the rock.

10.2.2.5 Backfill

Panels are bulkheaded upon completion of emplacement; however, backfill is not placed until permanent closure. The requirement for retrievability does not directly impact backfilling operations. However, in the case of local retrieval, backfill might be required to ensure that the room or panel does not become a preferential pathway for radionuclide migration when emptied of waste.

10.2.2.6 Thermal Effects

The thermal effects associated with nuclear waste disposal in an underground repository have significant impacts on the retrievability of the waste. A number of thermal analyses have been completed by BWIP to determine the practical waste storage geometry and repository layout which will preserve the isolation capability of the host rock formation. Thermal effects can be divided into three distinct areas:

- Very-near-field effects which have the most direct impact on retrievability since elevated temperatures can lead to decrepitation of the borehole wall and binding of the canister
- Near-field effects which impact retrievability indirectly by increasing the potential for creating instability of the storage rooms
- Far-field effects which have minimal impact on retrievability since the stability of the entries and shafts would not be affected by the thermal loading.

Thermal effects of this storage concept have been determined by BWIP using the SUPER 5 and HEATING 5 computer codes using the assumed thermal loadings given in Section 10.2.1.4. Calculated peak temperatures in the repository for this storage concept, using an in situ basalt temperature of 134°F, are (RHO-BWI-C-116, 1982):

- Waste form: 572°F
- Bentonite: 392°F
- Basalt around canister: 392°F
- Entries and shafts: 135°F.

The above-mentioned temperatures are well within the maximum temperature criteria established by BWIP, which are as follows:

- Basalt: 932°F
- Bentonite: 572°F
- Entries and shafts:
  158°F - operational phase
  212°F - retrievable phase
  302°F - terminal phase.

The waste package is always in quasi-steady-state equilibrium with the surrounding basalt because the heat capacity of the waste package is small compared to that of the surrounding basalt. The maximum rise in the basalt temperature at the inside surface of the borehole is about 260°F. The temperature is fixed by the history of the decay heat released within the storage holes and by the storage configuration. The peak temperatures in the repository at 50 years after initial storage are:

- Waste form: 464°F
- Bentonite: 396°F
- Basalt around canister: 396°F
- Entries and shafts: 154°F.

These temperatures are well within the maximum temperature criteria established by BWIP for preventing hole decrepitation and preserving the integrity of waste isolation. By preventing thermal decrepitation and providing a storage sleeve assembly around the waste package, retrievability should be ensured. The near-field effect of the temperature rise from 134°F to 154°F should still maintain a rock stress safety factor (RSSF) of over 2.0 against stress-related failures.

The primary uncertainity is the degree of variability of rock strength in the repository, which may result in areas of local overstress where rockfalls may occur. Because the rooms are not backfilled, rockfalls can be easily handled without affecting the retrievability of waste packages, once bulkheads are breached and the rooms precooled. If a rockfall damages the floor ring, however, provisions for repair or special retrieval would then be necessary..

10.2.2.7 Requirements for Special Equipment for High Temperature and Radioactive Environments

Rooms are not backfilled in this concept; therefore, they can be precooled prior to initiation of retrieval activities. Provided a waste package is intact, the transporter (whose operation was described in Section 10.2.1.7) can be used for retrieval such that 10CFR60 standards are satisfied. High temperature equipment is not required.

If a waste package is damaged, then other measures may be required for retrieval. For example, if the titanium overpack is fractured and splits upon retrieval, the transporter would pick up the top half of the overpack but leave the remainder of the overpack and the canister in the hole. Because the grapple in the transfer cask (on the transporter) is designed to engage the top of the titanium overpack, it cannot be used to retrieve the remainder of the waste package. It is possible that the sleeve surrounding the waste package may also be damaged. If the damage could impede retrieval operations, it would likely be advisable to overcore the hole. In such case, provisions for retrieval in the repository design are inadequate and design of a special machine for retreival in such cases is then required.

10.2.2.8 Ground Support

As discussed in Section 10.2.1.3, the Q-system (Barton, Lien, and Lunde, 1974) has been used to estimate ground support requirements. The Barton, Lien, and Lunde (1974) data base does not include experience similar to repository conditions; therefore, the designers have specified ground support in excess of that suggested by the Q-system.

Resin-grouted bolts may not be acceptable for use in the repository rooms. The rock temperatures of 212°F, and greater, may exceed the maximum service temperature of resin grout. Experience is lacking regarding the stability of bolts in general for a period of decades. Experience with concretes at elevated temperatures (Troxell, Davis, and Kelly, 1968, p. 248-250) indicates that for simple temperature increases to 212°F relatively minor strength losses occur due to loss of both free and combined moisture. Above 212°F more significant strength losses occur in the repository maximum temperature ranges up to, say 400°F, but amount to 10% reduction, or less. However, if the concrete is heated and then cooled, strength losses approach 25% or more at 400°F. Two considerations may minimize such strength losses. Using lean mixes and limestone, expanded slag, or similar aggregates minimize heat effects in this range. We suspect that the important cement grout, shotcrete, and concrete considerations for repository temperatures hinge on minimizing the water content and matching the thermal expansion and chemistry of cements and aggregates. Concrete also has a coefficient of thermal expansion intermediate between that of steel and basalt limiting difficulties resulting from differential thermal expansion.

In any case, over a decades-long period, some deterioration of the rock reinforcement can be expected, and minor roof falls may result. In areas of deterioration, the debris must be removed and renewed rock support provided prior to commencement of retrieval operations. With bulkheaded rooms, the remedial measures can be carried out only after the rooms have been precooled. A LHD vehicle and a roof-bolting jumbo would be required for resupport operations.

Seepage of ground water toward the openings will occur. With time the seepage could result in a build-up of pore water pressure on the shotcrete liner. Rock mass grouting at the time of construction of the rooms could minimize deterioration by seepage and chemical action. Despite grouting efforts and shotcrete application to the repository walls, some ground water is likely to enter the repository during the operating period. Underground conditions could reasonably be expected to remain generally dry but some allowance for the presence of minor amounts of water during retrieval would be prudent. The postulated water inflow would slightly exceed the evaporating capability of the ventilation system, and would result in puddles on the repository floor.

10.2.2.9 Instrumentation

The performance of the repository has to be monitored to ensure that the safety criteria are not violated and that the isolation capacity is maintained. The retrievability option mandates that significant changes in selected parameters, or deviations from expected behavior, be detected when they occur, and steps be taken to correct the problem or retrieve the waste to the surface. Categories requiring monitoring are:

- Hydrogeologic - water inflow
- Thermal - heat build-up
- Mechanical - stress build-up, rock deformations, and rock instability
- Radiological - activity levels.

A monitoring program for subsurface conditions consisting of visual inspection where possible, and remote measurement within panels, will be initiated. Visual inspection and hands-on measurement are preferable to remote monitoring because instrumentation available at present is not reliable for periods in excess of about a decade, especially under the thermal conditions of the repository rooms. To evaluate the performance of the remote monitoring system, an experimental panel will be provided in the repository where extensive verification and confidence testing will be performed. This panel will also provide an opportunity to study the reliability of instrumentation.

Thermal monitoring will primarily consist of thermocouples embedded in boreholes drilled into the rock at intervals along storage rooms. Thermocouple signals will be collected at several spots and relayed to a central control console to detect abnormalities.

Hydrogeologic monitoring will consist of measuring the pressure of formation water in the vicinity of storage holes, in various accesses, and in basalt flows and interflows. High-precision, durable pressure transducers will be placed between packers in boreholes. Water quantities entering individual panels will be monitored by devices measuring the humidity and temperature of the air inside the panels.

Mechanical monitoring will consist of a network of geophones and seismographs to monitor rock noise and rockfalls. The closure of pre-established points in main entries will be measured. At a few selected locations outside the panels, detailed evaluation of rock stability will be made using stressmeters and multiple-position borehole extensometers.

Ventilation conditions in the repository will be monitored for radiation levels, fire and smoke emergencies, and ventilation blockages caused by rockfalls. Mobile radiation and thermal sensors in ventilation airways will permit continuous monitoring from a main surface control console. Flow direction, pressure, differential pressure, and temperature will be monitored.

The retrievability requirement mandates monitoring of the repository for perhaps decades after initial placement of the waste. The following steps need to be taken to ensure the reliability of instrumentation placed in the repository:

- Develop geophones, stressmeters, multiple-position borehole extensometers, piezometers, thermocouples, and ventilation instrumentation that will maintain their accuracy in the hot and humid environment expected in a repository
- Provide extensive verification of the reliability of instrumentation in the experimental panel established within the repository
- Ensure that inspection of the repository at predetermined intervals can be performed by robots or by personnel in air-conditioned suits or vehicles.

10.2.3 Adequacy of Incorporated Retrieval Systems or Allowances

10.2.3.1 Local Retrieval

Local retrieval may be necessary for quality assurance or quality control purposes, or due to a detected radionuclide release. A manufacturing error could cause premature breakdown of overpacking for some canisters in a storage room. Bulkheaded but unbackfilled rooms allow using the same equipment for emplacement and retrieval procedures provided precooling is carried out. Most likely the canister transporter and "hot cell" equipment will be necessary.

Equipment travel in a storage room creates hazardous conditions. Local retrieval involves recovering one or more canisters in a storage room. Traveling to the designated canister means approaching very near or running over surrounding canister holes. Because of storage room dimensions and equipment clearances, minor damage to the floor rings could result.

Local retrieval requires removing the bulkhead and precooling the room prior to retrieval. Equipment for removing the bulkhead and removing the debris will be required and dedicated to the confinement ventilation circuit. Rockfalls due to roof deterioration must be cleaned up and the roof resupported. LHD equipment and a roof bolter will be incorporated as part of the retrieval equipment system. The canister transport equipment being used for storage may be used for retrieval, so that a delay or stoppage in storage activities could result. Use of the crane, the hoist, and the surface facilities for handling retrieved waste will also slow storage progress (Figure 10.2.5). No equipment has presently been designed to overcore a 48-in.-diameter hole in a repository environment. Overcoring may be necessary if the canister to be retrieved has broken and cannot be retrieved intact. Overall, with incorporation of equipment to remove the bulkhead and support the roof, the local retrieval system is adequate except where canisters are no longer intact. Further design and definition is required to facilitate breached canister retrieval.

10.2.3.2 Full Retrieval

Full retrieval of waste canisters will need planning and preparation but will not be necessarily difficult. Full retrieval planning is eased because all repository resources can be committed to the operations. For unforeseen reasons underground storage may prove unsatisfactory leading to abandonment of the site. Full retrieval will require special equipment if the reasons for retrieval interfere, such as excessive rock movement crushing canisters, or rapid deterioration of rock causing need for roof support and scaling equipment.

Full retrieval will also require equipment for removing the bulkhead and resupporting the roof of the room. All equipment involved in full retrieval will be dedicated to the confinement ventilation system. Small clearances between the ribs and equipment and small alignment tolerances between the transporter and floor rings will impede retrieval progress. The heavy equipment traveling through the room may possibly cause damage to the floor rings or canisters. The possibilities during full retrieval of attempting to retrieve a canister which is bound in the hole by rock closure, or which is broken into numerous pieces are more likely. The grappling equipment on the transporter may prove inadequate in this case, requiring retrieval by overcoring. As stated in the section on local retrieval, no equipment for large-diameter overcoring has been developed for repository environments. The confinement ventilation system must be altered to be adequate for full retrieval. The exhaust shaft and return airways must be increased in size (or new shafts sunk) to handle adequate airflow during retrieval. The incorporated systems will be adequate for retrieval of intact canisters, provided the equipment for bulkhead removal and roof resupport are included, and the confinement ventilation exhaust and return airways are enlarged. The retrieval of breached and broken canisters requires further development in the area of overcoring equipment for repository environments.

10.2.4 Concerns

10.2.4.1 Technological Concerns

When panels are bulkheaded with trickle ventilation and single waste packages are stored in vertical holes, the main technological concern is the effect of the hot rock on the materials used in the ground support system, which will consist of rock bolts and shotcrete. The rock bolts will presumably be fully grouted to minimize the possibility of corrosion of the steel bars and the grout used must be functional at high temperatures. At the temperatures normally encountered in mining and tunneling, polyester resins are used for the grout. The stability of such materials at high temperatures is unknown. The coefficient of thermal expansion of resin is much greater than that of either basalt or steel. Differential thermal expansion may occur reducing the effectiveness of the bolts.

Use of Portland cement mixtures that minimize heat effects (Section 10.2.8) in both the shotcrete and the grouted bolts would reduce the uncertainty regarding stability of the support systems. The widespread use of shotcrete or grouted bolts, or both, as primary ground support is about 25 years old and experience is lacking regarding the condition of such support systems after decades even at normal temperatures.

Another technological concern is development of equipment for retrieval of breached canisters, especially those which have broken into two or more pieces. If canisters have cracked but are otherwise intact, retrieval could be accomplished using the transporter with a transfer cask having an internal shielding sleeve. If the breached canister has separated into more than one piece, the surest method would be to overcore the hole. While overcoring is feasible, no equipment exists at present for overcoring 48-in.-diameter holes in repository environments. Overcoring would also require a room height in excess of the 20 ft assumed, since the holes are 20 ft deep and the overcore should penetrate at least 6 in. to 1 foot below the bottom of the hole.

10.2.4.2 Safety Concerns

As discussed under technological concerns, no experience exists with grouted bolt and shotcrete systems for decades-long periods. The panels are accessible and ventilated and the ground support can be periodically inspected and rehabilitated as necessary. Safety concerns will occur in the event of radionuclide release; and will be discussed later.

10.2.4.3 Radionuclide Release Concerns

One of the possible reasons for retrieval is failure of the waste package, with consequent release of radionuclides. Gaseous and volatile radionuclides may be released into the emplacement hole while soluble radionuclides may be carried away by any water that is present in the emplacement hole. Removal by aqueous solution, requires the presence of water in liquid form; that is, its temperature must be less than the boiling point for the repository air pressure conditions.

10.2.4.3.1 Releases into Air

The gaseous and volatile isotopes which could be released by a breached canister are hydrogen-3 (tritium), carbon-14, and krypton-85. The quantity of krypton-85 is large compared with that of either tritium or carbon-14. In addition, the carbon-14 must be in a form that leads to volatile species upon reaction with water in order to be of concern. It is assumed that one-tenth of the krypton-85 is sufficiently near an exposed surface to be able to leave the fuel. If a breach occurs, the concentration of krypton-85 and tritium in air must not exceed 10 nCi/liter and 5 nCi/liter, respectively, in order to satisfy 10CFR20. (These radioactivity concentrations standards are defined by the EPA in metric units, the equivalent traditional units, for reference, are 0.35 nCi/ft^3 and 0.18 nCi/ft^3, respectively.)

If storage hole plugs are gas-tight, release of gaseous radionuclides from a breached waste package will occur at retrieval. Otherwise, the radionuclides will leak through the plug into the air. Assuming the room was still bulkheaded and the breach was discovered due to radionuclides in the leakage air, retrieval of the breached canister would require removal of the bulkheads and precooling. The time required to reduce krypton-85 concentrations to the Maximum Permissible Concentration (MPC) given in 10CFR60 is shown in Figure 10.2.6 for different room volumes and airflows. In any case the time required for precooling greatly exceeds the time required to dilute the krypton-85.

Release occurring at retrieval can be avoided by having radiation sensors in the holes. The gaseous radionuclides could then be drawn off prior to retrieval using millipore filters or a cryogenic absorption system, both of which fall within existing technology.

10.2.4.3.2 Releases into Water

With regard to the movement of radionuclides by aqueous transport, the water must be in the liquid state. At a pressure of 1,600 psi, the boiling point of water is about 600°F, and since the rock temperature will be 300°F or less, pore water will be in the liquid state. Since the rooms are at atmospheric pressure, this water will vaporize as soon as it enters the room.

For water to transport radionuclides, it is necessary that water come into contact with a breached canister. This would require penetration of several layers of shielding and overpacks. Supposing this did happen, and water contacted a breached canister, the rate of dissolution of the spent fuel would vary widely depending on water composition and temperature. For a typical rate of 0.0000264 lb/day over an area of 183 in^2., the solution water would contain about 0.25 mCi/lb of water. This solution would generate about 0.1 mR/hr at 4 ft from the waste package.

Water could also dissolve gaseous radionuclides. Krypton-85 has a solubility of 0.628 ft^3/100 gal (Weast, 1983) in hot water so that only about 1.5 gal of water would required to dissolve the krypton-85 released by a single breach. Thus water which came into contact with a breached canister and then percolated into the room would release gaseous radionuclides as it entered the room. As in the case of direct releases to the air described in Section 10.2.4.3.1, the time required to dilute the krypton-85 to the MPC is much less than the precooling time.

Hence water intrusion would provide a good index to failure but would not by itself introduce significant hazards to the operations (Post, 1982).

10.2.4.3.3 Radiation Detection Standards

The radiation levels measured during retrieval operations are not exceptional so that the system standards used in the nuclear industry would prevail. Lower limits of 0.1 mR/hr and upper limits of a few

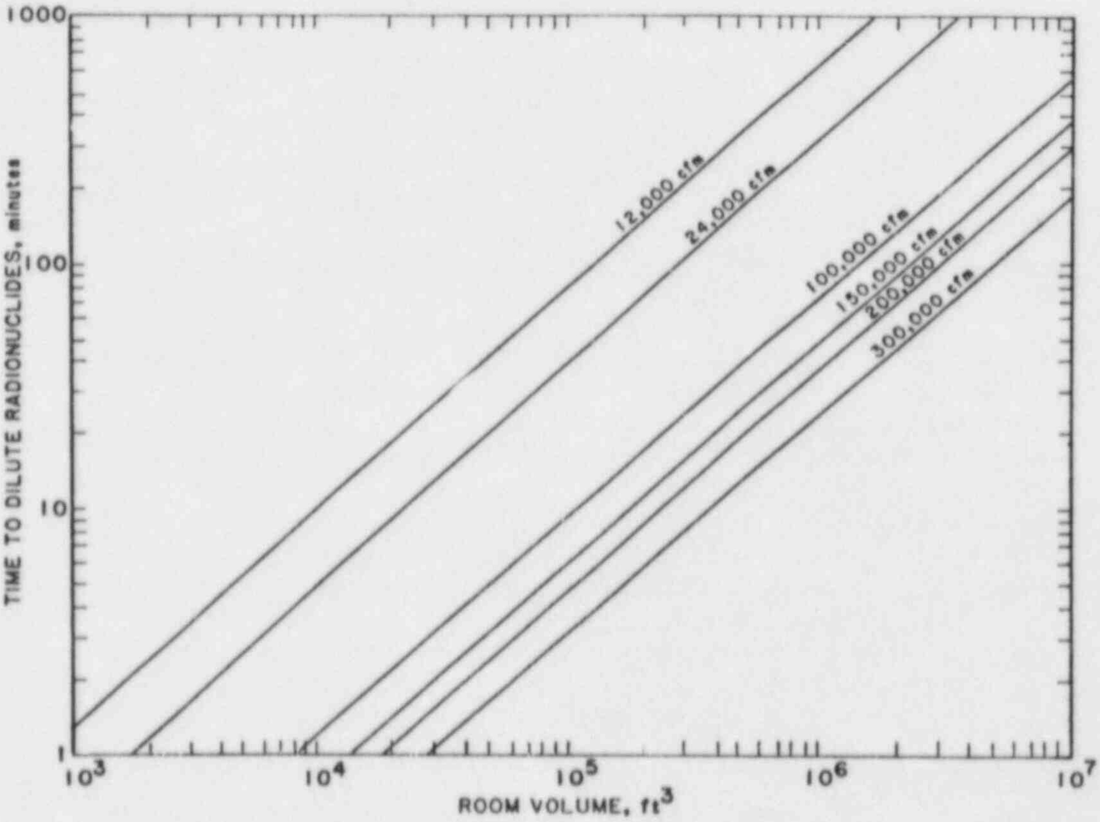

Figure 10.2.6 Time required to dilute Kr-85, from a breached canister containing three PWR fuel assemblies, to the Maximum Permissible Concentration (MPC) assuming 10% of the Kr-85 is liberated.

kR/hr would be adequate. A system to detect krypton-85 in the ventilating air and in the storage holes will be required. This system should be capable of detecting krypton-85 levels below 100 pCi/liter (2.6 pCi/ft^3) (Post, 1982).

10.2.4.4 Operational Concerns

Retrieval of breached canisters will require equipment other than the transporter and standard transfer cask. Retrieval could be accomplished by overcoring the holes containing breached canisters; however, room heights of at least 22 ft are required where canisters are cracked but otherwise intact, a transfer cask having an internal shielded sleeve could possibly be used. To facilitate retrieval, such equipment must be available.

Given the small tolerances for alignment of canisters and storage holes, precise positioning of the transporter over the hole may be difficult even with lasers. Positioning would be simplified if transporters were rail mounted.

The amount of cooling required will necessitate large capacity heat exchangers (cooling units). The area required for the coolers in the headings could significantly reduce the space available in the entrances to the rooms. Also the cooling units have a restricted life and will become less efficient with time.

10.2.4.5 Other Concerns

A fundamental concern related to a repository in basalt concerns the geologic/hydrogeologic uncertainty at the repository horizon. The uniformity of the particular basalt flow with regard to thickness, the uniformity of the jointing, and the occurrence of faults are major concerns. The further in situ exploratory programs planned (1983) by DOE (ES-I and ES-II) are aimed at rectifying the lack of information about the geology/hydrogeoology at the proposed repository horizon.

Another concern is the mechanism for and probability of canister breach. One possible mechanism is corrosion. The rate of corrosion will depend on the environmental conditions and the chemical composition of the ground water. Another possible mechanism is attempted retrieval of a canister upon which the hole has closed.

10.2.5 Summary and Conclusions

The repository is located at a depth of 3,700 ft in the Umtanum Flow basalt of the Hanford Reservation, Washington. The repository will

consist of 22 panels divided by a central pillar into two areas having 12 and 10 panels, respectively. Each panel is divided into six rooms (14 ft wide, 20 ft high, and 3,572 ft long) that are joined by crosscuts at 890-ft-centers.

The waste packages (carbon steel spent fuel canisters, graphite filler, and titanium overpack) are placed in 4-ft-diameter sleeved holes 12-ft on center in the floor of the rooms along the centerline. Based on a heat load of 1.74 kW/canister at the time of placement for canisters containing three 10-year-old PWR fuel assemblies, the panel thermal load is 51.6 kW/Acre.

Backfilling of the rooms would not taken place until the permanent closure of the repositiory. Rooms will be bulkheaded when completely filled with canisters. Trickle ventilation through the bulkhead is allowed for monitoring of air quality within the room. The room must be precooled either prior to or after removing the bulkhead to facilitate retrieval.

The retrievability requirement has the following effects on the repository systems:

- Re-excavation system - Drilling, blasting, and mucking equipment are required for bulkhead removal
- Equipment systems - In addition to the re-excavation equipment, a roof bolter is required for repair of the deteriorate roof support. The bulkhead removal and resupport equipment must be isolated from the development equipment
- Facilities - Removal of debris from bulkhead excavation will impose an adverse impact on the hoist crane and material handling system. Local retrieval may impose adverse impacts on the transportation system, the confinement ventilation, and development mining
- Ventilation requirements - The airflows detailed in the reference design must be increased to account for air supplied to the retrieval operation. The confinement exhaust shaft requires an increase in diameter from 10 ft to 12 ft to handle the increased airflow, or a new shaft could be sunk
- Backfilling - None is required until permanent closure.

The concerns for the repositiory concept are summarized as follows:

- Technological Concerns:
  - Adequacy of the rock support system over a period of decades

  - Adequacy of existing equipment to retrieve breached canisters

- Safety Concerns:
  - Progressive deterioration of rock support as a result of bulkheads isolating the rooms
  - Thermal spalling and moisture related tensile failures upon precooling

- Radionuclide Release Concerns:
  - Canister breaches would result in release of gaseous hydrogen-3 (tritium) and krypton-85, and volatile carbon-14, of which the krypton-85 would have the largest concentration
  - Diluting krypton-85 to the MPC given by 10CFR20 could take up to several hours for release from a single breached waste package
  - The mechanism for release of gaseous radionuclides from the storage hole to the atmosphere could be non-gas-tight hole plugs, streaming through the floor shield at retrieval, and aqueous transport (if hole liners corrode)
  - A system is required for detection of krypton-85 in ventilating air and in storage holes

- Operational Concerns:
  - Retrieval of breached canisters by overcoring
  - Small alignment tolerances requiring precise positioning of the transporter
  - Large capacity heat exchanges limiting the space in the room entrances
  - Coordination of handling possibly contaminated bulkhead muck in the shaft areas with on going development

- Other Concerns:
  - Geologic and hydrogeologic uncertainties

- Undetermined probabilities and mechanism of canister breach

- Prediction of time-dependent activities of critical radionuclides.

The general repository concept parameters are well defined. Further definition and confirmation are required in the areas of hydrogeology and geology, long-term adequacy of roof support, detecting and retrieving breached canisters, the probabilities and mechanisms of breach, and the details of bulkhead construction and venting. With an increase in the ventilation system capacity, the repository concept meets the requirements of 10CFR60 except with regard to retrieval of breached canisters.

10.3 Basalt Repository with Vertical Hole Storage and Immediate Backfilling

10.3.1 Basic Information

The third repository concept is in basalt, with vertical storage holes in the floor, and rooms backfilled and bulkheaded after waste placement. This concept is similar to the reference repository in basalt (RHO-BWI-C-116, 1982) except that backfill placement in a panel will occur as soon as waste storage in the panel has been completed.

10.3.1.1 Definition of Repository Concept

The host geologic medium is basalt. Waste packages will be placed in 48-in.-diameter holes in the storage room floors. The panels will be backfilled and bulkheaded as soon as waste emplacement has been completed. Details of the repository conditions are given in Table 10.3.1

Canisters containing 10-year old Pressurized Water Reactor (PWR) spent fuel will emit 1.74 kW each at the time of placement while canisters containing 10-year old Boiling Water Reactor (BWR) spent fuel will initially emit 1.33 kW each. In both cases, the heat emissions will decrease with time. To be conservative, thermal studies have been based on 1.74 kW/canister. For the conceptual repository layout, the canister heat load results in a thermal loading of 51.6 kW/acre, or 35.6 kW/acre within a panel for the entire repository.

10.3.1.2 Geologic Environment

10.3.1.2.1 Rock Units

The proposed horizon for the nuclear waste reference repository at the Hanford Reservation Basalt Waste Isolation Project (BWIP) is the Umtanum Flow of the Grande Ronde Basalt. Recent (1982) core drilling in the vicinity of the Reference Repository Location at BWIP indicates the Umtanum Flow interior may thin in places. Until the final decision is made concerning which flow will be proposed for the repository, the Umtanum Flow will be assumed for design purposes.

The Umtanum Flow, a single basalt flow, has a typical cross-section which consists of, in descending order, the flow-top, the entablature, and the colonnade. The repository would be located in the entablature, whose thickness in boreholes has averaged 150 ft. The

Table 10.3.1 Retrieval Conditions and Operations

(A) CANISTER, HOLE, WASTE PACKAGE

1. Waste Package: PWR - O.D.[1] = 21 in.
   L[2] = 170 in.

   BWR - O.D. = 21 in.
   L = 182 in.

   Non-Self-Shielding

   Titanium outer, graphite middle, carbon steel inner

2. Container: PWR - O.D. = 45 in.
   L = 196 in.

   BWR - O.D. = 45 in.
   L = 208 in.

   Aluminum outer, tailored backfill middle, ceramic inner

3. Hole: PWR - O.D. = 48 in.
   L = 19 ft

   BWR - O.D. = 48 in.
   L = 20 ft

   Hole is vertical. Hole is bored. 1 canister/hole.

4. Plug: Shielded, 38 in. wide x 32 in. high.

(B) PLACEMENT UNIT

1. Horizontal, longitudinal transporter
2. The transfer cask is shielded and has an internal hoist chain grapple.

(C) EMPLACEMENT SEQUENCE

1. Inspect and clean emplacement area
2. Align transporter with hole
3. Lower floor shield
4. Remove plug
5. Rotate cask 90° so that it is vertical
6. Open shielding doors
7. Lower waste package[3,4]
8. Retract grapple, close floor shield door[3]
9. Raise and reposition transfer cask[3]
10. Raise floor shield[3]
11. Remove transporter

(D) BACKFILL PLACEMENT

1. Make-up of Backfill

   Most recent Report: 75% basalt, 25% bentonite

   CD 116: 50% basalt, 40% ground bentonite, 10% prilled bentonite

   Backfill will have 10-15% water for best compaction

2. Placement Method

   In lower 10 ft "Low Profile" equipment will be used

   Backfill will be dumped from load-haul-dump units, pushed with dozers into 8 in. lifts, and compacted with compaction equipment

   For final 10 ft, pneumatic or blower equipment that "has yet to be developed" will be used

   Basalt and Bentonite will be mixed in the room

   Basalt will be crushed underground in a portable batch plant

(E) RETRIEVAL ENVIRONMENT

1. Backfilled
2. High temperature
3. Water present (?)
4. Cannot be pre-cooled upon re-opening
5. May or may not be radioactive
6. May or may not contain water at high pressure which will turn into steam
7. Less monitored environment due to difficulties associated with remote montoring

(F) REMINING OF BACKFILL

1. It is impossible to construct a remining sequence with the information presently available.
2. Backfill will have to be remined using either:
   - a. a protected mining machine
   - b. an auger system
   - c. remote-controlled hydraulic system
3. Cooling of machine will be necessary, as will cooling of operator if one is present
4. Ventilation will be a problem, and the machine operator will need an isolated fresh air supply in any case
5. Monitoring begins immediately upon breaching bulkhead
6. Removal of backfill may allow loosened roof rocks to fall, catching machine. Re-support of rock may be necessary
7. Pre-cooling could produce spalling of rock
8. For a local retrieval scenario, high temperature retrieval may be necessary though it would require redesigned equipment
9. After the room has been remined, cooled, and adequately supported (in whatever sequence) the retrieval sequence will continue as in concepts 1 and 2.

(G) RETRIEVAL SEQUENCE

1. Radiation survey
2. Decontamination and clean-up
3. Identify canister
   Locate canister precisely
   Determine canister orientation[5]
4. Align shielded transporter with hole, vertically and horizontally[6,7]
5. Lower floor shield
6. Remove plug
7. Close floor shield doors
8. Rotate transfer cask 90° into position over floor shield
9. Open doors[8]
10. Place grapple[8,9]
11. Retrieve cask[8,9]
12. Close shield doors
13. Replace plug
14. Decontaminate retrieval area

(H) NOTES

[1] O.D. - Outside diameter

[2] L - Length

[3] Monitor for and protect against streaming radiation

[4] Misalignment could lead to damage or canister and required retrieval. Need to check for alignment.

[5] If canister is not retrievable by transporter, it must be retrieved by any means necessary. If the canister is OK, sequence continues with container monitoring.

[6] Transporter may need more shielding than is required for placement.

[7] Transporter may also have to be modified for high temperature operation

[8] Monitor for and protect against streaming radiation

[9] Provision is needed for handling of contaminated canister or for decontamination of canister to avoid contamination.

Umtanum Flow basalt is black to dark green in color, extremely fine-grained to glassy in texture, and composed principally of plagioclase, clinopyroxene, and glass, with titano-magnetite and ilmenite as accessory minerals.

10.3.1.2.2 Rock Mass Properties

The rock mass properties of the Umtanum Flow are probably controlled by intraflow structures such as joints, vesicles, flow-top breccias, and sedimentary interbeds. Correlations of intraflow structures between 10 boreholes penetrating the Umtanum Flow (Myers et al., 1979) found a significant variation in the flow-top breccia thickness and columnar joint spacing across the Pasco Basin. Rock mass properties can also be expected to vary. DOE designs anticipate a rock mass that responds well to tunneling, with minimal support required.

The mechanical and thermomechanical properties used for the conceptual repository design were based on generalized basalt properties. Most rock testing was performed on intact rock samples in the laboratory.

The lack of in situ rock mass data remains an issue to be resolved from planned (1983) investigations at the Near Surface Test Facility (NSTF) and the future at depth exploratory programs (ES-I and ES-II). Design parameters may be re-evaluated as data are developed from these test programs. Ranges for the properties based on data currently available are given in Table 10.3.2 (NUREG/CR-2352, 1982).

10.3.1.2.3 Hydrogeology

The hydrogeological data presently available do not fully define the ground water system. The data indicate that fractures and intraflow structures control the ground water flow at the repository site. The vertical hydraulic conductivities, as yet undetermined, strongly affect radionuclide migration into the accessible environment. Near-field ground water flow models which consider repository construction and waste emplacement are yet to be developed. The geochemical changes in the ground water due to the introduction of nuclear wastes remain unclear.

The hydrogeologic deficiencies will be addressed by on-going (1983) exploration programs. Preliminary estimated hydrogeologic conditions for the Umtanum Flow are:

Table 10.3.2 Range of Rock Mechanics Properties of Hanford Basalt (NUREG/CR-2352, 1982)

	Intact	Fractured	Estimated In Situ
Compressive Strength (psi)	5,400 to 60,000	0 to 44,000	-
Tensile Strength (psi)	1,000 to 3,500	0 to 1,000	-
Young's Modulus (psi)	8.0 to 14.0 x 10^6	-	0.8 to 1.4 x 10^6
Poisson's Ratio	0.5 to 0.35	-	-
Thermal Conductivity (Btu/hr-ft°F)	0.484 to 1.45	-	-
Specific Heat (Btu/lb-°F)	0.175 to 0.28	-	-
Thermal Expansion (/°F)	2.22 to 4.11 x 10^{-6}	-	-

Hydraulic conductivity: 10^{-6} to 10^{-8} fps; flow top
10^{-10} to 10^{-13} fps; columnar zone

pH (at 149°C): 9.4 to 9.9

Eh: -0.36 to -0.41 volts.

10.3.1.2.4 Seismicity

The proposed site is seismically quiet with only two Intensity VII (Modified Mercalli) earthquakes having been recorded since 1898. Seismic monitoring of the Columbia Plateau has determined that microearthquake (low magnitude) swarms typify the activity of the region (Myers et al., 1979).

10.3.1.3 Repository Construction and Layout

As shown in Figure 10.3.1, the repository will contain 22 storage panels, each of which, with the exception of the experimental panel, comprise six rooms. The rooms will be 3,574 ft long and are to be connected by cross-cuts on 890-ft-centers. Entries, rooms, and cross-cuts will be driven by drill-and-blast methods. Table 10.3.3 gives dimensions of the various facilities.

Five entries will connect the storage panels with five shafts to surface. Each shaft will have a different dedicated function:

- Personnel and materials (service) shaft
- Basalt transport shaft
- Waste transport shaft
- Confinement air intake shaft
- Confinement air exhaust shaft.

The shafts will be sunk by conventional drill-and-blast methods, lined by steel and concrete to a depth of 1,900 ft and lined with cast-iron segments backed by concrete to the final depths of about 3,800 ft.

There are two potential sequences for repository development and waste placement, namely:

- Repository development has been completed before waste storage begins

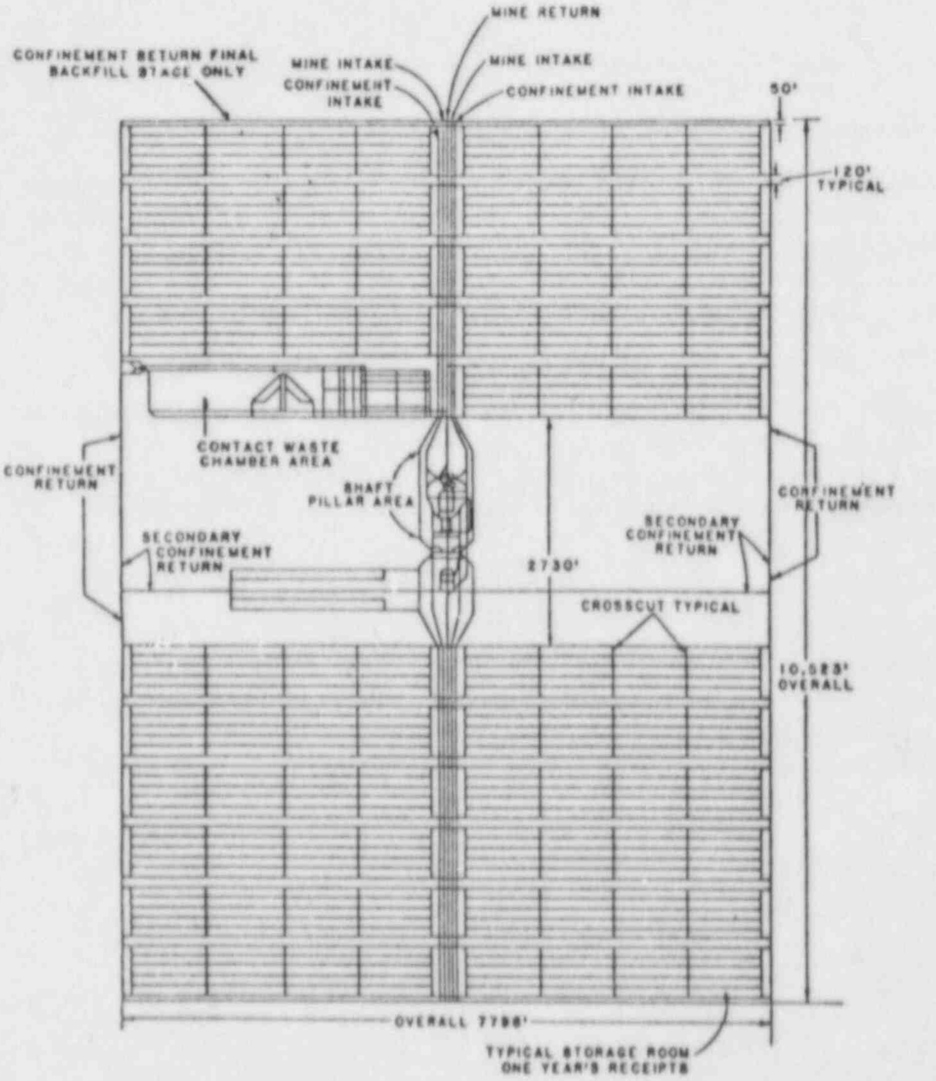

Figure 10.3.1 Repository layout for storage in vertical holes. (RHO-BWI-C-116, 1982)

Table 10.3.3 Dimensions of Repository Facilities

Facility	Dimensions
Personnel and Materials (Service) Shaft	16 ft inside diameter
Basalt Transport Shaft	14 ft inside diameter
Waste Transport Shaft	12 ft inside diameter
Confinement Air Intake Shaft	12 ft inside diameter
Confinement Air Exhaust Shaft	12 ft inside diameter
Confinement Air Intake and Accessways	13 ft wide by 12 ft high
Mine Intake Air and Accessways	18 ft wide by 17 ft high
Mine Exhaust Air and Accessways	18 ft wide by 17 ft high
Confinement Return Air and Accessways	13 ft wide by 12 ft high
Access Pillars	36 ft wide
Panels	3,577 ft by 614 ft
Storage Rooms	14 ft wide by 20 ft high
Crosscuts	14 ft wide by 20 ft high
Panel and Room Pillars	106 ft
Rib Pillars	100 ft
Storage Holes: for PWR	48-in. diameter by 19 ft deep
for BWR	48-in. diameter by 20 ft deep
Storage Hole Pitch	12 ft

- Panel development and waste storage take place concurrently with both operations advancing at the rate of one panel per year.

The two sequences have very different requirements for ventilation and excavation systems, shaft facilities and equipment quantities. The two sequences also affect retrieval operations differently.

According to assumed current repository construction schedules, waste placement is required to begin within ten years of construction authorization. Assuming five years for shaft sinking and allowing for contract procurement for both the shafts and the underground development, preplacement development must be completed within three years. Since PWR and BWR waste will be stored in separate panels (according to information supplied to EI by the NRC) and an available spare panel is desirable at all times, three panels must be ready for storage by year 10. Completion of three panels in three years requires a development rate of 5,500 tpd, on a five-day week basis.

If complete repository development must occur before placement, the required development rate is 23,500 tpd. This option causes the following a modification to the facility dimensions given in Table 10.3.3, in that the Basalt Transport Shaft should be 21-ft-inside diameter to accommodate the large muck hoisting capacity required.

In the reference repository description (RHO-BWI-C-116, 1982), development and storage proceed outward from the panels nearest the shaft pillar to those at the extremities of the repository. The mining cycle in a given heading would consist of (in order):

- Drill the round
- Load and blast the round
- Remove the broken muck and
- Install ground support.

Although the basalt is thought to be strong and competent, protection from minor local failures such as rock falls requires rock reinforcement and support. A loosened zone surrounds openings excavated in rock. The loosened zone generally extends 5 to 10 ft outward regardless of the size of the opening, but can be as little as 3 ft where smooth blasting practices are employed. The loosened zone is generally sufficiently unstable to require some support. As an aid in estimating support requirements, the Hanford basalt has been classified according to the Q-system of Barton, Lien, and Lunde, (1974), resulting in extreme Q-values of 4 and 95, with the most probable range being from 10 to 25 (RHO-BWI-C-116, 1982). Barton, Lien, and Lunde, (1974) indicate, for repository-size openings in rock, with Q-values equal to 10 to 25, some spot bolting would be required. Because thermal stresses are not allowed for in the Q-system, the reference repos' ɔry description (RHO-BWI-C-116, 1982) has specified systematic rock bolting on a 5-ft spacing together with a layer of shotcrete. The type and length of the bolts is not mentioned (RHO-BWI-C-116, 1982) nor is the thickness of the shotcrete.

With respect to ground water, mining will tend to drain the repository horizon as the water will tend to flow toward the openings. However, due to the long travel times, only a fraction of the water contained in the Umtanum Flow will be drained during mining.

10.3.1.4 Canister Arrangement

The waste package (Figure 10.3.2) consists of a carbon steel canister, surrounded by graphite fill material, and contained within a 21-in.-outside diameter titanium overpack. The packages will be placed in 48-in.-diameter holes drilled vertically along the centerline of storage room floors on 12-ft-centers. As shown in Figure 10.3.3, the hole is designed as an engineered barrier consisting of (starting at the outside) zircon sand and bentonite filler, an aluminum container surrounding tailored overpack and a ceramic sleeve to support the tailored overpack. No mention is made in reference repository description (RHO-BWI-C-116, 1982) of the method(s) used to place the filler, aluminum container, tailored overpack, and ceramic sleeve in the hole. We assume that sleeves and liners will be lowered into place, and overpack and fillers will be either poured or blown in.

10.3.1.5 Thermal Loading

The waste packages radiate heat as a result of decay of the radionuclides contained in the spent fuel. Unreprocessed spent fuel contains fission products which are relatively short-lived and actinides which are generally quite long-lived. As the radionuclides decay to stable isotopes, the number of disintegrations, and resultant heat produced, will decrease with time. The heat produced by a canister will be at a maximum at the time of emplacement.

A canister will contain either three PWR or seven BWR spent fuel assemblies. Assuming 10-year-old waste, canisters will have initial maximum heat loads of 1.74 kW and 1.33 kW for PWR and BWR, respectively.

The areal extent of the repository, the canister spacing, the age of the waste, and the type of waste (PWR or BWR) determine the overall thermal load on the repository. To be conservative, all the waste is assumed to be 10-year-old PWR. In reality, waste type and age will vary, and actual panels are assumed to consist of waste of a uniform type and age to avoid uneven thermal loading within a room or panel.

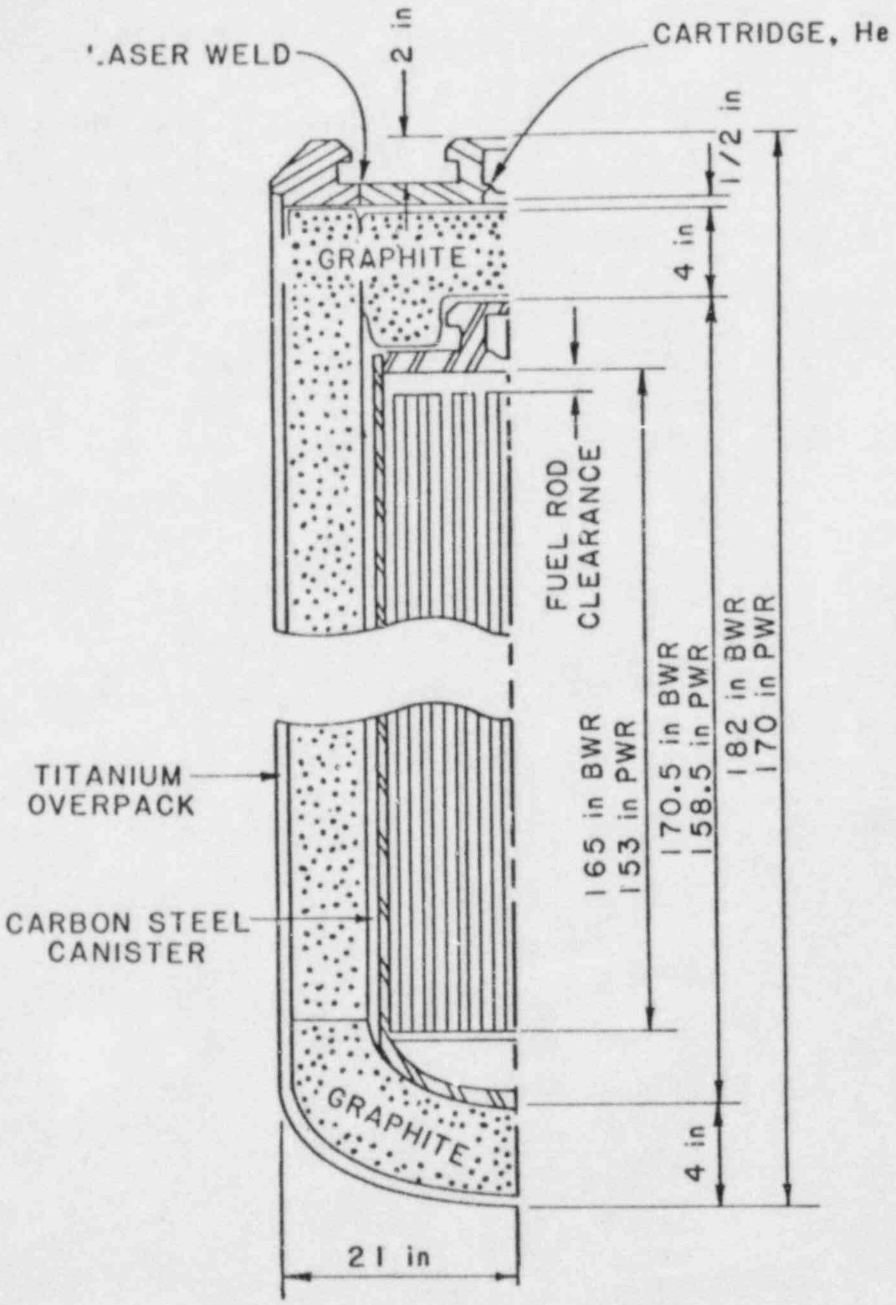

Figure 10.3.2 Waste package.
(RHO-BWI-C-116, 1982)

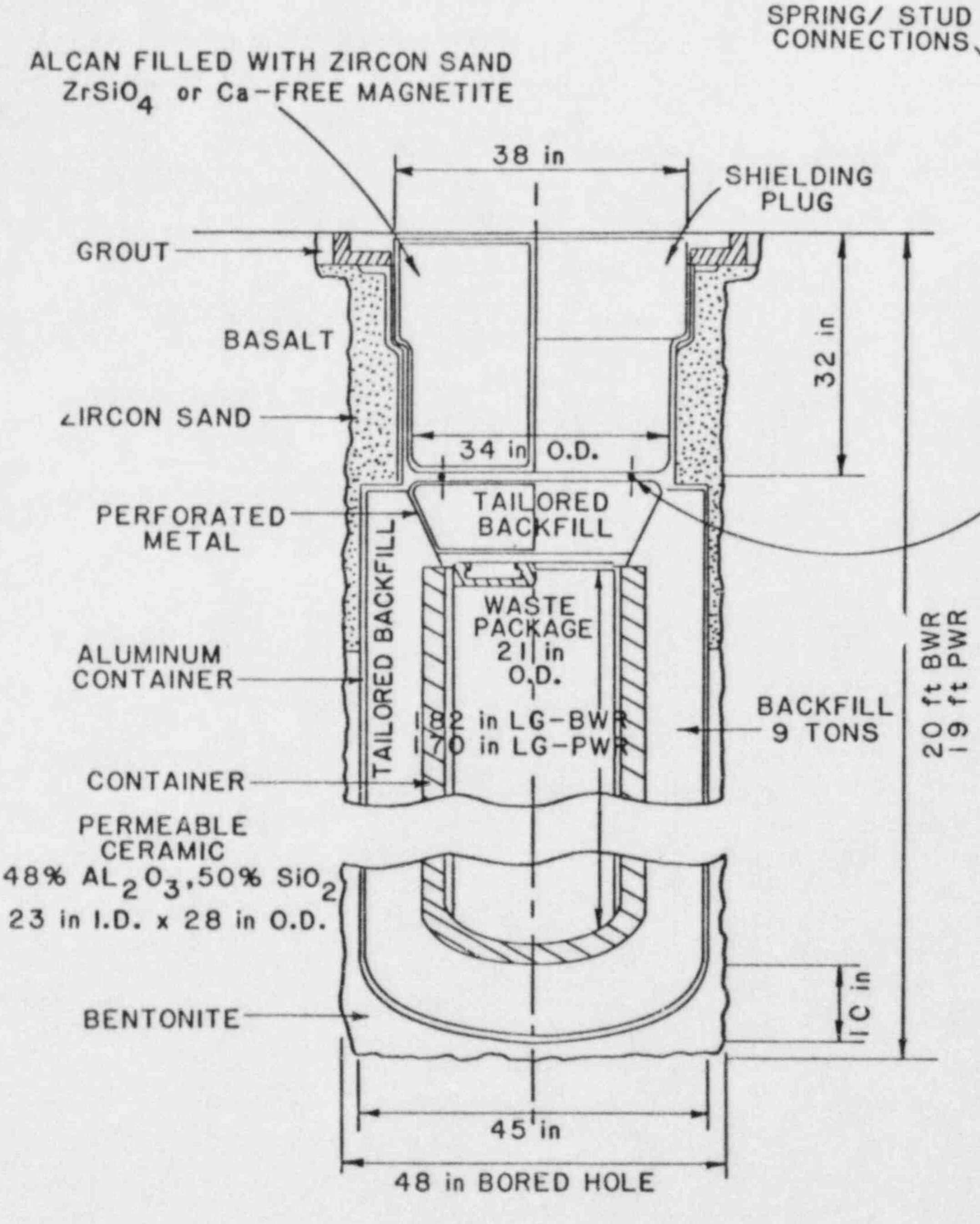

Figure 10.3.3 Storage position.
(RHO-BWI-C-116, 1982)

The storage area consists of 22 panels occupying a total of 1,300 acres, or 59 acres per panel. Using 1.74 kW/canister and a storage complement of 1,750 canisters per panel the heat load within a panel is 51.6 kW/acre. On the basis of the total area of 1,884 acres which includes the shaft pillar and service areas, the overall heat load is 35.6 kW/acre.

10.3.1.6 Backfill Timing

Ultimately, a repository must be backfilled, with the backfill designed as a barrier (10CFR60.133). The backfill will be placed in a panel as soon as the panel has been filled with its complement of waste. If retrieval becomes necessary, remining of backfill will be required. The composition of the backfill proposed in the reference repository design (RHO-BWI-C-116, 1982) is 50% crushed basalt, 40% powdered bentonite, and 10% prilled bentonite.

10.3.1.7 Ventilation

With this particular concept, the panels are backfilled and bulkheaded after waste placement has been completed. A small amount of leakage through the bulkheads is allowed, in order to monitor air quality within the isolated panels. The two potential development options:

- Develop and store waste simultaneously
- Develop whole repository prior to waste placement,

result in two different ventilation schemes. In the first case, two separate ventilation circuits are required:

- Mine (development) ventilation system
- Confinement (storage) ventilation system.

Because the rooms will be developed only as they are required for waste placement and the panels are bulkheaded except during development or emplacement, the airflows required in the two ventilation circuits will remain constant over the life of the repository.

If total repository development precedes placement, only one ventilation circuit is required. Panels will be bulkheaded after development and reopened immediately prior to waste placement to economize in the ventilation system. Because panels are open and ventilated only during development and placement, the required airflows should not vary significantly.

In the summer, the intake air may require precooling to maximize the convective heat removed from the rock. In winter, the intake air may need to be heated to ensure that the temperature exceeds 37°F to prevent icing. Heating could best be accomplished by extracting heat from the exhaust air using heat exchangers.

10.3.1.8 Retrieval Systems

Title 10, Part 60 of the Code of Federal Regulations (10CFR60) requires that repository operations be designed so that any or all of the waste could be retrieved on a reasonable schedule "Full Retrieval" (sometimes termed "Mass Retrieval") is removal of all waste. However, from time to time, retrieval on a limited basis may become necessary. For example, a few canisters, a single room, or a single panel may need retrieval. This scenario is designated as "Local Retrieval."

In addition to providing multiple barriers in the hole, the storage position, described in Section 10.3.1.4, has been designed to facilitate retrieval. Since storage rooms will be backfilled, they may or may not be precooled after removal of the bulkheads. Precooling of heated, placed backfill has not been suggested by DOE in the reference design; however, boreholes or pre-placed pipes could be used to circulate air or high heat-capacity fluids to cool the backfill. This is time consuming, but could be done. Equipment designed for high temperature operation during remining of hot backfill will be necessary for retrieval without precooling. The transporter (Figure 10.3.4) used to place canisters in the hole could also be used for retrieval after remining and precooling, provided that the canisters remain intact. The rubber-tired machine is powered by a 300 HP diesel motor and has a net vehicle weight of 39 tons. It has a track width of 8.5 ft and a wheel-base of 20.5 ft. It has two operator cabs, one at each end, facing in opposite directions.

The order of operations for retrieval using the transporter after cooling, remining, and resupporting is (Table 10.3.1):

- The floor shield is placed over the storage hole
- The plug housing is placed over the floor shield
- The doors in the floor shield are opened and the storage hole plug is removed and stored in the plug housing which is rotated away from the hole after the floor shield doors have again been closed
- The transfer cask is lowered into position over the floor shield
- The doors on the floor shield and transfer cask are opened

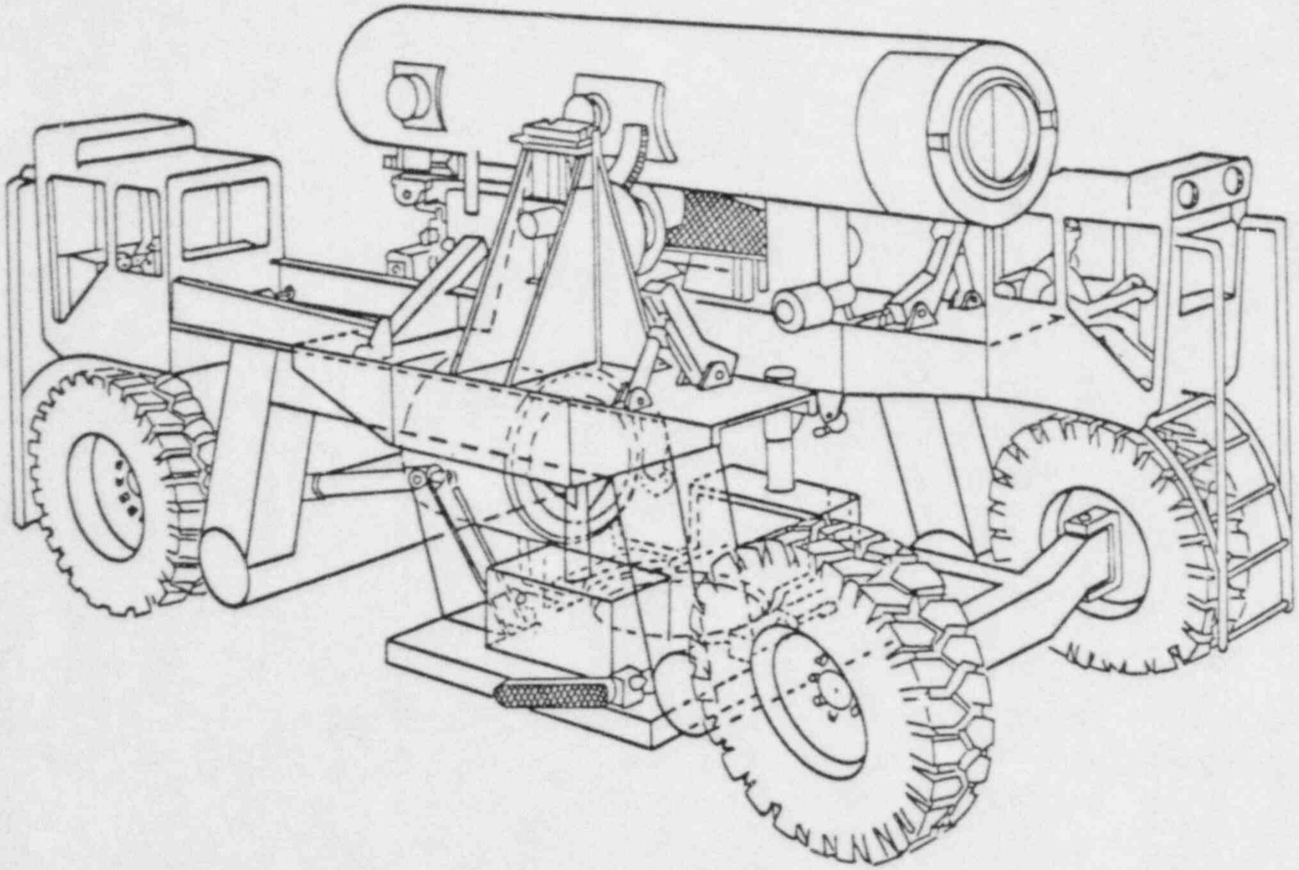

Figure 10.3.4 Transfer cask transporter.
(RHO-BWI-C-116, 1982)

- The grapple in the transfer cask is lowered to engage the top of the waste package

- The waste package is hoisted into the transfer cask

- The transfer cask shield doors and the floor shield doors are closed and the transfer cask is lifted and rotated to the horizontal traveling position

- The plug housing is placed over the floor shield

- The door on the floor shield and plug housing are opened and the plug replaced in the hole

- The doors on the floor shield and plug housing are closed and the floor shield and plug housing moved to their traveling positions.

10.3.2 Retrieval Impacts on Repository Systems

As mentioned, the backfill and surrounding rock may be precooled by using cooling fluids circulating in boreholes or pre-placed pipes. However, the canister will remain hot in the hole.

10.3.2.1 Excavation Systems

When panels are backfilled as soon as waste placement has been completed in the panel, canister retrieval requires mining the backfill. The factors which affect mining of the backfill include:

- Strength and density of the backfill

- The temperature of unprecooled backfill which may be as high as 300°F

- The probable occurrence of superheated water in the backfill

- The condition of the roof and roof support

- The depth of the canisters below the floor.

As retrieval can occur at any time up to decades after start of waste placement in the repository, the actual temperature encountered in the backfill at the time of retrieval depends on the number of years which have elapsed since waste was emplaced in the particular panel. The worst case would be full retrieval after say 50 years with retrieval in the reverse order to emplacement. The last panel would be retrieved about 70 years after emplacement assuming retrieval requires the same length of time as emplacement. The maximum temperatures in a panel would occur about 50 to 70 years after emplacement (RHO-BWI-C-116, 1982). The high temperatures, which may approach 300 °F, would result in cementation and chemical alteration of the backfill. However the compressive strength attained as a result of cementation is assumed not to exceed 1,500 psi, the strength of a weak concrete. As a result, mining of the unprecooled backfill could be performed using continuous miners or roadheaders. There are two possible approaches for mining the backfill:

- Full-face advance
- Pilot and slash (pilot heading and second pass).

Each option will be considered separately.

10.3.2.1.1 Full-Face Advance

A full-face advance has the advantage of access to the equipment for routine maintenance or repair since the heading as re-excavated is larger than the equipment. Through careful mining, disturbance of stored canisters and existing roof support can be minimized. Drift dimensions are amenable to mining backfill with single head roadheaders emptying into shuttle cars dumping onto conveyors. Roof scalers will be needed to clean roof and side walls of unmined backfill. Drift dimensions provide adequate clearance and should not inhibit equipment operations.

10.3.2.1.2 Pilot and Slash

A pilot drift can be advanced first either by continuous miner or a tunnel-boring-machine (TBM), assuming a pilot drift of 8 ft x 8 ft. When the pilot drift has holed through, the panel can be precooled to dissipate the bulk of the heat, until the second pass of backfill removal is practical. The pilot drift technique could utilize a TBM and similar associated rock handling equipment mentioned.

The pilot and slash method presents several disadvantages. Mining the pilot is a confined operation and encountered temperatures could be detrimental to equipment and personnel. Protective clothing will be required. Remote control mining may be the only alternate method. Another disadvantage is if the machine breaks down and must be repaired in place, accessibility is minimal and heat will impair maintenance and safety. Also, vapor or steam pressure, if present from backfill moisture, can create a hazard in pilot drift development. The second development pass would necessitate another piece of equipment for optimum efficiency.

While remining, in order to avoid disturbing canisters, care must be taken to protect the shielding plug grapple knob which is flush with the floor level. Overmining only a few inches into the floor will damage grout, floor ring, and parts of the shield plug as shown in Figure 10.3.3. The potential for damage is greatly increased if floor heave has taken place.

To avoid damage, a saw cut may be advanced just over the canister row center line and ahead of remining. Material under the cut line but over the storage holes can be "dentally" excavated after advance of the roadheader.

10.3.2.2 Equipment Systems

10.3.2.2.1 Remote Control Systems

Remote control mine haulage systems have been placed in many applications throughout the world in recent years, most notably by ASEA of Sweden. Control equipment is 10 to 20% of the cost of new haulage equipment. Rail systems are more popular although truck trolley systems are being used with success (for example, Sherritt Gordon Mines Ltd., Manitoba). For haulage, remote control is a feasible alternative, but for excavation, the technology is not fully developed and successfully implemented.

The pilot drift development would be in an environment where remote control systems could be beneficial because of heat and the possible presence of radionuclides. Personnel could operate equipment from safe areas, and productivity would be greater. The greatest disadvantage is unexpected machine repair. If the TBM were to break down while in place, the environment would prohibit retrieval except by remote control methods, or by personnel outfitted in climate-controlled suits. Remote control systems may be promising, but the present level of technology is low. Particular areas of concern are the guidance system to keep direction control, system dependability, operator visibility, and handling trailing cables (Gent, 1975).

10.3.2.2.2 High Temperature Concerns

Areas of concern in equipment systems are heat effects on hoses, cutting bits, fittings, and tires. The following limitations and equipment availability demonstrate the thermal effects on equipment:

- Carbide bits can withstand the anticipated rock temperature of 300°F

- The roadheader will likely need a transmission oil cooler to cope with high ambient temperatures

- Hydraulic hoses with elastomer tube, single wire braid reinforced and covers are available to withstand temperatures of 300°F

- Steel fittings are available with special "O" ring seals for 300 to 400°F.

Tire considerations are more complex. The roadheader can be crawler-mounted, so tire problems would apply to shuttle cars and roof scalers. Tire manufacturers state that the internal air temperature of the tire must be less than 234°F for safe operation regardless of the rubber compound or number of plys in ther tire construction. Internal temperature depends on load, time of travel, grade, speed, ambient temperature, and length of travel (Wallgard, 1978). The use of rubber-tired vehicles should not be automatically ruled out, because they will be in face areas for brief periods while loading, and will generally travel in well ventilated drifts. However, detailed study is required.

Rubber-tired equipment can be utilized for development mining and canister storage operations, but, because of heat limitations, may not be applicable for waste retrieval operations. Although the rock temperature is precooled to 125°F, the tire interior temperatures may be appreciably higher. These conditions suggest if canister emplacement and retrieval operations are to be done with the same equipment, a rail or crawler system may be necessary. Rail systems probably would not be practical due to road bed preparation and construction time. Rail haulage could be used to haul development rock to the shaft crusher and loading pocket. However, to maintain flexibility and to cope with the ambient heat problems, the use of crawler equipment would be best.

"Tires" as designed and used in the Apollo lunar landing program by the National Aeronautics and Space Administration for the "Lunar Rover" cars may be usable in the backfill remining environment. These tires consist of open metal interwoven laths that are as deformable as a rubber tire, but are heat-resistant.

10.3.2.2.3 Equipment for Retrieval

Provided canisters have not been breached, a crawler-mounted transporter used to emplace the waste can be used for retrieval, once the backfill has been removed and the room precooled. The canister may be hot, but its lifting and incorporation into the transporter should not provide any special difficulties.

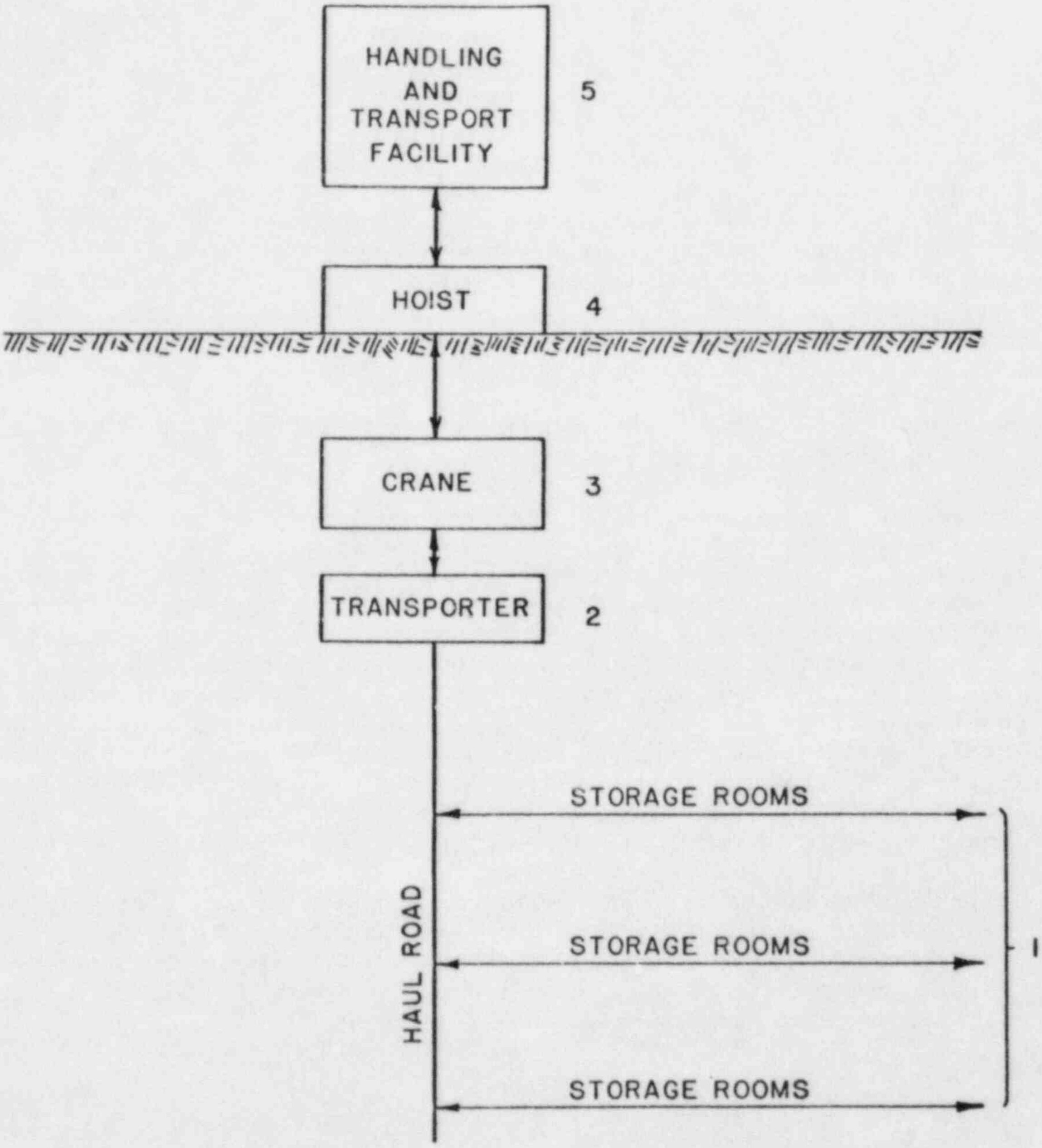

Figure 10.3.5 Schematic of waste handling operations.

Local retrieval of canisters for any reason, must take place concurrently with storage operations. Unless new equipment is obtained for the task, the storage equipment will have to be used slowing the normal storage rate. Retrieval of breached canisters will require "hot cell" or shielded equipment along with decontamination equipment in the storage area. Transporting the canisters to the surface will require use of the crane (3), hoist (4), and surface handling facilities (5)as shown in Figure 10.3.5. These systems will be unable to perform their normal operation for handling canisters and a delay repository storage activities.

Full retrieval of canisters can be planned systematically for a full storage room or full repository, starting with the oldest storage rooms. Because the same type of handling equipment will be used for the full retrieval operation, an operating schedule can be defined. If any canisters are breached, the retrieval will be more complex due to contamination. Special equipment will be used for the life of the breached canister retrieval operation. Generally, a repository committed to one operation at a time makes a much more efficient operation than if local retrieval is concurrent.

The transporter is about 8 ft wide, the storage panel is 14 ft wide, leaving 3 ft clearance to the rib on each side of the vehicle. Transporter travel is over the centrally placed row of holes, straddling them with the tires. The inside track of the vehicle is 6 ft, the holes to be straddled are 4 ft leaving 1 ft clearance on either side. Since it is unlikely that the transporter would follow a precisely straight and centered path, tires will at times run over floor rings and hole plugs. Since, however, the pressure exerted by a transporter tire would be about 70 psi, such events will do little damage to the holes.

Retrieval operations are detailed in Table 10.3.1. The lifting operations may be extremely difficult if the canister (especially a hot canister) binds against the hole lining - a potential situation if any lateral rock movement has occurred.

The fill in the hole lining can absorb some rock deformation and resulting side pressure, but the limits must be adequately identified through testing. Radial pressure on the canister will develop due to hole closure. The frictional resistance to pulling the canister will be a function of this radial pressure.

10.3.2.3 Facilities

The most important effects of the storage and retrieval concept on repository facilites are:

- The waste handling shaft will be required for hoisting transport casks containing retrieved canisters

- A system is required for disposal of the excavated backfill, especially if contaminated.

Assuming transport casks keep radiation levels within acceptable limits and that dispersal of radionulcides from breached canisters is prevented, the impact of hoisting casks containing retrieved canisters is minor. In the case of local retrieval while placement operations are still in progress, a cask containing a canister for placement is likely to be descending while a cask containing a retrieved canister is being hoisted. This hoisting process is fairly common practice in mine shafts where the conveyances are "balanced" cages.

Disposal of the excavated backfill represents a more difficult problem. If the backfill is contaminated, special handling and disposal procedures are required. Backfill that is not contaminated could be used in a panel in which storage is nearing completion (or has recently been completed) provided the heat has not caused detrimental chemical cementation of the backfill. If the excavated backfill is blocky as a result of thermal cementation, crushing will be necessary before reuse.

If the backfill is to be hoisted, the basalt handling shaft must be used. The shaft will require ventilation by the confinement ventilation system while backfill is being hoisted. If repository development has been completed no problem results from hoisting the backfill. Because retrieval could be required before development has been completed, logistical problems regarding the shaft and the ventilation systems could result. Muck hoisting shafts are generally exhaust air systems, because hoisting muck is a dusty operation and no miners need travel in the dusty, warm, and polluted exhaust air. When hoisting excavated backfill, the basalt shaft would be a confinement exhaust shaft and would require a High Efficiency Particulate Air (HEPA) filtration system in the event of radionuclide release. One option is to have the HEPA filtration system underground near the shafts rather than in the waste handling and confinement exhaust buildings.

10.3.2.4 Ventilation Requirements

As panels in which storage has been completed are backfilled, ventilation is required only in areas where operations are active. Thus airflow requirements are minimized. However, storage, backfilling, remining, and local retrieval could be required simultaneously so that while confinement airflow requirements are minimized, they are greater than if rooms were bulkheaded but unbackfilled. Assuming 25,000 cfm for the waste storage area, 8,000 cfm for precooling for storage 41,000 cfm each for storage and backfilling operations, 30,000 cfm for remining, 144,000 cfm for precooling prior to retrieval, and 15,000 for short-circuiting and recirculation, a total confinement airflow of 304,000 cfm will be required.

Retrieval operations would have to be carried out after the panel has been precooled because accurately positioning the transporter over the canister by remote control is not practical. The airflows necessary for retrieval are dependent on cooling requirements. The cooling requirements depend on the ambient temperature which is a function of the length of time since emplacement. Studies are required to predict the temperature in the backfill after decades of emplacement.

Once the backfill has been removed or boreholes or pre-placed pipes cleared and a path is available for ventilating air, precooling can begin. In the design report (RHO- BWI-C-116, 1982), precooling is assumed to be carried out in a maximum of 9 days. The precooling time period is based on a literal interpretation of 10CFR60 which requires full retrieval in the same overall time period as construction and waste emplacement (10CFR60. 111(a2)). If the 9-day period is to be met, three factors are important to design of the cooling and ventilation system:

- The temperature of the rocks surrounding the opening
- The desired air temperature
- The air velocity for efficient convective heat extraction.

As discussed in the previous paragraph, studies are necessary to determine the temperature of the rock and backfill during the 50-year retrievability period.

The desired temperature of air entering a panel should be low enough so that it can pickup heat while passing through the room, yet not rise above a limit (106°F) which would endanger the workers' health in the case of an emergency. If the calculated rock temperatures are greater than those in the design report, the 144,000 cfm airflow estimate for precooling given previously may not be adequate.

If retrieval does not take place until after development has been completed, the mine ventilation system could be integrated with the confinement system. HEPA filters must be installed at the Basalt Handling Shaft in the mine exhaust circuit. Once the rock temperature has been determined, calculations are required to find the airflow necessary to cool the rock to 125°F in the planned 9-day precooling period using inlet air having a dry bulb temperature of 80°F.

10.3.2.5 Backfill

An assessment of the impacts of retrievability on backfill necessitates a discussion of fill material properties. Fill material suggested in the conceptual design report (RHO-BWI-C-116, 1982) consist of a mixture of 50% crushed basalt, 40% ground bentonite, and 10% prilled bentonite. More than likely, the grain size distribution for crushed basalt will extend finer than the No. 200 sieve. Therefore, we need only to establish the upper bound (that is, the crushed basalt is expected to pass a standard 3-in.-sieve). Material properties which affect backfill performance and retrievability include:

- High water sorption capacity and swelling pressure
- Low hydraulic conductivity
- High thermal conductivity
- High chemical, physical, and mechanical stability
- High ion sorption and exchange potential.

The inherent structure of bentonite allows absorbtion of water and swelling to over 7 times its dry weight beyond which bentonite starts to flow. If bentonite is confined and no volumetric expansion is allowed, a maximum swelling pressure of 218 to 725 psi may develop, resulting in decrease in air voids in the backfill and low hydraulic conductivity (RHO-BWI-ST-7, 1980). Confinement may be achieved by filling the rooms at a high bulk density (about 130 pcf) and subsequently sealing the rooms with bulkheads. The high placement density along with the inherently low permeability of bentonite would give the fill a hydraulic conductivity of 6.56×10^{-11} ft/s. This value is low enough for repository conditions.

The fill mixture exhibits a thermal conductivity of approximately 1.2 Btu/hr-ft-°F (RHO-BWI-C-116, 1982) which is probably sufficient to restrict temperature rises in a repository room. High temperatures tend to drive moisture away from bentonite in the form of vapor or steam, reducing the thermal conductivity. Under confinement, vapor pressures within the sealed rooms may be high enough (about 1,600 psi) to prevent steam formation (RHO-BWI-C-116, 1982). Steam will form once the bulkheads at room entrances are breached for remining, creating difficult conditions. Presence of a certain amount of water (8 to 10%) aids backfill performance, but adversely affects retrievability. Information supplied by Federal Bentonite suggests that bentonite structurally degrades beyond 1,117°F. The CDR indicates bentonite degrades at 212°F. Repository temperatures exceed the temperature limit in the CDR but not the 1,117°F indicated by the manufacturer. Behavior of the bentonite at elevated temperatures is an area requiring further extensive evaluation.

The foregoing discussion is based on presently available information, however, the actual performance of the backfill at elevated temperatures over a prolonged period of time cannot be determined without in situ testing.

Both crushed basalt and bentonite are considered to possess sufficient ion exchange capability to adsorb especially detrimental radionuclides. The most critical radionuclides with regard to radioactive pollution of the water supply, are cesium and strontium which can adequately be adsorbed by the fill.

Based on the above discussion, four scenarios of retrieval will be addressed in the following paragraphs to assess their impacts.

10.3.2.5.1 Retrieval at Start of Backfilling

Under unforeseen circumstances, retrieval may be necessary just before backfilling operations in a room or panel are scheduled to start. No problems are seen with this case. Continuation of development and storage operations will depend upon the reason for retrieval and whether full or local retrieval is undertaken. In the case of local retrieval it will be necessary either to procure new machinery for retrieval, or to curtail the rate of placement to accommodate retrieval operations.

10.3.2.5.2 Retrieval While Backfilling is in Progress

In this scenario, backfilling operations continue approximately concurrently with storage for about 20 years and retrieval may be necessary at any time during that period. The difficulties encountered in full retrieval will depend on the extent to which backfilling operations have progressed. If the retrieval decision is made in the early stages of filling, remining should prove relatively easy. The difficulties encountered in local retrieval will depend on the elapsed time since the room or panel was filled and hence the temperature of the rock and backfill.

Water which may be present in the fill may be released as steam due to the pressure drop when the bulkhead at a room entrance is breached. Whether the pressure release and steam formation will cause an outburst of fill material is not known. The accompanying dehydration result in breakdown of the fill into a powder thereby adversely affecting remining efforts. The backfill and water can potentially be contaminated due to radionuclide leakage and require special handling.

10.3.2.5.3 Retrieval Immediately after Backfilling is Complete

If retrieval takes place immediately following backfill completion, the concerns mentioned in the previous subsection will be further accentuated by higher temperatures and larger quantities of unprecooled backfill to be handled. As mentioned earlier, steam release when the bulkheads are breached may cause outbursts and breakdown of fill.

10.3.2.5.4 Retrieval at the End of Retrieval Period

All of the concerns discussed earlier will be significantly increased after decades, yielding the worst retrieval conditions. Whether the backfill will become saturated with water within decades is not presently known. If saturation does occur, apart from steam release when the bulkhead is breached, the bentonite may be in the form of a thixotropic gel and may be prone to flow.

As mentioned, the backfill may be precooled prior to remining, but this is time consuming and the technologies are as yet undefined.

10.3.2.6 Thermal Effects

The thermal effects associated with nuclear waste disposal in an underground repository have significant impacts on the retrievability of the waste. A number of thermal analyses have been completed by the Basalt Waste Isolation Project (BWIP) to determine the practical waste storage geometry and repository layout which will preserve the isolation capability of the host rock formation. Thermal effects can be divided into three distinct areas:

- Very-near-field effects which have the most direct impact on retrievability since elevated temperatures can lead to decrepitation of the borehole wall and binding of the canister

- Near-field effects which impact retrievability indirectly by increasing the potential for creating instability of the storage rooms

- Far-field effects which have minimal, if any, impact on retrievability since the stability of the entries and shafts would not, in general, be affected by the thermal loading.

Thermal effects of this storage concept have been determined by BWIP using the SUPER 5 and HEATING 5 computer codes and the assumed thermal loadings given in Section 10.3.1.5. Calculated peak temperatures in the repository for this storage concept, using an in situ basalt temperature of 134°F, are (RHO-BWI-C-116, 1982):

- Waste form: 572°F
- Bentonite: 392°F
- Basalt around canister: 392°F
- Entries and shafts: 135°F.

The above-mentioned temperatures are well within the maximum temperature criteria established by BWIP, which are as follows:

- Basalt: 932°F
- Bentonite: 572°F
- Entries and shafts:
  158°F - operational phase
  212°F - retrievable phase
  302°F - terminal phase.

The waste package is always in quasi-steady-state equilibrium with the surrounding basalt because the heat capacity of the waste package is small compared to that of the surrounding basalt. A maximum rise in the basalt temperature at the inside surface of the borehole of about 260°F is fixed by the history of the radionuclide decay heat released within storage holes and by the storage configuration. The peak temperatures in the repository at 50 years after initial storage are:

- Waste Form: 464°F
- Bentonite: 396°F
- Basalt around canister: 396°F
- Entries and shafts: 154°F.

These temperatures are well within the maximum temperature criteria which were established by BWIP for preventing hole decrepitation and preserving the integrity of waste isolation. By preventing thermal decrepitation and providing a storage sleeve assembly around the waste package, retrievability should be facilitate. The near-field effect of the temperature rise from 134°F to 154°F should still maintain a rock stress safety factor (RSSF) of over 2.0 (RHO-BWI-C-116, 1982). The only uncertainty is the degree of variability of rock strength in the repository, which may result in areas of local overstress where rock falls may occur. Since the rooms are open and ventilated, rock falls, if they occur, can be easily handled without affecting the retrievability of waste packages, unless the rock fall damages the floor ring. If a rock fall damages the floor rings, special provisions for retrieval or floor ring repair may be necessary.

10.3.2.7 Requirements for Special Equipment for High Temperature and Radioactive Environment

Precooling of the backfill by circulating cooling fluids in boreholes or pre-placed pipes may be done, but is time-consuming. However, the canisters will not be effectively cooled by this method and will remain hot for some time.

The lack of ventilation due to backfilling of the storage rooms will cause heat buildups over the storage period and compound the difficulty of unprecooled backfill mining. As discussed in Section 10.3.2.2 full remote control systems would be a viable alternative except the technology has not been fully developed or successfully implemented.

Successful application of semi-remote control excavation systems such as longwall shearers and continuous miners for underground coal mines has been demonstrated. In these cases, a cable or radio-remote control system places the machine operator about 25 ft away from the machine. Such systems have not been developed for the hard rock industry.

Semi-remote systems may be feasible for mining the backfill if programed for the particular excavating equipment. The operator can be in the confinement intake and upstream of the machine. However, heat could still be a problem because the rooms are 3,600 ft long.

An inherent problem associated with full-remote or semi-remote systems is maintaining accurate vertical and horizontal control. In coal mining applications "sensitized" picks have been used to differentiate between the coal seam and the strata overlying and underlying the coal seam to maintain vertical control. For the proposed repository concept, differentiation between backfill and intact rock will be different and therefore use of the sensitized pick concept for vertical control will be difficult. Consequently, canister breaching is a distinct possibility and would require decontamination chambers for affected equipment and personnel .

10.3.2.8 Ground Support

As discussed in Section 10.3.1.3, The Q-system (Barton, Lien and Lunde, 1974) has been used to determine ground support requirements. Because the Q-system data base does not include experience similar to repository conditions, the designers have specified ground support in excess of that required by the Q-system.

Resin grouted bolts are not acceptable for use in the repository rooms. The rock temperatures of 212°F and greater exceed the maximum service temperature of resin grout (Weast, 1983). Experience is lacking regarding the stability of bolts for a period of decades. Experience with concretes at elevated temperatures (Troxell, Davis, and Kelly, 1968, p. 248-250) indicates that for simple temperature increases to 212°F relatively minor strength losses occur due to loss of both free and combined moisture. Above 212°F more significant strength losses occur in the repository maximum temperature ranges up to, say 400°F, but amount to 10% reduction, or less. However, if the concrete is heated and then cooled, strength losses approach 25% or more at 400°F. Two considerations may minimize such strength losses. Using lean mixes and limestone, expanded slag, or similar aggregates minimize heat effects in this range. We suspect that the important cement grout, shotcrete, and concrete considerations for repository temperatures hinge on minimizing the water content and matching the thermal expansion and chemistry of cements and aggregates. Concrete also has a coefficient of thermal expansion intermediate between that of steel and basalt limiting difficulties resulting from differential thermal expansion.

In any case, over a decade-long period some deterioration of the rock reinforcement can be expected, and minor roof instability may result. In areas of deterioration, renewed rock reinforcement or support must be provided prior to commencement of canister retrieval operations. With backfilled rooms, the remedial measures are carried out after the remining and precooling of the rooms. A Load-Haul-Dump vehicle and a roof-bolting jumbo are required for support.

Early in the repository life, seepage of ground water towards the openings will occur. With time, the seepage could result in a build-up of pore water pressure on the shotcrete liner. Rock mass grouting at the time of construction of the rooms could minimize seepage and chemical deterioration.

Despite grouting efforts and shotcrete application to the repository walls, some ground water is likely to enter the repository backfill during the operating period. Backfill conditions could reasonably be expected to remain near the placement moisture content but some allowance for the presence of minor amounts of water during remining would be prudent. The water inflow quantity postulated would partially saturate the backfill and possibly create pockets of steam or hot liquids under pressure.

10.3.2.9 Instrumentation

The performance of the repository has to be monitored to ensure the safety criteria are not violated and the isolation capacity is maintained. The retrievability option mandates significant changes in selected parameters or deviations from expected behavior be detected. When they occur, steps must be taken to correct the problem or retrieve the waste to the surface. Categories requiring monitoring are:

- Hydrogeologic - water inflow
- Thermal - heat buildup
- Mechanical - stress buildup, rock deformations, and rock instability
- Radiological - activity levels.

A monitoring program of subsurface conditions is limited by the bulkheads and backfill. Most monitoring will be made by remote sensing measurements. Visual inspection and "hands-on" measurements are preferable to remote monitoring because instrumentation available at present is not reliable for periods in excess of about a decade, especially under the thermal conditions associated with the repository rooms. As a result, an experimental panel will be provided in the repository in which extensive verification and confidence testing for the remote sensing equipment will be performed. The panel will also provide an opportunity to study the reliability of instrumentation.

Thermal monitoring will primarily consist of thermocouples embedded in boreholes placed at intervals along storage rooms. Thermocouple signals will be collected at several locations outside the storage room and relayed to a central control console to detect abnormalities.

Hydrogeologic monitoring will consist of measuring the pressure of water near the storage rooms, in various accesses, and in basalt flows and interflows. High-precision, durable, pressure transducers will be placed between packers in boreholes.

The convergence of pre-established points in accessways will be measured. At a few selected locations in the main entries detailed evaluation of rock stability will be made using stressmeters and multiple position borehole extensometers.

Ventilation conditions in the repository will be monitored to detect radiation levels, fire and smoke emergencies, as well as ventilation blockages caused by rock falls. Mobile radiation and thermal sensors in ventilation airways will permit continuous monitoring from a main surface control console. Flow direction, pressure, differential pressure, and temperature, will be monitored.

The retrievability requirement mandates monitoring of the repository for perhaps decades after initial waste placement. The following steps need to be taken to ensure the reliability of instrumentation placed in the repository:

- Develop stress meters, multiple position borehole extensometers, piezometers, thermocouples, and ventilation instrumentation that will maintain accuracy in the hot and humid environment expected in a repository
- Provide extensive verification of the instrument reliability in the repository experimental panel
- Ensure that repository inspection at predetermined intervals can be performed by robots or by personnel in air-conditioned suits or vehicles.

10.3.3 Adequacy of Incorporated Retrieval Systems or Allowances

10.3.3.1 Local Retrieval

Local retrieval may be necessary for quality assurance, quality control, or due to a detected or suspected radionuclide release. A manufacturing error, for example, could have caused premature breakdown of overpacking for some canisters in a storage room. Rooms that have been adequately remined allow using the same equipment for emplacement and retrieval procedures. Most likely the canister transporter and "hot cell" equipment will be necessary. Equipment travel in a storage room creates a hazardous condition. Local retrieval involves recovering one or more canisters in a storage room, and traveling to the designated canister means approaching very near or running over surrounding canisters. The concern is discussed in detail in Section 10.3.2.2.3. Because of storage room dimensions and equipment clearances, the storage safety of canisters can be impaired by stresses induced from the presence of heavy equipment during remining or retrieval.

Local retrieval will encompass four main phases: precooling, remining, resupport, and canister retrieval. Remining begins with removing the bulkhead. A drilling jumbo and Load-Haul-Dump unit will be required to remove the bulkhead and debris. To remine unprecooled backfill requires high temperature remote-control equipment. The remining can be by full-face advance, pilot and slash, or hydraulic methods. Handling the hot backfill is within current technology but imposes an additional load on the material handling system. Present technology does not encompass adequate equipment to perform the remining under repository thermal conditions. Precooling rooms after remining hot backfill requires an increase in the confinement ventilation capacity compared to that for storage and backfilling only. Rock bolters and scalers will be required to resupport the roof prior to canister retrieval. "Hot cell" equipment will be required for handling breached canister. Interfaces in the shaft area will delay storage operations during canister retrieval. No equipment has presently been designed to overcore a 48-in.-diameter hole in repository environments. Overcoring will be necessary if the canister to be retrieved has broken. Retrieval equipment including bolters and scalers should be crawler mounted to withstand the elevated temperatures. Even with incorporation of equipment to breach the bulkhead, to support the roof and withstand the elevated temperature, the retrieval system for intact canister is inadequate due to a lack of present technology with regard to remining backfill by remote control at high temperatures. Retrieval of broken canisters by overcoring also requires further development to assure retrievability.

10.3.3.2 Full Retrieval

Full retrieval of waste canisters will need planning and preparation. Full retrieval planning is facilitated because all repository resources can be committed to the operation. Underground storage may prove unsatisfactory, leading to repository abandonment. Nevertheless, full retrieval will require special equipment if the reasons for retrieval interfere, such as excessive rock movement crushing canisters, or rapid deterioration of rock causing need for roof support and scaling equipment.

Precooling of the backfill before retrieval can be accomplished with circulating cooling fluids or air in boreholes or pre-placed pipes, but would be time consuming. The canisters would remain hot for some time, as they would not be efficiently precooled by this method.

Full retrieval expands the scope of the problems and facilities detailed for local retrieval. Equipment for removing the bulkheads and resupporting the roof will be incorporated. The present technology lacks equipment capable of remining the backfill at high temperature by remote control. Handling and storage of the remined backfill during full retrieval requires a separate materials handling system, room for storage and possibly hoisting facilities. Clearance and alignment difficulties are expected for the mining, material handling and retrieval equipment. "Hot cells" must be incorporated to handle contaminated canisters and equipment. Retrieval of a breached or broken canister requires overcoring equipment which requires development. As in local retrieval, equipment working in the rooms for extended periods must be crawler-mounted. Even by including proper equipment for bulkhead removal, backfill handling and storage, and roof resupport and the retrieval systems are inadequate due to a lack of high temperature remote control mining equipment in present technology. Development of this specialized mining technique and of a large diameter overcoring transporter are required to make the incorporated systems adequate for full retrieval.

10.3.4 Concerns

10.3.4.1 Technological Concerns

Precooling of heated rock masses by circulating fluids has not been demonstrated. Freezing soil for excavation and heating roadways for ice removal are not similar in that the high initial temperatures are not present.

As discussed in Section 10.3.2.1, it may be necessary to mine backfill in a high temperature environment. Because of the heat as well as potential radionuclide release and safety operational problems, this mining is best carried out by remote control. However, no true remote control mining systems exist. Remote control haulage systems exist using unit trains operating on closed-circuit track. Mucking units have been developed that are controlled by radio commands from an operator located a short distance away within sight of the unit. U. S. Bureau of Mines sponsored research into the feasibility of remote control mining equipment has indicated much work remains to be done and satisfactory systems have not been developed.

Alternatively, one could consider hydraulic mining of the fill in a manner similar to the systems employed in some coal mines in Canada, USSR, and Japan. A problem with the hydraulic method, however, is that the fill will contain bentonite which absorbs water. Use of very large quantities of water might cause the bentonite to flow. Testing is required in order to determine if the method could be effective. In addition, existing systems are not truly remote because the operator is within 100 ft of the face.

Another concern is the effect of the hot environment on the materials used for ground support. As discussed in Section 10.3.2.8, grouted bolts and shotcrete have been proposed for the ground support. While polyester resin is commonly used to grout bolts, the expected repository temperatures exceed the maximum service temperature of resin grout. Use of cement mixtures in the shotcrete and grouted bolts that minimize heat effects (Section 10.3.2.8) should ensure that the support systems will be effective under repository conditions.

10.3.4.2 Safety Concerns

Remining of the fill will expose the roof and allow any weakened areas to fall. If the falls occur near the face, remining equipment could be damaged. Rock falls could be minimized by mining a pilot heading and then rehabilitating the support, as required, before removing the remainder of the fill.

Rockfalls are possible because the effectiveness of grouted bolt and shotcrete support systems for decades is not known. Such systems have only been in common use for about 25 years. Because the rooms are backfilled, the support cannot be inspected. If deterioration has occurred, repairs using bolters and scalers cannot be made until the backfill has been removed and the room has been precooled. As previously stated, falls could occur before the roof can be rehabilitated. During precooling some thermal spalling is likely. During the bulkhead removal, steam previously trapped inside the room may escape, presenting a safety hazard to the personnel and equipment removing the bulkhead.

10.3.4.3 Radionuclide Release Concerns

One of the possible reasons for retrieval is failure of the waste package, with consequent release of radionuclides. Gaseous and volatile radionuclides may be released into the emplacement hole while soluble radionuclides may be carried away by any water that is present in the emplacement hole. Removal by aqueous solution, requires the presence of water in liquid form; that is, its temperature must be less than the boiling point for the repository pressure conditions.

10.3.4.3.1 Releases into Air

The gaseous and volatile isotopes which could be released by a breached canister are hydrogen-3 (tritium), carbon-14, and krypton -85. The quantity of krypton-85 is large compared with that of either tritium or carbon-14. In addition, the carbon-14 must be in a form that leads to volatile species upon reaction with water in order to be of concern. It is assumed that one-tenth of the krypton-85 is sufficiently near an exposed surface to be able to leave the fuel. If a breach occurs, the concentration of krypton-85 and tritium in air must not exceed 10 nCi/liter and 5 nCi/liter, respectively, in order to satisfy 10CFR20. (The MPC limits are defined in metric units. The equivalent limits in customary units, for reference, are 0.35 nCi/ft^3 and 0.18 nCi/ft^3, respectively.)

If storage hole plugs are gas-tight, release of gaseous radionuclides from a breached waste package will occur at retrieval. Otherwise, the radionuclides will leak through the plug into the backfill pore spaces. Radionuclides contained in the pore spaces would be liberated as the backfill were removed. Since the quantities of air provided for remining are limited to what can be supplied in a duct, the airflow into which the gases would be release would likely be less than 50,000 cfm, and so dilution of the radionuclides to the maximum permissible concentrations (MPCs) given in 10CFR20 could require up to several hours. During this time, personnel should not be present.

Release occurring at retrieval can be avoided by having radiation sensors in the holes. The gaseous radionuclides could then be drawn off prior to retrieval using millipore filters or a cryogenic absorption system, both of which fall within existing technology. Where the radionuclides are in the backfill, warning of their locations cannot be provided. Therefore, as a precaution remining should be by remote-control (or semi-remote control if sufficient shielding for the operator can be provided within view of the face).

10.3.4.3.2 Releases into Water

With regard to the movement of radionuclides by aqueous transport, this, as previously mentioned, requires that water be in the liquid state. At a pressure of 1,600 psi, the boiling point of water is about 600°F, and since the rock and backfill temperatures will be 300°F or less, the pore water will be in liquid form within the backfill. Upon remining, pressures are reduced to atmospheric and the water vaporizes.

If water contacted a breached canister, the rate of dissolution would vary widely with the water composition and temperature. For a typical rate of 0.0000264 lb/day, the solution water would contain about 0.25 mCi/lb of water and one pound of this solution would generate about 0.1 mR/hr at 4 ft. Pore spaces in the backfill would also contain small amounts of gaseous radionuclides which would be liberated upon mining.

Hence water intrusion would provide a good index to failures but would provide a good index to failures but would not by itself introduce significant hazards to the operations (Post, 1982).

10.3.4.3.3 Radiation Detection Standards

The radiation levels measured during retrieval operations are not exceptional so that the system standards used in the nuclear industry would prevail. Lower limits 0.1 mR/hr and upper limits of a few kR/hr and in the storage holes will be required. This system should be capable of detecting krypton-85 levels below 100 pCi/liter (2.6 pCi/ft^3)

10.3.4.4 Operations Concerns

Retrieval of breached canisters will require either transfer casks equipped with internal shielded sleeves or "hot cell" equipment. Since detection of breached canister will not be practicable prior to attempting retrieval shielded equipment should be used for all retrieval. In the case of canisters which have split into more than one piece, overcoring the hole would be the most practical method of retrieval. Overcoring will require the room to be at least 22 ft high in order to provide sufficient clearance.

To cool the rooms from about 300°F to 125°F will require large capacity cooling units, which occupy a fairly large space. The units will limit the free clearance at the room entries. Also, cooling units have a finite life and become less efficient with time.

Precise positioning of the transporter over the holes will be difficult. Positioning would be simplified if transporters were rail mounted.

The coordination of backfill handling during retrieval will likely impose an operations problem on the material handling system. The backfill will require a storage location after remining or prior to replacement. Contaminated backfill will require special handling to avoid contamination of the usual material handling system.

10.3.4.5 Other Concerns

A fundamental concern related to a repository in basalt concerns the geologic/hydrogeologic uncertainty at the repository horizon. Among the concerns are the uniformity in thickness of the basalt flow, the uniformity of the jointing, the occurrence of faults, and the vertical and horizontal hydraulic conductivities. The exploratory programs planned (1983) by DOE (ES-I and ES-II) are intended to obtain as much in situ data as possible prior to License Application.

Another concern is the mechanism for and probability of canister breach. One possible mechanism is corrosion. The rate of corrosion will depend on the ground water. Another possible mechanism is attempted retrieval of a canister upon which the hole has closed. Assuming a canister has been breached, the level of radioactivity must be monitored and the activities of critical radionuclides, especially those that are very abundant (cesium and strontium) and gaseous (krypton-85, tritum, and iodine) must be predicted at various times up to decades after emplacement.

While not directly related to retrievability, the method of backfill placement postulated in RHO-BWI-C-116 has a number of problems, especially the means of placing fill in the top 10 ft of the heading. A more practical method than the method proposed would be to backfill the whole cross section pneumatically. A suitable pneumatic filling system would have the following characteristics:

- Capacity: 180 tph
- Maximum horizontal distance: 2,000 ft
- Blower horsepower: 710 hp
- Operating pressure: 13 psig
- Pipe diameter: 14 in. inside diameter
- Maximum material size: Passing a standard-3 in. seive
- Solids loading ratio: 7 lb solids/lb air.

The quality of the backfill in all cases of retrieval will have a direct effect on the retrieval systems.

10.3.5 Summary and Conclusions

The repository is located at a depth of 3,700 ft in the Umtanum Flow basalt of the Hanford Reservation, Washington. The repository will

consist of 22 panels divided by a central pillar into two areas having 12 and 10 panels, respectively. Each panel is divided into six rooms (14 ft wide, 20 ft high and 3,572 ft long) and joined by crosscuts at 890-ft-centers.

The waste packages, that consist of the carbon steel spent fuel canisters, graphite filler, and titanium overpack are placed in 4-ft-diameter sleeved holes, 12-ft on center in the floor of the rooms along the centerline. Based on a heat load of 1.74 kW/canister at the time of placement, the panel thermal load is 51.6 kW/acre. Backfill is placed in the rooms upon completion of storage in the room. Bulkheads are placed at the ends of the room to contain the backfill.

The retrievability requirement affects the repository systems as follows:

- Re-excavation system - The unprecooled backfill will require mining by either a full-face advance or a pilot and slash method, and either excavation method may require remote or semi-remote equipment as a result of high temperatures and limited available ventilation

- Equipment systems - Haulage systems during remining of unprecooled backfill will need to be remote controlled. Due to the elevated temperatures specialized equipment, including carbide bits, oil coolers, hydraulic hoses, and steel fittings will be required. Equipment working at or near the face will need to be crawler-mounted because the high temperatures will cause rubber tires to rapidly deteriorate. Even with precooling, rock contact temperatures will require crawler- mounted equipment for retrieval

- Facilities - Retrieval will result in the waste handling shaft being used to hoist transport casks. A separate materials handling system is required for disposal of excavated backfill. Special system requirements are necessary if the backfill is contaminated. The basalt handling shaft may be used to hoist backfill and would require a HEPA filtration system to prevent radionuclide release

- Ventilation Requirements - The ventilation airflows during retrieval are a function of the ambient rock temperature, the time since waste placement, and the required precooling temperature. Depending on these parameters, the design flow for precooling of 144,000 cfm may be inadequate

- Backfill - The condition of unprecooled backfill during retrieval is a function of the elapsed time and the backfill composition. The retrieval operation may encounter steam and unstable backfill depending on the hydrogeologic and thermal conditions. The backfill during retrieval will require material handling systems and an evaluation of the quality of the material for reuse or disposal due to contamination. Breached canister retrieval imposes additional requirements for the equipment systems, facilities system and the backfill handling system.

The concerns for the repository concept are summarized as follows:

- Technological concerns:
  - Development and implementation of remote control mining systems
  - Adequacy of the rock support system over a period of decades
  - Adequacy of existing equipment to retrieve breached canisters
  - Development and implementation of a precooling system which does not limit isolation or lead to untimely retrieval
- Safety concerns:
  - Rock falls during remining as a result of deterioration of the roof support system
  - Thermal spalling during precooling
  - Steam release upon breach of bulkheads
  - High temperature conditions during mechanical repairs to remote control equipment
- Radionuclide release concerns:
  - Canister breaches would result in release of gaseous hydrogen-3 (tritium, and krypton-85, and volatile carbon-14, of which the krypton-85 would have the largest concentration
  - Diluting krypton-85 to the MPC given by 10CFR20 could take up to several hours for release from a single breached waste package
  - The mechanisms for release of gaseous radionuclides from the storage hole to the atmosphere could be non-gas-tight hole plugs, streaming through the floor shield at retrieval and a gaseous transport (if hole liners corrode)

  - A system is required for detection of krypton-85 in ventilating air and in storage holes

- Operational concerns:
  - Detection and retrieval by overcoring of a breached canister
  - Small alignment tolerances requiring precise positioning of the transporter
  - Larger capacity heat exchangers limiting space in the room entrances
  - Coordination of backfill handling and storage

- Other concerns:
  - Geologic and hydrogeologic uncertainties
  - Undetermined probabilities and mechanisms for canister breach
  - Methods and details of backfill placing, especially in the upper 10 ft of a room
  - Unknown backfill condition and quantity over the repository retrieval period affects all retrieval systems.

The development and waste placement concepts for the repository have been sufficiently detailed in the various DOE documents. The backfill type and placement method lack adequate definition at this point. The condition, presence, and quality have a significant effect on the waste retrieval. The details of placement and quality will define the methods and hazards of remining. DOE has not suggested precooling the heated backfill to aid remining. The equipment used to mine the backfill needs further definition. Present technologies do not encompass equipment capable of remote control mining the unprecooled backfill at the temperatures expected in the repository. Further definition and confirmation is required in the areas of hydrogeology and geology, long term adequacy of roof support, detecting and retrieving breached canisters, and the probabilities and mechanisms for breach. The problems involved in mining and handling the backfill prevent the repository concept from meeting the retrievability requirements of 10CFR60. In order to meet the requirements, considerable development work in precooling backfill or in remote control mining is required.

10.4 Basalt Repository with Horizontal Hole Storage, Continuous Ventilation, and Permanent Closure Backfilling

10.4.1 Basic Information

The fourth repository concept is in basalt with horizontal storage holes in the pillars between rooms, continuous room ventilation after waste emplacement, and backfilling at permanent closure. This concept does not specifically appear in any DOE design but has been hybridized from several designs and EI projections in order to assess retrievability of a viable overall system.

10.4.1.1 Definition of Repository Concept

The host geologic medium is basalt. Waste packages will be placed in 24-in.-diameter drill holes in the pillars between rooms with six canisters per hole. The rooms will not be backfilled until repository permanent closure but will remain open and ventilated.

This concept is similar to the Preconceptual Design Report, (RHO-BWI-CD-35, 1980), except for the following features:

- The panels where waste storage has been completed will be open and ventilated rather than backfilled and bulkheaded
- The concept will require a confinement circuit airflow of about 12 million cfm, larger confinement entries and returns, and more and larger shafts than those described in RHO-BWI-CD-35.

The emplaced canisters emit heat which results in thermal loading in a panel of 150 kW/acre or 50 kW/acre for the entire repository area.

10.4.1.2 Geologic Environment

10.4.1.2.1 Rock Units

The proposed horizon for the nuclear waste reference repository in RHO-BWI-C-116 at the Hanford Reservation is the Umtanum Flow of the Grande Ronde Basalt. Recent (1982) core drilling in the vicinity of the Reference Repository Location for the Basalt Waste Isolation Project (BWIP), indicates the Umtanum Flow interior may thin. Until the final decision is made concerning which flow will be proposed for the repository, the Umtanum Flow will be assumed for design review purposes.

The Umtanum Flow, a single basalt flow, has a typical cross-section which consists of, in descending order, the flow-top, the entablature, and the colonnade. The repository would be located in the entablature, whose thickness in boreholes has averaged 150 ft. The Umtanum Flow basalt is black to dark green in color, extremely fine-grained to glassy in texture, and composed principally of plagioclase, clinopyroxene, and glass, with titano-magnetite and ilmenite as accessory minerals.

10.4.1.2.2 Rock Mass Properties

The rock mass properties of the Umtanum Flow are probably controlled by intraflow structures such as joints, vesicles, and flow-top breccias. Correlations of intraflow structures between 10 boreholes penetrating the Umtanum Flow (Myers et al., 1979) found a significant variation in the flow-top breccia thickness and columnar joint spacing. Rock mass properties can also be expected to vary. DOE designs anticipate a rock mass that responds well to tunneling, with minimal support required.

The mechanical and thermomechanical properties used for the conceptual repository design were based on generalized basalt properties. Most rock testing was performed on intact rock samples in the laboratory.

The lack of in situ rock mass data presently (1983) remains an issue to be resolved from further investigations at the Near Surface Test Facility (NSTF) and the future at-depth exploratory programs (ES-I and ES-II). Design parameters may be re-evaluated as data are developed from these test programs. Ranges for the properties based on data currently available are given in Table 10.4.1 (NUREG/CR-2352, 1982).

10.4.1.2.3 Hydrogeology

The hydrogeological data presently (1983) available do not fully define the ground water system. The data indicate that fractures and intraflow structures control the ground water flow at the repository site. The vertical hydraulic conductivities, as yet undetermined, strongly affect radionuclide migration into the accessible environment. Near-field ground water flow models which consider repository construction and waste emplacement are yet to be developed. The geochemical changes due to the introduction of nuclear wastes remain unclear.

The hydrogeologic deficiencies will be addressed by on-going exploration programs. Estimated preliminary hydrogeologic conditions for the Umtanum Flow are (RHO-BWI-ST-7):

Table 10.4.1 Range of Rock Mechanics Properties of Hanford Basalt (NUREG/CR-2352, 1982)

	Intact	Fractured	Estimated In Situ
Compressive Strength (psi)	5,400 to 60,000	0 to 44,000	-
Tensile Strength (psi)	1,000 to 3,500	0 to 1,000	-
Young's Modulus (psi)	8.0 to 14.0 x 10^{6}	-	0.8 to 1.4 x 10^{6}
Poisson's Ratio	0.5 to 0.35	-	-
Thermal Conductivity (Btu/hr-ft°F)	0.484 to 1.45	-	-
Specific Heat (Btu/lb-°F)	0.175 to 0.28	-	-
Thermal Expansion (/°F)	2.22 to 4.11 x 10^{-6}	-	-

Hydraulic conductivity:	10^{-6} to 10^{-8} fps; flow top
	10^{-10} to 10^{-13} fps; columnar zone
pH (at 149°F):	9.4 to 9.9
Eh:	-0.36 to -0.41 volts.

10.4.1.2.4 Seismicity

The proposed site is seismically quiet with only two Intensity VII (Modified Mercalli) earthquakes having been recorded since 1898. Seismic monitoring of the Columbia Plateau has determined that microearthquake (low magnitude) swarms typify the activity of the region (Myers et al., 1979).

10.4.1.3 Repository Construction and Layout

As shown in Figure 10.4.1, the repository will contain 23 storage panels, an experimental area, and a panel for storage of Low Level Waste (LLW) waste. Each panel (Figure 10.4.2) contains 30 storage areas driven perpendicular to a central panel access. Each storage area consists of a storage room with reaming rooms on either side. Each storage area holds 750 canisters within 125 boreholes, 174 ft long. The rooms are 575 ft long. The pillar surrounding each panel will be 164 ft thick between panels and 656 ft thick between the panel openings and the lateral access and return entries. Access to the panels is by main entries at either end (intakes at one end, returns at the other) which connect the storage panels with 5 shafts to the surface. Entries and rooms will be driven by drill-and-blast methods. Dimensions of the various facilities are given in Table 10.4.2. Because of ventilation requirements for an open repository, an extra ventilation shaft is required in addition to those detailed in RHO-BWI-CD-35.

Each of the 6 required shafts will have a different function:

- Personnel and materials (service) shaft
- No. 1 confinement air exhaust shaft
- No. 2 confinement air exhaust shaft
- Mine air exhaust shaft
- Basalt transport shaft
- Waste transport shaft.

The shafts will be sunk by conventional drill-and-blast methods and lined with a concrete/steel/concrete sandwich liner.

Table 10.4.2 Dimensions of Repository Facilities

Facility	Dimensions
Personnel and Materials (Service) Shaft	29 ft inside diameter
Basalt Transport Shaft	36 ft inside diameter
Waste Transport Shaft	36 ft inside diameter
No. 1 Waste Air Exhaust Shaft	36 ft inside diameter
Mine Air Exhaust Shaft	29 ft inside diameter
No. 2 Waste Air Exhaust Shaft	36 ft inside diameter
Central Panel Corridor	26 ft by 16.4 ft (lined)
Sublevel Rail Haulage Corridor	26 ft by 16.4 ft (lined)
Transporter Access	26 ft by 28 ft (lined)
Transporter Return	26 ft by 28 ft (lined)
Man and Supply Access	26 ft by 16.4 ft (lined)
Waste Air Return	26 ft by 16.4 ft (lined)
Rail Haulage Access	13 ft by 13 ft (lined)
Rail Haulage Return	26 ft by 16.4 ft (lined)
Rock Pass	7.5 ft by 16.4 ft by 29.5 ft
Panels	1,228 ft by 6,232 ft
Storage Rooms	31 ft by 16.4 ft
Reaming Rooms	9.8 ft by 16.4 ft
Rib Pillars	656 ft
Panel Pillars	164 ft
Room Pillars	174 ft
Storage Holes	24-in. diameter by 175 ft long
Storage Hole Pitch	8.4 ft

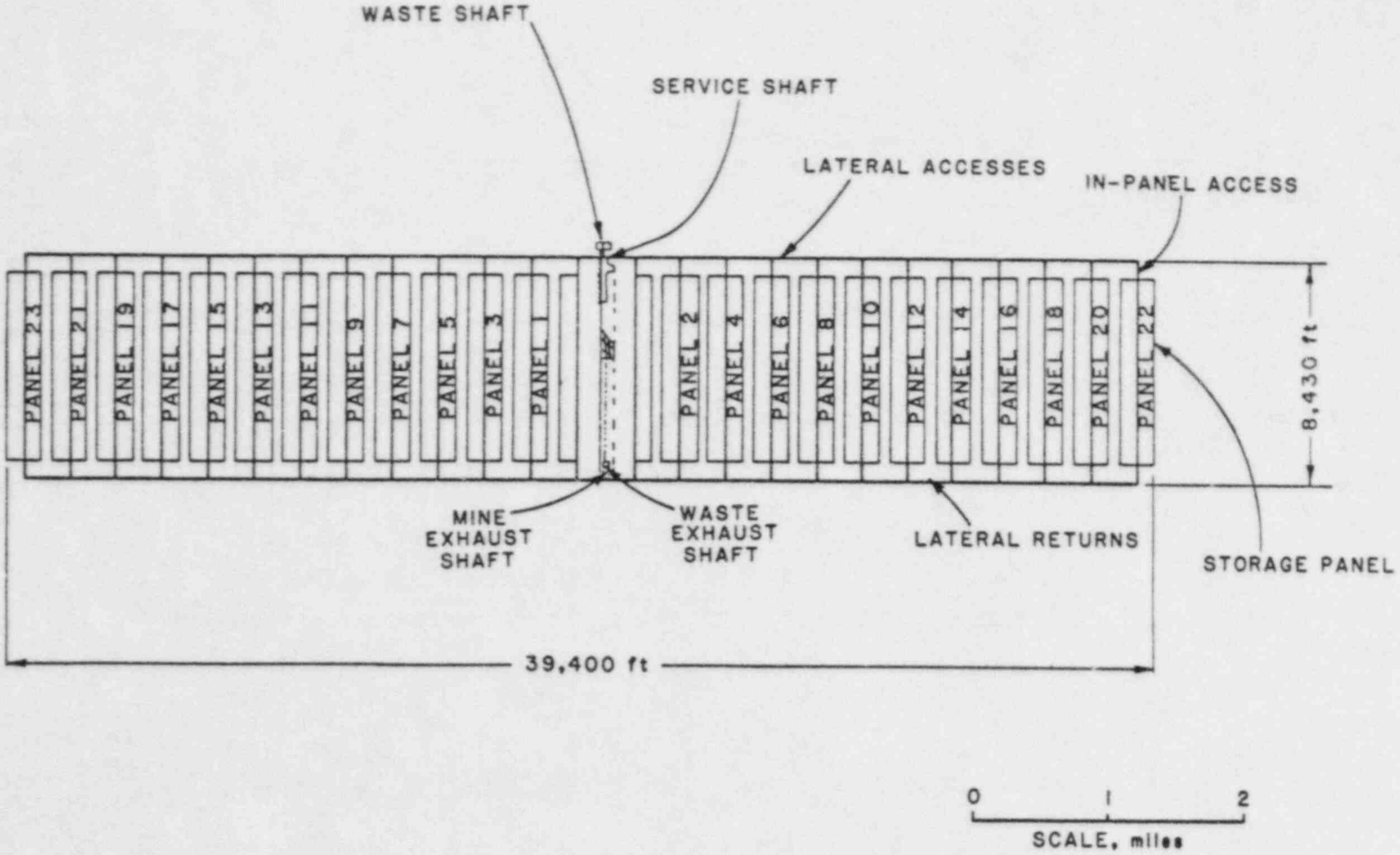

Figure 10.4.1 Layout for repository employing horizontal holes for canister storage. (RHO-BWI-CD-35, 1980)

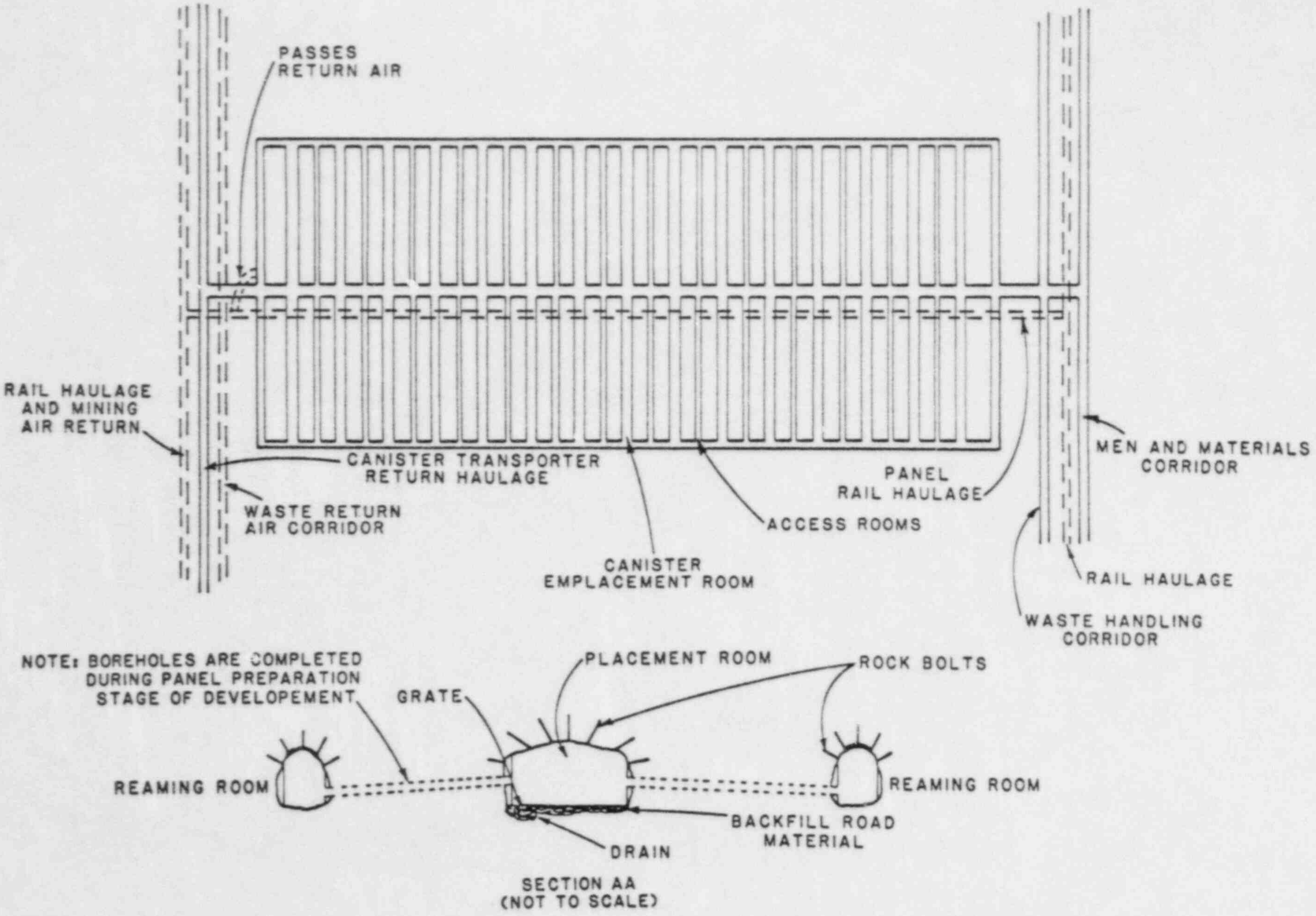

Figure 10.4.2 Panel and room layout for storage in horizontal holes. (RHO-BWI-CD-35, 1980)

Two potential sequences for repository development and waste placement are:

- Repository development has been completed before waste storage begins
- Panel development and waste storage take place concurrently with both operations advancing at the rate of one panel per year.

The two options have very different requirements for ventilation and excavation systems, shaft facilities, and equipment quantities. The dimensions for the facilities given in Table 10.4.2 are for the second option. The impact of retrieval on systems in the two alternatives will also be different.

According to assumed repository construction schedules, waste placement is required to begin within ten years of construction authorization. Assuming five years for shaft sinking and allowing for contract procurement for both the shafts and the underground development, preplacement development must be completed within three years. Three panels must be ready for storage by year 10 because different types of waste will be stored in separate panels (according to information supplied to EI by the NRC) and an available spare panel is desirable at all times. To develop three panels requires a development rate of about 7,500 tpd on a five-day-week basis.

If repository development must be completed before placement occurs, the required development rate is about 37,500 tpd. This option would result in the dimensions for the facilities given in Table 10.4.3.

In the preconceptual design (RHO-BWI-CD-35, 1980), development and storage proceed outward from the panels nearest the shaft pillar to those at the extremity of the repository. For the open, ventilated rooms, advantages are obtained by having operations on a retreat basis from the repository extremities toward the shaft pillar. If development has been completed prior to placement, the advantages are greater.

The mine cycle in a given heading would consist of (in order):

- Drill the round
- Load and blast the round
- Remove the broken muck
- Install ground support.

A "dental excavation" method has been proposed (RHO-BWI-CD-35, 1980) whereby all but the outer 3 ft of an opening is excavated by an initial drill and blast round and the remainder is subsequently blasted using a "trim round" of lightly-loaded, closely-spaced holes.

Table 10.4.3 Dimensions of Repository Facilities if Development Completed before Placement

Facility	Dimensions
Personnel and Materials (Service) Shaft	33.5 ft inside diameter
Tuff Transport Shaft	33.5 ft inside diameter
Waste Transport Shaft	33.5 ft inside diameter
No. 1 Waste Air Exhaust Shaft	31 ft inside diameter
Mine Air Exhaust Shaft	31 ft inside diameter
No. 2 Waste Air Exhaust Shaft	31 ft inside diameter
Central Panel Corridor	26 ft by 28 ft (lined)
Sublevel Rail Haulage Corridor	26 ft by 28 ft (lined)
Transporter Access	26 ft by 28 ft (lined)
Transporter Return	26 ft by 28 ft (lined)
Man and Supply Access	26 ft by 28 ft (lined)
Waste Air Return	26 ft by 28 ft (lined)
Rail Haulage Access	26 ft by 28 ft (lined)
Rail Haulage Return	26 ft by 28 ft (lined)
Rock Pass	7.5 ft by 16.4 ft by 29.5 ft
Panels	1,228 ft by 6,232 ft
Storage Rooms	31 ft by 16.4 ft
Reaming Rooms	9.8 ft by 16.4 ft
Rib Pillars	656 ft
Panel Pillars	164 ft
Room Pillars	174 ft
Storage Holes	24-in. diameter by 175 ft long
Storage Hole Pitch	8.4 ft

Although the basalt is strong and competent, rock reinforcement and support is necessary to protect against minor local failures such as rockfalls. A loosened zone typically surrounds openings excavated in rock. With the "Dental Excavation" techniques referred to above, the thickness of this loosened zone could be as little as 3 ft. The zone is generally sufficient to require some support where otherwise unnecessary. According to RHO-BWI-CD-35, the proposed support system consists of :

- Rock bolts whose length exceeds one-third the opening span, spaced no more than 4-ft apart
- Shotcrete, nominally 4-in. thick
- Cast-in-place concrete at critical locations.

With respect to ground water, mining will tend to drain the repository horizon as the water will tend to flow toward the openings. As a result of the low permeability of basalt and resulting long travel times, only a fraction of the water contained in the Umtanum Flow is assumed to be drained.

10.4.1.4 Canister Arrangement

The waste package (Figure 10.4.3) consists of an 18.5-ft-long canister with a 16-in.-outside diameter and containing either one Pressurized Water Reactor (PWR) or three Boiling Water Reactor (BWR) Spent Fuel assemblies. The packages will be placed in 24-in.-diameter holes drilled horizontally on 8.4-ft centers into the pillars between the storage and reaming rooms. The hole is lined with a carbon steel sleeve which is grouted into place with cementitious, absorptive materials. However, no mention is made as to how the sleeve or the grout are placed, but this operation is within standard tunneling technology.

10.4.1.5 Thermal Loading

As a result of decay of the radionuclides contained in the spent fuel, the waste packages radiate heat. Unreprocessed spent fuel contains fission products which are relatively short-lived and actinides which are generally quite long-lived. As the radionuclides decay ultimately to stable isotopes, the number of disintegrations, and the heat produced, will decrease with time. The heat produced by a canister will be at a maximum at the time of emplacement.

A canister will contain either one PWR or three BWR spent fuel assemblies. Assuming 10-year-old waste, canisters will have heat

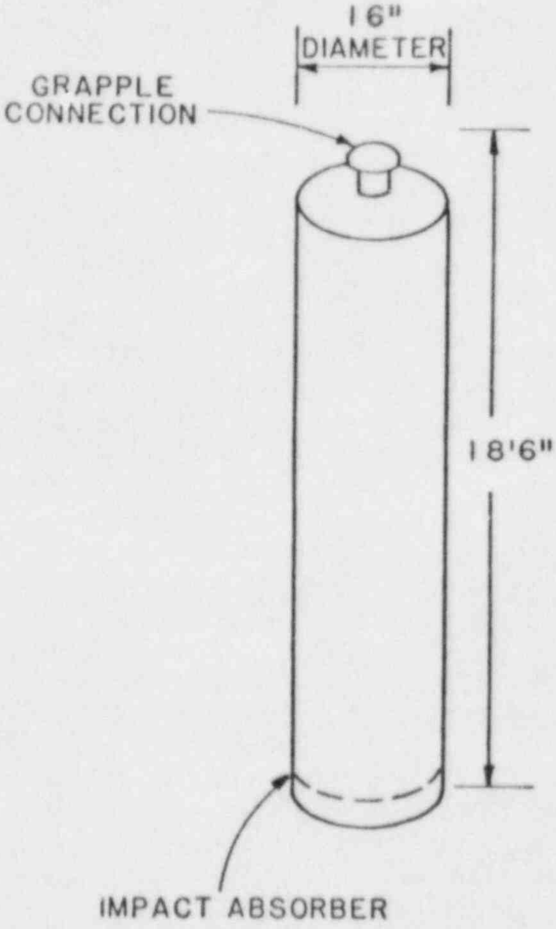

REFERENCE WASTE CHARACTERISTICS

CANISTER	THERMAL POWER	SURFACE DOSE RATE
SPENT FUEL	700 W	20,000 REM/HR
HLW	3100 W	100,000 REM/HR

Figure 10.4.3 Standard waste canister.
(RHO-BWI-CD-35, 1980)

loads of approximately 0.55 kW and 0.66 kW for PWR and BWR, respectively. To be conservative the heat load per canister is taken as 0.7 kW.

The areal extent of the repository, the canister spacing, the age of the waste, and the type of waste (PWR or BWR) determine the overall thermal load on the repository. To be conservative, all the waste is assumed to be 10-year-old PWR. In reality, waste type and age will vary, and actual panels are assumed to consist of waste of a uniform type and age to avoid uneven thermal loading within a room or panel.

The effective storage area consists of 24 panels occupying 188 acres each, or 4,330 acres total. Using the 0.7 kW/canister thermal load and the waste complement of 22,500 canisters per panel, the heat load within a panel is 83.8 kW/acre. By comparison, the in-panel loading given in RHO-BWI-CD-35 is 150 kW/acre which requires a canister heat load of 1.25 kW/canister. Given the assumption in RHO-BWI-CD-35 of 4.1 kW/canister for reprocessed HLW, that heat load requires a ratio of Spent Fuel to HLW equal to 5.2 to 1. On the basis of the gross repository area including the shaft pillar and service areas, the overall heat load will be about 50 kW/acre.

10.4.1.6 Backfill Timing

Ultimately, a repository must be backfilled, with the backfill designed as a barrier (10CFR60.133). In this repository concept, backfill will not be placed until permanent closure. Remining of backfill for retrieval purposes is apparently not an issue since the decision to permanently close nullifies the retrievability requirement.

However, the permanent closure process will take about 23 years to complete (the same length of time as placement) and retrieval could possibly be required during the permanent closure process, though the rule (10CFR60) does not require retrieval to be maintained as an option after initiation of permanent closure. Once the backfill is placed, the repository concept basis is changed and the implications for retrieval are detailed in the concept where backfill is placed immediately after waste placement.

10.4.1.7 Ventilation

Rooms are open (unbulkheaded) and ventilated after waste placement has been completed. The two potential development options can be identified:

- Develop and store waste simultaneously
- Develop the whole repository prior to waste placement.

In the first case, two separate ventilation circuits are required:

- Mine (development) ventilation system
- Confinement (storage) ventilation system.

The airflow in the confinement circuit will begin at a small value and as the rooms are developed will increase until the final value of 12,000,000 cfm is reached. To ensure the leakage is minimized and is toward the confinement circuit, the size of the confinement entries and returns must increase as the confinement airflow increases.

If total repository development precedes placement, only one ventilation system is required. The airflow requirement will increase as panels are developed. Once repository development is complete, the airflow will remain constant until permanent closure.

In the summer, the intake air may require precooling to maximize the convective heat removed from the rock. In winter, the intake air may be need to be heated to ensure that the temperature exceeds 37°F to avoid icing in the shaft. Heating could best be accomplished by extracting heat from the exhaust air using heat exchangers.

10.4.1.8 Retrieval Systems

A requirement of 10CFR60 is that repository operations must be designed so that any or all of the waste could be retrieved on a reasonable schedule. "Full Retrieval" (sometimes termed "Mass Retrieval"), is removal of all waste. From time to time, retrieval on a limited basis may become necessary. For example, a few canisters, a single room, or a single panel may need to be retrieved. The latter scenario is designated as "Local Retrieval."

In this repository concept, storage rooms are open and ventilated. Temperatures will remain workable and equipment for high temperature operations will not be required for retrieval. In the preconceptual design (for "occasional retrieval" during the period prior to initial closure) the transporter (Figure 10.4.4) used for canister placement is assumed to be used for retrieval. The rubber-tired transporter holds the canister in a shielded cask in a horizontal position longitudinally on the machine. The retrieval procedure is not given in the design reports nor are details of the transporter and transfer cask. The transporter assumed in this concept is a more recent and improved design than the one in RHO-BWI-CD-35 (RHO-BW-SA-273, P, 1982). We have assumed details of the retrieval sequence as given in Table 10.4.4.

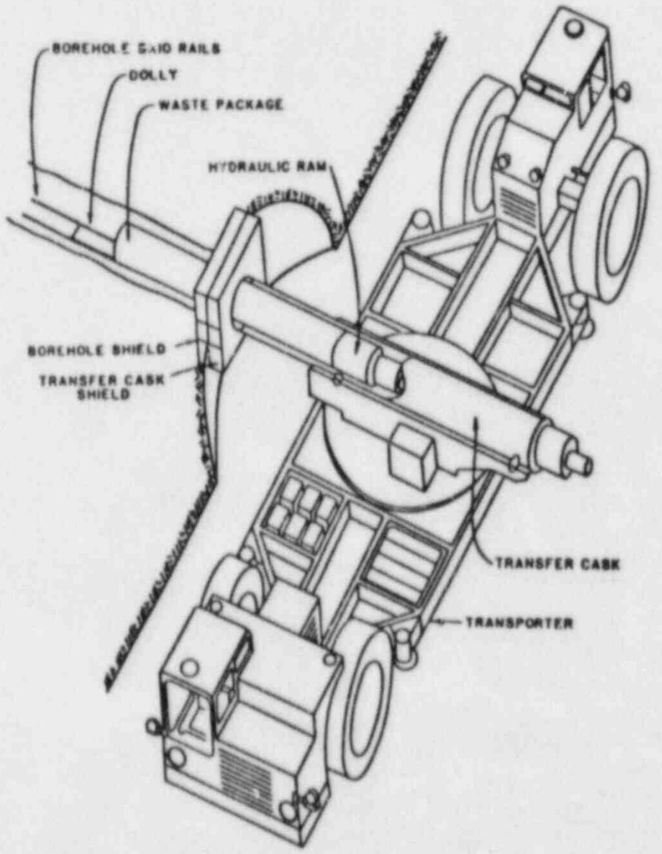

Figure 10.4.4 Transporter and transfer cask configuration for placing waste in horizontal holes. (BWIP SCR, 1982)

Table 10.4.4 Retrieval Conditions and Operations

(A) CANISTER, HOLE, WASTE PACKAGE

1. Canister - Carbon steel
   non-shielded

   O.D. = 16 in.
   L = 18.5 ft
   Bundled fuel rods

2. Hole - holes are horizontal

   Hole length is 197 ft[1]

   Hole spacing is 8.5 ft

   Hole diameter is 24 in.

   A carbon-steel sleeve is grouted into the hole

   6 canisters in each hole, with spacers in-between[2]

   A plug is placed at the reaming-room end of the hole

   A wall shield provides a "target" alignment guide

(B) PLACEMENT UNIT

1. Horizontal, longitudinal transporter
2. Shielded transfer cask

(C) EMPLACEMENT SEQUENCE

1. Align transporter with hole
2. Open valves in wall shield and transporter
3. Telescoping hydraulic ram pushes canister into hole (pushing next canister and spacer deeper into hole)
4. Close valves
5. Remove transporter
6. Plug[3] is emplaced after last canister (using ram in transporter or another piece of equipment designed for plug placement)

(D) RETRIEVAL ENVIRONMENT

1. Temperature = 80° wet bulb (air)
2. Ventilation at all times, so no pre-cooling will be necessary
3. Worst case is when canister has been in ground 50 years
4. Rock temperature will be less than 290°F
5. More information is needed on the temperature gradient between the canister and the room for retrieval scenario.
6. All that is known now is that the wall rock temperature will be between 80°F and 290°F
7. Water situation is also unknown 100% humidity is probably ponding of water is possible

(E) RETRIEVAL SEQUENCE

1. Radiation survey
2. Decontamination and clean-up
3. Put on wall shield
4. Align transporter with hole
5. Remove plug[4,5]
6. Grapple spacer and remove it[6]
7. Grapple and remove canister[6,7,8]
8. Repeat 6-7 until all canisters retrieved

(F) NOTES

[1] What is current capability for drilling a long, straight hole? What are the criteria for the rejection of crooked holes?

[2] If spacer is shielded retrieval will be facilitated

[3] Plug preferably screw-threaded to facilitate retrieval. P case-fit makes problems

[4] Special equipment may be required

[5] Shielding may be necessary to prevent streaming from hole

[6] Special grappling equipment will be required to grapple spacers and canisters deep in the hole. Possibilities include:

  a. Redesign of hydraulic ram to reach end of hole
  b. Mechanical "mouse" with a chain
  c. A "pushing" system from the reaming room

[7] Potential problems include:

  a. Breached canister
  b. Lost piece of canister that is grappled onto
  c. Canister stuck due to deformation of liner

[8] Friction, perhaps made worse by rust, could be a problem. Potential solutions include:

  a. Rails or upset in sleeve
  b. Graphite or teflon in annulus

10.4.2 Retrievability Impacts on Repository Systems

10.4.2.1 Excavation Systems

Storage rooms which are open over the life of the repository do not require excavation prior to retrieval.

10.4.2.2 Equipment Systems

Retrievability impact on equipment systems can best be identified with the aid of the flow chart shown in Figure 10.4.5. Each basic repository operation is given an identification number to facilitate identification of an event's impact on all systems. With mining development completed, the only active operations involve canister storage. Different levels of retrievability vary greatly in their impact on repository operations.

Local retrieval of canisters takes place concurrently with storage operations. Unless new equipment is obtained for the task, the storage equipment will have to be used, slowing the normal storage rate. Retrieval of breached canisters will require "hot cell" or shielded equipment along with decontamination equipment in the storage area. Transporting the canisters to the surface will require (Figure 10.4.5) use of the crane (3), hoist (4), and surface handling facilities (5). These systems will be unable to perform their normal operation for handling canisters and a delay in repository storage activities will result.

Full retrieval of canisters can be planned systematically for a full storage room or full repository, starting with the oldest storage rooms. Because the same handling equipment will be used for the full retrieval operation, an operating schedule can be defined, with no interference from other operations. If any canisters are breached, the retrieval will be more complex due to contamination. Special equipment will be used for the life of the breached canister retrieval operation.

10.4.2.3 Facilities

If mining development and waste emplacement are concurrent operations, the reason for full retrieval will most likely preclude further mining. The modular concept of repository operations keeps the two systems entirely separated to the extent that equipment for each system uses different haulageways and shafts. Facilities such as haulageways, loading bins, skips, and other equipment for handling mined rock will not be affected by local retrieval, and may be temporarily stopped during full retrieval if warranted by retrieval

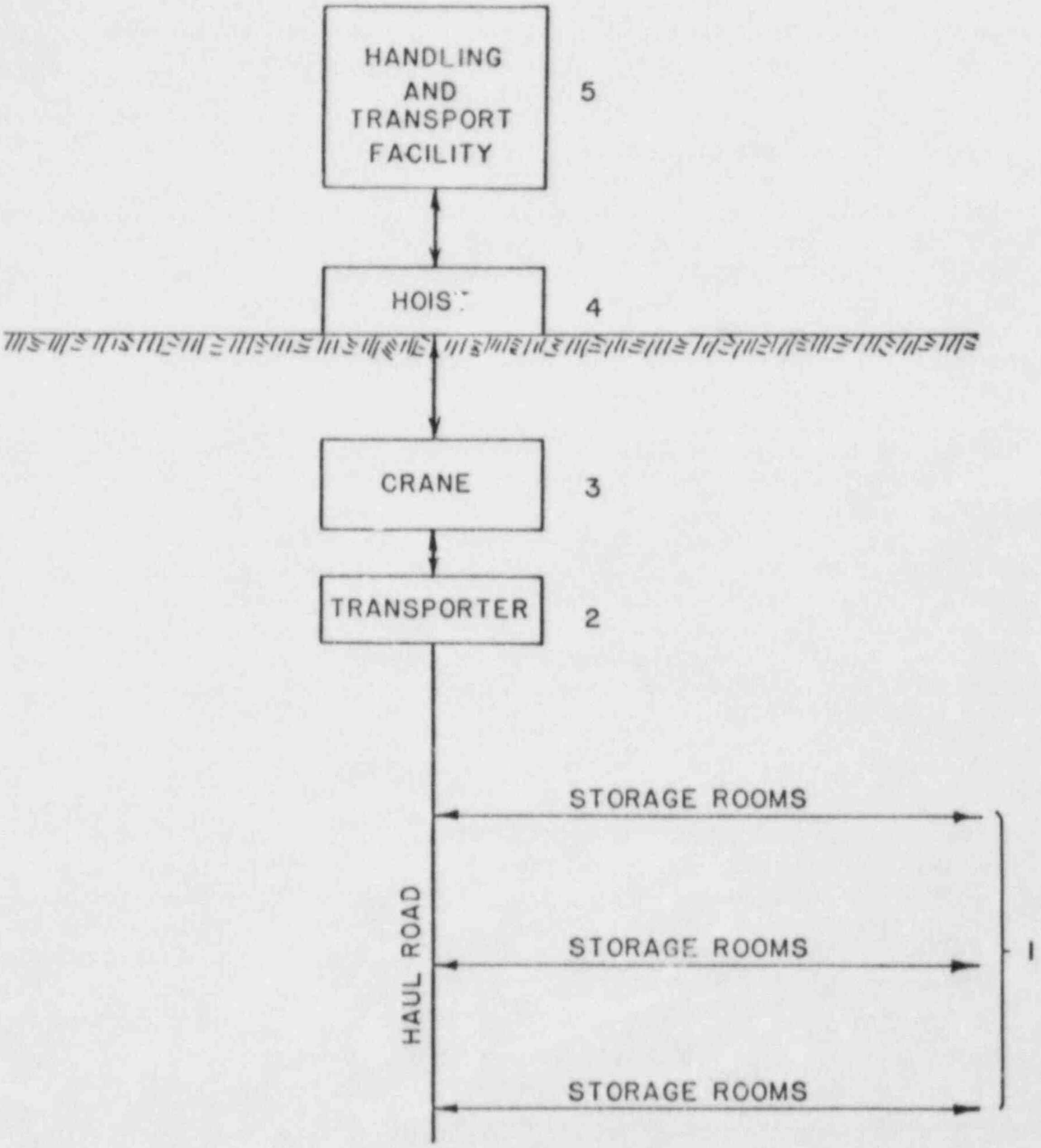

Figure 10.4.5 Schematic of waste handling operations.

conditions. The area most likely affected by local retrieval will be the shaft area where full transfer casks will be handled, hoisted, and lowered, and mined rock will be hoisted. Retrieved canisters may be breached, compounding the congestion.

10.4.2.4 Ventilation Requirements

The ventilation of the open rooms until the time of permanent closure continuously extracts heat from the surrounding rock. As a result, rock temperatures at the perimeter of the opening will be lower than those which would occur if the rooms were not ventilated. Air temperatures in the rooms will be planned to vary from 80°F at the intake to 106°F at the exhaust end. The air temperature range is equal to or less than that at waste placement, and no special measures, such as air-conditioned cabs on vehicles, are required for retrieval, unless already required for placement operations.

As a result of the auxiliary power supply and a fan set-up consisting of duplicate fans plus an identical backup unit which is not normally operating, neither power outages nor fan component failures will interrupt the supply of ventilating air. Retrieval operations would be carried out in rooms ventilated by the confinement ventilation circuit which provides a continuous supply of air to all rooms in which waste placement has occurred or is occurring. As a result, no changes are required in the ventilation system to accomodate retrieval. For the option in which all development is completed prior to commencement of placement operations, all rooms are ventilated continuously by the confinement ventilation system.

10.4.2.5 Backfill

In the concept of open, ventilated rooms, backfill would not be placed until permanent closure. The requirement for retrievability does not directly affect backfilling operations. Full retrieval would affect backfilling because when all the waste is removed, isolation of the repository by backfilling is no longer required. In the case of local retrieval, when a room or panel is emptied of waste, backfill would be required to ensure the room or panel does not become a preferential pathway for radionuclide migration.

10.4.2.6 Thermal Effects

The thermal effects associated with nuclear waste disposal in an underground repository have significant effects on the retrievability of the waste. A number of thermal analyses have been completed by

BWIP to determine the practical waste storage geometry and repository layout which will preserve the isolation capability of the host rock formation. Thermal effects can be divided into three distinct areas:

- Very-near-field effects which have the most direct impact on retrievability because elevated temperatures can lead to decrepitation of the borehole wall and binding of the canister
- Near-field effects which impact retrievability indirectly by increasing the potential for instability of the storage rooms
- Far-field effects which have minimal, if any, impact on retrievability because the stability of the entries and shafts would not, in general, be affected by the thermal loading.

Considering the thermal effect in the very-near field, a study of borehole decrepitation described in RHO-BWI-CD-35 indicates that local failure of a canister borehole wall may occur well below the apparent strength of the wall rock. The consequences of borehole decrepitation are:

- Increase in canister temperature to an unacceptable level due to decreased thermal conductivity of the rock around the borehole
- Loss of retrievability of a canister from an unlined borehole.

A steel liner, with a low yield strength between the liner and the wall rock, will be incorporated to control borehole decrepitation. Further analysis is necessary to determine liner and backfill thickness. Contradictory results concerning thermal effects were obtained during the course of study by BWIP. As indicated in the BWIP Site Characterization Report (DOE/RL 82-3, 1982) the thermal impact on the openings, in terms of thermal slabbing and spalling, was very limited. This conclusion is only qualitative in nature and did not incorporate the coupled effects of the suspected high horizontal in situ stresses with thermal loading.

In the near-field, the virgin rock temperature in the storage rooms will be around 135°F, which is below the maximum temperature criterion. The temperature level will also be maintained within this limit by continuous open-room ventilation until the end of the retrievability period. No room instability due to thermal effects is anticipated.

The thermal impact on the far-field (shafts and entries) would be insignificant, because of the distance to the waste emplacement panels and the continuous ventilation throughout the entire repository life.

10.4.2.7 Requirements for Special Equipment for High Temperature and Radioactive Environments

Due to continuous room ventilation, the room temperatures vary from 80°F at the intake side to 106°F at the exhaust side. Retrieval would take place at air temperatures as cool as, or cooler than, those during emplacement. Provided that the waste package is intact, the transporter (whose operation was described in Section 10.4.1.8) can be used for retrieval and 10CFR60 standards are satisfied.

Radioactive environments that may arise from breached canisters will require special shielding of equipment for operator safety. Decontamination facilities will also be necessary for service equipment, and storage areas.

10.4.2.8 Ground Support

At discussed in Section 10.4.1.3, initial support will consist of rock bolts at least one-third the opening span in length and spaced no more than 4-ft apart. Shotcrete will be applied in a nominal thickness of 4 in. to stabilize all intervening rock and a concrete liner 1.5-ft thick will be placed at critical locations. Report RHO-BWI-CD-35 does not indicate the type of rock bolts to be used but the bolts are assumed to be full-column grouted to minimize corrosion potential.

Resin grouted bolts may not be acceptable for use in the repository rooms, because the rock temperatures of 212°F and greater may exceed the maximum service temperature of resin grout (Weast, 1983). Experience is lacking regarding the stability of rock bolts for a period of decades. Experience with concretes at elevated temperatures (Troxell, Davis, and Kelly, 1968, p. 248-250) indicates that for simple temperatures increases to 212°F relatively minor strength losses occur due to loss of both free and combined moisture. Above 212°F more significant strength losses occur in the repository maximum temperature ranges up to, say 400°F, but amount to 10% reduction, or less. However, if the concrete is heated and then cooled, strength losses approach 25% or more at 400°F. Two considerations may minimize such strength losses. Using lean mixes and limestone, expanded slag, or similar aggregates minimize heat effects in this range. We suspect that the important cement grout, shotcrete and concrete considerations for repository temperatures hinge on minimizing the water content and matching the thermal expansion and chemistry of cements and aggregates. Concrete also has a coefficient of thermal expansion intermediate between that of steel and basalt limiting difficulties resulting from differential thermal expansion.

In any case, over a decades-long period some deterioration of the rock reinforcement can be expected, and minor roof falls may result. In areas of deterioration, the debris will be removed and renewed rock support provided prior to commencement of retrieval operations. With accessible, ventilated rooms, the remedial measures can be carried out as the rockfalls are discovered. A Load-Haul-Dump (LHD) vehicle and a roof-bolting jumbo are required for resupport.

Seepage of ground water towards the openings will occur. With time the seepage could result in a build-up of pore water pressure on the shotcrete liner. Rock mass grouting at the time of room construction could minimize deterioration by seepage and chemical action.

Despite grouting efforts and shotcrete application to the repository walls, some ground water is likely to enter the repository during the operating period. Underground conditions could reasonably be expected to remain generally dry but some allowance for the presence of minor amounts of water during retrieval would be prudent. The postulated water inflow volume would slightly exceed the evaporating capability of the ventilation system, and would result in puddles on the repository floor.

10.4.2.9 Instrumentation

Repository performance monitoring ensures the safety criteria are not violated and the isolation capacity is maintained. The retrievability option mandates that significant changes in selected parameters, or deviations from expected behavior, be detected when they occur, and steps be taken to correct the problem or retrieve the waste to the surface. Categories requiring monitoring are:

- Hydrogeologic - water inflow
- Thermal - heat build-up
- Mechanical - stress build-up, rock deformations, and rock instability
- Radiological - activity levels.

Direct observation of subsurface conditions is also advisable. BWIP proposes a monitoring program of subsurface conditions by visual inspection and hands-on measurement within panels, with a minimum of instruments actually placed within the panels. The monitoring program is possible since the rooms will be left open and ventilated. Visual inspection and hands-on measurements are preferable to remote monitoring because instrumentation available at present is not reliable for periods in excess of about a decade, especially under the thermal conditions associated with the repository rooms. An experimental panel will be provided in the repository in which extensive verification and confidence testing will be performed. This panel will also provide an opportunity to study the reliability of instrumentation.

Thermal monitoring will primarily consist of thermocouples embedded in boreholes placed at intervals along storage rooms. Thermocouple signals will be collected at several spots and relayed to a central control console to detect abnormalities.

Hydrogeologic monitoring will consist of measuring the pressure of formation water in the vicinity of storage holes, in various accesses, and in basalt flows and interflows. High precision, durable pressure transducers will be placed between packers in boreholes. Water quantities entering individual panels will be monitored by devices measuring the humidity, temperature, and the airflow through panels after waste emplacement.

Mechanical monitoring will consist of a network of geophones and seismographs to monitor rock noise and rock falls. The closure of pre-established points in storage rooms and drifts will be measured. At a few selected locations, detailed evaluation of rock stability will be made using stressmeters and multiple-position borehole extensometers.

Ventilation conditions in the repository will be monitored to detect radiation levels, fire and smoke emergencies, and ventilation blockages caused by roof falls. Mobile radiation and thermal sensors in ventilation airways will permit continuous monitoring from a main surface control console. Flow direction, pressure, differential pressure, and temperature.

The retrievability requirement mandates repository monitoring for perhaps decades after initial waste placement. The following steps need to be taken to ensure the reliability of repository instrumentation:

- Develop geophones, stressmeters, multiple-position borehole extensometers, piezometers, thermocouples, and ventilation instrumentation that will maintain their accuracy in the hot and humid environment expected in a repository
- Provide extensive verification of the reliability of instrumentation in the experimental panel established within the repository
- Ensure that inspection of the repository at predetermined intervals can be performed by robots or by personnel in air-conditioned suits or vehicles.

10.4.3 Adequacy of Incorporated Retrieval Systems or Allowances

10.4.3.1 Local Retrieval

Local retrieval may be necessary for quality assurance or quality control purposes, or due to a detected radionuclide release. A manufacturing error, for example, could have caused premature breakdown of some canisters in a storage room. Open rooms permit the use of the same equipment for emplacement and retrieval procedures. Most likely the canister transporter and "hot cell" equipment will be necessary. Equipment will be dedicated to the confinement ventilation circuit for cleanup of roof falls and resupport of the roof. A LHD unit and a roof-bolter will repair roof falls during the retrieval period and will be available to work in any room during local retrieval. Local retrieval, if concurrent with development and storage, will slow the latter two processes because of interfaces in the shaft and hoisting area. The ventilation system is adequate for local retrieval because of the confinous ventilation. As a result of continuous ventilation, repository air and rock surface temperatures will allow the use of the rubber-tired vehicles used during placement. Unless the canister to be retrieval is the one closest in the hole to the storage room, retrieval of a leaking canister will require prior retrieval of up to five other canisters.

Retrieval of breached canisters by overcoring the holes is not presently practical with horizontal holes containing more than one canister. A possible method to facilitate retrieval would be to have a piece of equipment pushing from the reaming rooms as well as having the transporter and transfer cask in the storage room. For this method to work the width of the reaming rooms must be increased. Another possibility for retrieval is a remote controlled or magnetic grapple. Provisions for retrieving breached canisters are not included in the preliminary DOE design and therefore, the incorporated systems are inadequate.

10.4.3.2 Full Retrieval

Full retrieval of waste canisters will need planning and preparation. Full retrieval planning is eased because all repository resources can be committed to the operations. Underground storage may prove unsatisfactory, leading to repository abandonment. Nevertheless, full retrieval should not require special equipment unless the reasons for retrieval interfere, such as excessive rock movement crushing canisters, or rapid deterioration of rock causing need for roof support and scaling equipment.

The equipment for roof support and rockfall clean-up will be dedicated to the confinement ventilation system. The systems for full retrieval will be the same as local retrieval without interference from development and placement. The retrieval of a breached or broken canister in a horizontal hole is not well-defined. Even with increasing the size of the reaming room and using another piece of equipment to help push the canisters, the incorporated system cannot retrieve a broken or bound canister. Overcoring is apparently not feasible with long horizontal holes. The incorporated retrieval systems are considered inadequate until a systems for retrieving a broken or bound canisters in horizontal holes are developed.

10.4.4 Concerns

10.4.4.1 Technological Concerns

In this concept, the transporter and transfer cask are not adequate for retrieval of breached canisters. How a canister 150 ft deep in a 174-ft-horizontal hole can be retrieved is unclear. The telescopic arm may reach to the extreme distance, but if the canister is frozen in place due to excessive rock stress, retrieval from the hole may be impossible to achieve. Horizontal storage in holes approaching 200 ft precludes the option of overcoring a breached canister. The drift for horizontal storage, being 31-ft wide, necessitates breaking the overcore numerous times before attaining the desired length. Breaking the rock mass will require a special operation, as well as additional work to handle the broken core. In addition, the core breaking will require removal of the entire hole lining before overcoring can begin. If grouted into place, removing the lining could be quite difficult. Design of a transfer cask and transporter which could be used for retrieval is within current technology. The transporter and waste emplacement scheme outlined incorporates some features such as the magnetic grapple and telescopic arm which would facilitate retrieval. No provisions are indicated for retrieving breached canisters, especially those which have broken into more than one piece. Design of such equipment does require some development, but is within current technology.

10.4.4.2 Safety Concerns

The proposed design (CD-35) requires one transporter operator rather than two which is not advisable under the inherently more hazardous retrieval operation for breached canisters. Transporters will be the only equipment necessary for retrieval in the storage room. As a consequence, if an operator become injured, there would be difficulty in getting aid quickly. Personnel working in pairs helps eliminate problems in case of injuries to one partner. The "buddy system" is widely used throughout the mining industry to help safeguard personnel, and seems desirable for repository operations as well.

Experience is lacking regarding the effectiveness of grouted rock bolts and shotcrete support systems over periods of decades, especially at the anticipated high rock temperatures (up to 300°F). The temperature difficulties can be minimized by using materials for the bolt grout and shotcrete that minimize heat effects (Section 10.4.2.8). Some weakening of the supports will take place with time and minor roof falls will occur. With open ventilated panels, rooms can be periodically inspected and the support rehabilitated as necessary.

In spite of grouting and shotcreting, some water may flow into the rooms. Due to the flat slope of rooms, the water will tend to collect in puddles on the floor. This water will likely be cotaminated by radiation and should be transferred to a collection area in closed tanks or conduits.

Whether they are breached or not, unshielded canisters will be emitting gamma radiation. During retrieval, streaming radiation will be able to escape from the placement holes, if the doors on the borehole and transfer cask shields are not closed tightly. In the case of breached canisters, especially those which have broken into more than one piece, gamma radiation and gaseous radionuclides can also escape by streaming. Dose rates and dosages from these materials must be kept within the acceptable limits.

10.4.4.3 Radionuclide Release Concerns

One possible reason for retrieval is failure of the waste package with consequent release of radionuclides. Gaseous and volatile radionuclides may be released into the emplacement hole while soluble radionuclides may be carried away by any water that is present in the emplacement hole. Removal by aqueous solution requires the presence of water in liquid form; that is, it temperature must be less than the boiling point for the repository pressure conditions. For open, ventilated rooms, this pressure will be approximately one atmosphere and, hence, aqueous transport of radionuclides will only occur if the water temperature does not exceed 212°F. Due to the cooling effect of the ventilating air the rock surrounding the opening should have a temperature considerably less than 212°F and hence water will be in a liquid state.

10.4.4.3.1 Releases into Air

The gaseous and volatile radionuclides release from spent fuel consist primarily of hydrogen-3 (tritium), carbon-14, and krypton-85. The quantity of krypton-85 is large compared with that of either tritium or carbon-14. In addition, the carbon-14 must be in a form that leads to volatile species upon reaction with water in order to be of concern. It is assumed that one-tenth of the krypton-85 is sufficiently near an exposed surface to leave the spent fuel. If a breach occurs, the concentrations of krypton-85 and tritium in air must not exceed the EPA defined standards 10 nCi/liter and 5 nCi/liter respectively in order to satisfy 10CFR20. (These radioactivity concentration limits are defined in metric units, the equivelent traditional units, for reference, are 0.35 nCi/ft^3 and 0.18 nCi/ft^3, respectively.)

Before methods of dealing with such releases are discussed, it is necessary to indicate how the radionuclides released into the hole by a breached canister would be liberated into the rooms. There are two possibilities:

- The hole plug is not gas-tight
- Release occurs at retrieval if the doors in the floor shield are not closed tightly after removing the hole plug.

If the hole plugs are not gas-tight, then the volatile and gaseous radionuclides will be released into the room soon after the breach. If the hole plugs are gas-tight, then the gas pressure in a hole could very slightly increase but not to a level that might lead to difficulties.

In the former situation, the presence of radionuclides would be detected by instrumentation. Unless personnel happen to be present at the time of the release, there would not be cause for alarm since ventilating air would dilute the concentration to within acceptable limits. The time required for this dilution depends on the airflow supplied and on the room volume.

If release occurs during the retrieval process, workers would be exposed. However, since the room will be ventilated, the gas would not diffuse to fill the whole room. Consequently, the detection time would be less than if the room were unventilated, other things, being equal.

Releases occurring at retrieval can be avoided by having radiation sensors in the hole. Any detected gaseous radionuclides could then be drawn off prior to retrieval using millipore filters or a cryogenic absorption system. Both of these methods fall within existing technology.

10.4.4.3.2 Releases into Water

With regard to the movement of radionuclides by aqueous transport, the water must be in the liquid state. Heat balance calculations show that the lower the initial temperature of the water, the smaller the flow that is required to remove the canister heat and the greater the concentration of dissolved solids in the water. Reduction of the surface temperature of the canister below 212°F would occur for almost any water flow (Post, 1982).

If water contacted a breached canister, the rate of dissolution would vary widely with the water composition and temperature. For a typical rate of 0.0000264 lb/day, the solution water would contain about 0.25 mCi/lb water and about one pound of this solution would generate about 0.1 mR/hr at 4 ft. Thus it appears that intrusion of water into a detective package would provide a good index to the failure but would not introduce a significant radiation hazard to the operation (Post, 1982).

Although the rock surrounding the rooms will likely be grouted, some seepage will still occur, resulting in casual water (puddles) on the floors of the rooms. This water could be mildly contaminated and will likely be hot. Hence, collection and transport to pumping stations should be in closed pipelines or tanks.

10.4.4.3.3 Radiation Detection Standards

The radiation levels measured during retrieval operations are not exceptional so that the standards used in the nuclear industry would prevail. Lower limits of 0.1 mR/hr and upper limits of a few kR/hr would be adequate. A system to detect radioactive krypton-85 in the ventilation air and in the storage holes will be required. This system should be capable of detecting krypton-85 levels below 100 pCi/liter (2.6 pCi/ft^3) (Post, 1982).

10.4.4.4 Operational Concerns

The 8.4-ft-spacing allows only a 3-ft-radius for hole deviation to ensure that holes do not intersect. To meet the tolerance in a sub-horizontal hole which is 175-ft-long requires careful drilling and frequent hole surveys. Even with these precautions, the hole will deviate both in azimuth and inclination. The deviation will depend on:

- The direction of rotation of the bit
- The attitude of any intersected joints
- The weight of the cutting head.

The design outlined in the BWIP SCR has the hole spacing at 60 ft for spent fuel and 107 ft for commercial reprocessed waste (CHLW). The tight drilling tolerances mentioned above no longer constitute a problem because the holes are not likely to wander 30 ft to 50 ft. Excessive hole deviation must be avoided to limit the possibility of binding a canister in the hole.

Another concern is the method of placing the hole liner and assuring the liner fully grouted into place. Neither RHO-BWI-CD-35 or more recent designs address placement of the liner or grout. However, this is within standard tunneling technology.

The alignment of the RHO-BWI-CD-35 transporter with the hole is difficult to accomplish because the transporter must be sideways in the room, because the transfer cask is aligned with the long axis of the transporter. The BWIP SCR shows a transporter (Figure 10.4.4) having the transfer cask mounted on a swivel, providing a solution to the problem. This improved transporter has been incorporated into this concept.

As discussed in Section 10.4.4.2, Safety Concerns, some deterioration of ground support can be expected. Since the rooms are open and ventilated, inspection can be done periodically with rehabilitation of the supports carried out as necessary. Rehabilitation requires bolters and scalers to be available for the life of the repository.

As discussed in Section 10.4.4.1, the transporter and transfer cask as given in RHO-BWI-CD-35 are not adequate for canister retrieval. The improved design in the BWIP SCR does allow for canister retrieval but does not make provision for retrieval of canisters which have broken into more than one piece.

Cooling the environment to an acceptable level will require large airflows and perhaps large spot cooling units. The space occupied by these units would limit the free clearance in the room entrances.

10.4.4.5 Other Concerns

A fundamental concern related to a repository in basalt concerns the geologic/hydrogeologic uncertainty at the repository horizon. Among the concerns are:

- Uniformity of the thickness of the candidate basalt flow
- Uniformity of the jointing
- Occurrence of faults
- Vertical and lateral hydraulic conductivity.

The further in situ exploratory programs planned (1983) by DOE (ES-I and ES-II) are aimed at resolving, in the available time frame, the questions about geologic and hydrogeologic condition at the proposed repository horizon.

Another concern is the mechanisms and probabilities of canister breach. One mechanism is corrosion by ground water. The rate of corrosion will depend on the ions present in the ground water and their concentrations, and on whether the chemical environment is reducing or oxidizing. Another possible mechanism is attempted retrieval of a canister upon which the hole has closed. With an annulus of 6 in. between the hole perimeter and the canister, in the most recent BWIP SCR designs, this scenario is unlikely. Assuming that canister breaches will occur at sometime during a decades-long retrievability period, the activities of abundant (strontium and cesium), volatile (iodine), and gaseous (tritium, krypton-85) radionuclides and the levels of beta and gamma radiation that would occur for breaches at various times up to several decades after placement must be predicted.

10.4.5 Summary and Conclusions

The repository is to be located at a depth of 3,700 ft in the Umtanum Flow basalt of the Hanford Reservation, Washington. The repository will have 23 storage panels and one experimental panel divided by a shaft pillar into two sections of 12 panels each. As evisioned, each panel is divided into 30 storage areas consisting of a storage room with a reaming room on either side. The storage rooms are 575-ft-long, 31-ft-wide and 16.4-ft-high.

The waste package consists of a carbon steel canister with a diameter of 16 in., is 18.5-ft-long, and contains either one PWR and three BWR Spent Fuel assemblies. Six canisters are placed in 174-ft-long, 24-in.-diameter horizontal holes. Based on an average canister thermal load of 1.25 kW/canister at the time of placement, the panel thermal load is 150 kW/acre.

Backfilling of the rooms would not take place until permanent closure of the repository. Rooms completely filled with waste would be constantly ventilated with sufficient air quantities to provide a satisfactory environment for people to work.

The retrievability requirements of 10CFR60 impose the following effects on the repostiory systems:

- Re-excavation system - none required
- Equipment system - a LHD and a roof bolter need to be retained for clean-up of rock-falls. Canister retrieval will required modification of the placement transporter in order to "pull" the canister from the hole
- Ventilation requirements - no effect due to continuous ventilation
- Backfilling - none required until permanent closure
- Facilities - local retrieval may impose adverse loads on the transportation, confinement ventilation system and development mining.

Breached canister retrieval imposes additional requirements for the equipment system and the repository facilities.

The concerns for the repository concept are detailed as follows:

- Technological Concerns:
  - Overcoring a horizontal hole 174 ft long to retrieve a breached canister requires removal of the hole lining and numerous difficult core breaks
  - Within current technology, a telescopic arm or a magnetic grapple requires development to retrieve the canister
  - Adequacy of the rock support system for a period of decades
- Safety Concerns:
  - Operation of the retrieval transporter by one rather than two operators
  - Rockfalls resulting from deterioration of the roof support system
  - Presence of radioactive fluids on the repository floor prior to and during retrieval
  - Streaming gamma radiation and possible beta particles and gaseous radionuclides during retrieval
- Radionuclide Release Concerns:
  - Canister breaches would result in release of gaseous hydrogen-3 (tritium) and krypton-85, and volatile carbon-14, of which krypton-85 would have the largest concentration
  - Diluting krypton-85 to the MPC given by 10CFR20 could take up to several hours for a release from a single breached waste package
  - The mechanisms for release of gaseous radionuclides from the storage hole to the atmosphere would be non-gas-tight hole plugs, streaming through the floor shield retrieval and aqueous transport (if hole liners corrode)
  - A system is required for detection of krypton-85 in ventilating air and in storage holes

- Operational Concerns:
  - Excessive deviation of the storage holes from the proposed alignment due to drill steel weight and variations in rock properties
  - Difficulties in fully grouting the hole liner into place
  - Alignment of the transporter cask with the hole requires precise positioning
  - Large capacity heat exchangers limiting space in room entrances
- Other Concerns:
  - Geologic and hydrogeologic uncertainties
  - Undetermined probabilities and mechanisms for canister breach
  - Prediction of radionuclide activities during the repository life.

The general repository systems for retrieval are well defined in the design documents. Recent (1982) information provided by the BWIP SCR has eliminated several areas which were previously unclear. Further definition and confirmation is required in the areas of hydrogeology, geology, and canister retrieval oeprations (especially in case of breach and the probabilities and mechanism for breach). The repository concept meets the retrievability requirements of 10CFR60 except in the case of retrieval of breached or broken canisters.

10.5 Basalt Repository with Horizontal Hole Storage, Immediately Bulkheaded Rooms, and Permanent Closure Backfilling

10.5.1 Basic Information

The fifth repository concept is in basalt with horizontal storage holes in the pillars between rooms, rooms bulkheaded after emplacement, and backfilling at permanent closure. The concept is similar to the preconceptual design presented in report RHO-BWI-CD-35. The differences pertain to the timing of the backfill placement (after completion of storage in RHO-BWICD-35 and at permanent closure in this concept).

10.5.1.1 Definition of Repository Concept

Waste packages will be placed in 24-in.-diameter horizontal holes in the basalt pillars. Each hole will contain six canisters. The rooms will be bulkheaded but will not be backfilled until repository permanent closure.

The emplaced canisters emit heat (0.7 kW/canister for unreprocessed spent fuel and 4.1 kW/canister for reprocessed waste) resulting in a thermal loading of 150 kW/acre to a panel and of 50 kW/acre over the entire repository area.

10.5.1.2 Geologic Environment

10.5.1.2.1 Rock Units

The proposed horizon for the nuclear waste reference repository in RHO-BWI-C-116 at the Hanford Reservation is the Umtanum Flow of the Grande Ronde Basalt. Recent (1982) core drilling in the vicinity of the Reference Repository Site for the Basalt Waste Isolation Project (BWIP) indicates that the Umtanum Flow interior may thin in places. Until the final decision is made concerning which flow will be proposed for the repository, the Umtanum Flow will be assumed for design review purposes.

The Untanum Flow, a single basalt flow, has a typical cross-section that consists of, in descending order, the flow-top, the entablature, and the colonnade. The repository would be located in the entablature, whose thickness in boreholes has averaged 150 ft. The Umtanum Flow basalt is black to dark green in color, extremely fine-grained to glassy in texture, and composed principally of plagioclase, clinopyroxene, and glass, with titano-magnetite and ilmenite as accessory minerals.

10.5.1.2.2 Rock Mass Properties

The rock mass properties of the Umtanum Flow are probably controlled by intraflow structures such as joints, vesicles, flow-top breccias and sedimentary interbeds. Correlations of intraflow structures between 10 boreholes penetrating the Umtanum Flow (Myers et al., 1979) indicated a significant variation in the flow-top breccia thickness and columnar joint spacing across the Pasco Basin. Rock mass properties can also be expected to vary. DOE designs anticipate a rock mass that responds well to tunneling, with minimal support required.

The mechanical and thermomechanical properties used for the conceptual repository design were based on generalized basalt properties. Most rock testing was performed on intact rock samples in the laboratory.

The lack of in situ rock mass data remains an issue to be resolved from planned (1983) investigations at the Near Surface Test Facility (NSTF) and the upcoming at-depth exploratory programs (ES-I and ES-II). Design parameters may be reevaluated as data is developed from these test programs. Ranges for the properties based on data currently available are given in Table 10.5.1 (NUREG/CR-2352, 1982).

10.5.1.2.3 Hydrogeology

The hydrogeological data presently (1983) available do not fully define the ground water system. The data indicate fractures and intraflow structures control the ground water flow at the repository site. The vertical hydraulic conductivities, as yet undetermined, strongly affect radionuclide migration into the environment.

Near-field ground water flow models which consider repository construction and waste emplacement are yet to be developed (1983). The geochemical changes because of the introduction of nuclear wastes remain unclear. The hydrogeologic deficiencies will be addressed by on-going exploration programs.

Preliminary estimated hydrogeologic and hydrochemical data for the Umtanum Flow are:

Hydraulic conductivity: 10^{-6} to 10^{-8} fps; flow top

10^{-10} to 10^{-13} fps; columnar zone

pH (at 149°F): 9.4 to 9.9

Eh: -0.36 to -0.41 volts.

Table 10.5.1 Range of Rock Mechanics Properties of Hanford Basalt (NUREG/CR-2352, 1982)

	Intact	Fractured	Estimated In Situ
Compressive Strength (psi)	5,400 to 60,000	0 to 44,000	-
Tensile Strength (psi)	1,000 to 3,500	0 to 1,000	-
Young's Modulus (psi)	8.0 to 14.0 x 10^6	-	0.8 to 1.4 x 10^6
Poisson's Ratio	0.5 to 0.35	-	-
Thermal Conductivity (Btu/hr-ft°F)	0.484 to 1.45	-	-
Specific Heat (Btu/lb-°F)	0.175 to 0.28	-	-
Thermal Expansion (/°F)	2.22 to 4.11 x 10^{-6}	-	-

10.5.1.2.4 Seismicity

The proposed site is seismically quiet with only two Intensity VII (Modified Mercalli) earthquakes recorded since 1898. Seismic monitoring of the Columbia Plateau has determined microearthquake (low magnitude) swarms are typical of the region (Myers et al., 1979).

10.5.1.3 Repository Construction and Layout

As shown in Figure 10.5.1, the repository will contain 23 storage panels, an experimental area, and a panel for storage of Low Level Waste (LLW). Each panel (Figure 10.5.2) contains 30 storage areas driven perpendicular to a central panel access. Each storage area consists of a storage room with reaming rooms on either side. Each storage area contains 125 boreholes (each 174-ft long) holding 750 canisters. The rooms are 575 ft in length. The pillar surrounding each panel will be 164-ft thick between panels and 656-ft thick between the panel openings and the lateral access and return entries. Access to the panels is by main entries at either end (intakes at one end, returns at the other) that connect the storage panels with 5 shafts to the surface. Entries and rooms will be driven by drill-and-blast methods. Dimensions of the various facilities are given in Table 10.5.2.

Each shaft will have a different function:

- Personnel and materials (service) shaft
- Waste air exhaust shaft
- Mine air exhaust shaft
- Basalt transport shaft
- Waste transport shaft.

The shafts will be sunk by conventional drill-and-blast methods and lined with a concrete/steel/concrete sandwich liner.

The two potential sequences for repository development and waste placement are:

- Repository development completed before waste storage begins

- Concurrent panel development and waste storage with both operations advancing at the rate of one panel per year.

These two options have very different requirements for ventilation and excavation systems, shaft facilities, and equipment quantities. The dimensions for the facilities given in Table 10.5.2 are for the second. The effect of retrieval on systems in the two alternatives will also be different.

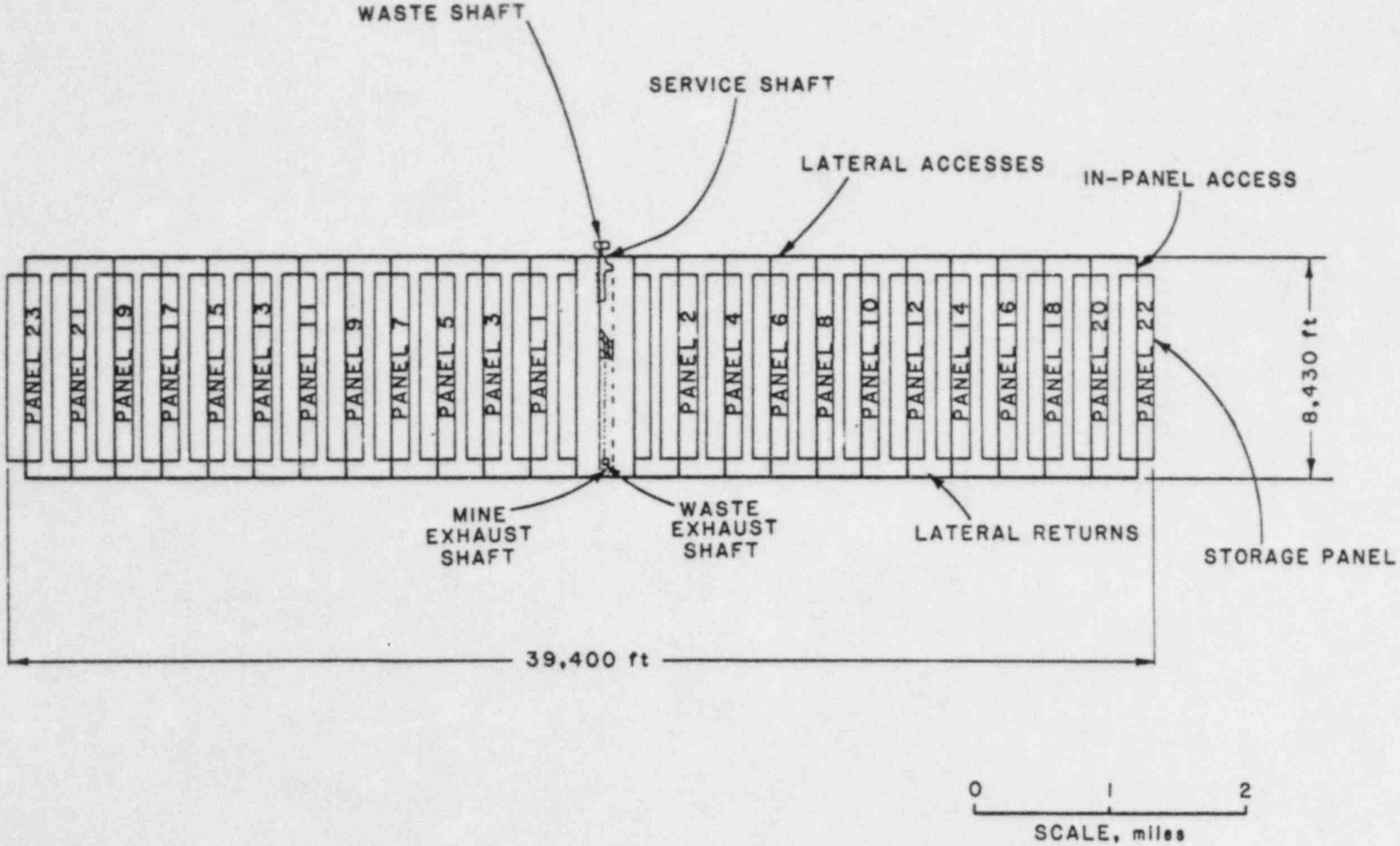

Figure 10.5-1 Layout for repository employing horizontal holes for canister storage. (RHO-BWI-CD-35, 1980)

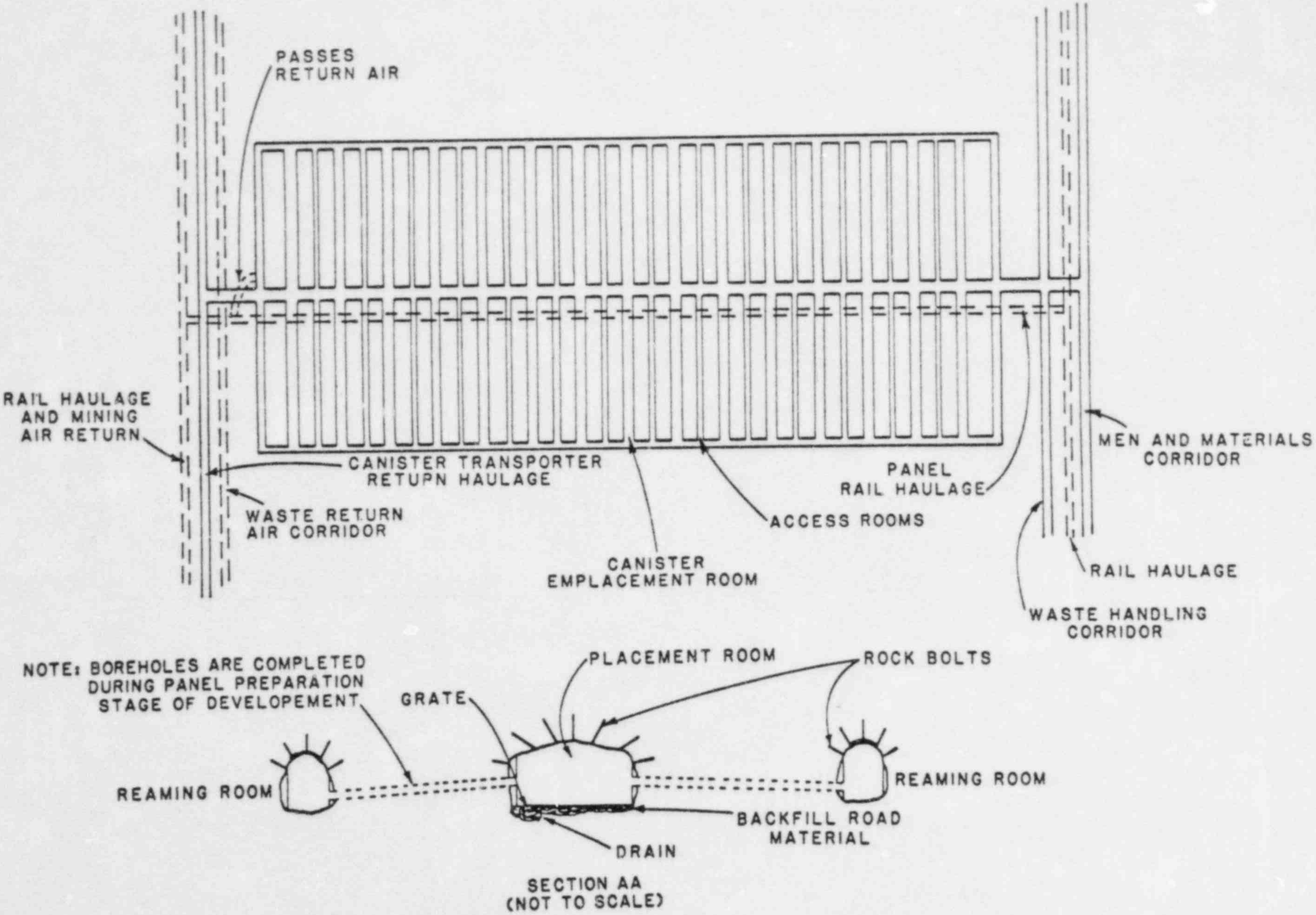

Figure 10.5-2 Panel and room layout for storage in horizontal holes. (RHO-BWI-CD-35-1980)

Table 10.5.2 Dimensions of Repository Facilities

Facility	Dimensions
Personnel and Materials (Service) Shaft	23 ft inside diameter
Basalt Transport Shaft	18 ft inside diameter
Waste Transport Shaft	26 ft inside diameter
Waste Air Exhaust Shaft	18 ft inside diameter
Mine Air Exhaust Shaft	18 ft inside diameter
Central Panel Corridor	26 ft by 16.4 ft (lined)
Sublevel Rail Haulage Corridor	26 ft by 16.4 ft (lined)
Transporter Access	26 ft by 16.4 ft (lined)
Transporter Return	26 ft by 16.4 ft (lined)
Man and Supply Access	26 ft by 16.4 ft (lined)
Waste Air Return	26 ft by 16.4 ft (lined)
Rail Haulage Access	13 ft by 13 ft (lined)
Rail Haulage Return	26 ft by 16.4 ft (lined)
Rock Pass	7.5 ft by 16.4 ft by 29.5 ft
Panels	1,228 ft by 6,232 ft
Storage Rooms	31 ft by 16.4 ft
Reaming Rooms	9.8 ft by 16.4 ft
Rib Pillars	656 ft
Panel Pillars	164 ft
Room Pillars	174 ft
Storage Holes	24-in. diameter by 175 ft long
Storage Hole Pitch	8.4 ft

According to assumed repository construction schedules, placement is required to begin within ten years of construction authorization. Assuming five years for shaft sinking and allowing for contract procurement for both the shafts and the underground development, pre-placement development must be completed within three years. Because different types of waste will be stored in separate panels (according to information supplied to EI by the NRC) and an available spare panel is desirable at all times, three panels must be ready for storage by year 10. To develop three panels requires a rate of 7,500 tpd on a five-day-week basis.

If repository development must be completed before waste placement occurs, the required development rate is about 37,500 tpd. Such a daily tonnage would require large crews and a large number of pieces of equipment. Also, to our knowledge, there are few if any room and pillar mines which hoist this large a daily tonnage in hard rock.

In the preconceptual design (RHO-BWI-CD-35, 1980), development and storage proceed outward from the panels nearest the shaft pillar to those at the extremity of the repository.

The mine cycle in a given heading would consist of (in order):

- Drill the round
- Load and blast the round
- Remove the broken muck
- Install ground support.

A "Dental Excavation" method has been proposed (RHO-BWI-CD-35, 1980) whereby all but the outer 3 ft of an opening is excavated by an initial drill and blast round and the remainder is subsequently blasted using a "trim round" of lightly-loaded, closely-spaced holes.

Although the basalt is strong and competent, rock reinforcement and support are necessary to protect against minor local failures such as rockfalls. A loosened zone surrounds openings excavated in rock, which with the "dental excavation" techniques referred to above, could be as little as 3 ft. The zone is generally sufficient to require some support where otherwise unnecessary. In the preconceptual design (CD-35), the proposed support systems consists of:

- Rock bolts whose length exceeds one-third the opening span, spaced no more than 4 ft apart

- Shotcrete, nominally 4-in. thick

- Cast-in-place concrete at critical locations.

Mining will tend to drain the repository as the water flows toward the openings. Because of the low permeability of basalt and the resulting long travel times, only a fraction of the water contained in the Umtanum Flow is expected to drain.

10.5.1.4 Canister Arrangement

The waste package (Figure 10.5.3) consist of a canister 16-in.-outside diameter and 18.5-ft-long containing either one Pressurized Water Reactor (PWR) or three Boiling Water Reactor (BWR) spent fuel assemblies. The packages will be placed in 24-in.-diameter holes drilled horizontally on 8.4-ft centers into the pillars between the storage and reaming rooms. The hole is lined with a carbon steel sleeve which is grouted into place with cementitious, absorptive materials. No mention is made in of how the sleeve or the grout are placed, though this is standard tunneling technology.

10.5.1.5 Thermal Loading

As a result of decay of the radionuclides contained in the spent fuel, the waste packages radiate heat. Unreprocessed spent fuel contains fission products which are relatively short-lived and actinides which are generally quite long-lived. As the radionuclides decay to stable isotopes, the number of disintegrations, and the heat produced decrease with time. The heat produced by a canister will be maximum at the time of emplacement.

A canister will contain either one PWR or three BWR spent fuel assemblied. Assuming 10-year-old waste, canisters will have heat loads of approximately 0.55 kW and 0.66 kW for PWR and BWR, respectively. To be conservative the heat load per canister is taken as 0.7 kW.

The areal extent of the repository, the canister spacing, the age of the waste, and the type of waste (PWR or BWR) determine the overall thermal load on the repository. To be conservative, assume the waste is 10-year old PWR. Waste type and age will vary, and actual panels are assumed to consist of waste of a uniform type and age to avoid uneven thermal loading within a room or panel.

The effective storage area consists of 24 panels occupying 188 acres each or 4,330 acres total. Using the 0.7 kW/canister thermal load and the waste complement of 22,500 canisters per panel, the heat load within a panel is 83.8 kW/acre. By comparison, the in-panel loading given in CD-35 is 150 kW/acre which requires a canister heat load of 1.25 kW/canister. Given the assumption in CD-35 of 4.1 kW/canister for reprocessed HLW, the heat load requires a ratio of spent fuel to HLW equal to 5.2 to 1. On the basis of the gross repository area including the shaft pillar and service areas, the overall heat load will be 50 kW/acre.

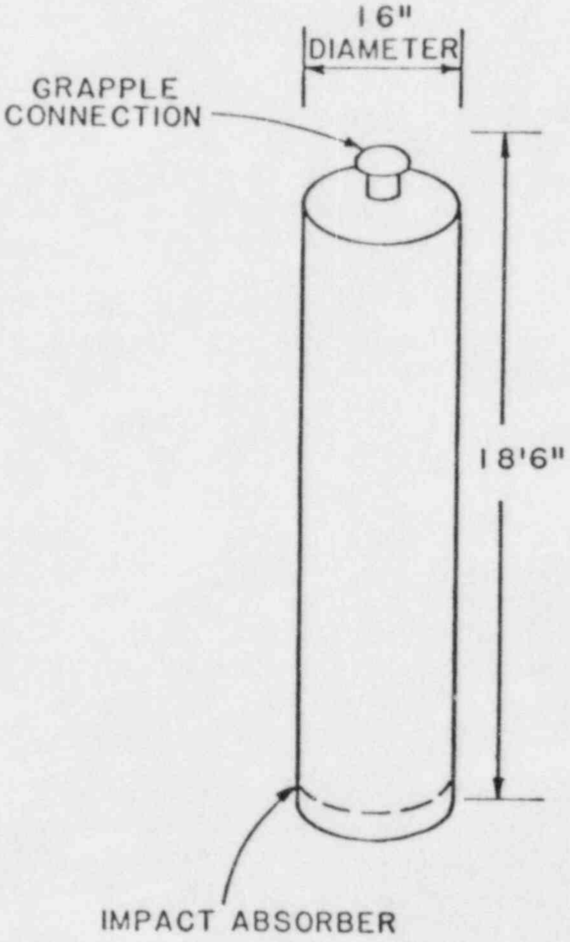

REFERENCE WASTE CHARACTERISTICS

CANISTER	THERMAL POWER	SURFACE DOSE RATE
SPENT FUEL	700 W	20,000 REM/HR
HLW	3100 W	100,000 REM/HR

Figure 10.5.3 Standard waste canister.
(RHO-BWI-CD-35, 1980)

10.5.1.6 Backfill Timing

Ultimately, a repository must be backfilled, with the backfill designed as a barrier (10CFR60.133). In this repository concept, backfill will not be placed until permanent closure. Remining of backfill for retrieval purposes is apparently not an issue since the decision to permanently close nullifies the retrievability requirement.

Permanent closure will take about 23 years to complete, the same length of time as placement; therefore, retrieval could be required for some reason during the permanent closure process, though the rule (10CFR60) does not require retrieval to be maintained as an option after initiation of permanent closure. Once the backfill is placed, the repository concept basis is changed. Remining prior to retrieval will not be detailed in this concept because the retrieval operations would be similar to concepts where backfill is placed immediately after waste emplacement.

10.5.1.7 Ventilation

Rooms are bulkheaded but not backfilled until permanent closure. The two potential development options:

- Develop and store waste simultaneously
- Develop whole repository prior to waste placement,

result in two potential ventilation schemes. In the first case, two separate ventilation circuits are required:

- Mine (development) ventilation system
- Confinement (storage) ventilation system.

Although rooms will be bulkheaded as soon as storage has been completed, the central panel accesses will remain open. The airflow required for the waste air circuit will increase until storage has been completed in the entire repository if development and storage occur simultaneously. If repository development is completed prior to commencement of storage operations, there are three possibilities:

- If rooms are left open until storage takes place, the require ventilation capacity will decrease as placement progresses

- If rooms are bulkheaded but the central panels accesses remain open, the required airflow will remain constant

- If panels are totally bratticed, then the required airflow will increase as the repository is filled.

The second option is the most practical.

In the summer, the intake air may require precooling in order to maximize the convective heat removed from the rock. In winter, the intake air may require heating to ensure that the temperature exceeds 37°F to avoid icing. Heating could best be accomplished by extracting heat from the exhaust air using heat exchangers.

10.5.1.8 Retrieval Systems

Title 10, Part 60 of the Code of Federal Regulations (10CFR60) requires that repository operations be designed so that any or all of the waste could be retrieved on a reasonable schedule "Full Retrieval" (sometimes termed "Mass Retrieval") is removal of all waste. Retrieval on a limited basis (a few canisters, a single room, or a single panel) may become necessary. The latter scenario is designated as "Local Retrieval."

After breaching the bulkheads, the repository rooms are precooled to allow the same type of equipment to be used for both storage and retrieval. This equipment is shown in Figure 10.5.4. The temperatures after precooling will remain workable and high temperature equipment for retrieval is not necessary. The equipment and order of operations for retrieval is given in Table 10.5.3.

10.5.2 Retrievability Impacts on Repository Systems

10.5.2.1 Excavation Systems

Storage rooms are bulkheaded after being filled with waste canisters, but an access will be maintained to monitor the storage atmosphere. Bulkhead design is not detailed in RHO-BWI-CD-35 but must meet certain criteria to prevent deterioration from extreme differential temperatures. The bulkheads will likely be made of concrete and contain reinforcing steel, keyed into the side walls.

The bulkheads will be removed upon retrieval or at permanent closure in one of several ways. Blasting may be the least desirable, possibly causing damage to the entry. Drilling holes for rock breaking devices may be the safest, and does not require elaborate equipment or highly skilled labor.

Bulkhead removal may be tedious but is well within present technology. Certain precautions must be undertaken to protect personnel from sudden exposure to the higher temperature and possible radioactivity behind the bulkhead. Precooling the panel is necessary before equipment can enter the area.

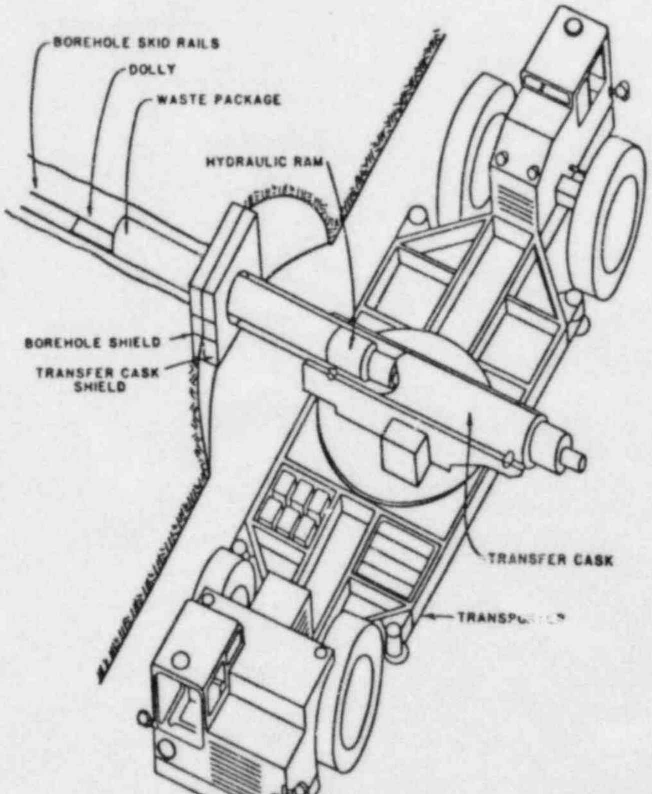

Figure 10.5-4 Transporter and transfer cask configuration for placing waste in horizontal holes. (RHO-BW-SA -273 P, 1982)

Table 10.5.3 Retrieval Conditions and Operations

(A) CANISTER, HOLE, WASTE PACKAGE

1. Canister - Carbon steel
   non-shielded

   O.D. = 16 in.
   L = 18.5 ft
   Bundled fuel rods

2. Hole - holes are horizontal

   Hole length is 197 ft[1]

   Hole spacing is 8.5 ft

   Hole diameter is 24 in.

   A carbon-steel sleeve is grouted into the hole

   6 canisters in each hole, with spacers in-between[2]

   A plug is placed at the reaming-room end of the hole

   A wall shield provides a "target" alignment guide

(B) PLACEMENT UNIT

1. Horizontal, longitudinal transporter
2. Shielded transfer cask

(C) EMPLACEMENT SEQUENCE

1. Align transporter with hole
2. Open valves in wall shield and transporter
3. Telescoping hydraulic ram pushes canister into hole (pushing next canister and spacer deeper into hole)
4. Close valves
5. Remove transporter
6. Plug[3] is emplaced after last canister (using ram in transporter or another piece of equipment designed for plug placement)

(D) RETRIEVAL ENVIRONMENT

1. Before pre-cooling, air temperature = 290°F and rock temperature = 290°F
2. After pre-cooling, air temperature = 80° wet bulb
3. Worst case is when canister has been in ground 50 years
4. Rock temperature will be greater than 290°F
5. More information is needed on the temperature gradient between the canister and the room for retrieval scenario.
6. All that is known now is that the wall rock temperature will be between 80°F and 290°F
7. Water situation is also unknown. 100% humidity is probable, ponding of water is possible

(E) RETRIEVAL SEQUENCE

1. Radiation survey
2. Filter contaminated, hot room air
3. Pre-cool room
4. Decontamination and clean-up
5. Put on wall shield
6. Align transporter with hole
7. Remove plug[4,5]
8. Grapple spacer and remove it[6]
9. Grapple and remove canister[6,7,8]
10. Repeat steps 8-9 until all canisters retrieved

(F) NOTES

[1] What is current capability for drilling a long, straight hole? What are the criteria for the rejection of crooked holes?

[2] If spacer is shielded retrieval will be facilitated

[3] Plug preferably screw-threaded to facilitate retrieval press-fit makes problems

[4] Special equipment may be required

[5] Shielding may be necessary to prevent streaming from hole

[6] Special grappling equipment will be required to grapple spacers and canisters deep in the hole. Possibilities include:

- a. Redesign of hydraulic ram to reach end of hole
- b. Mechanical "mouse" with a chain
- c. A "pushing" system from the reaming room

[7] Potential problems include:

- a. Breached canister
- b. Lost piece of canister that is grappled onto
- c. Canister stuck due to deformation of liner

[8] Friction perhaps made worse by rust, could be a problem, potential solutions include:

- a. Rails or upset in sleeve
- b. Graphite or teflon in annulus

10.5.2.2 Equipment Systems

Retrievability effects on equipment systems can best be identified with the aid of the flow chart shown in Figure 10.5.5. Each basic repository operation is given an identification number to facilitate identification of an event's effect on all systems. With development mining completed, the only active operations involve canister storage. Different levels of retrievability vary greatly in the way they affect repository operations.

Local retrieval of canisters for any reason may take place concurrently with storage operations. Unless new equipment is obtained for the task, the storage equipment will have to be used slowing the normal storage rate. Retrieval of breached canisters will require "hot cell" or shielded equipment along with decontamination equipment in the storage area. Transporting the canisters to the surface (Figure 10.5.5) will require use of the crane (3), hoist (4), and surface handling facilities (5). This will slow, but not stop, storage operations since retrieved canisters can travel in the ascending conveyance which canisters to be stored travel in the ascending one. The delays occur since the handling equipment can handle only one canister at a time. The debris from bulkhead removal must be handled which imposes additional loads on the material handling systems.

Full retrieval of canisters can be planned systematically for a full storage room or full repository, starting with the oldest storage rooms. Because the same handling equipment will be used for the full retrieval operation as for emplacment, an operating schedule can be defined, with no interference from other operations. If any canisters are breached, the retrieval will be more complex due to contamination. Special equipment will be used for the breached canister retrieval operation. A repository committed to one operation at a time (such as canister emplacement) makes a much more efficient operation than if local retrieval is concurrent.

Before canisters can be retrieved, an excavation system is necessary to remove the bulkhead. Although specialized equipment may be used for local retrieval, a separate work force is not necessary. Personnel would most likely be taken from other duties and consequently one or more routine operations would be temporarily postponed or slowed.

10.5.2.3 Facilities

If mining development and waste emplacement are concurrent operations, the reason for full retrieval will most likely preclude further mining. The modular concept of repository operations keeps the two systems separated to the extent that equipment for each

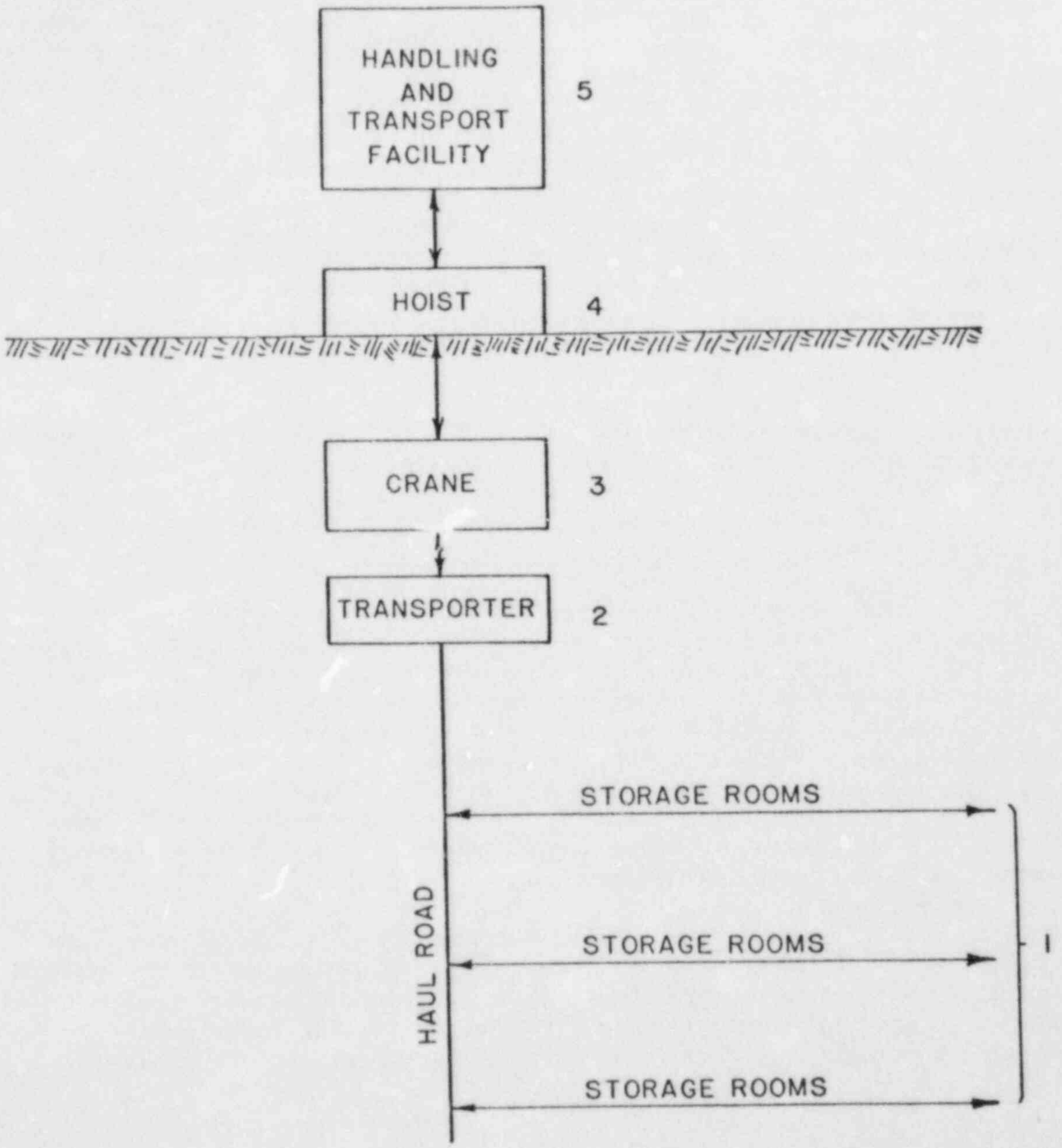

Figure 10.5-5 Schematic of waste handling operations.

system uses different haulageways and hoisting shafts. Facilities such as haulageways, loading bins, skips, and the equipment for handling mined rock will not be effected by local retrieval. The mining equipment may be temporarily stopped during full retrieval if warranted by retrieval conditions. The area most likely effected by local retrieval will be the shaft area where full transfer casks will be handled, hoisted, and lowered, and mined rock will be hoisted. If the retrieved canisters are breached, the congestion will be compounded.

10.5.2.4 Ventilation Requirements

Ventilation is provided only in the central access corridor of a panel after storage has been completed in the panel. The storage rooms within individual panels are bulkheaded but not backfilled until permanent closure. The impact of retrievability on the ventilation system depends on several factors:

- Whether development operations have been completed
- Whether retrieval is local or full
- Whether placement operations have been completed.

If development operations have been completed, two ventilation circuits are not required. The airflow capacity of the mine air circuit is available, if needed, for waste placement or retrieval operations. If development operations are in progress, only the capacity of the waste air circuit is available, if needed, for waste placement or local retrieval operations.

If full retrieval is initiated, then, by definition, both development and placement operations cease and the total ventilation capacity of both mine and waste circuits can be used for retrieval operations. Also, the combined capacity of the mine and waste air circuits can be used for retrieval, if necessary, as long as placement operations have been completed prior to initiation of retrieval.

After room bulkheads are breached, precooling will be required before retrieval can take place. The refrigeration and airflow capacities required for precooling depend on the temperature of the rock, the temperature of the intake air, the acceptable temperature for the exhaust air and the desired rate of cooling.

In order to monitor air quality within the bulkheaded rooms allowance should be made for a venting system to be installed in the bulkheads.

To keep the central panel accesses ventilated and reasonably cool requires an airflow of 25,000 cfm for each. Assuming development is completed prior to storage initiation, the maximum required airflow quantity would be when placement is occurring in the 23rd (or final) panel and local retrieval is required elsewhere. Allowing 155,000 cfm each for placement and retrieval, and an additional 10% for occasionally bleeding of air into bulkheaded rooms and for recirculation, the required airflow is 946,000 cfm. Because the total capacity of the combined mine and waste air ventilation circuits in RHO-BWI-CD-35 is 1,265,000 cfm, and sufficient capacity exists to allow these operations.

Where local retrieval is required while both storage and development activities are in progress, the mine air circuit is not available, and a sufficient capacity in the waste air circuit must be verified. The worst case would occur in the final year of development operations (year 22 of storage operations). At that time, all panels are bulkheaded except for the central access and one panel each where storage and retrieval operations are taking place. Basic airflow required is 810,000 cfm, (or 891,000 cfm allowing 10% for recirculation and occasional venting through bulkheaded rooms). The quantity of 891,000 cfm exceeds the capacity of the waste air circuit provided in RHO-BWI- CD-35, but could be accomodated by increasing the size of the fans at the Waste Air Exhaust Shaft. The size of the Waste Air Exhaust Shaft should also be increased to 19-ft diameter so the air velocity does not exceed 3,000 fpm. Proper sizing of the shaft is important in order to assure that any leakage between the mine air and waste air circuits is toward the waste air circuit.

10.5.2.5 Backfill

Backfill would not be placed until permanent closure. The requirement for retrievability does not directly impact backfilling operations. However, full retrieval would impact backfilling because when all the waste is removed, isolation of the repository and backfilling is no longer required. When a room or panel is emptied of waste, backfill would still be required to ensure that the room or panel does not become a preferential pathway for radionuclide migration.

10.5.2.6 Thermal Effects

The thermal effects associated with nuclear waste disposal in an underground repository have significant impacts on the retrievability of the waste. A number of thermal analyses have been completed by the Basalt Waste Isolation Project (BWIP) to determine the practical waste storage geometry and repository layout which will preserve the isolation capability of the host rock formation. Thermal effects can be divided into three distinct areas:

- Very-near-field effects which have the most direct impact on retrievability since elevated temperatures can lead to decrepitation of the borehole wall and jamming of the canister

- Near-field effects which impact retrievability indirectly by increasing the potential for creating instability of the storage rooms

- Far-field effects which have minimal, if any, impact on retrievability since the stability of the entries and shafts would not, in general, be affected by the thermal loading

Considering the thermal effect in the very-near field, the study on the borehole decrepitation indicates that local failure of a canister borehole wall may occur well below the apparent strength of the wall rock (RHO-BWI-CD-35, 1980). The consequences might be:

- Increase in canister temperature to an unacceptable level due to decreased thermal conductivity of the rock around the borehole

- Loss of retrievability of a canister from an unlined borehole.

A steel liner, preferably with a low yield strength between the liner and the wall rock, is recommended for controling borehole decrepitation. Further work is necessary to determine appropriate liner and backfill thickness.

Contradictory results for rooms openings were obtained during the course of studies by BWIP. As indicated in the BWIP SCR (DOE/RL82-3, 1982), the thermal impact on the openings in terms of thermal slabbing and spalling was very limited. The conclusion is only qualitative in nature and did not incorporate the coupled effect of the repository stresses with thermal loading.

In the near-field, the initial temperature in the storage room is around 134°F. The room temperature will increase to 302°F during the retrieval phase. The elevated temperature may increase rock mass and support instability in the rooms.

The thermal impact on the far-field (shafts and entries) would be insignificant, because they are remote from the waste emplacement panels and will be ventilated continuously throughout the entire repository life.

10.5.2.7 Equipment Requirements for High Temperature and Radioactive Environment

High temperatures in storage rooms will not be encountered during retrieval as long as rooms are precooled after bulkhead removal. The same equipment can be used for emplacement and for a full retrieval operation without modification for high temperature.

Radioactive environments will require special shielding of equipment for operator safety. Decontamination facilities will also be necessary to service equipment and storage areas.

10.5.2.8 Ground Support

As discussed in Section 10.5.1.3, initial support will consist of rock bolts at least one-third the opening span in length and spaced no more than 4-ft apart. Shotcrete will be applied in a nominal thickness of 4 in. to stabilize all intervening rock and a concrete liner 1.5-ft thick will be placed at critical locations. In RHO-BWI-CD-35, how the support requirements were determined is not indicated. Similarly RHO-BWI-CD-35 does not indicate the type of rock bolts to be used but presumably the bolts would be full-column grouted to minimize corrosion potential.

Resin grouted bolts are not acceptable for use in the repository rooms. The rock temperatures of 212°F and greater exceed the maximum service temperature of resin grout (Weast, 1983). Experience is lacking regarding the stability of bolts for a decades-long period. Experience with concretes at elevated temperatures (Troxell, Davis, and Kelly, 1968, p. 248-250) indicates that for simple temperatures increases to 212°F relatively minor strength losses occur due to loss of both free and combined moisture. Above 212°F more significant strength losses occur in the repository maximum temperature ranges up to, say 400°F, but amount to 10% reduction, or less. However, if the concrete is heated and then cooled, strength losses approach 25% or more at 400°F. Two considerations may minimize such strength losses. Using lean mixes and limestone, expanded slag, or similar aggregates minimize heat effects in this range. We suspect that the important cement grout, shotcrete, and concrete considerations for repository temperatures hinge on minimizing the water content and matching the thermal expansion and chemistry of cements and aggregates. Concrete also has a coefficient of thermal expansion intermediate between that of steel and basalt limiting difficulties resulting from differential thermal expansion.

Deterioration of the rock reinforcement over a decades-long period will occur and minor roof falls may result. Where rockfalls occur, the debris must be removed and support renewed prior to starting of retrieval operations. With bulkheaded rooms, remedial measures can be carried out only after breaching the bulkhead and precooling the room. The equipment required would be a Load-Haul-Dump vehicle and a roof-bolting jumbo.

Seepage of ground water towards the openings will occur. With time, the seepage could result in a build-up of pore water pressure on the shotcrete liner. Rock mass grouting at the time of construction of the rooms could minimize deterioration by seepage and chemical action.

Despite grouting efforts and shotcrete application to the repository walls, some ground water is likely to enter the repository during the operations period. Underground conditions could reasonably be expected to remain generally dry, but some allowance for the presence of minor amounts of water and steam during retrieval would be prudent. The water inflow volume postulated will likely result in a steam buildup in the room. The potential for steam is a function of the quantity of bulkhead leakage and water inflow.

10.5.2.9 Instrumentation

The performance of the repository has to be monitored to ensure the safety criteria are not violated and the isolation capacity is maintained. The retrievability option mandates significant changes in selected parameters or deviations from expected behavior be detected when they occur. Steps must be taken to correct the problem or retrieve the waste to the surface. Categories requiring monitoring are:

- Hydrogeologic - water inflow
- Thermal - heat buildup
- Mechanical - stress buildup rock deformations and rock instability
- Radiological - activity levels.

A monitoring program of subsurface conditions by visual inspection where possible and remote measurement from within panels will be initiated. Visual inspection and hands-on measurements are preferable to remote monitoring because instrumentation available at present is not reliable for periods in excess of about a decade, especially under the thermal conditions of the repository rooms. In order to evaluate the performance of the remote monitoring system, an experimental panel will be provided in the repository where extensive verification and confidence testing will be performed. The panel will also provide an opportunity to study the reliability of instrumentation.

Thermal monitoring will primarily consist of thermocouples embedded in boreholes drilled into the rock at intervals along storage rooms. Thermocouple signals will be collected at several spots and relayed to a central control console to detect abnormalities.

Hydrogeologic monitoring will consist of measuring the pressure of formation water in the vicinity of storage holes, in various accesses, and in basalt flows and interflows. High-precision, durable pressure transducers will be placed between packers in boreholes. Water quantities entering individual panels will be monitored by devices measuring the humidity, and temperature of the air inside the panels.

Mechanical monitoring will consist of a network of geophones and seismographs to monitor rock noise and rockfalls. The closure of pre-established points in accessways will be measured. At a few selected locations outside the panels, detailed evaluation of rock stability will be made using stressmeters and multiple position borehole extensometers.

Ventilation conditions in the repository will be monitored to detect radiation levels, fire and smoke emergencies, and ventilation blockages caused by rockfalls. Mobile radiation and thermal sensors in ventilation airways will permit continuous monitoring from a main surface control console. Flow direction, pressure, differential pressure, and temperature, will be monitored.

The retrievability requirement mandates monitoring of the repository for perhaps decades after initial placement of the waste. The following steps need to be taken to ensure the reliability of instrumentation placed in the repository:

- Develop geophones, stressmeters, multiple position borehole extensometers, piezometers, thermocouples, and ventilation instrumentation that will maintain their accuracy in the hot and humid environment expected in a repository.
- Provide extensive verification of the reliability of instrumentation in the experimental panel established within the repository.
- Ensure inspection of the repository at predetermined intervals can be performed by robots or by personnel in air-conditioned suits or vehicles.

10.5.3 Adequacy of Incorporated Retrieval Systems or Allowances

10.5.3.1 Local Retrieval

Local retrieval may be necessary for quality assurance, quality control, or a radionuclide release. A manufacturing error, for example, could cause premature breakdown of some canisters in a storage room. Local retrieval requires breaching the bulkhead, and precooling the room prior to retrieval. Bulkheaded but unbackfilled rooms permit the use of the same equipment type for emplacement and retrieval procedures, once the rooms are cooled. Equipment for resupporting the roof after precooling will be dedicated to the waste ventilation system. The canister transporter and "hot cell" equipment will be necessary for breached canisters. Unless the leaking canister is the one closest in the hole to the storage room, retrieval of a leaking canister will require prior retrieval of up to five other canisters.

Retrieval of breached canisters by overcoring the holes is apparently not practical with horizontal holes containing more than one canister. A possible method to facilitate retrieval would be to have a piece of equipment pushing from the reaming rooms as well as having the transporter and transfer cask in the storage room. One difficulty with this retrieval method is the narrow width of the reaming rooms. Provisions for such equipment is not included in the design and the incorporated systems are inadequate.

Equipment for removal of debris from the breached bulkhead must be incorporated in and dedicated to the waste ventilation circuit. In order to make the retrieval system adequate, the size of the reaming room must be increased and the equipment for pushing must be dedicated to the waste ventilation system. The waste ventilation system in RHO-BWI-CD-35 is adequate for local retrieval with concurrent development and storage. The Waste Air Exhaust Shaft diameter must be increased to 19 ft in diameter or a new shaft sunk in order to have sufficient airflows for local retrieval. Even with incorporation of larger reaming rooms and pushing equipment a broken or bound canister may make the retrieval system inadequate.

10.5.3.2 Full Retrieval

Full retrieval of waste canisters will need planning and preparation but will not be necessarily difficult. Full retrieval planning is eased because all repository resources can be committed to the operations. Underground storage may prove unsatisfactory leading to repository abandonment. Nevertheless, full retrieval should not require special equipment unless the reasons for retrieval interfere, such as excessive rock movement crushing canisters, or rapid deterioration of rock causing need for roof support and scaling equipment.

Full retrieval presents the same technological problems as local retrieval. The incorporation of large reaming rooms, pushing equipment or magnetic grapples, and equipment to breach and cleanup bulkheads and resupport the roof satisfy most of the retrievability requirements. With the repository dedicated to full retrieval the ventilation systems can be combined for adequate airflows. A broken or bound canister during full retrieval may make the incorporated system inadequate.

10.5.4 Concerns

10.5.4.1 Technological Concerns

No concerns were identified which can truly be attributed to a lack of technology. The transporter and transfer cask as described in RHO-BWI-CD-35 are inadequate for retrieval of canisters, especially those that have been breached. How a canister 150-ft deep in a 174-ft-horizontal hole can be retrieved is unclear. A telescopic arm can reach to the extreme distance, but if the canister is frozen in place due to excessive rock stress, retrieval may be impossible. Horizontal storage in holes 174-ft-long preclude the option of overcoring a breached canister. The drift for horizontal storage, being 31-ft wide, necessitates breaking the overcore numerous times before attaining the desired 150-ft-length. Breaking the rock mass will require a special operation, as well as additional work to the breached canister. In addition, the breaking of core will require the removal the entire lining before overcoring can begin. If the lining has been grouted into place removal could be quite difficult. The transporter and waste emplacement scheme described in the BWIP SCR, which has been assumed in this concept, incorporates features such as the magnetic grapple and telescopic grapple which would facilitate retrieval. Nevertheless, no provision is indicated for retrieving breached canisters, especially those which have broken into more than one piece. Design of such equipment does require some development but is attainable within current technology.

10.5.4.2 Safety Concerns

The preconceptual design (RHO-BWI-CD-35, 1980) required one transporter operator rather than two, which is not advisable under the hazardous operation of retrieval of breached canisters. Transporters will be the only equipment necessary for retrieval in the storage room. If an operator became injured he may have trouble getting aid quickly. Personnel working in pairs help eliminate the communication problem in case of injuries to the partner. The transporter described in the BWIP SCR, which has been assumed for this concept, does have two operators and thus corrects this potential problem. The "buddy system" is widely used throughout the mining industry to help safeguard personnel, and seems desirable for repository operations.

Experience is lacking regarding the effectiveness of grouted bolt and shotcrete support systems over periods of decades and at the high rock temperatures (up to 300°F) that will be encountered. (The maximum continuous service temperature for the polyester resins normally employed in grouted bolts is about 212°F (Weast, 1983) and hence other grout materials are required.) The uncertainties concerning high temperatures can be minimized by using cement mixtures for the bolt grout and shotcrete which minimize heat effects (Section 10.5.2.8). Some weakening of the supports will take place with time and some minor roof falls will occur. With bulkheaded but unbackfilled panels, support rehabilitation can be carried out only after the bulkheads have been breached and the panels precooled. The reintroduction of moist ventilating air can aggravate weaknesses in the room and cause roof falls through the mechanism of moisture entering any cracks.

In spite of grouting and shotcreting, some water will seep into the rooms of the repository. Because of the flat grade of the rooms, the water will not drain but will collect in local low spots. As the water will likely be contaminated, the water must be carried in tanks or closed conduits to treatment areas. After a period of 15 years the increasing room temperature will cause the water to become steam. The steam must be handled during the breach of the bulkhead to prevent a possible safety hazard.

All canisters will be emitting radiation. In the course of storage, the hole plugs may be sufficient to minimize escape of this radiation into the rooms. During retrieval, however, the rays can escape as streaming radiation if the doors on the borehole and transfer cask shields are not tightly closed. In the case of breached canisters, gaseous radionuclides and beta radiation will also be emitted. The potential dosages must be determined in order to provide adequate shielding for personnel.

10.5.4.3 Radionuclide Release Concerns

One of the possible reasons for retrieval is failure of the waste package, with consequent release of radionuclides. Gaseous and volatile radionuclides may be released into the emplacement hole while soluble radionuclides may be carried away by any water that is present in the emplacement hole. Removal by aqueous solution, requires the presence of water in liquid form; that is, its temperature must be less than the boiling point for the repository pressure conditions.

10.5.4.3.1 Releases into Air

The gaseous and volatile isotopes which could be released by a breached canister are hydrogen-3 (tritium), carbon-14, and krypton-85. The quantity of krypton-85 is large compared with that of either tritium or carbon-14. In addition, the carbon-14 must be in a form that leads to volatile species upon reaction with water in order to be of concern. It is assumed that one-tenth of the krypton-85 is sufficiently near an exposed surface to be able to leave the fuel. If a breach occurs, the concentration of krypton-85 and tritium in air must not exceed 10 nCi/liters and 5 nCi/liter, respectively, in order to satisfy 10CFR20. (These radioactivity concentrations standards are defined by the EPA in metric units, the equivalent traditional units, for reference, are 0.35 nCi/ft^3 and 0.18 nCi/ft^3, respectively.)

If storage hole plugs are gas-tight, release of gaseous radionuclides from a breached waste package will occur at retrieval. Otherwise, the radionuclides will leak through the plug into the air. Assuming the room was still bulkheaded and the breach was discovered due to radionuclides in the leakage air retrieval of the breached canister would require removal of the bulkheads and precooling. The time required to reduce krypton concentrations to the Maximum Permissible Concentration (MPC) given in 10CFR60 would not exceed a few hours. In any case the time required for precooling greatly exceeds the time required to dilute the krypton-85.

Releases occurring at retrieval can be avoided by having radiation sensors in the holes. The gaseous radionuclides could then be drawn off prior to retrieval using millipore filters or a cryogenic absorption system, both of which fall within existing technology.

10.5.4.3.2 Releases into Water

With regard to the movement of radionuclides by aqueous transport, this, as previously mentioned, requires that water be in the liquid state. At a pressure of 1,600 psi, the boiling point of water is about 60C°F, and since the rock temperature will be 300°F or less, pore water will be in the liquid state. Since the rooms are at atmospheric pressure, this water will vaporize as soon as it enters the room.

For water to transport radionuclides, it is necessary that water come into contact with a breached canister. This would require penetration of the grouted-in steel hole liner. Supposing this did happen, and water contacted a breached canister, the rate of dissolution would vary widely with the water composition and temperature. For a typical rate of 0.0000264 lb/day, the solution water would contain about 0.25 mCi/lb water and one pound of this solution would generate about 0.1 mR/hr at 4 ft.

Water could also dissolve gaseous radionuclides. Krypton-85 has a solubility of 0.628 ft^3/100 gal (Weast, 1983) in hot water so that only about 1.5 gal of water would be require to dissolve the krypton-85 released by a single breach. Thus water which came into contact with a breached canister and then percolated into the room would release gaseous radionuclides as it entered the room. As in the case of direct releases to the air described in Section 10.5.4.3.1, the time required to dilute the krypton-85 to the MPC is much less than the precooling time.

Hence water intrusion would provide a good index to failures but would not by itself introduce significant radiation hazards to the operations (Post, 1982).

10.5.4.3.3 Radiation Detection Standards

The radiation levels measured during retrieval operations are not exceptional so that the system standards used in the nuclear industry would prevail. Lower limits 0.1 mR/hr and upper limits of a few kR/hr would be adequate. A system to detect krypton in the ventilating air and in the storage holes will be required. This system should be capable of detecting krypton-85 levels below 100 pCi/liter (2.6 pCi/ft^3) (Post, 1982).

10.5.4.4 Operational Concerns

The pitch (or spacing between storage holes) is given in RHO-BWI-CD-35 as 8.4 ft. Intersection of adjacent holes is unacceptable. The lateral alignment variance therefore must be less than a 3-ft-radius from the design location. The tolerance can be easily achieved in vertical or steeply dipping holes, but is difficult to attain in flat-dipping or horizontal holes. In the Site Characterization Report (SCR), the hole pitch has been expanded to 60 ft for spent fuel and 107 ft for commercial high level waste. As a result, the restriction concerning alignment does not apply. Variation in the alignment should be minimized and to do so requires careful drilling. As noted in the SCR, horizontal holes will tend to deflect downward due to the weight of the drill head and drill string. Deflection increases with bit size. To minimize the deflection, the holes will be drilled at a smaller size first and back-reamed to full size, as noted in the SCR. Where close to and roughly parallel to bedding planes, holes may tend to follow these planes.

In RHO-BWI-CD-35, the transfer cask is fitted longitudinally on the transporter and as a result the transporter must have its long axis parallel to the placement holes (or perpendicular to the long axis of the rooms) in order to place or retrieve waste. Turning the transporter to align with the holes will be a difficult and time-consuming maneuver. The problem has been rectified in the BWIP SCR by having the transfer cask on a turntable which rotates to align the transfer cask with the hole.

If a canister has been breached, especially if the canister has broken into more than one piece, the transfer cask and transporter combination will not be able to successfully retrieve. With horizontal holes, overcoring is not feasible. The holes, however, are accessbale at both ends and retrieval could be accomplished by using a transporter at each end with the hydraulic ram in the transfer cask on one pushing and the grapple on the other pulling. Reaming rooms must, then, be equal in size to the placement rooms, rather than smaller as currently designed.

Because of the heat load, large capacity spot coolers will be required in active headings. These cooling units will take up a large amount of space, reducing the clearance for vehicles. In addition, coolers have a finite useful life and become less efficient with age.

10.5.4.5 Other Concerns

A fundamental concern related to a repository in basalt concerns the geologic/hydraulic uncertainty at the repository horizon. Among the concerns are:

- Uniformity of the thickness at the canidate basalt flow
- Uniformity of the jointing
- Occurrence of faults
- Vertical and lateral hydraulic conductivity.

The in situ exploratory programs planned (1983) by DOE (ES-I and ES-II) are aimed at resolving the questions about geologic and hydrogeologic parameters at the proposal repository horizon.

Another concern is the probability of and mechanisms for canisters to become breached. One mechanism is corrosion by ground water. The rate of corrosion will depend on the ions present in the ground water, their concentrations, and whether the chemical environment is reducing or oxidizing. Another possible mechanism is attempted retrieval of a canister upon which the hole has closed. With an annulus of 6-in. between the hole perimeter and the canister in the most recent SCR design, the mechanism is unlikely. Assuming that canister breaches will occur at sometime during the 50-year retrievability period, the activities of toxic (strontium and cesium), volatile (iodine), and gaseous (tritium, krypton-85) radionuclides and the dosages of beta and gamma radiation that would occur for breaches at various times up to decades after placement must be predicted.

10.5.5 Summary and Conclusions

The repository is located at a depth of 3,700 ft in the Umtanum Flow basalt of the Hanford Reservation, Washington. The repository consists of 23 storage panels and one experimental panel divided by a shaft pillar into two sections of 12 panels each. Each panel is divided into 30 storage areas consisting of a storage room with reaming rooms on either side. The storage room are 515 ft long, 31 ft wide and 16.4 ft high.

The waste package consists of carbon steel, 16-in. in diameter and 18.5-ft in length, and contains either one PWR or three BWR spent fuel assemblies. Six canisters are placed in each 174-ft-long, 24-in-diameter horizontal hole. Based on an average canister thermal load of 1.25 kW/canister at time of placement, the panel thermal load is 150 kW/acre. The rooms are bulkheaded after being receiving the complement of waste. Backfilling of the rooms would not take place until permanent closure of the repository.

The retrievability requirements of 10CFR60 impose the following effects on the repository systems:

- Re-excavation System - Equipment is required to remove the bulkheads. Drilling jumbo and rock breaking devices are anticipated for the work
- Equipment Systems - A Load-Haul-Dump and a roof bolter are required to resupport the roof after precooling the rooms. Canister retrieval will require modifications of the placement transporter to "pull" the canisters or a second transporter in the reaming rooms to push the canisters out
- Facilities - Local retrieval may impose additional loads on the transportation, confinement ventilation and development mining. Handling debris from the bulkhead removal operation will impose an additional load on the material handling system
- Ventilation Requirements - Sufficient capacity is included in the ventilation system for full retrieval if both mine and waste air ventilation circuits are used for that purpose. For local retrieval while development and storage are in progress, the waste air circuit capacity must be increased from the values in RHO-BWI-CD-35
- Backfilling - none required until permanent closure.

Breached canister retrieval imposes additional requirements on the equipment systems and repository facilities.

The concerns for the repository concept are as follows:

- Technological Concerns:
  - Overcoring a horizontal hole, 174-ft-long to retrieve a breached canister requires removal of the hole lining and numerous difficult core breaks
  - Within current technology, a telescopic ram or magnetic grapple requires development and implementation to retrieve the canisters
  - Adequacy of the rock support system for a period of decades
- Safety Concerns:
  - Deterioration of the roof support system due to elevated temperatures resulting in rockfalls
  - Presence of radioactive fluid on the repository floor and radioactive steam prior to and during retrieval
  - Streaming gamma radiation, possible beta particles, and gaseous radionuclides during retrieval
- Radionuclide Release Concerns:
  - Canister breaches would result in release of gaseous hydrogen-3 (tritium) and krypton-85, and volatile carbon-14, of which krypton-85 would have the largest concentration
  - Diluting krypton-85 to the MPC given by 10CFR20 could take up to several hours for a release from a single breached waste package
  - The mechanics for release of gaseous radionuclides from the storage hole to the atmosphere could be non-gas-tight hole plugs, streaming through the floor shield at retrieval and aqueous transport (if hole liners corrode)
  - A system is required for detection of krypton-85 in ventilating air and in storage holes

- Operational Concerns:
  - Excessive deviation of storage holes from proposed alignment due to variations in rock properties and drill bit and steel weight
  - Difficulties in fully grouting the hole liner into place
  - Alignment of the transporter cask with the hole requires precise positioning
  - Large capacity heat exchangers limit space in room entrances
- Other Concerns:
  - Geologic and hydrogeologic uncertainties
  - Undetermined probabilities and mechanism for canister breach
  - Prediction of radionuclide activities during the repository life.

The general repository systems for retrieval are well defined. Recent information supplied by DOE has eliminated several areas which were previously unclear. Further definition and confirmation is required in areas of hydrogeology and geology, canister retrieval operations, especially in case of breach and probabilities and mechanisms for breach. The repository concept meets the retrievability requirements of 10CFR60 except in the case of retrieval of breached canisters.

10.6 Basalt Repository with Horizontal Hole Storage and Immediate Backfilling

10.6.1 Basic Information

The sixth repository concept is in basalt with horizontal storage holes in the pillars between rooms, and rooms bulkheaded and backfilled after completion of emplacement. The concept is similar to the preconceptual design presented in report RHO-BWI-CD-35 and hereafter referred to as RHO-BWI-CD-35.

10.6.1.1 Definition of Repository Concept

The host geologic medium is basalt. Waste packages will be placed in 24-in.-diameter holes in the storage room walls, with six canister per hole. The rooms will be bulkheaded and backfilled as soon as storage has been completed. The concept is the same as that given in RHO-BWI-CD-35.

The emplaced canisters emit heat of 0.7 kW/canister for unreprocessed spent fuel and 4.1 kW/canister for reprocessed waste, resulting in a thermal loading in a panel of 158 kW/acre and of 50 kW/acre over the entire repository area.

10.6.1.2 Geologic Environment

10.6.1.2.1 Rock Units

The proposed horizon for the nuclear waste reference repository in RHO-BWI-C-116 at the Basalt Waste Isolation Project (BWIP) is the Umtanum Flow of the Grande Ronde Basalt. Recent (1982) core drilling in the vicinity of the Reference Repository Location at BWIP indicates the Umtanum Flow interior may thin in places. Until the final decision is made concerning which flow will be proposed for the repository, the Umtanum Flow will be assumed for design review purposes.

The Umtanum Flow, a single basalt flow, has a typical cross-section consisting of (in descending order) the flow-top, the entablature, and the colonnade. The repository would be located in the entablature, whose thickness in boreholes has averaged 150 ft. The Umtanum Flow basalt is black to dark green in color, extremely fine-grained to glassy in texture, and composed principally of plagioclase, clinopyroxene, and glass, with titano-magnetite and ilmenite as accessory minerals.

10.6.1.2.2 Rock Mass Properties

The rock mass properties of the Umtanum Flow are probably controlled by intraflow structures such as joints, vesicles, and flow-top breccias. Correlations of intraflow structures between 10 coreholes penetrating the Umtanum Flow (Myers et al., 1979) found a significant variation in the flow-top breccia thickness and columnar joint spacing across the Pasco Basin. Rock mass properties can also be expected to vary. DOE designs anticipate a rock mass that responds well to tunneling, with minimal support required.

The mechanical and thermomechanical properties used for the conceptual repository design were based on generalized basalt properties. Most rock testing was performed on intact rock samples in the laboratory. Test results varied with rock density and temperature (RHO-BWI-CD-35, 1980).

The present (1983) lack of in situ rock mass data remains an issue to be resolved from investigations at the Near Surface Test Facility (NSTF) and the future at-depth exploratory programs (ES-I and ES-II). Design parameters may be re-evaluated as data are developed from these test programs. Ranges for the properties based on data currently available are given in Table 10.6.1 (NUREG/CR-2352, 1982).

10.6.1.2.3 Hydrogeology

The hydrogeological data presently (1983) available do not fully define the ground water system. The data indicate fractures and intraflow structures control the ground water flow at the repository site. The vertical hydraulic conductivities, as yet undetermined, strongly affect radionuclide migration into the accessible environment. Near-field ground water flow models which consider repository construction and waste emplacement are yet to be developed. The geochemical changes due to the introduction of nuclear wastes remain unclear.

The hydrogeological information deficiencies will be addressed by on-going exploration programs. Preliminary estimated hydrogeologic conditions for the Umtanum Flow are:

Hydraulic conductivity:	10^{-6} to 10^{-8} fps; flow top
	10^{-10} to 10^{-13} fps; columnar zone
pH (at 149°F):	9.4 to 9.9
Eh:	-0.36 to -0.41 volts

Table 10.6.1 Range of Rock Mechanics Properties of Hanford Basalt (NUREG/CR-2352, 1982)

	Intact	Fractured	Estimated In Situ
Compressive Strength (psi)	5,400 to 60,000	0 to 44,000	-
Tensile Strength (psi)	1,000 to 3,500	0 to 1,000	-
Young's Modulus (psi)	8.0 to 14.0 x 10^6	-	0.8 to 1.4 x 10^6
Poisson's Ratio	0.5 to 0.35	-	-
Thermal Conductivity (Btu/hr-ft°F)	0.484 to 1.45	-	-
Specific Heat (Btu/lb-°F)	0.175 to 0.28	-	-
Thermal Expansion (/°F)	2.22 to 4.11 x 10^{-6}	-	-

10.6.1.2.4 Seismicity

The proposed site is seismically quiet with only two Intensity VII (Modified Mercalli) earthquakes having been recorded since 1898. Seismic monitoring of the Columbia Plateau has determined that microearthquake (low magnitude) swarms typify the activity of the region (Myers et al., 1979).

10.6.1.3 Repository Construction and Layout

As shown in Figure 10.6.1, the repository will contain 23 storage panels, an experimental area, and a panel for storage of LLW waste. Each panel (Figure 10.6.2) contains 30 storage areas driven perpendicular to a central panel access. Each storage area consists of a storage room with reaming rooms on either side. Each storage area holds 750 canisters within 125 boreholes, 174-ft long. The rooms are 575-ft long. The pillar surrounding each panel will be 164-ft thick between panels and 656-ft thick between the panel openings and the lateral access and return entries. Access to the panels is by main entries at either end (intakes at one end, returns at the other) which connect the storage panels with 5 shafts to the surface. Entries and rooms will be driven by drill-and-blast methods. Dimensions of the various facilities are given in Table 10.6.2. Because of ventilation requirements for an open repository, an extra ventilation shaft is required in addition to those detailed in RHO-BWI-CD-35. Each shaft will have a different function, as follows:

- Personnel and materials (service) shaft
- Waste air exhaust shaft
- Mine air exhaust shaft
- Basalt transport shaft
- Waste transport shaft.

The shafts will be sunk by conventional drill-and-blast methods and lined with a concrete/steel/concrete sandwich liner.

There are two potential sequences for repository development and waste placement, namely:

- Repository development has been completed before waste storage begins

- Panel development and waste storage take place concurrently with both operations advancing at the rate of one panel per year.

These two options have very different requirements for ventilation and excavation systems, shaft facilities, and equipment quantities. The dimensions for the facilities given in Table 10.6.2 are for the

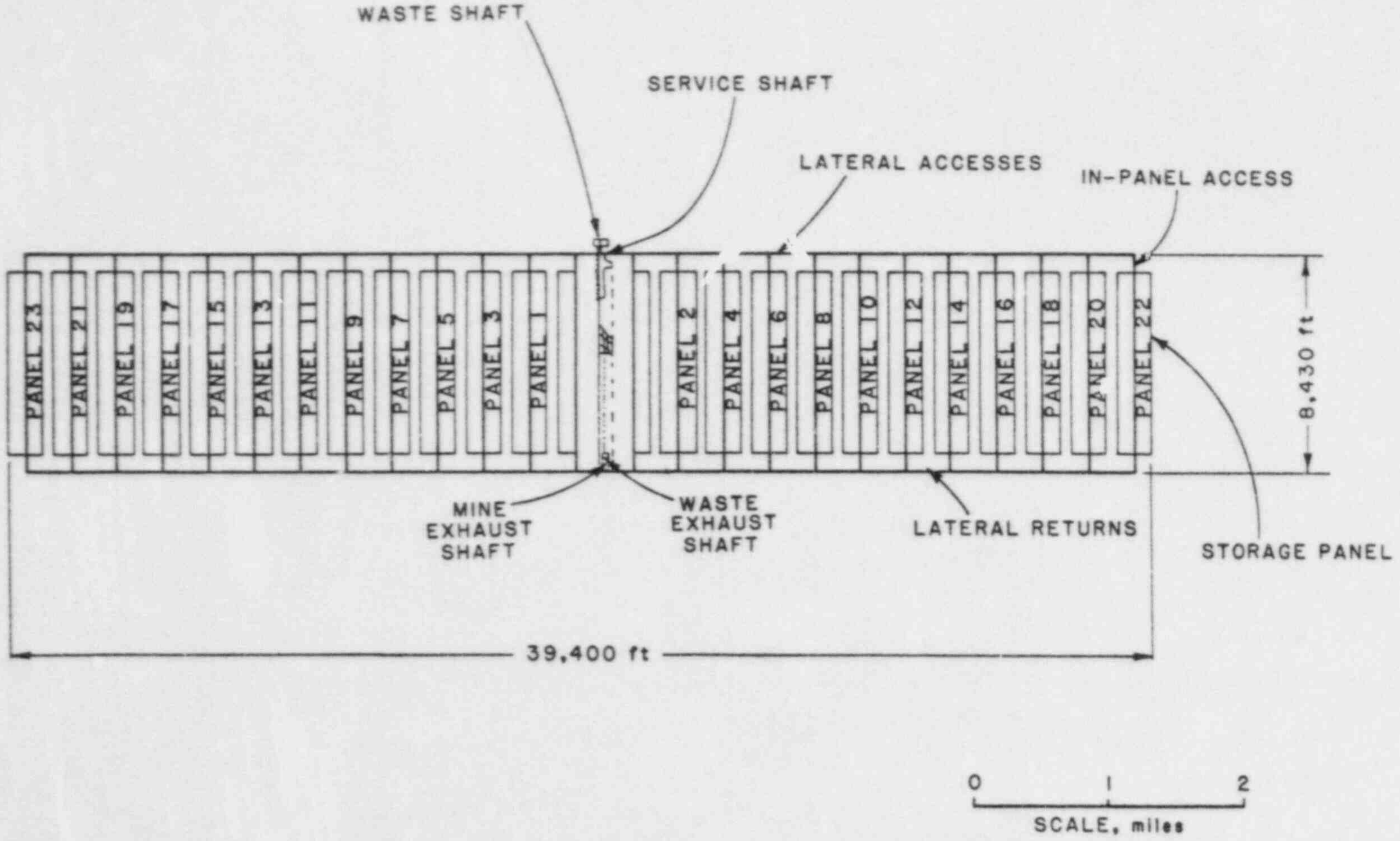

Figure 10.6.1 Layout for repository employing horizontal holes for canister storage. (RHO-BWI-CD-35, 1980)

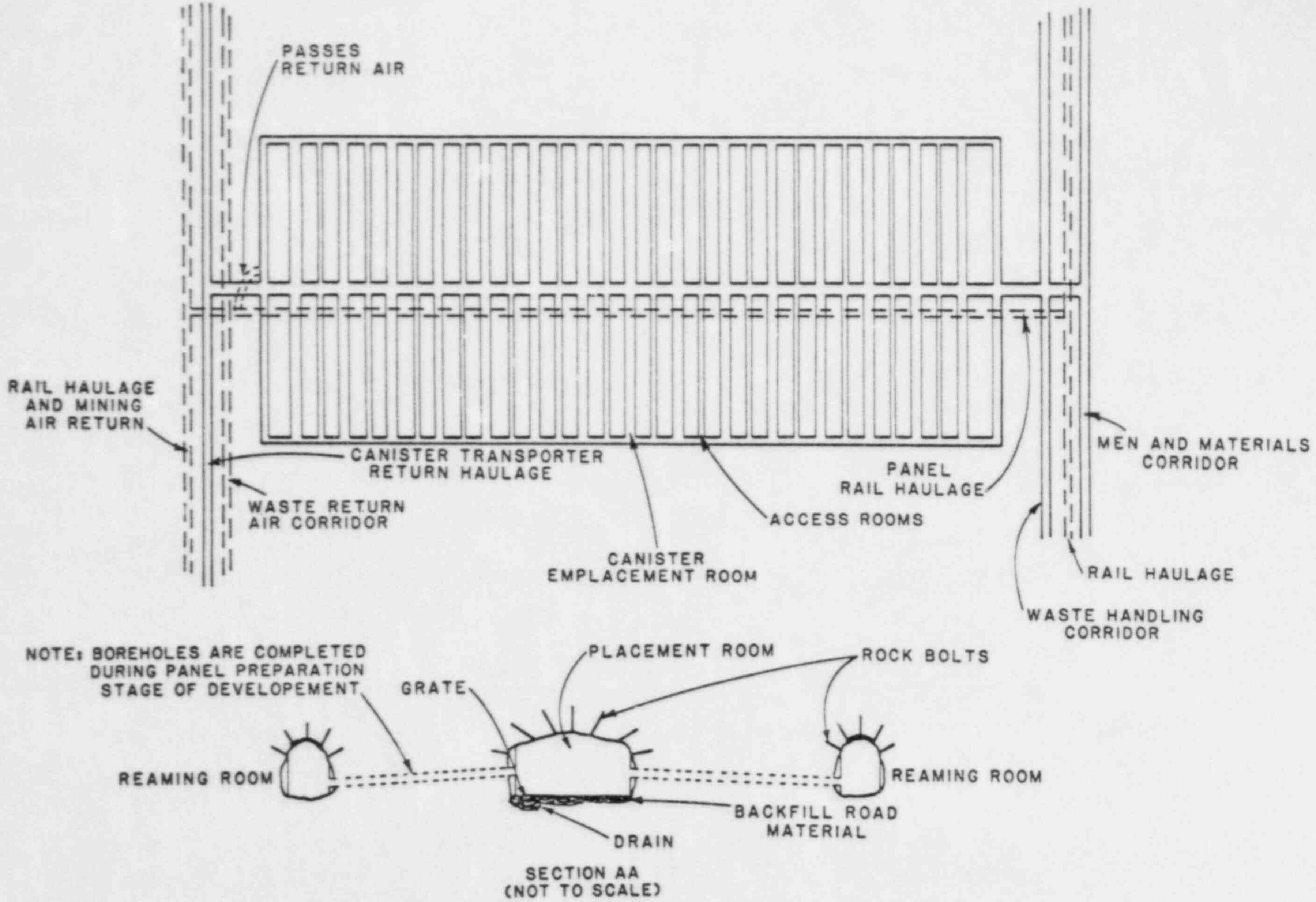

NOTE: BOREHOLES ARE COMPLETED DURING PANEL PREPARATION STAGE OF DEVELOPEMENT

SECTION AA
(NOT TO SCALE)

Figure 10.6.2 Panel and room layout for storage in horizontal holes. (RHO-BWI-CD-35, 1980)

Table 10.6.2 Dimensions of Repository Facilities

Facility	Dimensions
Personnel and Materials (Service) Shaft	23 ft inside diameter
Basalt Transport Shaft	18 ft inside diameter
Waste Transport Shaft	26 ft inside diameter
Waste Air Exhaust Shaft	18 ft inside diameter
Mine Air Exhaust Shaft	18 ft inside diameter
Central Panel Corridor	26 ft by 16.4 ft (lined)
Sublevel Rail Haulage Corridor	26 ft by 16.4 ft (lined)
Transporter Access	26 ft by 16.4 ft (lined)
Transporter Return	26 ft by 16.4 ft (lined)
Man and Supply Access	26 ft by 16.4 ft (lined)
Waste Air Return	26 ft by 16.4 ft (lined)
Rail Haulage Access	13 ft by 13 ft (lined)
Rail Haulage Return	26 ft by 16.4 ft (lined)
Rock Pass	7.5 ft by 16.4 ft by 29.5 ft
Panels	1,228 ft by 6,232 ft
Storage Rooms	31 ft by 16.4 ft
Reaming Rooms	9.8 ft by 16.4 ft
Rib Pillars	656 ft
Panel Pillars	164 ft
Room Pillars	174 ft
Storage Holes	24-in. diameter by 175 ft long
Storage Hole Pitch	8.4 ft

second of the aforementioned options. The impact of retrieval on systems in the two alternatives will also be different.

According to assumed repository construction schedules, placement is required to begin within ten years of construction authorization. Assuming five years for shaft sinking and allowing for contract procurement for both the shafts and the underground development, pre-placement development must be completed within three years. Because different types of waste will be stored in separate panels (according to information supplied to EI by NRC) and an available spare panel is desirable at all times, three panels must be ready for storage by year 10. To achieve this requires a development rate of 7,500 tpd on a five-day-week basis. If, however, repository development must be completed before placement occurs, the required development rate is about 37,500 tpd. This represents a mining rate much greater than that hoisted from any or all existing room-and-pillar hard rock mines, to our knowledge.

The mine cycle in a given heading would consist of (in order):

- Drill the round
- Load and blast the round
- Remove the broken muck
- Install ground support.

A "dental excavation" method has been proposed (RHO-BWI-CD-35, 1980) whereby all but the outer 3 ft of an opening is excavated by an initial drill-and-blast round and the remainder is subsequently blasted using a "trim round" of lightly-loaded, closely-spaced holes.

Although the basalt is strong and competent, rock reinforcement and support are necessary to protect against minor local failures such as rock falls. A loosened zone surrounds openings excavated in rock, which, with the "dental excavation" techniques referred to above, could be as little as 3 ft. The zone is generally sufficient to require some support where otherwise unnecessary. In the preconceptual design (RHO-BWI-CD-35, 1980), the proposed support systems consists of:

- Rock bolts whose length exceeds one-third the opening span, spaced no more than 4-ft apart

- Shotcrete, nominally 4-in.-thick

- Cast-in-place concrete at critical locations.

Mining will tend to drain the repository horizon as the water will tend to flow toward the openings. However, due to the low permeability of basalt and resulting long travel times, no more than 50% of the water contained in the Umtanum Flow is expected to be drained.

10.6.1.4 Canister Arrangment

The waste package (Figure 10.6.3) consists of a canister of 16-in.-outside diameter and 18.5-ft-long containing either one PWR or 3 BWR spent fuel assemblies. The packages will be placed in 24-in.-diameter holes drilled horizontally on 8.4-ft-centers into the pillars between the storage and reaming rooms. The hole is lined with a carbon steel sleeve which is grouted into place with cementitious, absorptive materials. No mention in made in RHO-BWI-CD-35 of how the sleeve or the grout are emplaced, but this is standard tunneling technology.

10.6.1.5 Thermal Loading

As a result of decay of the radionuclides contained in the spent fuel, the waste packages radiate heat. Unreprocessed spent fuel contains fission products which are relatively short-lived and actinides which are generally quite long-lived. As the radionuclides decay to more stable isotopes, the number of disintegrations and resultant heat produced will decrease with time. The heat produced by a canister will be at a maximum at the time of emplacement.

A canister will contain either one PWR or three BWR spent fuel assemblies. Assuming 10-year-old waste, canisters will have heat loads of approximately 0.55 kW and 0.66 kW for PWR and BWR, respectively. To be conservative the heat load per canister is taken as 0.7 kW.

The overall thermal load on the repository is determined from the areal extent of the repository, the canister spacing, the age of the waste, and the type of waste (PWR or BWR). To be conservative, all the waste is assumed to be 10-year-old BWR. In practice, waste will be of the two types and of varying ages; and, to avoid uneven thermal loading, actual panels will contain waste of uniform type and age.

The effective storage area consists of 24 panels occupying 188 acres each or 4,330 acres total. Using the 0.7 kW/canister thermal load and the waste complement of 22,500 canisters per panel, the heat load within a panel is 83.8 kW/acre. By comparison, the in-panel loading given in RHO-BWI-CD-35 is 158 kW/acre which requires a canister heat load of 1.25 kW/canister. However some of the waste will be commercial HLW which has a higher thermal load. On the basis of the gross repository area including the shaft pillar and service areas, the overall heat load will be 50 kW/acre.

10.6.1.6 Backfill Timing and Placement Method

Panels will be backfilled as soon as all canisters have been emplaced, except for the central panel access which will remain open until the repository has been completely filled.

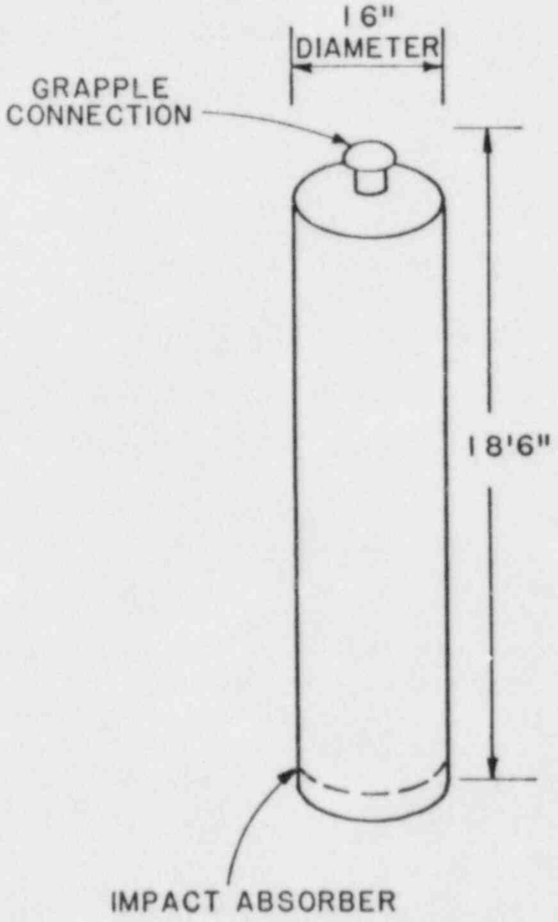

REFERENCE WASTE CHARACTERISTICS

CANISTER	THERMAL POWER	SURFACE DOSE RATE
SPENT FUEL	700 W	20,000 REM/HR
HLW	3100 W	100,000 REM/HR

Figure 10.6.3 Standard waste canister.
(RHO-BWI-CD-35, 1980)

According to RHO-BWI-CD-35, the lower portion of the rooms will be filled with crushed and sized basalt mechanically compacted to reduce permeability, while the upper third of the rooms will be pneumatically filled with a concrete-like mixture. More recent design concepts have postulated fills containing 50% basalt and 50% bentonite and, most recently, 75% basalt and 25% bentonite. Bentonite expands while absorping water, inhibiting percolation of water, which is a beneficial property in limiting radionuclide access to the environment.

10.6.1.7 Ventilation

Repository rooms are bulkheaded and backfilled upon completion of storage. As discussed in Section 10.6.1.3, the two potential development options:

- Develop and store waste simultaneously
- Develop the whole repository prior to waste placement,

result in two potential ventilation schemes. In the first case, two separate ventilation circuits are required:

- Mine (development) ventilation system
- Confinement (storage) ventilation system.

Although rooms will be bulkheaded and backfilled as soon as storage has been completed, the central panel accesses will remain open. The airflow required for the waste air circuit will increase until storage has been completed in the entire repository if development and storage occur simultaneously. If repository development is completed prior to commencement of storage operations the three possibilities are:

- If rooms are left open until storage take place, then required ventilation capacity will decrease as placement progresses.

- If rooms are bulkheaded but the central panel accesses remain open, the required airflow will remain constant.

- If panels are totally bratticed off, then the required airflow will increase as the repository is filled.

The second option is the most practical.

In the summer, the intake air may require precooling to maximize the convective heat removed from the rock. In winter, the intake air should be heated to ensure that the temperature exceeds 37°F to avoid icing. Heating could best be accomplished by extracting heat from the exhaust air using heat exchangers.

10.6.1.8 Retrieval Systems

Title 10, Part 60 of the Code of Federal Regulations (10CFR60) requires that repository operations be designed so that any or all of the waste could be retrieved on a reasonable schedule "Full Retrieval" (sometimes termed "Mass Retrieval") is removal of all waste. However, from time to time, retrieval on a limited basis may become necessary, as for example, a few canisters, a single room, or a single panel. This scenario is designated as "Local Retrieval."

When the storage rooms are backfilled and bulkheaded, the repository requires extensive retrieval systems. Precooling of heated, placed backfill has not been suggested by DOE in the reference repository designs; however, boreholes or pre-placed pipes could be used to circulate air or high-heat-capacity fluids to cool the backfill. This is time-consuming, but could be done. Nevertheless, the canisters will remain hot as they will not be efficiently cooled by this method. Retrieval will encompass the removal of the bulkheads, remining the backfill, precooling, resupporting the roof, and retrieval possibly with equipment designed for high temperatures. The details of retrieval are given in Table 10.6.3.

Figure 10.6.4 illustrates the emplacement vehicle, and the emplacement operation.

10.6.2 Retrievability Impacts on Repository Systems

10.6.2.1 Excavation Systems

Immediate backfilling of rooms containing stored canisters is the most complex operation affecting retrievability. Extensive remining of backfill is necessary and is affected by:

- Strength and density of the backfill
- Temperature of the backfill material
- Location of stored canisters in holes along the drift sidewalls
- Deteriorated roof support and roof conditions
- The probable occurrence of superheated water in unprecooled backfill.

Table 10.6.3 Retrieval Conditions and Operations

(A) CANISTER, HOLE, WASTE PACKAGE

1. Canister - Carbon steel
   non-shielded

   O.D. = 16 in.
   L = 18.5 ft
   Bundled fuel rods

2. Hole - holes are horizontal

   Hole length is 197 ft[1]

   Hole spacing is 8.5 ft

   Hole diameter is 24 in.

   A carbon-steel sleeve is grouted into the hole

   6 canisters in each hole, with spaces in-between[2]

   A plug is placed at the reaming-room end of the hole

   A wall shield provides a "target" alignment guide

(B) PLACEMENT UNIT

1. Hori-ontal, longitudinal transporter
2. Shielded transfer cask

(C) EMPLACEMENT SEQUENCE

1. Align transporter with hole
2. Open values in wall shield and transporter
3. Telescoping hydraulic ram pushes canister into hole (pushing next canister and spacer deeper into hole)
4. Close valves
5. Remove transporter
6. Plug[3] is emplaced after last canister (using ram in transporter or another piece of equipment designed for plug placement)

(D) BACKFILL PLACEMENT

1. Make-up of Backfill
   Most recent 75% basalt
   Report: 25% bentonite

   CD 116: 50% basalt
   40% ground bentonite
   10% prilled bentonite

   Backfill will have 10-15% water for best compaction

2. Placement Method

   In lower 10 ft "Low Profile" equipment will be used

   Backfill will be dumped from load-haul-dump units, pushed with dozers into 8 in. lifts, and compacted with compaction equipment

   For final 10 ft, pneumatic or blower equipment that "has yet to be developed" will be used

   Basalt and Bentonite will be mixed in the room

   Basalt will be crushed underground in a portable batch plant

(E) RETRIEVAL ENVIRONMENT

1. Backfilled
2. High temperature
3. Water present (?)
4. Cannot be pre-cooled upon re-opening
5. May or may not be radioactive
6. May or may not contain water at high pressure which will turn into steam
7. Less monitored environment due to difficulties associated with remote monitoring

(F) REMINING OF BACKFILL

1. It is impossible to construct a remining sequence with the information presently available.
2. Backfill will have to be remined using either:
   a. a protected mining machine
   b. an auger system
   c. remote-controlled hydraulic system
3. Cooling of machine will be necessary, as will cooling of operator if one is present
4. Ventilation will be a problem, and the machine operator will need an isolated fresh air supply in any case
5. Monitoring begins immediately upon breaching bulkhead
6. Removal of backfill may allow loosened roof rocks to fall, catching machine. Re-support of rock may be necessary
7. Pre-cooling could produce spalling of rock
8. For a local retrieval scenario, high temperature retrieval may be necessary though it would require redesigned equipment
9. After the room has been remined, cooled and adequately supported (in whatever sequence) the retrieval sequence will continue as in concepts 1 and 2.

(G) RETRIEVAL SEQUENCE

1. Radiation survey
2. Decontamination and clean-up
3. Put on wall shield
4. Align transporter with hole
5. Remove plug[4,5]
6. Grapple spacer and remove it
7. Grapple and remove canister[6,7,8]
8. Repeat 6-7 until all canisters retrieved

(H) NOTES

[1] What is current capability for drilling a long, straight hole? What are the criteria for the rejection of crocked holes?

[2] If spacer is shielded retrieval will be facilitated

[3] Plug preferably screw-threaded to facilitate retrieval [illegible]-fit makes problems

[4] Special equipment may be required

[5] Shielding may be necessary to prevent streaming from hole

[6] Special grappling equipment will be required to grapple spacers and canisters deep in the hole. Possibilities include:

a. Redesign of hydraulic ram to reach end of hole
b. Mechanical "mouse" with a chain
c. A "pushing" system from the rearing room

[7] Potential problems include:

a. Breached canister
b. Lost piece of canister that is grappled onto
c. Canister stuck due to deformation of liner

[8] Friction, perhaps made worse by rust, could be a problem. Potential solutions include:

a. Rails or upset in sleeve
b. Graphite or teflon in annulus

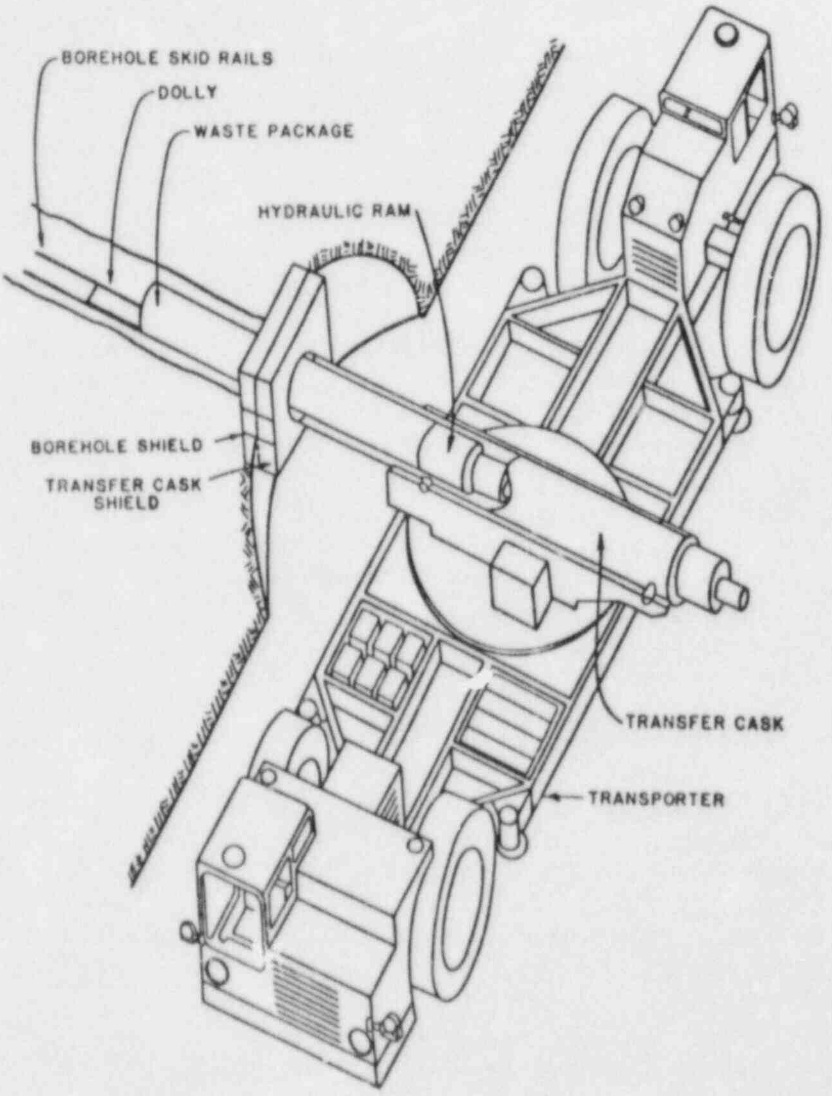

Figure 10.6.4 Transporter and transfer cask configuration for placing waste in horizontal holes. (RHO-BW-SA-273 P, 1982).

Backfill excavation can be done in several ways:

- Full-face advance
- Pilot drift and second pass
- Hydraulic means.

10.6.2.1.1 Full-Face Advance

Full-face advance has the advantage of maintaining easy access to equipment for routine maintenance or repair. Also, only one piece of equipment is necessary to do the mining, for example a drill jumbo or one continuous miner. Careful excavation is necessary to avoid disturbing old roof support, bolts, drift lining, and canisters.

The major disadvantage is the heat emitted by unprecooled backfill. Cooling rooms after remining hot backfill requires large airflows to be directed to the area, that can only adequately be accomplished after a through-ventilation circuit has been created.

Drift dimensions are amenable to full face remining of the backfill with single head roadheaders emptying onto extensible conveyors. Roof scalers are needed to clean roof and side walls of unmined backfill. Drift dimensions are adequate for the work and do not inhibit equipment operation.

10.6.2.1.2 Pilot and Slash

A pilot drift can be advanced in unprecooled backfill first either by a continuous miner or a tunnel boring machine (TBM) assuming a pilot drift of 8 ft by 8 ft. The finished panel can be preventilated until the second pass at backfill removal is practical: when the bulk of the heat has been dissipated. The pilot drift technique can utilize the TBM and associated rock handling equipment similar to that already mentioned.

There are several disadvantages. Initial mining is in a confined area and ambient temperatures could be detrimental to equipment and to personnel, who may have to wear protective clothing. Remote control mining may be the only method of accomplishing remining. Another disadvantage is machine breakdown that must be repaired in place. Accessability is minimal and heat will impair maintenance and safety. Steam pressure if present from backfill moisture can create another hazard in pilot drift development. The second pass of development would necessitate another piece of equipment for optimum efficiency.

10.6.2.2 Equipment Systems

10.6.2.2.1 Thermal Effects on Equipment Systems

Areas of concern in equipment systems are heat effects on hoses, cutting bits, fittings, and tires. The following limitations and requirements are pertinent to the equipment systems:

- Carbide bits can withstand the anticipated rock temperatures of 300°F
- The roadheader will need a transmission oil cooler to cope with higher ambient temperatures
- Hydraulic hoses with elastomer tube, single wire braid reinforced and special cover are available and withstand temperatures of 300°F
- Steel fittings are available with special "O" ring seals suitable for 300° to 400°F.

Tire considerations are more complex. The roadheader can be crawler mounted, so tire investigations apply to shuttle cars and roof scalers. According to a manufacturer, the internal air temperature of the tire must be less than 234°F for safe operations regardless of rubber compound or number of plys in tire construction. Internal temperature depends on load, time of travel, grade, speed, ambient temperature, and length of travel. Consequently, use of rubber tired vehicles such as shuttle cars requires detailed study of the application. Because they will be in face areas for brief periods while loading, but travel in well ventilated drifts, the use of rubber tired vehicles should not be automatically ruled out. The use of "tires" developed for the Apollo Lunar Landing program "Lunar Rover" car may be feasible. These tires consist of metal laths interwoven to form a flexible tire having the heat and abrasion resistance of metal.

10.6.2.2.2 Remote Control Equipment Systems

Remote control haulage systems have been placed in many applications throughout the world in recent years. Rail systems are more popular although truck trolley systems are being used with success. For haulage, at least, remote control appears as a feasible alternative.

Full-face remining or remining a pilot heading would be carried out in an environment requiring remote control systems because of heat and the possible presence of radiation. Personnel could direct equipment from safe areas, and in the long run, productivity would be greater. The biggest disadvantage is unexpected machine repair. If the TBM were to break down while in place, the environment would prohibit repair except either by remote control methods, or personnel outfitted in climate-controlled suits. Remote control systems may be promising, but the level of technology is low. Particular areas of concern are the guidence system to keep direction control, system dependability, operator visibility, and handling trailing cables (Gent et al., 1975).

10.6.2.2.3 Equipment for Retrieval

Provided canisters have not been breached, a crawler-mounted transporter modified with a magnetic or telescopic grapple can be used for retrieval after the backfill has been remined and the room precooled. However, canisters will remain hot but probably can be effectively handled. If a canister is breached, retrieval must be by specialized equipment because overcoring a long horizontal hole is not presently possible. In the case of breached canisters, some of the six canisters in the hole may be retrieved using the magnetic or telescopic grapple provided shielding and "hot cell" equipment are present.

10.6.2.3 Facilities

The most important effects of the storage and retrieval concept on repository facilites are:

- The waste handling shaft will be required for hoisting transport casks containing retrieved canisters

- A system is required for disposal of the excavated backfill, especially if contaminated.

Assuming transport casks keep radiation levels even from breached canisters within acceptable standards, the impact of hoisting casks containing retrieved canisters is minor. In the case of local retrieval while placement operations are still in progress, a cask containing a canister for placement is likely to be descending at the same time as a cask containing a retrieved canister is being hoisted. This hoisting process is fairly common practice in mine shafts where the conveyances are "balanced" cages.

Disposal of the excavated backfill represents a more difficult problem. If the backfill is contaminated, special handling and disposal procedures are required. The backfill if not contaminated could be used in a panel in which storage is nearing completion or has recently been completed provided the heat has not caused detrimental chemical cementation. If the excavated backfill is blocky as a result of thermal cementation, crushing will be necessary before reuse. If the backfill is to be hoisted, the basalt handling shaft must be used. The shaft will require ventilation by the confinement ventilation system while backfill is being hoisted. If repository development has been completed no problem results from hoisting the backfill. Because retrieval could be required before development has been completed, logistical problems regarding the shaft and the ventilation systems could result. Muck hoisting shafts are generally air exhausts, since hoisting muck is a dusty operation and miners should travel in fresh air. When hoisting excavated backfill, the basalt shaft would be a confinement exhaust and would require a HEPA filtration system in the event of radionuclide release. One solution is to have the HEPA filtration system underground near the shafts rather than in the waste handling and confinement exhaust buildings.

10.6.2.4 Ventilation Requirements

Ventilation is provided only in the central access corridor of a panel after storage has been completed in the panel. The individual storage and reaming rooms within a panel are bulkheaded and backfilled. The impact of retrievability on the ventilation system depends on several factors:

- Whether development operations have been completed
- Whether retrieval is local or full
- Whether placement operations have been completed.

If development operations have been completed, the main air circuit and the waste air circuit can be combined to provide greater airflow capacity.

If retrieval is local, development, storage, and backfilling operations could be in progress elsewhere in the repository. The waste air ventilation system must have sufficient capacity to permit storage, backfilling, and retrieval operations. Otherwise, the need to retrieve would necessitate temporary termination of storage, or backfilling, or both.

If retrieval is full, other operations (development, storage, and backfilling) are no longer required. The total airflow capacity of both mine and waste air circuits is available for ventilating full retrieval operations.

If placement and backfilling operations have been completed, the only operations in the repository would be monitoring and retrieval. The total ventilating capacity of mine and waste air circuits would be available for retrieval if needed.

After remining has been completed, in the case of full-face remining, or after hole-through of the pilot has taken place, in the case of two-stage remining, further complete precooling would be required before further operations took place. The refrigeration and airflow capacities required for precooling are complex, and depend on:

- The temperature of the rock
- The temperature of the intake air
- The acceptable temperature for the exhaust air
- The desired rate of cooling.

The ventilation calculations are best performed using one of the several existing computer codes.

To keep the panel accesses ventilated and reasonably cool requires an airflow of 25,000 cfm for each. Assuming development is completed prior to placement initiation, the maximum required air quantity would occur when placement is occurring in the twenty-third (or final) panel, backfilling in the twenty-second panel, and local retrieval elsewhere in the repository. Allowing 155,000 cfm for storage operations, 263,000 cfm for retrieval operations including cooling, 155,000 cfm for backfilling operations, 500,000 cfm for central panel accesses and 5% of the total for recirculation, the required airflow is 1,130,000 cfm. The available capacity of the combined mine and waste circuits of 1,265,000 cfm are just adequate to meet this requirement.

If placement and development operations are carried out simultaneously, the worst case would occur in year 22, the last year of development operations according to the RHO-BWI-CD-35 schedule. In this case, the available airflow is 660,000 cfm in the waste air circuit, whereas the requirements for storage, backfilling, and local retrieval would be 1,100,000 cfm. If storage and backfilling are temporarily halted, the requirement becomes 775,000 cfm which could be provide by increasing the size of the exhaust fans at the Waste Air Exhaust Shaft.

10.6.2.5 Backfill

An assessment of the impacts of retrievability on backfill necessitates a discussion of fill material properties. Fill material suggested in the conceptual design report (RHO-BWI-CD-35, 1980) is crushed basalt for the lower two-thirds of a room and a "concretious mixture" (concrete-like mixture) with bentonite as an additive, for the upper third. Fill material properties which aid complete isolation of the nuclear waste include:

- Low hydraulic conductivity
- Water sorption capacity
- Relatively high thermal conductivity
- High chemical, physical, and mechanical stability
- High ion sorption and exchange potential.

The major disadvantage of using only crushed basalt as backfill is its high hydraulic conductivity. Fill hydraulic conductivity in a repository room under high temperature conditions should be about 3.0 x 10^{-13} fps to retard ground water movements (Westinghouse Electric Corporation, 1981). This hydraulic conductivity value may be obtained by adding relatively impermeable bentonite to the fill. The actual proportions can be determined only by actually testing various bentonite/basalt mixtures. Bentonite can absorb water and swell to over 7 times its dry weight providing lower hydraulic conductivity. If allowed to swell uncontrollably, bentonite becomes a thixotropic gel, and tends to flow. If the fill is placed at a high density (about 130 pcf) and the room is subsequently sealed with bulkheads, volumetric expansion is inhibited and bentonite properties are maintained. The confinement may also allow a swelling pressure of about 218 to 725 psi to develop, which further reduces the hydraulic conductivity.

A mixture of crushed basalt and bentonite exhibits a thermal conductivity of 1.2 Btu/hr-ft-°F, which is probably sufficient to restrict temperature rises in a repository room. High temperatures tend to drive moisture away from bentonite in the form of vapor or steam, reducing the thermal conductivity. However, under confinement, vapor pressures within the sealed rooms may be high enough (about 700 psi) to prevent steam formation. Steam will form once the bulkheads are breached for remining, creating difficult conditions. The presence of a certain amount of water (about 8 to 10%) aids backfill performance, but adversely affects retrievability. Personal communication with bentonite manufacturers suggests that bentonite degrades structurally beyond 1,117°F. The CDR indicates bentonite degrades at 212°F. Repository temperatures exceed the temperature limit in the CDR but not the 1,117°F indicated by the manufacturer. Behavior of the bentonite at elecated temperatures is an area requiring further extensive evaluator.

The foregoing discussion suggests that performance of the backfill is mainly dependent on the placement density and moisture content. The high density along with the strength properties of crushed basalt allows the fill to maintain sufficient bearing capacity to allow remining machinery to operate.

Both crushed basalt and bentonite possess sufficient ion exchange potential to adsorb most radionuclides. The critical radionuclides, cesium and strontium, can adequately be adsorbed by both crushed basalt and bentonite.

Based on the above discussion, four scenarios of retrieval will be addressed in the following sections to assess their impacts.

10.6.2.5.1 Retrieval at Start of Filling

Under unforeseen circumstances, retrieval may be necessary just before backfilling operations are scheduled to start. This should not cause problems to any great extent except that hole locating and coring equipment will be required because the room walls are faced with concrete before filling. Continuation of development and storage operations will depend upon the reason for retrieval and whether local or full retrieval is undertaken. In case of local retrieval, it will be necessary either to procure new machinery for retrieval, or to curtail the rate of placement to accommodate retrieval operations.

10.6.2.5.2 Retrieval while Backfilling is in Progress

Placement and backfilling operations continue for about 20 years and retrieval may be necessary at any time during this period. The difficulties encountered in retrieval will depend upon the extent to which filling operations have progressed. If the retrieval decision is made in the early stages of backfilling, remining should prove relatively easy.

Water present in the unprecooled backfill will be released as steam due to the pressure drop when the bulkhead at the entrance to a room is breached. The pressure release and steam formation may cause an outburst of fill material. Dehydration due to steam formation may turn the bentonite into a powder and make it mechanically unstable. This would adversely affect remining efforts. The backfill and water can potentially be contaminated due to radionuclide leakage and will require careful handling.

Because the walls of the storage rooms will have been faced with concrete, some procedure for storage hole location and drilling equipment may be required. Continuation of development and storage operations will depend upon the reason for retrieval and scale (local or full) of retrieval.

10.6.2.5.3 Retrieval Immediately after Backfilling is Complete

If retrieval is found necessary soon after completion of backfilling operations, the problems mentioned in the previous subsection will be accentuated. Steam release when the bulkheads are breached may cause outbursts and breakdown of unprecooled backfill.

10.6.2.5.4 Retrieval at the End of Retrieval Period

All the problems highlighted earlier will be significantly increased by the end of the retrieval period yielding the worst scenario. The extent of bentonite saturation within the decades-long period is unknown. In addition to the steam release from unprecooled backfill when the bulkhead is breached, the bentonite, if saturated, could be in the form of a thixotropic gel and may be prone to flow.

10.6.2.6 Thermal Effects

The thermal effects associated with nuclear waste disposal in an underground repository have significant impacts on the retrievability of the waste. Thermal analyses are made to determine the practical waste storage geometry and repository layout which will preserve the isolation capability of the host rock formation. Thermal effects can be divided into three distinct areas:

- Very-near-field effects which have the most direct impact on retrievability since elevated temperatures can lead to decrepitation of the borehole wall and jamming of the canister
- Near-field effects which impact retrievability indirectly by increasing the potential for creating instability of the storage rooms
- Far-field effects which have minimal, if any, impact on retrievability since the stability of the entries and shafts would not, in general, be affected by the thermal loading.

With room backfilling, the thermal impacts on the emplacement boreholes and storage rooms are most significant. The possibility of borehole decrepitation is increased by the expectation of higher temperature gradients within the very-near field. The exact temperature level is presently undefined. The inclusion of steel liners in the boreholes to prevent any local borehole failures that may hinder canister retrieval is a desirable feature.

In the near-field, the storage rooms will be backfilled immediately after the waste emplacement. The initial temperature level is around 134°F. The temperature will then rise continuously up to 300°F before the end of 50 years, which might cause instability at the storage rooms. The deficiency may be minimized by the presence of backfill which can serve as a support for the roof and sidewalls. The interactive effect of the backfill material with the opening becomes an important issue to be further investigated.

The thermal impact of the far-field is insignificant because the shafts and entries will be located from the waste emplacement panels. The continuous ventilation through them will maintain the temperature below the decrepitation temperature.

10.6.2.7 Equipment Requirements for High Temperature and Radioactive Environment

Precooling of the backfill by circulating cooling fluids in boreholes or pre-placed pipes may be done, but is time-consuming and as yet undefined. However, the canisters will not be effectively cooled by this method and will remain hot for some time.

Equipment requirements for high temperature and radioactive environments are extensive, and must be an integral part of the equipment system.

Radioactive environments will require special shielding of equipment for operator safety. Decontamination facilities will also be necessary to service equipment and to handle exposed backfill, other materials. Heat effects on equipment systems, including hoses, cutting bits, fittings, and tires are discussed in detail in Section 10.6.2.2.1.

10.6.2.8 Ground Support

At discussed in Section 10.4.1.3, initial support will consist of rock bolts at least one-third the opening span in length and spaced no more than 4 ft apart. Shotcrete will be applied in a nominal thickness of 4 in. to stabilize all intervening rock and a concrete liner 1.5 ft thick will be placed at critical locations. Report RHO-BWI-CD-35 does not indicate the type of rock bolts to be used but the bolts are assumed to be full-column grouted to minimize corrosion potential.

Resin-grouted bolts are not acceptable for use in the repository rooms. The rock temperatures of 212°F and greater exceed the maximum service temperature of resin grout whether epoxy or polyester (Weast, 1983). Experience is lacking regarding the stability of bolts for a period of decades. Experience with concretes at elevated temperatures (Troxell, Davis, and Kelly, 1968, p. 248-250) indicates that for simple temperatures increase to 212°F relatively minor strength losses occur due to loss of both free and combined moisture. Above 212°F more significant strength losses occur in the repository maximum temperature ranges up to, say 400°F, but amount to 10% reduction, or less. However, if the concrete is heated and then cooled, strength losses approach 25% or more at 400°F. Two considerations may minimize such strength losses. Using lean mixes and limestone, expanded slag, or similar aggregates minimize heat effects in this range. We suspect that the important cement grout, shotcrete and concrete considerations for repository temperatures hinge on minimizing the water content and matching the thermal expansion and chemistry of cements and aggregates. Concrete also has a coefficient of thermal expansion intermediate between that of steel and basalt limiting difficulties resulting from differential thermal expansion.

In any case, over a decades-long period some deterioration of the rock reinforcement can be expected, and minor roof falls may result. In areas of deterioration, the debris and renewed rock support provided prior to commencement of retrieval operations. With accessible, ventilated rooms, the remedial measures can be carried out as the falls are discovered. A Load-Haul-Dump vehicle and a roof-bolting jumbo are required for cleanup and resupport.

Seepage of ground water towards the openings will occur. With time the seepage could result in a build-up of pore water pressure on the shotcrete liner. Rock mass grouting at the time of construction of the rooms could minimize deterioration by seepage and chemical action.

Despite grouting efforts and shotcrete application to the repository walls, some ground water is likely to enter the repository during the operating period. Underground conditions could reasonably be expected to remain generally dry but some allowance for the presence of minor amounts of water during retrieval would be prudent. The water inflow quantity postulated would slightly exceed the evaporating capability of the ventilation system, and would result in puddles on the repository floor.

10.6.2.9 Instrumentation

The performance of the repository has to be monitored to ensure the safety criteria are not violated and the isolation capacity is maintained. The retrievability option mandates significant changes in selected parameters or deviations from expected behavior be detected. When they occur, steps must be taken to correct the problem or retrieve the waste to the surface. Categories requiring monitoring are:

- Hydrogeologic - water inflow
- Thermal - heat buildup
- Mechanical - stress buildup, rock deformations, and rock instability
- Radiological - activity levels.

A monitoring program of subsurface conditions is limited by the bulkheads and backfill. Most monitoring will be made by remote sensing measurements. Visual inspection and "hands-on" measurements are preferable to remote monitoring because instrumentation available at present is not reliable for periods in excess of about a decade, especially under the thermal conditions associated with the repository rooms. As a result, an experimental panel will be provided in the repository in which extensive verification and confidence testing for the remote sensing equipment will be performed. The panel will also provide an opportunity to study the reliability of instrumentation.

Thermal monitoring will primarily consist of thermocouples embedded in boreholes placed at intervals along storage rooms. Thermocouple signals will be collected at several locations outside the storage room and relayed to a central control console to detect abnormalities.

Hydrogeologic monitoring will consist of measuring the pressure of water near the storage rooms, in various accesses, and in basalt flows and interflows. High-precision, durable, pressure transducers will be placed between packers in boreholes.

The convergence of pre-established points in accessways will be measured. At a few selected locations in the main entries detailed evaluation of rock stability will be made using stressmeters and multiple position borehole extensometers.

Ventilation conditions in the repository will be monitored to detect radiation levels, fire and smoke emergencies, as well as ventilation blockages caused by rock falls. Mobile radiation and thermal sensors in ventilation airways will permit continuous monitoring from a main surface control console. Flow direction, pressure, differential pressure, and temperature, will be monitored.

The retrievability requirement mandates monitoring of the repository for perhaps decades after initial waste placement. The following steps need to be taken to ensure the reliability of instrumentation placed in the repository:

- Develop stress meters, multiple position borehole extensometers, piezometers, thermocouples, and ventilation instrumentation that will maintain accuracy in the hot and humid environment expected in a repository
- Provide extensive verification of the instrument reliability in the repository experimental panel
- Ensure that repository inspection at predetermined intervals can be performed by personnel in air-conditioned suits or vehicles or robots.

10.6.3 Adequacy of Incorporated Retrieval Systems or Allowances

10.6.3.1 Local Retrieval

Local retrieval can occur as a result of quality assurance, quality control, or a detection of radionuclide releases. A manufacturing error, for example, could have caused premature breakdown of some canisters in a storage room. Bulkheaded and backfilled rooms permit the use of similar equipment for emplacement and retrieval procedures, provided rooms are cooled after remining and prior to retrieval. Local retrieval will encompass four main phases: remining, precooling, resupport, and canister retrieval. Remining begins with breaching the bulkhead. A drilling jumbo and Load-Haul-Dump unit will be required to remove the bulkhead and debris. To remine the unprecooled backfill requires high temperature remote-control equipment. The remining can be by full-face advance, pilot and slash, or hydraulic methods. Handling the hot backfill is within current technology but imposes an additional load on the material handling system. Present technology does not emcompass adequate equipment to perform the remining under repository thermal conditions. Rock bolters and scalers will be required to resupport the roof prior to canister retrieval. "Hot cell" equipment will be required for handling breached canisters. Interfaces in the shaft area will delay storage operations during canister retrieval. Equipment including bolters and scalers must be crawler-mounted to withstand the elevated temperatures. Even with incorporation of equipment to breach the bulkhead, to support the roof and withstand the elevated temperature, the retrieval system for intact canisters is inadequate due to a lack of present technology with regard to remining backfill by remote control at high temperatures.

Unless the leaking canister is the one closest in the hole to the storage room, retrieval of a leaking canister will require prior retrieval of up to five other canisters. As was discussed in Section 10.6.2.2, retrieval of breached canisters by overcoring the holes is not practical with horizontal holes containing more than one canister. A possible alternative method would be to have a piece of equipment pushing from the reaming rooms as well as having the transporter and transfer cask in the storage room. One difficulty with this is the narrow width of the reaming rooms. Provisions for such equipment have not included in the design and the incorporated systems are inadequate for the task.

10.6.3.2 Full Retrieval

Full retrieval of waste canisters will need planning and preparation but will not be necessarily difficult. Full retrieval planning is eased since all repository resources can be committed to the operations. Underground storage may prove unsatisfactory leading to repository abandonment. Nevertheless, full retrieval should not require special equipment unless the reasons for retrieval interfere, such as excessive rock movement crushing canisters, or rapid deterioration of rock causing need for roof support or scaling equipment.

10.6.4 Concerns

10.6.4.1 Technological Concerns

Precooling of heated rock masses by circulating fluids has not been demonstrated. Freezing soil for excavation and heating roadways for ice removal are not similar in the high initial temperatures are not present.

As discussed in Section 10.6.2.1, mining backfill in a high temperature environment may be necessary. Because of the heat and potential safety, operational, and radionuclide release problems, the mining is best carried out by remote control. Remining presents a serious problem because no true remote control mining systems exist. Remote control haulage systems exist using unit trains operating on closed-circuit track and radio-controlled mucking units have been developed. Remotely-operated drill-and-blast or boring equipment does not exist. U. S. Bureau of Mines sponsored research into the feasibility of remote-control mining equipment has indicated that much work remains to be done and that satisfactory systems have yet to be developed and implemented. Remote control mining will require precise horizontal control to prevent damaging the wall ring sealing the canister hole.

Alternatively, one could consider hydraulic mining of the fill in a manner similar to the hydraulic mining of coal in some mines. The method might not be very effective if the backfill contains bentonite, because bentonite absorbes water. Us of very large quantities of water could, however, cause bentonite to flow. Testing is required to verify that backfill could be removed in this manner. Existing hydraulic systems are not truly remote as the operator is within 100 ft of the face.

Another concern is the effect of the hot environment on the materials used for ground support. As discussed in Section 10.6.1.4, grouted bolts, shotcrete, and, in places, cast-in-place concrete have been proposed for the ground support. While polyester resin is commonly used to grout bolts, the expected repository temperatures exceed the maximum service temperatures of polyester resin grout. Use of cement mixtures that minimize heat effect (Section 10.6.2.8) for the shotcrete and grouted bolts should ensure the support system will be effective under repository conditions.

10.6.4.2 Safety Concerns

Remining of the fill will expose the roof and allow any weakened areas to fall. If the falls occurred near the face, remining equipment could be damage. Mining a pilot heading and then rehabilitating the support as required before removing the remainder of the fill would minimize rockfalls.

The rockfalls are possible because grouted bolt and shotcrete support systems have not yet been proven effective for decades - such systems have only been in common use for about 25 years. Because the rooms are backfilled, the support cannot be inspected and if deterioration has occurred, it cannot be counteracted until the backfill has been removed, and the rooms have been precooled so that bolters and scalers can operate. Falls could then occur before the roof can be rehabilitated.

The presence of water or steam in the backfill can cause a safety problem at the time of bulkhead breach or during remining. The water and steam may be contaminated and could cause outbursts as a result of the pressure differential.

10.6.4.3 Radionuclide Release Concerns

One of the possible reasons for retrieval is failure of the waste package, with consequent release of radionuclides. Gaseous and volatile radionuclides may be released into the emplacement hole while soluble radionuclides may be carried away by any water that is present in the emplacement hole. Removal by aqueous solution, requires the presence of water in liquid form; that is, its temperature must be less than the boiling point for the repository pressure conditions.

10.6.4.3.1 Releases into Air

The gaseous and volatile isotopes which could be released by a breached canister are hydrogen-3 (tritium), carbon-14, and krypton-85. The quantity of krypton-85 is large compared with that of either tritium or carbon. In addition, the carbon must be in a form that leads to volatile species upon reaction with water in order to be of concern. It is assumed that one-tenth of the krypton-85 is sufficiently near an exposed surface to be able to leave the fuel. If a breach occurs, the concentration of krypton-85 and tritium in air must not exceed 10 nCi/liter and 5 nCi/liter, respectively, in order to satisfy 10CFR20. (These radioactivity concentration limits are defined in metric units. The equivalent traditional units, for reference, are 0.35 nCi/ft^3 and 0.18 nCi/ft, respectively).

If storage hole plugs are gas-tight, release of gaseous radionuclides from a breached waste package will occur at retrieval. Otherwise, the radionuclides will leak through the plug into the backfill pore spaces. Radionuclides contained in the pore spaces would be liberated as the backfill were removed. Since the quantities of air provided for remining are limited to what can be supplied in a duct, the airflow into which the gases would be released would likely be less than 50,000 cfm, and so dilution of the radionuclides to the maximum permissible concentrations (MPC's) given in 10CFR60 could require up to several hours. During this time personnel should not be present.

Release occurring at retrieval can be avoided by having radiation sensors in the holes. The gaseous radionuclides could then be drawn off prior to retrieval using millipore filters or a cryogenic absorption system, both of which fall within existing technology. Where the radionuclides are in the backfill, warning of their locations cannot be provided. As a precaution, remining should be by remote-control (or semi-remote control if sufficient shielding for the operator can be provided within view of the face).

10.6.4.3.2 Releases into Water

With regard to the movement of radionuclides by aqueous transport, this, as previously mentioned, requires that water be in the liquid state. At a pressure of 1,600 psi, the boiling point of water is about 600°F, and since the rock and backfill temperatures will be 300°F or less, the pore water will be in liquid form within the backfill. Upon remining, pressures are reduced at atmospheric and the water vaporizes.

If water contacted a breached canister, the rate of dissolution would vary widely with the water composition and temperature. For a typical rate of 0.0000264 lb/day, the solution water would contain about 0.25 mCi/lb of water and one pound of this solution would generate about 0.1 mR/hr at 4 ft. Port spaces in the backfill would also contain small amounts of gaseous radionuclides which would be liberated upon mining.

10.6.4.3.3 Radiation detection Standards

Hence water intrusion would provide a good index to failures but would not by itself introduce significant hazards to the operations (Post, 1982). The radiation levels measured during retrieval operations are not exceptional so that the system standards used in the nuclear industry would prevail. Lower limits 0.1 mR/hr and upper limits of a few kR/hr would be adequate. A system to detect krypton-85 in the ventilating air and in the storage holes will be required. This system should be capable of detecting krypton-85 levels below 100 pCi/liter (2.6 pCi/ft^3) (Post, 1982).

10.6.4.4 Operational Concerns

Retrieval from holes containing breached canisters will require transfer casks equipped with internal shielded sleeves in order to ensure releases of radiation meet regulatory limits. Because canister breach cannot be readily determined before the precooling stage, the shielded equipment should be used for all retrieval. In the case of canisters which have split into more than one piece, the grapple in the transfer cask may not be able to retrieve all parts of the breached canister. Retrieval of broken canisters could likely be done by using a transporter at each end of the hole. One would push and the other would pull, requiring that remining rooms have dimensions allowing transporter use.

To cool the rooms from about 300°F to 125°F will require large capacity cooling units, which occupy a large space. The free clearance at the room entries thereby would be limited. Also, cooling units have a finite life and become less efficient with time.

In RHO-BWI-CD-35, the transfer cask is fitted longitudinally on the transporter, and the transporter must have its long axis parallel to the placement holes in order to place or retrieve the waste. Turning the transporter to align with the holes will be a difficult and time-consuming maneuver. The SCR has rectified the problem by having the transfer cask on a turntable which rotates to align the transfer cask with the hole.

The pitch (or spacing) of the holes is given in RHO-BWI-CD-35 as 8.4 ft. Intersecting holes are undesirable and holes cannot be allowed to wander more than a 3-ft-radius from the design location. With the hole spacing of 60 ft or greater given in the SCR, the problem is limited.

Drilling long, large-diameter, horizontal holes is difficult. First, as noted in the SCR, removal of the cuttings will be difficult. Second, the holes will tend to deflect downward due to the weight of the drill head and drill string. Deflection, as noted in the SCR, can be minimized by drilling a pilot hole and then back-reaming to full size. Intersection with joints will also tend to deflect holes and holes may tend to follow bedding planes if they are collared close to and roughly parallel to such planes.

10.6.4.5 Other Concerns

A fundamental concern related to a repository in basalt concerns the geologic/hydrogeologic uncertainty at the repository horizon. Among the concerns are:

- Uniformity of the thickness of the candidate basalt flow
- Uniformity of the jointing
- Occurrence of faults
- Vertical and lateral hydraulic conductivity.

The in situ exploratory programs planned (1983) by DOE (ES-I and ES-II) are aimed at resolving the questions concerning geologic and hydrogeologic parameters at the proposed repository horizon.

Another concern is the probability or mechanism for canister breach. One mechanism is corrosion by ground water. The rate of corrosion will depend on the ions present in the ground water and their concentrations, and on whether the chemical environment is reducing or oxidizing. Another possible mechanism is attempted retrieval of a canister upon which the hole has closed. With an annulus of 6 in. between the hole perimeter and the canisters in the most recent (SCR) design, this mechanism is unlikely. Assuming canister breaches will occur at sometime during the 50 year retrievability period, activities of toxic (strontium and cesium), volatile (iodine), and gaseous (tritium and krypton-85) radionuclides and the dosages of beta and gamma radiation that would occur for breaches at various times up to decades after placement, must be predicted.

While having a limited effect on retrievability, the backfill placement method could possibly be improved by using pneumatic filling throughout. A suitable pneumatic filling system for the repository would have the following characteristics:

- Capacity: 164 tph
- Maximum horizontal distance: 600 ft
- Blower horsepower: 740 HP
- Operating pressure: 15 psig
- Maximum material size: -3 in.
- Solids loading ratio: 10 lb solids/lb air.

Crushed basalt has been suggested as the fill materials for the lower two-thirds of the room. However, crushed rock such as basalt exhibits a very high hydraulic conductivity. The addition of bentonite may render the fill relatively impermeable. The proportions of basalt and bentonite to obtain a fill having optimum physical and chemical properties must be determined.

10.6.5 Summary and Conclusions

The repository is located at a depth of 3,700 ft in the Umtanum Flow basalt of the Hanford Reservation, Washington. The repository has 23 storage panels and one experimental panel divided by a shaft pillar into two sections of 12 panels each. Each panel is divided into 30 storage areas consisting of a storage room with a reaming room on either side. The storage rooms are 575-ft long, 31-ft wide, and 16.4-ft high.

The waste package consists of carbon steel with a diameter of 16 in., is 18.5 ft in length, and contains either one PWR and three BWR spent fuel assemblies. Six canisters are placed in 17.4-ft-long, 24-in.-diameter horizontal holes. Based on an average canister thermal load of 1.25 kW/canister at the time of placement, the panel thermal load is 158 kW/acre.

Backfilling of the rooms take place after completion of storage in the panel. Bulkheads are placed at either end of the panel to contain the backfill.

The retrievability requirements of 10CFR60 impose the following effects on the repository systems:

- Re-excavation system - The unprecooled backfill will require mining by either a full-face advance or a pilot and slash method. Either excavation will require remote or semi-remote equipment as a result of the high temperatures and limited available ventilation

- Equipment system - Haulage systems during remining of unprecooled will need to be remote controlled. Due to the elevated temperatures, specialized equipment including carbide bits, oil coolers, hydraulic hoses, and steel fittings will be required. Equipment working at or near the face will need to be crawler-mounted because the high temperatures rubber tires will rapidly deteriorate. Even with procooling, rock contact temperatures will require crawler-mounted equipment for retrieval

- Facilities - Retrieval will result in the waste handling shaft being used to hoist transport casks containing retrieved canisters. A separate materials handling system is required for disposal of excavated backfill. Special system requirements are necessary if the backfill is contaminated. The basalt handling shaft may be used to hoist backfill and would require a HEPA filtration system to prevent radionuclide release

- Ventilation requirements - The ventilation airflows during retrieval are a function of the ambient rock temperature, air intake temperature, acceptable exhaust temperature, the time since waste placement, and the required precooling temperature. The quantities will vary according to what activities are taking place. Depending on the parameters, the combined design airflow of 1,265,000 should be adequate. If placement, backfilling, and local retrieval are simultaneous the waste air circuit is inadequate-storage and backfill must be halted and the fan size increased to achieve adequate airflow

- Backfill - The condition of the unprecooled backfill present at retrieval is a function of the elapsed time and the backfill composition. Mining for retrieval operations may encounter steam and unstable backfill depending on the hydrogeologic and thermal conditions. The backfill during retrieval will require material handling systems and an evaluation of the quality of the material for reuse or disposal due to contamination.

Breached canister retrieval imposes additional requirements for the equipment system and the repository facilities.

The concerns for this repository concept are summarized as follows:

- Technological Concerns:
  - Overcoring a horizontal hole 174 ft long to retrieve a breached canister requires removal of the hole lining and numerous difficult to handle core break
  - Within current technology, a telescopic jaw or a magnetic grapple requires development to retrieve the canister
  - Adequacy of the rock support system for a period of decades
  - Development and implementation of remote control mining systems with adequate horizontal and vertical controls
  - Development of precooling system which does not limit isolation or lead to untimely retrieval
- Safety Concerns:
  - Operation of the retrieval transporter by one rather than two operators
  - Rockfalls resulting from deterioration of the roof support system
  - Presence of radioactive fluids or steam in backfill prior to and during remining
  - Streaming gamma radiation and possible beta particles and gaseous radionuclides during retrieval
  - Thermal spalling during precooling

- Radionuclide Release Concerns:
  - Canister breaches would result in release of gaseous hydrogen-3 (tritium) and krypton-85, and volatile carbon-14, of which the krypton-85 would have the largest concentration
  - Diluting krypton-85 to the MPC given by 10CFR20 could take up to several hours for release from a single breached waste package
  - The mechanism for release of gaseous radionuclides from the storage hole to the atmosphere could be non-gas-tight hole plugs, streaming through the floor shield at retrieval, and aqueous transport (if hole liners corrode)
  - A system is required for detection of krypton-85 in ventilating air and in storage holes
- Operational Concerns:
  - Excessive deviation of the storage holes from the proposed alignment due to drill steel weight and variations in rock properties
  - Difficulties in fully grouting the hole liner into place
  - High temperature conditions during repair of remote control equipment
  - Large capacity heat exchangers limiting space in room entrances
  - Coordination of backfill handling and storage
- Other Concerns:
  - Geologic and hydrogeologic uncertainties
  - Undetermined probabilities and mechanisms for canister breach
  - Methods and details of backfill placing
  - Unknown backfill quality over the repository retrieval period effects all retrieval systems.

The development and placement concepts for the repository are adequately defined in the DOE documents. The backfill type and placement method need more adequate definition. DOE has not suggested precooling the backfill prior to remining. The backfill presence and quality have a significant effect on the waste retrieval, and the details of placement and quality will define the methods and hazard of remining. The equipment used to mine unprecooled backfill needs to be defined. Present technologies do not encompass equipment capable of remote control mining of the unprecooled backfill at the temperatures expected in the repository. Further definition and confirmation is required in the areas of hydrogeology and geology, long term adequacy of roof support, detecting and retrieving breached canisters and the probabilities and mechanisms for breach. The problems involved in remining and handling unprecooled backfill need solutions in order to meet the retrievability requirements of 10CFR60. In order to meet the requirements, considerable development in remote control mining is required.

10.7 Basalt Repository with In-Room Storage and Immediate Backfilling

10.7.1 Basic Information

The repository concept is in basalt with canisters laid horizontally within shaped bentonite overpacks and transverse to the long axis of the rooms. Panels are bulkheaded and backfilled as soon as they have been filled with waste. The concept is based on Westinghouse Report AESD-TME-3113 (1981) which mainly dealt with the conceptual design of the engineered waste package and not the repository conceptual design.

10.7.1.1 Definition of Repository Concept

The host geologic medium is basalt. Waste packages will be laid horizontally within overpacks of shaped bentonite on the floors of and transverse to the long axis of the rooms. The rooms will be bulkheaded and backfilled as soon as they have been filled with waste.

The canisters of spent fuel will emit 1.02 kW each which results in thermal loading within a panel of 63.1 kW/acre or 28.8 kW/acre for the gross repository area. To achieve the thermal load of 1.02 kW/canister, a canister of spent fuel is assumed to contain three 30-year-old Pressurized Water Reactor (PWR) fuel assemblies or seven 20-year-old Boiling Water Reactor (BWR) fuel assemblies.

10.7.1.2 Geologic Environment

10.7.1.2.1 Rock Units

The proposed horizon for the nuclear waste reference repository at the Basalt Waste Isolation Project (BWIP) is the Umtanum Flow of the Grande Ronde Basalt. Recent (1982) core drilling in the vicinity of the Reference Repository Location at BWIP indicates the Umtanum Flow interior may thin in places. Until the final decision is made concerning which flow will be proposed for the repository, the Umtanum Flow will be assumed for design purposes.

The Umtanum Flow, a single basalt flow, has a typical cross-section which consists of, in descending order, the flow-top, the entablature, and the colonnade. The repository would be located in the entablature, whose thickness in boreholes has averaged 150 ft. The Umtanum Flow basalt is black to dark green in color, extremely fine-grained to glassy in texture, and composed principally of plagioclase, clinopyroxene, and glass, with titano-magnetite and ilmenite as accessory minerals.

10.7.1.2.2 Rock Mass Properties

The rock mass properties of the Umtanum Flow are probably controlled by intraflow structures such as joints, vesicles, flow-top breccias and sedimentary interbeds. Correlations of intraflow structures between 10 coreholes penetrating the Umtanum Flow (Myers et al., 1979) found a significant variation in the flow-top breccia thickness and columnar joint spacing across the Pasco Basin. Rock mass properties can also be expected to vary. DOE designs anticipate a rock mass that responds well to tunneling, with minimal support required.

The mechanical and thermomechanical properties used for the conceptual repository design were based on generalized basalt properties. Most rock testing was performed on intact rock samples in the laboratory (RHO-BWI-CD-35, 1980).

The lack of in situ rock mass data remains an issue to be resolved from (1983) investigations at the Near Surface Test Facility (NSTF) and the future at depth exploratory programs (ES-I and ES-II). Design parameters may be reevaluated as data are developed from these test programs. Ranges for the properties based on data currently available are given in Table 10.7.1 (NUREG/CR-2352, 1982).

10.7.1.2.3 Hydrogeology

The hydrological data presently available (1983) do not fully define the ground water system. The data indicate that fractures and intraflow structures control the ground water flow at the repository site. The vertical hydraulic conductivities, as yet undetermined, strongly affect radionuclide migration into the accessible environment. Near-field ground water flow models which consider repository construction and waste emplacement are yet to be developed (1983). The geochemical changes in the ground water due to the introduction of nuclear wastes remain unclear.

The hydrogeologic deficiencies will be addressed by on-going exploration programs. Tentative preliminary hydrologic conditions for the Umtanum Unit are:

Hydraulic conductivity: 10^{-6} to 10^{-8} fps, flow top

10^{-11} to 10^{-13} fps, columnar zone

pH (at 149°F): 9.4 to 9.9

Eh: -0.36 to -0.41 volts.

Table 10.7.1 Range of Rock Mechanics Properties of Hanford Basalt (NUREG/CR-2352, 1982)

	Intact	Fractured	Estimated In Situ
Compressive Strength (psi)	5,400 to 60,000	0 to 44,000	-
Tensile Strength (psi)	1,000 to 3,500	0 to 1,000	-
Young's Modulus (psi)	8.0 to 14.0 x 10^6	-	0.8 to 1.4 x 10^6
Poisson's Ratio	0.5 to 0.35	-	-
Thermal Conductivity (Btu/hr-ft°F)	0.484 to 1.45	-	-
Specific Heat (Btu/lb-°F)	0.175 to 0.28	-	-
Thermal Expansion (/°F)	2.22 to 4.11 x 10^{-6}	-	-

10.7.1.2.4 Seismicity

The proposed site is seismically quiet with only two Intensity VII (Modified Mercalli) earthquakes recorded since 1898. Seismic monitoring of the Columbia Plateau has determined that microearthquake (low magnitude) swarms are typify the activity of the region (Myers et al., 1979).

10.7.1.3 Repository Construction and Layout

Few details of repository layout are given in the waste package conceptual design report (AESD-TME-3113, 1981). A design concept for review has been assembled by:

- Assuming the overall repository layout is similar to the conceptual repository design (RHO-BWI-C-116, 1982)
- Making inferences regarding room dimensions from those given by Westinghouse (1981) for defense high level waste
- By assuming that, unless otherwise given, entry and pillar dimensions are as given in the conceptual repository design (RHO-BWI-C-116, 1982).

Based on the above assumptions, the repository will, as shown in Figure 10.7.1, contain 22 panels each of which, with the exception of the experimental panel, will comprise five rooms. The rooms will be 3,590-ft long and are to be connected by cross-cuts at 892.5-ft-centers. Access to the panels is provided by five entries which connect the storage panels with five shafts to the surface. Entries, rooms, and crosscuts will be driven by drill-and-blast methods. Dimensions of the various facilities are given in Table 10.7.2. Each shaft will have a different dedicated function:

- Personnel and materials (service) shaft
- Basalt transport shaft
- Waste transport shaft
- Confinement air intake shaft
- Confinement air exhaust shaft.

The shafts will be sunk by conventional drill-and-blast methods, lined with steel and concrete to a depth of 1,900 ft, and lined with cast iron segments backed by concrete to the final depths of about 3,800 ft.

The two potential sequences for repository development and waste emplacement are:

- Repository development has been completed before waste storage begins

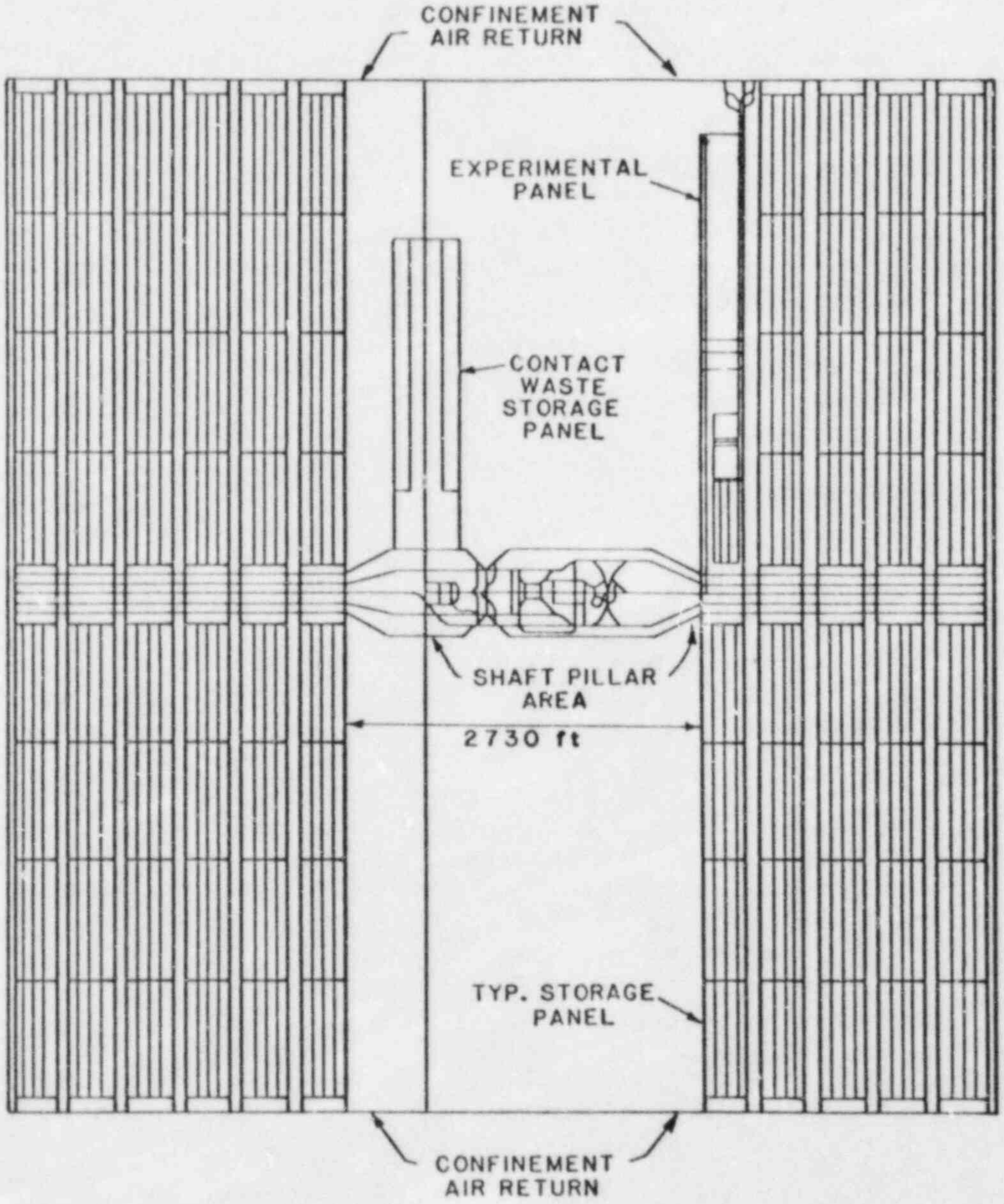

Figure 10.7-1 Assumed layout for a repository in basalt utilizing in-room (vault) storage.

Table 10.7.2 Dimensions of Repository Facilities

Facility	Dimensions
Personnel and Materials (Service) Shaft	16 ft inside diameter
Basalt Transport Shaft	14 ft inside diameter
Waste Transport Shaft	12 ft inside diameter
Confinement Air Intake Shaft	11 ft inside diameter
Confinement Air Exhaust Shaft	10 ft inside diameter
Confinement Air Intake and Accessways	13 ft wide by 12 ft high
Mine Intake Air and Accessways	18 ft wide by 17 ft high
Mine Exhaust Air and Accessways	18 ft wide by 17 ft high
Confinement Return Air and Accessways	13 ft wide by 12 ft high
Access Pillars	36 ft wide
Panels	3,591 ft by 342.5 ft
Storage Rooms	20.5 ft wide by 10 ft high
Crosscuts	20.5 ft wide by 10 ft high
Panel Pillars	106 ft
Room Pillars	60 ft
Rib Pillars	100 ft
Canister Pitch	9.5 ft

- Panel development and waste storage occur concurrently with both operations advancing at the rate of one panel per year.

The two sequences have very different requirements for ventilation and excavation systems, shaft facilities and equipment quanitites. The effect of retrieval on the two systems will also be different.

According to current assumed repository construction schedules, placement is to begin within ten years of license application. Assuming five years for shaft sinking and allowing for contract procurement for both the shafts and underground development, preplacement development must be completed within three years. Because PWR and BWR waste will be stored in separate panels and because an available spare panel is desirable at all times three panels must be ready by the time, storage is to commence. Completion of three panels in three years requires a development rate of 2,000 tpd on a five-day week basis.

If repository development must be completed before placement occurs, the required development rate is about 8,500 tpd. This option would require increased hoisting capacity if all muck is to be hoisted before storage begins or else stockpiling excavated basalt underground for hoisting at a later date. The latter would be the more practical alternative.

The mining cycle in a given heading would consist of (in order):

- Drill the round
- Load and blast the round
- Remove the broken muck
- Install ground support.

Although the rock is strong and competent, rock reinforcement and support is necessary to protect against minor local failures such as rockfalls. The loosened zone generally extends 5-ft to 10-ft deep around openings excavated in rock. If smoothwall blasting practices are employed, the zone could be as little as 3 ft. This zone is generally sufficiently unstable to require some support.

Ground support has not been addressed in the waste package conceptual design (AESD-TME-3113, 1981). The assumed ground support system is from the repository conceptual design report (RHO-BWI-C-116, 1982). As an aid in estimating support requirements, the Hanford basalt has been classified according to the Q-system of Barton, Lien, and Lunde (1974), resulting in extreme Q-values of 4 and 95, with the most probable range being from 10 to 25 (RHO-BWI-C-116, 1982). Barton, Lien, and Lunde (1974) indicate that for repository-size openings in rock with Q-values from 10 to 25, some spot bolting would be required. Because thermal stresses are not allowed for in the Q-system classification, the reference repository description (RHO-BWI-C-116, 1982) has specified systematic rock bolting on a 5-ft spacing and a layer of shotcrete. The type and length of the bolts are not mentioned in RHO-BWI-C-116 (1982), nor is the thickness of the shotcrete.

With respect to ground water, mining will tend to drain the repository horizon as the water flows toward the openings. Due to the long travel times, only fraction of the water contained in the Umtanum Flow is expected to drain during mining.

10.7.1.4 Canister Arrangement

The waste package (Figure 10.7.2) consists of a carbon steel canister (called an overpack by Westinghouse) having an outer diameter of 40 in. and an inner diameter of 12 in. The length of the canister is 16.25 ft for PWR and 17.0 ft for BWR waste.

The packages will be placed within 9-in.-thick shaped bentonite overpacks (Figure 10.7.3) and laid transverse to the long axis of the room. The bottom, back, and end sections of compacted bentonite would be installed in the tunnel prior to placement of a package. The sections would be made of bentonite blocks, sized to facilitate manufacture, transport, and placement. After placement of the canister by a low-profile, forklift-type machine, and placement of the bentonite cover sections, the remainder of the opening would be backfilled. The backfill material is not specified.

10.7.1.5 Thermal Loading

As a result of decay of the radionuclides contained in the spent fuel, the waste packages radiate heat. Unreprocessed spent fuel contains fission products which are relatively short lived and actinides which are generally quite long-lived. As the radionuclides decay to stable isotopes, the number of disintegrations and the resulting heat produced will decrease with time. The heat produced by a waste package will be at a maximum at the time of emplacement.

A waste package will contain either three PWR or seven BWR spent fuel assemblies. Because bentonite has a low thermal conductivity and to ensure the temperature in the bentonite does not exceed 482°F, thirty-year-old and twenty-year-old waste will be used for PWR and BWR respectively. As a result, the waste packages will have an initial heat load at 1.02 kW.

The storage area consist of 22 panels occupying a total of 621 acres or 28.3 acres per panel. Using 1.02 kW/canister and 1,750 canisters per panel, the heat load within a panel is 63.1 kW/acre. On the

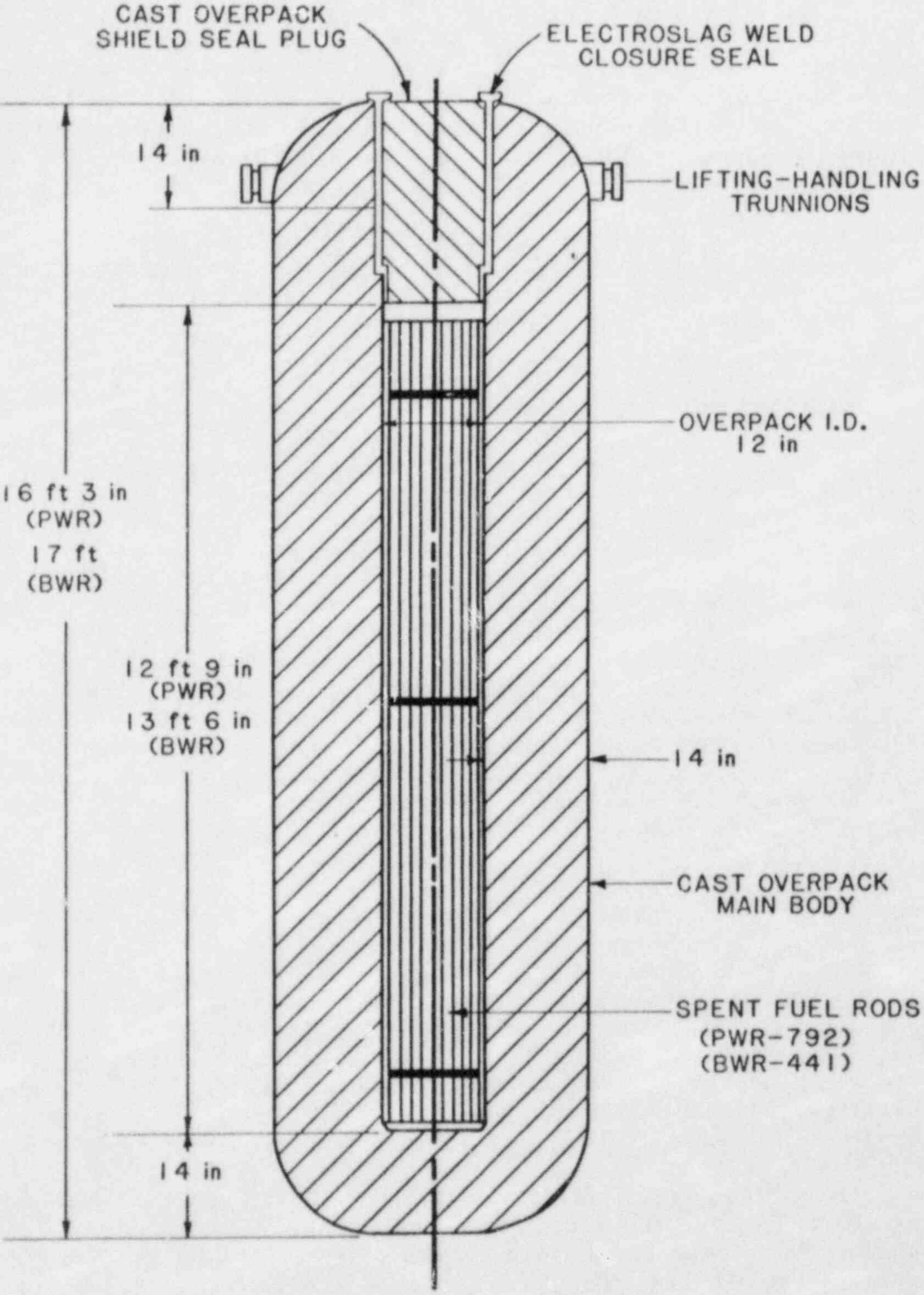

Figure 10.7.2 Self-shielded waste package for in-room (vault) storage.

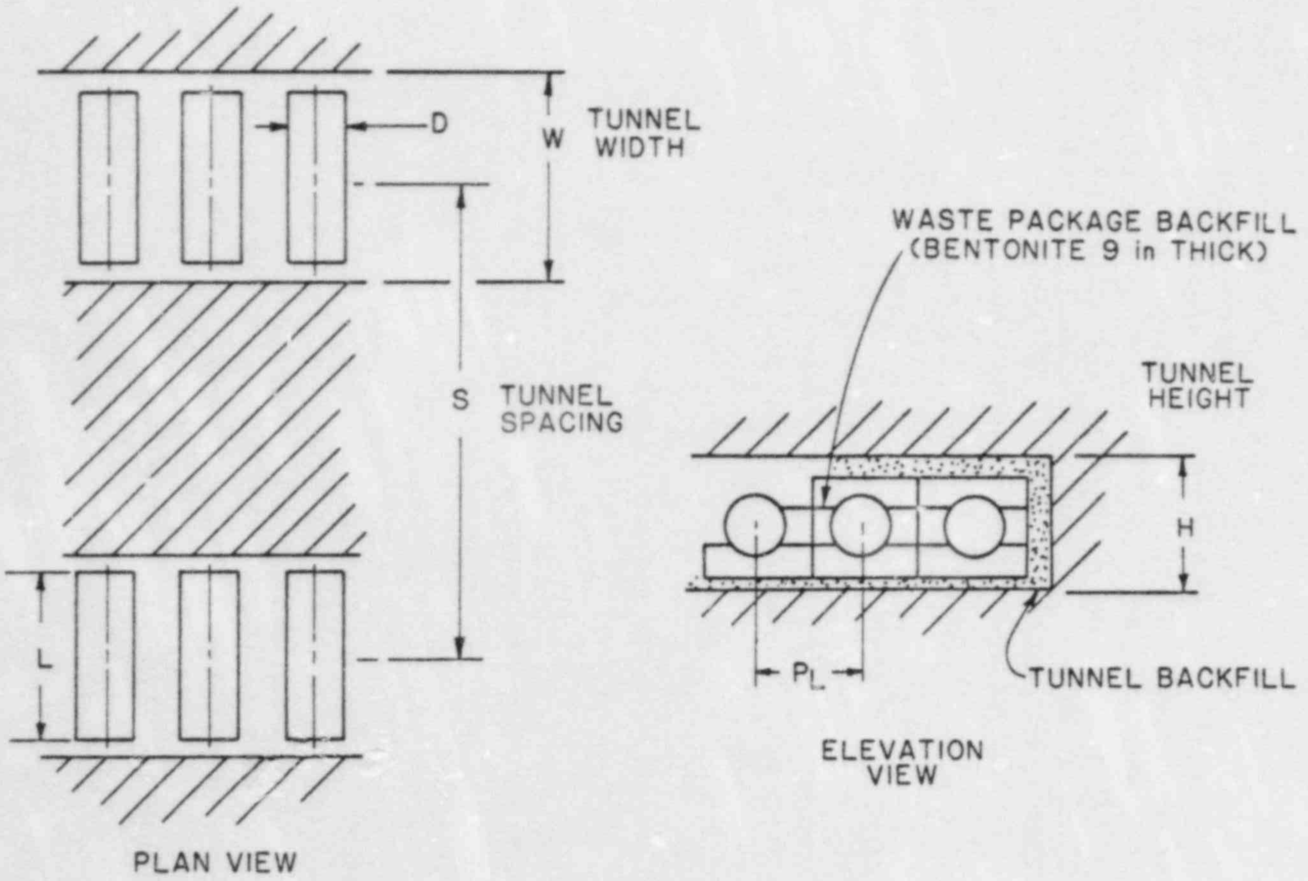

	D	L	P_L	H	W	S	FEET
PWR WASTE	3.33	16.25	9.5	10.0	20.5	80.5	
BWR WASTE	3.33	17.0	9.5	10.0	20.5	80.5	

Figure 10.7.3 In-room (Vault) storage configuration.

basis of the total area of 1,363 acres, which included the shaft pillar and service areas, the overall heat load is 28.8 kW/acre.

10.7.1.6 Backfill Timing and Placement Method

Backfill will be placed over the canister and bentonite overpack as soon as they have been placed. The method of backfill placement is unspecified by (AESD-TME-3113, 1981) except for indications that a front-end loader or conveyor belt will be used for placement and some shovelling or tamping might be required to achieve adequate placement density. The material to be used is unspecified. The material is assumed to prevent uncontrolled swelling in the bentonite overpacks. It is suggested that, because of the small clearances between the bentonite blocks and the roof and walls, pneumatic placement may be a viable backfilling method.

10.7.1.7 Ventilation

Rooms are backfilled as storage progresses, panels are backfilled, and bulkheaded as storage is completed, and the resulting ventilation requirements for this concept are minimal. The two potential development options:

- Develop and store waste simultaneously
- Develop whole repository prior to waste placement,

result in two possible ventilation schemes. In the first case, two separate ventilation circuits are required:

- Mine (development) ventilation circuit
- Waste (confinement) ventilation circuit.

The airflows required in the two circuits will remain constant over the life of the repository, because the rooms will be developed only as required for placement and the panels are bulkheaded except during development or placement. If total repository development precedes placement, only one ventilation circuit is required. The required airflow will not vary, because panels are only open and ventilated during their development or placement operations.

In the summer, the intake air may require precooling in order to maximize the convective heat removed from the rock. In winter, the intake air may need to be heated to ensure that the temperature exceeds 37°F to prevent icing of the shaft and for comfort of the personnel. Heating could best be accomplished by extracting heat from the exhaust air using heat exchangers.

10.7.1.8 Retrieval Systems

Title 10, Part 60 of the Code of Federal Regulations (10CFR60) requires that repository operations be designed so that any or all of the waste could be retrieved on a reasonable schedule. "Full Retrieval" (sometimes termed "Mass Retrieval") is removal of all waste. From time to time to retrieval on a limited basis (for example, a few canisters, a single room, or a single panel) may become necessary. The latter scenario is designated as "Local Retrieval."

The equipment and systems used for canister retrieval are not specified (AESD-TME-3113, 1981). Retrieval would require removing the backfill and the bentonite overpacks before reaching the canister. If the canisters to be retrieved are in the center of a room segment, all the canisters from the room entrance to that point must first be removed. Alternatively, a new room adjacent to the old could be mined but pillar size would be reduced by 20 ft and precise mining techniques at elevated temperatures would be required. The placement and retrieval sequences assumed are detailed in Table 10.7.3.

10.7.2 Retrievability Impacts on Repository Systems

10.7.2.1 Excavation Systems

The bentonite blocks and the backfill will become heated after emplacement. Unless preplaced pipes or boreholes are used to circuklate cooling fluids, the blocks and backfill will have to be removed while hot.

In the vault storage concept, the developed drift becomes the storage area. Bentonite blocks house the waste canisters and immediate backfilling eliminates the void between the blocks and the drift perimeter. The backfilling and block arrangement must be removed in order to retrieve a canister, and specialized equipment will be needed to cope with the high-temperature material and environment.

The backfill removal must not damage the bentonite blocks and complicate their removal. Excavation of the backfill between the room perimeter and the bentonite blocks will therefore either be labor intensive, or require very special remote control equipment. Remining is compounded by:

- Temperature of the backfill material
- Moisture concentration in the backfill
- Presence of stored canisters
- Deteriorated roof support and roof conditions.

The proposed canister transporter (AESD-TME-3113, 1981) presumably can handle the sectioned bentonite blocks. No modifications are discussed for retrieval. The overall retrieval procedure of remove

Table 10.7.3 Retrieval Conditions and Operations

(A) WASTE PACKAGE

1. Dimensions:
   L - 194 in. (PWR)
   204 in. (BWR)

   O.D. - 40 in.
2. Cast overpack
3. Shielded seal plug

(B) PLACEMENT UNIT

Canisters will be placed by a low profile, fork-lift type machine

(C) EMPLACEMENT SEQUENCE

1. Pre-formed blocks of bentonite overpack are brought into work area
2. The bottom, back and end blocks of the bentonite overpack are installed for one canister
3. The canister is placed in the bentonite
4. Bentonite overpack cover sections are placed over the canister
5. Backfill is emplaced over each canister after the overpack is installed

(D) BACKFILL PLACEMENT

1. Make-up of backfill is unknown, although it will not be exclusively bentonite
2. Placement method may be with a front end loader, a conveyor, or a conveyor belt. Shovelling and tamping may be necessary.
3. What is headroom for backfill placement equipment?
4. What is exact timing of back fill emplacement? Is backfill placed after each canister is stowed, or after an entire room has been filled?

(E) RETRIEVAL ENVIRONMENT

1. Backfilled
2. High temperature
3. Water present (?)
4. Cannot be pre-cooled upon re-opening
5. May or may not be radioactive
6. May or may not contain water with high pressure which will turn to steam
7. Less monitored environment due to difficulties associated with remote monitoring

(F) REMINING AND RETRIEVAL

1. In this concept, remining and retrieval will have to take place simultaneously, and therefore there will not be an option for precooling
2. Unless there is sufficient headroom between the top of the bentonite over-packed and the roof, retrieval of an individual canister without remining the entire room will be impossible

backfill, remove top bentonite blocks, remove canister, and remove remaining blocks, although the reverse of emplacement, appears to be a time-consuming effort particularly when considering that backfill and bentonite overpack quality and integrity are not predicted.

10.7.2.2 Equipment Systems

Areas of concern in equipment systems are heat effects on hoses, cutting bits, fittings, and tires. The following limitations and equipment availability demonstrate the thermal effects on equipment:

- Carbide bits can withstand rock temperatures of 300°F
- The roadheader for remining will likely need a transmission oil cooler to cope with higher ambient temperatures
- Hydraulic hoses with elastomer tube, single wire braid reinforced, and thermal covers are available and can withstand temperatures of 300°F
- Steel fittings are available with special "O" ring seals good for 300° to 400°F.

Tire considerations are more complex. The roadheader can be crawler mounted, so tire considerations apply to shuttle cars and roof scalers. The internal air temperature of the tire must be less than 234°F for safe operations regardless of rubber compound or number of plys in tire construction. Internal temperature depends on load, time of travel, grade, speed, ambient temperature, and length of travel. Consequently, use of rubber tired vehicles such as shuttle cars requires detailed study of the application. Shuttle cars will be in the face areas for brief periods while loading, but otherwise will travel in well-ventilated drifts. The temperature of the tires may be satisfactory and use of rubber-tired vehicles may be possible.

The self-shielded package length is about 17 ft and the storage drift width is 20.5 ft. The resulting side clearance of 1.75 ft may be too close a tolerance for good transporter efficiency. Several machines may be required to handle bentonite block sections and canisters, and a traffic problem may result. The room dimensions preclude passing of equipment and a breakdown could halt all retrieval operations until the passage is cleared.

Remote control haulage systems have been placed in many applications throughout the world in recent years. For haulage, remote control appears to be a feasible alternative. Remote control mining systems may be promising, but technology is deficient. Particular areas of concern are the directional guidance system, system dependability, operator visibility, and trailing cable handling (Gent, et al., 1975).

10.7.2.3 Facilities

Vault storage rooms require minimum facilities for canister storage. Facilities used in mining storage rooms, such as haulageways, loading bins, skips, and other equipment to handle mined rock may need to be reactivated during the canister storage/retrieval stages. Stockpiles and associated surface equipment should be unaffected by retrieval operations provided that remined fill is handled at the repository level. Canister handling operations at the surface are capable of handling breached canisters but at rates slower than normal. Full retrievability, if prepared for, should offer no particular operational problems. The shaft area would be affected by local retrieval. The hoisted canisters may be breached. Canisters being lowered for storage must be handled by the hoist also. The multiple operations could create congestion of equipment.

10.7.2.4 Ventilation Requirements

As panels in which storage has been completed are backfilled and bulkheaded, ventilation is required only in areas where operations are actively taking place and in accessways, minimizing airflow requirements. Placement will occur in dead-end headings because rooms are filled as placement progresses.

The temperatures expected in the repository during the 50-year retrievability period are shown in Figure 10.7.4. Given the very high temperatures, precooling may be required before remining and may be necessary prior to retrieval. The airflow and refrigeration capacity required for precooling will depend on the rate of precooling. Studies are required to determine the capacity and cooling rate of the optimum system. Before precooling can take place remining of the backfill as discussed in Section 10.7.2.1 is required in order to have a through circuit.

The airflows supplied to the mine and confinement air circuits are assumed to be those given in RHO-BWI-C-116 (1982), which provides for airflows of 255,000 cfm and 212,000 cfm in the mine and confinement air, respectively. The airflow for the confinement circuit is divided as follows:

- Waste handling area - 25,000 cfm
- Room precooling for retrieval - 127,000 cfm
- Precooling and waste storage - 49,000 cfm
- Short-circuiting - 11,000 cfm.

The maximum temperature for this concept in the basalt is 428°F at 40 years after placement (Figure 10.7.4). The rock is to be cooled to 125°F, a difference of 303°F. Assuming the backfill could be removed

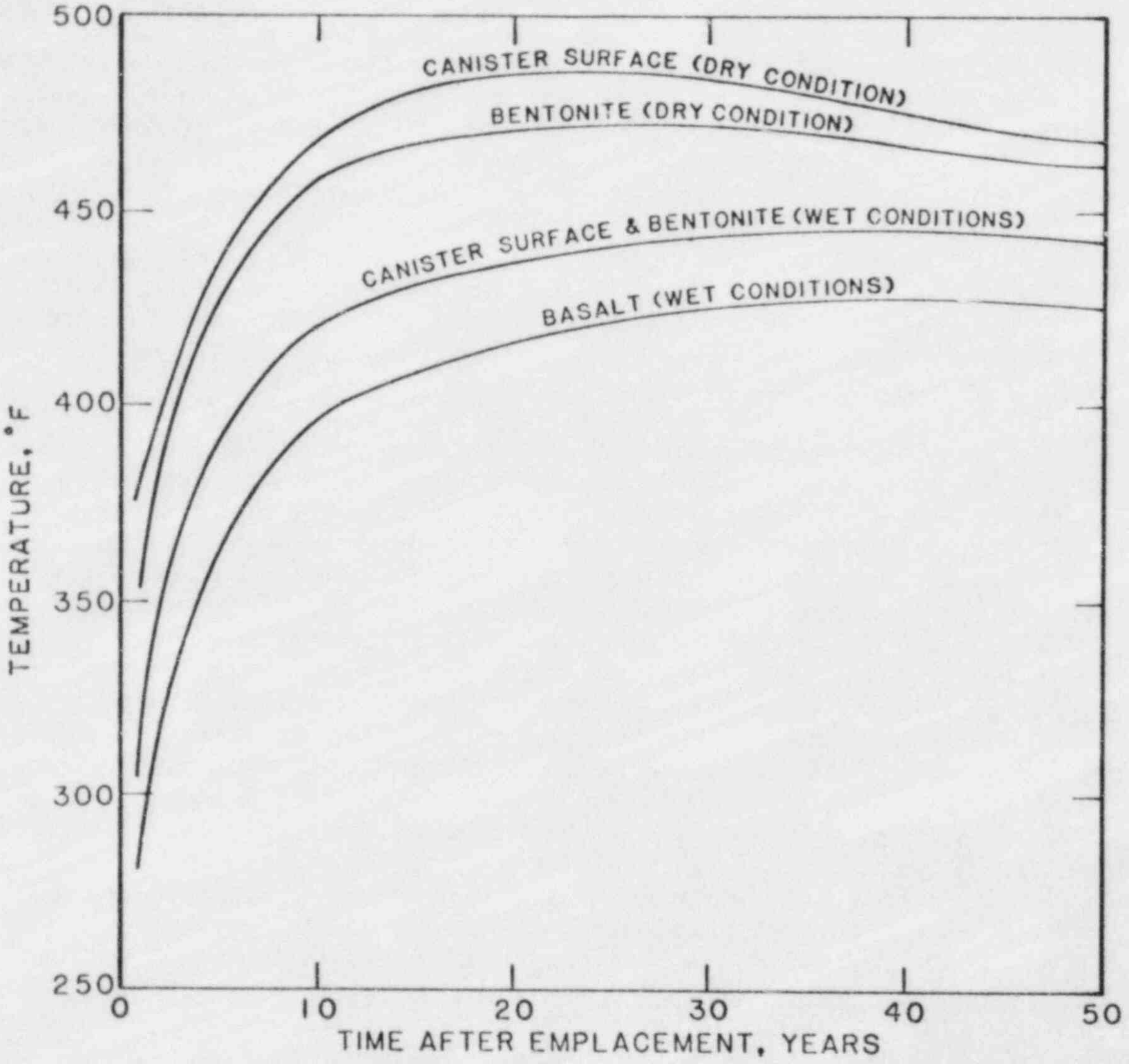

Figure 10.7.4 Estimated temperatures for in-room (vault) storage in a repository in basalt.

without disturbing the bentonite overpacks, the resulting opening would be relatively small. As a result, to precool using airflows with satisfactory (less than 1,500 fpm) velocities would require several years. Thus retrieval itself must take place at high temperatures, since a delay of several years would not satisfy 10CFR60.

From Figure 10.7.4, it is clear that temperatures in excess of 300°F are achieved within one to two years of placement. As discussed above, the airway crated by removal of the backfill is too small to make precooling practical. Even if it were practical, it is not known whether the cooled region would extend through the bentonite overpacks and into the floor. Thus, equipment for high temperature operation would in any case be required.

If a canister were breached (although this is very unlikely with the thick-walled, self-shielded canister) gaseous radionuclides and radiation would be released when the bentonite overpack was removed. Depending on the airflow, it would take several hours before the radionuclide concentrations were diluted to less than the Maximum Permissible Concentration (MPC) given in 10CFR20. Any personnel present during this period must be either in shielded, gas-tight vehicles or in shielded, gas-tight, climate-controlled suits. So-called radioactivity-resistant suits are commercially available but they are effective only for periods of less than two hours and are believed to be effective against gaseous radionuclides but not penetrating radiation. (Thus, one should rely on these suits only in case of emergency.) To facilitate dilution of radionuclides, the largest possible airflow should be provided. If the backfill, bentonite overpack, and canister are removed in one operation, the required airflow is the maximum flow that can be supplied through a duct. This depends on the length and diameter of the ductwork and for a 48-in.-diameter duct 3,500-ft long, this airflow will be about 34,000 cfm for a maximum static pressure of 10 in. water gage. The backfill has been removed, the maximum allowable velocity is 1,500 fpm which yields an airflow of 114,000 cfm through the space between the roof and walls and the bentonite overpacks. Since this airflow for retrieval is less than that provided by the assumed ventilation system, the assumed system is adequate.

Recognizing such difficulties for retrievability, the rooms could be widened so that precooling could take place both above and alongside the stored canisters. Ventilation and access would be more efficient, but more rock excavation would be initially required.

10.7.2.5 Backfill

An assessment of the impact of retrievability on backfill necessitates a discussion of fill material properties. The design report suggests the canisters be placed horizontally between mating blocks of precompacted bentonite in a storage room which is subsequently backfilled and sealed. Although there is no mention of the type of room backfill material, a reasonable mixture of crushed basalt and bentonite is assumed. Backfill material properties which influence backfill performance and retrievability include:

- High water sorption capacity and swelling pressure
- Low hydraulic conductivity
- High thermal conductivity
- High chemical, physical and mechanical stability
- High ion sorption and exchange potential.

The hydrated structure allows bentonite to absorb water and swell to over seven times its dry weight, beyond which it tends to flow. If confined, with no volumetric expansion allowed, a swelling pressure of up to 1,450 psi may develop, resulting in greater saturation, higher wet density, and attendant low hydraulic conductivity. The confinement can be achieved by filling the portion of the rooms above the bentonite blocks at a higher-density (about 130 pcf) and subsequently sealing the rooms with bulkheads. The high placement density, along with the inherently low hydraulic conductivity of bentonite (10^{-13} fps) gives a room backfill (basalt and bentonite mixture) hydraulic conductivity of 10^{-11} fps), a sufficiently low value to satisfy 10CFR60 travel time requirements within the repository.

Bentonite exhibits a very low thermal conductivity (about 0.44 Bfu/hr-ft-°F), which is detrimental to the ambient temperature of the storage room. A mixture of crushed basalt and bentonite has a higher thermal conductivity of 1.2 Bfu/hr-ft-°F. The temperature rise caused by the low thermal conductivity of bentonite tends to evaporate moisture causing a further reduction in thermal conductivity. However, under confinement, pore water pressures within the backfill in the sealed room may may be high enough (about 1,600 psi) to prevent steam formation. Steam will form once the bulkheads at room entrances are breached for remining, creating difficult and hazardous conditions. Presence of a certain amount of water aids backfill performance, but adversely affects retrievability. From information supplied by Federal Bentonite to EI, bentonite degrades structurally at temperatures beyond 1,117°F but RHO-BWI-C-116 indicates that bentonite begins to degrade at 212°F. However, repository temperatures do not approach this higher value and degradation may or may not occur. More investigations are needed in this area.

The performance of the backfill is dependent on achieving a high placement density at proper moisture content (8% to 10%) which also allows the fill to maintain sufficient bearing capacity. The actual performance of the bentonite blocks at elevated temperatures over a prolonged time period is not known. If the blocks are a pressed bentonite, the elevated temperatures may cause a decrease in moisture content and cause the blocks to be reduced to bentonite powder. However, under certain conditions the blocks may unify into a stiff gel.

Both bentonite and crushed basalt possess sufficient ion exchange capability to adsorb radionucludes. The most critical ones with regard to radioactive pollution of a water supply, cesium and strontium, can adequately be adsorbed by both the bentonite and backfill.

Based on the above discussion, impacts of three full retrieval scenarios on the storage concept will be discussed.

10.7.2.5.1 Full Retrieval while Operations are in Progress

Storage and backfilling operations continue for about 20 years and retrieval can be necessary at any time during that period. The difficulties encountered in full retrieval will depend on the storage and backfilling operations' progress. If the retrieval decision is made in the early stages of filling, retrieval remining conditions should not be difficult. Depending upon the results of monitoring, the degree of difficulty in remining the rooms will require assessment and appropriate equipment must be procured.

Water adsorbed in bentonite will be released as steam, due to the pressure drop when the bulkhead at a room entrance is removed, unless the room has been precooled by circulating cooling fluids in preplaced pipes or boreholes. This pressure release and steam formation may result in an outburst of fill material. The accompanying dehydration will turn the bentonite into a powder and make it physically and mechanically unstable. Canisters within the unstable bentonite may sink making precise location necessary prior to retrieval. The backfill above the bentonite blocks may flow leaving the roof unsupported, which may result in rockfalls. The backfill and water can potentially be contaminated due to radionuclide leakage and will require special handling.

10.7.2.5.2 Full Retrieval Immediately after Completion of Operations

If retrieval is to take place immediately following completion of storage and backfilling operations, the problems mentioned in the previous subsection will be accentuated by increase in temperature, moisture, and roof instability.

10.7.2.5.3 Full Retrieval at the End of the Retrieval Period

All problems previously outlined will be significantly increased by the end of the retrieval period, yielding the worst retrieval scenario. Whether the backfill in a room will become saturated with water in the decades-long retrieval period is not known. If saturation occurs, the bentonite will be transformed into a thixotropic gel and will tend to flow, along with steam release, when bulkheads are breached for retrieval. Bentonite flow will cause the canisters to move, making precise location difficult. In addition, the room backfill above the bentonite blocks may migrate downward, leaving the roof unsupported, possibly resulting in rockfalls. Extreme care must be exercised in retrieving canisters under such situations.

The bentonite blocks and backfill could be precooled, as mentioned, but this is time-consuming.

10.7.2.5.4 Local Retrieval

With local retrieval, the conditions encountered will be similar to those previously discussed for full retrieval. Since local retrieval is limited in scope, and will any case require removal of the backfill and bentonite overpacks the difficulty will depend on the temperature and moisture conditions, which are dependent on the elapsed time since placment. The longer the elapsed time, the greater the difficulty.

10.7.2.6 Thermal Effects

Due to the very low thermal conductivity of dry bentonite and assumed maximum operating temperature of 482°F, the use of bentonite imposes limits on the waste quantity or quality. The quantity of fuel assemblies in each package may be reduced. Tasking waste which has been out of the reactor longer than 10 years is more favorable from an economic point of view and because a large quantity of waste of this age will be available at the time of repository storage initiation. The material temperature design limits are assumed to be:

- Waste: 698°F
- Overpack: 482°F
- Bentonite: 482°F
- Host rock: 932°F.

The material peak temperatures were analyzed and predicted by using thermal models, as outlined by Westinghouse (AESD-TME-3113, 1981). For the dry bentonite conditions, the calculated peak temperature in °F are:

- Waste: 599°F
- Overpack: 482°F
- Bentonite: 473°F
- Host rock: 428°F.

In the case of wet bentonite, the calculated peak temperature are:

- Waste: 473°F
- Overpack: 443°F
- Bentonite: 443°F.

The above thermal analyses indicate that the material peak temperature are acceptable for this limit specified in the far-field, the thermal effect was not evaluated in the report, but the impact is expected to be insignificant. The far field areas of the shafts and accesses will be continuously ventilated.

10.7.2.7 Requirements for Special Equipment for High Temperature and Radioactive Environment

If the bentonite blocks and backfill are not precooled, high-temperature equipment may be necessary. Equipment requirements for high temperature and radioactive environment are extensive, and must be an integral part of the equipment system. Special requirements for high temperature equipment operation are detailed in Section 10.7.2.2.

Radioactive environments will require special shielding of equipment for operator safety. Decontamination facilities will also be necessary to service equipment and exposed backfill, or other materials.

10.7.2.8 Ground Support

As discussed in Section 10.7.1.3, ground support has not been addressed by Westinghouse (AESD-TME-3113, 1981) and the ground support system postulated in the RHO-BWI-C-116 (1982) has been assumed. In the latter document, the Q-system (Barton, Lien, and Lunde, 1974) has been used to determine support requirements. The data base for the Q-system does not include experience at repository conditions, and the designers as a result have specified support in excess of that required according to the Q-system classification for the Hanford basalts. Resin-grouted bolts are not acceptable for use in the repository rooms. The rock temperatures of 212°F and greater exceed the maximum service temperature of resin grout. Experience with concretes at elevated temperatures (Troxell, Davis, and Kelly, 1968, p. 248-250) indicates that for simple temperature increases to 212°F relatively minor strength losses occur due to loss of both free and combined moisture. Above 212°F more significant strength losses occur in the repository maximum temperature ranges up to, say 400°F, but amount to 10% reduction, or less. However, if the concrete is heated and then cooled, strength losses approach 25% or more at 400°F. Two considerations may minimize such strength losses. Using lean mixes and limestone, expanded slag, or similar aggregates minimize heat effects in this range. We suspect that the important cement grout, shotcrete and concrete considerations for repository temperatures hinge on minimizing the water content and matching the thermal expansion and chemistry of cements and aggregates.

Experience is lacking regarding the stability of rock bolt support systems for a period of decades. Concrete also has a coefficient of thermal expansion intermediate between that of steel and basalt limiting difficulties resulting from differential thermal expansion.

Over a decades-long period, deterioration of the support system will occur and minor roof falls may result. Where rockfalls occur, the support must be rehabilitated in conjunction with retrieval operations. Resupport of the roof cannot occur until the backfill above the bentonite overpacks is removed. The remining is potentially hazardous as the well-packed backfill, if not degraded, would prevent movement of blocks which have loosened from the roof. Such movement is free to occur once the backfill has been removed. If the backfill has degraded and moved away from the roof, the roof may have deteriorated requiring more care and more resupport. Reestablishing ventilation could also result in rockfalls, especially if the air has a high relative humidity. With the low headroom (10 ft) even after remining, rebolting must take place in conjuntion with retrieval of individual waste packages. Shotcreting with a remote nozzle could be carried 20 or 30 ft beyond the last retrieved canister to minimize progressive roof failure. The equipment required for rehabilitation would be:

- A Load-Haul-Dump vehicle for cleanup
- A roof-bolting jumbo
- A shotcrete machine with remote nozzle.

As discussed in Section 10.7.2.4, it may not be practicable to precool and so this equipment must be capable of high temperature operations.

Seepage of ground water toward the openings will occur. With time, pore pressure could build up on the shotcrete liner, resulting in shotcrete deterioration due to chemical action. Rock mass grouting at the time of room construction could minimize chemical deterioration.

Despite grouting efforts and shotcrete application to the emplacement room walls, some ground water is likely to enter the repository during the operating period Underground conditions could reasonably be expected to remain generally dry, but allowance for minor amounts of water during retrieval would be prudent. The water inflow volumes postulated would result in minor amounts of moisture in the backfill.

10.7.2.9 Instrumentation

The performance of the repository has to be monitored to ensure the safety criteria are not violated and the isolation capacity is maintained. The retrievability option mandates significant changes in selected parameters or deviations from expected behavior be detected when they occur, and steps be taken to correct the problem or retrieve the waste to the surface. Categories requiring monitoring are:

- Hydrogeologic - water inflow
- Thermal - heat buildup
- Mechanical - stress buildup, rock deformations and rock instability
- Radiological - activity levels.

The monitoring program of subsurface conditions is limited by the bulkheads and backfill. Most monitoring will be made by remote sensing measurements. Visual inspection and hands-on measurement is preferable to remote monitoring because instrumentation presently available has not been used for periods in excess of about ten years, especially under the thermal conditions of the repository rooms. As a result, an experimental panel will be provided in the repository in which extensive verification and confidence testing for the remote sensing equipment will be performed. The panel will also provide an opportunity to study the reliability of the instrumentation.

Thermal monitoring will primarily consist of thermocouples embedded in boreholes drilled into the rock at intervals along storage rooms. Thermocouple signals will be collected at several spots outside the storage room and relayed to a central control console to detect abnormalities.

Hydrogeologic monitoring will consist of measuring the pressure of formation water near the storage rooms, in various accesses, and in basalt flows and interflows. Durable, high-precision, pressure transducers will be placed between packers in boreholes.

The closure of preestablished points in main entries will be measured. At a few selected locations in the main entries, detailed evaluations of rock stability will be made using stressmeters and multiple position borehole extensometers.

Ventilation conditions in the repository will be monitored to detect ratiation levels, fire and smoke emergencies, as well as ventilation blockages caused by roof falls. Mobile radiation and thermal sensors in ventilation airways will permit continuous monitoring from a main surface control console. Flow direction, pressure, differential pressure, and temperature will be monitored.

The retrievability requirement mandates monitoring of the repository for perhaps decades after initial waste placement. The following steps need to be taken to ensure the reliability of instrumentation placed in the repository:

- Develop stressmeters, multiple position borehole extensometers, piezometers, thermocouples, and ventilation instrumentation that will maintain accuracy in the hot and humid environment expected in a repository.
- Provide extensive verification of the instrumentation reliablity in the repository experimental panel.
- Ensure repository inspection at predetermined intervals can be performed by robots or by personnel in air-conditioned suits or vehicles.

10.7.3 Adequacy of Incorporated Retrieval Systems or Allowances

The betonite blocks and backfill could be precoolted by preplaced pipes or boreholes with circulating cooling fluids, but this technology has not been demonstrated.

10.7.3.1 Local Retrieval

Local retrieval may occur as a result of quality control, quality assurance, or detection of a breached canister. A manufacturing error, for example, could have caused premature breakdown of some canisters in a storage room. "Hot cell" equipment or transfer casks containing internal shielded sleeves will be necessary for breached canisters. Unless the canister to be retrieved is the closest one, prior retrieval of other canisters will.

In the Westinghouse Report (AESD-TME-3113, 1981), placement and retrieval procedures and equipment are not specified. To retrieve a canister requires removing backfill and molded bentonite overpacks. No provision is made for the variable quality of the backfill and bentonite. The equipment for remining completed deteriorated backfill prior to retrieval is not a straightforword extension of existing techniques. Remining is performed after the removal of the bulkhead by equipment dedicated to the waste ventilation circuit. The remining will be carried out at high temperature with a low overhead clearance (10 ft). The roof may require resupport also by low-profile equipment. The equipment performing the remining and roof support will be traveling on the bentonite overpacks. At the expected repository temperatures, the bentonite overpacks may be come powder due to the loss of moisture. If the bentonite blocks do not remain intact the bentonite powder will provide inadequate support for the remining and roof support equipment. If the geometry or quality of the bentonite overpacks is altered a locating device may be required for determining the position and orientation of the canister. Until further development of remining methods, and low profile equipment and assessment of backfill and bentonite overpack quality is made, the incorporated systems for retrieval are inadequate.

10.7.3.2 Full Retrieval

Full retrieval of waste canisters will need planning and preparation. Full retrieval will require special equipment not yet developed. The reasons for retrieval may interfere, such as deterioration of backfill and bentonite allowing excessive rock falls damaging canisters, inundation of the repository due to intersection with a previously undetected water-bearing fault, or breach of the canisters from corrosion. The timing for full retrieval further complicates the problems and inadequacies defailed for local retrieval. Equipment for breaching the bulkhead and resupporting the roof will be dedicated to the waste ventilation circuit. Low profile equipment capable of operating at high temperatures for remining and roof support must be developed. The equipment may have to be remote controlled with very precise control to avoid disturbing the bentonite overpacks if intact. Full retrieval near the end of the retrievability period is likely to encounter deteriorated roof support and degraded backfill and benontie overpacks requiring special equipment. The retrieval system incorporated within current technology is inadequate. Further development of retrieval equipment and sequences is required to assure compliance with 10CFR60.

10.7.4 Concerns

10.7.4.1 Technological Concerns

Precooling of the bentonite and backfill could be done, but the technology has not been demonstrated.

As discussed in Section 10.7.2.1, if retrieval in a high temperature environment is necessary, retrieval will require three separate operations:

- Remove backfill
- Remove bentonite blocks
- Retrieve canisters.

The physical state of the bentonite at temperatures of about 480°F requires evaluation. Should the bentonite be either a thixotropic gel or a powder, the backfill and canisters can migrate relative to their initial positions, complicating the retrieval operation. Fluid bentonite may flow upon breach of the bulkheads at the ends of the rooms. Bentontite flows would create a continuous void through the room at the crown, but because the void cross-section would be small, no cooling would occur. Research is required to determine the properties and behavior of the bentonite at high temperatures.

Potential steam pressure from moisture trapped in the backfill requires study. The characteristics of backfill subjected up to 50 years of compaction at temperatures of up to 480°F need to be determined.

Remote control systems need to be examined or researched with regard to their capabilities for remining hot backfill. Present systems have operational shortcomings and may not be readily adaptable to the remining environment.

10.7.4.2 Safety Concerns

Remining of the backfill will expose the roof and allow any weakened areas to fall. The rockfalls, if near the face, could damage remining equipment. The falls are possible because the performance of grouted bolt and shotcrete support systems for decades is unknown. Such systems have only been in common use for about 25 years. Because the rooms are backfilled the supports cannot be inspected. Deterioration cannot be counteracted until the backfill has been removed when shotcrete can be placed with a remote nozzle. Removal of bentonite overpacks and canisters is also requred before bolter, can operate. (Scaling can be performed prior to shotcreting using a long boom.)

Another cpncern is the traffic congestion during local retrieval operations. Transporters will be traveling to and from storage rooms carrying either retrieved canisters or those to be stored. The two operations will be carried out simultaneously resulting in possible congestion and safety hazards at haulageway intersections. The hazards are compounded if the retrieved canisters leak radionuclides and radiation, creating a greater hazard in the case of a collision, should protective barriers be broken. (With the self-shielded, thick-walled canisters, a breach is highly unlikely but further research is required to confirm this assumption.)

Safety of personnel depends largely on the numerous monitoring devices placed throughout the repository to detect airflow deficiency or radionuclides. The devices must continuously be checked, calibrated or replaced to maintain an accurate warning system.

10.7.4.3 Radionuclide Concerns

One of the possible reasons for retrieval is failure of the waste package, with consequent release of radionuclides. Gaseous and volatile radionuclides may be released into the miniscule space between the canister and the bentonite blocks while soluble radionuclides may be carried away by any water present in the aforementioned space. Removal by aqueous solution, requires the presence of water in liquid form; that is, its temperature must be less than the boiling point for the repository pressure conditions.

10.7.4.3.1 Releases into Air

The gaseous and volatile isotopes which could be released by a breached canister are hydrogen-3 (tritium), carbon-14, and krypton-85. The quantity of krypton-85 is large compared with th of either tritium or carbon-14. In addition, the carbon-14 must be in a form that leads to volatile species upon reaction with water in order to be of concern. One-tenth of the krypton-84 is assumed to be sufficiently near an exposed surface to be able to leave the fuel. If a breach occurs, the concentration of krypton-85 and tritium in air must not exceed 10 nCi/liter and 5 nCi/liter, respectively, in order to satisfy 10CFR20. (The limits are defined in metric units. The equivalent limits in customary units, for reference, are 0.35 nCi/ft^3 and 0.18 nCi/ft^3, respectively.)

Gaseous radionuclides released by a breached canister will migrate into any pore spaces in the compressed bentonite blocks, and through the space between blocks into pore spaces in the backfill (assuming the blocks retain their integrity). Thus, these radionuclides will be released as the backfill is remined and as the bentonite overpack is removed. Because of the limited airflow which can be provided during backfill removal (50,000 cfm or less) dilution of the radionuclides to the maximum permissible concentrations (MPCs) given in 10CFR20 would require up to several hours.

Releases occurring as the bentonite blocks are being removed, assuming that the blocks have retained their integrity and separate forms, cannot be avoided. If the bentonite has degraded into powder, the gaseous radionuclides could diffuse through the bentonite and backfill and hence would be liberated as the backfill and powdered bentonite was removed. Personnel should not be present when removal of backfill and bentonite are occurring.

The aformentioned discussion is predicated on the occurrence of a breach. With the self-shielded thick-walled canister, a breach within the perhaps decades-long retrieval period is very unlikely. However, if one did occur the entire room or panel containing that canister would be contaminated, so that operations would need to be by remote-control. It would be necessary to have a shielded container into which the canister could be placed for transport since canister placement and removal would normally be with a fork-lift type machine having minimal shielding. Retrieval operations must necessarily be by remote control and "hot cell" equipment would be required.

10.7.4.3.2 Releases into Water

The movement of radionuclides by aqueous transport, requires the water be in the liquid state. At a pressure of 1,600 psi, the boiling point of water is about 600°F, and because the rock and backfill temperatures will be 450°F or less, the pore water will be in liquid form within the backfill. Upon remining unprecooled backfill, pressures are reduced to atmospheric and the water vaporizes.

If water contacts a breached canister, the rate of dissolution would vary widely with the water composition and temperature. For a typical rate of 0.0000264 lb/day, the solution water would contain about 0.25 mCi/lb of water and about one pound of this solution would generate about 0.1 mR/hr at 4 ft. Pore spaces in the backfill would also contain gaseous radionuclides which would be liberated upon mining. Water intrusion would provide a good index to failures but alone would not introduce significant radiation hazards to the operations (Post, 1982).

10.7.4.3.3 Radiation Detection Standards

The radiation levels measured during retrieval operations are not exceptional and the detection system standards used in the nuclear industry would prevail. A lower limit of 0.1 mR/hr and upper limit of a few kR/hr would be adequate. A system to detect radioactive krypton in the storage holes will be required. This system should be capable of detecting krypton-85 levels below 100 pCi/liter (2.6 pCi/ft^3).

10.7.4.4 Operational Concerns

During retrieval, equipment congestion is likely in the shaft areas and in the storage drifts. Bottlenecks in the storage rooms are due to the storage rooms being "no pass zones" and the need for different pieces of equipment to remove backfill, bentonite blocks and canisters.

The total clearance between the ends of the canisters and the walls of the storage room is 3 ft. Transport of canisters within the storage rooms must be performed carefully.

Remining of the limited thickness (5 ft or less) of backfill at the top of the rooms will present difficulties. The extent and nature of the problem depends on the physical state of the bentonite blocks underlying the backfill. If the compressed bentonite blocks remain solid and at their original height and configuration, the backfill may remain packed to the crown of the opening. A low-profile remote control mining system will be necessary for remining. If the bentonite blocks have disintegrated, the praticality of remining the backfill depends on the physical state of the bentonite. Investigations are required to determine what the state of the bentonite and backfill will be.

Handling of the bentonite during retrieval is another problem. Resolution of this problem, by design of suitable handling equipment, depends on having knowledge of the physical state of the bentonite.

The thick-walled, self-shielded canisters are unlikely to breach during the retrieval period. If breached, the canister will contaminate the immediate surroundings. Transport of breached canisters to the shaft area will result in contamination of all areas through which the canister has passed unless an adequate shielding cask is provided on the transporter.

10.7.4.5 Other Concerns

A fundamental problem related to a repository in basalt concerns the geologic/hydrogeologic uncertainty at the repository horizon. Among the concerns are:

- Uniformity of the thickness of the candidate basalt flow
- Uniformity of the jointing
- Occurrence of faults
- Vertical and lateral hydraulic conductivity.

The in situ exploratory programs planned (1983) by DOE are aimed at resolving the questions concerning geologic and hydrogeologic conditions at the proposed repository horizon.

Another problem concerns the probability of canister breach. Assuming a breach is possible, the activities of toxic (strontium and cesium), volatile (iodine), and gaseous (tritium, krypton-85) radionuclides and the dosages of beta and gamma radiation that would occur for breaches at various times up to 50 years after placement must be predicted. The method of backfill placement over the bentonite blocks requires further study. Presumably, backfill could be placed pneumatically using a low tonnage, low pressure system. The placement properties of the backfill will have a influence on the backfill conditions during the retrieval period.

10.7.5 Summary and Conclusions

The repository is located at a depth of 3,700 ft in the Umtanum Flow basalt of the Hanford Reservation, Washington. The repository consists of 23 storage panels and an experimental panel divided by a shaft pillar into two sections of 12 panels each. Each is divided into five rooms. The storage rooms are 3,590-ft long, 10-ft high, and 20.5-ft wide.

The waste package consists of a carbon steel overpack with an inside diameter of 12 in. and an outside diamater of 40 in. The package is 16.25-ft long when containing three PWR spent fuel assemblies and 17.0-ft long when containing seven BWR spent fuel assemblies. Based on an average canister thermal load of 1.02 kW/canister the panel thermal load is 63.2 kW/acre. The canisters are placed in preformed bentonite overpacks with a nominal thickness of 22.5 in. The remaining height of the room is backfilled after storage and the rooms are then bulkheaded.

The retrievability requirements of 10CFR60 impose the following effects on the repository systems:

- Precooling systems - Precooling hot backfill and bentonite blocks with circulating cooling fluids has not been shown to be demonstrated technology
- Re-excavation systems - The backfill will require mining by low profile equipment. The quality and condition of the backfill and bentonite overpacks will have a significant effect on the type of equipment to be used for remining
- Equipment systems - Haulage and excavation systems during remining will need to be remote controlled due to elevated temperature. Specialized equipment including carbide bits, oil coolers, hydraulic hoses and steel fittings will be required to cope with the elevated temperatures. Equipment working at the face or retrieving waste will need to be crawler-mounted because rubber tires will rapidly deteriorate
- Facilities - Retrieval will result in some congestion in the shaft facilities in order to coordinate the hoisting of retrieved waste and the lowering of waste to be stored.

The mined rock handling system will need to be reactivated to handle the remined backfill. Special handling may be required if the backfill is contaminated

- Ventilation requirements - The ventilation air volumes during retrieval are a function of the ambient rock temperature, time since placement, the desired time for precooling and the required precooling temperature. The airflow which can be provided in the void created in the crown by backfill removal is too small to provide any significant cooling. The largest flow possible must however be provided so that any concentrations of gaseous radionuclides are diluted in the shortest possible time. With the various retrieval types in relation to placement and storage, the incorporated ventilation systems may not allow retrieval in the same period as storage unless high temperature retrieval equipment is used. The basalt handling shaft may be used to hoist backfill during retrieval and would require a HEPA filtration system to prevent radionuclide release

- Backfill - The condition of the backfill present at retrieval is a function of the elapsed time and the backfill composition. Retrieval operations may encounter steam and unstable backfill depending on the hydrologic and thermal conditions. The backfill during retrieval will require material handling systems and an evaluation of the quality of the material for reuse or disposal.

Degradation of the backfill, rock support, and betonite overpack may lead to rockfalls damaging canisters and requiring special retrieval equipment.

The concerns for the repository concept are summarized as follows:

- Technilogical Concerns:
  - Development of backfill precooling systems
  - Prediction of bentonite behavior and properties at high temperatures
  - Prediction of steam pressure effects on bentonite
  - Remining and retrieval equipment which is undeveloped and not a simple extension of current technology
  - Adequacy of rock support for a decades-long period

- Safety Concerns:
  - Rockfalls during remining as a result of deterioration of the rock support system
  - Thermal spalling during precooling
  - Traffic congestion during local retrieval and continued storage
- Radionuclide Release Concerns:
  - Canister breaches would result in release of gaseous hydrogen-3 (tritium) and krypton-85, and volatile carbon-14, of which the krypton-85 would have the largest concentration
  - A system is required for detection of krypton-85 in ventilating air and in storage holes
  - Gaseous radionuclides released by a breached canister would be liberated either during backfill removal or bentonite removal depending on the physical state of the bentonite
- Operational Concerns:
  - Coordination of equipment in the storage rooms and main entries during retrival
  - Limited clearances between canisters and room walls requiring careful handling
  - Remining of a thin backfill perimeter between the bentonite overpacks and room walls
  - Large capacity heat exchanger limiting space in the room entrances
  - Handling of contaminated bentonite blocks and adequate shielding for retrieving breached canisters
- Other Concerns:
  - Geologic and hydrogeologic uncertainties
  - Undetermined probabilities and mechanisms for canister breach

- Methods and details of backfill placing especially in the upper portion of the room
- Unknown backfill quality over the repository retrieval period affects all retrieval systems.

The development and placement concepts for the repository are adequately defined. The backfill type and placement method lack adequate definition. The backfill presence and quality have a significant effect on waste retrieval. The details of placement and quality will define the methods and hazards of remining. The equipment used to either precool or to mine the backfill are not fully defined. Present technologies do not encompass equipment capable of remote control mining the backfill with the precision and at the temperatures expected in the repository. Details of retrieval by removing the bentonite overpacks is lacking and are totally undefined for the case of degradation of the bentonite. Further definition and confirmation is required in the areas of geology and hydrogeology, decades-long adequacy of roof support, detection and retrieval of breached or damaged canisters and the probabilities and mechanisms for breach. The problems involving placement, remining and handling of backfill and retrieval details for the bentonite overpacks prevent the repository concept from meeting the retrievability requirements of 10CFR60. In order to meet the requirements, considerable development in remote control mining and retrieval equipment is required.

10.8 Tuff Repository With Vertical Hole Storage, Continuous Ventilation, and Permanent Closure Backfilling

10.8.1 Basic Information

The eighth repository concept is in tuff, with vertical storage holes in the floor, continuous ventilation after waste emplacement, and backfilling at permanent closure. The eighth concept does not specifically appear in any DOE design, but has been hybridized from several designs and EI projections to assess retrievability of a viable overall system with several important features.

10.8.1.1 Definition of Repository Concept

The host geologic medium is tuff. Waste packages will be placed in 48-in.-diameter drillholes in the storage rooms floors. The rooms will not be backfilled until repository permanent closure, but will remain open and ventilated. The concept is similar to the reference repository in basalt (RHO-BWI-C-116, 1982) except that:

- Panels where waste storage has been completed will be open and ventilated rather than bulkheaded
- The concept will require a confinement circuit airflows of about 3 million cfm and larger cross sectional areas in confinement entries, returns, and shafts than those in the reference repository.

The emplaced canisters emit 1.74 kW/canister, which results in a thermal loading within a panel of 51.6 kW/acre, or 35.6 kW/acre for the entire repository.

10.8.1.2 Geologic Environment

10.8.1.2.1 Rock Units

The proposed repository emplacement horizons are in the bedded tuff rocks of Yucca Mountain located adjacent to the southwestern portion of the Nevada Test Site. Of the several tuffaceous rock units present at Yucca Mountain, the Topopah Spring Member of the Paintbrush Tuff Formation is the leading candidate horizon. The majority of available information is based on data from boreholes USW-G1, UE25a-1, and J-13 (SAND80-1464, OF81-1349).

The lower contact of the Topopah Spring Member lies about 1,200-ft deep. The Topopah Spring Member has an ashbed within the interior and several ashflow units which range from non-welded to vitrophyric.

A thin ashfall/reworked tuff section is present at the base of the member. The lower portion of the member is slightly zeolitized and only partially welded. The vitrophyre is unaltered, tightly compacted, and welded. In some areas, the vitrophyre contains abundant calcite veinlets and about 7% to 30% phenocrysts. Fractures in the vitrophyre are cemented; however, the nature of cementing material is undescribed. All rock above the vitrophyre is densely welded and extensively fractured. Clay gouge is found along some of the fractures.

Volcanic rocks of this sequence generally dip towards the east and southeast at angles less than 10°. Dip reversals occur locally and may assume values up to 20° in the vicinity of faults. Several confirmed and inferred faults bound most of the mountain block around the proposed repository site. Faults are generally normal, dip at approximately 60°, and strike north-south. A total of several hundred joints were identified from cores of Borehole USW-G1 and nearly half of these joints occur in the Topopah Spring Member core. A majority of the joints shows a near vertical trend (70° to 90°). Shear fractures occur predominantly within the extensive densely welded zone of the Topopah Spring Member.

The Yucca Mountain area tends to be aseismic, however, an earthquake of Richter magnitude 1.7 occurred below sea level under Yucca Mountain in 1981 and another single earthquake of unknown magnitude and depth was recorded east of Yucca Mountain during the same year.

10.8.1.2.2 Hydrogeology

Hydrogeologic studies for the Yucca Mountain area are part of the ongoing (1983) work of the Department of Energy. Very limited data were available at the time of this present study. The regional groundwater flow trend is from the northwest to the southeast across Yucca Mountain with a low horizontal gradient and almost no vertical gradient. The water table in this area is about 2,000 ft below the land surface, and a regionally uniform position of water levels seems to exist.

The Topopah Spring Member lies well above the regional water table and is therefore unsaturated. Ground water flow through this member is generally controlled by structural features. In the densely-welded portions of the ashflow tuff, water flow is controlled by primary (cooling) and secondary joints. The hydraulic conductivity ranges from 15 to 15,000 ft/day, however, intercrystalline permeability and porosity are neglible. The unwelded part of this member exhibits a relatively higher porosity (35% to 50%) and a modest hydraulic conductivity (0.25 ft/day) and may act as a leaky aquitard.

10.8.1.2.3 Rock Mechanics Properties

Rock mechanics properties of tuff rocks of the Topopah Spring Member are based on limited laboratory testing of intact rock specimens and discontinuities, and (1983) in situ data are almost non-existent. Available data are presented in Table 10.8.1, along with reference sources. Generalized mechanical properties of intact rocks and joints reported by shown in Tables 10.8.2 and 10.8.3, were used to determine the thermomechanical behavior of the Topopah Spring Member in a repository environment. Recent laboratory studies (SAND 82-1723) indicate that the mean unconfined compressive strength of the Topopah Spring Member is about 13,900 psi. Tests on water-saturated specimens. were performed at room temperature at 14.5 psi confining pressure. The compressive strength so determined is lower than that reported by SAND 80-1455. This strength reduction appears to be resulting from the significant effect of water on tuffs. However, since the Topopah Spring Member lies above the water table (and is therefore, unsaturated) and will experience temperature levels above 212°F (on the room scale), it is reasonable to assume a compressive strength of 16,000 psi (30% strength reduction from 22,800 psi, SAND 80-1455. This compressive strength value was used to determine ground support requirement for repository construction in the Topopah Spring Member.

10.8.1.3 Repository Construction and Layout

As shown in Figure 10.8.1, the repository will contain 22 storage panels, each of which, with the exception of the experimental panel, will comprise sixe rooms. The rooms will be 3,574-ft long and are to be connected by crosscuts on 890-ft-centers. Entries, rooms, and crosscuts will be driven by drill-and-blast methods. Table 10.8.4 gives dimensions of the various facilities.

Five entries will connect the storage panels with five shafts to the surface. Each shaft will have a different dedicated function:

- Personnel and materials (service) shaft
- Tuff transport shaft
- Waste transport shaft
- Confinement air intake shaft
- Confinement air exhaust shaft

We assume that the shafts will be sunk by conventional drill-and-blast methods, and lined by concrete to a depth of about 1,300 ft.

Two potential sequences for repository development and waste placement, are:

Table 10.8.1 Summarized Mechanical Properties of the Topopah Spring Member

TEST CONDITIONS	COMPRESSIVE STRENGTH	COHESION (C)	ANGLE OF INTERNAL FRICTION	POISSON'S RATIO	AVERAGE POROSITY (%)
Intact Rock at room temperature (73°F)	22,800 psi[a]	2,540 psi[a]	67°[a]	0.23 (at 1,450 psi confining pressure)	9.4%[a]
Intact Rock at elevated temperature (392°F)	22,300 psi[b]	-	-	0.15[a]	11.3%[a]
Rock Joint at room temperature (73°F) (unspecified rock formations)			31.8° to 33.4°[c] (dry) 33.8° to 36.5° (saturated)		

[a] SAND80-1455

[b] SAND81-0629

[c] Olsson & Teufel (1980)

Table 10.8.2 Mechanical Properties of Intact Rock
Johnson (1981)

	TEMPERATURE				
PROPERTY	68°F	212°F	212°F	1,832°F	UNITS
Young's Modulus	2.9×10^6	2.9×10^6	2.9×10^6	2.9×10^6	psi
Poisson's Ratio	0.25	0.25	0.25	0.25	--
Shear Modulus	1.16×10^6	1.16×10^6	1.16×10^6	1.16×10^6	psi
Coefficient of Thermal Expansion	4.17×10^{-6}	4.17×10^{-6}	5.72×10^{-6}	5.72×10^{-6}	$°F^{-1}$
Angle of Internal Friction	42.9°	42.9°	42.9°	42.9°	Degrees
Cohesion	1230	1230	1230	1230	psi

Table 10.8.3 Mechanical Properties of Joints
(Johnson 1981)

	TEMPERATURE				
PROPERTY	68°F	211.98°F	212.02°F	1,832°F	UNITS
Angle of Internal Friction	35°	35°	35°	35°	Degrees
Cohesion	1.45	1.45	1.45	1.45	psi
Joint Angle (with respect to drill core axis)	90°	90°	90°	90°	Degrees

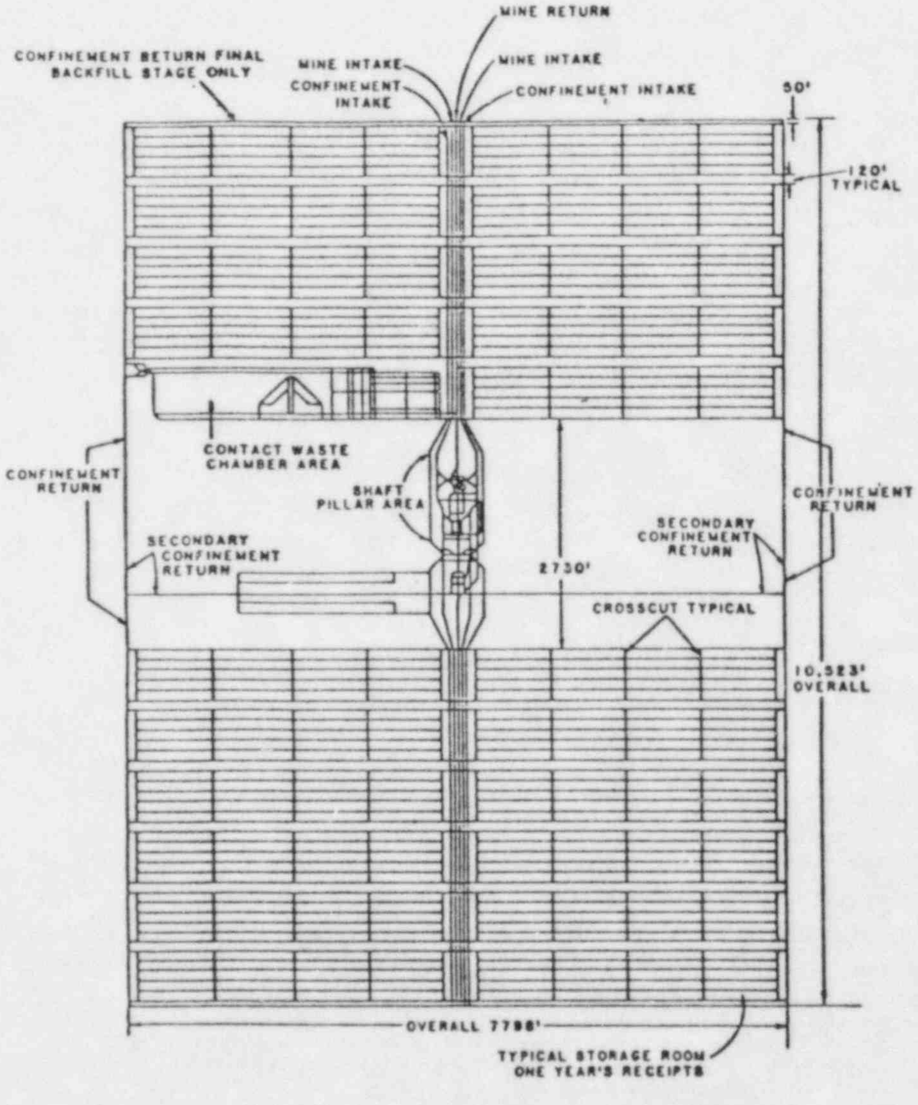

Figure 10.8.1 Repository layout for storage in vertical holes. (RHO-BWI-C-116)

- Repository development has been completed before waste storage begins
- Panel development and waste storage take place concurrently with both operations advancing at the rate of one panel per year.

The two sequences have very different requirements for ventilation and excavation systems, shaft facilities, and equipment quantities. The two sequences also affect retrieval considerations differently.

According to assumed repository construction schedules, placement is required to begin within ten years of construction authorization. Assuming two years for shaft sinking and allowing for contract procurement for both the shafts and the underground development, preplacement development must be completed within six years. Because Pressurized Water Reactor (PWR) and Boiling Water Reactor (BWR) waste will be stored in separate panels (according to information supplied to EI by the NRC) and an available spare panel is desirable at all times, three panels must be ready for storage by year 10. Completion of three panels in six years would require a development rate of 2,800 tpd, on a five-day week basis.

If complete repository development must occur before placement, the required development rate is 11,800 tpd. This option causes the following modifications to the facility dimensions given in Table 10.8.4:

- Tuff tranport shaft - 21-ft inside diameter
- Confinement intake accesses - 13-ft wide by 12-ft high.

In the reference repository description assumed (originally for basalt) (RHO-BWI-C-116), development and storage proceed outward from the panels nearest the shaft pillar to those at the extremities of the repository. However, for the open, ventilated rooms concept, development and storage on a retreat basis from the repository extremities toward the shaft pillar is more practical, especially if complete development occurs prior to placement.

The mining cycle in a given heading would consist of (in order):

- Drill the round
- Load and blast the round
- Remove the broken muck
- Install ground support.

Although the rock is strong and competent, protection from minor local failures such as rock falls requires rock support. A loosened

Table 10.8.4 Dimensions of Repository Facilities

Facility	Dimensions
Personnel and Materials (Service) Shaft	23 ft inside diameter
Tuff Transport Shaft	18 ft inside diameter
Waste Transport Shaft	26 ft inside diameter
Waste Air Intake Shaft	18 ft inside diameter
Mine Air Exhaust Shaft	18 ft inside diameter
Central Panel Corridor	26 ft by 16.4 ft (lined)
Sublevel Rail Haulage Corridor	26 ft by 17 ft (lined)
Transporter Access	18 ft by 17 ft (lined)
Transporter Return	32 ft by 16 ft (lined)
Man and Supply Access	26 ft by 16.4 ft (lined)
Waste Air Return	26 ft by 16.4 ft (lined)
Rail Haulage Access	13 ft by 13 ft (lined)
Rail Haulage Return	26 ft by 16.4 ft (lined)
Rock Pass	7.5 ft by 16.4 ft by 29.5 ft
Panels	1,228 ft by 6,232 ft
Storage Rooms	31 ft by 16.4 ft
Reaming Rooms	9.8 ft by 16.4 ft
Rib Pillars	656 ft
Panel Pillars	164 ft
Room Pillars	174 ft
Storage Holes	24-in. diameter by 175 ft long
Storage Hole Pitch	8.4 ft

zone surrounds openings excavated in rock. The loosened zone generally extends 5 ft to 10 ft outward regardless of the size of the opening, but can be as little as 3 ft where smooth blasting practices are employed. The loosened zone is generally sufficiently unstable to require some support in an otherwise competent rock mass. As an aid in estimating support requirements, the tuff has been classified by EI according to the Q-system of Barton, Lien, and Lunde (1974), resulting in a value of about 85. Barton, Lien and Lunde (1974) indicate for repository-size openings in rock, with a Q-value equal to 85, no support would be required. Thermal stresses are not allowed for in the Q-system, therefore systematic rock bolting consisting of cement-grouted rock bolts spaced 8 to 10 ft apart is assumed, along with a remined 4-in. layer of shotcrete.

10.8.1.4 Canister Placement and Arrangement

The waste package (Figure 10.8.2) consists of a carbon steel canister, surrounded by graphite fill material, and contained within a 21-in.-outside diameter titanium overpack. The packages will be placed in 48-in.-diameter holes drilled vertically on 12-ft centers along the centerline of storage room floors. As shown in Figure 10.8.3, the hole is designed as a engineered barrier consisting of (starting at the outside) zircon sand and bentonite filler, an aluminum container surrounding tailored overpack, and a ceramic sleeve to support the tailored overpack. No mention is made in the assumed basalt reference repository description (RHO-BWI-C-116)) of the method(s) used to place the filler, aluminum container, tailored overpack, and ceramic sleeve in the hole. We assume the containers and sleeves are lowered into place, while fill materials are poured or blown in.

10.8.1.5 Thermal Loading

As a result of decay of the radionuclides contained in the spent fuel, the waste packages radiate heat. Unreprocessed spent fuel contains fission products which are relatively short-lived and actinides which are generally quite long-lived. As the radionuclides decay to more stable isotopes, the number of disintegrations and resultant heat produced will decrease with time. The heat produced by a canister will be at a maximum at the time of emplacement.

A canister will contain either three PWR or seven BWR spent fuel assemblies. Assuming 10-year-old waste, canisters will have initial maximum heat loads of 1.74 kW and 1.33 kW for PWR and BWR, respectively.

The areal extent of the repository, the canister spacing, the age of the waste, and the type of waste (PWR or BWR) determine the overall thermal load on the repository. To be conservative, all the waste is

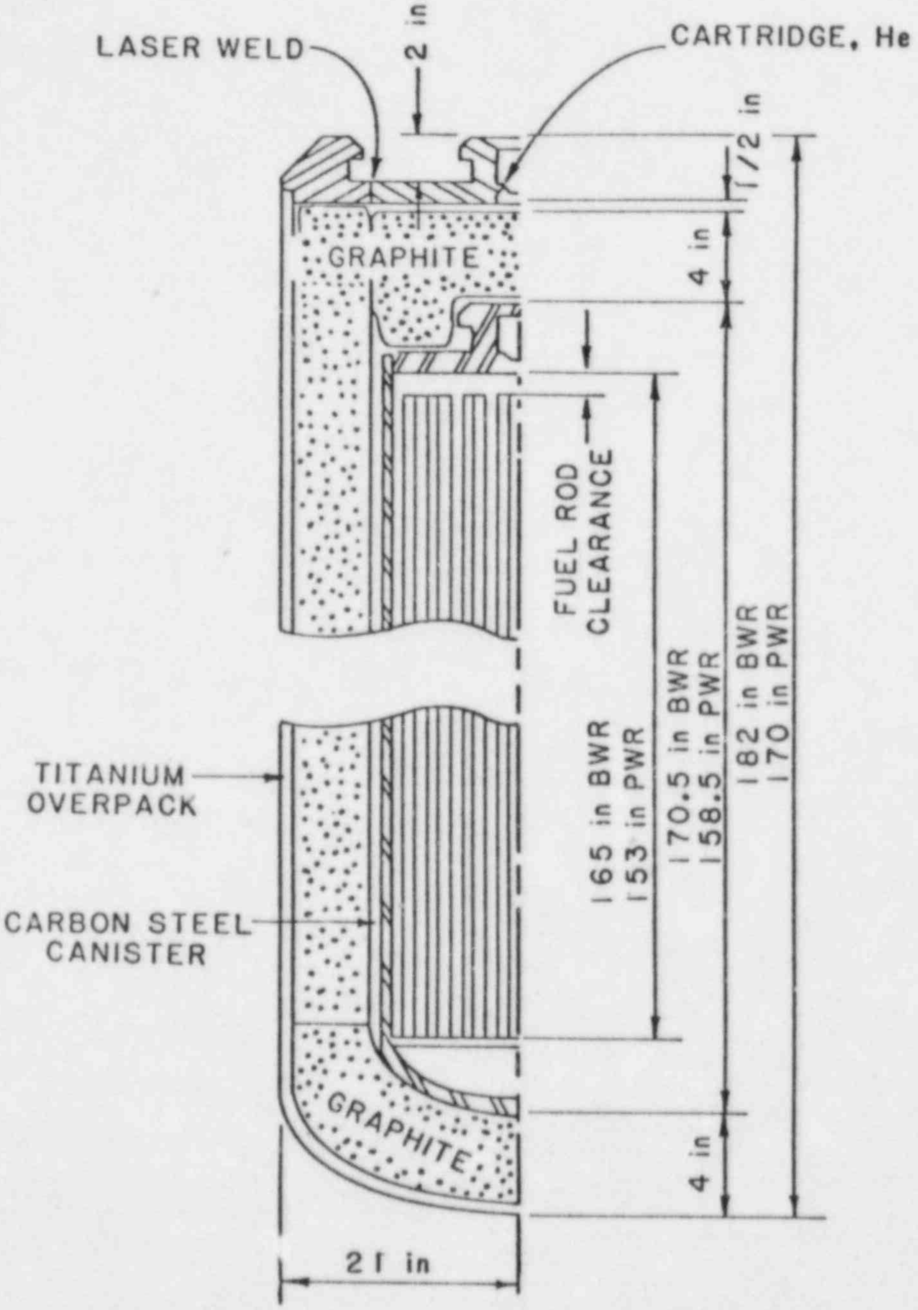

Figure 10.8.2 Waste package.
(RHO-BWI-C-116, 1982)

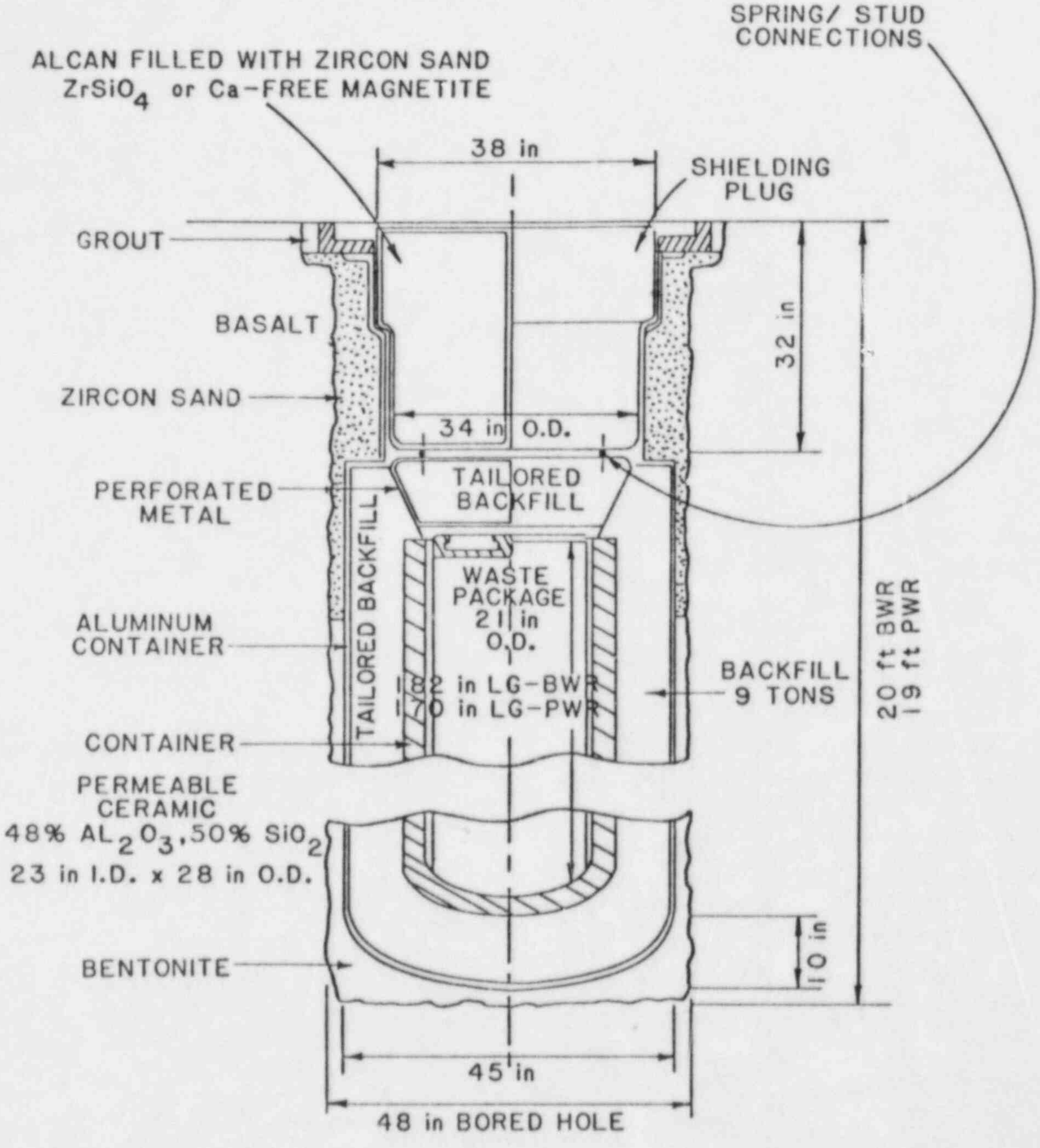

Figure 10.8.3 Storage position.
(RHO-BWI-C-116)

assumed to be 10-year-old PWR. In reality, waste type and age will vary, and actual panels are assumed to consist of waste of a uniform type and age to avoid uneven thermal loading within a room or panel.

The storage area consists of 22 panels occupying a total of 1,300 acres, or 59 acres per panel. Using 1.74 kW/canister and a storage complement of 1,750 canisters per panel, the heat load within a panel is 51.6 kW/acre. On the basis of the total area of 1,884 acres (which includes the shaft pillar and service areas) the overall heat load is 35.6 kW/acre.

10.8.1.6 Backfill Timing

Ultimately, a repository must be backfilled, with the backfill designed as a barrier (10CFR60.133). In this repository concept, backfill will not be placed until permanent closure. Remining of backfill for retrieval purposes is apparently not an issue in this open-room concept because the decision to permanently close nullifies the retrievability requirement.

Permanent closure will take about 20 years, and a possibility exists that retrieval could be required for some reason during the permanent closure process, though the rule (10CFR60) does not require retireval to be maintained as an option after initiation of permanent closure. Remining prior to retrieval will not be dealt with in this concept as the retrieval operations would be similar to those in concepts where backfill is placed as soon as storage in a panel has been completed.

10.8.1.7 Ventilation

Rooms are open (unbulkheaded) and ventilated after waste placement has been completed. The two potential development options:

- Develop and store waste simultaneously
- Develop whole repository prior to waste placement,

result in two alternative ventilation schemes. In the first case, two separate ventilation circuits are required:

- Mine (development) ventilation system
- Confinement (storage) ventilation system.

The airflow in the confinement circuit will begin at a small value and increase until the final value is reached because rooms will be developed only as they are required for placement. To ensure that leakage is minimized and is toward the confinement circuit, the size of the confinement entries and returns must increase as the confinement air volume increases.

If total repository development precedes placement, only one ventilation system is required. The airflow requirement will increase as panels are developed. Once repository development is complete, the airflow will remain constant until permanent closure.

In the summer, the intake air may require precooling to maximize the convective heat removed from the rock. In winter, the intake air may have to be heated to ensure that the temperature exceeds 37°F to avoid icing. Heating could best be accomplished by extracting heat from the exhaust air using heat exchangers.

10.8.1.8 Retrieval Systems

Title 10, Part 60 of the Code of Federal Regulations (10CFR60) requires that repository operations be designed so that any or all of the waste could be retrieved on a reasonable schedule "Full Retrieval" is removal of all waste. However, from time to time, retrieval on a limited basis may become necessary; as for example, a few canisters, a single room, or a single panel. This scenario is designated as "Local Retrieval."

In addition to providing multiple barriers in the hole, the storage position, described in Section 10.8.3, has been designed to facilitate retrieval. In the present repository concept, storage rooms are open and ventilated, and air temperatures would remain workable. Equipment for high temperature operation would not be necessary for retrieval. The transporter (Figure 10.8.4) used to place the canisters in the holes could also be used for retrieval. The rubber-tired machine is powered by a 300-HP diesel engine and has a net vehicle weight of 39 tons. The transporter has a track width of 8.5 ft, a wheel-base of 20.5 ft, and has two operator cabs, one at each end, facing opposite directions.

The order of operations for retrieval using the transporter is:

- The floor shield is placed over the storage hole
- The plug housing is placed over the floor shield
- The doors in the floor shield are opened and the storage hole plug is removed and stored in the plug housing which is rotated away from the hole after the floor shield doors have again been closed
- The transfer cask is lowered into position over the floor shield
- The doors on the floor shield and transfer cask are opened
- The grapple in the transfer cask is lowered to engage the top of the waste package

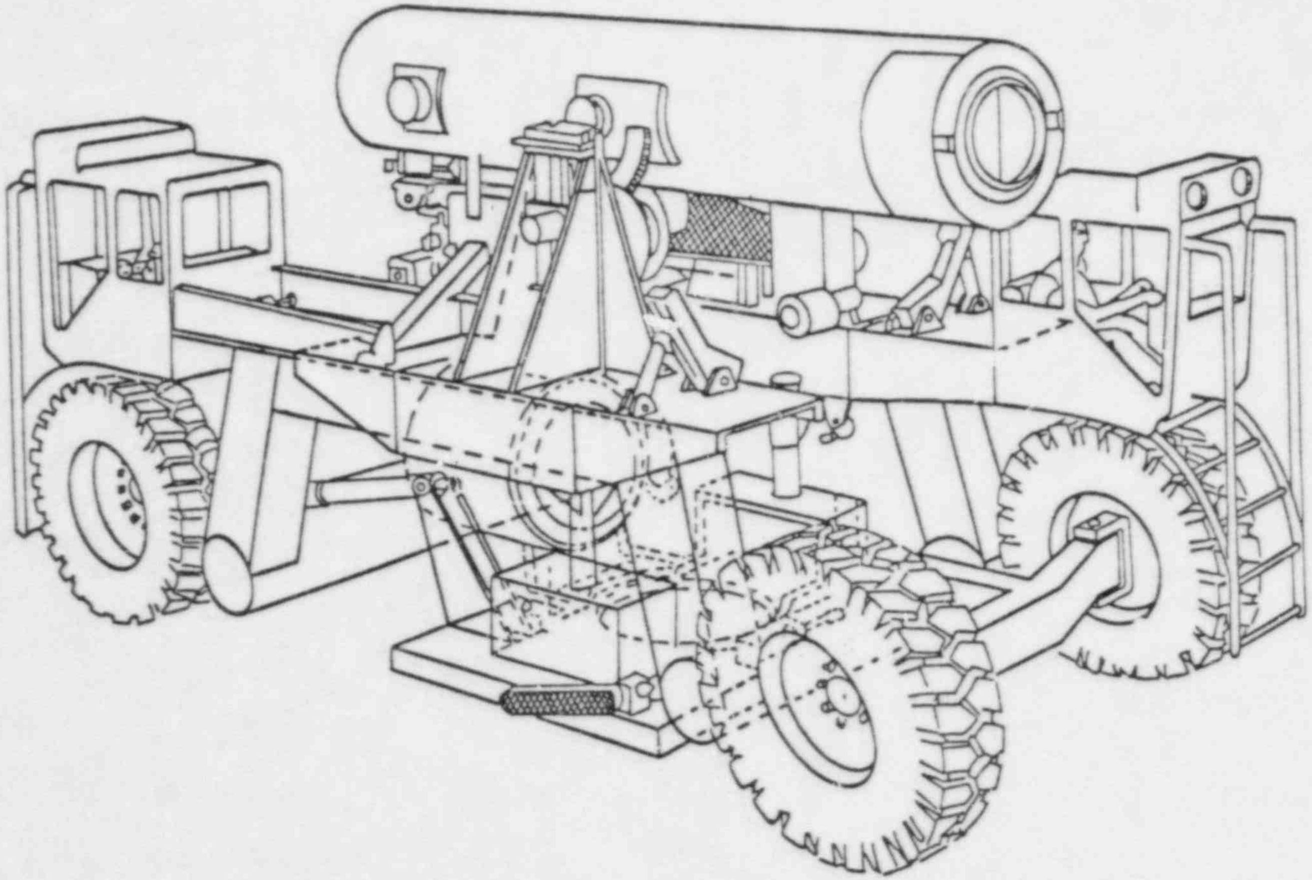

Figure 10.8.4 Transfer cask transporter.
(RHO-BWI-C-116, 1982)

- Waste package is hoisted into the transfer cask
- The transfer cask shield doors and the floor shield doors are closed and the transfer cask is lifted and rotated to the horizontal traveling position
- The plug housing is placed over the floor shield
- The door on the floor shield and plug housing are opened and the plug replaced in the hole
- The doors on the floor shield and plug housing are closed and the floor shield and plug housing moved to their traveling positions.

10.8.2 Retrieval Impacts on Repository Systems

10.8.2.1 Excavation Systems

Open storage rooms over the life of the repository do not require excavation prior to retrieval.

10.8.2.2 Equipment Systems

Retrievability impact on equipment systems can best be identified with the aid of the flow chart shown in Figure 10.8.5. Each basic repository operation is given an identification number to facilitate identification of an event's impact on all systems. With mining development completed, the only active operations involve canister storage. Different levels of retrieval vary greatly in their impact on repository operations.

Local retrieval of canisters for any reason, can take place concurrently with storage operations. Unless new equipment is obtained for the task, the storage equipment will have to be used, slowing the normal storage rate. Retrieval of breached canisters will require "hot cell" or shielded equipment along with decontamination equipment in the storage area. Transporting the canisters to the surface will require use (Figure 10.8.5) of the crane (3), hoist (4), and surface handling facilities (5). These systems will be unable to perform their normal operation for handling canisters and a delay in repository storage activities may result.

Full retrieval of canisters can be planned systematically for a full storage room or full repository, starting with the oldest storage rooms. Because the same handling equipment will be used for the full

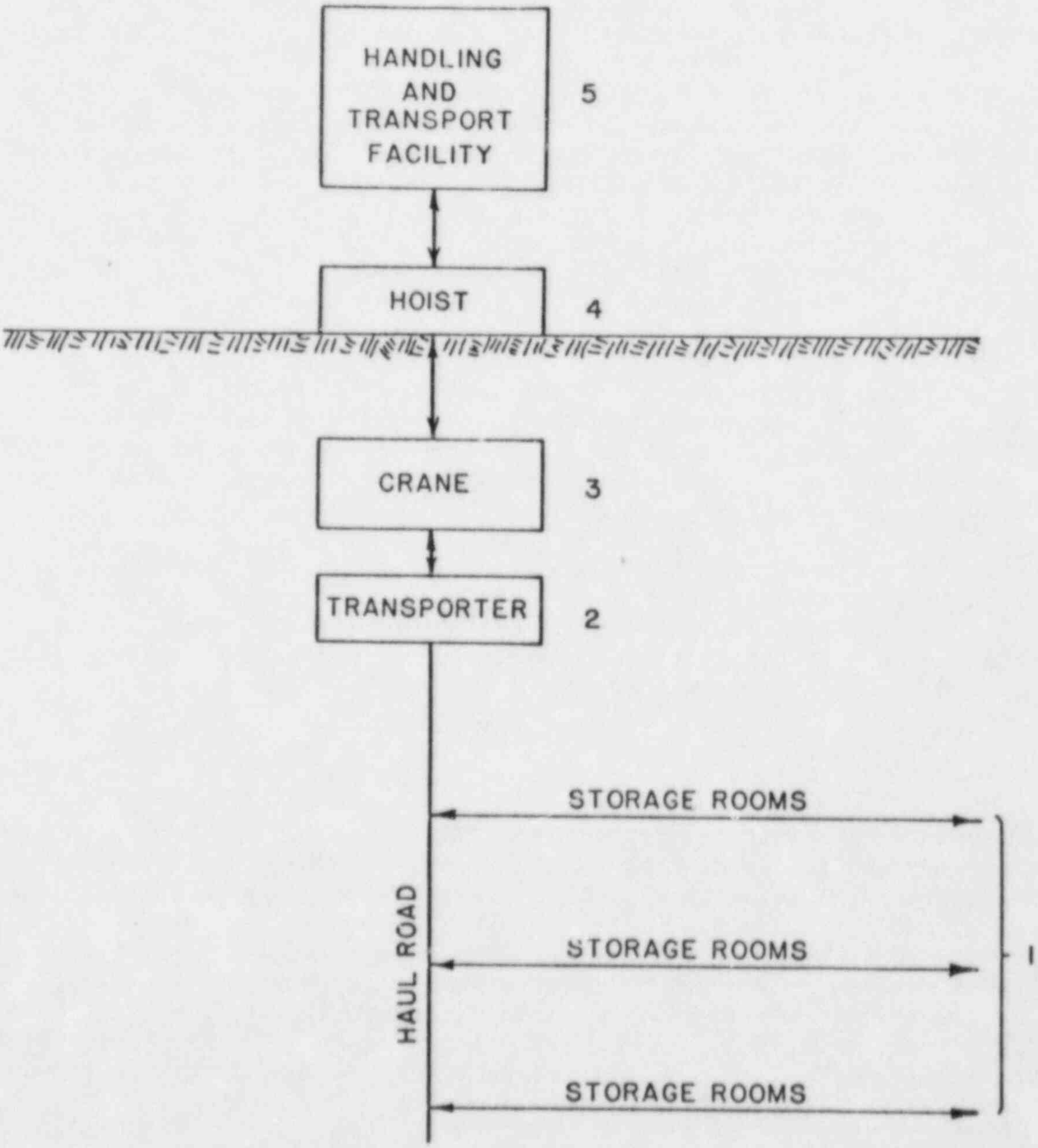

Figure 10.8.5 Schematic of waste handling operations.

retrieval operation, an operating schedule can be defined, with no interference from other operations. If any canisters are breached, the retrieval will be more complex due to contamination.

Special equipment will be used for the life of the breached canister retrieval operation. Generally, a repository committed to one operation at a time makes a much more efficient operation than if local retrieval is concurrent.

The transporter is about 8.5-ft wide, the storage panel is 14 ft wide, leaving less than 3-ft clearance to the sidewall (or rib) on each side of the vehicle. Transport travel is over the centrally placed row of holes, straddling them with the wheels. The inside track of the vehicle is 6 ft, the holes to be straddled are 4 ft, leaving 1-ft clearance on either side. Thus, it can be expected that the transporter tires will at times run over the floor rings and hole plugs. Since the tire load on the ground is about 75 psi, this would result in at most minor damage to the floor rings and hole plugs.

Retrievability requires unplugging the hole, grappling the canister, and lifting it into the transfer cask on the transporter vehicle. The lifting operations may be difficult if the canister binds against the hole lining - a potentially serious situation if any lateral rock movement has occurred.

The fill material in the Hole can absorb some rock deformation and resulting side pressure, but the limits must be adequately identified through testing. Radial pressure on the canister will develop due to hole closure. The frictional resistance to pulling the canister will be a function of this radial pressure.

10.8.2.3 Facilities

Open storage rooms require minimal facilities for canister storage and retrieval. Facilities used in mining storage rooms, such as haulageways, loading bins, skips, and other equipment to handle mined rock, will be dismantled or inoperative during the canister storage/retrieval stages. Stockpiles and associated surface equipment should be unaffected by retrieval operations. Canister handling facilities at the surface are capable of handling breached canisters from local retrieval operations, but at rates slower than the normal canister handling production. Full retrievability, if prepared for, should offer no particular operational problems.

10.8.2.4 Ventilation Requirements

Continuous ventilation of the open rooms until the time of permanent closure results in continuous extraction of heat from the surrounding rock. As a result, rock temperatures at the perimeter of the opening will be less than those which would occur if the rooms were not ventilated. Air temperatures in the rooms will vary from 80°F at the intake and to 106°F at the exhaust end. Because the air temperature range is equal to or less than that at waste placement, no special measures, such as air-conditioned cabs on vehicles, are required for retrieval, unless already required for placement operations.

As a result of the auxiliary power supply and a fan set-up consisting of duplicate fans plus an identical backup unit which is not normally operating, neither power outages nor fan component failures will interrupt the supply of ventilating air. Retrieval operations would be carried out in rooms ventilated by the confinement ventilation circuit which provides a continuous supply of air to all rooms in which waste placement has occurred or is occurring. As a result, no changes are required in the ventilation system due to retrieval. For the option in which all development is completed prior to commencement of placement operations, all rooms are ventilated continuously by the confinement ventilation system. This ventilation system complies with 10CFR60.

10.8.2.5 Backfill

In the concept of open, ventilated rooms, backfill would not be placed until permanent closure. Thus, the requirement for retrievability does not directly backfilling operations. Full retrieval would impact backfilling because when all the waste is removed, isolation of the repository and backfilling is no longer required. In the case of local retrieval, when a room or panel is emptied of waste, backfill would still be required to ensure that the room or panel does not become a preferential pathway for radionuclide migration.

10.8.2.6 Thermal Effects

The thermal effects associated with nuclear waste disposal in an underground repository have significant impacts on the retrievability of the waste. Thermal effects can be divided into three distinct areas:

- Vary-near-field effects which have the most direct impact on retrievability because elevated temperatures can lead to decrepitation of the borehole wall and consequent binding of the canister

- Near-field effects which impact retrievability indirectly by increasing the potential for creating instability of the storage rooms

- Far-field effects which have minimal, if any, impact on retrievability because the stability of the entries and shafts would not, in general, be affected by the thermal loading.

The Mine Design Studies (MIDES) Working Group has completed a limited member of thermal analyses of a waste storage repository in tuff (SAND82-0170; SAND80-2813). Table 10.8.5 is based on these analyses and shows the predicted maximum rock temperatures at critical locations for a gross thermal loading (GTL) of 50 kW/acre. As no maximum temperature criteria have been defined for tuff, the predicted temperatures are compared with the BWIP basalt temperature criteria (RHO-BWI-C-116, RHO-BWI-CD 35).

The MIDES Work Group used the COYOTE and ADINAT computer codes in the analyses. The results are based on the following assumptions:

- The rooms are open but not ventilated

- The repository horizon is the Bullfrog Member of the Crater Flat Tuff, at a depth of 2,624 ft and not the Topopah Spring Member at a depth of 1,200 ft

- Initial rock temperature is 97°F

- The tuff is fully saturated with water

- No boiling of ground water occurs.

At present (1983), DOE considers the Topopah Spring Member of the Paintbrush Tuff the most likely repository horizon. Temperatures in the Topopah Spring Member may be different from those calculated for the Bullfrog Member because:

- The Topopah Spring Member is not as deep as the Bullfrog Member, and therefore has a lower initial temperature

- The Topopah Spring Member has a lower thermal conductivity, which would tend to increase long-term temperatures.

When the actual repository horizon is chosen, further site-specific thermal analyses will have to be performed. The temperatures shown in Table 10.8.5 may be taken as an approximation of the temperatures expected at the time of retrieval. However, actual repository temperatures for the open, ventilated rooms storage concept will be less than the predicted temperatures because the modeling did not consider the cooling effect of ventilation.

If the actual temperatures do not exceed the peak temperatures shown in Table 10.8.5, then the maximum temperature criteria will not be

Table 10.8.5 Maximum Predicted Temperatures for Tuff

LOCATION	MAXIMUM PREDICTED TEMPERATURE FOR TUFF[1] (°F)	BWIP MAXIMUM TEMPERATURE CRITERIA FOR BASALT (°F)
Rock at Canister	241	392[2]
Emplacement Room	189	212[3]

[1] Source - SAND82-0170. Assumes thermal loading of 50 kW/acre and that repository horizon is Bullfrog Member of Crater Flat Tuff

[2] Source - RHO-BWI-C-116

[3] Source - RHO-BWI-CD-35

exceeded. The possibility of borehole decrepitation seems remote, but further studies should be performed on this phenomenon. The effect of the temperature rise on room stability will depend on the variability of rock strength in the repository, and on the final room layout and repository design. Rockfalls may occur in areas of local overstress but with open access to the rooms could easily be cleaned up without affecting the retrievability of the waste packages.

The thermal impact in the shafts and main entries should be insignificant, as they are remote from the waste emplacement panels and will be ventilated continuously throughout the entire repository life.

10.8.2.7 Requirements for Special Equipment for High Temperature and Radioactive Environment

Due to continuous room ventilation, the room air temperatures vary from 80°F at the intake side to 106°F at the exhaust side. Retrieval would take place at air temperatures as cool as, or cooler than, those during emplacement.

Provided that the waste package is intact, the transporter (whose operation was described in Section 10.8.1.8) can be used for retrieval such that 10CFR60 standards are satisfied.

If a waste package is damaged, then other measures may be required for retrieval. For example, if the titanium overpack splits upon retrieval, the transporter would pick up the top half of the overpack but leave the remainder of the overpack and the canister in the hole. Since the grapple in the transfer cask on the transporter is designed to engage the top of the titanium overpack, the transporter grapple cannot be used to retrieve the remainder of the waste package. The possibility of damage to the waste package sleeve impeding retrieval operations, may require overcoring of the hole. In the case where overcoring is required, provisions for retrieval in the repository design are inadequate, and development of a machine for retrieval by overcoring or other methods is required.

10.8.2.8 Ground Support

The Q-system (Barton, Lien and Lunde, 1974) has been used to determine ground support requirements in the repository. Strength values of the rock mass discussed under Section 10.8.1.1.3, "Rock Mechanics Properties" indicate a Q-value of 85. Based on this value and storage room cross-sections under consideration, the Q-system indicates the tuff to be competent, requiring no support. However, because the data base for the Q-system does not include high temperature operating conditions, a support system consisting of untensioned cement grouted rock bolts spaced 8 ft to 10 ft apart is assumed.

Over a decades-long period some deterioration of the rock reinforcement system is anticipated and minor roof falls may result. Where rockfalls occur, removal the debris and provisions for renewed support will be necessary prior to commencement of retrieval operations. With accessible, ventilated rooms, such remedial measures can be carried out as soon as the falls have been discovered. The equipment required would be a load-haul-dump vehicle and a roof bolting jumbo.

Despite the Topopah Spring Member lying above the water table, some ground water is likely to enter the repository during the operating period. Underground conditions can be expected to be generally dry, however, some allowance for the presence of minor amounts of water during retrieval would be prudent.

10.8.2.9 Instrumentation

Repository performance monitoring ensures that safety criteria are not violated and the isolation capacity is maintained. The retrievability option mandates significant changes in selected parameters or deviations from expected behavior be detected when they occur, and steps be taken to correct the problem or retrieve the waste to the surface. Categories requiring monitoring are:

- Hydrogeologic - water inflow
- Thermal - heat buildup
- Mechanical - stress buildup, rock deformations, and rock instability
- Radiological - activity levels.

A monitoring program for the repository in tuff has not yet been formulated but can be expected to be similar to that at the Hanford site (BWIP). BWIP proposes a monitoring program of subsurface conditions by visual inspection and hands-on measurement within panels, with a minimum of instruments actually placed within the panels. The monitoring program is possible because the rooms will be open and ventilated. Visual inspection and hands-on measurements are preferable to remote monitoring because instrumentation available at present is not reliable for periods in excess of about a decade, especially under the thermal conditions associated with the repository rooms. An experimental panel will be provided in the repository in which extensive verification and confidence testing will be performed. The panel will also provide an opportunity to study the reliability of instrumentation.

Thermal monitoring will primarily consist of thermocouples embedded in boreholes placed at intervals along storage rooms. Thermocouple signals will be collected at several spots and relayed to a central control console to detect abnormalities.

Hydrogeologic monitoring will consist of measuring the pressure of formation water in the vicinity of storage holes, in various accesses, and in tuff flows. High precision, durable pressure transducers will be placed between packers in boreholes. Water quantities entering individual panels will be monitored by devices measuring the humidity, quantity, temperature, and volume of airflow through panels after waste emplacement.

Mechanical monitoring will consist of a network of geophones and seismographs to monitor rock noise and rockfalls. The closure of points in storage rooms and drifts will be measured. At a few selected locations, detailed evaluation of rock stability will be made using stressmeters and multiple position borehole extensometers.

Ventilation conditions in the repository will be monitored to detect radiation levels, fire and smoke emergencies, and ventilation blockages caused by roof falls. Mobile radiation and thermal sensors in ventilation airways will permit continuous monitoring from a main surface control console. Flow direction, pressure, differential pressure, and temperature will be monitored.

The retrievability requirement mandates repository monitoring for 50 years after initial waste placement. The following steps need to be taken to ensure the reliability of repository instrumentation:

- Develop geophones, stressmeters, multiple position borehole extensometers, piezometers, thermocouples, and ventilation instrumentation that will maintain their accuracy in the hot and humid environment expected in a repository
- Provide extensive verification of the reliability of instrumentation in the experimental panel established within the repository
- Ensure that inspection of the repository at predetermined intervals can be performed by robots or by personnel in air-conditioned suits or vehicles.

10.8.3 Adequacy of Incorporated Retrieval Systems or Allowances

10.8.3.1 Local Retrieval

Local retrieval may be necessary for quality assurance, quality control, or a detected radionuclide release. A manufacturing error, for example, could have caused premature breakdown of overpacking for some canisters in a storage room. Open rooms allow using the same equipment for emplacement and retrieval procedures. Most likely the canister transporter and "hot cell" equipment will be necessary. Local retrieval involves recovering one or more canisters in a storage room, and traveling to the designated canister means approaching very near to or running over nearby canister holes.

During local retrieval, the equipment being used for storage may require use for retrieval. If the same equipment is used, storage activities will be slowed or stopped. Use of the crane, hoist, and surface handling facilities for handling retrieval waste will also slow storage activities. No equipment has presently been designed to overcore a 48-in.-diameter hole in a repository environment. Overcoring may be necessary if the canister to be retrieved has broken and cannot be retrieved intact. Overall, with workable temperatures and intact canisters, the local retrieval system is adequate. Further design and definition is required to facilitate breached canister retrieval.

10.8.3.2 Full Retrieval

Full retrieval of waste canisters will need planning and preparation, but will not be necessarily difficult. Full retrieval planning is eased because all repository resources can be committed to the operations. Underground storage may prove unsatisfactory, leading to repository abandonment. Full retrieval may require special equipment if the reasons for retrieval interfere, such as excessive rock movement crushing canisters, or rapid deterioration of rock causing need for roof support and scaling equipment.

The small clearances between the trnasfer casks and the room roof and small tolerances for transfer cask alignment with the holes may impede the retrieval progress. Heavy equipment such as the transporter traveling near the floor rings may cause minor damage to the rings or the canisters. The probability of attempting to retrieve a canister which is bound in the hole by rock closure or which is broken into numerous pieces is high with full retrieval. The grappling equipment on the transporter may prove inadequate in this case, requiring retrieval by overcoring. As stated in Section 10.8.3.1 no equipment for large diameter overcoring has been developed for repository environments. The systems incorporated for full retrieval are adequate except when a canister is bound in the hole or no longer intact.

10.8.4 Concerns

10.8.4.1 Technological Concerns

When panels are open and ventilated and single waste packages are stored in vertical holes, the main technological concern is the effect of the hot rock on the materials used in the ground support system, which will consist of rock bolts and shotcrete. The rock bolts will presumably be fully grouted to minimize the possibility of corrosion of the steel bars, and the grout used must be resistant to high temperatures. At the temperatures normally encountered in mining and tunneling, polyester resins are used for the grout. However, the maximum service temperature for these resins is in the range at 250°F to 392°F (Weast, 1983). The convective cooling by the circulating air will result in wall and roof temperatures less than 250°F. However, the coefficient of thermal expansion is about 10 times that for steel and tuff. Differential thermal expansion may occur which reduces bolt effectiveness. Experience with concretes at elevated temperatures (Troxell, Davis, and Kelly, 1968, p. 248-250) indicates that for simple temperature increases to 212°F relatively minor strength losses occur due to loss of both free and continued moisture. Above 212°F more significant strength losses occur in the repository maximum temperature ranges up to, say 400°F, but amount to 10% reduction, or less. However, if the concrete is heated and then coded, strength losses approach 25% or at 400 °F. Two considerations may minimize such strength losses using lean mixes and limestone, expanded slag, or similar aggregates minimize heat effects in this range. We suspect that the important cement grout, shotcrete, and concrete considerations for repository temperatures hinge on minimizing the water content and matching the thermal expansion and chemistry of cements and aggregates. The widespread use of shotcrete or grouted bolts, or both, as primary ground support is about 25 years old and experience is lacking regarding the condition of such support systems after decades even at ambient temperatures.

Another technological concern is development of equipment for retrieval of breached canisters, especially those which have split into two or more pieces. If canisters have cracked but are otherwise intact, retrieval could be accomplished using the transporter with a transfer cask having an internal shielding sleeve. If the breached canister has separated into more than one piece, the surest method would be to overcore the hole. While overcoring is feasible, no equipment exists at present (1983) for overcoring 48-in.-diameter holes. Overcoring would also require a room height in excess of the 20 ft in the repository environment assumed because the holes are 20 ft deep and the overcore should penetrate at least 6 in. to 1 foot below the bottom of the hole.

10.8.4.2 Safety Concerns

As discussed under technological concerns, no experience with grouted bolt and shotcrete systems for deacdes-long periods exists. Ground support can be periodically inspected and rehabilitated as necessary, because the panels are accessible and ventilated.

10.8.4.3 Radionuclide Release Concerns

Our possible reason for retrieval is failure of the waste package with consequent release of radionuclides. Gaseous and volatile radionuclides may be released into the emplacment hole while soluble radionuclides may be carried away by any water present in the emplacement hole. Removal by aqueous solution requires the presence of water in liquid form; that is, its temperature must be less than the boiling point for the repository pressure conditions. For open ventilated rooms, the pressure will be approximately one atmosphere and, aqueous transport of radionuclides will only occur if the water temperature does not exceed 212°F. Due to the cooling effect of the ventilating air the rock surrounding the opening should have a temperature considerably less than 212°F and water will be in a liquid state.

10.8.4.3.1 Releases into Air

The gaseous and volatile radionuclides release from spent fuel consist primarily of hydrogen-3 (tritium), carbon-14, and krypton-85. The quantity of krypton-85 is large compared with that of tritium or carbon-14. In addition, carbon-14 must be in a form that leads to volatile species upon reaction with water in order to be of concern. One-tenth of the krypton-85 is assumed to be sufficiently near an exposed surface to leave the fuel. If a breach occurs, the concentrations of krypton-85 and tritium in air must not exceed 10 nCi/liter and 5 nCi/ liter, respectively in order to satisfy 10CFR60. (The EPA radioactivity concentration limits are specified in metric units. For reference, the equivalent traditional units are 0.35 nCi/ft^3 and 0.18 nCi/ft^3, respectively).

Before methods of dealing with such releases can be discussed, the methods by which the radionuclides released into the hole by a breached canister would be liberated into the rooms. There are two possibilities, namely:

- The hole plug is not gas-tight
- Release occures at retrieval if the doors in the floor shield are not closed tightly after removing the hole plug.

If the hole plugs are not gas-tight, then the volatile and gaseous radionuclides will be released into the room soon after the breach. If the hole plugs are gas-tight, then the gas pressure in a hole could increase very slightly but not to a level that might lead to difficulties. In the former situation, the presence of radionuclides would be detected by instrumentation. Unless personnel happen to be present at the time of the release, there would not be cause for concern because ventilating air would dilute the concentration to within acceptable limits. The time required for this dilution depends on the airflow supplied and on the room volume, and is given in Figure 10.8.6.

If release occurs during the retrieval process, workers would be exposed. The gas would not diffuse to fill the whole room volume because the room is ventilated at the time. Consequently, the effective room volume and therefore, the dilution time would be less than if the room were unventilated, other things being equal.

Releases occurring at retrieval can be avoided by having radiation sensors in the hole. Any detected gaseous radionuclides could then be drawn off prior to retrieval using millipore filters or a cryogenic absorption system. Both of these methods fall within existing technology.

10.8.4.3.2 Releases into Water

The movement of radionuclides by aqueous tranport, requires that water be in the liquid state. Heat balance concentration shows that the lower the initial temperature of the water, the smaller the required flow to remove the canister heat and the greater the concentration of dissolved solids in the water. Reduction of the canister's surface temperature below 212°F would occur for almost any water flow (Post, 1982).

If water contacted a breached canister, the rate of dissolution would vary widely with the water composition and temperature. For typical rate of 0.0000264 lb/day, the solution water would contain about 0.25 mCi/lb water and one pound of this solution would generate about 0.1 mR/hr at 4 ft. The intrusion of water into a defective package would appear to provide a good index to the failure but would not introduce a significant hazard to the operation (Post, 1982).

Although the rock surrounding the rooms will likely be grouted, some seepage will still occur, resulting in minimal water on the floors of the rooms. The water could be mildly contaminated and will likely be hot. Collection and transport to pumping stations should be in closed pipelines.

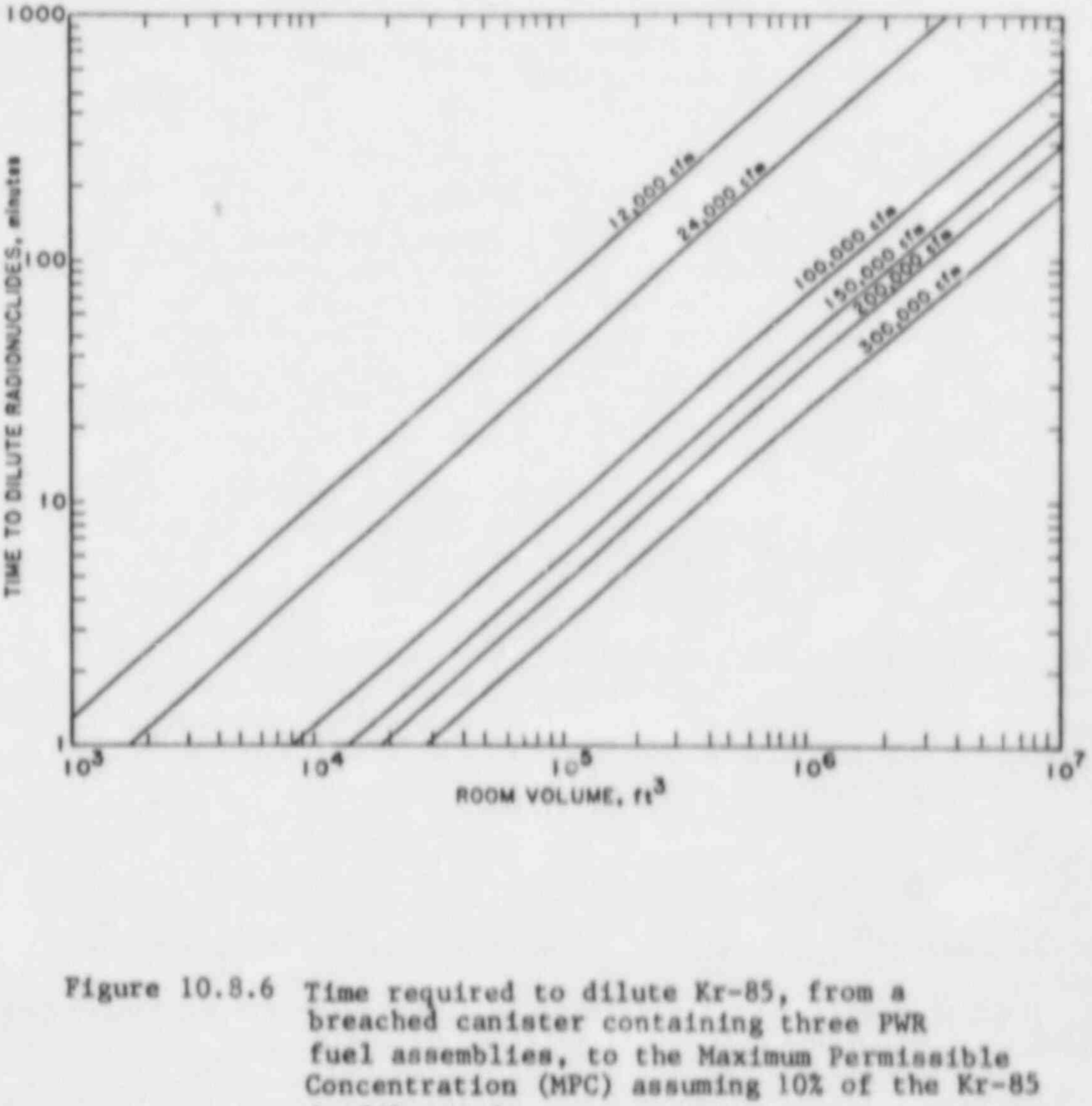

Figure 10.8.6 Time required to dilute Kr-85, from a breached canister containing three PWR fuel assemblies, to the Maximum Permissible Concentration (MPC) assuming 10% of the Kr-85 is liberated.

10.8.4.3.3 Radiation Detection Standards

The radiation levels measured during retrieval operations are not exceptional so that the system standards used in the nuclear industry would prevail. A lower limit of 0.1mR/hr and an upper limit of a few kR/hr would be adequate. A system to detect radioactive kyrpton-85in the ventilation air and in the storage holes will be required. This system should be capable of detecting krypton-85 levels below 100 pCi/liter (2.6 pCi/ft^3) (Post, 1982).

10.8.4.4 Operations Concerns

Retrieval of breached canisters will require equipment other than the transporter and standard transfer cask. Retrieval could be accomplished by overcoring the holes containing breached canisters. Room heights of at least 22 ft are required to accomodate the overcore upon retrieval. Otherwise, a transfer cask having an internal shielded sleeve must be used. To facilitate breached canister retrieval, all such equipment must be available.

With the small tolerances for alignment of canister and storage holes, precise positioning of the tranporter over the hole may be difficult even with lasers. Positioning would be simplified if transporters were rail mounted.

The amount of cooling required may necessitate large capacity heat exchangers (cooling units). The area required for the coolers in the headings could significantly reduce the space available in the entrances to the rooms. Also the cooling units have a restricted life and will become less efficient with time.

10.8.4.5 Other Concerns

A fundamental problem related to a repository in tuff concerns the geologic/hydrogeologic uncertainty at the repository horizon. Among the concerns are the uniformity of the particular beds with regard to thickness, the uniformity of the jointing, and the occurrence of faults.

Another concern is the mechanism for and probability of canister breach. One possible mechanism is corrosion. The rate of corrosion will depend on the environmental conditions and the chemical composition of the ground water. Another possible mechanism is attempted retrieval of a canister upon which the hole has closed. Physical disruption of canisters due to tectonic and thermal stress-induced rock mass failures in the storage hole is a serious concern.

10.8.5 Summary and Conclusions

The repository is located at a depth of 1,200 ft in the Topopah Springs Member at Yucca Mountain, on the Nevada Test Site, Nevada. The repository will consist of 22 panels divided by a central pillar into two areas having 12 and 10 panels, respectively. Each panel is divided into six rooms (14 ft wide, 20 ft high, and 3,572 ft long) which are joined by crosscuts at 890-ft-centers.

The waste packages, which consist of the carbon-steel spent fuel canisters, graphite filler, and titanium overpack are placed in 4-ft-diameter sleeved holes, 12-ft on center in the floor of the rooms along the centerline. Based on a heat load of 1.74 kW/caniser at the time of placement, the panel thermal load is 51.6 kW/Acre.

Backfilling of the rooms would not taken place until the permanent closure of the repositiory. Rooms completely filled with waste would be constantly ventilated with sufficient quantities of air to provide a satisfactory environment for people to work.

Except in the case of a breached waste package, the retrievability requirement has only minor affects on the following repository systems:

- Re-execavation system - none required
- Equipment System - a load-haul-dump and roof bolter need to be retained for cleanup of rockfalls
- Facilities - local retrieval may impose adverse loads on the transportation system, confinement ventilation system and development mining
- Ventilation Requirements - no effect due to continuous ventilation
- Backfilling - none required until permanent closure.

Breached canister retrieval imposes additional requirements for the equipment systems and facilities system.

The concerns for the repository concept are detailed as follows:

- Technological Concerns:
  - Adequacy of the rock support system over a period of decades

- Safety Concerns:
    - Rockfalls resulting from deterioration of the roof support system
- Radiological Concerns:
    - Canister breaches would result in release of gaseous hydrogen-3 (tritium) and krypton-85 and volatile carbon-14, of which krypton-85 would have the largest concentration
    - Diluting krypton-85 to the MPC given by 10CFR20 could take up to several hours for a release from a single breached waste package
    - The mechanics for release of gaseous radionuclides from the storage hole to the atmosphere could be non-gas-tight hole plugs, streaming through the floor shield at retrieval and aqueous transport (if hole liners corrode)
    - Radiation from contaminated water would not exceed safe levels but could be used to detect breaches
    - Radiation levels during retrieval will not be excessive and monitoring systems having a lower limits of 1mR/hr and an upper limit of a few kR/hr would be adequate
    - A system is required for detection of krypton-85 in ventilating air and in storage hole
- Operational Concerns:
    - Retrieval of breached canisters by overcoring
    - Small alignment tolerances requiring precise positioning of the transporter, and
    - Large capacity heat exchangers limiting space in the room entrances
- Other Concerns:
    - Geologic and hydrogeologic uncertainties
    - undetermined probabilities and mechanism for canister breaches.

The general repository operations and retrieval systems are adequate. Further design and conformation is required in the areas of hydrology and geology, fifty-year adequacy of roof support, provisions for detecting and retrieving breached canisters, and the probabilities and mechanisms for breach. The repository concept meets the retrievability requirements of 10CFR60, except systems to retrieve breached canisters.

10.9 Tuff Repository with Vertical Hole Storage in Bulkheaded Rooms, and Permanent Closure Backfilling

10.9.1 Basic Information

The ninth repository concept is in tuff, with vertical storage holes in the floor, rooms bulkheaded after waste placement, and backfilling at permanent closure. The concept is the same as that contained in the basalt conceptual design report (RHO-BWI-C-116, 1982).

10.9.1.1 Definition of Repository Concept

The host geologic medium is tuff. Waste packages will be placed in 48-in.-diameter holes in the storage room floors. The panels will not be backfilled until permanent closure but will be bulkheaded as soon as waste emplacement has been completed.

The emplaced waste canisters' heat emission 1.74 kW/canister, which results in a thermal load within a panel of 51.6 kW/acre, or 35.6 kW/acre for the entire repository.

10.9.1.2 Geologic Environment

10.9.1.2.1 Rock Units

The proposed repository emplacement horizons are in the bedded tuff rocks of Yucca Mountain located adjacent to the southwestern portion of the Nevada Test Site. Of the several tuffaceous rock units present at Yucca Mountain, the Topopah Spring Member of the Paintbrush Tuff Formation is the leading candidate horizon. The majority of available information is based on data from boreholes USW-G1, UE25a-1, and J-13 (SAND80-1464, OF81-1349).

The lower contact of the Topopah Spring Member lies about 1,200 ft deep. The Topopah Spring Member has an ashbed within the interior and several ashflow units which range from non-welded to vitrophyric. A thin ashfall/reworked tuff section is present at the base of the member. The lower portion of the member is slightly zeolitized and only partially welded. The vitrophyre is unaltered, tightly compacted, and welded. In some areas, the vitrophyre contains abundant calcite veinlets and about 7% to 30% phenocrysts. Fractures in the vitrophyre are cemented; however, the nature of cementing material is undescribed. All rock above the vitrophyre is densely welded and extensively fractured. Clay gouge is found along some of the fractures.

Volcanic rocks of this sequence generally dip towards the east and southeast at angles less than 10°. Dip reversals occur locally and may assume values up to 20° in the vicinity of faults. Several confirmed and inferred faults bound most of the mountain block around the proposed repository site. Faults are generally normal, dip at approximately 60°, and strike north-south. A total of several hundred joints were identified from cores of Borehole USW-G1 and nearly half of these joints occur in the Topopah Spring Member core. A majority of the joints shows a near vertical trend (70° to 90°). Shear fractures occur predominantly within the extensive densely welded zone of the Topopah Spring Member.

The Yucca Mountain area tends to be aseismic, however, an earthquake of Richter magnitude 1.7 occurred below sea level under Yucca Mountain in 1981 and another single earthquake of unknown magnitude and depth was recorded east of Yucca Mountain during the same year.

10.9.1.2.2 Hydrogeology

Hydrogeologic studies for the Yucca Mountain area are part of the ongoing (1983) work of the Department of Energy. Very limited data were available at the time of this present study. The regional groundwater flow trend is from the northwest to the southeast across Yucca Mountain with a low horizontal gradient and almost no vertical gradient. The water table in this area is about 2,000 ft below the land surface, and a regionally uniform position of water levels seems to exist.

The Topopah Spring Member lies well above the regional water table and is therefore unsaturated. Ground water flow through this member is generally controlled by structural features. In the densely-welded portions of the ashflow tuff, water flow is controlled by primary (cooling) and secondary joints. The hydraulic conductivity ranges from 15 to 15,000 ft/day, however, intercrystalline permeability and porosity are neglible. The unwelded part of this member exhibits a relatively higher porosity (35% to 50%) and a modest hydraulic conductivity (0.25 ft/day) and may act as a leaky aquitard.

10.9.1.2.3 Rock Mechanics Properties

Rock mechanics properties of tuff rocks of the Topopah Spring Member are based on limited laboratory testing of intact rock specimens and discontinuities, and in situ data are almost non-existent. Available data are presented in Table 10.13.1, along with reference sources. Generalized mechanical properties of intact rocks and joints reported by SAND 81-0629, shown in Tables 10.13.2 and 10.13.3, were used to determine the thermomechanical behavior of the Topopah Spring Member

Table 10.9.1 Summarized Mechanical Properties of the Topopah Spring Member

TEST CONDITIONS	COMPRESSIVE STRENGTH	COHESION (C)	ANGLE OF INTERNAL FRICTION	POISSON'S RATIO	AVERAGE POROSITY (%)
Intact Rock at room temperature (73°F)	22,800 psi[a]	2,540 psi[a]	67°[a]	0.23 (at 1,450 psi confining pressure)	9.4%[a]
Intact Rock at elevated temperature (392°F)	22,300 psi[b]	-	-	0.15[a]	11.3%[a]
Rock Joint at room temperature (73°F) (unspecified rock formations)			31.8° to 33.4°[c] (dry) 33.8° to 36.5° (saturated)		

[a] SAND80-1455

[b] SAND81-0629

[c] Olsson & Teufel (1980)

Table 10.9.2 Mechanical Properties of Intact Rock
Johnson (1981)

	TEMPERATURE				
PROPERTY	68°F	212°F	212°F	1,832°F	UNITS
Young's Modulus	2.9×10^{6}	2.9×10^{6}	2.9×10^{6}	2.9×10^{6}	psi
Poisson's Ratio	0.25	0.25	0.25	0.25	--
Shear Modulus	1.16×10^{6}	1.16×10^{6}	1.16×10^{6}	1.16×10^{6}	psi
Coefficient of Thermal Expansion	4.17×10^{-6}	4.17×10^{-6}	5.72×10^{-6}	5.72×10^{-6}	$°F^{-1}$
Angle of Internal Friction	42.9°	42.9°	42.9°	42.9°	Degrees
Cohesion	1230	1230	1230	1230	psi

Table 10.9.3 Mechanical Properties of Joints
(Johnson 1981)

	TEMPERATURE				
PROPERTY	68°F	211.98°F	212.02°F	1,832°F	UNITS
Angle of Internal Friction	35°	35°	35°	35°	Degrees
Cohesion	1.45	1.45	1.45	1.45	psi
Joint Angle (with respect to drill core axis)	90°	90°	90°	90°	Degrees

in a repository environment. Recent laboratory studies (SAND 82-1723) indicate that the mean unconfined compressive strength of the Topopah Spring Member is about 13,900 psi. Tests on water-saturated specimens were performed at room temperature at 14.5 psi confining pressure. The compressive strength so determined is lower than that reported by SAND 80-1455. This strength reduction appears to be resulting from the significant effect of water on tuffs. However, since the Topopah Spring Member lies above the water table (and is therefore, unsaturated) and will experience temperature levels above 212°F (on the room scale), it is reasonable to assume a compressive strength of 16,000 psi (30% strength reduction from 22,800 psi, SAND 80-1455. This compressive strength value was used to determine ground support requirement for repository construction in the Topopah Spring Member.

10.9.1.3 Repository Construction and Layout

As shown in Figure 10.9.1, the repository will contain 22 storage panels, and with the exception of the experimental panel, each comprise six rooms. The rooms are 3,574-ft long and connected by crosscuts on 890-ft-centers. Five entries connect the storage panels with five shafts to the surface. Entries, rooms, and crosscuts will be driven by drill-and-blast methods. Table 10.9.4 gives dimensions of the various facilities.

Each shaft will have a different dedicated function:

- Personnel and materials (service) shaft
- Tuff transport shaft
- Waste transport shaft
- Confinement air intake shaft
- Confinement air exhaust shaft.

We assume that the shafts will be sunk by conventional drill-and-blast methods, and lined by concrete to a depth of about 1,300 ft.

Two potential sequences for repository development and waste placement, are:

- Repository development has been completed before waste storage begins
- Panel development and waste storage take place concurrently with both operations advancing at the rate of one panel per year.

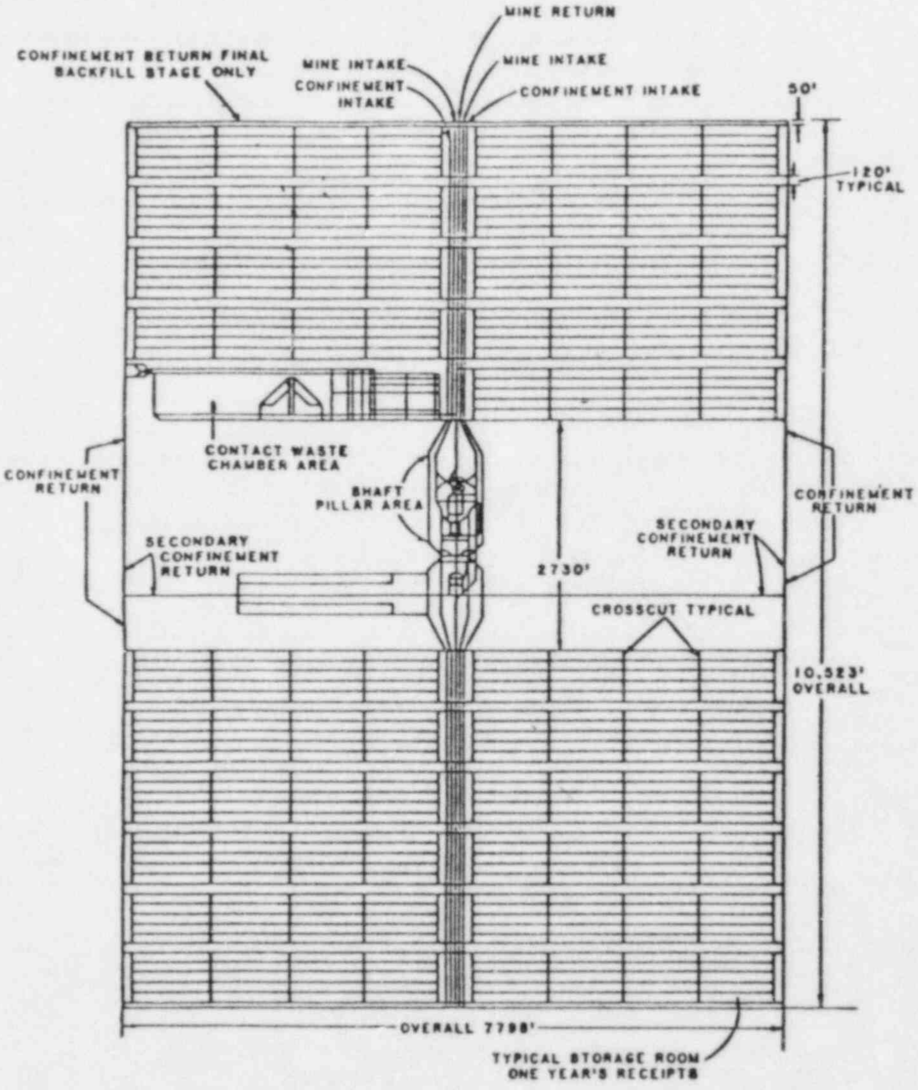

Figure 10.9.1 Repository layout for storage in vertical holes. (BWI-RHO-C-116)

Table 10.9.4 Dimensions of Repository Facilities

Facility	Dimensions
Personnel and Materials (Service) Shaft	16 ft inside diameter
Tuff Transport Shaft	14 ft inside diameter
Waste Transport Shaft	12 ft inside diameter
Confinement Air Intake Shaft	11 ft inside diameter
Confinement Air Exhaust Shaft	10 ft inside diameter
Confinement Air Intake and Accessways	13 ft wide by 12 ft high
Mine Intake Air and Accessways	18 ft wide by 17 ft high
Mine Exhaust Air and Accessways	18 ft wide by 17 ft high
Confinement Return Air and Accessways	13 ft wide by 12 ft high
Access Pillars	36 ft wide
Panels	3,577 ft by 614 ft
Storage Rooms	14 ft wide by 20 ft high
Crosscuts	14 ft wide by 20 ft high
Panel and Room Pillars	106 ft
Rib Pillars	100 ft
Storage Holes: for PWR	48-in. diameter by 19 ft deep
for BWR	48-in. diameter by 20 ft deep
Storage Hole Pitch	12 ft

The two sequences have very different requirements for ventilation and excavation systems, shaft facilities, and equipment quantities. The two sequences affect retrieval differently.

According to current (1983) repository construction schedules, waste placement is required to begin within ten years of construction authorization. Assuming 2 years for shaft sinking and allowing for contract procurement for both the shafts and the underground development, pre-placement development must be completed within 6 years. Because the Pressurized Water Reactor (PWR) and Boiling Water Reactor (BWR) waste will be stored in separate panels (according to information supplied to EI by the NRC) and an available spare panel is desirable at all times, three panels must be ready for storage by year 10. To complete the three panels in three years requires a development rate of 2,800 tpd on a five-day week basis.

If complete, repository development must occur before placement, the required development rate a 11,800 tpd. This option causes the following modifications to the facility dimensions given in Table 10.9.4:

- Tuff transport shaft - 21-ft inside diameter.

Development and storage proceed outward from the panels nearest the shaft pillar to those at the extremities of the repository. The mining cycle in a given heading would consist of (in order):

- Drill the round
- Load and blast the round
- Remove the broken muck
- Install ground support.

Although the rock is probably strong and competent, protection from minor local failures such as rockfalls requires rock reinforcement and support. A loosened zone surrounds openings excavated in rock, which is generally 5-to 10-ft deep regardless of the size of the opening, but can be as little as 3 ft where smooth blasting practices are employed. The loosened zone is generally sufficiently unstable to require some support where otherwise support may be unnecessary. As an aid in estimating support requirements, the tuff has been classified by EI according to the Q-system of Barton, Lien, and Lunde, (1974), resulting in a Q-value of 85.

Barton, Lien, and Lunde, (1974) indicate that in repository-size openings in rock, with Q-values equal to 85, at most spot bolting would be required. Because thermal stresses are not allowed for in the classification, we have assumed for the repository description systematic rock bolting on an 8-to 10-ft spacing together with a layer of shotcrete.

10.9.1.4 Canister Placement and Arrangement

The waste package (Figure 10.9.2) consists of a carbon steel canister, surrounded by graphite fill material, and contained within a 21-in.-outside-diameter titanium overpack. The packages will be placed in 48-in.-diameter holes drilled vertically along the centerline of storage room floors on 12-ft-centers. As shown in Figure 10.9.3, the hole is designed as a engineered barrier consisting of (starting at the outside) zircon sand and bentonite filler, an aluminum container surrounding tailored overpack and a ceramic sleeve to support the tailored overpack. No mention is made in the assumed reference repository description (RHO-BWI-C-116) of the method(s) used to place the filler, aluminum container, tailored overpack, and ceramic sleeve in the hole, and it is assumed that the sleeves and containers are lowered into place, while the fill materials would be poured or blown in.

10.9.1.5 Thermal Loading

As a result of decay of the radionuclides contained in the spent fuel, the waste packages radiate heat. Unreprocessed spent fuel contains fission products which are relatively short-lived and actinides which are generally quite long-lived. As the radionuclides decay to more stable isotopes, the number of disintegrations and resultant heat produced will decrease with time. The heat produced by a canister will be maximum at the time of emplacement.

A canister will contain either three PWR or seven BWR spent fuel assemblies. Assuming 10-year-old waste, canisters will have initial maximum heat loads of 1.74 kW and 1.33 kW for PWR and BWR, respectively.

The overall thermal load on the repository is determined from the areal extent of the repository, the canister spacing, the age of the waste, and the type of waste (PWR or BWR). To be conservative, all the waste is assumed to be 10-year-old PWR. Waste type and age will vary, and actual panels are assumed to consist of waste of a uniform type and age to avoid uneven thermal loading within a room or panel.

The storage area consists of 22 panels occupying a total of 1,300 acres, or 59 acres apiece. Using 1.74 kW/canister and a storage compliment of 1,750 canisters per panel, the heat load within a panel is 51.6 kW/acre. On the basis of the total area of 1,884 acres which includes the shaft pillar and service areas, the overall heat load is 35.6 kW/acre.

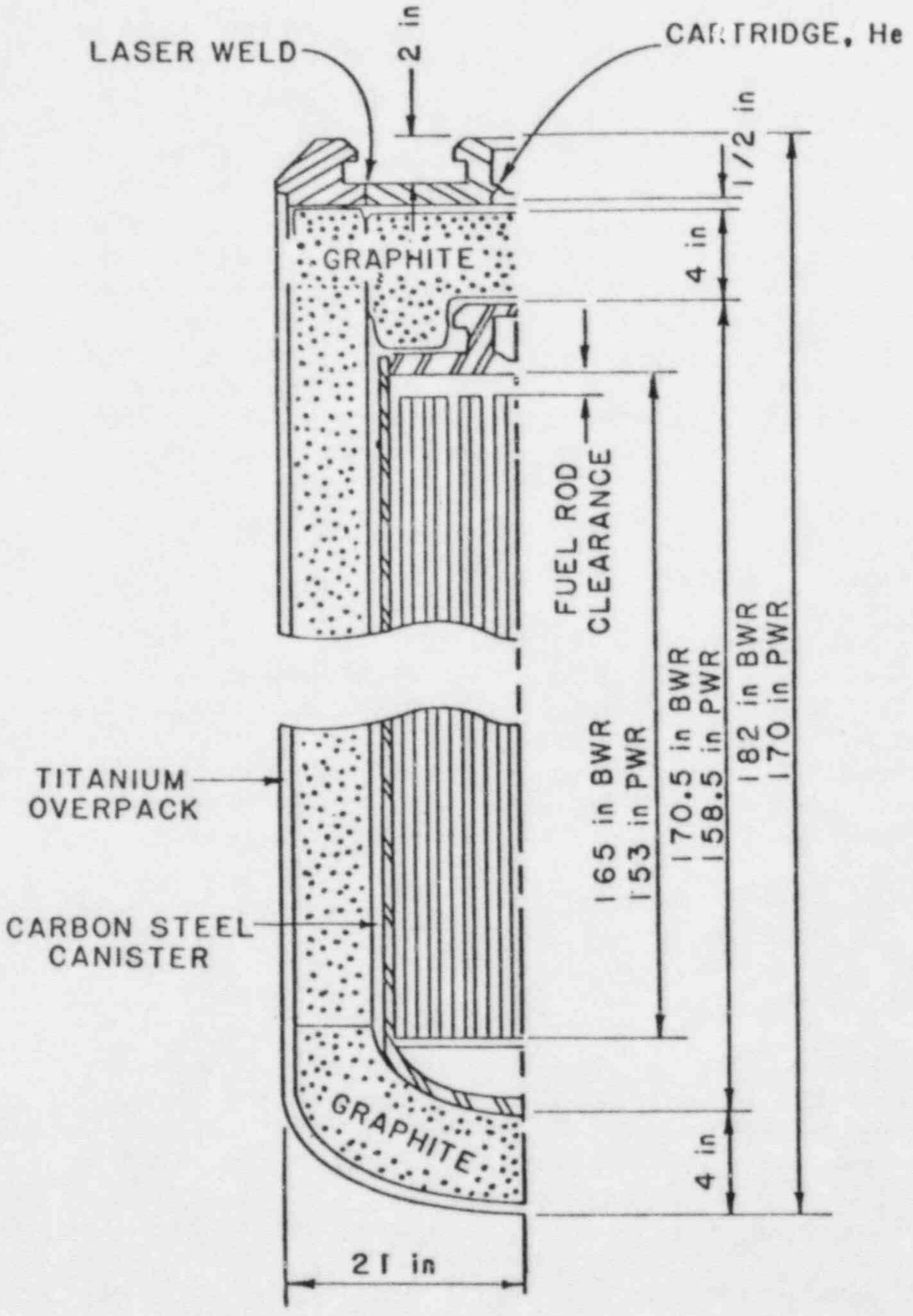

Figure 10.9.2 Waste package.
(RHO-BWI-C-116)

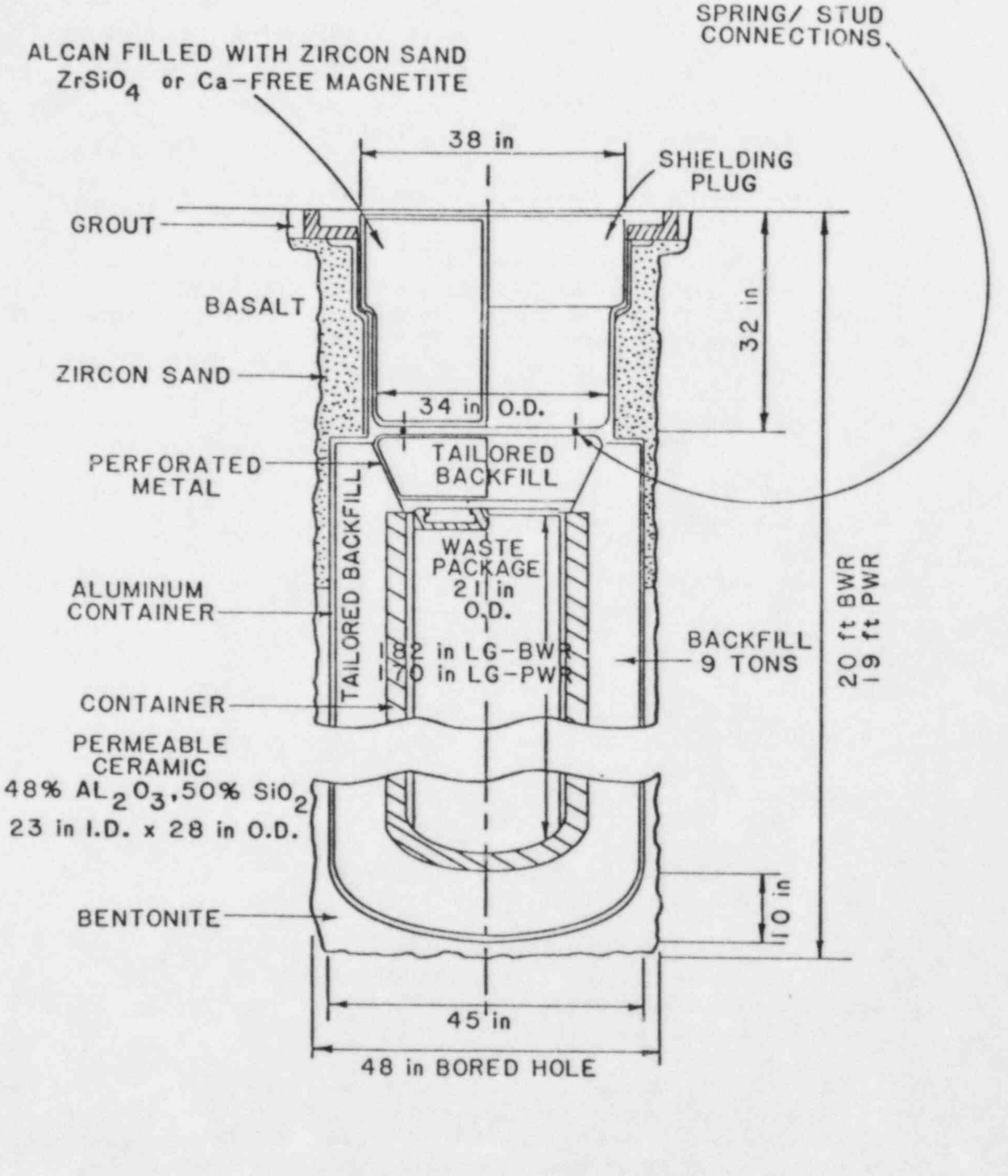

Figure 10.9.3 Storage position.
(RHO-BWI-C-116)

10.9.1.6 Backfill Timing

A repository must ultimately be backfilled, with the backfill designed as a barrier (10CFR60.133). In this repository concept, backfill will not be placed until permanent closure. Remining of backfill for retrieval purposes is apparently not an issue because the decision to permanently close nullifies the retriveability requirement.

Permanent closure will take about 20 years, and a possibility exists that retrieval could be required for some reason during the permanent closure process, though the rule (10CFR60) does not require retrieval to be maintained as an option after initiation of permanent closure. Remining prior to retrieval will not be dealt with in this concept, for the retrieval operations would be similar to those in concepts where backfill is placed concurrent with storage after a panel has been completed.

10.9.1.7 Ventilation

Panels are bulkheaded after waste placement has been completed. A small amount of air leakage through the bulkheads is allowed in order to monitor air quality within the isolated panels. The two potential development options:

- Develop and store waste simultaneously
- Develop whole repository prior to waste placement,

result in two potential ventilation schemes. In the first case, two separate ventilation circuits are required:

- Mine (development) ventilation system
- Confinement (storage) ventilation system.

Because panels will be developed only as they are required for placement and since panels are bulkheaded except during development or emplacement, the airflows required in the two ventilation circuits will remain constant over the life of the repository.

If total repository development precedes emplacement, only one ventilation system is required. Panels will be bulkheaded after development and reopened immediately prior to waste placement. Because panels are only open and ventilated during operations, the required airflows will not vary, depending on whether development or placing of waste is going on.

In the summer, the intake air may require precooling in order to maximize the heat removed from the rock. In winter, the intake air to may be need to be heated ensure that the temperature exceeds 37°F to avoid icing. Heating could best be accomplished by extracting heat from the exhaust air using heat exchangers.

10.9.1.8 Retrieval Systems

Title 10, Part 60 of the Code of Federal Regulations (10CFR60) requires that repository operations be designed so any or all of the waste could be retrieved on a reasonable schedule "Full Retrieval" is removal of all wastes. Retrieval on a limited basis (a few canisters, a single room, or a single panel) may become necessary. The later scenario is designated as "Local Retrieval."

In addition to providing multiple barriers in the hole, the storage position, described in Section 10.1.3, has been designed to facilitate retrieval. Because storage rooms are not backfilled, the rooms can be precooled after removal of the bulkheads. Air temperatures would remain low enough for personnel to work, and equipment for high temperature operation would not be necessary for retrieval. The transporter (Figure 10.9.4) assumed to place the canisters in the holes could also be used for retrieval. The rubber-tired machine is powered by a 300-HP diesel engine and has a net vehicle weight of 39 tons. The transporter has a track width of 8.5 ft, a wheel-base of 20.5 ft, and two operator's cabs, one at each end facing in opposite directions.

The order of operations for retrieval using the transporter is (Table 10.9.3):

- The floor shield is placed over the storage hole
- The plug housing is placed over the floor shield
- The doors in the floor shield are opened and the storage hole plug is removed and stored in the plug housing which is rotated away from the hole after the floor shield doors have again been closed
- The transfer cask is lowered into position over the floor shield
- The doors on the floor shield and transfer cask are opened
- The grapple in the transfer cask is lowered to engage the top of the waste package
- The waste package is hoisted into the transfer cask
- The transfer cask shield doors and the floor shield doors are closed and the transfer cask is lifted and rotated to the horizontal traveling position

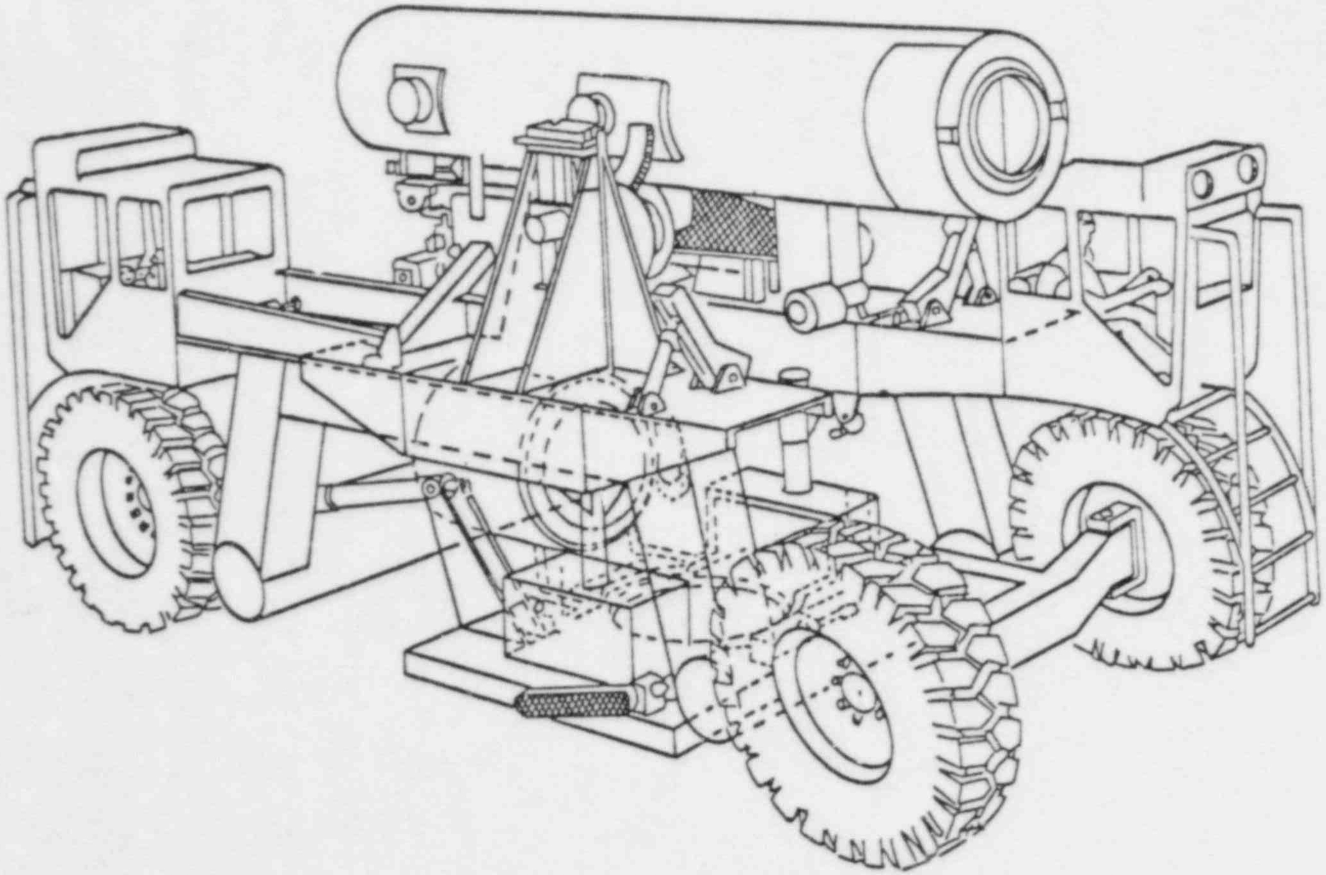

Figure 10.9.4 Transfer cask transporter.
(RHO-BWI-C-116)

- The plug housing is placed over the floor shield
- The door on the floor shield and plug housing are opened and the plug replaced in the hole
- The doors on the floor shield and plug housing are closed and the floor shield and plug housing moved to their traveling positions.

10.9.2 Interaction Between Retrieval and Repository Systems

10.9.2.1 Excavation Systems

The only excavation required prior to retrieval is removal of the bulkheads at the ends of a storage panel. Because the atmosphere in the panel will be hot, humid, and possibly contain radionuclides, the bulkheads on the return side should be breached prior to those on the intake side.

The assumed conceptual design report (RHO-BWI-C-116, 1982) gives no details concerning bulkhead construction. The preconceptual design report (RHO-BWI-CD-35, 1980) calls for 8-ft-thick concrete bulkheads that are keyed into the rock. With such airtight bulkheads, "windows" would be required in order to allow passage of the small airflow needed for monitoring air quality. The bulkheads should be able to:

- Withstand the horizontal and vertical deformations imposed by the surrounding rock
- Resist the temperature differential between the isolated panel and the ventilated airway
- Contain air and water contaminated with radionuclides from breached canisters (prevent uncontrolled air leakage and water seepage).

These criteria would be satisfied by 8-ft-thick concrete bulkheads. Even with a venting system or "windows," the bulkheads of the type postulated in RHO-BWI-CD-35 and as mentioned previously would contain the contaminants. The small airflows considered could transport only very limited quantities of contaminants.

Radioactive contaminants and seepage water would collect in an isolated panel over a period of time. Because of the elevated temperature, seepage water would be vaporized and some contaminants in the water may become airborne. Upon breach of the bulkheads, the hot, moist, and contaminated air would enter the confinement air return.

Bulkhead removal would require drilling and blasting of the concrete, and mucking out. The location, size and number of rebars used as reinforcement, and tiebacks must be known to plan the drilling. Prior to retrieval the rock condition must be inspected, the rock surfaced scaled, and rock support re-installed as necessary.

Bulkheads will not be used as retaining walls; therefore, other types of bulkheads that are equally effective but less substantial in construction could be used. Leak-proof bulkheads, (composed of segments of which are easy to assemble, install, and remove) are available. These bulkheads have proven very effective as bulkheads for underground rescue chambers in coal mines where bulkheads must be leak-proof and explosion-proof. Such bulkheads would also facilitate the retrieval effort.

Design of the bulkheads to periodically release contaminants to the main returns may be desirable. However the type of vent system adopted could further complicate bulkhead removal operations.

If retrieval were found necessary while development of the repository is still in progress, retrieval operations will have a minor impact on development operations. While development and confinement activities have separate entries and ventilation systems, the two systems do interface in the shaft area. When retrieval operations are in progress, movement of vehicles and materials in the shaft areas needs to be coordinated between the two systems in order to minimize the probability of accidential meetings resulting in contamination of the development equipment.

10.9.2.2 Equipment Systems

Removal of the bulkheads will be necessary for canister retrieval. The bulkheads could be excavated by conventional drilling and blasting using an electric-hydraulic jumbo for drilling, and a Load-Haul-Dump (LHD) for mucking. Alternatively, mechanical-hydraulic breakers, as commonly used in demolition work, could be effectively utilized. The equipment may need to be decontaminated if exposed to contaminated air. The use of equipment from development operations is not contemplated for use during retrieval.

Retrieval after completion of development mining will also require the use of the equipment for removing the bulkheads. A set of excavation equipment dedicated to operations in the confinement ventilation system is necessary. Because the rooms will be precooled the use of modified or high-temperature equipment is not expected.

Retrievability impact on equipment systems can best be identified with the aid of the flow chart shown in Figure 10.9.5. Each basic repository operation is given an identification number to facilitate identification of an event's impact on all systems. With mining development completed, the only active operations involve canister storage. Different levels of retrievability vary greatly in their impact on repository operations.

Local retrieval of canisters, for any reason, must take place concurrently with storage operations. Unless new equipment is obtained for the task, the storage equipment will have to be used, slowing the normal storage rate. Retrieval of breached canisters will require "hot cell" or shielded equipment along with decontamination equipment in the storage area. Transporting the canisters to the surface (Figure 10.9.5) will require use of the crane (3), hoist (4), and surface handling facilities (5). These systems will be unable to perform their normal operation for handling canisters, resulting in a delay repository storage activities. Ventilation constraints may also delay storage activities as discussed in Section 10.9.2.4.

Full retrieval of canisters can be planned systematically for a full storage room or full repository, starting with the oldest storage rooms. Because the same handling equipment will be used for the full retrieval operation, an operating schedule can be defined, with no interference from other operations. If any canisters are breached, the retrieval will be more complex due to contamination. Special equipment will be used for the life of the breached canister retrieval operation. A repository committed to one operation at a time makes a much more efficient operation than if local retrieval is concurrent.

The transporter is about 8-ft wide, the storage panel is 14-ft wide, leaving 3-ft clearance to the rib on each side of the vehicle. Transport travel is over the centrally-placed row of holes, straddling them with the tires. The inside track of the vehicle is 6 ft, the holes to be straddled are 4 ft, leaving 1foot of clearance on either side. With the small clearance, it is likely that tires would make contact with the floor rings and storage hole plugs. Since tire pressures would be about 80 psi, this is, however, not expected to do significant damage.

Retrieval requires removing the hole plug, grappling the canister, and lifting it into the transfer cask on the transporter vehicle. The lifting operations may be difficult if the canister binds against the hole lining - a potential situation if any lateral rock movement has occurred.

The fill material in the hole lining can absorb some rock deformation and resulting side pressure, but the limits must be adequately

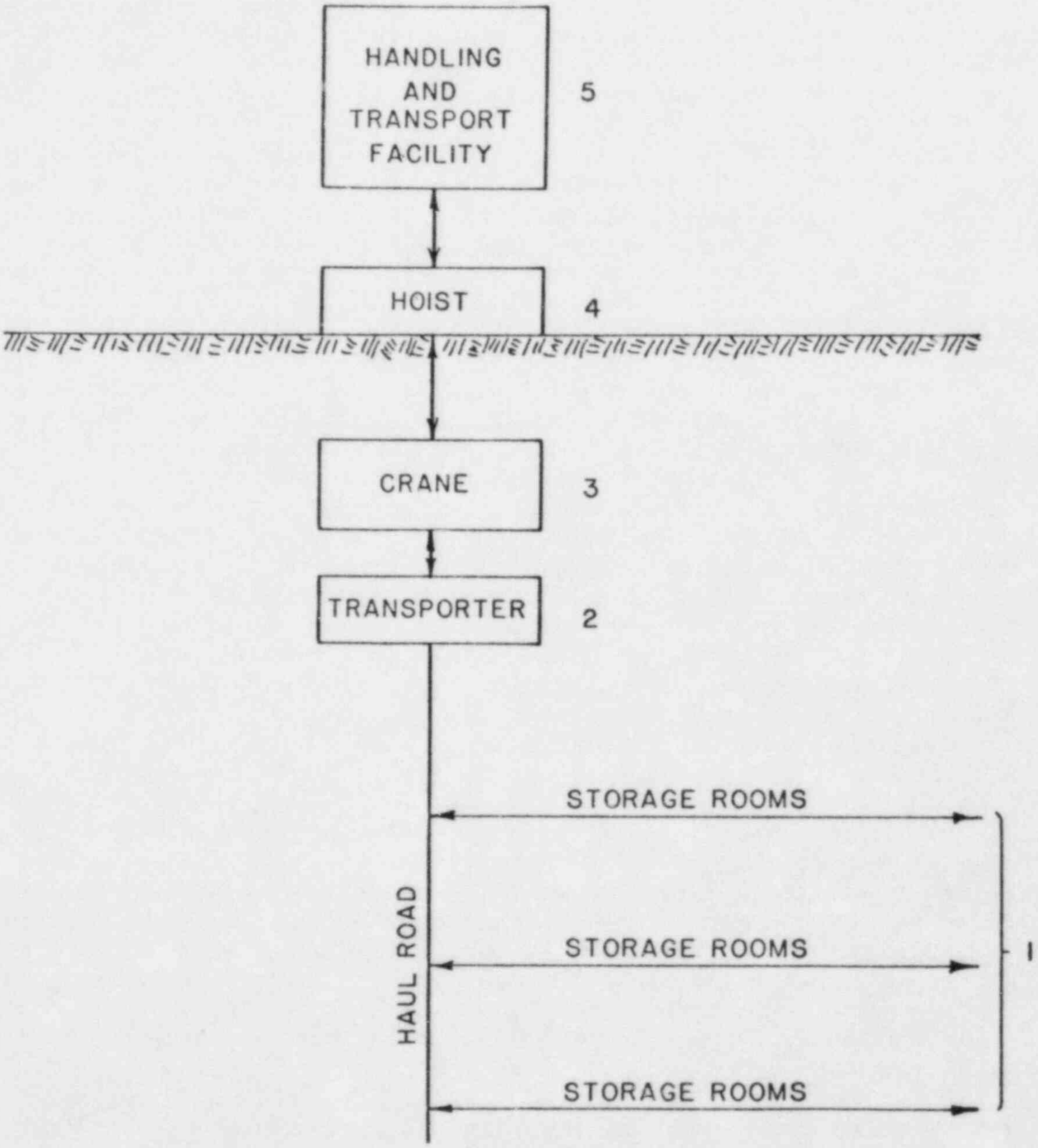

Figure 10.9.5 Schematic of waste handling operations.

identified through testing. Radial pressure on the canister may develop due to hole closure. The frictional resistance to pulling the canister will be a function of this radial pressure.

10.9.2.3 Facilities

Bulkheaded rooms would require additional facilities for canister storage and retrieval. After mining development has taken place and the waste stored, construction of the bulkheads and their removal would require the use of supporting equipment that may impede development mining if these processes take place concurrently. If spare equipment were available, the rate of development mining will not be adversely affected.

The concept of monitoring the bulkheaded rooms is sound but specific details are presently lacking. Monitoring would provide valuable information on cooling requirements and health and safety precautions that need to be taken during retrieval. Monitoring, however, would be unable to precisely locate the source of a radionuclide release unless specifically designed for this purpose. Consideration will have to be given to removing all the stored canisters from the panel if a breached canister is detected. Depending on the location of the affected panel, retrieval could adversely affect the materials handling/transportation system, confinement ventilation system, and development mining.

10.9.2.4 Ventilation Requirements

Based upon diesel and electric vehicle requirements, personnel requirements, and cooling requirements (as well as unavoidable leakage), the following total air quantities are supplied in the confinement ventilation system for emplacement and local retrieval:

• Waste handling (vehicles and personnel)	25,000 cfm
• Precooling prior to waste emplacement	8,000 cfm
• Precooling prior to retrieval	86,000 cfm
• Waste emplacement (vehicles and personnel)	41,000 cfm
• Leakage and short-circuiting	10,000 cfm;
• Total	170,000 cfm.

Presumably the airflow used for precooling would also be used for retrieval once the room is adequately cooled.

If full retrieval is initiated, presumably there will be no further development or placement operations in the repository. The mine (development) ventilation system would then be used to provide such additional airflows as are required.

During retrieval, transporters will frequently use the confinement returns for travelways. Since the temperature in the returns will likely exceed 106°F at 100% humidity - this is the air temperature at the outbye (exhaust) end of the storage and retrieval rooms - climate-controlled suits which incorporate radiation shielding should be provided in all vehicles so that personnel could walk away in the event of equipment failure. Under normal conditions worker protection would be provided by shielded, air-conditioned cabs.

10.9.2.5 Backfilling

Panels are bulkheaded upon completion of emplacement; however, backfill is not placed until permanent closure. The requirement for retrievability does not directly impact backfilling operations. Full retrieval would impact backfilling if all the waste removed. It would be no longer necessary to isolate the repository nor require backfilling. In the case of local retrieval, backfill would still be required to ensure that the room or panel does not become a preferential pathway for radionuclide migration when emptied of waste.

10.9.2.6 Thermal Effects

The thermal effects associated with nuclear waste disposal in an underground repository have significant impacts on the retrievability of the waste. Thermal effects can be divided into three distinct areas:

- Very-near-field effects which have the most direct impact on retrievability since elevated temperatures can lead to decrepitation of the borehole wall and binding of the canister

- Near-field effects which impact retrievability indirectly by increasing the potential for creating instability of the storage rooms

- Far-field effects which have minimal impact on retrievability since the stability of the entries and shafts would not be affected by the thermal loading.

The Mine Design Studies (MIDES) Working Group has completed a limited number of thermal analyses of a waste storage repository in tuff (SAND82-0170; SAND80-2813). Table 10.9.2 is based on these analyses and shows the predicted maximum rock temperatures at critical locations for a gross thermal loading (GTL) of 50 kW/acre. As no maximum temperature criteria have been defined for tuff, the predicted temperatures are compared with the BWIP basalt temperature criteria (RHO-BWI-C-116, RHO-BWI-CD-35).

The MIDES Working Group used the COYOTE and ADINAT computer codes in their analyses. Their results are based on the following assumptions:

- The rooms are open but not ventilated
- The repository horizon assumed by Mides is the Bullfrog member of the Crater Flat Tuff, at a depth of 2624 ft (rather than the 1,200-ft-depth of the Topopah Spring Member)
- Initial rock temperature is 97°F
- The tuff is fully saturated with water
- No boiling of ground water is anticipated.

At present, the DOE considers the Topopah Spring Member of the Paintbrush the most likely repository horizon. Temperatures in the Topopah Spring Member may be different from those calculated for the Bullfrog member because:

- The Topopah Spring Member is not as deep as the Bullfrog Member, and therefore has a lower initial temperature
- The Topopah Spring Member has a lower thermal conductivity, which would tend to increase long-term temperatures
- The Topopah Spring Member is above the water table and unsaturated, which would also result in higher long-term temperatures.

When the actual repository horizon is chosen, further site specific thermal analyses will have to be performed. The temperatures shown in Table 10.9.5 may be taken as an approximation of the temperatures that may be experienced at the time of retrieval. Because the model assumed that the rooms would not be backfilled or ventilated, the predicted tuff temperatures should correspond closely with those anticipated for bulkheaded storage rooms.

Table 10.9.5 Maximum Predicted Temperatures for Tuff

LOCATION	MAXIMUM PREDICTED TEMPERATURE FOR TUFF[1] (°F)	BWIP MAXIMUM TEMPERATURE CRITERIA FOR BASALT (°F)
Rock at Canister	241	392[2]
Emplacement Room	189	212[3]

[1] Source - SAND82-0170. Assumes thermal loading of 50 kW/acre and that repository horizon is Bullfrog Member of Crater Flat Tuff

[2] Source - RHO-BWI-C-116

[3] Source - RHO-BWI-CD-35

If the actual repository temperatures do not exceed those predicted in Table 10.9.5, then the maximum temperature criteria will not be exceeded. The possibility of borehole decrepitation seems remote, but further studies should be performed in this area. The effect of the temperature rise on room stability will depend on the variability of rock strength in the repository, and on the final room layout and repository design. Rockfalls may occur in areas of local overstress, and these would have to be cleaned when the rooms were reopened for retrieval.

The thermal impact in the shafts and main entries should be insignificant, as they are remote from the waste emplacement panels and will be ventilated continuously throughout the entire repository life.

10.9.2.7 Requirements for Special Equipment for High Temperature and Radioactive Environments

Rooms are not backfilled in this concept; therefore, they can be precooled prior to initiation of retrieval activities. Provided a waste package is intact, the transporter (whose operations was described in Section 10.9.1.7) can be used for retrieval such that 10CFR60 standards are satisfied. High temperature equipment is not required.

If a waste package is damaged, then other measures may be required for retrieval. For example, if the titanium overpack is fractured and splits in half upon retrieval, the transporter would pick up the top half of the overpack but leave the remainder of the overpack and the canister in the hole. Because the grapple in the transfer cask (on the transporter) is designed to engage the top of the titanium overpack, it cannot be used to retrieve the remainder of the waste package. It is possible that the sleeve surrounding the waste package may also be damaged. If the damage could impede retrieval operations, it would likely be advisable to overcore the hole. In such case, provisions for retrieval in the repository design are inadequate and design of a special machine for retrieval in such cases is then required.

10.9.2.8 Ground Support

The Q-system (Barton, Lien, and Lunde, 1974) has been used to determine ground support requirements in the repository. Strength values of the rock mass discussed under Section 10.9.1.1.3, "Rock Mechanical Properties" indicated a Q-system value of 85. Based on this calue and storage room cross-sections under consideration, the Q-system indicates the tuff to be competent requiring no support. However, since the data base for the Q-system does not include high temperature operating conditions, a support system in excess of that required has been specified. The support system should consist of untensioned, cement-grouted rock bolts spaced 8 to 10 ft apart.

It is anticipated that over a decades-long period some deterioration of the rock reinforcement system will occur and minor roof falls may result. Since the rooms are bulkheaded, clean-up and support reinstallation cannot be performed until prior to commencement of retrieval operations. Precooling will also be necessary before this can be done. However, if excessive roof falls occur (as determined by monitoring), it may be necessary to breach the bulkhead, reinstall resupport and reconstruct bulkheads, to avoid problems during actual retrival. Equipment for clean-up and support installation would include a Load-Haul-Dump vehicle and a roof bolting jumbo.

Despite the Topopah Spring Member lying above the water table, some ground water is likely to enter the repository during the operation period. This water may be expected to escape as steam when the bulkheads are breached for retrieval.

10.9.2.9 Instrumentation

The performance of the repository has to be monitored to ensure that the safety criteria are not violated and that the isolation capacity is maintained. The retrievability option mandates significant changes in selected parameters or deviations from expected behavior be detected when they occur, and steps be taken to correct the problem or retrieve the waste to the surface. Categories requiring monitoring are:

- Hydrogeologic - water inflow
- Thermal - heat buildup
- Mechanical - stress buildup rock deformations and rock instability
- Radiological - activity levels

A monitoring program for subsurface conditions consisting of visual inspection where possible, and remote measurement within panels, will be initiated. Visual inspection and hands-on measurement are preferable to remote monitoring because instrumentation available at present is not reliable for periods in excess of about a decade, especially under the thermal conditions of the repository rooms. To evaluate the performance of the remote monitoring system, an experimental panel will be provided in the repository where extensive verification and confidence testing will be performed. The panel will also provide an opportunity to study the reliability of instrumentation.

Thermal monitoring will primarily consist of thermocouples embedded in boreholes drilled into the rock at intervals along storage rooms. Thermocouple signals will be collected at several spots and relayed to a central control console to detect abnormalities.

Hydrogeologic monitoring will consist of measuring the pressure of formation water in the vicinity of storage holes, in various accesses, and in tuff flows and interflows. Durable high-precision, pressure transducers will be placed between packers in boreholes. Water quantities entering individual panels will be monitored by devices measuring the humidity and temperature of the air inside the panels.

Mechanical monitoring will consist of a network of geophones and seismographs to monitor rock noise and rockfalls. The closure of pre-established points in main entries will be measured. At a few selected locations outside the panels, detailed evaluation of rock stability will be made using stressmeters and multiple position borehole extensometers.

Ventilation conditions in the repository will be monitored for radiation levels, fire and smoke emergencies, and ventilation blockages caused by rockfalls. Mobile radiation and thermal sensors in ventilation airways will permit continuous monitoring from a main surface control console. Flow direction, pressure, differential pressure, and temperature will be monitored.

The retrievability requirement mandates monitoring of the repository for 50 years after initial placement of the waste. The following steps need to be taken to ensure the reliability of instrumentation placed in the repository:

- Develop geophones, stressmeters, multiple position borehole extensometers, piezometers, thermocouples, and ventilation instrumentation that will maintain their accuracy in the hot and humid environment expected in a repository
- Provide extensive verification of the reliability of instrumentation in the experimental panel established within the repository
- Ensure inspection of the repository at predetermined intervals can be performed by robots or by personnel in air-conditioned suits or vehicles.

10.9.3 Adequacy of Incorporated Retrieval Systems or Allowances

10.9.3.1 Local Retrieval

Local retrieval may be necessary for quality assurance, quality control, or a detected radionuclide release. A manufacturing error could cause premature breakdown of overpacking for some canisters in a storage room. Bulkheaded but unbackfilled rooms allow using the same equipment for emplacement and retrieval procedures provided precooling is carried out. Most likely the canister transporter and "hot cell" equipment will be necessary.

Equipment travel in a storage room creates hazardous conditions. Local retrieval involves recovering one or more canisters in a storage room. Traveling to the designated canister means approaching very near or running over surrounding canister holes.

Local retrieval requires removing the bulkhead and precooling the room prior to retrieval. Equipment for removing the bulkhead and removing the debris will be required and dedicated to the confinement ventilation circuit. Rockfalls due to roof deterioration must be cleaned up and the roof resupported. LHD equipment and a roof bolter will be incorporated as part of the retrieval equipment system. The canister transport equipment being used for storage may be used for retrieval, so that a delay or stoppage in storage activities could result. Use of the crane, the hoist, and the surface facilities for handling retrieved waste will also slow storage progress. No equipment has presently been designed to overcore a 48-in.-diameter hole in the repository environment. Overcoring may be necessary if the canister to be retrieved has broken and cannot be retrieved intact. Overall, with incorporation of equipment to remove the bulkhead and support the roof, the local retrieval system is adequate except where canisters are no longer intact. Further design and definition is required to facilitate breached canister retrieval.

10.9.3.2 Full Retrieval

Full retrieval of waste canisters will need planning and preparation but will not be necessarily difficult. Full retrieval planning is eased because all repository resources can be committed to the operations. Underground storage may prove unsatisfactory leading to repository abandonment. Full retrieval will require special equipment if the reasons for retrieval interfere, such as excessive rock movement crushing canisters, or rapid deterioration of rock causing need for roof support and scaling equipment.

Full retrieval will also require equipment for removing the bulkhead and resupporting the roof of the room. All equipment involved in full retrieval will be dedicated to the confinement ventilation system. Small clearances between the ribs and equipment and small alignment tolerances between the transporter and floor ring will impede retrieval progress. The heavy equipment traveling through the room may cause minor damage to the floor rings and canisters. The possibilities during full retrieval of attempting to retrieve a canister which bound in the hole by rock closure or which is broken into numerous pieces are more likely. The grappling equipment on the transporter may prove inadequate in this case, requiring retrieval by overcoring. As stated in Section 10.9.3.1, no equipment for large-diameter overcoring has been developed for repository environments. The incorporated systems will be adequate for retrieval of intact canisters, provided the equipment for bulkhead removal and roof resupport are included, and the confinement ventilation exhaust and retrun airways are enlarged (or new shafts sunk). The retrieval of breached and broken canisters require further development in the are of overcoring equipment for repository environments.

10.9.4 Concerns

10.9.4.1 Technological Concerns

When panels are bulkheaded with ventilated and single waste packages are stored in vertical holes, the main technological problem is the effect of the hot rock on the materials used in the ground support system, which will consist of rock bolts and shotcrete. The rock bolts will presumably be fully grouted to minimize the possibility of corrosion of the steel bars and the grout used must be functional at high temperatures. At the temperatures normally encountered in mining and tunneling, polyester resins are used for the grout. The temperatures of the rock surrounding the storage rooms may exceed the continuous maximum service temperature of the resin. Differential thermal expansion may occur reducing the effectiveness of the bolts. Experience with concrete at elevated temperatures (Troxell, Davis, and Kelly, 1968, p. 248-250) indicates that for simple temperature increases to 212°F relatively minor strength losses occur due to loss of both free and continued moisuture. Above 212°F more significant strength losses occur in the repository maximum temperature ranges up to say 400 °F, but amount to 10% reduction, or less. However, if the concrete is heated and then cooled, strength losses approach 25% or more at 400°F. Two considerations may minimize such strength losses using lean mixes and limestone expanded slag, or similar aggregates minimize heat effects in this range. We suspect that the important cement grout, shotcrete and concrete considerations for repository temperatures hinge on minimizing the water content and matching the thermal expansion and chemistry of cements and aggregates. The widespread use of shotcrete or grouted bolts, or both, as primary ground support is about 25 years old and experience is lacking regarding the condition of such support systems after decades even at more typically encountered temperatures.

Another technological concern is development of equipment for retrieval of breached canisters, especially those which have split into two or more pieces. If canisters have cracked but are otherwise intact, retrieval could be accomplished using the transporter with a transfer cask having an internal shielding sleeve. If the breached canister has separated into more than one piece, the surest method would be to overcore the hole. While overcoring is feasible, no equipment exists at present for overcoring 48-in.-diameter holes for repository environments. Overcoring would also require a room height in excess of the 20 ft assumed, since the holes are 20 ft deep and the overcore should penetrate at least 6 in. to 1 foot below the bottom of the hole.

10.9.4.2 Safety Concerns

As discussed under technological concerns, no experience exists with grouted bolt and shotcrete systems for decades-long periods. The panels are bulkheaded but not backfilled so that ground support can be inspected and rehabilitated as necessary after the bulkheads have been breached and the rooms precooled. Safety concerns will occur in the event of radionuclide release; and will be discussed later.

10.9.4.3 Radionuclide Release Concerns

One of the possible reasons for retrieval is failure of the waste package, with consequent release of radionuclides. Gaseous and volatile radionuclides may be released into the emplacement hole while soluble radionuclides may be carried away by any water that is present in the emplacement hole. Removal by aqueous solution, requires the presence of water in liquid form; that is, its temperature must be less than the boiling point for the repository pressure conditions.

10.9.4.3.1 Releases into Air

The gaseous and volatile isotopes which could be released by a breached canister are hydrogen-3 (tritium), carbon-14, and krypton-85. The quantity of krypton-85 is large compared with that of either tritium or carbon-14. In addition, the carbon-14 must be in a form that leads to volatile species upon reaction with water in order to be of concern. It is assumed that one-tenth of the krypton-85 is sufficiently near an exposed surface to be able to leave the fuel. If a breach occurs, the concentration of krypton-85 and tritium in air must not exceed 10 nCi/liter and 5 nCi/liter, respectively, in order to satisfy 10CFR20. (These radioactivity concentration limits are defined by the EPA in metric units, the equivalent traditional units, for reference, are 0.35 nCi/ft^3 and 0.18 nCi/ft^3, respectively.)

If storage hole plugs are gas-tight, release of gaseous radionuclides from a breached waste package will occur at retrieval. Otherwise, the radionuclides will leak through the plug into the air. Assuming the room was still bulkheaded and the breach was discovered due to radionuclides in the leakage air, retrieval of the breached canister would require removal of the bulkheads and precooling. The time required to reduce krypton-85 concentrations to the Maximum Permissible Concentration (MPC) given in 10CFR30 is shown in Figure 10.9.6 for different room volumes and airflows. In any case the time required for precooling greatly exceeds the time required to dilute the krypton-85.

Release occurring at retrieval can be avoided by having radiation sensors in the holes. The gaseous radionuclides could then be drawn off prior to retrieval using millipore filters or a cryogenic absorption system, both of which fall within existing technology.

10.9.4.3.2 Releases into Water

With regard to the movement of radionuclides by aqueous transport, this, as previously mentioned, requires that water be in the liquid state. Within the rock surround the rooms, the pore water will be at a pressure of 520 psi for which the boiling point of water is about 460°F. Since the rock temperature will be 250°F or less, the pore water in the rock will be in the liquid state. Since the rooms are at atmospheric pressure, this water will vaporize as soon as it enters the room.

For water to transport radionuclides, it is necessary that water come into contact with a breached canister. This would require penetration of several layers of shielding and overpacks. Supposing this did happen, and water contacted a breached canister, the rate of dissolution would vary widely with the water composition and temperature. For a typical rate of 0.0000264 lb/day, the solution would contain about 0.25mCi/lb water and one pound of this solution would generate about 0.1mR/hr at 4 ft.

Water could also dissolve gaseous radionuclides. Krypton-85 has a solubility of 0.628 ft^3/100 gal (Weast, 1983) in hot water so that only about 1.5 gal of water would be require to dissolve the krypton-85 released by a single breach. Thus water which came into contact with a breached canister and then percolated into the room

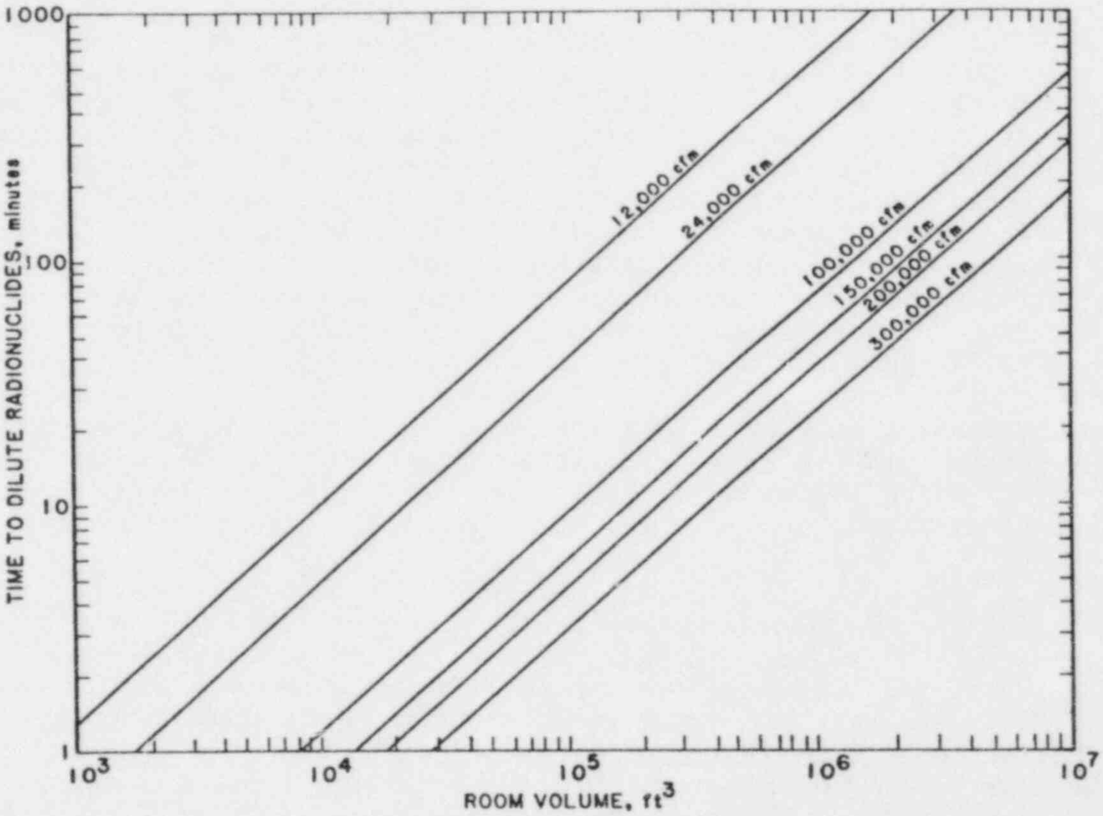

Figure 10.9.6 Time required to dilute Kr-85, from a breached canister containing three PWR fuel assemblies, to the Maximum Permissible Concentration (MPC) assuming 10% of the Kr-85 is liberated.

would release gaseous radionuclides as it entered the room. As in the case of direct releases to the air described in section 10.9.4.3.1, the time required to dilute the krypton-85 to the MPC is much less than the precooling time.

Hence water intrusion would provide a good index to failures but would not by itself introduce significant hazards to the operations (Post, 1982).

10.9.4.3.3 Radiation Detection Standards

The radiation levels measured during retrieval operations are not exceptional so that the system standards used in the nuclear industry would prevail. Lower limits of 0.1 mR/hr and upper limits of a few kR/hr would be adequate. A system to detect krypton-85 in the ventilating air and in the storage holes will be required. This system should be capable of detecting krypton-85 levels below 100 Ci/liter (2.6 pCi/ft^3) (Post, 1982).

10.9.4.4 Operational Concerns

Retrieval of breached canisters will require equipment other than the transporter and standard transfer cask. Retrieval could be accomplished by overcoring the holes containing breached canisters; however, room heights of at least 22 ft are required. Where canisters are cracked but otherwise intact, a transfer cask having an internal shielded sleeve could possibly be used. To facilitate retrieval, such equipment must be available.

Given the small tolerances for alignment of canisters and storage holes, precise positioning of the transporter over the hole may be difficult even with lasers. Positioning would be simplified if transporters were rail mounted.

The amount of cooling required will necessitate large capacity heat exchangers (cooling units). The area required for the coolers in the headings could significantly reduce the space available in the entrances to the rooms. Also the cooling units have a restricted life and will become less efficient with time.

10.9.4.5 Other Concerns

A fundamental concern related to a repository in tuff concerns the geologic/hydrogeologic uncertainty at the repository horizon. The uniformity of the particular tuff flow with regard to thickness, the uniformity of the jointing, and the occurrence of faults are major concerns. The further in situ exploratory programs planned (1983) by DOE aimed at rectifying the lack of information about the geology/hydrogeoology at the proposed repository horizon.

Another concern is the probability of canister breach and the causal mechanism. One possible mechanism is corrosion. The rate of corrosion will depend on the environmental conditions and the chemical composition of the ground water. Another possible mechanism is attempted retrieval of a canister upon which the hole has closed.

10.9.5 Summary and Conclusions

The repository is located at a depth of 1,200 ft in the Topopah Springs Member tuff of the Nevada Test Site, Nevada. The repository will consist of 22 panels divided by a central pillar into two areas having 12 and 10 panels, respectively. Each panel is divided into six rooms (14-ft wide, 20-ft high, and 3,572-ft long) that are jointed by crosscuts at 890-ft-centers.

The waste packages (carbon-steel spent fuel canisters, graphite filler, and titanium overpack) are placed in 4-ft-diameter sleeved holes 12-ft on center in the floor of the rooms along the centerline. Based on a heat load of 1.74 kW/canister at the time of placement for canisters containing three 10-year-old PWR fuel assemblies, the panel thermal load is 51.6 kW/Acre.

Backfilling of the rooms would not taken place until the permanent closure of the repositiory. Rooms will be bulkheaded when completely filled with canisters. Trickle ventilation through the bulkhead is allowed for monitoring of air quality within the room. The room must be precooled either prior to or after removing the bulkhead to facilitate retrieval.

The retrievability requirement has the following effects on the repository systems:

- Re-excavation system - Drilling, blasting, and mucking equipment are required for bulkhead removal
- Equipment systems - In addition to the re-excavation equipment, a roof bolter is required for repair of the deteriorate roof support. The bulkhead removal and resupport equipment must be isolate from the development equipment
- Facilities - Removal of debris from bulkhead excavation will impose an adverse impact on the hoist crane and material handling system. Local retrieval may impose adverse impacts on the transportation system, the confinement ventilation, and development mining

- Ventilation requirements - The air quantities detailed in the reference design are sufficient for the retrieval operation

- Backfilling - None is required until permanent closure.

The concerns for the repository concept are summarized as follows:

- Technological Concerns·
  - Adequacy of the rock support system over a period of decades
  - Adequacy of existing equipment to retrieve breached canisters

- Safety Concerns:
  - Progressive deterioration of rock support as a result of bulkheads isolating the rooms
  - Thermal spalling and moisture related tensile failures upon precooling

- Radionuclide Release Concerns:
  - Canister breaches would result in release of gaseous hydrogen-3 (tritium), and krypton-85, and volatile carbon-14, of which the krypton-85 would have the largest concentration.
  - Diluting krypton-85 to the MPC given by 10CFR20 could take up to several hours for release from a single breached waste package
  - The mechanism for release of gaseous radionuclides from the storage hole to the atmosphere could be non-gas-tight hole plugs, streaming through the floor shield at retrieval and aqueous transport (if hole liners corrode)
  - Radiation from contaminated water would not be excessive but could be used to detect breaches
  - Radiation levels during retrieval will not be excessive and monitoring systems having lower limits of 1 mR/hr and upper limits of a few kR/hr would be adequate
  - A system is required for detection of krypton-85 in ventilating air and in storage holes

- Operational Concerns:
  - Retrieval of breached canisters by overcoring
  - Small alignment tolerances requiring precise positioning of the transporter
  - Large capacity heat exchanges limiting the space in the room entrances
  - Coordination of handling possibly contaminated bulkhead muck in the shaft areas with that from development
- Other Concerns:
  - Geologic and hydrogeologic uncertainties
  - Undertermined probabilities and mechanism of canister breach
  - Prediction of time-dependent activities of critical radionuclides.

The general repository concept parameters are well defined. Further definition and confirmation are required in the areas of hydrogeology and geology, long-term adequacy of roof support, detecting and retrieving breached canisters, the probabilities and mechanisms of breach, and the details of bulkhead construction and venting. With an increase in the ventilation system capacity, the repository concept meets the requirements of 10CFR60 except with regard to retrieval of breached canisters.

10.10 Tuff Repository with Vertical Hole Storage and Immediate Backfilling

10.10.1 Basic Information

The tenth repository concept is in tuff, with vertical storage holes in the floor, and rooms backfilled and bulkheaded after waste placement. This concept is similar to the reference repository in basalt (RHO-BWI-C-116, 1982) except that backfill placement in a panel will occur as soon as waste storage in the panel has been completed.

10.10.1.1 Definition of Repository Concept

The host geologic medium is tuff. Waste packages will be placed in 48-in.-diameter holes in the storage room floors. The panels will be backfilled and bulkheaded as soon as waste emplacement has been completed.

Canisters containing 10-year old Pressurized Water Reactor (PWR) spent fuel will emit 1.74 kW each at the time of placement while canisters containing 10-year old Boiling Water Reactor (BWR) spent fuel will initially emit 1.33 kW each. In both cases, the heat emissions will decrease with time. To be conservative, thermal studies have been based on 1.74 kW/canister. For the conceptual repository layout, the canister heat load results in a thermal loading of 51.6 kW/acre, or 35.6 kW/acre within a panel for the entire repository.

10.10.1.2 Geologic Environment

10.10.1.2.1 Rock Units

The proposed repository emplacement horizons are in the bedded tuff rocks of Yucca Mountain located adjacent to the southwestern portion of the Nevada Test Site. Of the several tuffaceous rock units present at Yucca Mountain, the Topopah Spring Member of the Paintbrush Tuff Formation is the leading candidate horizon. The majority of available information is based on data from boreholes USW-G1, UE25a-1, and J-13 (SAND80-1464, OF81-1349).

The lower contact of the Topopah Spring Member lies about 1,200 ft deep. The Topopah Spring Member has an ashbed within the interior and several ashflow units which range from non-welded to vitrophyric. A thin ashfall/reworked tuff section is present at the base of the member. The lower portion of the member is slightly zeolitized and only partially welded. The vitrophyre is unaltered, tightly compacted, and welded. In some areas, the vitrophyre contains abundant calcite veinlets and about 7% to 30% phenocrysts. Fractures in the vitrophyre are cemented; however, the nature of cementing material is undescribed. All rock above the vitrophyre is densely welded and extensively fractured. Clay gouge is found along some of the fractures.

Volcanic rocks of this sequence generally dip towards the east and southeast at angles less than 10°. Dip reversals occur locally and may assume values up to 20° in the vicinity of faults. Several confirmed and inferred faults bound most of the mountain block around the proposed repository site. Faults are generally normal, dip at approximately 60°, and are strike north-south. Several hundred joints were identified from cores of Borehole USW-G1 and nearly half of these joints occur in the Topopah Spring Member core. A majority of the joints shows a near vertical trend (70° to 90°). Shear fractures occur predominantly within the extensive densely welded zone of the Topopah Springs Member.

The Yucca Mountain area tends to be aseismic; however, an earthquake of Richter magnitude 1.7 occurred below sea level under Yucca Mountain in 1981 and another single earthquake of unknown magnitude and depth was recorded east of Yucca Mountain during the same year.

10.10.1.2.2 Hydrogeology

Hydrogeologic studies for the Yucca Mountain area are part of the ongoing (1983) work of the Department of Energy. Very limited data were available at the time of this present study. The regional groundwater flow trend is from the northwest to the southeast across Yucca Mountain with a low horizontal gradient and almost no vertical gradient. The water table in this area is about 2,000 ft below the land surface, and a regionally uniform position of water levels seems to exist.

The Topopah Spring Member lies well above the regional water table and is therefore unsaturated. Ground water flow through this member is generally controlled by structural features. In the densely-welded portions of the ashflow tuff, water flow is controlled by primary (cooling) and secondary joints. The hydraulic conductivity ranges from 15 to 15,000 ft/day, however, intercrystalline permeability and porosity are neglible. The unwelded part of this member exhibits a relatively higher porosity (35% to 50%) and a modest hydraulic conductivity 0.25 ft/day and may act as a leaky aquitard.

10.10.1.2.3 Rock Mechanics Properties

Rock mechanics properties of tuff rocks of the Topopah Spring Member are based on limited laboratory testing of intact rock specimens and discontinuities, and in situ data are almost non-existent (1983). Available data are presented in Table 10.10.1, along with reference sources. Generalized mechanical properties of intact rocks and joints reported by SAND81-1629, shown in Tables 10.10.2 and 10.10.3, were used to determine the thermomechanical behavior of the Topopah Spring Member in a repository environment. Recent laboratory studies (SAND82-1723) indicate that the mean unconfined compressive strength of the Topopah Spring Member is about 13,900 psi. Tests on water-saturated specimens were performed at room temperature at 14.5 psi confining pressure. The compressive strength so determined is lower than that reported by SAND80-1455. This strength reduction appears to result from the significant effect of water on tuffs. However, since the Topopah Spring Member lies above the water table (and is therefore, unsaturated) and will experience temperature levels above 212°F (on the room scale), it is reasonable to assume a compressive strength of 16,000 psi (30% strength reduction from 22,300 psi, SAND80-1455). This compressive strength value was used to determine ground support requirement for repository construction in the Topopah Spring Member.

10.10.1.3 Repository Construction and Layout

As shown in Figure 10.10.1, the repository will contain 22 storage panels, each of which, with the exception of the experimental panel, comprise six rooms. The rooms will be 3,574 ft long and are to be connected by crosscuts on 890-ft-centers. Entries, rooms, and cross-cuts will be driven by drill-and-blast methods. Table 10.10.4 gives dimensions of the various facilities.

Five entries will connect the storage panels with five shafts to surface. Each shaft will have a different dedicated function:

- Personnel and materials (service) shaft
- Tuff transport shaft
- Waste transport shaft
- Confinement air intake shaft
- Confinement air exhaust shaft.

The shafts presumably will be sunk by conventional drill-and-blast methods, lined by concrete to a depth of 1,300 ft.

Table 10.10.1 Summarized Mechanical Properties of the Topopah Spring Member

TEST CONDITIONS	COMPRESSIVE STRENGTH	COHESION (C)	ANGLE OF INTERNAL FRICTION	POISSON'S RATIO	AVERAGE POROSITY (%)
Intact Rock at room temperature (73°F)	22,800 psi[a]	2,540 psi[a]	67°[a]	0.23 (at 1,450 psi confining pressure)	9.4%[a]
Intact Rock at elevated temperature (392°F)	22,300 psi[b]	-	-	0.15[a]	11.3%[a]
Rock Joint at room temperature (73°F) (unspecified rock formations)			31.8° to 33.4°[c] (dry) 33.8° to 36.5° (saturated)		

[a] SAND80-1455

[b] SAND81-0629

[c] Olsson & Teufel (1980)

Table 10.10.2 Mechanical Properties of Intact Rock
Johnson (1981)

	TEMPERATURE				
PROPERTY	68°F	212°F	212°F	1,832°F	UNITS
Young's Modulus	2.9×10^6	2.9×10^6	2.9×10^6	2.9×10^6	psi
Poisson's Ratio	0.25	0.25	0.25	0.25	--
Shear Modulus	1.16×10^6	1.16×10^6	1.16×10^6	1.16×10^6	psi
Coefficient of Thermal Expansion	4.17×10^{-6}	4.17×10^{-6}	5.72×10^{-6}	5.72×10^{-6}	$°F^{-1}$
Angle of Internal Friction	42.9°	42.9°	42.9°	42.9°	Degrees
Cohesion	1230	1230	1230	1230	psi

Table 10.10.3 Mechanical Properties of Joints
(Johnson 1981)

	TEMPERATURE				
PROPERTY	68°F	211.98°F	212.02°F	1,832°F	UNITS
Angle of Internal Friction	35°	35°	35°	35°	Degrees
Cohesion	1.45	1.45	1.45	1.45	psi
Joint Angle (with respect to drill core axis)	90°	90°	90°	90°	Degrees

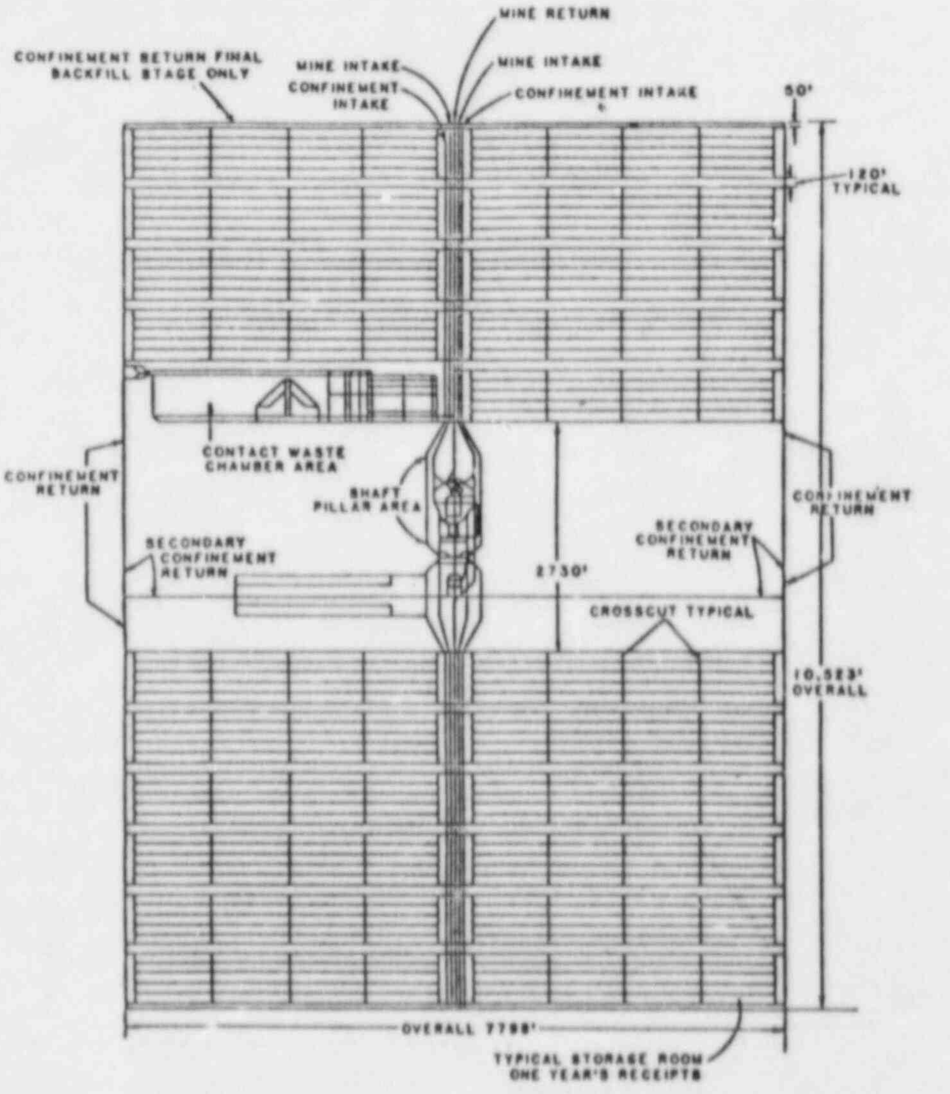

Figure 10.10.1 Repository layout for storage in vertical holes. (RHO-BWI-C-116, 1982)

Table 10.10.4 Dimensions of Repository Facilities

Facility	Dimensions
Personnel and Materials (Service) Shaft	16 ft inside diameter
Tuff Transport Shaft	14 ft inside diameter
Waste Transport Shaft	12 ft inside diameter
Confinement Air Intake Shaft	11 ft inside diameter
Confinement Air Exhaust Shaft	10 ft inside diameter
Confinement Air Intake and Accessways	13 ft wide by 12 ft high
Mine Intake Air and Accessways	18 ft wide by 17 ft high
Mine Exhaust Air and Accessways	18 ft wide by 17 ft high
Confinement Return Air and Accessways	13 ft wide by 12 ft high
Access Pillars	36 ft wide
Panels	3,577 ft by 614 ft
Storage Rooms	14 ft wide by 20 ft high
Crosscuts	14 ft wide by 20 ft high
Panel and Room Pillars	106 ft
Rib Pillars	100 ft
Storage Holes: for PWR	48-in. diameter by 19 ft deep
for BWR	48-in. diameter by 20 ft deep
Storage Hole Pitch	12 ft

The two potential sequences for repository development and waste placement are:

- Repository development has been completed before waste storage begins
- Panel development and waste storage take place concurrently with both operations advancing at the rate of one panel per year.

The two sequences have very different requirements for ventilation and excavation systems, shaft facilities and equipment quantities. The two sequences also affect retrieval operations differently.

According to assumed repository construction schedules, waste placement is required to begin within ten years of construction authorization. Assuming two years for shaft sinking and allowing for contract procurement for both the shafts and the underground development, preplacement development must be completed within six years. Since PWR and BWR waste will be stored in separate panels (according to information supplied to EI by the NRC) and an available spare panel is desirable at all times, three panels must be ready for storage by year 10. Completion of three panels in six years requires a development rate of 2,800 tpd, on a five-day week basis. If complete repository development must occur before placement, the required development rate is 11,800 tpd. This option causes a modification to the facility dimensions given in Table 10.10.4, the Tuff Transport Shaft should be 21-ft-inside diameter to accommodate the large muck hoisting capacity required.

In the reference repository description for basalt (RHO-BWI-C-116, 1982), development and storage proceed outward from the panels nearest the shaft pillar to those at the extremities of the repository. The mining cycle in a given heading would consist of (in order):

- Drill the round
- Load and blast the round
- Remove the broken muck and
- Install ground support.

Although the tuff is probably strong and competent, protection from minor local failures such as rockfalls requires rock reinforcement and support. A loosened zone surrounds openings excavated in rock. The loosened zone generally extends 5 to 10 ft outward regardless of the size of the opening, but can be as little as 3 ft where smooth blasting practices are employed. The loosened zone is generally sufficiently unstable to require some support.

The Q-system (Barton, Lien, and Lunde, 1974) has been used to determine ground support requirements in the repository. Strength values of the rock mass discussed under Section 10.11.1.1.3, "Rock Mechanics Properties" indicated a Q-system value of 85. Based on this value and storage room cross-sections under consideration, the Q-system indicates the tuff to be competent requiring no support. However, because the data based for the Q-system does not include high temperature operating condtitions, a support system in excess of that required has been assumed. The support system could consist of untensioned, cement-grouted rock bolts spaced 8 to 10 ft apart; one third the span in length and 4 in. normal thickness shotcrete. Experience with concretes at elevated temperatures (Troxell, Davis, and Kelly, 1968, p. 248-250) indicates that losses occur due to loss of both free and combined moisture. Above 212°F more significant strength losses occur in the repository maximum temperature range sup to, say 400°F, but amount of 10% reduction, or less. However, if the concrete is heated and then cooled, strength losses approach 25% or more at 400°F. Two considerations may minimize such strength losses. using lean mixes and limestone, expanded slag, or similar aggregates minimize heat effects in this range. We suspect that the important cement grout, shotcrete and concrete considerations for repository temperatures hinge on minimizing the water content and matching the thermal expansion and chemistry of cememts and aggregates.

With respect to ground water, mining will tend to drain any water within the repository area as the water will tend to flow toward the openings. As a result of the horizon lying above the water table, water intrusion is expected to be minimal.

10.10.1.4 Canister Arrangement

The assumed waste package (Figure 10.10.2) consists of a carbon steel canister, surrounded by graphite fill material, and contained within a 21-in.-outside diameter titanium overpack. The packages will be placed in 48-in.-diameter holes drilled vertically along the centerline of storage room floors on 12-ft-centers. As shown in Figure 10.10.3, the hole is designed as an engineered barrier consisting of (starting at the outside) zircon sand and bentonite filler, an aluminum container surrounding tailored overpack and a ceramic sleeve to support the tailored overpack. No mention is made in the assumed reference repository description (RHO-BWI-C-116, 1982) of the method(s) used to place the filler, aluminum container, tailored overpack, and ceramic sleeve in the hole. We assume that sleeves and liners will be lowered into place, and overpack and fillers will be either poured or blown in.

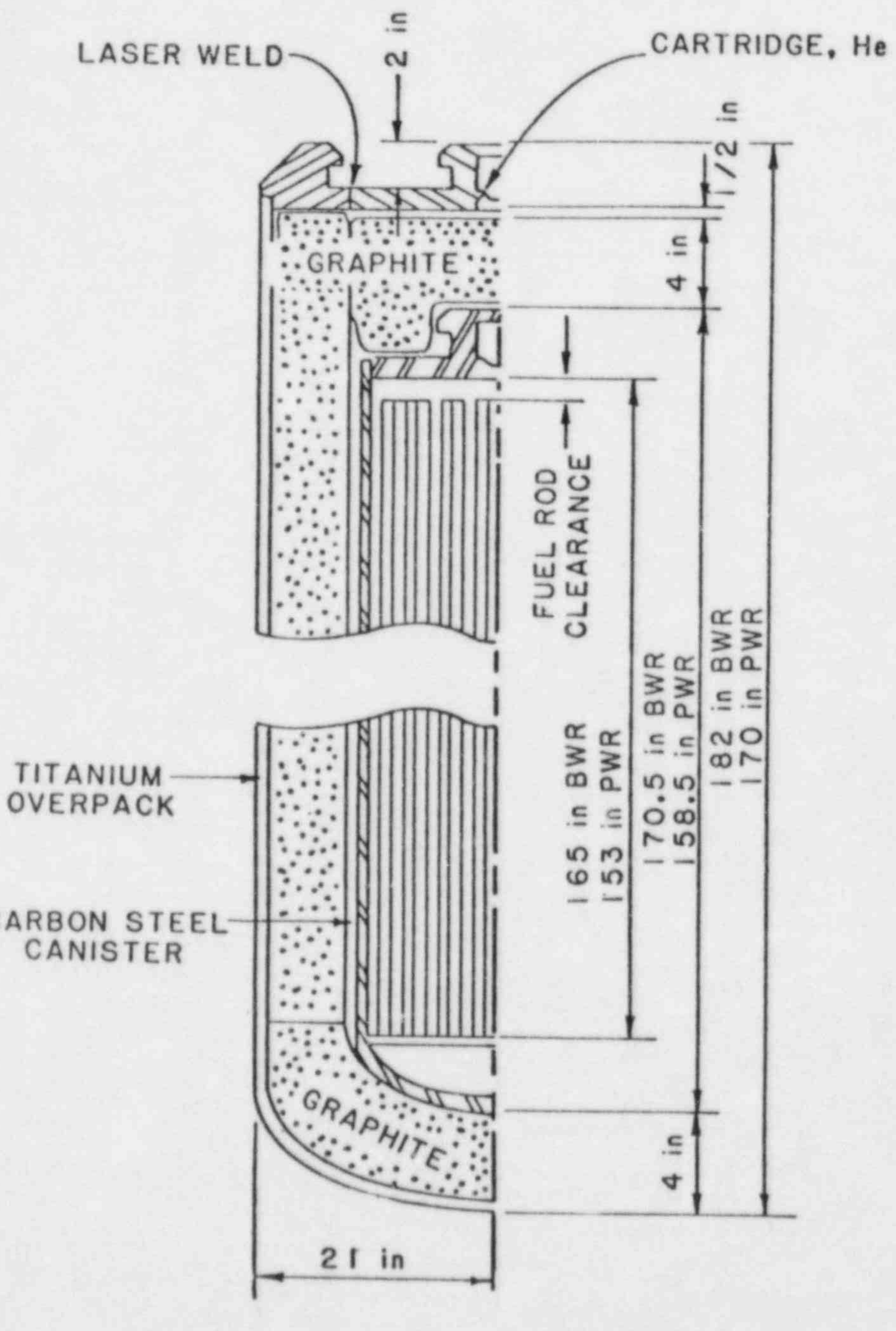

Figure 10.10.2 Waste package.
(RHO-BWI-C-116)

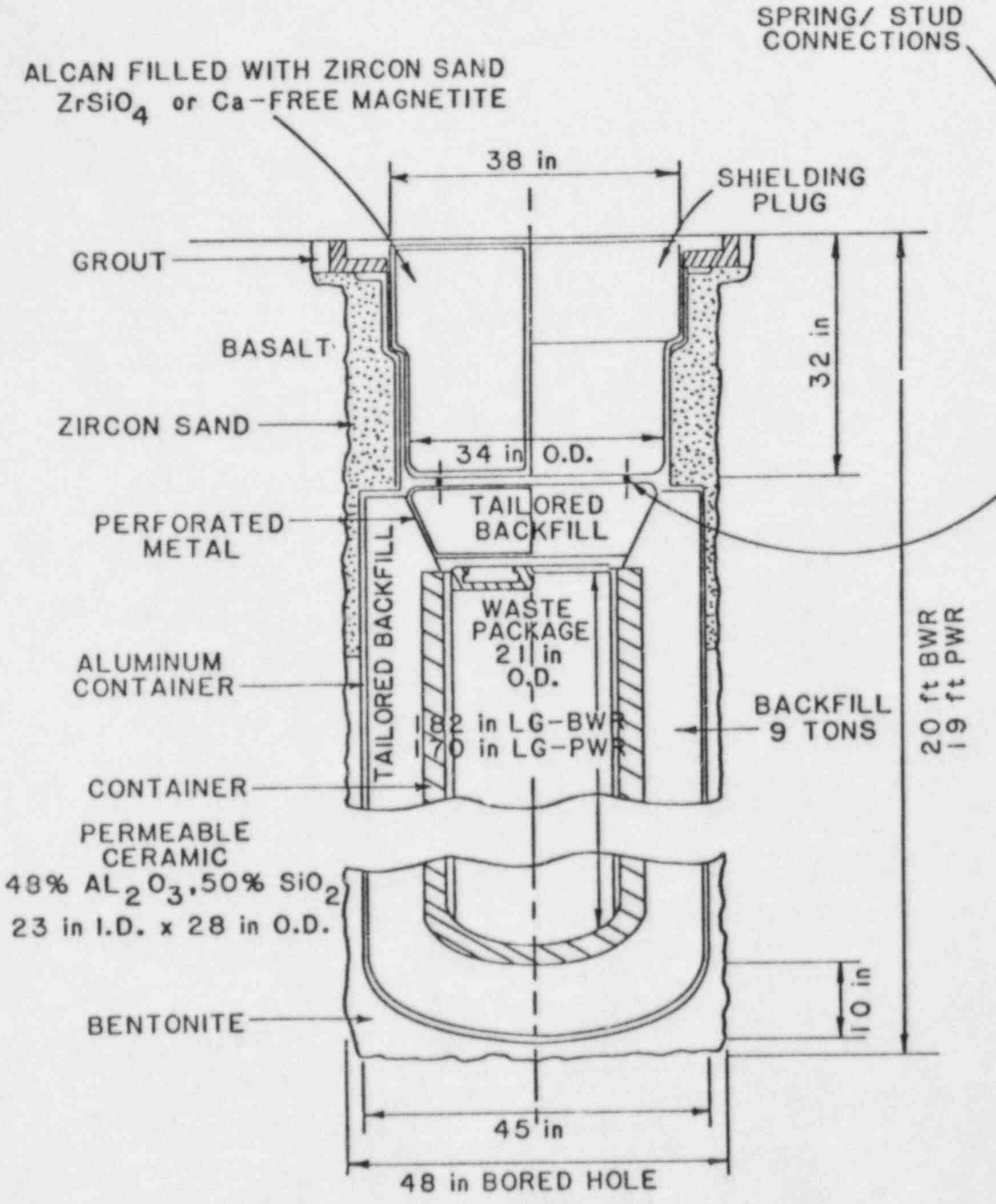

Figure 10.10.3 Storage position.
(RHO-BWI-C-116)

10.1.1.5 Thermal Loading

The waste packages radiate heat as a result of decay of the radionuclides contained in the spent fuel. Unreprocessed spent fuel contains fission products which are relatively short-lived and actinides which are generally quite long-lived. As the radionuclides decay to stable isotopes, the number of disintegrations, and resultant heat produced will decrease with time. The heat produced by a canister will be at a maximum at the time of emplacement.

A canister will contain either three PWR or seven BWR spent fuel assemblies. Assuming 10-year-old waste, canisters will have initial maximum heat loads of 1.74 kW and 1.33 kW for PWR and BWR, respectively.

The areal extent of the repository, the canister spacing, the age of the waste, and the type of waste (PWR or BWR) determine the overall thermal load on the repository. To be conservative, all the waste is assumed to be 10-year-old PWR. In reality, waste type and age will vary, and actual panels are assumed to consist of waste of a uniform type and age to avoid uneven thermal loading within a room or panel.

The assumed storage area consists of 22 panels occupying a total of 1,300 acres, or 59 acres per panel. Using 1.74 kW/canister and a storage complement of 1,750 canisters per panel the heat load within a panel is 51.6 kW/acre. On the basis of the total area of 1,884 acres which includes the shaft pillar and service areas, the overall heat load is 35.6 kW/acre.

10.10.1.6 Backfill Timing

Ultimately, a repository must be backfilled, with the backfill designed as a barrier (10CFR60.133). The backfill will be placed in a panel as soon as the panel has been filled with its complement of waste. If retrieval becomes necessary, remining of backfill will be required. The composition of the backfill assumed is 50% crushed tuff, 40% powdered bentonite, and 10% prilled bentonite, similar to the backfill in the reference repository (RHO-BWI-C-116, 1982).

10.10.1.7 Ventilation

With this particular concept, the panels are backfilled and bulkheaded after waste placement has been completed. A small amount of leakage through the bulkheads is allowed, in order to monitor air quality within the isolated panels. The two potential development options:

- Develop and store waste simultaneously
- Develop whole repository prior to waste placement,

result in two different ventilation schemes. In the first case, two separate ventilation circuits are required:

- Mine (development) ventilation system
- Confinement (storage) ventilation system.

Because the rooms will be developed only as they are required for waste placement and the panels are bulkheaded except during development or emplacement, the airflows required in the two ventilation circuits will remain constant over the life of the repository.

If total repository development precedes placement, only one ventilation circuit is required. Panels will be bulkheaded after development and reopened immediately prior to waste placement to economize in the ventilation system. Because panels are open and ventilated only during development and placement, the required airflows should not vary significantly.

In the summer, the intake air may require precooling to maximize the convective heat removed from the rock. In winter, the intake air may need to be heated to ensure that the temperature exceeds 37°F to prevent icing. Heating could best be accomplished by extracting heat from the exhaust air using heat exchangers.

10.10.1.8 Retrieval Systems

Title 10, Part 60 of the Code of Federal Regulations (10CFR60) requires that repository operations be designed so that any or all of the waste could be retrieved on a reasonable schedule "Full Retrieval" is removal of all waste. However, from time to time, retrieval on a limited basis may become necessary. For example, a few canisters, a single room, or a single panel may need retrieval. This scenario is designated as "Local Retrieval."

In addition to providing multiple barriers in the hole, the storage position, described in Section 10.10.1.4, has been designed to facilitate retrieval. Because storage rooms will be backfilled, they may or may not be precooled after removal of the bulkheads. Precooling of heated placed backfill has not been suggested by DOE in the reference repository design, however, boreholes or preplaced pipes could be used to circulate air or high-heat-capacity fluids to cool the backfill. This is time consuming, but could be done. Equipment designed for high temperature operation during remining of the hot backfill will be necessary for retrieval without precooling. The assumed transporter (Figure 10.10.4) used to place canisters in the hole could also be used for retrieval after remining and precooling, provided that the canisters remain intact. The rubber-tired machine

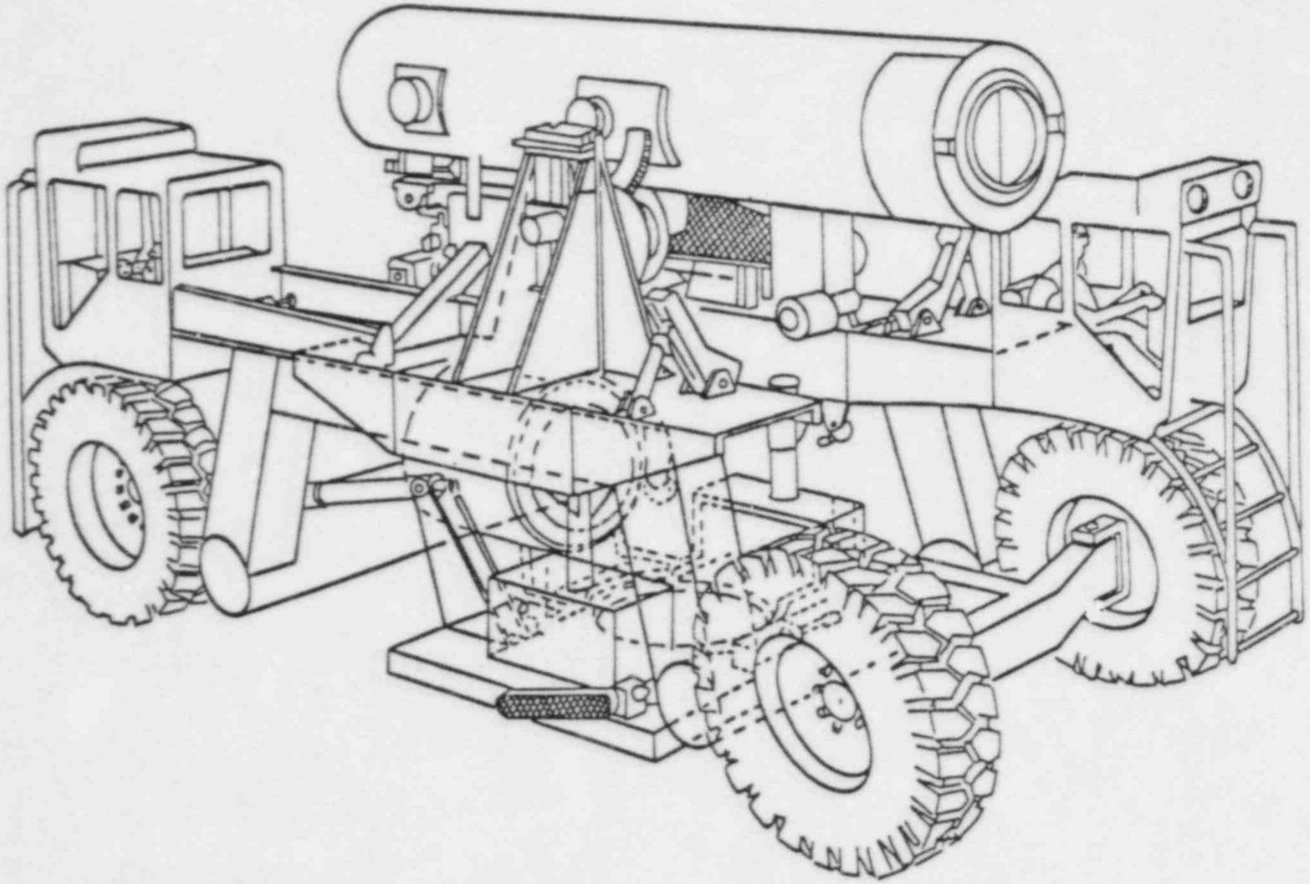

Figure 10.10.4 Transfer cask transporter.
(RHO-BWI-C-116)

is powered by a 300-HP diesel motor and has a net vehicle weight of 39 tons. The transporter has a track width of 8.5 ft, a wheel-base of 20.5 ft, and two operator cabs, one at each end, facing in opposite directions.

The order of operations for retrieval using the transporter after cooling, remining, and resupporting is:

- The floor shield is placed over the storage hole
- The plug housing is placed over the floor shield
- The doors in the floor shield are opened and the storage hole plug is removed and stored in the plug housing which is rotated away from the hole after the floor shield doors have again been closed
- The transfer cask is lowered into position over the floor shield
- The doors on the floor shield and transfer cask are opened
- The grapple in the transfer cask is lowered to engage the top of the waste package
- Waste package is hoisted into the transfer cask
- The transfer cask shield doors and the floor shield doors are closed and the transfer cask is lifted and rotated to the horizontal traveling position
- The plug housing is placed over the floor shield
- The door on the floor shield and plug housing are opened and the plug replaced in the hole
- The doors on the floor shield and plug housing are closed and the floor shield and plug housing moved to their traveling positions.

10.10.2 Retrieval Impacts on Repository Systems

As mentioned, the backfill and surrounding rock may be precooled by using cooling fluids circulating in boreholes or preplaced pipes. However, the canister will remain hot in the hole.

10.10.2.1 Excavation Systems

When panels are backfilled as soon as waste placement has been completed in the panel, canister retrieval requires mining the backfill. The factors which affect mining of the backfill include:

- Strength and density of the backfill
- The temperature of the backfill
- The probable occurrence of superheated water in the backfill
- The condition of the roof and roof support
- The depth of the canisters below the floor.

As retrieval can occur at any time up to decades after start of waste placement in the repository, the actual temperature encountered in the backfill at the time of retrieval depends on the number of years which have elapsed since waste was emplaced in the particular panel. The worst case would be full retrieval after 50 years with retrieval in the reverse order to emplacement. The last panel would be retrieved about 70 years after emplacement assuming retrieval requires the same length of time as emplacement. The maximum temperatures in a panel for basalt and assumed for tuff would occur about 50 to 70 years after emplacement (RHO-BWI-C-116, 1982). The high temperatures, which may approach 300 °F, may result in cementation and chemical alteration of the backfill. The compressive strength attained as a result of cementation is assumed not to exceed 1,500 psi, the strength of a weak concrete. As a result, mining of the unprecooled backfill could be performed using continuous miners or roadheaders. The two possible approaches for mining the backfill are:

- Full-face advance
- Pilot and slash.

Each option will be considered separately.

10.10.2.1.1 Full-Face Advance

A full-face advance has the advantage of access to the equipment for routine maintenance or repair because the heading as re-mined is larger than the equipment. Through careful mining, disturbance of stored canisters and existing roof support can be minimized. Drift dimensions are amenable to mining backfill with single head roadheaders emptying onto extensible conveyors. Roof scalers will be needed to clean roof and side walls of unmined backfill. Drift dimensions provide adequate clearance and should not inhibit equipment operations.

10.10.2.1.2 Pilot and Slash

A pilot drift can be advanced first either by continuous miner or a tunnel-boring-machine (TBM), assuming a pilot drift of 8 ft x 8 ft. When the pilot drift has holed through, the panel can be precooled to dissipate the bulk of the heat, until the second pass of backfill removal is practical. The pilot drift technique could use a TBM and associated rock handling equipment similar to that mentioned for full-face advance.

The pilot and slash method presents several disadvantages. Mining the pilot is a confined operation and encountered temperatures could be detrimental to equipment and personnel. Protective clothing will be required. Remote control mining may be the only alternate method. Another disadvantage is if the machine breaks down and must be repaired in place, accessibility is minimal and heat will impair maintenance and safety. Also, vapor or steam pressure, if present from backfill moisture, can create a hazard in pilot drift development. The second development pass would require another piece of equipment for optimum efficiency.

While remining, in order to avoid disturbing canisters, care must be taken to protect the shielding plug grapple knob which is flush with the floor level. Overmining only a few inches into the floor will damage grout, floor ring, and parts of the shield plug as shown in Figure 10.10.3. The potential for damage is greatly increased if floor heave has taken place.

To avoid damage, a saw cut may be advanced just over the canister row center line and ahead of remining. Material under the cut line but over the storage holes can be "dentally" excavated after advance of the roadheader or continuous miner.

10.10.2.2 Equipment Systems

10.10.2.2.1 Remote Control Systems

Remote control mine haulage systems have been placed in many applications throughout the world in recent years. Rail systems are more popular although truck trolley systems are being used with success (Sherritt Gordon Mines Ltd., Manitoba). For haulage, remote control is a feasible alternative, but for excavation, the technology is not fully developed and successfully implemented.

The pilot drift development would be in an environment where remote control systems could be beneficial because of heat and the possible presence of radionuclides. Personnel could operate equipment from safe areas, and productivity would be greater. The greatest disadvantage is unexpected machine repair. If the TBM were to break down while in place, the environment would prohibit repair except by remote control methods, or by personnel outfitted in climate-controlled suits. Remote control systems may be promising, but the present technology is deficient. Particular areas of concern are the guidance system to keep direction control, system dependability, operator visibility, and handling trailing cables (Gent et al., 1975).

10.10.2.2.2 High Temperature Concerns

Areas of concern in equipment systems are heat effects on hoses, cutting bits, fittings, and tires. The following limitations and equipment availability demonstrate the thermal effects on equipment:

- Carbide bits can withstand the anticipated rock temperature of 300°F
- The roadheader will likely need a transmission oil cooler to cope with high ambient temperatures
- Hydraulic hoses with elastomer tube, single wire braid reinforced and special covers are available to withstand temperatures of 300°F
- Steel fittings are available with special "O" ring seals for 300 to 400°F.

Tire considerations are more complex. The roadheader can be crawler-mounted, so tires problems apply to shuttle cars and roof scalers. Tire manufacturers state that the internal air temperature of the tire must be less than 234°F for safe operation regardless of the rubber compound or number of plys in ther tire construction. Internal temperature depends on load, time of travel, grade, speed, ambient temperature, and length of travel (Wallgard, 1978). The use of rubber-tired vehicles which will be in face areas for brief periods while loading, but will generally travel in well ventilated drifts requires detailed study

Rubber-tired equipment can be used for development mining and canister storage operations, but, because of heat limitations, may not be applicable for waste retrieval operations. Although the rock temperature is precooled to 125°F, the interior tire temperatures may be appreciably higher. These conditions suggest if canister emplacement and retrieval operations are to be done with the same equipment, a rail or crawler system may be necessary. Rail systems probably would not be practical due to road bed preparation and construction time. Rail haulage could be used to haul development rock to the shaft crusher and loading pocket. However, to maintain flexibility and to cope with the ambient heat problems, the use of crawler equipment would be best.

"Tires" as designed and used in the Apollo lunar landing program by the National Aeronautics and Space Administration for the "Lunar Rover" cars may be usable in the backfill remining environment. These tires consist of open metal interwoven laths that are as deformable as a rubber tire, but are heat-resistant.

10.10.2.2.3 Equipment for Retrieval

Provided canisters have not been breached, a crawler-mounted transporter used to emplace the waste can be used for retrieval, once the backfill has been removed, the room precooled and the roof resupported. The canister may be hot but its lifting and incorporation into the transporter should not provide any special difficulties.

Local retrieval of canisters may take place concurrently with storage operations. Unless new equipment is obtained for the task, the storage equipment will have to be used slowing the normal storage rate. Retrieval of breached canisters will require "hot cell" or shielded equipment along with decontamination equipment in the storage area. Transporting the canisters to the surface will require use of the crane (3), hoist (4), and surface handling facilities (5) as shown in Figure 10.10.5. These systems will be unable to perform their normal operation for handling canisters. A delay in repository storage activities will result.

Full retrieval of canisters can be planned systematically for a full storage room or full repository, starting with the oldest storage rooms. Because the same type of handling equipment will be used for the full retrieval operation, an operating schedule can be defined. If any canisters are breached, the retrieval will be more complex due to contamination. Special equipment will be used for the life of the breached canister retrieval operation. Generally, a repository committed to one operation at a time makes a much more efficient operation than if local retrieval is concurrent.

The transporter is about 8 ft wide, the storage panel is 14 ft wide, leaving 3 ft clearance to the rib on each side of the vehicle. Transporter travel is over the centrally placed row of holes, straddling them with the tires. The inside track of the vehicle is 6 ft, the holes to be straddled are 4 ft leaving 1 ft clearance on either side. Because the transporter is unlikely to follow a precisely straight and centered path, tires will at times run over floor rings and hole plugs. The pressure exerted by a transporter tire would be about 70 psi, and such events will do little damage to the holes.

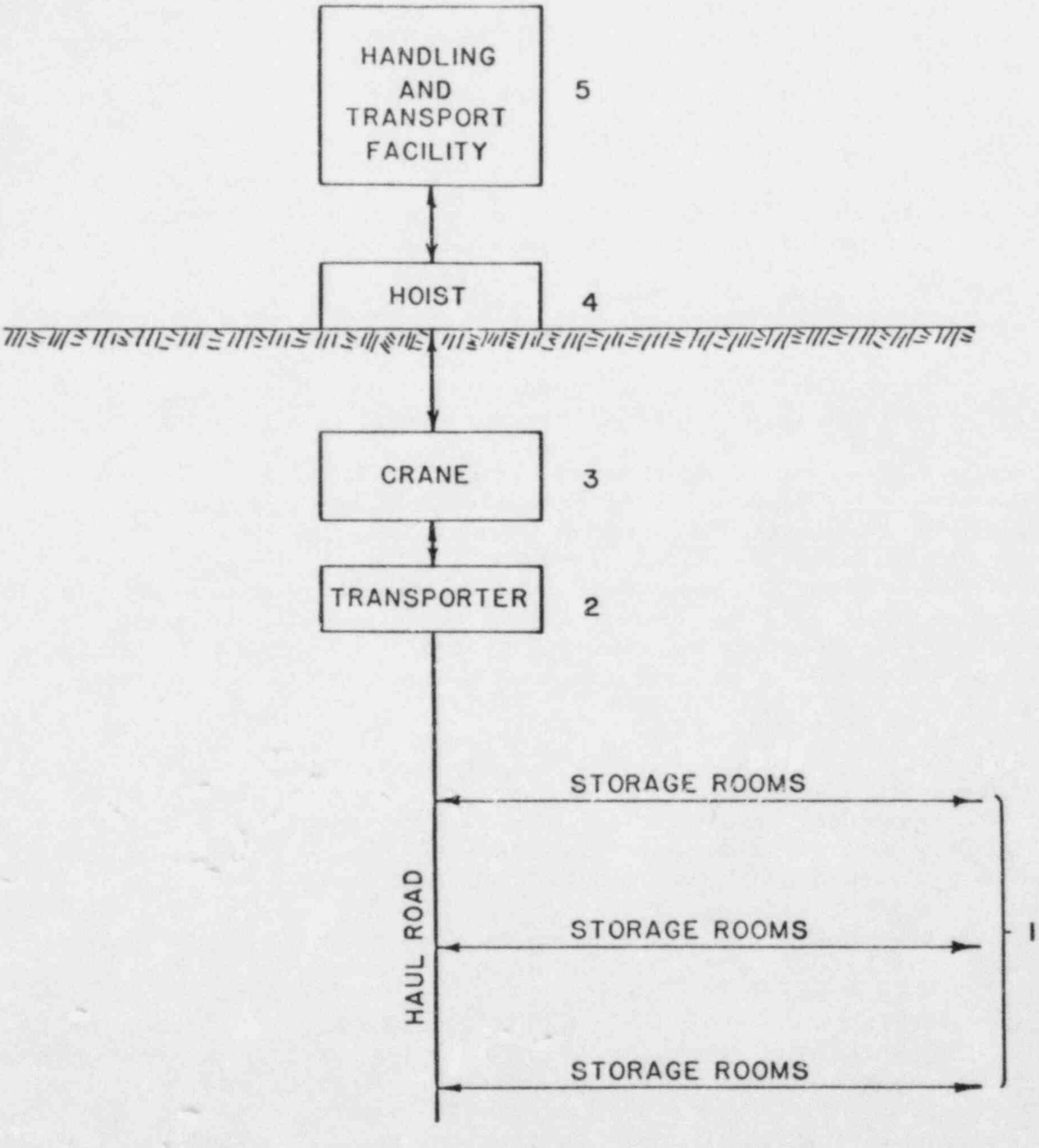

Figure 10.10.5 Schematic of waste handling operations.

The retrieval lifting operations may be difficult if the canister binds against the hole lining - a potential situation if any lateral rock movement has occurred. The fill in the hole lining can absorb some rock deformation and resulting side pressure, but the limits must be adequately identified through testing. Radial pressure on the canister will develop due to hole closure. The frictional resistance to pulling the canister will be a function of this radial pressure.

10.10.2.3 Facilities

The most important effects of the storage and retrieval concept on repository facilites are:

- The waste handling shaft will be required for hoisting transport casks containing retrieved canisters
- A system is required for disposal of the excavated backfill, especially if contaminated.

Assuming transport casks keep radiation levels within acceptable limits and that dispersal of radionuclides from breached canisters is prevented, the impact of hoisting casks containing retrieved canisters is minor. In the case of local retrieval while placement operations are still in progress, a cask containing a canister for placement is likely to be descending while a cask containing a retrieved canister is being hoisted. This hoisting process is fairly common practice in mine shafts where the conveyances are "balanced" cages.

Disposal of the excavated backfill represents a more difficult problem. If the backfill is contaminated, special handling and disposal procedures are required. Backfill that is not contaminated could be used in a panel in which storage is nearing completion (or has recently been completed) provided the heat has not caused detrimental chemical cementation of the backfill. If the excavated backfill is blocky as a result of thermal cementation, crushing will be necessary before reuse.

If the backfill is to be hoisted, the Tuff Handling Shaft must be used. The shaft will require ventilation by the confinement ventilation system while backfill is being hoisted. If repository development has been completed no problem results from hoisting the backfill. Because retrieval could be required before development has been completed, logistical problems regarding the shaft and the ventilation systems could result. Muck hoisting shafts are generally exhaust air systems, because hoisting muck is a dusty operation and no miners need travel in the dusty, warm, and polluted exhaust air. When hoisting excavated backfill, the tuff shaft would be a confinement exhaust shaft and would require a High Efficiency Particulate

Air (HEPA) filtration system in the event of radionuclide release. One option is to have the HEPA filtration system underground near the shafts rather than in the waste handling and confinement exhaust buildings.

10.10.2.4 Ventilation Requirements

As panels in which storage has been completed are backfilled, ventilation is required only in areas where operations are active. Thus airflow requirements are minimized. Storage, backfilling, remining, and local retrieval could, however, be required simultaneously . Assuming 25,000 cfm for the waste storage area, 8,000 cfm for precooling for storage, 41,000 cfm each for storage and backfilling operations, 30,000 cfm for remining 176,000 cfm for precooling prior to retrieval, and 15,000 for short-circuiting and recirculation, a total confinement airflow of 336,000 cfm will be required.

Retrieval operations would have to be carried out after the panel has been precooled because accurately positioning the transporter over the canister by remote control is not practical. The airflows necessary for retrieval are dependent on cooling requirements. The cooling requirements depend on the ambient temperature which is a function of the length of time since emplacement. Studies are required to predict the temperature in the backfill after 50 years of emplacement. The airflow of 176,000 cfm given above was based on a 50-day cooling period and temperatures given by Sandia Laboratories (SAND80-2639, 1981).

Once the backfill has been removed or boreholes or preplaced pipes cleared; and a path is available for ventilating air, precooling can begin. In the basalt design report (RHO-BWI-C-116, 1982), precooling is assumed to be carried out in a maximum of 9 days. This precooling time period is based on a literal interpretation of 10CFR60 which requires full retrieval in the same overall time period as construction and waste emplacement.

The desired temperature of air entering a panel should be low enough to pickup heat while passing through the room, yet not rise above a limit (106°F) which would endanger the workers' health in the case of an emergency. If the calculated rock temperatures are greater than those in the design report, the 176,000 cfm airflow estimate for precooling given previously may not be adequate.

If retrieval does not take place until after development has been completed, the mine ventilation system could be integrated with the confinement system. HEPA filters must be installed at the Tuff Handling Shaft in the mine exhaust circuit. Once the rock temperature has been determined, calculations are required to find the airflow necessary to cool the rock to 125°F in the planned precooling period using inlet air having a dry bulb temperature of 80°F.

10.10.2.5 Backfill

An assessment of the impacts of retrievability on backfill necessitates a discussion of fill material properties. The fill material assumed consists of a mixture of 50% crushed tuff, 40% ground bentonite, and 10% prilled bentonite. More than likely, the grain size distribution for crushed tuff will extend from a maximum of 3 in. to finer than the No. 200 sieve. Material properties which affect backfill performance and retrievability include:

- High water sorption capacity and swelling pressure
- Low hydraulic conductivity
- High thermal conductivity
- High chemical, physical, and mechanical stability
- High ion sorption and exchange potential.

The inherent structure of bentonite allows absorbtion of water and swelling to over 7 times its dry weight beyond which bentonite starts to flow. If bentonite is confined and no volumetric expansion is allowed, a maximum swelling pressure of 218 psi to 725 psi may develop, resulting in decrease in air voids in the backfill and low hydraulic conductivity. Confinement may be achieved by filling the rooms at a high bulk density (about 130 pcf) and subsequently sealing the rooms with bulkheads. The high placement density along with the inherently low permeability of bentonite would give the fill a hydraulic conductivity of 6.56×10^{-11} ft/s. This value is low enough for repository conditions.

The fill mixture probably exhibits a thermal conductivity of approximately 0.8 Btu/hr-ft-°F. The thermal conductivity is probably sufficient to restrict the temperature rise in a repository room. High temperatures tend to drive moisture away from bentonite in the form of vapor or steam, reducing the thermal conductivity. Under confinement, vapor pressures within the sealed rooms may be high enough to prevent steam formation. Steam will form once the bulkheads at room entrances are breached for remining, creating difficult conditions. Presence of a certain amount of water (8 to 10%) aids backfill performance, but adversely affects retrievability. Information supplied by Federal Bentonite suggests that bentonite structurally degrades beyond 1,117°F. The basalt CDR (RHO-BWI-C-116, 1982) indicates bentonite degrades at 212°F. Repository temperatures exceed the temperature limit in the basalt CDR but not the 1,117°F indicated by the manufacturer. Behavior of the bentonite at elevated temperatures is an area requiring further extensive evaluation. The actual performance of the backfill at elevated temperatures over a prolonged period of time cannot be determined without in situ testing.

Bentonite is considered to possess sufficient ion exchange capability to adsorb especially detrimental radionuclides. The most critical radionuclides with regard to radioactive pollution of the water supply, are cesium and strontium which can adequately be adsorbed by the bentonite.

Based on the above discussion, four scenarios of retrieval will be addressed in the following paragraphs to assess their impacts.

10.10.2.5.1 Retrieval at Start of Filling

Under unforeseen circumstances, retrieval may be necessary before backfilling operations in a room or panel are scheduled to start. No problems are seen with this case. Continuance of development and storage operations will depend upon the reason for retrieval and whether total or local retrieval is undertaken. In the case of local retrieval it will be necessary either to procure new machinery for retrieval must be procured, or the rate of placement must be curtailed to accommodate retrieval operations.

10.10.2.5.2 Retrieval While Backfilling is in Progress

In this scenario, backfilling operations continue approximately concurrently with storage for about 20 years and retrieval may be necessary at any time during that period. The difficulties encountered in full retrieval will depend on the extent of backfilling operations progress. If the retrieval decision is made in the early stages of filling, remining should prove relatively easy. The difficulties encountered in local retrieval will depend on the elapsed time since the room or panel was filled and the temperature of the rock and backfill.

Water which may be present in the fill may be released as steam due to the pressure drop when the bulkhead at a room entrance is breached. Whether the pressure release and steam formation will cause an outburst of fill material is not known. The accompanying dehydration result in breakdown of the fill into a powder thereby, adversely affecting remining efforts. The backfill and water can potentially be contaminated due to radionuclide leakage and require special handling.

10.10.2.5.3 Retrieval Immediately after Backfilling is Complete

If retrieval takes place immediately following backfill completion, the concerns mentioned in the previous subsection will be further accentuated by higher temperatures and larger quantities of unprecooled backfill to be handled. As mentioned earlier, steam release when the bulkheads are breached may cause outbursts and breakdown of fill.

10.10.2.5.4 Retrieval at the End of Retrieval Period

All of the concerns discussed earlier will be significantly increased after decades, yielding the worst retrieval conditions. The backfill is unlikely to become saturated with water within the 50 years. If saturation does occur, apart from steam release when the bulkhead is breached, the bentonite may be in the form of a thixotropic gel and may be prone to flow.

The backfill may be precooled prior to remining, but this is time consuming and the technologies are as yet undefined.

10.10.2.6 Thermal Effects

The thermal effects associated with nuclear waste disposal in an underground repository have significant impacts on the retrievability of the waste. Thermal effects can be divided into three distinct areas:

- Very-near-field effects which have the most direct impact on retrievability because elevated temperatures can lead to decrepitation of the borehole wall and binding of the canister

- Near-field effects which impact retrievability indirectly by increasing the potential for creating instability of the storage rooms

- Far-field effects which have minimal, if any, impact on retrievability because the stability of the entries and shafts would not, in general, be affected by the thermal loading.

The Mine Design Studies (MIDES) Working Group has completed a limited number of thermal analyses of a waste storage repository in tuff (SAND82-0170; SAND80-2813). Table 10.10.5 is based on these analyses and shows the predicted maximum rock temperatures at critical locations for a gross thermal loading (GTL) of 50 kW/acre. As no maximum temperature criteria have been defined for tuff, the predicted temperatures are compared with the BWIP basalt temperature criteria (RHO-BWI-C-116, RHO-BWI-CD-35).

The MIDES Working Group used the COYOTE and ADINAT computer codes in their analyses. Their results are based on the following assumptions:

- The rooms are open but not ventilated

Table 10.10.5 Maximum Predicted Temperatures for Tuff

LOCATION	MAXIMUM PREDICTED TEMPERATURE FOR TUFF[1] (°F)	BWIP MAXIMUM TEMPERATURE CRITERIA FOR BASALT (°F)
Rock at Canister	241	392[2]
Emplacement Room	189	212[3]

[1] Source - SAND82-0170. Assumes thermal loading of 50 kW/acre and that repository horizon is Bullfrog Member of Crater Flat Tuff

[2] Source - RHO-BWI-C-116

[3] Source - RHO-BWI-CD-35

- The repository horizon assumed by MIDES is the Bullfrog Member of the Crater Flat Tuff, at a depth of 2,624 ft (rather than the 1,200-ft-depth of the Topopah Spring Member)
- Initial rock temperature is 97°F
- The tuff is fully saturated with water
- No boiling of ground water is anticipated

At present, the DOE considers the Topopah Spring Member of the Paintbrush Tuff the most likely repository horizon. Temperatures in the Topopah Spring Member may be different from those calculated for the Bullfrog Member because:

- The Topopah Spring Member is not as deep as the Bullfrog Member, and therefore has a lower initial temperature
- The Topopah Spring Member has a lower thermal conductivity, which would tend to increase long-term temperatures
- The Topopah Spring Member is above the water table and unsaturated, which would also result in higher long-term temperatures.

When the actual repository horizon is chosen, further site specific thermal analyses will have to be performed. The temperatures shown in Table 10.10.5 may be taken as an approximation of the temperatures that may be experienced at the time of retrieval.

The repository temperatures shown in Table 10.10.5 were predicted for unbackfilled, unventilated room. According to the same study (SAND81-2813), the storage room temperatures rise 9°F beyond the peak temperatures shown when the rooms are backfilled 50 years after waste emplacement. With the rooms backfilled immediately following emplacement, the peak temperatures could possibly be even greater. Further thermal simulations should be performed to predict expected repository temperature during retrieval.

The probability of borehole decrepitation increases with the expectation of higher room temperatures. The borehole liner described in the BWIP CDR (RHO-BWI-C-116, 1982) should be sufficient to protect the canister and facilitate retrieval.

Room stability may also be induced by higher thermal stresses, necessitating, either additional rock support or a reduction in the gross thermal loading. The backfill may serve as a partial support of the roof and sidewalls, and the interactions of the backfill with the opening will be investigated further in the upcoming conceptual design report.

Thermal effects on the shafts and main entries will be insignificant because the shafts and entries will be remote from the waste emplacement panels. Continuous ventilation through the shafts and entries will maintain their temperatures well within the assumed temperature criteria.

10.10.2.7 Requirements for Special Equipment for High Temperature and Radioactive Environment

Precooling of the backfill by circulating cooling fluids in boreholes or pre-placed may be done, but is time-consuming and the technologies as yet undefined. However, the canister will not be effectively cooled by this method and will remain hot for some time.

The lack of ventilation due to backfilling of the storage rooms will cause heat buildups over the storage period and compound the difficulty of unprecooled backfill mining. As discussed in Section 10.10.2.2 full remote control systems would be a viable alternative except the technology has not been fully developed or successfully implemented.

Successful application of semi-remote control excavation systems such as longwall shearers and continuous miners for underground coal mines has been demonstrated. In these cases, a cable or radio-remote control system places the machine operator about 25 ft away from the machine. Such systems have not been developed for the hard rock industry.

Semi-remote systems may be feasible for mining the backfill if programed for the particular excavating equipment. The operator can be in the confinement intake and upstream of the machine. However, heat could still be a problem because the rooms are 3,600-ft long.

An inherent problem associated with full-remote or semi-remote systems is maintaining accurate vertical and horizontal control. In coal mining applications "sensitized" picks have been used to differentiate between the coal seam and the strata overlying and underlying the coal seam to maintain vertical control. For the proposed repository concept, differentiation between backfill and intact rock will be difficult limiting the therefore use of the sensitized pick concept control. Consequently, canister breaching is a distinct possibility and would require decontamination chambers for affected equipment and personnel.

10.10.2.8 Ground Support

The Q-system (Barton, Lien, and Lunde, 1974) has been used to determine ground support requirement in the repository. Strength values of the rock mass discussed under Section 10.10.1.1.3, "Rock Mechanics

Properties" indicate a Q-value of 85. Based on this value, storage room cross-sections under consideration, and thermal considerations the support system was determined as detailed in 10.10.1.3. Because data base for the Q-System does not include high temperature operating conditions, a support system consisting of untensioned cement-grouted rock bolts spaced 8-ft to 10-ft apart and 4-in. nomimal thickness of shotcrete has been assumed.

Over a decades-long period some deterioration of the rock reinforcement system will occur. Because rooms are backfilled, no repairs can be effected until the backfill is removed and the room precooled. Falls could occur before the support can be rehabilitated. Some thermal spalling is expected during precooling. A Load-Haul-Dump vehicle and a roof bolting jumbo are required for resupport.

Despite the Topopah Spring Member lying above the water table, some ground water is likely to enter the repository during the operating period. This water may be expected to escape as steam when the bulkheads are breached for retrieval.

10.10.2.9 Instrumentation

The performance of the repository has to be monitored to ensure the safety criteria are not violated and the isolation capacity is maintained. The retrievability option mandates significant changes in selected parameters or deviations from expected behavior be detected. When they occur, steps must be taken to correct the problem or retrieve the waste to the surface. Categories requiring monitoring are:

- Hydrogeologic - water inflow
- Thermal - heat buildup
- Mechanical - stress buildup, rock deformations, and rock instability
- Radiological - activity levels.

A monitoring program of subsurface conditions is limited by the bulkheads and backfill. Most monitoring will be made by remote sensing measurements. Visual inspection and "hands-on" measurements are preferable to remote monitoring because instrumentation available at present is not reliable for periods in excess of about a decade, especially under the thermal conditions associated with the repository rooms. As a result, an experimental panel will be provided in the repository in which extensive verification and confidence testing for the remote sensing equipment will be performed. The panel will also provide an opportunity to study the reliability of instrumentation.

Thermal monitoring will primarily consist of thermocouples embedded in boreholes placed at intervals along storage rooms. Thermocouple signals will be collected at several locations outside the storage room and relayed to a central control console to detect abnormalities.

Hydrogeologic monitoring will consist of measuring the pressure of water near the storage rooms, in various accesses, and in tuff flows. High-precision, durable, pressure transducers will be placed between packers in boreholes.

The convergence of preestablished points in accessways will be measured. At a few selected locations in the main entries detailed evaluation of rock stability will be made using stressmeters and multiple position borehole extensometers.

Ventilation conditions in the repository will be monitored to detect radiation levels, fire and smoke emergencies, as well as ventilation blockages caused by rockfalls. Mobile radiation and thermal sensors in ventilation airways will permit continuous monitoring from a main surface control console. Flow direction, pressure, differential pressure, and temperature will be monitored.

The retrievability requirement mandates monitoring of the repository for decades after initial waste placement. The following steps need to be taken to ensure the reliability of instrumentation placed in the repository:

- Develop stress meters, multiple position borehole extensometers, piezometers, thermocouples, and ventilation instrumentation that will maintain accuracy in the hot and humid environment expected in a repository

- Provide extensive verification of the instrument reliability in the repository experimental panel

- Ensure that repository inspection at predetermined intervals can be performed by robots or by personnel in air-conditioned suits or vehicles.

10.10.3 Adequacy of Incorporated Retrieval Systems or Allowances

10.10.3.1 Local Retrieval

Local retrieval may be necessary for quality assurance, quality control, or due to a detected or suspected radionuclide release. A manufacturing error, for example, could have caused premature breakdown of overpacking for some canisters in a storage room. Rooms that have been adequately remined allow using the same equipment for emplacement and retrieval procedures. Most likely the canister transporter and "hot cell" equipment will be necessary. Local retrieval involves recovering one or more canisters in a storage room, and traveling to the designated canister means approaching very near or running over adjacent canisters. The concern is discussed in detail in Section 10.10.2.2.3.

Local retrieval will encompass four main phases: remining, precooling, resupport, and canister retrieval. Remining begins with removing the bulkhead. A drilling jumbo and Load-Haul-Dump unit will be required to remove the bulkhead and debris. To remine the unprecooled backfill requires high temperature remote-control equipment. The remining can be by full-face advance, pilot and slash, or hydraulic methods. Handling the hot backfill is within current technology but imposes an additional load on the material handling system. Present technology does not encompass adequate equipment to perform the remining under repository thermal conditions. Precooling rooms after remining hot backfill requires an increase in the confinement ventilation capacity compared to that for storage and backfilling only. Rock bolters and scalers will be required to resupport the roof prior to canister retrieval. "Hot cell" equipment may be required for handling breached canisters. Interfaces in the shaft area will delay storage operations during local canister retrieval.

No equipment has presently been designed to overcore a 48-in.-diameter hole in repository environments. Overcoring will be necessary if the canister to be retrieved has broken. Retrieval equipment including bolters and scalers should be crawler-mounted to withstand the elevated temperatures. Even with incorporation of equipment to breach the bulkhead, to support the roof and withstand the elevated temperature, the retrieval system for intact canister is inadequate due to a lack of present technology with regard to remining backfill by remote control at high temperatures. Retrieval of broken canisters by overcoring also requires further development to assure retrievability.

10.10.3.2 Full Retrieval

Precooling of the backfill by circulating cooling fluids in boreholes or pre-placed pipes may be done, but is time-consuming and the technologies as yet undefined. However, the canister will not be effectively cooled by this method and will remain hot for some time.

Full retrieval of waste canisters will need planning and preparation. Full retrieval planning is facilitated because all repository resources can be committed to the operation. Underground storage may prove unsatisfactory, leading to repository abandonment. Full retrieval will require special equipment if the reasons for retrieval interfere, such as excessive rock movement crushing canisters, or rapid deterioration of rock causing need for roof support and scaling equipment.

Full retrieval expands the scope of the problems and facilities detailed for local retrieval. Equipment for breaching the bulkheads and resupporting the roof will be incorporated. The present technology lacks equipment capable of remining the backfill at high temperature by remote control. Handling and storage of the remined backfill during full retrieval requires a separate materials handling system, room for storage, and possibly hoisting facilities. Clearance and alignment difficulties are expected for the mining, material handling and retrieval equipment. "Hot cells" must be incorporated to handle contaminated canisters and equipment. Retrieval of a breached or broken canister requires overcoring equipment which requires development. As in local retrieval, equipment working in the rooms for extended periods must be crawler-mounted. Even by including proper equipment for bulkhead removal, backfill handling and storage, and roof resupport, the retrieval systems are inadequate due to a lack of high temperature remote control mining equipment in present technology. Development of this specialized mining technique and of a large diameter overcoring transporter are required to make the incorporated systems adequate for full retrieval.

10.10.4 Concerns

10.10.4.1 Technological Concerns

Precooling of heated rock masses by circulating fluids has not been demonstrated. Freezing soil for excavation and heating roadways for ice removal are not similar in that the high initial temperatures are not present.

As discussed in Section 10.10.2.1, backfill may require remining in a high temperature environment. Because of the heat as well as potential radionuclide release and safety operational problems, this mining is best carried out by remote control. No truly remote control mining systems exist. Remote control haulage systems exist using unit trains operating on closed-circuit track. Mucking units have been developed that are controlled by radio commands from an operator located a short distance away within sight of the unit. U. S. Bureau of Mines sponsored research into the feasibility of remote control mining equipment has indicated much work remains to be done and satisfactory systems have not been developed.

Alternatively, one could consider hydraulic mining of the fill in a manner similar to the systems employed in some coal mines in Canada, USSR, and Japan. A problem with the hydraulic method, however, is that the fill will contain bentonite which absorbs water. Use of very large quantities of water might cause the bentonite to flow. Testing is required in order to determine if the method could be effective. In addition, existing systems are not truly remote because the operator is within 100 ft of the face.

Another problem area is the effect of the hot environment on the materials used for ground support. As discussed in Section 10.10.1.3, grouted bolts and shotcrete have been proposed for the ground support. While polyester resin is commonly used to grout bolts, the expected repository temperatures exceed the maximum service temperature of resin grout. Use of cement mixtures in the shotcrete and grouted bolts that minimize heat effects (Section 10.10.1.3) should ensure that the support systems will be effective under repository conditions.

10.10.4.2 Safety Concerns

Remining of the fill will expose the roof and allow any weakened areas to fall. If the falls occur near the face, remining equipment could be damaged. Rockfalls could be minimized by mining a pilot heading and then rehabilitating the support, as required, before removing the remainder of the fill.

Rockfalls are possible because the effectiveness of grouted bolt and shotcrete support systems for decades is not known. Such systems have only been in common use for about 25 years. Because the rooms are backfilled, the support cannot be inspected. If deterioration has occurred, repairs using bolters and scalers cannot be made until the backfill has been removed and the room has been precooled. As previously stated, falls could occur before the roof can be rehabilitated. During precooling some thermal spalling is likely. During the bulkhead removal, steam previously trapped inside the room may escape, presenting a safety hazard to the personnel and equipment removing the bulkhead.

10.10.4.3 Radionuclide Release Concerns

One of the possible reasons for retrieval is failure of the waste package, with consequent release of radionuclides. Gaseous and volatile radionuclides may be released into the emplacement hole while soluble radionuclides may be carried away by any water present in the emplacement hole. Removal by aqueous solution, requires the presence of water in liquid form; that is, its temperature must be less than the boiling point for the repository pressure conditions.

10.10.4.3.1 Releases into Air

The gaseous and volatile isotopes which could be released by a breached canister are hydrogen-3 (tritium), carbon-14, and krypton -85. The quantity of krypton-85 is large compared with that of either tritium or carbon-14. In addition, the carbon-14 must be in a form that leads to volatile species upon reaction with water in order to be of concern. One-tenth of the krypton-85 is assumed to be sufficiently near an exposed surface to be able to leave the fuel. If a breach occurs, the concentration of krypton-85 and tritium in air must not exceed 10 nCi/liter and 5 nCi/liter, respectively, in order to satisfy 10CFR20. (The EPA limits are defined in metric units. The equivalent limits in customary units, for reference, are 0.35 nCi/ft^3 and 0.18 nCi/ft^3, respectively.)

If storage hole plugs are gas-tight, release of gaseous radionuclides from a breached waste package will occur at retrieval. Otherwise, the radionuclides will leak through the plug into the backfill pore spaces. Radionuclides contained in the pore spaces would be liberated as the backfill is removed. Because the quantities of air provided for remining are limited to what can be supplied in a duct, the airflow into which the gases would be release would likely be less than 50,000 cfm, and dilution of the radionuclides to the maximum permissible concentrations (MPCs) given in 10CFR20 could require up to several hours. During this time, personnel should not be present.

Release occurring at retrieval can be avoided by having radiation sensors in the holes. The gaseous radionuclides could then be drawn off prior to retrieval using millipore filters or a cryogenic absorption system, both of which fall within existing technology. Where the radionuclides are in the backfill, warning of their locations cannot be provided. Therefore, as a precaution remining should be by remote-control or semi-remote control if sufficient shielding for the operator can be provided within view of the face.

10.10.4.3.2 Releases into Water

The movement of radionuclides by aqueous transport, requires the water be in the liquid state. At a pressure of 520 psi, the boiling point of water is about 450°F, and because the rock and backfill temperatures will be 300°F or less, the pore water will be in liquid form within the backfill. Upon remining, pressures are reduced to atmospheric and the water vaporizes.

If water contacts a breached canister, the rate of dissolution would vary widely with the water composition and temperature. For a typical rate of 0.0000264 lb/day, the solution water would contain about 0.25 mCi/lb of water and one pound of this solution would generate about 0.1 mR/hr at 4 ft. Pore spaces in the backfill would also contain small amounts of gaseous radionuclides which would be liberated upon mining. Water intrusion would provide a good index to failures but alone would not introduce significant radiation hazards to the operations (Post, 1982).

10.10.4.3.3 Radiation Detection Standards

The radiation levels measured during retrieval operations are not exceptional and the detection system standards used in the nuclear industry would prevail. A lower limit of 0.1 mR/hr and an upper limit of a few kR/hr would be adequate. A system to detect radioactive krypton in the storage holes will be required. This system should be capable of detecting krypton-85 levels below 100 pCi/liter (2.6 pCi/ft^3).

10.10.4.4 Operations Concerns

Retrieval of breached canisters will require either transfer casks equipped with internal shielded sleeves or "hot cell" equipment. Because detection of breached canister will not be practicable prior to attempting retrieval, shielded equipment should be used for all retrieval. In the case of canisters which have split into more than one piece, overcoring the hole would be the most practical method of retrieval. Overcoring will require the room to be at least 22 ft high in order to provide sufficient clearance.

To cool the rooms from about 300°F to 125°F will require high capacity cooling units, which occupy a large space. The units will limit the free clearance at the room entries. Also, cooling units have a finite life and become less efficient with time.

Precise positioning of the transporter over the holes will be difficult. Positioning would be simplified if transporters were rail mounted.

The coordination of backfill handling during retrieval will likely impose an operations problem on the material handling system. The backfill will require a storage location after remining or prior to replacement. Contaminated backfill will require special handling to avoid contamination of the usual material handling system.

10.10.4.5 Other Concerns

A fundamental Concerns related to a repository in tuff concerns the geologic/hydrogeologic uncertainty at the repository horizon. Among the concerns are the uniformity in thickness of the tuff flow, the uniformity of the jointing, the occurrence of faults, and the vertical and horizontal hydraulic conductivities. Exploratory programs being planned (1983) by DOE are intended to obtain as much in situ data as possible prior to License Application.

Another concern is the mechanism for and probability of canister breach. One possible mechanism is corrosion. The rate of corrosion will depend on the ground water. Another possible mechanism is attempted retrieval of a canister upon which the hole has closed. Assuming a canister has been breached, the level of radioactivity must be monitored and the activities of critical radionuclides, especially those that are very abundant (cesium and strontium) and gaseous (krypton, tritum, and iodine) must be predicted at various times up to 50 years after emplacement.

While not directly related to retrievability, the method of backfill placement postulated in RHO-BWI-C-116 has a number of problems, especially the means of placing fill in the top 10 ft of the heading. A more practical method than the method proposed would be to backfill the whole cross section pneumatically. A suitable pneumatic filling system would have the following characteristics:

- Capacity: 180 tph
- Maximum horizontal distance: 2,000 ft
- Blower horsepower: 710 HP
- Operating pressure: 13 psig
- Pipe diameter: 14 in. inside diameter
- Maximum material size: Passing a standard 3 in. seive
- Solids loading ratio: 7 lb solids/lb air.

The quality of the backfill in all cases of retrieval will have a direct effect on the retrieval systems.

10.10.5 Summary and Conclusions

The repository is located at a depth of 1,200 ft in the Topopah Spring Member tuff at the Nevada Test Site. The repository will consist of 22 panels divided by a central pillar into two areas having 12 and 10 panels, respectively. Each panel is divided into six rooms (14-ft-wide, 20-ft-high and 3,572-ft-long) and joined by crosscuts at 890-ft-centers.

The waste packages, that consist of the carbon steel spent fuel canisters, graphite filler, and titanium overpack are placed in 4-ft-diameter sleeved holes, 12-ft on center in the floor of the rooms along the centerline. Based on a heat load of 1.74 kW/canister at the time of placement, the panel thermal load is 51.6 kW/acre. Backfill is placed in the rooms upon completion of storage in the room. Bulkheads are placed at the ends of the room to contain the backfill.

The retrievability requirement affects the repository systems as follows:

- Re-excavation system - The unprecooled backfill will require mining by either a full-face advance or a pilot and slash method, and either excavation method may require remote or semi-remote equipment as a result of the high temperatures and limited available ventilation

- Equipment systems - Haulage systems during remining on unprecooled backfill will need to be remote controlled. Due to the elevated temperatures specialized equipment, including carbide bits, oil coolers, hydraulic hoses, and steel fittings will be required. Equipment working at or near the face will need to be crawler-mounted because the high temperatures will cause rubber tires to rapidly deteriorate. Even with precooling, rock contact temperatures will require crawler- mounted equipment for retrieval

- Facilities - Retrieval will result in the waste handling shaft being used to hoist transport casks. A separate materials handling system is required for disposal of excavated backfill. Special system requirements are necessary if the backfill is contaminated. The tuff handling shaft may be used to hoist backfill and would require a HEPA filtration system to prevent radionuclide release

- Ventilation Requirements - The ventilation airflows during retrieval are a function of the ambient rock temperature, the time since waste placement, and the required precooling temperature. Depending on these parameters, the design flow for precooling of 144,000 cfm may be inadequate

- Backfill - The condition of the unprecooled backfill during retrieval is a function of the elapsed time and the backfill composition. The retrieval operation may encounter steam and unstable backfill depending on the hydrogeologic and thermal conditions. The backfill during retrieval will require material handling systems and an evaluation of the quality of the material for reuse or disposal due to contamination. Breached canister retrieval imposes additional requirements for the equipment systems, facilities system and the backfill handling system.

The concerns for the repository concept are summarized as follows:

- Technological concerns:

  - Development and implementation of remote control mining systems

  - Adequacy of the rock support system over a period of decades

  - Adequacy of existing equipment to retrieve breached canisters

  - Development and implementaion of a precooling system that does not limit isolation or lead to untimely retrieval

- Safety concerns:

  - Rockfalls during remining as a result of deterioration of the roof support system

  - Thermal spalling during precooling

  - Steam release upon breach of bulkheads

  - High temperature conditions during mechanical repairs to remote control equipment

- Radionuclide release concerns:

  - Canister breaches would result in release of gaseous hydrogen-3 (tritium) and krypton-85, and volatile carbon-14, of which the krypton-85 would have the largest concentration

  - Diluting krypton-85 to the MPC given by 10CFR20 could take up to several hours for release from a single breached waste package

  - The mechanisms for release of gaseous radionuclides from the storage hole to the atmosphere could be non-gas-tight hole plugs, streaming through the floor shield at retrieval and a gaseous transport (if hole liners corrode)

  - A system is required for detection of krypton in ventilating air and in storage holes

- Operational concerns:

  - Detection and retrieval by overcoring of a breached canister

  - Small alignment tolerances requiring precise positioning of the transporter

  - Larger capacity heat exchangers limiting space in the room entrances

  - Coordination of backfill handling and storage.

- Other concerns:

  - Geologic and hydrogeologic uncertainties

  - Undetermined probabilities and mechanisms for canister breach

  - Methods and details of backfill placement, especially in the upper 10 ft of a room

  - Unknown backfill quality over the repository retrieval period affects all retrieval systems.

The development and placement concepts for the repository have been sufficiently detailed in the various DOE documents. The backfill type and placement method lack adequate definition. The backfill presence and quality have a significant effect on the waste retrieval. The details of placement and quality will define the methods and hazards of remining. DOE has not suggested precooling the heated backfill to aid remining. The equipment used to mine the unprecooled backfill needs further definition. Present technologies do not encompass equipment capable of remote control mining the unprecooled backfill at the temperatures expected in the repository. Further definition and confirmation is required in the areas of geology and hydrogeology, long term adequacy of roof support, detecting and retrieving breached canisters, and the probabilities and mechanisms for breach. The problems involved in mining and handling the backfill prevent the repository concept from meeting the retrievability requirements of 10CFR60. In order to meet the requirements, considerable development work in precooling backfill or remote control mining is required.

10.11 Tuff Repository with Horizontal Hole Storage, Continuous Room Ventilation, and Permanent Closure Backfilling

10.11.1 Basic Information

The eleventh repository concept is in tuff with horizontal storage holes in the pillars between rooms, continuous room ventilation after emplacement, and backfilling at permanent closure. This concept does not specifically appear in any DOE design but has been hybridized from several designs and EI projections in order to assess retrievability of a viable overall system.

10.11.1.1 Definition of Repository Concept

The host geologic medium is tuff. Waste packages will be placed in 24-in.-diameter drill holes in the pillars between rooms with six canisters per hole. The rooms will not be backfilled until repository permanent closure but will remain open and ventilated.

This concept is similar to the Preconceptual Design Report, for basalt, hereafter referred to as CD-35 (RHO-BWI-CD-35) except for the following features:

- The panels where waste storage has been completed will be open and ventilated rather than backfilled and bulkheaded
- The concept will require a confinement circuit airflow of about 12 million cfm, larger confinement entries and returns, and more and larger shafts than those described in CD-35.

The emplaced canisters emit heat which results in thermal loading in a panel of 150 kW/acre or 50 kW/acre for the entire repository area.

10.11.1.2 Geologic Environment

10.11.1.2.1 Rock Units

The proposed repository emplacement horizons are in the bedded tuff rocks of Yucca Mountain located adjacent to the southwestern portion of the Nevada Test Site. Of the several tuffaceous rock units present at Yucca Mountain, the Topopah Spring Member of the Paintbrush Tuff Formation is the leading candidate horizon. The majority of available information is based on data from boreholes USW-G1, UE25a-1, and J-13 (SAND80-1464, OF81-1349).

The lower contact of the Topopah Spring Member lies about 1,200 ft deep. The Topopah Spring Member has an ashbed within the interior and several ashflow units which range from non-welded to vitrophyric. A thin ashfall/reworked tuff section is present at the base of the member. The lower portion of the member is slightly zeolitized and only partially welded. The vitrophyre is unaltered, tightly compacted, and welded. In some areas, the vitrophyre contains abundant calcite veinlets and about 7% to 30% phenocrysts. Fractures in the vitrophyre are cemented; however, the nature of cementing material is undescribed. All rock above the vitrophyre is densely welded and extensively fractured. Clay gouge is found along some of the fractures.

Volcanic rocks of this sequence generally dip towards the east and southeast at angles less than 10°. Dip reversals occur locally and may assume values up to 20° in the vicinity of faults. Several confirmed and inferred faults bound most of the mountain block around the proposed repository site. Faults are generally normal, dip at approximately 60°, and strike north-south. Several hundred joints were identified from cores of Borehole USW-G1 and nearly half of these joints occur in the Topopah Springs Member core. A majority of the joints shows a near vertical trend (70° to 90°). Shear fractures occur predominantly within the extensive densely welded zone of the Topopah Spring Member.

The Yucca Mountain area tends to be aseismic, however, an earthquake of Richter magnitude 1.7 occurred below sea level under Yucca Mountain in 1981 and another single earthquake of unknown magnitude and depth was recorded east of Yucca Mountain during the same year.

10.11.1.2.2 Hydrogeology

Hydrogeologic studies for the Yucca Mountain area are part of the ongoing (1983) work of the Department of Energy. Very limited data were available at the time of this present study. The regional groundwater flow trend is from the northwest to the southeast across Yucca Mountain with a low horizontal gradient and almost no vertical gradient. The water table in this area is about 2,000 ft below the land surface, and a regionally uniform position of water levels seems to exist.

The Topopah Springs Member lies well above the regional water table and is therefore unsaturated. Ground water flow through this member is generally controlled by structural features. In the densely-welded portions of the ashflow tuff, water flow is controlled by primary (cooling) and secondary joints. The hydraulic conductivity ranges from 15 to 15,000 ft/day, however, intercrystalline permeability and porosity are neglible. The unwelded part of this member exhibits a relatively higher porosity (35% to 50%) and a modest hydraulic conductivity (0.25 ft/day) and may act as a leaky aquitard.

10.11.1.2.3 Rock Mechanics Properties

Rock mechanics properties of tuff rocks of the Topopah Spring Member are based on limited laboratory testing of intact rock specimens and discontinuities, and in situ data are almost non-existent (1983). Available data are presented in Table 10.11.1, along with reference sources. Generalized mechanical properties of intact rocks and joints reported by SAND81-0629, shown in Tables 10.11.2 and 10.11.3, were used to determine the thermomechanical behavior of the Topopah Spring Member in a repository environment. Recent laboratory studies (SAND82-1723) indicate that the mean unconfined compressive strength of the Topopah Spring Member is about 13,900 psi. Tests on water-saturated specimens were performed at room temperature at 14.5 psi confining pressure. The compressive strength so determined is lower than that reported by SAND80-1455. This strength reduction appears to result from the significant effect of water on tuffs. However, since the Topopah Spring Member lies above the water table (and is, therefore, unsaturated) and will experience temperature levels above 212°F (on the room scale), it is reasonable to assume a compressive strength of 16,000 psi (30% strength reduction from 22,300 psi, SAND80-1455). This compressive strength value was used to determine ground support requirement for repository construction in the Topopah Spring Member.

10.11.1.3 Repository Construction and Layout

As shown in Figure 10.11.1, the assumed repository will contain 23 storage panels, an experimental area, and a panel for storage of Low Level Waste (LLW) waste. Each panel (Figure 10.11.2) contains 30 storage areas driven perpendicular to a central panel access. Each storage area consists of a storage room with reaming rooms on either side. Each storage area holds 750 canisters within 125 boreholes, 174 ft long. The rooms are 575 ft long. The pillar surrounding each panel will be 164 ft thick between panels and 656 ft thick between the panel openings and the lateral access and return entries. Access to the panels is by main entries at either end (intakes at one end, returns at the other) which connect the storage panels with 5 shafts to the surface. Entries and rooms will be driven by drill-and-blast methods. Dimensions of the various facilities are given in Table 10.11.4. Because of ventilation requirements for an open repository, an extra ventilation shaft is required in addition to those detailed in the assumed CD-35.

Table 10.11.1 Summarized Mechanical Properties of the Topopah Spring Member

TEST CONDITIONS	COMPRESSIVE STRENGTH	COHESION (C)	ANGLE OF INTERNAL FRICTION	POISSON'S RATIO	AVERAGE POROSITY (%)
Intact Rock at room temperature (73°F)	22,800 psi[a]	2,540 psi[a]	67°[a]	0.23 (at 1,450 psi confining pressure)	9.4%[a]
Intact Rock at elevated temperature (392°F)	22,300 psi[b]	-	-	0.15[a]	11.3%[a]
Rock Joint at room temperature (73°F) (unspecified rock formations)			31.8° to 33.4°[c] (dry) 33.8° to 36.5° (saturated)		

[a] SAND80-1455

[b] SAND81-0629

[c] Olsson & Teufel (1980)

Table 10.11.2 Mechanical Properties of Intact Rock
Johnson (1981)

	TEMPERATURE				
PROPERTY	68°F	212°F	212°F	1,832°F	UNITS
Young's Modulus	2.9×10^6	2.9×10^6	2.9×10^6	2.9×10^6	psi
Poisson's Ratio	0.25	0.25	0.25	0.25	--
Shear Modulus	1.16×10^6	1.16×10^6	1.16×10^6	1.16×10^6	psi
Coefficient of Thermal Expansion	4.17×10^{-6}	4.17×10^{-6}	5.72×10^{-6}	5.72×10^{-6}	$°F^{-1}$
Angle of Internal Friction	42.9°	42.9°	42.9°	42.9°	Degrees
Cohesion	1230	1230	1230	1230	psi

Table 10.11.3 Mechanical Properties of Joints
(Johnson 1981)

	TEMPERATURE				
PROPERTY	68°F	211.98°F	212.02°F	1,832°F	UNITS
Angle of Internal Friction	35°	35°	35°	35°	Degrees
Cohesion	1.45	1.45	1.45	1.45	psi
Joint Angle (with respect to drill core axis)	90°	90°	90°	90°	Degrees

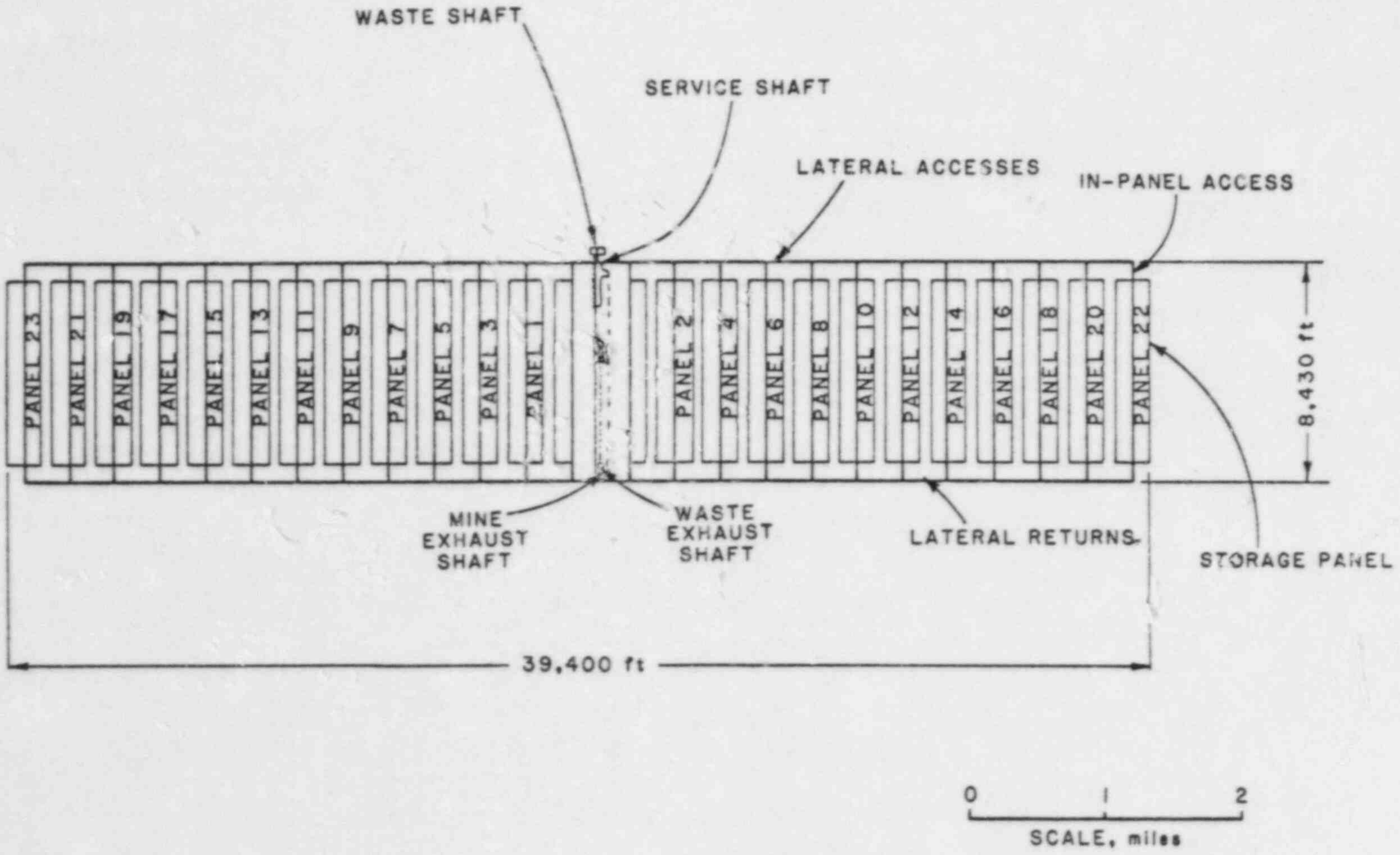

Figure 10.11-1 Layout for repository employing horizontal holes for canister storage. (RHO-BWI-CD-35)

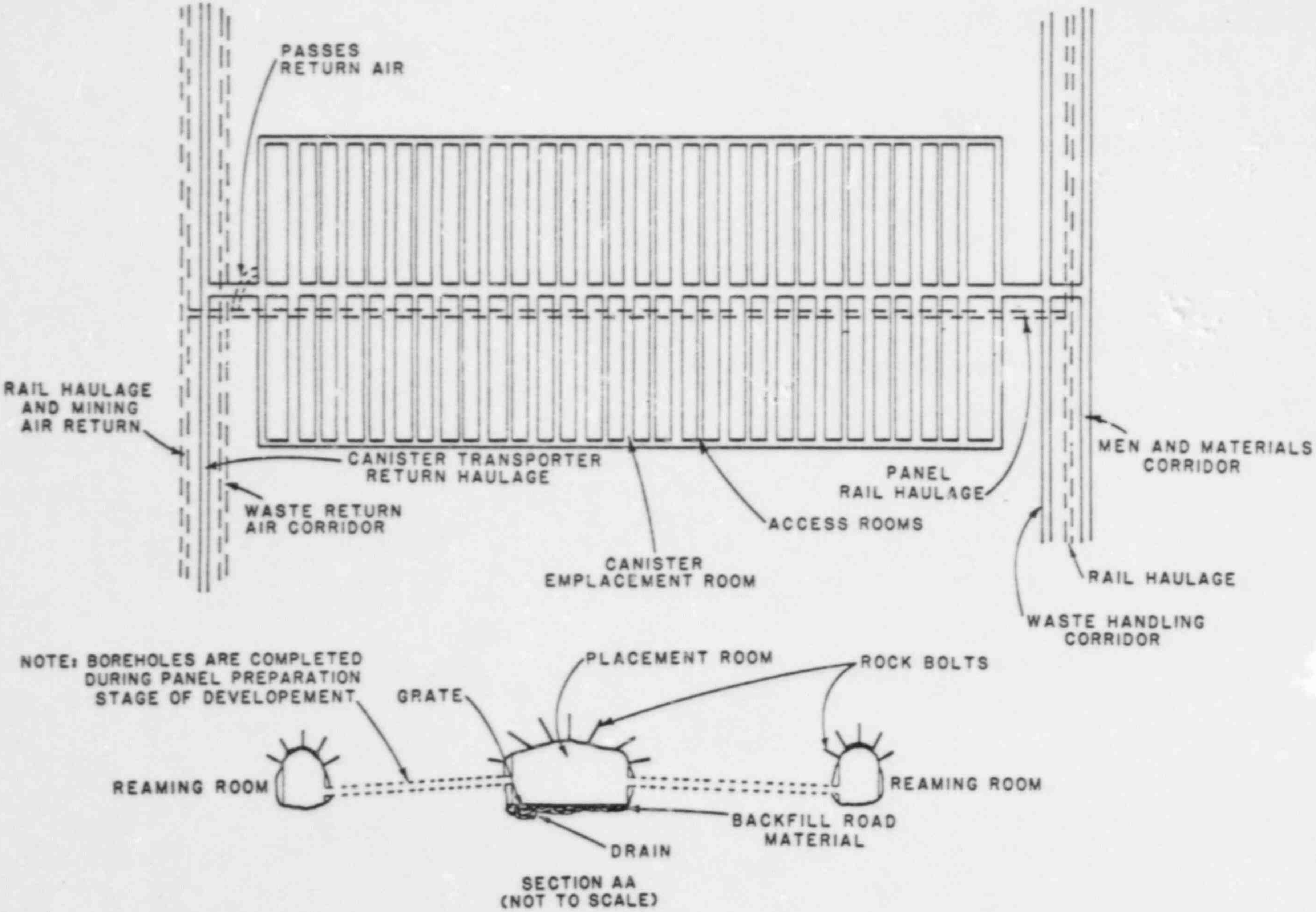

Figure 10.11-2 Panel and room layout for storage in horizontal holes. (RHO-BWI-CD-35)

Table 10.11.4 Dimensions of Repository Facilities

Facility	Dimensions
Personnel and Materials (Service) Shaft	29 ft inside diameter
Tuff Transport Shaft	36 ft inside diameter
Waste Transport Shaft	36 ft inside diameter
Waste Air Exhaust Shaft	29 ft inside diameter
Mine Air Exhaust Shaft	36 ft inside diameter
Central Panel Corridor	26 ft by 16.4 ft (lined)
Sublevel Rail Haulage Corridor	26 ft by 16.4 ft (lined)
Transporter Access	26 ft by 28 ft (lined)
Transporter Return	26 ft by 28 ft (lined)
Man and Supply Access	26 ft by 16.4 ft (lined)
Waste Air Return	26 ft by 16.4 ft (lined)
Rail Haulage Access	13 ft by 13 ft (lined)
Rail Haulage Return	26 ft by 16.4 ft (lined)
Rock Pass	7.5 ft by 16.4 ft by 29.5 ft
Panels	1,228 ft by 6,232 ft
Storage Rooms	31 ft by 16.4 ft
Reaming Rooms	9.8 ft by 16.4 ft
Rib Pillars	656 ft
Panel Pillars	164 ft
Room Pillars	174 ft
Storage Holes	24-in. diameter by 175 ft long
Storage Hole Pitch	8.4 ft

Each of the 6 required shafts will have a different function:

- Personnel and materials (service) shaft
- No. 1 confinement air exhaust shaft
- No. 2 confinement air exhaust shaft
- Mine air exhaust shaft
- Tuff transport shaft
- Waste transport shaft.

The shafts will be sunk by conventional drill-and-blast methods and lined with a concrete liner.

The two potential sequences for repository development and waste placement are:

- Repository development has been completed before waste storage begins

- Panel development and waste storage take place concurrently with both operations advancing at the rate of one panel per year.

The two options have very different requirements for ventilation and excavation systems, shaft facilities, and equipment quantities. The dimensions for the facilities given in Table 10.11.4 are for the second option. The impact of retrieval on systems in the two alternatives will also be different.

According to assumed repository construction schedules, waste placement is required to begin within ten years of construction authorization. Assuming two years for shaft sinking and allowing for contract procurement for both the shafts and the underground development, preplacement development must be completed within six years. Three panels must be ready for storage by year 10 because different types of waste will be stored in separate panels (according to information supplied to EI by the NRC) and an available spare panel is desirable at all times. To develop three panels requires a development rate of about 3,800 tpd on a five-day-week basis.

If repository development must be completed before placement occurs, the required development rate is about 18,800 tpd. This option would result in the dimensions for the facilities given in Table 10.11.5.

In the preconceptual design (RHO-BWI-CD-35, 1980), development and storage proceed outward from the panels nearest the shaft pillar to those at the extremity of the repository. For the open, ventilated rooms, advantages are obtained by having operations on a retreat basis from the repository extremities toward the shaft pillar. If development has been completed prior to placement, the advantages are greater.

Table 10.11.5 Dimensions of Repository Facilities if Development Completed before Placement

Facility	Dimensions
Personnel and Materials (Service) Shaft	33.5 ft inside diameter
Tuff Transport Shaft	33.5 ft inside diameter
Waste Transport Shaft	33.5 ft inside diameter
No. 1 Waste Air Exhaust Shaft	31 ft inside diameter
Mine Air Exhaust Shaft	31 ft inside diameter
No. 2 Waste Air Exhaust Shaft	31 ft inside diameter
Central Panel Corridor	26 ft by 28 ft (lined)
Sublevel Rail Haulage Corridor	26 ft by 28 ft (lined)
Transporter Access	26 ft by 28 ft (lined)
Transporter Return	26 ft by 28 ft (lined)
Man and Supply Access	26 ft by 28 ft (lined)
Waste Air Return	26 ft by 28 ft (lined)
Rail Haulage Access	26 ft by 28 ft (lined)
Rail Haulage Return	26 ft by 28 ft (lined)
Rock Pass	7.5 ft by 16.4 ft by 29.5 ft
Panels	1,228 ft by 6,232 ft
Storage Rooms	31 ft by 16.4 ft
Reaming Rooms	9.8 ft by 16.4 ft
Rib Pillars	656 ft
Panel Pillars	164 ft
Room Pillars	174 ft
Storage Holes	24-in. diameter by 175 ft long
Storage Hole Pitch	8.4 ft

The mine cycle in a given heading would consist of (in order):

- Drill the round
- Load and blast the round
- Remove the broken muck
- Install ground support.

A "dental excavation" method has been proposed for (RHO-BWI-CD-35), that is applicable to tuff whereby all but the outer 3 ft of an opening is excavated by an initial drill and blast round and the remainder is subsequently blasted using a "trim round" of lightly-loaded, closely-spaced holes.

Although the tuff is probably strong and competent, rock reinforcement and support is necessary to protect against minor local failures such as rockfalls. A loosened zone typically surrounds openings excavated in rock. With the "dental excavation" techniques, the thickness of this loosened zone could be as little as 3 ft. The zone is generally sufficient to require some support where otherwise unnecessary. The assumed support system consists of :

- Rock bolts whose length exceeds one-third the opening span, spaced no more than 10-ft apart

- Shotcrete, nominally 4-in.-thick

- Cast-in-place concrete at critical locations.

With respect to ground water, mining will tend to drain any water within the repository area as the water will tend to flow toward the openings. As a result of the position of the reposotiry horizon above the water table, water intrusion will be minimal.

10.11.1.4 Canister Arrangment

The waste package (Figure 10.11.3) consists of an 18.5-ft-long canister with a 16-in.-outside diameter and containing either one Pressurized Water Reactor (PWR) or three Boiling Water Reactor (BWR) Spent Fuel assemblies. The packages will be placed in 24-in.-diameter holes drilled horizontally on 8.4 ft centers into the pillars between the storage and reaming rooms. The hole is lined with a carbon steel sleeve which is grouted into place with cementitious, absorptive materials. We assume the sleeve or the grout are readily placed, as this operation is within standard tunneling technology.

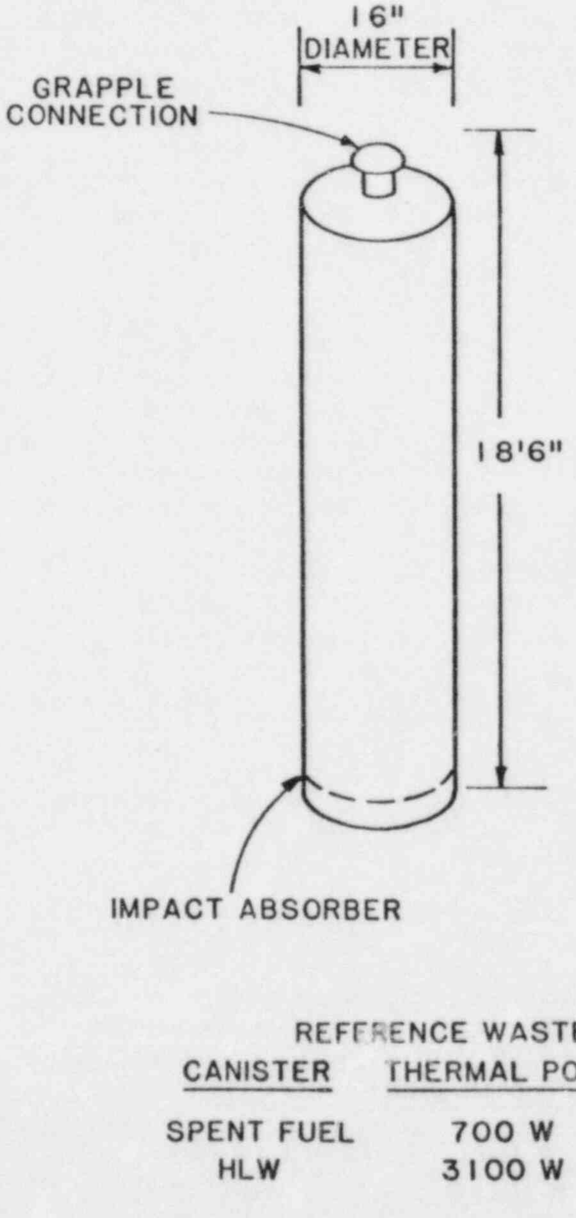

REFERENCE WASTE CHARACTERISTICS

CANISTER	THERMAL POWER	SURFACE DOSE RATE
SPENT FUEL	700 W	20,000 REM/HR
HLW	3100 W	100,000 REM/HR

Figure 10.11-3 Standard waste canister.
(RHO-BWI-CD-35)

10.11.1.5 Thermal Loading

As a result of decay of the radionuclides contained in the spent fuel, the waste packages radiate heat. Unreprocessed spent fuel contains fission products which are relatively short-lived and actinides which are generally quite long-lived. As the radionuclides decay ultimately to stable isotopes, the number of disintegrations, and the heat produced, will decrease with time. The heat produced by a canister will be at a maximum at the time of emplacement.

A canister will contain either one PWR or three BWR spent fuel assemblies. Assuming 10-year-old waste, canisters will have heat loads of approximately 0.55 kW and 0.66 kW for PWR and BWR, respectively. To be conservative, the heat load per canister is taken as 0.7 kW.

The areal extent of the repository, the canister spacing, the age of the waste, and the type of waste (PWR or BWR) determine the overall thermal load on the repository. To be conservative, all the waste is assumed to be 10-year-old PWR. In reality, waste type and age will vary, and actual panels are assumed to consist of waste of a uniform type and age to avoid uneven thermal loading within a room or panel.

The effective storage area consists of 23 panels occupying 188 acres each, or 4,330 acres total. Using the 0.7 kW/canister thermal load and the waste complement of 22,500 canisters per panel, the heat load within a panel is 83.8 kW/acre. By comparison, the in-panel loading given in CD-35 is 158 kW/acre which requires a canister heat load of 1.25 kW/canister.

On the basis of the gross repository area including the shaft pillar and service areas, the overall heat load will be about 50 kW/acre.

10.11.1.6 Backfill Timing

Ultimately, a repository must be backfilled, with the backfill designed as a barrier (10CFR60.133). In this repository concept, backfill will not be placed until permanent closure. Remining of backfill for retrieval purposes is apparently not an issue since the decision to permanently close nullifies the retrievability requirement.

However, the permanent closure process will take about 23 years to complete (the same length of time as placement) and retrieval could possibly be required during the permanent closure process though the rule (10CFR60) does not require retrieval to be maintained as an option after initiation of permanent closure. Once the backfill is placed, the repository concept basis is changed and the implications for retrieval are detailed in the concept, where backfill is placed immediately after waste placement.

10.11.1.7 Ventilation

Rooms are open (unbulkheaded) and ventilated after waste placement has been completed. Two potential development options can be identified:

- Develop and store waste simultaneously
- Develop the whole repository prior to waste placement.

In the first case, two separate ventilation circuits are required:

- Mine (development) ventilation system
- Confinement (storage) ventilation system.

The airflow in the confinement circuit will begin at a small value and as the rooms are developed will increase until the final value of 12,000,000 cfm is reached. To ensure the leakage is minimized and is toward the confinement circuit, the size of the confinement entries and returns must increase as the confinement airflow increases.

If total repository development precedes placement, only one ventilation system is required. The airflow requirement will increase as panels are developed. Once repository development is complete, the airflow will remain constant until permanent closure.

In the summer, the intake air may require precooling to maximize the convective heat removed from the rock. In winter, the intake air may be need to be heated to ensure that the temperature exceeds 37°F to avoid icing in the shaft. Heating could best be accomplished by extracting heat from the exhaust air using heat exchangers.

10.11.1.8 Retrieval Systems

A requirement of 10CFR60 is that repository operations must be designed so that any or all of the waste could be retrieved on a reasonable schedule. "Full Retrieval" is removal of all waste. From time to time, retrieval on a limited basis may become necessary. For example, a few canisters, a single room, or a single panel may need to be retrieved. The latter scenario is designated as "Local Retrieval."

In this repository concept, storage rooms are open and ventilated. Temperatures will remain workable and equipment for high temperature operations will not be required for retrieval. In the assumed preconceptual design (CD-35), the transporter (Figure 10.11.4) used for canister placement is assumed to be used for retrieval. The

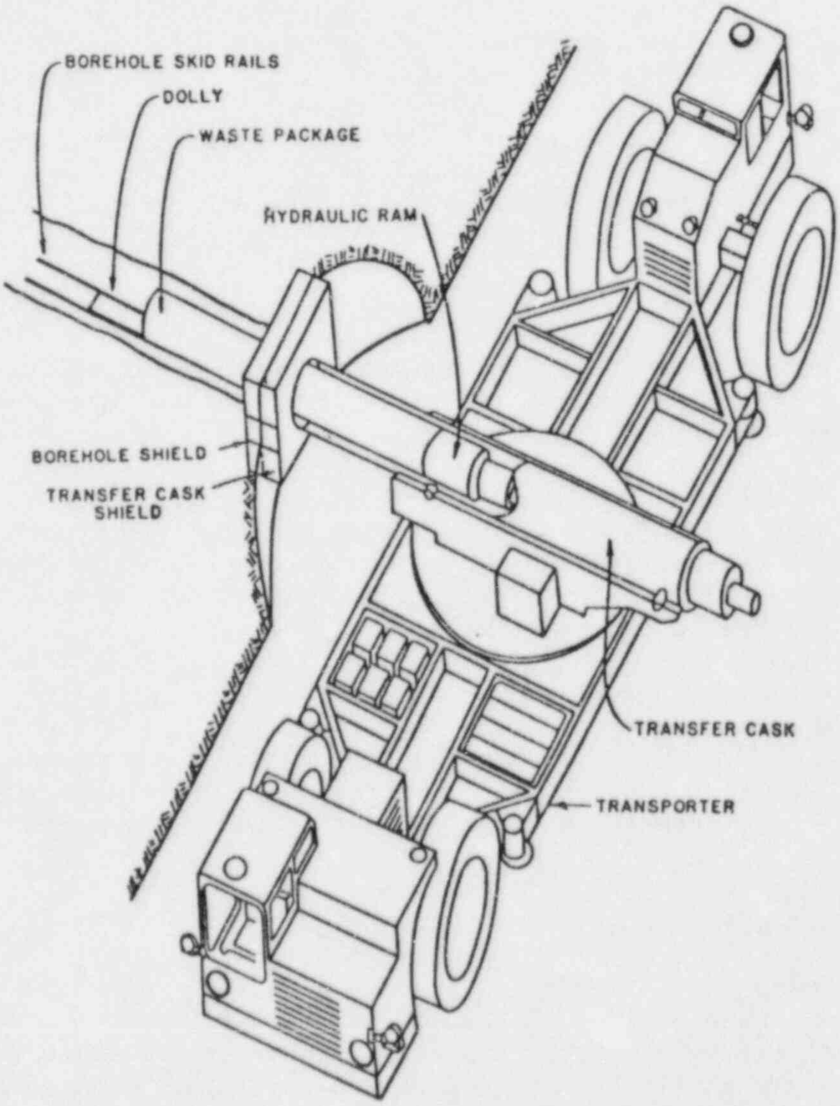

Figure 10.11-4 Transporter and transfer cask configuration for placing waste in horizontal holes. (RHO-BW-SA-273 P, 1982)

rubber-tired transporter holds the canister in a shielded cask in a horizontal position longitudinally on the machine. The retrieval procedure is not given in the design reports nor are details of the transporter and transfer cask. The transporter assumed in this concept is a more recent and improved design than the one in CD-35 (RHO-BW-SA-273 P, 1982).

10.11.2 Retrievability Interactions with Repository Systems

10.11.2.1 Excavation Systems

Storage rooms which are open over the life of the repository do not require excavation prior to retrieval.

10.11.2.2 Equipment Systems

Retrievability impact on equipment systems can best be identified with the aid of the flow chart shown in Figure 10.11.5. Each basic repository operation is given an identification number to facilitate identification of an event's impact on all systems. With mining development completed, the only active operations involve canister storage. Different levels of retrievability vary greatly in their impact on repository operations.

Local retrieval of canisters may take place concurrently with storage operations. Unless new equipment is obtained for the task, the storage equipment will have to be used, slowing the normal storage rate. Retrieval of breached canisters will require "hot cell" or shielded equipment along with decontamination equipment in the storage area. Transporting the canisters to the surface will require (Figure 10.11.5) use of the crane (3), hoist (4), and surface handling facilities (5).

Full retrieval of canisters can be planned systematically for a full storage room or full repository, starting with the oldest storage rooms. Because the same handling equipment will be used for the full retrieval operation, an operating schedule can be defined, with no interference from other operations. If any canisters are breached, the retrieval will be more complex due to contamination. Special equipment will be used for the life of the breached canister retrieval operation.

10.11.2.3 Facilities

If mining development and waste emplacement are concurrent operations, the reason for full retrieval will most likely preclude further mining. The modular concept of repository operations keeps

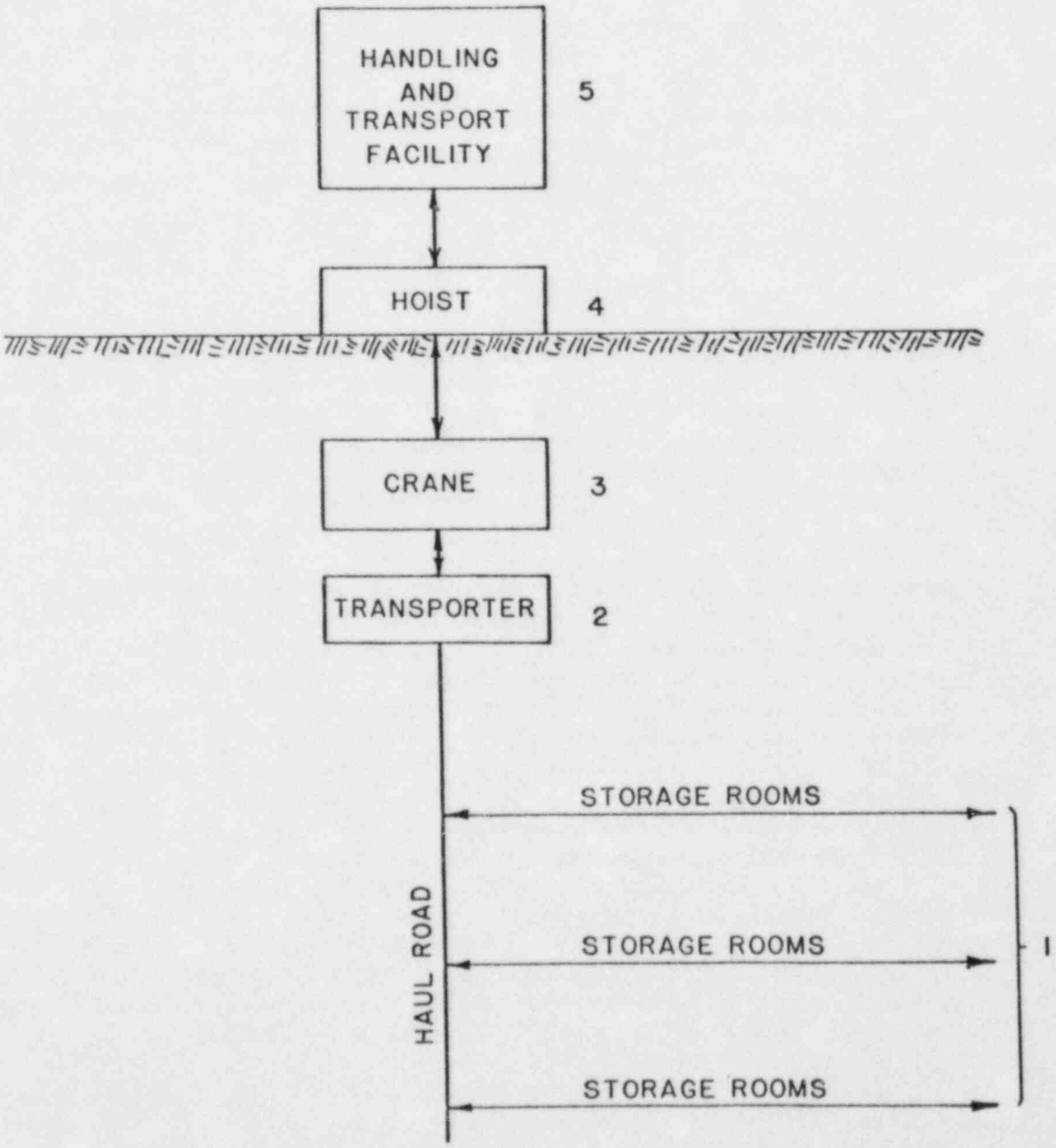

Figure 10.11-5 Schematic of waste handling operations.

the two systems entirely separated to the extent that equipment for each system uses different haulageways and shafts. Facilities such as haulageways, loading bins, skips, and other equipment for handling mined rock will not be affected by local retrieval, and may be temporarily stopped during full retrieval if warranted by retrieval conditions. The area most likely affected by local retrieval will be the shaft area where full transfer casks will be handled, hoisted, and lowered, and mined rock will be hoisted. Retrieved canisters may be breached, compounding the congestion.

10.11.2.4 Ventilation Requirements

The ventilation of the open rooms until the time of permanent closure continuously extracts heat from the surrounding rock. As a result, rock temperatures at the perimeter of the opening will be lower than those which would occur if the rooms were not ventilated. Air temperatures in the rooms will be planned to vary from 80°F at the intake to 106°F at the exhaust end. The air temperature range is equal to or less than that at waste placement, and no special measures, such as air-conditioned cabs on vehicles, are required for retrieval, unless already required for placement operations.

As a result of the auxiliary power supply and a fan set-up consisting of duplicate fans plus an identical backup unit which is not normally operating, neither power outages nor fan component failures will interrupt the supply of ventilating air. Retrieval operations would be carried out in rooms ventilated by the confinement ventilation circuit which provides a continuous supply of air to all rooms in which waste placement has occurred or is occurring. As a result, no changes are required in the ventilation system to accomodate retrieval. For the option in which all development is completed prior to commencement of placement operations, all rooms are ventilated continuously by the confinement ventilation system.

10.11.2.5 Backfill

In the concept of open, ventilated rooms, backfill would not be placed until permanent closure. The requirement for retrievability does not directly affect backfilling operations. Full retrieval would affect backfilling because, when all the waste is removed, isolation of the repository by backfilling is no longer required. In the case of local retrieval, when a room or panel is emptied of waste, backfill would be required to ensure the room or panel does not become a preferential pathway for radionuclide migration.

10.11.2.6 Thermal Effects

The thermal effects associated with nuclear waste disposal in an underground repository have significant effects on the retrievability of the waste. Thermal effects can be divided into three distinct areas:

- Very-near-field effects which have the most direct impact on retrievability because elevated temperatures can lead to decrepitation of the borehole wall and binding of the canister
- Near-field effects which impact retrievability indirectly by increasing the potential for instability of the storage rooms
- Far-field effects which have minimal, if any, impact on retrievability because the stability of the entries and shafts would not, in general, be affected by the thermal loading.

No thermal analyses have yet (1983) been reported specifically for a horizontal storage concept in tuff. Thermal analyses have been performed for both horizontal and vertical storage in basalt, however, and the results of these analyses indicate that the predicted temperatures are very similar for both storage concepts (RHO-BWI-C-116, RHO-BWI-CD-35). Therefore, the predicted temperatures for vertical storage in tuff may be used as an approximation to the temperatures for the horizontal storage concept. More precise thermal analyses should be performed before design.

The Mine Design Studies (MIDES) Working Group has completed a limited number of thermal analyses of a waste storage repository in tuff (SAND82-0170; SAND80-2813). Table 10.11.6 is based on these analyses and shows the predicted maximum rock temperatures at critical locations for a gross thermal loading (GTL) of 50 kW/acre. As no maximum temperature criteria have been defined for tuff, the predicted temperatures are compared with the BWIP basalt temperature criteria (RHO-BWI-C-116, RHO-BWI-CD-35).

The MIDES Working Group used the COYOTE and ADINAT computer codes in their analyses. Their results are based on the following assumptions:

- The rooms are open but not ventilated
- The repository horizon assumed by MIDES is the Bullfrog Member of the Crater Flat Tuff, at a depth of 2,624 ft (rather than the 1,200-ft-depth of the Topopah Springs Member)

Table 10.11.6 Maximum Predicted Temperatures for Tuff

LOCATION	MAXIMUM PREDICTED TEMPERATURE FOR TUFF[1] (°F)	BWIP MAXIMUM TEMPERATURE CRITERIA FOR BASALT (°F)
Rock at Canister	241	392[2]
Emplacement Room	189	212[3]

[1] Source - SAND82-0170. Assumes thermal loading of 50 kW/acre and that repository horizon is Bullfrog Member of Crater Flat Tuff

[2] Source - RHO-BWI-C-116

[3] Source - RHO-BWI-CD-35

- Initial rock temperature is 97°F
- The tuff is fully saturated with water
- No boiling of ground water is anticipated.

At present the DOE considers the Topopah Spring Member of the Paintbrush Tuff the most likely repository horizon. Temperatures in the Topopah Spring Member may be different from those calculated for the Bullfrog Member because:

- The Topopah Spring Member is not as deep as the Bullfrog Member, and therefore has a lower initial temperature
- The Topopah Spring Member has a lower thermal conductivity, which would tend to increase long-term temperatures
- The Topopah Spring Member is above the water table and unsaturated, which would also result in higher long-term temperatures.

When the actual repository horizon is chosen, further site specific thermal analyses will have to be performed. The temperatures shown in Table 10.11.6 may be taken as an approximation of the temperatures that may be experienced at the time of retrieval.

Acutal repository temperatures for the open ventilated room storage concept may be less than the predicted temperatures because the modeling did not consider the cooling effect of ventilation.

If the actual temperatures do not exceed peak temperatures shown in Table 10.11.6, the the maximum temperature criteria will not be exceeded. Borehole decrepitation occur seem unlikely to at the predicted temperatures, but borehole failure could severely hinder retrieval if the hole liners were damaged and the canister were bound deep in the horizontal holes.

The effect of the temperature rise on room stability will depend on the variability of rock strength in the repository, and on the final room layout and repository design. Rockfalls may occur in areas of local overstress, but with open access to the rooms could easily be cleaned up without affecting the retrievability of the waste packages.

The thermal impact in the shafts and main entries should be insignificant, as they are remote from the waste emplacement panels and will be ventilated continuously throughout the entire repository life.

10.11.2.7 Requirements for Special Equipment for High Temperature and Radioactive Environments

Due to continuous room ventilation, the room temperatures will be planned to vary from 80°F at the intake side to 106°F at the exhaust side. Retrieval would take place at air temperatures as cool as, or cooler than, those during emplacement. Provided that the waste package is intact and free in the hole, the assumed transporter (whose operation was described in Section 10.11.1.8) can be used for retrieval and 10CFR60 standards are satisfied.

Radioactive environments that may arise from breached canisters will require special shielding of equipment for operator safety. Decontamination facilities will also be necessary for service equipment, and storage areas.

10.11.2.8 Ground Support

The Q-system (Barton, Lien, and Lunde, 1974) has been used to determine ground support requirements in the repository. Strength values of the rock mass discussed under Section 10.11.1.1.3, "Rock Mechanics Properties" indicated a Q-system value of 85. Based on this value and storage room cross-sections under consideration, the Q-system indicates the tuff to be competent requiring no support. However, because the data base for the Q-system does not include high temperature operating conditions, a support system in excess of that indicated has been assumed. The support system is assumed to consist of untensioned, cement-grouted rock bolts spaced 8-to 10-ft apart. Experience with concretes at elevated temperatures (Troxell, Davis, and Kelly, 1968, p. 248-250) indicates that for simple temperature increases to 212°F relatively minor strength losses occur due to loss of both free and combined moisture. Above, 212°F more significant strength losses occur in the repository maximum temperature ranges up to, say 400°F, but amount to 10% reduction, or less. However, if the concrete is heated and then cooled, strength losses approach 25% or more at 400°F. Two considerations may minimize such strength losses. Using lean mixes and limestone, expanded slag, or similar aggregates minimize heat effects in this range. We suspect that the important cement grout, shotcrete and concrete considerations for repository temperatures hinge on minimizing the water content and matching the thermal expansion and chemistry of cements and aggregates.

Over a decades-long period, some deterioration of the rock reinforcement system is expected to occur and minor roof falls may result. Because the rooms are open and ventilated, clean-up and support reinstallation can be performed as the rockfalls as discovered.

Equipment for cleanup and support installation would include a Load-Haul-Dump vehicle and a roof bolting jumbo.

Despite the Topopah Springs Member lying above the water table, some ground water is likely to enter the repository during the operation period. This water may be expected to collect in puddles on the room floors.

10.11.2.9 Instrumentation

Repository performance monitoring ensures the safety criteria are not violated and the isolation capacity is maintained. The retrievability option mandates that significant changes in selected parameters, or deviations from expected behavior, be detected when they occur, and steps be taken to correct the problem or retrieve the waste to the surface. Categories requiring monitoring are:

- Hydrogeologic - water inflow
- Thermal - heat build-up
- Mechanical - stress build-up, rock deformations, and rock instability
- Radiological - activity levels.

Direct observation of subsurface conditions is also advisable. The instrumentation program for tuff will presumably be similar to that proposed by BWIP for basalt. BWIP proposes a monitoring program of subsurface conditions by visual inspection and hands-on measurement within panels, with a minimum of instruments actually placed within the panels. The monitoring program is possible because the rooms will be left open and ventilated. Visual inspection and hands-on measurements are preferable to remote monitoring because instrumentation available at present is not reliable for periods in excess of about a decade, especially under the thermal conditions associated with the repository rooms. An experimental panel will be provided in the repository in which extensive verification and confidence testing will be performed. This panel will also provide an opportunity to study the reliability of instrumentation.

Thermal monitoring will primarily consist of thermocouples embedded in boreholes placed at intervals along storage rooms. Thermocouple signals will be collected at several spots and relayed to a central control console to detect abnormalities.

Hydrogeologic monitoring will consist of measuring the pressure of formation water in the vicinity of storage holes, in various accesses, and in tuff flows. High precision, durable pressure transducers will be placed between packers in boreholes . Water quantities entering individual panels will be monitored by devices measuring the humidity, temperature, and airflow pulled through panels after waste emplacement.

Mechanical monitoring will consist of a network of geophones and seismographs to monitor rock noise and rockfalls. The closure of pre-established points in storage rooms and drifts will be measured. At a few selected locations, detailed evaluation of rock stability will be made using stressmeters and multiple-position borehole extensometers.

Ventilation conditions in the repository will be monitored to detect radiation levels, fire and smoke emergencies, and ventilation blockages caused by roof falls. Mobile radiation and thermal sensors in ventilation airways will permit continuous monitoring from a main surface control console. Flow direction, pressure, differential pressure, and temperature will be monitored.

The retrievability requirement mandates repository monitoring for 50 years after initial waste placement. The following steps need to be taken to ensure the reliability of repository instrumentation:

- Develop geophones, stressmeters, multiple-position borehole extensometers, piezometers, thermocouples, and ventilation instrumentation that will maintain their accuracy in the hot and humid environment expected in a repository
- Provide extensive verification of the reliability of instrumentation in the experimental panel established within the repository
- Ensure that inspection of the repository at predetermined intervals can be performed by personnel in airconditioned suits or vehicles or robots.

10.11.3 Adequacy of Incorporated Retrieval Systems or Allowances

10.11.3.1 Local Retrieval

Local retrieval may be necessary for quality assurance or quality control purposes, or due to a detected radionuclide release. A manufacturing error, for example, could have caused premature breakdown of some canisters in a storage room. Open rooms permit the use of the same equipment for emplacement and retrieval procedures. Most likely the canister transporter and "hot cell" equipment will be necessary. Equipment will be dedicated to the confinement ventilation circuit for cleanup of roof falls and resupport of the roof. A LHD unit and a roof-bolter will repair roof falls during the retrieval period and will be available to work in any room during local retrieval. Local retrieval, if concurrent with development and storage, will slow the latter two processes because of interfaces in the shaft and hoisting area. As a result of continuous ventilation, repository air and rock surface temperatures will allow the use of the rubber-tired vehicles used during placement. Unless the canister to be retrieved is the one closest in the hole to the storage room, retrieval of a leaking canister will require prior retrieval of up to five other canisters.

Retrieval of breached canisters by overcoring the holes is not presently practical with horizontal holes containing more than one canister. A possible method to facilitate retrieval would be to have a piece of equipment pushing from the reaming rooms as well as having the transporter and transfer cask in the storage room. For this method to work, the width of the reaming rooms must be increased. Another possibility for retrieval is a remote controlled or magnetic grapple. Provisions for retrieving breached or broken canisters are not included in the assumed preliminary DOE design and, therefore, the incorporated systems are inadequate.

10.11.3.2 Full Retrieval

Full retrieval of waste canisters will need planning and preparation. Full retrieval planning is facilitated because all repository resources can be committed to the operations. Underground storage may prove unsatisfactory, leading to repository abandonment. Nevertheless, full retrieval should not require special equipment unless the reasons for retrieval interfere, such as excessive rock movement crushing canisters, or rapid deterioration of rock causing need for roof support and scaling equipment.

The equipment for roof support and rockfall cleanup will be dedicated to the confinement ventilation system. The systems for full retrieval will be the same as local retrieval without interference from development and placement. The retrieval of a breached or broken canister in a horizontal hole is not well-defined. Even with increasing the size of the reaming room and using another piece of equipment to help push the canisters, the incorporated system may not be able to retrieve a broken or bound canister. Overcoring is apparently not feasible with long horizontal holes. The incorporated retrieval systems are considered inadequate until systems for retrieving a broken or bound canisters in horizontal holes are developed.

10.11.4 Concerns

10.11.4.1 Technological Concerns

In this concept, the transporter and transfer cask are not adequate for retrieval of breached canisters. How a canister 150-ft deep in a

174-ft-horizontal hole can be retrieved is unclear. A telescopic arm may reach to the extreme distance, but if the canister is frozen in place due to excessive rock stress, retrieval from the hole may be impossible to achieve. Horizontal storage in holes approaching 200 ft precludes the option of overcoring a breached canister. The drift for horizontal storage, being 31-ft wide, necessitates breaking the overcore numerous times before attaining the desired length. Breaking the rock mass will require a special operation, as well as additional work to handle the broken core. In addition, the core breaking will require removal of the entire hole lining before overcoring can begin. If grouted into place, removing the lining could be quite difficult. Design of a transfer cask and transporter which could be used for retrieval is within current technology. The transporter and waste emplacement scheme outlined incorporates some features such as the magnetic grapple and telescopic arm which would facilitate retrieval. No provisions are indicated for retrieving breached canisters, especially those which have broken into more than one piece. Design of such equipment does require some development, but is within current technology.

10.11.4.2 Safety Concerns

The preconceptual design for basalt (RHO-BWI-CD-35) specifies one transporter operator rather than two; which is not advisable under the inherently hazardous retrieval operation for breached canisters. Transporters will be the only equipment necessary for retrieval in the storage room. As a consequence, if an operator became injured, there would be difficultly in getting aid quickly. Personnel working in pairs helps eliminate problems in case of injuries to one partner. The "buddy system" is widely used throughout the mining industry to help safeguard personnel, and seems desirable for repository operations as well. The transporter used in this concept however, is an improved design (RHO-BW-SA-273 P. 1982) which does have two operators.

Experience is lacking regarding the effectiveness of grouted rock bolts and shotcrete support systems over periods of decades, especially at the anticipated high rock temperatures (up to 300°F). The temperature difficulties can be minimized by using materials for the bolt grout and shotcrete which minimize heat effects (Section 10.11.[illegible].8). Some weakening of the supports will take place with time and minor roof falls will occur. With open ventilated panels, rooms can be periodically inspected and the support rehabilitated as necessary.

In spite of grouting and shotcreting, some water may flow into the rooms. Due to the flat slope of rooms, the water will tend to collect in puddles on the floor. This water will likely be contaminated by radiation and should be transferred to a collection area in closed tanks or conduits.

Whether they are breached or not, unshielded canisters will be emitting gamma radiation. During retrieval, streaming radiation will be able to escape from the placement holes, if the doors on the borehole and transfer cask shields are not closed tightly. In the case of breached canisters, especially those which have broken into more than one piece, gaseous radionuclides can also escape by streaming. Dose rates and dosages from these materials must be kept within the acceptable limits.

10.11.4.3 Radionuclide Release Concerns

One possible reason for retrieval is failure of the waste package with consequent release of radionuclides. Gaseous and volatile radionuclides may be released into the emplacement hole while soluble radionuclides may be carried away by any water present in the emplacement hole. Removal by equeous solution requires the presence of water in liquid form; that is, it temperature must be less than the boiling point for the repository pressure conditions. For open, ventilated rooms, this pressure will be approximately one atmosphere and aqueous transport of radionuclides will only occur if the water temperature does not exceed 212°F. Due to the cooling effect of the ventilating air the rock surrounding the opening should have a temperature considerably less than 212°F and the water will be in a liquid state.

10.11.4.3.1 Releases into Air

The gaseous and volatile radionuclides release from spent fuel consist primarily of hydrogen-3 (tritium), carbon-14, and krypton-85. The quantity of krypton-85 is large compared with that of either tritium or carbon-14. In addition, the carbon-14 must be in a form that leads to volatile species upon reaction with water in order to be of concern. One-tenth of the krypton-85 is assumed to be sufficiently near an exposed surface to leave the fuel. If a breach occurs, the concentrations of krypton-85 and to tritium in air must not exceed the EPA defined standards 10 nCi/liter and 5 nCi/liter respectively in order to satisfy 10CFR20. (These radioactivity concentration limits are defined in metric units. The equivelent traditional units, for reference, are 0.35 nCi/ft^3 and 0.18 nCi/ft^3, respectively.)

Before methods of dealing with such releases are discussed, the methods of transport of radionuclides release into the hole by a breached canister into the rooms must be identified. The two possibilities are:

- The hole plug is not gas-tight

- Release occurs at retrieval if the doors in the floor shield are not closed tightly after removing the hole plug.

If the hole plugs are not gas-tight, then the volatile and gaseous radionuclides will be released into the room soon after the breach. If the hole plugs are gas-tight, then the gas pressure in a hole could very slightly increase but not to a level that might lead to difficulties.

In the former situation, the presence of radionuclides would be detected by instrumentation. Unless personnel happen to be present at the time of the release, there would not be cause for alarm because ventilating air would dilute the concentration to within acceptable limits. The time required for this dilution depends on the air volume supplied and on the room volume.

If release occurs during the retrieval process, workers would be exposed. However, because the room will be ventilated, the gas would not diffuse to fill the whole room. Consequently, the dilution time would be less than if the room were unventilated, other things, being equal.

Releases occurring at retrieval can be avoided by having radiation sensors in the hole. Any detected gaseous radionuclides could then be drawn off prior to retrieval using millipore filters or a cryogenic absorption system. Both of these methods fall within existing technology.

10.11.4.3.2 Releases into Water

With regard to the movement of radionuclides by aqueous transport, the water must be in the liquid state. Heat balance concentration show that the lower the initial temperature of the water, the smaller the flow required to remove the canister heat and the greater the concentration of dissolved solids in the water. Reduction of the surface temperature of the canister below 212°F would occur for almost any water flow (Post, 1982).

If water contacted a breached canister, the rate of dissolution would vary widely with the water composition and temperature. For a typical rate of 0.0000264 lb/day, the solution water would contain about 0.25 mCi/lb water and about one pound of this solution would generate about 0.1 mR/hr at 4 ft. Intrusion of water into a defective package appears to provide a good index to the failure but would not introduce a significant radiation hazard to the operation (Post, 1982).

Although the rock surrounding the rooms will likely be grouted, some seepage will still occur, resulting in casual water (puddles) on the floors of the rooms. This water could be mildly contaminated and will likely be hot. Collection and transport to pumping stations should be in closed pipelines.

10.11.4.3.3 Radiation Detection Standards

The radiation levels measured during retrieval operations are not exceptional and the detection system standards used in the nuclear industry would prevail. A lower limit of 0.1 mR/hr and an upper limit of a few kR/hr would be adequate. A system to detect radioactive krypton-85 in the ventilation air and in the storage holes will be required. This system should be capable of detecting krypton-85 levels below 100 pCi/liter (2.6 pCi/ft^3) (Post, 1982).

10.11.4.4 Operational Concerns

The 8.4-ft-spacing allows only a 3-ft-radius for hole deviation to ensure that holes do not intersect. To meet the tolerance in a sub-horizontal hole which is 174-ft-long requires careful drilling and frequent hole surveys. Even with these precautions, the hole will deviate both in azimuth and inclination. The deviation will depend on:

- The direction of rotation of the bit
- The attitude of any intersected joints
- The weight of the cutting head.

The design outlined in the BWIP SCR and assumed for tuff has the hole spacing at 60 ft for spent fuel and 107 ft for commercial reprocessed waste (CHLW). The tight drilling tolerances mentioned above no longer constitute a problem because the holes are not likely to wander 30 ft to 50 ft. Excessive hole deviation must be avoided to limit the possibility of binding a canister in the hole.

Another concern is the method of placing the hole liner and assuring the liner fully grouted into place. Neither CD-35 or more recent designs address placement of the liner or grout. However, this is within standard tunneling technology.

The alignment of the assumed CD-35 transporter with the hole is difficult to accomplish because the transporter must be sideways in the room, because the transfer cask is aligned with the long axis of the transporter. The BWIP SCR proposes a transporter (Figure 10.11.4) having the transfer cask mounted on a swivel, providing a solution to the problem - this improved transporter has been incorporated into this concept.

As discussed in Section 10.11.4.2, Safety Concerns, some deterioration of ground support can be expected. Because the rooms are open and ventilated, inspection can be done periodically with rehabilitation of the supports carried out as necessary. Rehabilitation requires bolters and scalers to be available for the life of the repository.

As discussed in Section 10.11.4.1, the transporter and transfer cask as given in RHO-BWI-CD-35 are not adequate for canister retrieval. The improved design in the BWIP SCR incorporated here does allow for canister retrieval but does not make provision for retrieval of canisters which have broken into more than one piece.

Cooling the environment to an acceptable level will require large airflows and perhaps large spot cooling units. The space occupied by these units would limit the free clearance in the room entrances.

10.11.4.5 Other Concerns

A fundamental concern related to a repository in tuff concerns the geologic/hydrogeologic uncertainty at the repository horizon. Among the concerns are:

- Uniformity of the thickness of the candidate tuff flow
- Uniformity of the jointing
- Occurrence of faults
- Vertical and lateral hydraulic conductivity.

The further in situ exploratory programs are being planned (1983) by DOE to resolve the questions about geologic and hydrogeologic condition at the proposed repository horizon.

Another concern is the mechanisms and probabilities of canister breach. One mechanism is corrosion by ground water. The rate of corrosion will depend on the ions present in the ground water and their concentrations, and on whether the chemical environment is reducing or oxidizing. Another possible mechanism is attempted retrieval of a canister upon which the hole has closed. With an annulus of 6 in. between the hole perimeter and the canister, in the most recent BWIP SCR designs, this scenario is unlikely. Assuming that canister breaches will occur at sometime during the 50-year retrievability period, the activities of abundant (strontium and cesium), volatile (iodine), and gaseous (tritium and krypton) radionuclides and the levels of beta and gamma radiation that would occur for breaches at various times up to several decades after placement must be predicted.

10.11.5 Summary and Conclusions

The repository is to be located at a depth of 1,200 ft in the Topopah Spring Member tuff at the Nevada Test Site. The repository will have 23 storage panels and one experimental panel divided by a shaft pillar into two sections of 12 panels each. As envisioned, each panel is divided into 30 storage areas consisting of a storage room with a reaming room on either side. The storage rooms are 575-ft-long, 31-ft-wide and 16.4-ft-high.

The waste package consists of a carbon steel canister with a diameter of 16 in., is 18.5-ft-long, and contains either one PWR and three BWR Spent Fuel assemblies. Six canisters are placed in 174-ft-long, 24-in.-diameter horizontal holes. Based on an average canister thermal load of 1.25 kW/canister at the time of placement, the panel thermal load is 150 kW/acre.

Backfilling of the rooms would not take place until permanent closure of the repository. Rooms completely filled with waste would be constantly ventilated with sufficient air quantities to provide a satisfactory environment for people to work.

The retrievability requirements of 10CFR60 impose the following effects on the repostiory systems:

- Re-excavation system - none required
- Equipment system - a LHD and a roof bolter need to be retained for cleanup of rockfalls. Canister retrieval may required modification of the placement transporter in order to "pull" the canister from the hole.
- Ventilation requirements - no effect due to continuous ventilation
- Backfilling - none required until permanent closure
- Facilities - local retrieval may impose adverse loads on the transportation, confinement ventilation system and development mining.

Breached canister retrieval imposes additional requirements for the equipment system and the repository facilities.

The concerns for the repository concept are summarized as follows:

- Technological Concerns:
  - Overcoring a horizontal hole 174-ft-long to retrieve a breached canister requires removal of the hole lining and numerous difficult core breaks

- Within current technology, a telescopic arm or a magnetic grapple requires development to retrieve the canister

- Adequacy of the rock support system for a period of decades

- Safety Concerns:

  - Operation of the retrieval transporter by one rather than two operators

  - Rockfalls resulting from deterioration of the roof support system

  - Presence of radioactive fluids on the repository floor prior to and during retrieval

  - Streaming gamma radiation and possible beta particles and gaseous radionuclide during retrieval

- Radionuclide Release Concerns:

  - Canister breaches would result in release of gaseous hydrogen-3 (tritium) and krypton-85, and volatile carbon-14, of which krypton-85 would have the largest concentration

  - Diluting krypton-85 to the MPC given by 10CFR20 could take up to several hours for a release from a single breached waste package

  - The mechanisms for release of gaseous radionuclides form the storage hole to the atmosphere would be non-gas-tight hole plugs, streaming through the floor shield retrieval and aqueous transport (if hole liners corrode)

  - A system is required for detection of krypton-85 in ventilating air and in storage holes

- Operational Concerns:

  - Excessive deviation of the storage holes from the proposed alignment due to drill steel weight and variations in rock properties

  - Difficulties in fully grouting the hole liner into place

  - Alignment of the transporter cask with the hole requires precise positioning

  - Large capacity heat exchangers limiting space in room entrances

- Other Concerns:

  - Geologic and hydrogeologic uncertainties

  - Undetermined probabilities and mechanisms for canister breach

  - Prediction of radionuclide activities during the repository life.

The general repository systems for retrieval are well defined in the assumed design documents. Recent (1982) information provided by the BWIP SCR and incorporated for tuff has eliminated several areas which were previously unclear. Further definition and confirmation is required in the areas of hydrogeology, geology, and canister retrieval operations (especially in case of breach and the probabilities and mechanism for breach). The repository concept meets the retrievability requirements of 10CFR60 except in the case of retrieval of breached or broken canisters.

10.12 Tuff Repository with Horizontal Storage Holes, Immediately Bulkheaded Rooms, and Permanent Closure Backfilling

10.12.1 Basic Information

The twelfth repository concept is in tuff with horizontal storage holes in the pillars between rooms, rooms bulkheaded after emplacement, and backfilling at permanent closure. The concept is similar to the basalt preconceptual design presented in report RHO-BWI-CD-35. The differences pertain to the timing of the backfill placement (after completion of storage in RHO-BWI-CD-35 and at permanent closure in this concept).

10.12.1.1 Definition of Repository Concept

Waste packages will be placed in 24-in.-diameter horizontal drillholes in the tuff pillars. Each hole will contain six canisters. The rooms will be bulkheaded will but not backfilled until repository permanent closure.

The emplaced canisters emit heat (0.7 kW/canister for unreprocessed spent fuel and 3.1 kW/canister for reprocessed waste) resulting in a thermal loading of 150 kW/acre to a panel and of 50 kW/acre over the entire repository area.

10.12.1.2 Geologic Environment

10.12.1.2.1 Rock Units

The proposed repository emplacement horizons are in the bedded tuff rocks of Yucca Mountain located adjacent to the southwestern portion of the Nevada Test Site. Of the several tuffaceous rock units present at Yucca Mountain, the Topopah Spring Member of the Paintbrush Tuff Formation is the leading candidate horizon. The majority of available information is based on data from boreholes USW-G1, UE25a-1, and J-13 (SAND80-1464, OF81-1349).

The lower contact of the Topopah Spring Member lies about 1,200 ft deep. The Topopah Spring Member has an ashbed within the interior and several ashflow units which range from non-welded to vitrophyric. A thin ashfall/reworked tuff section is present at the base of the member. The lower portion of the member is slightly zeolitized and only partially welded. The vitrophyre is unaltered, tightly compacted, and welded. In some areas, the vitrophyre contains abundant calcite veinlets and about 7% to 30% phenocrysts. Fractures in the vitrophyre are cemented; however, the nature of cementing material is undescribed. All rock above the vitrophyre is densely welded and extensively fractured. Clay gouge is found along some of the fractures.

Volcanic rocks of this sequence generally dip towards the east and southeast at angles less than 10°. Dip reversals occur locally and may assume values up to 20° in the vicinity of faults. Several confirmed and inferred faults bound most of the mountain block around the proposed repository site. Faults are generally normal, dip at approximately 60°, and strike north-south. Several hundred joints were identified from cores of Borehole USW-G1 and nearly half of these joints occur in the Topopah Spring Member core. A majority of the joints shows a near vertical trend (70° to 90°). Shear fractures occur predominantly within the extensive densely welded zone of the Topopah Spring Member.

The Yucca Mountain area tends to be aseismic, however, an earthquake of Richter magnitude 1.7 occurred below sea level under Yucca Mountain in 1981 and another single earthquake of unknown magnitude and depth was recorded east of Yucca Mountain during the same year.

10.12.1.2.2 Hydrogeology

Hydrogeologic studies for the Yucca Mountain area are part of the ongoing (1983) work of the Department of Energy. Very limited data were available at the time of this present study. The regional ground water flow trend is from the northwest to the southeast across Yucca Mountain with a low horizontal gradient and almost no vertical gradient. The water table in this area is about 2,000 ft below the land surface, and a regionally uniform position of water levels seems to exist.

The Topopah Spring Member lies well above the regional water table and is therefore unsaturated. Ground water flow through this member is generally controlled by structural features. In the densely-welded portions of the ashflow tuff, water flow is controlled by primary (cooling) and secondary joints. The hydraulic conductivity ranges from 15 to 15,000 ft/day, however, intercrystalline permeability and porosity are neglible. The unwelded part of this member exhibits a relatively higher porosity (35% to 50%) and a modest hydraulic conductivity (0.25 ft/day) and may act as a leaky aquitard.

10.12.1.2.3 Rock Mechanics Properties

Rock mechanics properties of tuff rocks of the Topopah Spring Member are based on limited laboratory testing of intact rock specimens and discontinuities, and in situ data are almost non-existent (1983). Available data are presented in Table 10.12.1, along with reference

Table 10.12.1 Summarized Mechanical Properties of the Topopah Spring Member

TEST CONDITIONS	COMPRESSIVE STRENGTH	COHESION (C)	ANGLE OF INTERNAL FRICTION	POISSON'S RATIO	AVERAGE POROSITY (%)
Intact Rock at room temperature (73°F)	22,800 psi[a]	2,540 psi[a]	67°[a]	0.23 (at 1,450 psi confining pressure)	9.4%[a]
Intact Rock at elevated temperature (392°F)	22,300 psi[b]	-	-	0.15[a]	11.3%[a]
Rock Joint at room temperature (73°F) (unspecified rock formations)			31.8° to 33.4°[c] (dry) 33.8° to 36.5° (saturated)		

[a] SAND80-1455

[b] SAND81-0629

[c] Olsson & Teufel (1980)

sources. Generalized mechanical properties of intact rocks and joints reported by SAND81-0629, shown in Tables 10.12.2 and 10.12.3, were used to determine the thermomechanical behavior of the Topopah Spring Member in a repository environment. Recent laboratory studies (SAND82-1723) indicate that the mean unconfined compressive strength of the Topopah Spring Member is about 13,900 psi. Tests on water-saturated specimens were performed at room temperature at 14.5 psi confining pressure. The compressive strength so determined is lower than that reported by SAND80-1455. This strength reduction appears to be resulting from the significant effect of water on tuffs. However, since the Topopah Spring Member lies above the water table (and is therefore, unsaturated) and will experience temperature levels above 212°F (on the room scale), it is reasonable to assume a compressive strength of 16,000 psi (30% strength reduction from 22,300 psi, SAND80-1455). This compressive strength value was used to determine ground support requirement for repository construction in the Topopah Spring Member.

10.12.3.1 Repository Construction and Layout

As shown in Figure 10.12.1, the assumed repository will contain 23 storage panels, an experimental area, and a panel for storage of Low Level Waste (LLW). Each panel (Figure 10.12.2) contains 30 storage areas driven perpendicular to a central panel access. Each storage area consists of a storage room with reaming rooms on either side. Each storage area contains 125 boreholes (each 174 ft long) holding a total of 750 canisters. The rooms are 575 ft in length. The pillar surrounding each panel will be 174-ft thick between panels and 656-ft thick between the panel openings and the lateral access and return entries. Access to the panels is by main entries at either end (intakes at one end, returns at the other) that connect the storage panels with five shafts to the surface. Entries and rooms will be driven by drill-and-blast methods. Dimensions of the various facilities are given in Table 10.12.4. Each shaft will have a different function:

- Personnel and materials (service) shaft
- Waste air exhaust shaft
- Mine air exhaust shaft
- Tuff transport shaft
- Waste transport shaft.

The shafts will presumably be sunk by conventional drill-and-blast methods and lined with a concrete liner.

The two potential sequences for repository development and waste placement are:

Table 10.12.2 Mechanical Properties of Intact Rock
Johnson (1981)

	TEMPERATURE				
PROPERTY	68°F	212°F	212°F	1,832°F	UNITS
Young's Modulus	$2.9\text{x}10^6$	$2.9\text{x}10^6$	$2.9\text{x}10^6$	$2.9\text{x}10^6$	psi
Poisson's Ratio	0.25	0.25	0.25	0.25	--
Shear Modulus	$1.16\text{x}10^6$	$1.16\text{x}10^6$	$1.16\text{x}10^6$	$1.16\text{x}10^6$	psi
Coefficient of Thermal Expansion	$4.17\text{x}10^{-6}$	$4.17\text{x}10^{-6}$	$5.72\text{x}10^{-6}$	$5.72\text{x}10^{-6}$	$°F^{-1}$
Angle of Internal Friction	42.9°	42.9°	42.9°	42.9°	Degrees
Cohesion	1230	1230	1230	1230	psi

Table 10.12.3 Mechanical Properties of Joints
(Johnson 1981)

	TEMPERATURE				
PROPERTY	68°F	211.98°F	212.02°F	1,832°F	UNITS
Angle of Internal Friction	35°	35°	35°	35°	Degrees
Cohesion	1.45	1.45	1.45	1.45	psi
Joint Angle (with respect to drill core axis)	90°	90°	90°	90°	Degrees

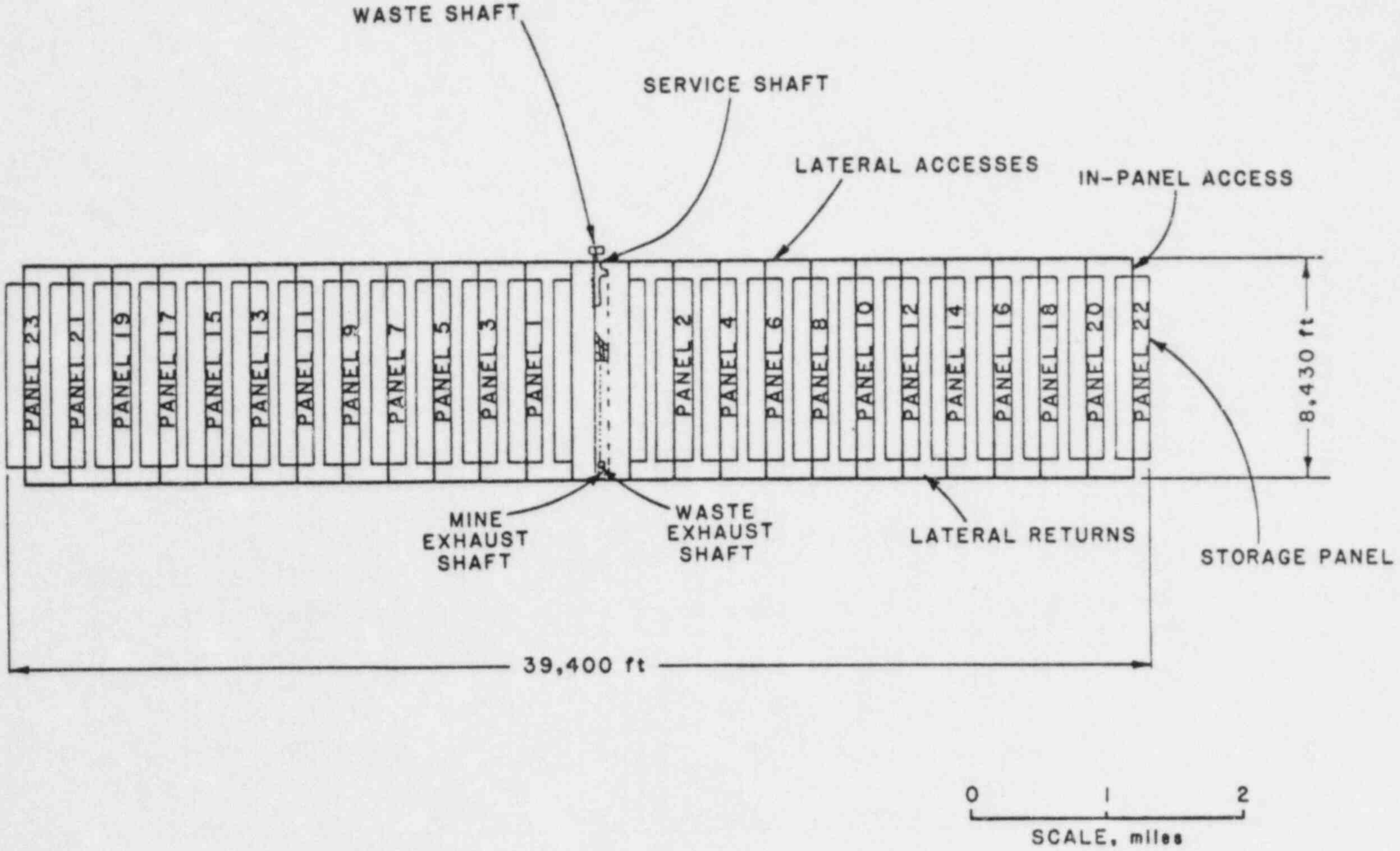

Figure 10.12.1 Layout for repository employing horizontal holes for canister storage. (RHO-BWI-CD-35)

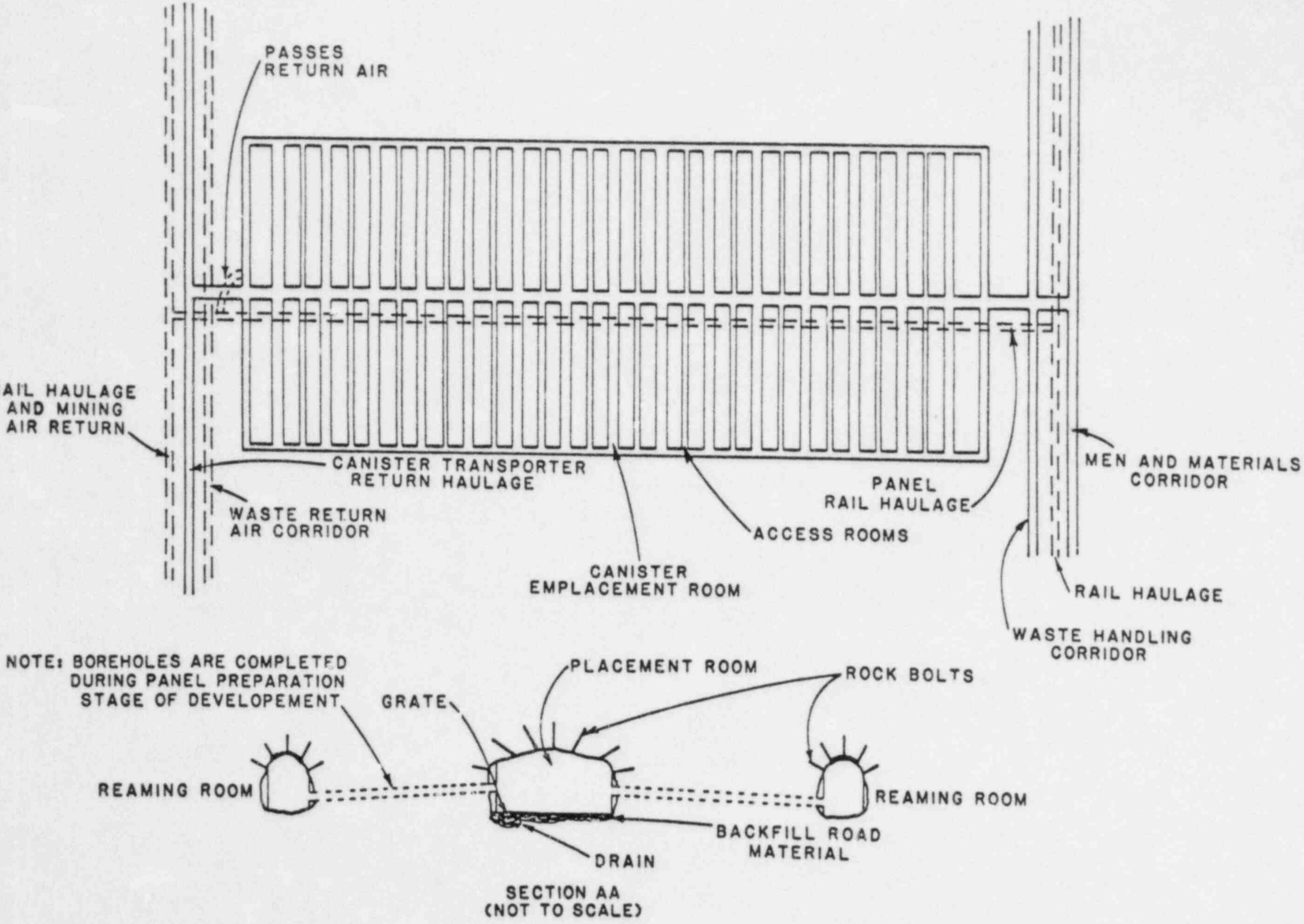

Figure 10.12.2 Panel and room layout for storage in horizontal holes. (RHO-BWI-CD-35)

Table 10.12.4 Dimensions of Repository Facilities

Facility	Dimensions
Personnel and Materials (Service) Shaft	23 ft inside diameter
Tuff Transport Shaft	18 ft inside diameter
Waste Transport Shaft	26 ft inside diameter
Waste Air Exhaust Shaft	18 ft inside diameter
Mine Air Exhaust Shaft	18 ft inside diameter
Central Panel Corridor	26 ft by 16.4 ft (lined)
Sublevel Rail Haulage Corridor	26 ft by 16.4 ft (lined)
Transporter Access	26 ft by 16.4 ft (lined)
Transporter Return	26 ft by 16.4 ft (lined)
Man and Supply Access	26 ft by 16.4 ft (lined)
Waste Air Return	26 ft by 16.4 ft (lined)
Rail Haulage Access	13 ft by 13 ft (lined)
Rail Haulage Return	26 ft by 16.4 ft (lined)
Rock Pass	7.5 ft by 16.4 ft by 29.5 ft
Panels	1,228 ft by 6,232 ft
Storage Rooms	31 ft by 16.4 ft
Reaming Rooms	9.8 ft by 16.4 ft
Rib Pillars	656 ft
Panel Pillars	164 ft
Room Pillars	174 ft
Storage Holes	24-in. diameter by 175 ft long
Storage Hole Pitch	8.4 ft

- Repository development completed before waste storage begins
- Concurrent panel development and waste storage with both operations advancing at the rate of one panel per year.

These two options have very different requirements for ventilation and excavation systems, shaft facilities, and equipment quantities. The dimensions for the facilities given in Table 10.12.4 are for the second. The effect of retrieval on systems in the two alternatives will also be different.

According to assumed repository construction schedules, placement is required to begin within ten years of construction authorization. Assuming two years for shaft sinking and allowing for contract procurement for both the shafts and the underground development, preplacement development must be completed within six years. Because different types of waste will be stored in separate panels (according to information supplied to EI by the NRC) and an available spare panel is desirable at all times, three panels must be ready for storage by year 10. To develop three panels requires a rate of 3,800 tpd on a five-day-week basis.

If repository development must be completed before placement occurs, the required development rate is about 18,800 tpd. Such a daily tonnage would require large crews and a large number of pieces of equipment. Also, to our knowledge, few room and pillar mines hoist this large a daily tonnage in hard rock.

In the assumed preconceptual design (RHO-BWI-CD-35, 1980), development and storage proceed outward from the panels nearest the shaft pillar to those at the extremity of the repository. The mine cycle in a given heading would consist of (in order):

- Drill the round
- Load and blast the round
- Remove the broken muck
- Install ground support.

A "dental excavation" method has been proposed (RHO-BWI-CD-35, 1980) whereby all but the outer 3 ft of an opening is excavated by an initial drill and blast round and the remainder is subsequently blasted using a "trim round" of lightly-loaded, closely-spaced holes.

Although the tuff is probably strong and competent, rock reinforcement and support are necessary to protect against minor local failures such as rockfalls. A loosened zone surrounds openings excavated in rock, which with the "dental excavation" techniques could be as little as 3 ft. The zone is generally sufficient to require some support where otherwise unnecessary. The assumed support systems consists of:

- Rock bolts whose length exceeds one-third the opening span, spaced no more than 10-ft apart
- Shotcrete, nominally 4-in. thick
- Cast-in-place concrete at critical locations.

Mining will tend to drain the repository horizon as the water flows toward the openings but since the repository horizon is above the water table inflows are expected to be minimal.

10.12.1.4 Canister Arrangement

The waste package (Figure 10.12.3) consist of a canister 16-in.-outside diameter and 18.5-ft-long containing either one Pressurized Water Reactor (PWR) or three Boiling Water Reactor (BWR) spent fuel assemblies. The packages will be placed in 24-in.-diameter holes drilled horizontally on 8.4-ft-centers into the pillars between the storage and reaming rooms. The hole is lined with a carbon steel sleeve which is grouted into place with cementitious, absorptive materials. The placement of the sleeve and the grout are standard tunneling technology.

10.12.1.5 Thermal Loading

As a result of decay of the radionuclides contained in the spent fuel, the waste packages radiate heat. Unreprocessed spent fuel contains fission products which are relatively short-lived and actinides which are generally quite long-lived. As the radionuclides decay to stable isotopes, the number of disintegrations, and the heat produced decrease with time. The heat produced by a canister will be maximum at the time of emplacement.

A canister will contain either one PWR or three BWR spent fuel assemblied. Assuming 10-year-old waste, canisters will have heat loads of approximately 0.55 kW and 0.66 kW for PWR and BWR, respectively. To be conservative the heat load per canister is taken as 0.7 kW.

The areal extent of the repository, the canister spacing, the age of the waste, and the type of waste (PWR or BWR) determine the overall thermal load on the repository. To be conservative, all the waste is assumed to be 10-year-old PWR. Waste type and age will vary, and actual panels are assumed to consist of waste of a uniform type and age to avoid uneven thermal loading within a room or panel.

The assumed effective storage area consists of 23 panels occupying 188 acres each or 4,330 acres total. Using the 0.7 kW/canister

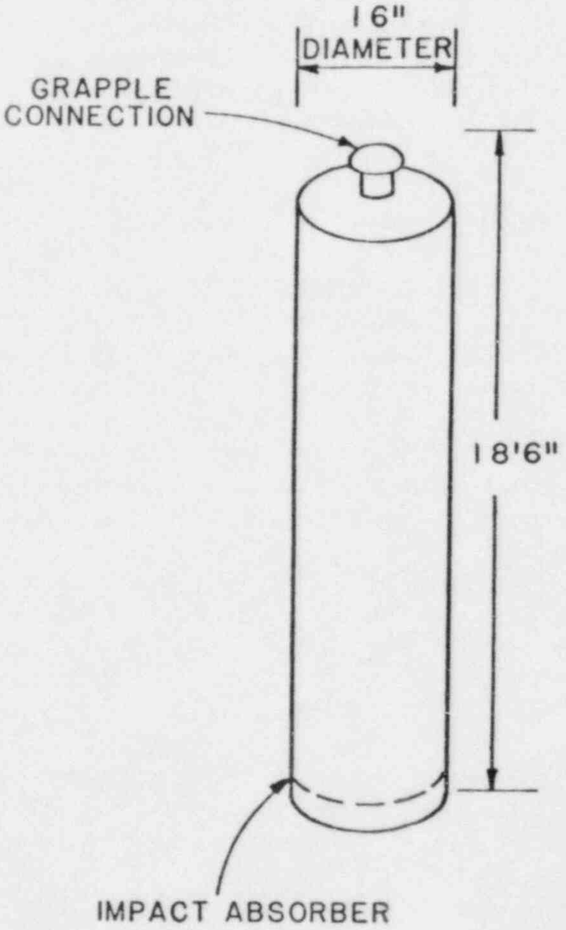

REFERENCE WASTE CHARACTERISTICS

CANISTER	THERMAL POWER	SURFACE DOSE RATE
SPENT FUEL	700 W	20,000 REM/HR
HLW	3100 W	100,000 REM/HR

Figure 10.12.3 Standard waste canister.
(RHO-BWI-CD-35)

thermal load for spent fuel and the waste complement of 22,500 canisters per panel, the heat load within a panel is 83.8 kW/acre. By comparison, the in-panel loading given in RHO-BWI-CD-35 is 158 kW/acre which requires a canister heat load of 1.25 kW/canister. This is due to the assumption that the repository will also contain a reprocessed HLW which has a higher thermal load. On the basis of the total repository area including the shaft pillar and service areas, the overall heat load will be 50 kW/acre.

10.12.1.6 Backfill Timing

Ultimately, a repository must be backfilled, with the backfill designed as a barrier (10CFR60.133). In this repository concept, backfill will not be placed until permanent closure. Remining of backfill for retrieval purposes is apparently not an issue because the decision to permanently close nullifies the retrievability requirement.

Permanent closure will take about 23 years to complete, the same length of time as placement. Therefore, retrieval could be required for some reason during the permanent closure process, though the rule (10CFR60) does not require retrieval to be maintained as a option after initiation of permanent closure. Once the backfill is placed, the repository concept basis is changed. Remining prior to retrieval will not be detailed in this concept because the retrieval operations would be similar to concepts where backfill is placed immediately after waste emplacement.

10.12.1.7 Ventilation

Rooms are bulkheaded but not backfilled until permanent closure. The two potential development options:

- Develop and store waste simultaneously
- Develop whole repository prior to waste placement,

result in two potential ventilation schemes. In the first case, two separate ventilation circuits are required:

- Mine (development) ventilation system
- Confinement (storage) ventilation system.

Although rooms will be bulkheaded as soon as storage has been completed, the central panel accesses will remain open. The airflow required for the waste air circuit will increase until storage has been completed in the entire repository if development and storage occur simultaneously. If repository development is completed prior to commencement of storage operations, there are three possibilities:

- If rooms are left open until storage takes place, the require ventilation capacity will decrease as placement progresses.

- If rooms are bulkheaded but the central panels accesses remain open, the required airflow will remain constant.

- If panels are totally bratticed, then the required airflow will increase as the repository is filled.

The second option is the most practical.

In the summer, the intake air may require precooling in order to maximize the convective heat removed from the rock. In winter, the intake air may require heating to ensure that the temperature exceeds 37°F to avoid icing. Heating could best be accomplished by extracting heat from the exhaust air using heat exchangers.

10.12.1.8 Retrieval Systems

Title 10, Part 60 of the Code of Federal Regulations (10CFR60) requires that repository operations be designed so that any or all of the waste could be retrieved on a reasonable schedule, "Full Retrieval" is removal of all waste. Retrieval on a limited basis (a few canisters, a single room, or a single panel) may become necessary. The latter scenario is designated as "Local Retrieval."

After breaching the bulkheads, the repository rooms are precooled to allow the same type of equipment to be used for both storage and retrieval. This equipment is shown in Figure 10.12.4. The temperatures after precooling will remain workable and high temperature equipment for retrieval is not necessary.

10.12.2 Retrievability Impacts on Repository Systems

10.12.2.1 Excavation Systems

Storage rooms are bulkheaded after being filled with waste canisters, but an access will be maintained to monitor the storage atmosphere. Bulkhead design is not detailed in the assumed RHO-BWI-CD-35 but must meet certain criteria to prevent deterioration from extreme differential temperatures. The bulkheads will likely be made of concrete and contain reinforcing steel, keyed into the side walls.

The bulkhead will be removed upon retrieval or at permanent closure in one of several ways. Blasting may be the least desirable, possibly causing damage to the entry. Drilling holes for rock breaking

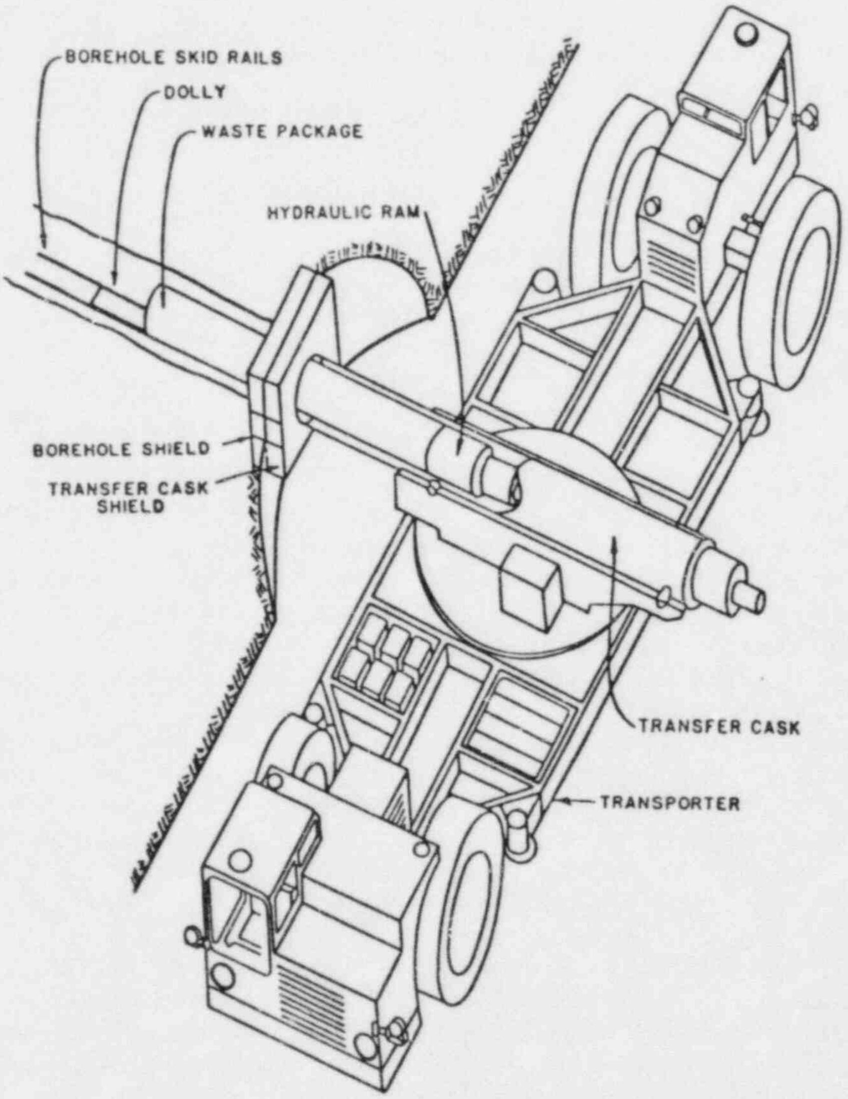

Figure 10.12.4 Transporter and transfer cask configuration for placing waste in horizontal holes. (RHO-BW-SA-273 P, 1982)

devices may be the safest, and does not require elaborate equipment or highly skilled labor.

Bulkhead removal may be tedious but is within present technology. Certain precautions must be undertaken to protect personnel from sudden exposure to the higher temperature and possible radioactivity behind the bulkhead. Precooling the panel is necessary before equipment can enter the area.

10.12.2.2 Equipment Systems

Retrievability effects on equipment systems can best be identified with the aid of the flow chart shown in Figure 10.12.5. Each basic repository operation is given an identification number to facilitate identification of an event's effect on all systems. With development mining completed, the only active operations involve canister storage. Different levels of retrievability vary greatly in the way they affect repository operations.

Local retrieval of canisters for any reason may take place concurrently with storage operations. Unless new equipment is obtained for the task, the storage equipment will have to be used slowing the normal storage rate. Retrieval of breached canisters will require "hot cell" or shielded equipment along with decontamination equipment in the storage area. Transporting the canisters to the surface (Figure 10.12.5) will require use of the crane (3), hoist (4), and surface handling facilities (5). This may slow, but not stop storage operations because retrieved canisters can travel in the ascending conveyance while canisters to be stored travel in the descending one. The delays occur because the handling equipment can handle only one canister at a time. The debris from bulkhead removal must be handled which imposes additional loads on the material handling systems.

Full retrieval of canisters can be planned systematically for a full storage room or full repository, starting with the oldest storage rooms. Because the same handling equipment will be used for the full retrieval operation as for emplacement, an operating schedule can be defined, with no interference from other operations. If any canisters are breached, the retrieval will be more complex due to contamination. Special equipment will be used for the breached canister retrieval operation. A repository committed to one operation at a time (such as canister emplacement) makes a much more efficient operation than if local retrieval is concurrent.

Before canisters can be retrieved, an excavation system is necessary to remove the bulkhead. Although specialized equipment may be used for local retrieval, a separate work force is not necessary. Personnel would most likely be taken from other duties and consequently one or more routine operations would be temporarily postponed or slowed.

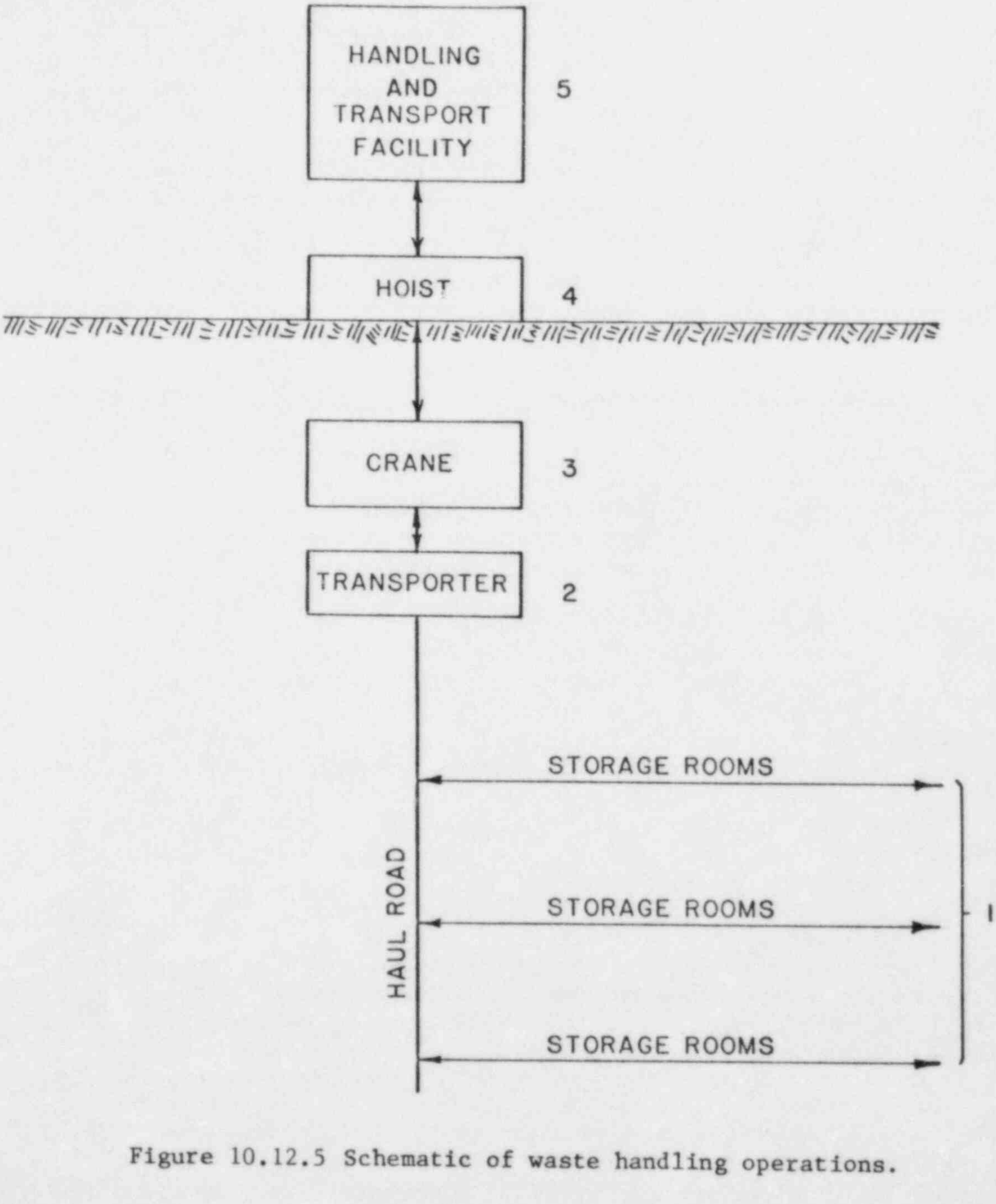

Figure 10.12.5 Schematic of waste handling operations.

10.12.2.3 Facilities

If mining development and waste emplacement are concurrent operations, the reason for full retrieval will most likely preclude further mining. The modular concept of repository operations keeps the two systems separated to the extent that equipment for each system uses different haulageways and hoisting shafts. Facilities such as haulageways, loading bins, skips, and the equipment for handling mined rock will not be effected by local retrieval. The mining equipment may be temporarily stopped during local retrieval if warranted by retrieval conditions. The area most likely affected by local retrieval will be the shaft area where full transfer casks will be handled, hoisted, and lowered, and mined rock will be hoisted. If the retrieved canisters are breached, the congestion will be compounded.

10.12.2.4 Ventilation Requirements

Ventilation is provided only in the central access corridor of a panel after storage has been completed in the panel. The storage rooms within individual panels are bulkheaded but not backfilled until permanent closure. The impact of retrievability on the ventilation system depends on several factors:

- Whether development operations have been completed
- Whether retrieval is local or full
- Whether placement operations have been completed.

If development operations have been completed, two ventilation circuits are not required. The airflow capacity of the mine air circuit is available, if needed, for waste placement or retrieval operations. If development operations are in progress, only the capacity of the waste air circuit is available for waste placement or local retrieval operations.

If full retrieval is initiated, then, by definition, both development and placement operations cease and the total ventilation capacity of both mine and waste circuits can be used for retrieval operations. Also, the combined capacity of the mine and waste air circuits can be used for local retrieval, if necessary, as long as placement operations have been completed prior to initiation of retrieval.

After room bulkheads are breached, precooling will be required before retrieval can take place. The refrigeration and airflow capacities required for precooling depend on the temperature of the rock, the temperature of the intake air, the acceptable temperature for the exhaust air and the desired rate of cooling.

In order to monitor air quality within the bulkheaded rooms allowance should be made for a venting system to be installed in the bulkheads.

To keep the central panel accesses ventilated and reasonably cool requires an airflow of 25,000 cfm for each. Assuming development is completed prior to storage initiation, the maximum required airflow quantity would be when placement is occurring in the 23rd (or final) panel and local retrieval is required elsewhere. Allowing 155,000 cfm each for placement and retrieval, and an additional 10% for occasionally bleeding of air into bulkheaded rooms and for recirculation, the required airflow is 946,000 cfm. Because the total capacity of the combined mine and waste air ventilation circuits in the assumed RHO-BWI-CD-35 is 1,265,000 cfm, sufficient capacity exists to allow these operations.

Where local retrieval is required while both storage and development activities are in progress, the mine air circuit is not available, and a sufficient capacity in the waste air circuit must be verified. The worst case would occur in the final year of development operations (year 22 of storage operations). At that time, all panels are bulkheaded except for the central access and one panel each where storage and retrieval operations are taking place. Basic airflow required is 810,000 cfm, (or 891,000 cfm allowing 10% for recirculation and occasional venting through bulkheaded rooms). The quantity of 891,000 cfm exceeds the capacity of the waste air circuit provided in the assumed RHO-BWI-CD-35, but could be accomodated by increasing the size of the fans at the Waste Air Exhaust Shaft. The size of the Waste Air Exhaust Shaft should also be increased to 19-ft diameter so the air velocity does not exceed 3,000 fpm. Proper sizing of the shaft is important in order to assure that any leakage between the mine air and waste air circuits is toward the waste air circuit.

10.12.2.5 Backfill

Backfill would not be placed until permanent closure. The requirement for retrievability does not directly impact backfilling operations. However, full retrieval would impact backfilling because when all the waste is removed, isolation of the repository and backfilling is no longer required. When a room or panel is emptied of waste, backfill would still be required to ensure that the room or panel does not become a preferential pathway for radionuclide migration.

10.12.2.6 Thermal Effects

The thermal effects associated with nuclear waste disposal in an underground repository have significant impacts on the retrievability of the waste. Thermal effects can be divided into three distinct areas:

- Very-near-field effects which have the most direct impact on retrievability because elevated temperatures can lead to decrepitation of the borehole wall and binding of the canister

- Near-field effects which impact retrievability indirectly by increasing the potential for creating instability of the storage rooms

- Far-field effects which have minimal, if any, impact on retrievability because the stability of the entries and shafts would not, in general, be affected by the thermal loading.

No thermal analyses have been performed specifically for a horizontal storage concept in tuff. Thermal analyses have been performed for both horizontal and vertical storage in basalt, however, and the results of these analyses indicate that the predicted temperatures are very similar for both storage concepts (RHO-BWI-CD-35, RHO-BWI-C-116). Therefore the prediction for vertical storage in tuff may be used as an approximation of the temperatures for the horizontal storage concept and precise thermal analyses should be performed before design.

The Mine Design Studies (MIDES) Working Group has completed a limited number of thermal analyses of a waste storage repository in tuff (SAND82-0170; SAND80-2813). Table 10.12.5 is based on these analyses and shows the predicted maximum rock temperatures at critical locations for a gross thermal loading (GTL) of 50 kW/acre. As no maximum temperature criteria have been defined for tuff, the predicted temperatures are compared with the BWIP basalt temperature criteria (RHO-BWI-C-116, RHO-BWI-CD-35).

The MIDES Working Group used the COYOTE and ADINAT computer codes in their analyses. Their results are based on the following assumptions:

- The rooms are open but not ventilated

- The repository horizon assumed by MIDES is the Bullfrog Member of the Crater Flat Tuff, at a depth of 2,624 ft (rather than the 1,200-ft-depth of the Topopah Spring Member)

- Initial rock temperature is 97°F

- The tuff is fully saturated with water

- No boiling of ground water is anticipated.

Table 10.12.5 Maximum Predicted Temperatures for Tuff

LOCATION	MAXIMUM PREDICTED TEMPERATURE FOR TUFF[1] (°F)	BWIP MAXIMUM TEMPERATURE CRITERIA FOR BASALT (°F)
Rock at Canister	241	392[2]
Emplacement Room	189	212[3]

[1] Source - SAND82-0170. Assumes thermal loading of 50 kW/acre and that repository horizon is Bullfrog Member of Crater Flat Tuff

[2] Source - RHO-BWI-C-116

[3] Source - RHO-BWI-CD-35

At present the DOE considers the Topopah Spring Member of the Paintbrush Tuff the most likely repository horizon. Temperatures in the Topopah Spring Member may be different from those calculated for the Bullfrog Member because:

- The Topopah Spring Member is not as deep as the Bullfrog Member, and therefore has a lower initial temperature
- The Topopah Spring Member has a lower thermal conductivity, which would tend to increase long-term temperatures.

When the actual repository horizon is chosen, further site specific thermal analyses will be necessary. The temperatures shown in Table 10.12.5 may be taken as an approximation of the temperatures that may be experienced at the time of retrieval. Because the model assumed that the rooms would not be backfilled or ventilated, the predicted tuff temperatures should correspond closely with those anticipated for bulkheaded storage rooms.

From a retrieval standpoint, the most critical feature of the horizontal storage concept is the stability of the horizontal holes. Borehole decrepitation seems unlikely to occur at the predicted temperatures, but borehole failure could severely hinder retrieval if the steel sleeves were damaged and canister were bound deep in the holes. The effect of the temperature rise on room stability will depend on the variability of rock strength in the repository, and on the final room layout and repository design. Rockfalls may occur in areas of local overstress, and these would have to be cleaned when the rooms were reopened for retrieval.

The thermal impact in the shafts and main entries should be insignificant, as they are remote from the waste emplacement panels and will be ventilated continuously throughout the entire repository life.

10.12.2.7 Equipment Requirements for High Temperature and Radioactive Environment

High temperatures in storage rooms will not be encountered during retrieval as long as rooms are precooled after bulkhead removal. The same equipment can be used for emplacement and for retrieval without modification for high temperature.

Radioactive environments will require special shielding of equipment for operator safety. Decontamination facilities will also be necessary to service equipment and storage areas.

10.12.2.8 Ground Support

The Q-system (Barton, Lien, and Lunde, 1975) has been used to determine ground support requirements in the repository. Strength values of the rock mass discussed under Section 10.12.1.1.3, "Rock Mechanics Properties" indicated a Q-system value of 85. Based on this value and storage room cross-sections under consideration, the Q-system indicates the tuff to be competent requiring no support. However, because the data base for the Q-system does not include high temperature operating conditions, a support system in excess of that indicated has been assumed. The support system should consist of untensioned, grouted rock bolts spaced 8 to 10 ft apart. Experience with concretes at elevated temperatures (Troxell, Davis, and Kelly, 1968, p. 248-250) indicates that for simple temperatures increases to 212°F relatively minor strength losses occur due to loss of both free and combined moisture. Above 212°F more significant strength losses occur in the repository maximum temperature ranges up to, say 400°F, but amount to 10% reduction, or less. However, if the concrete is heated and then cooled, strength losses approach 25% or more at 400°F. Two considerations may minimize such strength losses. Using lean mixes and limestone, expanded slag, or similar aggregates minimize heat effects in this range. We suspect that the important cement grout, shotcrete and concrete considerations for repository temperatures hinge on minimizing the water content and matching the thermal expansion and chemistry of cements and aggregates.

Over a decades-long period some deterioration of the rock reinforcement system will occur and minor roof falls may result. Because the rooms are bulkheaded, cleanup and support reinstallation cannot be performed until prior to commencement of retrieval operations. Precooling will also be necessary before this can be done. However, if excessive roof falls occur (as determined by monitoring), it may be necessary to breach the bulkhead, reinstall resupport and reconstruct bulkheads, to avoid problems during actual retrival. Equipment for cleanup and support installation would include a Load-Haul-Dump vehicle and a roof bolting jumbo.

Despite the Topopah Spring Member lying above the water table, some ground water is likely to enter the repository during the operation period. This water may be expected to escape as steam when the bulkheads are breached for retrieval.

10.12.2.9 Instrumentation

The performance of the repository has to be monitored to ensure the safety criteria are not violated and the isolation capacity is maintained. The retrievability option mandates significant changes in selected parameters or deviations from expected behavior be detected when they occur. Steps must be taken to correct the problem or retrieve the waste to the surface. Categories requiring monitoring are:

- Hydrogeologic - water inflow
- Thermal - heat buildup
- Mechanical - stress buildup rock deformations and rock instability
- Radiological - activity levels.

A monitoring program of subsurface conditions by visual inspection where possible and remote measurement from within panels will be initiated. Visual inspection and hands-on measurements are preferable to remote monitoring because instrumentation available at present is not reliable for periods in excess of about a decade, especially under the thermal conditions of the repository rooms. In order to evaluate the performance of the remote monitoring system, an experimental panel will be provided in the repository where extensive verification and confidence testing will be performed. The panel will also provide an opportunity to study the reliability of instrumentation.

Thermal monitoring will primarily consist of thermocouples embedded in boreholes drilled into the rock at intervals along storage rooms. Thermocouple signals will be collected at several spots and relayed to a central control console to detect abnormalities.

Hydrogeologic monitoring will consist of measuring the pressure of formation water in the vicinity of storage holes, in various accesses, and in tuff flows and interflows. Durable high-precision, pressure transducers will be placed between packers in boreholes. Water quantities entering individual panels will be monitored by devices measuring the humidity, and temperature of the air inside the panels.

Mechanical monitoring will consist of a network of geophones and seismographs to monitor rock noise and rockfalls. The closure of pre-established points in accessways will be measured. At a few selected locations outside the panels, detailed evaluation of rock stability will be made using stressmeters and multiple-position borehole extensometers.

Ventilation conditions in the repository will be monitored to detect radiation levels, fire and smoke emergencies, and ventilation blockages caused by rockfalls. Mobile radiation and thermal sensors in ventilation airways will permit continuous monitoring from a main surface control console. Flow direction, pressure, differential pressure, and temperature will be monitored.

The retrievability requirement mandates monitoring of the repository for perhaps decades after initial placement of the waste. The following steps need to be taken to ensure the reliability of instrumentation placed in the repository:

- Develop geophones, stressmeters, multiple position borehole extensometers, piezometers, thermocouples, and ventilation instrumentation that will maintain their accuracy in the hot and humid environment expected in a repository
- Provide extensive verification of the reliability of instrumentation in the experimental panel established within the repository
- Ensure inspection of the repository at predetermined intervals can be performed by personnel in air-conditioned suits or vehicles, or robots.

10.12.3 Adequacy of Incorporated Retrieval Systems or Allowances

10.12.3.1 Local Retrieval

Local retrieval may be necessary for quality assurance, quality control, or a radionuclide release. A manufacturing error, for example, could cause premature breakdown of some canisters in a storage room. Local retrieval requires breaching the bulkhead, and precooling the room prior to retrieval. Bulkheaded but unbackfilled rooms permit the use of the same equipment type for emplacement and retrieval procedures, once the rooms are cooled. Equipment for resupporting the roof after precooling will be dedicated to the waste ventilation system. The canister transporter and "hot cell" equipment will be necessary for breached canisters. Unless the leaking canister is the one closest in the hole to the storage room, retrieval of a leaking canister will require prior retrieval of up to five other canisters.

Retrieval of breached canisters by overcoring the holes is apparently not practical with horizontal holes containing more than one canister. A possible method to facilitate retrieval would be to have a piece of equipment pushing from the reaming rooms as well as having the transporter and transfer cask in the storage room. One difficulty with this retrieval method is the narrow width of the reaming rooms. Provisions for such equipment is not included in the design and the incorporated systems are inadequate.

Equipment for removal of debris from the breached bulkhead must be incorporated and dedicated to the waste ventilation circuit. In order to make the retrieval system adequate, the size of the reaming room must be increased and the equipment for pushing must be dedicated to the waste ventilation system. The waste ventilation system as assumed in RHO-BWI-CD-35 is adequate for local retrieval with concurrent development and storage. The Waste Air Exhaust Shaft diameter must be increased to 19 ft or a new shaft sunk in order to have sufficient airflows for local retrieval. Even with incorporation of larger reaming rooms and pushing equipment, a broken or bound canister may make the retrieval system inadequate.

10.12.3.2 Full Retrieval

Full retrieval of waste canisters will need planning and preparation but will not be necessarily difficult. Full retrieval planning is eased because all repository resources can be committed to the operations. Underground storage may prove unsatisfactory leading to repository abandonment. Nevertheless, full retrieval should not require special equipment unless the reasons for retrieval interfere, such as excessive rock movement crushing canisters, or rapid deterioration of rock causing need for roof support and scaling equipment.

Full retrieval presents the same technological problems as local retrieval. The incorporation of larger reaming rooms, pushing equipment or magnetic grapples, and equipment to breach and cleanup bulkheads and resupport the roof satisfy most of the retrievability requirements. With the repository dedicated to full retrieval the ventilation systems can be combined for adequate airflows. A broken or bound canister during full retrieval may make the incorporated system inadequate.

10.12.4 Concerns

10.12.4.1 Technological Concerns

No concerns were discerned which can truly be attributed to a lack of technology. The transporter and transfer cask as described in the assumed RHO-BWI-CD-35 are inadequate for retrieval of canisters, especially those that have been breached. How a canister 150-ft deep in a 174-ft-horizontal hole can be retrieved is unclear. A telescopic arm can reach to the extreme distance, but if the canister is frozen in place due to excessive rock stress, retrieval may be impossible. Horizontal storage in holes 174-ft-long preclude the option of overcoring a breached canister. The drift for horizontal storage, being 31-ft wide, necessitates breaking the overcore numerous times before attaining the desired 150-ft length. Breaking the rock mass will require a special operation, as well as additional work to the breached canister. In addition, the breaking of core will require the removal the entire lining before overcoring can begin. If the lining has been grouted into place removal could be quite difficult. The transporter and waste emplacement scheme described in the BWIP SCR, which has been assumed in this concept, incorporates features such as a magnetic and telescopic grapple which would facilitate retrieval. Nevertheless, no provision is indicated for retrieving breached canisters, especially those which have broken into more than one piece. Design of such equipment does require some development but is attainable within current technology.

10.12.4.2 Saftey Concerns

The assumed preconceptual design (RHO-BWI-CD-35, 1980) required one transporter operator rather than two, which is not advisable under the hazardous operation of retrieval of breached canisters. Transporters will be the only equipment necessary for retrieval in the storage room. If an operator became injured he may have trouble getting aid quickly. Personnel working in pairs help eliminate the communication problem in case of injuries to the partner. The transporter described in the BWIP SCR, which has been assumed for this concept, does have two operators and thus corrects this potential problem. The "buddy system" is widely used throughout the mining industry to help safeguard personnel, and seems desirable for repository operations.

Experience is lacking regarding the effectiveness of grouted bolt and shotcrete support systems over periods of decades and at the high rock temperatures (up to 300°F) that will be encountered. (The maximum continuous service temperature for the polyester resins normally employed in grouted bolts is about 250°F (Weast, 1983) and other grout materials are required.) The uncertainties concerning high temperatures can be minimized by using cements for the bolt grout and shotcrete which minimize heat effects (Section 10.12.2.8). Some weakening of the supports will take place with time and some minor roof falls will occur. With bulkheaded but unbackfilled panels, support rehabilitation can be carried out only after the bulkheads have been breached and the panels precooled. The reintroduction of moist ventilating air can aggravate weaknesses in the room and cause roof falls through the mechanism of moisture entering any cracks.

In spite of grouting and shotcreting, some water will seep into the rooms of the repository. Because of the flat grade of the rooms, the water will not drain but will collect in local low spots. As the water will likely be contaminated, the water must be carried in tanks or closed conduits to treatment areas. After a period of 15 years the increasing room temperature will cause the water to become steam. The steam must be handled during the breach of the bulkhead to prevent a possible safety hazard.

All canisters will be emitting radiation. In the course of storage, the hole plugs may be sufficient to minimize escape of this radiation into the rooms. During retrieval, however, the rays can escape as streaming radiation if the doors on the borehole and transfer cask shields are not tightly closed. In the case of breached canisters, gaseous radionuclides and beta radiation will also be emitted. The potential dosages must be determined in order to provide adequate shielding for personnel.

10.12.4.3 Radionuclide Release Concerns

One of the possible reasons for retrieval is failure of the waste package, with consequent release of radionuclides. Gaseous and volatile radionuclides may be released into the emplacement hole while soluble radionuclides may be carried away by any water present in the emplacement hole. Removal by aqueous solution, requires the presence of water in liquid form; that is, its temperature must be less than the boiling point for the repository pressure conditions.

10.12.4.3.1 Releases into Air

The gaseous and volatile isotopes which could be released by a breached canister are hydrogen-3 (tritium), carbon-14, and krypton-85. The quantity of krypton-85 is large compared with that of either tritium or carbon-14. In addition, the carbon-14 must be in a form that leads to volatile species upon reaction with water in order to be of concern. One-tenth of the krypton-85 is assumed to be sufficiently near an exposed surface to be able to leave the fuel. If a breach occurs, the concentration of krypton-85 and tritium in air must not exceed 10 nCi/liter and 5 nCi/liter, respectively, in order to satisfy 10CFR20. (These EPA radioactivity concentrations limits are defined in metric units. The equivalent traditional units, for reference, are 0.35 nCi/ft^3 and 0.18 nCi/ft^3, respectively.)

If storage hole plugs are gas-tight, release of gaseous radionuclides from a breached waste package will occur at retrieval. Otherwise, the radionuclides will leak through the plug into the air. Assuming the room was still bulkheaded and the breach was discovered due to radionuclides in the leakage air, retrieval of the breached canister would require removal of the bulkheads and precooling. The time required to reduce krypton-85 concentrations to the Maximum Permissible Concentration (MPC) given in 10CFR60 would not exceed a few hours. In any case, the time required for precooling greatly exceeds the time required to dilute the krypton-85.

Releases occurring at retrieval can be avoided by having radiation sensors in the holes. The gaseous radionuclides could then be drawn off prior to retrieval using millipore filters or a cryogenic absorption system, both of which fall within existing technology.

10.12.4.3.2 Releases into Water

The movement of radionuclides by aqueous transport requires that water be in the liquid state. At a pressure of 520 psi, the boiling point of water is about 450°F, and because the rock temperature will be 300°F or less, pore water will be in the liquid state. Because the rooms are near atmospheric pressure, this water will vaporize as soon as it enters the room.

To transport radionuclides, water must come into contact with a breached canister. This would require penetration of the grouted-in steel hole liner. Assuming this occurs, and water contacts a breached canister, the rate of dissolution would vary widely with the water composition and temperature. For a typical rate of 0.0000264 lb/day, the solution water would contain about 0.25 mCi/lb water and one pound of this solution would generate about 0.1 mR/hr at 4 ft.

Water could also dissolve gaseous radionuclides. Krypton-85 has a solubility of 0.628 ft^3/100 gal (Weast, 1983) in hot water so that only about 1.5 gal of water would be require to dissolve the krypton-85 released by a single breach. Water which came into contact with a breached canister and then percolated into the room would release gaseous radionuclides upon entering the room. As in the case of direct releases to the air described in Section 10.12.4.3.1, the time required to dilute the krypton-85 to the MPC is much less than the precooling time.

Water intrusion would provide a good index to failures but alone would not introduce significant radiation hazards to the operations (Post, 1982).

10.12.4.3.3 Radiation Detection Standards

The radiation levels measured during retrieval operations are not exceptional so that the system standards used in the nuclear industry would prevail. A lower limit of 0.1 mR/hr and an upper limit of a few kR/hr would be adequate. A system to detect krypton-85 in the ventilating air and in the storage holes will be required. This system should be capable of decting krypton-85 levels below 100 pCi/liter (2.6 pCi/ft^3) (Post, 1982).

10.12.4.4 Operational Concerns

The pitch (or spacing between storage holes) is given in the assumed RHO-BWI-CD-35 as 8.4 ft. Intersection of adjacent holes is unacceptable. The lateral alignment variance therefore must be less than a three-ft radius from the design location. The tolerance can be easily achieved in vertical or steeply dipping holes, but is difficult to attain in flat-dipping or horizontal holes. In the BWIP site characterization report (SCR), the hole pitch has been expanded to 60 ft for spent fuel and 107 ft for commercial high level waste. As a result, the restriction concerning alignment does not apply. Variation in the alignment should be minimized and to do so requires careful drilling. As noted in the BWIP SCR, horizontal holes will tend to deflect downward due to the weight of the drill head and drill string. Deflection increases with bit size. To minimize the deflection, the holes will be drilled at a smaller size first and back-reamed to full size, as noted in the BWIP SCR. Where close to and roughly parallel to bedding planes, holes may tend to follow these planes.

In the assumed RHO-BWI-CD-35, the transfer cask is fitted longitudinally on the transporter and as a result the transporter must have its long axis parallel to the placement holes (or perpendicular to the long axis of the rooms) in order to place or retrieve waste. Turning the transporter to align with the holes will be a difficult and time-consuming maneuver. The problem has been rectified in the BWIP SCR by having the transfer cask on a turntable which rotates to align the transfer cask with the hole.

If a canister has been breached, especially if the canister has broken into more than one piece, the transfer cask and transporter combination will not be able to successfully retrieve. With horizontal holes, overcoring is not feasible. The holes, however, are accessible at both ends and retrieval could be accomplished by using a transporter at each end with the hydraulic ram in the transfer cask on one pushing and the grapple on the other pulling. Reaming rooms must, then, be equal in size to the placement rooms, rather than smaller as currently assumed.

Because of the heat load, large capacity spot coolers will be required in active headings. These cooling units will take up a large amount of space, reducing the clearance for vehicles. In addition, coolers have a finite useful life and become less efficient with age.

10.12.4.5 Other Concerns

A fundamental concern related to a repository in tuff concerns the geologic/hydrogeologic uncertainty at the repository horizon. Among the concerns are:

- Uniformity of the thickness at the canidate tuff flow
- Uniformity of the jointing
- Occurrence of faults
- Vertical and lateral hydraulic conductivity.

The in situ exploratory programs being planned (1983) by DOE are aimed at resolving the questions about geologic and hydrogeologic parameters at the proposal repository horizon.

Another concern is the probability of and mechanisms for canisters to become breached. One mechanism is corrosion by ground water. The rate of corrosion will depend on the ions present in the ground water, their concentrations, and whether the chemical environment is reducing or oxidizing. Another possible mechanism is attempted retrieval of a canister upon which the hole has closed. With an annulus of 6-in. between the hole perimeter and the canister in the most recent BWIP SCR design, the mechanism is unlikely. Assuming that canister breaches will occur at sometime during the 50-year retrievability period, the activities of toxic (strontium and cesium), volatile (iodine), and gaseous (tritium, krypton-85) radionuclides and the dosages of beta and gamma radiation that would occur for breaches at various times up to several decades after placement must be predicted.

10.12.5 Summary and Conclusions

The repository is located at a depth of 1,200 ft in the Topopah Spring Member tuff of the Nevada Test Site, Nevada. The repository consists of 23 storage panels and one experimental panel divided by a shaft pillar into two sections of 12 panels each. Each panel is divided into 30 storage areas consisting of a storage room with reaming rooms on either side. The storage rooms are 575-ft-long, 31-ft-wide and 16.4-ft-high.

The waste package consists of carbon steel, 16-in. in diameter and 18.5-ft in length, and contains either one PWR or three BWR spent fuel assemblies. Six canisters are placed in each 174-ft-long, 24-in-diameter horizontal hole. Based on an average canister thermal load of 1.25 kW/canister at time of placement, the panel thermal load is 150 kW/acre. The rooms are bulkheaded after having received the complement of waste. Backfilling of the rooms would not take place until permanent closure of the repository.

The retrievability requirements of 10CFR60 have the following effects on the repository systems:

- Re-excavation System - Equipment is required to remove the bulkheads. Drilling jumbo and rock breaking devices are anticipated for the work
- Equipment Systems - A Load-Haul-Dump and a roof bolter are required to resupport the roof after precooling the rooms. Canister retrieval will require modifications of the placement transporter to "pull" the canisters or a second transporter in larger reaming rooms to push the canisters out

- Facilities - Local retrieval may impose additional loads on the transportation, confinement ventilation and development mining. Handling debris from the bulkhead removal operation will impose an additional load on the material handling system

- Ventilation Requirements - Sufficient capacity is included in the ventilation system for full retrieval if both mine and waste air ventilation circuits are used for that purpose. For local retrieval while development and storage are in progress, the waste air circuit capacity must be increased from the values assumed in RHO-BWI-CD-35

- Backfilling - none required until permanent closure.

Breached canister retrieval imposes additional requirements on the equipment systems and repository facilities.

The concerns for the repository concept are as follows:

- Technological Concerns:

  - Overcoring a horizontal hole, 174-ft-long to retrieve a breached canister requires removal of the hole lining and numerous difficult core breaks

  - Within current technology, a telescopic ram or magnetic grapple requires development and implementation to retrieve the canisters

  - Adequacy of the rock support system for a period of decades

- Safety Concerns:

  - Deterioration of the roof support system due to elevated temperatures resulting in rockfalls

  - Presence of radioactive fluid on the repository floor and radioactive steam prior to and during retrieval

  - Streaming gamma radiation, possible beta particles, and gaseous radionuclides during retrieval

- Radionuclide Release Concerns:

  - Canister breaches would result in release of gaseous hydrogen-3 (tritium) and krypton-85 and volatile carbon-14, of which krypton-85 would have the largest concentration

  - Diluting krypton-85 to the MPC given by 10CFR20 could take up to several hours for a release from a single breached waste package

  - The mechanics for release of gaseous radionuclides from the storage hole to the atmosphere could be non-gas-tight hole plugs, streaming through the floor shield at retrieval and aqueous transport (if hole liners corrode)

  - A system is required for detection of krypton-85 in ventilating air and in storage hole

- Operational Concerns:

  - Excessive deviation of storage holes from proposed alignment due to variations in rock properties and drill bit and steel weight

  - Difficulties in fully grouting the hole liner into place

  - Alignment of the transporter cask with the hole requires precise positioning

  - Large capacity heat exchangers limit space in room entrances

- Other Concerns:

  - Geologic and hydrogeologic uncertainties

  - Undetermined probabilities and mechanism for canister breach

  - Prediction of radionuclide activities during the repository life.

The general repository systems for retrieval are well defined. Recent information supplied by DOE has eliminated several areas which were previously unclear. Further definition and confirmation is required in areas of hydrogeology and geology, canister retrieval operations, especially in case of breach and probabilities and mechanisms for breach. The repository concept meets the retrievability requirements of 10CFR60 except in the case of retrieval of breached canisters.

10.13 Tuff Repository with Horizontal Hole Storage and Immediate Backfilling

10.13.1 Basic Information

The thirteenth repository concept is in tuff with horizontal storage holes in the pillars between rooms, and rooms bulkheaded and backfilled after completion of emplacement. The concept is similar to the basalt preconceptual design presented in report RHO-BWI-CD-35 prepared by Rockwell Hanford Operations in 1980 and here after referred to as RHO-BWI-CD-35.

10.13.1.1 Definition of Repository Concept

The host geologic medium is tuff. Waste packages will be placed in 24-in.-diameter drillholes in the pillars between rooms with six canisters per hole. The room will be bulkheaded and backfilled after completion of waste placement.

The emplacement canisters emit heat (0.7 kW/canister for unreprocessed Spent Fuel and 4.1 kW/canister for reprocessed waste) resulting in a thermal loading in a panel of 150 kW/acre and of 50 kW/acre over the total repository area.

10.13.1.2 Geologic Environment

10.13.1.2.1 Rock Units

The proposed repository emplacement horizons are in the bedded tuff rocks of Yucca Mountain located adjacent to the southwestern portion of the Nevada Test Site. Of the several tuffaceous rock units present at Yucca Mountain, the Topopah Spring Member of the Paintbrush Tuff Formation is the leading candidate horizon. The majority of available information is based on data from boreholes USW-G1, UE25a-1, and J-13 (SAND80-1464, OF81-1349).

The lower contact of the Topopah Spring Member lies about 1,200 ft deep. The Topopah Spring Member has an ashbed within the interior and several ashflow units which range from non-welded to vitrophyric. A thin ashfall/reworked tuff section is present at the base of the member. The lower portion of the member is slightly zeolitized and only partially welded. The vitrophyre is unaltered, tightly compacted, and welded. In some areas, the vitrophyre contains abundant calcite veinlets and about 7% to 30% phenocrysts. Fractures in the vitrophyre are cemented; however, the nature of cementing material is undescribed. All rock above the vitrophyre is densely welded and extensively fractured. Clay gouge is found along some of the fractures.

Volcanic rocks of this sequence generally dip towards the east and southeast at angles less than 10°. Dip reversals occur locally and may assume values up to 20° in the vicinity of faults. Several confirmed and inferred faults bound most of the mountain block around the proposed repository site. Faults are generally normal, dip at approximately 60°, and strike north-south. Several hundred joints were identified from cores of Borehole USW-G1 and nearly half of these joints occur in the Topopah Spring Member core. A majority of the joints shows a near vertical trend (70° to 90°). Shear fractures occur predominantly within the extensive densely welded zone of the Topopah Springs Member.

The Yucca Mountain area tends to be aseismic, however, an earthquake of Richter magnitude 1.7 occurred below sea level under Yucca Mountain in 1981 and another single earthquake of unknown magnitude and depth was recorded east of Yucca Mountain during the same year.

10.13.1.2.2 Hydrogeology

Hydrogeologic studies for the Yucca Mountain area are part of the ongoing (1983) work of the Department of Energy. Very limited data were available at the time of this present study. The regional groundwater flow trend is from the northwest to the southeast across Yucca Mountain with a low horizontal gradient and almost no vertical gradient. The water table in this area is about 2,000 ft below the land surface, and a regionally uniform position of water levels seems to exist.

The Topopah Spring Member lies well above the regional water table and is therefore unsaturated. Ground water flow through this member is generally controlled by structural features. In the densely-welded portions of the ashflow tuff, water flow is controlled by primary (cooling) and secondary joints. The hydraulic conductivity ranges from 15 to 15,000 ft/day, however, intercrystalline permeability and porosity are neglible. The unwelded part of this member exhibits a relatively higher porosity (35% to 50%) and a modest hydraulic conductivity (0.25 ft/day) and may act as a leaky aquitard.

10.13.1.2.3 Rock Mechanics Properties

Rock mechanics properties of tuff rocks of the Topopah Spring Member are based on limited laboratory testing of intact rock specimens and discontinuities, and in situ data are almost non-existent. Available data are presented in Table 10.13.1, along with reference sources. Generalized mechanical properties of intact rocks and joints reported by SAND81-0629, shown in Tables 10.13.2 and 10.13.3, were used to determine the thermomechanical behavior of the Topopah Spring Member in a repository environment. Recent laboratory studies (SAND82-1723) indicate that the mean unconfined compressive strength of the Topopah Spring Member is about 13,900 psi. Tests on water-saturated specimens were performed at room temperature at 14.5 psi confining pressure. The compressive strength so determined is lower than that reported by SAND80-1455. This strength reduction appears to be resulting from the significant effect of water on tuffs. However, since the Topopah Spring Member lies above the water table (and is therefore, unsaturated) and will experience temperature levels above 212°F (on the room scale), it is reasonable to assume a compressive strength of 16,000 psi (30% strength reduction from 22,300 psi, SAND80-1455). This compressive strength value was used to determine ground support requirement for repository construction in the Topopah Spring Member.

10.13.1.3 Repository Construction and Layout

As shown in Figure 10.13.1, the assumed repository will contain 23 storage panels, an experimental area, and a panel for storage of LLW waste. Each panel (Figure 10.13.2) contains 30 storage areas driven perpendicular to a central panel access. Each storage area consists of a storage room with reaming rooms on either side. Each storage area holds 750 canisters within 125 boreholes, 174-ft long. The rooms are 575-ft long. The pillar surrounding each panel will be 164 ft thick between panels and 656-ft thick between the panel openings and the lateral access and return entries. Access to the panels is by main entries at either end (intakes at one end, returns at the other) which connect the storage panels with 5 shafts to the surface. Entries and rooms will be driven by drill-and-blast methods. Dimensions of the various facilities are given in Table 10.13.4.

Each shaft will have a different function, as follows:

- Personnel and materials (service) shaft
- Waste air exhaust shaft
- Mine air exhaust shaft
- Tuff transport shaft
- Waste transport shaft.

The shafts will presumably be sunk by conventional drill-and-blast methods and lined with a concrete liner.

The two potential sequences for repository development and waste placement are:

Table 10.13.1 Summarized Mechanical Properties of the Topopah Spring Member

TEST CONDITIONS	COMPRESSIVE STRENGTH	COHESION (C)	ANGLE OF INTERNAL FRICTION	POISSON'S RATIO	AVERAGE POROSITY (%)
Intact Rock at room temperature (73°F)	22,800 psi[a]	2,540 psi[a]	67°[a]	0.23 (at 1,450 psi confining pressure)	9.4%[a]
Intact Rock at elevated temperature (392°F)	22,300 psi[b]	-	-	0.15[a]	11.3%[a]
Rock Joint at room temperature (73°F) (unspecified rock formations)			31.8° to 33.4°[c] (dry) 33.8° to 36.5° (saturated)		

[a] SAND80-1455

[b] SAND81-0629

[c] Olsson & Teufel (1980)

Table 10.13.2 Mechanical Properties of Intact Rock
Johnson (1981)

	TEMPERATURE				
PROPERTY	68°F	212°F	212°F	1,832°F	UNITS
Young's Modulus	2.9×10^6	2.9×10^6	2.9×10^6	2.9×10^6	psi
Poisson's Ratio	0.25	0.25	0.25	0.25	--
Shear Modulus	1.16×10^6	1.16×10^6	1.16×10^6	1.16×10^6	psi
Coefficient of Thermal Expansion	4.17×10^{-6}	4.17×10^{-6}	5.72×10^{-6}	5.72×10^{-6}	$°F^{-1}$
Angle of Internal Friction	42.9°	42.9°	42.9°	42.9°	Degrees
Cohesion	1230	1230	1230	1230	psi

Table 10.13.3 Mechanical Properties of Joints
(Johnson (1981)

	TEMPERATURE				
PROPERTY	68°F	211.98°F	212.02°F	1,832°F	UNITS
Angle of Internal Friction	35°	35°	35°	35°	Degrees
Cohesion	1.45	1.45	1.45	1.45	psi
Joint Angle (with respect to drill core axis)	90°	90°	90°	90°	Degrees

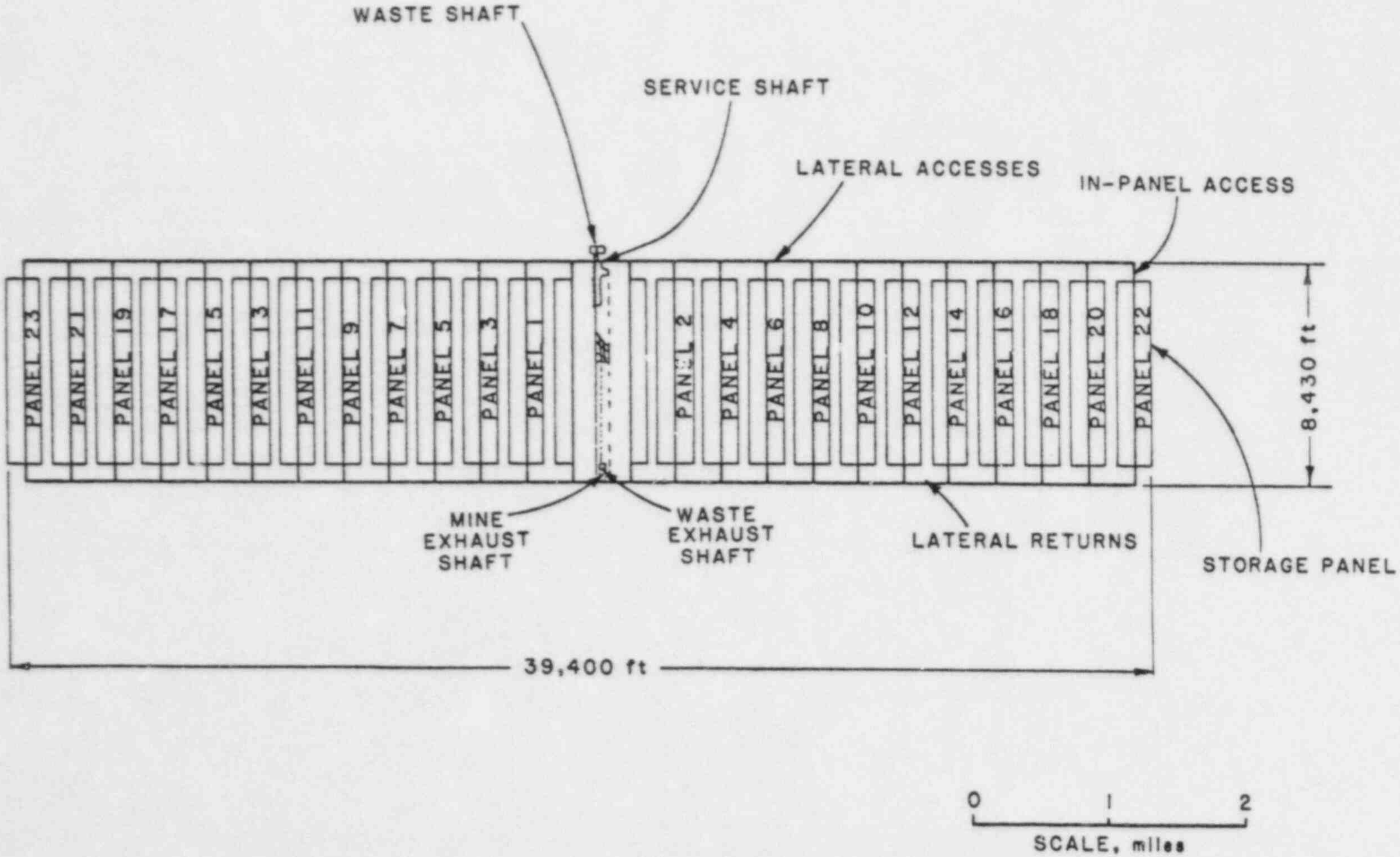

Figure 10.13.1 Layout for repository employing horizontal holes for canister storage.

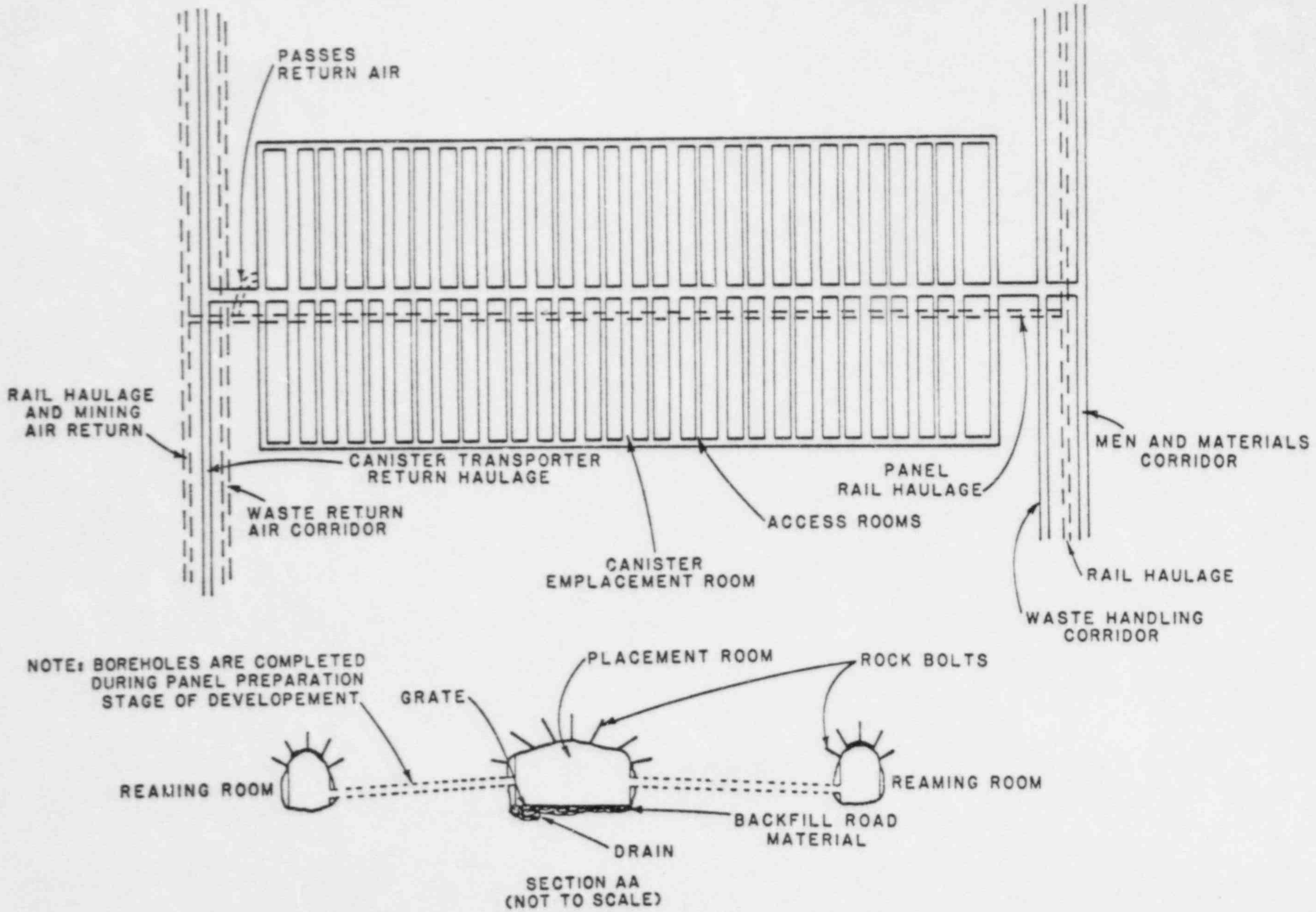

Figure 10.13.2 Panel and room layout for storage in horizontal holes.

Table 10.13.4 Dimensions of Repository Facilities

Facility	Dimensions
Personnel and Materials (Service) Shaft	23 ft inside diameter
Tuff Transport Shaft	18 ft inside diameter
Waste Transport Shaft	26 ft inside diameter
Waste Air Exhaust Shaft	18 ft inside diameter
Mine Air Exhaust Shaft	18 ft inside diameter
Central Panel Corridor	26 ft by 16.4 ft (lined)
Sublevel Rail Haulage Corridor	26 ft by 16.4 ft (lined)
Transporter Access	26 ft by 16.4 ft (lined)
Transporter Return	26 ft by 16.4 ft (lined)
Man and Supply Access	26 ft by 16.4 ft (lined)
Waste Air Return	26 ft by 16.4 ft (lined)
Rail Haulage Access	13 ft by 13 ft (lined)
Rail Haulage Return	26 ft by 16.4 ft (lined)
Rock Pass	7.5 ft by 16.4 ft by 29.5 ft
Panels	1,228 ft by 6,232 ft
Storage Rooms	31 ft by 16.4 ft
Reaming Rooms	9.8 ft by 16.4 ft
Rib Pillars	656 ft
Panel Pillars	164 ft
Room Pillars	174 ft
Storage Holes	24-in. diameter by 175 ft long
Storage Hole Pitch	8.4 ft

- Repository development has been completed before waste storage begins
- Panel development and waste storage take place concurrently with both operations advancing at the rate of one panel per year.

These two options have very different requirements for ventilation and excavation systems, shaft facilities, and equipment quantities. The dimensions for the facilities given in Table 10.13.3 are for the second option. The impact of retrieval on systems in the two alternatives will also be different.

According to assumed repository construction schedules, placement is required to begin within ten years of construction authorization. Assuming five years for shaft sinking and allowing for contract procurement for both the shafts and the underground development, preplacement development must be completed within three years. Because different types of waste will be stored in separate panels (according to information supplied to EI by NRC) and an available spare panel is desirable at all times, three panels must be ready for storage by year 10. To achieve this requires a development rate of 7,500 tpd on a five-day-week basis. If, however, repository development must be completed before placement occurs, the required development rate is about 37,500 tpd.

The mine cycle in a given heading would consist of (in order):

- Drill the round
- Load and blast the round
- Remove the broken muck
- Install ground support.

A "dental excavation" method has been proposed for basalt (RHO-BWI-CD-35) that is applicable to tuff, whereby all but the outer 3 ft of an opening is excavated by an initial drill-and-blast round and the remainder is subsequently blasted using a "trim round" of lightly-loaded, closely-spaced holes.

Although the tuff is probably strong and competent, rock support is necessary to protect against minor local failures such as rockfalls. A loosened zone surrounds openings excavated in rock which with "dental excavation" techniques, could be as little as 3 ft. The zone is generally sufficient to require some support where otherwise unnecessary. In the assumed preconceptual design (RHO-BWI-CD-35), the proposed support systems consists of:

- Rock bolts whose length exceeds one-third the opening span, spaced no more than 10-ft apart

- Shotcrete, nominally 4-in. thick
- Cast-in-place concrete at critical locations.

Mining will tend to drain any water within the repository are as the water will tend to flow toward the openings. However due to the position above the water table, water intrusion may be minimal.

10.13.1.4 Canister Arrangment

The waste package (Figure 10.13.3) consists of a canister 16-in.-outside diameter and 18.5-ft-long, containing either one PWR or 3 BWR spent fuel assemblies. The packages will be placed in 24-in.-diameter holes drilled horizontally on 8.4-ft-centers into the pillars between the storage and reaming rooms. The hole is lined with a carbon steel sleeve which is grouted into place with cementitious, absorptive materials. No mention is made in the assumed RHO-BWI-CD-35 of how the sleeve or the grout are emplaced, but this is standard tunneling technology.

10.13.1.5 Thermal Loading

As a result of decay of the radionuclides contained in the spent fuel, the waste packages radiate heat. Unreprocessed spent fuel contains fission products which are relatively short-lived and actinides which are generally quite long-lived. As the radionuclides decay to more stable isotopes, the number of disintegrations and resultant heat produced will decrease with time. The heat produced by a canister will be at a maximum at the time of emplacement.

A canister will contain either one PWR or three BWR spent fuel assemblies. Assuming 10-year-old waste, canisters will have heat loads of approximately 0.55 kW and 0.66 kW for PWR and BWR, respectively. To be conservative the heat load per canister is taken as 0.7 kW.

The overall thermal load on the repository is determined from the areal extent of the repository, the canister spacing, the age of the waste, and the type of waste (PWR or BWR). To be conservative, all the waste is assumed to be 10-year-old BWR. In practice, waste will be of the two types of varying ages, and to avoid uneven thermal loading, actual panels will contain waste of uniform type and age.

The effective assumed storage area consists of 23 panels occupying 188 acres each or 4,330 acres total. Using the 0.7 kW/canister thermal load and the waste complement of 22,500 canisters per panel, the heat load within a panel is 83.8 kW/acre. By comparison, the in-panel loading given in RHO-BWI-CD-35 is 150 kW/acre which requires a

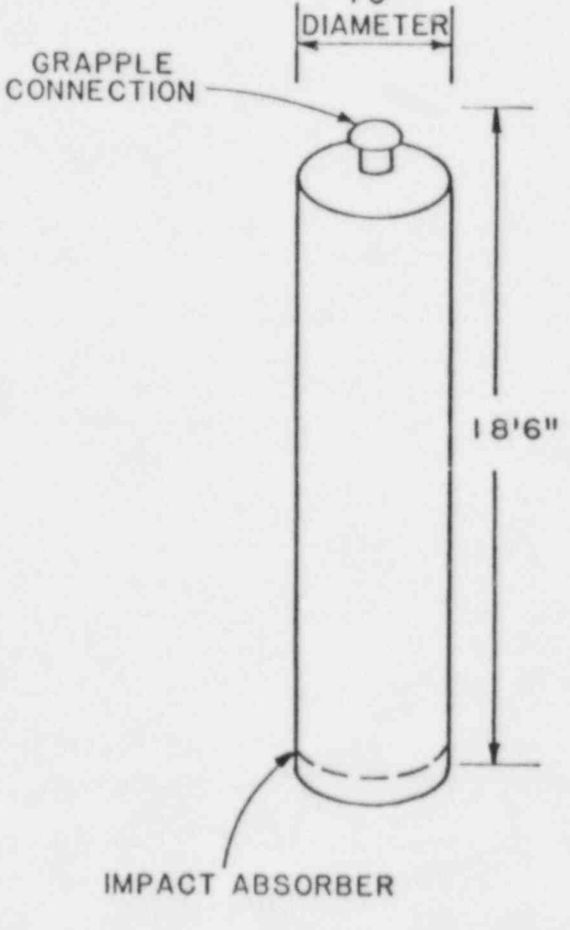

REFERENCE WASTE CHARACTERISTICS

CANISTER	THERMAL POWER	SURFACE DOSE RATE
SPENT FUEL	700 W	20,000 REM/HR
HLW	3100 W	100,000 REM/HR

Figure 10.13.3 Standard waste canister.

canister heat load of 1.25 kW/canister. Given the assumption in RHO-BWI-CD-35 of 4.1 kW/canister for reprocessed HLW, the heat load requires a ratio of spent fuel to HLW equal to 5.2 to 1. On the basis of the gross repository area including the shaft pillar and service areas, the overall heat load will be 50 kW/acre.

10.13.1.6 Backfill Timing and Placement Method

Panels will be backfilled as soon as all canisters have been emplaced, except for the central panel access which shall remain open until the repository has been completely filled.

According to the assumed design (RHO-BWI-CD-35), the lower portion of the rooms will be filled with crushed and sized mine rock (tuff) mechanically compacted to reduce permeability, while the upper third of the rooms will be pneumatically filled with a concrete-like mixture. contains 50% mine rock and 50% bentonite or alternatively, 75% mine rock and 25% bentonite. Bentonite expands while absorping water, inhibiting percolation of water, which is a beneficial property in limiting radionuclide access to the environment.

10.13.1.7 Ventilation

Repository rooms are bulkheaded and backfilled upon completion of storage. As discussed in Section 10.13.1.3, the two potential development options:

- Develop and store waste simultaneously
- Develop the whole repository prior to waste placement,

result in two potential ventilation schemes. In the first case, two separate ventilation circuits are required:

- Mine (development) ventilation system
- Confinement (storage) ventilation system.

Although rooms will be bulkheaded and backfilled as soon as storage has been completed, the central panel accesses will remain open. The airflow volume required for the waste air circuit will increase until storage has been completed in the entire repository if development and storage occur simultaneously. If repository development is completed prior to commencement of storage operations, the three possibilities are:

- If rooms are left open until storage takes place, then required ventilation capacity will decrease as placement progresses

- If rooms are bulkheaded but the central panels accesses remain open, the required airflow will remain constant
- If panels are totally bratticed off, then the required airflow will increase as the repository is filled.

The second option is the most practical.

In the summer, the intake air may require precooling to maximize the convective heat removed from the rock. In winter, the intake air may have to be heated occaisionally to ensure that the temperature exceeds 37°F to avoid icing. Heating could best be accomplished by extracting heat from the exhaust air using heat exchangers.

10.13.1.8 Retrieval Systems

Prcooling of heated, placed backfill has not been suggested by DOE in the reference repository; however, boreholes or pre-placed pipes may be used to circulate air or high-heat-capacity fluids to cool backfill. This is time-consuming and the technologies are as yet undefined but may be done. Nevertheless, the canisters will remain hot as they will not be efficiently cooled by this method.

Title 10, Part 60 of the Code of Federal Regulations (10CFR60) requires that repository operations be designed so that any or all of the waste could be retrieved on a reasonable schedule, "Full Retrieval" is removal of all waste. However, from time to time, retrieval on a limited basis may become necessary, as for example, a few canisters, a single room, or a single panel. This scenario is designated as "Local Retrieval."

When the storage rooms are backfilled and bulkheaded, the repository requires extensive retrieval systems. Retrieval will encompass removal of the bulkheads, remining the backfill, precooling room, resupporting the roof, and retrieval with equipment designed for high temperatures. The details of retrieval are given in Table 10.13.5.

Figure 10.13.4 illustrates the assumed emplacement vehicle and the emplacement operation.

10.13.2 Retrievability Impacts on Repository Systems

10.13.2.1 Excavation Systems

Immediate backfilling of rooms containing stored canisters is the most complex option affecting retrievability. Extensive remining of backfill is necessary and is affected by:

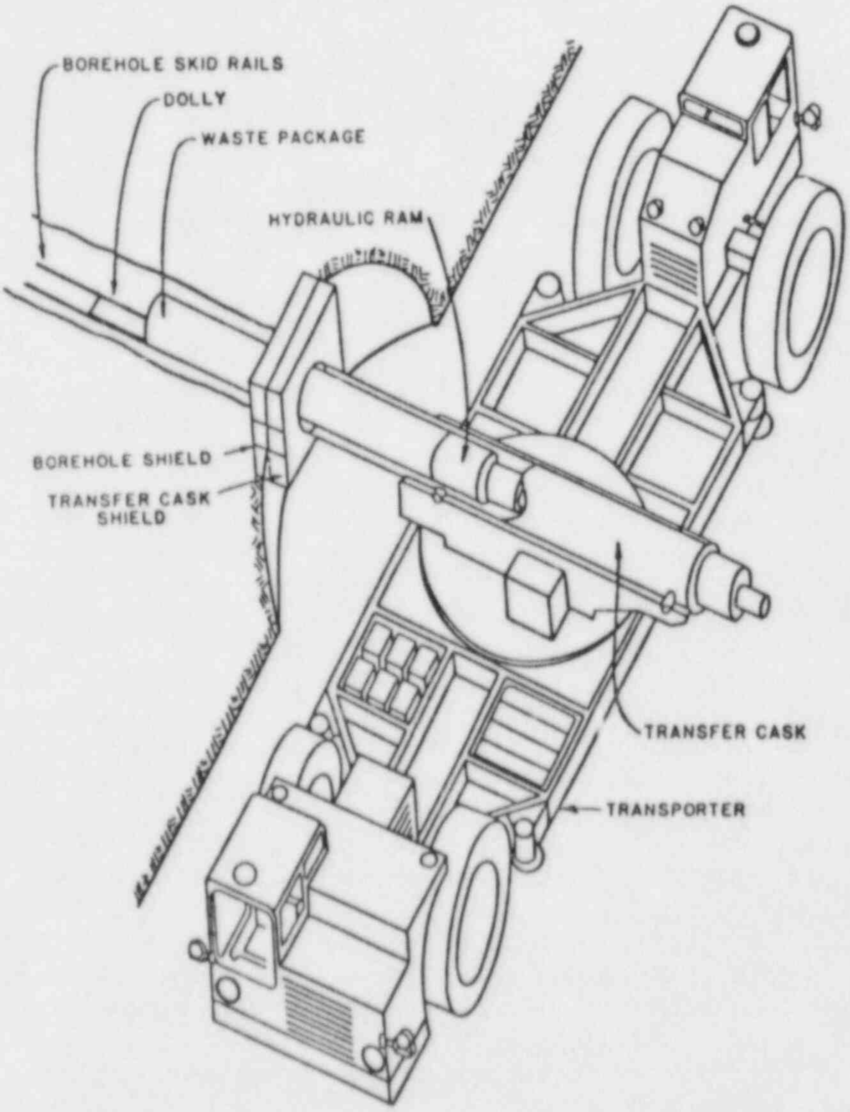

Figure 10.13.4 Transporter and transfer cask configuration for placing waste in horizontal holes.

- Strength and density of the backfill
- Temperature of the backfill material
- Location of stored canisters in holes along the drift sidewalls
- Deteriorated roof support and roof conditions
- The probable occurrence of superheated water in the unprecooled backfill.

Backfill excavation can be done in several ways:

- Full face advance
- Pilot drift and second pass
- Hydraulic means.

10.13.2.1.1 Full Face Advance

Full face advance has the advantage of maintaining easy access to equipment for routine maintenance of repair. Also, only one piece of equipment is necessary to do the mining, for example a drill jumbo or a continuous miner. Careful excavation is necessary to avoid disturbing existing roof support, drift lining, and canisters. The major disadvantage is in continually dealing with the heat emitted by the unprecooled backfill. Cooling requires large amounts of air to be directed to the area.

Drift dimensions are amenable to full face remining of the backfill with single-head roadheaders emptying into shuttle cars dumping to conveyors. Roof scalers are needed to clean roof and side walls of unmined backfill. Drift dimensions are adequate to permit the work and do not inhibit equipment operation.

10.13.2.1.2 Pilot and Slash

A pilot drift can be advanced in the unprecooled backfill first either by a continuous miner or a tunnel boring machine (TBM) assuming a pilot drift of 8-ft by 8-ft. The finished panel can be preventilated until the second pass at backfill removal is practical; when the bulk of the heat is dissipated. The pilot drift technique can use the TBM and similar associated rock handling equipment already mentioned.

There are several disadvantages. Initial mining is in a confined area and ambient temperatures could be detrimental to equipment and to personnel, who may have to wear protective clothing. Remote control mining may be the only method of accomplishing remining. Another disadvantage is if the machine breaks down and must be repaired in place. Accessibility is minimal and heat will impair maintenance and safety. Steam pressure if present from backfill moisture can create another hazard in pilot drift development. The second pass of development would necessitate another piece of equipment for optimum efficiency.

10.13.2.2 Equipment Systems

10.13.2.2.1 Thermal Effects on Equipment Systems

Areas of concern in equipment systems are heat effects on hoses, cutting bits, fittings, and tires. The following limitations and requirements are pertinent to the equipment systems:

- Carbide bits can withstand the anticipated rock temperatures of 300°F
- The roadheader will need a transmission oil cooler to cope with higher ambient temperatures
- Hydraulic hoses with elastomer tube, single wire braid reinforced and special covers are available and withstand temperatures of 300°F
- Steel fittings are available with special "O" ring seals good for 300° to 400°F.

Tire considerations are more complex. The roadheader can be crawler mounted, so tire investigations apply to shuttle cars and roof scalers. According to a manufacturer, the internal air temperature of the tire must be less than 234°F for safe operations regardless of rubber compound or number of plys in tire construction. Internal temperature depends on load, time of travel, grade, speed, ambient temperature, and length of travel. Consequently, use of rubber tired vehicles such as shuttle cars requires detailed study of the application. Because they will be in face areas for brief periods while loading, but travel in well ventilated drifts, the use of rubber tired vehicles requires further study. The use of "tires" developed for the Apollo Lunar Landing program "Lunar Rover" car may be feasible. These tires consist of metal laths interwoven to form a flexible tire, with the heat and abrasion resistance of metal.

10.13.2.2.2 Remote Control Equipment Systems

Remote control haulage systems have been placed in many applications throughout the world in recent years. Rail systems are more popular although truck trolley systems are being used with success. For haulage, at least, remote control appears as a feasibile alternative.

Full-face remining or remining a pilot heading would be carried out in an environment requiring remote control systems because of heat and possible presence of radiation. Personnel could operate equipment from safe areas, and, productivity would be greater. The biggest disadvantage is unexpected machine repair. If the TBM were to break down while in place, the environment would prohibit repair except either by remote control methods, or personnel outfitted in climate-controlled suits. Remote control systems may be promising, but the level of technology is low. Particular areas of concern are the guidance system to keep direction control, system dependability, operator visibility, and handling trailing cables (Gent, 1975).

10.13.2.2.3 Equipment for Retrieval

Provided canisters have not been breached, a crawler-mounted transporter modified with a magnetic or telescopic grapple can be used for retrieval after the backfill has been remined and the room precooled. However, the canister will remain hot but probably can be effectively handled. If a canister is breached, retrieval must be by specialized equipment because overcoring a long horizontal hole is not presently possible. In the case of breached canisters, some of the six canisters in the hole may be retrieved using the magnetic or telescopic grapple provided shielding and "hot cell" equipment are present.

10.13.2.3 Facilities

The most important effects of the storage and retrieval concept on repository facilites are:

- The waste handling shaft will be required for hoisting transport casks containing retrieved canisters
- A system is required for disposal of the excavated backfill, especially if contaminated.

Assuming transport casks keep radiation levels (even from breached canisters) within acceptable standards, the impact of hoisting casks containing retrieved canisters is minor. In the case of local retrieval while placement operations are still in progress, a cask containing a canister for placement is likely to be descending at the same as a cask containing a retrieved canister is being hoisted. This hoisting process is fairly common practice in mine shafts where the conveyances are "balanced" cages.

Disposal of the excavated backfill represents a more difficult problem. If the backfill is contaminated, special handling and disposal procedures are required. The backfill if not contaminated could be used in a panel in which storage is nearing completion or has recently been completed provided the heat has not caused detrimental chemical cementation. If the excavated backfill is blocky as a result of thermal cementation, crushing will be necessary before reuse. If the backfill is to be hoisted, the tuff handling shaft must be used. The shaft will require ventilation by the confinement ventilation system while backfill is being hoisted. If repository development has been completed, no problem results from hoisting the backfill. Because retrieval could be required before development has been completed, logistical problems regarding the shaft and the ventilation systems could result. Muck hoisting shafts are generally exhausts, because hoisting muck is a dusty operation and miners should travel in fresh air. When hoisting excavated backfill, the tuff shaft would be a confinement exhaust and would require a high efficiency particulate air (HEPA) filtration system in the event of radionuclide release. One solution is to have the HEPA filtration system underground near the shafts rather than in the waste handling and confinement exhaust buildings.

10.13.2.4 Ventilation Requirements

Ventilation is provided only in the central access corridor of a panel after storage has been completed in the panel. The individual storage and reaming rooms within a panel are bulkheaded and backfilled. The impact of retrievability on the ventilation system depends on several factors:

- Whether development operations have been completed
- Whether retrieval is local or full
- Whether placement operations have been completed.

If development operations have been completed, the main air circuit and the waste air circuit can be combined to provide greater airflow capacity.

If retrieval is local, development, storage, and backfilling operations could be in progress elsewhere in the repository. The waste air ventilation syrtem must have sufficient capacity to permit storage, backfilling, and retrieval operations. Otherwise, the need to retrieve would necessitate temporary termination of storage, or backfilling, or both.

If retrieval is full, other operations (development, storage, and backfilling) are no longer required. The total airflow capacity of both mine and waste air circuits is available for ventilating full retrieval operations.

If placement and backfilling operations have been completed, the only operations in the repository would be monitoring and retrieval. The total ventilating capacity of mine and waste air circuits would be available for retrieval if needed.

After remining has been completed, in the case of full-face remining, or after hole-through of the pilot has taken place, in the case of two-stage remining, further complete precooling would be required before further operations took place. The refrigeration and airflow capacities required for precooling are complex, and depend on:

- The temperatures of the rock
- The temperature of the intake air
- The acceptable temperature for the exhaust air
- The desired rate of cooling.

The calculations are best performed using one of the several existing computer codes.

To keep the panel accesses ventilated and reasonably cool requires an airflow of 28,000 cfm for each. Assuming development is completed prior to placement initiation, the maximum required air quantity would occur when placement is occurring in the twenty-third (or final) panel, backfilling in the twenty-second panel and local retrieval elsewhere in the repository. Allowing 250,000 cfm for storage operations, 150,000 cfm for retrieval operations including cooling, 155,000 cfm for backfilling operations, 588,000 cfm for central panel accesses and 5% of the total for recirculation, the required airflow is 1,200,000 cfm. The available capacity of the combined mine and waste circuits of 1,265,000 cfm just meets the requirement.

If placement and development operations are carried out simultaneously, the worst case would occur in year 22, the last year of development operations according to the assumed (RHO-BWI-CD-35) schedule. In this case, the available airflow is 660,000 cfm in the waste air circuit, whereas the requirements for storage, backfilling and local retrieval would be 1,171,000 cfm. If storage and backfilling are temporarily halted, the requirement becomes 746,000 cfm which could be provide by increasing the size of the exhaust fans at the Waste Air Exhaust Shaft. The shaft size does not need to be increased in order to maintain a satisfactory velocity.

10.13.2.5 Backfill

An assessment of the impacts of retrievability on backfill necessitates a discussion of fill material properties. Fill material assumed is crushed tuff for the lower two-thirds of a room and a concrete-like mixture with bentonite as an additive, for the upper third. Fill material properties which aid complete isolation of the nuclear waste include:

- Low hydraulic conductivity
- Water sorption capacity
- Relatively high thermal conductivity
- High chemical, physical, and mechanical stability
- High ion sorption and exchange potential.

The major disadvantage of using only crushed mine rock such as tuff as backfill is the high hydraulic conductivity. Fill hydraulic conductivity in a repository room under high temperature conditions should be about 3.0×10^{-13} fps to retard ground water movements (Westinghouse Electric Corporation, 1981). This hydraulic conductivity value may be obtained by adding relatively impermeable bentonite to the fill. The actual proportions can be determined only by actually testing various bentonite/tuff mixtures. Bentonite can absorb water and swell to over 7 times its dry weight providing lower hydraulic conductivity. If allowed to swell uncontrollably, bentonite loses the beneficial properties, becomes a thixotropic gel, and tends to flow. If the fill is placed at a high density (about 130 pcf) and the room is subsequently sealed with bulkheads, volumetric expansion is inhibited and bentonite properties are maintained. The confinement may also allow a swelling pressure of about 218 psi to 725 psi to develop, which further lowers the hydraulic conductivity.

A mixture of crushed tuff and bentonite may exhibit a thermal conductivity similar to a basalt/bentonite mixture of 1.2 Btu/hr-ft-F°, which is probably sufficient to restrict the temperature rise in a repository room. High temperatures tend to drive moisture away from bentonite in the form of vapor or steam, causing a loss of the beneficial properties and reducing the thermal conductivity. However, under confinement, vapor pressures within the sealed rooms may be high enough (about 700 psi) to prevent steam formation. Steam will form once the bulkheads are breached for remining, creating difficult and hazardous conditions. The presence of a certain amount of water (about 8 to 10%) aids backfill performance, but adversely affects retrievability. Personal communication with bentonite manufacturers suggests that bentonite degrades structurally beyond 1,117°F. The CDR indicates bentonite degrades at 212°F. Repository temperatures exceed the temperatue limit in the CDR but not the temperature limit provided by the manufacturer. Behavior of the bentonite at elevated temperature is an area requiring further extensive evaluation.

The foregoing discussion suggests that performance of the backfill is dependent on the placement density and moisture content. The high density along with the strength properties of crushed tuff allows the fill to maintain sufficient bearing capacity to allow remining machinery to operate.

Bentonite possesses sufficient ion exchange potential to adsorb most radionuclides, but the characteristics of crushed tuff are not reported.

Based on the above discussion, four scenarios of retrieval will be addressed in the following sections to assess their impacts:

10.13.2.5.1 Retrieval at Start of Filling

Under unforeseen circumstances, retrieval may be necessary just before backfilling operations are scheduled to start. This should not cause problems to any great extent except that hole locating and coring equipment will be required because the room walls are faced with concrete before filling. Continuation of development and storage operations will depend upon the reason for retrieval and whether local or full retrieval is undertaken. In case of local retrieval, new machinery must be procurred for retrieval, or the rate of placement must be curtailed to accommodate retrieval operations.

10.13.2.5.2 Retrieval while Backfilling is in Progress

Placement and backfilling operations continue for about 20 years and retrieval may be necessary at any time during this period. The difficulties encountered in retrieval will depend upon the extent to which filling operations have progressed. If the retrieval decision is made in the early stages of backfilling, remining should prove relatively easy.

Water present in the unprecooled backfill will be released as steam due to the pressure drop when the bulkhead at the entrance to a room is breached. The pressure release and steam formation may cause an outburst of fill material. Dehydration due to steam formation may turn the bentonite into a mechanically unstable powder, adversely affect remining efforts. The backfill and water can potentially be contaminated due to radionuclide leakage and will require careful handling.

Because the walls of the storage rooms will have been faced with concrete, some procedure for storage hole location and drilling equipment may be required. As before, continuation of development and storage operations will depend upon the reason for and scale (local or full) of retrieval.

10.13.2.5.3 Retrieval Immediately after Backfilling is Complete

If retrieval is found necessary soon after completion of backfilling operations, the problems mentioned in the previous subsection will be accentuated. As mentioned earlier, steam release when the bulkheads are breached may cause outbursts and breakdown of backfill.

10.13.2.5.4 Retrieval at the End of Retrieval Period

All the problems highlighted earlier will be significantly increased by the end of the retrieval period yielding the worst scenario. The extent of bentonite saturation within a decades-long time period is unknown. In addition to the steam release from the unprecooled backfill when the bulkhead is breached, the bentonite, if saturated, will be in the form of a thixotropic gel and may be prone to flow.

10.13.2.6 Thermal Effects

The thermal effects associated with nuclear waste disposal in an underground repository have significant impacts on the retrievability of the waste. Thermal effects can be divided into three distinct areas:

- Very-near-field effects which have the most direct impact on retrievability because elevated temperatures can lead to decrepitation of the borehole wall and jamming of the canister
- Near-field effects which impact retrievability indirectly by increasing the potential for creating instability of the storage rooms
- Far-field effects which have minimal, if any, impact on retrievability because the stability of the entries and shafts would not, in general, be affected by the thermal loading.

No thermal analyses have been reported specifically for a horizontal storage concept in tuff. Thermal analyses have been performed for both horizontal and vertical storage in basalt, however, and the results of these analyses indicate that the predicted temperatures are very similar for both storage concepts (RHO-BWI-CD-35 and RHO-BWI-C-116). Therefore, the predicted temperatures for vertical storage in tuff may be used as an approximation of the temperatures for the horizontal storage concept. More precise thermal analyses should be performed before design.

The Mine Design Studies (MIDES) Working Group has completed a limited number of thermal analyses of a waste storage repository in tuff (SAND82-0170, SAND80-2813). Table 10.13.5 is based on these analyses and shows the predicted maximum rock temperature at critical locations for a gross thermal loading (GTL) of 50 kW/acre. As no maximum temperature criteria have yet been defined for tuff, the predicted temperatures are compared with the BWIP basalt temperature criteria RHO-BWI-C-116, RHO-BWI-CD-35).

Table 10.13.5 Maximum Predicted Temperatures for Tuff

LOCATION	MAXIMUM PREDICTED TEMPERATURE FOR TUFF[1] (°F)	BWIP MAXIMUM TEMPERATURE CRITERIA FOR BASALT (°F)
Rock at Canister	241	392[2]
Emplacement Room	189	212[3]

[1] Source - SAND82-0170. Assumes thermal loading of 50 kW/acre and that repository horizon is Bullfrog Member of Crater Flat Tuff

[2] Source - RHO-BWI-C-116

[3] Source - RHO-BWI-CD-35

The MIDES Working Group used the COYOTE and ADINAT computer codes in their analyses. Their results are based on the following assumptions:

- The rooms are open but not ventilated
- The repository horizon assumed by MIDES is the Bullfrog Member of the Crater Flat Tuff, at a depth of 2,624 ft (rather than the 1,200-ft-depth of the Topopah Springs Member)
- Initial rock temperature is 97°F
- The tuff is fully saturated with water
- No boiling of ground water occurs.

At present (1983), DOE considers the Topopah Spring Member of Paintbrush Tuff the most likely repository horizon. Temperatures in the Topopah Spring Member may be different from those calculated for the Bullfrog Member because:

- The Topopah Spring Member is not as deep as the Bullfrog Member, and therefore has a lower initial temperature
- The Topopah Spring Member has a lower thermal conductivity, which would tend to increase long-term temperatures.

When the actual repository horizon is chosen, further site specific thermal analyses will have to be performed. The temperatures shown in Table 10.13.5 may be taken as an approximation of the temperatures that may be experienced at the time of retrieval, however.

The repository temperatures shown in Table 10.13.5 were predicted for unbackfilled, unventilated rooms. According to the same study (SAND80-2813), the storage room temperatures rise 9°F beyond the peak temperatures shown when the rooms are backfilled 50 years after waste emplacement. If the rooms were backfilled immediately following emplacement, the peak temperatures could possibly be even greater.

From a retrieval standpoint, the most critical feature of the horizontal storage concept is the stability of the horizontal holes. The probability of borehole decrepitation increases with the expectation of high room temperatures, and borehole failure could severely hinder retrieval if the borehole sleeves were damaged and canisters were bound deep in the holes.

Room instability may also be induced by high thermal stresses, necessitating either additional rock support or a reduction in the gross thermal loading. The backfill may serve as a partial support of the roof and sidewalls, and the interaction of the backfill with the opening will be investigated further in the upcoming conceptual design report.

Thermal effects on the shafts and main entries will be insignificant because the shafts and entries will be located far away from the waste emplacement panels. Continuous ventilation through the shafts and entries will maintain their temperatures well within the temperature criteria.

10.13.2.7 Equipment Requirements for High Temperature and Radioactive Environment

Precooling of the backfill by circulating cooling fluids in boreholes or pre-placed pipes may be done but is time consuming and as yet undefined. However, the canisters will not be effectively cooled by this method and will remain hot for some time.

Equipment requirements for high temperature and radioactive environments are extensive, and must be an integral part of the equipment system.

Radioactive environments will require special shielding of equipment for operator safety. Decontamination facilities will also be necessary to service equipment and to handle exposed backfill and other materials. Heat effects on equipment systems, including hoses, cutting bits, fittings, and tires are discussed in Section 10.13.2.2.1.

10.13.2.8 Ground Support

The Q-system (Barton, Lien and Lunde, 1974) has been used to determine ground support requirements in the repository. Strength values of the rock mass discussed under Section 10.13.1.1.3, "Rock Mechanics Properties" indicate a Q-value of 85. Based on this value and storage room cross sections under consideration, the Q-system indicates the tuff to be competent requiring no support. However, because the data base for the Q-system does not include high temperature operating conditions, a support system in excess of that required has been specified. The support system should consist of untensioned cement-grouted rock bolts spaced 8-ft to 10-ft apart. Experience with concretes at elevated temperatures (Troxell, Davis, and Kelly, 1968, p. 248-250) indicates that for simple temperature increases to 212°F relatively minor strength losses occur due to loss of both free and combined moisture. Above 212°F more significant strength losses occur in the repository maximum temperature ranges up to, say 400°F, but amount to 10% reduction, or less. However, if the concrete is heated and then cooled, strength losses approach 25% or more at 400°F. Two considerations may minimize such strength losses. Using lean mixes and limestone, expanded slag, or similar aggregates minimize heat effects in this range. We suspect that the important cement grout, shotcrete and concrete considerations for repository temperatures hinge on minimizing the water content and matching the thermal expansion and chemistry of cements and aggregates.

Over a decades-long period some deterioration of the rock reinforcement system is expected. Because rooms are backfilled, no repairs can be effected until the backfill is removed and the room precooled. Falls could occur before the support can be rehabilitated. Some thermal spalling is expected during precooling. A Load-Haul-Dump vehicle and a roof bolting jumbo are required for cleanup and re-support.

Despite the Topopah Spring Member lying above the water table, some ground water is likely to enter the repository during the operating period. This water may be expected to escape as steam when the bulkheads are breached for retrieval or during remining.

10.13.2.9 Instrumentation

The performance of the repository has to be monitored to ensure the safety criteria are not violated and the isolation capacity is maintained. The retrievability option mandates significant changes in selected parameters or deviations from expected behavior be detected. When they occur, steps must be taken to correct the problem or retrieve the waste to the surface. Categories requiring monitoring are:

- Hydrogeologic - water inflow
- Thermal - heat buildup
- Mechanical - stress buildup, rock deformations, and rock instability
- Radiological - activity levels.

A monitoring program of subsurface conditions is limited by the bulkheads and backfill. Most monitoring will be made by remote sensing measurements. Visual inspection and "hands-on" measurements are preferable to remote monitoring because instrumentation available at present is not reliable for periods in excess of about a decade, especially under the thermal conditions associated with the repository rooms. As a result, an experimental panel will be provided in the repository in which extensive verification and confidence testing for the remote sensing equipment will be performed. The panel will also provide an opportunity to study the reliability of instrumentation.

Thermal monitoring will primarily consist of thermocouples embedded in boreholes placed at intervals along storage rooms. Thermocouple signals will be collected at several locations outside the storage room and relayed to a central control console to detect abnormalities.

Hydrogeologic monitoring will consist of measuring the pressure of water near the storage rooms, and in various accesss. High-precision, durable, pressure transducers will be placed between packers in boreholes.

The convergence of pre-established points in accessways will be measured. At a few selected locations in the main entries detailed evaluation of rock stability will be made using stressmeters and multiple position borehole extensometers.

Ventilation conditions in the repository will be monitored to detect radiation levels, fire and smoke emergencies, as well as ventilation blockages caused by rock falls. Mobile radiation and thermal sensors in ventilation airways will permit continuous monitoring from a main surface control console. Flow direction, pressure, differential pressure, and temperature, will be monitored.

The retrievability requirement mandates monitoring of the repository for perhaps decades after initial waste placement. The following steps need to be taken to ensure the reliability of instrumentation placed in the repository:

- Develop stress meters, multiple position borehole extensometers, piezometers, thermocouples, and ventilation instrumentation that will maintain accuracy in the hot and humid environment expected in a repository

- Provide extensive verification of the instrument reliability in the repository experimental panel

- Ensure that repository inspection at predetermined intervals can be performed by personnel in air-conditioned suits or vehicles or robots.

10.13.3 Adequacy of Incorporated Retrieval Systems or Allowances

10.13.3.1 Local Retrieval

Local retrieval can occur as a result of quality assurance, quality control, or a detection of radionuclide releases. A manufacturing error, for example, could have caused premature breakdown of some canisters in a storage room. Bulkheaded and backfilled rooms permit the use of similar equipment for emplacement and retrieval procedures provided rooms are cooled after remining and prior to retrieval.

Local retrieval will encompass four main phases: remining, precooling, resupport, and canister retrieval. Remining begins with breaching the bulkhead. A drilling jumbo and Load-Haul-Dump unit will be required to remove the bulkhead and debris. To remine the unprecooled backfill requires high temperatures remote-control equipment. The remining can be by full-face advance, pilot and slash, or hydraulic methods. Handling the hot backfill is within current technology but imposes an additional load on the material handling system. Present technology does not encompass adequate equipment to perform the remining under repository thermal conditions. Rock bolters and scalers will be required to resupport the roof prior to canister retrieval. "Hot cell" equipment will be required for handling breached canisters. Interfaces in the shaft area will delay storage operations during canister retrieval. Equipment including bolters and scalers must be track-mounted to withstand the elevated temperatures. Even with incorporation of equipment to breach the bulkhead, to support the roof and withstand the elevated temeprature, the retrieval system for intact canister is inadequate due to a lack of present technology with regard to remining backfill by remote control at high temperatures.

Unless the leaking canister is the one closest in the hole to the storage room, retrieval of a leaking canister will require prior retrieval of up to five other canisters. As was discussed in Section 10.13.2.2, retrieval of breached canisters by overcoring the holes is not practical with horizontal holes containing more than one canister. A possible alternative method would be to have a piece of equipment pushing from the reaming rooms as well as having the transporter and transfer cask in the storage room. One difficulty is the narrow width of the reaming rooms. Provisions for such equipment have not included in the design and the incorporated systems are inadequate for the task.

10.13.3.2 Full Retrieval

Full retrieval of waste canisters will need planning and preparation but will not be necessarily difficult. Full retrieval planning is eased because all repository resources can be committed to the operations. Underground storage may prove unsatisfactory leading to abandonment. Nevertheless, full retrieval should not require special equipment unless the reasons for retrieval interfere, such as excessive rock movement crushing canisters, or rapid deterioration of rock causing need for roof support of scaling equipment.

Full retrieval expands the scope of the problems and facilities detailed for local retrieval. Equipment for breaching the bulkheads and resupporting the roof will be incorporated. The present technology lacks equipment capable of remining the backfill at high temperature by remote control. Handling and storage of the remined backfill during full retrieval requires a separate materials handling system, room for storage and possibly hoising facilities. Clearance and alignment difficulties are expected for the mining, material handling and retrieval equipment. "Hot cells" must be incorporated to handle contaminated canisters and equipment. Retrieval of a breached or broken canister requires special provisions be incorporated in the reaming rooms and transporters. As in local retrieval, equipment working in the rooms for extended periods must be crawler-mounted. Even by including proper equipment for bulkhead removal, backfill handling and storage, and roof resupport and the retrieval systems are inadequate due to a lack of high temperature remote control mining equipment in present technology. Development in this specialized mining technique and in incorporation of larger reamining rooms or magnetic grapples on the transporter is required to make the incorporated systems adequate for full retrieval.

10.13.4 Concerns

10.13.4.1 Technical Concerns

Precooling of heated rock masses by circulating fluids has not been demonstrated. Freezing soil for excavation and heating roadways for ice removal are not similar in that the high initial temperature are not present.

As discussed in Section 10.13.2.1, mining backfill in a high temperature environment may be necessary. Because of the heat and potential safety, operational, and radionuclide release problems, the mining is best carried out by remote control. Remining presents a serious problem because no true remote control mining systems exist. Remote control haulage systems exist using unit trains operating on closed-circuit track and radio-controlled mucking units have been developed. Remotely-operated drill-and-blast or boring equipment does not exist. U. S. Bureau of Mines sponsored research into the feasibility of remote-control mining equipment has indicated that much work remains to be done and that satisfactory systems have yet to be developed and implemented. Remote control mining will require precise horizontal control to prevent damaging the wall ring sealing the canister hole.

Alternatively, one could consider hydraulic mining of the fill in a manner similar to the hydraulic mining of coal in some mines. The method might not be very effective if the backfill contains bentonite, since bentonite absorbs water. Use of very large quantities of water could cause bentonite to flow. Testing is required to verify that backfill could be removed in this manner. Existing hydraulic systems are not truly remote as the operator is within 100 ft of the face.

Another concern is the effect of the hot environment on the materials used for ground support. As discussed in Section 10.13.1.4, grouted bolts, shotcrete, and, in places, cast-in-place concrete have been proposed for the ground support. Cements for grout, shotcrete, and concrete should use mixtures that minimize heat effects as detailed in Section 10.13.2.8.

Use of such material should ensure the support system will be effective under repository conditions.

10.13.4.2 Safety Concerns

Remining of the fill will expose the roof and allow any weakened areas to fall. If the falls occurred near the face remining equipment could be damage. Mining a pilot heading and then rehabilitating the support as required before removing the remainder of the fill would minimize rock falls.

Rockfalls are possible because grouted bolt and shotcrete support systems have not yet been proven effective for decades. Such systems have only been in common use for about 25 years. Because the rooms are backfilled, the support cannot be inspected and deterioration cannot be counteracted until the backfill has been removed, and the rooms have been precooled to allow bolters and scalers to operate. Falls could then occur before the roof can be rehabilitated.

The presence of water or steam in the backfill can cause a safety problem at the time of bulkhead breach or during remining. The water and steam may be contaminated and could cause outbursts as a result of the pressure differential.

10.13.4.3 Radionuclide Release Concerns

One of the possible reasons for retrieval is failure of the waste package, with consequent release of radionuclides. Gaseous and volatile radionuclides may be released into the emplacement hole while soluble radionuclides may be carried away by any water present in the emplacement hole. Removal by aqueous solution, requires the presence of water in liquid form; that is, its temperature must be less than the boiling point for the repository pressure conditions.

10.13.4.3.1 Releases into Air

The gaseous and volatile isotopes which could be released by a breached canister are hydrogen-3 (tritium), carbon-14, and krypton-85. The quantity of krypton-85 is large compared with that of either tritium or carbon-14. In addition, the carbon-14 must be in a form that leads to volatile species upon reaction with water in order to be of concern. One-tenth of the krypton-85 is assumed to be sufficiently near an exposed surface to be able to leave the fuel. If a breach occurs, the concentration of krypton-85 and tritium in the air must not exceed 10 nCi/liters and 5 nCi/liters, respectively, in order to satisfy 10CFR20. (These EPA radiation concentration standards are defined in metric units, the equivalents in traditional are 35 nCi/ft^3 and 18 nCi/ft^3, respectively).

If storage hole plugs are gas-tight, release of gaseous radionuclides from a breached waste package will occur at retrieval. Otherwise, the radionuclides will leak through the plug into the backfill pore spaces. Radionuclides contained in the pore spaces would be liberated as the backfill is removed. Because the quantities of air provided for remining are limited to what can be supplied in a duct, the airflow into which the gases would be released would likely be less than 50,000 cfm, and dilution of the radionuclides to the maximum permissible concentrations (MPC's) given in 10CFR20 could require up to several hours. During this time personnel should not be present.

Releases occurring at retrieval can be avoided by having radiation sensors in the holes. The gaseous radionuclides could then be drawn off prior to retrieval using millipore filters or a cryogenic absorption system, both of which fall within existing technology. Where the radionuclides are in the backfill, warning of their locations cannot be provided. Therefore, as a precaution remining should be by remote-control (or semi-remote control if sufficient shielding for the operator can be provided within view of the face).

10.13.4.3.2 Releases into Water

To the movement of radionuclides by aqueous transport, requires that water be in the liquid state. At a pressure of 1,600 psi, the boiling point of water is about 600°F, and because the rock and backfill temperatures will be 300°F or less, the pore water will be in liquid form with the backfill. Upon remining, pressures are reduced to atmospheric and the water will vaporize.

If water contacts a breached canister, the rate of dissolution or the fuel would be 0.0000264 lb/day exposing on area of 183 in^2. This 0.0000264 lb/day contains about 0.5 nCi and would generate about 0.2 mR/hr at 4 ft from the canister. Pore water in the backfill would also contain small amounts at gaseous radionuclides which would be liberated upon remining. Water intrusion would provide a good index to failures but would not by itself introduce significant hazards to the operations (Post, 1982).

10.13.4.3.3 Radiation Detection Standards

The radiation levels measured during retrieval operations are not exceptional so that the system standards used in the nuclear industry would prevail. A lower limit of 0.1 mR/hr and an upper limit of a few kR/hr would be adequate. A system to detect krypton-85 in the ventilating air and in the storage holes will be required. This system should be capable of detecting krypton-85 levels below 100 pCi/liter (2.6 pCi/ft^3) (Post, 1982).

10.13.4.4 Operational Concerns

Retrieval from holes containing breached canisters will require transfer casks equipped with internal shielded sleeves in order to ensure releases of radiation meet regulatory standards. Because canister breach cannot be readily determined before the precooling stage, the shielded equipment should be used for all retrieval. In the case of canisters which have split into more than one piece, the grapple in the transfer cask may not be able to retrieve all parts of the breached canister. Retrieval of broken canisters could likely be done by using a transporter at each end of the hole. One would push and the other would pull, requiring that reaming rooms have dimensions allowing transporter use.

To cool the rooms from about 300°F to 125°F will require large capacity cooling units, which occupy a large space. The free clearance at the room entries thereby would be limited. Also, cooling units have a finite life and become less efficient with time.

In the assumed RHO-BWI-CD-35, the transfer cask is fitted longitudinally on the transporter, and the transporter must have its long axis parallel to the placement holes in order to place or retrieve the waste. Turning the transporter to align with the holes will be a difficult and time-consuming maneuver. The BWIP SCR has rectified the problem by having the transfer cask on a turntable which rotates to align the transfer cask with the hole.

The pitch (or spacing) of the holes is given in the assumed RHO-BWI-CD-35 as 8.4 ft. Intersecting holes are undesirable and holes cannot be allowed to vary more than a 3-ft-radius from the design location. With the hole spacing of 60 ft or greater given in the BWIP SCR, the problem is limited.

Drilling long, large-diameter, horizontal holes is difficult. First, as noted in the BWIP SCR, removal of the cuttings will be difficult. Second, the holes will tend to deflect downward due to the weight of the drill head and drill string. Deflection, as noted in the BWIP SCR, can be minimized by drilling a pilot hole and then back-reaming to full size. Intersection with joints will also tend to deflect holes and holes may tend to follow bedding planes if they are collared close to and roughly parallel to such planes.

10.13.4.5 Other Concerns

A fundamental concern related to a repository in tuff concerns the geologic/hydrogeologic uncertainty at the repository horizon. Among the concerns are:

- Uniformity of the thickness of the candidate tuff flow
- Uniformity of the jointing
- Occurrence of faults
- Vertical and lateral hydraulic conductivity.

The further in situ exploratory programs planned by DOE are aimed at resolving the questions concerning geologic and hydrogeologic parameters at the proposed repository location.

Another concern is the probability or mechanism for canister breach. One mechanism is corrosion by ground water. The rate of corrosion will depend on the ions present in the ground water and their concentrations, and on whether the chemical environment is reducing or oxidizing. Another possible mechanism is attempted retrieval of a canister open which the hole has closed. With an annulus of 6 in. between the hole perimeter and the canisters in the most recent design, this mechanism is unlikely. Assuming canister breaches will occur at sometime during the decades-long retrievability period, activities of toxic (strontium and cesium), volatile (iodine), and gaseous (tritium, krypton-85) radionuclides and the dosages of beta and gamma radiation that would occur for breaches at various times up to 50 years after placement must be predicted.

While having a limited effect on retrievability, the backfill placement method could possibly be improved by using pneumatic filling throughout. A suitable pneumatic filling system for the repository would have the following characteristics:

- Capacity: 164 tph
- Maximum horizontal distance: 600 ft
- Blower horsepower: 740 HP
- Operating pressure: 15 psig
- Maximum material size: 3 in.
- Solids loading ratio: 10 lb solids/lb air.

Crushed tuff has been assumed as the fill materials for the lower two-thirds of the room. However, crushed rock such as tuff exhibits a very high hydraulic conductivity. The addition of bentonite may render the fill relatively impermeable. The proportions of tuff and bentonite to obtain a fill having optimum physical and chemical properties must be determined.

10.13.5 Summary and Conclusions

The repository is located at a depth of 1,200 ft in the Topopah Spring Member tuff, adjacent to the Nevada Test Site, Nevada. The repository has 23 storage panels and one experimental panel divided by a shaft pillar into two sections of 12 panels each. Each panel is divided into 30 storage areas consisting of a storage room with a reaming room on either side. The storage rooms are 575-ft-long, 31-ft-wide, and 16.4-ft-high.

The waste package consists of carbon steel with a diameter of 16 in., is 18.5 ft in length, and contains either one PWR and three BWR spent fuel assemblies. Six canisters are placed in 17.4-ft-long, 24-in.-diameter horizontal holes. Based on an average canister thermal load of 1.25 kW/canister at the time of placement, the panel thermal load is 150 kW/acre.

Backfilling of the rooms take place after completion of storage in the panel. Bulkheads are placed at either end of the panel to contain the backfill.

The retrievability requirements of 10CFR60 impose the following effects on the repository systems:

- Re-excavation system - The unprecooled backfill will require mining by either a full-face advance or a pilot and slash method. Either excavation will require remote or semi-remote equipment as a result of the high temperatures and limited available ventilation

- Equipment system - Haulage systems during remining unprecooled backfill will need to be remote controlled. Due to the elevated temperatures, specialized equipment including carbide bits, oil coolers, special hydraulic hoses, and steel fittings will be required. Equipment working at or near the face will need to be crawler-mounted because the high temperatures rubber tires will rapidly deteriorate. Even with precooling, rock contact temperatures will require crawler-mounted equipment for retrieval

- Facilities - Retrieval will result in the waste handling shaft being used to hoist transport casks containing retrieved canisters. A separate materials handling system is required for disposal of excavated backfill. Special system requirements are necessary if the backfill is contaminated. The tuff handling shaft may be used to hoist backfill and would require a HEPA filtration system to prevent radionuclide release

- Ventilation requirements - The ventilation air volumes during retrieval are a function of the ambient rock temperature, air intake temperature, acceptable exhaust temperature, the time since waste placement, and the required precooling temperature. The quantities will vary according to what activities are taking place. Depending on the parameters, the combined design airflow of 1,265,000 should be just adequate. If placement, backfilling, and local retrieval are simultaneous the waste air circuit is inadequate. Storage and backfill must be halted and the fan size increased to achieve adequate airflow

- Backfill - The condition of the unprecooled backfill present at retrieval is a function of the elapsed time and the backfill composition. Mining for retrieval operations may encounter steam and unstable backfill depending on the hydrologic and thermal conditions. The backfill during retrieval will require material handling systems and an evaluation of the quality of the material for reuse or disposal due to contamination.

Breached canister retrieval imposes additional requirements for the equipment system and the repository facilities.

The concerns for this repository concept are summarized as follows:

- Technological Concerns:
    - Overcoring a horizontal hole 174 ft long to retrieve a breached canister requires removal of the hole lining and numerous difficult to handle core breaks
    - Within current technology, a telescopic arm or a magnetic grapple requires development to retrieve the canister.
    - Adequacy of the rock support system for a period of decades
    - Development and implementation of remote control mining systems with adequate horizontal and vertical controls
    - Development and implementation of a precooling system which does not limit isolation or lead to untimely retrieval
- Safety Concerns:
    - Operation of the retrieval transporter by one rather than two operators

  - Rockfalls resulting from deterioration of the roof support system
  - Presence of radioactive fluids or steam in backfill prior to and during remining
  - Streaming gamma radiation and possible beta particles and gaseous radionuclides during retrieval
  - Thermal spalling during precooling

- Radionuclide Release Concerns:
  - Canister breaches would result in release of gaseous hydrogen-3 (tritium) and krypton-85, and volatile carbon-14, of which krypton-85 would have the largest concentration
  - Diluting krypton-85 to the MPC given by 10CFR20 could take up to several hours for a release from a single breached waste package
  - The mechanisms for release of gaseous radionuclides form the storage hole to the atmosphere would be non-gas-tight hole plugs, streaming through the floor shield retrieval and aqueous transport (if hole liners corrod)
  - A system is required for detection of krypton-85 in ventilating air and in storage holes

- Operational Concerns:
  - Excessive deviation of the storage holes from the proposed alignment due to drill steel weight and variations in rock properties
  - Difficulties in fully grouting the hole liner into place
  - High temperature conditions during repair of remote control equipment
  - Large capacity heat exchangers limiting space in room entrances
  - Coordination of backfill handling and storage

- Other Concerns:
  - Geologic and hydrogeologic uncertainties

- Undetermined probabilities and mechanisms for canister breach

- Methods and details of backfill placing

- Unknown backfill quality over the repository retrieval period effects all retrieval systems.

The development and placement concepts for the repository are adequately defined in the assumed DOE documents for basalt. The backfill type and placement method need more adequate definition. DOE has not suggest precooling the backfill prior to remining. We are not aware of studies on the workability, physical and chemical properties, and stability of the assumed tuff-bentonite backfill mixture. The backfill condition and quantity have a significant effect on the waste retrieval, and the details of placement and quality will define the methods and hazard of remining. The equipment used to mine the backfill needs to be defined. Present technologies do not encompass equipment capable of remote control mining of the unprecooled backfill at the temperatures expected in the repository. Further definition and confirmation is required in the areas of hydrogeology and geology, long term adequacy of roof support, detecting and retrieving breached canisters and the probabilities and mechanisms for breach. The problems involved in remining and handling unprecooled backfill need solutions in order to meet the retrievability requirements of 10CFR60. In order to meet the requirements, considerable development in remote control mining is required.

10.14 Salt Repository with Vertical Hole Storage and Immediate Backfilling

10.14.1 Basic Information

Bedded salt is the host geologic medium for the fourteenth repository concept. Waste packages will be placed in 20-in.-diameter holes drilled in the storage room floors and the rooms will be backfilled upon completion of waste placement. The assumed depth of the conceptual design repository is 2,000 ft. This concept is similar to the one in the Conceptual Design Report (CDR) for bedded salt (78-57-RE) except that in the conceptual design there is a five-year retrievability period during which no backfilling takes place. Thereafter, in the CDR, rooms are backfilled upon completion of waste storage.

The emplaced waste canisters each emit 0.58 kW, resulting in a thermal load within storage panels of 65 kW/acre, or 60 kW/acre for the storage area including main entries.

10.14.1.1 Geologic Environment

10.14.1.1.1 Rock Units

The assumed reference repository emplacement horizons are the bedded salt rock of the Permian Basin. Other areas being studied are the Paradox Basin, and the Gulf interior salt domes.

In the Permian Basin, the Palo Duro subbasin in the panhandle of Texas is a possible candidate for a geologic repository. The salt beds of major interest are the Lower San Andres Formation Cycles 4 and 5 at depths of 2,100 ft to 2,600 ft. The major water-bearing unit above the repository is the near-surface Ogallala Sandstone. The Lower San Andres Formation is overlain by a depositional sequence of siltstones, sandstones, salt, and anhydrite units.

The Lower San Andres Formation Salt Cycle 5 has an upper portion approximately 112 ft in thickness which is the target repository horizon. The upper portion of Salt Cycle 5 is relatively homogeneous with a consistent thickness of 100 to 110 ft. Cycle 5 contains anhydrite interbeds of consistent thickness and location. Shale interbeds of varying thickness and location also occur in Salt Cycle 5.

Salt Cycle 4 of the Lower San Andres Formation is approximately 160 ft thick, and is overlain by shale and underlain by anhydrite. No major anhydrite beds interrupt Salt Cycle 4. Minor anhydrite beds and shale, siltstone and claystones are present. In comparison to

Salt Cycle 5, Cycle 4 is thick and homogeneous. Selection of a potential repository horizon will depend on further information from holes associated with the exploratory shaft.

In the Paradox Basin, the Gibson Dome area of southeast Utah is a possible candidate site for a geologic repository. In the Gibson Dome area, Salt Cycle 6 of the Paradox Formation is a candidate repository horizon. The Paradox Formation is approximately 2,800 ft thick and contains approximately 68 % salt. Other interbeds in the formation are anhydrite, dolomite, limestone, siltstone and shale. Below the Paradox Formation is a transectional formation, the Pinkerton Trail Formation, consisting of interbedded limestone, dolomite, anhydrite, siltstone and shale. Below the Pinkerton Trail is the Molos Formation which completes the transformation to the Leadville Limestone. The strata overlying the Paradox Formation contain sandstones, siltstones, limestones, and dolomites. In general the overlying formations are aquifers with low permeability aquitards included.

Salt Cycle 6 ranges in thickness from 70 ft to 290 ft. The salt is dark reddish brown to grey brown and is finely crystalline. Thin undulatory anhydrite bands occur at intervals of 7 to 23 in. and range in thickness from about 0.1 in. near the top of the cycle to 6 in. near the lower part of the cycle. The bands are composed of anhydrite sand in a halite matrix. Associated with and immediately below the anhydrite bands, is a zone of dissolution pits where potash salts have been deposited and then dissolved. The basis for the stratigraphy of Gibson Dome is based in general on a single boring, GD-1. Additional geologic information is required for in situ testing planning. The dominant structure of the Gibson Dome area is a gently folded dome within a general homocline. The ockhart basin, a collapse feature near the northern end of the area, has been affected by dissolution of salt and possibly limestone collapse, breccia pipe formation, and folding and faulting.

Two salt domes are under consideration as possible repository sites. These are Vacherie Dome in Louisiana and Richton Dome in Mississippi. Both domes are parts of Interior Salt Basins found within the Gulf Interior Region, approximately 100 to 200 miles inland from the Gulf of Mexico.

The general stratigraphy of these domes includes thick salt beds (Louann Formation) that were laid down in early Jurassic time. Overlying the salt are combinations of marl, chalk shale, sandstone, and carbonates that have accumulated to thicknesses of thousands of feet and are considered to represent 15 depositional stages. They include numerous formations that will not be detailed here.

The diapiric rise of the salt is thought to have been caused by loading from accumulating sediments during late Jurassic time. In the Gulf Interior Salt Basin, this diapirism seems to have stopped during Middle Tertiary time after sediment loading decreased. The resulting domes developed as elongate, narrow structures that can extend to within several hundred feet of the surface.

Original bedding is complexly folded during doming, and salt domes typically contain vertically-oriented bands of halite and anhydrite. During the upward movement of a dome, salt and anhydrite are recrystallized and tend to leave other sedimentary inclusions behind. This process results in a natural segregation of sediments and evaporites, and so domes contain much purer salt (approximately 90%) than is found in bedded deposits (Barr, 1977). Importantly, a vertically oriented single "dome" may have developed as several intergrown "spikes" that have risen past each other to leave sheared zones included within the salt stock. These "anomalous zones" tend to be tabular features of brecciated halite and anhydrite of sediments carried upward with the salt. They can be several tens of feet thick, or thousands of feet long, and may extend to the sheath of sheared material at the outer edge of the dome (Kupfer, 1980).

A caprock of variable thickness (hundreds of feet) typically covers each dome. Caprock typically is comprised of various thicknesses of gypsum, anhydrite, and carbonates, but gypsum and carbonates may be absent in some domes. Brecciation and solution cavities are common features in the caprock.

The sediments overlying salt domes may be pierced or folded by the rising salt stocks, or, alternatively, the area over the dome may be a zone of erosion or non-deposition due to topographic rising. Consolidated sediments pierced by the domes are sheared during salt movements, and the outer region of each dome containes a large amount of lithic fragments. Sediments overlying the top of the dome often exhibit faulting and thickening or thinning due to the rise of the dome.

Vacherie Dome is in the northwest corner of Louisiana. It is a fairly large, elliptical body with a length and width of approximately 6 miles and 2 miles respectively (as measured at a depth of 10,000 ft). Based on geophysical investigations, the flanks of the dome are believed to dip approximately 30° from vertical to an elevation of about 10,000 ft below sea level. Below that elevation, the flanks are believed to be vertical (ONWI-119).

Exploratory boreholes have encountered the top of caprock at depths of 540 ft to 1,500 ft. Caprock thickness was found to vary between 80 ft and 270 ft in these boreholes. Three distinct caprock layers comprised of anhydrite, gypsum, and carbonate were found in a 5,030-ft-deep core hole, DOE No. 1 Smith (ONWI-119).

Descriptions of the salt petrology as found in DOE No. 1 Smith indicate that the Vacherie Dome is comprised of approximately 90% halite and 10% anhydrite. The halite is found in 0.25- to 1.0-in.-

crystals that typically coarsen near the caprock. It has numerous fluid inclusions at grain boundaries. Anhydrite and halite are interlayered in vertically oriented, thin bands that have been complexly folded. No internal sheared zones (anomalous zones) were identified in Vacherie Dome (ONWI-119).

Richton Dome, in southeastern Mississippi, is part of a Northwest trending salt ridge in the Mississippi Salt Basin. The dome forms an elliptical body approximately 9 mile long and 1.8 mile wide as measured at elevation - 1829 (MSL). Overhangs are present in the long dimension and give the dome a mushroomed shape as viewed southwest to northwest (ONWI-120).

Caprock has been encountered at depths of 500 to 880 ft in numerous exploratory boreholes. These borings also indicate that the caprock varies in thickness between 20 ft and 213 ft, and is thicker near the dome's center. A top caprock layer comprised of limestone and a lower anhydrite layer with gypsum-filled veins and vugs was found in a deep corehole, DOE MRIG-9 Masonite (ONWI-120).

Core descriptions from the DOE corehole also indicate that the salt is fine to coarse grained (< 2 in.) and contains numerous megacrystals. Approximately 90% of the salt dome is halite, and 10% is anhydrite. No shear zones (anomalous zones) were described within Richton Dome.

Although both bedded and domal salt are under consideration by DOE, this report assumes the repository is located in a bedded salt formation. At present (1983), preliminary rock mechanics and index testing for the possible horizons are beginning to be published. more site specific information may clarify and resolve some of the rock mechanics concerns raised in this report.

10.14.1.1.2 Rock Mechanics Properties

Rock strength and thermomechanical properties used for design are based on generalized salt properties (Y/OWI/TM-36/4). The most important mechanical property of salt for repository design is creep. Salt creep occurs almost universally underground because the shear strength, or creep limit, of salt in situ is only about 100 psi (Baar, 1977). Thus, only very small shear stresses are required to maintain creep (Y/OWI/TM-36/4). Creep causes joints and fractures within the salt mass to seal shortly after their creation.

Three stages of salt creep have been observed underground (Mraz, 1973). The excavation of a mine opening at depth creates high differential stresses at the wall of the opening, resulting in the first stage of rapid "stress relief" creep. The "stress relief" creep stage may last only a few days or hours before being succeeded by a second creep stage of a gradually reducing rate. In standard nomenclature, the first two stages are "primary creep."

The salt adjacent to the opening "yields" and the pressure peak is transferred deeper into the salt during the first two stages of creep. After several years, an equilibrium is reached and a final stage of slow, steady-state creep continues until the salt has "rehealed" itself completely closing the opening. In standard nomenclature, the steady-state condition is called "secondary creep." The accelerating or "tertiary" creep that precedes failure in laboratory salt testing does not occur under in situ mine conditions (Baar. 1977).

Pressure gradients exist in all directions away from the opening resulting in floor heave, roof sag, and pillar shortening during all three stages of creep. The creep zone, which is defined by the limit of the pressure gradient, has been measured to extend up to 100 ft into the salt around an opening (Baar, 1977).

Salt creep rates are determined primarily by the salt material properties, the applied load, and the temperature. Relevant salt material characteristics include the salt type, crystal size, and the presence of inclusions of clay, shale, or anhydrite. The applied load on pillars in situ is due primarily to the weight of the overburden, but the load on a given pillar is also dependent on the immediate mine geometry and the mining sequence.

An increase in salt temperature has been found to dramatically increase creep rates (ORNL-4555). In laboratory tests performed in conjunction with Project Salt Vault (ORNL-4555) the effect of temperature on creep rate was found to be:

$$(E_2/E_1) \propto (T_2/T_1)^{9.5} \qquad (10.14\text{-}1)$$

where

E_1 = initial creep rate, in./in.-hr

E_2 = creep rate at second temperature, in./in.-hr

T_1 = initial temperature, °K

T_2 = second temperature, °K.

Equation (10.14-1) implies that an increase in repository temperatures of 100°F (from 80°F, the prestorage ambient temperature, to 180°F, a typical repository temperature), with everything else remaining constant, would increase creep rates five-fold. Equation (10.14-1) is based only on laboratory testing of one specific salt and has not been confirmed by in situ testing. In other tests conducted during the former Project Salt Vault in Kansas, thermal stresses caused by the emplacement of a heat source were found to increase in situ creep rates as much as ten-fold even without an appreciable rise in salt temperature (ORNL-4555).

The prediction of the creep rates that are expected in the repository is of critical importance to repository design and to retrieval. A large amount of creep testing has been performed by Sandia National Laboratories and RE/SPEC, Inc., on salt samples from the Permian Basin, resulting in the development of "constitutive equations" for salt creep (SAND-80-0558; Pfeifle and Senseny, 1982). Several of these equations have been used in computer simulations to predict room closures in an underground salt repository (SAND79-1199), with unsatisfactory results. The closures predicted by the simulations were strongly sensitive to small variations in the parameters used in the equations. Also, different equations that provided equally good fits to the measured laboratory data resulted in widely varying predictions of room closure rates when used in pillar simulations.

The experiences in deep Canadian potash mines demonstrate that the results of laboratory testing can be quite misleading when applied to mine design, because of differences between laboratory and in situ loading conditions (Mraz, 1978). Underground, the excavation of a mine opening results in the local stress relief of an initially highly-stressed plastic salt mass. In the laboratory, initially stress-relieved salt specimens are subjected to applied loads. "Strain hardening" behavior of salt is observed in the laboratory but never underground (Baar, 1977).

Predictions of repository-scale behavior of heated salt based on extrapolations from laboratory test results are at present unreliable. Large scale, long duration, in situ testing is required before many important design parameters can be used with confidence.

The slow, continual creep of salt may affect repository functions over time, but alone does not present a safety hazard. Indirectly, salt creep may cause two types of local instability that do, however, pose safety problems. One of these unstable conditions is slabbing from pillars. Pillar slabbing is very common in salt and potash mines, and occurs because a stress-relieved zone of salt is formed at the wall of the opening, while the interior of the pillar continues to deform plastically. The stress-relieved zone behaves elastically and tends to remain at its original height, and often buckles as the interior of the pillar shortens (Baar, 1977). Pillar slabbing can be hazardous, especially where pillars are high, but the presence of slabbing indicates the pillars are behaving normally and are in no danger of failing suddenly.

A more serious safety problem occurs in bedded salt when thin bands of shale or clay are present near the opening. The discontinuities act as slip planes where thicker beds of salt in the roof or floor can separate from the salt mass. The salt beds are then stress-relieved and with continued creep of the surrounding salt mass buckle into the opening. In Canadian potash mines, "even minor variations in depth and spacing of clay seams and partings above and below the area extracted have very significant effects on the competency of openings" (Jones and Prugger, 1982).

Because creep dominates the in situ behavior of salt, elastic properties cannot provide a basis for the design of mine openings. Nevertheless, elastic properties for salt have been determined in laboratory tests. Typical thermal and mechanical properties for Permian Basin salt are given in Table 10.14.1. Future site specific testing will be performed to further characterize the mechanical properties of salt in the proposed repository horizon.

10.14.1.1.3 Hydrogeology

Salt rocks below a depth of 985 ft are functionally impermeable. The in situ intrinsic permeability of bedded salt has been measured at between 12 and 21 micro-darcys (SAND81-7073), while laboratory analysis of bedded salt have measured intrinsic permeability of 0.05 micro-darcys (Sutherland and Cave, 1980). Laboratory samples have a lower permeability because of their lower fracture (or discontinuity) density. The field tests are more representative of the intrinsic peremability that will affect repository operation. The hydraulic conductivity of laboratory samples has been measured to be on the order of 1.5×10^{-15} ft/day (Y/OWI/TM36-4). The secondary permeability associated with jointing and fracturing will be nearly as low as the hydraulic conductivity measured in the lab because of the self-sealing nature of salt.

Moisture in salt formations is in the form of brine pockets, brine inclusions, and brine trapped on intercrystalline boundaries. Salts which have high moisture contents or extensive brine pockets will be avoided in the siting of the repository.

The moisture content measured in salt samples obtained from the Permian Basin ranges from 0.15% by weight for Kansas salt to 1.75% by weight for New Mexico salt. In general, the moisture in laboratory samples is comprised of the brine in the crystal boundaries and the brine inclusions inside the salt crystals. Brine inclusions are cubical and range in size from less than 10^{-7} in. to 0.5 in. on a side.

The chemical composition of the included brine from salt samples from the Hutchinson Salt Formation has been analyzed (ORNL-5526), and was found to have a specific gravity of 1.22, a pH of 6.5, and to be saturated with sodium chloride and calcium sulfate. Considerable quantities of magnesium chloride and bromine ions were also present along with a lesser quantitiy of potassium ions.

As a particular salt repository site has not yet (1983) been chosen, specific investigation and modeling of ground water flow has not been performed. Models of near-field ground water flow that consider the changing conditions imposed by repository construction and waste

TABLE 10.14.1 Mechanical and Thermal Properties of Salt

Property	Range of Values	Typical Value
Young's Modulus	0.2 to 2 x 10^6 psi	1.6 x 10^6 psi
Poisson's Ratio	0.22 to 0.50	0.35
Unconfined Compressive Strength	2,300 to 7,250 psi	4,000 psi
Tensile Strength	20 to 400 psi	225 psi
Creep limit	20 to 400 psi	100 psi
Coefficient of Linear Thermal Expansion	20 x 10^{-6} to 22.2 x 10^{-6}/°F	22.2 x 10^{-6}/°F
Specific Heat	0.19 to 0.47 BTU/lb°F	0.22 BTU/lb°F
Intrinsic Permeability	12 to 21 Darcys	18 Darcys
Hydraulic Conductivity	1.7 x 10^{-15} to 1.1 x 10^{-2}ft/yr	5.2 x 10^{-13}ft/yr
Moisture Content	0.15 to 1.75% by weight	0.5% by weight
Unit Weight	103 to 152 pcf	133 pcf
Porosity	0.4 to 2.9%	0.5%
Thermal Conductivity	Temp(°F)	K (BTU/hr-ft°F)
	32	3.53
	122	2.90
	212	2.43
	302	2.08
	392	1.80
	572	1.44
	752	1.20

emplacement are being developed at present. These models account for brine and brine-gas inclusion migration in response to heat flow, pressure changes, possible waste migration, and salt micro-structure changes. Studies are presently underway to evaluate brine reactions with introduced materials (sintered carbon, fiberglass, waste canister, steel, etc.) such as might be stored in a nuclear waste repository.

Once a repository site has been chosen, the aquifers, aquitards, and acquicludes present above and below the repository horizon can be identified, and their behavior investigated.

10.14.1.2 Repository Construction and Layout

The proposed repository will contain 128 rooms, of which 126 rooms are for canister storage with two reserved for ventilation. The rooms are 4,000 ft long and are connected by crosscuts on 1,000-ft centers. Access to the rooms is provided by five main entries that connect the rooms with four shafts to the surface. With the exception of the initial portions of entries in the shaft pillar (that will be driven by drill-and-blast methods), the entries will be driven by a continuous miner. Dimensions of the various facilities are given in Table 10.14.2, and the repository layout is shown in Figure 10.14.1. Each shaft will have a different dedicated function as follows:

- Personnel and materials air intake shaft
- Salt hoist and air exhaust shaft
- Waste handling shaft (confinement air intake)
- Confinement air exhaust shaft.

Shaft sinking will be by conventional drill-and-blast methods, and the shafts will be lined with 1-ft-thick concrete. Station areas will be lined with 1.25-ft-thick reinforced concrete.

The two potential sequences for repository development waste placement are:

- Completion of repository development before beginning waste storage

- Concurrent room development and waste storage at the rate of 12 rooms per year.

The two options have very different requirements for ventilation and excavation systems, shaft facilities, and equipment quantities.

According to the current (1983) repository construction schedules, waste placement must begin within ten years of construction authorization. Assuming that two years will be required for shaft sinking, as estimated in the CDR, and allowing for contract procurement for both the shafts and the underground development, then pre-placement development must be completed within six years. Achieving this target would require a development rate of 1,140 tpd for a five-day workweek if room development and waste placement take place concurrently. Salt handling would be minimized, because once waste placement began the salt mined in a development panel could be used directly as backfill in a storage panel without being hoisted to the surface.

If repository development must be completed before waste placement begins, then the required development rate increases to about 9,940 tpd. The addition of several continuous miner units would be required to meet this development rate. Completion of development before placement and within 10 years of construction authorization would also mean that all the mined salt would have to be hoisted to the surface. The diameter of the salt hoisting shaft would have to be enlarged from 12 ft to 24 ft and would result in rooms being excavated up to 24 years before waste is emplaced. Creep closure rates may be large enough to require substantial overmining or remining to allow sufficient clearance for waste placement.

10.14.1.3 Canister Arrangement

The waste package (Figure 10.14.2) is a carbon steel canister. The waste packages will be placed in 10-in.-diameter holes drilled vertically into the storage room floors. Each room will contain two rows of holes, spaced 5.5 ft apart center-to-center, and located symmetrically about the room centerline. The hole spacing within each row (hole pitch) is 4-ft center-to-center.

10.14.1.4 Thermal Loading

As a result of decay of the radionuclides contained in the wastes, the waste packages radiate heat. Radionuclides all decay ultimately to stable isotopes, so the number of disintegrations decreases with time. Thus, the heat produced by a canister will be maximum at the time of emplacement.

Each canister will contain either one Pressurized Water Reactor (PWR) or two Boiling Water Reactor (BWR) spent fuel assemblies. The initial (maximum) heat loads for canisters containing 10-year-old waste are 0.58 kW and 0.38 kW for PWR and BWR, respectively. The overall thermal load on the repository is determined by the areal extent of the repository, the canister spacing, the age of the waste, and the type of the waste (PWR or BWR). In practice, waste will be of two types and varying ages, but in the CDR actual panels are assumed to consist of waste of uniform type and age

Table 10.14.2 Dimensions of Repository Facilities

Facility	Dimensions
Personnel-and-Materials Shaft	22.0 ft inside diameter
Salt Hoisting Shaft	12.0 ft inside diameter
Waste Handling Shaft	16.0 ft inside diameter
Confinement Upcast Shaft	10.5 ft inside diameter
Entries	11 ft high by 18.5 ft wide
Access Pillars	81.5 ft
Storage Rooms	17.5 ft wide by 19 ft high by 4,000 ft long
Manifolds	37 ft wide by 19 ft high
Cross-Cuts	17.5 ft wide by 19 ft high
Room Pillars	142.5 ft
Rib Pillars	43.75 ft
Storage Holes	20-in. diameter by 22 ft long
Storage Hole Pitch	4 ft

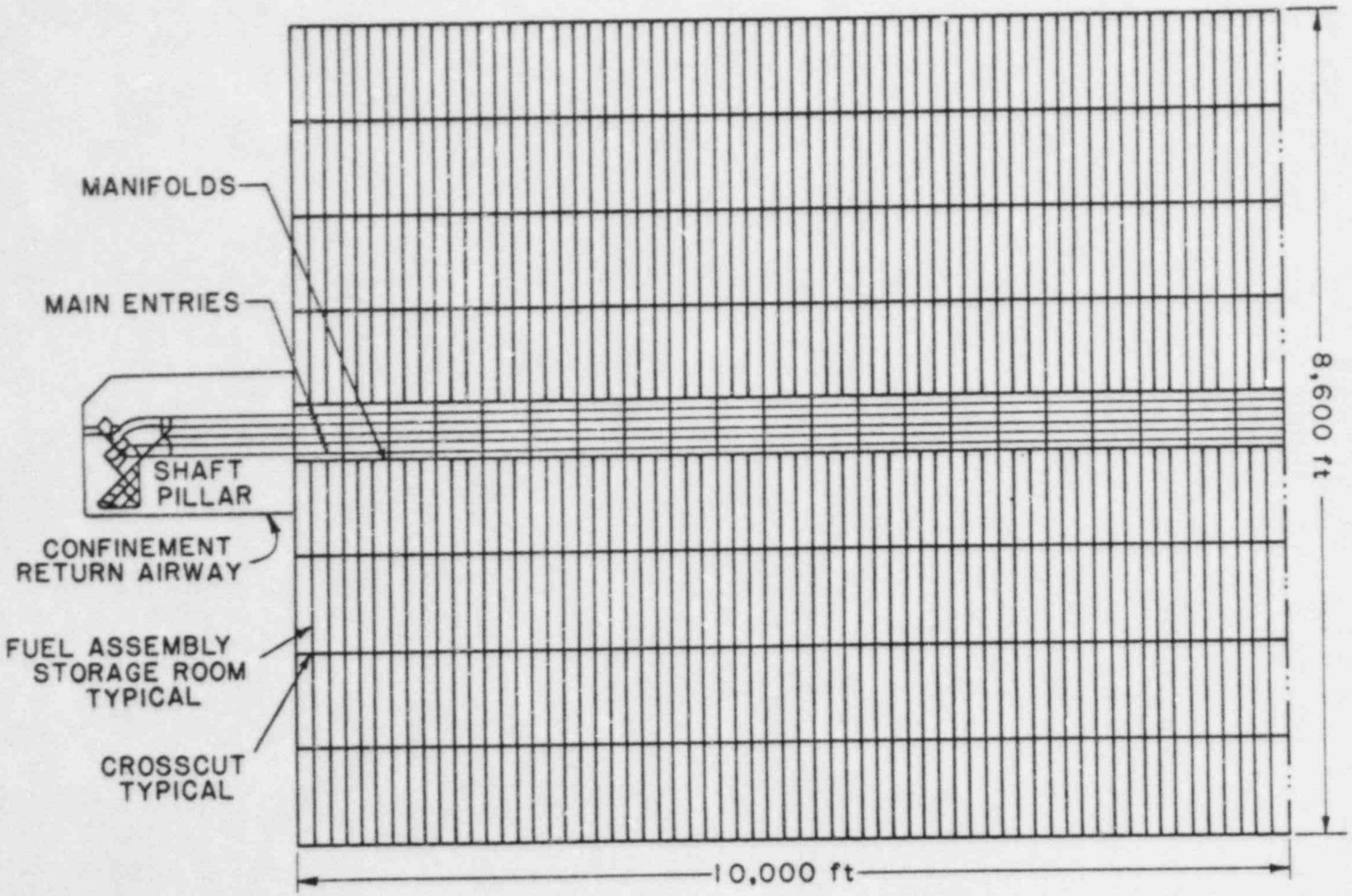

Figure 10.14.1 Layout for the repository in salt.
(78-57-RE)

The storage area consists of 126 rooms occupying a total area of 1,850 acres. Using 0.5 kW/canister (assuming that 60% of the waste will be PWR assemblies) and assuming the repository will contain a total of 242,000 canisters, the heat load over the storage area of 1,860 acres is 65 kW/acre. Taking the total area of 1,990 acres, which includes the storage area and entries but excludes the shaft pillar, the overall heat load is reduced to about 60 kW/acre. The design thermal loading in the CDR (78-57-RE) is 60 kW/acre.

The HEATING 5 computer program (ORNL/CSD/TM-15) has been used to predict temperature contours for thermal loads of 30 kW/acre and 60 kW/acre in bedded salt (78-56-R) and for a thermal load of 150 kW/acre in domal salt (EY-77-C-05-5367). Table 10.14.3 prepared on the basis of these analyses, shows the predicted salt temperatures at the canister-salt interface and on the roof at the centerline of the room for times of 5 to 25 years after emplacement.

The peak temperature at the salt-canister interface occurs relatively soon after emplacement. For example, at thermal loads of 150 kW/acre the peak temperature is reached 7 years after emplacement. For this thermal loading rate, repository temperatures will have essentially stabilized 25 years after emplacement. At the lower thermal loads, no information is available beyond 25 years but salt temperatures still appear to be increasing at this time. Because of the sensitivity of salt creep rates to temperature, further simulations for longer time periods are warranted.

Laboratory testing has determined that bedded salt containing micro-inclusions of brine can fail explosively due to internal gas pressures at a critical temperature of 482°F (ORNL 4555). The peak salt temperature for even a thermal loading of 150 kW/acre is considerably less than the critical temperature, so explosive failure of the salt is highly unlikely.

10.14.1.5 Backfill Timing and Placement

Ultimately, a repository must be backfilled with the backfill designed as a barrier (10CFR60.133). In this repository concept, backfill is placed in the rooms immediately after the waste is stored.

The backfill (crushed salt from the repository) will be transported to the rooms by shuttle cars carrying 20-yd^3-loads. After the loads have been dumped, the backfill will be pushed into place by means of a dozer (78-56-R). The backfill placement density will be 100 pcf, and the rooms will be 90% filled. Therefore, approximately 32% of the room space will be voids, assuming the in-place density of salt is 134 pcf.

The application of confining pressure, caused by creep closure of the repository room, is expected to have a significant impact on the

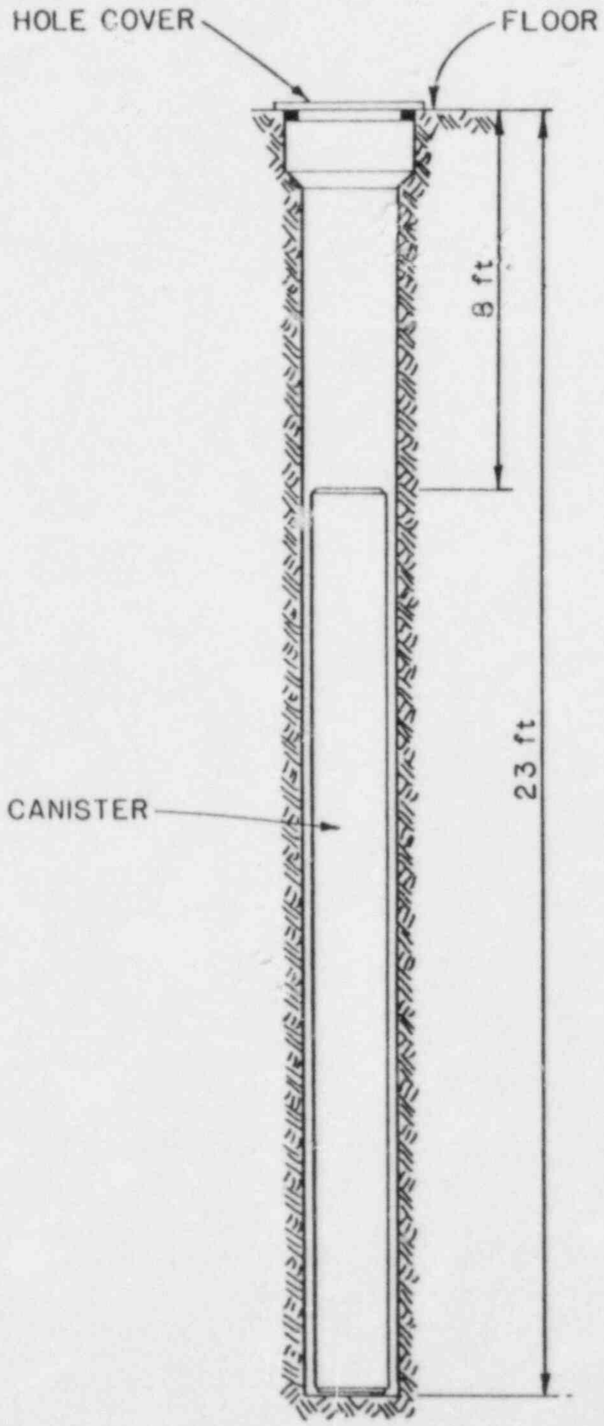

Figure 10.14.2 Canister and storage hole in salt.
(78-57-RE)

Table 10.14.3 Predicted Salt Temperatures after Waste Emplacement

Thermal Loading	Location at Salt-Canister Interface			Location at the Roof at the Center-Line of the Room		
(kW/Acre)	Time after Emplacement (years)			Time after Emplacement (years)		
	5	10	25	5	10	25
30(a)	163°F	163°F	N/A	101°F	113°F	N/A
60(a)	236°F	242°F	258°F	120°F	143°F	182°F
150(b)	345°F(c)	345°F	345°F	215°F	N/A	265°F

Notes:
(a) Source: 78-56-R

(b) Source: Stearns-Roger

(c) Peak temperature actually occurs 7 years after emplacement

N/A = Not Applicable

mechanical properties of the backfill. The effect of the pressure generated by room closure will be to gradually reduce the void space and increase the density until the backfill approaches the density of massive rock salt. Because the creep closure of the rooms is driven by essentially lithostatic pressures, but will also depend on the stiffness of the backfill. As the backfill consolidates, the stiffness will increase and hence the rate of creep closure may decrease as backfill density increases to undisturbed salt in situ values. Closure of the room and recompression of the backfill may initially occur relatively rapidly owing to thermal effects, but may occur more slowly as the backfill reconsolidates.

As the backfill is recompressed, pockets of air, brine, or brine vapor may be trapped under high pressure. The moisture content of the backfill may be higher than the surrounding salt, because of the higher permeability of the backfill, the presence of moisture in the ventilating air, and brine migration.

10.14.1.6 Ventilation

While not stated explicitly in the CDR, backfilled rooms are implied to be bulkheaded off so that they are isolated from the confinement ventilation circuit. Leakage through backfilled rooms will be minimal although the rooms initially have 10% of their volumes unfilled. The two potential development options, are:

- Develop and store waste simultaneously

- Develop the whole repository prior to waste emplacement.

In the first case, separate ventilation circuits are required for development and for storage operations. Only one ventilation circuit is required in the second case. In both cases, rooms will be bratticed off between the time they are developed and when storage takes place. Airflows required for development operations will remain constant. Because rooms will be backfilled and bulkheaded once storage operations are complete, the airflow required for storage operations will also remain constant.

The virgin rock temperature at a depth of 2,000 ft is unlikely to consistently exceed 80°F. The temperature of the intake air at the surface in summer is unlikely to exceed 96°F dry-bulb temperature and 70°F wet-bulb temperature, depending on the climatic conditions at the site. For development and storage operations, cooling of the intake air may not be necessary. In winter, the intake air may require heating to prevent problems with icing and for the comfort of workers traveling in the shaft.

10.14.1.7 Retrieval Systems

Title 10, Part 60 of the Code of Federal Regulations (10CFR60) requires that repository operations be designed so that any or all of the waste could be retrieved on a reasonable schedule, "Full Retrieval" is removal of all wastes. However, from time to time retrieval on a limited basis, a few canisters, a single room, or a single panel, may be necessary. We will designate this scenario as "Local Retrieval."

At the time of retrieval, the canister will be in total contact with salt backfill which will be compacted if the surrounding salt has crept toward the hole. For this reason, retrieval would best be carried out by overcoring. An overcoring unit which has been designed for use at the Waste Isolation Pilot Project (WIPP) site in New Mexico is shown in Figure 10.14.3 (SAND79-1239, 1979).

Using the overcoring machine, retrieval involves the following operations (Table 10.14.4):

- Locate the canister and establish its orientation
- Install retrieval manifold to be concentric with the canister and perpendicular to canister's center-line
- Position retrieval cask on the retrieval manifold and connect the cuttings collector
- Drill to within 4 in. of the top of the canister (Figure 10.14.4)
- Reconfigure the drill system so that it can perform the overcoring operation (add filters for cuttings collection system, and attach overcoring bit to the drill)
- Advance overcoring bit until it reaches a depth just beyond the bottom of the waste canister
- Halt penetration of overcore bit but continue rotation
- Advance sleeve portion of overcore barrel to undercut the canister (Figure 10.14.5)
- Retract the sleeve into the barrel and hoist the core barrel.

mechanical properties of the backfill. The effect of the pressure generated by room closure will be to gradually reduce the void space and increase the density until the backfill approaches the density of massive rock salt. Because the creep closure of the rooms is driven by essentially lithostatic pressures, but will also depend on the stiffness of the backfill. As the backfill consolidates, the stiffness will increase and hence the rate of creep closure may decrease as backfill density increases to undisturbed salt in situ values. Closure of the room and recompression of the backfill may initially occur relatively rapidly owing to thermal effects, but may occur more slowly as the backfill reconsolidates.

As the backfill is recompressed, pockets of air, brine, or brine vapor may be trapped under high pressure. The moisture content of the backfill may be higher than the surrounding salt, because of the higher permeability of the backfill, the presence of moisture in the ventilating air, and brine migration.

10.14.1.6 Ventilation

While not stated explicitly in the CDR, backfilled rooms are implied to be bulkheaded off so that they are isolated from the confinement ventilation circuit. Leakage through backfilled rooms will be minimal although the rooms initially have 10% of their volumes unfilled. The two potential development options, are:

- Develop and store waste simultaneously
- Develop the whole repository prior to waste emplacement.

In the first case, separate ventilation circuits are required for development and for storage operations. Only one ventilation circuit is required in the second case. In both cases, rooms will be bratticed off between the time they are developed and when storage takes place. Airflows required for development operations will remain constant. Because rooms will be backfilled and bulkheaded once storage operations are complete, the airflow required for storage operations will also remain constant.

The virgin rock temperature at a depth of 2,000 ft is unlikely to consistently exceed 80°F. The temperature of the intake air at the surface in summer is unlikely to exceed 96°F dry-bulb temperature and 70°F wet-bulb temperature, depending on the climatic conditions at the site. For development and storage operations, cooling of the intake air may not be necessary. In winter, the intake air may require heating to prevent problems with icing and for the comfort of workers traveling in the shaft.

10.14.1.7 Retrieval Systems

Title 10, Part 60 of the Code of Federal Regulations (10CFR60) requires that repository operations be designed so that any or all of the waste could be retrieved on a reasonable schedule, "Full Retrieval" is removal of all wastes. However, from time to time retrieval on a limited basis, a few canisters, a single room, or a single panel, may be necessary. We will designate this scenario as "Local Retrieval."

At the time of retrieval, the canister will be in total contact with salt backfill which will be compacted if the surrounding salt has crept toward the hole. For this reason, retrieval would best be carried out by overcoring. An overcoring unit which has been designed for use at the Waste Isolation Pilot Project (WIPP) site in New Mexico is shown in Figure 10.14.3 (SAND79-1239, 1979).

Using the overcoring machine, retrieval involves the following operations (Table 10.14.4):

- Locate the canister and establish its orientation
- Install retrieval manifold to be concentric with the canister and perpendicular to canister's center-line
- Position retrieval cask on the retrieval manifold and connect the cuttings collector
- Drill to within 4 in. of the top of the canister (Figure 10.14.4)
- Reconfigure the drill system so that it can perform the overcoring operation (add filters for cuttings collection system, and attach overcoring bit to the drill)
- Advance overcoring bit until it reaches a depth just beyond the bottom of the waste canister
- Halt penetration of overcore bit but continue rotation
- Advance sleeve portion of overcore barrel to undercut the canister (Figure 10.14.5)
- Retract the sleeve into the barrel and hoist the core barrel.

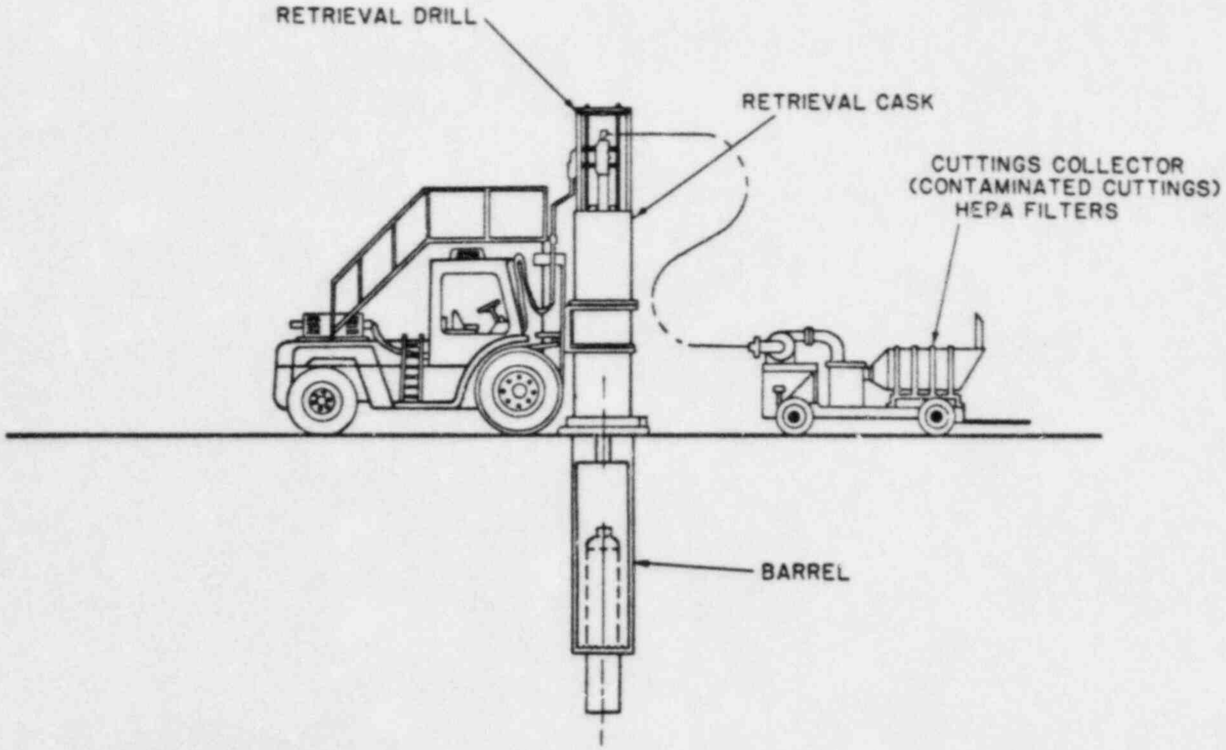

Figure 10.14.3 Retrieval machine during overcoring
(SAND 79-1239)

Table 10.14.4 Retrieval Conditions and Operations

(A) CANISTER, HOLE, WASTE PACKAGE

1) CANISTER: O.D. = 14 in.
L. = 15 ft 1 in.
NON-SELF-SHIELDING
CARBON STEEL

2) WASTE TYPE UNKNOWN[1]

3) HOLE: D. = 18 in.
L. = 23 ft

COUNTERBORE D. = 24 in.
L. = 2 ft

SHIELDED PLUG AND HOLE COVER ARE TEMPORARY

SALT BACKFILL IN HOLE ANNULUS

HOLES ARE VERTICAL, WITH ONE CANISTER PER HOLE

(B) PLACEMENT UNIT

HORIZONTAL, LONGITUDINAL TRANSPORTER

RUBBER-TIRED VEHICLE

(C) EMPLACEMENT ENVIRONMENT

1) ROOM DIMENSIONS: WIDTH - 17½ ft
HEIGHT - 19 ft

2) TWO ROWS OF CANISTERS IN EACH ROOM, EACH 6 FT FROM RIB

ROWS ARE 5½ FT APART, CANISTERS WITHIN ROWS ARE 4 FT APART

3) THERMAL LOADING IS 120 KW/ACRE

4) ROOM CLOSURE WILL COMMENCE IMMEDIATELY AFTER MINING, AND WILL ACCELERATE AS SOON AS CANISTERS ARE EMPLACED DUE TO THERMAL STRESSES[3]

5) ROOF INSTABILITY IS MORE LIKELY IF CLAY SEAMS OR OTHER NON-SALT LAYERS ARE PRESENT IN THE ROOF

(D) RETRIEVAL ENVIRONMENT

1) BACKFILLED: BACKFILL MAY BE EITHER RECONSTITUTED DUE TO CREEP OR LOOSE[4]

2) BULKHEADS MAY BE CRUSHED OUT

3) HOT - A THERMAL LOADING OF 120 KW/ACRE WOULD MEAN 30 YEAR TEMPERATURES GREATER THAN 300° F

4) POSSIBILITY OF ENCOUNTERING HOT BRINE/STEAM POCKETS DURING REMINING

5) POSSIBLE ROOF STABILITY PROBLEMS

(E) REMINING

1) SINGLE PASS MINING

2) MINING WITH A ROADHEAD[illegible], MODIFIED FOR HIGH TEMPERATURE CONDITIONS

3) PRE-COOLING PERIOD MAY BE NECESSARY AFTER SECOND MINING BEFORE RETRIEVAL[5]

4) VENTILATION WILL BE A PROBLEM, AND THE MACHINE OPERATOR WILL NEED AN ISOLATED FRESH-AIR SUPPLY IN ANY CASE

5) MONITORING BEGINS IMMEDIATELY ON BREACHING BULKHEAD

(F) RETRIEVAL SEQUENCE[6]

1) RADIATION SURVEY

2) DECONTAMINATION AND CLEAN-UP

3) IDENTIFY CANISTER
LOCATE CANISTER PRECISELY
DETERMINE CANISTER ORIENTATION

4) INSTALL RETRIEVAL MANIFOLD ABOVE CANISTER

5) POSITION RETRIEVAL CASK ON RETRIEVAL MANIFOLD AND CONNECT CUTTINGS COLLECTOR

6) DRILL TO WITHIN 4 IN. OF CANISTER WITH A FULL-FACE BIT

7) OVERCORE CANISTER

8) UNDERCUT CANISTER

9) RETRACT SLEEVE CONTAINING CANISTER AND OVER CORED SALT

(G) NOTES TO TABLE

1) COULD BE BWR, PWR OR REPROCESSED WASTE

2) ROOM HEIGHT SHOULD BE GREAT ENOUGH TO ALLOW FOR EQUIPMENT HEADROOM EVEN WITH ROOM CLOSURE

3) CREEP CLOSURES MAY BE A PROBLEM AT SEVERAL STAGES DURING REPOSITORY OPERATION. IT MAY BE NECESSARY TO MAINTAIN THE MAIN ENTRIES IN SPITE OF SUBSTANTIAL CREEP CLOSURES DURING THE RETRIEVAL PERIOD, FOR EXAMPLE

4) ARE THERE ANY SPECIAL PROBLEMS WITH MINING UNRECONSTITUTED SALT? FOR EXAMPLE, MIXED FACE CONDITIONS?

5) A THIRD MINING MAY BE NECESSARY IF SUBSTANTIAL CREEP CLOSURES ARE ENCOUNTERED DURING THE PRE-COOLING PERIOD. A SYSTEM WITH SIMULTANEOUS SECOND MINING AND RETRIEVAL WOULD GREATLY REDUCE THE AMOUNT OF TIME ROOMS WOULD BE REQUIRED TO BE HELD OPEN.

6) RETRIEVAL SEQUENCE IS TAKEN FROM SANDIA REPORT 79-1239, "RETRIEVAL OF CANISTERED EXPERIMENTAL WASTE AT THE WASTE ISOLATION PILOT PLANT".

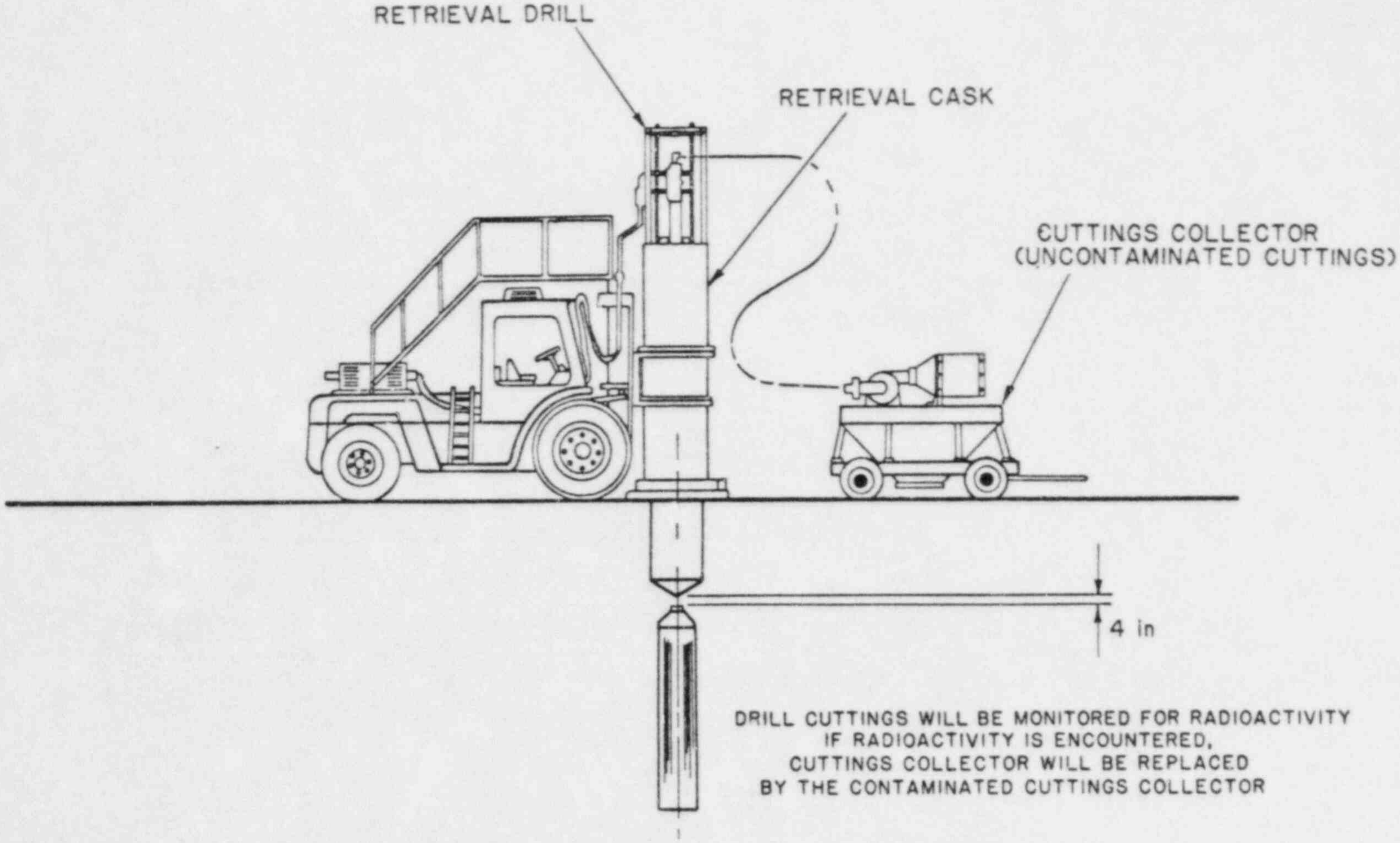

DRILL CUTTINGS WILL BE MONITORED FOR RADIOACTIVITY
IF RADIOACTIVITY IS ENCOUNTERED,
CUTTINGS COLLECTOR WILL BE REPLACED
BY THE CONTAMINATED CUTTINGS COLLECTOR

Figure 10.14.4 Overcoring apparatus blind drilling above canister. (SAND 79-1239)

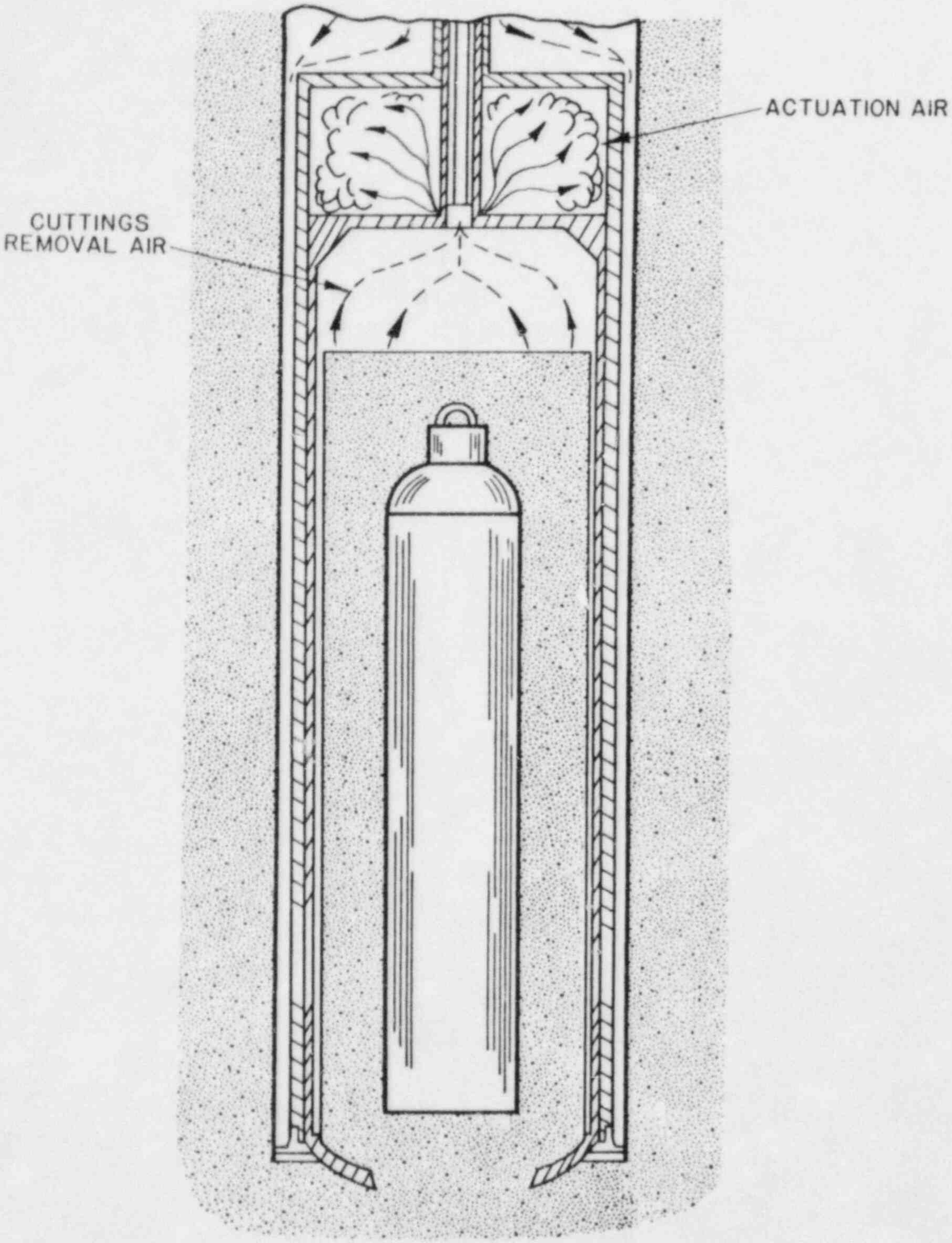

Figure 10.14.5 Overcoring barrel and canister immediately before completion of overcoring procedure. (SAND 79-1239)

10.14.2 Retrievability Impacts on Repository Systems

10.14.2.1 Excavation Systems

Retrieval of stored waste from backfilled rooms will require remining. Remining will be complicated by:

- Temperature of salt rock and backfill
- Large room closures due to salt creep
- Floor movement changing positions and orientations of canisters.

Several different excavation techniques could be used in remining, including:

- Auger
- Full-face advance
- Pilot-drift and second-pass
- Drill-and-blast.

The choice of remining technique will be determined by the conditions that exist at the time of retrieval.

Augering may be appropriate if no overmining of virgin salt is necessary and the backfill is still in a loose state. Augers have the advantage of being a proven remote mining technique, but some shortcomings exist. Hole alignment is not perfectly accurate, and the augers might cut into the roof support if support, is present. Also, even closely spaced circular holes leave cusps and peaks which would require extensive cleanup before retrieval operations could commence.

A single-pass, full-face remining method using a roadheader is planned in the CDR (78-56-R). The roadheader in the CDR excavates backfill and virgin salt for a remined room height of 21 ft. The major advantage of a single-pass system is that the time required for remining is reduced to a minimum, which minimizes salt creep. Moreover, the large airflow quantities required for cooling the room can be more easily handled because of the larger entry dimensions (78-56-R). A disadvantage of the single-pass method is the greater probability of cutting into a canister whose position has shifted. A two-pass system would be more flexible, and canisters could be located accurately from the pilot drift before the mining of the second lift. In addition, the same equipment used in repository development could be used for remining if adapted for the high temperature conditions. A major drawback to the two-pass method would be the greater total time required for remining.

Drilling and blasting would be a very flexible mining system. The remined room could be excavated to almost any dimensions as dictated by concerns about salt creep or shifted canisters. Drilling and blasting would not be feasible if the high temperature conditions rule out the use of conventional explosives.

10.14.2.2 Equipment Systems

Retrievability impacts on equipment systems can best be identified with the aid of a flow chart shown in Figure 10.14.6. Each basic repository operation is given an identification number to facilitate following one event's impact on all systems. After the completion of mining development, the only active operations are those envolved with canisters. The impact on repository operations is dependent upon the level of retrievability, either local or full.

If local retrieval of canisters becomes necessary, then it must take place concurrently with storage operations. Backfill removal operations can divert the material to rooms being backfilled if the material is reusable. If breached canisters are present, then decontamination of backfill with associated equipment will be necessary. Unless new equipment is obtained for the task, that used for storage will be utilized thus slowing the normal canister storage rate. Transporting these canisters to the surface will require (Figure 10.14.6) use of the crane (3), hoist (4), and surface handling facilities (5). These systems will be unable to perform their normal operations for handling canisters, thus delaying repository activities. Any necessary decontamination would slow retrieval operations.

Full retrieval, if planned, would be the reverse of emplacement. All repository operations would be a part of the retrieval and bottlenecks from concurrent different operations would be avoided. Facility operations 1 through 5 (Figure 10.14.6) would operate as for waste emplacement, carrying canisters to the surface. Backfill material (if not contaminated) could be placed in emptied storage rooms rather than brought to the surface.

Areas of concern in equipment systems are heat effects on hoses, cutting bits, fittings, and tires. The following limitations and equipment availability demonstrate the thermal effects on equipment:

- Carbide bits can withstand rock temperatures of 300°F
- The roadheader for remining will likely need a transmission oil cooler to cope with higher ambient temperatures
- Hydraulic hoses with elastometer tube, single wire brais reinforced and thermal covers are available and can withstand temperatures of 300°F

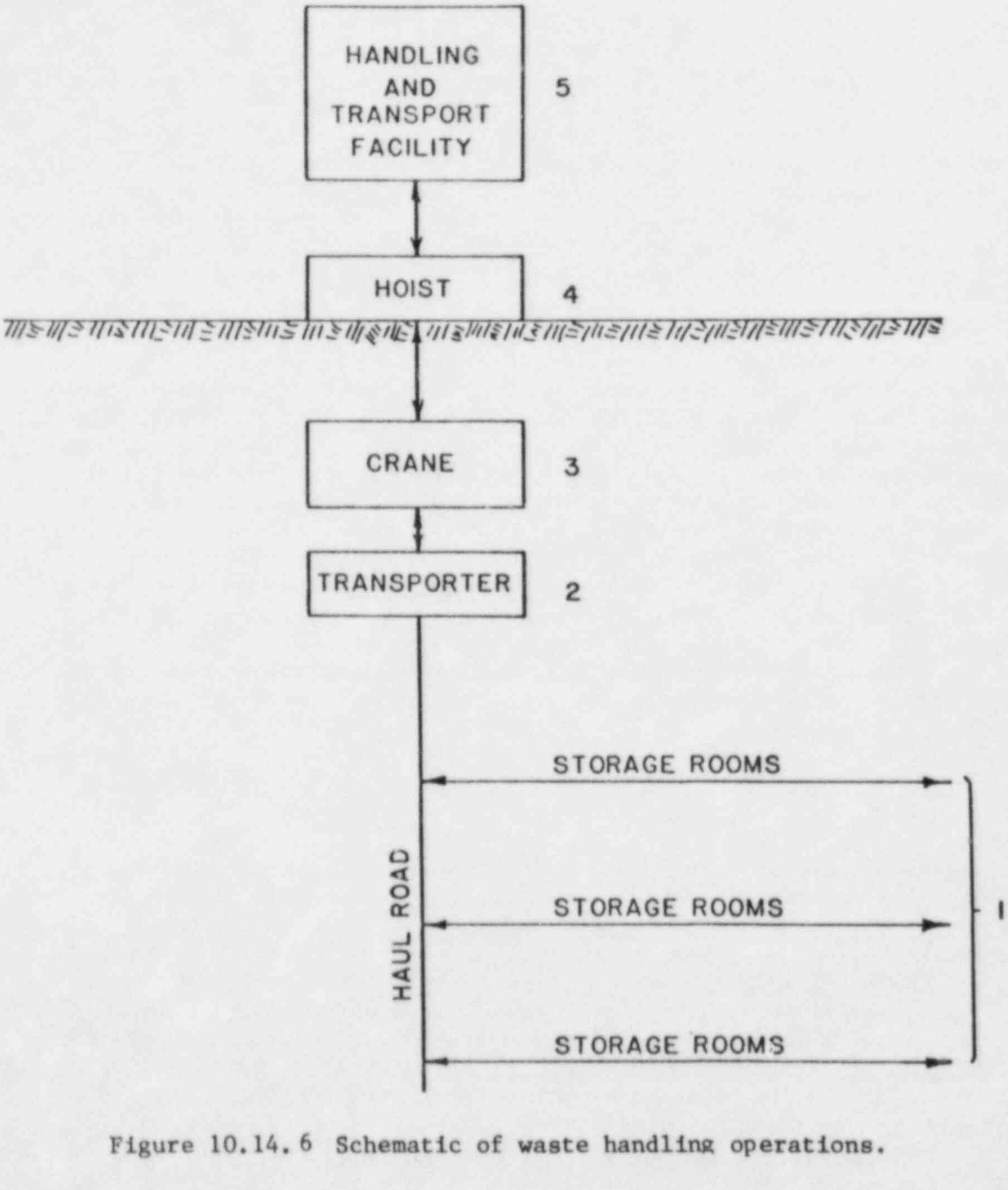

Figure 10.14.6 Schematic of waste handling operations.

- Steel fittings are available with special "O" ring seals good for 300°F to 400°F.

Tire considerations are more complex. The roadheader can be crawler mounted, so tire considerations apply to shuttle cars and roof scalers. The internal air temperature of the tire must be less than 234°F for safe operations regardless of rubber compound or number of plys in tire construction. Internal temperature depends on load, time of travel, grade, speed, ambient temperature, and length of travel. Consequently, use of rubber tired vehicles such as shuttle cars requires detailed study of the application. Shuttle cars will be in the face area for brief periods while loading, but otherwise will travel in well-ventilated drifts. The temperature of the tires may be satisfactory and use of rubber-tired vehicles may be possible.

Remote control haulage systems have been placed in many applications throughout the world in recent years. For haulage, remote control appears to be a feasible alternatice. Remote contorl mining systems may be promising, but the level of technology is low. Particular areasof concern are the directional guidance system, system dependability, operator visibility, and trailing cable handling (Gent, et al., 1975).

Precooling of the backfill has not been suggested in the conceptual design documents. However, a system of boreholes or pre-placed pipes may be used to circulate air or a high-heat-capacity fluid to cool the backfill. Particular care is required to assure the backfill is not dissolved. A precooling system would lessen the need for high temperature equipment.

10.14.2.3 Facilities

If mining development and waste emplacement are concurrent operations, then a decision to begin full retrieval will most likely preclude continued development mining. The modular concept of repository operations keeps the mining and waste handling systems entirely separated to the extent that equipment for each system uses different haulageways and hoisting shafts. However, facilities such as haulageways, loading bins, skips, and other equipment for handling mined rock may be affected by local retrieval, as the mined backfill will need to be transported and stored by these facilities. The characteristics of the remined materials may not be adequate for immediate use as backfill for another storage panel because of lumping or other factors. The area most likely to be affected by local retrieval will be the shaft area where full transfer casks will be handled, hoisted and lowered, and mined rock will be hoisted. Retrieved canisters may be breached, compounding the congestion.

10.14.2.4 Ventilation Requirements

As the rooms will be backfilled once the waste is stored, the airflow requirements of the confinement ventilation system will be minimal. The CDR (78-57-RE) provides for a confinement airflow of 173,000 cfm, of which 100,000 cfm is allowed for precooling prior to maintenance or backfilling.

In the retrieval CDR (78-56-R), retrieval operations begin only after the storage rooms have been remined and precooled. Precooling will be necessary if the retrieval equipment cannot be operated by remote control under the high temperatures present immediately after remining. The airflows required for precooling will depend on the rock temperature and the time allowed for precooling. In the retrieval CDR (78-56-R), precooling of a remined room 28 years after storage was calculated to require 200,000 cfm for 101 days. An airflow of 200,000 cfm is slightly greater than that provided by the confinement circuit. If storage operations have ceased at the time of retrieval, the mine ventilation (development) circuit could provide make-up air. Otherwise, an airflow of 373,000 cfm is required in the confinement circuit. This requires increasing the diameter of the confinement upcast shaft to 13 ft. Filters would have to be installed at the base of the salt hoisting (mine exhaust) shaft if development air were used to precool rooms containing stored waste.

Further studies will be necessary to the determine salt temperatures and the required precooling times and air volumes for retrieval periods greater than 28 years. These studies should take also into account the recompression of the backfill by salt creep. Studies may also need to be initiated for development of a precooling system for the backfill.

If an overcoring method were used for retrieval the release of gaseous radionuclides will not be problem unless the salt around the canister is fractured allowing the radionuclides to escape.

10.14.2.5 Backfill

Three retrieval scenarios are possible, based on the timing of retrieval relative to backfill emplacement. These are:

- Retrieval immediately following backfilling
- Retrieval with backfill partially reconstituted
- Retrieval with backfill totally reconstituted.

10.14.2.5.1 Retrieval Immediately Following Backfilling

In this scenario, the creep closure is assumed to be small. The mechanical properties and temperature of the backfill would be similar to the conditions at emplacement. In this case, the backfill could be removed by augers or some similar technique. Special remining equipment would not be necessary, unless overmining the existing room was desired.

10.14.2.5.2 Retrieval with Backfill Partially Reconstituted

Some creep closure has occurred but the reduction in room size has not reached the 32% for complete reconstitution of the backfill into massive rock salt. Some temperature rise is assumed to have occurred.

In this case, some remining of virgin salt will be necessary to restore the room to the original size. A "mixed face" consisting of a room perimeter of creeped salt and an interior of partially reconstituted unprecooled backfill will exist, but will not present special problems during remining. Also, as the void spaces within the backfill are still interconnected, there should be no problems with pockets of air, steam, or brine at high pressure.

10.14.2.5.3 Retrieval with Backfill Reconstituted

This retrieval scenario assumes that creep has reduced the original room volume by 32%, resulting in a complete or almost complete reconstitution of the backfill into solid salt. By the time reconstitution has occurred, high temperature conditions will prevail. In most respects, remining in this case would be no different from initial mining except for the elevated salt temperature. The special equipment described in Section 10.14.2.7, "Requirements for Special Equipment for High Temperature and Radioactive Environments," will therefore be used unless an adequate precooling system can be developed and implemented. Pockets of air, steam, or brine at high pressure may be encountered during remining.

10.14.2.6 Thermal Effects

The thermal effects associated with nuclear waste disposal in an underground repository have significant impacts on the retrievability of the waste. In the case of salt, three main areas where thermal effects are of most concern are:

- Magnified creep rates
- Brine migration
- Machinery and personnel.

The first two of these three areas are discussed in this section, the third is discussed elsewhere (Section 10.14.2.1, "Excavation Systems" and Section 10.14.2.7 "Requirements for Special Equipment for High Temperature and Radioactive Environments").

10.14.2.6.1 Salt Creep

Closure due to salt creep affects three distinct areas:

- Very-near field - closure of the storage hole around the canisters
- Near field - horizontal and vertical closure of the storage room
- Intermediate field - closure of the main entries.

The thermal load from the nuclear waste will increase the closure rates experienced in each of these areas. The immediate effect of waste emplacement will be the imparting of thermal stresses that can increase creep rates in the emplacement room by as much as 10 times (ORNL 4555). During the decades-long retrieval period the salt throughout the repository will be heated to temperatures on the order of 200°F. Once the salt temperatures reach equilibrium, the importance of thermal stresses will be minimal, but high temperatures will increase steady-state creep rates. The potential effects of creep on different repository and retrieval functions are summarized in Table 10.14.5.

10.14.2.6.1.1 Very-Near-Field Effect

Salt creep around the storage hole is expected to close any open annulus and completely encase the canister in salt by the end of the retrieval period. Therefore, retrieval by an overcoring method (Section 10.14.1.8) is indicated. The canister will be subjected to a radial stress (that may approach the sume of the lithostatic and thermal stresses) requiring canisters designed to withstand radial loads of 2,500 psi or greater.

Another very-near-field thermal effect will be displacement of the canister from floor movement. Floor movements may be very substantial during the retrieval period. An accurate canister locating device will be necessary for retrieval.

10.14.2.6.1.2 Near-Field Effects

Creep closure of the storage rooms will impact retrieval in several important ways. The effect of creep on the backfill in the time period between backfill emplacement and remining is discussed in section 10.14.2.5, "Backfill." After remining, creep of the hot salt around the new opening may have a crucial effect on the retrieval

Table 10.14.5 Effects of Salt Creep on Retrieval

Location	Phenomena	Effects
Very-Near-Field (Storage hole)	1. Closure of storage hole around canister.	1. Retrieval system must be designed to retrieve canisters enlarged in salt.
	2. Displacement of canister due to floor movement.	2. Canisters must be designed to withstand high radial loads.
	3. Brine migration to canister	3. Canisters must be locatable.
		4. Safety precautions against fluid of gas at high pressure, damaged canisters etc. due to brine migration.
Near-Field (Room)	1. Recompaction of backfill.	1. Condition of backfill affects remaining method.
	2. Closure after remining.	2. Large closures after remining may limit time available for retrieval.
		3. Large closures may accelerate slabbing and buckling type failures, making room less safe.
Intermediate-Field (Main entries)	1. Closure of mains and increasing temperatures over life of repository.	1. Necessity for maintenance including remining to keep main entries open.

operation itself. Because of the difficulty in making quantitative predictions about the creep of salt at high temperatures under repository conditions (Section 10.14.1.2.2) discussion of the effects of creep on retrieval must be of a qualitative nature.

In the current retrieval CDR (78-56-R), retrieval will be accomplished in the three-stage process:

- Remining of the backfilled room
- Precooling of the required room
- Retrieval of the canisters.

Kaiser Engineers (78-56-R) estimate that each remined room would have to remain open for approximately one year. The creep closure that would occur during this time would be 45 in. for a thermal loading of 60 KW/acre. Kaiser Engineer's (78-56-R) estimate is based on data from Project Salt Vault; however, the actual creep closure of the hot plastic salt could be greater. The implications of closures of this magnitude are serious, and the success of any roof control techniques in controlling the creep is doubtful (Section 10.14.2.8, "Ground Support"). Accordingly, every effort should be made in design to minimize the time the remined room will have to remain open during retrieval operations. A one-stage retrieval process, where remining and retrieval occurred simulataneously under high temperature conditions would appear to be indicated. A system which precools the backfill would have to be even more extensive the counteract the elevated creep rates in the salt.

Even with a one-stage retrieval process the creep rate of the hot salt may be so great as to preclude retrieval. To assure retrieval, prediction of creep rates at elevated temperatures needs to be far more reliable than at present. This fact once again underlines the need for large-scale, in situ testing of several years duration.

10.14.2.6.1.3 Intermediate-Field Effects

During the active life of the repository, including the mandatory retrieval period, the main entries must be kept open for movement of workers, material, and ventilating air. Serious creep closures will likely occur in the main entries over this time period, particularly if the temperature of the salt around the main entries is increasing throughout. Even if the temperature of the salt in the pillars protecting the main entries does not increase appreciably, creep rates could still increase as the main entries will form an "abutment zone" carrying some of the overburden load of the yielded, high temperature pillars in the waste storage area. An indication of the magnitude of closures that might occur are given by one potash mine at a depth of 3,000 ft, which experienced closures of 5 ft in the main entries over a four-year period at un elevated temperatures (Prugger, 1977). A large-scale main entry maintenance program for the life of the repository would be required to control closures.

10.14.2.6.2 Brine Inclusions

The presence of a thermal gradient through the salt will cause brine inclusions to migrate up the temperature gradient towards the waste canisters. Brine migration occurs because the solubility of salt increases with temperature. Migration begins with the solutioning of salt by the included brine on the warmer side of the inclusion and the deposition of salt on the cooler side. The volume of the inclusion remains nearly constant, and movement of the inclusion toward the heat source results.

The brine inclusions observed in laboratory experiments do not cross inter-crystalline boundaries. Migration rates for brine inclusions have been measured and theoretically calculated between 10^{-7} and 10^{-8} (ft/min)/(°F/ft) (ONWI-208). Included brine that reaches a salt-crystal boundary either stops or continues to migrate along the boundary rather than into the adjoining crystal. Once the brine is on the boundary, the transport mechanism is a vapor phase model. The liquid-vapor interface recedes as the liquid is converted into vapor and the vapor is transported along the crystal interface toward the heat source.

At the wall of the storage hole some researchers have found that condensation, evaporation, and resealing of the brine inclusions takes place. The resealed inclusions are part liquid and part vapor and have been observed to flow down the thermal gradient away from the canisters. Some controversy exists as to the significance of this reverse brine migration. Theoretical calculations have indicated that reverse migration rates will be on the order of 10^{-9} and 10^{-7} (ft/min) (°F/ft), but other workers feel that actual reverse migration rates will be even lower (ONWI 208).

The rate and quantity of inflow to a borehole containing a canister will be a function of the thermal load, the temperature and thermal properties of the salt, the solubility of the salt, the salt purity, the quantity and size of brine inclusions, the rock mass disturbance from installation of the borehole, and the geometry of the borehole. The inflow rate will decrease over the course of the retrieval period as the distance for migration increases and the thermal gradient decreases.

Recently researchers at Sandia Laboratories and elsewhere have measured and calculated inflows for varying thermal loads and borehole geometries (ORNL-5818). The results of this research are computer programs that will be used to model the brine migration. During in situ testing, the rates and quantities of inflow for the actual thermal loading and borehole configuration can be measured and compared with those generated by the computer programs. Proper use of the in situ testing and computer programs will result in estimates of the average inflows for the expected repository conditions.

10.14.2.7 Requirements for Special Equipment for High Temperature and Radioactive Environment

Equipment modifications to combat excessive temperatures has been discussed under Equipment Systems (Section 10.14.1.1). The actual modifications necessary will be determined by the remining technique employed. Shielded equipment and closed-environment systems are necessary for working under radioactive conditions. Both systems appear to be within the reach of available technology.

Mine Safety Appliances, Inc., (MSA) has developed a Gas Tight Total Protection Suit which can protect the wearer against solid or liquid radioactive substances for up to two hours. These suits can also be supplied with an integral cooling air circulation and dehumidifying system. Such suits could be provided in the cabs of the operating equipment for emergency use.

Large capacity cooling systems will be required on equipment used during remining because of the high temperatures that will be encountered. Cooling requirements in the cabs could be reduced if workers were required to wear heat-resistant suits when within the shielded cabs and to change to radionuclide resistant suits when leaving the vehicles. Precooling of the backfill and some of the host rock may be possible but at present the technologies have not been designed, presented, or implementd.

10.14.2.8 Ground Control

The CDR (78-56-R) states resin roof bolts and steel sets will be used to control excessive deformations in the remined rooms. From an analysis of the available literature these ground control techniques do not appear to be very effective in creeping rock salt.

Roof bolting is used in a number of U. S. salt mines (Y/OWI/SUB-77/16523/2; Plumeau and Peterson, 1981), in deep potash mines (Prugger, 1977), and in large storage caverns in domal salt. In domal salt, resin bolts up to 20 ft long are used to control pillar slabbing. In salt mines, roof bolting can be an effective ground control tool where full salt extraction is practiced and the bolts are installed in shale or other deeper elastic roof rock. Even under these circumstances, however, creep of the salt pillars can crush the shale roof despite the presence of bolts (Plumeau and Peterson, 1981).

Where the roof consists primarily of salt, roof bolts are less successful. In one instance, tensioned roof bolts were able to control the buckling of a 2-ft-thick salt layer in the roof (ORNL 4555), but in other cases roof bolting was completely ineffective in controlling roof buckling (Prugger, 1979).

The reasons roof bolts are relatively less effective in salt mine roof than elsewhere is easy to explain. In a discontinuous rock mass consisting of elastic rock blocks, roof bolts act to knit together the loosened zone that is formed around the excavation. In massive evaporite rocks (such as salt or potash), however, local instability is caused by creep. The zone of creep extends far beyond the reach of standard roof bolts, and the driving force behind the creep is the full lithostatic pressure.

In Canadian potash mines, the most effective means of controlling roof problems has been found to be the "Stress Control Method" (Serata, 1976, Prugger, 1979; Baar, 1977) that exploits the stress relief creep of the salt and therefore has a theoretical foundation. In a typical application of the Stress Control Method, two rooms are driven at opposite ends of a panel and the roof in the rooms is allowed to fail by buckling. The horizontal stresses are then forced higher up in the strata above the panel, and the immediate roof in the zone between the first two entries is stress-relieved. Further entries can then be driven in this zone without roof problems (Prugger, 1979). The pillars between the panel entries are also designed to "yield" so that overburden pressures are thrown onto the abutments. The width of the entire panel must be low enough that the overlying strata does not subside, reloading the yield pillars.

While proper application of the Stress Control Method can control roof instability, the method does not control creep. Horizontal pillar expansion and floor heave are still significant problems in main entries driven in stress-relieved ground (Jones and Prugger, 1982).

Where neither roof bolting nor Stress-Relief Methods are fully successful in preventing ground failure, steel arch canopies, such as those sometimes used to rehabilitate high roof falls in coal mines (Chlumecky, 1981), may provide safe conditions for retrieval operations. Steel arch canopies do not support the roof but instead protect workers from falling rock.

The use of some combination of roof bolts, the Stress Control Method, steel arch canopies, and other techniques would probably be successful in controlling local unstable conditions such as roof buckling and pillar slabbing. Safe working conditions during retrieval should therefore be achievable. None of the currently available roof control techniques appears to have been successful in controlling plastic creep of salt. The magnified creep rates of heated salt still present a significant problem for retrievability.

10.14.2.9 Instrumentation

The performance of the repository has to be monitored to ensure the safety criteria are not violated and the isolation capacity is maintained. The retrievability option mandates significant changes in selected parameters or deviations from expected behavior be detected when they occur, and that steps be taken to correct the problem or retrieve the waste to the surface.

Effective monitoring of conditions within backfilled storage rooms will be a difficult task. Remote monitoring techniques, which are less reliable than hands-on techniques, will be required. In addition, the monitoring will take place under high temperature conditions, and little of the presently available instrumentation has been tested at high temperatures (UCRL 15141). Repository conditions requiring monitoring are:

- Hydrogeologic - water inflow
- Thermal - heat buildup
- Mechanical - stress buildup rock deformations, and rock instability
- Radiological - activity levels.

The total volume of water inflow into the repository is expected to be small because of the sealing characteristics of rock salt. Therefore, hydrogeologic monitoring will be important only for measuring brine migration into selected canister holes and for observing the far-field ground water regime. Monitoring from observation wells that do not penetrate the repository horizon will be necessary to assure that mining of the repository does not disrupt the ground water regime theatening the isolation of the repository.

Remote monitoring of the thermal and mechanical conditions of the backfilled storage rooms will be very difficult. Monitoring the open entries adjacent to the storage panels will be possible. The instrumentation program should consist of some remote monitoring of the storage rooms and some hands-on monitoring of accessible entries. Thermal monitoring will primarily consist of thermocouples embedded in boreholes drilled into the salt. Extensometers will measure the magnitude and rate of room closure in the open entries throughout the repository life and in the storage rooms during emplacement and retrieval. The stress distribution within pillars should be measured using liquid inclusion stress measurement techniques that do not require elastic behavior of the rock. The pressures generated within the backfill by room closure should also be measured.

10.14.3 Adequacy of Incorporated Retrieval Systems or Allowances

10.14.3.1 Local Retrieval

Retrieval of individual leaking canisters on a local basis is not practical because monitoring of individual canisters is extremely difficult when rooms are backfilled after waste placement. If a canister is suspected of leaking radiation, the entire storage room will have to be remined before retrieval. Consequently, even local retrieval would be a major undertaking. Unless new equipment is obtained for remining backfill, the equipment used for development will be used, slowing the normal development rate. Retrieval of breached canisters will require "hot cell" or shielded equipment along with decontamination equipment for the storage area. Transporting the canisters to the surface will require use of the crane (3) hoist (4), and surface handling facilities (5) as shown in Figure 10.14.6. These systems will be unable to perform their normal operation while handling breached canisters and a delay in repository storage activities will result. Not only will the routine materials be handled, but contaminated material must be handled, decontaminated, and then handled again for storage. The extra operations will hamper normal repository operations.

Local retrieval will require mining equipment suitable for the backfill conditions existing in the room where retrieval is occurring. Remote control equipment, which is not yet well developed, may be required. The present remote control equipment which may be incorporated is inadequate for retrieval at high temperatures. Locating the canister to be retrieved will require development of a device capable of defining location and orientation. This device has not been developed and present locating systems are inadequate. An overcoring device is under development and will be incorporated to retrieve breached canisters.

10.14.3.2 Full Retrieval

Full retrieval of canisters can be planned systematically for the entire repository, starting with the oldest storage rooms. If many canister are breached, contamination will make the retrieval operation more complex requiring special equipment to be used for the duration of the operation. A routine overcoring procedure may prove to be an acceptable means of dealing with breached canisters. A repository committed to only one operation (for example, mining, canister storage, or retrieval only) can be operated more efficiently than a repository where local retrieval is concurrent with mining.

The equipment requirements for remining unprecooled backfill at high temperatures by remote control cannot be fulfilled. Current technology in this area is inadequate. Possible large variations in the quality of the backfill requires development of remining equipment capable of excavating materials with differing properties. The problems of locating canisters is an areas required further development to make equipment adequate for full retrieval. The roof support requirements during retrieval are inadequately defined but with planned in situ testing the roof support system can be designed to facilitate retrieval. The use of backfill precooling systems, though not proposed in the designs considered may lessen the need for remote-control or high temperature equipment.

10.14.4 Concerns

10.14.4.1 Technological Concerns

The primary technological concern is equipment development. Excavation systems must be considered for a wide range of mining conditions, from loose crushed salt backfill to completely reconstituted massive salt. The possibility that breached canisters may be encountered must be taken into consideration.

Remote control systems are not well developed as yet, but, if feasible, could become an integral part of retrieval operations. Guidance systems and dependability are the main shortcomings with existing remote control systems. Precooling systems are as yet undefined but if feasible could lessen the need for remote-control and high temperature equipment.

Technology may not be currently available for a canister location method that could detect a canister and define its orientation behind several feet of solid salt. An effective canister overcoring system also does not currently exist, but could probably be developed over a relatively short period.

10.14.4.2 Safety Concerns

Federal Metal and Nonmetal Mine Safety and Health Regulations (30CFR55, 56, and 57) cover all aspects of underground mine safety. Conformance to these regulations is more critical while handling waste because of contamination possibilities that could result from an accident.

Salt creep alone does not present a safety hazard, although large deformations may pose operational difficulties. Local instability of the roof and sidewalls caused by creep is, however, a major safety concern. To anticipate the structural behavior of the heated salt that will be present at the time of retrieval is very difficult. Slabbing from pillars and roof buckling, especially where layers of clay or other impurities are present, may be a common condition. Current mining experience indicates rock bolting may not be entirely effective in preventing such local failures. Other techniques, such as the Stress Control Method or the use of steel arch canopies, may be necessary to provide safe working conditions.

One concern during local retrieval operations is traffic congestion. Transporters will be traveling to and from storage rooms, carrying either retrieved canisters or those needing to be stored. Two different operations will be occurring simultaneously causing safety hazards at haulageway intersections. The hazard is compounded because the retrieved canisters may be leaking radionuclides, creating a greater hazard in the event of a collision.

Brine migration to the waste canister during the retrieval period presents several safety hazards. The salt backfill in the overcore above the canister in the initial loose state will provide a vent path for brine vapor into the backfilled room. The brine vapor may collect and form brine pockets which, with time, could become pressurized due to closure and temperature. During remining, such a brine pocket would represent a safety hazard to both men and machinery.

After a period of time, the salt backfill above the canister and in the room will become reconstituted and seal off the canisters. The temperature gradient will continue to cause brine migration to the hole and the brine will accumulate at the canister forming a pressurized pocket. The retrieval procedure should provide for determining if a brine or vapor pocket is present at the canister, and for dealing with the fluid when the attempt to retrieve is made. Overcoring of the canister will increase the potential for avoiding the brine and steam but does not eliminate the possibility for a release.

10.14.4.3 Radionuclide Release Concerns

One of the possible reasons for retrieval is failure of the waste package, with consequent release of radionuclides. Gaseous and volatile radionuclides may be released into the emplacement hole while soluble radionuclides may be carried away by any water that is present in the emplacement hole. Removal by aqueous solution, requires the presence of water in liquid form; that is, its temperature must be less than the boiling point for the repository pressure conditions.

10.14.4.3.1 Releases into Air

The gaseous and volatile isotopes which could be released by a breached canister are hydrogen-3 (tritium), carbon-14, and krypton-

85. The quantity of krypton-85 is large compared with that of either tritium or carbon-14. In addition, the carbon must be in a form that leads to volatile species upon reaction with water in order to be of concern. It is assumed that one-tenth of the krypton-85 is sufficiently near an exposed surface to be able to leave the fuel. If a breach occurs, the concentration of krypton-85 and tritium in air must not exceed 10 nCi/liter and 5 nCi/liter, respectively, in order to satisfy 10CFR20. (The MPC limits are defined in metric units. The equivalent limits in customary units, for reference, are 0.35 nCi/ft^3 and 0.18 nCi/ft^3, respectively.)

If storage hole plugs are gas-tight, release of gaseous radionuclides from a breached waste package will occur at retrieval, if the salt below the canister in the overcore barrel is fractured. Otherwise, the radionuclides will leak through the plug into the backfill pore spaces. Radionuclides contained in the pore spaces would be liberated as the backfill were removed. Since the quantities of air provided for remining are limited to what can be supplied in a duct, the airflow into which the gases would be release would likely be less than 50,000 cfm, and so dilution of the radionuclides to the maximum permissible concentrations (MPCs) given in 10CFR20 could require up to several hours. During this time, personnel should not be present.

Release occurring at retrieval can be avoided by having radiation sensors in the holes. The gaseous radionuclides could then be drawn off prior to retrieval using millipore filters or a cryogenic absorption system, both of which fall within existing technology. Where the radionuclides are in the backfill, warning of their locations cannot be provided. Therefore, as a precaution remining should be by remote-control (or semi-remote control if sufficient shielding for the operator can be provided within view of the face).

10.14.4.3.2 Releases into Water

With regard to the movement of radionuclides by aqueous transport, this, as previously mentioned, requires that water be in the liquid state. Since salt is impervious to water, the mechanism for water transport would be migration of a two phase brine migrated into the backfill then it would be released upon remining when are reduced to atmospheric and the water vaporizes.

If water contacted a breached canister, the rate of dissolution would vary widely with the water composition and temperature. For a typical rate of 0.0000264 lb/day, the solution water would contain about 0.25 mCi/lb of water and one pound of this solution would generate about 0.1 mR/hr at 4 ft. Pore spaces in the backfill would also contain small amounts of gaseous radionuclides which would be liberated upon mining.

Hence water intrusion would provide a good index to failures but would provide a good index to failures but would not by itself introduce significant radiation hazards to the operations (Post, 1982).

10.14.4.3.3 Radiation Detection Standards

The radiation levels measured during retrieval operations are not exceptional so that the system standards used in the nuclear industry would prevail. Lower limits 0.1 mR/hr and upper limits of a few kR/hr and in the storage holes will be required. This system should be capable of detecting krypton-85 levels below 100 pCi/liter (2.6 pCi/ft^3)

10.14.4.4 Operational Concerns

The major potential cause of operations difficulties is salt creep. Creep could affect remining, canister retrieval, and repository maintenance during the retrieval period. At the time of remining, the salt will probably be at an elevated temperature and subject to high creep rates even with backfill precooling. Creep could occur during the time necessary for remining a single room. Overmining or even some third mining may be required. Because of the potential for severe floor heave, difficulties could arise in withdrawing excavation equipment from a creeped room.

Canister retrieval will also be affected by creep. During the time the canisters are stored, the original volume of the room may be reduced by as much as 32%. The greater part of this volume reduction likely will be due to floor heave, and as the canisters are stored in the floor, their locations will shift. The orientation of the canisters may also be moved from plumb, and creep will most likely have wedged the canisters in the hole. To avoid operational problems caused by canister shifts, the canister retrieval system should be designed to locate and overcore canisters in many different orientations.

Severe floor heave could also impede retrieval operations by interfering with the position of the retrieval equipment. Floor buckling could make equipment positioning even more difficult. Finally, clearance problems could develop if the room closure is greater than allowed for in remining.

The necessity for maintenance of the main entries during the retrieval period is an operational concern that has not been addressed in any of the CDR's. The main entries must be kept open for the passage of both equipment and of sufficient quantities of ventilating air for development, storage, and retrieval operations. Large creep deformations are to be expected due to the long time the main entries must be kept open (upwards of 80 years), the potential for heating of the pillars in the main entries, and the transfer of cover load from the yielded, heated pillars in the waste storage area to the main entries. An effective maintenance program might require the full-time assignment of at least one continuous mining machine to wall, roof, and floor trimming. Creep in the main entries could be minimized by isolating them from the waste storage areas with very large barrier pillars.

Normal repository operations are potentially hazardous because of the nature of the material being handled. As a result, many tests and checks are incorporated into the waste handling process. Operation bottlenecks or slow-downs that adversely affect the repository's storage rate may also occur if leaking canisters are found before being stored.

Retrieving in the same time period as emplacement may be difficult because of the complex operation and the different equipment involved.

10.14.4.5 Other Concerns

The ultimate goal of in situ testing, and the preceding laboratory testing of salt material properties, is to aid in the development of design values for the temperature distribution and creep rates expected over the life of the repository. Experience has already indicated that temperature distributions can be successfully predicted from laboratory and in situ data. Prediction of creep is a far more difficult problem. The in situ tests conducted at Project Salt Vault and planned (1983) for the WIPP project involve the partial heating of a single pillar over a relatively short period of time. In these tests, the effects of thermal stress and changes in pillar load due to pillar yielding and thermal expansion must be separated from the inherent effects of increased temperature on salt behavior. The separation of the two effects is difficult. In order to obtain valid testing results, future in situ heated pillar tests should be performed on a larger scale and for a longer duration.

At the elevated temperatures expected in the repository, the brine entering the canister-borehole wall annulus will, depending on composition, become vapor. Based on the inflows occurring during in situ testing, the effects of the quality and quantity of brine and brine vapor in the annulus upon the corrosion rate of the canister materials should be assessed. The canister materials should be tested with the range of brines that may be encountered in the repository.

10.14.5 Summary and Conclusions

Bedded salt is the geologic medium for the conceptual design repository. The bedded salt deposit is assumed to be in the Permian Basin at a depth of 2,000 ft. No specific repository site has yet been chosen (1983). The repository consists of 126 waste storage rooms; each 4,000-ft-long joined by crosscuts on 1,000-ft-centers, two ventilation rooms, the main entries, and the shaft pillar. The design peak thermal loading is 60 kW/acre. Backfilling of the storage rooms occurs immediately after waste emplacement.

The retrievability requirement has the following effects on the repository systems:

- Re-excavation system - Re-excavation equipment will have to be adopted for high temperature operating conditions. A single-pass mining method using a modified roadheader is called for in the CDR

- Equipment systems - Haulage and excavation systems during remining will need to be remote controlled due to elevated temperature. Specialized equipment including carbide bits, oil coolers, hydraulic hoses, and steel fittings will be required to cope with the elevated temperatures. Equipment working at the face or retrieving waste will need to be crawler-mounted because rubber tires will rapidly deteriorated

- Facilities - Local retrieval may impose adverse loads on the transportation, confinement ventilation, and development mining systems

- Ventilation - Precooling for retrieval will require an airflow of 200,000 cfm for 101 days. This will necessitate increasing the capacity of the confinement ventilation system to 373,000 cfm and increasing the diameter of the confinement upcast shaft to 13 ft, unless development has been completed or full retrieval is to take place so that the mine ventilation circuit could be used. Ventilation requirements for retrieval may be lessen if alternative methods of precooling the backfill are developed

- Backfill - Creep closure of the storage rooms will gradually reconstitute the backfill into massive salt. At the time of retrieval the backfill may be either loose, partially reconstituted, unprecooled or completely reconstituted. Completely reconstituted backfill would present the most difficult mining conditions, because of the high temperatures and the possibility of encountering air, steam, or brine pockets under high pressure

- Thermal effects - The most important effect will be the greatly magnified creep rates of the salt. Large creep deformations can adversely affect retrievability and repository operation in three areas:
  - In the vicinity of the storage holes, where closure of the storage holes around the canisters and movement of the canisters will occur
  - In the storage rooms, where creep may cause recompaction of the backfill prior to retrieval, and large closures of the remined rooms during the retrieval operations
  - In the main entries, where excessive creep may necessitate major maintenance, including remining, to keep entries open during the active life of the repository
  - Brine migration to the stored canisters is another possible thermal effect. Brine may accelerate canister corrosion, and may also form pressurized pockets in the backfill in the room or near the canisters
- Ground control - roof buckling and pillar slabbing may cause safety problems in the remined rooms, requiring ground control. Rock bolts, steel arch canopies, or the application of Stress Control Methods developed specifically for evaporite rocks may be able to control local instability. No evidence exists that deep-seated salt creep can be controlled by any presently available ground support technique
- Instrumentation - monitoring of the backfilled rooms will be difficult because the remote instrumentation that is currently available has not been proven reliable, especially for long-term, high-temperature applications.

The concern for the repository concept are summarized as follows:

- Technological Concerns:
  - Development of equipment for remining and retrieval at elevated temperatures
  - Capability of retrieval systems to deal with steam or brine pockets
  - Development of an accurate canister-locating device

  - Development of a canister overcoring system capable of retrieving canisters whose location and orientation has shifted
  - Development and implementation of a precooling system that does not limit isolation or lead to untimely retrieval

- Safety Concerns:
  - Slabbing of salt blocks from the roof and sidewalls, possibly necessitating the use of rock bolts or steel arch canopies
  - Traffic congestion and the possibility of a collision resulting in radionuclide release
  - Steam or brine pockets that may be encountered in the unprecooled backfill during remining or near the canisters during overcoring
  - The possibility of mining into a canister whose positions shifted before retrieval

- Radionuclide Release Concerns:
  - Canister breaches would result in release of gaseous hydrogen-3 (tritium), and krypton-85, and volatile carbon-14, of which the krypton-85 would have the largest concentration
  - Diluting krypton-85 to the MPC given by 10CFR20 could take up to several hours for release from a single breached waste package
  - The mechanism for release of gaseous radionuclides from the storage hole to the atmosphere could be non-gas-tight hole plugs, fractured salt in the overcore barrel and transport by migrating brine
  - A system is required for detection of krypton-85 in ventilating air and in storage holes

- Operational Concerns:
  - The possibility of large creep deformations occurring in the remined rooms before retrieval can be completed resulting in excessive overmining or third mining
  - Shifted locations of canisters

  - Difficulties in maneuvering and positioning retrieval equipment due to floor heave and buckling
  - Difficulties in maintaining the main entries in a passable condition for the 80-year-life of the repository

- Other Concerns:
  - Geologic and hydrogeologic uncertainties
  - Prediction of creep behavior of salt on a repository scale at elevated temperatures
  - Effect of brine migration on canister corrosion.

In conclusion, compliance with the retrieval requirement apparently cannot be guaranteed at present for a waste repository in bedded salt. Large uncertainties exist about the structural behavior of heated salt, and high creep rates and local instability possibly could severely hinder retrieval operations. DOE has not suggested precooling of backfill. Remining and possibly retrieval would have to take place under high-temperature conditions, and the technology required to perform these tasks has not been developed. The possible effects of brine migration on canister corrosion and on remining and retrieval are also not fully understood. Monitoring for breached or damaged canisters and local retrieval of individual canisters from a backfilled room would be extremely difficult. A large-scale testing program, including long-duration in situ heated pillar tests, will be necessary before retrieval can be assured.

10.15 Salt Repository With Vertical Hole Storage, Continuously Ventilated Rooms, and Backfilling as Late as Practicable

10.15.1 Basic Information

Bedded salt is the host geologic medium for the fifteenth repository concept. Waste packages will be placed in 20-in.-diameter vertical holes drilled in the storage room floors. The storage rooms will be left open and ventilated after waste emplacement. Backfilling will take place either at permanent closure or earlier if excessive creep occurs in the storage rooms. Early backfilling would be required if creep were making the rooms inaccessible for retrieval equipment or threatening the structural integrity of the repository horizon. The assumed depth of the conceptual design repository is 2,000 ft. This concept is similar to the one in the Conceptual Design Report (CDR) for bedded salt (78-57-RE) except that in the conceptual design there is a five-year retrievability period during which no backfilling takes place. Thereafter, in the CDR, rooms are backfilled upon completion of waste storage.

The emplaced waste canisters each emit 0.58 kW of heat, resulting in a thermal load within storage panels of 65 kW/acre, or 60 kW/acre for the storage area including main entries.

10.15.1.1 Geologic Environment

10.15.1.1.1 Rock Units

The assumed reference repository emplacement horizons are the bedded salt rock of the Permian Basin. Other areas being studied are the Paradox Basin and the Gulf interior salt domes.

In the Permian Basin, the Palo Duro subbasin in the panhandle of Texas is a possible candidate for a geologic repository. The salt beds of major interest are the Lower San Andres Formation Cycles 4 and 5 at depths of 2,100 ft to 2,600 ft. The major water-bearing unit above the repository is the near-surface Ogallala Sandstone. The Lower San Andres Formation is overlain by a depositional sequence of siltstones, sandstones, salt, and anhydrite units.

The Lower San Andres Formation Salt Cycle 5 has an upper portion approximately 112 ft in thickness which is the target repository horizon. The upper portion of Salt Cycle 5 is relatively homogeneous with a consistent thickness of 100 to 110 ft. Cycle 5 contains anhydrite interbeds of consistent thickness and location. Shale interbeds of varying thickness and location also occur in Salt Cycle 5.

Salt Cycle 4 of the Lower San Andres Formation is approximately 160 ft thick, and is overlain by shale and underlain by anhydrite. No major anhydrite beds interrupt Salt Cycle 4. Minor anhydrite beds and shale, siltstone and claystones are present. In comparison to Salt Cycle 5, Cycle 4 is thick and homogeneous. Selection of a repository horizon will depend on further information from holes associated with the exploratory shaft.

In the Paradox Basin, the Gibson Dome area of southeast Utah is a possible candidate site for a geologic repository. In the Gibson Dome area, Salt Cycle 6 of the Paradox Formation is a candidate repository horizon. The Paradox Formation is approximately 2,800 ft thick and contains approximately 68 % salt. Other interbeds in the formation are anhydrite, dolomite, limestone, siltstone and shale. Below the Paradox Formation is a transectional formation, the Pinkerton Trail Formation, consisting of interbedded limestone, dolomite, anhydrite, siltstone and shale. Below the Pinkerton Trail is the Molos Formation which completes the transformation to the Leadville Limestone. The strata overlying the Paradox Formation contain sandstones, siltstones, limestones and dolomites. In general the overlying formations are aquifers with low permeability aquitards included.

Salt Cycle 6 ranges in thickness from 70 ft to 290 ft. The salt is dark reddish brown to grey brown and is finely crystalline. Thin undulatory anhydrite bands occur at intervals of 7 to 23 in. and range in thickness from about 0.1 in. near the top of the cycle to 6 in. near the lower part of the cycle. The bands are composed of anhydrite sand in a halite matrix. Associated with and immediately below the anhydrite bands, is a zone of dissolution pits where potash salts have been deposited and then dissolved. The basis for the stratigraphy of Gibson Dome is based in general on a single boring, GD-1. Additional geologic information is required for in situ testing planning. The dominant structure of the Gibson Dome area is a gently folded dome within a general homocline. The Lockhart basin, a collapse feature near the northern end of the area, has been affected by dissolution of salt and possibly limestone collapse, breccia pipe formation, and folding and faulting.

Two salt domes are under consideration as possible repository sites. These are Vacherie Dome in Louisiana and Richton Dome in Mississippi. Both domes are parts of Interior Salt Basins found within the Gulf Interior Region, approximately 100 to 200 miles inland from the Gulf of Mexico.

The general stratigraphy of these domes includes thick salt beds (Louann Formation) that were laid down in early Jurassic time. Overlying the salt are combinations of marl, chalk shale, sandstone, and carbonates that have accumulated to thicknesses of thousands of feet and are considered to represent 15 depositional stages. They include numerous formations that will not be detailed here.

The diapiric rise of the salt is thought to have been caused by loading from accumulating sediments during late Jurassic time. In the Gulf Interior Salt Basin, this diapirism seems to have stopped during Middle Tertiary time after sediment loading decreased. The resulting domes developed as elongate, narrow structures that can extend to within several hundred feet of the surface.

Original bedding is complexly folded during doming, and salt domes typically contain vertically-oriented bands of halite and anhydrite. During the upward movement of a dome, salt and anhydrite are recrystallized and tend to leave other sedimentary inclusions behind. This process results in a natural segregation of sediments and evaporites, and so domes contain much purer salt (approximately 90%) than is found in bedded deposits (Barr, 1977). Importantly, a vertically oriented single "dome" may have developed as several intergrown "spikes" that have risen past each other to leave sheared zones included within the salt stock. These "anomalous zones" tend to be tabular features of brecciated halite and anhydrite of sediments carried upward with the salt. They can be several tens of feet thick, or thousands of feet long, and may extend to the sheath of sheared material at the outer edge of the dome (Kupfer, 1980).

A caprock of variable thickness (hundreds of feet) typically covers each dome. Caprock typically is comprised of various thicknesses of gypsum, anhydrite, and carbonates, but gypsum and carbonates may be absent in some domes. Brecciation and solution cavities are common features in the caprock.

The sediments overlying salt domes may be pierced or folded by the rising salt stocks, or, alternatively, the area over the dome may be a zone of erosion or non-deposition due to topographic rising. Consolidated sediments pierced by the domes are sheared during salt movements, and the outer region of each dome containes a large amount of lithic fragments. Sediments overlying the top of the dome often exhibit faulting and thickening or thinning due to the rise of the dome.

Vacherie Dome is in the northwest corner of Louisiana. It is a fairly large, elliptical body with a length and width of approximately 6 miles and 2 miles respectively (as measured at a depth of 10,000 ft). Based on geophysical investigations, the flanks of the dome are believed to dip approximately 30° from vertical to an elevation of about 10,000 ft below sea level. Below that elevation, the flanks are believed to be vertical (ONWI-119).

Exploratory boreholes have encountered the top of caprock at depths of 540 ft to 1,500 ft. Caprock thickness was found to vary between 80 ft and 270 ft in these boreholes. Three distinct caprock layers comprised of anhydrite, gypsum, and carbonate were found in a 5,030 ft deep core deep core hole, DOE No. 1 Smith (ONWI-119).

Descriptions of the salt petrology as found in DOE No. 1 Smith indicate that the Vacherie Dome is comprised of approximately 90% halite and 10% anhydrite. The halite is found in 0.25 to 1.0 in. crystals that typically coarsen near the caprock. It has numerous fluid inclusions at grain boundaries. Anhydrite and halite are interlayered in vertically oriented, thin bands that have been complexly folded. No internal sheared zones (anomalous zones) were identified in Vacherie Dome (ONWI-119).

Richton Dome, in southeastern Mississippi, is part of a Northwest trending salt ridge in the Mississippi Salt Basin. The dome forms an elliptical body approximately 9-miles long and 1.8-miles wide as measured at elevation - 1829 (MSL). Overhangs are present in the long dimension and give the dome a mushroomed shape as viewed southwest to northwest (ONWI-120).

Caprock has been encountered at depths of 500 to 880 ft in numerous exploratory boreholes. These borings also indicate that the caprock varies in thickness between 20 ft and 213 ft, and is thicker near the dome's center. A top caprock layer comprised of limestone and a lower anhydrite layer with gypsum-filled veins and vugs was found in a deep corehole, DOE MRIG-9 Masonite (ONWI-120).

Core descriptions from the DOE corehole also indicate that the salt is fine to coarse grained (< 2 in.) and contains numerous megacrystals. Approximately 90% of the salt dome is halite, and 10% is anhydrite. No shear zones (anomalous zones) were described within Richton Dome.

Although both bedded and domal salt are under consideration by DOE, this report assumes the repository is located in a bedded salt formation. At present (1983), preliminary rock mechanics and index testing for the possible horizons are beginning to be published. more site specific information may clarify and resolve some of the rock mechanics concerns raised in this report.

10.15.1.1.2 Rock Mechanics Properties

Rock strength and thermomechanical properties used for design are based on generalized salt properties (Y/OWI/TM-36/4). The most important mechanical property of salt for repository design is creep. Salt creep occurs almost universally underground because the shear strength, or creep limit, of salt in situ is only about 100 psi (Baar, 1977). Thus, only very small shear stresses are required to maintain creep (Y/OWI/TM-36/4). Creep causes joints and fractures within the salt mass to heal shortly after their creation.

Three stages of salt creep have been observed underground (Mraz, 1973). The excavation of a mine opening at depth creates high differential stresses at the wall of the opening, resulting in the first stage of rapid "stress relief" creep. The "stress relief" creep stage may last only a few days or hours before being succeeded by a second creep stage of a gradually reducing rate. In standard nomenclature, the first two stages are "primary creep."

The salt adjacent to the opening "yields" and the pressure peak is transferred deeper into the salt during the first two stages of creep. After several years, an equilibrium is reached and a final stage of slow, steady-state creep continues until the salt has "rehealed" itself completely closing the opening. In standard nomenclature, the steady-state condition is called "secondary creep." The accelerating or "tertiary" creep that precedes failure in laboratory salt testing does not occur under in situ mine conditions (Baar, 1977).

Pressure gradients exist in all directions away from the opening resulting in floor heave, roof sag, and pillar shortening during all three stages of creep. The creep zone, which is defined by the limit of the pressure gradient, has been measured to extend up to 100 ft into the salt around an opening (Baar, 1977).

Salt creep rates are determined primarily by the salt material properties, the applied load, and the temperature. Relevant salt material characteristics include the salt type, crystal size, and the presence of inclusions of clay, shale, or anhydrite. The applied load on pillars in situ is due primarily to the weight of the overburden, but the load on a given pillar is also dependent on the immediate mine geometry and the mining sequence.

An increase in salt temperature has been found to dramatically increase creep rates (ORNL-4555). In laboratory tests performed in conjunction with Project Salt Vault (ORNL-4555) the effect of temperature on creep rate was found to be:

$$(E_2/E_1) \propto (T_2/T_1)^{9.5} \qquad (10.15\text{-}1)$$

where

E_1 = initial creep rate, in./in.-hr

E_2 = creep rate at second temperature, in./in.-hr

T_1 = initial temperature, °K

T_2 = second temperature, °K.

Equation (10.15-1) implies that an increase in repository temperatures of 100°F (from 80°F, the prestorage ambient temperature, to 180°F, a typical repository temperature), with everything else remaining constant, would increase creep rates five-fold. Equation

(10.15-1) is based only on laboratory testing of one specific salt and has not been confirmed by in situ testing. In other tests conducted during the former Project Salt Vault in Kansas, thermal stresses caused by the emplacement of a heat source were found to increase in situ creep rates as much as ten-fold even without an appreciable rise in salt temperature (ORNL-4555).

The prediction of the creep rates that are expected in the repository is of critical importance to repository design and to retrieval. A large amount of creep testing has been performed by Sandia National Laboratories and RE/SPEC, Inc., on salt samples from the Permian Basin, resulting in the development of "constitutive equations" for salt creep (SAND-80-0558; Pfeifle and Senseny, 1982). Several of these equations have been used in computer simulations to predict room closures in an underground salt repository (SAND79-1199), with unsatisfactory results. The closures predicted by the simulations were strongly sensitive to small variations in the parameters used in the equations. Also, different equations that provided equally good fits to the measured laboratory data resulted in widely varying predictions of room closure rates when used in pillar simulations.

The experiences in deep Canadian potash mines demonstrate that the results of laboratory testing can be quite misleading when applied to mine design, because of differences between laboratory and in situ loading conditions (Mraz, 1978). Underground, the excavation of a mine opening results in the local stress relief of an initially highly-stressed plastic salt mass. In the laboratory, initially stress-relieved salt specimens are subjected to applied loads. "Strain hardening" behavior of salt is observed in the laboratory but never underground (Baar, 1977).

Predictions of repository-scale behavior of heated salt based on extrapolations from laboratory test results are at present unreliable. Large scale, long duration, in situ testing is required before many important design parameters can be used with confidence.

The slow, continual creep of salt may affect repository functions over time, but alone does not present a safety hazard. Indirectly, salt creep may cause two types of local instability that do, however, pose safety problems. One of these unstable conditions is slabbing from pillars. Pillar slabbing is very common in salt and potash mines, and occurs because a stress-relieved zone of salt is formed at the wall of the opening, while the interior of the pillar continues to deform plastically. The stress-relieved zone behaves elastically and tends to remain at its original height, and often buckles as the interior of the pillar shortens (Baar, 1977). Pillar slabbing can be hazardous, especially where pillars are high, but the presence of slabbing indicates the pillars are behaving normally and are in no danger of failing suddenly.

A more serious safety concern occurs in bedded salt when thin bands of shale or clay are present near the opening. The discontinuities act as slip planes where thicker beds of salt in the roof or floor can separate from the salt mass. The salt beds are then stress-relieved and with continued creep of the surrounding salt mass buckle into the opening. In Canadian potash mines, "even minor variations in depth and spacing of clay seams and partings above and below the area extracted have very significant effects on the competency of openings" (Jones and Prugger, 1982).

Because creep dominates the in situ behavior of salt, elastic properties cannot provide a basis for the design of mine openings. Nevertheless, elastic properties for salt have been determined in laboratory tests. Typical thermal and mechanical properties for Permian Basin salt are given in Table 10.15.1. Future site specific testing will be performed to further characterize the mechanical properties of salt in the proposed repository horizon.

10.15.1.1.3 Hydrogeology

Salt rocks below a depth of 985 ft are functionally impermeable. The in situ intrinsic permeability of bedded salt has been measured at between 12 and 21 micro-darcys (SAND81-7073), while laboratory analysis of bedded salt have measured intrinsic permeability of 0.05 micro-darcys (Sutherland and Cave, 1980). Laboratory samples have a lower permeability because of their lower fracture (or discontinuity) density. The field tests are more representative of the intrinsic peremability that will affect repository operation. The hydraulic conductivity of laboratory samples has been measured to be on the order of 1.5 x 10^{-15} ft/day (Y/OWI/TM36-4). The secondary permeability associated with jointing and fracturing will be nearly as low as the hydraulic conductivity measured in the lab because of the self-sealing nature of salt.

Moisture in salt formations is in the form of brine pockets, brine inclusions, and brine trapped on intercrystalline boundaries. Salts which have high moisture contents or extensive brine pockets will be avoided in the siting of the repository.

The moisture content measured in salt samples obtained from the Permian Basin ranges from 0.15% by weight for Kansas salt to 1.75% by weight for New Mexico salt. In general, the moisture in laboratory samples is comprised of the brine in the crystal boundaries and the brine inclusions inside the salt crystals. Brine inclusions are cubical and range in size from less than 10^{-7} in. to 0.5 in. on a side.

TABLE 10.15.1 Mechanical and Thermal Properties of Salt
(Y/OWI/TM36-4)

Property	Range of Values	Typical Value
Young's Modulus	0.2 to 2 x 10^6 psi	1.6 x 10^6 psi
Poisson's Ratio	0.22 to 0.50	0.35
Unconfined Compressive Strength	2,300 to 7,250 psi	4,000 psi
Tensile Strength	20 to 400 psi	225 psi
Creep limit	20 to 400 psi	100 psi
Coefficient of Linear Thermal Expansion	20 x 10^{-6} to 22.2 x 10^{-6}/°F	22.2 x 10^{-6}/°F
Specific Heat	0.19 to 0.47 BTU/lb°F	0.22 BTU/lb°F
Intrinsic Permeability	12 to 21 Darcys	18 Darcys
Hydraulic Conductivity	1.7 x 10^{-15} to 1.1 x 10^{-2}ft/yr	5.2 x 10^{-13}ft/yr
Moisture Content	0.15 to 1.75% by weight	0.5% by weight
Unit Weight	103 to 152 pcf	133 pcf
Porosity	0.4 to 2.9%	0.5%

Thermal Conductivity

Temp(°F)	K (BTU/hr-ft°F)
32	3.53
122	2.90
212	2.43
302	2.08
392	1.80
572	1.44
752	1.20

The chemical composition of the included brine from salt samples from the Hutchinson Salt Formation has been analyzed (ORNL-5526), and was found to have a specific gravity of 1.22, a pH of 6.5, and to be saturated with sodium chloride and calcium sulfate. Considerable quantities of magnesium chloride and bromine ions were also present along with a lesser quantitiy of potassium ions.

As a particular salt repository site has not yet (1983) been chosen, specific investigation and modeling of ground water flow has not been performed. Models of near-field ground water flow that consider the changing conditions imposed by repository construction and waste emplacement are being developed at present. These models account for brine and brine-gas inclusion migration in response to heat flow, pressure changes, possible waste migration, and salt micro-structure changes. Studies are presently underway to evaluate brine reactions with introduced materials (sintered carbon, fiberglass, waste canister, steel, etc.) such as might be stored in a nuclear waste repository.

Once a repository site has been chosen, the aquifers, aquitards, and acquicludes present above and below the repository horizon can be identified, and their behavior investigated.

10.15.1.2 Repository Construction and Layout

The proposed repository will contain 128 rooms, of which 126 rooms are for canister storage with two reserved for ventilation. The rooms are 4,000-ft long and are connected by crosscuts on 1,000-ft centers. Access to the rooms is provided by five main entries that connect the rooms with four shafts to the surface. With the exception of the initial portions of entries in the shaft pillar (that will be driven by drill-and-blast methods), the entries will be driven by a continuous miner. Dimensions of the various facilities are given in Table 10.15.2, and the repository layout is shown in Figure 10.15.1. Each shaft will have a different dedicated function as follows:

- Personnel and materials air intake shaft
- Salt hoist and air exhause shaft
- Waste handling shaft (confinement air intake)
- Confinement air exhaust shaft.

Shaft sinking will be by conventional drill-and-blast methods, and the shafts will be lined with 1-ft-thick concrete. Station areas will be lined with 1.25-ft-thick reinforced concrete.

The two potential sequences for repository development waste placement are:

Table 10.15.2 Dimensions of Repository Facilities

Facility	Dimensions
Personnel-and-Materials Shaft	22.0 ft inside diameter
Salt Hoisting Shaft	12.0 ft inside diameter
Waste Handling Shaft	16.0 ft inside diameter
Confinement Upcast Shaft	10.5 ft inside diameter
Entries	11 ft high by 18.5 ft wide
Access Pillars	81.5 ft
Storage Rooms	17.5 ft wide by 19 ft high by 4,000 ft long
Manifolds	37 ft wide by 19 ft high
Cross-Cuts	17.5 ft wide by 19 ft high
Room Pillars	142.5 ft
Rib Pillars	43.75 ft
Storage Holes	20-in. diameter by 22 ft long
Storage Hole Pitch	4 ft

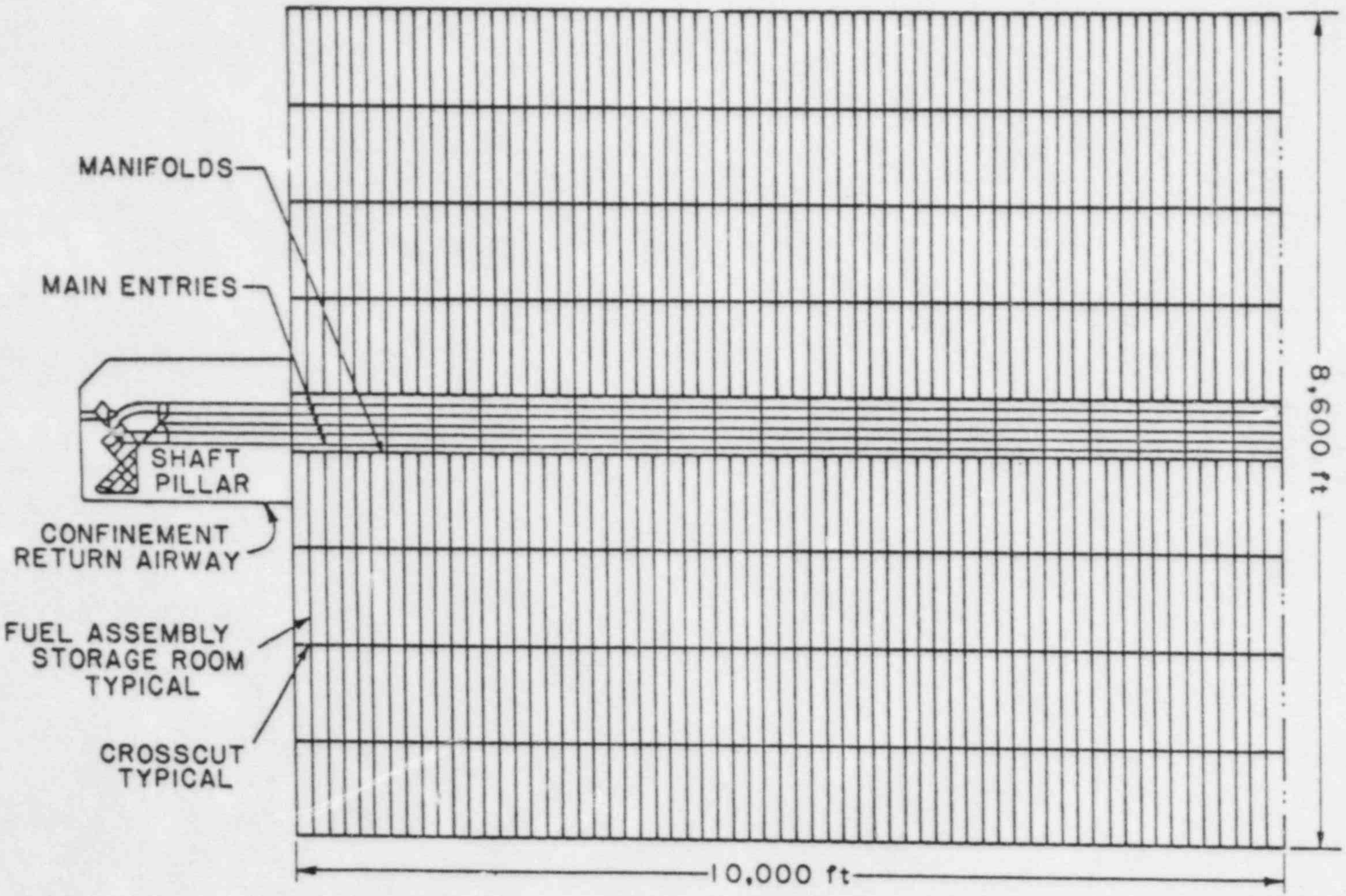

Figure 10.15.1 Layout for the repository in salt.
(78-57-RE)

- Completion of repository development before beginning waste storage
- Concurrent room development and waste storage at the rate of 12 rooms per year.

The two options have very different requirements for ventilation and excavation systems, shaft facilities, and equipment quantities.

According to the current (1983) repository construction schedules, waste placement must begin within ten years of construction authorization. Assuming that two years will be required for shaft sinking, as estimated in the CDR, and allowing for contract procurement for both the shafts and the underground development, then pre-placement development must be completed within six years. Achieving this target would require a development rate of 1,140 tpd for a five-day workweek if room development and waste placement take place concurrently.

If repository development must be completed before waste placement begins, then the required development rate increases to about 9,940 tpd. The addition of several continuous miner units would be required to meet this development rate. Completion of development before placement and within 10 years of construction authorization would also mean that all the mined salt would have to be hoisted to the surface. The diameter of the salt hoisting shaft would have to be enlarged from 12 ft to 24 ft and would result in rooms being excavated up to 24 years before waste is emplaced. Creep closure rates may be large enough to require substantial overmining or remining to allow sufficient clearance for waste placement.

10.15.1.3 Canister Arrangement

The waste package (Figure 10.15.2) is a carbon steel canister. The waste packages will be placed in 10-in.-diameter holes drilled vertically into the storage room floors. Each room will contain two rows of holes, spaced 5.5 ft apart center-to-center, and located symmetrically about the room centerline. The hole spacing within each row (hole pitch) is 4-ft center-to-center.

10.15.1.4 Thermal Loading

As a result of decay of the radionuclides contained in the wastes, the waste packages radiate heat. Radionuclides all ultimately decay to stable isotopes, so the number of disintegrations decreases with time. Thus, the heat produced by a canister will be maximum at the time of emplacement.

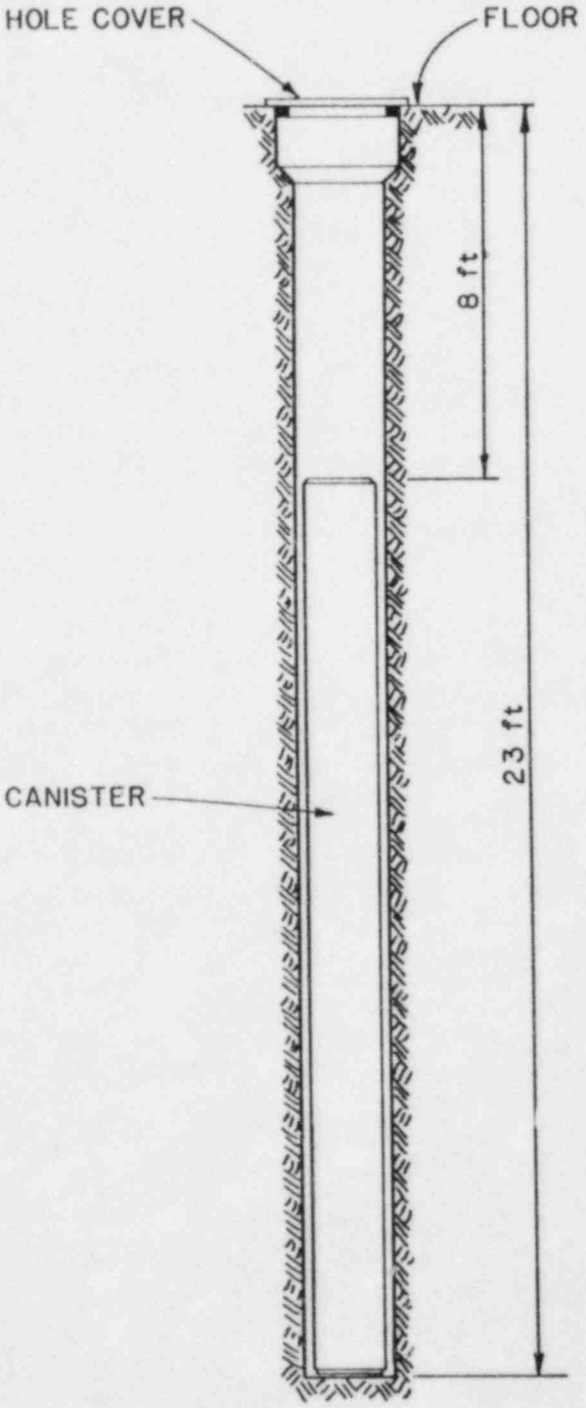

Figure 10.15.2 Canister and storage hole in salt.
(78-57-RE)

Each canister will contain either one Pressurized Water Reactor (PWR) or two Boiling Water Reactor (BWR) spent fuel assemblies. The initial (maximum) heat loads for canisters containing 10-year-old waste are 0.58 kW and 0.38 kW for PWR and BWR, respectively.

The overall thermal load on the repository is determined by the areal extent of the repository, the canister spacing, the age of the waste, and the type of the waste (PWR or BWR). In practice, waste will be of two types and varying ages, but in the CDR it is assumed that actual panels consist of waste of uniform type and age.

The storage area consists of 126 rooms occuping a total area of 1,850 acres. Using 0.5 kW/canister (assuming that 60% of the waste will be PWR assemblies) and assuming the repository will contain a total of 242,000 canisters, the heat load over the storage area of 1,850 acres is 65 kW/acre. Taking the total area of 1,990 acres, which includes the storage area and entries but excludes the shaft pillar, the overall heat load is reduced to about 60 kW/acre. The design thermal loading in the CDR (78-57-RE) is 60 kW/acre.

The HEATING 5 program (ONRL/CSD/TM-15) has been used to predict temperature contours for thermal loads of 30 kW/acre and 60 kW/acre in bedded salt (78-56-R) and for a thermal load of 150 kW/acre in domal salt (EY-77-C-05-5367). Table 10.15.3 prepared on the basis of these analyses, shows the predicted salt temperatures at the canister-salt interface and on the roof at the centerline of the room for times of 5 to 25 years after emplacement.

The analyses were made assuming the storage rooms were backfilled immediately after waste placement. Continuous ventilation of the storage rooms will remove heat from the wall rock, and the actual rock temperatures will be less than those that appear in Table 10.15.3.

The actual increase in salt temperature will depend upon the quantity and temperature of the ventilating air, the heat output of the waste, and the thermal characteristics of the salt. Computer simulations will be required to predict salt temperatures and to determine the required quantities of ventilating air. Such predictions are especially important because of the extreme sensitivity of salt creep rates to temperature.

Laboratory testing has determined that bedded salt containing micro inclusions can fail explosively due to internal gas pressures at a critical temperature of 482°F (ORNL 4555). The peak salt temperature for even a thermal loading of 150 kW/acre is considerably less than the critical temperature, so explosive failure of the salt is highly unlikely.

Table 10.15.3 Predicted Salt Temperatures after Waste Emplacement

Thermal Loading	Location at Salt-Canister Interface			Location at the Roof at the Center-Line of the Room		
(kW/Acre)	Time after Emplacement (years)			Time after Emplacement (years)		
	5	10	25	5	10	25
30(a)	163°F	163°F	N/A	101°F	113°F	N/A
60(a)	236°F	242°F	258°F	120°F	143°F	182°F
150(b)	345°F(c)	345°F	345°F	215°F	N/A	265°F

Notes: (a) Source: 78-56-R

(b) Source: Stearns-Roger

(c) Peak temperature actually occurs 7 years after emplacement

N/A = Not Applicable

10.15.1.5 Backfill Timing and Placement

Ultimately, a repository must be backfilled with the backfill designed as a barrier (10CFR60.133). In this repository concept, backfill will not be placed until permanent closure unless excessive creep occurs in the storage rooms. Excessive creep is defined as creep whose magnitude is great enough to make the rooms inaccessible to retrieval equipment or which may cause subsidence and fracturing in the strata overlying the repository horizon. Presently, confident prediction of the creep behavior of heated salt in situ is not possible (see Section 10.15.1.1.2, "Rock Mechanics Properties"). The chances of encountering excessive creep cannot be estimated.

If the rooms do remain open, backfill will not be an issue. Backfilling and remining of backfill would become necessary only because of excessive creep or if retrieval is required during the permanent closure process. Retrieval after backfilling and remining of backfill are discussed in another concept.

10.15.1.6 Ventilation

Rooms are open (unbulkheaded) and ventilated. The two potential development options:

- Develop and store waste simulteneously
- Develop whole repository prior to waste placement,

result in two potential ventilation schemes. In the first case, two separate ventilation circuits are required:

- Mine (development) ventilation system
- Confinement (storage) ventilation system.

Since rooms will be developed only as they are required for placement, the airflow in the confinement circuit will be small initially and will increase until the final value is reached. To ensure that leakage is toward the confinement circuit, the pressure in the development entries and returns must increase as the confinement airflow increases.

If the entire repository is developed before waste placement, only one ventilation system will be required. The airflow requirement will increase as panels are developed, but once repository development is complete the airflow will remain constant.

The virgin rock temperature at a depth of 2,000 ft is unlikely to exceed 80°F. The temperature of the intake air at the surface in summer is unlikely to continually exceed 96°F dry-bulb temperature and 70°F wet-bulb temperature depending on the climatic conditions at the site. For development and storage operations, cooling of the intake air may not be necessary. In winter, the intake air may require heating to prevent problems with icing and for the comfort of workers traveling in the shaft.

10.15.1.7 Retrieval Systems

Title 10, Part 60 of the Code of Federal Regulations (10CFR60) requires that repository operations be designed so that any or all of the waste could be retrieved on a reasonable schedule, "Full Retrieval" is removal of all waste. However, from time to time, retrieval on a limited basis, a few canisters, a single room, or a single panel may be necessary. We shall designate this scenario as "Local Retrieval."

At the time of retrieval, the canister will be in total contact with salt backfill which will be compacted if the surrounding salt creeps toward the hole. For this reason, retrieval would best be carried out by overcoring. An overcoring unit which has been designed for use at the WIPP site in New Mexico is shown in Figure 10.15.3 (SAND 79-1239, 1979).

Using the overcoring machine, retrieval involves the following operations:

- Locate canister and establish its orientation
- Install retrieval manifold to be concentric with canisters and perpendicular to the center-line
- Position retrieval cask on the retrieval manifold and connect the cuttings collector
- Drill to within 4 in. of the top of the canister (Figure 10.15.4
- Reconfigure the drill system so that it can perform the overcoring operation (add filters for cuttings collection system, and attach overcoring kit to the drill)
- Advance overcoring bit until it reaches a depth just beyond the bottom of the waste canister
- Halt penetration of overcore bit but continue rotation
- Advance sleeve portion of overcore barrel to undercut the canister (Figure 10.15.5)

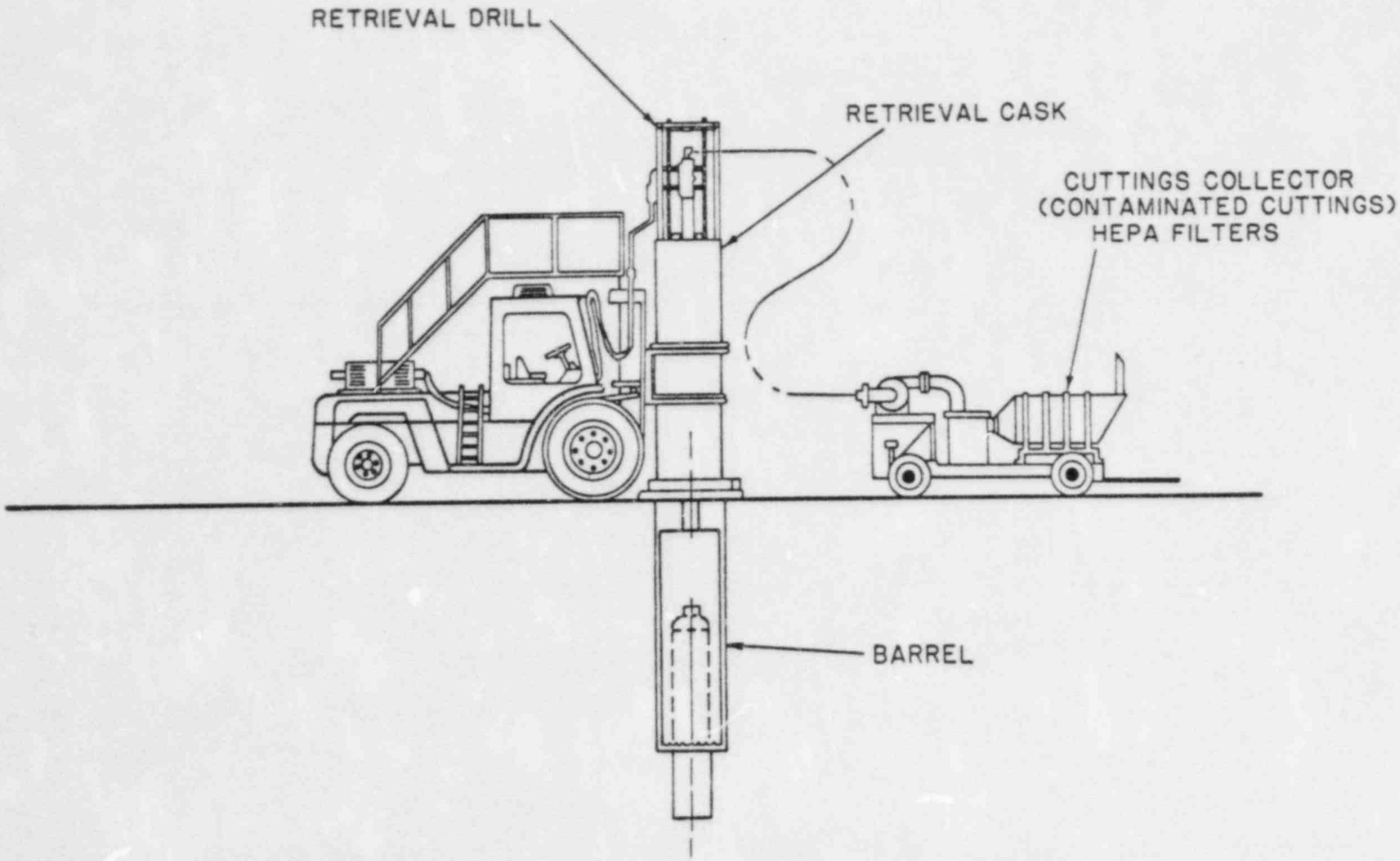

Figure 10.15.3 Retrieval machine during overcoring.
(SAND79-1239)

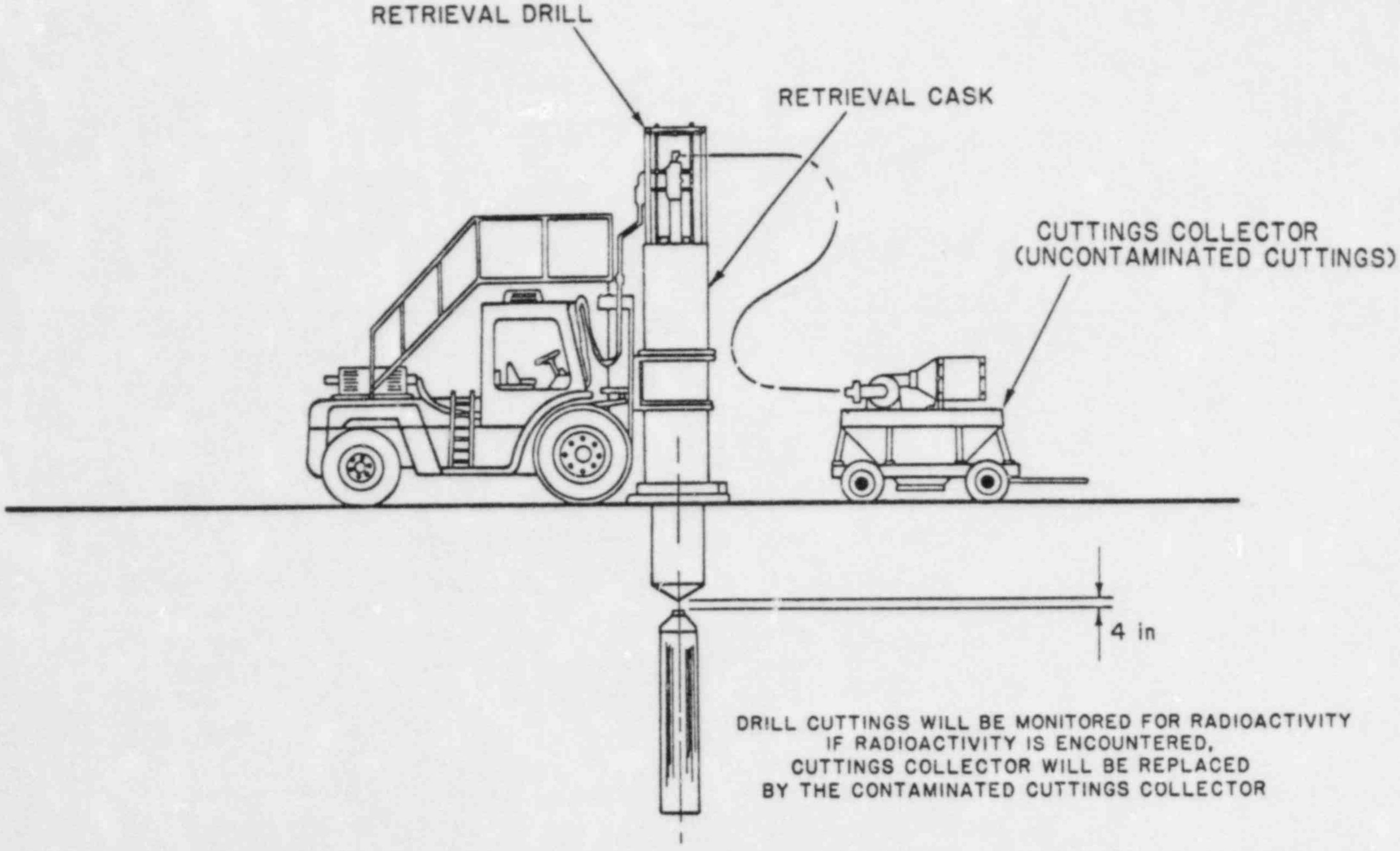

DRILL CUTTINGS WILL BE MONITORED FOR RADIOACTIVITY
IF RADIOACTIVITY IS ENCOUNTERED,
CUTTINGS COLLECTOR WILL BE REPLACED
BY THE CONTAMINATED CUTTINGS COLLECTOR

Figure 10.15.4 **Overcoring apparatus blind drilling above canister.** (SAND79-1239)

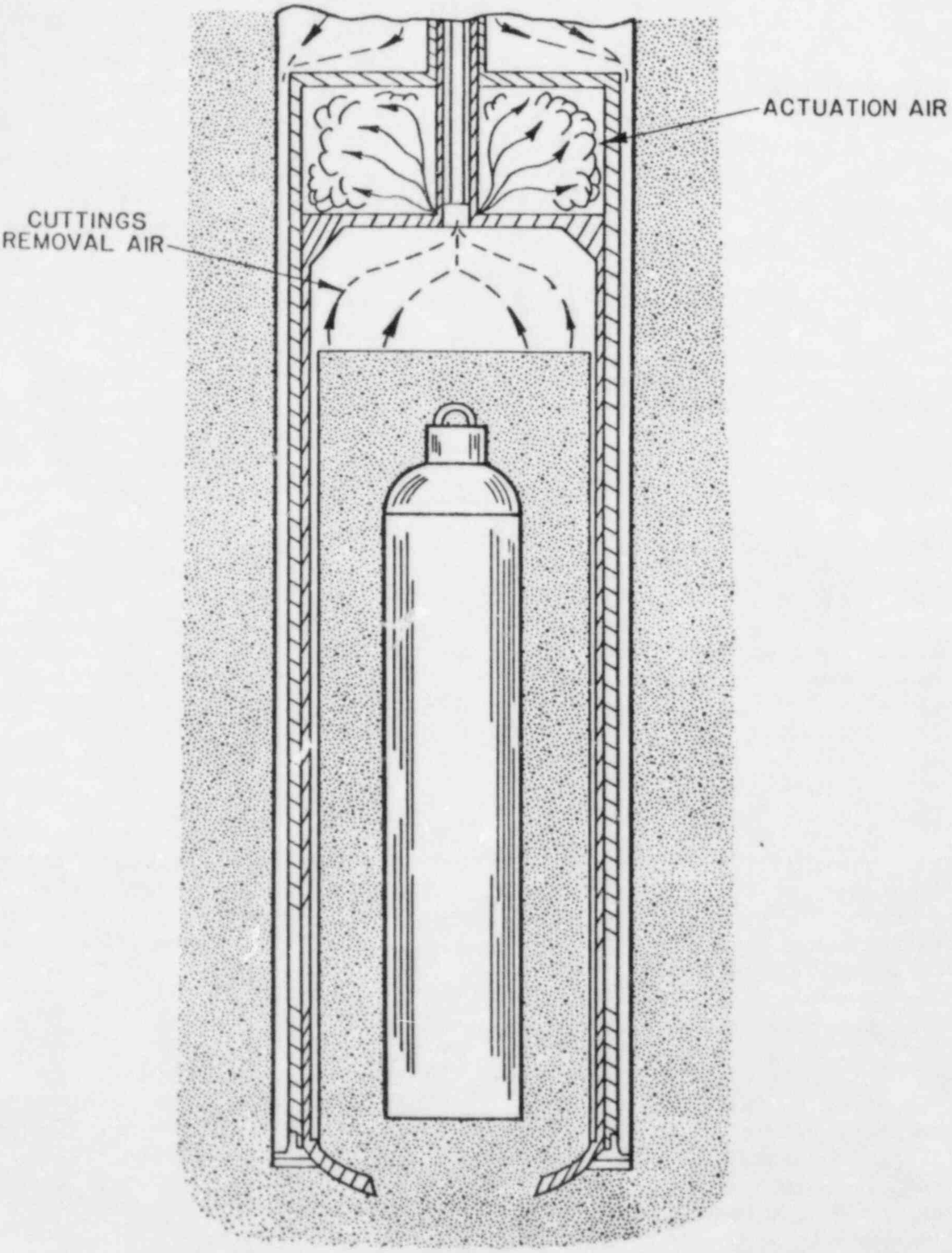

Figure 10.15.5 **Overcoring barrel and canister immediately before completion of overcoring procedure.** (SAND79-1239)

- Retract the sleeve into the barrel and hoist the core barrel.

10.15.2 Retrievability Impacts on Repository Systems

10.15.2.1 Excavation Systems

If the rooms remain open over the life of the repository, excavation of backfill will not be required prior to retrieval. Creep resulting in room closure and floor heave may necessitate some remining or floor trimming. The same mining equipment used in room development could be used for this operation because operating temperature conditions will be similar to those during emplacement. Large floor heaves could cause shifts in the location and orientation of some canisters, requiring an accurate canister-locating device.

Extensive local failure, such as roof or floor buckling, may occur during the retrieval period. In some storage rooms large, loose blocks of salt rock would then be present which would have to be removed before retrieval operations could begin. The continuous miners used in development would again be appropriate for removing the loose rock, unless the loose rock has cut off ventilation, allowing room temperatures to rise. Under these circumstances retrieval conditions would be similar to the backfilled concept.

10.15.2.2 Equipment Systems

Retrievability impact on equipment systems can best be identified with the aid of a flow chart shown in Figure 10.15.6. Each basic repository operation is given an identification number to facilitate following an event's impact on all systems. After completion of mining development, the only active operations are those involved with canisters. The impact on repository operations is dependent upon the level of retrievability.

If local retrieval of canisters becomes necessary, then it must take place concurrently with storage operations, unless storage has been completed. Because of the likelihood of hole closure around canisters, retrieval is best accomplished by overcoring. Transporting canisters to the surface will require (Figure 10.15.6) use of the crane (3), hoist (4), and surface handling facilities (5). These systems may be unable to perform their normal operations for handling canisters, resulting in short delays to repository storage activities.

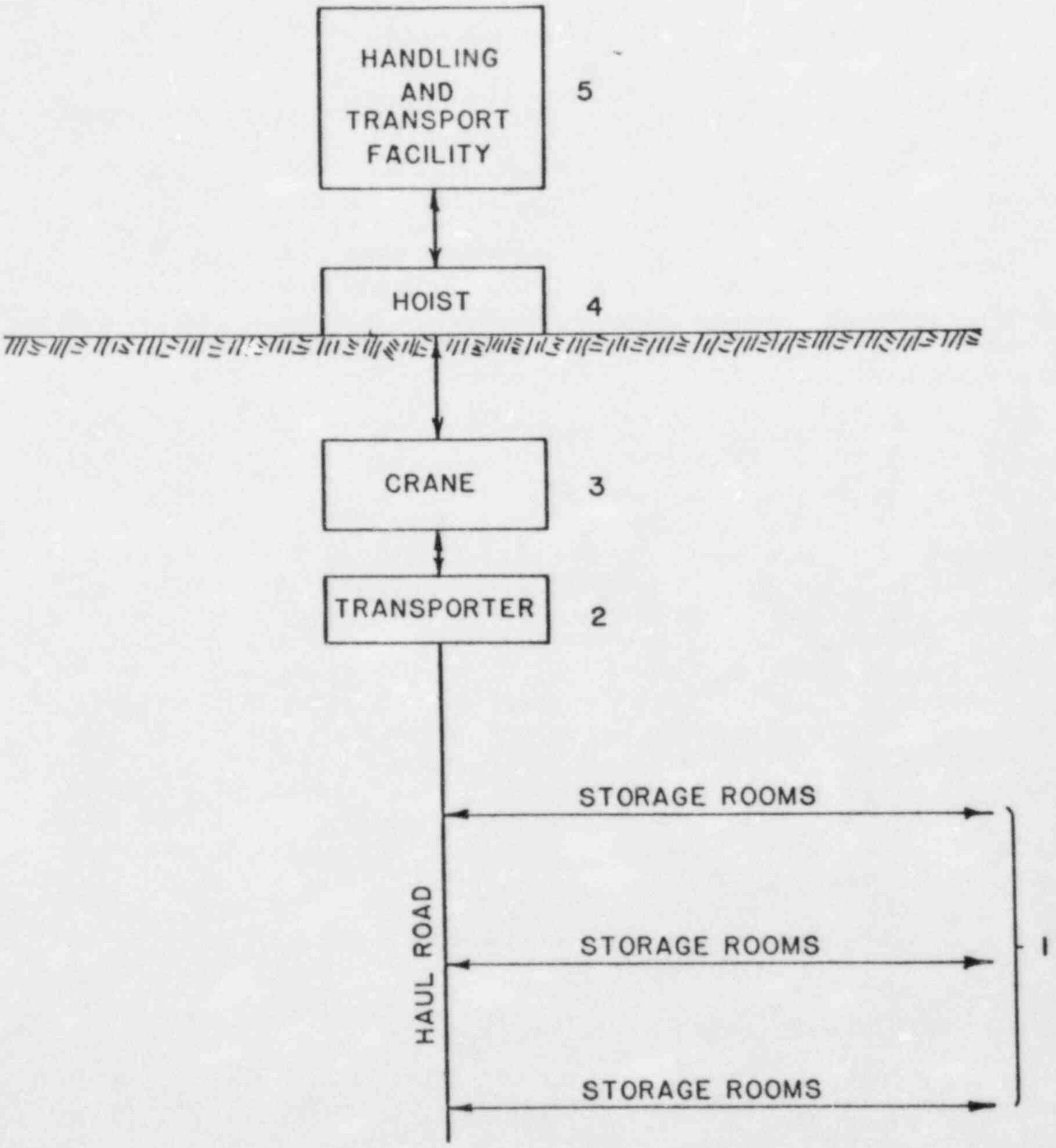

Figure 10.15.6 Schematic of waste handling operations.

Full retrieval operations are similar to those for local retrieval but larger inscope. To facilitate these operations, several overcoring machines would be required.

10.15.2.3 Facilities

If mining development and waste emplacement are concurrent operations, then a decision to begin full retrieval will most likely preclude continued development mining. The modular concept of repository operations keeps the mining and waste handling systems entirely separated to the extent that equipment for each system uses different haulageways and hoisting shafts. The area most likely to be affected by local retrieval will be the shaft area where transfer casks will be handled, hoisted and lowered, and mined rock will be hoisted. Retrieved canisters may be breached, so that congestion in the shaft area may result in contamination of development and storage vehicles.

10.15.2.4 Ventilation Requirements

While the rooms are open and ventilated heat will be continuously extracted from the wall rock. The air quantities required to maintain the rock at an acceptable temperature will have to be determined through a thermal analysis (Section 10.15.1.5, "Thermal Loading"). Normal mining operations require air velocities of between 50 and 100 fpm, and 50 fpm may be used as a first approximation of the velocity that will be used in the open rooms. A velocity of 50 fpm gives airflows of 16,600 cfm per room and a maximum of 2,120,000 cfm for the entire repository (126 open rooms, with an additional 25,000 cfm for the shaft and service area). To handle these airflows, the sizes of the confinement circuit shafts and main entries will have to be increased as follows:

- Waste Handling Shaft (confinement air intake) -
  32-ft inside diameter

- Confinement Air Exhaust Shaft -
  30-ft inside diameter

- Confinement Intake and Return Entries -
  21-ft high x 33-ft wide.

If an overcoring method is used for retrieval the release of gaseous radionuclides will not be a problem unless the salt around the canister is fractured allowing the radionuclides to escape.

10.15.2.5 Backfill

In the concept of open, ventilated rooms, backfill would not be placed until permanent closure. The requirement for retrievability does not directly impact backfilling operations. However, full retrieval would impact backfilling because when all the waste is removed, isolation of the repository and hence backfilling is no longer required. In the case of local retrieval, when a room or panel is emptied of waste, backfill would still be required to ensure that the room or panel does not become a preferential pathway for radionuclide migration.

10.15.2.6 Thermal Effects

The thermal effects associated with nuclear waste disposal in an underground repository have significant impacts on the retrievability of the waste. In the case of salt, three main areas where thermal effects are of most concern are:

- o Magnified creep rates
- o Brine migration
- o Machinery and personnel.

The first two of these three areas are discussed in this section, the third is discussed elsewhere (see Section 10.15.2.1, "Excavation Systems," and Section 10.15.2.7 "Requirements for Special Equipment for High Temperature and Radioactive Environments").

10.15.2.6.1 Salt Creep

Closure due to salt creep affects three distinct areas:

- Very-near field - closure of the storage hole around the canisters
- Near-field - horizontal and vertical closure of the storage room
- Intermediate field - closure of the main entries.

The thermal load coming from the nuclear waste will increase the closure rates experienced in each of these areas. The immediate effect of waste emplacement will be the imparting of thermal stresses that can increase creep rates in the emplacement room by as much as 10 times (ORNL-4555). Because continuous ventilation will maintain wall rock at the skin of the opening at its initial temperature while temperatures, elsewhere in the salt increase, a thermal gradient, and therefore thermal stresses, will exist within the salt throughout the retrieval period. The salt in the interior of the pillars may be heated to temperatures approaching 200°F during the retrieval period which would also result in increased creep rates.

The potential effects of creep on different repository and retrieval functions are summarized in Table 10.15.4.

10.15.2.6.1.1 Very-Near-Field Effects

Salt creep around the storage hole is expected to close any annulus and completely encase the canister in salt by the end of the retrieval period. Therefore, retrieval by an overcoring method (Section 10.15.1.8) is indicated. The canister will be subjected to a radial stress that may approach the sume of the in situ lithostatic and thermal stresses, requiring canisters designed to withstand radial stresses of 2,500 psi or greater.

Another very-near-field thermal effect will be displacement of the canister from floor movement. Even if excessive closures necessitating backfill do not occur, floor movements may be substantial during the retrieval period. An accurate canister locating device will be necessary for retrieval.

10.15.2.6.1.2 Near-Field Effects

Creep closure of the storage rooms will affect retrieval in several important ways. Because of the difficulty in making quantitative predictions concerning the creep of salt at elevated temperatures under repository conditions (Section 10.15.1.2.2), discussion of the effects of creep on retrieval must be of a qualitative nature.

The most important potential near-field thermal effect is that excessive creep may occur, forcing backfilling and the abandonment of the "open and ventilated" rooms concept. At this time, no thermal analayses have been performed to predict the temperature rise that will occur in the salt if ventilation is maintained. Insufficient large-scale in situ test data exist to predict the effect of thermal stresses or elevated temperature on underground creep rates. Performance of thermal analyses and in situ tests would help determine the viability of the open and ventilated rooms concept.

Unless creep closures during the retrieval period are excessive, creep should not cause any major problems during retrieval. Some creep will occur during the retrieval period, and may impose limitations on retrieval operations. Remining, trimming the floor, or removing fallen rock may be necessary as discussed in Section 10.15.2.1. Unstable roof or ribs may also be encountered, and the ground control techniques discussed in Section 10.15.2.8, may be necessary to provide safe working conditions.

Table 10.15.4 Effects of Salt Creep on Retrieval

Location	Phenomena	Effects
Very-Near-Field (Storage hole)	1. Closure of storage hole around canister.	1. Retrieval system must be designed to retrieve canisters enlarged in salt.
	2. Displacement of canister due to floor movement.	2. Canisters must be designed to withstand high radial loads.
	3. Brine migration to canister	3. Canisters must be locatable.
		4. Safety precautions against fluid of gas at high pressure, damaged canisters etc. due to brine migration.
Near-Field (Room)	1. Recompaction of backfill.	1. Condition of backfill affects remaining method.
	2. Closure after remining.	2. Large closures after remining may limit time available for retrieval.
		3. Large closures may accelerate slabbing and buckling type failures, making room less safe.
Intermediate-Field (Main entries)	1. Closure of mains and increasing temperatures over life of repository.	1. Necessity for maintenance including remining to keep main entries open.

10.15.2.6.1.3 Intermediate-Field Effects

During the active life of the repository, including the mandatory retrieval period, the main entries must be kept open for movement of workers, material, and ventilating air. Serious creep closures will likely occur in the main entries over this time period, particularly if the temperature of the salt around the main entries is increasing throughout. Even if the temperature of the salt in the pillars protecting the main entries does not increase appreciably, creep rates could still increase as the main entries will form an "abutment zone" carrying some of the overburden load of the yielded, high temperature pillars in the waste storage area. An indication of the magnitude of closures that might occur are given by one potash mine at a depth of 3,000 ft, which experienced closures of 5 ft in the main entries over a four-year period not at elevated temperatures (Prugger, 1977). A large-scale main entry maintenance program for the life of the repository would be required to control closures.

10.15.2.6.2 Brine Inclusions

The presence of a thermal gradient through the salt will cause brine inclusions to migrate up the temperature gradient towards the waste canisters. Brine migration occurs because the solubility of salt increases with temperature. Migration begins with the solutioning of salt by the included brine on the warmer side of the inclusion and the deposition of salt on the cooler side. The volume of the inclusion remains nearly constant, and movement of the inclusion toward the heat source results.

The brine inclusions observed in laboratory experiments do not cross inter-crystalline boundaries. Migration rates for brine inclusions have been measured and theoretically calculated between 10^{-7} and 10^{-8} (ft/min) (°F/ft) (ONWI-208). Included brine that reaches a salt-crystal boundary either stops or continues to migrate along the boundary rather than into the adjoining crystal. Once the brine is on the boundary, the transport mechanism is a vapor phase model. The liquid-vapor interface recedes as the liquid is converted into vapor and the vapor is transported along the crystal interface toward the heat source.

At the wall of the storage hole some researchers have found that condensation, evaporation, and resealing of the brine inclusions takes place. The resealed inclusions are part liquid and part vapor and have been observed to flow down the thermal gradient away from the canisters. Some controversy exists as to the significance of this reverse brine migration. Theoretical calculations have indicated that reverse migration rates will be on the order of 10^{-9} and 10^{-7} (ft/min) (°F/ft), but other workers feel that actual reverse migration rates will be even lower (ONWI 208).

The rate and quantity of inflow to a borehole containing a canister will be a function of the thermal load, the temperature and thermal properties of the salt, the solubility of the salt, the salt purity, the quantity and size of brine inclusions, the rock mass disturbance from installation of the borehole, and the geometry of the borehole. The inflow rate will decrease over the course of the retrieval period as the distance for migration increases and the thermal gradient decreases.

Recently researchers at Sandia Laboratories and elsewhere have measured and calculated inflows for varying thermal loads and borehole geometries (ORNL-5818). The results of this research are computer programs that will be used to model the brine migration. During in situ testing, the rates and quantities of inflow for the actual thermal loading and borehole configuration can be measured and compared with those generated by the computer programs. Proper use of the in situ testing and computer programs will result in estimates of the average inflows for the expected repository conditions.

10.15.2.7 Requirements for Special Equipment for High Temperature and Radioactive Environment

If the rooms remain open and ventilated during the retrieval period, retrieval will take place at temperatures as cool as those at which emplacement took place. No modifications to equipment for high temperature conditions will be required. Shielded equipment and enclosed operation environment systems are necessary for working under radioactive conditions, which may occur if breached canisters are encountered. Mine Safety Appliances, Inc. (MSA) has developed a Gas Tight Total Protection Suit which can protect the wearer against solid or liquid radioactive substances for up to two hours. Such suits could be provided in the cabs of the operating equipment for emergency use.

10.15.2.8 Ground Control

The CDR (78-56-R) states that resin roof bolts and steel sets will be used to control excessive deformations in the storage rooms. From an analysis of the available literature these ground control techniques do not appear to be very effective. Roof bolting is used in a number of U. S. salt mines (Y/OWI/ SUB-77/16523/2; Plumeau and Peterson, 1981), in deep potash mines (Prugger, 1977), and in large storage caverns in domal salt. In domal salt, resin bolts up to 20 ft long are used to control pillar slabbing. In salt mines, roof bolting can be an effective ground control tool where full salt extraction is practiced and the bolts are installed in shale or other elastic roof rock. Even under these circumstances, however, creep of the salt pillars can crush the shale roof despite the presence of bolts (Plumeau and Peterson, 1981).

Where the roof consist primarily of salt, roof bolts are less successful. In one instance, tensioned roof bolts were able to control the buckling of a 2-ft-thick salt layer in the roof (ORNL 4555), but in other cases roof bolting was completely ineffective in controlling roof buckling (Prugger, 1979).

The reasons roof bolts are relatively less effective in salt mine roof than elsewhere is easy to explain. In a discontinuous rock mass consisting of elastic rock blocks, roof bolts act to knit together the loosened zone that is formed around the excavation. In massive evaporite rocks, however, local instability is caused by creep. The zone of creep extends far beyond the reach of standard roof bolts, and the driving force behind the creep is the full lithostatic pressure.

In Canadian potash mines, the most effective means of controlling roof problems has been found to be of the "Stress Control Method" (Serata, 1976, Prugger, 1979; Baar, 1977), that exploits the stress relief creep of the salt and therefore has a theoretical foundation. In a typical application of the Stress Control Method, two rooms are driven at opposite ends of a panel and the roof in the rooms is allowed to fail by buckling. The horizontal stresses are then forced higher up in the strata above the panel, and the immediate roof in the zone between the first two entries is stress relieved. Further entries can then be driven in this zone without roof problems (Prugger, 1979). The pillars between the panel entries are also designed to "yield" so that overburden pressures are thrown onto the abutments. The width of the entire panel must be low enough that the overlying strata does not subside, reloading the yield pillars.

While proper application of the Stress Control Method can control roof instabilty, the method does not control creep. Horizontal pillar expansion and floor heave are still significant problems in main entries driven in stress-relieved ground (Jones and Prugger, 1982).

Where neither roof bolting nor Stress Relief Methods are fully successful in preventing ground failure, steel arch canopies, such as those sometimes used to rehabilitate high roof falls in coal mines (Chlumecky, 1981), may provide safe conditions for retrieval operations. Steel arch canopies do not support the roof but instead protect workers from falling rock.

The use of some combination of roof bolts, the Stress Control Method, steel arch canopies, and other techniques would probably be successful in temporarily controlling local unstable conditions such as roof buckling and pillar slabbing. Safe working conditions can be achieved during retrieval. Prevention of extensive local failure during the time the rooms are left open between storage and retrieval may not be possible. In addition, none of the currently available roof control techniques appear successful in controlling plastic creep of salt. No guarantee exists that extensive creep will not occur and leaving the storage rooms open for the duration of the retrieval period may not be possible.

10.15.2.9 Instrumentation

The performance of the repository has to be monitored to ensure the safety criteria are not violated and the isolation capacity is maintained. The retrievability option mandates significant changes in selected parameters or deviations from expected behavior be detected when they occur, and that steps be taken to correct the problem or retrieve the waste to the surface.

A major advantage of the open and ventilated rooms concept is that visual inspection and hands-on monitoring instruments, which are far more reliable than remote techniques, can be used. Repository conditions requiring monitoring are:

- Hydrogeologic - water inflow
- Thermal - heat buildup
- Mechanical - stress buildup rock deformations, and rock instability
- Air quality - radiological activity levels and airflows.

The total quantity of water inflow into the repository is expected to be small because of the sealing characteristics of salt. Therefore, hydrogeologic monitoring will be important only for measuring brine migration into selected canister holes and for observing the far-field ground water regime. Monitoring from observation wells that do not penetrate the repository horizon will be necessary to assure that mining of the repository does not disrupt the ground water regime threatening the isolation of the repository.

Thermal monitoring will primarily consist of thermocouples embedded in boreholes drilled into the salt. Extensometers will measure the magnitude and rate of room closure in the open entries throughout the repository life and in the storage rooms during emplacement and retrieval. The stress distribution within pillars should be measured using liquid inclusion stress measurement techniques that do not require elastic behavior of the rock.

Ventilation conditions in the repository will be monitored to detect radiation levels, fire and smoke emergencies, as well as ventilation blockages caused by rockfalls. Mobile radiation and thermal sensors in ventilation airways will permit continuous monitoring from a main surface control console. Flow direction, pressure, differential pressure, and temperature will be monitored.

The retrievability requirement mandates that monitoring of the repository be continued for perhaps decades after initial placement of the waste. As few monitoring techniques have been proven reliable for either extended time periods or elevated temperatures (UCRL 15141), an experimental panel should be provided in the repository in which extensive verification and confidence testing could be performed.

10.15.3 Adequacy of Incorporated Retrieval Systems or Allowances

10.15.3.1 Local Retrieval

In the open and ventilated rooms concept, local retrieval of individual defective canisters can be performed with relative ease. No special equipment beyond that described earlier would be required, unless a special overcoring system needs to be devised for breached canisters.

Retrieval of breached canisters will require "hot cell" or shielded equipment along with decontamination equipment for the storage area. Transporting these canisters to the surface will require use of the crane (3) hoist (4), and surface handling facilities (5) as shown in Figure 10.15.6. These systems will be unable to perform their normal operation while they are handling breached canisters and this will delay repository storage activities. Not only will the routine materials be handled, but contaminated material must be handled, decontaminated, and then handled again for storage. These extra operations will hamper normal repository performance.

During local retrieval, a minor amount of trimming or remining may be necessary to offset any creep closure to allow adequate clearances. A roadheader or other mining equipment must be dedicated to the waste ventilation circuit to facilitate local retrieval. With incorporation of dedicated mining equipment and an overcoring device the systems are adequate for local retrieval with the exception of a canister locating device. The locating device requires development before being incorporated into the retrieval system.

10.15.3.2 Full Retrieval

Full retrieval of canisters can be planned systematically for the entire repository, starting with the oldest storage rooms. If many canisters are breached, contamination will make the retrieval operation more complex. Special equipment may be required for the duration of the operation unless the overcoring procedure proves to be an acceptable means of dealing with breached canisters.

Full retrieval will require the same type of equipment as local retrieval. The system must include equipment for trim mining or remining, an overcoring device for retrieval, and a canister locating device. Of the required equipment the locating device and the overcoring machine required further development. Full retrieval may require extensive and continuous handling of both canisters and remined salt. Adequate interfaces in the material handling system are required to facilitate timely and safe retrieval.

10.15.4 Concerns

10.15.4.1 Technological Concerns

Technology may not currently be available for a canister location method that could detect a canister and define its orientation behind several feet of solid salt. An effective canister overcoring system also does not currently exist, but could probably be developed over a relatively short period.

10.15.4.2 Safety Concerns

Federal Metal and Nonmetal Mine Safety and Health Regulations (30CFR55, 56, and 57) cover all aspects of underground mine safety. Conformance to these regulations is more critical while handling waste because of contamination possibilities that could result from an accident.

Salt creep alone does not present a safety hazard, although large deformations may pose operational difficulties. Local instability of the roof and sidewalls caused by creep is, however, a major safety concern. To anticipate the structural behavior of the heated salt that will be present at the time of retrieval is very difficult. Slabbing from pillars and roof buckling, especially where layers of clay or other impurities are present, may be a common condition. Current mining experience indicates rock bolting may not be entirely effective in preventing such local failures. Other techniques, such as the Stress Control Method or the use of steel arch canopies, may be necessary to provide safe working conditions.

One concern during local retrieval operations is traffic congestion. Transporters will be traveling to and from storage rooms, carrying either retrieved canisters or those needing to be stored. Two different operations will be occurring simultaneously causing safety hazards at haulageway intersections. The hazard is compounded because the retrieved canisters may be leaking radionuclides, creating a greater hazard in the event of a collision.

Brine migration to the waste canister during the retrieval period presents several safety hazards. The salt backfill in the overcore above the canister in the initial loose state will provide a vent path for brine vapor into the backfilled room. The brine vapor may collect and form brine pockets which, with time, could become pressurized due to closure and temperature. During remining, such a brine pocket would represent a safety hazard to both men and machinery.

After a period of time, the salt backfill above the canister and in the room will become reconstituted and seal off the canisters. The temperature gradient will continue to cause brine migration to the hole and the brine will accumulate at the canister forming a pressurized pocket. The retrieval procedure should provide for determining if a brine or vapor pocket is present at the canister, and for dealing with the fluid when the attempt to retrieve is made. Overcoring of the canister will increase the potential for avoiding the brine and steam but does not eliminate the possibility for a release.

10.15.4.3 Radionuclide Release Concerns

One of the possible reasons for retrieval is failure of the waste package, with consequent release of radionuclides. Gaseous and volatile radionuclides may be released into the emplacement hole while soluble radionuclides may be carried away by any water that is present in the emplacement hole. Removal by aqueous solution, requires the presence of water in liquid form; that is, its temperature must be less than the boiling point for the repository pressure conditions.

10.15.4.3.1 Releases into Air

The gaseous and volatile isotopes which could be released by a breached canister are hydrogen-3 (tritium), carbon-14, and krypton -85. The quantity of krypton-85 is large compared with that of either tritium or carbon-14. In addition, the carbon must be in a form that leads to volatile species upon reaction with water in order to be of concern. It is assumed that one-tenth of the krypton-85 is sufficiently near an exposed surface to be able to leave the fuel. If a breach occurs, the concentration of krypton-85 and tritium in air must not exceed 10 nCi/liter and 5 nCi/liter, respectively, in order to satisfy 10CFR20. (The MPC limits are defined in metric units. The equivalent limits in customary units, for reference, are 0.35 nCi/ft^3 and 0.18 nCi/ft^3, respectively.)

If storage hole plugs are gas-tight, release of gaseous radionuclides from a breached waste package will occur at retrieval, if the salt below the canister in the overcore barrel is fractured. Otherwise, the radionuclides will leak through the plug into the room. Even though the rooms are ventilated dilution of the radionuclides to the maximum permissible concentrations (MPCs) given in 10CFR20 could require up to several hours. During this time, personnel should not be present.

Release occurring at retrieval can be avoided by having radiation sensors in the holes. The gaseous radionuclides could then be drawn off prior to retrieval using millipore filters or a cryogenic absorption system, both of which fall within existing technology.

10.15.4.3.2 Releases into Water

With regard to the movement of radionuclides by aqueous transport, this, as previously mentioned, requires that water be in the liquid state. Since salt is impervious to water, the mechanism for water transport would be migration of a two phase brine away from the storage hole. If the brine migrated into the room, it would become casual water on the floor (puddles).

If water contacted a breached canister, the rate of dissolution would vary widely with the water composition and temperature. For a typical rate of 0.0000264 lb/day, the solution water would contain about 0.25 mCi/lb of water and one pound of this solution would generate about 0.1 mR/hr at 4 ft.

Hence water intrusion would provide a good index to failures but would provide a good index to failures but would not by itself introduce significant radiation hazards to the operations (Post, 1982).

10.15.4.3.3 Radiation Detection Standards

The radiation levels measured during retrieval operations are not exceptional so that the system standards used in the nuclear industry would prevail. Lower limits 0.1 mR/hr and upper limits of a few kR/hr and in the storage holes will be required. This system should be capable of detecting krypton-85 levels below 100 pCi/liter (2.6 pCi/ft^3)

10.15.4.4 Operational Concerns

Creep will affect canister retrieval, in that floor heave will likely be responsible for the greater part of the room closure, and as the canisters are stored in the floor their locations will shift. The orientation of the canisters may also be moved from the vertical, and creep will most likely have wedged the canisters in the hole. To avoid operational problems caused by canister shifts, the canister retrieval system should be designed to locate and overcore canisters in many different orientations.

Severe floor heave could also impede retrieval operations by interfering with the position of the retrieval equipment. Floor buckling could make equipment positioning even more difficult.

The necessity for maintenance of the main entries during the retrieval period is an operational problem that has not been addressed in any of the CDR's. The main entries must be kept open for the passage of both equipment and sufficient quantities of ventilating air for development, storage, and retrieval operations. Large creep deformations may occur because of the long time that main accesses must be kept open (at least 80 years), the potential for heating of the pillars in the main entries, and the transfer of cover load from the yielded, heated pillars in the waste storage area to the main entries. An effective maintenance program might require the full-time assignment of at least one continuous mining machine to wall, roof and floor trimming. Creep in the main entries could be minimized by isolating them from the waste storage areas with very large barrier pillars.

Normal repository operations are potentially hazardous because of the nature of the material being handled. As a result, many tests and checks are incorporated into the waste handling process. Operation bottlenecks or slow-downs that adversely affect the repository's storage rate may also occur if leaking canisters are found before being stored.

10.15.4.5 Other Concerns

A basic concern with a repository in salt is the lack of a specific site for evaluation. Upon selecting a site, further characterization of repository is required in the areas of geology, salt behavior, and corrosion potential.

Prediction of creep is a difficult problem. The in situ tests conducted at Project Salt Vault and planned for the WIPP project involve the partial heating of a single pillar over a relatively short period of time. In these tests, the effects of thermal stress and changes in pillar load due to pillar yielding and thermal expansion must be separated from the inherent effects of increased temperature on salt behavior. The separation of the two effects is difficult. In order to obtain valid testing results, future in situ heated pillar tests should be performed on a larger scale and for a longer duration.

At the elevated temperatures expected in the repository, the brine entering the annulus will, depending on composition, become vapor. Based on the inflows occurring during in situ testing, the effects of the quality and quantity of brine and brine vapor in the annulus upon the corrosion rate of the canister materials should be assessed. The canister materials should be tested with the range of brines that may be encountered in the repository.

10.15.5 Summary and Conclusions

For this conceptual design repository, bedded salt is the geologic medium. The bedded salt deposit is assumed to be in the Permian Basin at a depth of 2,000 ft. No specific repository site has yet been chosen. The repository consists of 126 waste storage rooms, two ventilation rooms, the main entries and the shaft pillar. The design peak thermal loading is 60 kW/acre. The rooms will remain open and ventilated during the retrieval period unless excessive creep makes backfilling necessary. Otherwise, backfilling will occur at permanent closure.

The retrievability requirement has the following effects on the repository systems:

- Re-excavation system - Re-excavation will only be necessary if:
    - Creep closure has reduced the room height to less than necessary for the retrieval equipment
    - Floor heave has made the room impassible
    - Roof or rib failure has occurred, leaving loose rock on the room floor.

Because ventilation will maintain low rock temperature at the skin of the opening, modifications to equipment for high temperature conditions will not be necessary.

- Equipment Systems - Retrieval requires development of a canister-locating device and an overcoring machine. To facilitate fulle retrieval, several overcoring machines should be available
- Facilities - Local retrieval may impose adverse loads on the transportation, confinement ventilation, and development mining systems

- Ventilation - Continuous ventilation of open storage rooms will require large quantities of ventilating air, and the shafts and airways will have to be enlarged to handle the additional air. Thermal analyses will be necessary to more precisely determined the air quantities that will be required

- Backfill - In this repository concept, backfill will not be required until permanent closure, unless it is necessitated earlier by excessive creep

- Thermal Effects - The most important effect of the gradual increase in repository temperatures will be to greatly magnify the creep rates of the salt. Large creep deformations can adversely affect retrievability and repository operation in three areas:

    - In the vicinity of the storage holes, where closure of the storage holes around the canisters and movement of the canisters will occur

    - In the storage rooms, where creep may cause large closures of the storage rooms necessitating remining or backfilling

    - In the main entries, where excessive creep may necessitate major maintenance, including remining, to keep entries open during the active life of the repository.

Brine migration to the stored canisters is another possible thermal effect. Brine may accelerate canister corrosion, and may also form pressurized pockets near the canisters.

- Ground control - roof buckling and pillar slabbing may cause safety problems in the storage rooms, requiring ground control. Rock bolts, steel arch canopies, or the application of Stress Control Methods developed specifically for evaporite rocks may be able to control local instability. No evidence exists that deep-seated salt creep can be controlled by any presently available ground support technique

- Instrumentation - monitoring of the open rooms should be possible. Instrumentation should be tested and proven reliable, especially for long-term, high-temperature applications.

The concerns for the repository concept are summarized as follows:

- Technological Concerns:
  - Development of an accurate canister-locating device
  - Development of a canister overcoring system capable of retrieving canisters whose location and orientation has shifted
- Safety Concerns:
  - Slabbing of salt blocks from the roof and sidewalls, possibly necessitating the use of rock bolts or steel arch canopies
  - Traffic congestion and the possibility of a collision resulting in radionuclide release
  - Steam or brine pockets encountered near the canisters during overcoring
  - The possibility of mining into a canister whose positions shifted before retrieval
- Radionuclide Release Concerns:
  - Canister breaches would result in release of gaseous hydrogen-3 (tritium), and krypton-85, and volatile carbon-14, of which the krypton-85 would have the largest concentration
  - Diluting krypton-85 to the MPC given by 10CFR20 could take up to several hours for release from a single breached waste package
  - The mechanism for release of gaseous radionuclides from the storage hole to the atmosphere could be non-gas-tight hole plugs, fractured salt in the overcore barrel and transport by migrating brine
  - A system is required for detection of krypton-85 in ventilating air and in storage holes
- Operational Concerns:
  - The possibility of large creep deformations occurring in the storage rooms before retrieval caused by the elevated temperature of the salt, resulting in remining or early backfilling

  - Shifted locations of canisters

  - Difficulties in maneuvering and positioning retrieval equipment due to floor heave and buckling

  - Difficulties in maintaining the main entries in a passable condition for the 80 year life of the repository

- Other Concerns:

  - Geologic and hydrogeologic uncertainties

  - Prediction of creep behavior of salt on a repository scale at elevated temperatures

  - Effect of brine migration on canister corrosion.

In conclusion, compliance with the retrieval requirement cannot be guaranteed at present for a waste repository in bedded salt. Large uncertainties exist about the creep behavior of salt, especially at elevated temperatures, and the open and ventilated rooms concept discussed may not be feasible if creep rates are high. A large-scale testing program, including long-duration in situ heated pillar tests, will be necessary to determine if the creep closures that will occur during the retrieval period will be acceptable. Thermal simulations to predict the temperatures of the wall rock with continuous ventilation will also be necessary.

If creep closures can be shown not to be excessive, retrieval should be possible. Little remining will be required, and high temperature operations will not be necessary. Effective monitoring should be feasible, and currently available ground control techniques should be able to provide safe retrieval conditions. Less important questions will remain, including the possible effects of brine migration on canister corrosion, and on safety during retrieval.

NRC FORM 335
(11-81)

U.S. NUCLEAR REGULATORY COMMISSION

BIBLIOGRAPHIC DATA SHEET

1. REPORT NUMBER *(Assigned by DDC)*
NUREG/CR-3489
EI-1077

4. TITLE AND SUBTITLE *(Add Volume No., if appropriate)*
Assessment of Retrievel Alternatives for the Geologic Disposal of Nuclear Waste

2. *(Leave blank)*

3. RECIPIENT'S ACCESSION NO.

7. AUTHOR(S)
F.S. Kendorski, D.F. Hambley, and P.L. Wilkey

5. DATE REPORT COMPLETED

MONTH	YEAR
April	1984

9. PERFORMING ORGANIZATION NAME AND MAILING ADDRESS *(Include Zip Code)*

Engineers International, Inc.
98 E. Naperville Rd.
Westmont, IL 60559

DATE REPORT ISSUED

MONTH	YEAR
May	1984

6. *(Leave blank)*

8. *(Leave blank)*

12. SPONSORING ORGANIZATION NAME AND MAILING ADDRESS *(Include Zip Code)*

Division of Waste Management
Office of Nuclear Material Safety and Safeguards
U.S. Nuclear Regulatory Commission
Washington, DC 20555

10. PROJECT/TASK/WORK UNIT NO.
Task 1

11. FIN NO.
NRC B-7327-2

13. TYPE OF REPORT
Technical Assistance (formal)

PERIOD COVERED *(Inclusive dates)*
January, 1982 to August, 1983

15. SUPPLEMENTARY NOTES

14. *(Leave blank)*

16. ABSTRACT *(200 words or less)*

Currently, the most feasible alternative for permanent disposal of high level nuclear waste is storage in deep underground repositories in geologic media. Uncertainties in investigation, design and construction necessitate maintaining the retrieval option until the isolation is proven likely. Investigations were limited to concepts in geologic media currently being investigated by DOE. Retrieval in most concepts is not a simple reversal of waste emplacement. This study identified several concerns. Technological concerns are associated with remining and monitoring radioactivity in backfilled storage rooms and retrieval of breached canisters. Retrieval systems currently incorporated into DOE designs were found inadequate for handling breached canisters or those bound in the storage holes. Short holes containing single canisters could be overcored but equipment must be developed to overcore large diameter holes. Safety concerns common to all repository concepts are protection of personnel from heat, traffic congestion, and deterioration of ground support. Concerns on radionuclide release were the radiation and radionuclides which would be released into the air and water present in a storage room if there were a canister breach. The confinement ventilation circuit airflows provided in the DOE conceptual designs are just adequate for retrieval and are inadequate for retrieval from backfilled rooms.

17. KEY WORDS AND DOCUMENT ANALYSIS

17a. DESCRIPTORS

Nuclear waste
Geologic Disposal
Retrieval
Safety
Ventilation
Backfill

17b. IDENTIFIERS/OPEN-ENDED TERMS

18. AVAILABILITY STATEMENT
Unlimited

19. SECURITY CLASS *(This report)*
Unclassified

20. SECURITY CLASS *(This page)*
Unclassified

21. NO. OF PAGES
656

22. PRICE
$

UNITED STATES
NUCLEAR REGULATORY COMMISSION
WASHINGTON, D.C. 20555

OFFICIAL BUSINESS
PENALTY FOR PRIVATE USE, $300

120555078877 1 IAN1CH
US NRC
ADM-DIV OF TIDC
POLICY & PUB MGT BR-PDR NUREG
W-501
WASHINGTON DC 20555