ATTACHMENT 6

Consumers Power Company
Palisades Plant
Docket 50-255

PROCEDURE FOR APPLICATION AND EXAMINATION OF WELD OVERLAY REPAIRS TO AUSTENITIC STAINLESS STEEL PIPING SYSTEMS

March 6, 1994

VECTRA

0054-00101-001-101
Revision 0
0054.00101.001.101

PROCEDURE FOR APPLICATION AND EXAMINATION OF WELD OVERLAY REPAIRS TO AUSTENITIC STAINLESS STEEL PIPING SYSTEMS

PALISADES NUCLEAR PLANT

Prepared for:

Consumers Power Company

Prepared by:

VECTRA

Approved by:

Carl H. Froehlich

C. H. Froehlich, P.E.
Engineering Manager

Issued by:

James A. Bom
for D.L. Jones
Project Manager

Date: 3-4-94

REVISION CONTROL SHEET

TITLE: Procedure for Application and Examination of Weld Overlay Repairs to Austenitic Stainless Steel Piping Systems (0054-00101-001-101)

DOC. FILE NO.: 0054.00101.001.101

NAME/TITLE	INITIALS
Carl H. Froehlich / Staff Engineer	CHF
Christopher J. Johns / Senior Consultant	CJJ
James A. Brown / Staff Engineer	JB

AFFECTED PAGE(S)	DOC. REV.	PREPARED BY/DATE	ACCURACY CHECK BY/DATE	CRITERIA CHECK BY/DATE	REMARKS
iii & iv	0	CHF 3/4/94	3-4-94/CJJ	JB 3/4/94	Initial issue for use.
1 - 18	0		CJJ/3-4-94		
A.0	0		CJJ/3-4-94		
B.0	0		CJJ/3-4-94		
C.0 - C.7	0	CHF 3/4/94	CJJ/3-4-94	JB 3/4/94	

Page 1 of 1

TABLE OF CONTENTS

TABLE OF CONTENTS
(Concluded)

LIST OF FIGURES

1.0 SCOPE

1.1 The instructions contained in this detailed procedure pertain to the application and examination of weld metal overlays, deposited by machine and manual welding processes, applied to austenitic stainless steel piping system components and weldments.

1.2 A weld overlay is designed for each specific location based on flaw configuration, sizing, geometry, and applied stresses. Weld overlay width, thickness and contours shall be per the appropriate design.

1.3 This procedure implements the requirements of the applicable portions of American Society of Mechanical Engineers (ASME) Boiler and Pressure Vessel Code (BPVC) Sections II, III, V, IX, and XI and Code Case N-504-1 referenced in the ASME Section XI Repair Program for the workscope.

2.0 OVERLAY WELDING REQUIREMENTS

2.1 This procedure applies to the application of weld overlay repairs to P No. 8, Group No. 1 stainless steel piping components using machine and manual Gas Tungsten Arc Welding (GTAW) and Shielded Metal Arc Welding (SMAW) processes.

2.2 Filler metal shall be 308L or 309L per Section 5.0 of this procedure and in accordance with the applicable Welding Procedure Specifications (WPSs).

2.3 The weld overlay shall be per a design drawing. Dimensional requirements listed on the drawing must be met. These requirements shall include:

a. Minimum design width
b. Minimum design thickness
c. Edge contours
d. Overlay placement
e. Thickness of individual layers, or number of layers specified for the overlay. Unless otherwise stated on the design drawing, each filler layer should have a minimum thickness of 0.050 inch and shall have a maximum thickness of 0.160 inch. The cap layer may be less than 0.050 inch thick.

These requirements may also include a maximum design thickness for the weld overlay.

2.4 The minimum allowable preheat temperature shall be 40°F.

2.5 The maximum allowable interpass temperature shall be 212°F. This requirement is important to assure that the pipe being welded is filled with water. If this temperature is exceeded, welding shall not continue until measures have been taken to assure this requirement is met.

2.6 Post weld heat treatment is not permitted for weld overlays.

2.7 The shielding gas shall be argon of welding grade or better. For machine GTAW, 25 to 50 standard cubic feet per hour (SCFH) flow rates have been shown to be effective. For manual GTAW, a reduction of the flow rate to 20 SCFH has also been shown to be effective.

2.8 Overlays shall be applied using direct current. A heat input range of 18 - 28 Kjoule/inch of circumference shall be used in the application of at least the first two layers of the overlay repair.

2.9 The final welded surface of the overlay shall be suitable for liquid penetrant and ultrasonic examination. This is most readily achieved by applying a carefully controlled cap layer. If surface conditioning is required, VECTRA Document No. 0054-00101-001-102 (Reference 1) provides recommended techniques.

2.10 Initial and interpass cleaning shall be accomplished using plant/station-approved non-halogen bearing solvents and stainless steel brushes.

2.11 Peening is not permitted unless used in a repair as described in Section 10.0.

3.0 WPS QUALIFICATION

All welding done under this procedure shall be performed using WPSs qualified to the requirements of ASME Sections IX and XI (see Paragraph 1.3).

4.0 WELDER AND WELDING OPERATOR QUALIFICATION

4.1 This section defines the Code and special process requirements for the qualification of welders and welding operators. Welder and welding operator qualifications shall meet the detailed requirements of ASME Sections IX and XI (see Paragraph 1.3).

4.2 During qualification welding, the welder or welding operator shall have access to, and weld in accordance with an approved WPS.

a. Welding variables may be selected and modified at the operator's discretion providing that all welding controls and adjustments are within the prescribed variables of the WPS.

b. The interpass temperature and waterbacking requirements of this welding procedure can be eliminated during qualification welding.

c. If remote welding is required to perform repair, welding operator qualification shall be conducted remotely using video capabilities.

d. If all of the weldments to receive a WOR are in the same position, this position may be used for welder and welding operator qualification. If not, welder and welding operator qualification shall be conducted in the 6G position (axis of pipe 45° above horizontal).

4.3 Figure 4.3-1 illustrates a test assembly that could be used for the qualification of welder and welding operators. Inert gas backing is not required while filling the groove in this test coupon during GTAW. Test coupons may be of any convenient length and more than one groove may be machined into each test coupon. Coupon material may be either P-1 or P-8.

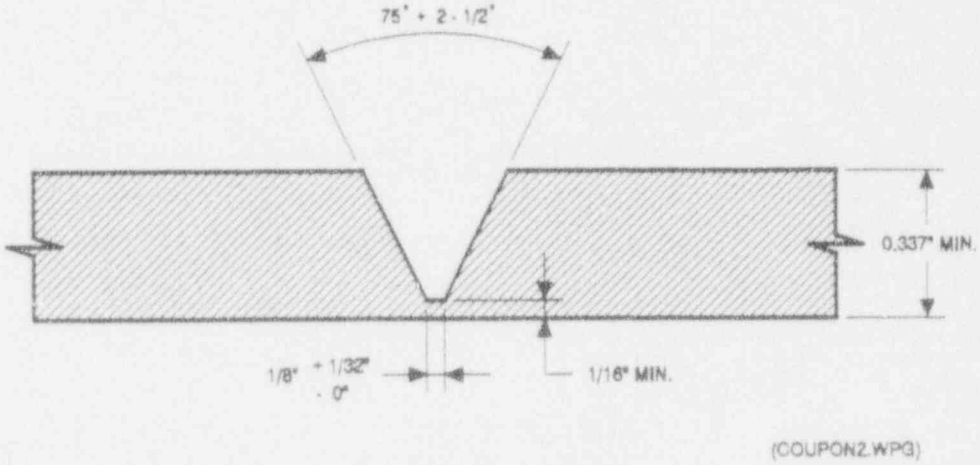

Figure 4.3-1

QUALIFICATION TEST ASSEMBLY DETAILS

5.0 WELDING FILLER MATERIALS

5.1 Welding filler materials used to deposit weld overlays on the outside diameter of pipe welds in austenitic stainless steel piping systems shall comply with plant/station approved procurement procedures. VECTRA Document No. 0054-00101-001-103 (Reference 2) provides recommended technical and quality requirements.

5.2 In-process control of welding filler materials shall be in accordance with a plant/station or plant/station-approved contractor procedure.

6.0 OVERLAY LAYOUT

6.1 All tools, devices, and miscellaneous materials that come in contact with stainless steel piping components shall be accepted by the plant/station.

a. Grinding materials shall consist of alumina or silicon carbide.

b. Air tool lines shall have adequately maintained oil and water separators to prevent contamination by oil or moisture.

c. Only plant/station-approved materials (such as cleaning materials, decontamination materials, tape, markers, and liquid penetrant materials) are permitted to contact the pipe surface or allowed within the Radiological Control Area (RCA).

d. Wire brushes shall be stainless steel.

e. Cleaning of stainless steel weld metal or base metal shall be performed using uncontaminated brushes, files, or grinding discs and wheels.

6.2 The base metal and weld metal surfaces to be overlayed shall be lightly polished with flapping wheels or their equivalent to remove surface oxides and other foreign materials that could cause subsequent welding difficulties. The plant/station shall be consulted at this time for the need to preserve information stamped or engraved in the pipe surface such as heat numbers, code stamps, or RT location markers.

a. Liquid penetrant examination (PT) of surfaces to be overlayed is required prior to welding (see Section 7.0).

b. It is not necessary to completely remove and replace base material containing flaws. Through-wall cracks shall be seal welded. VECTRA Document No. 0054-00101-001-104 (Reference 3) provides recommended techniques for manual GTAW and/or SMAW processes to ensure a defect-free overlay in the area. Repairs may be made on water-filled components, however it is recommended that the system be drained and dried to increase the chances for success.

6.3 As applicable, locate and identify the area to be overlay welded. When base metal and weld metal are indistinguishable, it may be necessary to define their interface with a magnetic measuring device or by acid etching. Preference to magnetic techniques shall be given to avoid the potential for crevice contamination which is inherent in the acid etching technique. Before use of any acid etching technique, all chemicals shall be approved for use by the plant/station Chemistry Department.

6.4 If not already in place, a series of punchmarks shall be placed on the piping components to be overlayed per a VECTRA Weld Overlay Data Sheet (Appendix A). The boundary marks define the outer boundaries of the overlay, and the witness marks serve as datums for pre-overlay/post-overlay shrinkage measurements.

Punch marks shall preferably be made with round-nose centerpunches. Punchmarks should be carefully placed in the patterns described below so their detection and interpretation will be possible through the welding machine's optics system. Marks may alternatively be made using a vibra etch.

The following sequence is recommended:

a. The existing groove weld centerline should be single centerpunched at four locations evenly spaced around the pipe. At existing overlays, this centerline location can be determined from records made during the welding of the original overlay.

b. At each of these four azimuthal locations lay out and punch the upstream and downstream boundary marks in accordance with the Weld Overlay Data Sheet. (**NOTE**: *The sketches accompanying the overlay design information may specify only the full-thickness length of the overlay. The boundary marks must be placed to provide for sloping end tapers in addition to the design lengths.*) Boundary marks shall consist of three circumferential punchmarks at each location as shown in Figure 6.4-1.

c. Witness marks are then punched onto each axial line outside of each pair of boundary marks. Witness marks shall be approximately one inch outboard (away from the original butt weld) from the corresponding boundary marks as shown in Figure 6.4-1.

d. In the event that a boundary mark or witness mark is incorrectly placed, it should be "punched out" to alert welding operators to ignore it as shown in Figure 6.4-1.

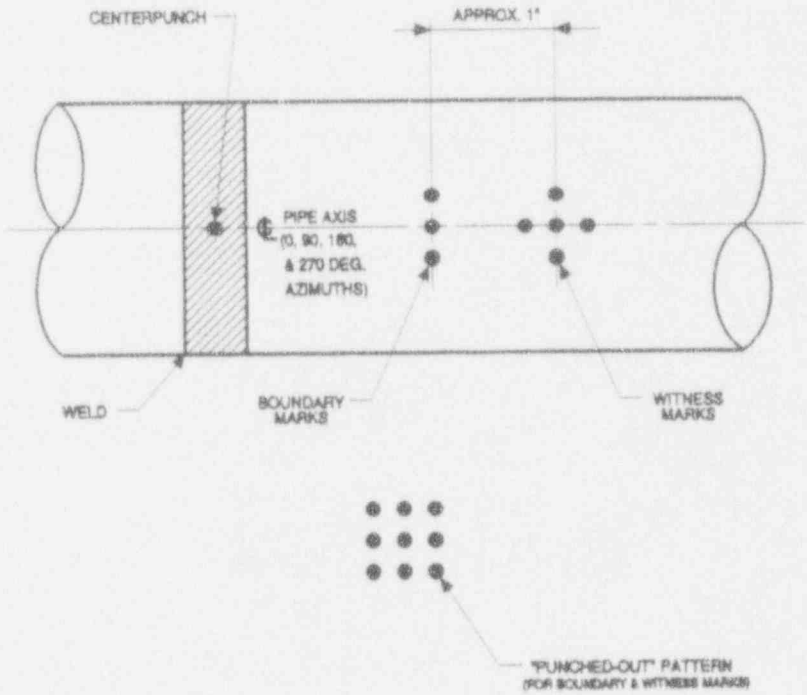

(PUNCH.WPG)

Figure 6.4-1

WELD OVERLAY PUNCHMARK LAYOUT

7.0 IN-PROCESS NONDESTRUCTIVE EXAMINATION/MEASUREMENT REQUIREMENTS AND ACCEPTANCE CRITERIA

7.1 Pre-overlay Liquid Penetrant Examination

Liquid penetrant (PT) examination of the surfaces to be welded, including 1" on either side of this area, is required prior to the application of any weld overlays.

a. Prior to the PT examination, the surface shall be lightly polished (see Paragraph 6.2). Any geometric condition which might trap the liquid penetrant materials and cause irrelevant indications shall also be eliminated and, if required, repaired at this time.

b. The PT examination shall be performed in accordance with a plant/station-approved liquid penetrant procedure which meets the requirements of ASME Sections V and XI (see Paragraph 1.3).

c. Any liquid penetrant indications in the overlay area shall be repaired prior to application of the weld overlay. The acceptable repair methods are:

1. For indications which are the result of geometric conditions (e.g., overlap, undercut, grinding marks and scratches), the indication can be removed by grinding prior to weld overlay application. No welding of the ground cavity is required.

2. For any linear indication, regardless of length, and for any rounded indication in the overlay region, plant/station or plant/station-approved contractor repair procedures shall be used. VECTRA Document No. 0054-00101-001-104 (Reference 3) provides recommended techniques for the repair of these indications.

Liquid penetrant indications outside of the overlay area shall be addressed per ASME Section XI requirements.

d. After any repairs, the area to be weld overlayed, including one-inch on either side, shall be liquid penetrant examined and re-repaired, if required, until found acceptable.

Alternatively, a "sacrificial" first layer may be applied to the existing pipe surface prior to the initial PT examination. This layer shall not be included in the final weld overlay repair design thickness.

7.2 Axial Shrinkage Measurement

Measurements shall be taken of the distance between the central punchmarks of each azimuthal set of witness marks before welding begins, and after the overlay is complete (see Weld Overlay Data Sheet dimension "C" in Appendix A).

a. Measurements shall be made to the greatest accuracy permitted by field conditions. In the event that clearance is insufficient to allow a dial caliper to make the measurements, point dividers and a scale may be used.

b. Shrinkage data shall be recorded on the Weld Overlay Data Sheet.

7.3 Thickness Measurement

Ultrasonic measurements of the pipe wall thickness shall be taken prior to overlay welding and of the pipe wall plus any low delta ferrite layer(s). These measurements shall be compared to measurements taken at the completion of welding and grinding to determine overlay thickness. Care shall be taken to assure that final measurements are taken in the same location as were the original measurements.

a. Only calibrated equipment and appropriately certified personnel may be employed to take these measurements. Thicknesses shall be determined to an accuracy of 0.05 inch.

b. As permitted by the phsical geometry of a weldment, thickness measurements shall be taken approximately 1/2-inch (see dimensions E1 and E2 on the Weld Overlay Data Sheet) inboard from the overlay shoulders. This distance may be modified as required if that area is found to coincide with internal counterbore transition ramps.

c. Whenever possible, upstream and downstream thickness measurements shall be recorded on the Weld Overlay Data Sheet.

d. Alternatively, templates and/or contour gauges may be used to determine the overlay thickness.

7.4 Workmanship Visual Inspection

Each layer shall be visually inspected by the welder or welding operator for defects and bead shape prior to starting the next layer. Porosity, lack of fusion, cracks, and other defects shall be removed by grinding prior to depositing the next pass in that area. Visual inspection may be by video for all layers.

7.5 Delta Ferrite Measurement

Delta ferrite measurements are required to be made after the completion of each of the first two design layers of an overlay. A Severn gage may be used for this purpose. If a Severn gage is used, VECTRA Document No. 0054-00101-001-105 (Reference 4) provides recommended techniques for delta ferrite measurement.

a. The measuring device shall be checked for calibration and operability prior to each use.

b. Measurement data shall be entered on the Weld Overlay Data Sheet.

c. In the interest of reducing radiation exposure when applicable, it is not necessary to closely determine ferrite content of the overlay. It is only required to determine that ferrite content is greater than 7.5FN and less than 20FN. The use of intermediate reference standards such as 10FN, 12.5FN, etc. is not required.

d. If the ferrite content is less than 7.5FN, the ferrite content shall be measured using 2.5FN and 5.0FN reference standards. With this additional data, the weld overlay repair design organization shall be contacted immediately for resolution. Welding

of the next layer may proceed during this resolution, but a ferrite measurement of this layer may be required in addition to an increase in the weld overlay repair design thickness.

e. If the ferrite content is greater than 20FN, plant/station or contractor quality control personnel shall confirm that the filler metal used in the welding of the first layer complies with the material requirements of Section 5.0.

7.6 First Layer Liquid Penetrant Examination

The first layer of a weld overlay repair (this may be a "sacrificial" layer) shall be PT examined per the requirements of Paragraph 7.1. Informational PT checks to identify and remove superficial surface indications prior to the record PT examination are permitted, but shall comply with the requirements of Paragraph 7.1(b).

8.0 WELDING INSTRUCTIONS AND TECHNIQUE

8.1 Overlay welds shall be suitably protected from drafts, water, and any other condition that might interfere with the welding operation or degrade the overlay.

8.2 All welding shall be conducted within the specified ranges of essential and non-essential variables listed in the welding procedure specification and this procedure.

a. For machine welding, upslope and downslope time, torch angle, pre- and post-purge time, and automatic voltage control response shall be as directed by the welding supervisor or his designee.

b. Only circumferential welding is permitted. There shall be no block welding, however, partial stripper passes are permitted to yield a uniform overlay surface.

c. Weld starts and stops should be staggered between layers.

d. For machine welding, sync-pulse or pulse arc welds shall be used.

e. Each layer of overlay shall consist of parallel, overlapping, circumferential beads.

f. The surface to be overlayed and 1/2-inch of adjacent metal surface shall be clean and dry before welding begins. Wipe with clean lint-free cloth and acetone or their equivalent.

8.3 All overlays shall be applied to waterfilled piping systems. There is no specified minimum flow rate.

a. Preheat shall be confirmed prior to welding. Interpass temperatures shall be measured for the first three passes of welding. If these datums indicate that the temperature ranges are not exceeded, monitoring may continue on a surveillance basis.

b. Temperature indicating crayons (temp. sticks), pyrometers, or thermocouples may be used to determine that the joint does not exceed a 212°F maximum interpass temperature.

c. On production welds in the 5G and 6G positions, interpass temperatures shall be measured at the top of the joint. The interpass temperatures of all other joints shall be measured near the start/stop tie-in of the previous pass immediately before welding begins.

8.4 Remote welding shall not be conducted unless the panoramic camera is operable or an observer is in direct communication with the welding operator to reduce the possibility of an undetected fire.

8.5 Weld each pass around the entire pipe circumference before starting the next pass. Each layer must be completed before the next layer is started. Individual "stripper" passes may be used to fill in low areas to achieve a more acceptable contour.

8.6 The overlay welds shall extend to and cover the overlay boundary marks. Care shall be taken to produce a smooth transition at the toes of the overlay unless prevented by the contour geometry of the piping components being repaired.

8.7 All overlay layers are to be deposited using the same nominal welding parameters that are found to produce adequate fusion and smooth surface contour. In some cases it may be desirable to adjust the parameters for the final layer to produce an optimum finish and contour.

8.8 Welding operators should maintain a bead-by-bead log. The log should reflect welder's symbol, weld number, time, date, bead number, layer number, and significant in-process events that occur. Appendix B presents a typical welding operator log.

8.9 Irregular piping geometries may cause the need to tack weld the track feet to pressure boundary items.

9.0 FINAL NONDESTRUCTIVE EXAMINATION/MEASUREMENT REQUIREMENTS AND ACCEPTANCE CRITERIA

9.1 Final Surface Condition

The completed overlay surface shall be suitable for liquid penetrant and ultrasonic examinations.

a. As-welded surfaces are permitted provided that the surface finish and contour are approximately equivalent to that of the plant/station ultrasonic calibration block to be used and are acceptable to the plant/station-designated examiners. VECTRA Document No. 0054-00101-001-102 (Reference 1) provides recommended surface conditioning techniques.

b. If grinding is required, care shall be used so as not to reduce the overlay or base metal below the minimum thickness specified.

c. Undercuts at the toes of the overlay shall not exceed 1/32 inch and shall not encroach on the required section thickness.

d. The transition between overlay weld metal and base metal shall be 45° or less from the pipe surface. This angle may vary as dictated by the component contour.

9.2 Overlay Geometry Check

The completed overlay shall meet the width requirements specified in the design sketch, as a minimum.

a. A minimum of two measurements shall be made to determine the overlay width. These measurements shall be made to an accuracy of 0.1 inch.

b. The width shall be determined at the overlay's design thickness as shown in Figure 9.2-1.

c. New overlays on unoverlayed pipe shall completely cover the punched boundary marks, but shall not obliterate the witness marks.

9.3 Axial Shrinkage Measurement

The completed overlay shall be measured for axial shrinkage as discussed in Paragraph 7.2.

9.4 Thickness Measurement

The completed overlay shall meet the thickness specified in the design drawing. Thicknesses shall be determined ultrasonically and/or measured in the immediate vicinity of the initial thickness measurements as discussed in Paragraph 7.3.

9.5 Liquid Penetrant Examination

The completed overlay shall be liquid penetrant examined. Liquid penetrant examination acceptance criteria shall be in accordance with a plant/station-approved PT procedure and the requirements of ASME Section XI (see Paragraph 1.3).

9.6 Volumetric UT Examination

The completed overlay shall be volumetrically examined in accordance with a plant/station-approved UT procedure. Weld metal defects detected by the ISI baseline volumetric examination shall be evaluated per the requirements of ASME BPVC Section XI, Paragraph IWB-3514. Any required defect repairs shall be corrected as described in Section 10.0.

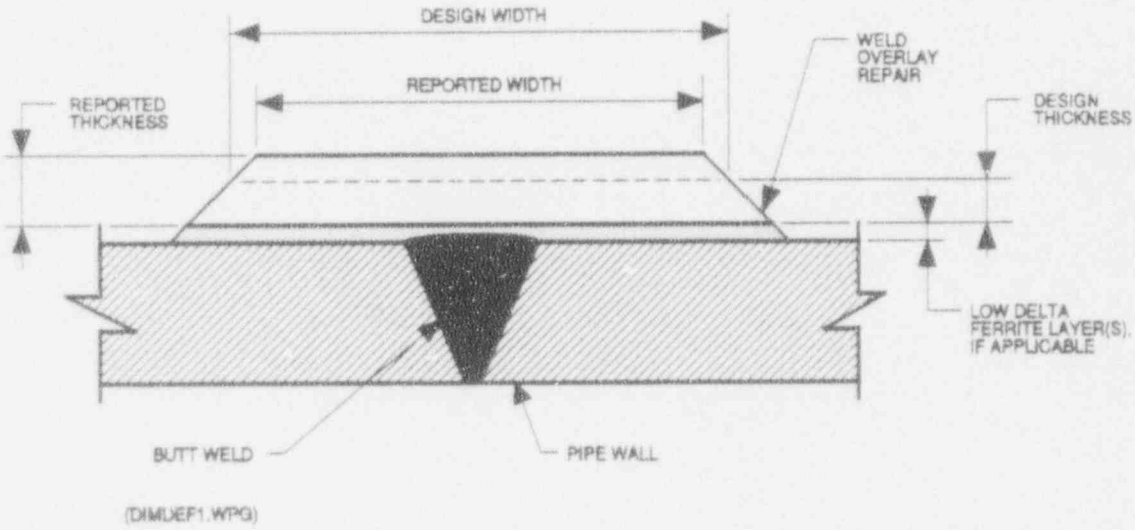

Figure 9.2-1

OVERLAY WIDTH VERSUS DESIGN THICKNESS

10.0 OVERLAY REPAIRS

10.1 Occasionally during welding of overlays, "steam blowouts" will occur. Blowouts are attributed to through-wall or nearly through-wall flaws. Immediately after observing a blowout or a suspected blowout:

a. Stop the welding machine.

b. Visually examine the welding head and optics system (if used) for damage and make necessary repairs or adjustments to return the equipment to operability.

c. Advance the welding head approximately one-half inch and resume welding to complete that bead.

d. Continue welding the layer to completion following the first three steps above in the event that other blowouts are encountered. A weld map showing the length, orientation and exact location of all blowouts shall be attached to the overlay traveler. VECTRA Document No. 0054-00101-001-104 (Reference 3) provides a recommended reporting format.

e. Repairs shall be made at the completion of the layer. VECTRA Document No. 0054-00101-001-104 provides recommended repair techniques.

10.2 Final overlay surfaces not acceptable in terms of smoothness, uniformity, or contour shall be corrected by machining or grinding. Extreme care shall be taken to prevent reduction of overall overlay thickness beyond its specified minimum value. Alternatively, low areas may be built up by local additions of weld metal by SMAW, manual GTAW, or machine GTAW welding to attain the required uniformity and contour.

10.3 Weld metal defects detected by the ISI baseline volumetric examination or by the final liquid penetrant examination shall be evaluated per the requirements of ASME BPVC Section XI, Paragraph IWB-3514. Any required defect repairs shall be corrected as described in the following steps:

a. The defect shall be removed by incremental grinding. Removal shall be verified by visual inspection. Excavation may only extend into the base metal a maximum distance of 1/4-inch. Excavations that extend into the base metal shall be repaired and examined. VECTRA Document No. 0054-00101-001-104 provides recommended repair techniques.

b. The excavation shall be filled flush with the surrounding area. Subsequent to repair welding, the final ground surface, or welded and ground surface, shall blend uniformly into the surrounding surface.

c. The final surface of weld metal repairs shall be examined by the liquid penetrant method.

11.0 EXAMINATION PERSONNEL QUALIFICATIONS

11.1 All personnel performing PT examination and UT thickness measurement shall be qualified in accordance with ASME Section XI (see Paragraph 1.3).

11.2 All personnel performing axial shrinkage and delta ferrite measurement shall be qualified in accordance with plant/station or plant/station-approved contractor quality control requirements.

12.0 DOCUMENTATION

12.1 A work package shall be prepared and used for each weld overlay repair. A process control traveler should be the primary work control document. The overlay traveler lists in sequence the steps required to layout, weld, and verify proper work control of weld metal overlays. Appendix C contains a work sequence for the implementation of a weld overlay repair.

12.2 The process control traveler(s) shall remain in the console area while welding is in progress. A controlled copy of the weld overlay repair technical specification (this document) shall always be in the console area for reference.

13.0 REFERENCES

1. VECTRA Document No. 0054-00101-001-102, "Weld Overlay Surface Conditioning Requirements," Revision 0.

2. VECTRA Document No. 0054-00101-001-103, "Filler Metal Procurement Specification for Austenitic Stainless Steel Weld Overlay Repairs," Revision 0.

3. VECTRA Document No. 0054-00101-001-104, "Procedure for Leak or Steam Blow-out/Defect Repair of Weld Overlay Repaired Piping Components", Revision 0.

4. VECTRA Document No. 0054-00101-001-105, "Delta Ferrite Determination Procedure," Revision 0.

Appendix A

TYPICAL WELD OVERLAY DATA SHEET
(Page 1 of 1)

VECTRA

WELD OVERLAY DATA SHEET

WELDMENT NO.: _____

Trav. No.: _____

File No.: _____

Page _____ of _____

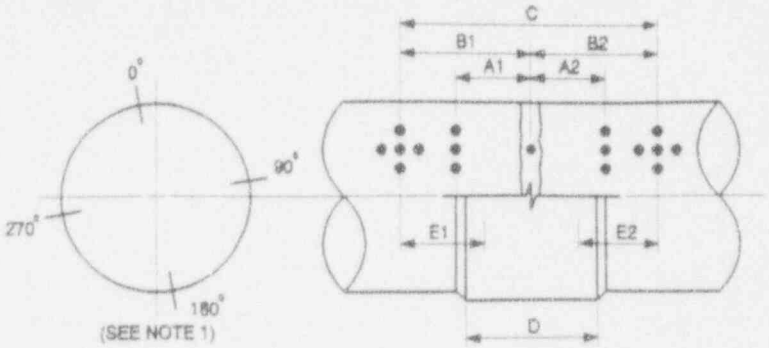

UPSTREAM COMPONENT

DOWNSTREAM COMPONENT

DESIGN DIMENSIONS	A1	A2	B1	B2	C	D	E1	E2	THK. UPSTREAM	THK. DOWNSTREAM

PREPARED BY _____ DATE _____ CHECKED BY _____ DATE _____

Define 0° location: _____

NOTES

1. Azimuths are read clockwise looking in direction of flow.
2. Overlay thickness = total thickness - (pipe wall + low delta ferrite layer(s) thicknesses).
3. C = shrinkage measurements taken after punchmarks are located on pipe. "C" does not equal B1 + B2 for curved segments.
4. D = width of overlay at design thickness.
5. E1 and E2 should be to a point approx. 1/2" inboard of overlay shoulder.
6. If first and second layer delta ferrite are acceptable, UT thickness checks of these layers are not required.

DELTA FERRITE MEASUREMENTS (5)		E1	E2
AFTER FIRST DESIGN LAYER	0		
	90		
	180		
	270		
AFTER SECOND DESIGN LAYER	0		
	90		
	180		
	270		

Record Calibrated Instrument Numbers(s) for Thickness Measurements:	
BEFORE OVERLAY	
AFTER 1ST OR 2ND LAYER	
AFTER OVERLAY	
Record Calibrated Instrument Number(s) for Shrinkage Measurements:	
BEFORE OVERLAY	
AFTER OVERLAY	
Record Calibrated Instrument Number(s) for Delta Ferrite Measurement(s):	
AFTER 1ST DESIGN LAYER	
AFTER 2ND DESIGN LAYER	

AS-BUILT DIM.		A1	A2	B1	B2	C	D	THK. UPSTRM.	THK. DNSTRM.
BEFORE OVERLAY	0								
	90								
	180								
	270								
AFTER 1ST OR 2ND LOW FERRITE LAYER	0								
	90								
	180								
	270								
AFTER OVERLAY	0								
	90								
	180								
	270								

AVERAGE SHRINK. (3):	AVERAGE WIDTH (4):	AVERAGE THK. UPSTRM. (2):	AVERAGE THK. DNSTRM. (2):

PREPARED BY _____ DATE _____ CHECKED BY _____ DATE _____

Appendix B

TYPICAL WELDING OPERATOR LOG
(Page 1 of 1)

VECTRA

WELDING OPERATOR LOG

WELDMENT NO.: ____________________

Trav. No.: ____________

File No.: ____________

Page ______ of ______

LAYER NO.:

WELD POSITION:

SLIDE MOVEMENT:

PASS NO.	DATE	START TIME	START POS.	DIRECTION (CW/CCW)*	FILLER METAL HEAT NO.	OPERATOR I.D.	SLIDE SPACING	PARAMETER SHEET I.D.	WIRE FEED RATE	INFORMATION

NOTES:

* Clockwise (CW) / Counter-Clockwise (CCW) as viewed looking downstream.

ABBREVIATIONS

T = tungsten change
W = wire change
B = blow-out
M = machine maintenance
VV = VCR tape change
V = VCR tape start or stop
QC = QC or NDE Check

Appendix C

TYPICAL WELD OVERLAY REPAIR IMPLEMENTATION SEQUENCE

If applicable, obtain ANII sign-off indicating AIA traveler review.

1.0 WELD IDENTIFICATION

1.1 Identify weld and any interferences.

1.2 Install scaffolding/lights and remove insulation.

1.3 Remove interferences.

1.4 Remove weld I.D. bands, markings, etc. in the WOR area.

1.5 Blend any nicks or high spots in the WOR area and assure clean metal (e.g. remove oxides, etc.)

1.6 Blend existing weld crown edges as necessary for proper weld fusion.

2.0 WOR LAYOUT/INITIAL NDE

2.1 Mark pipe per Weld Overlay Data Sheet (WODS) with overlay boundary and shrinkage marks.

2.2 Verify overlay boundary marks and shrinkage marks and record dimensions "A1", "A2", "B1", "B2", and "C" on the WODS.

2.3 Liquid penetrant (PT) examine pipe surface.

2.4 Sealweld through-wall cracks (see VECTRA Document No. 0054-00101-001-104 for recommended techniques).

2.5 Measure pipe thickness at locations shown on WODS using ultrasonic examination (UT). Record thickness data on WODS.

3.0 TRACK SET-UP

3.1 Mount welding machine track and head on the pipe.

3.2 Verify weld filler metal is ER308L or ER309L per approved Welding Procedure Specification and record Heat Number on Welding Operator Log.

NOTE 1: The Heat Number of each spool of filler metal should be checked at time of issuance.

3.3 Verify pipe is filled with water (call control room to verify).

NOTE 2: Water **flow** inside pipe is not required.

4.0 **LAYER NO. 1**

4.1 Verify that the welding machine settings are within the limits of the approved Welding Technique Sheet and verify preheat per Step No. 3.2 WPS.

4.2 Weld Pass No. 1 of Layer No. 1.

4.3 Within 5 minutes after completing Pass No. 1, measure pipe temperature with a 200°F temp. stick approximately 1" from edge of bead.

NOTE 3: If temp. stick melts, check with Station to confirm water level. If temp. stick does not melt, continue with the next step.

4.4 Weld Pass No. 2 of Layer No. 1.

4.5 Within 5 minutes after completing Pass No. 2, measure pipe temperature with a 200°F temp. stick approx. 1" from edge of bead (NOTE 3 applies).

4.6 Weld Pass No. 3 of Layer No. 1.

4.7 Within 5 minutes after completing Pass No. 3, measure pipe temperature with a 200°F temp. stick approx. 1" from edge of bead (NOTE 3 applies).

4.8 Complete welding Layer No. 1.

4.9 Welding operator visually inspect Layer No. 1. Porosity, lack of fusion, cracks, surface oxides, and other conditions that would be detrimental to subsequent WOR layers are not permitted and shall be removed prior to proceeding.

4.10 Verify width of Layer No. 1 will meet design width.

4.11 Grind/flap Layer No. 1 surface as required for PT examination.

4.12 PT examine Layer No. 1.

4.13 Record location of all "steam blow-outs" on a weld map.

NOTE 4: VECTRA Document No. 0054-00101-001-104 provides recommended techniques for "steam blow-out" repairs.

4.14 Repair "steam blow-outs".

4.15 Measure ferrite content of Layer No. 1 (VECTRA Document No. 0054-00101-001-105 provides recommended techniques). Record data on WODS.

4.16 If ferrite content is acceptable, proceed to Step No. 5.1.

4.17 Prepare overlay surface for UT thickness measurement.

4.18 Measure pipe wall plus deposited metal thickness at locations shown on WODS using UT. Record thickness data on the WODS.

4.19 Verify weld filler metal if ER308L or ER309L per approved WPS and record Heat Number on Welding Operator Log.

4.20 Weld new Layer No. 1 (NOTE 2 applies).

4.21 Record location of all "steam blow-outs" on a weld map. Go to NOTE 4.

4.22 Welding operator visually inspect new Layer No. 1 surface (the surface conditions stated in Step No. 4.9 apply).

4.23 Measure ferrite content on new Layer No. 1 (VECTRA Document No. 0054-00101-001-105 provides recommended techniques). Record data on WODS.

4.24 If ferrite content is unacceptable, go to Step No. 4.17. If ferrite content is acceptable, proceed to Step No. 5.1.

5.0 LAYER NO. 2

5.1 Verify weld filler metal is ER308L or ER309L per approved WPS and record Heat Number on Weld Operator Log (NOTE 1 applies).

5.2 Weld Layer No. 2 (NOTE 4 applies).

5.3 Welding operator visually inspect Layer No. 2 surface (the surface conditions stated in Step No. 4.9 apply).

5.4 Measure ferrite content of Layer No. 2 (VECTRA Document No. 0054-00101-001-105 provides recommended techniques). Record data on WODS.

5.5 If ferrite content is acceptable, proceed to Step No. 6.1. If ferrite content is unacceptable, perform Step No's. 4.16 through 4.23 for Layer No. 2.

6.0 LAYER NO. 3

6.1 Weld Layer No. 3.

6.2 Welding operator visually inspect Layer No. 3 surface (the surface conditions stated in Step No. 4.9 apply).

NOTE 5: If it is believed that the WOR thickness meets the design thickness, go to Step No. 11.1.

7.0 **LAYER NO. 4**

7.1 Weld Layer No. 4.

7.2 Welding operator visually inspect Layer No. 4 surface (the surface conditions stated in Step No. 4.9 apply. NOTE 5 also applies).

8.0 **LAYER NO. 5**

8.1 Weld Layer No. 5.

8.2 Welding operator visually inspect Layer No. 5 surface (the surface conditions stated in Step No. 4.9 apply. NOTE 5 also applies.)

9.0 **LAYER NO. 6**

9.1 Weld Layer No. 6.

9.2 Welding operator visually inspect Layer No. 6 surface (the surface conditions stated in Step No. 4.9 apply. NOTE 5 also applies).

10.0 **LAYER NO. 7**

10.1 Weld Layer No. 7.

10.2 Welding operator visually inspect Layer No. 7 surface (the surface conditions stated in Step No. 4.9 apply. NOTE 5 also applies).

11.0 **INITIAL THICKNESS CHECK**

11.1 Verify that WOR length and edge contour meet design length and edge contour.

11.2 Perform informational UT thickness check and provide documentation.

11.3 Verify WOR thickness meets design thickness. Calculate the actual WOR thickness below (see NOTE 6):

Upstream: Total Thk. (t_t) - Orig. Pipe Thk. (t_p) = WOR Thk. (t_o)

0°:

90°:

180°:

270°:

Dnstream: Total Thk. (t_t) - Orig. Pipe Thk. (t_p) = WOR Thk. (t_o)

0°:

90°:

180°:

270°:

DO NOT RECORD THIS DATA ON THE WODS.

NOTE 6: If surface conditioning is required, the "rough" WOR thickness (t_o) prior to grinding/machining should exceed the design WOR thickness to allow for thickness losses. This excess thickness should be approximately 0.10".

12.0 SURFACE CONDITIONING

12.1 Remove welding machine head.

12.2 If required, machine or grind the WOR surface (VECTRA Document No. 0054-00101-001-102 provides recommended techniques).

NOTE 7: Do not remove an excessive amount of WOR material. 80 grit or finer zirconia-alumina abrasive belts or disks are recommended for final WOR surface finish.

12.3 Measure final WOR thicknesses at the measurement locations shown on WODS per UT. Record thickness data on WODS.

12.4 Perform final PT examination.

12.5 Measure final shrinkage dimensions ("C") and WOR width ("D") and record on WODS.

NOTE 8: Step No's. 12.4 and 12.5 may be performed in any order or at the same time.

NOTE 9: Step No. 12.6 below may be performed prior to Step No. 12.5 if the track interferes with obtaining the shrinkage dimensions.

12.6 Remove welding machine track from the pipe.

NOTE 10: Step No. 12.6 may be performed at any time prior to surface conditioning.

12.7 Perform volumetric UT examination of overlay.

12.8 Perform a system pressure test.