Illinois Power Company
Clinton Power Station
P.O. Box 678
Clinton, IL 61727
Tel 217 935-6226
Fax 217 935-4632

J. Stephen Perry
Senior Vice President

ILLINOIS POWER

U-602257
L47-94(02.25)LP
8E.100a

JSP-079-94
February 25, 1994

Docket No. 50-461

10CFR50.91(a)(5)

Document Control Desk
Nuclear Regulatory Commission
Washington, D.C. 20555

Subject: Clinton Power Station
Proposed Amendment of Facility
Operating License No. NPF-62

Dear Sir:

As a result of emergent events which have occurred at Clinton Power Station (CPS), Illinois Power (IP) requests a Technical Specification change pursuant to 10CFR50.91(a)(5). This request consists of a proposed change to Technical Specification 3/4.4.3.1, "Reactor Coolant System Leakage - Leakage Detection Systems," which is being proposed in response to inoperability of the drywell floor drain sump flow rate monitoring instrumentation. As repair of this instrumentation requires a plant shutdown, this proposed change would allow continued plant operation until the first time the plant is required to be brought to COLD SHUTDOWN.

For the proposed Technical Specification change, a description and the associated justification (including a Basis For No Significant Hazards Consideration) are provided in Attachment 2. Marked-up copies of pages from the current Technical Specifications are provided in Attachment 3. In addition, marked-up copies from IP's request to adopt the Improved Standard Technical Specifications (IP letter U-602196 dated October 26, 1993) are provided in Attachment 4 reflecting the proposed change. Further, an affidavit supporting the facts set forth in this letter and its attachments is provided in Attachment 1.

IP has reviewed the proposed change against the criteria of 10CFR51.22 for categorical exclusion from environmental impact considerations. The proposed change does not involve a significant hazards consideration, or significantly increase the amounts or change the types of effluents that may be released offsite, nor does it significantly increase individual or cumulative occupational radiation exposures. Based on the foregoing, IP concludes that the proposed change meets the criteria given in 10CFR51.22(c)(9) for a categorical exclusion from the requirement for an Environmental Impact Statement.

A017

The subject drywell floor drain sump flow monitoring subsystem was declared inoperable at 0900 hours on February 13, 1994. This condition requires entry into an Action Statement which requires the plant to be shut down in 30 days if the system cannot be restored to OPERABLE status. As identified in Attachment 2 to this letter, IP has exhausted all possible avenues to restore this instrumentation to OPERABLE status with the plant in operation. Further corrective actions require access to the drywell and to the floor drain weir box located under the reactor vessel. Due to the high temperatures and radiation levels that exist in this area during plant operation, access to this area can only be accomplished with the plant in COLD SHUTDOWN.

Although the primary system for monitoring drywell floor drain sump flow is now inoperable and is irreparable during plant operation, alternative methods are available and currently in use for determining the drywell floor drain sump flow rate (as further described in Attachment 2). On this basis, continued plant operation is justified. However, in light of the current Technical Specification requirement for a plant shutdown, IP is submitting this application for amendment to revise the Technical Specifications on a one-time basis and requests that this application be reviewed prior to March 15, 1994.

This request has been reviewed and approved by the plant Facility Review Group.

Sincerely yours,

D.S. Perry
Senior Vice President

DAS/csm

Attachments

cc: NRC Clinton Licensing Project Manager
NRC Resident Office, V-690
Regional Administrator, Region III, USNRC
Illinois Department of Nuclear Safety

Attachment 1
to U-602257

STATE OF ILLINOIS

COUNTY OF DEWITT

J. Stephen Perry, being first duly sworn, deposes and says: That he is Senior Vice President of Illinois Power Company; that the application for amendment of Facility Operating License NPF-62 has been prepared under his supervision and direction; that he knows the contents thereof; and that to the best of his knowledge and belief said application and the facts contained herein are true and correct.

DATED: This 25 day of February 1994

Signed: J. Stephen Perry

Subscribed and sworn to before me this 25 day of February 1994.

"OFFICIAL SEAL"
Jacqueline S. Matthias
Notary Public, State of Illinois
My Commission Expires 11/24/97

Jacqueline S. Matthias
Notary Public

Reason for Request

In early February (1994), control room personnel began noticing perturbations of the indicated drywell floor drain sump inlet flow (UNIDENTIFIED LEAKAGE rate). Initially, operators conservatively considered the indications to be valid and took action consistent with the temporary indicated increases in the UNIDENTIFIED LEAKAGE rate. However, after verifying that actual leakage increases had not occurred using alternative methods available to detect leakage, the drywell floor drain sump inlet flow indication was declared inoperable at 0900 hours on February 13, 1994. At that time, the UNIDENTIFIED LEAKAGE rates (based on pump run time calculations) were between 0.2 gpm and 0.4 gpm.

Limits on leakage into the drywell are provided in Technical Specification 3/4.4.3.2, "Reactor Coolant System Leakage - Operational Leakage." That Technical Specification limits IDENTIFIED LEAKAGE to 25 gpm (averaged over any 24-hour period), UNIDENTIFIED LEAKAGE to 5 gpm, and UNIDENTIFIED LEAKAGE increases to 2 gpm in any 24-hour period or less. In order to ensure that these limits are not exceeded, the IDENTIFIED and UNIDENTIFIED LEAKAGE rates must be determined on a periodic basis. The UNIDENTIFIED LEAKAGE rate is determined, in part, by determining the flow rate into the drywell floor drain sump. Per plant procedure, the drywell floor drain sump inlet flow rate is determined at approximately four hour intervals.

OPERABILITY of the drywell floor drain sump inlet flow rate instrumentation is required by Technical Specification 3/4.4.3.1, "Reactor Coolant System Leakage - Leakage Detection Systems." The Technical Specification limits continued plant operation to 30 days with the drywell floor drain sump flow rate instrumentation inoperable, provided the drywell floor drain sump flow rate is determined by alternate means once per eight hours. Otherwise, the plant must be in at least HOT SHUTDOWN within the next 12 hours and in COLD SHUTDOWN within the following 24 hours.

Efforts to restore the drywell sump inlet flow monitoring instrumentation to OPERABLE status have been unsuccessful. The instrument loop has been recalibrated and equipment external to the drywell has been verified to be operating properly. The only remaining corrective actions available involve entry into the drywell. Due to the high temperature and radiation levels in the drywell during power operation and the location of the weir box under the reactor vessel, the plant must be in COLD SHUTDOWN to perform any further troubleshooting and repair of the drywell floor drain sump inlet flow rate monitoring instrumentation. To preclude an unnecessary plant transient and related plant risk associated with a plant shutdown, Illinois Power (IP) requests that continued operation of Clinton Power Station (CPS) be allowed until the next time the plant is brought to COLD SHUTDOWN, when repairs can then be made.

Background

The drywell sump flow monitoring system at CPS consists of two subsystems wherein a monitoring system is provided for each of two sumps, the floor drain sump and the equipment drain sump. Each subsystem consists of a V-notched weir box with a capacitance-type probe that senses the V-notch water level. (The weir box is situated between the drains and the sump. See Figures 1, 2, and 3.) The V-notch water level is directly proportional to the flow through the weir box, which in turn is equal to the sump inlet flow rate. Each subsystem includes a recorder (which includes an indicator) and an alarm which will actuate when the flow rate exceeds a certain value. Also included is a digital flow totalizer which provides an integrated flow that can be utilized to determine average sump flow rates. This system of components (see Figure 4, which depicts one subsystem) is the system normally used to monitor sump flow and is the system required to be OPERABLE by Technical Specification 3/4.4.3.1 for monitoring the drywell floor drain and drywell equipment drain sump flows. It should also be noted that, with respect to the monitoring of UNIDENTIFIED LEAKAGE, this is the only system at CPS that meets the accuracy requirements of Regulatory Guide 1.45 for drywell floor drain sump flow monitoring.

The CPS design also includes a system of pumps and pump-out timers, cycle counters and level switches for pumping collected leakage out of the sump(s). (A subsystem is provided for each sump. Again see Figure 4.) This system can be monitored to provide an average flow rate (based on the pump run times and the pump design flow rate or based on the sump fill-up times, etc.) and can thus provide a backup means for determining the average drywell equipment and/or floor drain sump flow (i.e., IDENTIFIED and/or UNIDENTIFIED LEAKAGE) over a certain time interval.

Alarms associated with the drain sumps are provided in the main control room. Operation of these alarms is based on the length of time the sump pumps operate. As described in USAR Section 7.7.1.24.10.1.1, if the sump pumping cycles become too lengthy or too frequent, it is indicative of a higher-than-normal influent flow rate to the sump due to high leakage rates. Pumping cycles that are too lengthy or too frequent are thus alarmed in the main control room using two timers which are operated by the sump pump controls. One will alarm if the pump-out time is too long, the other if the sump fill-up time is too short.

As described in USAR Sections 7.7.1.24.10.1 and 5.2.5, UNIDENTIFIED LEAKAGE into the drywell is also monitored by a flow rate meter in the condensate discharge line from the drywell air coolers (with an associated alarm in the main control room set at two gpm) and by a particulate and a gaseous radiation monitoring channel of the drywell fission product monitor. While the drywell fission product monitor does not provide a quantitative leakage rate, it is sensitive enough to provide plant operators with an early

indication of an unanticipated increase in the UNIDENTIFIED LEAKAGE rate involving reactor coolant.

Furthermore, as described in USAR Section 5.2.5, a number of other parameters are monitored with appropriate instrumentation to provide the plant operators with indirect indication of increases in UNIDENTIFIED LEAKAGE. These parameters include drywell pressure and drywell temperature.

Efforts Taken to Restore V-Notch Instrumentation

As described above, efforts to restore the drywell sump inlet flow monitoring instrumentation to OPERABLE status have included recalibration of the instrument loop and verification that the equipment external to the drywell is operating properly. In addition, IP has also "backflushed" the V-notched weir to dislodge potential foreign material. This evolution was unsuccessful in correcting the indication problem. Additional actions have been taken to troubleshoot (from outside the drywell) the instrumentation loop located inside the drywell, including installing a capacitor in place of the capacitance probe to check for any drift in the instrument loop outside containment, checking the sensor resistance and current capacitance, performing a Time Domain Reflectometry (TDR) test on the cabling in the main control room to the transmitter inside containment to determine if there are any changes in resistance, and performing a high potential test of the cable and sensor. The results of these tests indicate that the condition of the instrument loop from the main control room recorder to the transmitter inside containment is satisfactory. The condition of the probe, however, is indeterminate.

Description of Proposed Change

In support of the above request, IP is requesting that a footnote be added to the drywell sump flow monitoring system requirement in the Limiting Condition for Operation (LCO) of Technical Specification 3/4.4.3.1 as provided in Attachment 3. Specifically, IP proposes that the following footnote be attached to LCO 3.4.3.1.b:

> "In lieu of the requirement for the associated V-notched weir box to be OPERABLE, the drywell floor drain sump flow monitoring subsystem may be considered OPERABLE provided the drywell floor drain sump flow is monitored and determined by alternate means at least once per 8 hours. This provision is applicable until the first time the reactor is brought to COLD SHUTDOWN after March 15, 1994."

The proposed footnote is to be attached to the LCO such that the Action Statement is not entered as long as the sump flow is being monitored by alternate means. This approach is being taken since the drywell fission product monitor must briefly be removed from service once each week to change the filter paper for the particulate monitoring channel.

If the drywell floor drain sump monitoring subsystem is considered inoperable during this evolution, the plant would have to enter the "otherwise" shutdown statement which would require notification of the NRC per 10CFR50.72(b)(i)(A) due to the initiation of a plant shutdown required by the plant's Technical Specifications. Thus, IP proposes that the drywell floor drain sump flow monitoring subsystem continue to be considered OPERABLE based on availability of the alternate monitoring methods.

In addition, IP has previously requested implementation of the Improved Standard Technical Specifications (IP letter U-602196). Attachment 4 contains marked-up copies from that request reflecting this proposed change.

Justification for Proposed Change

The design basis accident involving leakage into the drywell is a guillotine break of the recirculation system suction piping. As described in USAR Section 6.2, this accident is mitigated by safety systems automatically initiated in response to high drywell pressure and/or low reactor water level. This proposed change does not affect any of these safety systems or the associated instrumentation that provides automatic initiation of these systems.

For smaller leaks into the drywell, multiple systems are available to plant operators to indicate changes in UNIDENTIFIED LEAKAGE rates. The system normally used (the drywell floor drain sump V-notched weir box system) meets the accuracy and sensitivity requirements of Regulatory Guide 1.45. (However, as stated in USAR Section 7.7.1.24.1, no credit is taken in the safety analysis for operation of or operator reliance upon the leakage detection monitoring instrumentation associated with the drywell sump.) The UNIDENTIFIED LEAKAGE rate can also be calculated at least once per eight hours as required by the CPS Technical Specifications using the sump pump run timers. Further, any significant increases in leakage will be promptly identified to the plant operators by the drywell gaseous and/or particulate channels of the drywell atmospheric radiation monitoring system.

On the basis that the affected instrumentation is not credited in the safety analysis and that there are alternate methods available to quantitatively determine the UNIDENTIFIED LEAKAGE rate into the drywell, it is overly restrictive to require the plant to be taken through an unnecessary transient and be subject to the associated risks caused by shutting down just to repair this instrumentation. Thus, IP is requesting that operation be allowed to continue until the next plant shutdown to COLD SHUTDOWN which would be the first opportunity to repair the affected instrumentation.

During the time period that the drywell floor drain sump V-notch weir box instrumentation is inoperable, the drywell floor drain sump flow rate will be monitored and determined utilizing the sump pump pump-out timers, cycle counters and level switches.

With the sump pump control switch in the after-start position, sump level is maintained in a narrow level band at a low level in the sump. In this mode of operation, the pumps automatically start when approximately 50-80 gallons of leakage has been accumulated in the sump. Currently, this results in one sump pump operating for approximately 1 to 1.5 minutes every five hours. Based on a rated pump flow rate of 50 gpm, the drywell floor drain sump flow rate is now approximately 0.2 gpm. Increased leakage rates would result in more frequent pump operation and thus more frequent determinations of drywell floor drain sump flow rate would be possible.

Basis for No Significant Hazards Consideration

In accordance with 10CFR50.92, a proposed change to the operating license (Technical Specifications) involves no significant hazards consideration if operation of the facility in accordance with the proposed change would not: (1) involve a significant increase in the probability or consequences of any accident previously evaluated, (2) create the possibility of a new or different kind of accident from any accident previously evaluated, or (3) involve a significant reduction in a margin of safety. The proposed changes are evaluated against each of these criteria below.

(1) The proposed change does not affect any initiators of any previously evaluated accidents. Additionally, the proposed change involves equipment that only provides indication, and therefore, it cannot increase the probability of any accident previously evaluated.

The drywell floor drain sump inlet flow monitoring V-notched weir box instrumentation is provided to meet the accuracy requirements of Regulatory Guide 1.45. This instrumentation does not provide any automatic action or control functions. In addition to the V-notch system, drywell floor drain sump flow rates can be determined by using the sump pump pump-out timers, cycle counters and level switches. In addition, UNIDENTIFIED LEAKAGE into the drywell is monitored by a flow rate meter in the condensate discharge line from the drywell air coolers and by a particulate and a gaseous radiation monitoring channel of the drywell fission product monitor. While the drywell fission product monitor does not provide a quantitative leakage rate, it is sensitive enough to provide plant operators with early indication of an unanticipated increase in the UNIDENTIFIED LEAKAGE rate involving reactor coolant. Furthermore, a number of other parameters are monitored with appropriate instrumentation to provide the plant operators with indirect indication of increases in UNIDENTIFIED LEAKAGE. These parameters include drywell pressure and drywell temperature. These alternate methods of detecting increases in UNIDENTIFIED LEAKAGE rates provide operators with sufficient information to take appropriate action to respond to an increase in leakage.

Notwithstanding the above, as stated in USAR Section 7.7.1.24.1, no credit is taken in the safety analysis for operation of or operator reliance upon the leakage detection monitoring instrumentation associated with the drywell sumps. As a result, IP concludes that the proposed change will not increase the consequences of any accident previously evaluated.

(2) The proposed change involves equipment which only provides indication of leakage to the plant operators. The affected equipment does not provide any automatic action or control functions. As a result, the proposed change does not involve a change in the operation of the plant, nor does it introduce any new failure modes. Sufficient alternate quantitative indications of drywell floor drain sump flow rate are provided by the sump pump pump-out timers, cycle counters and level switches. Therefore, this proposed change cannot create the possibility of a new or different kind of accident from any accident previously evaluated.

(3) The margin of safety associated with these requirements relates to the limits on UNIDENTIFIED LEAKAGE. As stated in the Bases for Technical Specification 3/4.4.3.2, "The allowable leakage rates from the reactor coolant system have been based on the predicted and experimentally observed behavior of cracks in pipes... The evidence obtained from experiments suggests that for leakage somewhat greater than that specified for UNIDENTIFIED LEAKAGE the probability is small that the imperfection or crack associated with such leakage would grow rapidly. With respect to Intergranular Stress Corrosion Cracking (IGSCC)-related cracks in service sensitive austenitic stainless steel piping however, an additional limit on the allowed increase in UNIDENTIFIED LEAKAGE (within a 24-hour period or less) is imposed in accordance with NRC Generic Letter 88-01, 'NRC Position on IGSCC in BWR Austenitic Stainless Steel Piping,' since an abrupt increase in the UNIDENTIFIED LEAKAGE could be indicative of leakage from such a source." The proposed change does not alter any of these limits on the UNIDENTIFIED LEAKAGE.

With respect to the ability to detect changes in UNIDENTIFIED LEAKAGE rates, in addition to the V-notch system, drywell floor drain sump flow rates can be determined by using the sump pump pump-out timers, cycle counters and level switches. In addition, UNIDENTIFIED LEAKAGE into the drywell is monitored by a flow rate meter in the condensate discharge line from the drywell air coolers and by a particulate and a gaseous radiation monitoring channel of the drywell fission product monitor. While the drywell fission product monitor does not provide a quantitative leakage rate, it is sensitive enough to provide plant operators with early indication of an unanticipated increase in the UNIDENTIFIED LEAKAGE rate involving reactor coolant. Furthermore, a number of other parameters are monitored with appropriate instrumentation to

provide the plant operators with indirect indication of increases in UNIDENTIFIED LEAKAGE. These parameters include drywell pressure and drywell temperature.

As stated above, the drywell floor drain sump flow monitoring instrumentation does not provide any automatic action or control functions. Further, as stated in USAR Section 7.7.1.24.1, no credit is taken in the safety analysis for operation of or operator reliance upon the leakage detection monitoring instrumentation associated with the drywell sumps.

In light of the above, IP concludes that the proposed change does not involve a reduction in the margin of safety.

Based upon the foregoing, IP concludes that the proposed change does not involve a significant hazards consideration.

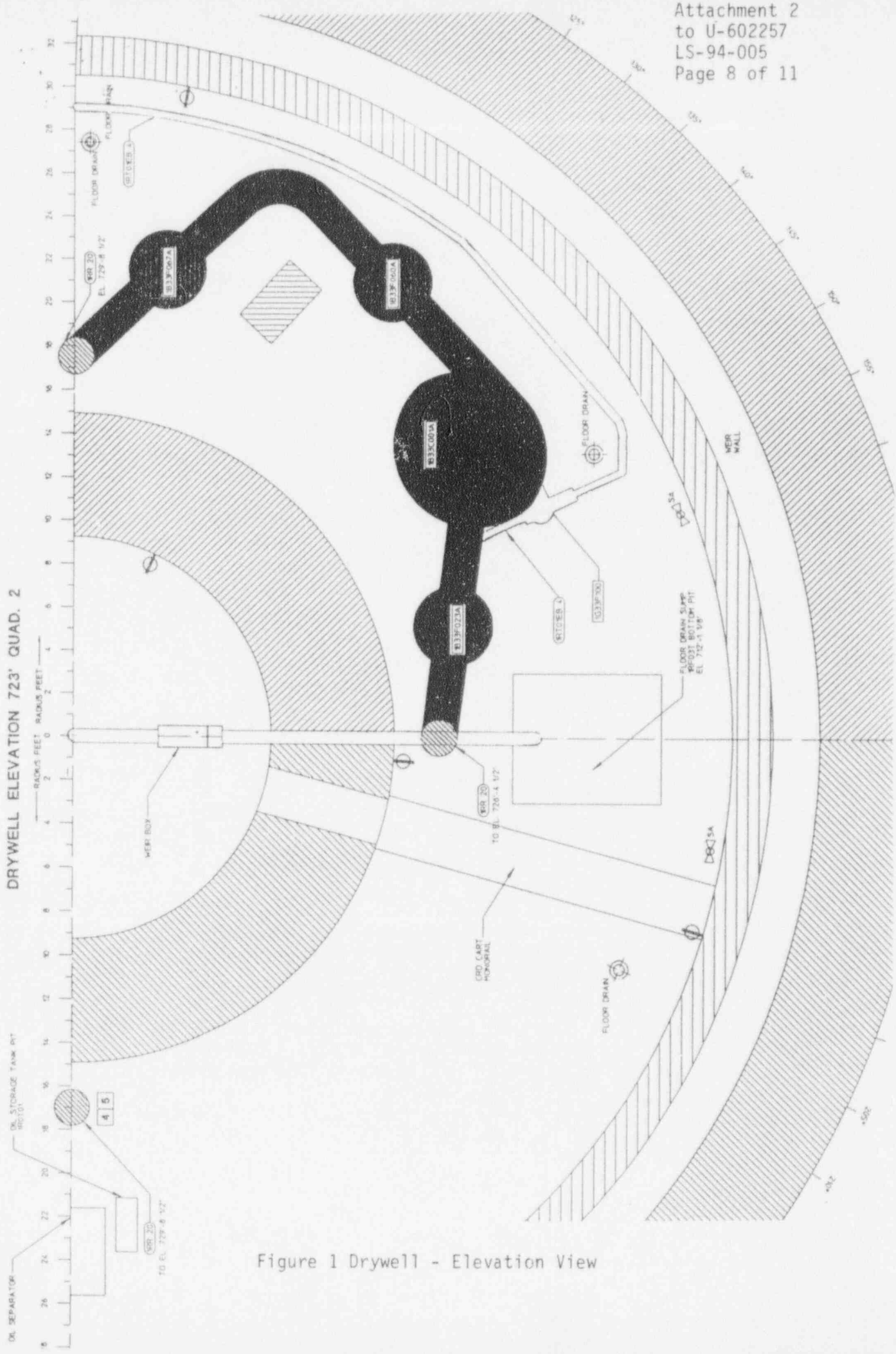

Figure 1 Drywell - Elevation View

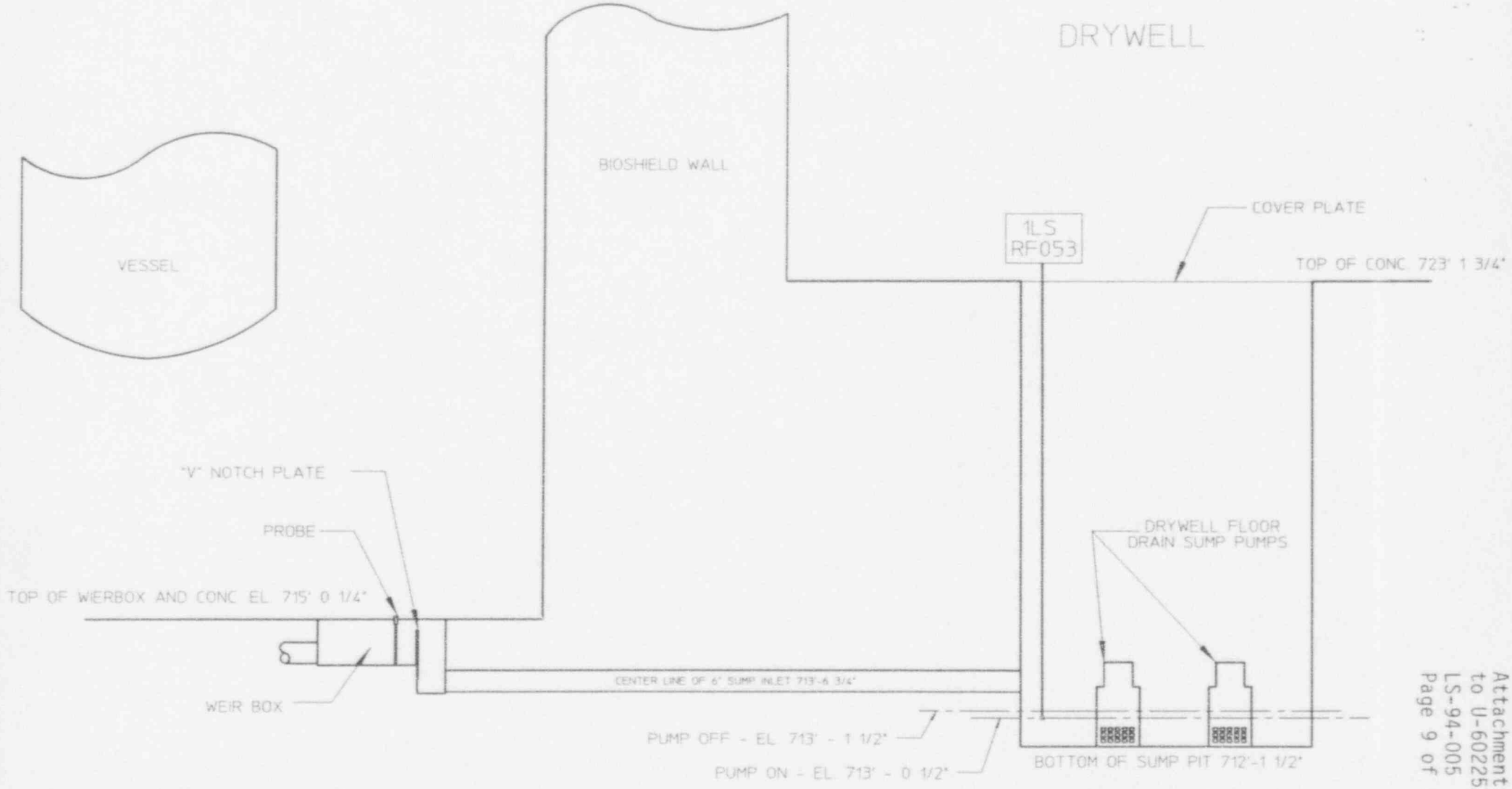

Figure 2
Drywell Floor Drain Sump - Plan View

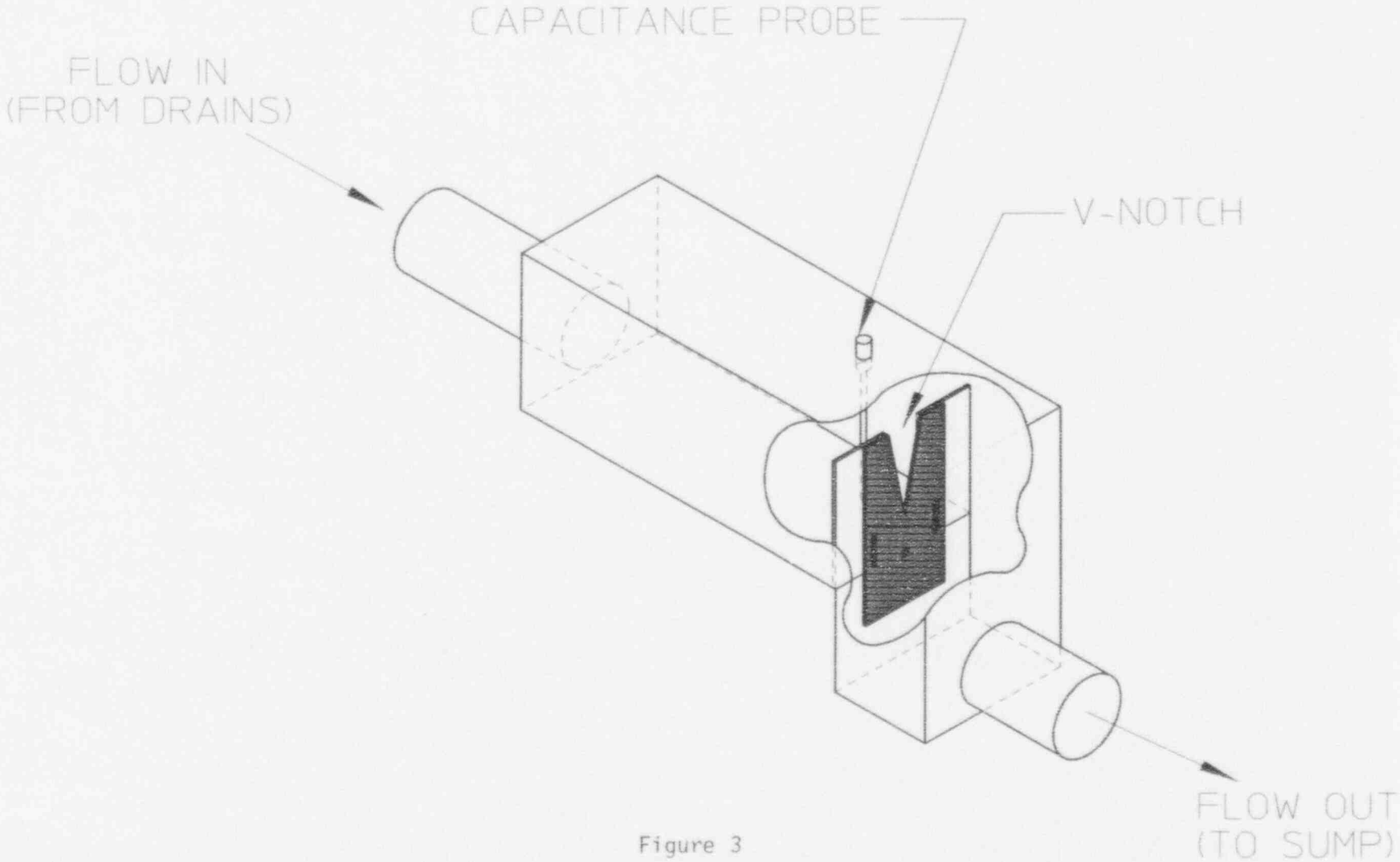

Figure 3

V-NOTCHED WEIR BOX

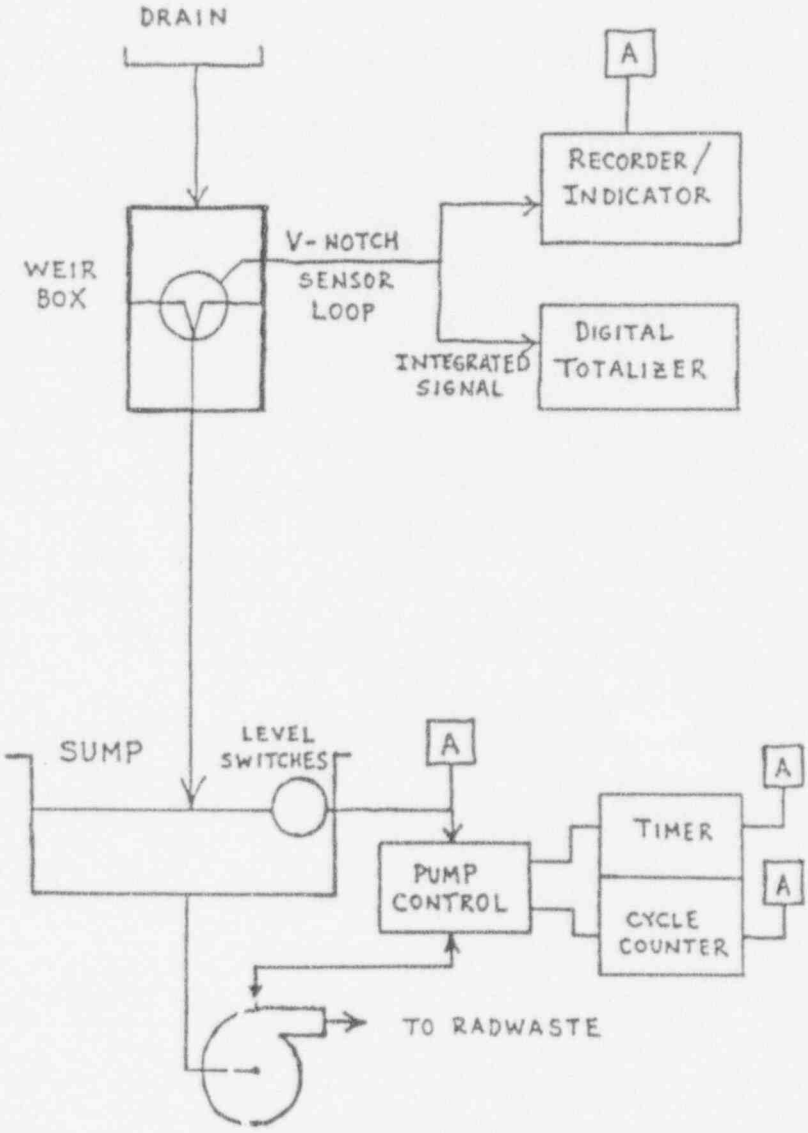

Typical Configuration for Either the Drywell Floor Drain Sump Flow Monitoring Subsystem or the Drywell Equipment Drain Sump Flow Monitoring Subsystem

Figure 4