Rosemount Nuclear Instruments, Inc.
8200 Market Boulevard
Chanhassen, MN 55317 USA

Tel 1 (952) 949-5200
Fax 1 (952) 949-5201
www.RosemountNuclear.com

26 February 2020

United States Nuclear Regulatory Commission
ATTN: Document Control Desk
Washington, DC 20555-0001

Subject: Reply to NRC Notice of Nonconformance 99900271/2019-201-01

References:
1) NRC Notice of Nonconformance, dated January 27, 2020, Docket No. 99900271, Report No. 2019-201, Nonconformance 99900271/2019-201-01
2) NRC Vendor Inspection Report No. 99900271/2019-201

Rosemount Nuclear Instruments, Inc. ("**RNII**") hereby responds to the aforementioned Notice of Nonconformance (Reference 1), from the Nuclear Regulatory Commission ("**NRC**") dated January 27, 2020. The nonconformance was identified during the NRC inspection (Reference 2) of RNII's Chanhassen, Minnesota facility conducted December 9 through 12, 2019 by inspectors Jeffrey Jacobson, Nicholas Savwoir, Phil Natividad, and Dong Park.

Attached, please find RNII's reply to Reference 1.

Please contact me at (952) 949-5377 if you have any questions or need to discuss this matter further.

Sincerely,

Jeff Chivers
Director of Engineering and Quality
Rosemount Nuclear Instruments, Inc.

Attachment

cc: Chief, Quality Assurance and Vendor Inspection Branch
Division of Reactor Oversight
Office of Nuclear Reactor Regulation

IE09
NRR

Attachment
Reply to NRC Notice of Nonconformance
Docket No. 99900271 / Inspection Report No. 2019-201

This attachment sets forth the reply of Rosemount Nuclear Instruments, Inc. ("**RNII**") to the NRC's Notice of Nonconformance, dated January 27, 2020, relative to NRC Inspection Report 99900271/2019-201 (the "**Inspection Report**").

NRC Notice of Nonconformance

The Notice of Nonconformance includes the following description of Nonconformance 99900271/ 2019-201-01:

Based on the results of a U.S. Nuclear Regulatory Commission (NRC) inspection conducted at the Rosemount Nuclear Instruments, Inc.'s (hereafter referred to as RNII) facility in Chanhassen, MN, from December 9, 2019 through December 12, 2019, RNII did not conduct certain activities in accordance with NRC requirements that were contractually imposed upon RNII by its customers or NRC licensees:

1. *Criterion III, "Design Control," of Appendix B, "Quality Assurance Criteria for Nuclear Power Plants and Fuel Reprocessing Plants," to Title 10 of the Code of Federal Regulations*

   (10 CFR) Part 50, "Domestic Licensing of Production and Utilization Facilities," states, in part, that "design control measures shall provide for verifying or checking the adequacy of design...by the performance of a suitable testing program."

   Criterion XI, "Test Control," of Appendix B to 10 CFR Part 50 states, in part, that "the test is performed under suitable environmental conditions. Test results shall be documented and evaluated to assure that test requirements have been satisfied."

   Contrary to the above, as of December 12, 2019, RNII failed to verify or check the adequacy of design by the performance of a suitable testing program and that the test was performed under suitable environmental conditions. Specifically, due to the way the 3159 nuclear qualified remote diaphragm seal and detector assemblies were mounted in the radiation chamber and the way that the associated radiation dose was measured, the test samples may have received significantly less radiation dose than what was called for in the test plan and captured in the analysis. Furthermore, portions of the test sample were shielded in the radiation chamber, and the thermoluminescent dosimeters used to measure the field were placed primarily on the test sample closest to the test source, resulting in a nonconservative dose delivered to the test sample. These two factors resulted in the test sample receiving less radiation dose than what was called for in the test plan and captured in the analysis performed to establish the accuracy specifications for the remote seal system.

   This issue has been identified as Nonconformance 99900271/2019-201-01.

Additional information related to the Nonconformance is provided within the Inspection Report ("Report Details"). Pertinent excerpts are included below.

2.b Design Control: Observations and Findings

The NRC inspection team identified that the testing protocol that was implemented associated with the radiation testing portion of RNII's 3159 nuclear qualified remote diaphragm seal and 3150 series pressure transmitters did not verify the adequacy of the design. Specifically, due to the way the 3159 nuclear qualified remote diaphragm seal and detector assemblies were mounted in the

radiation chamber and the way that the associated radiation dose was measured, the test samples may have received significantly less radiation dose than what was called for in the test plan and captured in the analysis. In addition, the NRC inspection team identified that the remote seal assemblies were installed in the test chamber in such a way that the capillary tubing was looped into multiple circles such that the loops on the outside would shield some of the other loops from the radiation field emitted from the test source. Also, the thermoluminescence dosimeters (TLDs) used to measure the field were placed primarily on the outer loops closest to the test source, so the actual measured radiation would not have been indicative of the dose received by the loops farthest away from the source. The only non-metallic component of the seal assembly is the fluid encased in the capillary tubing, so it is this fluid that is the primary concern with respect to ensuring an accurate assessment of the applied radiation dose. Preliminary calculations performed by RNII during the inspection, showed that the shielding effects could be significant and could have resulted in a large percentage of the coil loops receiving less than the dose designated in the test plan. The overall impact of this on the stated accuracy numbers was indeterminate at the end of the inspection as margin may exist in other portions of the analysis. RNII entered this issue into their corrective action program under CAPA No. 004435.

The NRC inspection team identified these issues as an example of Nonconformance 99900271/2019-201-01 for RNII's failure to adequately qualify the design of the 3159 nuclear qualified remote diaphragm seal through suitable EQ testing under the most adverse design conditions to verify the adequacy of the design.

2.c Design Control: Conclusions

The NRC inspection team issued Nonconformance 99900271/2019-201-01 in association with RNII's failure to verify the adequacy of design by the performance of a suitable testing program and that the test is performed under suitable environmental conditions of a 3159 nuclear qualified remote diaphragm seal. As described above, the test sample received less radiation dose than what was called for in the test plan and in the accuracy specifications for the seal system. RNII initiated CAPA No. 004435 to address this issue.

RNII Reply

RNII has conducted a detailed evaluation of the nonconformance identified by the NRC inspection team in conjunction with internal Corrective and Preventive Action (CAPA) No. 004435. As discussed in the following sections, RNII has determined that the test program documented in Rosemount report D2013009 ("IEEE Qualification Report: Rosemount 3159 Remote Diaphragm Seal with 3150 Series Nuclear Pressure Transmitters"), was suitable to demonstrate the adequacy of the 3159 design to perform its intended safety function.

As identified by the inspection team, RNII agrees the 3159 test methodology did not expressly account for the effects of capillary bundle self-shielding in the calculation of total integrated dose (TID) received by the test specimens. The analysis of the self-shielding effects summarized herein concludes the effect of self-shielding will have no detrimental impact on safety significant properties of the fill fluid. To document this analysis, D2013009 will be updated to reflect this assessment by April 30, 2020.

RNII believes the test methodology employed for the qualification of the 3159 remote diaphragm seal system created suitable environmental conditions to assess qualification. Specifically, RNII's test methodology arranged the test specimens in a manner to provide an average TID in excess of the highest TID target values. As a result, the specifications defined in D2013009 are determined to remain suitable and appropriate.

Background: Rosemount 3159 Remote Diaphragm Seal

The Rosemount 3159 is a remote sensing device for use with 3150 Series nuclear-qualified pressure transmitters in class 1E safety applications and can be used with all pressure measurement types (gage, differential, and absolute). The 3159 allows physical separation between the process connection and pressure transmitter as shown in Figure 1.

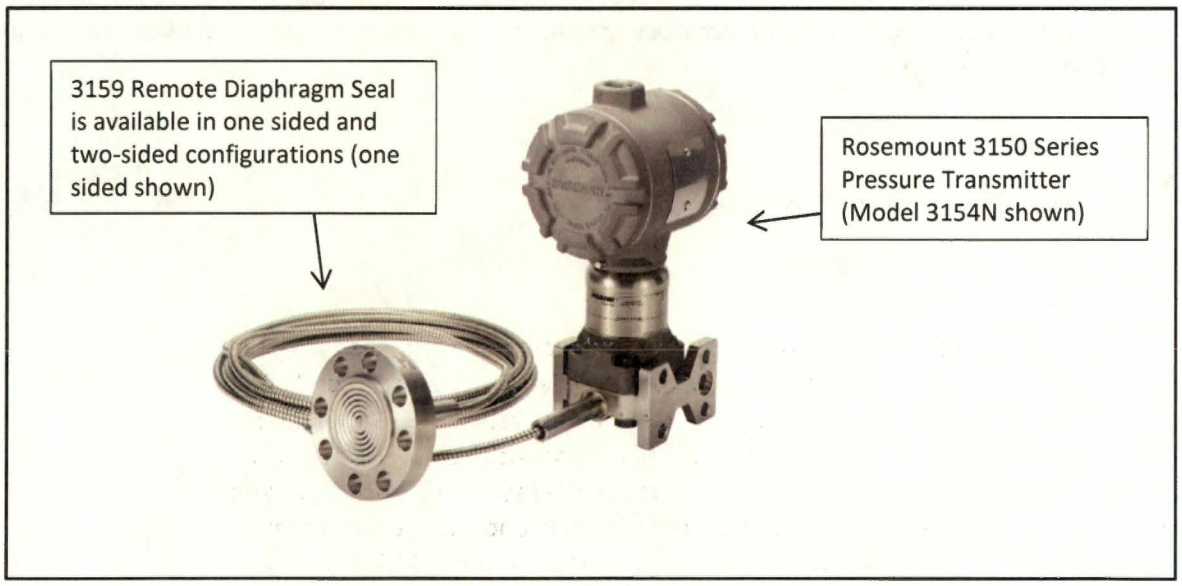

Figure 1. 3150 Series Pressure Transmitter with 3159 Remote Diaphragm Seal

Process pressure applied to the remote seal isolator diaphragm is transmitted through a fluid-filled capillary to the pressure transmitter's isolating diaphragm. The transmitted pressure is converted to a proportional 4-20 mA output signal by the pressure transmitter. An exploded view of the remote seal assembly is shown in Figure 2.

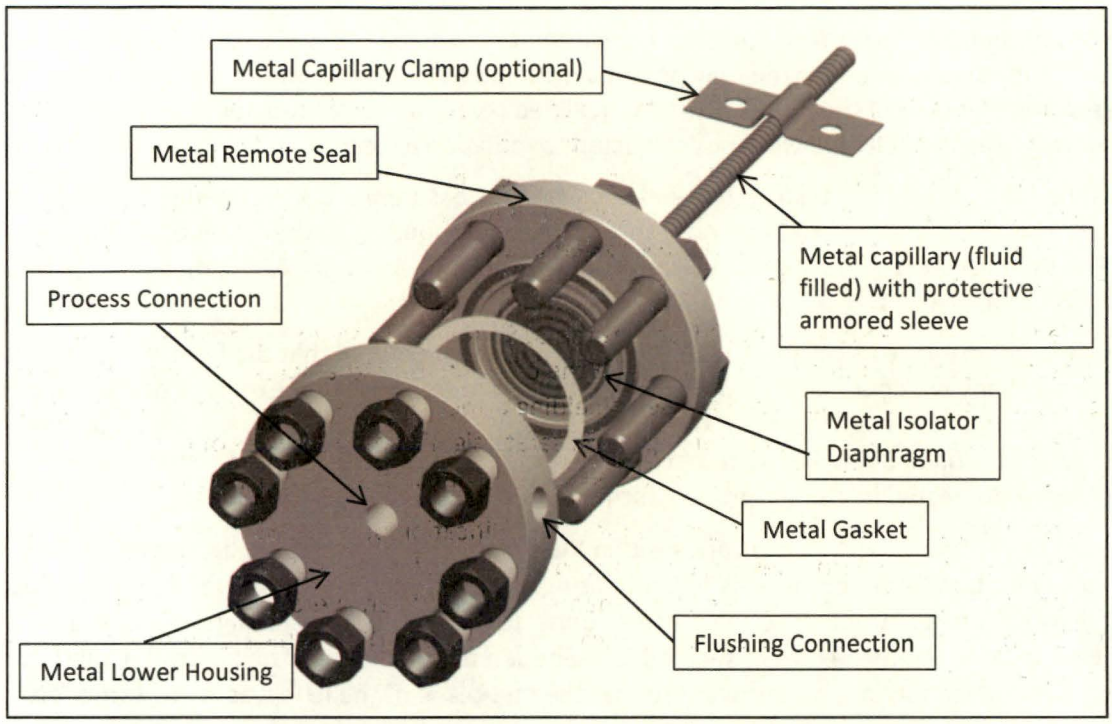

Figure 2. Exploded View of 3159 Remote Seal / Lower Housing Assembly

The Rosemount 3159 includes multiple options to satisfy various nuclear applications:

- One-sided or two-sided remote seal configurations
- Multiple capillary lengths
- Three capillary fill fluids:
  - Distilled water
  - PMX-200 silicone oil
  - 704 silicone oil

I. Reason for the nonconformance

Type Test Program

The Rosemount 3159 Remote Diaphragm Seal was subjected to a type test program developed to be suitable for verifying and checking the adequacy of the design as required by 10CFR50, Appendix B. The qualification type test program was designed to satisfy the requirements of IEEE Std 323™-1974/1983/2003 and IEEE Std 344™-1975/1987/2004 and included functional & thermal aging, radiation, vibration & seismic, and steam pressure/temperature exposure. Radiation exposure was performed using two different profiles to account for mild and harsh environment applications. The overall qualification program is documented in Rosemount report D2013009.

Type Test: Radiation Exposure

Radiation testing of Rosemount 3159 Remote Diaphragm Seals included seven pressure transmitters (which included 1-sided and 2-sided configurations and 10-ft and 30-ft capillaries). Three test specimens included PMX-200 silicone oil (for mild environment exposure up to TID of 6.5 Mrad); and four test

specimens included 704 silicone oil (for harsh environment exposure up to TID of 112 Mrad). The silicone oil capillary fill fluids are the only potentially radiation-sensitive components within the remote seal assembly. Because of their insensitivity to qualified levels of gamma radiation, test specimens with distilled water capillary fill fluid were not subjected to radiation exposure.

Prior to the start of radiation testing, free-field dosimetry measurements were made to determine the distances from the radiation head to a reference plane corresponding to the target dose rates in the test plan. The established target distances were: 26 in (0.1 Mrad/h), 11 in (0.4 Mrad/h), 3.25 in (1 Mrad/h), 2.5 in. (1.5 Mrad/h) and 1.25 in. (2 Mrad/h).

The small target distances associated with the high dose rates required that the items under test (IUTs) fit within a defined window (height x width). To achieve a more consistent exposure of the remote seal capillaries, the four harsh environment transmitters were tested in two groups (identified as run #1 & run #2), which included 80 ft. and 90 ft. of capillary respectively. The three mild environment transmitters were tested in a single group which included 110 ft. of capillary tubing.

In order to fit the total length of capillaries within the defined window, the capillaries were coiled and tied into a loose bundle. Remote seals/lower housings were arranged in the center and slightly back of the capillary coils to allow access to the process connections. The IUTs (including capillaries and remote seal/lower housing assemblies) were secured to a wooden fixture mounted on a movable platform. The platform was moved forward or backward so that the mid-plane of the IUTs was at the target distance. By centering the IUTs on the target line, half of the mass of the IUTs is forward of the target distance and will receive more radiation; and half of the mass (mostly remote seals/lower housings) is behind the target distance and will receive less radiation. See Figures 3 and 4.

At target distances greater than 12 inches, the radiation fields generated by each of the four 15 kCurie gamma sources (Cobalt 60) overlap and provide a relatively uniform distribution of radiation across the test area. At target distances less than 12 inches, the radiation fields generated by the four gamma sources don't overlap and the items under test will see four separate gamma sources. Therefore, at the smaller target distances, there will be localized areas with higher and lower dose rates and the distribution of gamma radiation will be non-uniform over the test area. There will also be a decrease in dose rate with distance from the sources—independent of potential self-shielding effects.

Thermoluminescent dosimeters (TLDs) were mounted on the front-side of the capillaries and the front-side of the remote seals to validate the pre-test dosimetry and to obtain data relative to the expected variation across the test area. These TLD dose rate measurements were utilized in the qualification program, along with test time, to calculate TID levels achieved. TLDs were also mounted on the back-side of the capillaries in the mild environment test group and harsh environment run #1 as shown in Figure 4 (note that the capillary back-side TLD data was retrieved from the original test lab documentation following the NRC inspection and therefore RNII was not able to present that information to the NRC at the time of the inspection). Although the capillary bundle back-side TLD data was taken during the first two runs, it was not incorporated into the original 3159 qualification TID calculations because it was not available for all runs. As identified by the inspection team, only using the front side TLD's might have resulted in a non-conservative TID calculation with respect to target values as the effects of capillary self-shielding were not expressly accounted for. As a result, RNII has conducted a more detailed analysis which is discussed further in the next section.

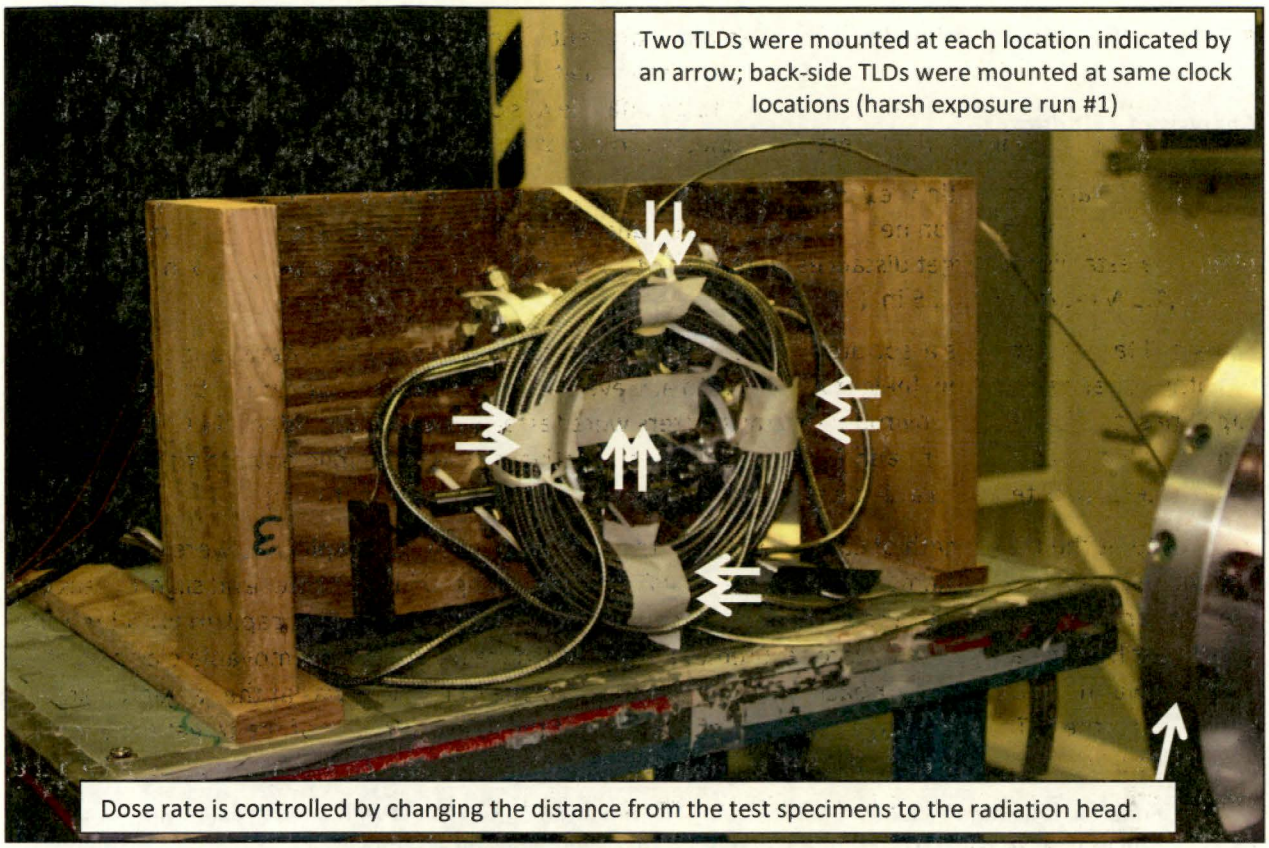

Figure 3. Typical Test Set-up for Radiation Exposure

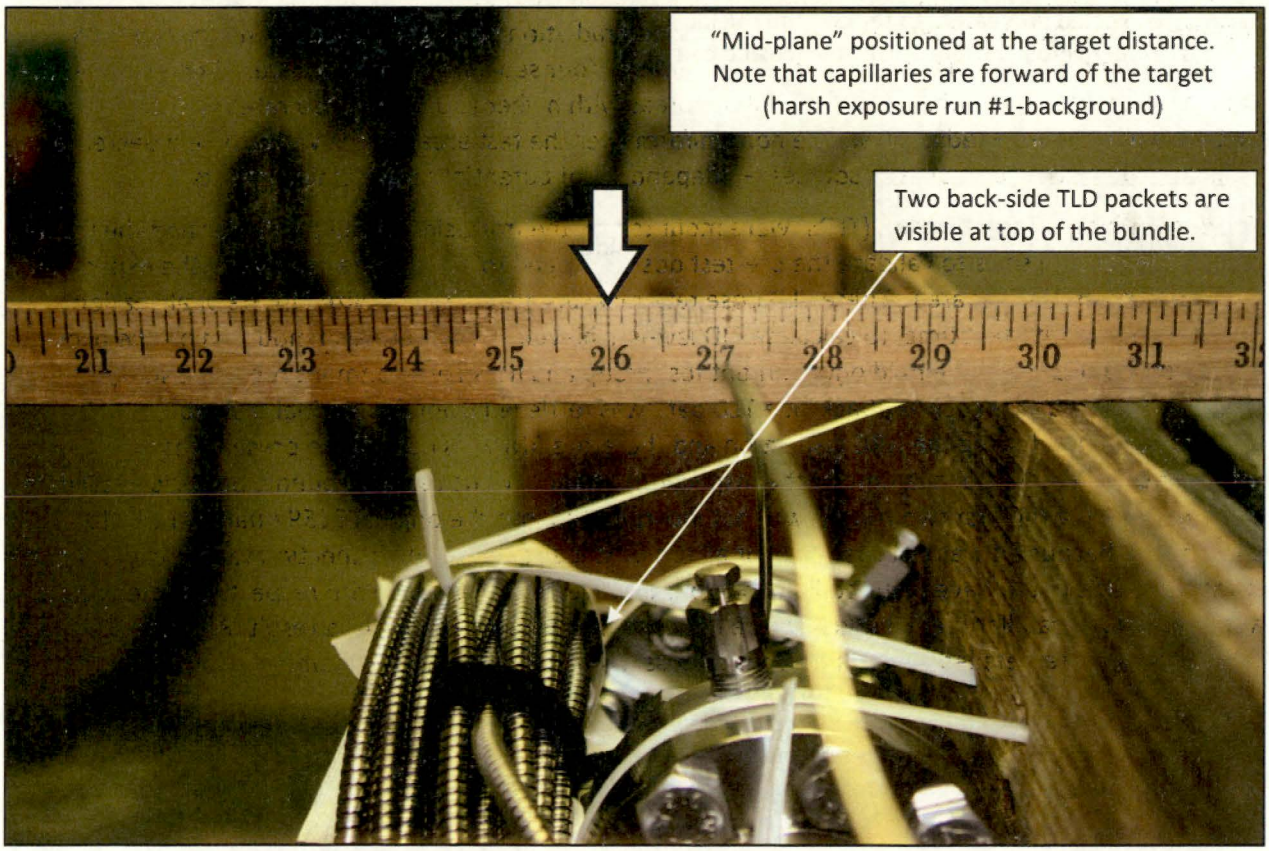

Figure 4. Position of Items Under Test (IUT) Relative to Target Distance

II. Corrective steps taken and results achieved

Analysis of TLD data

A supplemental analysis of TLD data has been performed to assess the effects of capillary self-shielding and to ensure published product specifications established from the 3159 qualification test program documented in D2013009 remain appropriate. This includes front-side TLD data and back-side TLD data. Results are summarized in Tables 1 and 2. The total average TID (background plus accident) exceeded test plan requirements. In some instances, dose rate specific averages did not achieve target values; however, as described in the "Evaluation of radiation effects on silicone oils", these differences are insignificant to the safety function of the transmitter.

Table 1. TID Calculations for Mild Exposure

Phase	Target Dose rate	Target Distance	TID (Mrad)			Target dose (Mrad)
			Front-side Average (1)	Back-side Average (2)	Total Average (3)	
Background	0.1 Mrad/h	26 in	1.00	0.76	0.89	1
Accident	0.4 Mrad/h	11 in	7.02	4.97	6.11	5.5
		TID →	8.02	5.73	**7.00**	**6.5**

NOTES:

(1) *Front-side Average* includes readings from TLDs mounted on capillaries with unobstructed view of the radiation head plus TLDs mounted on remote seal/lower housing assemblies.

(2) *Back side Average* includes readings from TLDs mounted on the back side of the capillary bundle, corrected (increased) to remove the shielding effect of one capillary.

(3) *Total Average* includes all front-side and corrected back side data.

Table 2. TID Calculations for Harsh Exposure

Phase	Target Dose rate	Target Distance	TID (Mrad)			Target dose (Mrad)
			Front-side Average (1)	Back-side Average (2)	Total Average (3)	
Background	0.1 Mrad/h	26 in	1.99	1.49	1.78	2
Accident	2 Mrad/h	1.25 in	3.09	2.31	2.78	4
	1.5 Mrad/h	2.5 in	5.79	3.74	4.97	6
	1 Mrad/h	3.25 in	143.38	82.65	119.87	100
		TID →	154.26	90.18	**129.40**	**112**

NOTES:

(1) *Front-side Average* includes readings from TLDs mounted on capillaries with unobstructed view of the radiation head plus TLDs mounted on remote seal/lower housing assemblies. For harsh exposure, TID is based on combined front-side TLD data from runs #1 and #2.

(2) *Back side Average* includes TLD readings from Harsh run #1 mounted on the back-side of the capillary bundle, corrected (increased) to remove the shielding effect of one capillary. It also includes front side TLD readings from Harsh run #2 corrected (reduced) to account for the calculated shielding effect of the capillary bundle (this is necessary as there was no back-side TLD data available for Harsh run #2).

(3) *Total Average* includes all front-side and corrected back side data.

Evaluation of radiation effects on silicone oils

From August through September of 2017, subsequent to the 3159 qualification test program, RNII performed detailed Cobalt-60 gamma radiation testing on bulk samples of 704 and PMX-200 silicone oils (contained in glass jars). The purpose of the testing was to assess total dose and dose rate sensitivity of fill fluid properties important to the function of the 3159 remote seal system in support of a supplier change for 704 silicone oil. In this testing, 704 silicone oil was irradiated at two different dose rates up to a minimum TID of 200 Mrad. PMX-200 was irradiated up to 50 Mrad. At planned increments of TID, test samples were removed from the radiation cell and viscosity and density were measured in the chemistry lab. Changes in these two characteristics are indicative of radiation-induced release of methane/hydrogen and subsequent cross-linking of molecules which may affect time response and temperature effects performance of the 3159.

The data from this test have been evaluated to determine the potential performance impacts due to radiation dose differences relevant to this analysis. As shown in Tables 3 and 4, the differences in viscosity and density at the maximum, minimum, and target measured TIDs are small and will have an insignificant effect on the performance characteristics of the 3159 remote seal. Specifically, time response scales directly with ratio of viscosities. As shown in Table 4 (Background + Accident), the ratio at minimum TID vs. target TID viscosity is -1.5% and is conservatively offset by the ratio of maximum TID vs. target TID viscosity of +4%. Also shown in Table 4 (Background + Accident), the difference in density at minimum TID vs. target TID is negligible (less than 0.1%).

Table 3. Measured Properties of PMX-200 Silicone Oil at Mild Exposure TIDs

	Background		
	TID (Mrad)	Viscosity (cs)	Density (g/cm^3)
Pre-test	0	10.20	0.937
Min TID	0.76	10.23	0.937
Target TID	1.0	10.24	0.937

	Background + Accident		
	TID (Mrad)	Viscosity (cs)	Density (g/cm^3)
Min TID	5.7	10.43	0.938
Target TID	6.5	10.47	0.938
Max TID	8.0	10.53	0.938

Table 4. Measured Properties of 704 Silicone Oil at Harsh Exposure TIDs

	Background		
	TID (Mrad)	Viscosity (cs)	Density (g/cm^3)
Pre-test	0	37.89	1.063
Min TID	1.49	37.92	1.063
Target TID	2.0	37.93	1.063

	Background + Accident		
	TID (Mrad)	Viscosity (cs)	Density (g/cm^3)
Min TID	90.2	40.18	1.064
Target TID	112	40.78	1.065
Max TID	154.3	42.40	1.065

Use of enveloping specifications

It is important to note that 3159 radiation performance specifications are developed by enveloping performance data from all specimens. This adds additional conservatism, as the performance of an under-irradiated test specimen will be enveloped by an over-irradiated test specimen should any differences exist in performance. As discussed in the previous section, no difference in performance will be expected, however the additional conservatism is noted.

Summary

The Rosemount 3159 Remote Diaphragm Seal was subjected to qualification type testing to demonstrate the adequacy of the design for safety-related applications.

During qualification type testing, pre-test dosimetry was performed to establish the size of the test area and to determine the target distances corresponding to RNII dose rate requirements. Test specimens were split into separate groups and then arranged within the test area so that the average measured TID would meet specified requirements. This approach created a suitable test environment for radiation exposure of the Rosemount 3159.

Supplemental analysis of TLD data, which included front and back side capillary TLD measurements at the time of the testing, confirmed that a portion of the capillaries were under-irradiated due to self-shielding, while other portions received significantly higher radiation than required. The average measured total TID exceeded the test requirements.

The effects of any potential under-irradiation on the properties of silicone oil fill fluids are small and would have insignificant effect on the performance of the Rosemount 3159 under normal and accident conditions.

Nuclear specifications for Rosemount 3159 envelop the maximum observed errors, which would be conservative and envelop all observed data including over irradiated specimens.

The under-irradiation of a portion of the capillaries does not impact the conclusions and specifications established in qualification summary report D2013009 and the safety function of the Rosemount 3159 Remote Diaphragm Seal is not affected.

III. Corrective steps that will be taken to avoid further nonconformance

Qualification summary report D2013009 will be revised to incorporate elements of the supplemental radiation exposure analysis to ensure this assessment is documented and visible to all users of D2013009.

IV. Date when corrective actions will be completed

April 30, 2020.