ATTACHMENT 1

SAIC-90/1370

TECHNICAL EVALUATION REPORT

NORTH ANNA POWER STATION UNITS 1 AND 2

STATION BLACKOUT EVALUATION

TAC Nos. 68572 AND 68573

SAIC

Science Applications International Corporation

An Employee-Owned Company

Final
September 24, 1990

Prepared for:

U.S. Nuclear Regulatory Commission
Washington, D.C. 20555

Contract NRC-03-87-029
Task Order No. 38

9010030250 XA

Post Office Box 1303, 1710 Goodridge Drive, McLean, Virginia 22102 (703) 821-4300

TABLE OF CONTENTS

TECHNICAL EVALUATION REPORT

NORTH ANNA POWER STATION UNITS 1 AND 2
STATION BLACKOUT EVALUATION

1.0 BACKGROUND

On July 21, 1988, the Nuclear Regulatory Commission (NRC) amended its regulations in 10 CFR Part 50 by adding a new section, 50.63, "Loss of All Alternating Current Power" (1). The objective of this requirement is to assure that all nuclear power plants are capable of withstanding a station blackout (SBO) and maintaining adequate reactor core cooling and appropriate containment integrity for a required duration. This requirement is based on information developed under the commission study of Unresolved Safety Issue A-44, "Station Blackout" (2-6).

The staff issued Regulatory Guide (RG) 1.155, "Station Blackout," to provide guidance for meeting the requirements of 10 CFR 50.63 (7). Concurrent with the development of this regulatory guide, the Nuclear Utility Management and Resource Council (NUMARC) developed a document entitled, "Guidelines and Technical Basis for NUMARC Initiatives Addressing Station Blackout at Light Water Reactors," NUMARC 87-00 (8). This document provides detailed guidelines and procedures on how to assess each plant's capabilities to comply with the SBO rule. The NRC staff reviewed the guidelines and analysis methodology in NUMARC 87-00 and concluded that the NUMARC document provides an acceptable guidance for addressing the 10 CFR 50.63 requirements. The application of this method results in selecting a minimum acceptable SBO duration capability from two to sixteen hours depending on the plant's characteristics and vulnerabilities to the risk from station blackout. The plant's characteristics affecting the required coping capability are: the redundancy of the onsite emergency AC power sources, the reliability of onsite emergency power sources, the frequency of loss of offsite power (LOOP), and the probable time to restore offsite power.

In order to achieve a consistent systematic response from licensees to the SBO rule and to expedite the staff review process, NUMARC developed two

generic response documents. These documents were reviewed and endorsed by the NRC staff (9) for the purposes of plant specific submittals. The documents are titled:

1. "Generic Response to Station Blackout Rule for Plants Using Alternate AC Power," and

2. "Generic Response to Station Blackout Rule for Plants Using AC Independent Station Blackout Response Power."

A plant-specific submittal, using one of the above generic formats, provides only a summary of results of the analysis of the plant's station blackout coping capability. Licensees are expected to ensure that the baseline assumptions used in NUMARC 87-00 are applicable to their plants and to verify the accuracy of the stated results. Compliance with the SBO rule requirements is verified by review and evaluation of the licensee's submittal and audit review of the supporting documents as necessary. Follow up NRC inspections assure that the licensee has implemented the necessary changes as required to meet the SBO rule.

In 1989, a joint NRC/SAIC team headed by an NRC staff member performed audit reviews of the methodology and documentation that support the licensees' submittals for several plants. These audits revealed several deficiencies which were not apparent from the review of the licensees' submittals using the agreed upon generic response format. These deficiencies raised a generic question regarding the degree of the licensees' conformance to the requirements of the SBO rule. To resolve this question, on January 4, 1990, NUMARC issued additional guidance as NUMARC 87-00 Supplemental Questions/Answers (15) addressing the NRC's concerns regarding the deficiencies. NUMARC requested that the licensees send their supplemental responses to the NRC addressing these concerns by March 30, 1990.

2.0 REVIEW PROCESS

The review of the licensee's submittal is focused on the following areas consistent with the positions of RG 1.155:

A. Minimum acceptable SBO duration (Section 3.1),

B. SBO coping capability (Section 3.2),

C. Procedures and training for SBO (Section 3.4),

D. Proposed modifications (Section 3.3), and

E. Quality assurance and technical specifications for SBO equipment (Section 3.5).

For the determination of the proposed minimum acceptable SBO duration, the following factors in the licensee's submittal are reviewed: a) offsite power design characteristics, b) emergency ac power system configuration, c) determination of the emergency diesel generator (EDG) reliability consistent with NSAC-108 criteria (9), and d) determination of the accepted EDG target reliability. Once these factors are known, Table 3-8 of NUMARC 87-00 or Table 2 of Regulatory Guide 1.155 provides a matrix for determining the required coping duration.

For the SBO coping capability, the licensee's submittal is reviewed to assess the availability, adequacy and capability of the plant systems and components needed to achieve and maintain a safe shutdown condition and recover from an SBO of acceptable duration which is determined above. The review process follows the guidelines given in RG 1.155, Section 3.2, to assure:

a. availability of sufficient condensate inventory for decay heat removal,

b. adequacy of the class 1E battery capacity to support safe shutdown,

c. availability of adequate compressed air for air-operated valves necessary for safe shutdown,

d. adequacy of the ventilation systems in the vital and/or dominant areas that include equipment necessary for safe shutdown of the plant,

e. ability to provide appropriate containment integrity, and

f. ability of the plant to maintain adequate reactor coolant system inventory to ensure core cooling for the required coping duration.

The licensee's submittal is reviewed to verify that required procedures (i.e., revised existing and new) for coping with SBO are identified and that appropriate operator training will be provided.

The licensee's submittal for any proposed modifications to emergency AC sources, battery capacity, condensate capacity, compressed air capacity, appropriate containment integrity and primary coolant make-up capability is reviewed. Technical Specifications and quality assurance set forth by the licensee to ensure high reliability of the equipment, specifically added or assigned to meet the requirements of the SBO rule, are assessed for their adequacy.

The licensee's proposed use of an alternate AC power source is reviewed to determine whether it meets the criteria and guidelines of Section 3.3.5 of RG 1.155 and Appendix B of NUMARC 87-00.

This SBO evaluation is based on a review of the licensee's submittals dated April 17 and 20, 1989 (11 and 20), and March 30, 1990 (12), a telephone conversation on July 3, 1990, and the available information in the plant Updated Final Safety Analysis Report (UFSAR) (13); it does not include a

concurrent site audit review of the supporting documentation. Such an audit may be warranted as an additional confirmatory action. This determination would be made and the audit would be scheduled and performed by the NRC staff at some later date.

3.0 EVALUATION

3.1 Proposed Station Blackout Duration

Licensee's Submittal

The licensee, Virginia Electric and Power Company (VEPCO), calculated (11 and 12) a minimum acceptable station blackout duration of eight hours for North Anna Power Station Units 1 and 2. The licensee stated no modifications are necessary to attain this coping duration.

The plant factors used to estimate the proposed SBO duration are:

1. **Offsite Power Design Characteristics**

   The plant AC power design characteristic group is "P2" based on:

   a. Independence of the plant off site power system characteristics of "I1/2,"

   b. Expected frequency of grid-related LOOPs of less than one per 20 years,

   c. Estimated frequency of LOOPs due to extremely severe weather (ESW) places the plant in ESW group "4," and

   d. Estimated frequency of LOOPs due to severe weather (SW) places the plant in SW group "2."

2. **Emergency AC (EAC) Power Configuration Group**

   The EAC power configuration of the plant is "C." Each unit at North Anna power station is equipped with two dedicated EDGs. One EDG per unit is necessary to operate safe shutdown equipment following a LOOP.

3. **Target Emergency Diesel Generator Reliability**

The licensee selected a target EDG reliability of 0.95 based on having a nuclear unit average EDG reliability of greater than 0.95 for the last 100 demands. The licensee stated (12) that the targeted EDG reliability will be maintained.

Review Of Licensee's Submittal

The factors which affect the estimation of the required SBO coping duration are: the independence of offsite power system, the estimated frequency of LOOPs due to the severe and extremely severe weather conditions, the expected frequency of the grid-related LOOPs, the classification of EAC, and the selection of EDG target reliability. The licensee's estimated frequency of LOOPs due to SW and ESW conditions conform with those given in Table 3-2 of NUMARC 87-00. The licensee correctly classified the EAC configuration of each unit as "C."

The licensee stated that the independence of the offsite power system grouping is "I1/2." A review of the North Anna power station UFSAR indicates that:

1. All offsite power sources are connected to the plant through one switchyard.

2. At each unit, there are two divisions of 4.16 kV emergency buses, each division is normally powered from a separate and independent offsite power source through a reserve station service transformer (RSST), see Figure 1 (20).

3. Upon the loss of RSST "A," "B," or "C," (loss of preferred power source), the connected emergency bus(es), i.e. Bus 1H, 2H, 1J or 2J, can only be powered through manual closure of circuit breakers which tie independent divisions together. This means of providing

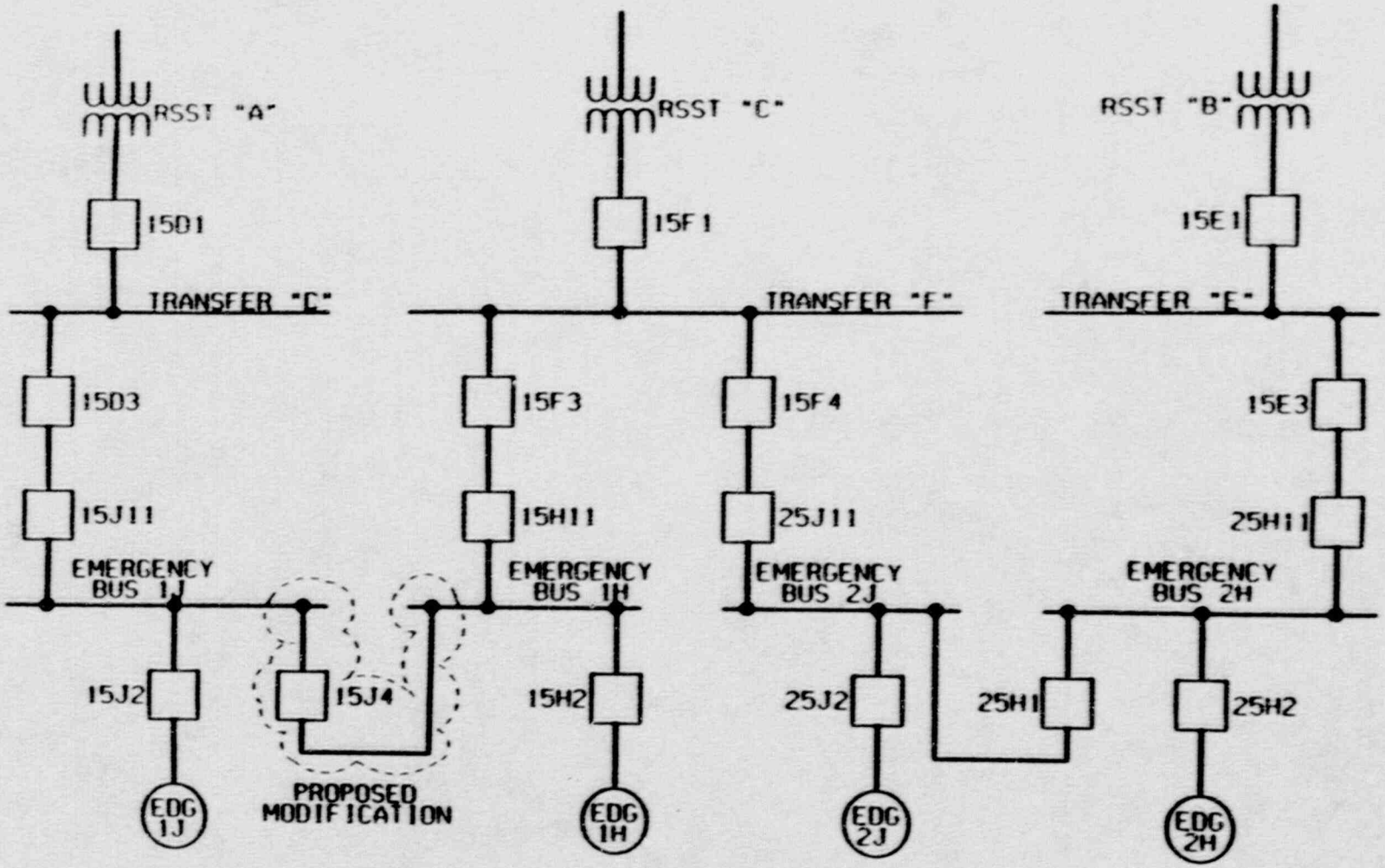

FIGURE 1

NORTH ANNA POWER STATION

power does not conform to the operating guidance regarding the independence of the emergency trains in a unit.

Using the guidance provided in Table 5 of RG 1.155 the independence of the offsite power system grouping is "I3." This conclusion is driven by the configuration discussed in item 3 above.

The licensee's statement of nuclear unit average EDG reliability of greater than 0.95 for the last 100 demands as a justification for selecting a target EDG reliability of 0.95 is in conformance with both NUMARC 87-00 and RG 1.155. Although the licensee is committed to maintain the targeted EDG reliability, it did not state whether the plant has any formal EDG reliability program which conforms to guidance provided in RG 1.155. Since the information supporting the EDG target reliability is only available onsite for review, an audit may be required to confirm compliance.

With regard to the expected frequency of grid-related LOOPs at the site, we cannot confirm the stated results. The available information in NUREG/CR-3992 (3), which gives a compendium of information on the loss of offsite power at nuclear power plants in the U.S., indicates that the North Anna station did not have any grid-related LOOPs prior to the calendar year 1984. This time period does not include the last six years of operation of the North Anna power station. However, in the absence of any contradicting information, we agree with the licensee's statement.

Based on the above, we concur with the licensee that the offsite power design characteristics of the site is "P2" requiring a minimum coping duration of eight hours. The independence of offsite power grouping does not affect the classification of the site's offsite power design characteristic grouping.

3.2 Alternate Ac (AAC) Power Source

Licensee's Submittal

The licensee stated that the AAC power source at North Anna will be from one of the four EDGs at the site. This AAC power source will be available to the blacked out unit within one hour from the onset of an SBO event and has sufficient capacity and capability for coping with an SBO for four hours while maintaining and bringing both units to safe shutdown conditions. The proposed AAC power configuration is shown in Figure 1. The licensee proposed a modification of the electrical connection configuration of the EDGs. Currently, emergency buses 2J and 2H for unit 2 are connected to each other through tie breaker 25H1, but no such connection exists between unit 1 emergency buses 1J and 1H. The proposed modification would add tie breaker 15J4 to connect emergency bus 1J to emergency bus 1H.

Review of Licensee's Submittal

The licensee's proposed AAC power source configuration, see Figure 1, does not conforms to an acceptable configuration provided in NUMARC 87-00 Supplemental Questions/Answers under Question C.1 (15). The licensee addressed this non-conformance for the Surry power station by proposing to install a non-safety grade cross-tie between the transfer Buses "D" and "E" (16). The licensee needs to commit to the same modification for the North Anna Units 1 and 2. This is needed to have an acceptable cross connect to power the needed air compressor from the operating EDGs.

The proposed AAC power source, one of the site EDGs, meets all the required criteria in Appendix B of NUMARC 87-00 except for the following cases:

- Paragraph B.9 of Appendix B states, "the AAC power source shall be ... capable of maintaining voltage and frequency within limits

consistent with established industry standard that will not degrade the performance of any shutdown system or component. At a multi-unit site, except for 1/2 Shared or 2/3 emergency AC power configuration, an adjacent unit's Class 1E power source may be used as an AAC power source for the blacked-out unit if it is capable of powering the required loads at both units."

- Paragraph B.12 of Appendix B states, " ... the AAC system shall be demonstrated by initial test to be capable of powering required shutdown equipment within one hour of a station blackout event."

The guidance on the use of existing EDGs as AAC power sources at multi-unit sites is documented in RG 1.155, Section 3.3.5, NUMARC 87-00, Section 2.3.1(3), NUMARC 87-00 Supplemental Questions/Answers, Questions 3.4 and B.3, and further detailed in References 17, 18, and 19. In addition, the SBO rule states that at multi-unit sites where the combination of EAC power sources *'exceeds the minimum redundancy requirements for safe shutdown (non-DBA) of all units, the remaining EAC sources may be used as AAC sources'* provided that they meet the applicable requirements.

The rule statement requires *'minimum redundancy.'* This means that in order for an EDG to qualify as an AAC source there must be an EDG available in the NBO unit in addition to the number of EDGs required to meet the minimum EDG redundancy requirement for powering a normal safe shutdown loads following a LOOP event. Thus, the EDGs in a two-unit site with two dedicated EDGs per unit would not qualify as AAC sources. Two EDGs per unit would meet only the minimum redundancy requirement, and there is no excess EDG.

However, there are some plants at multi-unit sites which have EDGs that just meet the minimum redundancy but each EDG has sufficient capacity to power all the normal LOOP loads of the NBO unit and also has sufficient excess capacity to power the required safe shutdown loads of the SBO unit. Recognizing the existence of this type of situation, the staff

has interpreted the *'literal'* excess EDG redundancy requirement of the SBO rule to allow large capacity EDGs to qualify as AAC sources, provided other applicable requirements are met.

In order to take credit for this interpretation, the NRC staff's basic position has been (17, 18, and 19) that:

1. no action should be taken that would exacerbate the already difficult situation in the NBO unit. Any actions that make operator tasks more difficult such as load switching or disablement of information readouts or alarms in the control room are also considered to be a degradation of normal safe shutdown capability for LOOP in the NBO unit. And,

2. excess capacity of the EDG being designated as an AAC source should not be the capacity made available by shedding or not powering normal safe shutdown loads in the NBO unit. Examples of such loads are: motor driven auxiliary feedwater pumps; heating, ventilation and air conditioning loads; the power supply of the plant computer; one or more sets of redundant instrumentation; etc. The shedding of such loads constitutes degradation of the normal safe shutdown capability of the NBO unit.

It is not in the interest of safety to reduce the capability to handle various eventualities in one unit for the purpose of meeting the SBO rule in another unit. Each unit must meet the SBO rule on its own merits without reducing another unit's capability to respond to its own potential problems.

The excess capacity of the EDG in the NBO unit that qualifies it as an AAC source is, therefore, *'only that available capacity within the normal continuous rating but above the EDG load represented by the complete contingent of safety related and non-safety related loads normally expected to be available for the LOOP condition.'*

In its SBO supplemental response (12), the licensee stated that load shedding is needed in the NBO unit to provide power to selected equipment in the blacked out unit. During a telephone conversation on July 3, 1990, the licensee provided a list of NBO and SBO loads that are expected to be carried by one EDG. On the NBO load list, the licensee did not consider the load requirements associated with the residual heat removal (RHR) pump, component cooling water pump (CCW), turbine generator oil pump, and generator lift pump. The licensee identified the following SBO loads: two battery chargers and associated loads, two control rod drive mechanism fans, control room/emergency switchgear chiller, emergency switchgear room air conditioning unit, pressurizer heater, and transformer losses for a total of 519 kW. The licensee stated that the instrument air compressors are powered from emergency buses 1H and 2H, therefore, an air compressor may not be available until the electrical cross-tie is made.

To conform with the guidance stated above, the licersee needs to consider the load requirements associated with the RHR pump, turbine generator oil pump, CCW pump, and generator lift pump as part of the required loads on the NBO unit. Our review of the plant UFSAR indicates a discrepancy on equipment load requirements between what is given in the UFSAR and that provided by the licensee. If we were to add the missing loads to the licensee's identified NBO loads, then the total NBO loads will exceed the 2,000 hour rating capacity (3,000 kW) of each EDG. Table 8.3-6 of the UFSAR, which itemizes the individual equipment loads, gives a total of 2749 to 2938 kW for operation from 1 to 12 hours after a LOOP. Therefore, the site EDGs cannot be considered as a viable AAC power source for the blacked out unit.

Based on the above, we conclude that the licensee's proposed AAC power source does not conform to the requirements of the SBO rule, and the licensee needs to provide an alternate power source to support the required SBO loads.

3.3 Station Blackout Coping Capability

The plant coping capability with a station blackout for the required duration of eight hours is assessed based on the following results:

1. **Condensate Inventory for Decay Heat Removal**

Licensee's submittal

The licensee stated that 103,024 gallons of water are required for decay heat removal for the proposed SBO duration of eight hours. The minimum available water in the Emergency Condensate Storage Tank (ECST) per technical specifications is 110,000 gallons per unit. This volume of water exceeds the quantity required to cope with an SBO of 8-hour duration. The licensee stated that no plant modifications or procedure changes are needed to utilize this water source.

Review of Licensee's Submittal

The licensee estimated the needed condensate inventory for decay heat removal during an 8-hour SBO duration using a generic equation given in NUMARC 87-00. The licensee stated that the plant will be maintained in a hot standby condition during the SBO event.

For the purpose of this review we used data from Branch Technical Position ASB 9-2, "Residual Decay Heat Release Rate for Light Water Reactors," (14) to estimate the needed water to maintain hot standby condition for an 8-hour SBO event. Based on a maximum reactor thermal power of 2,905 MWt, we estimated that ~103,300 gallons of condensate would be needed to remove decay heat during an 8-hour SBO event. A review of the plant UFSAR (revision 9/89) indicates that the minimum ECST tank level is 110,000 at all times. Therefore, we agree with the licensee that the plant has

sufficient condensate inventory to cope with an SBO event of eight hours duration. However, the licensee needs to describe the operability of the decay heat removal system in the absence of sufficient AC and DC power sources during an SBO event (see Section 3.2 above, and item 2 below).

2. **Class 1E Battery Capacity**

Licensee's Submittal

The licensee stated in the April 17, 1989 submittal (11) that the station batteries have sufficient capacity to meet SBO loads for one hour without charging, after which battery voltage will degrade. Each unit at North Anna has two batteries per safety train. The AAC power source will support the battery chargers on one safety train. Therefore, one division (two channels) of instrumentation will be available for the entire SBO event. The batteries not connected to the AAC powered charger will be monitored and the loads will be procedurally stripped to maintain additional channels of instrumentation.

Review of Licensee's Submittal

Since the AAC power source does not meet the guidance for the SBO rule, the assumption that one division of class 1E batteries are charged from AAC source is invalid. To conform with the guidance provided in NUMARC 87-00 Supplemental Questions/Answers, the licensee needs to ensure that the normal battery-backed plant monitoring and electrical system controls remain operational for successfully coping with and recovering from an SBO event. Therefore, the licensee needs to provide a separate AAC power source, or provide additional battery capacity to support the required SBO loads for eight hours without charge.

3. **Compressed Air**

Licensee's Submittal

In the April 17, 1989 (11) SBO submittal, the licensee stated that all air operated valves (AOVs) needed for one hour SBO coping can either be operated manually or have sufficient back-up sources independent of the preferred and blacked out unit's class 1E power supply. Valves requiring manual operation or that need back-up power sources for operation are identified in plant procedures. Both North Anna units operate on a common compressed air system with one instrument air compressor per unit powered from an emergency bus. There are also separate air bottles or a nitrogen supply on critical valves to allow control without a compressor. An air compressor will be available within one hour after the electrical cross-connect is established.

Review of Licensee's Submittal

Since the air system is common between the units and the compressors are supported from emergency buses, the compressed air will be available within one hour when the electrical cross-connect is established. This assessment is based on the assumption that the licensee will commit to add a non-safety grade cross tie between transfer buses "D" and "E." A review of the plant UFSAR indicates that the auxiliary feedwater (AFW) system is equipped with redundant flow control valves. These valves are either air-operated or motor-operated valves. The atmospheric dump valves which are used to control decay heat release rate are also air operated. The UFSAR also states that these air operated valves are equipped with back-up compressed air, and local manual back-up. Therefore, we agree with the licensee that air operated valves needed to cope with an SBO have sufficient back-up source for their operations.

4. Effects of Loss of Ventilation

Licensee's Submittal

The licensee's calculated post-SBO steady state ambient air temperature for the plant areas containing SBO equipment is as follows:

Area	Temperature (°F)	
	Final	Initial
Emergency Switchgear Room	153°F (<120°F)*	NP
Charging Pump Cubicle	300°F (<120°F)*	NP
Control Room	181°F (<120°F)*	NP
AFW Pump Room	175°F	NP

* = Temperature when HVAC is available @ 1 hour
NP = Not provided by the licensee

No heating, ventilation, and air conditioning (HVAC) system would be available to the emergency switchgear room, control room, charging pump cubicle and AFW pump room for the first hour following an SBO event.

The operability of the SBO response equipment in the dominant areas of concern has been assessed in accordance with Appendix F and the Topical Report to the NUMARC 87-00. The licensee has asserted that opening doors and dampers and initiating appropriate HVAC within one hour after the SBO will reduce the emergency switchgear room (ESR), charging pump cubicle, AFW pump room and control room temperatures to less than 120°F.

Review of Licensee's Submittal

The licensee's submittal dated March 30, 1990 (12) implied that the NUMARC 87-00 method was used for calculating the steady state room ambient air temperature rise in dominant areas of concern. The NUMARC 87-00 method is not applicable to an eight hour room heat-up and therefore, a different method needs to be used. In addition, since the AAC power source does not conform to the requirements of the SBO rule, the assumption of HVAC availability within one hour is invalid. Therefore, the licensee needs to re-assess the room heat-up calculations by considering an appropriate method for an 8-hour SBO.

The licensee's implicit assumption that HVAC operation after one hour will insure a temperature less than 120°F in the control room, ESR, and charging pump cubicle is incorrect. Detailed transient room heat-up calculations have shown that most of a room's temperature rise after the loss of HVAC occurs in the first hour. Thus, it is likely that, at one hour, the area temperatures to be almost the same as the final calculated temperatures before the AAC powered HVAC is assumed to be initiated. Therefore, it is expected that calculated final temperatures in the above areas to be well in excess of 120°F. The licensee needs to re-assess the operability of the SBO equipment in the above areas using the final ambient temperatures resulting from the loss of HVAC during an 8-hour SBO event.

In addition, the licensee needs to provide additional specific details on anticipated operator actions in the AFW pump room to justify the acceptability of a 175°F environment. These details need to specifically address the ability of the operator to adequately perform his functions in this room during an SBO event.

5. **Containment Isolation**

Licensee's Submittal

The licensee reviewed the plant list of containment isolation valves to verify that valves which must be capable of being closed or operated (cycled) during an 8-hour SBO duration can be positioned (with indication) independent of the preferred and blacked-out unit's class 1E power supplies. The licensee stated that no procedure changes or plant modifications are required to ensure that appropriate containment integrity can be maintained under SBO conditions.

Review of Licensee's submittal

A review of the containment isolation valves (CIVs) was performed using the CIVs identified on Table 6.2-39 of the North Anna UFSAR. This review was performed in accordance with the criteria delineated in NUMARC 87-00 and RG 1.155. We concur with the licensee's statement that all CIVs which must be capable of being closed or operated (cycled) during the SBO coping duration can be positioned (with indication) independent of the preferred and blacked-out unit's class 1E power supplies.

6. **Reactor Coolant Inventory**

Licensee's Submittal

The licensee stated that a plant specific analysis performed for the Surry Power Station resulted in demonstrating that core uncovering would not occur during the one hour period following an SBO event. This analysis bounds the North Anna reactor coolant system (RCS) inventory requirement. Therefore, make-up systems are not required to maintain core cooling under natural circulation for the initial one hour period.

During the telephone conversation on July 3, 1990, the licensee stated that a charging pump in the NBO unit can provide sufficient make-up flow to the RCS of both units through a cross connect line.

Review of Licensee's Submittal

We performed an independent evaluation to assess the reactor coolant inventory depletion. This evaluation considered the volume of water above the core available for leakage prior to core uncovering and the charging pump capacity at normal expected RCS pressure as compared to the leakage rate from both units. The blacked out unit requires a charging flow rate of 100 gpm, 25 gpm per pump for seal leak and an assumed 25 gpm for the maximum allowed technical specification leak rate, for maintaining the RCS inventory. The NBO unit requires a charging flow to replenish the losses from the nominal seal leakage from pumps and the level shrink caused by cooldown. At each unit there are three charging pumps, each with a design flow rate capacity of 150 gpm. Therefore, one charging pump has sufficient capacity to maintain the RCS inventory at the NBO unit and prevent core uncovering at the blacked out unit provided that the reactor at the NBO unit is kept at hot standby condition during an SBO event. However, the licensee needs to justify the adequacy of this method for maintaining the RCS water level above the core without the benefit of instrumentation or DC power in the blacked out unit after one hour when the batteries are depleted.

3.4 Proposed Procedures and Training

Licensee's Submittal

The licensee has stated that the following procedures have been reviewed against the guidance of NUMARC 87-00, Section 4, and have been or will be modified where necessary:

1. AC power restoration including the Virginia Power Transmission System Restoration Plan and Station Procedure AP-10.2, "Restoration of Switchyard."

2. Severe weather procedure including Station Procedure AP-41, "Severe Weather Conditions."

3. Station blackout response including implementation of the AAC source to achieve safe shutdown on both units.

4. Station ECA-0 Series (Emergency Contingency Action) procedures based on Westinghouse generic procedures changed in accordance with NUMARC 87-00 for SBO "defense-in-depth."

5. Power restoration to a de-energized emergency bus procedures (AP-10 Series).

6. Procedures for using the proposed new manual cross-tie between emergency busses 1J and 1H, and operator flexibility in electrical load selection consistent with plant conditions and the 2000 hour rating of the EDG.

The licensee has stated that all of the aforementioned procedure changes will be implemented within two years after a notification is received from the NRC in accordance with 10 CFR 50.63(c)(3).

Review of Licensee's Submittal

We neither received nor reviewed the affected procedures. These procedures are plant specific actions concerning the required activities to cope with an SBO. We believe it is the licensee's responsibility to revise and implement these procedures, as needed, to mitigate an SBO event and to assure that these procedures are complete and correct and that the associated training needs are carried out accordingly.

3.5 Proposed Modifications

Licensee's Submittal

The licensee proposes (11) to add an emergency bus tie breaker between Bus 1H and 1J in Unit 1. This modification will allow transfer of power from emergency Bus 1J to Unit 2. The licensee stated that the modifications of procedures are to be implemented within two years after the notification provided by the staff in accordance with 10 CFR 50.63 (c)(3).

Review of Licensee's Submittal

The proposed modification does not conform to the guidance provided in NUMARC 87-00 Supplemental Questions/Answers. The licensee acknowledged (12) that this modification is unacceptable to the staff and proposed a new modification for the Surry power station. The new modification (16) cross ties transfer Buses "D" and "E." The licensee needs to perform a similar modification for the North Anna plant. In addition, since the proposed AAC power source does not have sufficient capacity, additional modifications are needed in order for the North Anna power station to become an AAC plant.

3.6 Quality Assurance And Technical Specifications

The licensee's submittals do not document the conformance of the plant's SBO equipment to the guidance of RG 1.155, Appendices A and B.

4.0 CONCLUSIONS

Based on our review of the licensee's submittals and the related supporting documents and discussions for the North Anna Power Station Units 1 and 2, we find that the submittal does not conform to the requirements of the SBO rule and the guidance of RG 1.155 for the following reasons:

1. Independence of Offsite Power System

The licensee classifies the site as "I1/2." Our review indicates that the site is "I3" since upon loss of power from either RSST "A," "B," or "C" (preferred power sources) only one division of emergency buses can be powered. The RG 1.155 position is that all emergency buses be powered.

2. Alternate AC Power Source

The licensee's proposed load shedding of the non-blacked-out (NBO) unit is not in conformance with the requirements of the SBO rule and the guidelines provided in RG 1.155, NUMARC 87-00 Supplemental Questions/Answers. The load shedding scheme will result in the degradation of the LOOP safe shutdown capability of the NBO unit. This excess capacity made available by load shedding could not be credited as an AAC source for the blacked out unit (see the discussion under the AAC power source in Section 3.2). Therefore, the AAC power source does not have sufficient capacity to power the selected safe shutdown equipment in the blacked out unit.

3. Condensate Inventory for Decay Heat Removal

Although sufficient condensate inventory exists for each unit in the emergency condensate storage tank, the ability of the auxiliary feedwater system to provide that water to the steam generators is in doubt due to the lack of DC power for control and

instrumentation, resulting from insufficient AAC capacity (see items 2 and 4).

4. **Class 1E Battery Capacity**

The plant UFSAR indicates that each class 1E battery will last for one hour without being charged. However, the batteries are needed to supply the connected loads for eight hours. Since the proposed AAC power source does not conform to the requirements of the SBO rule, the assumption that one division of the class 1E batteries will be charged from the AAC source is invalid. Therefore the licensee needs to provide a separate AAC power source, or provide additional battery capacity to ensure that the class 1E batteries will last for eight hours without charge. To conform with the guidance provided in NUMARC 87-00 Supplemental Questions/Answers, the licensee needs to ensure that the normal battery-backed plant monitoring and electrical system controls remain operational for successfully coping with and recovering from an SBO event.

5. **Effects of Loss of Ventilation**

The licensee's submittal indicates that the NUMARC 87-00 method was used to calculate the ambient air temperature rise in the dominant areas of concern. This method is only applicable to a four coping plant. The licensee also takes credit from the availability of the AAC powered HVAC to selected areas in the blacked out unit. Since the AAC power source does not conform to the requirements of the SBO rule, the assumption of the availability of the required HVAC is invalid. Therefore, the licensee needs to re-assess the room heat-up calculations and SBO equipment operability using an appropriate method for an 8-hour SBO event without HVAC, or provide an alternate AAC source. In addition, the acceptability of an AFW pump room at 175°F for operator entry and manual actions needs to be further justified by the licensee. Further, the licensee needs to justify why there is

no mention of opening the control cabinet doors within 30 minutes from the onset of an SBO as guided in NUMARC 87-00 Supplemental Questions/Answers.

6. **Reactor Coolant Inventory**

The licensee proposes to use a charging pump from the NBO unit to provide the needed RCS make-up in the blacked out unit. Our review indicates that the NBO charging pump has sufficient capacity to maintain an adequate RCS inventory in the SBO unit. However, the licensee needs to justify the adequacy of this method for maintaining the RCS inventory above the core without the benefit of instrumentation or DC power in the blacked out unit.

7. **Proposed Modifications**

The selection of one of the EDGs as an AAC power source does not conform with the requirements of the SBO rule. In addition, the licensee's proposed modification of the emergency bus tie breaker does not conform to the guidance provided in NUMARC 87-00 Supplemental Questions/Answer. Therefore, additional modifications are necessary for the North Anna power station to become an AAC plant.

8. **Quality Assurance and Technical Specifications**

The licensee has not submitted any information regarding the quality assurance or technical specifications aspects of SBO coping equipment. This does not meet the requirements of RG 1.155 Section 3.5 and Appendices A and B.

5.0 References

1. The Office of Federal Register, "Code of Federal Regulations Title 10 Part 50.63," 10 CFR 50.63, January 1, 1989.

2. U.S. Nuclear Regulatory Commission, "Evaluation of Station Blackout Accidents at Nuclear Power Plants - Technical Findings Related To Unresolved Safety Issue A-44," NUREG-1032, Baranowsky, P. W., June 1988.

3. U.S. Nuclear Regulatory Commission, "Collection and Evaluation of Complete and Partial Losses of Offsite Power at Nuclear Power Plants," NUREG/CR-3992, February 1985.

4. U.S. Nuclear Regulatory Commission, "Reliability of Emergency AC Power System at Nuclear Power Plants," NUREG/CR-2989, July 1983.

5. U.S. Nuclear Regulatory Commission, "Emergency Diesel Generator Operating Experience, 1981-1983," NUREG/CR-4347, December 1985.

6. U.S. Nuclear Regulatory Commission, "Station Blackout Accident Analyses (Part of NRC Task Action Plan A-44)," NUREG/CR-3226, May 1983.

7. U.S. Nuclear Regulatory Commission Office of Nuclear Regulatory Research, "Regulatory Guide 1.155 Station Blackout," August 1988.

8. Nuclear Management and Resources Council, Inc., "Guidelines and Technical Bases for NUMARC Initiatives Addressing Station Blackout at Light Water Reactors," NUMARC 87-00, November 1987.

9. Thadani, A. C., letter to W. H. Rasin of NUMARC, "Approval of NUMARC Documents on Station Blackout (TAC-40577)", October 7, 1988.

10. Nuclear Safety Analysis Center, "The Reliability of Emergency Diesel Generators at U.S. Nuclear Power Plants," NSAC-108, Wyckoff, H., September 1986.

11. Cartwright, W. R., letter to USNRC Document Control Desk, "Virginia Electric and Power Company, Surry Power Station Units 1 and 2, North Anna Power Station Units 1 and 2, Response to 10 CFR 50.63: Loss of all Alternating Current Power," Docket Nos. 50-280 and 50-281, NRC License Nos. DPR-32 and DPR-37, letter Serial No. 88-414, dated April 17, 1989.

12. Stewart, W. L., letter to USNRC Document Control Desk, "Virginia Electric and Power Company, Surry Power Station Units 1 and 2, North Anna Power Station Units 1 and 2, Supplemental Response to 10 CFR 50.63: Loss of all Alternating Current Power," Docket Nos. 50-280 and 50-281, NRC License Nos. DPR-32 and DPR-37, letter Serial No. 88-414B, dated March 30, 1990.

13. North Anna Power Station Units 1 and 2 Updated Final Safety Analysis Report.

14. U.S. Nuclear Regulatory Commission," Standard Technical Review Plan for the Review of Safety Analysis Reports for Nuclear Power Plants LWR Edition," NUREG-0800, June 1987.

15. Thadani, A. C., letter with attachment to A. Marion of NUMARC, "Publicly Noticed Meeting, December 27, 1989," dated January 3, 1990 (confirming "NUMARC 87-00 Supplemental Questions/Answers," December 27, 1987).

16. Stewart W. L., letter to USNRC Document Control Desk, "Virginia Electric and Power Company Surry Power Station Units 1 and 2 Station Blackout Supplemental Response," Docket Nos. 50-280 and 50-281, NRC License Nos. DPR-32 and DPR-37, letter Serial No. 90-410, dated August 1, 1990.

17. Rosa, F., Memorandum to Docket Concerning Beaver Valley Units 1 and 2, "Meeting Summary - Meeting of February 22, 1990, on Station Blackout Issues (TAC 68510/68511)," Docket Nos. 50-334 and 50-412, dated March 6, 1990.

18. Tam, P. S., Memorandum for, "Daily Highlight-Forthcoming Meeting with NUMARC on Station Blackout (SBO) Issues (TAC 40577)," (providing a Draft Staff Position Regarding Use of Emergency AC Power Sources (EDGs) as Alternate AC (AAC) Power Sources, dated April 24, 1990), dated April 25, 1990.

19. Russell, W. T., letter to W. Rasin of NUMARC, "STATION BLACKOUT," dated June 6, 1990.

20. Cartwright, W. R., letter to USNRC Document Control Desk, "Virginia Electric and Power Company, Surry Power Station Units 1 and 2, North Anna Power Station Units 1 and 2, Supplemental Information to 10 CFR 50.63 Response: Loss of all Alternating Current Power," Docket Nos. 50-280, 50-281, 50-338, and 50-339, License Nos. DPR-32, DPR-37, NPF-4 and NPF-7, letter Serial No. 88-414A, dated April 20, 1989.