Georgia Power Company
40 Inverness Center Parkway
Post Office Box 1295
Birmingham, Alabama 35201
Telephone 205 877-7279

J. T. Beckham, Jr.
Vice President - Nuclear
Hatch Project

Georgia Power
the southern electric system

February 3, 1994

Docket No. 50-366 HL-4493

TAC No. M87850

U.S. Nuclear Regulatory Commission
ATTN: Document Control Desk
Washington, D.C. 20555

Edwin I. Hatch Nuclear Plant - Unit 2
Request to Revise Technical Specifications:
Increase in Allowable MSIV Leakage Rate and
Deletion of the MSIV Leakage Control System

Gentlemen:

By letter dated October 1, 1993 Georgia Power Company (GPC) submitted proposed changes to the Plant Hatch Unit 2 Technical Specifications, Appendix A to Operating License NPF-5, to increase the allowable main steam isolation valve (MSIV) leakage and delete the requirements for the currently installed MSIV leakage control system.

On December 10, 1993, GPC representatives and consultants met with the Nuclear Reactor Regulation (NRR) staff to discuss the proposed changes and to provide responses to the NRR staff's questions and comments. By letter dated December 29, 1993, the NRR staff requested GPC to provide a response to comments relative to the radiological dose assessment, a postulated failure of valve 2B21-F021, small diameter piping interconnected with the condenser, and the piping support margin assessment. By letter dated January 6, 1994, GPC provided a response to the above comments and revised the proposed changes to the Technical Specifications relative to the total allowable MSIV leakage.

On January 12 and 13, 1994, GPC representatives and consultants met with the NRR staff at Plant Hatch to discuss GPC's submittals and to tour the plant site. By letter dated January 27, 1994, the NRR staff requested GPC to provide a response relative to the seismic evaluation of the off-gas hydrogen recombiner system supports and the engineering analyses for selected critical supports.

A017 1/1

Enclosure 1 provides GPC's response to the requested information. Enclosure 2 provides a summary of the methodology and evaluations performed to justify the proposed increase in allowable MSIV leakage and the deletion of the MSIV leakage control system. Enclosure 3 provides GPC's environmental assessment for the proposed amendment.

Should you have any questions in this regard, please contact this office.

Sincerely,

J. T. Beckham, Jr.

JKB/cr

Enclosures:
1) Response to Request for Additional Information
2) Summary of Methodology and Evaluations
3) Environmental Assessment

cc: *Georgia Power Company*
Mr. H. L. Sumner, General Manager - Nuclear Plant
NORMS

U.S. Nuclear Regulatory Commission, Washington, D.C.
Mr. K. Jabbour, Licensing Project Manager - Hatch

U.S. Nuclear Regulatory Commission, Region II
Mr. S. D. Ebneter, Regional Administrator
Mr. L. D. Wert, Senior Resident Inspector - Hatch

Enclosure 1

Edwin I. Hatch Nuclear Plant
Request to Revise Technical Specifications:
Increase in Allowable MSIV Leakage Rate and
Deletion of the MSIV Leakage Control System

Response to Request for Additional Information

On January 12 and 13, 1994, Georgia Power Company (GPC) representatives and consultants met with the Nuclear Reactor Regulation (NRR) staff to discuss GPC's request to revise the Unit 2 Technical Specifications to delete the main steam isolation valve (MSIV) leakage control system and to increase the allowable MSIV leakage rate. During the meeting, the NRR staff requested additional information relative to the engineering evaluation of the off-gas hydrogen recombiner system supports and the engineering analyses of selected critical supports. GPC's response is as follows:

1. NRR Staff Comment:

   The licensee should provide the evaluation that demonstrates the adequacy of the off-gas hydrogen recombiner system supports.

   GPC Response:

   The identified leakage control path includes a 2 inch line which branches from the main steam line to the steam jet air ejectors line. This 2 inch line reduces to 1 1/2 inch, attaches to the tube side of the off-gas preheater, and terminates at the boundary valve downstream of the preheater. The shell side of the off-gas preheater has a 16 inch line which runs between the preheater and the hydrogen recombiner tank. Both the off-gas preheater and recombiner tank are spring-supported. The NRR staff comment was that if the recombiner tank fell off of its spring supports during a seismic event it then may impose large movements on the off-gas preheater, resulting in displacement-induced damage to the 1 1/2 inch line in the leakage control path.

   The piping attached to the recombiner and preheater tank is very stiff. As shown in Figure 1, the 16 inch pipe goes through a 7 foot 2 inch long sleeve which penetrates the slab at elevation 112, both upstream and downstream of these vessels. The sleeve is made of 20 inch pipe; therefore, the movement of the pipe is limited to the gap inside the 20 inch pipe, which is approximately 2 inches.

Vertical movement of the piping is limited by the pipe and equipment spring supports, which allow approximately 2 inches of vertical motion before bottoming out. The support design has sufficient margin so that combined vertical loads due to seismic and dead weight are less than rated loads. From the piping computer analysis run, the horizontal movement at the recombiner due to seismic loading is determined to be approximately 2 inches. This movement would be insufficient to cause the recombiner tank to move off its spring supports.

An evaluation of the 1 1/2 inch line and its identified supports shows that it is flexible enough to accommodate seismic anchor motion of the vessel. Therefore, this seismic motion would not adversely effect the ability of the piping to maintain its pressure boundary role.

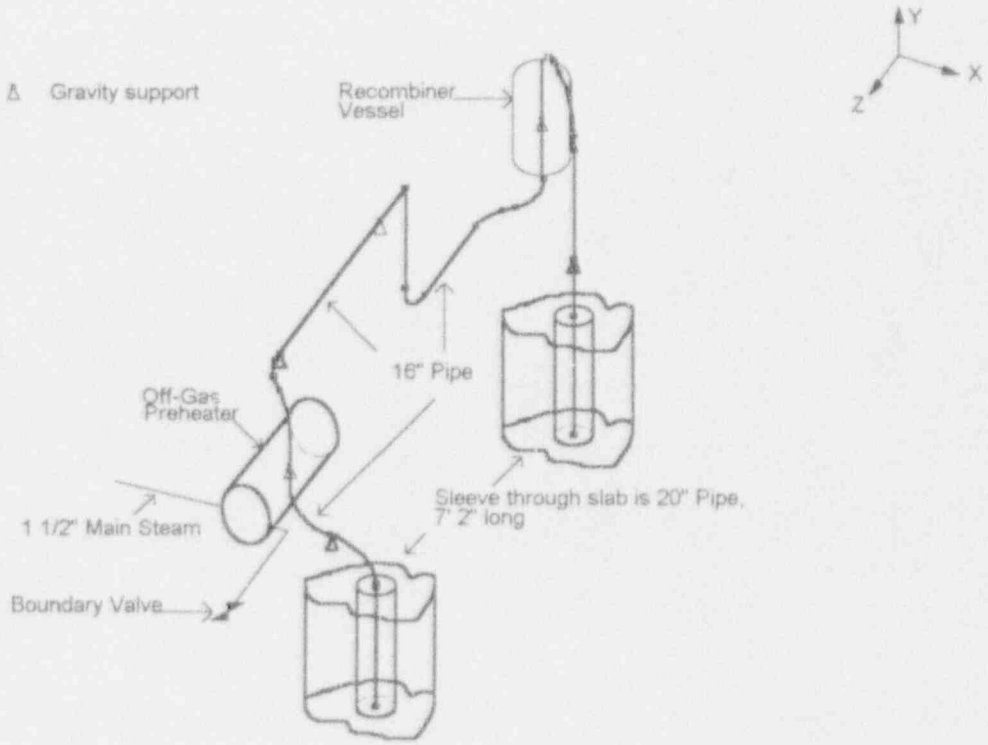

Figure 1

2. NRR Staff Comment:

The licensee should provide a summary of the engineering analyses for selected critical supports.

GPC Response:

Piping and pipe supports are not specifically included in the A-46 program, or in the Generic Implementation Procedure (GIP) for Seismic Verification of Nuclear Power Plant Equipment. However, to expedite the review of the proposed Technical Specifications changes, GPC has applied the philosophy used in the GIP document to the pipe supports. This type of evaluation is more conservative and restrictive than the evaluation referenced in the BWROG topical report for evaluating pipe supports.

The demand used in the evaluation is the estimated realistic median-centered amplified floor response spectrum and includes a factor of conservatism of 1.25 (GIP Section 4.4.3). This method for determining the demand is consistent with the approved A-46 program for Plant Hatch. Since natural frequencies are not calculated, the peak of the response spectrum is used throughout the evaluation as an additional conservatism. The estimated realistic median-centered amplified floor response spectrum peak values and the values used for support evaluation are summarized in the following table. This table includes minor numerical corrections to the information previously presented during the December 10, 1993 meeting. There has been no change in the methodology for calculation of seismic demand. The most significant change was to the vertical acceleration for the 164 foot elevation, which was changed from 0.75 g to the correct value of 0.34 g.

Elevation (Ft.)	Direction	Freq. of Peak (Hz)	Med. Ctr. FRS Accel. Peak (Gs)	Displacement @ Accel. Peak (in)	Med. Ctr. FRS Peak x 1.25 (for support evaluation) (Gs)
112	NS	2.05	0.67	1.56	0.84
	EW	2.75	0.46	0.59	0.57
	Vert.	2.20	0.38	0.76	0.47
130	NS	2.25	0.52	1.00	0.65
	EW	2.70	0.47	0.63	0.59
	Vert.	2.30	0.35	0.66	0.44
147	NS	1.80	0.51	1.55	0.64
	EW	2.75	0.50	0.65	0.63
	Vert.	2.25	0.34	0.66	0.43
164	NS	1.80	0.58	1.76	0.73
	EW	2.70	0.58	0.78	0.73
	Vert.	2.35	0.34	0.60	0.42

For anchorage, the capacities as defined in Appendix C of the GIP are used. For structural members, AISC Part 2 allowables are used. For standard pipe support components, capacities equal to 1.67 times the rated value are used. Note that the vendor rated values for pipe supports include a safety factor of 5 based on the tested failure load. Therefore, 1.67 times the rated value provides an equivalent factor of safety of 3 for these components.

The evaluation included a total of fifteen support configurations. All of the rod-hung supports on the 3 inch main drain to the condenser (first fourteen supports in the table) were evaluated due to the importance of the line. The evaluation also included the support (2N11-HPS-H14) which was judged to provide the least margin of those considered in the program (last support in the table). This support is a cantilevered, angle support with sleeve anchors and no lateral or axial restraint, and is located on the 6 inch main steam line to the steam jet air ejectors.

The results of the evaluation are summarized below:

Support Designation Note (1)	Dead Load (lb)	Operating Mech. Loads (lb)	DBE Seismic Load (lb) Note (2)	Total Loads (lb) Note (3)	Component Capacity (lb)	Anchorage Capacity (lb) Note(4)	Component Capacity/ Demand	Anchorage Capacity/ Demand	Lowest Seismic Capability (Multiple of DBE) Note (5)
2N22-HD-H123	431	0	183	614	1890	N/A	3.08	N/A	7.97
2N22-HD-H126	263	78	112	453	1890	N/A	4.17	N/A	13.83
2N22-HD-H127	270	0	115	385	1890	N/A	4.91	N/A	14.09
2N22-HD-H128	248	8	105	361	1890	N/A	5.24	N/A	15.56
2N22-HD-H130	213	16	91	320	1890	N/A	5.91	N/A	18.25
2N22-HD-H131	223	0	95	318	1890	N/A	5.94	N/A	17.55
2N22-HD-H132	193	85	82	360	3780	N/A	10.50	N/A	42.71
2N22-HD-H133	57	0	24	81	3780	N/A	46.67	N/A	155.13
2N22-HD-H134	226	7	96	329	1890	3435	5.74	10.44	17.26
2N22-HD-H135	168	0	72	240	1890	3435	7.88	14.31	23.92
2N22-HD-H136	407	0	173	580	1890	3435	3.26	5.92	8.57
2N22-HD-H137	352	19	150	521	1890	N/A	3.63	N/A	10.13
2N22-HD-H138	323	0	137	460	1890	2748	4.11	5.97	11.44
2N22-HD-H139	350	0	149	500	7145	4687	14.29	9.37	29.11
2N11-HPS-H14	509	25	223	757	2244	1846	2.97	2.44	5.89

Note (1): The prefix 2N22 indicates the main steam drain line; the prefix 2N11 indicates the main steam.

Note (2): Equal to the 1.25 times the median-centered floor response spectrum peak times the dead load.

Note (3): Total Load = Dead Load + Operating Mechanical Loads + Seismic Load.

Note (4): Welded anchorage is included in Component Capacity consideration. N/A indicates the support does not have concrete anchor bolts.

Note (5): This is the factor times which the DBE seismic demand must be multiplied to reach the support capacity.

The results of the evaluation demonstrate that there is substantial margin on the capacity of the supports. The margins are even more significant when considering the conservatisms used in the evaluation. For the support with the least margin, the earthquake required to produce a demand equal to the support's capacity is 0.88g peak ground acceleration (PGA). This is significantly above the design basis earthquake level of 0.15g PGA. Consequently, GPC has concluded the component and anchorage for the selected critical supports are substantially adequate.

Enclosure 2

Edwin I. Hatch Nuclear Plant
Request to Revise Technical Specifications:
Increase in Allowable MSIV Leakage Rate and
Deletion of the MSIV Leakage Control System

Summary of Methodology and Evaluations

During the January 12 and 13, 1994 meeting, GPC provided the methodology, evaluations, and safety assessment performed to demonstrate the acceptability of the proposed increase in MSIV allowable leakage and the deletion of the existing MSIV leakage control system. A summary is provided as follows:

In 1986 the Boiling Water Reactor Owners' Group (BWROG) formed the Main Steam Isolation Valve (MSIV) Leakage Closure Committee to resolve the issue of MSIV leakage. The BWROG Leakage Control Committee studied the issues of MSIV leakage rates and associated excessive maintenance required for the MSIVs and the leakage control systems (LCS). As a resolution to those issues, the BWROG proposed to use the main steam piping, drain line, and isolated condenser as an alternate method for MSIV leakage treatment. This alternate MSIV leakage treatment method has been shown to provide effective and reliable fission product attenuation for reducing the radiological consequences of MSIV leakage. This leakage treatment method takes advantage of the large volume in the main condenser to provide hold-up and plate-out of fission products that may leak from closed MSIVs.

A plant specific radiological dose calculation has been performed which showed that for MSIV leakage at Plant Hatch, Unit 2, of 100 scfh per MSIV with a maximum total leakage of 250 scfh, the loss of coolant accident (LOCA) doses would remain within the regulatory guidelines. The radiological dose calculations used the methodology developed by General Electric for the BWROG. This methodology is documented in Appendix C of NEDC-31858P, Revision 2, "BWROG Report for Increasing MSIV Leakage Rate Limits and Elimination of Leakage Control Systems."

In order to justify the capability of the main steam piping and condenser as the alternate leakage treatment system, GPC has verified that the main steam lines, the steam drain line, the condenser, and interconnecting piping and equipment are seismically adequate to withstand a safe shutdown earthquake and maintain their integrity. The seismic adequacy of those piping and equipment systems at Plant Hatch was confirmed by comparing them to a detailed earthquake experience data base as discussed in Section 6.7 of NEDC-31858P, Revision 2, and performing engineering walkdowns and evaluations using qualified seismic engineers.

The earthquake experience data base, which consists of the documentation of the performance of piping and equipment in power and industrial facilities during past earthquakes, is founded on extensive studies of over 100 industrial facilities and surveys of several hundred other facilities

located in the vicinity of over 60 strong motion earthquakes that have occurred in California, Alaska, New Zealand, and Latin American countries since 1971. A detailed description of the data base was provided to the NRC staff as part of the GPC supplemental information transmittal to the NRC dated January 6, 1994. The data base information was presented in an EQE document attached to the submittal entitled "Supplemental Piping Earthquake Performance Data," dated December, 1993.

The current standard practice for the seismic design of piping and equipment systems has not considered the real performance of such systems in strong motion earthquakes. This has resulted in excessive conservatism in the treatment of primary stresses when uncorrected linear elastic analyses are performed and the results are compared to stress limits based on static tests. The earthquake experience data provides the only available full-scale tests of designs and installations. The data, therefore, provides a realistic and practical method of verifying the seismic adequacy of piping and equipment.

Equipment and above ground piping at data base facilities have exhibited excellent resistance to damage during and after earthquakes without the specific application of seismic design considerations and provisions. A large number of classes of equipment (pumps, valves, tanks, instrument cabinets, etc.) have proven seismically rugged when properly anchored. For welded steel piping designed and constructed to normal industrial practice (e.g., ANSI B31.1), past seismic experience has never shown a primary collapse mode of failure. A relatively small number of seismically induced piping failures have occurred due to excessive relative support movements or seismic interactions.

Consistent with the verification methodology, a plant specific seismic verification walkdown of all systems and components associated with the alternate MSIV leakage treatment was performed by qualified seismic engineers. The purpose of the walkdown was to physically verify that the components in the alternate leakage treatment system have attributes similar to those in the data base that have good seismic performance and to identify potential seismic vulnerabilities. As a result of the walkdown and subsequent evaluations, GPC has determined that the plant features compare well with the data base. The walkdown also includes an inspection for those structural details and causal factors that resulted in component damage at industrial sites contained in the database to ensure such conditions are evaluated to satisfaction or plant modifications are implemented to resolve the concern. As a result of the walkdown, GPC identified the need to implement minor modifications or repairs to thirteen components.

Enclosure 2
Summary of Methodology and Evaluations

Georgia Power Company (GPC) has compared the Hatch piping and equipment necessary to utilize the alternate MSIV leakage control method with the earthquake experience data including a walkdown to identify and evaluate any of the characteristics associated with the limited failures that have occurred at the data base facilities. An engineering analyses of selected critical supports was performed which showed that the supports exhibited substantial margin. As a result, GPC has concluded that the Hatch, Unit 2 main steam line, main steam drain line, condenser, and applicable interconnecting piping and equipment, are well represented by the earthquake experience data demonstrating good seismic performance, are confirmed to exhibit excellent resistance to damage from a design basis earthquake, have been shown to have substantial margin for seismic capability, and are, therefore, seismically adequate to withstand the Hatch design basis earthquake and maintain pressure retaining integrity. This capability of the alternate MSIV leakage treatment system to withstand the effects of the safe shutdown earthquake and continue to perform its intended function (treatment of MSIV leakage) satisfies the intent of the seismic requirement of Appendix A to 10 CFR 100.

Enclosure 3

Edwin I. Hatch Nuclear Plant - Unit 2
Request to Revise Technical Specifications
Increase in Allowable MSIV Leakage Rate and
Deletion of the MSIV Leakage Control System

Environmental Assessment

Identification of Proposed Actions

The proposed amendment would change the Technical Specifications to increase the allowable main steam isolation valve (MSIV) leakage from 11.5 scf per hour for any one main steam isolation valve to 100 scf per hour for any one main steam isolation valve and a combined maximum pathway leakage rate of 250 scf per hour for all four main steam lines. The proposed change also changes the associated Action for the Technical Specifications. If the leakage for any MSIV exceeds 100 standard cubic feet per hour (scfh), it will be restored to 11.5 scfh. If the total maximum pathway MSIV leakage for all four main steam lines exceeds 250 scfh, the necessary MSIVs will be restored such that the maximum pathway leakage is no more than 250 scfh.

The proposed amendment would also change the Technical Specifications to eliminate the MSIV leakage control system (LCS). A more reliable alternative treatment method of MSIV leakage is proposed. GPC proposes to use the main steam drain lines and the isolated condenser as an alternate method for MSIV leakage treatment.

Need for Proposed Actions

The current Technical Specifications allowable MSIV leakage rate is extremely limiting and routinely requires repair and retest of the MSIVs. This significantly impacts the maintenance work load during plant outages and contributes to outage extensions. The outage planning group at Plant Hatch typically schedules several days of contingency for repair and retest of the MSIVs. The proposed increase in the allowable MSIV leakage would reduce the need for repair and, thereby, reduce dose exposures to maintenance personnel consistent with As Low As Reasonable Achievable principles.

Based on extensive evaluation of valve leakage data, the BWROG (GE Report NEDC-31858P, Revision 2, Section 4.2, submitted by the BWROG on October 4, 1993) has found disassembling and refurbishing the MSIVs to meet very low leakage limits frequently contributes to repeating failures. In most cases, machining of the valve seat is required to reduce the leakage to an acceptable level. Each time the seat is machined, the thickness is reduced, leading to earlier than necessary seat replacement. Disassembly and assembly also cause wear on the various components removed and replaced. By not having to disassemble the valves and refurbish them for minor leakage, GPC may avoid introducing one of the root causes of recurring valve leakage problems which lead to later LLRT failures and the possibility of compromising plant safety.

The current Technical Specifications allowable MSIV leakage rate (11.5 scfh) is excessively conservative considering the valve's physical size and operating characteristics (large size and fast-acting). Additionally, the original radiological assessment did not consider the existing turbine building equipment at the time the leakage limit was established.

This proposed increase in the allowable MSIV leakage rate provides a more realistic, but still conservative, limit for the MSIVs. Based on the BWROG study (GE Report NEDC-31858P, Revision 2, Section 3.1 and 4.2), the proposed increase in the allowable leakage rate will increase the chance for successful LLRT results to greater than 90 percent, up from the 77 percent success rate at the current limit of 11.5 scfh. At Plant Hatch, the increase in successful local leak rate testing will significantly reduce MSIV maintenance cost, reduce dose exposure to maintenance personnel, reduce outage durations, extend the effective service life of the MSIVs, and minimize the potential for outage extensions.

In addition to resolving the concern identified in Generic Issue C-8 (NUREG-1169"n Resolution of Generic Issue C-8, August, 1986), the proposed deletion of the LCS requirements from the Technical Specifications will result in significant operational and maintenance benefits. LCS equipment is located in a high temperature, high radiation area and is required to be environmentally qualified necessitating extensive preventive maintenance. The system has extensive logic and instrumentation which required frequent calibration to meet the Technical Specifications requirements. The BWROG evaluated recent LCS performance data; the results are shown in GE Report NEDC-31858P, Revision 2, Section 3.2. The evaluation indicates the LCS is extremely difficult to maintain, and as a result of maintenance requirements, plant shutdowns and startup delays have occurred within the industry.

Environmental Impacts of the Proposed Action

The proposed amendment will not increase potential radiological environmental effects due to MSIV leakage beyond those already permitted by the regulations. The MSIV leakage control system and MSIVs perform no function during normal operation but serve to mitigate accidents after they occur. Therefore, no adverse change in plant radiological or non-radiological releases would occur for normal operation of the plant with an increase in the allowable MSIV leakage rate and deletion of the MSIV leakage control system.

MSIV leakage, along with containment leakage, is used to calculate the maximum radiological consequences of a design basis accident. Standard conservative assumptions were used to calculate offsite, control room, and TSC doses, including the doses due to MSIV leakage, which could potentially result from a postulated design basis LOCA at Plant Hatch. The results of those calculations are currently described in section 15.1.39 of the Hatch Unit 2 FSAR. The control room, TSC, and offsite doses resulting from a postulated LOCA have recently been recalculated using currently accepted iodine dose conversion factors. The control room and TSC doses were calculated using accepted iodine factors and the guidance in Regulatory Guide 1.109, "Calculation of Annual Doses to Man from Routine Releases of Reactor Effluents for the Purpose of Evaluating Compliance With 10 CFR Part 50, Appendix I." The offsite doses were calculated using the guidance contained in EPA Federal Guidance Report No. 11, "EPA-520/1-88-020 Limiting Values of Radionuclide Intake and Air Concentration and Dose Conversion Factors for Inhalation, Submersion, and Ingestion."

This analysis demonstrates that a total leakage rate of 250 scfh (with the deletion of the existing LCS) results in acceptable dose exposures for the control room, TSC, exclusion area boundary (EAB), and low population zone (LPZ). The revised LOCA doses remain within the guidelines of 10 CFR 100 for offsite doses and 10 CFR 50, Appendix A, (General Design Criterion 19) for the control room and TSC doses.

Therefore, plant radiological releases after an accident will not increase beyond those already permitted by the regulations. Deletion of the MSIV Leakage Control System will reduce the overall occupation dose exposures due to the elimination of maintenance and surveillance activities associated with the system. The dose exposure associated with deleting the system will be as low as reasonable achievable and will be less than the dose which would result to personnel from maintenance and surveillance activities associated with the system for the remainder of plant life. With regard to potential nonradiological impacts, the proposed amendment does not affect plant nonradiological effluents.

Therefore, GPC concludes the proposed amendment would result in no significant adverse environmental impact. The NRC conclusions in the Final Environmental Statement related to operation of Edwin I. Hatch Nuclear Plant-Unit 2, dated March 1978 (NUREG-0417) regarding radiological and nonradiological releases from the plant during normal operation or after an accident are not adversely affected.