Georgia Power Company
Post Office Box 4545
Atlanta, Georgia 30302
Telephone 404 522-6060

Southern Company Services, Inc.
Post Office Box 2625
Birmingham, Alabama 35202
Telephone 205 870-6011

Vogtle Project

August 10, 1982

United States Nuclear Regulatory Commission
Office of Inspection and Enforcement
Region II - Suite 3100
101 Marietta Street
Atlanta, Georgia 30303

File: X7BG03-M9
Log: GN-187

Attention: Mr. James P. O'Reilly

Reference: Vogtle Electric Generating Plant - Units 1 & 2
RII: JPO, 50-424; 50-425 Interim Reports, dated 11/11/80, 4/1/81 and 12/10/81
10CFR50.55(e) (Charging Pumps)

Gentlemen:

Georgia Power Company has previously reported a significant deficiency to the NRC concerning centrifugal charging pump operation following secondary side high energy line ruptures. Attached is the proposed corrective action to be taken at Plant Vogtle.

This response contains no proprietary information and may be placed in the NRC Public Document Room upon receipt.

Very truly yours,

D. O. Foster

D. O. Foster
Project General Manager

DOF/CWH/tlp
Attachment
xc: U. S. Nuclear Regulatory Commission
Attn: Victor J. Stello, Jr., Director
Office of Inspection and Enforcement
Washington, D. C. 20555

R. J. Kelly
R. E. Conway
G. F. Head
J. T. Beckham, Jr.
J. H. Boykin
D. E. Dutton
R. H. Pinson
D. L. McCrary
R. A. Thomas
J. A. Bailey
O. Batum
H. H. Gregory, III
E. D. Groover
L. T. Gucwa
M. Malcom
C. R. Miles, Jr.
M. Manry
P. D. Rice
R. W. Staffa
J. L. Vota
W. F. Sanders

PROPOSED CORRECTIVE ACTION
CENTRIFUGAL CHARGING PUMP MINIFLOW

INTRODUCTION:

On May 8, 1980, Westinghouse reported the existence of a Part 10CFR21 regarding the operation of the centrifugal charging pumps following a secondary side high energy line break. On November 11, 1980, GPC concluded this item was reportable in accordance with 10CFR50.55(e). Interim reports promised a proposed corrective action would be submitted to the NRC on or before August 6, 1982.

BACKGROUND:

The centrifugal charging pumps are major components in that portion of the chemical and volume control system which also functions as a high head injection flowpath in the emergency core cooling system. Upon receipt of a safety injection signal, the centrifugal charging pumps start and provide high head injection flow to the reactor coolant system loops via the boron injection tank. During a safety injection actuation incident, the centrifugal charging pump miniflow path is automatically closed. If reactor coolant system backpressure increases to a value below the setpoint of the primary safety valves, but above the pump shutoff head, insufficient flow may exist through the charging pumps to satisfy pump cooling requirements and damage to the pumps may occur.

ANALYSIS OF SAFETY IMPLICATIONS:

Following the accident at Three Mile Island-Unit 2, the Nuclear Regulatory Commission issued Inspection and Enforcement Bulletin 79-06A. Item 7 of the bulletin directed that operating procedures be revised such that automatic actions of engineered safety features and the high pressure injection system not be overridden until the plant exhibits stable behavior. As a result, Westinghouse included additional requirements in their criteria for terminating safety injection which have caused operator action to be delayed. This longer period for operator action becomes significant when the centrifugal charging pumps start and continue to run following a secondary side high energy line break or spurious safety injection signal.

When a safety injection signal is received, the following relevant actions occur:

- the centrifugal charging pumps are started
- the flowpath to the reactor coolant system loops via the boron injection tank is opened
- the normal charging flowpath is secured
- the centrifugal charging pump miniflow path is secured

For a valid safety injection signal accompanied by a decrease in reactor coolant system pressure, the closure of the miniflow path is essential to guaranteeing proper emergency core cooling system flow to the core; cooling requirements for the centrifugal charging pumps are satisfied by the high rate of flow through the pumps.

However, when the reactor coolant system does not depressurize or remain depressurized (e.g., following secondary side high energy line break or spurious safety injection), the charging pumps raise the reactor coolant system pressure to the shutoff head of the charging pumps. Assuming nominal degradation of the charging pumps during normal operation and primary safety and relief valve operation at the high end of their setpoint bands (above the shut-off-head of the centrifugal charging pumps), it is possible for flow through the charging pumps to be reduced to such a point that insufficient cooling is provided to the pumps. Under these conditions, it is possible to damage one or both of the centrifugal charging pumps in a short period of time (i.e., before it can be determined that the safety injection termination criteria have been satisfied). Coupled with the postulation of a single failure, this possibility of damage to the centrifugal charging pumps represents a substantial safety hazard and a significant deficiency in the design of the high head injection portion of the emergency core cooling system. This problem has been reported under both 10 CFR 21 and 10 CFR 50.55(e).

CORRECTIVE ACTION:

The system modification shown in Figure 1 provides an auxiliary miniflow path which is made available to protect each charging pump whenever a safety injection actuation signal is present and the normal miniflow path is isolated. The auxiliary path is placed in service by automatically opening a motor operated isolation valve in each individual charging pump branch line. The normally closed isolation valve receives power from the same electric power train as the charging pump it is protecting.

A relief valve is provided in each auxiliary miniflow path with a set pressure established to prevent the charging pump from reaching a dead-head condition. The characteristics of the relief valve are such that as the pump discharge pressure is increased above the relief valve set pressure, the flow through the relief valve increases. The capacity of the relief valve is selected to provide at least the required minimum flow of 60 gpm for each charging pump when the injection flow into the RCS is zero.

SYSTEM OBJECTIVE:

The auxiliary miniflow path will be placed in service any time the safety injection actuation signal is present by the automatic opening of the one upstream isolation valve which is normally closed. For any plant condition in which the reactor coolant pressure increases to or above the relief valve set pressure, the relief valve will open to return some of the charging pump flow back to the refueling water storage tank.

If the reactor coolant pressure subsequently decreases, due to the processes imposed on the reactor coolant system, the relief valve will reclose as the charging pump flow is again directed into the Reactor Coolant System. The auxiliary miniflow line will remain in service to relieve the pump flow should the reactor coolant pressure again increase.

After the operator has diagnosed the initiating event and has assured that the requirements for termination of safety injection have been met, the charging pump subsystem can be realigned for normal operation. One step in this realignment procedure will be to reclose the one isolation valve in each auxiliary miniflow path to take the paths out of service.

In the case of an accident in which the safety injection flow cannot be terminated, the auxiliary miniflow path will remain in service until the refueling water storage tank reaches a low water level condition and the transfer to recirculation is to be accomplished. One step in the transfer to recirculation will require the operator to close both motor operated isolation valves in each auxiliary miniflow path to positively isolate the relief valve from the charging pumps and prevent a return of the recirculation fluid to the refueling water storage tank.

PERIODIC TESTING:

The two motor operated isolation valves in each auxiliary miniflow path can be manually cycled at any time in plant operation that their associated charging pump is not in service without lifting the relief valve. The pressure imposed on the relief valve, if both isolation valves are open simultaneously, will be approximately equal to the volume control tank pressure since the normal miniflow path is also open. A preferred procedure would be to cycle the valves such that at least one is always closed.

The safety injection signal testing can be accomplished one train at a time by proper pre-test system alignment. That is, the backup motor operated isolation valve can be closed prior to actuating the train under test to prevent the pump discharge pressure from lifting the relief valve.

The relief valve set pressure can be checked through the test connection upstream from the valve. This same test connection can be used to check that the relief valve is fully closed after each actuation of safety injection which could have caused the relief valve to open. This seating check will use the elevation of the water level in the discharge line to the refueling water storage tank as the test pressure across the valve seat.

INTERLOCKS:

New interlocks are required to prevent an operator error from allowing post-accident recirculation fluid to be transferred to the refueling water storage tank through the auxiliary miniflow path. The recirculation flow paths from the residual heat removal pump discharge to the charging pump and safety injection suction is interlocked such that isolation valves HV-8804 A/B in these lines (See Figure 2) cannot be opened unless the auxiliary miniflow paths are blocked by the motor operated isolation valves. In addition, the auxiliary miniflow path

isolation valves are interlocked with the recirculation valves such that both valves HV-8804A and B must be closed before the auxiliary miniflow valves are opened.

To prevent an operator error from allowing the discharge of letdown coolant through the auxiliary miniflow path during normal plant operation, the normally closed isolation valve is interlocked with a volume control tank outlet valve. Only when the volume control tank outlet path is blocked will the operator be allowed to open the auxiliary miniflow path.

MONITOR LIGHTS:

The two motor operated isolation valves in the auxiliary miniflow path of each charging pump shall be provided with monitor lights (in addition to red/green position lights) to indicate an off-normal alignment.

The isolation valve, powered from the same train as the pump to which it is associated, will be in the normally closed position. That is, the A train powered valve associated with the A train powered charging pump shall have a monitor light to indicate that the valve is not closed. The second valve, powered from the opposite train, shall have a monitor light to indicate not open since its normal position is open.

The switch contacts used for these monitor lights shall be separate from the motor operator so the monitor light will not be lost if power is removed from the valve motor.

CONCLUSION:

This deficiency has been reported to the NRC under Part 10 CFR 21 and 10 CFR 50.55(e). This corrective action report contains the information required to close this item under 10 CFR 50.55(e) and Part 10 CFR 21 for the Vogtle Electric Generating Station - Units 1 and 2.

Figure 1

AUXILIARY MINIFLOW PATH

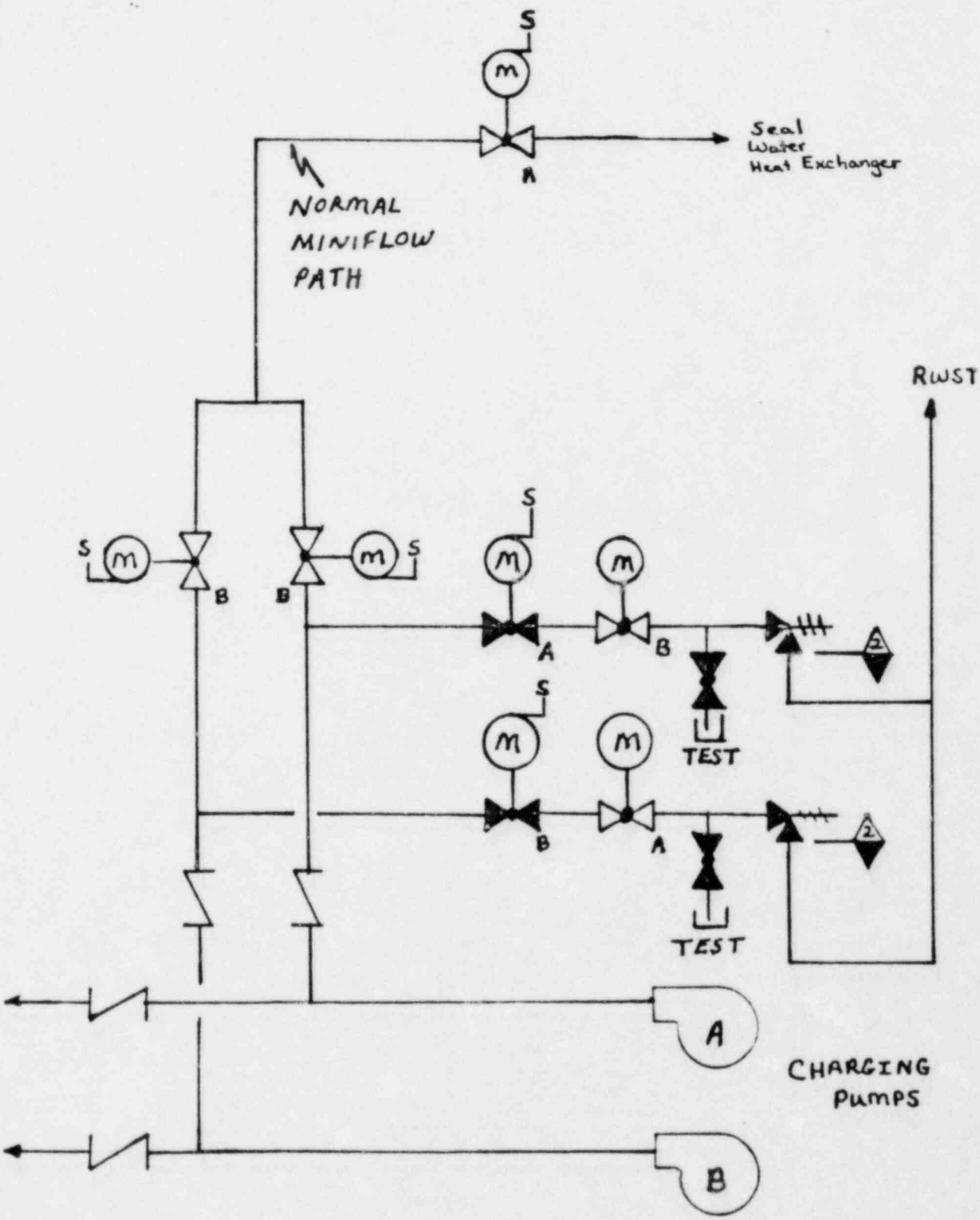

Figure 2

EMERGENCY CORE COOLING SYSTEM