NUREG/CR-2690
SAND82-0953
R4
Printed June 1982

Thermal/Hydraulic Analysis Research Program Quarterly Report October–December 1981

Samuel L. Thompson

Prepared by
Sandia National Laboratories
Albuquerque, New Mexico 87185 and Livermore, California 94550
for the United States Department of Energy
under Contract DE-AC04-76DP00789

Prepared for
U. S. NUCLEAR REGULATORY COMMISSION

Available from
GPO Sales Program
Division of Technical Information and Document Control
U.S. Nuclear Regulatory Commission
Washington, D.C. 20555

and

National Technical Information Service
Springfield, Virginia 22161

NUREG/CR-2690
SAND82-0953
R4

THERMAL/HYDRAULIC ANALYSIS RESEARCH PROGRAM QUARTERLY REPORT OCTOBER-DECEMBER 1981

S. L. Thompson, Person in Charge

Date Published: April 1982

Approved:

DA Dahlgren
Manager, Light Water Reactor Safety Dept.

DA Dahlgren
Director, Nuclear Fuel Cycle Program

Sandia National Laboratories
Albuquerque, NM 87185
Operated by
Sandia National Laboratories
for the
U. S. Department of Energy

Prepared for
Analytical Models Branch
Division of Accident Evaluation
Office of Nuclear Regulatory Research
U. S. Nuclear Regulatory Commission
Washington, DC 20555
Under Memorandum of Understanding DOE 40-550-75
NRC FIN No. A-1205

LIST OF CONTRIBUTORS:

Samuel L. Thompson
Blaine W. Burnham
Lawrence D. Buxton
Rupert K. Byers
Lubomyra Nadia Kmetyk
Katherine McFadden
John L. Orman
Gloria C. Padilla
David Tomasko

CONTENTS

ILLUSTRATIONS

LIST OF TABLES

1.0 RALOC CODE ASSESSMENT PROJECT

The RALOC computer program for the analysis of gas transport in subdivided compartments was initially acquired by Sandia in March 1981 from the Gesellschaft für Reaktorsicherheit (GRS). RALOC was obtained at the request of the NRC contract monitor for the Sandia Hydrogen program (FIN A1246) which originally provided funding for the assessment and evaluation of RALOC. Consequently, all previous quarterly reports on the RALOC program have been submitted to the NRC as part of the Hydrogen Program(1,2). After an early determination was made that RALOC would require fairly extensive modification to allow analyses of a wider class of problems, the NRC transferred control of the gas transport code development effort from the Severe Accident Branch of the Division of Accident Evaluation (DAE) to the Analytical Models Branch of DAE. Due to the change of control of the RALOC program, this quarterly progress report and those of the future on the RALOC effort will be provided to the Analytical Models Branch. Contact will still be maintained with the Sandia Hydrogen Program to ensure that critical needs for analyses are fulfilled, but duplication of reports will be avoided.

Two sensitivity studies were completed with RALOC this quarter. These studies were performed in order to evaluate the reliability of RALOC and to determine the sensitivity of the code to certain input parameters. Both studies modeled the Grand Gulf Mark III containment building. Parameters varied in the first study included the maximum time step allowed during the implicit integration of the differential equations and the degree of discretization used in modeling the containment. The parameters in the second study included the amount and rate of hydrogen injection, the injection temperature of the hydrogen, and the initial temperature distribution in the containment. A brief summary of the results of these sensitivity studies is given below. A more detailed discussion is given in References (3) and (4). Until additional assessment has been completed, these results should be considered tentative.

1. The computer code RALOC is fairly well behaved numerically, i. e., the calculations are fairly independent of the time step used in the implicit integration of the differential equations, and reasonably independent of the degree of resolution used in the nodalization.

2. Increasing the rate of hydrogen injection for a fixed mass of hydrogen increases the degree of nonhomogeneity in the zonal hydrogen concentrations due to reduced mixing time.

3. For isothermal initial conditions, nearly uniform hydrogen concentrations are predicted within 20 minutes after the end of hydrogen injection. (Injection times ranged from 15 to 60 minutes.)

4. Hydrogen injection temperatures greater than the temperatures of the suppression pool do not significantly affect the results.

5. Mixing is not particularly enhanced by using a decreasing-with-elevation temperature profile.

6. Inverting the initial temperature distribution (hotter temperatures at the top of the containment than at the bottom) affects the hydrogen concentrations by establishing a convective thermal barrier, resulting in less hydrogen at the top of the containment than at the bottom.

7. Transport of hydrogen is dominated by convection for short intervals of time (hours); diffusion effects only become important in long time calculations (days).

Based on the above sensitivity studies, we concluded that for "Best Estimate" calculations, the RALOC user will need to accurately define the input hydrogen source and any initial temperature distribution in the containment which is modeled. Due to the inherent uncertainties in these parameters and the sensitivity of RALOC to them, we do not recommend using RALOC for single "Best Estimate" calculations. Rather, we recommend varying these parameters over a sufficiently broad range to ensure reliable qualitative results.

To further assess RALOC, Sandia National Laboratories has modified the RALOC code to allow simulation of the EPRI-HEDL tests(5). Logic has been added to permit simultaneous time-dependent injection of hydrogen/steam or helium/steam mixtures. Evaluations of simple four-zone test calculations performed with the modified version of RALOC indicate that the injection models are performing satisfactorily (i.e., there is global conservation of mass and internal energy). Another code modification required for the EPRI-HEDL simulations involved replacing the constant outlet-temperature fan model with a more realistic model which permits the user to specify the temperature rise of the gases which pass through the fan. A series of test calculations performed with the new fan model indicates that small temperature increases in the fan mixing chamber do not significantly affect the RALOC results.

Two nodalizations have been developed for the EPRI-HEDL tests. These nodalizations simulate the 300 and the 360 degree geometries available at the HEDL test facility. A number of preliminary calculations have been performed for test HM-4 (a proposed standard test) which used helium/steam injection into the 300 degree room geometry. To date, our HM-4 calculations indicate a very rapid dispersion of the helium which is further enhanced by the use of the recirculation fans. Additional EPRI-HEDL test calculations will be performed with RALOC and documented as more experimental data becomes available.

Due to present code restrictions, saturated steam conditions are required by RALOC at all times. To maintain these conditions, the user must initially provide a sufficient amount of water in each zone to guarantee that RALOC does not "dry out" a zone as it heats up. Failure to do so results in erroneous answers due to non-conservation of energy. We are presently investigating adding logic which would eliminate this constraint.

Development of the RALOC plot program discussed in the previous quarterly report[2] has been completed. This plot program produces time histories of any of the standard RALOC plot variables for a single volume and also permits results from several different volumes to be overlayed on a single plot frame. The latest feature added to the plot program allows cross-plotting of results from different runs as well as cross-plotting of experimental data against code predictions.

1.1 References

1. M. Berman, "Light Water Reactor Safety Research Program Quarterly Report, January-March 1981", NUREG/CR-2163/1of4 SAND81-1216/1of4, Sandia National Laboratories, Albuquerque, NM, July 1981.

2. M. Berman, "Light Water Reactor Safety Research Program Quarterly Report, April-September 1981", NUREG/CR-2481, SAND82-0006, Sandia National Laboratories, Albuquerque, NM, February 1982.

3. J. C. Cummings, et al., "Review of the Grand Gulf Hydrogen Igniter System", NUREG/CR-2530, SAND82-0218, Sandia National Laboratories, Albuquerque, NM, to be published.

4. L. D. Buxton, et al., "An Evaluation of the RALOC Computer Code", Sandia National Laboratories, Albuquerque, NM, to be published.

5. Private Communication, L. D. Buxton with Loren Thompson, Electric Power Research Institute, Palo Alto, CA, (1981).

2.0 RELAP5 CODE ASSESSMENT PROJECT

2.1 Introduction and Summary

The RELAP5 assessment project at Sandia National Laboratories is part of the overall effort funded by the U. S. Nuclear Regulatory Commission to determine the ability of various system codes to predict the detailed thermal-hydraulic response of LWR's during accident and off-normal situations. This is an "independent" assessment project since the code developers are not directly involved in the study.

The RELAP5 code(1) has been under development at Idaho National Engineering Laboratory (INEL) for an extended period. The first version was released by INEL in May 1979. The version being used for this assessment project is RELAP5 MOD1/CYCLE 14, the latest publicly released version (with documentation) at the time this project was started. According to the current INEL program plans, only error correction is projected for MOD1. Major development efforts are being directed toward MOD2, which should be released in 1983.

The SNLA assessment project began in late FY81 when funding was received. However, due to the time necessary to collect information and develop facility nodalizations, the major effort was actually begun at the start of this quarter. Some of the preliminary nodalizations were tested on earlier versions of MOD1, however, before CYCLE 14 was received in October, 1981. No corrections to CYCLE 14 have been received from INEL to date.

The code will be assessed at SNLA against test data from various experimental facilities. The test matrix for FY81-82 is shown in Table 2.1.1. This ambitious schedule involves the eleven independent base nodalizations shown in Table 2.1.2.

Several ground rules were established at the beginning of the assessment project, and are discussed below to explain our method of attacking the tasks. First, no model improvements were to be added to the released code (CYCLE 14) after the assessment had begun. This was to guard against the "tuning" of the code to model a particular test. Second, coding error correction would be allowed, if necessary. Any corrections added after the tasks had begun would be documented in the assessment document with reasons for the inclusion. A third ground rule concerned the nodalizations. All were to be independently developed by Sandia, even though similar nodalizations might be available from the code developers. The purpose of this rule was to test the ability of an educated user to collect the masses of information required to model a facility and to relate it to the mathematical model required by the code. Code input processing and documentation is also tested in the process.

The general method of nodalization development and testing is discussed in Section 2.2. This covers motivations and methodology common to all tasks. The exact status of the specific nodalization for each facility is given in the individual test sections.

Calculations are now being run on four of the facilities listed in Table 2.1.2; individual status reports for LOFT, PKL, Semiscale MOD3 and LOBI tasks are given in Sections 2.3 through 2.6. None of the transient calculations have been completed at this time.

In keeping with the SNLA-NRC agreement, no extensive reporting of incomplete calculations (or analysis) will be attempted. Past experience has shown that a great deal of effort was wasted on such efforts and caused serious delays in the project. Complete analyses will be produced only when tasks are finished.

Section 2.7 contains a list of code modifications made at Sandia and the reasons for these changes. In Section 2.8, we have included a list of errors and oversights in the code and documentation that we have discovered. This list is not extensive.

TABLE 2.1.1

RELAP5 Assessment Matrix

CODE	CALCULATION	NODALIZATION
A	L6-7/L9-2	1
B	L3-3/L9-1	1
C	L3-6/L8-1	1
D	L5-1/L8-2	1
E	S-SB-P1	2
F	S-SB-P3	2
G	S-SB-P4	2
H	S-SB-P7	2
I	PKL ID 1-8	3
J	PKL ID 1-13	3
K	S-UT-1	5
L	S-UT-2	5
M	S-UT-3	5
N	NC-2	6
O	NC-7	6
P	LOBI A1-04R	4
Q	LOBI A1-03	4
R*	TLTA 6431/1	7
S*	TLTA 6441/7-T5	7
T	THTF 3.02.10F	8
U	Flecht-Seaset S.G. 23402	11
V	B&W S.G. 28	10
W	B&W S.G. 29	10
X	BCL 26508	9
Y	BCL 29302	9

*It now appears that calculations R and S will be replaced by alternate tests. This change will be reported in the next quarter.

TABLE 2.1.2

Assessment Matrix Facility Codes

CODE	FACILITY
1	LOFT
2	SEMISCALE MOD3
3	PKL
4	LOBI
5	SEMISCALE MOD2A
6	SEMISCALE MOD2A' (NC Configuration)
7	TLTA
8	THTF
9	BCL
10	B&W S.G.
11	Flecht-Seaset S.G.

2.2 Nodalization Development

Several of the nodalizations required for the RELAP5 assessment project (LOFT, Semiscale MOD3, PKL and LOBI) have been developed in preliminary form. The exact status of each nodalization will be discussed individually in the following sections. In this section, we present the motivations and methodology common to all the nodalizations being developed.

The vast majority of the information needed to model these experimental facilities is being taken from readily available published sources. In the case of LOFT and Semiscale, the primary sources of information on the test geometries were the system descriptions and the presentations at the LOFT/Semiscale Modeling Workshop. Although the LOFT documentation was reasonably complete, the Semiscale system description and handouts had to be supplemented by blueprints obtained during an earlier project (to develop a TRAC Semiscale nodalization). For PKL and LOBI, both foreign facilities, we received copies of all available reports on both system geometry and test results from people modeling these experiments for the TRAC assessment program at LASL, thus saving us much time and effort. Information on other facilities to be modeled is being received both through NRC and directly from the individuals involved. Input decks developed for both TRAC and RELAP4 (by LASL and INEL, respectively) are sometimes available for comparison purposes.

One basic nodalization is being developed for each given facility. Although various break assemblies, relief valves, etc., may have to be added to analyze particular transients, we do not anticipate changing the basic vessel, piping, and steam generator modeling for individual transient calculations. As a consequence of this approach, every effort is being made to include all potentially important features (e.g., bypass flow paths and structural metal mass) in the baseline nodalization. The vessel is usually finely noded, particularly in the downcomer and in the core to resolve the axial power gradient present. The steam generators are also finely noded with the secondary side from downcomer to steam separator and steam dome being carefully modeled.

In each case, we have found it necessary to use engineering judgment about some system details in the preliminary nodalization since all required information was not available. While the basic primary geometry is usually well-documented, descriptions of pump curves, valve sizes, set points and characteristics, steam generator secondary sides, and ECC trains are often incomplete or totally lacking. Due to the sheer bulk of information needed, small details are not discovered to be missing until they are required, which results in delays in the overall schedule. It has also been found that many system description documents are inaccurate due to equipment changes over the life of the facility or inadequate due to shifts in experimental emphasis (relief valves and secondary sides might be negligible in large break LOCAs but can dominate small break accident scenarios). Considerable detective work is required to locate the source of a problem and the revised data.

Just as every effort is made to develop a complete baseline nodalization, no great effort is made to "fine-tune" it afterwards. Simple geometry-based formulae are used to calculate form losses for area changes and elbows, and to calculate hydraulic and heated equivalent diameters; additional perturbations due to the presence of instrumentation are ignored. There is usually no adequate documentation on instrument effects for modeling use, but we do not expect such effects to be significant in a well-designed facility. Form losses are not arbitrarily adjusted to perfectly match experimental pressure drop data, since these data are not always available or consistent, and since the applicability of such form losses derived from steady state single-phase data to transient two-phase flow is not well established.

The heat slabs representing the piping and the exterior vessel and steam generator walls have been modeled adiabatically, as a first approximation, since the environmental heat losses are usually not well characterized and documented. (This may be changed for particular transients, where heat losses are important.)

The problem of available computer storage space limits the nodalizations to approximately 200 cells with their associated junctions and heat slabs. This has turned out to be a major factor in the development process, particularly for multi-loop integral test facilities. Often two or three passes are required before a given nodalization fits on the computer. Each nodalization is originally developed with cells and their boundaries corresponding to spool pieces, grid plates, flow reducers, etc., but this correspondence is often lost when cells must be combined due to storage problems.

Once developed and fit onto the computer, each nodalization is tested and brought to steady state in stages. The primary side is first run with a specified heat removal rate through the steam generator U-tubes. This allows us to develop and test controllers which maintain the primary side pressure, mass flow and temperature drop by adjusting pump speeds and pressurizer heaters and sprays. Next we run the steam generator secondary side, with a constant heat input through the U-tubes. Controllers are installed to maintain secondary liquid level and steam outflow by controlling feedwater flow rate and valve positions.

Breaking the steady-state process into two such smaller pieces allows easier debugging. The two halves are then combined and an overall steady state is calculated for each transient's initial condition, from which the actual transient calculation will be started.

2.3 LOFT Test Status

Modeling of the LOFT (Loss-of-Fluid Test) facility(2) (Figure 2.3.1) has been a major source of user experience during the beginning of this project. During this period, the development of a generic nodalization for LOFT was completed. The major effort was then directed toward analyzing the L6-7/L9-2 test, although there are a number of LOFT tests in the assessment matrix.

The nodalization used for L6-7/L9-2 is shown in Figure 2.3.2. There are a total of 173 cells - 45 in the vessel, 31 in the intact loop piping, 15 in the pressurizer and surge line, 17 in the broken loop and 6 in the ECC system. The steam generator is modeled with 59 cells - 10 for the primary side, 20 for the secondary side and 29 in the feedwater train. The nodalization will be described in more detail in future reports, after the transient calculations have been completed. There are several things to note here, however. First, all known bypass paths in the LOFT vessel have been included. Secondly, the broken loop plumbing for L6-7/L9-2 differs from the "generic" configuration shown in Figure 2.3.1. The pump and steam generator simulators were not in the active system and other piping modifications were present in the broken loop. This causes the apparent disagreement between Figures 2.3.1 and 2.3.2.

One of the principal areas of investigation this quarter was the character of the control system necessary to achieve a given set of steady-state operating conditions. In the primary coolant system, control functions are used to adjust the pump speed and to generate several edit variables, such as collapsed liquid levels and cooldown rate. These were straightforward and caused no difficulties.

The secondary side controllers are not so easily obtained. There are four experimental quantities we want to match before starting a transient: 1) feedwater flow, 2) steam flow, 3) steam dome pressure, and 4) steam generator liquid level. These four quantities must be matched by controllers on the feedwater valve and steam valve. The problem is that 2 controllers must try to match 4 computed quantities. The difficulties are compounded by coupling between quantities with various time constants.

The controllers finally selected act in the following manner:

1. Steam flow valve - This valve is controlled to match the steam dome pressure using an exponential decay scheme.

2. Feedwater valve - This valve is controlled by both the liquid level and feedwater flow. The controller first brings the liquid level to the desired level and then attempts to bring the feedwater mass flow to the desired valve.

If the liquid level drifts outside of the allowed limits, then control is returned to the level controller until the desired level is reestablished.

This set of controllers will not lead to an absolutely steady state since the steam flow and feedwater flow are not forced to exact equality. The result is a slow drift in the liquid level. With the settings used in L6-7/L9-2, this would lead to a cycling with a period of 200 to 500 seconds. An example is shown in Figure 2.3.3. In this case, the liquid level was allowed to drift 0.02 meters.

Both the steam flow and feedwater flow valves are motor valves with constant stem position change rates. In the RELAP5 model, this generates a minor difficulty related to the exact balance of the two flows. The valves can be directed to either open or close during any given time cycle. This means that only a discrete set of positions can be obtained, depending on the size of the time step. The larger the time step, the more severe the valve "chatter" that can result when attempting to balance the flows.

A great deal of time was needed to understand the properties of the controllers and their interactions. The sample controllers supplied by INEL with the code user package were of very limited value. They could not bring our nodalizations to a steady state. This is one area where we feel that the code manual and facility description needs extensive revisions and additions.

The LOFT steady-state effort was also hampered by strange behavior from the separator module. Installed as directed in the manual at the top of the shroud, the ideal separator would sometimes fill with liquid and become a noise generator. Renodalization that put the separator at the top of the downcomer nodes (and thereby altered the inlet-outlet relations) solved most of the problems.

A great deal of experience in the use of control functions was gained during this study. It is felt that the above controllers are capable of generating all steady states required for the LOFT tasks in this project. Due to the thermal inertia of the LOFT system, about 300 to 500 seconds is required to move the system from one steady state to another. This requires about one hour of CPU time on the CDC 7600.

The steady state values for L6-7/L9-2 are shown in Table 2.3.1. The measured values have been taken from the experimental Quick-Look report(3). The final experimental data report is not yet available.

The L6-7/L9-2 transient calculations will begin shortly. Information contained in the Quick-Look report will be used to model the operator actions that controlled the L9-2 part of the test, since it appears that the operators were not entirely successful in achieving the desired constant cooldown rates.

Work on the other LOFT tests will be started during the next quarter. Each case will require some renodalization because of reconfigurations in the broken loop.

TABLE 2.3.1

Steady State values for L6-7/L9-2

	Measured Value	RELAP5
Loop Mass FLow (kg/s)	483.7 ± 2.6	482.5
Hot Leg Pressure (MPa)	14.75 ± 0.11	14.74
Hot Leg Temperature (K)	576.4 ± 0.3	576.5
Cold Leg Temperature (K)	556.7 ± 1.0	557.5
Core Power (MW)	49.0 ± 1.2	49.0
S.G. Secondary Water Temperature (K)	543.3 ± 0.9	542.3
S.G. Secondary Water Pressure (MPa)	5.51 ± 0.08	5.43
S.G. Secondary Flow (kg/s)	25.0 ± 0.6	25.018
Pressurizer Mass (kg)	341	334
Pressurizer Level (m)	0.95 ± 0.04	.9508

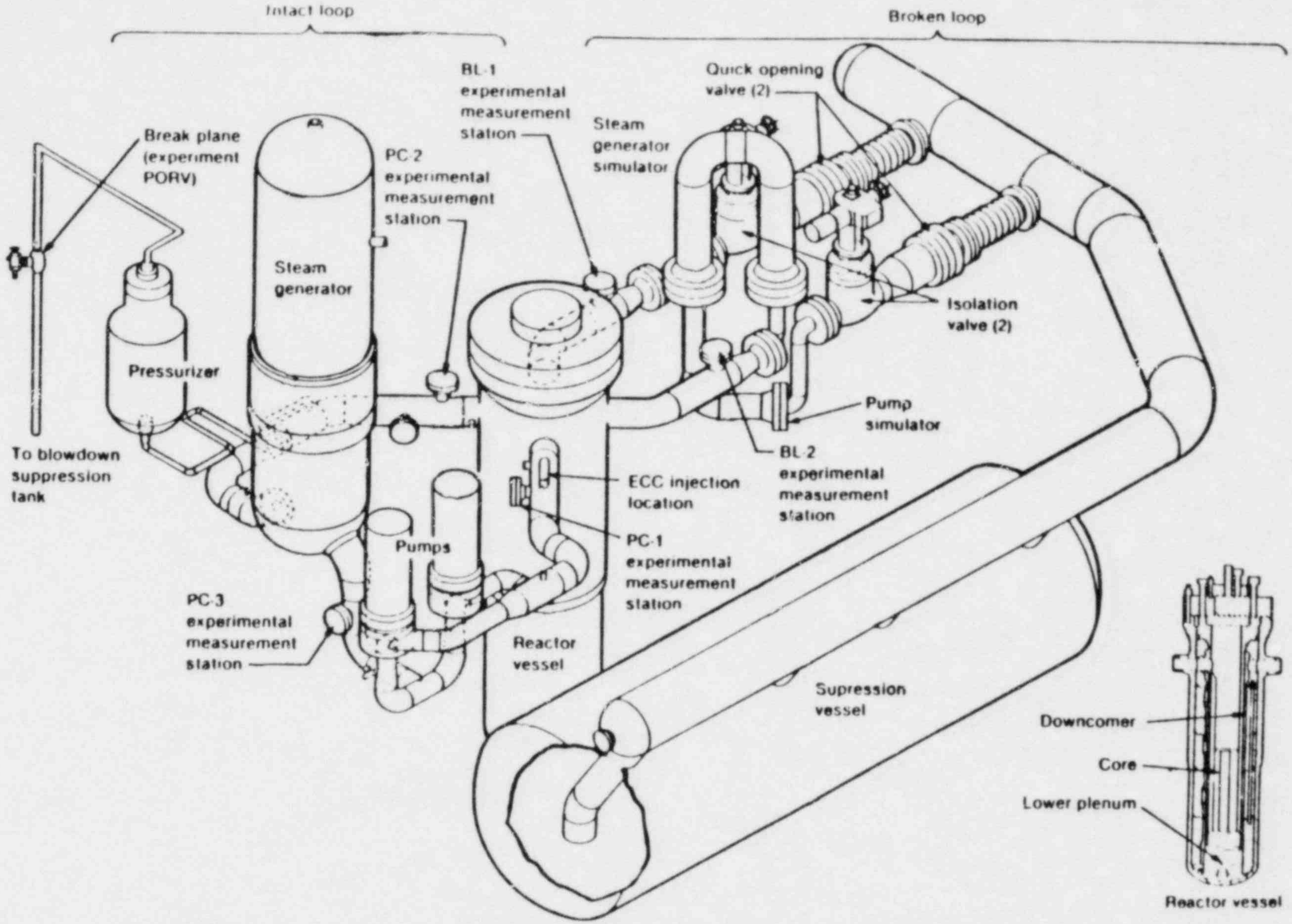

Figure 2.3.1 Axonometric projection of LOFT system

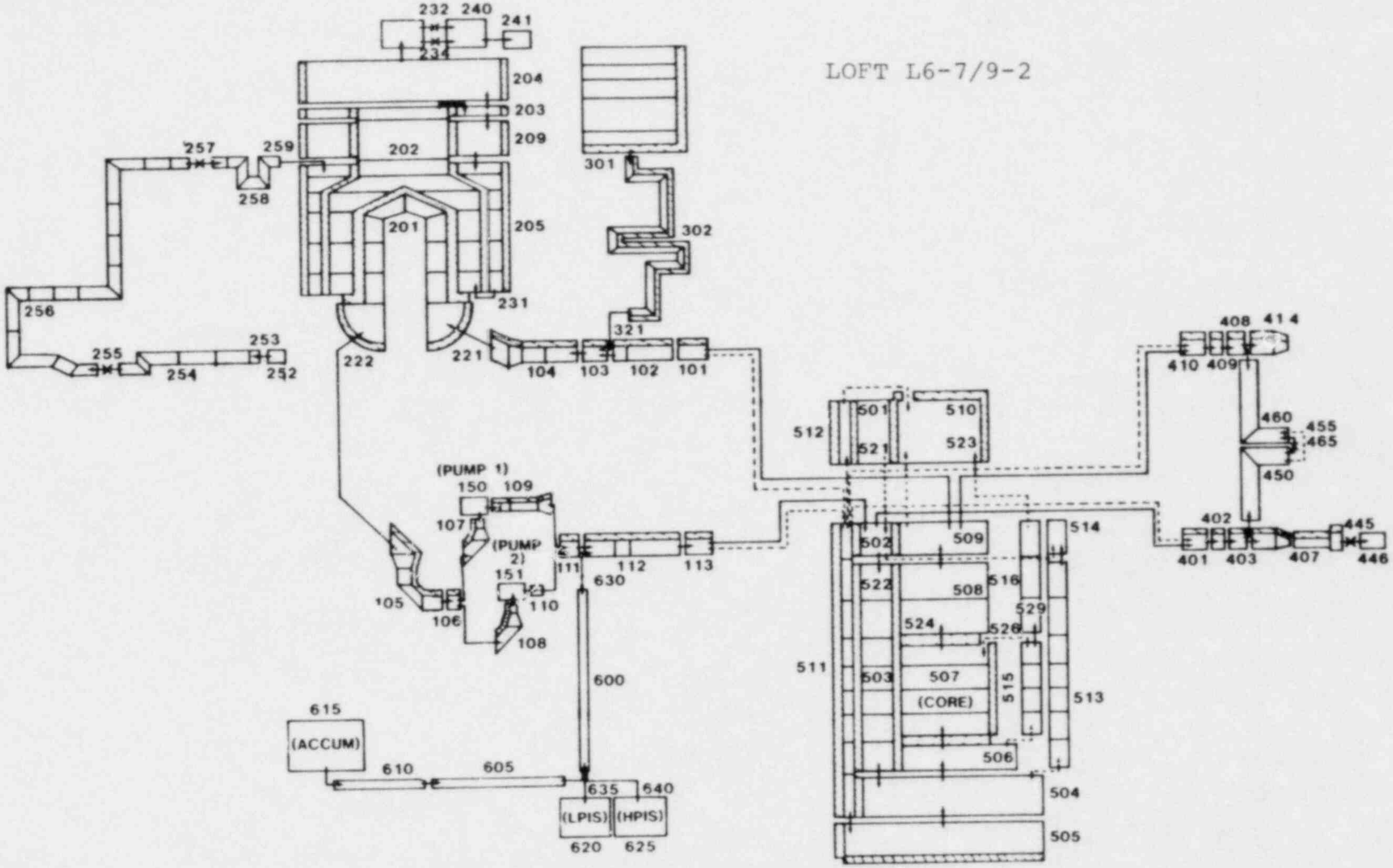

Figure 2.3.2 Nodalization for LOFT L6-7/9-2

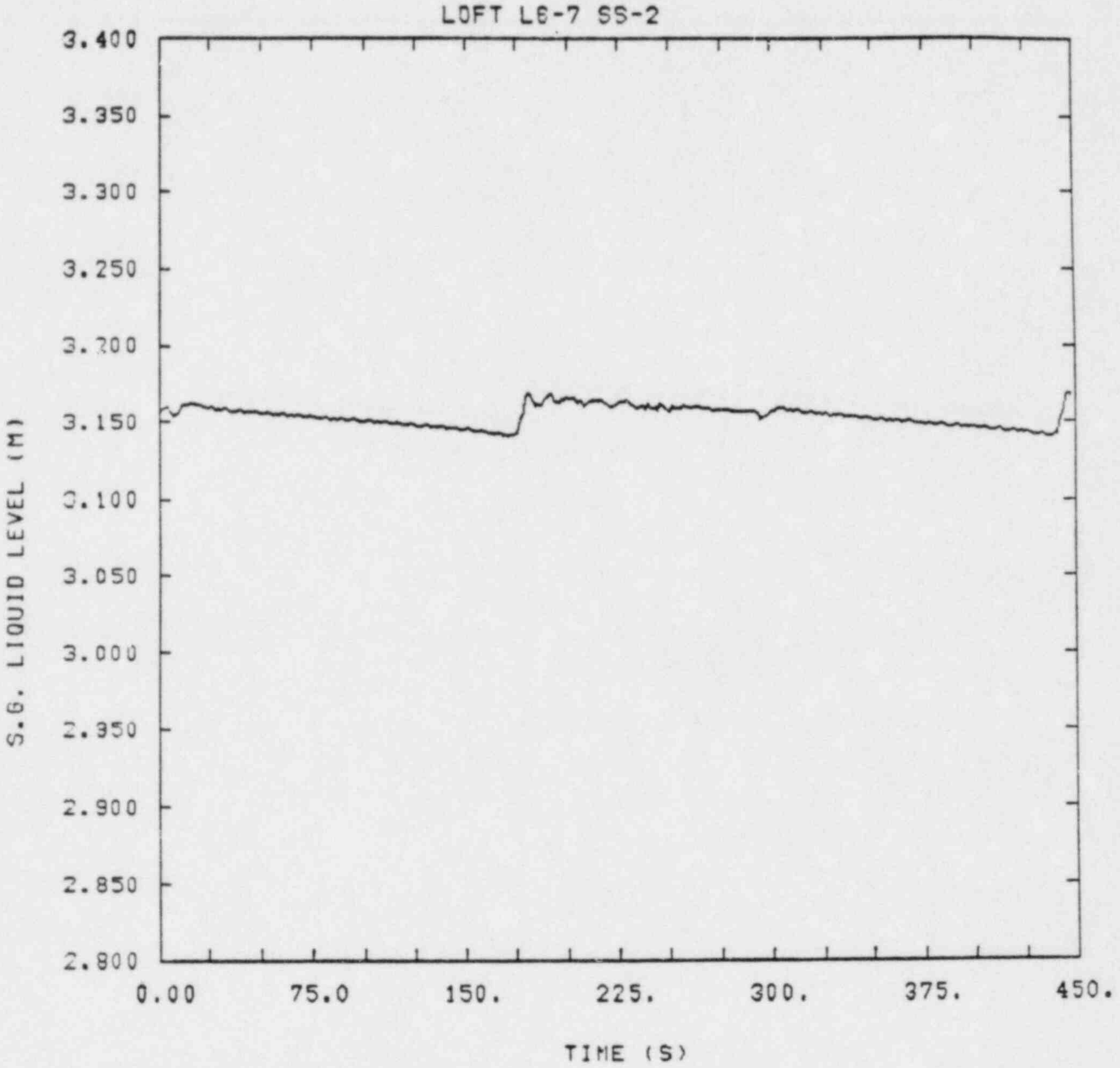

Figure 2.3.3 Cycling of Steam Generator Liquid Level

2.4 PKL Test Status

The Primarkreislaufe (PKL) test facility$^{(4)}$, located at Erlangen, West Germany, is a 1/134-scale three-loop model of a four-loop PWR. All elevations correspond to a full-scale system so that gravitational terms are correctly simulated. Core power is provided by 340 electrically heated rods. The drawing of the system is shown in Figure 2.4.1.

The ID1 series of tests$^{(5)}$ was designed to study the natural circulation modes occurring during small break situations where the primary system was slowly losing inventory. In a continuous operational mode, data for twelve different inventories was recorded, with the notation of ID1-4 to ID1-15. These covered the entire range of potential system response from subcooled natural circulation to reflux cooling, as shown in Table 2.4.1. ID1-8 and ID1-13 are of particular interest to this study.

The RELAP5 nodalization developed for this facility is shown in Figure 2.4.2. All three loops are modeled. There are a total of 217 cells - 29 in the vessel, 26 per loop for the piping, 20 in each steam generator primary and 12 in each steam generator secondary, with 4 cells used to model the common secondary feedwater downcomer and headers. Note that a drain system (526 and 527) has been included to move from one test condition to another. This feature and other properties that vary between tests are controlled by appropriate control functions.

Due to several modeling uncertainties, we felt that the initial effort for verification of the RELAP5 nodalization should be directed towards test ID1-4. Several questions such as energy losses and exact loop configurations needed to be answered before an accurate assessment of RELAP5 could be made. Considerable detective work was required to trace the evolution of the system from the initial test facility description$^{(4)}$ through previous tests to the current configuration. Major uncertainties were the presence or absence of orifice plates in the pump simulators and broken loop piping. In general, these uncertainties were the same as those encountered in modeling other facilities in this study and similar studies.

Some preliminary results from ID1-4 are shown in Figure 2.4.3. The two curves show the effect of heat loss on downcomer mass flow for the subcooled case. The mass flow agreement is unexpectedly good (the quoted experimental flow is 4.5 kg/s ± 5%). Unfortunately, the primary system temperatures seem to be slightly too high throughout the system, as shown in Figure 2.4.4. The source of this disagreement is being investigated.

TABLE 2.4.1

PKL ID1 TEST RESULTS

ID1	BUNDLE POWER	WATER** INVENTORY	MODE OF ENERGY TRANSPORT	FLOW RATE $\dot{M}$	$\Delta\theta_{P-S}$	P_P	P_S	ΔP_{P-S}
-	KW	%		KG/S	K	BAR	BAR	BAR
4	402	100	SUBCOOLED NATURAL CIRCULATION	4.5	17	28.8	18.8	10.0
5	625	100	SUBCOOLED NATURAL CIRCULATION	5.4	25	29.7	17.8	11.9
6*	404	99	SINGLE PHASE NATURAL CIRCULATION	5.4	16	30.1	23.3	6.8
7*	405	96	SINGLE PHASE NATURAL CIRCULATION	4.9	16	30.0	23.3	6.7
8	409	95	TWO PHASE CIRCULATION	9.1	3-5	30.0	28.8	1.2
9	410	93	TWO PHASE CIRCULATION	7.5	3-5	29.8	28.7	1.1
10	413	87	TWO PHASE CIRCULATION	4.2	3-5	30.5	29.6	0.9
11	411	86	TWO PHASE CIRCULATION	3.2	3-5	30.0	29.1	0.9
12	412	84	TWO PHASE CIRCULATION	1.7	3-5	30.2	29.7	0.5
13	412	80	REFLUX CONDENSER	0	2-4	30.2	30.0	0.2
14	411	51	REFLUX CONDENSER	0	2-4	29.5	29.5	0
15	641	53	REFLUX CONDENSER	0	2-4	29.9	29.1	0.1

*SOME STEAM IN UPPER PLENUM
**PRIMARY SIDE WATER INVENTORY (PRESSURIZER NOT INCLUDED)

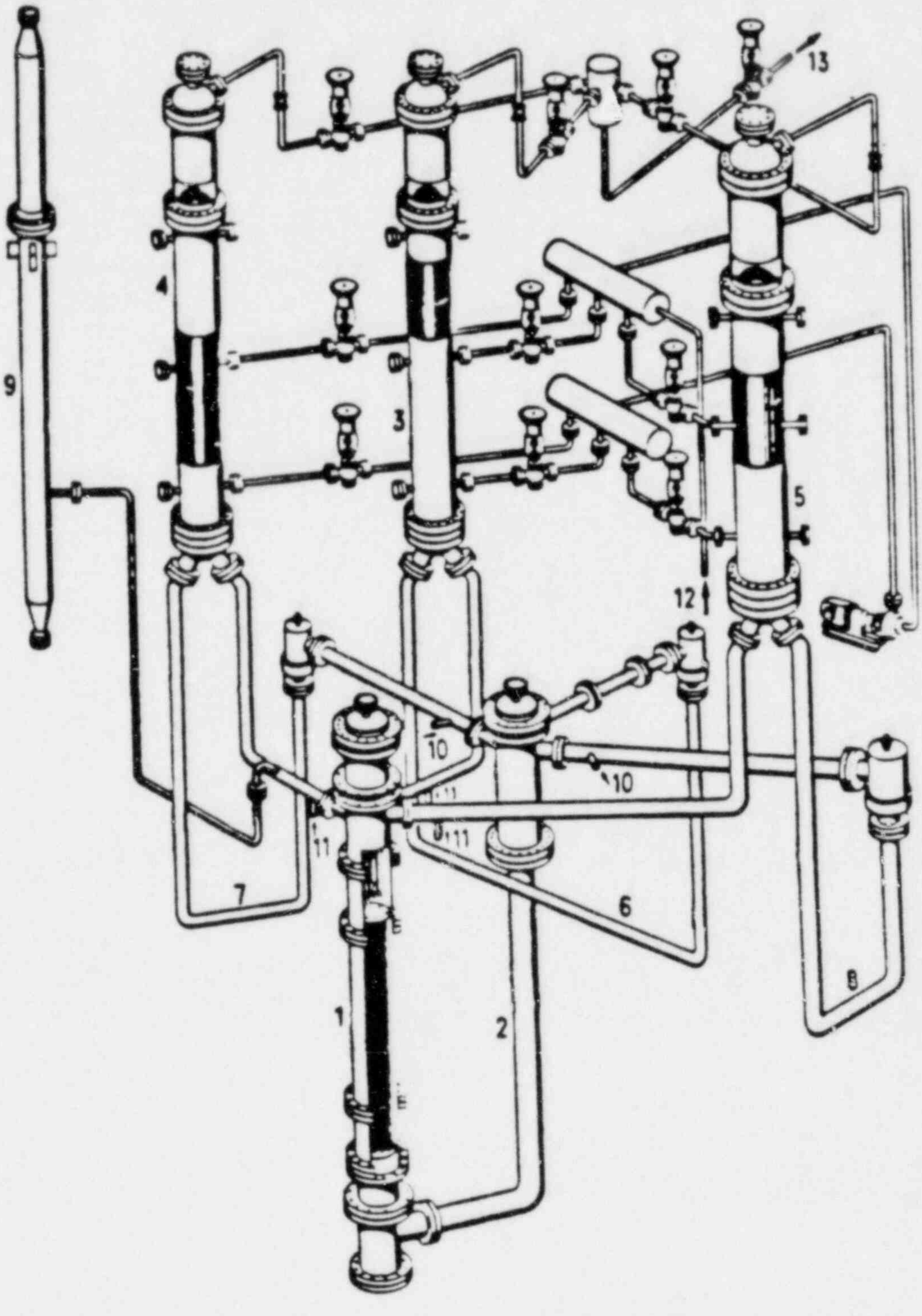

1 Rod Cluster Container
2 Downcomer
3 Steam Generator 1 (broken loop)
4 Steam Generator 2 (single loop)
5 Steam Generator 3 (double loop)
6 Pump Bend 1
7 Pump Bend 2

8 Pump Bend 3
9 Pressurizer
10 Cold Injection Point
11 Hot Injection Point
12 Coolant Supply
13 Steam Relief Point

Figure 2.4.1 PKL Test Configuration

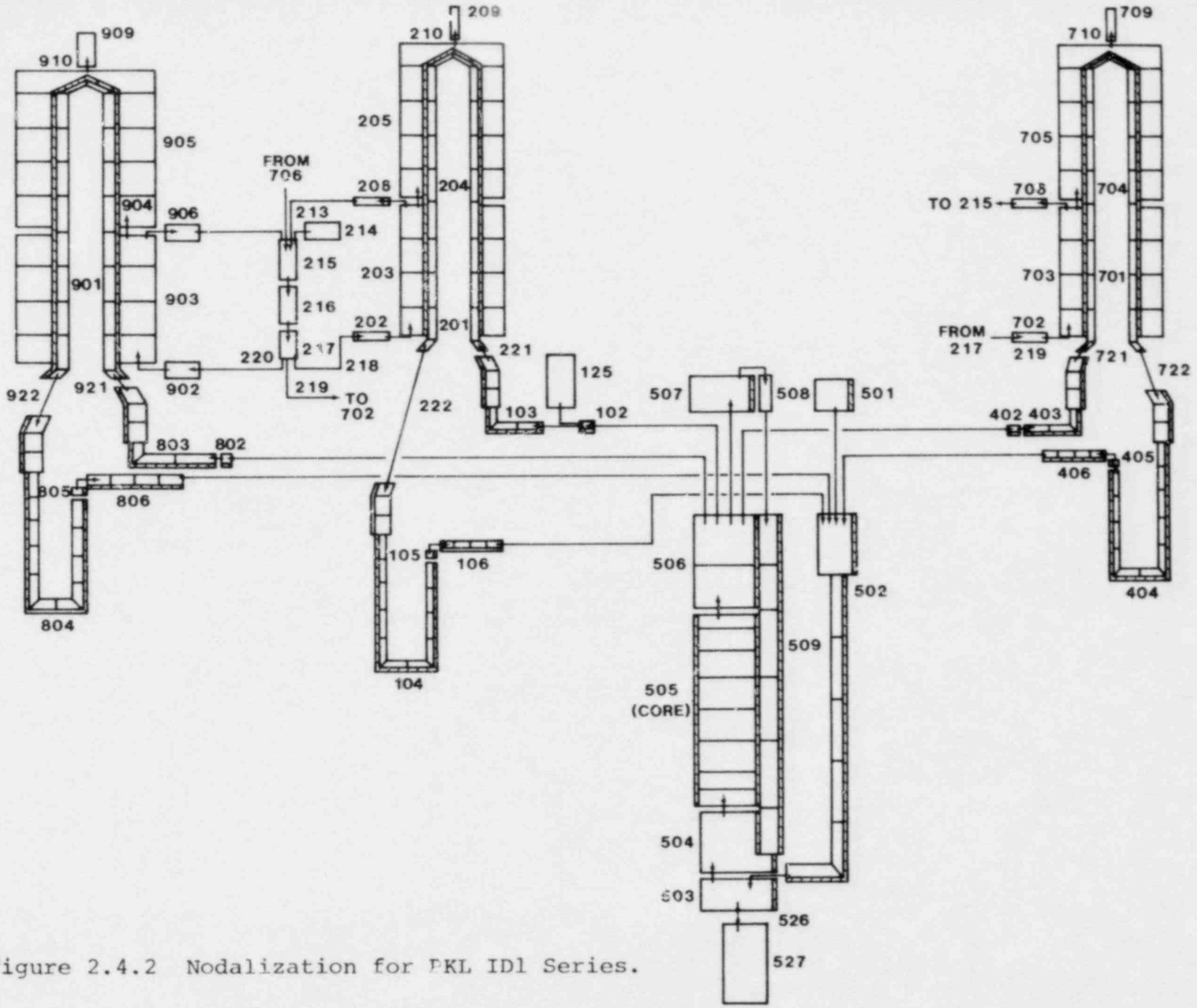

Figure 2.4.2 Nodalization for PKL ID1 Series.

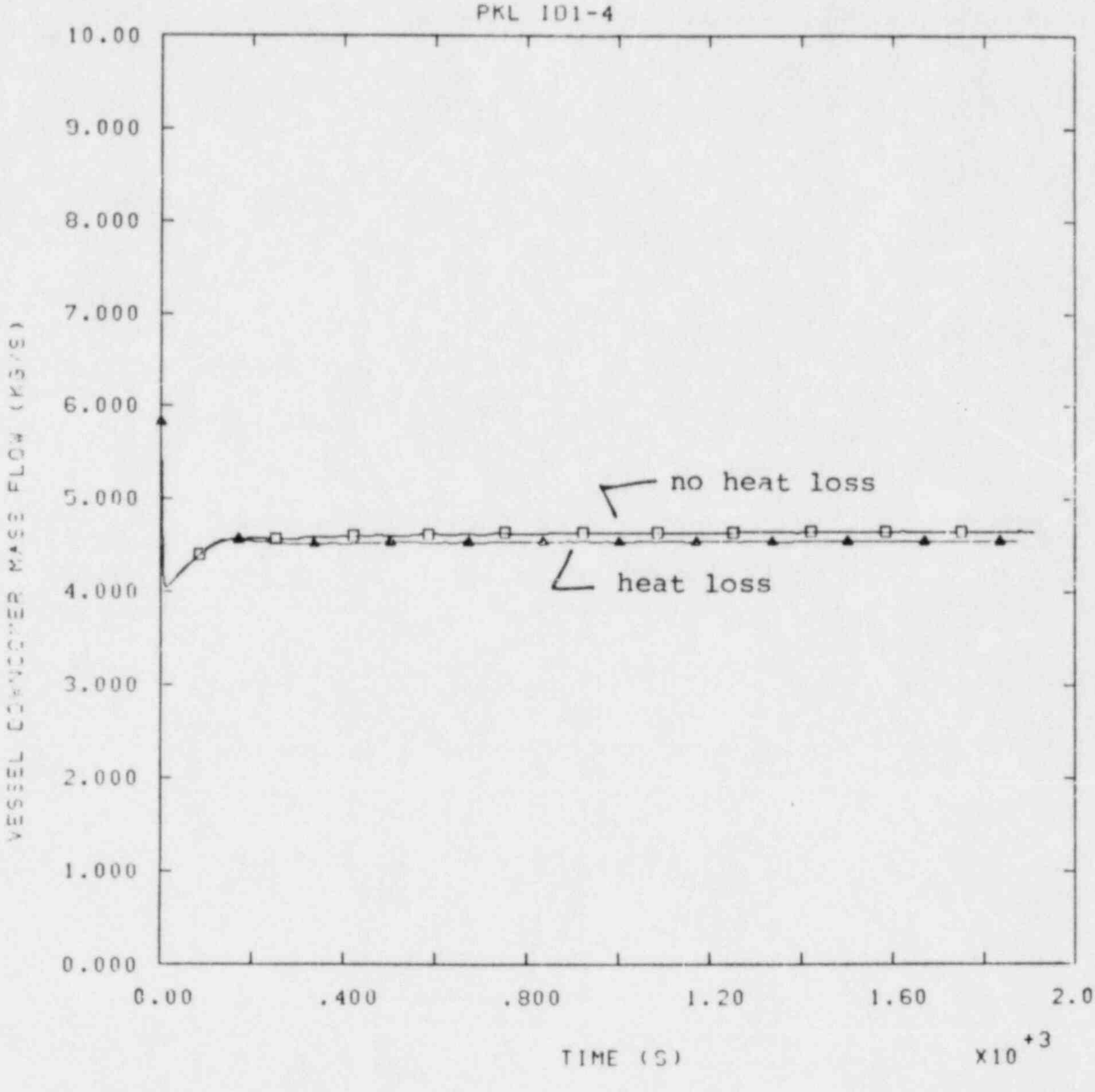

Figure 2.4.3 Downcomer flows for ID1-4 with and without heat loss.

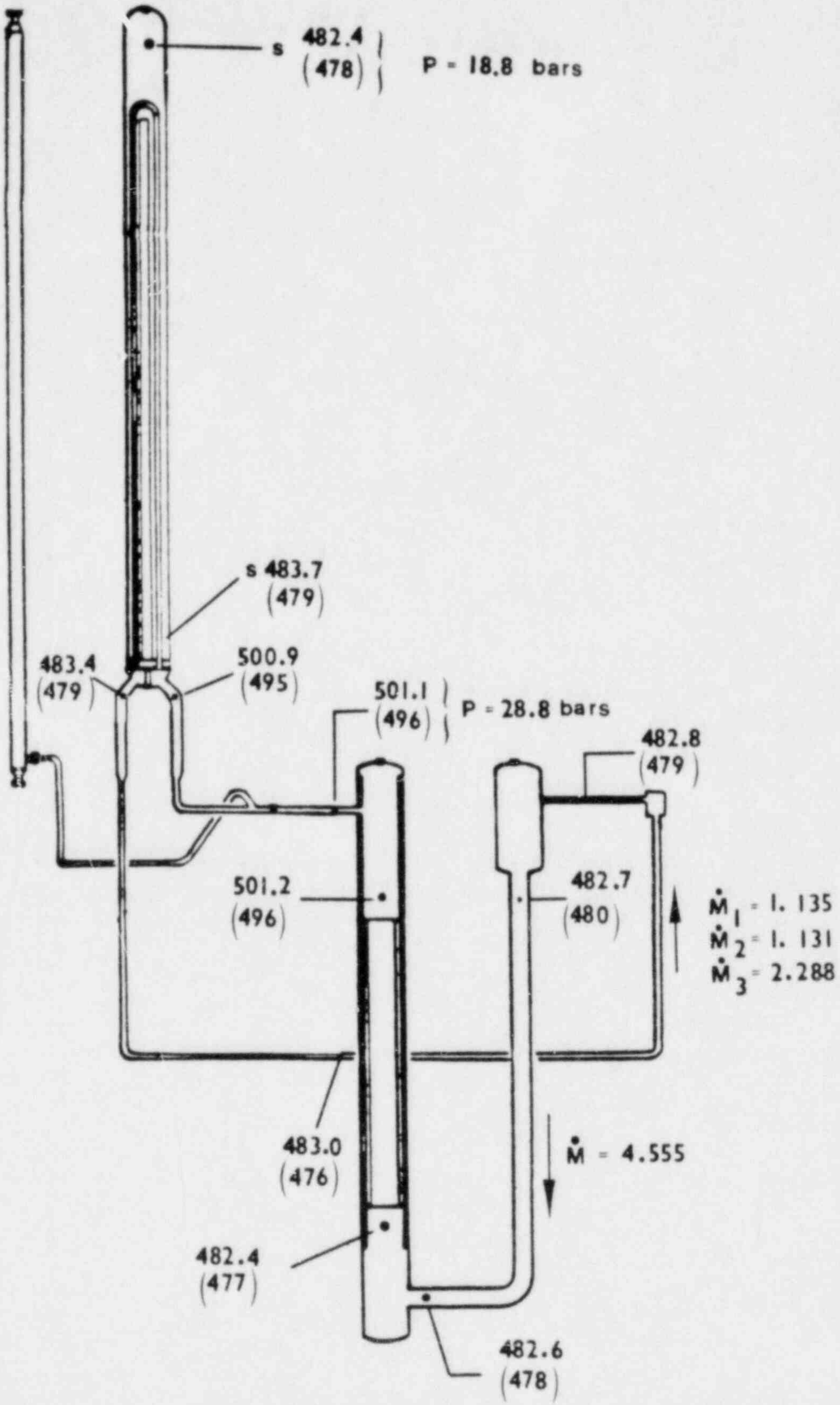

Figure 2.4.4 Preliminary Comparison of calculated and measured () conditions for ID1-4. Temperatures are in K with ± 3K experimental uncertainty. Mass flows are Kg/s. There appears to be some inconsistency in the experimental data since 478K corresponds to 17.3 bars.

2.5 Semiscale Test Status

A preliminary nodalization has been developed for the Semiscale MOD3 facility(6) (see Figure 2.5.1) as shown in Figure 2.5.2. This nodalization, totaling 154 volumes connected by 159 junctions, includes only those components necessary to obtain a steady state. Other components such as the break assemblies and the ECCS which are necessary for the transient calculations will be added at a later time, as appropriate for each specific test. The vessel and external downcomer shown in the center of Figure 2.5.2 are modeled using 36 volumes, of which 8 are used in the core region to resolve the axial power and temperature gradients. A secondary flow path from the downcomer inlet annulus through the upper head to the upper plenum is also modeled by single volumes for the bypass line, guide tube, and core support tubes. The intact loop, which in the Semiscale facility is used to represent three of the four loops in a PWR, is shown on the left. This loop includes a pressurizer and surge line and a volume-scaled steam generator. Twenty-four volumes are used to model the loop piping and coolant pump, and 31 volumes are used for the steam generator. The broken loop, to the right of the vessel, includes a height-scaled steam generator which is modeled using 34 volumes, and the loop piping and pump, modeled by 17 volumes. In addition to heat structures representing the 22 electrically heated rods in the core and the steam generator U-tubes, heat slabs have been included for the piping walls, the tube sheet, shroud, and exterior walls for each steam generator, and vessel walls and structure in an attempt to account for most of the metal mass in the system which may be of importance during small break tests. Heat losses are assumed adiabatic for the steady-state calculations. This base nodalization will be used for tests S-SB-P1, S-SB-P3, S-SB-P4, and S-SB-P7, which model early and delayed pump trips for small breaks in the hot leg and cold leg piping.

The process of obtaining a steady state has basically followed the strategy detailed in Section 2.2. Initially, the steam generator secondaries were replaced by constant heat transfer rate boundary conditions extracting 75% of the total core power from the intact loop and 25% from the broken loop. Intact loop and broken loop pump controllers were developed to regulate pump speeds to obtain the desired intact loop ΔT and the mass flow split between the loops, respectively, for a given power level. A rough steady state for the primary side has been obtained, and during this process, most input errors and omissions have been identified and corrected. The next step, currently underway, is to run only the steam generator secondaries, replacing the primary side by constant heat input to the U-tubes. Controllers are being developed to regulate the feedwater flow rates to maintain liquid levels in the downcomer regions and to regulate the steam

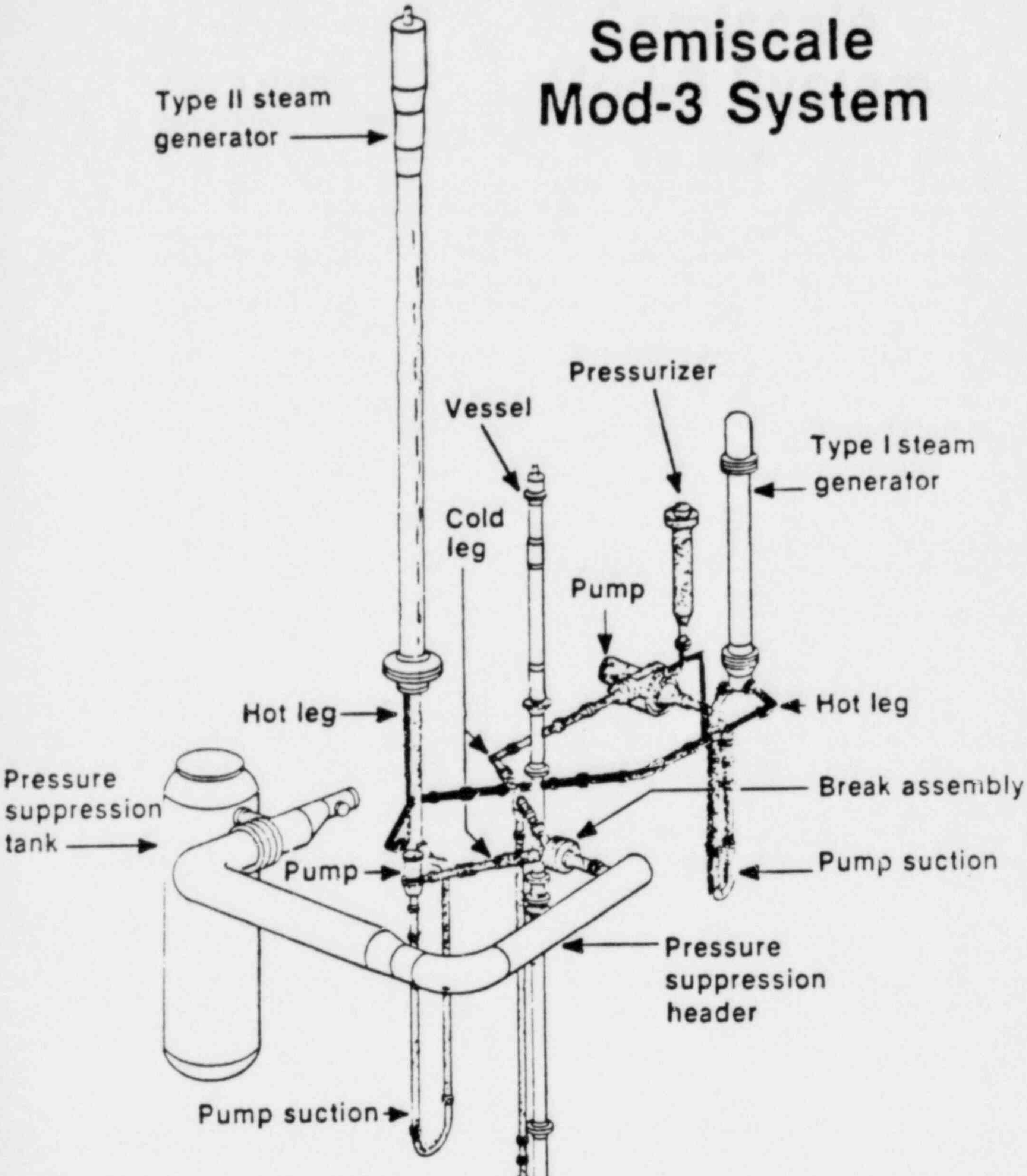

Figure 2.5.1 Semiscale MOD3 Test Configuration

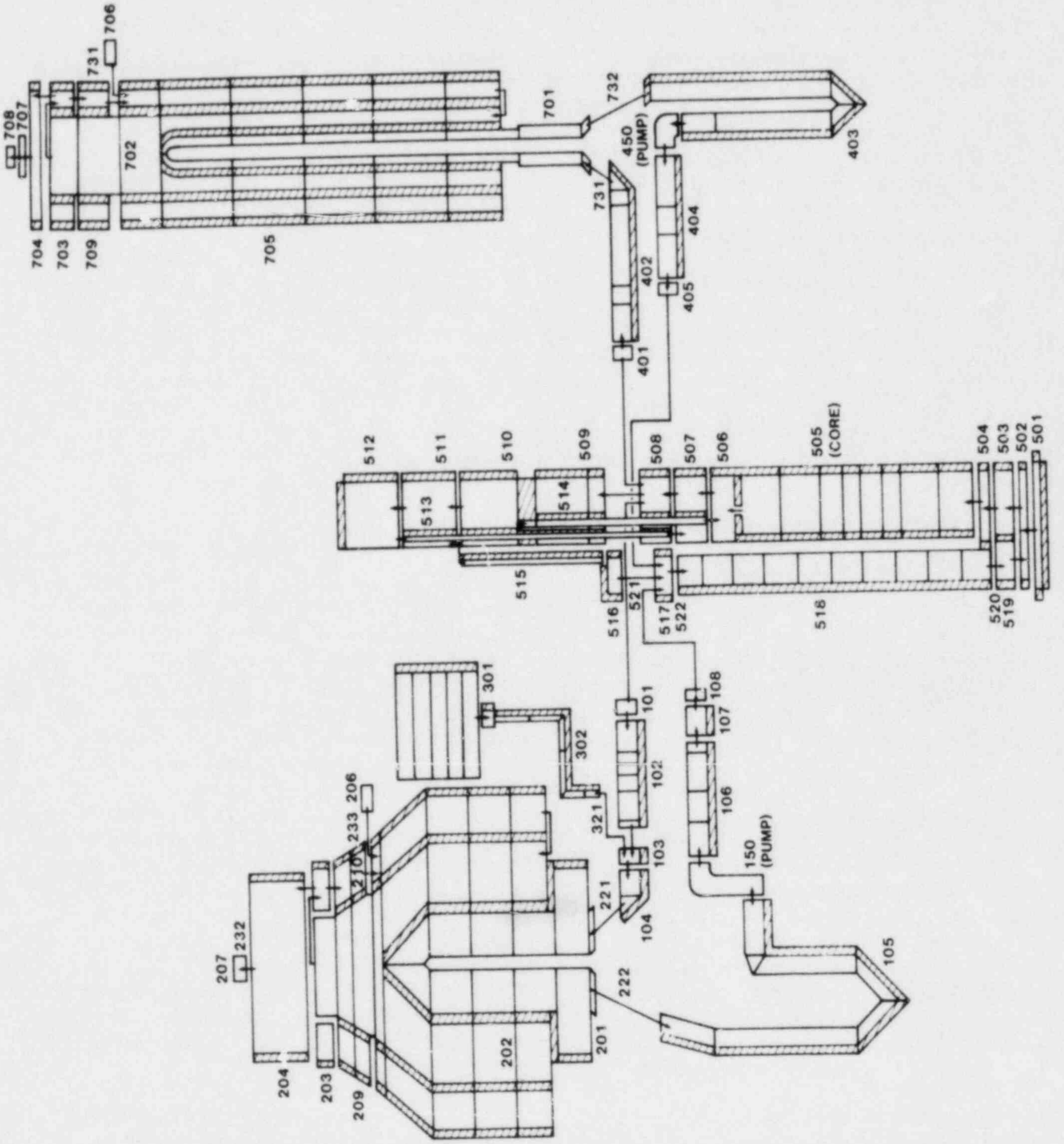

Figure 2.5.2 Nodalization for Semiscale MOD3

outlet flow rates to govern steam dome pressures and hence secondary coolant temperatures. After the primary and secondary systems have each been brought to a steady state separately, they will be combined and controller setpoints adjusted to match (within experimental uncertainties) the specified initial conditions for each transient.

Progress in correcting and refining the nodalization and steady-state calculation has been hampered by insufficient or contradictory information and documentation for various components. For example, the only source of information found regarding orifices present at the inlet and outlet of the intact loop steam generator was a single sentence in the EOS Appendix for tests S-SB-P1 and S-SB-P2, which was at first overlooked. Consequently, the calculated pressure drop in the intact loop was an order of magnitude too low until this statement was discovered. The single-phase homologous curves for the broken loop pump are in error, yielding calculated pump speeds for a given pump head that are about 30% high. This is apparently due to the replacement of an orifice at the pump discharge by a venturi nozzle for the SB-P test series. Information on other components such as the pressurizer heaters and spray systems, steam outlet valves, and feedwater piping is still incomplete or missing entirely.

2.6 LOBI Test Status

A baseline nodalization for the LOBI facility(7), located at Ispra, Italy, has been developed, and is shown in Figure 2.6.1. There are a total of 187 volumes, 194 junctions and 188 heat slabs. The intact loop, shown on the left, is modeled using 19 volumes for the piping and pump and 42 volumes in the steam generator. In the broken loop, shown on the right, 17 volumes are used for the piping and pump and 42 for the steam generator. The intact loop in the LOBI facility simulates three equivalent single loops. Both steam generators are height-scaled, with the broken loop using 6 U-tubes and the intact loop having 18 U-tubes. The vessel is also height-scaled, and is modeled using 27 volumes, mostly in the core and downcomer. Since the LOBI heater rods lose a significant fraction of their power (~ 14%) in the lower and upper plena, the core has essentially been extended to run the length of the vessel. The pressurizer and its surge lines are modeled using 21 volumes, with injection into both the intact and broken loop hot legs. Each loop also has an accumulator for ECC injection into the hot and/or cold legs, using 10 volumes in the intact loop and 13 volumes in the broken loop.

The LOBI model had to be renodalized twice before the storage limitations were met, which added over a week to the development process. This has been completed, and the primary side steady-state controllers for the pumps and pressurizer are now being tested.

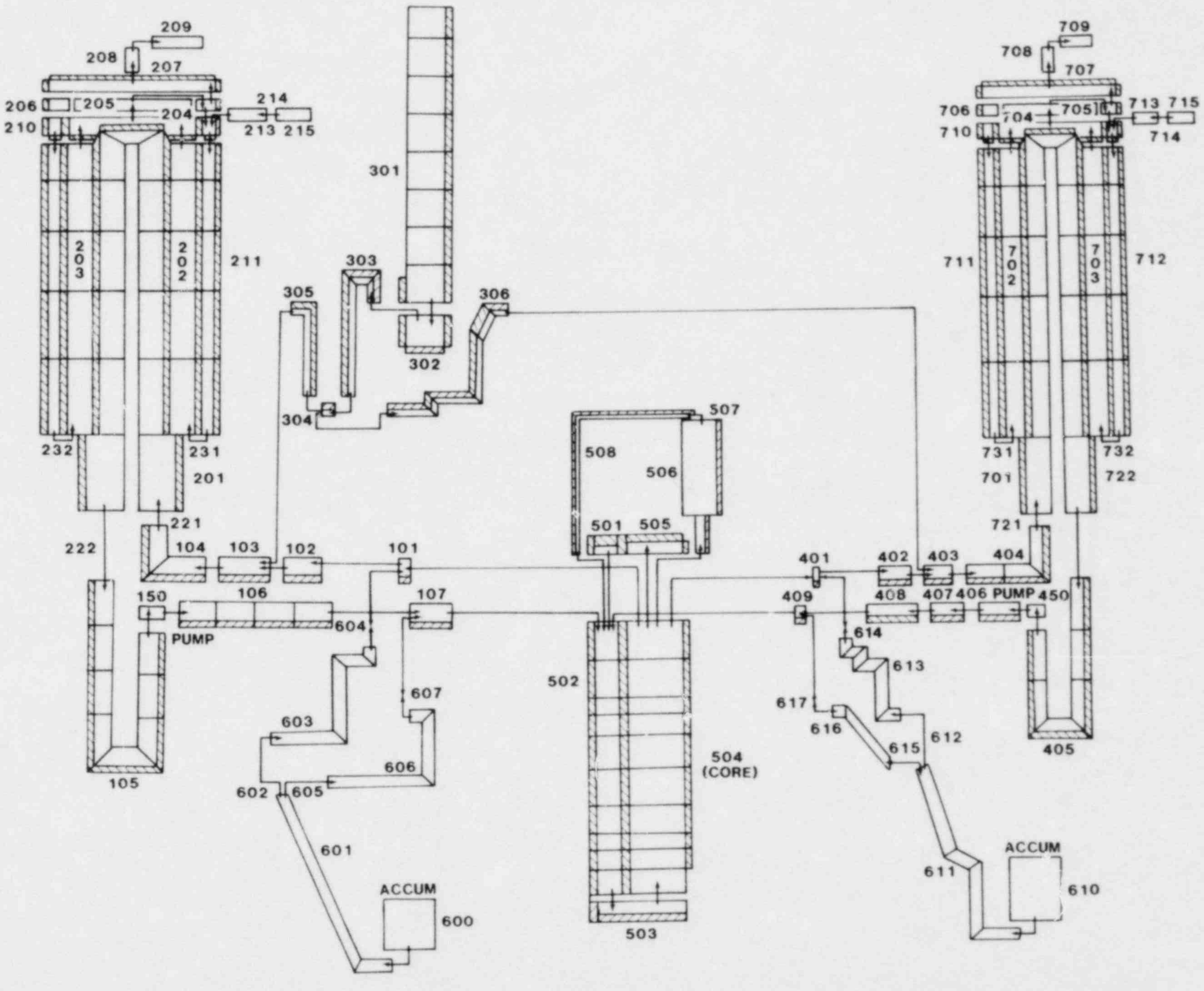

Figure 2.6.1 Nodalization for LOBI Al Test Series

2.7 RELAP5 Code Modifications at SNLA

Several code modifications were made to the RELAP5 code as received from INEL. A list of these and their purpose is given below.

A. Audit Information. In order to maintain an audit trail for each RELAP5 calculation, a special subroutine was added to store the time, date and job name of the compiling run with which the absolute program file was created. A microfiche copy of the complete compiling job is made and filed.

   Whenever RELAP5 is executed, this audit information is printed in the job log file. This makes it possible to determine the exact code configuration for any given calculation.

   We have also added the execution job name, time and date to the plot-restart file. This information is added automatically to any plots that are produced using this file.

B. Code Segmentation. Soon after SNLA received the RELAP5/MOD1/014 program from INEL, it became clear that we could not run large problems on the code as received. INEL had used a CYBER 176 for the code development. Sandia (along with the other national laboratories) has CDC 7600 and CYBER 76 equipment. The CYBER 176 is the last model in the evolution of the CDC 7600 class machines. There are a number of differences in the three generations of equipment, but the main one of interest to the present study is that the CYBER 176 has a larger SCM (small core memory) than the two older models.

   We have made changes to the segmentation directives supplied by the code builders (segmentation is an alternate method of program overlaying). This breaks the code up into small pieces which can be brought into SCM only when needed. Some special routines were written which store code segments in LCM (large core memory) instead of on disk. There are considerable differences in the time required for the LCM and disk methods.

   The net result of the resegmentation is a code that runs about 6% slower than the code as received. This number was obtained from several test problems that could be run in either configuration. It should also be noted that none of the assessment calculations considered to date would fit with the code as received.

We feel that this is a serious shortcoming of the distributed code. The resegmentation is a complex process and not for the casual code user. The more likely approach would be to cut back on nodalization.

It is difficult to recommend a proper course of action to NRC and the code builders in this area. All CDC 7000 models (including the 176) are becoming obsolete and are being replaced by CRAY1/CYBER205 class hardware. We feel that future development should be on this hardware class.

C. LOFT pump corrections. In order to correctly model a flywheel clutch on the LOFT primary pumps, INEL recommended that the following update be made to RELAP5:

```
*INSERT  PUMP.84

     IF(PMPOLD(I).GT.78.53982)
        PINVAR=((-542.47*S+640.95)*S+136.32)*0.04215
```

A separate program file containing this update is maintained for running LOFT problems. The effect is clearly seen in the pump coastdown.

2.8 Summary of Known Problems with RELAP5/MOD1

The following list of problems in RELAP5 is included at the request of NRC as an aid to other users of the code. (Recall that this list was compiled during the use of CYCLE 14 of the program).

A. Separator Component Orientation. The documentation and some of the examples indicate that the separator component should be installed in a steam generator as shown in Figure 2.8.1. Note that the model is that of a perfect separator in that only pure vapor is allowed to flow in junction 1. Several problems were encountered with the arrangement, and it was discovered that the component worked much better as shown in Figure 2.8.2. The underlying reason for this improvement is not known.

B. Pump Description. The manual states that homologous behavior curves for a pump may be obtained from those specified for another component. (This type of input

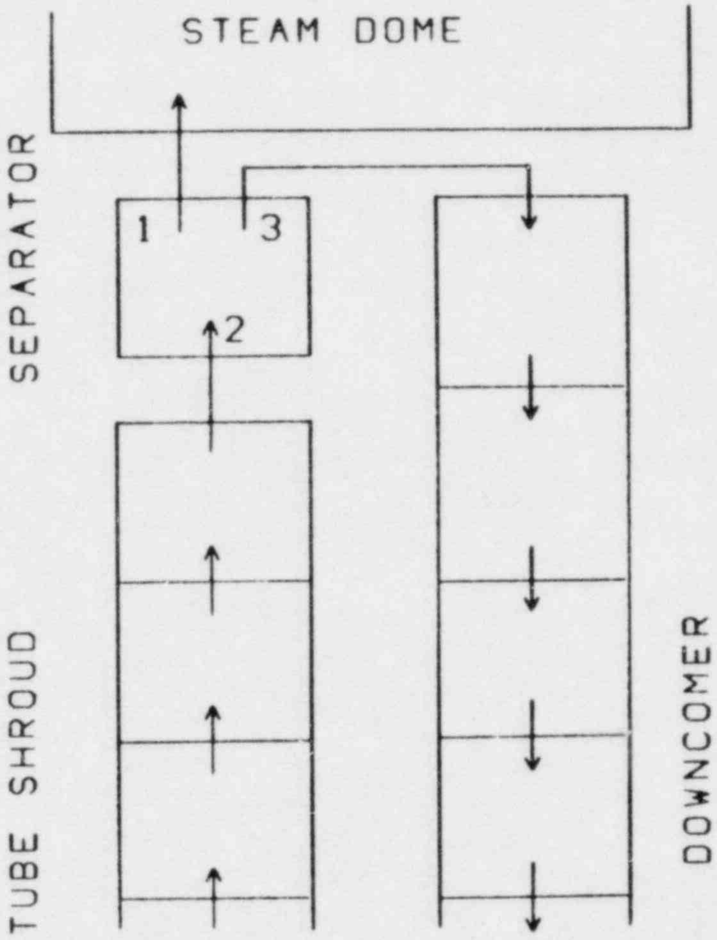

Figure 2.8.1 Suggested Separator Configuration

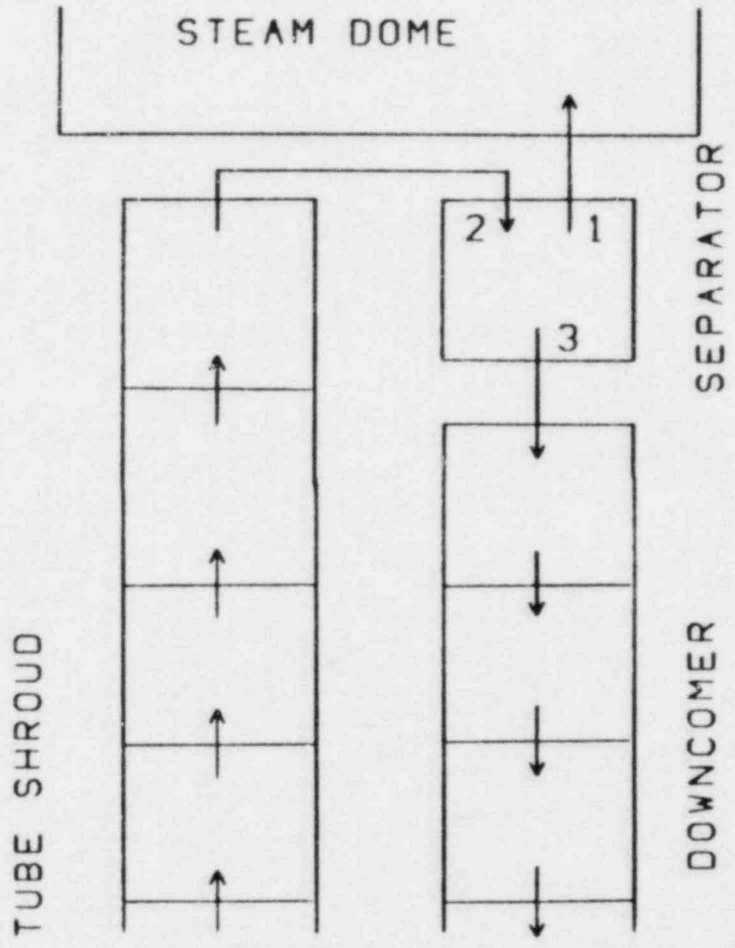

Figure 2.8.2 Revised Separator Configuration

option is called the "refer back" option.) This does in fact work; however, it also disables the use of a time-dependent velocity table for the pump.

Coefficients for the dependence of pump friction on speed are described as coefficients in a cubic function of the speed. The variable actually used is the absolute value of the speed, normalized with the rated speed. If the rated pump motor torque is computed, it is the sum of the initial hydraulic torque and the friction.

C. Some input parameters are never defined (e.g., "energy loss coefficients" for junctions).

D. The refer back option for heat structure mesh geometry includes copying the value of the left boundary of the structure referred to. This is not stated in the documentation.

E. The list of standard functions in the control system description is incomplete. The code also contains functions MAX and MIN, which record extreme values of a parameter over the history of a calculation.

F. The manual states that, for a valve junction component, either the "from" or the "to" connection code must refer to the component itself. This rule is false, and attempting to adhere to it results in an input error.

G. In the input description for a pipe or annulus component, paragraph 11.6 of the input documentation includes: "Except for connections to a branch component, only one junction may be connected to the inlet and only one junction may be connected to the outlet." This is false.

H. The code permits, and computes with, the specification of a junction of a branch component which is not connected to the branch.

I. In the list of quantities which may be edited or plotted, or used in trips or control functions:

   i) Stem position for a valve (VLVSTEM) is omitted.

   ii) VAPGEN is a volumetric vapor generation rate, not a volume rate (i.e., its SI units are $kg.m^{-3}s^{-1}$, not $kg.s^{-1}$).

iii) The quantity HTHTC is a heat transfer coefficient, not its derivative with respect to surface temperature.

2.9 References

1. V. H. Ransom, et al., RELAP5/MOD1 Code Manual Volume 1: System Models and Numerical Methods, Volume 2: Users Guide and Input Requirements (DRAFT), NUREG/CR-1826, EGG-2070, Idaho National Engineering Laboratory, September 1981.

2. D. L. Reeder, LOFT System and Test Description (5.5-ft Nuclear Core 1 LOCEs), NUREG/CR-0247, TREE-1208, July 1978.

3. J. P. Adams, Quick-Look Report on LOFT Nuclear Experiment L6-7/9-2, EGG-LOFT-5526, August 1981.

4. B. Brand, R. Kirmse, and W. Winkler, OECD-CSNI Standard Problem No. 10: Refill and REflood Experiments in A Simulated PWR Primary System (PKL), GRS report December 1979.

5. D. Hein, et al., PKL-Small Breaks (Test Series ID): Results of the Steady-State Test PKL ID1 in A Four-Loop Operation with 30 Bar System Pressure, KWU Tech. Rept. No. R 513/18/81, April 1981.

6. M. L. Patton, Semiscale MOD-3 Test Program and System Description, NUREG/CR-0239, TREE-NUREG-1212, July 1978.

7. W. Riebold, et al., Specifications-LOBI Pre-prediction Exercise-Influence of PWR Primary Loops on Blowdown, Tech. note no. 1.06.01.79.25, J.R.C., Ispra, February 1979.

DISTRIBUTION:

U. S. NRC Distribution Contractor (CDSI)
7300 Pearl Street
Bethesda, MD 20014
335 copies for R4
25 copies for NTIS

List available from Author (10)

8214	M. A. Pound
9400	A. W. Snyder
9410	D. J. McCloskey
9412	J. W. Hickman
9420	J. V. Walker
9421	R. L. Coats
9422	D. A. Powers
9423	P. S. Pickard
9424	M. J. Clauser
9425	W. J. Camp
9440	D. A. Dahlgren
9441	M. Berman
9441	J. C. Cummings
9441	R. K. Cole, Jr.
9442	W. A. Von Riesemann
9443	D. A. Dahlgren
9444	S. L. Thompson (20)
9444	L. D. Buxton (10)
9444	R. K. Byers
9444	L. N. Kmetyk
9444	K. McFadden
9444	J. Orman
9444	G. C. Padilla
9444	W. R. Schmidt
9444	R. M. Summers
9444	G. G. Weigand
9444	C. N. Wong
3141	L. J. Erickson (5)
3151	W. L. Garner (3) For: DOE/TIC (Unlimited Release)

120555078877   1 ANR4
US NRC
ADM DIV OF TIDC
POLICY & PUBLICATIONS MGT BR
PDR NUREG COPY
LA 212
WASHINGTON   DC 20555

Org.				Org.	Bldg.	Name	Rec'd by

Sandia National Laboratories