WISCONSIN ELECTRIC
POWER COMPANY

POINT BEACH
NUCLEAR PLANT
UNIT NO. 1

STEAM GENERATOR
REPAIR REPORT

AUGUST 1982

2671Q:1

TABLE OF CONTENTS

TABLE OF CONTENTS (Continued)

2671Q:1

TABLE OF CONTENTS (Continued)

2671Q:1

TABLE OF CONTENTS (Continued)

2671Q:1

LIST OF TABLES

2671Q:1

LIST OF TABLES (Continued)

2671Q:1

LIST OF FIGURES

1.0 INTRODUCTION, SUMMARY AND CONCLUSIONS

1.1 SUMMARY OF STEAM GENERATOR REPAIR PROGRAM

1.1.0 Introduction

Point Beach Nuclear Plant Unit 1 has experienced secondary side corrosion in a number of tubes in the two steam generators. Various ameliorative measures have been taken to arrest the corrosion, including changes in the secondary water chemistry, plugging degraded tubes, and reduction of operating temperature. Approximately 14 percent of the tubes in each steam generator have been removed from service by plugging. As a result of the reduced operating temperature, Unit 1 is currently operating at less than 80 percent of full power. To increase availability and reliability, and to return to full-power operation, it is appropriate to replace both steam generators of Unit 1.

This document discusses the steam generator repair program which will be implemented to restore the reliability and performance of the steam generators installed in Unit 1. The discussion of the steam generator repair program and the effect on the operating unit demonstrates that the repair work and subsequent operation can be conducted without undue risk to the health and safety of the general public or to personnel engaged in the repair work. The information contained herein is not intended to supplant the information in the Final Safety Analysis Report (FSAR), but is intended to supplement the discussion presented therein in the specific areas associated with the repair program and to identify significant changes that may result from the repair program. The FSAR for the Point Beach Nuclear Plant should be consulted for specific details about referenced equipment, systems, or components.

The information presented herein reflects the most current design information at the time of preparation. Since the detail design and engineering for the program are currently in progress, this document will be revised as new information is developed.

1.1.1 Containment Entry and Exit of Steam Generator Lower Assemblies

Entry and exit of the steam generator lower assemblies will be through the present equipment hatch in the containment structure. The equipment hatch is sized to accommodate steam generator replacement without containment modification. The steam generator lower assemblies will be moved through the equipment hatch using a temporary containment transport system.

1.1.2 Steam Generator Lower Assembly Characteristics

Westinghouse Electric Corporation will fabricate new steam generator lower assemblies. The design of the lower assemblies will match the design performance of the lower assemblies being replaced. However, several design features that do not alter mechanical performance and FSAR parameters are included in the design. These design features will provide improved thermal hydraulic performance, improved access to the tube bundle, and reduce the potential for secondary side corrosion.

1.1.3 Safety-Related Considerations

The potential impact of the repaired steam generators on each appropriate accident analyzed in the FSAR has been evaluated. In addition, it is realized that the repair effort involves extensive work with radioactive components which include cutting, welding and transporting of portions of the steam generators and associated piping. Point Beach Nuclear Plant has had extensive experience throughout its history in similar activities. Because of the essentially duplicated safety-related design parameters; improved thermal-hydraulic, corrosion resistance, and maintainability characteristics; and previous experience, it is concluded that the repair work and subsequent operation can be conducted without undue risk to the health and safety of the general public or to personnel engaged in the repair work and does not involve an unreviewed safety question.

1.1.4 ALARA Considerations

The guidelines contained in Regulatory Guide 8.8, "Information Relevant to Ensuring That Occupational Radiation Exposure at Nuclear Power Stations Will Be As Low As Is Reasonably Achievable," will be considered. The entire repair process will be preplanned. Mockups and training will be used extensively to minimize outage time and radiation exposure. Decontamination and other exposure limiting techniques will be used where they offer significant savings in exposure commensurate with overall program objectives. Special scaffolding and other components will be prefabricated to the extent possible to minimize radiation exposure and outage time.

In addition, estimates have been made of the exposure to personnel involved in the repair activity. This evaluation indicates that the reduction in man-rem exposure currently being incurred during tube inspection and plugging operations will offset, in a short time period, the man-rem exposure incurred during the steam generator repair.

1.1.5 Offsite Radiological Considerations

Radiological controls will be in effect during all activities associated with the repair program. Since the lower steam generators may be a source of radioactive contamination during and following cutting operations, special covering devices will be employed to minimize radiation exposure and the spread of radioactive contamination.

1.1.6 Other Aspects of the Program

The shop fabrication of the lower assemblies and moisture separator replacement parts will be conducted in accordance with standard practices. Transport, lifts, removal and replacement of components, and site preparation associated with the repair program will utilize standard manufacturing and construction practices.

1.1.7 Steam Generator Disposal

The repair activity and ultimate disposal of the existing lower assemblies are separable issues. During the time between removal from containment and ultimate disposal, the lower assemblies will be stored onsite in a temporary storage facility.

1.2 IDENTIFICATION OF PRINCIPAL AGENTS AND CONTRACTORS

The Wisconsin Electric Power Company (WE), is the sole owner and licensed operator of Point Beach Nuclear Plant. WE has been actively engaged in nuclear power operations with the construction, operation, and maintenance of Point Beach Nuclear Plant Units 1 and 2. This represents a total operating experience of approximately 22 reactor years.

Westinghouse Electric Corporation (Westinghouse) manufactured the existing steam generators and designed and fabricated the replacement steam generator lower assemblies and moisture separator components. Westinghouse experience in nuclear plants for the electric utility industry is demonstrated by the pressurized water reactor plants that Westinghouse has designed, developed, and manufactured. Westinghouse has developed a broad technological foundation in nuclear power application which enables them to offer the electric utility industry a reliable and safe source of power and services related to the maintenance of nuclear power plants.

1.3 OTHER CONSIDERATIONS

The repair program will involve replacement/repair of facility equipment, rather than an alteration or change to the facility. Because of the scope of the steam generator repair, the process has been reviewed by WE pursuant to 10 CFR 50.59. In addition to each FSAR accident analysis evaluation, the construction incident potential, the potential impact on the ability to shut down the operating unit and maintain it in a safe shutdown configuration, and the impact on cooling spent fuel have

also been evaluated. The evaluations indicate tnat the repair activity does not involve an unreviewed safety question, a change to Point Beach Nuclear Plant Unit 1 Technical Specifications is not required, and tne repair work and subsequent operation can be conducted without undue risk to the health and safety of the general public or to the personnel engaged in the repair work.

1.4 CONCLUSIONS

The fundamental conclusions reached are that the steam generator repair program can be conducted utilizing proven manufacturing and construction techniques and that the repair program does not result in any adverse impact on plant safety. The repair effort will provide employment, income, and sales revenue to the local region and will not significantly affect the environment of the plant site or immediate adjacent areas. The detailed bases supporting these conclusions are provided in tne report that follows.

2.0 REPLACEMENT COMPONENT DESIGN

Westinghouse will shop fabricate new steam generator lower assemblies as illustrated by Figure 2-1. The design of the lower assemblies will be similar to the design performance of the lower assemblies being replaced. However, several design features which do not alter mechanical, performance and Final and Safety Analysis Report (FSAR) parameters are included in the design. These design features will provide improved flow distribution, access improved to the tube bundle, and will reduce the potential for secondary side corrosion. This section discusses the design and manufacture of the lower assemblies.

2.1 COMPARISON WITH ORIGINAL COMPONENT

2.1.1 PARAMETRIC COMPARISON

The steam generators for the Point Beach Nuclear Plant plant Unit 1, upon completion of the repair, will have physical, mechanical and thermal characteristics consistent with the original design and safety analysis as currently documented in the FSAR.

Design data for the existing and repaired steam generators are presented in Table 2-1. The thermal performance data for each steam generator will remain the same as the original steam generators.

Materials used in the fabrication of the replacement lower assemblies will be identical to those used in the original steam generators except where specific design changes have been incorporated or fabrication practice has changed. These changes include the following:

1. Plate material used in the secondary shell formation has been changed to SA-533 Grade A Class 2 from SA-302 Grade B Class 1 as a result of changes in fabrication practices;

2. Support plate material has been changed to SAS-240 Type 405 from SA-285 Grade C to minimize corrosion and the potential for denting; and

3. The steam generator tube material for the replacement steam generator assemblies is thermally-treated Inconel 600. The original tube material was mill-annealed Inconel-600.

Material changes due to design improvements will not degrade the physical, mechanical and thermal performance of the steam generators. Further discussion of mateial changes is provided in Section 2.2 Table 2-2 provides comparison of past and present aplications of mateials.

2.1.2 PHYSICAL COMPATIBILITY WITH ORIGINAL STEAM GENERATORS AND SYSTEMS

The replacement steam generator lower assemblies are designed to be duplicate physical replacements for the existing units. Outside overall dimensions are the same as are the locations of nozzles and support attachments. Existing interfaces between the steam generators and plant components and systems are maintained. Dry and wet weights and center of gravity of the steam generators will remain essentially the same; therefore, no changes to the existing supports are necessary.

2.1.3 ASME CODE APPLICATION

The original steam generators were built to the 1965 Edition of the ASME Boiler and Pressure Vessel Code (ASME Code), including Addenda through Summer 1966; the replacement steam generator lower assemblies will be designed and fabricated to the latest edition of the ASME Code in effect as of December 1, 1979. The stress analysis will be performed using the 1965 Edition of the ASME Code, including all Addenda through Summer 1966.

2.1.4 REGULATORY GUIDE APPLICATION

The compilation below addresses Regulatory Guides considered applicable to the fabrication of the replacement lower assemblies. It must be noted that these guides were issued subsequent to construction and

operation of this facility. The intent is to accomodate, consistent with facility design and repair program objectives, the guidance provided by these regulatory guidelines.

1.26 Quality Group Classifications and Standards for Water, Steam and Radioactive-Waste-Containing Components of Nuclear Power Plants (Rev. 2) July 1975.

1.28 Quality Assurance Program Requirements (Design and Construction) (Rev. 2) Feb. 1979 (Safety Guide 28, June 1972)

The Westinghouse position on Regulatory Guide 1.28 is presented in WCAP-8370, Revision 9A, "WRD Quality Assurance Plan."

1.29 Seismic Design Classification (Rev. 3, July 1978).

1.31 Control of Stainless Steel Welding (Rev. 3) October 1978

The Westinghouse production weld verification program, as described in WCAP-8324-A, was approved by the NRC as a satisfactory substitute for following the recommendations of the NRC Interim Position on Regulatory Guide 1.31 (4/74). The results of the verification program support the hypothesis presented in WCAP-8324-A; these results have been summarized and documented in WCAP-8693, which has been submitted to the NRC for information.

1.37 Quality Assurance Requirements for Cleaning of Fluid Systems and Associated Components of Water-Cooled Nuclear Power Plants (Sept., 1981)

The Westinghouse position on Regulatory Guide 1.37 is presented in WCAP-8370, Revision 9A, "WRD Quality Assurance Plan."

1.38 Quality Assurance Requirements for Packaging, Shipping, Receiving, Storage, and Handling for Nuclear Power Plants (Rev. 2, May 1977)

The Westinghouse position on Regulatory Guide 1.38 is presented in WCAP-8370, Revision 9A, "WRD Quality Assurance Plant."

1.43 Control of Stainless Steel Weld Cladding of Low-Alloy Steel Components (May 1973)

The Westinghouse Nuclear Components Division will use materials made to fine-grain practice or which are not susceptible to underclad cracking. These materials do not require the controls listed in the guide.

1.44 Control of the Use of Sensitized Stainless Steel (May 1973)

All of the unstabilized austenitic stainless steels used for component parts of the reactor coolant pressure boundary are utilized in the final heat treated condition required by the respective ASME Code, Section II, material specification for the particular type or grade of alloy. Processing and fabrication are performed using established methods and techniques to avoid sensitization. Westinghouse has verified that these practices will prevent sensitization by performing corrosion tests on as-received wrought material, as well as on production and qualification weldments. In addition, the water chemistry in the reactor coolant system is controlled to prevent intergranular attack of unstabilized stainless steels; the effectiveness of these controls has been demonstrated by both laboratory tests and operating experience.

1.48 Design Limits and Loading Combinations for Seismic Category I Fluid Systems Components (May 1973)

Westinghouse meets and will continue to meet the requirements of General Design Criterion 2 and will thereby satisfy the concerns of Regulatory Guide 1.48. The loading combinations and design limits used in the code stress analysis of the steam generator will be the same as those in the Point Beach FSAR.

1.50 Control of Preheat Temperature for Welding of Low-Alloy Steel (July, 1976)

Westinghouse practices are in agreement with Regulatory Positions C.1.a, C.3 and C.4. For Regulatory Position C.1.b, Westinghouse qualified Welding procedures within the preheat temperature ranges required by Section IX of the ASME Code. For Regulatory Position C.2, Westinghouse uses the methods documented in WCAP-8577-A, which has been accepted by the NRC.

1.54 Quality Assurance Requirements for Protective Coatings Applied to Water-Cooled Nuclear Power Plants (Rev. 9, June 1973).

1.60 Design Response Spectra for Seismic Design of Nuclear Power Plants (Rev. 1, December 1973).

1.61 Damping Values for Seismic Design of Nuclear Power Plants (Rev. 0, October 1973).

1.64 Quality Assurance position on Regulatory Guide 1.64 is presented in WCAP-8370, Revision 9A, "WRD Quality Assurance Plan."

1.68 Preoperational and Initial Startup Test Programs for Water Cooled Power Reactors (August, 1978).

1.74 QA Terms and Definitions (February, 1974).

1.83 Inservice Inspection of Pressurized Water Reactor Steam Generator Tubes (Rev. 1, July 1975).

1.84 Code Case Acceptability-ASME Section III Design and Fabrication (Rev. 19, April 1982).

1.85 Code Case Acceptability-ASME Section III Materials (Rev. 19, April 1982).

1. Westinghouse controls its suppliers to:

   a. Limit the use of code cases to those listed in Regulatory Position C.1 of the applicable guide revision in effect at the time the equipment is ordered, except as allowed in item 2 below.

   b. Identify and request permission for use of any code cases not listed in Regulatory Position C.1 of the applicable guide revision in effect at the time the equipment is ordered, where use of such cases is needed by the supplier.

   c. Allow continued use of a code case considered acceptable at the time of equipment order, where such code case was subsequently annulled or amended.

2. Westinghouse seeks NRC permission for the use of code cases needed by suppliers and not yet endorsed in Regulatory Position C.1 of the applicable guide revision in effect at the time the equipment is ordered and permits supplier use only if NRC permission is obtained or is otherwise assurd (e.g., a later version of the regulatory guide includes endorsement).

1.92 Combination of Modes and Spatial in Seismic Response Analysis (Rev. 1, Feb. 1976).

1.116 QA Requirements for Installation, Inspection, and Testing of Mechanical Equipment and Systems (May 1977).

1.121 Bases for Plugging Degraded PWR Steam Generator Tubes (April 1977).

1.123 Quality Assurance Requirements for Control of Procurement of Items and Services for Nuclear Power Plants (Revision 1, July 1977).

2.2 COMPONENT DESIGN IMPROVEMENTS

The physical, thermal and hydraulic characteristics of the steam generators will be at least equivalent to those of the original steam generators. Additional design features have been incorporated in the design.

These features, will increase the operating reliability and reduce the potential for corrosion of the steam generator components.

Extensive research, development and testing have been utilized to select design parameters, materials and component configurations which will minimize the potential for corrosion and enhance the performance of the repaired steam generators.

2.2.1 DESIGN REFINEMENTS TO MINIMIZE THE POTENTIAL FOR CORROSION

2.2.1.1 FLOW DISTRIBUTION BAFFLE

A flow distribution baffle has been provided 23 inches above the tubesheet. This baffle has a cut out center section and oversized drilled tube holes. The baffle plate assists in directing flow across the tubesheet then up the center of the bundle through the center cutout. The design is sized to maximize the flow to the center of the bundle and minimize the number of tubes in low-velocity regions. Consistent with this purpose, the design is also intended to cause any sludge to deposit near the blowdown intake where it can be removed. The flow distribution baffle plate material is ferritic stainless steel. Figure 2-2 illustrates the flow distribution baffle. As noted in Section 2.2.3.1, access holes have been provided to allow sludge lancing above and below the baffle plate.

2.2.1.2 IMPROVED INTERNAL BLOWDOWN DESIGN

Maintenance of the secondary side water chemistry is assisted through the use of the blowdown system. Each steam generator will be designed to have two 2-inch schedule 40 Inconel internal blowdown pipes. The blowdown nozzles on the external portion of the steam generator shall have provisions for connection to 2-1/2 inch existing blowdown piping. The blowdown intake location is coordinated with the baffle plate design so that the maximum intake is located where the greatest amount of sludge may collect. The modified blowdown system should allow increased capacity blowdown in comparison with the present blowdown arrangement.

2.2.1.3 TUBE EXPANSION IN TUBESHEET

Following insertion into the tubesheet hole, tack rolling, welding and gas leak testing, the tubes are hydraulically expanded to the full depth of the tubesheet holes. Full-depth closes eliminates the tube sheet crevice in which concentration of impurities has occured in the original steam generator.

2.2.1.4 THERMALLY TREATED INCONEL 600 TUBING

Research by Westinghouse has determined that additional resistance in the stress corrosion of Inconel 600 tubing can be achieved by modification of the metallurgical structure through thermal treatment. The primary objective of this treatment is to develop a metallurgical structure, associated with grain boundary precipitate morphology, which provides increased margin with respect to stress corrosion resistance. Several benefits results from this treatment such as additional resistance to stress corrosion cracking in NaOH, additional resistance to intergranular attack in oxygenated environments, additional resistance to intergranular attack in sulphur-containing species and reduction of residual stress imparted by tube processing.

2.2.1.5 OFFSET FEEDWATER DISTRIBUTION

Feedwater distribution within the steam generators is modified so that approximately 80 percent of the flow is directed to the hot leg side of the bundle and the remaining 20 percent of the flow is directed to the cold leg side of the bundle. This reduces the steam quality in the hot leg side of the bundle and raises the steam quality in the cold leg side of the bundle. The effect of these changes in steam quality is to shift the point of highest steam quality at the tubesheet elevation toward the center of the bundle. This area is utilized for location of the blowdown intake. Feedwater flow distribution is accomplished by providing a greater number of flow paths on the portion of the feedwater ring which traverses the hot leg side of the tube bundle.

2.2.1.6 CORROSION RESISTANT SUPPORT PLATE MATERIAL

The support plate material has been selected such that the potential for denting of the tubing due to corrosion in the crevice between the tube and tube support plate is significantly reduced. SA-240 Type 405 ferritic stainless steel has been selected for this application. This material is ASME Code-approved and is believed to be resistant to corrosion with the chemistry expected during the operation of the steam generator. In addition, SA-240 has a low wear coefficient when paired with Inconel and has a coefficient of thermal expansion similar to carbon steel. Corrosion of SA-240 results in an oxide which has approximately the same volume as the parent material. In addition to the tube support plates, the baffle plate (discussed in Subsection 2.2.1.2) will be constructed of SA-240 Type 405.

2.2.1.7 QUATREFOIL TUBE SUPPORT PLATES

The quatrefoil tube support plate design, illustrated by Figure 2-3, consists of four flow lobes and four support lands. The lands provide support to the tube during all operating conditions, while allowing flow around the tube. This design also directs the flow along the tubes which limits steam formation and chemical concentration at the tube-to-tube support plate intersections. The quatrefoil support plate design results in higher average velocities along the tubes, which should sludge deposition. The combination of higher velocities in the support plate region and corrosion resistant material will minimize the potential for support plate corrosion.

2.2.2 DESIGN REFINEMENTS TO IMPROVE PERFORMANCE

In the course of the steam generator design, as derived from operating experience and ongoing research and development programs, certain modifications and refinements have been incorporated in recent designs to provide additional performance of thermal hydraulic characteristics. These are included in the Point Beach design and are discussed below. They do not alter previous safety analyses.

2.2.2.1 FLUSH TUBE TO TUBESHEET WELD

The tubes on the replacement lower assemblies will be flush with the tubesheet holes and then welded to the tubesheet cladding. Elimination of the protruding tube stub of the original design results in lower entry pressure losses and, therefore, a lower pressure drop in the primary loop. In addition, a possible point of crud buildup and corrosion is minimized with this design. This illustrated in Figure 2-4.

2.2.2.2 TUBE LANE BLOCKING DEVICE

A portion of the recirculated water exiting at the bottom of the wrapper will tend to preferentially channel to the tube lane and bypass part of the tube array. In order to minimize this tube bundle bypass, a series of plates are installed in the tube lane to block the bypass flow paths. These plates are compatible with sludge lancing.

2.2.2.3 MOISTURE SEPARATOR MODIFICATIONS

The secondary moisture separator external drains will be changed to larger internal drains. The existing primary separator swirl vane barrels will be replaced with a primary moisture separator assembly consisting of one hundred and twelve modular 7" I.D. swirl vane assemblies. These modifications provide improved steam-water separation and reduced moisture carryover.

2.2.3 DESIGN FEATURES TO PERMIT EASE OF MAINTENANCE AND RELIABILITY

Operational experience, including necessary maintenance and repair, has led to certain changes in design with the objectives of increasing providing additional maintainability of the units. These changes are discussed below and do not affect performance or FSAR safety analyses.

2.2.3.1 ACCESS PORTS

The replacement lower assemblies are provided with additional access ports. Four 6-inch access ports will be located slightly above the tube-

sheet, approximately 90 degrees apart, with two located on the tube lane-below the baffle plate. Two 6-inch access ports will be located on the tube lane, between the baffle plate and the first tube support plate. The addition of these access ports should promote inspection of the tubesheet and flow distribution baffle plate .

2.2.3.2 INSPECTION PORT

One 3 inch inspection port is located on the lower shell transition cone at an elevation slightly above the top tube support plate of the tube bundle. This port is located on the tube lane centerline and provides for inspection of the top support plate and the tubing U-bend area.

2.2.3.3 WET LAYUP NOZZLE

A 2-inch nozzle is to be added to the upper shell to facilitate the wet layup of the steam generators during periods of inactivity. The wet layup nozzle can be used during these periods to maintain desired water chemistry in the steam generator. The nozzle can also be used in conjunction with other equipment to circulate water through the steam generator during periods of layup.

2.2.3.4 PRIMARY SHELL DRAIN

A 3/8-inch primary shell drain is included in the channel head to provide additional drainage of the channel head. This drain facilitates maintenance and inspection to be conducted in the channel head.

2.2.3.5 PRIMARY CLOSURE RINGS

Closure rings will be welded inside the channel head at the base of each primary nozzle so that closure plates can be installed during primary chamber maintenance. This design allows the plates to be bolted to the rings for quick installation and removal. Closure plates allow maintenance or inspection to be conducted in the channel head with the reactor cavity flooded and, thhhus, can reduce outage time.

2.2.3.6 STEAM NOZZLE FLOW LIMITING DEVICE

A flow limiting device will be provided to be installed in the steam outlet nozzle to minimize the pressure drop across internal components during a postulated steam line break transient and also to help minimize the blowdown rate for the postulated accident condition.

2.3 SHOP TESTS AND INSPECTIONS

The tests and inspections required by the ASME Code, Section III will be conducted during the fabrication of the steam generator lower assembly. In addition to these ASME requirements, further tests and inspections will be conducted at the fabrication facility. After the tubing installation is completed a gas leak test will be performed to demonstrate the integrity of the tube-to-tubesheet welds. The primary side of the steam generator will be hydrotested at the shop in accordance with approved procedures.

TABLE 2-1

STEAM GENERATOR DESIGN DATA (PER STEAM GENERATOR)

	Original	Replacement
Design Pressure, Reactor Coolant/Steam psig	2485/1085	N.C.
Reactor Coolant Hydrostatic Test Pressure (tube side), psig	3106	N.C.
Hydrostatic Test Pressure, Shell Side, psig	1356	N.C.
Design Temperature, Reactor Coolant/Steam, ^{o}F	650/556	N.C.
Steam Conditions at 100% Load, Outlet Nozzle:		
Steam Flow, lb per hr	3.31×10^6	N.C.
Steam Temperature, ^{o}F	521.2	N.C.
Steam Pressure, psia	821	N.C.
Feedwater Temperature at 100% Load, ^{o}F	435.7	N.C.
Overall Height, ft-in	63-1.6	N.C.
Shell OD, upper/lower, in.	166/127	N.C.
Shell Thickness, upper/lower, in.	3.5/2.6	N.C.
U-tube OD, in.	0.875	N.C.
Tube Wall Thickness, (nominal) in.	0.050	N.C.
Number of Manways/ID, in.	3/16	N.C.
Number of Handholes/ID, in.	2/6	6/6
Number of U-tubes	3260	3214
Tube height (largest U-bend), in.	397.5	N.C.
Total Heat Transfer Surface Area, ft^2	44,430	43,467
Reactor Coolant Water Volume, ft^3	945	925
Reactor Coolant Flow, gpm	89,000	N.C.
Secondary Side Volume, ft^3	4580	4682
Secondary Side Mass No Load, lbs	134,000	136,000
Secondary Side Mass 100% Power, lbs	89,000	91,000
Center of Gravity (from the support pads), ft/in.	25-3.6	N.C.

TABLE 2-2

STEAM GENERATOR MATERIALS

	Original	Replacement
Plate (shell courses)	SA-302 Grade B	SA-533 Grade A Class 2
Tube Sheet Forging	SA-336 Code Case 1332	SA-508 Class 2a
Channel Head Casting	SA-216 Grade WC	SA-216 Grade WCC
Support Plates	SA-285 Grade C	SA-240 Type 405
Channel Head Cladding	Stainless Steel Type 304 or equivalent	Stainless Steel, Type 304 or equivalent
Tube Sheet Cladding	Inconel	Inconel Weld Deposit
Tubes	SB-163-61T (Code Case 1336)	SB-163 Special Thermal Treated (Code Case 1484)

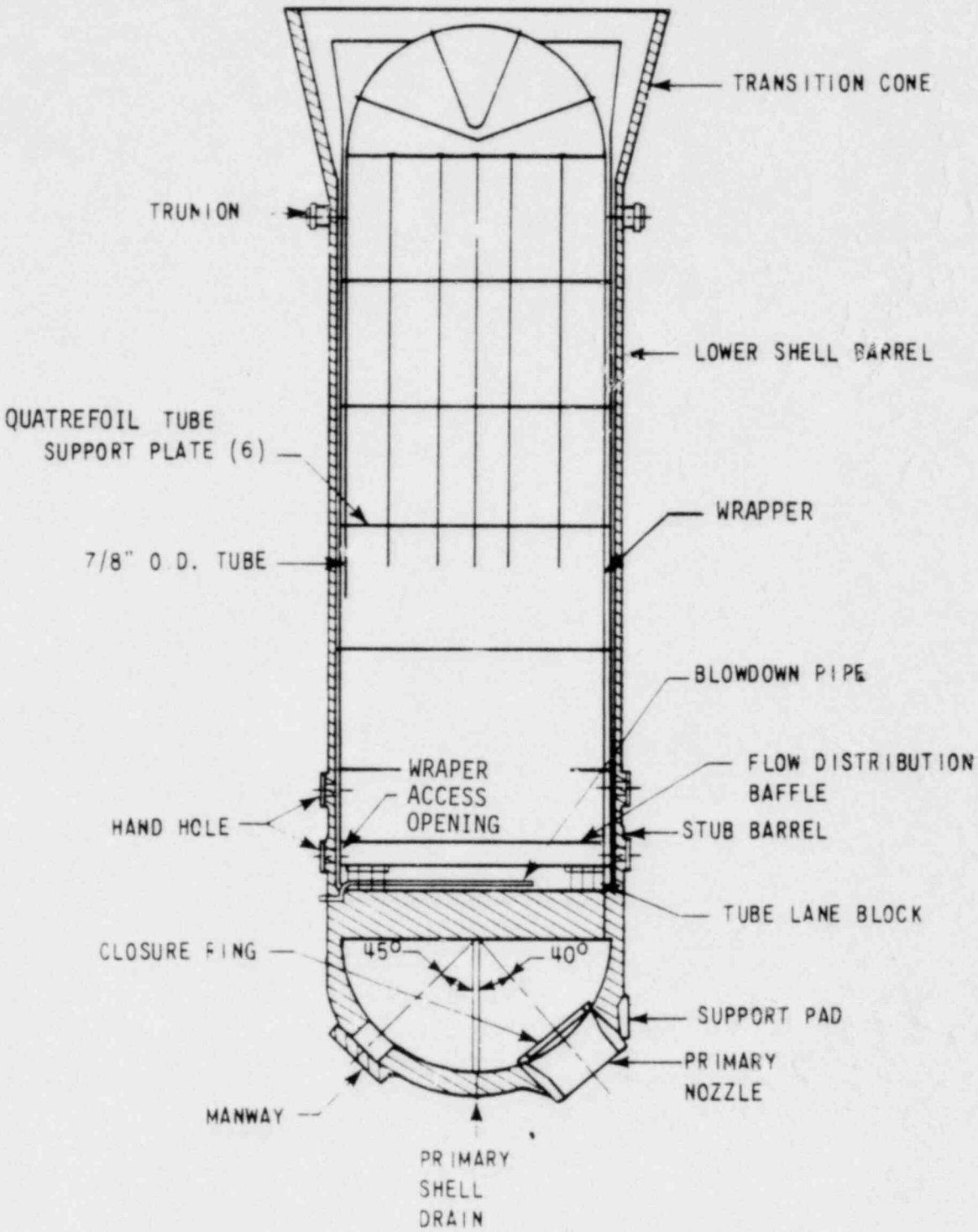

Figure 2-1 Steam Generator Lower Assembly

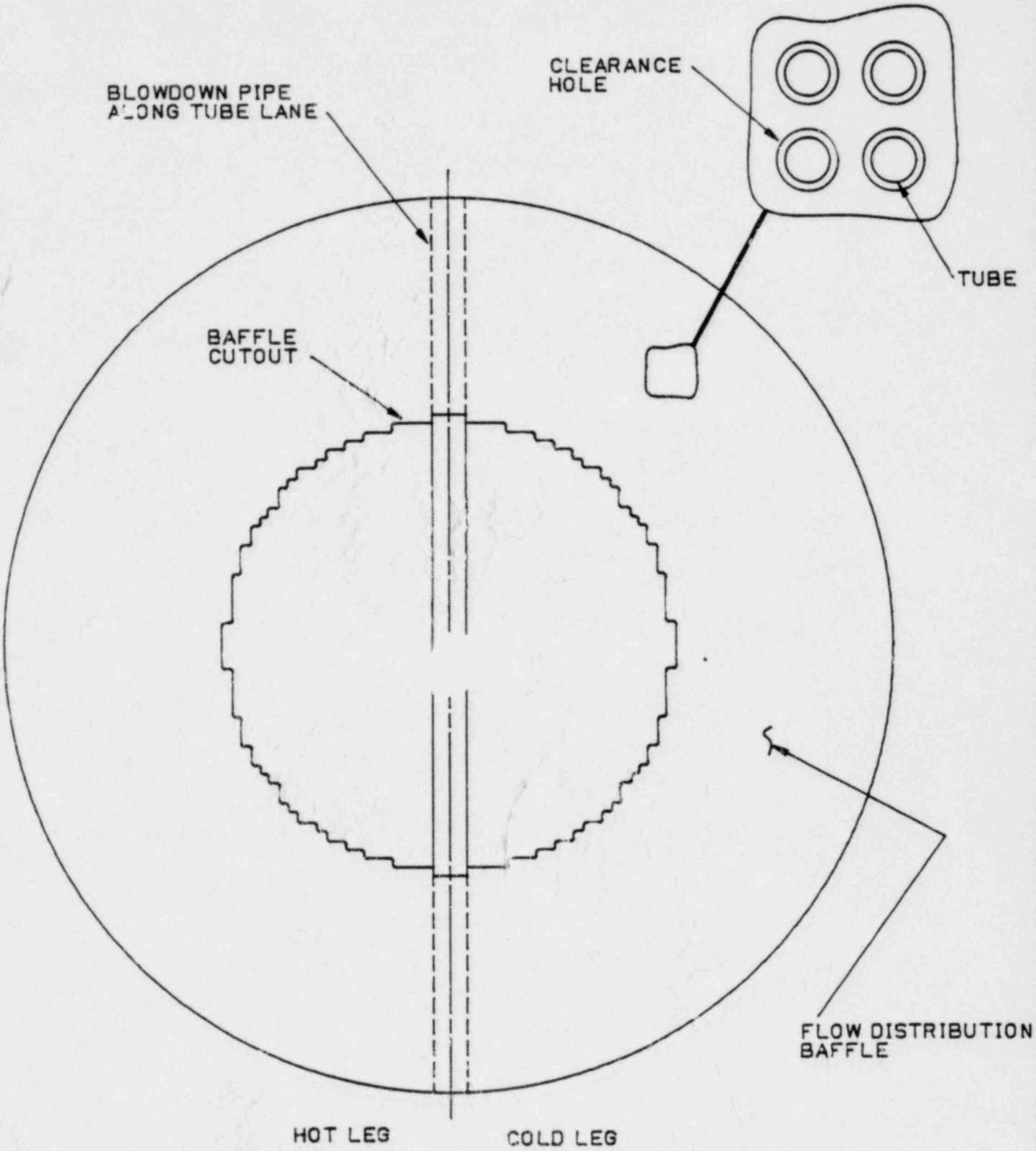

Figure 2-2 Flow Distribution Baffle and Blowdown

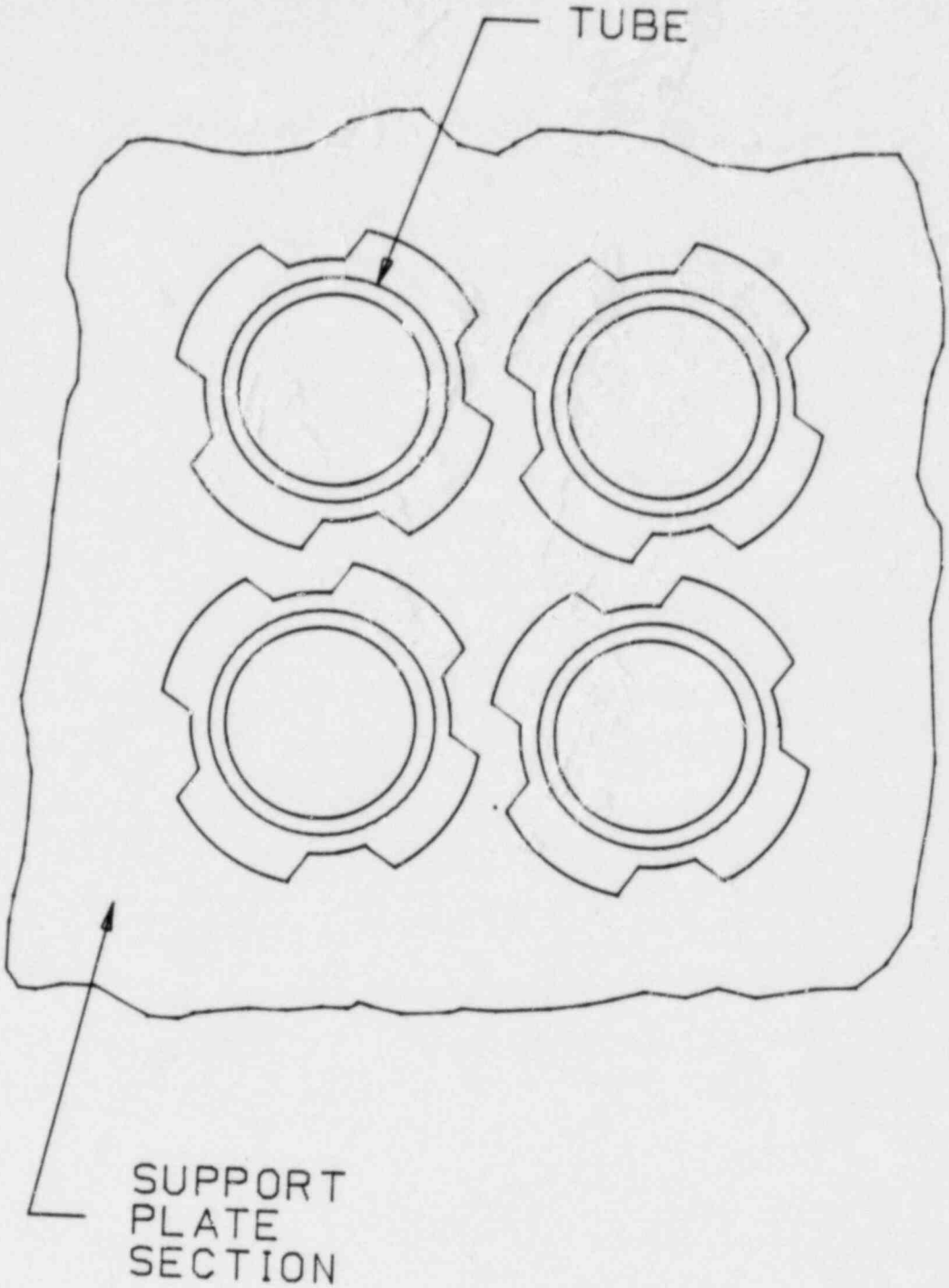

Figure 2-3 Quatrefoil Tube Support Plate Schematic

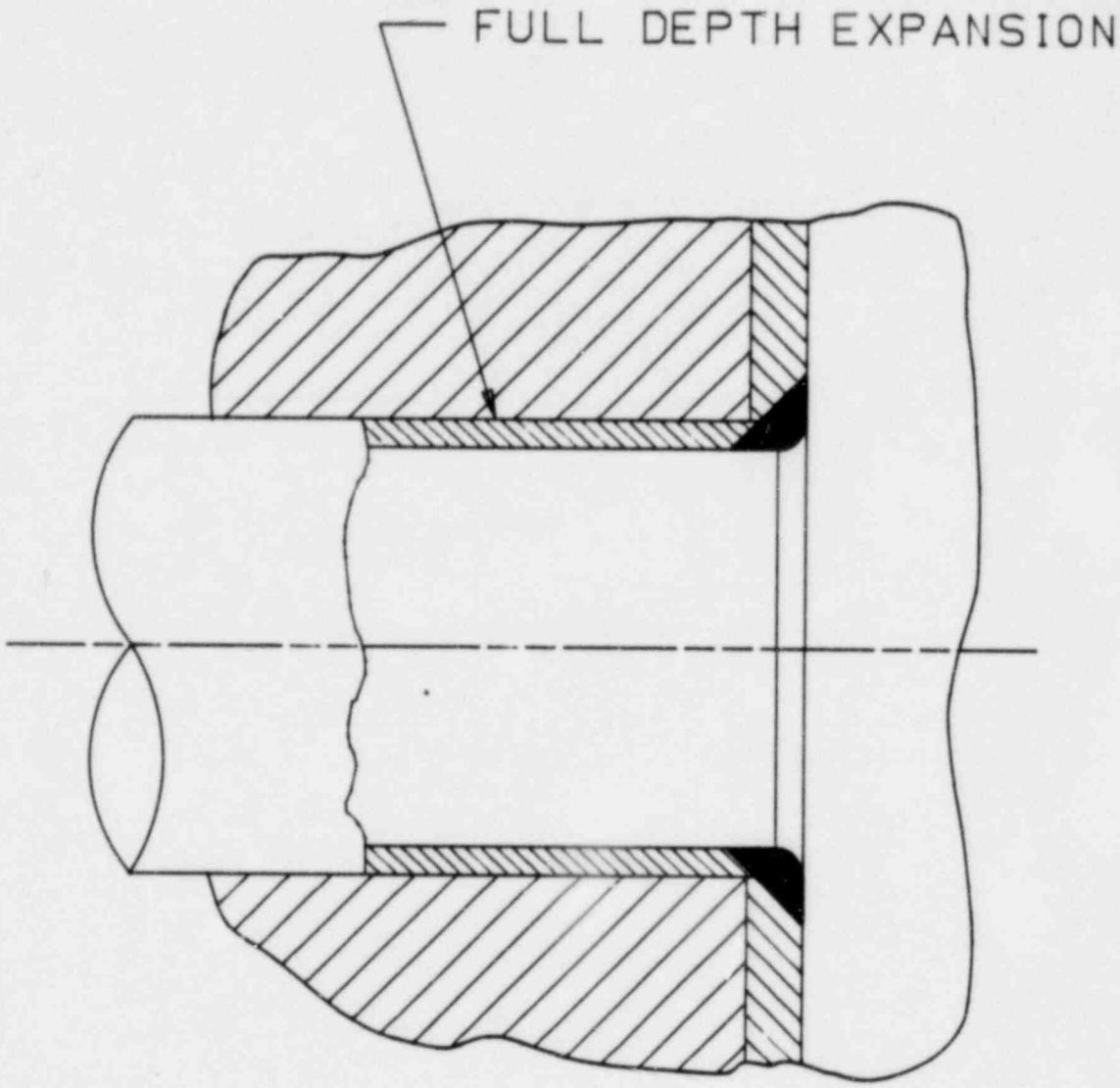

Figure 2-4 Tube to Tubesheet Juncture

3.0 COMPONENT REPLACEMENT PROGRAM AND PROCEDURES

This section discusses the engineering evaluation of the field activities required to implement the steam generator repair. Figure 3-1 represents the outage sequence, and Figure 3-2 illustrates the removal sequence of the lower assemblies. These evaluations demonstrate feasibility of implementation. Any changes incurred during detailed design will not alter the envelope of potential construction incidents discussed in Section 5.2.

The steam generator lower assemblies will be removed and replaced through the equipment hatch in the containment structure. The upper assemblies will remain inside the containment and will likely be stored at the operating floor level, elevation +66', until the new lower assemblies are brought in and installed.

Handling of the steam generator lower assemblies inside the containment will require an additional polar crane trolley with a capacity of approximately 250 tons. Handling through the equipment hatch will require special track-mounted upending/downending skid attached to the steam generator vertical support lugs. (Ref. Figure 3-2) Handling outside the containment is expected to be by heavy lift crane. Jacking operation may be used to minimize the use of heavy lift crane.

A rigging platform will be provided inside the containment. This platform will provide support for the lower assemblies while they are being maneuvered from the vertical position to the horizontal position. The temporary construction loads from this platform will be transmitted to the containment base mat. In addition, temporary laydown area will be provided for two upper assemblies weighing 105 tons each and for two sets of swirl vane assemblies weighing approximately 5 tons each. Adequate laydown area is available inside the containment, utilizing in some cases temporary structural members to span certain operating floor areas.

Clearances to accomplish the removal of the lower assemblies through the

equipment hatch may require the removal of minor quantifies of internal concrete and structures in the vicinity of the equipment hatch. The portions to be removed are minimal and are listed in Section 3.2.5. Impact on existing equipment is minimal and is described in Section 3.2.

The removal of the lower assemblies through the existing equipment hatch will have minimal impact on the site layout in terms of new foundations required.

Upon exiting from the equipment hatch, the lower assemblies will likely be loaded onto a crawler type or rubber wheeled transporter and moved to an onsite temporary storage building.

The existing access to the equipment hatch will be modified as necessary to enlarge the access area and to facilitate access by trucks and mobile cranes. This access area will be at the equipment hatch elevation.

This refurbishment will provide additional flexibility in selection of handling methods for steam generator movement.

No permanent modifications to existing structures are expected to be necessary.

3.1 PATHWAYS AND CONSTRUCTION RESTRICTIONS

3.1.1 SITE PREPARATION

3.1.1.1 FOUNDATIONS

All heavy hoisting equipment will be located so that foundations will not interfere with permanent plant installations, either above or below grade. The steam generator removal rails outside the equipment hatch will require the placement of foundations as shown in Figure 3-3. Below grade emplacements may be removed after completion of the repair work.

3.1.2.1 TEMPORARY HEAVY LOAD BEARING PLATFORMS INSIDE CONTAINMENT

A temporary platform at elevation +24'-0" inside the equipment hatch opening will be provided to handle the steam generators as shown in Figure 3-3. The existing steel platform in this area will be removed. Guide rails on this structure will extend through the hatch opening and align with similar guide rails outside the equipment hatch providing a path for the roller assemblies required to permit steam generator movement through the hatch.

Additionally, there will be a platform at elevation +66'-0" to support the polarcrane center post and for inverting the upper assembly. These are designed for adequate protection of the CRDM and the reactor underneath.

3.1.2.2 OTHER PREPARATIONS

Concrete removal and equipment relocation for rigging clearances are discussed in Section 3.2.

3.1.2.3 LAYDOWN FACILITIES INSIDE CONTAINMENT

All fuel asemblies will be removed from the reactor and stored in the spent fuel pool. The reactor internals will be stored in the reactor vessel, the reactor vessel head will be stored in place on the reactor vessel and the control rod drive mechanism (CRDM) missile shield will be stored on top of the refueling cavity. Laydown of each upper assembly will be on a platform at elevation +66'-0" in front of the steam generator cubicles. This platform area will be evaluated and suitably strengthened if necessary to accomodate the steam generator upper assembly loads.

There is adequate space inside containment for the temporary storage of the additional equipment discussed in Section 3.2.

3.1.1.2 ROADWAYS, RAMPS, AND PLATFORMS

The existing access to the equipment hatch will be modified as necessary. A service area shown in Figure 3-3 may be installed to facilitate access into the containment. The steam generator removal rails will be designed to support the weight as the lower assembly and associated rollers and saddles. The service area will be equipped with as required loading and unloading of miscellaneous equipment.

The proposed onsite steam generator haul route is shown in Figure 3-4. The route shown will be used for both the original steam generator lower assemblies and the replacement assemblies. The haul route may vary based on detailed engineering studies. Prior to use of any haul route for transportation of heavy loads (other than normal axle loads for highway equipment), the haul route will be evaluated for adequate capacity and upgraded where necessary utilizing standard construction practices.

3.1.1.3 PROTECTION OF BURIED FACILITIES

Evaluations of the steam generator haul route and the potential for impact on safety related facilities are provided in Section 5.2.

3.1.1.4 STEAM GENERATOR RECEIPT ON SITE

The method of transportation to the site will be overland by a multi-axial rubber tire transporter from a intermodal transfer point.

3.1.1.5 LAYDOWN FACILITIES OUTSIDE CONTAINMENT

Adequate laydown area for construction materials and equipment will be provided by grading an area adjacent to the plant fence which was used during original plant construction (see Figure 3-4).

3.1.2 CONTAINMENT PREPARATION

3.1.2.4 CONTAINMENT STRUCTURAL ANALYSES

Containment structural analyses have been performed in accordance with the design criteria in Appendix 5B of the FSAR for the following:

A. Temporary laydown areas at elevation +66'-0" on the operating floor. These areas will be required to support the upper assemblies, pipe sections, and miscellaneous construction equipment. (See Figure 3-3).

B. Containment base mat and existing floor support embeds in the containment wall. A temporary transfer rails will be installed inside the containment to facilitate the removal of the lower assemblies. Rail loads inside the containment will be transmitted to the base mat. (See Figure 3-2).

These analyses indicate that the containment, foundation and internal structures are capable of supporting the construction loads without permanent modifications to the existing structures.

3.1.3 TRANSPORTATION ON-SITE

Movement of the new steam generator lower assemblies (220 tons) on site can be accomplished by several methods such as flatdeck trailer or crawler transporter. Motive power may be rubber-tired tractor or tracked vehicle.

3.1.4 RIGGING CONFIGURATION

3.1.4.1 Inside Containment

The existing polar crane bridge will be analysed and strengthened to make it structurally adequate to sustain the loads imposed by a lower assembly in addition to a construction hoist weighing approximately 20 tons. The polar crane will be center posted to transfer part of the lift loads at EL. 66'-0. This will reduce loads on containment wall brackets.

Because of insufficient lift capacity, the existing polar crane trolley is not suitable for steam generator lower assembly replacement, and will, therefore, be moved aside to permit the placement of a 250-ton construction hoist on the polar crane bridge. The temporary hoist will be load tested to meet current OSHA Safety Standards prior to its use for construction lifts.

The upper assemblies will be parted from the lower assemblies and lifted and inverted by pad eyes and commercial sling assemblies and relocated to selected storage locations, as discussed in Subsection 3.1.2.3.

The lower assemblies will be lifted from their compartments using conventional hoisting techniques. The hoist lower load block will be linked by pins to a steam generator lift beam equipped with toggle arms or endless grommet type cables. The toggle arms or cables will engage existing lifting trunnions on the assemblies. Each lower assembly will be lifted and transferred in turn to a point approximately 11' from the containment inside wall and approximately on the centerline of the equipment hatch. Special tilting upending/downending skids assemblies, such as Hillman roller units and structural members, will be used to move the assembly from the vertical to the horizontal position. Transfer of the lower assemblies through the equipment hatch will require the connection of additional roller assemblies as each lower assembly travels beyond the reach of the polar crane hoist.

3.1.4.2 OUTSIDE CONTAINMENT

The lower assembly will exit the containment approximately at grade, on the access area previously described in Section 3.1.1.2. Transfer to a trailer/crawler transport system will be accomplished by a suitable lifting device.

Shipping saddles and tie downs will be provided for secure attachment while the transport device is in transit to and from the storage area.

3.1.5 RIGGING AND HANDLING CONTROLS

All lift cranes and transport devices will be controlled such that postulated failure does not adversely impact the ability to achieve and maintain safe-shutdown conditions in the operating unit or to provide adequate cooling for stored spent fuel. Administrative controls will limit lift heights so that loads will be raised only to a height sufficient to provide clearance for horizontal movement. When traversing plant roads in the vicinity of the operating unit, crane booms will be in the lowered position. Travel speed and travel routes for cranes and transport devices will be controlled to minimize their influence on structures in the immediate area.

3.2 EQUIPMENT AND CONCRETE REMOVAL AND REPLACEMENT

Engineering evaluations will be continued to determine the impact of repair activities on equipment and structures in containment. The repair activity is not expected to result in any safety considerations due to equipment removal or interruption of function, nor will there be any major impact on structures and equipment (non-steam generator related).

Detailed engineering studies are in progress to precisely define the components, pipes, cables, instruments, etc. within the containment affected by the repair activity. The discussion below provides the results of the study to date. It is provided to illustrate the minimal impact on non-steam generator related equipment within containment.

3.2.1 MECHANICAL EQUIPMENT

All equipment which interfer with the lower assembly pathway will be temporarily removed and relocated as required.

As appropriate, equipment within the containment will be covered to ensure cleanliness during the repair.

Upon completion of the repair, affected equipment will be returned to service using standard procedures followed during routine plant maintenance programs.

Disconnection of power cables to equipment is discussed in Section 3.2.3.

3.2.2 INSTRUMENTATION

All steam generator instrumentation, sensing lines, and associated supports will be temporarily removed and relocated inside the containment, as required.

The open ends of lines will be capped to ensure cleanliness during the repair.

The instrumentation and sensing lines will be returned to service using standard procedures followed during routine plant maintenance programs.

3.2.3 CABLE AND CONDUIT

The steam generator repair does not require the removal and relocation of major pieces of electrical and control equipment such as panels, load centers, transformers or motor control centers.

The cable terminations will be disconnected and the cables pulled back and coiled out of the path of the lower assembly. The same cable will then be reconnected when equipment are returned to their original location.

The conduit to be removed will be tagged, disassembled, and the associated cable pulled back and coiled. When the conduit is later reinstalled, the cable will then be repulled and reconnected. Procedures will be generated for pulling back, coiling and repulling of cables and removal and reinstallation of the conduit. Circuit checkout procedures will also be written.

3.2.4 PIPING

In order to accomplish the steam generator repair it will be necessary to cut portions of the following major piping systems:

A. Reactor Coolant piping.

B. Main steam piping, including small pipe vent lines.

C. Main feedwater piping.

D. Steam generator blowdown piping.

The open ends of cut piping will be shielded and as appropriate, covered to ensure cleanliness during the repair.

Piping weld end preps, welding and nondestructive examination for the reinstallation will be in accordance with the latest applicable edition of the ASME Boiler and Pressure Vessel Code. The piping system will be reinstalled in accordance with FSAR criteria.

3.2.5 CONCRETE AND STRUCTURAL STEEL

The following structures or portions of structures within the containment will be removed to provide a path for the lower assembly:

A. The removable shield wall panels of steam generator cubicles above elevation of 66'-0".

B. A portion of the floor framing and grating at elevation +66'-0" above the equipment hatch.

C. A portion of the floor and removable floor slabs at elevation 21'-0" and 26'-0".

D. The upper portion of the steel stairway near the equipment hatch opening.

E. A reinforced grouted pad in the equipment hatch at elevation +21'-0".

F. A portion of the truss system tie rods to allow for clearance of the temporary polar crane trolly if necessary.

3.2.6 REMOVAL AND INSTALLATION OF STEAM GENERATORS

3.2.6.1 GENERAL

This section contains a general description of the removal and installation in the lower steam generator assemblies and activities associated therewith. The discussion is limited to the methodology to be used and the basic removal and installation criteria. Detailed engineering is currently in progress to establish the specific techniques, processes, equipment, material, etc. which is required.

The basic technique which will be used to repair the steam generators will be to cut the currently installed steam generator at the steam drum upper girth weld. The inlet and outlet reactor coolant piping, the steam line piping and feedwater piping will also be cut. The steam generator upper assembly will be lifted off inverted and placed in a storage-work location in the containment for refurbishment of moisture separation equipment. The lower assembly will then be lifted from its supports and transported out of the containment through the equipment hatch. The replacement assembly will proceed through the same steps in reverse. The upper and lower assemblies will be welded together in the field. A detailed description of the process is given in following sections.

3.2.6.2 GUIDELINES AND CRITERIA

A number of guidelines and criteria are applicable to the overall repair process. They are summarized below:

1. The reactor vessel will be completely defueled prior to the repair work. The fuel will be stored in the spent fuel pool for the dura-

tion of the repair outage. The removal of the fuel assemblies will eliminate the possibility of potential incidents involving the fuel which could affect the health and safety of the workers or the general public.

2. Access to the containment will be through the present equipment and personnel hatch; therefore, no structural changes will be required to the containment structure which forms part of the containment pressure boundary. Minor structural changes, e.g., chipping of concrete, may be required on internal walls; however, the effect on internal structures is expected to be insignificant.

3. The entire repair process will be preplanned. The guidelines contained in Regulatory Guide 8.8, "Information Relevant to Ensuring That Occupational Radiation Exposure at Nuclear Power Stations Will Be as Low is Reasonably Achievable", will be followed where applicable. In keeping with these guidelines mockups and training will be used to minimize outage time and radiation exposure. Decontamination and other exposure limiting techniques will be used where they offer a significant savings in exposure commensurate with overall program objectives. Special scaffolding and other components will be prefabricated to the extent possible to minimize radiation exposure and outage time.

4. The reactor cavity will be covered by structural members to minimize the possibility of impacting the reactor vessel and associated components during the repair program.

5. The repair program will be completed in accordance with the Point Beach Quality Assurance Manual and Section XI of the ASME Code, including such items as interaction of repair activities with the unaffected part of the plant station, design reviews, radiation control procedures, document control, material acquisitions, etc.

6. The actual repair process will be similar to the methods used during original construction of the units. Much of the experience gained

during original construction is applicable to the repair process and will be used as appropriate.

7. The potential environmental effects of the repair program are expected to be minimal. However, reasonable precautions will be exercised to further minimize any environmental impact.

8. Presently installed station facilities will be augmented as required to accomodate the additional personnel who will participate in the repair program or to facilitate the actual repair work. The areas of special concern are facilities to prevent the spread of radioactive contamination, disposal of radioactive material, and security provisions.

9. The major portion of the repair program will be performed by a commercial installer under the direction of Westinghouse personnel. It is presently anticipated that WE will utilize its own radiation control procedures and personnel. The installer will provide quality control personnel and procedures and Westinghouse will provide quality assurance personnel. The installer will be required to have an ASME certification as applicable to the work he is to perform.

10. The length of the steam generator repair outage is now estimated to be approximately 180 days. This schedule is predicated on performing in containment work on shift rotation that will permit working 24 hrs/day. The schedule is divided into the following phases:

    a. Preshutdown activities
    b. Shutdown and preparatory activities
    c. Removal activities
    d. Installation activities
    e. Post Installation activities
    f. Startup activities
    g. Post Startup activities

Each of these phases is discussed in the following paragraphs.

3.2.6.3 PRESHUTDOWN ACTIVITIES

Prior to the first unit shutdown, the repair program will be preplanned and appropriate provisions made for accomplishing each activity required in the repair process. Appropriate procedures, drawings, and instruction will be utilized in the performance of repair activities. Engineering activities will be completed during this time, as well as establishing temporary installation facilities, material acquisition, training of personnel, prefabrication of certain components and completion of items which do not require a unit shutdown.

The "work package" concept will be used for the repair program whereby individual tasks will be defined and a work package for each task, containing all pertinent information required to complete that task, will be completed.

3.2.6.4 Post Shutdown Activities

Following the shutdown of the unit, certain preparatory activities will be completed prior to the actual removal process. The following activities are typical of those which will be performed; however, they are not necessarily listed in the order which they will be performed.

1. Establish appropriate valve linups consistent with the requirements of the repair efforts.

2. Place systems in the appropriate condition for long term layup, i.e., approximately six (6) months.

3. Open equipment hatch and establish access control to work area.

4. Remove reactor pressure vessel head and upper internals and store.

5. Remove all fuel assemblies from the reactor vessel and store in

spent fuel storage pool in the fuel building.

6. Reinstall reactor vessel internals, and replace reactor vessel head.

7. Survey containment work areas and establish radiation zones.

8. Perform local decontamination of work areas to the extent possible, and shield areas which cannot be decontaminated.

9. Install cover over the reactor cavity to provide protection to the reactor vessel and associated equipment and to provide a continuous work area. The cover or flooring will be supported by structural members designed to hold the center post of the upgrated polar crane.

10. Assemble special prefabricated scaffolding to gain access to all work areas.

11. Remove biological shield wall and transport debris from the containment. These walls are not structural members, they are only required for shielding.

12. Remove insulation from steam generators, feedwater piping, steam line piping, reactor coolant piping, and other components and transport debris from the containment.

13. Install local control structures, such as tents ducting, temporary filters, etc.

14. Install the steam generator transport system, e.g., rails, inside the containment and through equipment hatch.

15. Refurbish equipment hatch acress area and install steam generator removal rails outside containment.

16. Inspect, test, and modify the existing containment polar crane as

necessary. The existing polar crane will be used to make all major lifts.

17. Enlarge and/or reinforce equipment hatch area outside of the containment.

3.2.6.5 REMOVAL ACTIVITIES

Having established appropriate access requirements, radiological controls, installation of temporary facilities to provide access to the work areas and for removal of debris and components, and the removal of insulation from the equipment, the actual removal process can commence. A description of the basic removal process is given below; however, the sequence of activities is not necessarily in order of implementation.

The description given below is applicable to one steam generator; however, the other steam generator will be removed in a similar manner. The activities for both generators will be performed roughly simultaneously; however, because of availability of the polar crane, the commencement of the activities for each steam generator will be staggered, e.g., the removal process may not begin for steam generator number 2 until about a week after it begins for number 1.

Where cutting is required either flame cutting techniques or mechanical techniques may be used.

1. Remove miscellaneous small piping, such as blowdown piping, and instruments and controls, such as level transmitters to facilitate removal of the steam generator.

2. Cut steam line piping at the steam nozzle on the upper shell and downstreams to allow a section of the piping to be removed so that the upper and lower shells can be lifted. The removed section will be marked for identification and stored for reuse. (See Figure 3-5)

3. Cut feedwater piping at its junction with the upper shell and

upstream from the junction to allow a section of the piping to be removed so that the upper and lower shell can be removed. (See Figure 3-6)

4. Cut and remove reactor coolant inlet and outlet piping. A section of the hot leg (inlet) piping (an elbow) will be removed by cutting the pipe at the steam generator nozzle and at an appropriate point up stream of the nozzle on the hot leg piping. A larger section of cold leg (outlet) piping, consisting of two elbows and two straight sections, will be removed by cutting the pipe at the steam generator nozzle and upstream of the reactor coolant pump. Figure 3-5 schematically shows the portions of the reactor coolant piping which will be removed.

5. Cut steam generator wrapper to facilitate lifitng of the upper assembly.

6. Cut steam generator shell at the transition cone to upper barrel girth weld leaving stock on the upper steam drum for final machining. The lower assembly will not be reused; however, the shell of the upper assembly will be used.

7. After removal of the upper assembly, it will be placed in convenient location within the containment in the inverted position, i.e., steam nozzle down, where the moisture separation equipment, feedring and other associated equipment will be removed and refurbished.

8. The steam generator lower assembly will be lifted from its supports by the polar crane. The polar crane will be attached to the lower shell by means of cables or straps attached to the two lifting trunnions on either side of the steam generator. A special lifting rig must be used to attach these cables to the crane hook. As shown in Figure 3-2, the steam generator will be lifted straight up out of its supports, moved aside in the vertical position to a designated location on the operating floor, and lowered onto upending/downending skid in the vertical

position. The lower assembly will be downending and vertically transported out of the containment through the equipment hatch on a rails.

9. Radiological controls will be in effect during the removal process. Since the lower assemblies will be a major source of radioactive contamination cutting operations will be controlled and covers will be employed to control the spread of contamination.

10. During all activities, the containment work areas will be cleaned and decontaminated as required.

11. Following the transport of the steam generator lower assemblies through the equipment hatch, they will be transported to temporary storage facility onsite.

3.2.6.6 Installation Activities

Following the removal of both steam generator lower assemblies, the major installation activities will commence. The major steps involved in the installation process are discussed below.

1. The replacement steam generator lower assemblies will be delivered to the site by rubber tired transporter. While it is planned to install the steam generator lower assemblies at or near their time of delivery, it may be necessary to store the steam generators onsite for a short period of time. Provisions will be made for appropriate storage.

2. The steam generator lower assemblies will be delivered to the equipment hatch and lifted on the rails for transfer into containment. The procedure will be the reverse of that for removal of the lower assemblies.

3. The assembly will be transported to a designated location within the containment using the special lifting rig with straps or

cables attached to the two lifting trunnions on the replacement lower assembly and the assembly will be upended using the polar crane. The assembly will then be lifted vertically and moved to a position over the steam generator supports. The assembly will be lowered onto place in the supports. Temporary positioning devices, (e.g. jacks) may be installed to facilitate the positioning of the lower assembly.

4. Reassemble and/or reinstall the steam generator support system.

5. Install new moisture separation equipment, feedring and other internal components in the upper shell. Weld preparation for the upper shell will be made for mating to the lower assembly.

6. Lift upper assembly into place and align with lower assembly. Temporary positioning devices may be used to facilitate alignment.

7. Weld the upper and lower assemblies together, stress relieve and inspect.

8. Weld the steam generator wrapper to the upper internals and inspect.

9. Reinstall the reactor coolant piping. The installation procedure for this piping is similar to that used during the original installation of the steam generator.

10. Complete fitup, weld, and inspect the main piping.

11. Complete fitup, weld, and inspect the feedwater piping.

12. Reinstall miscellaneous piping (e.g. blowdown) and other equipment which was removed to provide clearance for lower assembly removal.

13. Reinstall instrumentation and controls which were removed.

14. Reassemble the removable block shield wall for the steam generator cubicles.

15. Remove all temporary structures which were put inplace to facilitate the repair process.

16. Restore crane wall and other concrete structures which were chipped.

3.2.6.7 POST INSTALLATION ACTIVITIES

Following the completion of the major installation activities, it will be necessary to restore the unit to a condition from which unit startup can commence, and to perform tests or inspections. The following are typical activities which will be performed:

1. Perform hydrostatic tests in accordance with Section XI of the ASME Code.

2. Clean affected systems and work areas.

3. Install insulation.

4. Remove scaffolding.

5. Remove cavity cover.

6. Refuel the reactor.

7. Perform baseline inservice inspection as required on piping, equipment or components, including 100 percent eddy current inspections of steam generator tubing.

8. Remove all temporary structures and supports.

9. Install reactor internals, vessel head and other components.

3.2.6.8 STARTUP ACTIVITIES

Upon completion of the repair work, a number of activities must be completed to return the unit to power. Among these are:

1. Establish valve lineups and system conditions in accordance with established procedures.

2. Perform startup test program on the systems that were affected by the repair effort or otherwise required to satisfy test program requirements and the Technical Specifications.

3. Run performance tests and moisture carryover tests to verify performance of the steam generators.

3.3 RADIOLOGICAL PROTECTION PROGRAM

The radiological protection program to be implemented for the repair effort will be in accordance with the Point Beach Nuclear Plant Health Physics Administrative Control Policies and Procedures Manual. This program is responsive to the applicable Nuclear Regulatory Commission and State of Wisconsin regulations.

3.3.1 SUPPLEMENTAL ACCESS CONTROL

Additional facilities will be provided for the repair effort to accommodate the personnel involved. These facilities include:

A. Outside controlled zone

   1. Office area

   2. Storage area

   3. Radiological protection training area

4. Mock-up training area

B. Inside controlled zone

1. Office area

2. Radiation control point

3. Protective clothing pickup area

4. Locker room

5. Protective clothing dressout area

6. Storage area for protective clothing

7. Sanitary Facilities

8. Health physics area

The following is a brief description of the access control pathway currently contemplated for entering and exiting the containment:

> After proceeding through the radiation control point, personnel will pick up their protective clothing and dress in a locker room area before entering the equipment hatch into containment. The requirements for protective clothing are specified in the Point Beach Nuclear Plant Health Physics Administrative Control Policies and Procedures Manual HP 2.5, General Use of Protective Clothing and HP 12.2, Nonroutine Protective Clothing Requirements. Personnel leaving the containment will remove their shoe covers and gloves at an access control point just inside the equipment hatch before stepping onto the step-off pad. These personnel will immediately proceed to the undressing area to

remove protective clothing and be checked for residual contamination. They will then exit through the radiation control point and return to the locker area for their street clothes. Handling of contaminated personnel will follow the procedures given in the Point Beach Nuclear Plant Health Physics Administrative Control Policies and Procedures Manual HP 9.1, Personnel Decontamination.

Access control at the steam generator compartments, equipment hatch, and at the temporary access control area discussed above will be provided.

Personnel involved in work areas with a potential for high-level contamination will wear two sets of protective clothing. The outer set of protective clothing will be removed when leaving the work area and deposited in a container. The second set will be removed in an area outside containment, as described above.

3.3.2 LAUNDRY

In order to accommodate the laundry expected during the repair effort, additional water wash or dry cleaning capabilities will be provided. Laundering of protective clothing and cleaning and sanitizing of respiratory equipment wil be in accordance with the Point Beach Nuclear Plant Health Physics Administrative Control Policies and Procedures Manual.

3.3.3 CONTROL OF AIRBORNE RADIOACTIVITY AND SURFACE CONTAMINATION

Airborne radioactivity inside containment during the steam generator repair effort will be controlled and monitored. Small releases may occur via the plant ventilation systems. A slightly negative pressure inside of containment will be maintained using the containment purge exhaust system. Air will be drawn through the equipment and personnel hatches and exhausted by the purge system via the purge vent, thus precluding airborne radioactive particles or gases from leaving contain-

ment openings utilized for construction activities. Air flow requirements necessary for maintaining a slightly negative containment pressure are well within the existing purge exhaust system capacity. The air being exhausted will be monitored for radioactivity using normal plant monitoring system.

In addition to bulk containment atmosphere control of airborne radioactivity, appropriate localized control will also be provided. Radioactivity generated during the cutting of the reactor coolant pipes will be contained within specially designed contamination control envelopes, which will provide local high efficiency filtration. Personnel working inside these control envelopes will wear respiratory protection equipment, as required, by Point Beach Nuclear Plant Health Physics Administrative Control Policies and Procedures Manual HP 2.6, Respiratory Protection and HP 12.1 Respiratory Protection Program, Appendices A through J. No special provisions are expected to be required for other cutting operations inside containment.

Section 3.3.1 describes the method of controlling the spread of surface contamination by personnel removing their outer set of protective clothing when leaving the control envelope.

The radioactive releases and dose assessments associated with Steam Generator Repair are provided in Section 5.2.2.1.

3.3.4 SUPPLEMENTAL PERSONNEL MONITORING REQUIREMENTS

3.3.4.1 MONITORING OF AIRBORNE RADIOACTIVITY

Mobile air monitors will be used, as required, to monitor the airborne radioactivity inside the control envelopes and in other work areas inside containment. Airborne radioactivity samplers coupled with laboratory analyses will also be employed.

3.3.4.2 MONITORING OF WORKERS FOR INGESTED RADIOACTIVITY

3.3.4.2.1 Whole body counting of personnel shall routinely be done for those individuals exposed to significant amounts of radioactive materials. Whole body counting shall also be done after termination of work at Point Beach Nuclear Plant for all employees having access to the controlled side and after any significant event that may have contributed to an uptake.

Whole body counting of contract workers shall normally be accomplished during "processing in" if the individual has worked as a radiation worker elsewhere during the previous six months, and when "processing out" at the end of the work assignment if the work involves respirator use for radiation protection.

3.3.4.2.2 Nasal swabs will be taken from individuals when there is a possibility of accidental uptake. The results of analysis of these swabs will be reviewed for possible immediate whole body counting.

3.3.4.2.3 Urinalysis is performed to detect tritium and to determine the existance of other beta gamma emitters when compared to the whole body count.

3.3.4.3 PERSONNEL MONITORING

All personnel working or visiting within the plant restricted area shall be provided with either a thermoluminescent dosimeter (TLD Badge), a self reading dosimeter (SRD), or a combination of both in accordance with the Point Beach Nuclear Plant Health Physics Administrative Control Policies and Procedures Manual HP 3.1, Issue and Control of Personnel Monitoring Devices.

3.3.4.4 RADIATION AND CONTAMINATION SURVEYS

Detailed surveys which provide proper control of radiation and contamination will be performed, as required, throughout the repair effort.

These surveys will be performed in accordance with Section 8.0 of the Point Beach Nuclear Plant Health Physics Administrative Control Policies and Procedures Manual HP 8.1, Contamination Surveys; HP 8.2, Radiation Surveys; HP 8.3, Postings of Radiation and High Radiation Areas; HP 8.4, Extended Outage Survey Schedule; HP 8.5, Airborne Radioactivity Surveys; and HP.6, Counting of Air Samples for Low Level, Long Lived Radioactive Particulate Contamination.

3.3.4.5 PORTABLE SURVEY INSTRUMNETS

Table 3-1 provides a typical listing of the types of portable survey instruments which are used during the repair effort.

3.3.5 GENERAL ALARA CONSIDERATIONS

The repair of steam generators in operating nuclear power plants requires the utilization of state-of-the-art exposure reduction techniques to keep radiation exposures As-Low-As-Reasonably-Achievable (ALARA). The experience gained by the nuclear industry from the replacement of six (6) steam generators at the Surry Unit 1 and 2 sites and the three (3) steam generators replaced at the Turkey Point Unit-3 site will be used to the extent possible in the engineering, planning, tool and process designs, and exposure control for the Point Beach Nuclear Plant Unit 1 Steam Generator Replacement Program.

Personnel exposures will be maintained ALARA in accordance with 10 CFR 20.1 (c) and the guidance provided by Regulatory Guide 8.8. An extensive program to address radiological concerns has been established which consists of utilizing remote and semi-remote tooling, remote monitoring systems, extensive training of personnel in full size mock-ups, the utilization of temporary shielding to minimuze the radiation field and the use of administrative controls to limit the number of non-essential personnel at the work station areas.

3.3.5.1 SPACE ENVELOPE EVALUATION

The ingress/egress accessibility and the effective control and utiliza-

tion of in containment work spaces are essential for minimizing exposure while working in potentially high radiation areas. The computer aided design (CAD) computer system, modeling and scale drawings will be used to confirm access clearances for the movement of tools and equipment in and out of containment. These techniques will minimize the potential for unexpected delays in containment work and the associated radiation exposure. Work space envelopes will be studied to assure adequate space for the tooling designed to be used in the high radiation environment.

3.3.5.2 TEMPORARY SHIELDING

Shielding will be used, as necessary, to reduce the dose rates from other components such as the regenerative heat exchanger, RHR system valves, and from temporary storage areas used for storage of contaminated pieces of pipe, rags, and tools. Temporary shielding will be used, as necessary, for the steam generator while it is being cut out of the reactor coolant loop and while the steam generator and reactor coolant pipe is moved out of the containment. The steam generator shell will also help shield the more contaminated parts of the steam generators.

The water level on the secondary side of the steam generator will also be adjusted as required to provide shielding during cutting of the upper shell and feedwater and steam lines.

3.3.5.3 LOCAL DECONTAMINATION

Local decontamination of the steam generators and reactor coolant piping may be performed. Decontamination of the work areas will be performed periodically depending on the contamination levels. Paper and plastic sheeting will be used to facilitate collection and cleanup of contamination.

3.3.5.4 LOW BACKGROUND RADIATION WAITING AREAS

Low background radiation waiting areas will be established where workers must wait between tasks. Special signs will be posted to designate

these areas. Signs will also be posted in high background radiation areas to warn personnel.

Health physics personnel will work with the job supervisors to assure that personnel not required in the work area remain in the waiting area.

3.3.5.4 RADIOLOGICAL PROTECTION PERSONNEL TRAINING

As a minimum, personnel will be given radiological protection training as described in the Point Beach Nuclear Plant Health Physics Administrative Control Policies and Procedures Manual. This training consists of a radiation protection orientation given all personnel who work with radioactive materials prior to working unescorted in Radiation Controlled Areas and, as required, one of five additioal health physics training courses given to auxiliary operator trainees, radiation control operator trainees, security guards, and plant supervisors. The orientation program includes, but is not limited to instructions and demonstrations in Radiological Protection Program, Emergency Plan, fire alarms and response, and ALARA.

3.3.5.5 MOCK-UP TRAINING

The extensive training of repair personnel on full-sized mock-ups has proven to be an effective method for minimizing personnel exposures durng steam generator maintenance. Steam Generator Repair personnel will become thoroughly familiar with each tool that is designed and tested in the mock-ups. As each tool reaches final design stages, field procedures will be written for qualifying the tool in the mock-up. Tool designs will be modified and procedures will be updated for field implementation based on lessons learned in mock-up testing.

In parallel to the field qualifications of the tooling, personnel will be trained and qualified to operate the equipment in field operations.

Technicians will be required to operate the equipment in simulated radiation conditions, dressed in the complete Anti-C clothing required

for performing the repair in operating plant conditions. An estimate of time spent in the radiation environment will be used to determine manpower requirements and to establish administrative man-rem exposure limits for completing the repair. The training records of each technician will be documented and forwarded to the field coordinator so that only qualified personnel are used in the steam generator replacement project. It has been the experience of Westinghouse over the years that ALARA issues involving radiation exposures to repair personnel are best addressed by using highly trained, experienced technicians to perform tasks in a high radiation environment.

3.3.5.6 REMOTE MONITORING SYSTEMS

The utilization of remote monitoring systems will be used during in the repair of steam generators. TV cameras will be used to monitor work both inside and outside of the steam generator cubicle. The remote monitoring systems may be used for QA inspections as well as during repair operations. The remote monitoring systems in combination with an audio communication system will be designed to minimize the time spent in the high radiation field.

3.3.6 MISCELLANEOUS WASTE DISPOSAL

3.3.6.1 CONCRETE DISPOSAL

Approximately 15 cubic yards of concrete will be removed from the containment internal walls and floors and will be disposed of. The majority of this concrete has an insignificant amount of transferable contamination (transferable contamination is considered insignificant if it is less than 2200 dpm/100 cm^2 per 49 CFR 173.397) without surface decontamination. The concrete which is considered contaminated, (i) may be decontaminated prior to cutting by vacuuming and/or scrubbing with detergent and water to reduce the amount of transferable contamination to as low as is reasonably achievable or, (ii) appropriately packaged for shipment. Following removal from the containment, the concrete will be shipped as "low specific activity" (LSA) material to a licensed land burial site.

3.3.6.2 MISCELLANEOUS DRY WASTE DISPOSAL

Metal shavings from the various cutting operations and miscellaneous dry waste, such as paper, rags, etc., will be put in standard shipping containers and shipped as LSA material to a licensed land burial site. The estimated volume of low-level waste is 760 m^3 (26,800 Ft^3) per steam generator as indicated in USNRC NUREG-CR-1595. The total activity in this waste is estimated to be 21 curies, derived from the Surry Unit 2 data also reported in NUREG-CR-1595.

3.3.6.3 LIQUID RADWASTE DISPOSAL

There are three potential sources of radioactive liquid to be disposed of. These sources are:

a. Water drained from the reactor coolant system

b. Laundry waste water

c. Local decontamination waste fluids.

The radioactive releases associated with these sources are discussed in Subsection 5.2.2.4.

The reactor coolant will be processed through the boron recycle system and will be released or reused, depending on plant water inventory.

The laundry waste water could be discharged without processing due to the low activity level as indicated by the estimated laundry waste water specific activities given in Table 5-8. However, the laundry waste water will be processed in the the normal liquid radwaste processing system.

The small amount of liquid waste generated as a result of local decontamination will be processed in the normal liquid radwaste processing system.

3.4 DISPOSITION OF STEAM GENERATOR LOWER ASSEMBLIES

The lower assemblies to be removed from Point Beach Unit 1 represent the single largest source of solid radioactive waste to be disposed of during the repair effort. The disposal effort is independent of the repair and is evaluated on that basis.

The primary side surfaces of the steam generators are covered by a tenacious film of deposited radioactive products containing primarily cobalt isotopes. Based on actual Point Beach data provided in Section 5.2.2, it is estimated that at the time the lower assemblies are removed, each will contain approximately 300 curies of deposited gamma activity.

3.4.1 OBJECTIVES OF HANDLING/DISPOSAL OPERATIONS

The objectives of handling/disposal operations are as follows:

A. To dispose of or store the lower assemblies safely and economically, and in accordance with applicable licensing requirements.

B. To provide means to handle/dispose of the steam generator lower assemblies so that radiation exposures to personnel are as low as is reasonably achievable.

C. To minimize the potential for release of radioactivity to the environment so as to keep radiation exposure to the public as low as is reasonably achievable and within 10 CFR 20.

3.4.2 ONSITE STORAGE

A temporary onsite storage building will be provided for the storage of the lower assemblies. It is expected that the lower assemblies will be stored in this building until plant decommissioning. Prior to removal from the containment, the openings in the lower assemblies will be sealed by welding to prevent the release of radioactivity during trans-

fer and subsequent onsite storage. As discussed in Section 3.4.4, the only radiological consideration associated with storage is the direct radiation from the steam generators. Shielding will be provided to ensure acceptable radiation levels external to the storage facility. Section 3.4.5 demonstrates that there are no safety concerns associated with onsite storage.

Based on the above considerations, the required storage facility design criteria are:

A. Appropriate shielding for direct dose.

B. Provisions for periodic surveillance of the steam generator lower assemblies.

C. Provisions for preventing releases to the environment.

3.4.3 OFFSITE DISPOSAL

Disposal of the steam generator lower assemblies at an offsite facility is not an available alternative at this time due to restrictions at existing disposal facilities. Therefore, detailed evaluations of alternative offsite disposal methods have not been made specifically for the Point Beach lower assemblies. Estimates of occupational doses for various steam generator disposal alternatives have been made by Hoenes, et. al. (Reference 1). A summary of these estimates is provided in Table 3-2. With the exception of the immediate intact shipment alternative, the long-term onsite storage alternatives provide the lowest estimated occupational exposures.

3.4.4 RADIOACTIVE RELEASES AND DOSE ASSESSMENT ASSOCIATED WITH ONSITE STORAGE

As indicated in Section 3.4.2, prior to removal from the containment, the openings in the steam generator lower assemblies will be sealed to prevent the release of radioactivity during transfer and subsequent

onsite storage. Since the lower assemblies will be completely sealed, there will be no airborne releases as a result of lower assembly onsite storage.

The only potentially radioactive liquid wastes associated with the onsite storage of the lower assemblies are liquids collected in the temporary storage facility sump. If necessary, these can be processed through a radwaste evaporator and subsequently discharged, or solidified, packaged, and shipped to a disposal site. Since the lower assemblies will be sealed prior to transporting to the storage facility, it is not expected that processing will be required.

As discussed in Section 3.4.5, the radioactivity within the steam generators is immobile and the lower assemblies are stored in a closed facility. Thus, even if seal integrity were lost, releases to the environment are not likely. Nonetheless, a surveillance program will be implemented. Periodic area radiation surveys and monitoring will provide assurance that there are no releases of radioactivity to the environment.

The only contribution, therefore, to the annual dose equivalent to any member of the public is from direct radiation emanating from the storage facility. The storage facility will be shielded, as required, in order to limit the dose rate at the outside limits of the storage facility to <2.5 mr/hr. The resulting dose equivalent to an individual at the site boundary for a full year is estimated to be less than 0.01 mrem, which is insignificant. Furthermore, it is highly unlikely that an individual would be continuously exposed for a period of one year at the site boundary; therefore, the actual annual dose equivalent to any individual at this location will be substantially lower than that given above.

3.4.5 ACCIDENT CONSIDERATIONS ASSOCIATED WITH ONSITE STORAGE

The only potential accident consideration associated with steam generator lower assembly storage is the release of radioactivity to the

environment. The majority of this radioactivity is on the primary side surfaces of the lower assembly in the form of a protective film of metal oxides which is very adherent and very refractory. Radioactivity would be present in negligible concentrations on the secondary side of the steam generator.

As discussed in Section 3.4.2, an additional measure of radioactivity confinement will be attained by welding cover plates over all lower assembly openings.

A. Radioactivity could conceivably be released to the environment only if both of the conditions below occurred:

   1. Radioactivity is dislodged from the primary side surfaces.

   2. The lower assembly primary side boundary is breached.

B. There are three mechanisms which could potentially dislodge the corrosion film:

   1. Thermal shock.

   2. Chemical/corrosion attack.

   3. Mechanical shock.

Temporary variations in the lower assembly would occur during ambient temperature variations, but these are much too slow to produce a thermal shock effect. Since the lower assemblies will be drained and sealed against moisture, chemical and corrosive attack will not occur. The possibility of mechanical shock during storage is very small since the steam generators are protected by the closed temporary storage facility. Even if a mechanical shock is assumed, the tenacious nature of the film is such that it would not dislodge more than an insignificant amount of radioactivity and, even then, any dislodged radioactivity would be contained in the sealed steam generators.

Since it is highly unlikely that more than an insignificant amount of radioactivity would be dislodged from a primary side surface, the second condition for radioactivity release to the environment, breaching the lower assembly primary side boundary, need not be considered.

Based on the above, it is concluded that there are no radiological accident considerations associated with onsite storage.

3.4.6 CONCLUSIONS

The steam generator lower assemblies will ultimately be disposed of at a licensed land burial site or decommissioned with the plant. Radiological impacts associated with this disposal alternative are acceptable and are less than those associated with presently available alternatives.

3.4.7 REFERENCES FOR SECTION 3.4

1. Hoenes, G. R., Mueller, M. A., McCormack, W. D., 1980. Radiological Assessment of Steam Generator Removal and Replacement: Update and Revision. NUREG-CR-1595 (PNL-3454), U. S. NRC, Washington, D.C.

3.5 PLANT SECURITY

Specific plans for physical protection of Point Beach Nuclear Plant Units 1 and 2 during the steam generator repair will be addressed, as necessary, in a separate submittal to be withheld from public disclosure pursuant to 10 CFR Part 2, paragraph 2.790(d).

3.6 QUALITY ASSURANCE PROGRAM

The Quality Assurance Programs for WE and Westinghouse Electric Corporation are described in this section.

3.6.1 WE QUALITY ASSURANCE PROGRAM

Wisconsin Electric Power Company (WE) has the overall responsibility for the Quality Assurance Program for replacement of steam generators in accordance with Appendix H of the Final Safety Analysis Report.

WE will assure that Westinghouse has documented and implemented Quality Assurance Programs commensurate with their scope of work and in accordance with the requirements of 10CFR50 Appendix B and the ASME Code.

Quality Assurance (QA) and Quality Control (QC) functions will be performed on site by Westinghouse and its subcontractors under QA programs approved by WE. WE QA personnel will audit and provide surveillance to the extent necessary to assure that all activities are conducted in accordance with applicable codes, standards and regulations and are in concert with the WE QA program.

3.6.2 WESTINGHOUSE NUCLEAR SERVICE DIVISION (WNSD) QUALITY ASSURANCE PROGRAM

The quality assurance program used by WNSD during the installation of the replacement steam generators will be in accordance with "Westinghouse Nuclear Service Division Quality Assurance Program Plan," WCAP9245, Rev. 5, May, 1980.

3.6.3 WESTINGHOUSE NUCLEAR TECHNOLOGY DIVISION (WNTD) QUALITY ASSURANCE PROGRAM

The design of the replacement steam generators is in accordance with the quality assurance program described in WCAP-8370, Rev. 9A, Amendment 1, "Westinghouse Nuclear Technology Division Quality Assurance Program."

3.6.4 WESTINGHOUSE NUCLEAR COMPONENTS DIVISION QUALITY ASSURANCE PROGRAM

The quality assurance program for the fabrication of the replacement steam generators is in accordance with "Westinghouse Nuclear Components Division Quality Assurance Program Manual," Rev. 5, dated 4/27/82.

TABLE 3-1

TYPICAL PORTABLE SURVEY INSTRUMENT SPECIFICATIONS

Instrument	Detector	Power Source	Type of Radiation Measured	Range	Controls	Application at Point Beach Nuclear Plant
Eberline Model RO-1	Air-filled ionization chamber, with beta shield for window	Two "D" size cells, 1.0-1.7 volts each	Beta-gamma	5,50,500 mR/int; 5,50,500 mR/hr; 5,50,500 R/hr; full scale ± 10%	One zero check pushbutton. One zero set knob. One range switch with OFF and battery check positions.	General purpose survey instrument
Eberline Model RO-2	Air-filled ionization chamber, with beta shield for window	Three NRDA 1604 (9V) batteries	Beta-gamma	5,50,500,5000 mR/hr ± 5%	One rotary switch with OFF, battery check, zero check and range selection positions. One zero set knob.	General purpose survey instrument
Eberline Model RO-3A	Air-filled ionization chamber, with beta shield for window	Four miniature NEDA 1604 (9V) batteries	Beta-gamma	50,500 mR/hr 5,50 R/hr ± 5%	One rotary switch for the OFF, battery check, zero set, and scale selector. One zero set knob.	General purpose survey instrument
Victoreen Model 592-B	Ionization chamber with no beta window	Six 22-1/2 volt batteries and three 1.3-volt mercury cells	Gamma	10,100 & 1000 mR/hr ± 10%	One zero adjust switch. One selector switch with five positions for zero set and scale multiplication.	Emergency radiation monitor
Eberline Model PIC-6A	Gas-filled ionization chamber with beta window on bottom (60 cm. Hg pressure-propane)	Two NEDA 1604 (9V) batteries	Beta-gamma	1-1000 mR/hr 1-1000 R/hr ± 20%	One control switch turns instrument OFF, provides battery check and selects the range	General purpose gamma radiation survey instrument

TABLE 3-1 (Continued)

TYPICAL PORTABLE SURVEY INSTRUMENT SPECIFICATIONS

Instrument	Detector	Power Source	Type of Radiation Measured	Range	Controls	Application at Point Beach Nuclear Plant
Eberline Model PNR-4	Nine-inch-diameter cadnium loaded, polyethylene sphere with a BF^3 tube in the center	Five standard "D" size cells	Neutron	5,50,500 5000 mR/hr full scale ± 10%	One selector switch for OFF, ON, and BATT. One H. V. adjust.	General purpose neutron radiation survey instrument
Eberline Model 6112	Two C-M tubes inside a telescoping probe that extends over thirteen feet	Four "C" size cells	Beta-gamma	2,50 mr/hr & 2,50,1000 R/hr ± 10%	One selector switch for OFF (AUS), battery and scale changes. One connection for Aural indication.	High level radiation monitor used in areas which are not easily accessible
Eberline Model Rm-16	Nine-inch diameter cadnium loaded, polyethylene sphere with a BF^3 tube in the center	One 6.3-volt gelled electrolite battery with trickle charge connection for AC	Neutron	10 mR/hr to 10 R/hr ± 10%	One reset for Hi-Lo alarm. One switch for power ON. One pushbutton for BATT. check. Has connection for scaler.	Special neutron surveys
Victoreen Radector III	Neher white ionization chamber	Four standard "D" size cells, NEDA type 13	Gamma	0.1-100 mR/hr 0.1-100 R/hr 0.1-100 kR/hr ± 20%	One rotary switch for OFF, battery and logarithmic scale. One pushbutton switch for scale illumination.	High radiation surveys and emergencies

TABLE 3-1 (Continued)

TYPICAL PORTABLE SURVEY INSTRUMENT SPECIFICATIONS

Instrument	Detector	Power Source	Type of Radiation Measured	Range	Controls	Application at Point Beach Nuclear Plant
Eberline Model Rm-14	G-M detector "side window" with beta shield	One Ni-Cd battery with trickle charge connection for 105-125V AC	Beta-gamma	0-500, 0-5000 0-05,000 cpm ± 5%	One selector switch for OFF, BATT. and scale multiplication. One volume control for Aural indication. One reset switch. One alarm set switch (in back).	Used in monitoring of equipment and personnel
	G-M detector "end window" with no beta shield	Same	Beta-gamma	Same	Same	Same
	HP-210 G-M detector "Pancake"	Same	Beta-gamma	Same	Same	Same
Eberline Portable Alpha Counter Model PAC-15AGA	G-M gamma detector	Five standard "D" size cells	Gamma	0-2 R/hr ± 10%	Scale multiplier switch and OFF, external detector switch & two discriminators	High energy gamma monitoring
	AC-3 alpha scintillation detector	Same	Alpha	0-2000 cpm ± 10%	Same	Alpha monitoring
	PG-1 plutonium gamma scintillation detector	Same	Gamma	0-2 R/hr ± 10%	Same	For information only (not used)

TABLE 3-1 (Continued)

TYPICAL PORTABLE SURVEY INSTRUMENT SPECIFICATIONS

Instrument	Detector	Power Source	Type of Radiation Measured	Range	Controls	Application at Point Beach Nuclear Plant
Eberline Model RM-19	HP-210 G-M detector "Pancake"	One Ni-Cd battery with trickle charge connection for 105-125V AC	Beta-gamma	0-500, 0-5000, 0-50,000, 0-50,000 cpm, ± 15%	One selector switch for OFF, BATT, and scale multiplication. One volume control for Aural indication. One reset switch. One high voltage push to read switch. Gross/PHA selector switch.	Counting high level smears and as frisking unit in field for checking personnel and equipment
Eberline Model 1 RM	RP-1/7B G-M detector "side window" with beta shield	Five standard "D" size cells	Beta-gamma	1-500 K cpm ± 10%	One selector switch for OFF, ON, and BATT. One H. V. adjust.	Used for detecting contamination, beta-gamma.
Johnson Model GSM-5	Johnson GP-200 "end window"	Three standard "D" size cells		0-20 mR/hr 0-500 cpm ± 15%	Range switch off X1, X10, and X100 battery test and calibration	Used solely as a count rate instrument
	HP-210 G-M detector "Pancake"	Same	Beta-gamma	Same	Same	Same
Victoreen Thyac III, Model 490	Model 489-4 beta-gamma probe	Two standard "D" size cells, NEDA Type 13	Beta-gamma	0-0.2 mR/hr 0-2 mR/hr and 0-20 mR/hr ± 10%	Rotary range and function OFF, battery. X1000, X100, X10 and X1 cpm and 0-.2, 2, and 20 mR/hr. Rotary response switch marked slow, medium, and fast.	Use limited to hospital emergency room, site boundary control center. First aid station and health physics station

TABLE 3-1 (Continued)

TYPICAL PORTABLE SURVEY INSTRUMENT SPECIFICATIONS

Instrument	Detector	Power Source	Type of Radiation Measured	Range	Controls	Application at Point Beach Nuclear Plant
Victoreen Thyac III, Model 490	Model 489-35 alpha-beta-gamma probe	Same	Alpha-beta-gamma	Same	Same	Same
Eberline Fast-Slow Neutron Counter Model PNC-4	Model NP-2, BF_3 slow neutron tube with base assembly	Five standard "D" size cells	Slow & fast neutrons	500; 5000; 50,000 and 500,000 cpm ± 10%	Switch for OFF, ON, and battery check. HV adjust.	Special neutron surveys
Dosimeter Corporation Mini-Rad Radiation Monitor	G-M detector	One 9V battery	X-rays and gamma	0-50 mR/hr and 0-5 R/hr ± 15%	Two position range switch and ON-OFF battery switch	Used when a small compact device is desired
Eberline Rascal Model PRS-2P	Nine-inch diameter cadnium loaded polyethylene sphere with BF_3 tube in the center	Five standard "D" size cells	Neutrons	6 decades of digital information	rotary switch OFF, H.V.; rates A, B, C, and D; minutes .5, 1, 2, and 5; manual, and stop. Two discriminator potentiometers. Reset, speaker, scale illuminate and gross/PHA switches.	Used as a ratemeter or as a scaler for counting neutrons

TABLE 3-2

COMPARISON OF ESTIMATED OCCUPATIONAL DOSES FOR STEAM GENERATOR DISPOSAL ALTERNATIVES (MAN-REM)

OPTION	NUREG/CR-1595[1]
Long-term storage with cut-up and shipment	50
Long-term storage with intact shipment	30
Shorter-term storage with cut-up - at 5 yr.	690
- at 15 yr.	180
Immediate cut-up and shipment by rail/truck - no decontamination	1700
Immediate cut-up and shipment by rail/truck - with chemical decontamination	810
Immediate intact shipment	7

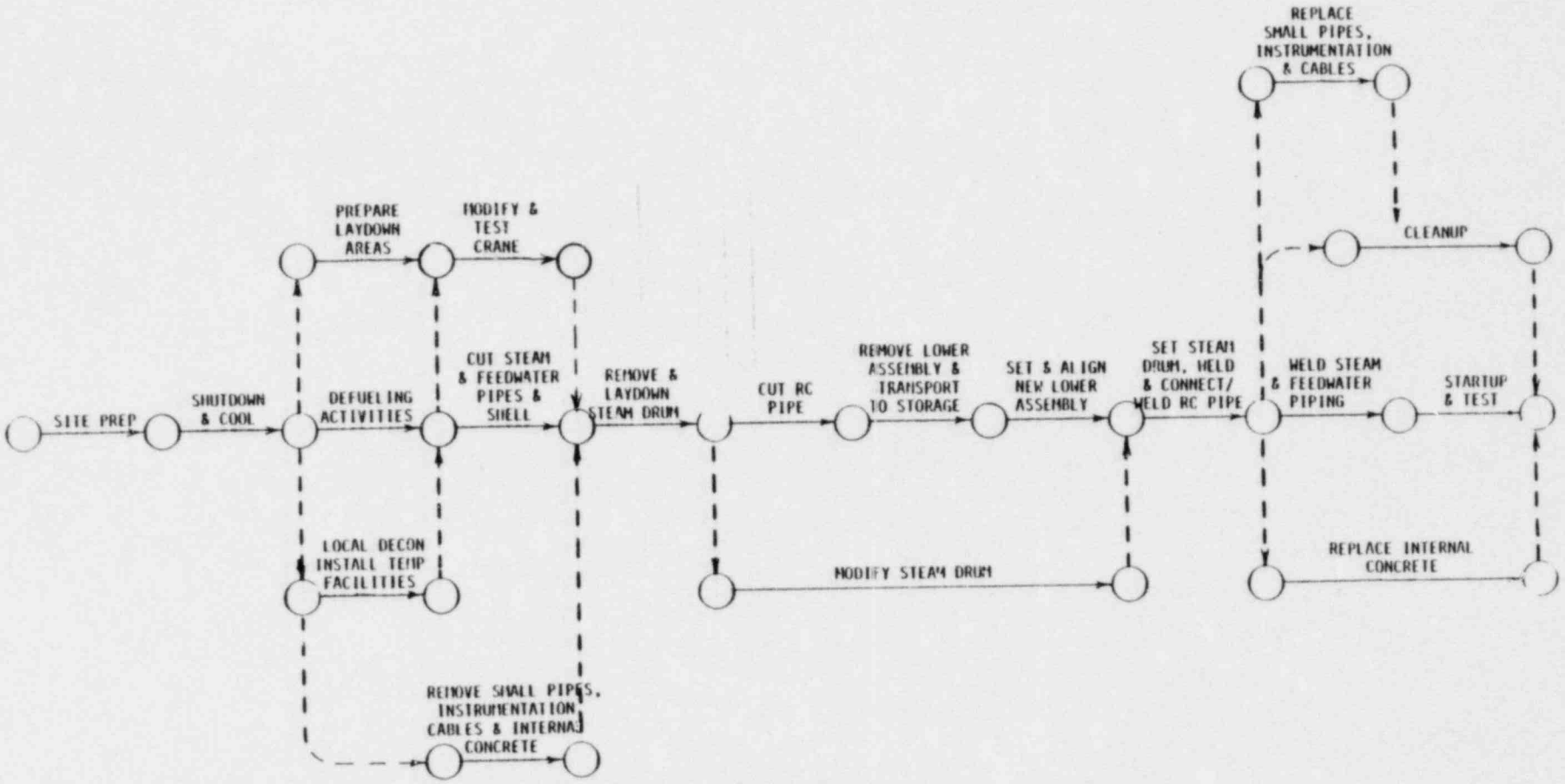

Figure 3-1 Outage Sequence

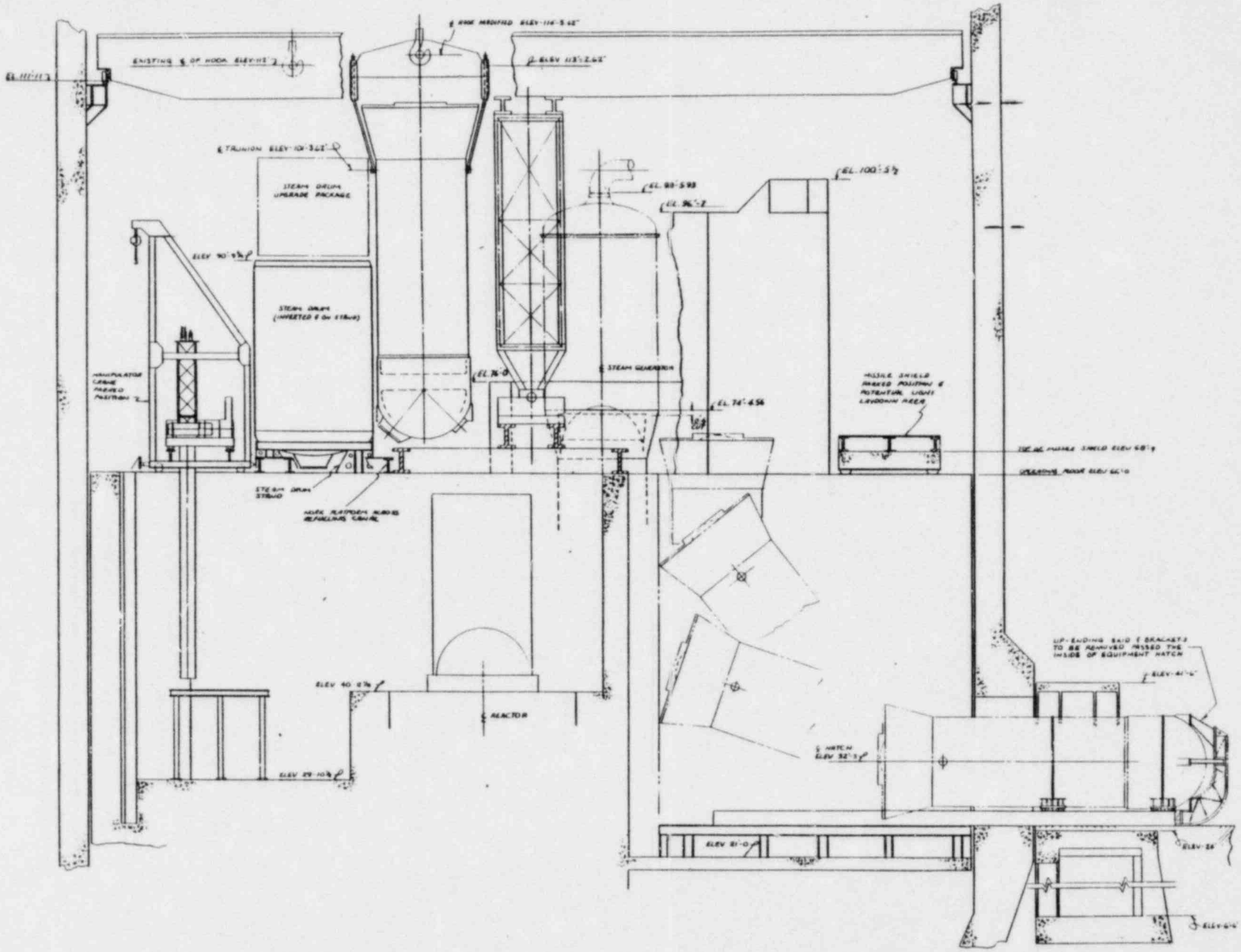

Figure 3-2 Lower Assembly Removal Sequence (Sheet 1 of 2)

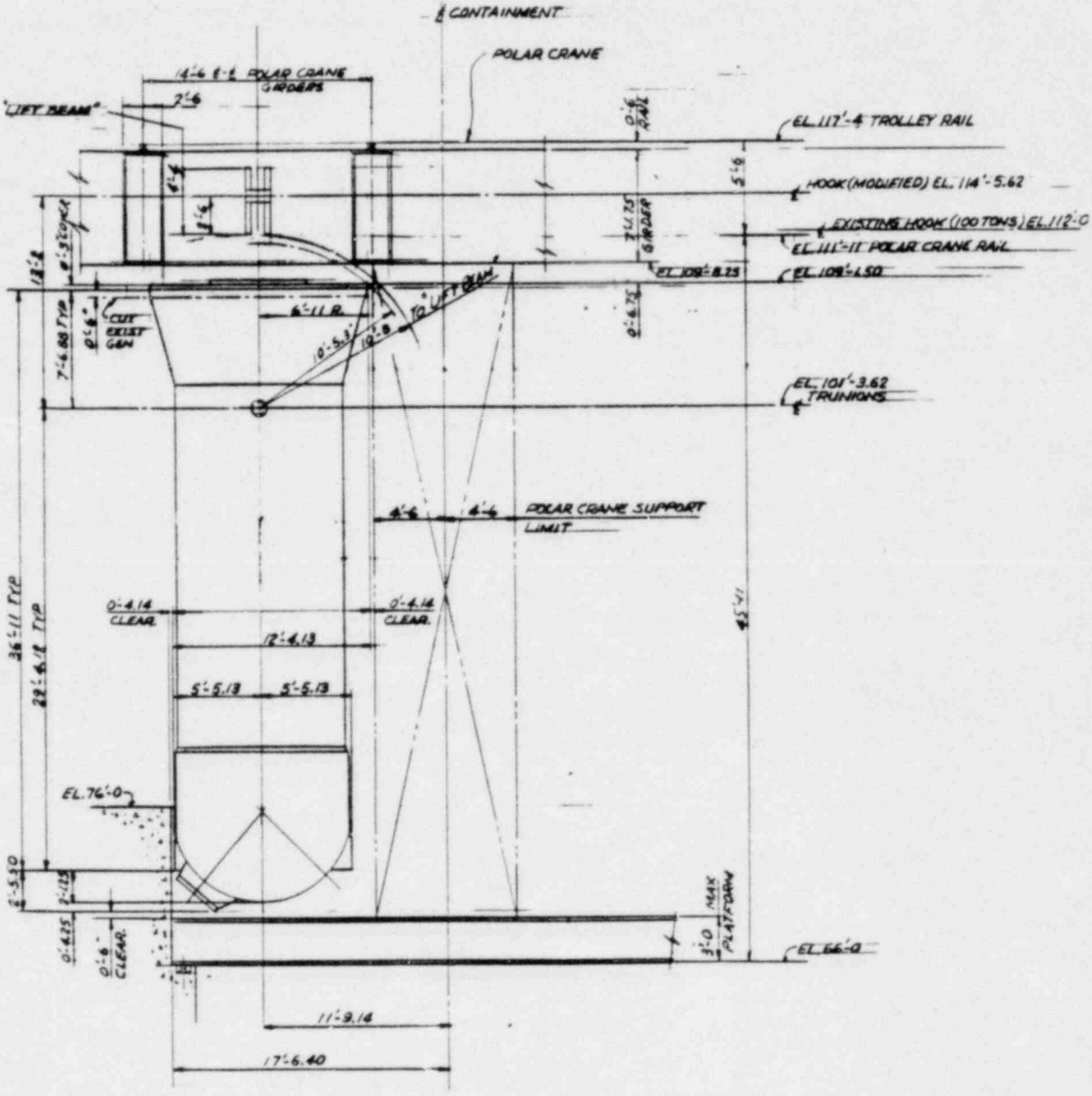

Figure 3-2 Lower Assembly Removal Sequence (Sheet 2 of 2)

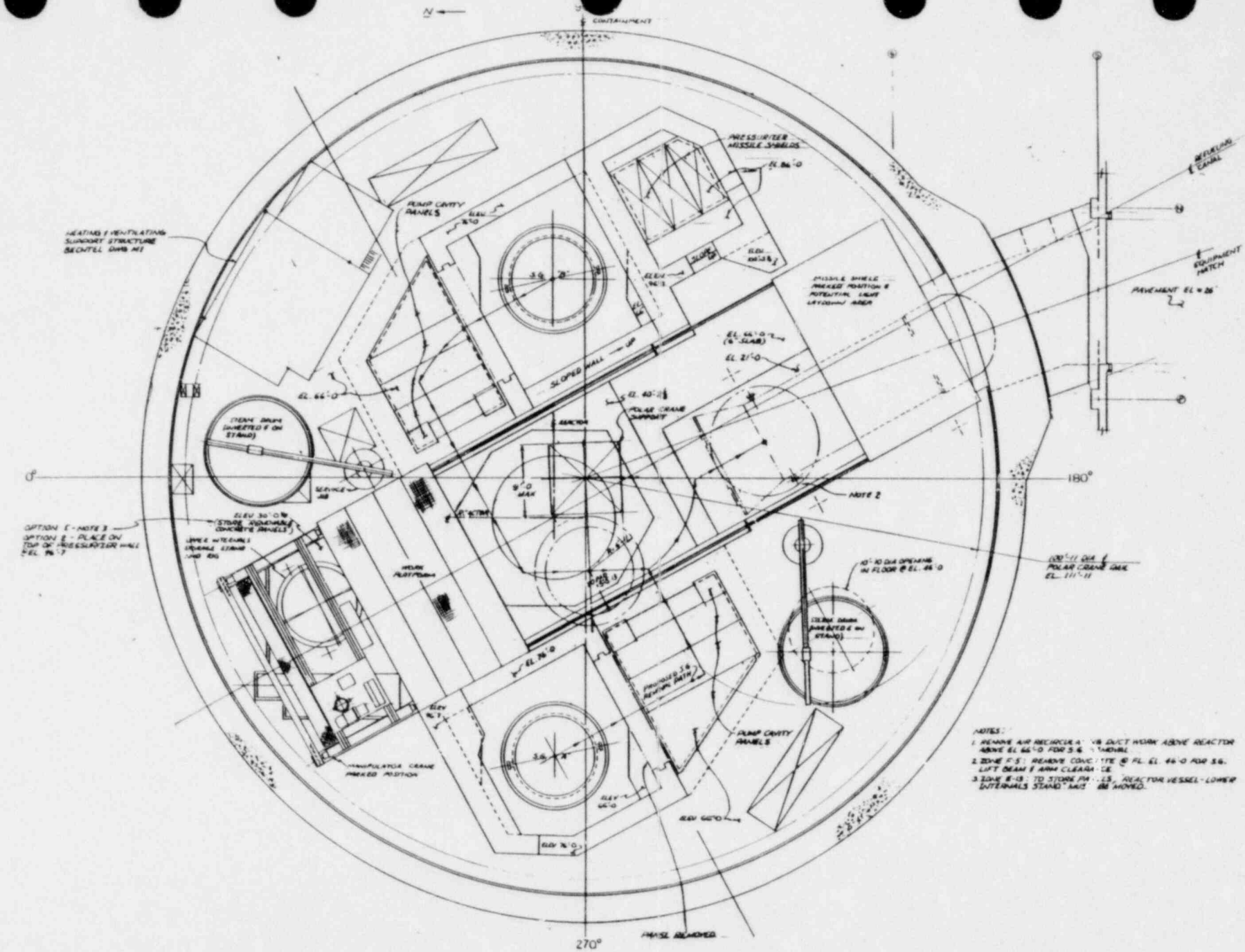

Figure 3-3 Steam Generator Laydown Areas

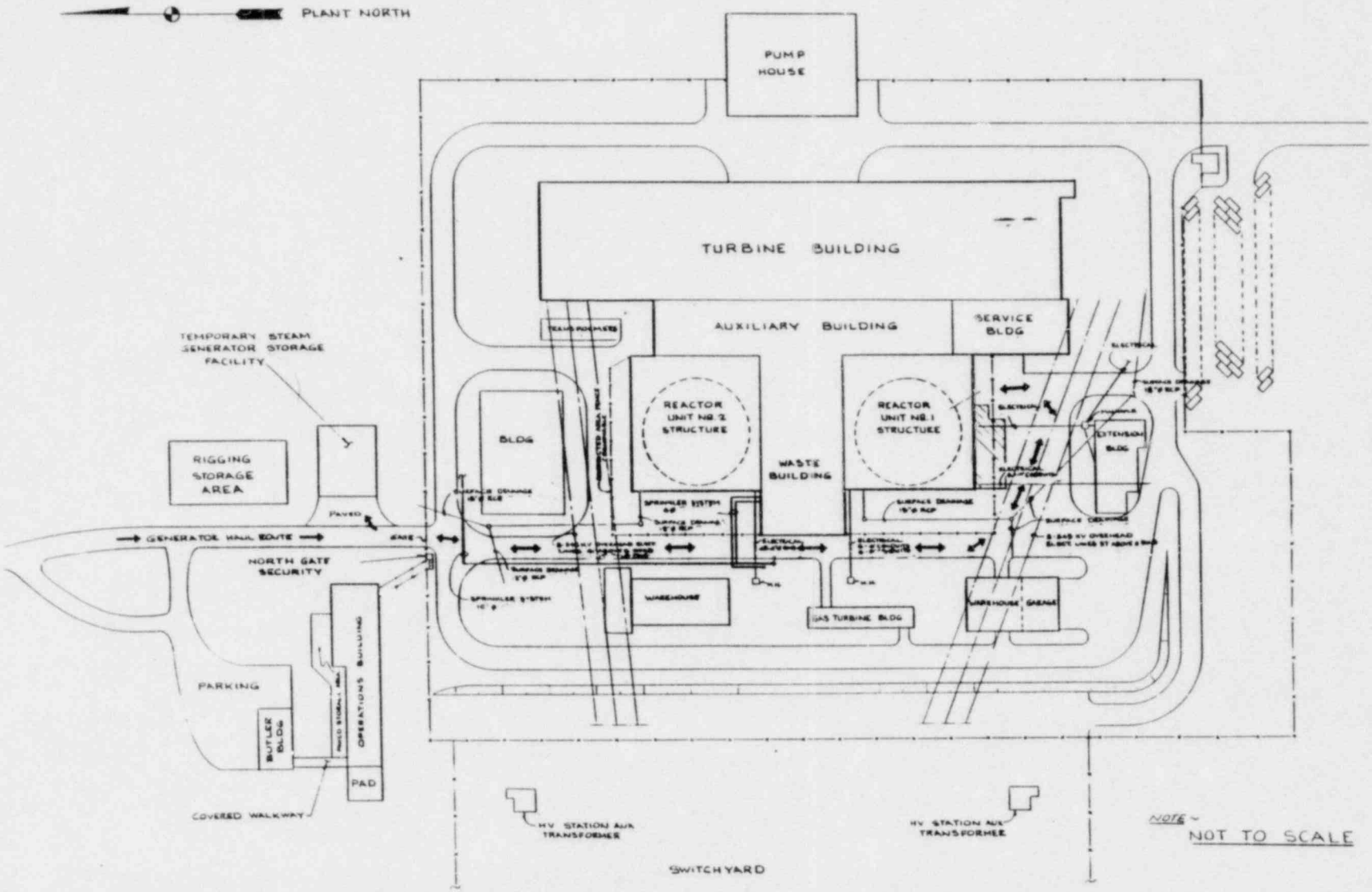

Figure 3-4 Steam Generator Haul Routes

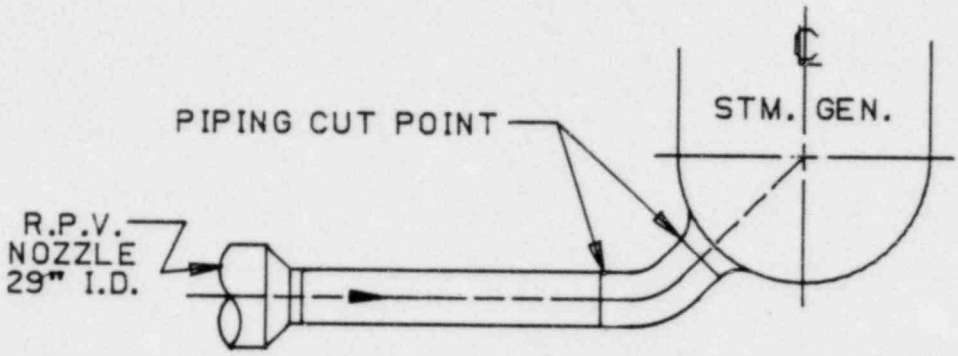

SECTION
REACTOR COOLANT PIPING
HOT LEG

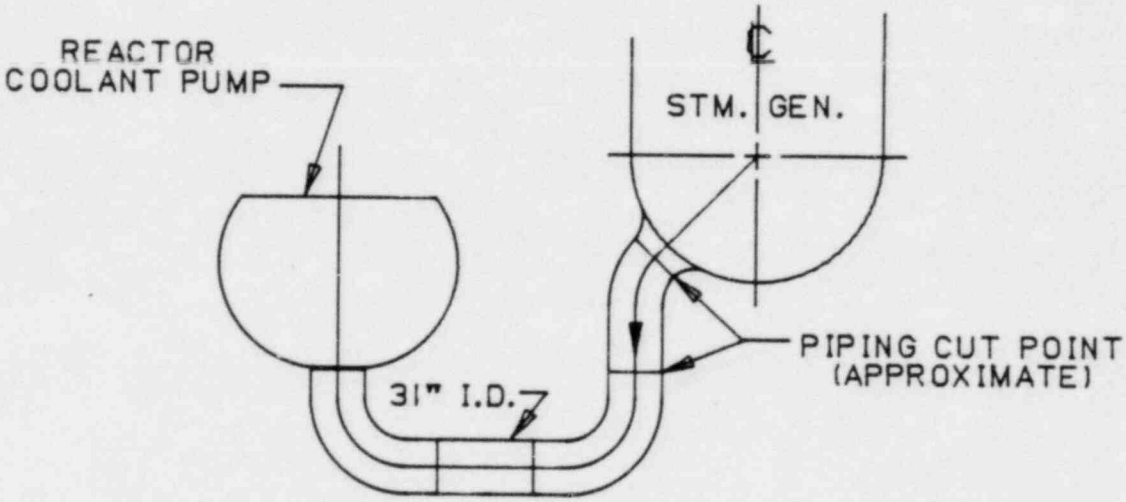

Figure 3-5 Reactor Coolant Piping Cut Points

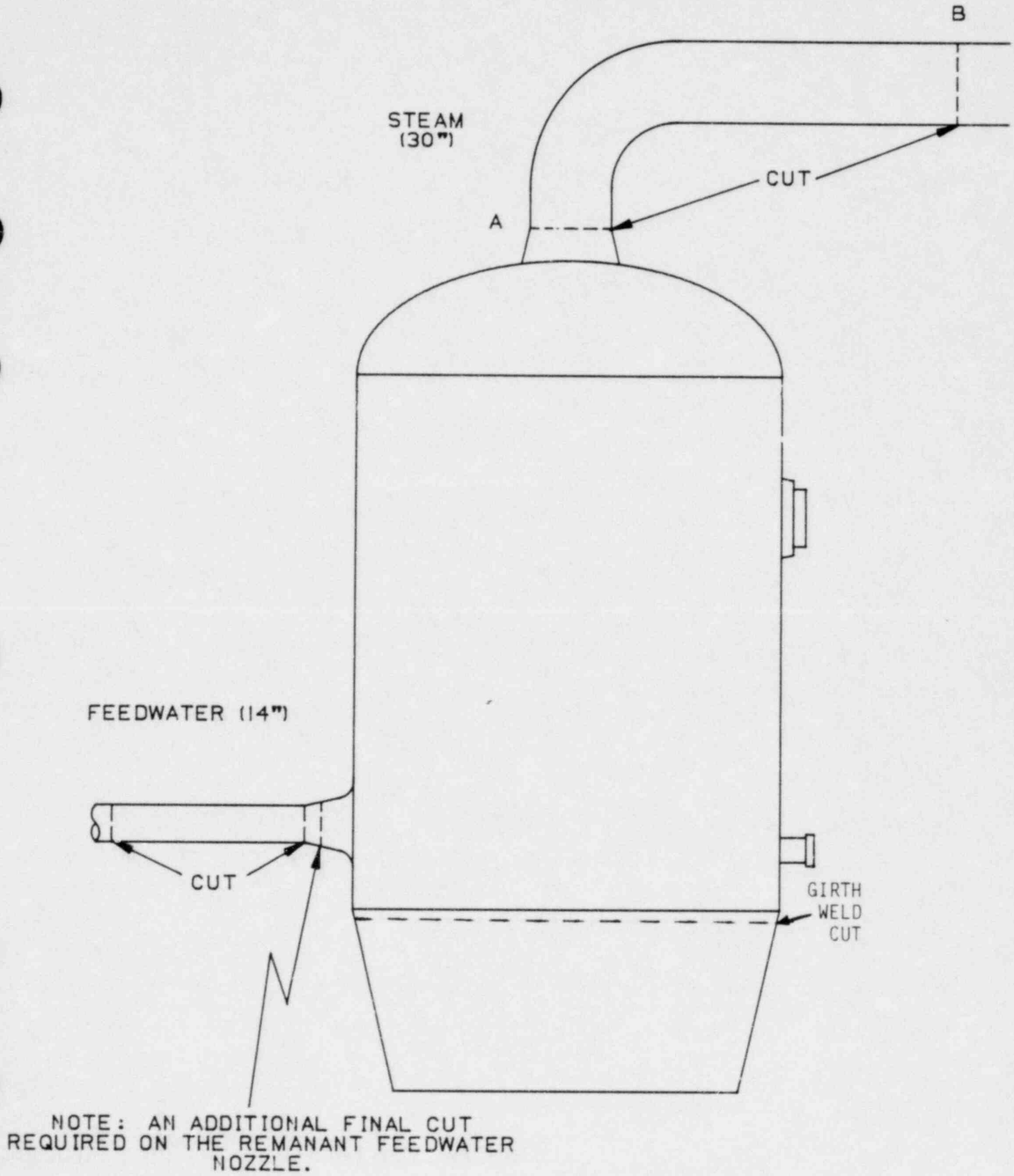

Figure 3-6 Feedwater and Steam Line Piping Cut Points

4.0 RETURN-TO-SERVICE TESTING

Following completion of steam generator repair, a preoperational testing program will be conducted. This testing program will include the following tests and inspections:

1. Reactor coolant system hydrostatic test

2. Secondary side hydrostatic test

3. Thermal expansion test during heatup

4. Steam generator carryover test

5. Steam generator thermal performance test

6. Reactor coolant flow verification

7. Eddy current inspection of steam generator tubes

8. Calibration and testing of instrumentation and controls affected by the repair activities

These tests and inspections will provide the necessary assurance that the unit can be operated in accordance with design requirements and will not endanger the health and safety of the public.

5.0 SAFETY EVALUATION

5.1 FSAR EVALUATIONS

5.1.1 Introduction

The purpose of this section is to evaluate the impact, if any, of the repaired steam generators on the accident analysis transients for Point Beach Unit 1. Under the guidelines specified in 10 CFR 50.59 such an evaluation is required to verify that no unreviewed safety concerns or changes to the Technical Specifications occur. This section provides a qualitative discussion of the effect on the accident analysis of steam generator parameter changes resulting from steam generator repair. Conclusions are made concerning the applicability of the original FSAR to the repaired unit. Consistent with the requirements of 10 CFR 50.59, licensing regulations and guidelines of the original licensing of the Point Beach Unit are assumed to apply, and only changes in the safety analysis due to equipment changes are considered.

The relevant plant operating parameters and steam generator design parameters are compared in Table 5-1 and Table 5-2, respectively, for the original and repaired steam generators. While design improvements have been incorporated, the repaired steam generators continue to match the design performance of the original steam generators. It may be noted from Tables 5-1 and 5-2 that there is very little change in original plant operating parameters as a result of steam generator repair. It is, therefore, to be anticipated that the impact on the accident analyses will be insignificant. The results of the accident evaluation show that the repair of steam generators resulting in physically and functionally similar units has not resulted in any adverse changes in the plant operating conditions used in the FSAR, and, therefore, the analyses presented in the FSAR are still valid. This section establishes that no unreviewed safety concerns exist due to operation with the repaired Point Beach steam generators.

5.1.2 Non-LOCA Accidents

The Point Beach FSAR includes analyses of fifteen non-LOCA accidents in Sections 14.1 and 14.2. These are:

a. Uncontrolled rod cluster control assembly (RCCA) withdrawal from a subcritical condition

b. Uncontrolled RCCA withdrawal at power

c. Malpositioning of part length rods

d. RCCA drop

e. RCCA ejection

f. Loss of reactor coolant flow

g. Excessive load increase incident

h. Chemical and volume control system malfunction

i. Startup of an inactive reactor coolant loop

j. Reduction in feedwater enthalpy incident

k. Loss of external electrical load

l. Loss of normal feedwater

m. Loss of all ac power to the station auxiliaries (blackout)

n. Liklihood of turbine-generator unit overspeed

o. Rupture of a main steam pipe (steam break)

The impact of the secondary system on the results of transients (a) through (e) is of no consequence since constant heat extraction is still maintained with the repaired steam generators. The main reason for this is that the nuclear and thermal time constants of the fuel are much smaller than the fluid mixing and transport time, the latter being mechanisms responsible for secondary to primary interaction. For the rod withdrawal and rod ejection accidents reactor trip occurs at a time near the magnitude of the coolant loop transport time. The limiting consideration for the rod drop accident and malpositioning of part length rods is the neutron flux redistribution resulting from the control rod movement and is clearly not coupled to steam generator performance. It can be validly concluded, therefore, that the first five accident transients named above are unaffected by the repair of the Point Beach steam generators.

Loss of reactor flow transients can be discussed collectively as was the case for the five reactivity insertion accidents above. Included in this general category are the following:

a. Total loss of reactor coolant flow

b. Partial loss of reactor coolant flow

c. Locked rotor

If the reactor is at power, the immediate effect of loss of coolant flow is a rapid increase in coolant temperature, which could result in departure from nucleate boiling (DNB). However, the reactor is tripped on low frequency, low voltage or low coolant flow trips such that the consequences are within the bounds of the FSAR analyses. The low-flow protection system, consisting of the low voltage, low frequency and low flow trips, rapidly detects and protects against loss of coolant flow

events. Changes in coolant temperature due to secondary parameter changes would not be detected in the core during the time frame of interest to this transient. Therefore, it can be concluded that the repair of the steam generator will not affect the loss of coolant flow transients.

The chemical and volume control system malfunction is a boron dilution in the reactor coolant system caused by adding unborated water to the reactor coolant via the makeup control system. Factors to be considered in the analysis of this transient are that the maximum dilution rate depends on the charging pump characteristics and that the malfunction must be recognized and terminated by operator action. Repair of the steam generators with physically and functionally similar units will neither affect the initiating circumstances nor the corrective actions for the chemical and volume control system malfunction.

An excessive load increase incident is defined as a rapid increase in steam generator steam flow that causes a power mismatch between the reactor core power and the steam generator load demand. The accident is analyzed in the FSAR to show that a 10 percent increase in steam flow from full power can be accommodated with a reactor trip. If a 10 percent step load increase is postulated, feed flow will increase to match steam flow and maintain steam generator level. Depending on whether or not automatic rod control is available, a new steady state condition is established at the initial coolant average temperature or at a lower coolant average temperature. As is evident from the over-temperature ΔT equation, more than 10 percent power margin in DNB is available. Repair of the steam generators resulting in units of similar physical size and tube structure could slightly affect the excessive load increase accident in that the higher (by about 2 percent) full power fluid inventory of the repaired steam generators could cause the transient to progress more slowly; however, the same endpoint equilibrium condition would still be eventually reached, since no reactor trips are encountered.

The turbine generator design analysis describes the turbine generator and its speed control and provides a discussion concerning the velocity and energy of postulated ejected parts from the turbine. This analysis is completely independent of the nuclear steam supply system and thus is not affected by the repaired steam generators.

It is apparent, therefore, that only those accidents which involve a primary-secondary interaction could potentially be affected by steam generator repair. Since the remaining accidents on the above list are generally concerned with primary coolant heatup or cooldown resulting from loss of secondary heat sink or excessive heat removal from the secondary side, they could potentially be affected by changes resulting from steam generator repair. These accidents are evaluated individually in the following sections.

5.1.2.1 Startup of an Inactive Reactor Coolant Loop

The cold leg temperature in the inactive loop will be identical to the cold leg temperature of the active loops and to the reactor core inlet temperature. If the reactor is operated at power, there is a temperature drop across the steam generator in the inactive loop, and reverse flow would exist through the inactive loop thereby lowering the hot leg temperature of that loop below core inlet temperature. Administrative procedures require that the plant be brought to less than 10 percent load level and approximate temperature equilibrium between loops prior to starting the pump in the inactive loop.

The startup of an inactive reactor coolant loop accident occurs when a coolant pump in a loop, which contains water at a lower temperature than active loops, is started, causing a significant increase in water flow into the core. The decrease in core temperature due to the increase in flow and the injection of colder water causes a rapid core power increase due primarily to moderator reactivity feedback. Verification that safety criteria for this accident are not violated is accomplished by demonstrating that the DNB ratio is always greater than 1.30.

The analysis presented in the Point Beach FSAR assumed that the inactive loop flow reversed and accelerated to its nominal full flow value instantaneously. The reactor coolant in that part of the inactive loop from the steam generator plenum to the reactor exit plenum (normally the hot leg) was assumed to be at a temperature equal to the saturation temperature of the secondary side. This assumption is independent of the heat transfer characteristics of the steam generator, and thus is not affected by the repaired steam generators. Also, since the primary side volume is essentially unchanged for the repaired steam generators, the duration of the cold water slug (14 seconds) and the delay for the slug to reach the core inlet (7 seconds) would remain unchanged from the FSAR analysis. Therefore, the transient results presented in the FSAR would not be affected, and the accident criteria would continue to be met with the repaired steam generators.

5.1.2.2 Reduction in Feedwater Enthalpy Incident

The reduction in feedwater enthalpy is another means of increasing core power above full power. Such increases are attenuated by the thermal capacity in the secondary plant and in the reactor coolant system. The overpower-overtemperature protection (nuclear overpower and ΔT trips) prevents any power increase which could lead to a DNBR less than 1.30.

An extreme example of excess heat removal by the feedwater system is the transient associated with the accidental opening of the feedwater bypass valve which diverts flow around the low pressure feedwater heaters.

The function of the bypass valve is to maintain net positive suction head on the main feedwater pump in the event heater drain pump flow is lost, e.g., during a large sudden load decrease. In the event of an accidental opening of the feedwater bypass valve, flow is diverted around the low pressure feedwater heaters. This causes a sudden reduction in inlet feedwater temperature to the steam generators. This increased subcooling will create a greater load demand on the primary system which can lead to a reactor trip.

Two cases are analyzed to demonstrate the unit behavior in the event of a sudden feedwater temperature reduction resulting from accidental opening of the feedwater bypass valve. The first case is for the reactor in manual control with a zero moderator coefficient since this represents a condtion where the unit has the least inherent transient capability. The second case is for the reactor in automatic control with a large negative moderator coefficient. Initial pressure coolant temperature and power conditions are assumed at extreme values consistent with steady state operation to allow for calibration and instrument errors. This results in minimum margin to core DNB limit at the start of the transient.

During the accidental opening of a feedwater bypass valve transient, the secondary heat extraction is greater than the core power generation. This causes the pressurizer pressure and coolant average temperature to decrease. Without automatic reactor control and a zero moderator coefficient of reactivity, the core power level increases slowly and eventually comes to equilibrium at a slightly higher power level. With automatic reactor control and a large negative moderator coefficient the negative coefficient causes the core power to increase rapidly. Steady state conditions are reached at a higher power level.

The analysis presented in the Point Beach FSAR for the accidental opening of a feedwater bypass valve without reactor control and zero moderator coefficient shows that T_{avg} will decrease as secondary heat extraction remains greater than core power generation. As T_{avg} continues to decrease the pressurizer heaters will not be able to maintain pressurizer pressure and the reactor will be tripped by low pressure trip and the DNB ratio increases from the initial value. For the case with automatic rod control and negative moderator coefficient the FSAR analysis shows that no reactor trip is generated and the DNB ratio remains well above 1.30. The replacement steam generator design has a larger full load steam generator mass, approximately 2 percent larger. This increased secondary side heat capacity would result in a slightly lower cooldown rate than in the FSAR analysis. The steady state

conditions of the FSAR analysis would be reached at a slower rate. The same margins to reactor trip will exist. Therefore, the accident criteria would still be met with the repaired steam generators.

5.1.2.3 Loss of External Electrical Load

A loss of external electrcal load may result from:

a. Abnormal variation in network frequency or other adverse network operating conditions

b. Trip of the generator or opening of the main breaker from the generator with failure of turbine trip. In this case the action of the turbine control system causes a large nuclear steam supply system load reduction

c. Trip of the turbine

The unit is designed to accept a step loss of load from 100 percent to 50 percent load without actuating a reactor trip. The automatic steam bypass system, with 40 percent steam-dump capacity to the condenser, is able to accomodate this load rejection by reducing the severity of the transient imposed upon the reactor coolant system. The reactor power is reduced to the new equilibrium power level at a rate consistent with the capability of the rod control system. Should the reactor suffer a loss of load from greater than 50 percent power, the reactor protection system would actuate a reactor trip.

In the event the turbine bypass valves fail to open following a large load loss or in the event of a complete loss of load with steam dump operating, the steam generator safety valves may lift. The reactor coolant temperature will increase rapidly and the DNB limit will be approached. The reactor is tripped on the following signals:

a. High pressurizer pressure signal

b. High pressurizer level signal

c. Overtemperature ΔT signal

The steam generator shell side pressure will increase rapidly. The pressurizer safety valves and steam generator safety valves are, however, sized to protect the reactor coolant system and steam generator against overpressure for all load losses without assuming the availability of the turbine bypass system. The steam dump valves will not be opened for load reductions of 10 percent or less. For larger load reductions, they may be open.

The most likely source of a complete loss of load on the nuclear steam supply system is a trip of the turbine-generator. In this case, there is a direct reactor trip signal (unless below approximately 10 percent power) derived from either the turbine autostop oil pressure or a closure of the turbine stop valves. Reactor coolant temperatures and pressure do not significantly increase if the turbine bypass system and pressurizer pressure control system are functioning properly. However, in the Point Beach FSAR the behavior of the unit is analyzed for a complete loss of load from 102 percent of full power without a direct reactor trip due to a turbine trip primarily to show the adequacy of the pressure relieving devices and also to show that no core damage occurs. The reactor coolant system and main steam system pressure relieving capacities are designed to ensure safety of the unit without requiring the automatic rod control, pressurizer pressure control and/or steam bypass control systems.

In the Point Beach FSAR, the following cases are analyzed for the loss of external electrical load accident:

a. BOL with pressure control and automatic rod control

b. EOL with pressure control and automatic rod control

c. BOL without reactor control and pressure control

d. EOL without reactor control and pressure control

It is shown in the FSAR that the accident criteria on system pressure and DNB are not violated in any of the loss of load cases.

The slight increase in full load mass of the repaired steam generators would provide additional heat capacity and reduce the heatup rate. Thus the conclusions of the FSAR remain valid.

5.1.2.4 Loss of Normal Feedwater

A loss of normal feed water (from a pipe break, pump failure, valve malfunctions) could conceivably result in a loss in capability of the secondary system to remove the heat generated in the reactor core. Since the plant is tripped well before the steam generator heat transfer capability is reduced and auxiliary feedwater flow initiated, the primary system variables never approach a DNB condition.

The following provide the necessary protection against a loss of normal feedwater:

1) Reactor trip on very low water level in either steam generator

2) Reactor trip on main steam flow-feedwater flow mismatch in coincidence with low water level in either steam generator

3) Two motor driven auxiliary feedwater pumps (200 gpm each) which are started on

   a. Low-low level in either steam generator

b. Opening of both feedwater pump circuit breakers

c. Any Safety Injection signal

d. Manually

4) One turbine driven auxiliary feedwater pump (400 gpm) which is started on:

a. Low-low level in both steam generators or

b. Loss of voltage on both 4 kV busses, or

c. Manually

On the loss of normal feedwater transient following the reactor and turbine trip, the water level in the steam generators will fall due to the reduction of steam generator void fraction and because steam flow through the safety valves continues to dissipate the stored and generated heat. Making conservative assumptions on steam generator water level at time of trip, residual heat generation in core, number of auxiliary feedwater pumps available and reactor coolant flow (natural circulation flow is assumed), the FSAR analysis demonstrates the adequacy of the auxiliary feedwater system to remove stored and residual heat without water relief from the primary system.

The loss of normal feedwater is a loss of heat sink accident. The increased steam generator mass at full load of the repaired steam generators is a change in a favorable direction. The physical dimensions of the steam generator have not changed. Therefore, the conclusion that the tubesheet in the steam generators receiving auxiliary feedwater will always be covered and adequate heat transfer capability will be maintained remains valid.

5.1.2.5 Loss of All AC Power to the Station Auxiliaries (Blackout)

The loss of ac power to the station auxiliaries is analyzed to demonstrate long term heat removal capability by auxiliary feedwater and natural circulation reactor coolant flow.

In the event of a complete loss of offsite power and a turbine trip there will be a loss of power to the station auxiliaries, i.e., the reactor coolant pumps, main feedwater pumps, etc. After a loss of ac power with turbine and reactor trip, the following events would occur:

a. Plant vital instruments are supplied by the emergency power sources.

b. Reactor coolant flow would coast down to natural circulation flowrates. Main feedwater flow would stop and auxiliary feed pumps would automatically start.

c. The rise in steam system pressure following the trip would automatically open the steam system power operated relief valves. (If the condenser is not available, the steam will be vented to the atmosphere.) If the steam flow rate through the power relief valves is not adequate, the steam generator self-actuated safety valves would lift to dissipate the sensible heat of the fuel and coolant above no-load temperature plus the residual heat produced in the reactor.

d. As the no load temperature is approached, the steam system power relief valves are used to dissipate the residual heat and to maintain the plant at the hot shutdown condition.

Upon the loss of power to the reactor coolant pumps, coolant flow necessary for core cooling and the removal of residual heat is maintained by natural circulation in the reactor coolant loops. Differences in the average tube height could produce a change in the steam generator

contribution to the natural circulation buoyancy driving head, and changes in the tube structure could cause a difference in primary steam system pressure drop. In the repaired steam generator design, the average tube height has not changed. Therefore, it is concluded that the loss of ac power analysis in the Point Beach is still applicable for the repaired steam generators.

5.1.2.6 Rupture of a Main Steam Pipe (Steam Break)

A rupture of a steam pipe is assumed to include any accident which results in an uncontrolled steam release from a steam generator. An uncontrolled steam release, typically through a ruptured steam line or a defective valve, causes the secondary system temperature and pressure to fall and the heat transfer rate through the steam generator tubes to rise. Therefore, the heat removal rate from the reactor coolant system increases, and the core moderator temperature drops. As the core is cooled, the negative moderator temperature coefficient causes the core reactivity level to rise.

The FSAR analysis of an uncontrolled steam release was performed to demonstrate that:

a. Assuming a stuck control rod assembly with or without offsite power and assuming a single failure in the engineered safety features, there is no consequential damage to the primary system and the core remains in place and intact.

b. There is no return to criticality for any single active failure in the main steam system. The single active failure is the opening, with failure to close, of the largest of any single steam bypass, relief, or safety valve.

c. Energy release to the containment from the worst steamline break does not cause failure of the containment structure..

The following systems provide the necessary protection against the steam break accident:

a. Safety injection system actuation on:

   1. One out of three pressurizer coincident low pressure and low ·l signals

   2. Two out of three low pressure signals in any steamline

   3. Two out of three high containment pressure signals

b. Reactor trip on:

   1. Overpower reactor trips

   2. Reactor trip on safety injection signal

c. Feedwater isolation on safety injection signal

d. Steam line isolation on:

   1. High steam line flow coincident with any safety injection signal or low reactor coolant average temperature

   2. Two out of three containment pressure signals

Major assumptions include use of end-of-life core kinetics parameters, assumption of the most reactive rod cluster control assembly stuck in the fully withdrawn position, and minimum safety injection capability due to a single failure in the system.

The cases considered are the complete severance of a main steam pipe upstream and downstream of the flow restrictor in the steam pipe, with and without the simultaneous loss of offsite power and steam release

through a safety valve. All the cases assume initial hot shutdown condition since steam generator mass inventory is greatest at that condition. Should the reactor be just critical or at power at the time of the steam line break the reactor would be tripped by the normal overpower protection system and the additional stored energy would be removed by the cooldown before the no load condition and shutdown margin assumed above are reached. In addition, the greater steam generator mass at hot shutdown conditions increases the magnitude and duration of the cooldown.

The core power and reactor coolant system transients will not be affected by the repaired steam generators. The reasons for this conclusion include the following:

a. The key parameters which strongly influence the transient are performance of the emergency shutdown system and core reactivity coefficients. There are no changes to these parameters as they are used in the analysis due to repair of the steam generators.

b. The flow area of the main steam line is an important factor in determining the amount and rate of heat extracted from the reactor coolant. This flow area decreases due to the integral flow restrictors. The FSAR analysis would be bounding, since no credit was taken for intergal restrictors.

c. No changes are expected due to differences in initial conditions (zero load steam temperature and pressure are identical for the unit with repaired steam generators). The no load steam generator mass increases insignificantly (~1.5 percent).

Therefore the steam line break analyses presented in the FSAR are valid for the repaired steam generators.

5.1.3 Loss of Coolant Accident Evaluation

In the event of a major reactor coolant system pipe break, depressurization of the reactor coolant system results in a pressure decrease in the pressurizer. Reactor trip signal occurs when the pressurizer low pressure trip setpoint is reached. A safety injection system signal is actuated when the appropriate setpoint is reached. These countermeasures will limit the consequences of the accident in two ways:

a. Reactor trip and borated water injection complement void formation in causing rapid reduction of power to a residual level corresponding to fission product decay heat.

b. Injection of borated water provides heat transfer from the core and prevents excessive clad temperatures.

At the beginning of the blowdown phase, the entire reactor coolant system contains subcooled liquid which transfers heat from the core by forced convection with some fully developed nucleate boiling. After the break develops, the time to departure from nucleate boiling is calculated, consistent with Appendix K of 10 CFR 50. Thereafter, the core heat transfer is based on local conditions with transition boiling and forced convection to steam as the major heat transfer mechanisms. During the refill period, rod-to-rod radiation is the only heat transfer mechanism.

When the reactor coolant system pressure falls below 600 psia, the accumulators begin to inject borated water. The conservative assumption is made that accumulator water injected bypasses the core and goes out through the break. This conservatism is again consistent with Appendix K of 10 CFR 50.

The reactor is designed to withstand thermal effects caused by a loss of coolant accident, including the double ended severance of the largest reactor coolant system pipe. The reactor core and internals together with the emergency core cooling system (ECCS) are designed so that the reactor can be safely shutdown and the essential heat transfer geometry of the core preserved following the accident.

The ECCS, even when operating during the injection mode with the most severe single active failure, is designed to meet the acceptance criteria (Reference 1).

Several large break loss of coolant analyses have been submitted as amendments to the Point Beach FSAR. The most applicable existing analysis to use as a baseline for the evaluation of the steam generator repairs was performed with 18 percent steam generator tube plugging and F_q equal to 2.32.

This analysis utilized the Westinghouse, February 1978 ECCS Evaluation Model (References 7, 8, 9 and 10)).

The analysis was performed with a reactor vessel upper head fluid temperature equal to the reactor coolant system hot leg temperature. The effect of using the hot leg temperature in the reactor vessel upper head is described in Reference 6.

An evaluation was performed to determine the effects on ECCS performance of the repaired steam generator parameters. The evaluation basis was a comparison with the aforementioned large break analysis for Point Beach which incorporates 18 percent steam generator tube plugging with an F_q of 2.32.

The evaluation shows that the effect of 18 percent tube plugging is more limiting with respect to ECCS performance than the effects of the repaired steam generator parameters. Thus, the previous 18 percent tube plugging analysis is conservative for the Point Beach Plant with repaired steam generators.

The slight decrease in primary side volume and heat transfer area will not impact the blowdown portion of the LOCA analysis since these changes are only second order effects during this phase of the accident.

The tube resistance for the replacement steam generators will be lower than that of the original steam generators at the existing analysis conditions. Therefore, the impact on LOCA PCT will be a benefit over the previous analysis due to the improvement in core reflood rates.

From this evaluation it is concluded that the repaired steam generators, compared to the original steam generators, would show an improvement in the limiting break LOCA analysis results.

The existing small break analysis for Point Beach is described in Section 14.3 of the FSAR. This analysis is in conformance with 10 CFR 50.46 and Appendix K to 10 CFR 50. None of the parameters in the repaired steam generator has a significant effect on small break LOCA. Thus the effect on the small break analyses in negligible and the existing small break analyses in the FSAR are applicable to the plant with repaired steam generators.

The containment mass and energy release in the FSAR were performed in conformance with criteria existing at the time of the Point Beach Operating License submittal. This analysis for a LOCA is sensitive to reactor power and primary system volume. Since both of these parameters are virtually unchanged, the containment mass and energy release would not change and the existing analysis is still applicable.

5.1.4 Steam Generator Tube Rupture

No plant parameters will change as a result of the steam generator repair, and, as shown in Tables 5-1 and 5-2, no steam generator parameters will be changed which would affect the tube rupture analysis. Thus, the tube rupture analysis and consequences in the Point Beach FSAR would be unchanged with the repaired steam generators and remain valid.

5.1.5 References for Section 5.1

1. "Acceptance Criteria for Emergency Core Cooling Systems for Light Water Cooled Nuclear Power Reactors," 10 CFR 50.46 and Appendix K of 10 CFR 50. Federal Register, Volume 39,. Number 3, January 4, 1974.

2. Bordelon, F.M., et al., "Westinghouse ECCS Evaluation Model - Supplementary Information," WCAP-8471, April 1975 (Proprietary) and WCAP-8472, April 1975 (Non-Proprietary).

3. "Westinghouse ECCS Evaluation Model October 1975 Version," WCAP-8622 November 1975 (Proprietary), and WCAP-8623, November 1975 (Non-Proprietary).

4. Letter from C. Eicheldinger of Westinghouse Electric Corporation to D. B. Vassallo of the Nuclear Regulatory Commission, Letter Number NS-CE-924, January 23, 1976.

5. "Supplement to the Status Report by the Directorate of Licensing in the matter of Westinghouse Electric Corporation ECCS Evaluation Model Conformance of 10 CFR 50 Appendix K, "Federal Register, November 1974.

6. Letter from C. Eicheldinger of Westinghouse Electric Corporation to V. Stello of the Nuclear Regulatory Commission, Letter Number NS-CE-1163, August 13, 1976.

7. "Westinghouse ECCS Evaluation Model, February 1978 Version", WCAP-9220-P-A (Proprietary Version)), WCAP-9221-A (Non-Proprietary Version), February, 1978.

8. Letter from T. M. Anderson of Westinghouse Electric Corporation to John Stolz of the Nuclear Regulatory Commission, Letter Number NS-TMA-1981, November 1, 1981.

9. Letter from T. M. Anderson of Westinghouse Electric Corporation to R. L. Tedesco of the Nuclear Regulatory Commission, Letter Number NS-TMA-2014, December 11, 1978.

10. "Safety Evaluation Report on ECCS Evaluation Model for Westinghouse Two-Loop Plants", November, 1977.

5.2 CONSTRUCTION RELATED EVALUATIONS

Rigging and transportation of heavy load requirements have been evaluated. Administrative procedures and controls will be established to minimize the potential for of any mishap. Nevertheless, the potential for rigging and construction incidents to occur have been postulated. The evaluations below demonstrate that the in situ configuration, augmented where appropriate with temporary physical protection, can accommodate all events analyzed.

The conclusion reached by the analysis of construction related incidents is that any loss of safety-related functions has been precluded. Therefore, there is no unreviewed safety question associated with the construction activity.

5.2.1 Handling of Heavy Objects

As described in Section 3.1.5, precautions will be taken to preclude the possibility that a rigging or transportation incident will adversely affect any component, system or structure important to the nuclear safety of either unit. These precautions include training of equipment operating personnel, additional protection of buried piping and duct banks where necessary along the steam generator haul routes, controls on haul routes and equipment speed, and controls on lift heights, travel directions, location and swing arcs for both loaded and unloaded cranes. However, for the purpose of evaluation, certain construction related incidents were analyzed and the results of the analyses are summarized in the following subsections.

These analyses demonstrate that the spectrum of postulated events will not preclude the ability to achieve/maintain a safe shutdown condition. These events are not likely to occur. In all cases analyzed, these events have been precluded by design and/or temporary augmented protective measures.

5.2.1.1 Overturning of a Loaded Trailer

Analyses were performed to determine the conditions which would be required to overturn a typical trailer loaded with a steam generator lower assembly. The following assumptions were made for the purpose of these analyses:

a. A multi-axle, multi-tire trailer with a bed height of 4 feet above the ground.

b. Trailer tire span width of 12 feet out-to-out of tires.

c. A combined trailer weight and steam generator saddle weight of 70 tons with a center of gravity at 4 feet from ground elevation.

d. A steam generator lower assembly weight of 205 tons with center of gravity at 12 feet from ground elevation.

e. A worst case turn radius of 25 feet.

Results of analyses indicate that the loaded trailer would become unstable and overturn if inclined beyond 31 degrees from the horizontal, or if the trailer exceeds a speed of 15 miles per hour in a turn radius of 25 feet.

For the following reasons, it is concluded that overturning of a typical trailer is highly unlikely:

a. The haul routes do not have any banking; therefore, the trailer will not be inclined laterally. In addition, as described in Subsection 3.1.1.2, haul routes will be evaluated and upgraded, if necessary, to preclude the possibility of roadway collapse.

b. The turning radius of any haul road on the plant site will significantly exceed the conservatively assumed turn radius of 25 feet.

c. A speed less than 15 mph will be maintained by administrative controls.

5.2.1.2 Effect of Postulated Rigging Incidents on Safety-Related Plant Structures

Postulated Crane Boom Drop

There are no safety related structures within range of a 360° radius of any crane boom in the working area adjacent to the Unit 1 containment hatch.

Postulated Steam Generator Lower Assembly Drop

There are not subterranean structures at the containment hatch either safety-related or otherwise. Therefore, in the event that a steam generator is dropped while being transferred to or from the trailer, no affect on to an existing structure is expected.

The structures which could be impacted by rigging incident have not been evaluated further because they do not perform safety-related functions during steam generator repair on that unit. These structures are as follows and related to the corresponding location identified in Fig. 5-1:

(Location A)	Containment	- During the repair, fuel is removed from the affected containment.
(Location B)	Service Bldg.	-

(Location C) Extension Bldg. -

(Location D) Overhead Electrical Wires - Three overhead electrical wires which pass over the work area and possibly within range of the crane boom(s) will be out of service during Unit 1 outage. Although normal construction practices will be followed to prevent contact with the wires, a postulated accident which results in severing any or all three lines will have no consequential impact on the safety of the plant or the workers since the lines will be out of service with the shutdown of Unit 1.

5.2.2 Radioactive Releases and Dose Assessment

Radioactive airborne and liquid releases have been evaluated for the repair effort using conservative, bounding parameters and assumptions. In order to assess the significance of these releases, they were compared with the radioactive releases at Point Beach in the year 1981. The total calculated release per unit for the repair effort was found to be a small fraction of the 1981 radioactive releases per unit and, therefore, is acceptable.

5.2.2.1 Airborne Releases

Airborne effluent releases to the environment resulting from this type of repair effort have been estimated in Reference 1 as follows:

The primary airborne releases of radionuclides during steam generator removal are due to 1) cutting the reactor coolant piping and 2) cutting other system piping. Containment envelopes are assumed to be used when cutting the reactor coolant piping. These containment envelopes have a HEPA filter in their ventilation system and are exhausted through the plant ventilation system. For other cutting operations, no containment envelopes are assumed. For these calculations, it is assumed that all HEPA filters are preceded by a demister, which is necessary to retain filter integrity. Segmenting the steam generator at the transition cone and the internal wrapper does not contribute significantly to airborne releases because the contamination levels on the secondary side of the generator are several orders of magnitude below those on the primary side.

Airborne releases were calculated as follows:

Cutting the reactor coolant piping

1. Four cuts with a 0.95-cm kerf are made in 86-cm-ID pipe.

2. $4 \times 0.95 \times 86\ \pi = 1030\ cm^2$ of material vaporized.

3. The contamination level on the interior of the piping is 86 $\mu Ci/cm^2$ (see Table 5-3).

4. $1030\ cm^2 \times 86\ \mu Ci/cm^2 = 8.9 \times 10^4\ \mu Ci$ released.

5. With a decontamination factor of 10^4 (two HEPA filters preceded by demisters), release to the atmosphere is 8.9 μCi per steam generator.

Cutting other system piping

1. Single cuts with a 0.95-cm kerf are made in six 15-cm-ID and six 5-cm-ID pipes, and two cuts are made in one 76-cm-ID (steam line) and one 36-cm-ID (feedwater) pipe.

2. $0.95 \times (6 \times 15\ \pi + 6 \times 5\ \pi + 2 \times 76\ \pi + 2 \times 36\ \pi) = 1.0 \times 10^3\ cm^2$ of material vaporized.

3. The contamination level on the interior of the pipes is 6.2 $\mu Ci/cm^2$ (see Table 5.2-1).

4. $1.0 \times 10^3\ cm^2 \times 6.2\ \mu Ci/cm^2 = 6.4 \times 10^3\ \mu Ci$ released.

5. With a decontamination factor of 10^2 (one HEPA filter preceded by a demister), release to the atmosphere is 64 μCi per steam generator.

Assuming two steam generators per reactor unit, the total release for cutting operations would be 146 μCi. The radionuclide distribution would be similar to that listed in Table 5-4.

Actual airborne releases (Table 5-5) measured during the steam generator replacement at Surry Unit 2 were 101.3 Ci of noble gases, 6.88×10^{-6} Ci of iodines, and 1.32×10^{-3} Ci of particulates.[2] Airborne releases from fuel unloading and reloading are included in the Surry measurements.

5.2.2.2 Environmental Consequences of Airborne Releases

The critical organ and whole body doses for an adult at the worst site boundary location resulting from the estimated airborne effluent releases during the repair effort were evaluated using Reference 1 assumptions, an annual average a ground level release atmospheric dispersion factor of 1.5×10^{-6} sec/m^3, and the dose models and dose factors given in Regulatory Guide 1.109. The critical organ (lung) and the whole body doses for an adult at the site boundary are estimated to be 2.8×10^{-5} mrem and 6.8×10^{-8} mrem respectively during the repair effort for Unit 1.

5.2.2.3 Comparison with Observed Gaseous Releases and Estimated Doses During Normal Operation

The estimated releases of radioactive airborne effluents per unit during the repair effort are found to be much smaller than the observed gaseous effluent releases per unit for the Point Beach Plant during the year 1981. Observed gaseous effluent releases during 1981 are compared with estimated releases during the repair effort in Table 5-6.

The critical organ (thyroid) and whole body doses to an adult at the worst site boundary location due to the release of gaseous effluents for the year 1981 were calculated to be 0.003 and 0.07 mrem/unit, respectively. The estimated critical organ (lung) dose for the repair effort is less than 1.0 percent of the calculated critical organ dose during 1981. The estimated whole body dose for the repair effort is less than 0.0001 percent of calculated whole body dose during 1981.

5.2.2.4 Liquid Effluent Releases

Liquid effluent releases resulting from the repair effort were estimated using the following parameters and assumptions:

a. The reactor coolant system is drained 15 days after reactor shutdown and the reactor coolant is subsequently discharged (about 30 days after shutdown) after processing through a mixed

bed demineralizer and through the boric acid recovery evaporator as required. Laundry waste water is discharged without processing.

b. The decontamination factors for processing equipment are listed below and are in accordance with NRC NUREG-0017:

Processing Equipment	Decontamination Factors		
	Iodines	Cs and Rb	Others
Mixed bed demineralizer	10	2	10
Boric acid recovery evaporator	100	1,000	1,000

c. Reactor coolant concentrations are given in Table 5-7 and are based on values given in Reference 1 which were taken from NRC NUREG-0017. These values are conservative since Point Beach Unit 1 reactor coolant concentrations have been generally much lower.

d. The mass of the reactor coolant discharged after processing is 2.6×10^5 lbs.

e. Laundry releases were estimated using the expected specific activities in the laundry waste water given in Table 5-8 and assuming approximately 26,000 gal/day of laundry waste water will be discharged for approximately 180 days during the repair effort for one unit. (It is expected, however, that on the average only 10,000 gal/day of laundry waste water will be discharged during this period.)

The total radioactive liquid effluent release based on the above assumptions is estimated to be approximately 0.23 Ci/unit (chiefly laundry waste), excluding tritium and dissolved gases, and approximately 125 Ci/unit of tritium. Details of this release by isotope are given in Tables 5-9 and 5-10.

5.2.2.5 Comparison with Observed Radioactive Liquid Releases During Normal Operation

Estimated radioactive liquid releases during the repair effort are compared with the observed liquid waste releases during the year 1981 in Table 5.2-11. The estimated total radioactive liquid release per unit (excluding tritium and dissolved gases) during the repair effort is seen to be about 42 percent of the observed total liquid waste release per unit (excluding tritium and dissolved gases) during 1981. The estimated tritium release per unit during the replacement effort is about 38 percent of the observed tritium release per unit during 1981.

5.2.3 References for Section 5.2

1. Hoenes, G.R., M. A. Mueller, W. D. McCormack, 1980, Radiological Assessment of Steam Generator Removal and Replacement: Update and Revision, NUREG-CR-1595 (PNL-3454), U.S. NRC, Washington, D.C.

2. Virginia Electric and Power Company, 1979, Steam Generator Repair Program for the Surry Power Station Unit No. 2 - Final Report (Progress Report - No. 6) for the Period February 3, 1979 through December 31, 1979, NRC Docket Numbers 50-280 and 50-281, Washington, D.C.

TABLE 5-1

COMPARISON OF OPERATING PARAMETERS FOR ORIGINAL AND REPAIRED STEAM GENERATORS

PARAMETER	
Nominal power/SG	Unchanged
Nominal primary flow/SG	Unchanged
Nominal hot leg temperature, °F	Unchanged
Nominal cold leg temperature, °F	Unchanged
Feedwater temperature, °F	Unchanged
Reactor Coolant System pressure, psia	Unchanged
Nominal steam pressure, psia	Unchanged
Nominal fluid mass/SG, lb^m	Increased 2 percent
No load fluid mass/SG, lb^m	Increased 1.5 percent
No load temperature, °F	Unchanged
Steam flow	Unchanged

TABLE 5-2

COMPARISON OF DESIGN PARAMETERS FOR ORIGINAL AND REPAIRED STEAM GENERATORS

Primary Side Volume	Decreased by less than .4 percent
Number of Tubes	Decreased by 46
Tube O.D.	Unchanged
Wall Thickness	Unchanged
Primary Pressure Drop	Decreased by 0.3 psi
Fouling Factor	Unchanged
Heat Transfer Area	Decreased by 2.2 percent
Flow Area	Decreased by 1.5 percent
Equivalent Length	Increased by 1.5 percent

TABLE 5-3

Gross Contamination Levels by Location in Piping and Steam Generator (Reference 1)

Component	Contamination Level, $\mu Ci/cm^2$
Reactor coolant piping	86
Other piping	6.2
Steam generator	
Primary side	
tubes	8.2
tubesheet	140
channel head	68
partition plate	140
Secondary side	$\sim 10^{-3}$

TABLE 5-4

Point Beach Nuclear Plant, Unit 1

Estimated Steam Generator Curie Content

Isotope	Percent of Total	Estimated Curies
60 Co	62	186
58 Co	26	78
103 Ru	5.8	17.4
141 Ce	3.2	9.6
51 Cr	2.9	8.7
Balance*	0.1	0.3
TOTAL	100	300

*Other isotopes identified include 95 Zr, 95 Nb, 137 Cs, 144 Ce, 241 Am, 109 Cd, 140 La, 59 Fe, 54 Mn, 124 Sb and 106 Ru.

TABLE 5-5

Effluent Release Isotopic Distributions Steam Generator Replacement Project Surry Power Station - Unit No. 2 (Reference 2)

GASEOUS EFFLUENTS

Isotope	Total Activity Released (Ci)	Percent of Total Activity
Noble Gases		
Xe-133	99.4	98
Xe-135	1.9	2
Total	101.3	100
Iodines		
I-131	6.88×10^{-6}	100
Total	6.88×10^{-6}	100
Particulates		
Co-60	7.00×10^{-4}	53
Co-58	3.01×10^{-4}	23
Cs-137	2.19×10^{-4}	16
Cs-134	4.94×10^{-5}	4
Cr-51	4.51×10^{-5}	3
Mn-54	8.37×10^{-6}	1
Total	1.32×10^{-3}	100

TABLE 5-6

Comparison of Gaseous Effluent Releases

Isotope	Average 1981 Release/Unit (Ci)	Estimated Release During the SG Repair Effort (Ci)
Noble gases	305	Negligible
Iodines	5.2×10^{-3}	6.8×10^{-6} (1)
Particulates	9.6×10^{-2}	1.46×10^{-4}
Tritium	240	Negligible

Notes

(1) Estimated from Surry Unit 2 Data, Table 5.2-3.

TABLE 5-7

Radionuclide Concentrations in Reactor Coolant
(Reference 1)

Radio-nuclide	Half-Life, days	Concentration μCi/g	Radio-nuclide	Half-Life, days	Concentration μCi/g
^{3}H	4.51E+03[a]	1.0E+00	^{106}Rh	3.46E-04	1.0E-05
^{16}N	8.22E-05	4.0E+01	^{125m}Te	5.80E+01	2.9E-05
^{51}Cr	2.77E+01	1.9E-03	^{127m}Te	1.09E+02	2.8E-04
^{54}Mn	3.13E+02	3.1E-04	^{127}Te	3.90E-01	8.5E-04
^{55}Fe	9.86E+02	1.6E-03	^{129m}Te	3.36E+01	1.4E-03
^{59}Fe	4.46E+01	1.0E-03	^{129}Te	4.83E-02	1.6E-03
^{58}Co	7.08E+01	1.6E-02	^{131m}Te	12.5E+0	2.5E-03
^{60}Co	1.93E+03	2.0E-03	^{131}Te	1.74E-02	1.1E-03
^{83}Br	9.96E-02	4.8E-02	^{132}Te	3.26E+00	2.7E-02
^{84}Br	2.21E-02	2.6E-03	^{130}I	5.15E-01	2.1E-03
^{85}Br	1.99E-03	3.0E-04	^{131}I	8.04E+0	2.7E-01
^{86}Rb	1.87E+01	8.5E+01	^{132}I	9.5E-02	1.0E-01
^{88}Rb	1.24E-02	1.0E-01	^{133}I	8.67E-01	3.8E-01
^{89}Sr	5.06E+01	3.5E-04	^{134}I	3.65E-02	4.7E-02
^{90}Sr	1.04E+04	1.0E-05	^{135}I	2.75E-01	1.9E-01
^{91}Sr	3.96E-01	6.5E-04	^{134}Cs	7.53E+02	2.5E-02
^{90}Y	1.67E+00	1.2E-06	^{136}Cs	131E+01	1.3E-02
^{91m}Y	3.4E-02	3.6E-04	^{137}Cs	1.10E+-4	1.8E-02
^{91}Y	5.81E+01	6.4E-05	^{137m}Ba	1.78E-03	1.6E-02
^{93}Y	4.21E-01	3.4E-05	^{140}Ba	1.28E+01	2.2E-04
^{95}Zr	6.40E+01	6.0E-05	^{140}La	1.68E+0	1.5E-04
^{95}Nb	3.52E+01	5.0E-05	^{141}Ce	3.25E+01	7.0E-05
^{99}Mo	2.75E+0	8.4E-02	^{143}Ce	1.38E+0	4.0E-05
^{99m}Tc	2.51E-01	4.8E-02	^{144}Ce	2.84E+02	3.3E-05
^{103}Ru	3.93E+01	4.5E-05	^{143}Pr	1.36E+01	5.0E-05
^{106}Ru	3.68E+02	1.0E-05	^{144}Pr	5.00E-03	3.3E-05
^{103m}Rh	3.90E-02	4.5E-05	^{239}Np	2.35E+00	1.2E-03

(a) 4.51E+03 = 4.51×10^{3}

TABLE 5-8

Estimated Specific Activities of Laundry Waste Water

Isotope	Specific Activity[1] μ Ci/cc
Co-58	6.7×10^{-6}
Co-60	5×10^{-6}
Cs-137	5.4×10^{-6}
Cs-134	6.5×10^{-7}
Mn-54	7.3×10^{-7}
I-131	1.1×10^{-7}

Note

(1) Time-averaged specific activity during a period of 180 days.

TABLE 5-9

Estimated Radionuclude Releases Due to Discharge of Reactor Coolant Water[a]

Radionuclide	Release, Ci
^{3}H	1.25E+02[b]
^{51}Cr	1.1E-05
^{54}Mn	3.6E-06
^{55}Fe	2.0E-05
^{59}Fe	7.9E-06
^{58}Co	1.5E-04
^{60}Co	2.5E-05
^{86}Rb	1.7E-06
^{89}Sr	2.9E-06
^{90}Sr	1.3E-07
^{90}Y	1.3E-07
^{91}Y	5.6E-07
^{95}Zr	5.4E-07
^{95}Nb	3.5E-07
^{99}Mo	5.5E-07
^{103}Ru	3.3E-07
^{106}Ru	1.2E-07
^{125m}Te	2.5E-07
^{127m}Te	2.9E-06
^{129m}Te	9.2E-06
^{131m}Te	1.8E-12
^{132}Te	5.7E-09
^{131}I	2.6E-03
^{133}I	1.8E-12
^{134}Cs	1.5E-03
^{136}Cs	1.6E-04
^{137}Cs	1.1E-03
^{140}Ba	5.4E-07
^{140}La	7.9E-12
^{141}Ce	4.6E-07
^{143}Ce	1.4E-13
^{144}Ce	3.8E-07
^{143}Pr	1.3E-07
^{239}Np	2.2E-09
Total	1.25E + 0.2 including tritium 5.6E - 0.3 excluding tritium

(a) For a power plant with two steam generators
(b) 1.25E+02 = 1.25×10^{2}.

TABLE 5-10

Estimated Radioactive Liquid Effluent Releases During the Steam Generator Repair

Isotope	Release/Unit (Ci)
Mn-54	1.1×10^{-2}
Co-58	1.0×10^{-1}
Co-60	7.5×10^{-2}
Cs-134	1.1×10^{-2}
Cs-137	3.2×10^{-2}
I-131	4.3×10^{-3}
Total	2.3×10^{-1}
Tritium	125

TABLE 5-11

Comparison of Radioactive Liquid Effluent Releases

Isotope	Average 1981 Release/Unit (Ci)	Estimated Release During the S.G. Repair Effort[1] (Ci)
Total (excluding tritium and dissolved gases)	0.55	0.23
Tritium	326	125

(1) The total releases excluding tritium, estimated for steam generator repair activities, conservatively assumes no processing of laundry wastes prior to release. It is expected that these wastes will be processed in the plant radioactive waste processing system. Such processing would reduce the estimated releases by at least an order of magnitude.

6.0 ALARA CONSIDERATIONS

6.1 ALARA OBJECTIVES

The steam generator replacement activities described herein will be implemented at the Point Beach Nuclear Plant No. 1 which will have operated for approximately thirteen 13 years at the time of repair. As a result of irradiation and contamination, many of the tasks associated with the replacement activities will expose personnel to radiation. Radiation exposure to personnel will be maintained at levels that comply with 10 CFR 20, "Standards for Protection Against Radiation". In addition, every reasonable effort will be made to maintain exposures to radiation below the limits specified in 10 CFR 20 and as low as is reasonable achievable. Accordingly, this section provides information relevant to attaining goals and objectives for planning, designing, engineering, and implementing the steam generator replacement activities to assure that exposures of personnel will be "as low as is reasonably achievable" (ALARA). The guidance and recommendations contained in Regulatory Guide 8.8, "Information Relevant to Ensuring That Occupational Radiation Expsoures at Nuclear Power Stations Will Be As Low As Is Reasonabley Achievable", Revision 3, June 1978 have been considered in formulating the ALARA Program for the project.

The overall goal of the ALARA effort for the replacement activities are (1) to maintain the annual dose to individual personnel as low as reasonably achievable and (2) to keep the annual collective dose to personnel, i.e. total man-rem exposure, as low as reasonably achievable. In satisfying these objectives, both current technology and good work practices will be used. The means available to implement ALARA objectives are varied and must be applied on a case-by-case basis. In evaluating ALARA considerations, some decisions are obvious without a detailed study, whereas cost benefit analyses are used in some cases.

The specific objectives which have been established for the replacement activities to maintain occupational radiation exposures ALARA are:

A. Establish that the ALARA philosophy shall apply to the program

B. Engineer facilities, systems and components, and select equipment, that satisfy ALARA objectives

C. Establishment of a radiation control program, plans and procedures

D. Make supporting equipment, instrumentation and facilities available

E. Preplan and schedule all activities to minimize duration, exposure and number of people

F. Assign trained personnel to perform replacement activities

6.2 STEAM GENERATOR ALARA PROGRAM

For purposes of discussion, the information presented herein will be in the context of the steam generator replacement activities, although many of the principles and practices identified may be applicable for normal plant operation, and have been applied to those activities. Some of the items identified are unique to the replacement program. For steam generator repair, the ALARA Program has not been developed as an independent document, but is included as part of this submittal and other special instructions or procedures issued for the steam generator project.

As stated herein, there is a management policy for, and commitment to, ensuring that the exposure of personnel to radiation is ALARA. This policy and commitment is implemented by existing procedures and instructions and by special procedures applicable to the replacement activities. The activities involved with the overall replacement are identified as discrete "work packages". These detailed work packages include appropriate procedures, instructions, drawings, etc. to assure that the work can be completed with a minimum of radiation exposure. These work packages include any special provisions that are necessary in

performing the work, e.g. temporary shielding. Special emphasis has been placed on the engineering and planning prior to issuing "work packages" to assure that ALARA objectives are incorporated.

The steam generator project organization reflects a commitment to ALARA objectives. A full time engineer knowledgeable with health physics practices is assigned to the headquarters organization to assist in the planning phase. During the engineering and planning phase, he is assisting in establishing basic criteria for implementing ALARA objectives, as well as working with the engineers, planners and consultants in establishing specific requirements. During the actual work a full time Health Physics Director, knowledgeable with health physics practice, will implement all health physics activities, through Health Physics Shift Coordinators and Health Physics Technicians. The Health Physics Director will have line responsibility through the Site Manager and Program Manager to the WE Special Projects Administrator.

Health physics procedures written for the steam generator project will be utilized. These procedures provide instructions for HP related items and implement applicable Point Beach Health Physics Procedures and Policies. The Health Physics Director will be responsible for assuring that an effective measurement system is established, that results are reviewed with the WE Health Physicist, and that corrective actions are taken when attainment of the specific objectives appear to be compromised. The appropriate resources needed to achieve ALARA goals and objectives will be provided. The Health Physics Director and Health Physics Shift Coordinators will be able to call upon the headquarters organization as well as consultants for support.

The basic responsibilities of the Health Physics Director for the replacement activities includes:

A. Participating in design reviews for facilities and equipment that can affect potential radiation exposures;

B. Identifying locations, operations, and conditions that have the potential for causing significant exposures to radiation;

C. Initiating and implementing an exposure control program;

D. Developing plans, procedures, and methods for keeping radiation exposures of plant personnel ALARA;

E. Reviewing, commenting on, and recommending changes in job procedures to maintain exposures ALARA;

F. Developing and participating in training programs related to work in radiation areas or involving radioactive material;

G. Supervising the radiation surveillance program to maintain data on exposures of and doses to plant personnel, by specific job functions and type of work;

H. Supervising the collection, analysis, and evaluation of data and information attained from radiological surveys and monitoring activities;

I. Ensuring that adequate radiation protection coverage is provided for plant personnel during all working hours.

J. Coordinate activities of the steam generator project with those of the operating unit.

K. Ensuring that Point Beach Health Physics Procedures and Policies are implemented and that the WE Health Physicist is kept informed of Health Physics related activities.

6.3 TRAINING AND INSTRUCTION

A health physics training program currently in operation will be applied to the steam generator repair activities. Personnel working on the

steam generator project will receive instructions and training in exposure control and emergency procedures. All personnel involved in steam generator repair activities whose duties require (1) working with radioactive materials, (2) entering radiation areas, or (3) directing the activities of others who work with radioactive materials or enter radiation areas will receive training. The training program includes sufficient instruction in the biological effects of exposure to radiation to permit the individuals receiving the instruction to understand and evaluate the significance of radiation doses in terms of the potential risks. The training program also includes instruction on radiation protection rules for the plant and the applicable federal regulations.

It is planned to utilize experienced and trained personnel to implement the replacement program. The use of highly skilled craft labor should permit tasks to be performed reliably and more effeciently. Specific training sessions will be held for tasks unique to the replacement activities.

6.4 ENGINEERING AND DESIGN REVIEWS

The overall steam generator replacement program will be implemented by the use of "work packages" that are amenable to efficient and timely review. These packages contain all the information required to implement a specific task associated with the project, e.g. cutting the steam generator. Each of these packages is subject to intensive review, including operation, maintenance, construction, quality assurance, health physics, and engineering personnel. The coordination in the various groups is the responsibility of the cognizant engineer. This coordinated effort by these individuals ensures that the objectives of the ALARA Program are achieved.

To the extent possible, the repair activities reflect considerations of personnel required to perform maintenance and inservice inspection operations that could lead to substantial personnel exposures. Specifications for repair equipment reflect the objectives of ALARA as shown by the following examples:

A. Although the overall replacement itself is expected to reduce future occupational exposure, a number of specific items were also addressed in the specification. In addition to those identified in Section 2.0 a special device has been designed for removing primary manway covers.

B. Special lifting lugs to facilitate handling and installation of reactor coolant pipe sections, thus minimizing exposure.

6.5 DESIGN FEATURES

The steam generator replacement activities involve the repair of an existing facility; therefore, the flexibility to provide features to address ALARA objectives is limited. However, to the extent possible, special provisions are being considered that will address ALARA objectives during installation and after the unit is returned to service. Although the major source of personnel exposure will be from external sources, there is a potential for doses from internal exposure. In establishing work procedures and preparing engineering designs, the factors which determine the doses from internal and external sources are considered.

For external exposures the primary concern in establishing work procedures and designs is the need to limit the time personnel remain in the radiation field and the intensity of the radiation field. In order to limit the exposure time, efforts are being made to thoroughly preplan the work activity prior to its actual accomplishment, using mock-ups, use of highly qualified individuals, use of training aids, etc. In simple terms, the goal is to minimize the amount of time required to complete the job. In addition to minimizing man-rem exposure, it also results in significant economic benefits.

The intensity of the radiation field is determined by (1) the quantity of radioactive material, (2) the nature of the emitted radiation, (3) the nature of shielding between the radiation source and the worker, and (4) geometry. While it is rather straight forward in limiting the length of the stay time, it is somewhat subjective to determine how much reduction in the radiation field is cost beneficial. Each circumstance must be treated on a case-by-case basis. Methods for reducing the radiation fields for the steam generator replacement activities are discussed in Section 3.3.5 of this report.

Internal radiation exposure is an important consideration for the activities associated with replacement because of the potential for airborne contamination attributable to cutting, welding, movement, disassembly, etc. The parameters important in determining doses from internal exposures are 1) the quantity of radioactive material taken into the body, 2) the nature of the material and 3) the time retained in the body. Consequently, the basic variables that can be controlled during the repair activities to limit doses from internal exposures are those that limit 1) the amount of contamination, 2) the disposal of the contamination, and 3) the length of time that personnel must spend in contaminated areas. Each situation must be treated on a case-by-case basis. Methods for eliminating or minimizing internal doses are discussed in sections 3.3 and 3.4 of this report.

Radiation sources within a nuclear power plant differ appreciably with respect to location, intensity and characteristics. Unlike a new power plant, where the parameters affecting radiation exposure must be estimated using standards or experience, the radiation environment for the steam generator replacement activities exists and can be quantified. Therefore, the environmental conditions can be determined more exactly for each location within the station. As an integral part of the planning activities for the project, existing survey data, as well as new data, are being reviewed to establish exposure levels. Once these levels are established, techniques can be applied to reduce them commensurate with their cost-benefit.

To illustrate some of the specific measures that are being implemented and considered, each of the items in Section C.2, C.3 and C.4 of Regulatory Guide 8.8 is addressed herein below and is numbered accordingly. For ease of reference and comparative purposes, each of the RG 8.8 recommendations is presented in tabular form in Table 6-1, with a general discussion of those measures which are tentatively planned for the steam generator replacement activities.

6.6 RADIOLOGICAL IMPACT

6.6.1 IN-PLANT DOSES

The removal of the original steam generators will involve cutting along the transition cone just below the upper girth weld. The inlet and outlet reactor coolant piping, the steam line piping, and the feedwater piping, and other miscellaneous piping will be cut to facilitate the removal of the lower shell. the upper shell of the steam generator assembly will be lifted off and placed in a storage/work location in the containment. The lower assembly will then be lifted from its supports and transported out of the containment through the equipment hatch. The replacement steam generator will then be installed in the same manner, only with the procedures reversed. The upper and lower assemblies will be welded together in the field. A more detailed description of these procedures is provided in Section 3.0 of this report.

The performance of the above tasks will result in doses to individuals. Table 6-2 presents a breakdown of the estimated man-rem dose from direct radiation exposure for the removal of the old steam generator and the installation of the new steam generators. These values are best estimates at the present time and may be updated as additional survey data becomes available. The total exposure predicted for the repair is about 1390 man-rem.

6.6.2 DOSES TO THE PUBLIC

Due to the nature of the cutting and welding which will take place during the steam generator replacement there is the possibility of airborne particulates being generated. Steps will be taken to minimize or prevent this occurence, if necessary (i.e. glove boxes, tents, etc.) However, since the ventilation flow in the containment will be maintained so that there will be an inward flow of air through any openings, with the exhaust through the containment purge filters, the possibility of releases of radioactive particulates is expected to be very small. It is also expected that there may be contaminated liquids generated during these operations associated with local decontamination, laundry, etc. These liquids will be monitored for radioactivity; any releases will be controlled by treatment prior to discharge. Total off-site radiological dose due to replacement activities for each unit is expected to be less than that which would result if the unit were operating.

Following replacement of the steam generators and resumption of operation, it is expected that there will be an over-all reduction in unit operational radiological impact due to improved steam generator performance.

TABLE 6-1

ALARA PROVISIONS

R.G. 8.8 COMMENT	STEAM GENERATOR REPLACEMENT PROGRAM PROVISIONS
2. Facility and Equipment Design Features	
a. Access Control of Radiation Areas To avoid unnecessary and inadvertent exposures of personnel to radiation, the magnitude of the potential dose rates at all locations within the station should be measured periodically during operation to determine current exposure potentials. Zones associated with the higher dose rates should be kept as small as reasonably achievable consistent with accessibility for accomplishing the services that must be performed in those zones, including equipment laydown requirements. Radiation zones where station personnel spend substantial time should be designed to the lowest practical dose rates.	a. Potential dose rates will be estimated using actual survey data, both historical and new. At the beginning of the outage a complete detailed survey will be taken in accordance with a preplanned standard format. This survey will be periodically updated. Zones will be established in the containment work areas identifying the exposure level in each work zone. This data will be periodically updated. Zones with high dose rates will be kept as small as possible considering the work requirements. A detailed laydown study is now in progress and a laydown map will be issued for the actual work. Specific low radiation zones will be established in the containment work area which will allow personnel to take "rest breaks" without leaving the general work area. This "rest area" will have a background radiation exposure of 5 mR per hour or less.
A system should be established to permit effective control over personnel access to the radiation areas and control over the movement of sources of radiation within	

R.G. 8.8 COMMENT	STEAM GENERATOR REPLACEMENT PROGRAM PROVISIONS
the station. Where high radiation areas (100 mrem/hr) exist, 10 CFR Part 20, 20.203 requires that station design features and administrative controls provide effective ingress control, ease of egress, and appropriate warning devices and notices. Access control of radiation areas also should reflect the following considerations:	
(1) Extraordinary design features are warranted to avoid any potential dose to personnel that is large enough to cause acute biological effects and that could be received in a short period of time. Positive control of ingress to such areas, permanent shielding, source removal, or combinations of these alternatives can reduce the dose potential.	1. An access control point will be established for the containment area at the equipment hatch. Access to the containment by steam generator replacement personnel will be through this point. Access through the the existing personnel hatch will be minimized. Access through the personnel hatch will be controlled at the current control point location. Part 20 requirements will be satisfied by appropriate devices, barriers, etc. Prior to the commencement of work, high radiation areas will be identified. The use of shielding and removal of source material will be implemented. As a goal, high radiation areas will be reduced to a field of less than 50 mR/hr. Where not practicable to do so, appropriate measures will be taken to control access to the area.
(2) Administrative controls such as standard operating procedures can be effective in preventing inadvertent exposures of personnel and the spread of contamination when radioactive	2. Current plant procedures will be augmented by special procedures covering steam generator replacement activities. Appropriate "frisking" stations will be

R.G. 8.8 COMMENT	STEAM GENERATOR REPLACEMENT PROGRAM PROVISIONS
material or contaminated equipment must be transported from one station location to another and when the route of transport through lower radiation zones or "clean" areas cannot be avoided.	used to minimize the potential spread of contamination.
(3) Station features such as platforms or walkways, stairs, or ladders that permit prompt accessibility for servicing or inspection of components located in higher radiation zones can reduce exposure of personnel who must perform these services.	3. As part of the engineering and planning effort, scaffolding, hoisting and transportation requirements are being identified. Provisions will be made for the installation of temporary scaffolding, hoisting equipment and transportation equipment to facilitate steam generator removal activities.
b. Radiation Shields and Geometry	
Radiation shields should be designed using conservative assumptions for radioactive source quantities and geometries. Calculational methods known to provide reliable and accurate results (i.e., methods and modeling techniques that have been demonstsrated to give acceptable accuracy in analyses similar to the problem of concern) should be used to determine appropriate shield thicknesses. Shield design features should reflect the following considerations to maintain occupational radiation exposures ALARA:	
(1) Exposure of personnel servicing a specific component (such as a pump, filter, or valve) to radiation from other components containing radioactive material can be reduced by providing shielding between the individual	1. Radiation shielding material will be used where possible to minimize radiation exposure. This temporary shielding may consist of standard components such as lead blankets, etc., or, in some cases special

TABLE 6-1 (Continued)

R.G. 8.8 COMMENT	STEAM GENERATOR REPLACEMENT PROGRAM PROVISIONS
components that constitute substantial radiation sources and the receptor.	shields will be fabricated. For example, special shielded plugs will be installed in all openings in the steam generator lower shell assemblies prior to movement out of the containment.
(2) Where it is impracticable to provide permanent shielding for individual components that constitute substantial radiation sources, the exposure of personnel maintaining such components can be reduced (a) by providing as much distance as practicable between the serviceable components and the substantial radiation sources in the area and (b) by providing temporary shields around components that contribute substantially to the dose rate.	2. The work described herein involves the repair of an existing facility, therefore, there is limited opportunity to change the basic plant design or layout. Temporary shielding will be provided while working on components. For example, the exposed piping in the reactor coolant system follow cutting will be fitted with plugs and other shielding material.
(3) Potential exposure of station personnel to radiation from certain systems containing radiation sources can be reduced by means of a station layout that permits the use of distance and shielding between the sources and work locations. These systems include (but are not limited to) the NSSS and the reactor water cleanup, offgas treatment, solid waste treatment, and storage systems, as well as systems infrequently containing radiation sources, such as the standby gas treatment and residual heat removal systems.	3. Not applicable to repair work.
(4) Streaming or scattering of radiation from locally shielded components (such as cubicles) can be reduced by providing laby-	4. Streaming of radiation will be minimized by installing shielding, such as plugs in open ended pipe lines following cutting.

TABLE 6-1 (Continued)

R.G. 8.8 COMMENT	STEAM GENERATOR REPLACEMENT PROGRAM PROVISIONS
rinths for access. However, such labyrinths or other design features of the cubicle should permit the components to be removed readily from the cubicle for repair or replacement where such is work expected or anticipated. Single-scatter labyrinths may be inadequate if the cubicle contains a substantial radiation source.	The steam generator primary side manways will remain in place during the repair process to eliminate streaming.
(5) Streaming of radiation into accessible areas through penetrations for pipes, ducts, and other shield discontinuities can be reduced (a) by means of layouts that prevent substantial radiation sources within the shield from being aligned with the penetrations or (b) by using "shadow" shields such as shields of limited size that attenuate the direct radiation component. Streaming also can occur through roofs or floors unless adequate shielding encloses the source from all directions.	5. Streaming of radiation will be minimized by installing shielding, such as plugs in open ended pipe lines following cutting.
(6) The exposure of station personnel to radiation from pipes carrying radioactive material can be reduced by means of shielded chases.	6. Not specifically applicable to repair program.
(7) Design features that permit the rapid removal and reassembly of shelding, insulation, and other material from equipment that must be inspected or serviced periodically can reduce the exposure of station personnel performing these activities.	7. The insulation presently installed on the steam generator and certain portions of the piping connected thereto will not be be reused. New reflective type insulation will be designed to provide quick and easy access to areas subject to in-service inspection.

TABLE 6-1 (Continued)

R.G. 8.8 COMMENT	STEAM GENERATOR REPLACEMENT PROGRAM PROVISIONS
(8) Space within cubicles and other shielding to provide laydown space for special tools and ease of servicing activities can reduce potential doses by permitting the services to be accomplished expeditiously, thus reducing exposure time.	8. Not specifically applicable to repair program.
(9) The exposure of personnel who service components that constitute substantial radiation sources or are located in high radiation fields can be minimized by removing the components and transporting them to low radiation zones where shielding and special tools are available. Design features that permit the prompt removal and installation of these components can reduce the exposure time.	9. While this provision is intended to apply to permanently installed equipment, the general philosophy will be followed in the repair activities. For example, the steam generator upper shell will be refurbished in a lower radiation area that will be equiped with special jib cranes to facilitate the change out of the moisture separation equipment.
(10) Floor and equipment drains, piping, and sumps that are provided to collect and route any contaminated liquids that might leak or be spilled from process equipment or sampling stations can become substantial radiation sources. The drain lines can be located in concrete floors, concrete ducts, columns, or radwaste pipe chases to provide shielding. These systems can also become a source of airborne contamination because of the potential for gases to form in, and be released by, such systems.	10. Not specifically applicable to repair program.

TABLE 6-1 (Continued)

R.G. 8.8 COMMENT	STEAM GENERATOR REPLACEMENT PROGRAM PROVISIONS
c. Process Instrumentation and Controls	
Appropriate station layout and design features should be provided to reduce the potential doses to personnel who must operate service, or inspect station instrumentation and controls. The following considerations should be reflected in selecting the station features.	
(1) The exposure of personnel who must manually operate valves or controls can be reduced through the use of "reach rods" or remotely operated valves or controls. However, these devices can require lubrication and maintenance that can be the source of additional exposures, and these factors should be taken into consideration.	1. Not specifically applicable to the repair program.
(2) The exposure of personnel who must view or operate instrumentation, monitors, and controls can be reduced by locating the readouts or control points in low radiation zones.	2. While this provision is intended to apply to permanently installed equipment, the welding of the steam generator will utilize a a remote control center for monitoring weld parameters.
(3) Instrumentation must satisfy functional requirements, but the exposure of personnel can be reduced if the instruments are designed, selected, specified, and located with consideration for long service-life, ease and low frequency of maintenance and calibration, and low crud accumulation. Operating experience should be recorded,	3. Instrumentation will be evaluated and appropriately selected for the specific function to be performed.

TABLE 6-1 (Continued)

R.G. 8.8 COMMENT	STEAM GENERATOR REPLACEMENT PROGRAM PROVISIONS
evaluated, and reflected in the selection of replacement instrumentation.	
(4) The use of instrumentation that contains minimal quantities of contaminated working fluid, (for example, pressure transducers rather than bellows-type pressure gauges) can reduce the potential for exposure at the readout locations.	4. Not specifically applicable to the repair program.
d. Control of Airborne Contaminants and Gaseous Radiation Sources	
Station design features should be provided in all station work areas to limit the average concentrations of radioactive material in air to levels well below the values listed in Appendix B, Table 1, Column 1 of 10 CFR Part 20. Effective design features can minimize the occurrence of occasional increases in air contamination and the concentrations and amounts of contaminants associated with any such occasional increases. Designs that permit repeated, identified releases of large amounts of radioactive materials into the air spaces occupied by personnel are contrary to an ALARA program.	During the steam generator replacement activities, the potential for airborne contamination is increased because of the work tasks required in the removal process, e.g. cutting into radioactively contaminated piping systems. Special measures will be implemented to minimize and control such airborne and gaseous contamination, such as the use of temporary enclosures and filtering systems. Respiratory protection equipment will be used s required to further assure personnel safety.
Station design features should provide for protection against airborne radioactive material by means of engineering controls such as process, containment, and ventilation equipment. The routine provision of	

TABLE 6-1 (Continued)

R.G. 8.8 COMMENT	STEAM GENERATOR REPLACEMENT PROGRAM PROVISIONS
respiratory protection by use of individually worn respirators rather than engineered design features is generally unacceptable. The use of respirators however, might be appropriate in certain nonroutine or emergency operations when the application of engineering controls is not feasible or while such controls are being installed.	
The approved use of respirators is subject to the requirements of 10 CFR Part 20, 20.103, "Exposure of Individuals to Concentration of Radioactive Materials in Air in Restricted Areas", and to regulatory guidance on acceptable use. (See Regulatory Guide 8.15, "Acceptable Programs for Respiratory Protection", and NUREG-0041, "Manual of Respiratory Protection Against Airborne Radioactive Materials". Design features of the station ventilation system and gaseous radwaste processing systems should reflect the following considerations.	Respirators will satisfy the requirements of 10 CFR 20, as well as R.G. 8.15 and NUREG-0041.
(1) The spread of airborne contamination within the station can be limited by maintaining air pressure gradients and air flows from areas of low potential airborne contamination to areas of higher potential contamination. Periodic checks would ensure that the design pressure differentials are being maintained.	1. During the steam generator replacement activities when the equipment hatch is open, the containment ventilation system will be operated to assure that air flow is from the outside into the containment, i.e. there will be no outleakage from the containment.

TABLE 6-1 (Continued)

R.G. 8.8 COMMENT	STEAM GENERATOR REPLACEMENT PROGRAM PROVISIONS
(2) Effectively designed ventilation systems and gaseous radwaste treatment systems will contain radioactive material that has been deposited, collected, stored, or transported within or by the systems. Exposures of station personnel to radiation and to contamination from ventilation or gaseous radwaste treatment components occur as a result of the need to service, test, inspect, decontaminate, and replace components of the systems or perform other duties near these systems. Potential doses from these systems can be minimized by providing ready access to the systems, by providing space to permit the activities to be accomplished expeditiously, by separating filter banks and components to reduce exposurs to radiation from adjacent banks and components, and by providing sufficient space to accommodate auxiliary ventilation or shielding of components.	2. Not specifically applicable to the repair program.
(3) Auxiliary ventilation systems that augment the permanent system can provide local control of airborne contaminants when equipment containing potential airborne sources is opened to the atmosphere. Two types of auxiliary ventilation systems have proven to be effective. In areas where contaminated	3. Auxiliary ventilation systems will be utilized during the steam generator replacement activities to provide local control of airborne contaminants when equipment containing potential airborne sources is open to the atmosphere. When contaminated piping systems are cut they

TABLE 6-1 (Continued)

R.G. 8.8 COMMENT	STEAM GENERATOR REPLACEMENT PROGRAM PROVISIONS
equipment must be opened frequently, dampers and fittings can be provided in ventilation ducts to permit the attachment of flexible tubing or "elephant trunks" without imbalancing the ventilation system.. In areas where contaminated equipment must be opened infrequenetly, portable auxiliary ventilation systems featuring blowers, HEPA filters, and activated charcoal filters (where radioiodine might be anticipated) on carts can be used effectively. Portable auxiliary ventilation systems should be tested frequently to verify the efficiency of the filter elements in their mountings. When the efficiency has been verified, the system may be exhausted to the room or the ventilation exhaust duct without further treatment and thus imbalance of the permanent ventilation system can be avoided.	will be surrounded by appropriate "tents" or gloveboxes with portable blower and filtration equipment. A temporary containment ventilation system may be used to maintain the containment at a slightly negative pressure to assure no degradation of the installed system.
(4) Machining of contaminated surfaces (e.g., welding, grinding, sanding, or scaling) or "plugging" of leaking steam generator or condenser tubes can be substantial sources of airborne contamination. These sources can be controlled by using auxiliary ventilation systems.	4. Machining operations will be controlled to assure that potential airborne contamination is contained.

R.G. 8.8 COMMENT	STEAM GENERATOR REPLACEMENT PROGRAM PROVISIONS
(5) Sampling stations for primary coolant or other fluids containing high levels of radioactive material can constitute substantial sources of airborne contamination. Such sources can be controlled by using auxiliary ventilation systems.	5. Not specifically applicable to the repair program.
(6) Wet transfer or storage of potentially contaminated components will minimize air contamination. This can be accomplished by keeping contaminated surfaces wet, by spraying, or, preferably, by keeping such surfaces under water.	6. Not specifically applicable to the repair program.
e. Crud control	
Design features of the primary coolant system, the selection of construction materials that will be in contact with the primary coolant, and features of equipment that treat primary coolant should reflect considerations that will reduce the production and accumulation of crud in stations where it can cause high exposure levels. The following item should be considered in the crud control effort.	
(1) Production of Co-58 and Co-60, which constitute substantial radiation sources in crud, can be reduced by specifying, to the extent practicable, low nickel and low cobalt bearing materils for primary coolant pipe,	1. The materials of construction of the reactor coolant system will essentially remain the same. Stainless steel support plates will be used instead of carbon steel.

R.G. 8.8 COMMENT	STEAM GENERATOR REPLACEMENT PROGRAM PROVISIONS
tubing, vessel internal surfaces, heat exchangers, wear materials, and other components that are in contact with primary coolant. Alternative materials for hard facings of wear materials of high-cobalt content should be considered where it is shown that these high-cobalt materials contribute to the overall exposure levels. Such consideration should also take into account potential increased service/repair requirements and overall reliability of the new material in relation to the old. Alternative materials for high-nickel alloy materials (e.g., Inconel 600) should be considered where it is shown that these mateials contribute to overall exposure levels. Such consideration should also take into account potential increased service/repair requirements and overall reliability of the new materials in relation to the old.	
(2) Loss of material by erosion of load-bearing hard facings can be reduced by using favorable geometrics and lubricants, where practicable, and by using controlled leakage purge across journal sleeves to avoid entry of particles into the primary coolant.	2. Not specifically applicable to the repair program.
(3) Loss of material by corrosion can be reduced by continuously monitoring and adjusting oxygen concentration and pH in primary coolant above 250°F and by using bright hydrogen-annealed tubing and piping in the primary coolant and feedwater systems.	3. The AVT chemistry program will be used in the secondary side of the steam generators and technical specifications maintained for the primry coolant chemistry.

TABLE 6-1 (Continued)

R.G. 8.8 COMMENT	STEAM GENERATOR REPLACEMENT PROGRAM PROVISIONS
(4) Consideration should be given to cleanup systems (e.g., using graphite or magnetic filters) for removal of crud from the primary coolant during operation	4. No changes to the reactor water cleanup systems are planned. Based on the results of studies conducted for the repair program, it is not planned to perform any chemical decontamination. Also, as a result of these studies, flushing of the systems will provide no significant benefit in reducing radioactive exposure.
(5) Deposition of crud within the primary coolant system can be reduced by providing laminar flow and smooth surfaces for coolant and by minimizing crud traps in the system to the extent practicable.	5. The new lower assemblies will have flush tubes welded in the tube sheet. The tube ends presently project below the bottom of the tube sheet. This change effectively reduces entrance losses and eliminates a potential crud trap. The replacement lower assemblies will be equipped with an improved blowdown system to minimize crud deposition. The overall design of the replacement steam generators has as a design objective to minimize crud deposition. See Section 2.0 of this report for more details.
f. Isolation and Decontamination Potential doses to station personnel who must service equipment containing radioactive sources can be reduced by removing such sources from the equipmenet (decontamination) to the extent practicable, prior to servicing. Serviceable systems and components	

TABLE 6-1 (Continued)

R.G. 8.8 COMMENT	STEAM GENERATOR REPLACEMENT PROGRAM PROVISIONS
that constitute a substantial radiation source should be designed, to the extent practicable, with features that permit isolation and decontamination. Station design features should consider, to the extent practicable, the ultimate decommissioning of the facility and the following concerns:	
(1) The necessity for decontamination can be reduced by limiting, to the extent practicable, the deposition of radioactive material within the processing equipment--particularly in the "dead spaces" or "traps" in components where substantial accumulations can occur. The deposition of radioactive material in piping can be reduced and decontamination efforts enhanced by avoiding stagnant legs, by locating connections above the pipe centerline, by using sloping rather than horizontal runs, and by providing drains at low points in the system.	1. Drains will be provided in the steam generator channel heads to allow all water to be removed before entrance for maintenance and/or inspection.
(2) The need to decontaminate equipment and station areas can be reduced by taking measures that will reduce the probability of release, reduce the amount released, and reduce the spread of the containment from the source (e.g., from systems or components that must be opened for service or replacement). Such measures can include auxiliary ventilation systems (see 4.b),	2. The replacement of the steam generators will reduce the probability of radioactive releases, as well as the amount released.

TABLE 6-1 (Continued)

R.G. 8.8 COMMENT	STEAM GENERATOR REPLACEMENT PROGRAM PROVISIONS
treatment of the exhaust from vents and overflows (see 2.h(8)), drainage control such as curbing and floors sloping to local drains, or sumps to limit the spread of contamination from leakage of liquid systems.	
(3) Accumulations of crud or other radioactive material that cannot be avoided within components or systems can be reduced by providing features that will permit the recirculation or flushing of fluids with the capacity to remove the radioactive material through chemical or physical action. The fluids containing the contaminants will require treatment and this source should be considered in sizing station radwaste treatment systems.	3. Not specifically applicable to the repair program.
(4) Continuity in the functioning of processing or ventilation systems that are important for controlling potential doses to station personnel can be provided during servicing of the systems if redundant components or systems are available so that the component (with associated piping) being serviced can be isolated.	4. Not specifically applicable to the repair program.
(5) The potential for contamination of "clean services" (such as station service air, nitrogen, or water supply) from leakage from	5. Not specifically applicable to the repair program.

R.G. 8.8 COMMENT	STEAM GENERATOR REPLACEMENT PROGRAM PROVISIONS
adjacent systems containing contaminants can be reduced by separating piping for these services from piping that contains radioactive sources. Piping that carries radioactive sources can be designed for the lifetime of the station, thus avoiding the necessity for replacement (and attendant exposures) and lessening the potential for contamination of clear services if it is impracticable to provide insolation through separate chases.	
(6) Surfaces can be decontaminated more expeditiously if they are smooth, nonporous, and free of cracks, crevices, and sharp corners. These desirable features can be realized by specifying appropriate design instructions, by giving attention to finishing work during construction or manufacture, and by using sealers (such as special paints) on surfaces where contamination can be anticipated. (ANSI N-101.2 provides helpful guidance on this matter).	6. Not specifically applicable to the repair program.
(7) Where successful decontamination of important systems could be prevented by an anticipated failure of a critical component or feature, additional features that permit alternative decontamination actions can be provided.	7. Not specifically applicable to the repair program.

R.G. 8.8 COMMENT	STEAM GENERATOR REPLACEMENT PROGRAM PROVISIONS
(8) Contaminated water and deposited residues in spent fuel storage pools contribute to the exposure at accessible locations in the area. Treatment systems that remove contaminants from the water can perform more efficiently (a) if intake and discharge points for the treatment systems are located to provide enhanced mixing and to avoid stagnation areas in the pool and (b) if pool water overflows and skimmer tanks are provided. Fluid jet or vacuum cleaner type agitators can help reduce the settling of crud on surfaces of the pool system.	8. Not specifically applicable to the repair program.
g. Radiation Monitoring Systems Central or "built-in" monitoring systems that give information on the dose rate and concentration of airborne radioactive material in selected station areas can reduce the exposure of station personnel who would be required to enter the areas to obtain the data if such systems were not provided. These systems also can provide timely information regarding changes in the dose rate or concentrations of airborne radioactive material in the areas. (The installation of a central monitoring system is easier and less expensive if it is a part of the original station design.) The selection or design and installation of a central monitoring	g. Not specifically applicable to the repair program.

TABLE 6-1 (Continued)

R.G. 8.8 COMMENT	STEAM GENERATOR REPLACEMENT PROGRAM PROVISIONS
system should include consideration of the following desirable features: (1) Readout capability at the main radiation protection access control point; (2) Placement of detectors for optimum coverage of areas; (3) Circuitry that indicates component failure; (4) Local alarm and readout; (5) Clear and unambiguous readout; (6) Ranges adequate to ensure readout of the highest anticipated radiation levels and to ensure positive readout at the lowest anticipated levels; and (7) Capability to record the readout of all systems.	
h. Resin and Sludge Treatment Systems Systems used to transport, store, or process resins or slurries of filter sludge present a special hazard because of the concentrated nature of the radioactive material. Design features for resin and sludge-handling systems should reflect this concern and the following specific considerations:	h. Not specifically applicable to the repair program.

TABLE 6-1 (Continued)

R.G. 8.8 COMMENT	STEAM GENERATOR REPLACEMENT PROGRAM PROVISIONS
(1) The accumulation of radioactive material in components of systems used to process resin and sludges can be reduced by	1. Not specifically applicable to the repair program.
(a) Reducing the length of piping runs;	
(b) Using larger diameter piping (to minimize plugging);	
(c) Reducing the number of pipe fittings;	
(d) Avoiding low points and dead legs in piping;	
(e) Using gravitational flow to the extent practicable; and	
(f) Minimizing flow restrictions of processed material.	
(2) The need for maintenance and the presence of intense local radiation sources can be reduced by:	2. Not specifically applicable to the repair
(a) Using full-ported valves constructed such that the slurry will not interfere with the opening or closing of the valve and	
(b) Avoiding cavities in valves.	
(3) The deposition of resin and sludge that would occur if elbow fittings were used can be reduced by using pipe bends of at least five pipe diameters in radius.	3. Not specifically applicable to the repair program.

TABLE 6-1 (Continued)

R.G. 8.8 COMMENT	STEAM GENERATOR REPLACEMENT PROGRAM PROVISIONS
Where pipe bends cannot be used, long radius elbows are preferred.	
(4) Smoother interior pipe surfaces at connections (with attendent reductions in friction losses, deposition of material, and tendencies to "plug") can be achieved by using butt welds rather than socket welds and by using consumable inserts rather than backing rings.	4. Not specifically applicable to the repair program.
(5) Where the use of tees cannot be avoided, line losses can be reduced if the flow is through the run (straight section) of the tee, and accumulations of material in the branch of the tee can be reduced by orienting the branch horizontally or (preferably) above the run.	5. Not specifically applicable to the repair program.
(6) Slurry piping is subject to plugging that may require backflushing from the tank and equipment isolation valves and pressurizing with water, nitrogen, or air to "blow out" plugged lines. However, the use of pressurized gas for blowing out lines can present a potential contamination source and may not be effective in relieving plugged lines.	6. Not specifically applicable to the repair program.
(7) Water, air, or nitrogen for sparging can be used to fluidize resins or sludges in storage tanks. The use of gases, however, presents a potential source of airborne contamination and tank rupture from overpressures.	7. Not specifically applicable to the repair program.

R.G. 8.8 COMMENT	STEAM GENERATOR REPLACEMENT PROGRAM PROVISIONS
(8) The spread of contamination by the loss of resin or sludge through overflows and vents can be reduced by using screens, filters, or other features that will collect and retain solids. However, such features generally require cleaning by remote flushing, by rapid replacement, or by other means to reduce exposures during servicing.	8. Not specifically applicable to the repair program.
i. Other Features Station layout and station tasks should be reviewed to identify and provide special features that complement the ALARA Program. Station design should reflect consideration of the following concerns:	
(1) The selection of radiation-damage-resistant materials for use in high radiation areas can reduce the need for frequent replacement and can reduce the probability of contamination from leakage.	1. Materials used satisfy this criteria.
(2) The use of stainless steel for constructing or lining components, where is is compatible with the process, can reduce corrosion and can provide options for decontamination methods.	2. Not specifically applicable to the repair program.

TABLE 6-1 (Continued)

R.G. 8.8 COMMENT	STEAM GENERATOR REPLACEMENT PROGRAM PROVISIONS
(3) Field-run piping that carries radioactive material can cause unnecessary exposures unless due consideration is given to the routing. Such unnecessary exposures can be avoided if the routing is accomplished under the cognizance of an individual familiar with the principles of radiation protection or if a detailed piping layout is provided, i.e., if the piping is not field-run.	3. Detailed piping layout will be provided for the steam generator replacement activities.
(4) Where filters or other serviceable components can constitute substantial radiation sources, exposures can be reduced by providing features that permit operators to avoid the direct radiation beam and that provide remote removal, installation, or servicing. Standardization of filters should be considered.	4. Not specifically applicable to the repair program.
(5) The servicing of valves can be a substantial source of doses to station personnel. These doses can be reduced by providing adequate working space for easy accessibility and by locating the valves in areas that are not in high radiation fields.	5. Not specifically applicable to the repair program.
(6) Leakage of contaminated coolant from the primary system can be reduced by using live-loaded valve packings and bellow seals.	6. Not specifically applicable to the repair program.

TABLE 6-1 (Continued)

R.G. 8.8 COMMENT	STEAM GENERATOR REPLACEMENT PROGRAM PROVISIONS
(7) Potential doses from servicing valves and from leakage can be reduced by specifying and installing reliable valves for the required service, by using radiation-damage-resistant seals and gaskets, and by using valve back seats. The use of straight-through valve configurations can avoid the buildup of accumulations in internal crevices and the discontinuities that exist in valves of other configurations. In most cases, valves can be installed in the "stem-up" orientation to facilitate maintenance and to minimize crud traps. The desired features are reliability, good performance, and the ability to be maintained infrequently and rapidly.	7. Not specifically applicable to the repair program.
(8) Leaks from pumps can be reduced by using canned pumps where they are compatible with the service needs, provided that lower personnel exposures can be achieved thereby. If mechanical seals are used on a pump in a slurry service, features that permit the use of flush water to clean pump seals can reduce the accumulation of radioactive material in the seals. Drains on pump housings can reduce the radiation field from this source during servicing. Provision for the collection of such leakage or disposal to a drain sump is appropriate.	8. Not specifically applicable to the repair program.
(9) The sources of radiation such as sedimentation that occurs in tanks used to process liquids containing radioactive material and residual liquids can be reduced when servicing by draining the tanks. The design can include	9. Not specifically applicable to the repair program.

TABLE 6-1 (Continued)

R.G. 8.8 COMMENT	STEAM GENERATOR REPLACEMENT PROGRAM PROVISIONS
sloping the tank bottoms toward outlets leading to other reprocessing equipment and, where practicable, providing built-in spray or surge features.	
(10) Spare connections on tanks or other components located in higher radiation zones may be desirable to provide flexibility in operations. Exposures of personnel can be avoided if these connections are provided as a part of the original equipment rather than by subsequent modification of the equipment in the presence of radiation.	10. Not specifically applicable to the repair program.
(11) Inspections to satisfy the ASME Code and regulatory requirements can result in exposures of station personnel to radiation. Many of the objectives presented above will aid in reducing potential exposures to personnel who perform the required inspections. Station features and design should, to the extent practicable, permit inspections to be accomplished expeditiously and with minimal exposure of personnel. The ALARA effort can also be aided by prompt accessibility, shielding and insulation that can be quickly removed and reinstalled, and special tools and instruments that reduce exposure time or permit remote inspection of components or equipment containing potential radiation sources.	11. Appropriate provisions will be implemented to minimize exposure of station personnel in performing Code inspections, such as removable insulation, smooth welds, etc.

TABLE 6-1 (Continued)

R.G. 8.8 COMMENT	STEAM GENERATOR REPLACEMENT PROGRAM PROVISIONS
(12) Components can be removed from processing systems more expeditiously if adequate space is provided in the layout of the system and if the interconnections permit prompt disconnects.	12. Not specifically applicable to the repair program.
(13) Station features that provide a favorable working environment, such as adequate lighting, ventilation, working space, and accessibility (via such means as working platforms, cat walks, and fixed ladders), can promote work efficiency.	13. Temporary lighting and scaffolding will be installed to provide a favorable work environment.
(14) The exposure of station personnel who must replace lamps in high radiation areas can be reduced by using extended service lamps and by providing design features that permit the servicing of the lamps from lower radiation areas.	14. Not specifically applicable to the repair program.
(15) An adequate emergency lighting system can reduce potential exposures of station personnel by permitting prompt egress from high radiation areas if the station lighting system fails.	15. An emergency lighting system will be available for the steam generator replacement activities.

TABLE 6-1 (Continued)

R.G. 8.8 COMMENT	STEAM GENERATOR REPLACEMENT PROGRAM PROVISIONS
3. Radiation Protection Program	
A substantial portion of the radiation dose to station personnel is received while they are performing services such as maintenance, refueling, and inspection in high radiation areas. The objectives that were previously presented in Section 2(RG 8.8) can provide station design features conducive to an effective ALARA Program. However, an effective ALARA Program also requires station operational considerations in terms of procedures, job planning, record keeping, special equipment, operating philosophy, and other support. This section deals with the manner in which the station administrative efforts can influence the variable of (1) the number of persons who must enter high radiation areas or contaminated areas, (2) the period of time the persons must remain in these areas, and (3) the magnitude of the potential dose.	This section of the ALARA guidelines is directly applicable to the steam generator replacement activities and the philosophy identified will be carried out. Many efforts are being implemented to assure that the number of persons who must enter high radiation areas or contaminated areas are held to a minimum; that the period of time the persons must remain in these areas is minimized; and that the magnitude of the potential dose is maintained to the lowest levels commensurate with other considerations.
a. Preparation and Planning	
Before entering radiation areas where significant doses could be received, station personnel should have the benefit of preparations and plans that can ensure that exposures are ALARA while the personnel are performing the services. Preparations and plans should reflect the following considerations:	a. Each task will be identified as a "work package" which will contain a specific procedures, drawings, instructions, shelters and other pertinent information necessary to perform the task. These plans will be available prior to the actual commencement of the work and will have undergone extensive review by engineering, operations, health physics and construction personnel.

TABLE 6-1 (Continued)

R.G. 8.8 COMMENT	STEAM GENERATOR REPLACEMENT PROGRAM PROVISIONS
(1) A staff member who is a specialist in radiation protection can be assigned the responsibility for contributing to and coordinating ALARA efforts in support of operations that could result in substantial individual and collective dose levels.	1. A staff member qualified and experienced in radiation protection has been assigned full time to assist in preparing the "work packages". During the actual replacement activities, he will be responsible for all radiation protection activities, including dose control and monitoring, issuance of radiation work permits, etc. The specific responsibilities are identified elsewhere herein.
(2) To provide the bases for planning the activity, surveys can be performed to ascertain information with respect to radiation, contamination, airborne radioactive material, and mechanical difficulties that might be encountered while performing services.	As part of the preplanning activities historic survey data and experience has been reviewed. Supplemental surveys will have also been performed. At the beginning of the outage it is planned to make comprehensive surveys prior to the commencement of work and to conduct them periodically thereafter. Previous operating experience has been reviewed regarding mechanical difficulties and this information is being incorporated into the work packages. Since the original installation of the steam generators is very similar to that planned for replacement, this knowledge has been utilized, such as use of photographs, review of records, etc.

TABLE 6-1 (Continued)

R.G. 8.8 COMMENT	STEAM GENERATOR REPLACEMENT PROGRAM PROVISIONS
(3) Radiation surveys provided in conjunction with inspections or other activities can define the nature of the radiation fields and identify favorable locations where personnel may take advantage of available shielding, distance, geometry, and other factors that affect the magnitude of the dose rate or the portions of the body exposed to the radiation.	3. Radiation surveys will be taken at the commencement of the outage and periodically thereafter, as well as special surveys for specific tasks. The work areas, temporary shielding, etc. are being planned considering expected exposure levels.
(4) Photographs of "as installed" equipment or components can be valuable for planning purposes and can be augmented by additional photos taken during the surveys. The use of portable TV cameras with taping features has considerable merit as both an operational aid and a teaching aid.	4. Photographs have been taken for planning purposes. In addition, photographs have been utilized in the engineering and planning effort. It is planned to maintain a photographic record of work in the program. Video taping is being considered for recording certain tasks.
(5) The existing radiation levels frequently can be reduced by draining, flushing, or other decontamination methods or by removing and transporting the component to a lower radiation zone. An estimate of the potential doses to station personnel expected to result from these procedures is germane in selecting among alternative actions.	5. An extensive evaluation of possible decontamination techniques has been performed and is discussed in Section 3.4 of this report.

TABLE 6-1 (Continued)

R.G. 8.8 COMMENT	STEAM GENERATOR REPLACEMENT PROGRAM PROVISIONS
(6) A pre-operational briefing for personnel who will perform pervices in a high radiation area can ensure that service personnel understand the tasks about to be performed, the information to be disseminated, and the special instructions to be presented.	6. Preoperation briefings will be performed to instruct personnel on the requirements of specific work packages. As a minimum, each "work package" will be reviewed by the personnel performing the work. The work packages provided are self explanatory and provide sufficient information to perform the work.
(7) A program can be implemented to provide access control and to limit exposures to those persons needed to perform the required services in the radiation areas. Such a program would address conditions that require a special work permit or other special procedures.	7. An access control program will be in effect during the replacement activities. Specifically an access control point will be established at the entrance to the work area, i.e. equipment hatch and will be manned by a radiation protection staff member. Additional radiation protection personnel will be available to monitor such assignments as required. The "Radiaion Work Permit" (RWP) system presently in use at the plant will be used.
(8) A work permit form with an appropriate format can be useful for recording pertinent information concerning tasks to be performed in high radiation areas so that the information is amenable to cross-referencing and statistical analysis. Information of interest would include the following items:	8. A "Radiation Work Permit" System is presently being used at the plant. This system is presently being reviewed for used on the steam generator replacement activities, primarily as a result of the desirability to make the data obtained amenable to statistical analysis. The

TABLE 6-1 (Continued)

R.G. 8.8 COMMENT	STEAM GENERATOR REPLACEMENT PROGRAM PROVISIONS
(a) Designation of services to be performed on specific components, equipment or systems; (b) Number and identification of personnel working on the tasks; (c) Anticipated radiation, airborne radioactive material, and contamination levels, based on current surveys of the work areas, and date of survey; (d) Monitoring requirements, such as continuous air monitoring or sampling equipment; (e) Estimated exposure time required to complete the tasks and the estimated doses anticipated from the exposure; (f) Special instructions and equipment to minimize the exposures of personnel to radiation and contamination; (g) Protective clothing and equipment requirements; (h) Personnel dosimetry requirements; (i) Authorization to perform the tasks; and (j) Actual exposure time, doses, and other information obtained during the operation.	information listed in items (a) through (j) will typically be recorded for the work activities.
(9) Consideration of potential accident situations or unusual occurrences (such as gross contamination leakage, pressure surges, fires, cuts punctures, or wounds) and contingency planning	9. Where appropriate "work packages" will address potential accident situations or unusual occurrences and will include appropriate contingency planning.

TABLE 6-1 (Continued)

R.G. 8.8 COMMENT	STEAM GENERATOR REPLACEMENT PROGRAM PROVISIONS
can reduce the potential for such occurrences and enhance the capability for coping with the situations expeditiously if they occur.	
(10) Portable or temporary shielding can reduce dose rate levels near "hot spots" and in the general area where the work is to be performed.	10. Temporary shielding, e.g. lead blankets will be used to minimize dose rate levels. For instance, in the cutting and rewelding of the reactor coolant piping, shielding will be used to isolate those portions of the system which are contaminated.
(11) Portable or temporary ventilation systems or contamination enclosures and expendable floor coverings can control the spread of contamination and limit the intake by workers through inhalation.	11. Temporary ventilation systems will be used for certain work tasks, e.g. cutting of reactor coolant piping. Where appropriate, coverings will be used to minimize spread of contamination.
(12) "Dry runs" on mock-up equipment can be useful for training personnel, identifying problems that can be encountered in the actual task situation, and selecting and qualifying special tools and procedures to reduce potential exposures of station personnel.	12. Dry runs and mock-up equipment will be used for training personnel and testing equipment. For example, a full scale mock-up of the channel head and the transition cone areas will be used to simulate the welding of the generator. The actual equipment to be used at the site will be used for this demonstration. Welding technicians will also be trained on the mock-up. Special handling tools and equipment will be used extensively.

R.G. 8.8 COMMENT	STEAM GENERATOR REPLACEMENT PROGRAM PROVISIONS
	For instance, a special handling and transiport system will be installed for handling the steam generator lower assemblies during removal and installation. Temporary job cranes will be installed in the containment to facilitate the handling of the moisture separation equipment and other equipment. Trash compactors will be installed in the containment to minimize waste volume and to reduce handling. Automatic welding equipment will be used for welding the reactor coolant piping and will be used to train personnel prior to the actual work. Many other similar provisions will be implemented to reduce exposure times.
(13) Adequate auxiliary lighting and a comfortable environment (for example, vortex tube coolers for supplied air suits) can increase the efficiency of the work and thus reduce the time spent in the higher radiation zones.	13. Auxiliary lighting will be provided as required. The specific requirements have not yet been established. The containment environment should be comfortable without any significant changes since the reactor will be defueled thus eliminating the major heat source. Because the containment is fully enclosed by concrete walls, the ambient working conditions in winter and summer are expected to be comfortable. Operation of the temporary containment ventilation system will assure that there is adequate air flow in the containment.

TABLE 6-1 (Continued)

R.G. 8.8 COMMENT	STEAM GENERATOR REPLACEMENT PROGRAM PROVISIONS
(14) Radiation monitoring instruments selected and made available in adequate quantities can permit accurate measurements and rapid evaluations of the radiation and contamination levels and changes in levels when they occur. Routine calibration of instruments with approprieate sources and testing can ensure operability and accuracy of measurements.	14. Radiation monitoring equipment of the type and quantity required to monitor radiation and contamination levels will be available. Calibration of the monitoring equipment will be in accordance with the Point Beach Quality Assurance Manual.
(15) Performing work on some components inside disposable tents or, for less complicated jobs, inside commercially available disposable clear plastic glove bags can limit the spread of contamination. Such measures can also avoid unnecessary doses resulting from the need to decontaminate areas to permit personnel access or to allow for entry with less restrictive protective clothing and equipment requirements.	15. Temporary tents and glove boxes will be used where appropriate, e.g. cutting of the reactor coolant piping.
(16) Careful scheduling of inspections and other tasks in high radiation areas can reduce exexposures by permitting decay of radiation sources during the reactor shutdown period and by eliminating some repetitive surveys. Data from surveys and experience attained in previous operations and current survey data can be factored into the scheduling of specific tasks.	16. The entire outage will be scheduled in detail, commensurate with other requirements, to take advantage of radioactive decay considerations. Data from historical surveys and experience is being utilized in the planning effort.

TABLE 6-1 (Continued)

R.G. 8.8 COMMENT	STEAM GENERATOR REPLACEMENT PROGRAM PROVISIONS
b. Operations	
During operations in radiation areas, adequate supervision and radiation protection surveillance should be provided to ensure that the appropriate procedures are followed, that planned precautions are observed, and that all potential radiation hazards that might develop or that might be recognized during the operation are addressed in a timely and appropriate manner.	
(1) Assigning a health physics (i.e., radiation safety or radiation protection) technician the responsibility for providing radiation protection surveillance for each shift operating crew can help ensure adequate radiation protection surveillance.	1. There will be an adequate number of health physics personnel assigned to each shift. The duties of these individuals will be related to the steam generator replacement activities. Other members of the health physics staff who are assigned to the operating unit would be available in unusual situations.
(2) Personnel monitoring equipment such as direct-reading dosimeters, alarming dosimeters, and personnel dose rate meters can be used to provide early evaluation of doses to individuals and the assignment of those doses to specific operations.	2. Direct reading dosimeters and TLS's will be used to determine doses to individuals

TABLE 6-1 (Continued)

R.G. 8.8 COMMENT	STEAM GENERATOR REPLACEMENT PROGRAM PROVISIONS
(3) Communications systems between personnel in high radiation zones and personnel who are monitoring the operation in other locations can permit timely exchanges of information and avoid unnecessary exposures to monitoring personnel.	3. Audio communication systems will be available for use during the outage activities. A video communications system is being pursued.
c. Postoperations	
Observations, experience, and data obtained during nonroutine operations in high-radiation zones should be ascertained, recorded, and analyzed to identify deficiencies in the program and to provide the bases for revising procedures, modifying features, or making other adjustments that may reduce exposures during subsequent similar operations.	
(1) Formal or informal postoperation debriefings of station personnel performing the services can provide valuable information concerning shortcomings in pre-operational briefings, planning procedures, special tools, and other factors that contributed to the cause of doses received during the operation.	1. Postoperational debriefings will be used to obtain information regarding the requirements of the work packages.
(2) Dose data obtained during or subsequent to an operation can be recorded in a preselected manner as part of a "Radiation Work Permit" or similar program (see 3.a(8), RG 8.8) so that the data are amenable to statistical analyses.	2. The data listed in 3.a.8 (RG 8.8) will typically be recorded and analyzed.

TABLE 6-1 (Continued)

R.G. 8.8 COMMENT	STEAM GENERATOR REPLACEMENT PROGRAM PROVISIONS
(3) Information concerning the cause of component failures that resulted in the need for servicing in high radiation areas can provide a basis for revising specifications on replacement equipment or for other modifications that can improve the component reliability. Such improvements can reduce the frequency of servicing and thus reduce attendant exposures.	3. The purpose of the replacement is to accomplish this objective.
(4) Information gained in operations can provide a basis for modifying equipment selection and design features of new facilities.	4. To the extent practicable, information gained from the replacement operation will be considered in future designs.
(5) Summaries of doses received by each category of maintenance activity can be reviewed periodically by upper management to compare the incremental reduction of doses with the cost of station modifications that could be made.	5. The exposure data obtained will be compared with the estimated exposures.
4. Radiation Protection Facitilities, Instrumentation, and Equipment	
A radiation protection staff with facilities, instrumentation, and protective equipment adequate to permit the staff to function efficiently is an important element in achieving an effective ALARA program. The selection of instrumentation and other equipment and the quantities of such equipment provided for normal station operations should be adequate to meet the anticipated	Additional radiation monitoring equipment, protective clothing and related items will be furnished for the steam generator replacement activities.

TABLE 6-1 (Continued)

R.G. 8.8 COMMENT	STEAM GENERATOR REPLACEMENT PROGRAM PROVISIONS
needs of the station during normal operations and during major outages that may require supplemental workers and extensive work in high radiation areas. (Accident situations are not considered in this guide.) Station design features and provisions should reflect the following considerations.	
a. Counting Room	
A low-radiation background counting room is needed to perform routine analyses on station samples containing radioactive material collected from air, water, surfaces, and other sources. An adequately equipped counting room would include	
(1) Multichannel gamma pulse height analyzer (Regulatory Guide 5.9, "Specifications for Ge(Li) Spectroscopy Systems for Material Protection Measurements--Part 1: Data Acquisition Systems", provides guidance for selecting Ge(Li) spectroscopy systems);	1. The existing counting room is equipped with a multichannel analyzer which will be utilized.
(2) Low-background alpha-beta radiation proportional counter(s) or scintillation counter(s);	2. These counters are available.
(3) End-window Geiger-Muller (G-M) counter(s); and	3. These counters are available.

TABLE 6-1 (Continued)

R.G. 8.8 COMMENT	STEAM GENERATOR REPLACEMENT PROGRAM PROVISIONS
(4) A liquid scintillation counter for tritium analysis. Analyses of bioassay and environmental samples and whole body counting (see Regulatory Guide 8.9 "Acceptable Concepts, Models, Equations, and Assumptions for a Bioassay Program") call for additional equipment and laboratory space if the analyses are performed by station personnel rather than by other specialists through contractual arrangements.	4. Equipment available.
b. Portable Instruments Portable instruments needed for measuring dose rates and radiation characteristics would include (1) Low-range (nominally 0 to 5 R per hour) ion chambers or G-M rate meters; (2) High-range (0.1 to at least 500 R per hour) ion chambers; (3) Alpha scintillation or proportional count rate meters; (4) Neutron dose equivalent rate meters; (5) Air samplers for short-term use with particulate filters and iodine collection devices (such as activated charcoal cartridges); and (6) Air monitors with continuous readout features.	b. Appropriate equipment is available.

TABLE 6-1 (Continued)

R.G. 8.8 COMMENT	STEAM GENERATOR REPLACEMENT PROGRAM PROVISIONS
c. Personnel Monitoring Instrumentation	c.
Personnel monitoring instrumentation selections should include consideration of (1) G-M "Friskers" for detecting low level of radioactive material; (2) Direct-reading low-range (0 to 200 mR) and intermediate-range (0 to 1000 mR) pocket dosimeters (see Regulatory Guide 8.4); (3) Alarm Dosimeters; (4) Film badges and/or thermouminescent dosimeters (TLD); (5) Hand and foot monitors; and (6) Portal monitors.	Appropriate equipment is available.
d. Protective Equipment	
Utility-supplied protective equipment selection should include consideration of:	
(1) Anti-contamination clothing and equipment that meet the requirements of ANSI Z-88.2, 1969 for use in atmospheres containing radioactive materials, or the National Institue of Occupational Safety and Health's (NIOSH) "Certified Personal Protective Equipment List", July 1974, and current supplements fro DHEW/PHS.	1. Anti-contamination clothing will be used.

TABLE 6-1 (Continued)

R.G. 8.8 COMMENT	STEAM GENERATOR REPLACEMENT PROGRAM PROVISIONS
(2) Respiratory protective equipment including a respirator fitting program that satisfies the guidance of Regulatory Guide 8.15 and NUREG-0041.	2. Respiratory protective equipment is available. Also, a respirator fitting program that satisfies the guidance of Regulatory Guide 8.15 and NUREG-0041 is available and shall be utilized as acceptable.
e. Support Facilities	
Design features of radiation protection support facilities should include consideration of:	
(1) A portable-instrument calibration area designed and locted such that radiation in the calibration area will not interfere with low level monitoring or counting systems;	1. Calibration area suitable for calibration is used.
(2) Personnel decontamination area (this facility should be located and designed to expedite rapid cleanup of personnel and should not be used as a multiple-purpose area or share ventilation with food-handling areas) with showers, basins, and installed "frister" equipment;	2. A special decontamination area is being provided for the use of personnel assigned to the steam generator replacement project, and will be equipped with the appropriate facilities. The existing plant facilities will also be used if required.
(3) Facilities and equipment to clean, repair, and decontaminate personnel protectiave equipment, monitoring instruments, hand tools, electromechanical parts, or other material (highly contaminated tools or other equipment should not be decontaminated in the area used to clean respiratory equipment)	3. The existing plant decontamination facility will be used to clean, repair and decontaminate personnel, protective clothing, hand tools, etc. The need to augment cleaning of protective clothing is being pursued.

TABLE 6-1 (Continued)

R.G. 8.8 COMMENT	STEAM GENERATOR REPLACEMENT PROGRAM PROVISIONS
(4) Change rooms that (preferably) connect with the personnel decontamination area and a control station area equipped with sufficient lockers to accommodate permanent and contract maintenance workers who may be required during major outages;	4. As noted in item 2, a special personnel change facility will be provided for steam genertor replacement unit and will be equipped with the approprieate facilities such as lockers.
(5) Control stations for entrance or exit of personnel into radiation and contamination controlled access areas of the station, such as the personnel entrance to the containment buildings and the main entrance to the radwaste processing areas; these control stations also may be used as the control point for radioactive material movements throughout the station and for the storage of portable radiation survey equipment, signs, ropes, and respiratory protective equipment;	5. A control station will be established at the containment equipment hatch. Ingress and egress for the containment work area will be through this station. The personnel hatch will be used minimally as necessary.
(6) Equipment to facilitate communication between all areas throughout the station;	6. Audio communications systems will be available for use.
(7) Sufficient office space to accommodate the temporary and permanent radiation protection staff, permanent records, and technical literature.	7. The area identified in items 2 and 4, as well as a temporary construction, will contain office space to accommodate the steam generator project staff.

TABLE 6-2

ESTIMATE OF PERSONNEL RADIATION EXPOSURES FOR
STEAM GENERATOR REPLACEMENT OPERATIONS
AT POINT BEACH UNIT - I
PHASE-I SHUTDOWN AND PREPARATORY ACTIVITIES

TASK DESCRIPTION		ESTIMATED LABOR (MAN-HOURS)	ESTIMATED EXPOSURE (MAN-REM)
I	Shutdown and Preparatory Activities	58,887	237.3
II	Removal Activities	141,680	421.7
III	Installation Activities	334,138	605.8
IV	Post Installation and Startup Activities	87,700	118.3
V	Steam Generator Storage Activities	1,532	6.6
	PROJECT TOTALS	623,937 (All Tasks)	1389.7

TABLE 6-2

ESTIMATE OF PERSONNEL RADIATION EXPOSURES FOR
STEAM GENERATOR REPLACEMENT OPERATIONS
AT POINT BEACH UNIT - I
PHASE-I SHUTDOWN AND PREPARATORY ACTIVITIES

TASK DESCRIPTION	ESTIMATED LABOR (MAN-HOURS)	ESTIMATED EXPOSURE (MAN-REM)
Install Polar Crane Gibpole Modification	2,000	10.0
Installation of Jib Cranes	5,584	6.7
Misc. Disassemble Manipulator Crane	1,000	2.0
Install Steam Generator Transport System	5,738	6.7
Removal Constainment Obstructions	2,000	3.5
Installation of Temporary Ventilation System	2,000	2.5
Temporary Scaffolding	5,000	29.7
Temporary Lighting and Power	2,000	2.0
Cleanup and Decon	10,712	35.0
Polar Crane Operator	1,000	2.0
Shielding	11,500	100.0

TABLE 6-2

ESTIMATE OF PERSONNEL RADIATION EXPOSURES FOR
STEAM GENERATOR REPLACEMENT OPERATIONS
AT POINT BEACH UNIT-I
PHASE-I: SHUTDOWN AND PREPARATORY ACTIVITIES

TASK DESCRIPTION	ESTIMATED LABOR (MAN-HOURS)	ESTIMATED EXPOSURE (MAN-REM)
H.P., Q.A	12,723	15.0
Miscellaneous	2,000	5.0
Installation of Service Air System	630	2.2
Work Platform Modification	2,000	1.0
Protection of Containment Components	1,500	8.0
Project Supervision and Administration	1,000	6.0
SUBTOTAL PHASE I	58,887	237.3

TABLE 6-2

ESTIMATE OF PERSONNEL RADIATION EXPOSURES FOR
STEAM GENERATOR REPLACEMENT OPERATIONS
AT POINT BEACH UNIT-1
PHASE II: REMOVAL ACTIVITIES

TASK DESCRIPTION	ESTIMATED LABOR (MAN-HOURS)	ESTIMATED EXPOSURE (MAN-REM)
Removal of Insulation (lower shell, RC piping)	1,224	9.3
Removal of Insulation (upper shell, mainstream and feedwater piping)	446	3.2
Removal of Miscellaneous Piping	3,356	24.4
Set Up Steam Generator Girth Cut Equipment	600	2.0
Cut and Remove Steam Generator Upper Shell	3,536	6.8
Cutting of Reactor Coolant Piping	9,139	96.9
Cutting of Mainstream and Feedwater Piping	1,412	2.4
Disassembly of Steam Generator Supports	5,910	34.7
Removal of Moisture Separation Equipment	3,794	8.1
Refurbish Steam Generator Upper Shell	11,543	10.2
Removal of Steam Generator Level Instruments and Blowdown Piping	1,892	4.7
Removal of Steam Generator Lower Shell	2,733	17.6

TABLE 6-2

ESTIMATE OF PERSONNEL RADIATION EXPOSURES FOR STEAM GENERATOR REPLACEMENT OPERATIONS AT POINT BEACH UNIT-1 PHASE II: REMOVAL ACTIVITIES

TASK DESCRIPTION	ESTIMATED LABOR (MAN-HOURS)	ESTIMATED EXPOSURE (MAN-REM)
Temporary Scaffolding	8,227	29.1
Temporary Lighting and Power	3,810	5.2
Cleanup and Decon	35,731	86.2
Polar Crane Operator	1,837	1.7
H.P., Q.A.	20,167	42.4
Material Handling, Equipment Maintenance, and Miscellaneous Construction Activities	16,323	23.9
Project Supervision and Administration	10,000	12.9
SUBTOTAL PHASE II	141,680	421.7

TABLE 6-2

ESTIMATE OF PERSONNEL RADIATION EXPOSURES
FOR STEAM GENERATOR REPLACEMENT OPERATIONS
AT POINT BEACH UNIT-I
PHASE III: INSTALLATION ACTIVITIES

TASK DESCRIPTION	ESTIMATED LABOR (MAN-HOURS)	ESTIMATED EXPOSURE (MAN-REM)
Steam Generator Lower Shell Installation	7,744	12.7
Installation of Reactor Coolant Piping	43,666	193.1
Steam Generator Girth Weld	19,135	9.9
Installation of Main Steam Piping	6,661	6.9
Installation of Feedwater Piping	4,715	2.3
Installation of Blowdown and Miscellaneous Piping	12,252	45.2
Install Steam Generator Level Instruments	7,622	9.6
Installation of Insulation	7,747	25.0
Temporary Scaffolding	12,148	35.6
Temporary Lighting & Power	6,802	6.5
Cleanup and Decon	79,563	127.7
Polar Crane Operator	5,245	2.1
H.P., Q.A.	73,061	66.2
Material Handling, Equipment Maint., and Misc. Construction Activities	35,777	25.5
Project Supervision & Administration	12,000	37.5
SUBTOTAL PHASE III	334,138	605.8

TABLE 6-2

ESTIMATE OF PERSONNEL RADIATION EXPOSURES FOR
STEAM GENERATOR REPLACEMENT OPERATIONS AT
POINT BEACH UNIT-I
PHASE-IV: POST INSTALLATION AND STARTUP ACTIVITIES

TASK DESCRIPTION	ESTIMATED LABOR (MAN-HOURS)	ESTIMATED EXPOSURE (MAN-REM)
Install Biological Shield Wall	2,121	2.9
Repair Crane Wall Opening	214	0.4
Install S/G Recirculation & Transfer System	16,534	33.5
Remove Polar Crane Gibpole Mod.	1,500	5.0
Install Reactor Cavity Coaming	650	0.7
Reassemble Manipulator Crane	1,256	1.4
Remove S/G Transport System	200	1.5
Hydrostatic Tests	2,376	3.4
Temporary Scaffolding	3,382	6.4
Temporary Lighting & Power	1,712	1.5
Cleanup and Decon	14,378	23.2
Polar Crane Operator	1,186	0.5
Painting	9,000	8.0
H.P., Q.A.	14,321	9.8
Miscellaneous	3,000	5.0
Material Handling, Equipment Maint., and Miscellaneous Const. Activities	10,000	9.7
Project Supervision & Administration	5,870	5.4
SUBTOTAL PHASE IV	87,700	118.3

TABLE 6-2

ESTIMATE OF PERSONNEL RADIATION EXPOSURES FOR
STEAM GENERATOR REPLACEMENT OPERATIONS
AT POINT BEACH UNIT-1
PHASE-V: STEAM GENERATOR STORAGE ACTIVITIES

TASK DESCRIPTION	ESTIMATED LABOR (MAN-HOURS)	ESTIMATED EXPOSURE (MAN-REM)
Steam Generator Storage Activities	1,532	6.6

7.0 ENVIRONMENTAL ASPECTS OF THE REPAIR

7.1 GENERAL

This section evaluates evnironmental effects relevant to the steam generator repair effort and demonstrates that no significant environmental effects are associated with the repair activities. Any minor environmental impacts are expected to be temporary and controllable by the use of standard construction practices. The site preparation, construction, and repair activities will be carried out in conformance with local, state and federal regulations.

7.2 RESOURCES COMMITTED

7.2.1 Non-Recyclable Building Materials

Housekeeping operations for all construction areas will be performed throughout the constuction period. Construction wastes will be separated into salvageable and non-salvageable materials. Salvageable materials such as lumber and scrap metal will be sold to salvage contractors. Non-salvageable materials will be disposed of by a licensed contractor.

All required fuels, oils, and chemicals will be handled, stored and disposed of in accordance with applicable Wisconsin Administrative Code regulations. Any spills will be cleaned up quickly and any contaminated materials properly disposed.

7.2.2 Land Resources

The repair effort will have minimal impact on existing site layout and plant facilities. Two new facilities, a 16,000-square-foot operations building and a 5,500-square-foot, temporary steam generator storage building, will be constructed in the previously modified area adjacent to the plant to the north. A 6,500-square-foot access structure will be

constructed adjacent to the Unit 1 containment facade. Only about four acres of land will be required for construction activities. A parking lot will require about two acres and a layout area will require about 1.5 acres. The temporary steam generator storage building and operations building will require about 0.5 acres.

No historical, cultural, archeological sites, or natural landmarks or access thereto will be affected by the proposed construction activities.

Erosion and runoff control measures include: 1) limiting site grading and surface disturbance to the minimum area practicable, and 2) covering construction roads, parking, and laydown areas with gravel. In addition, an approximately 300-foot-wide vegetated area will serve to filter sediments from any parking and laydown area runoff before reaching Lake Michigan. Following completion of the construction and repair activities, remaining disturbed areas around the buildings will be seeded to return to grass cover.

The replacement steam generator lower assemblies will be delivered to the plant site by barge or rail. If the lower assemblies are delivered by barge, reconstruction of the temporary barge slip previously used for off-loading steam generators during initial plant construction will be required. The barge slip would be located approximately 2,400 feet south of the plant discharge structure. About 1,000 cubic feet of material would be excavated from the Lake Michigan shore for the slip and about 1,000 cubic feet of material would be dredged from the lake bottom for an approach channel. The bottom elevation of the barge slip and approach channel would be approximately 8 feet below low water datum for Lake Michigan. The excavated and dredged spoils would be placed in the existing land fill area on site. The barge slip and approach channel would be allowed to revert to their original conditions upon completion of the delivery operations or could be used as a recreational boat-launching facility.

It is expected that the recreational boat-launch area and fisherman parking lot area, both located near the barge slip, would be temporarily closed to the public during construction activities and during steam generator delivery operations. The fisherman parking lot would be used for barge slip construction crew parking.

The construction area to the north of the plant and the barge slip area are utilized minimally by the species of fauna known to inhabit the plant site. It is anticipated that whatever species normally use the habitat in the construction area will move to and use other adjacent areas of the plant site once construction activities begin, and other existing populations of wildlife on the plant site will avoid the area until construction activities are completed. Approximately four acres will be lost.

No displacement of wildlife from other areas of the plant site (i.e., wood lots, small ponds and stream course areas) due to increased levels of human activity and noise associated with the construction activities is expected to occur.

No impact on rare and endangered species is expected.

7.2.3 Water Resources

A well to provide a permanent potable water supply for the existing construction building and the operations building is expected to be drilled in the area north of the plant. The well will have a capacity of less than 70 gallons per minute. An estimated 5,000 to 10,000 gallons of water per day will be used during construction. No impact on the existing groundwater aquifier is anticipated.

No groundwater impacts due to construction activities are anticipated. No dewatering of the site is required. Holding tanks will be used for handling sanitary facilities' wastewater and no groundwater discharges will occur.

Approximately 0.4 acres of lake bottom would be temporarily disturbed. Turbidity would occur in an area slightly larger in size. Periphyton communities, plankton populations, and benthic organisms in the area would be temporarily impacted. The barge slip area is not uniquely utilized by the few minnow species and slimy sculpin known to inhabit the shorezone adjacent to the plant site. It is anticipated that whatever fish species normally use or may occasionally frequent the barge slip area would move to other areas of the shorezone once construction activities begin and would avoid the area until construction is completed. Similar shorline environment exists for several miles north and south of the site and any impacts on the total aquatic environment of the site area would be minimal.

7.3 WASTE WATER

7.3.1 Sanitary Facilities

Sanitary wastes will not be discharged on site. During site preparation and early stages of construction, portable sanitary facilities will be utilized. Wastes from these facilities will be removed by a licensed contractor. A holding tank will be installed to collect sanitary wastes from the existing construction building and the operations building. A second holding tank will be installed to collect sanitary wastes from the containment access building. Wastes from the holding tanks will also be removed by a licensed contractor. The holding tank for the existing construction building and operations building will remain after construction is completed. The holding tank for the containment access building will be removed if the access structure is removed. Should the containment access building be left in place, the access building sanitary facilities may be connected to the plant sewage system. The existing plant sewage treatment system has adequate capacity to process the additional wasteloads without modification.

7.3.2 Laundering Operations

Laundry waste water generated during the repair activities will originate from facilities adapted for the proposed effort. If required, laundry waste water will be directed to the liquid radwaste system for processing (see Subsection 3.3.6.3). Additional information on the expected quality and quantity of laundry waste water from the steam generator repair program is provided in Subsection 5.2.2.4 of this report.

7.4 CONSTRUCTION

The construction activities associated with the steam generator repair are not unique. The use of standard construction practices will result in effective control of the anticipated impacts.

7.4.1 Noise

Noise levels in the construction area will be typical of those associated with the operation of site clearing equipment such as tractors, bulldozers, front-end loaders, scrapers, trucks, and other construction equipment such as cranes, air compressors, and metal-cutting devices. Typical sound pressure levels will range from 75 dBA to 110 dBA in the vicinity of the equipment. No use of explosives will be required. Standard noise control procedures, including the use of muffled equipment, will be used to reduce noise levels. Occupational Safety and Health Administration Standards (OSHA) will be followed to protect personnel located on site. Noise inputs are expected to be confined to the construction area.

7.4.2 Dust

Dust will be created during site grading and by movement of vehicles on the unpaved construction areas. The primary means of control will be periodic sprinkling of the unpaved areas using water sprinkler trucks if the need is indicated by visual inspection. The temporary parking lot and laydown areas will be covered with stone or gravel. Only about 4

acres will require grading. Following covering of the parking lot and laydown areas, only 0.5 acres of land for the operations building and steam generator storage building will remain in a disturbed state. The building sites will be open for a short period of time until the foundations are poured. Dust is not expected to be a problem and any minor impacts will be confined to the immediate areas near where the site surface is disturbed.

7.4.3 Open Burning

There will be no open burning.

7.5 RADIOLOGICAL ASPECTS

The estimated releases of radioactive airborne and liquid effluents during the repair effort are found to be much smaller than observed effluent releases for the operating plant during 1981. The comparison is shown in Section 5.2.2. The radioactive effluent release points during steam generator repair activities will be the same as during normal plant operations.

Since releases of radioactive effluents during the repair program will be a small fraction of normal operating plant releases and their potential exposure pathways will be the same as for the existing plant, the radiological impact of these releases is insignificant. These releases will be monitored in accordance with the existing Point Beach environmental monitoring program.

7.6 RETURN TO OPERATION

7.6.1 Water Use

A well may be drilled north of the plant to provide a potable water source for the existing construction building and operations building. Maximum daily water use from the well is estimated to be about 5,000 to 10,000 gallons. No impact on the existing groundwater aquifier is anticipated.

7.6.2 Operational Exposure

According to historical data on occupational radiation exposure for the Point Beach Nuclear Plant, presented in NUREG-0713, "Occupational Radiation Exposure at Commercial Nuclear Power Reactors", the average annual exposure per unit during 1979, 1980, and 1981 was 306 man-rem. During the preceeding six years, this annual average per unit was only 205 man-rem. The additional radiation exposure in recent years is primarily due to increased steam generator inspection and maintenance activities. Assuming that the replacement steam generator tubes maintain their integrity during the remaining operating lifetime of the plant (27 years), the radiation exposure should be reduced by at least this incremental amount (approximately 100 man-rem per year). Factoring in the estimated radiation exposure expected for the repair effort, given in Table 6.6-1 (about 1400 man-rem), a total of 1300 man-rem may be saved over the lifetime of the plant by repairing the steam generators.

7.6.3 Radiological Releases

Secondary plant releases result from primary to secondary leakage. While doses due to radioactive releases from the existing steam generators are insignificant, the repaired steam generators will have enhanced tube integrity thus further reducing doses due to secondary plant releases.