UNITED STATES OF AMERICA

NUCLEAR REGULATORY COMMISSION

In the Matter of	)	
	)	
UNITED STATES DEPARTMENT OF ENERGY	)	
	)	
PROJECT MANAGEMENT CORPORATION	)	Docket No. 50-537
	)	
TENNESSEE VALLEY AUTHORITY	)	
	)	
(Clinch River Breeder Reactor Plant)	)	

APPLICANTS' TESTIMONY

CONCERNING NRDC

CONTENTIONS 1,2, AND 3

Dated. August 16, 1982

DS03

APPLICANT'S TESTIMONY CONCERNING
NRDC CONTENTIONS 1,2, AND 3

1.0 STATEMENT OF CONTENTIONS

This testimony addresses those allegations set forth in NRDC Admitted and Renumbered Contentions 1, 2, and 3 which state that adequate accident analyses for the CRBRP have not been performed. The specific contentions to be litigated for the LWA-1, as limited by the Board Order Following Conference with Parties dated April 22, 1982, are as follows:

1. The envelope of DBAs should include the CDA.

   a. Neither Applicants nor Staff have demonstrated through reliable data that the probability of anticipated transients without scram or other CDA initiators is sufficiently low to enable CDAs to be excluded from the envelope of DBAs.

      Inquiry at this stage is limited to whether it is feasible to design CRBRP to make HCDAs sufficiently improbable that they can be excluded from the envelope of design basis accidents for a reactor of the general size and type proposed. Discovery at the LWA-1 stage is limited to the following areas:

      1. The major classes of accident initiators potentially leading to HCDAs;

      2. The relevant criteria to be imposed for the CRBRP;

      3. The state of technology as it relates to applicable design characteristics or criteria; and

      4. The general characteristics of the CRBRP design (e.g., redundant, diverse shutdown systems).

      A full scale inquiry into the specific design of the CRBRP is inappropriate at the LWA-1 stage.

2. The analyses of CDAs and their consequences by Applicants and Staff are inadequate for purposes of licensing the CRBR, performing the NEPA cost/benefit analysis, or demonstrating that the radiological source term for CRBRP would result in potential hazards not exceeded by those from any accident considered credible, as required by 10CFR100.11(a),fn.1.

   a. The radiological source term analysis used in CRBRP site suitability should be derived through a mechanistic analysis. Neither Applicants nor Staff have based the radiological source term on such an analysis.

   b. The radiological source term analysis should be based on the assumption that CDAs (failure to scram with substantial core disruption) are credible accidents within the DBA envelope, should place an upper bound on the explosive potential of a CDA, and should then derive a conservative estimate of the fission product release from such an accident. Neither Applicants nor Staff have performed such an analysis.

   c. The radiological source term analysis has not adequately considered either the release of fission products and core materials, e.g. halogens, iodine and plutonium, or the environmental conditions in the reactor containment building created by the release of substantial quantities of sodium. Neither Applicants nor Staff have established the maximum credible sodium release following a CDA or included the environmental conditions caused by such a sodium release as part of the radiological source term pathway analysis.

The limitations set forth for Contention 1(a) apply to subparts (a)-(c) of Contention 2. The evidentiary record is to be confined to considering whether the Staff's source term is likely to envelop the design basis accidents as defined under 1(a) for a reactor of the general size and type proposed.

d. Neither Applicants nor Staff have demonstrated that the design of the containment is adequate to reduce calculated offsite doses to an acceptable level.

The limitations set forth for Contention 1(a) apply to subpart (d) of Contention 2.

e. As set forth in Contention 8(d), neither Applicants nor Staff have adequately calculated the guideline values for radiation doses from postulated CRBRP releases.

This subpart of Contention 2 will be addressed by the Health Effects panel.

f. Applicants have not established that the computer models (including computer codes) referenced in the Applicants' CDA safety analysis reports, including the PSAR, and referenced in the Staff's CDA safety analyses are valid. The models and computer codes used in the PSAR and the Staff safety analyses of CDAs and their consequences have not been adequately documented, verified or validated by comparison with applicable experimental data. Applicants' and Staff's safety analyses do not establish that the models accurately represent the physical phenomena and principles which control the response of CRBR to CDAs.

g. Neither Applicants nor Staff have established that the input data and assumptions for the computer models and codes are adequately documented or verified.

h. Since neither Applicants nor Staff have established that the models, computer codes, input data and assumptions are adequately documented, verified and validated, they have also been unable to establish the energetics of a CDA and thus, have also not established the adequacy of the containment of the source term for post accident radiological analysis.

Subparts (f)-(h) are the basis for discovery at the LWA-1 stage as to the codes used, including their validity, foundation proof, and the like.

3. Neither Applicants nor Staff have given sufficient attention to CRBR accidents other than the DBAs for the following reasons:

b. Neither Applicants' nor Staff's analyses of potential accident initiators, sequences and events are sufficiently comprehensive to assure that analysis of the DBAs will envelop the entire spectrum of credible accident initiators, sequences and events.

c. Accidents associated with core meltthrough following loss of core geometry and sodium-concrete interactions have not been adequately analyzed.

d. Neither Applicants nor Staff have adequately identified and analyzed the ways in which human error can initiate, exacerbate, or interfere with the mitigation of CRBR accidents.

The limitations set forth for Contention 1(a) apply to subparts (b)-(d) of Contention 3.

2.0 OVERVIEW

Contrary to the assertions made by NRDC in Contentions 1, 2, and 3, Applicants have performed adequate accident analyses for the CRBRP. This testimony, which addresses the two basic issues encompassed within NRDC Contentions 1, 2, and 3 (site suitability and hypothetical core disruptive accidents), demonstrates the following:

1. With respect to the issue of site suitability:

   a. The postulated source term for site suitability analysis is appropriate for a reactor of the general size and type of CRBRP.

      1. The Design Basis Accidents (DBAs) selected by Applicants envelop the entire spectrum of credible accident initiators, sequences and events (see Section 3.2 below);

      2. Hypothetical Core Disruptive Accidents (HCDAs) have been made sufficiently improbable that they need not be considered within the spectrum of DBAs (see Section 3.3 below); and

      3. The postulated source term envelops the consequences of the DBAs (see Sections 4.1 and 4.2 below).

   b. The expected demonstrable containment leak rate is appropriate (see Section 4.3 below).

   c. The proposed reactor containment and site conform to the guideline values of 10CFR100.11, given the source term, the containment leak rate and meteorological conditions appropriate to the site (see Section 4.3 below).

2. With respect to the issue of hypothetical core disruptive accidents, the Applicants have evaluated the residual risk from HCDAs and found this risk to be acceptably low (see Section 5 below).

Spectrum of Accidents

The spectrum of accidents can be divided into two categories. The first category is accidents within the design base. This category includes the Design Basis Accidents whose consequences bound the accidents within the design base. Engineered Safety Features are provided to mitigate the consequences of Design Basis Accidents.

The second category within the spectrum of accidents is accidents beyond the design base. The plant features determine the boundary between accidents within the design base and accidents beyond the design base. The design of CRBRP includes preventive features to ensure that the class of accidents called Hypothetical Core Disruptive Accidents (HCDAs)[1] is beyond the design base. Notwithstanding the fact that specific preventive features are included to prevent HCDAs, the Applicants have also specifically included design features to mitigate the consequences of HCDAs. The Applicants have also evaluated HDCAs to show that with these mitigating features the residual risk from HCDAs is acceptably low.

Applicants' evidence with respect to each major element of analysis is summarized in Sections 2.1, 2.2, 2.3 which follow.

2.1 SELECTION OF DESIGN BASIS ACCIDENTS

The spectrum of theoretically possible CRBRP accidents is extremely broad. At the high likelihood end, the spectrum of accidents includes those that approach certainty. At the low likelihood end, the spectrum of accidents includes those that

---

[1] HCDAs are accidents postulated for fast neutron reactors involving 1) material motions in the core to the extent that there is potential for reactivity to approach or exceed prompt criticality, or 2) whole-core melting and relocation.

approach impossibility. The accidents at the high likelihood end of the accident spectrum present no significant risk because they do not involve release of significant radioactivity. Accidents at the low likelihood end of the spectrum present no significant risk because the likelihood of their occurrence is so low.

Between the extremes of likelihood, the Applicants established the envelope of Design Basis Accidents (DBAs). This envelope was chosen using engineering judgment to establish which accident initiators should be considered. This engineering judgment took into consideration the preventive features of the plant. Specifically, HCDAs were judged to be beyond the design basis because of the features provided to prevent HCDA initiation. The conservatively selected DBA initiators were evaluated using pessimistic assumptions including various combinations of concurrent failures of mitigating features. The effects of natural phenomena and potential human error were also considered. The DBAs include events so unlikely that they are not expected to occur during the plant lifetime. The process of selecting DBAs is summarized in Figure 2-1 and discussed further in Section 3.0 of this testimony.

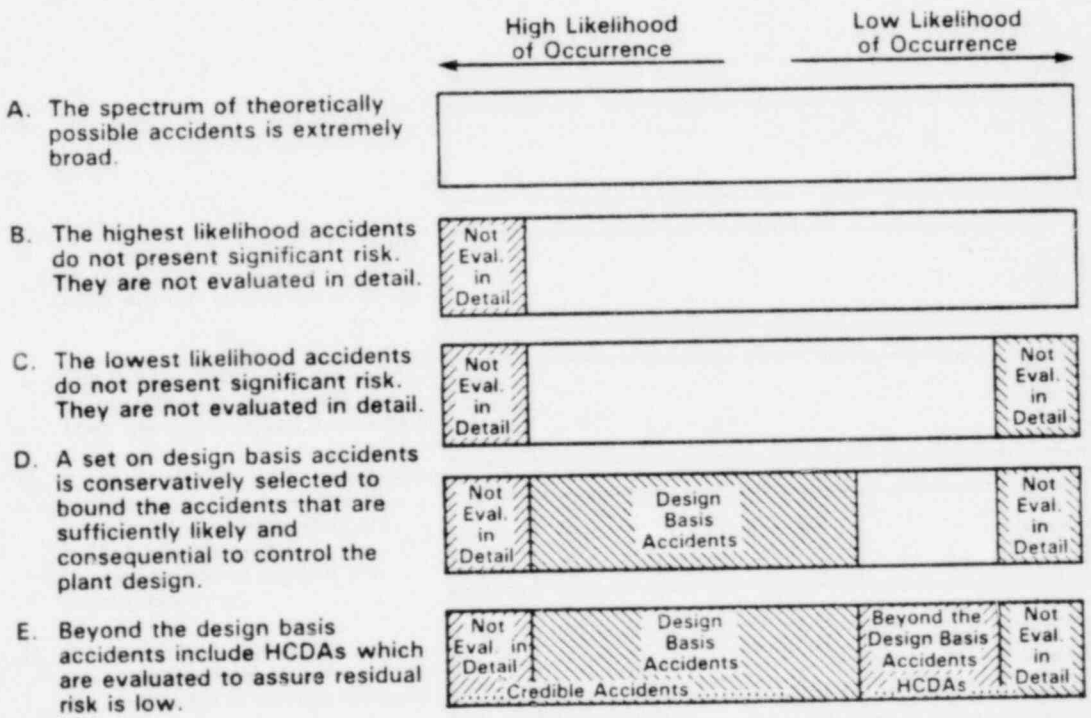

Figure 2-1: The Spectrum of CRBRP Accidents

2.2 SITE SUITABILITY SOURCE TERM

The criteria which guide the NRC in its evaluation of the suitability of proposed nuclear power plant sites are specified in 10CFR100. These prescribe a calculation of the off-site doses resulting from a site suitability source term (SSST) given the mitigating effects of the plant containment system. The calculated doses must then be compared to specified dose guidelines. The SSST must "result in potential hazards not exceeded by those from any accident considered credible." The SSST identified for CRBRP represents a potential hazard greater than any reactor DBA.

The appropriate calculations and comparisons have been completed by the Applicants. The calculated doses are within the specified dose guidelines. Figure 2-2 provides a graphic summary of the SSST considerations. The definition of the SSST and the assessment of its consequences are discussed further in Section 4 of this testimony.

The radiological hazard of the SSST is within the 10 CFR 100 guidelines.

The radiological hazard of the SSST is not exceeded by the hazards of design basis accidents.

Radiological hazards of design basis accidents envelop the hazards of credible accidents.

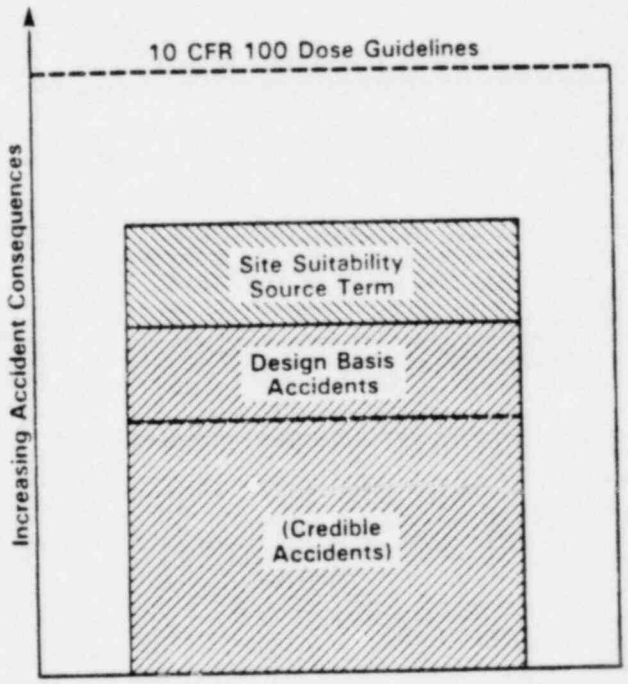

Figure 2-2: Accident Consequences

2.3 EVALUATION OF HYPOTHETICAL CORE DISRUPTIVE ACCIDENTS

The potential environmental effects of Hypothetical Core Disruptive Accidents (HCDAs) have been evaluated by the Applicants. This evaluation included consideration of (a) HCDA energetics, (b) structural design of the primary system to accommodate HCDA energetics, (c) penetration of the reactor vessel and guard vessel following core melt, (d) sodium-concrete reactions, (e) sodium burning and hydrogen burning challenges to containment integrity, and (f) release of radionuclides to the environment.

The results of these evaluations show that the consequences of HCDAs would be mitigated by CRBRP plant features and that the residual risks from HCDAs are acceptably low. The evaluation of HCDAs is discussed further in Section 5 of this testimony.

3.0 DESIGN BASIS ACCIDENT DELINEATION

As discussed in this section of the testimony:

1. Contrary to NRDC Contention 3 (b), a systematic and comprehensive analysis of potential accident initiators, sequences, and events has been performed to assure that analysis of the DBAs will envelop the entire spectrum of credible accident initiators, sequences, and events. In addition, contrary to NRDC Contention 3 (d), the ways that human error can initiate, exacerbate, or interfere with mitigation of CRBRP accidents have been adequately identified and analyzed.

2. Contrary to NRDC Contention 1 (a), the probability of anticipated transients without scram or other HCDA initiators is sufficiently low to enable HCDAs to be excluded from the envelope of DBAs.

3.1 METHODOLOGY OF DESIGN BASIS ACCIDENT SELECTION

As summarized in Section 2.1, accident analysis for CRBRP has employed the technique of bounding the spectrum of credible accidents by a set of DBAs. In executing this approach, the Applicants followed the criteria described in PSAR Section 15.1.1, "Design Approach to Safety". This approach consisted of consideration of three levels of safety:

First Level of Safety	-	This level assures reliable operation and prevents accidents. This level reduces the likelihood of accident initiation and the challenges to the protective systems.
Second Level of Safety	-	This level provides protection against events that might occur. Despite the

preventive features of the first level, this second level provides redundant protective features to terminate events at an early stage and thereby reduce the challenges to accident mitigating features.

Third Level of Safety - Despite the preventive and protective features of the first two levels of safety, this level provides features to mitigate events which are not expected to occur in the plant lifetime but which are postulated and analyzed to establish conservative design bases.[2]

In implementing the first and second levels of safety, the Applicants included features to preclude the occurrence of HCDAs (see Section 3.3). In the third level of safety the Applicants have selected a set of bounding DBAs. The consequences of these DBAs envelop all credible accidents but do not include HCDAs since the first two levels of safety preclude their occurrence.

The method used by the Applicants to assure the specified DBAs envelop all credible accident initiators, sequences and events included conservatism in each of three areas, as follows:

1. The credible accident initiators were conservatively bounded by applying engineering judgment to the data base on initiators.

---

[2]As discussed in Sections 2.0 and 5.0, the Applicants also have analyzed and provided specific design features, beyond those features included in the third level of safety, to mitigate the consequences of HCDAs.

2. The credible accident sequences were bounded by assuming equipment failures in mitigating systems simultaneous with accident initiators.

3. The credible consequences were bounded by using engineering judgment to apply conservative assumptions to account for uncertainties.

Each of these three areas of conservatism is discussed further below.

DBA initiators were selected on the basis of a systematic review and search of generic initiators and a review and search of specific initiators in CRBRP. These reviews included consideration of DBA lists developed for LWRs and FFTF. Experience from the licensing process with NRC, including the list of 67 accidents in the Standard Format and Content of Safety Analysis Reports (LMFBR edition) also was considered. The selection process considered all initiators, including operational incidents, that could lead to challenges to the plant safety features. Engineering judgment was used conservatively to select bounding initiators as DBA initiators. (Preventive features were identified for sequences potentially leading to HCDAs. See Section 3.3 below.) The DBA initiators include a broad spectrum of equipment failures without identification of the cause of failure. Thus, the DBA initiators include accidents resulting from human error. This method assures that the selected DBAs envelop the entire spectrum of credible accident initiators.

DBA initiators are evaluated assuming conservatively selected equipment failures. Engineering judgment and the application of Regulatory requirements are used to identify equipment failures assumed in the safety-related systems that mitigate the DBA. Further, no non-safety-related equipment is assumed to operate to mitigate the DBA. These assumptions are

made without identification of a cause of failure. Thus, these assumptions envelop failures resulting from human error before, during or after accident initiation. The conservative combination of concurrent failures assures that consideration of the DBAs envelops consideration of the entire spectrum of credible accident sequences.

The evaluation of DBA consequences is conducted using conservative assumptions to envelop uncertainties. This conservative treatment of uncertainties is used for both design parameters (e.g., dimensions) and other parameters that affect accident consequences (e.g., heat transfer characteristics). In addition, all DBAs are evaluated assuming they occur at the least desirable time in the plant lifetime. This assures that the calculated DBA consequences envelop the consequences from the entire spectrum of credible events.

The use of the first two levels of safety to assure accidents are infrequent and terminated early, and the conservative specification of DBAs (including bounding DBA initiators, sequences with simultaneous failures and conservative assumptions to account for uncertainties) in the third level of safety assure that the Applicants' analysis of DBAs will envelop the entire spectrum of credible accident initiators, sequences and events.

3.2 DESIGN BASIS ACCIDENT ENVELOPE

As part of the process for assuring that the selected DBAs envelop all credible reactor accidents, the Applicants evaluated these accidents on a fundamental physical level. On this level, all potential reactor accidents, regardless of sequence, must involve either or both of two basic categories of conditions.

- Reduced heat removal, or
- Excessive heat generation.

As discussed below, the bounding DBAs envelop all credible conditions for both reduced heat removal and excessive heat generation conditions. These conditions - reduced heat removal and excessive heat generation - were evaluated in terms of accidents involving: 1) the whole core and 2) local regions (e.g. one fuel assembly). The DBAs discussed below are limited, terminated and mitigated by specific plant features. These features assure that a balance between heat removal and heat generation is reestablished, and that conditions do not progress to those necessary for initiation of an HCDA. These features are addressed in Section 3.3.

Reduced Whole Core Heat Removal

Accidents involving reduced whole core heat removal result from reduced capacity or failures in the overall Heat Transport Systems (HTS). The overall HTS provides three paths for transfer of heat from the reactor to the turbine-generator. Each of the HTS paths includes a loop of the Primary Heat Transport System (PHTS), a loop of the Intermediate Heat Transport System (IHTS) and a Steam Generator (SG) as shown in Figure 3-1.

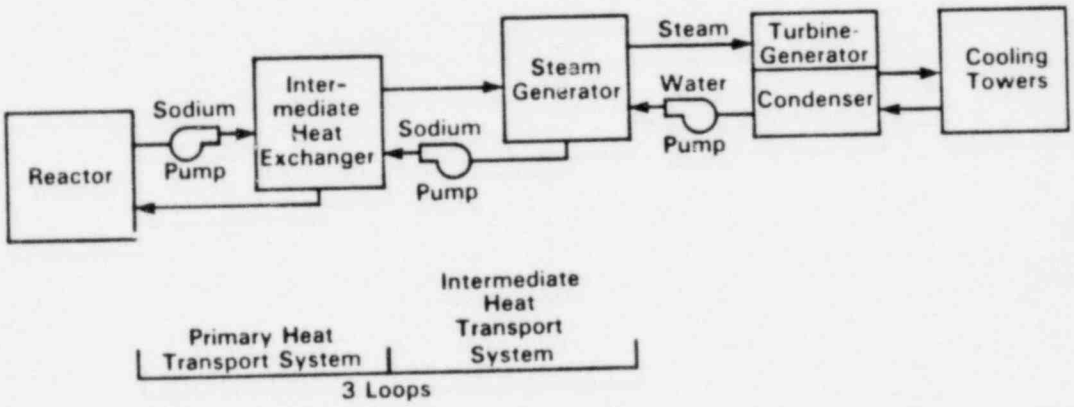

Figure 3-1: Schematic of Overall Transport Systems

The heat is removed from the reactor by forced circulation of sodium through the core and the three loops of the PHTS. Each PHTS loop contains piping, a pump, and an Intermediate Heat Exchanger (IHX). Each PHTS loop is located in a nitrogen-inerted cell in the Reactor Containment Building. In each of the three

IHXs, the heat is transferred from the PHTS sodium to sodium in one of the IHTS loops. Each IHTS loop contains piping, a pump, and a steam generator. The IHTS loops extend from the Reactor Containment Building cells containing the PHTS loops to the Steam Generator Building.

In each steam generator, heat is transferred from the IHTS sodium to water and steam in the steam generators. The steam generators are located in the Steam Generator Building.

The steam from the steam generators drives the turbine-generator to produce electricity. Condensed water is pumped back to the steam generators. Waste heat is rejected to the atmosphere by cooling towers.

Figure 3-2 is a plan (overhead) view of the physical arrangement of the overall HTS.

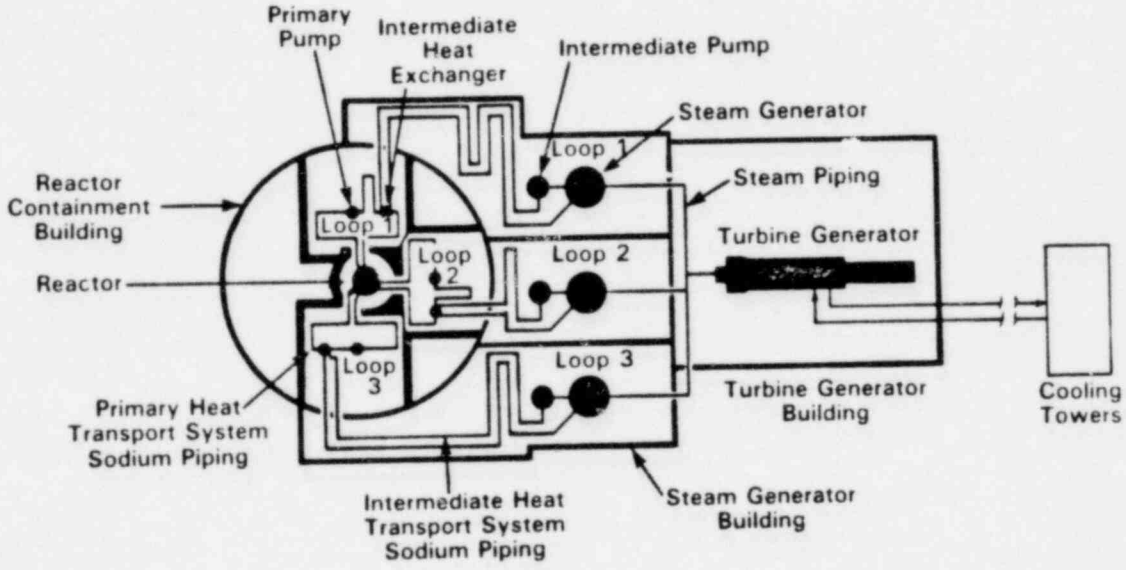

Figure 3-2: Layout of the Overall Heat Transport Systems

As shown in the figure, the three HTS paths are physically separated from each other within the Reactor Containment Building and Steam Generator Building. The reactor vessel, each of the three PHTS loops and a portion of the IHTS loops are located within the Reactor Containment Building in separate reinforced concrete cells that contain an inerted nitrogen atmosphere. The

remainder of the three IHTS loops and the steam generators are located within the Steam Generator Building in separate reinforced concrete cells. The turbine-generator is located within the Turbine-Generator Building.

Reduced whole core heat removal could occur in two ways: 1) reduced primary coolant flow through the core and/or 2) increased primary coolant temperature at the core inlet.

(1) Reduced Primary Coolant Flow

Reduction in primary coolant flow through the core could result from loss of pumping power, mechanical failure of one or more of the three primary pumps, or leakage from the PHTS piping.

The maximum possible loss of pumping power would occur if all three pump motors fail simultaneously. The only credible cause of simultaneous failure of all three pump motors is the loss of electric power to the pump motors which would cause the pumps to coast down in speed. The coastdown of all three primary pumps is the bounding loss-of-pumping-power DBA because it assumes simultaneous failure of all primary pumping power. Human error could not cause a greater loss of pumping power (i.e., no more than three primary pumps can fail; nor can the timing of failure be made worse than the simultaneous failures assumed in the DBA).

To compensate for the reduced heat removal caused by loss-of-pumping-power, automatic reactor shutdown and shutdown heat removal must occur. The Reactor Shutdown and Shutdown Heat Removal Systems perform this function. (See Section 3.3 below.) PSAR Section 15.3 demonstrates the adequacy of the Reactor Shutdown and Shutdown Heat Removal Systems to reestablish the balance between heat removal and heat generation.

Mechanical failure of a PHTS pump, up to and including seizure which would cause very rapid flow reduction in one of the PHTS loops, is a DBA initiator. The three pumps are physically separated and mechanically independent. Mechanical failure in one pump would not affect either of the other pumps. A prototype of the pump is undergoing testing over the broad range of expected PHTS conditions to assure that the three pumps will operate as designed in their common PHTS sodium conditions (e.g. temperature, pressure, flow). Similarly, the three mechanically independent pump motors are widely spaced in separate cavities of the Reactor Containment Building operating floor and are served by separate lubricating oil systems. Although mechanical failure of one pump due to fabrication flaws, adverse coolant conditions, maintenance errors or other failure modes, including human errors, is credible, simultaneous failure of more than one pump due to these causes is not credible.

To compensate for the reduced heat removal caused by seizure of one pump, automatic reactor shutdown must occur. The Reactor Shutdown Systems perform this function. The Reactor Shutdown Systems are described in Section 3.3 below. Section 15.3 of the PSAR demonstrates the adequacy of the Reactor Shutdown and Shutdown Heat Removal Systems to reestablish the balance between heat removal and heat generation.

Reduction in PHTS sodium flow through the core could also occur due to leaks from the PHTS piping. As discussed in Section 3.3 below (paragraphs entitled "Means to Prevent Double-Ended Inlet Pipe Rupture"), the rate of such leakage is limited by the inherent characteristics of the CRBRP PHTS coolant, the mechanical properties of the piping, the compatibility of the surrounding environment, the operating conditions in the PHTS, and a sensitive leak detection system. Based on the consideration of these factors, a Design Basis leak from the PHTS piping was specified with several levels of conservatism.

An initial flaw larger than those permitted by the engineering specifications for the piping was conservatively assumed. The initial flaw also was assumed to grow and become a crack even though the characteristics of plant features prevent such growth. The crack then was assumed to grow to maximum length. These conservative assumptions encompass potential human errors in fabrication, installation, and operation of the PHTS.

The Design Basis leak that results from this evaluation is assumed to occur in the location that results in the largest leakage flow. This Design Basis leak represents loss of a very small fraction (approximately 0.01 percent) of the total core flow and thus does not represent a significant reduction of heat removal capability. As discussed in PSAR Section 15.3, this leak size can be accommodated by the plant design.

(2) Increased Core Inlet Temperature

The second way reduction of whole-core heat removal might occur is from increase in the temperature of the primary coolant flowing into the core. This could occur only if heat removal from the PHTS sodium in the intermediate heat exchangers is reduced. The bounding failure to remove heat from any one of the IHXs due to any cause has been specified as a DBA. In this DBA it is assumed that, while the reactor is operating at full power, heat removal from one IHX is stopped completely and instantaneously. This is not physically possible because IHTS sodium flow cannot stop instantaneously; and even if the flow stopped, heat transfer to the IHTS sodium in the IHX could not stop instantaneously. However, the assumption of instantaneous failure to remove heat permits one bounding analysis to apply to all failure modes. This assumption envelops all reductions in heat removal due to failure in one IHTS or steam generator. To compensate for reduced IHX heat removal, automatic reactor shutdown must occur. The Reactor Shutdown Systems perform this

function. The Reactor Shutdown Systems are described in Section 3.3, below. Section 15.3 of the PSAR demonstrates the adequacy of the Reactor Shutdown and Shutdown Heat Removal Systems to reestablish the balance between heat removal and heat generation.

Simultaneous mechanical failures of components (pumps, pipes and steam generators) in two or three IHTS loops are not credible because of the physical and environmental separation of the three IHTS loops. Reduced heat removal from all three steam generators could occur only from failure of the turbine-generator or associated cooling water systems. Such events will be detected and automatic plant shutdown will occur well before the effects of the event propagate through the steam generators, IHTS and PHTS to affect the primary coolant temperature at the core inlet. To compensate for the reduced heat removal caused by loss of all three IHTS loops, automatic reactor shutdown must occur and, once shutdown occurs, decay heat removal must occur. As discussed in Section 3.3, below, the Shutdown Heat Removal Systems are capable of protecting the core even with loss of heat removal through the steam generators.

Excessive Whole Core Heat Generation

Excessive heat generation requires a reactivity insertion to the reactor. Reactivity can be inserted in only two significant ways: 1) control rod withdrawal and 2) compaction of fuel geometry.

Control rods are used to control reactor power (i.e., heat generation), to compensate for fuel burnup during life, and to provide a shutdown capability. Prior to bringing the reactor critical, some control rods are fully withdrawn from the core. Motion of these fully withdrawn control rods cannot add reactivity. To achieve criticality and power operation, other control rods are partially withdrawn from the reactor core. These partially withdrawn control rods then are used to control

reactor power and have the potential for further withdrawal, and hence for causing excessive heat generation. This arrangement is shown schematically in Figure 3-3.

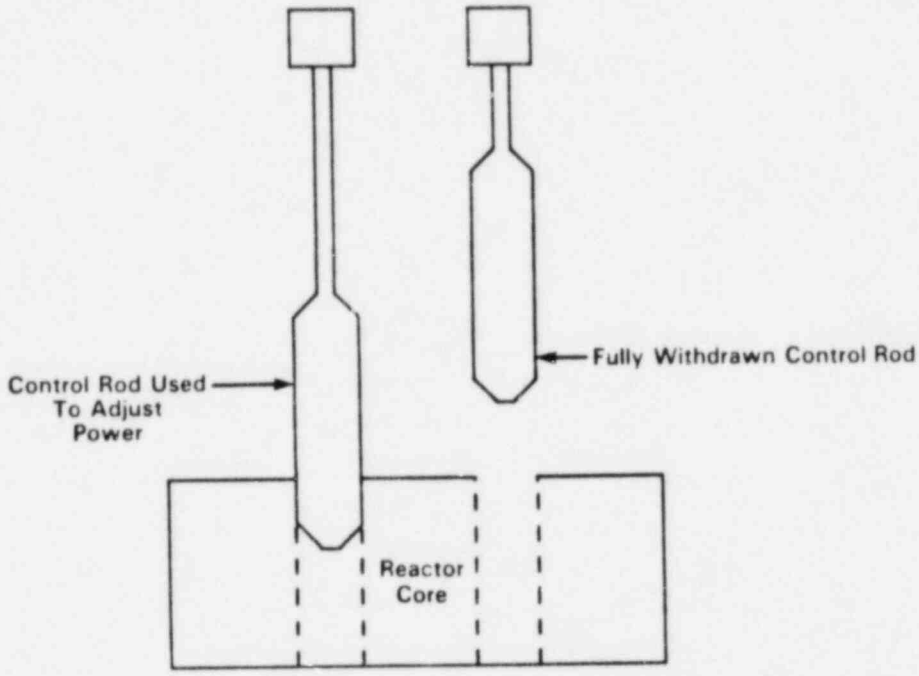

Figure 3-3: Control Rod Operation

The rate of potential reactivity insertion by further control rod withdrawal is inherently limited by the control rod drive mechanism design. The control rod is withdrawn by roller nuts engaging and rotating around the lead screw from which the rod is suspended. The roller nuts are held in engagement with the lead screw by the force from a magnetic field. Centrifugal force caused by rotation of the roller nuts opposes the magnetic field force. If the roller nut rotational speed were to become excessive causing the control rod to be withdrawn at an excessive rate, the centrifugal force would overcome the magnetic force,

causing the roller nuts to disengage from the lead screw. This stops the lead screw and control rod from further withdrawal, thus terminating the reactivity insertion. Figure 3-4 depicts the conditions controlling roller nut engagement and disengagement of the drive mechanism lead screw.

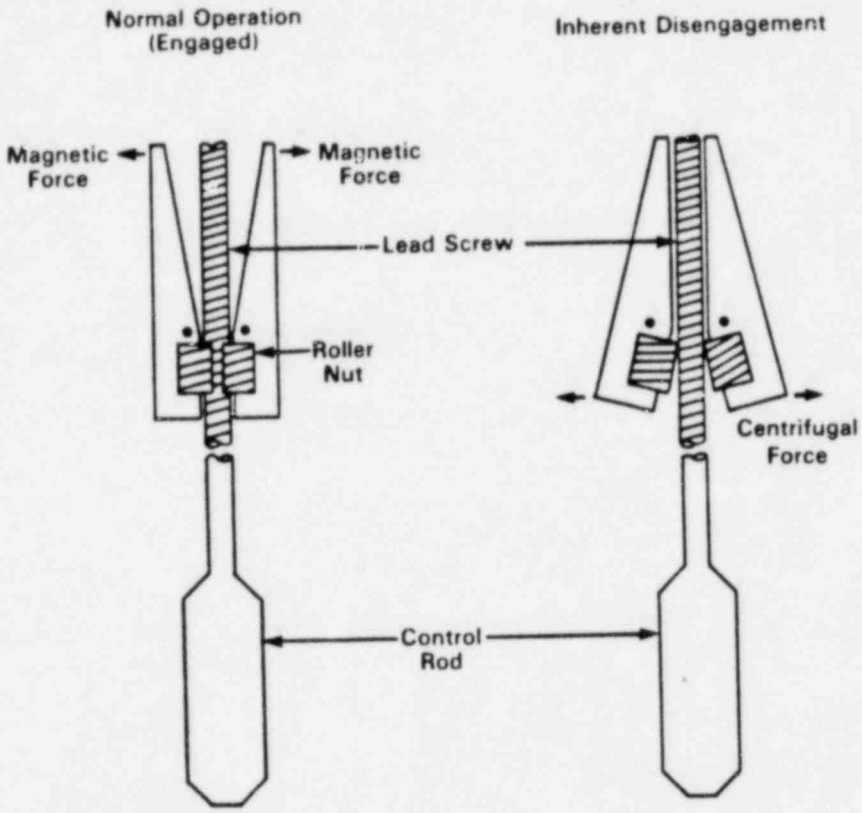

Figure 3-4: Inherent Termination of Reactivity Insertion Due to Control Rod Withdrawal

The PHTS is operated at low pressure so there can be no pressure driven control rod ejection. Further, control rod weight is larger than maximum coolant hydraulic forces so that flow from either intended or accidental operation of the PHTS pumps will not force a control rod out of the core.

The performance of the control rod drive mechanism, incorporating the roller nut and lead screw, has been verified in full scale tests.

The bounding DBA involving whole core excess heat generation from control rod withdrawal is based on assumed withdrawal at the rate at which the roller nuts will inherently disengage from the lead screw. There is no physically realistic greater rate of reactivity insertion from control rod withdrawal than this bounding DBA. This assumption conservatively neglects numerous design features that prevent inappropriate demands for power increase and that limit roller nut rotational speed to less than that at which inherent disengagement would occur. This DBA also envelops operator errors such as entering improper power demands or improperly maintaining plant control systems. To compensate for excessive whole core heat generation from control rod withdrawal, automatic reactor shutdown must occur. The Reactor Shutdown Systems perform this function. The Reactor Shutdown Systems are described in Section 3.3 below. PSAR Section 15.2 demonstrates the adequacy of the Reactor Shutdown and Shutdown Heat Removal Systems to reestablish the balance between heat removal and heat generation.

As previously mentioned, the second significant way to cause excessive whole core heat generation by a reactivity insertion to the reactor is by a compaction of fuel. CRBRP reactor fuel is held in position by rigid steel core former rings and hexagonal steel subassembly ducts, as shown in Figure 3-5.

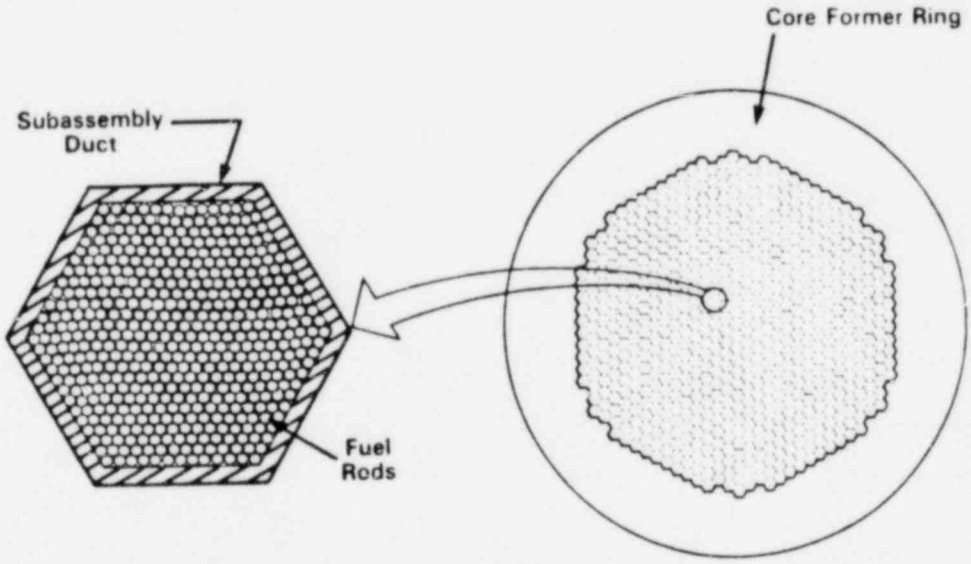

Figure 3-5: The Core Former Ring and Subassembly Ducts Limit Fuel Motion

The clearance between the core former rings and the hexagonal subassembly ducts is small but allows for manufacturing tolerances and material swelling during service. The movement of the subassembly ducts within the small clearance can change the reactivity of the core. The more tightly the ducts are compacted toward the center, the higher the reactivity.

The bounding DBA which envelops all fuel movement resulting in excessive heat generation is the instantaneous insertion of the maximum possible reactivity from subassembly duct compaction. Six areas of conservatism are included in this DBA:

1. The reactivity insertion is assumed to be instantaneous even though it is physically impossible for the ducts to move in zero time. Even if the motion of the ducts were assumed to take a fraction of a second, the predicted generation of excessive heat would be substantially alleviated.

2. The initial duct geometry is assumed to be in a worst case condition.

3. The final duct geometry is based on the assumption that all duct dimensions are "perfect" (i.e., nominal design dimensions without expected manufacturing tolerances), thus allowing ideal packing of the hexagonal subassembly ducts. The final condition definition also ignores forces that will hold the ducts apart.

4. The nuclear physics evaluation of the reactivity insertion conservatively considers uncertainties in the data base and is performed for the worst time in the fuel cycle.

5. The DBA reactivity insertion is arbitrarily specified to be 50 percent greater than the conservatively predicted maximum.

6. The DBA reactivity insertion from fuel motion is assumed to occur concurrently with a Safe Shutdown Earthquake which results in reduced control rod insertion speeds and coastdown of all three primary coolant pumps (the worst flow coastdown DBA).

Because the core former ring and fuel subassembly ducts are passive devices located inside the reactor vessel, human interaction cannot modify or interfere with the behavior of these components during plant operation.

There is no credible accident which could insert greater reactivity by fuel motion than the bounding DBA.

To compensate for excessive whole core heat generation from compaction of fuel, automatic reactor shutdown must occur. The Reactor Shutdown Systems perform this function. The Reactor Shutdown Systems are described in Section 3.3, below. PSAR Sections 15.1.4 and 15.2 demonstrate the adequacy of the Reactor Shutdown and Shutdown Heat Removal Systems to reestablish the balance between heat removal and heat generation.

Reduced Heat Removal and Excessive Heat Generation in Local Regions

In addition to the assessments of whole core sequences, a search was conducted for sequences that would produce imbalances in a limited region of the core (e.g., one fuel assembly) between heat generation and heat removal. This included searching for mechanisms where these local imbalances could progress to whole core involvement and an HCDA. The CRBRP design incorporates specific features to detect local imbalances and to prevent them from progressing to whole core involvement and an HCDA. These features and this assessment are described in Section 3.3 of the testimony and show that no credible sequences would lead to imbalances that could initiate an HCDA.

Conclusion

The discussion above demonstrates that the Applicants' DBAs envelop all credible accidents that could lead to reduced heat removal from the core or excess heat generation in the core. The Reactor Shutdown Systems are necessary to reestablish the balance between heat removal and heat generation after these DBAs. Following reactor shutdown, the Shutdown Heat Removal Systems are necessary to remove decay heat from the core and thus maintain the heat-removal/heat-generation balance in the long term. Characteristics and features of the plant were considered in selecting the Design Basis leak from the PHTS piping, which is less than the maximum theoretical leak. The means to prevent larger pipe leaks are necessary to prevent leaks beyond the design basis. Features to prevent and detect local heat-generation/heat-removal imbalances have been identified as necessary to prevent HCDA initiating conditions.

Thus there are four categories of design features which are necessary to prevent initiation of an HCDA: 1) the Reactor Shutdown Systems; 2) the Shutdown Heat Removal Systems; 3) means to prevent PHTS pipe leaks larger than the Design Basis leak; and 4) features to prevent local imbalance between heat generation and heat removal.

3.3 PREVENTION OF HCDAs

The design approach for CRBRP is to exclude HCDAs from the DBA spectrum by providing features to prevent their initiation. In conjunction with the delineation of DBA initiating conditions discussed in Section 3.2, a comprehensive search for HCDA initiating conditions was also made. This Section 3.3 discusses the features incorporated in the CRBRP to prevent occurrence of HCDA initiating conditions.

The major features necessary for this purpose are, as indicated in Section 3.2: 1) the redundant and diverse shutdown systems, 2) the redundant and diverse shutdown heat removal systems, 3) the means to prevent a double-ended rupture of the reactor vessel inlet pipe, and 4) the means to maintain individual subassembly heat generation and removal balance. These features are described as follows:

Reactor Shutdown Systems (RSS)

The Reactor Shutdown Systems consist of two redundant, diverse, independent, fast-acting shutdown systems, called the primary and secondary reactor shutdown systems.[3] Each of these two systems consists of sensors, logic trains, control rod drive

[3]Redundancy, diversity and independence assure a high likelihood of RSS operation. Redundant means that two (or more) sets of equipment are provided to perform the required function. Redundancy provides protection against random failures that could disable one of the sets of equipment. Diversity means that the redundant sets of equipment are not identical and, where practical, utilize different principles of operation or design concept. Diversity provides protection against potential common-cause failure within the systems that could be postulated to disable concurrently all of the redundant sets of equipment. Independent means that the sets of redundant equipment are separated physically and electrically (e.g., located in different electrical cabinets and receive power from separate power supplies). Independence provides protection against potential adverse environments or failures in supporting systems that could otherwise be postulated to disable all of the redundant sets of equipment, thus providing additional protection against common-cause failures.

mechanisms and control rods. Figure 3-6 graphically summarizes these elements and examples of the diversity between the primary and secondary reactor shutdown systems as discussed below. Further description of the RSS may be found in PSAR Sections 4.2.3 and 7.1.2.

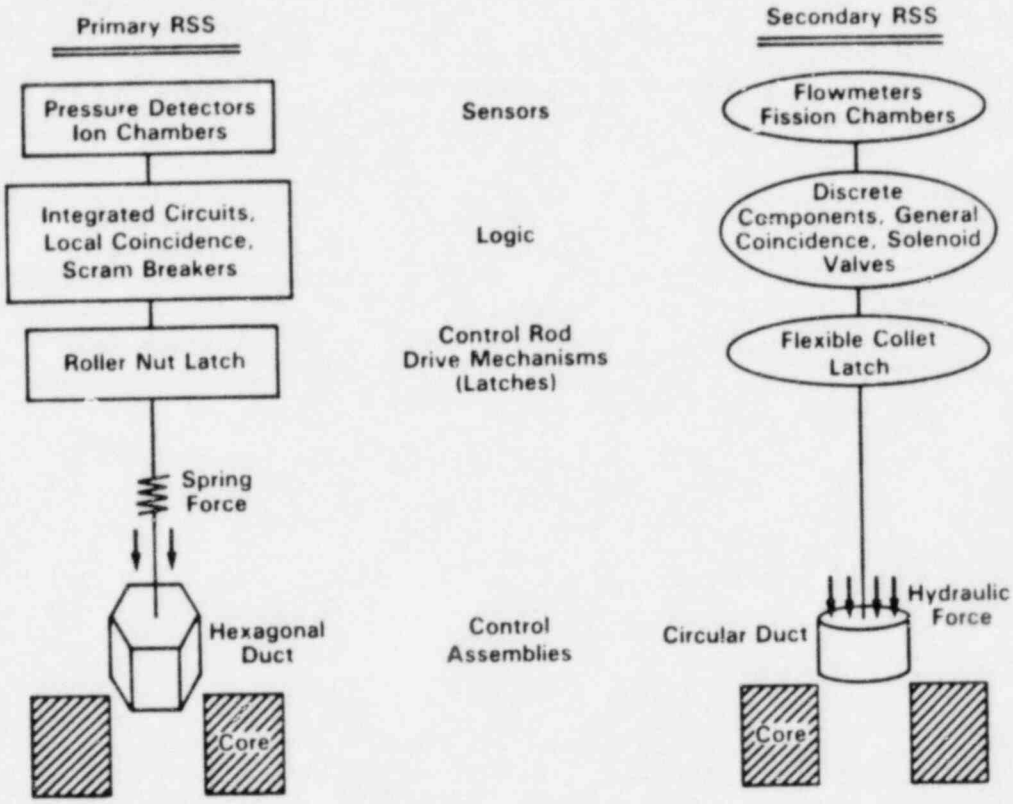

Figure 3-6: Redundant and Diverse Reactor Shutdown Systems

(1) <u>Sensors</u>

The RSS sensors monitor key plant parameters which directly indicate the condition of the plant. The sensors used in the RSS have been proven by use in nuclear and other applications. Redundancy is provided by using three sensors (Channels A, B and C) to monitor each parameter. Diversity between the primary and secondary systems is provided by using different sensors to

detect the same conditions of interest. For example, as depicted in Figure 3-7, different sensors are used to monitor the adequacy of PHTS pump performance. The primary RSS sensors measure the pressure (pump head) being delivered to the reactor core inlet, whereas the secondary RSS sensors measure the sodium flow being delivered to the core.

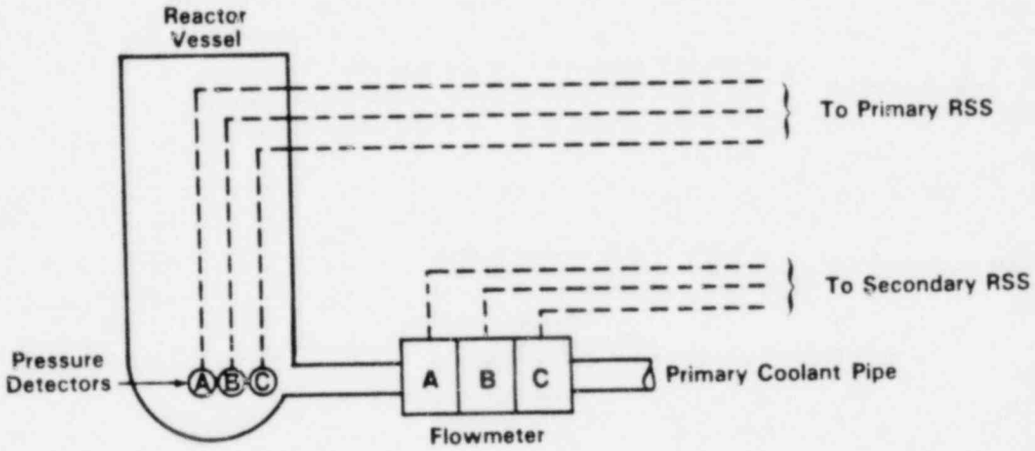

Figure 3-7: Redundant and Diverse RSS Sensors

Strict electrical independence, including physical separation, is maintained between the A, B and C channels to assure that the RSS reliably receives 3 independent signals.

(2) Logic

The RSS logic uses proven electronic and pneumatic technology to automatically convert signals from the RSS sensors into scram signals. Both the primary RSS and secondary RSS use two-out-of-three (2/3) logic to provide redundant scram signals while reducing the frequency of scrams caused by sensor failures. Differences in devices and logic structure assure independence and diversity in this portion of the RSS.

The primary RSS uses integrated circuits in a local coincidence logic structure. In this local coincidence logic, when any two of three sensors monitoring the same plant parameter indicate conditions exceeding the established limits, a reactor scram is initiated. A separate logic channel is provided for each plant parameter being monitored by the primary RSS. As shown in Figure 3-8, the scram signals generated by the integrated circuits is used to trip circuit breakers feeding power to the primary control rod drive mechanisms.

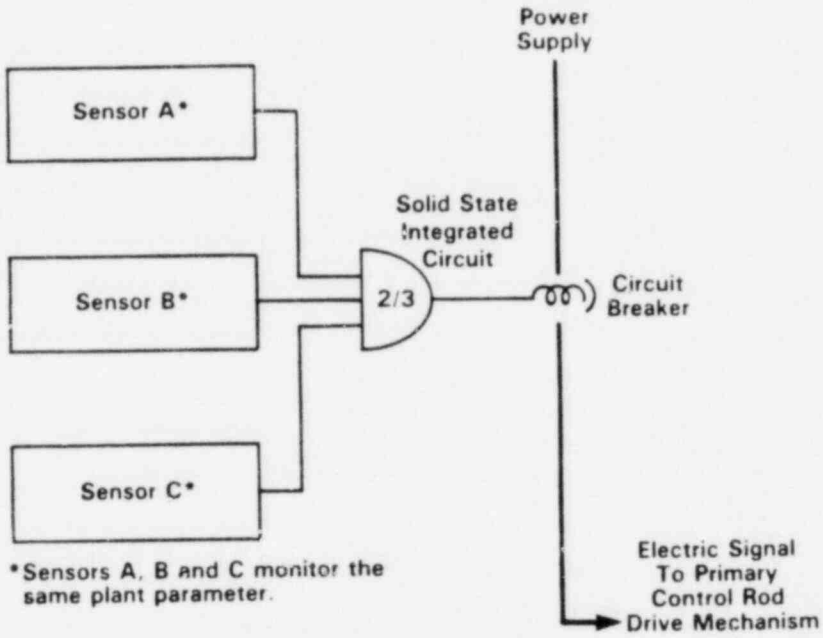

Figure 3-8: Primary RSS Logic

Strict electrical independence, including physical separation, is maintained between the three sets of logic in the primary RSS.

The secondary RSS uses discrete electronic components (e.g., transistors and capacitors) and solenoid operated pneumatic valves in a general coincidence logic structure. In this general coincidence logic, when at least one sensor in two of the three sensor channels (Channels A, B and C) indicate conditions exceeding the established limits, a reactor scram is initiated.

The scram will occur even if the two sensors in the two tripped channels are monitoring different plant parameters. As shown in Figure 3-9, the scram signal generated by the logic is a pneumatic signal to a secondary control rod drive mechanism (SCRDM).

Independent pneumatic valves perform the two-of-three logic function for each SCRDM, thus maintaining redundancy in the secondary RSS.

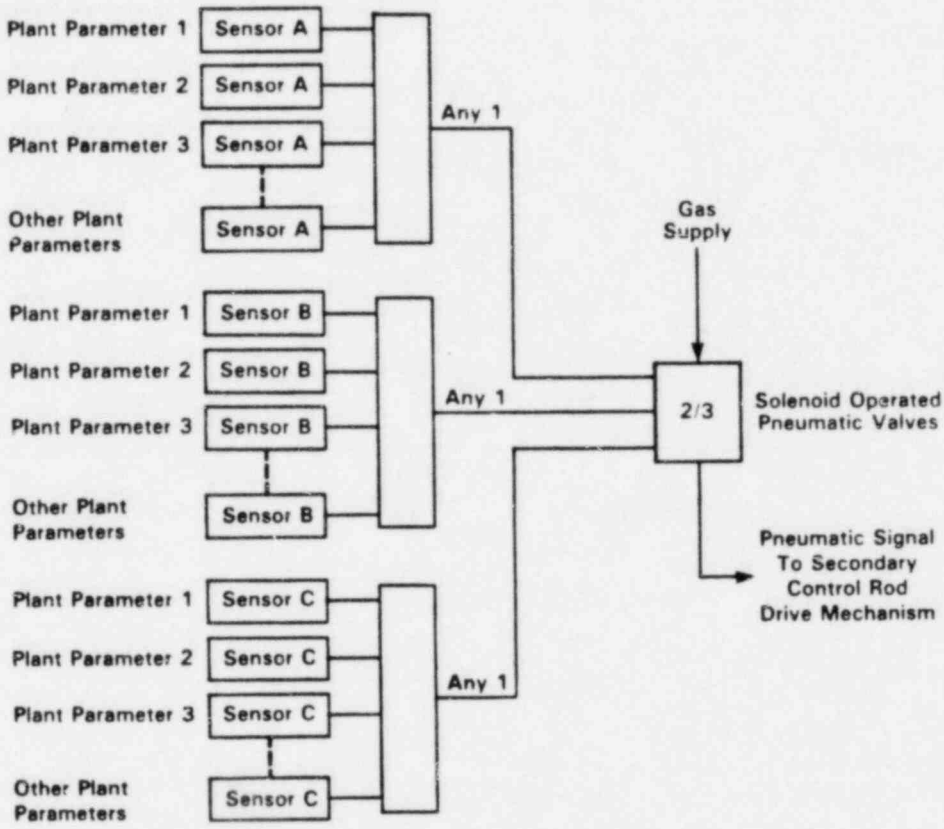

Figure 3-9: Secondary RSS Logic

(3) Control Rod Drive Mechanisms

The Control Rod Drive Mechanisms (CRDMs) are the components of the RSS which provide the feature allowing the insertion of the control rods. The primary CRDMs use roller nuts and opposing magnetic and spring forces as shown in Figure 3-10.[4] These forces control the engagement of the roller nuts with a translating lead screw which is attached to the control rod.

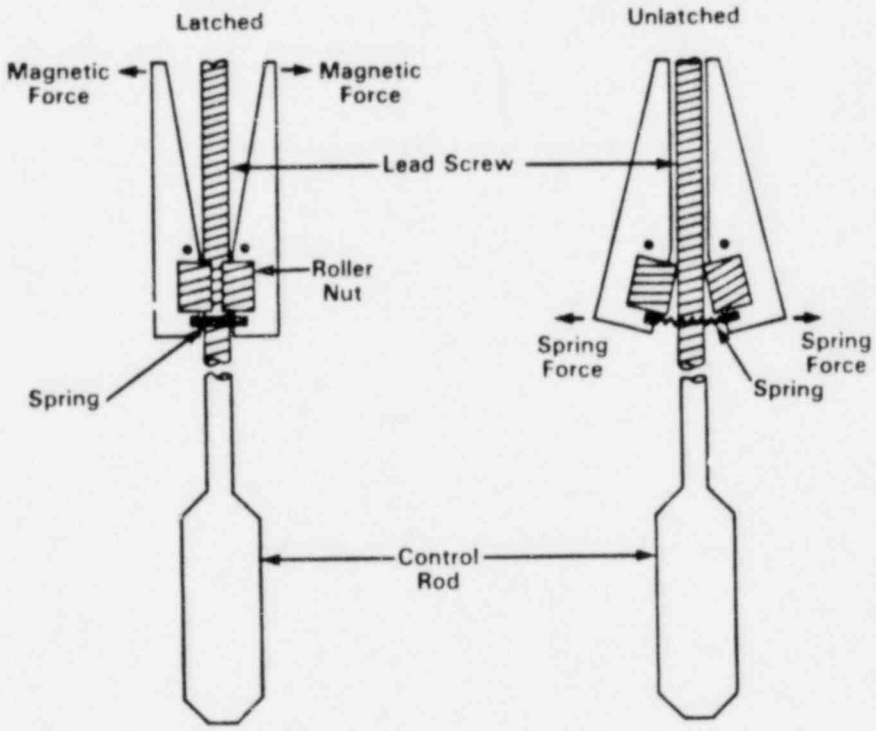

Figure 3-10: Primary RSS Roller-Nut Latch

When a scram signal from the primary RSS logic trips the circuit breakers, power to the primary CRDMs is interrupted, thus removing the magnetic force. When the magnetic force becomes less than the spring force, the roller nuts disengage from the lead screw allowing the lead screw to fall. This inserts the attached control rod fully into the core.

[4] In the Section 3.2 discussion of inherent features limiting the rate of control rod withdrawal, discussion of the spring force was not included because it is only a small contributor in that context.

In contrast, the secondary CRDMs use a flexible collet latch and opposing pneumatic and hydraulic forces as shown in Figure 3-11.

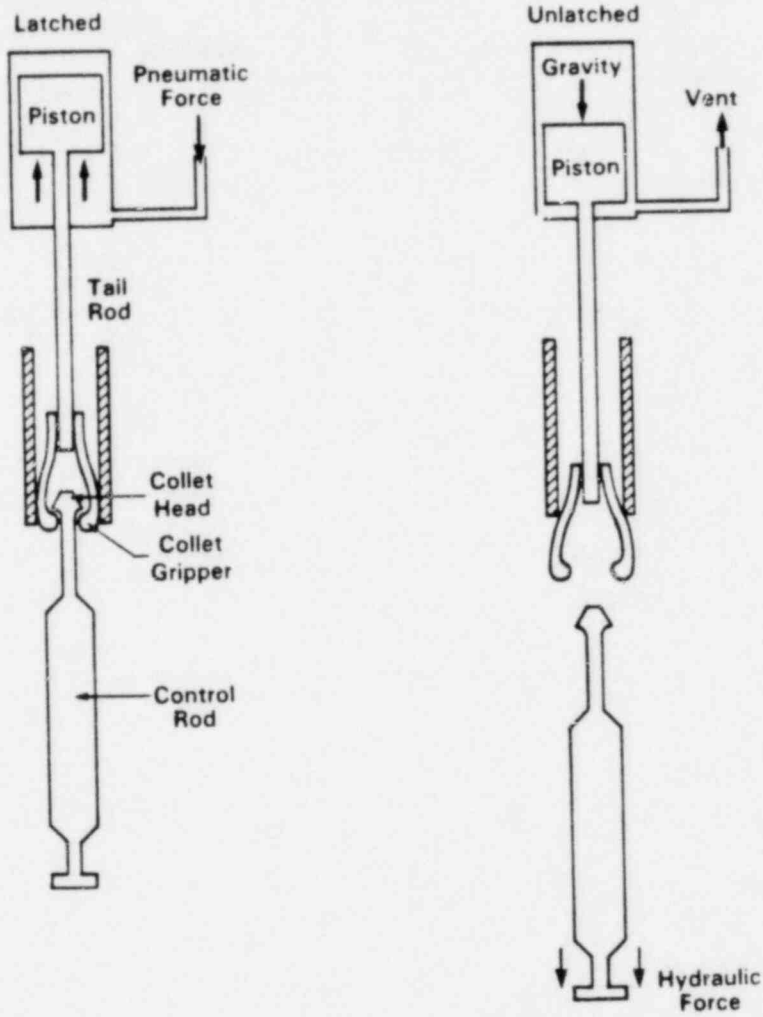

Figure 3-11: Secondary RSS Collet Latch

The movable control rod is rigidly attached to the collet head. A piston with attached tail rod controls the position of the collet grippers around the collet head. Gas pressure (pneumatic force) normally holds the piston in a raised position, causing the collet grippers to grip the collet head. The pneumatic scram signal from the secondary RSS logic removes the gas pressure from below the piston allowing the piston to drop, disengaging the collet grippers from the collet head. This allows the collet head and attached control rod to insert fully into the core.

These features provide diversity in reactor shutdown activation principles as well as separation in location of the latch point.

(4) Control Rods

The movable control rods of the primary RSS differ from those of the secondary RSS. The feature used to assure rapid insertion of the primary control rods is spring force acting on the lead screw. Although the primary control rods would fall into the core by gravitational force alone, the initial scram motion of each rod is accelerated by a spring located around each lead screw. The feature used to assure rapid insertion of the secondary control rods is hydraulic force acting on the control rod. Although the secondary control rods would fall into the core by gravitational force alone, the initial scram motion of each rod is accelerated by sodium hydraulic forces acting on a piston located at the bottom of the rod. These diverse means of accelerating the primary and secondary rods into the reactor core are shown in Figure 3-12.

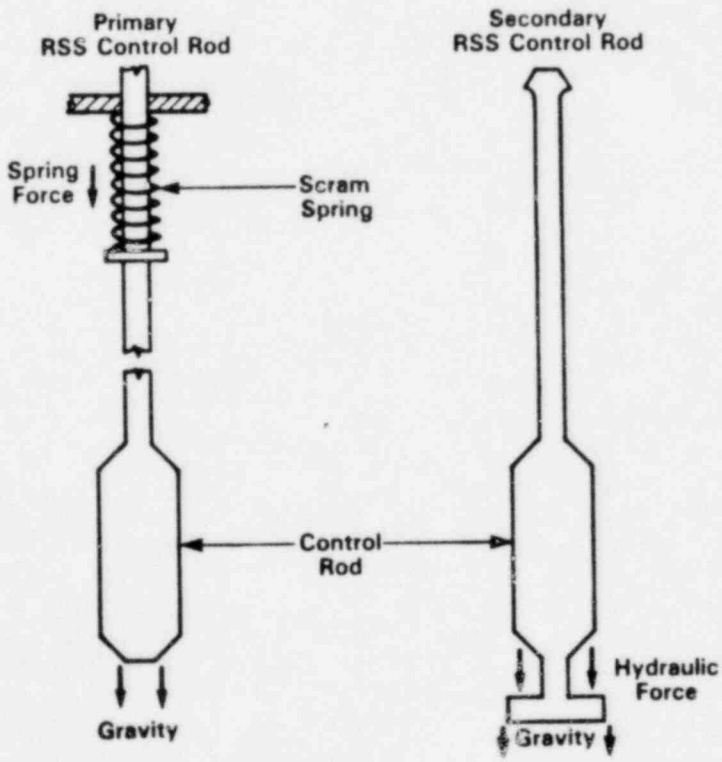

Figure 3-12: RSS Control Rods

The redundant, diverse and independent characteristics achieved for the overall RSS provide two fast-acting shutdown systems, each of which is capable of shutting down the reactor and preventing HCDA initiation assuming any single failure within the operable system (including the assumption that the most reactive control rod in the operable system does not insert). See PSAR Sections 15.2 and 15.3 for further discussion.

The redundancy, diversity and independence in the sensors, logic, latches, and control rods of the RSS assure that there is a high likelihood that the RSS will automatically shut down the reactor when required. Highly likely reactor shutdown assures that the balance between heat generation and heat removal will be reestablished after a DBA. Thus there is a low likelihood that a DBA would progress to HCDA initiation due to a failure to scram.

Shutdown Heat Removal Systems

Following reactor shutdown, the reactor decay heat is removed by the Shutdown Heat Removal Systems (SHRS).

The SHRS can remove heat by four independent paths. The systems providing these paths incorporate redundant and diverse features, thus assuring a high likelihood of SHRS operation (see footnote 3, page 27). Three of the four paths reject the heat to the atmosphere through the three heat transport loops described in Section 3.2. The fourth path rejects heat to the atmosphere through the Direct Heat Removal Service (DHRS).

During shutdown, the heat is normally transported from the reactor vessel through the Primary Heat Transport System (PHTS), Intermediate Heat Transport System (IHTS), and Steam Generators (SGs). Sodium is circulated in the PHTS and IHTS loops using pony motors to turn the coolant pumps at reduced speed. The steam generated by the SGs bypasses the turbine-generator (T-G) directly to the T-G condenser. At the T-G condenser, the heat is

transferred to the cooling tower water which rejects the heat to the atmosphere. Any one of the three overall Heat Transport System (HTS) paths has the capability to independently reject the reactor decay heat. When the plant is shut down, these features automatically function to remove decay heat; operator action is not required. Figure 3-13 provides a schematic representation of these features.

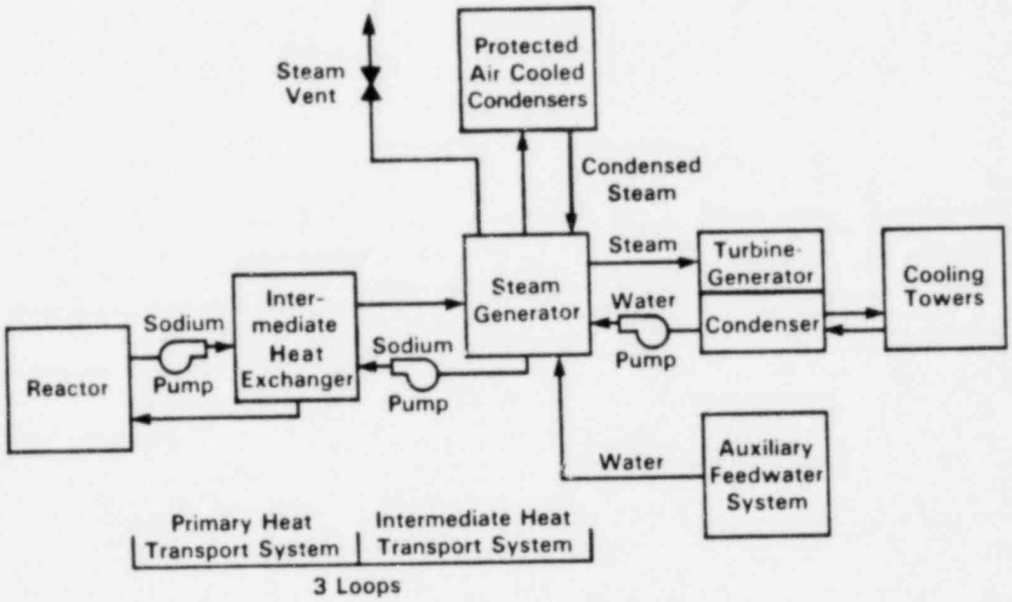

Figure 3-13: Schematic of Shutdown Heat Removal Systems—Three Main Heat Removal Paths

If the T-G condenser is not available as a heat rejection path, the SGs are automatically isolated (without operator action) from the T-G condenser by valve actuation. Concurrently, the Steam Generator Auxiliary Heat Removal System (SGAHRS) is automatically activated to reject the decay heat from the SGs to the atmosphere. The SGAHRS removes the heat that has been transported to the SGs by a combination of venting steam to the atmosphere and by air cooled steam condensers. These steam condensers are called Protected Air Cooled Condensers (PACCs). Each of the three heat transport loops has venting capability and a PACC.

The venting of steam will be the heat removal mode if the T-G condenser is lost immediately after reactor shutdown. Venting automatically ceases about one hour after shutdown when the heat rejection capability of one PACC is adequate to maintain safe shutdown.

The water lost from the SGs during the venting process is replenished by the normal feedwater system or, if this source is unavailable, from the Auxiliary Feedwater System (AFWS). The make-up of water from either system is actuated automatically and does not require operator action.

The AFWS has three feedwater pumps which are independent and diverse. There are two electric-motor-driven pumps and one steam-turbine-driven pump. The two motor-driven pumps can supply make-up water to any one or all three of the SGs. In the event that the motor-driven pumps are unavailable, the turbine-driven pump can independently supply the make-up water to any one or all three of the SGs.

Any one of the HTS paths in conjunction with the normal feedwater system or AFWS can remove the reactor decay heat without the need for operator action.

The pony motors, electrical motor-driven auxiliary feedwater pumps, and PACC fans all are operable using either off-site or on-site power supplies. The off-site power supply consists of four separate connections to the TVA grid. The principal on-site power supplies are three diesel-generators. Each HTS path and its associated PACC is provided independent on-site power from a separate diesel-generator. One of the three diesel-generators is different from the other two. This provides diversity in addition to redundancy in the SHRS.

In addition to the forced circulation heat rejection mode discussed above, the three HTS paths can remove the shutdown heat using natural circulation. This is an inherent capability resulting from placement of the thermal centers of the heat exchanging components at successively increasing elevations in the plant. Thus, the thermal centers of the reactor, the IHXs, the steam generators and the PACCs are at successively increasing elevations. By using this natural circulation capability along with the turbine-driven auxiliary feedwater pump with battery powered instrumentation and control, SHRS capability can be maintained even in the event of loss of all off-site power and loss of all three on-site diesel-generators.

The high boiling point of sodium permits implementing a PHTS design that precludes loss of coolant from the core as the result of PHTS leaks, and assures shutdown cooling even if leaks should occur. This protection is accomplished by providing guard vessels around the PHTS components, and elevated piping outside the guard vessels. The guard vessels are sized to retain leaking sodium so that the sodium in the reactor vessel remains at a safe level above the core. The piping outside the guard vessels is elevated so that leaks which might occur in these sections are limited in leakage volume. Pumps operating at pony motor speed are not able to raise sodium to the elevated leak location but are able to circulate sodium through the core and the intact loops.

The SHRS features discussed above provide adequate redundant, diverse, and independent reactor decay heat removal capabilities.

In spite of this, a fourth SHRS heat removal path is provided to remove heat in the event that the three HTS paths are simultaneously incapable of removing the shutdown heat. This system is shown in Figure 3-14 and is called the Direct Heat Removal Service (DHRS).

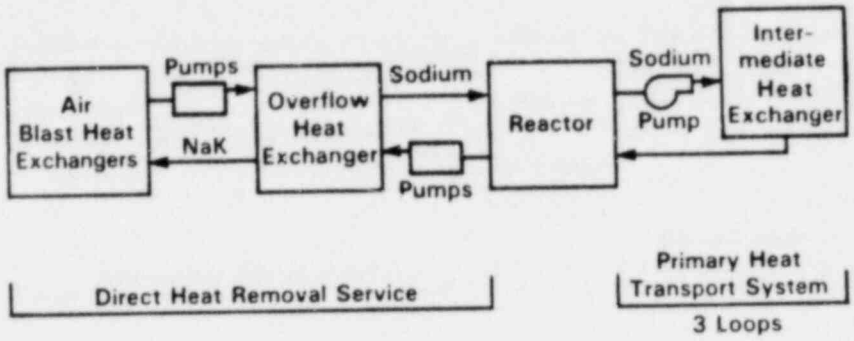

Figure 3-14: Schematic of Shutdown Heat Removal Systems—
Fourth (DHRS) Heat Removal Path

The DHRS takes advantage of the inherent capability of the liquid sodium coolant to store a large amount of heat energy. The DHRS also takes advantage of the inherent electrical conductivity of liquid metals by using electromagnetic pumps in the heat removal path. These pumps exert magnetic force on the liquid metal DHRS coolants. (This is diverse from the use of mechanical pumping principles in the heat transport system loops.)

Heat initially is transferred from the core to the PHTS sodium by circulation of PHTS sodium through the core. The DHRS removes heat from the primary sodium using two electromagnetic pumps to circulate primary sodium from the reactor vessel to a heat exchanger. This heat exchanger is called the Overflow Heat Exchanger (OHX). At the OHX, heat contained in the sodium is transferred to NaK[5]. The NaK is transported from the OHX by two electromagnetic pumps to two heat exchangers. These heat exchangers are called Air Blast Heat Exchangers (ABHXs). At these ABHXs, the heat contained in the NaK is rejected to the atmosphere by fan-forced circulation of air. The electromagnetic pumps and fans are operable using either off-site or on-site power supplies.

The Shutdown Heat Removal Systems are described further in Chapter 5 of the PSAR.

---

[5]NaK is a liquid metal of 78 percent sodium and the remainder potassium.

The redundancy, diversity and independence of the four SHRS paths assure that there is a high likelihood that reactor decay heat removal will be accomplished following all reactor operations. Highly likely decay heat removal assures that the balance between heat generation and heat removal is reestablished following a DBA. Thus there is a low likelihood that HCDA initiation would result from failure to remove decay heat.

Means to Prevent Double-Ended Inlet Pipe Rupture

As discussed in Section 3.2 above, the plant can accommodate the Design Basis leak from the primary coolant piping. Further, leaks much greater than the Design Basis leak can be accommodated without approaching HCDA initiating conditions. However, a hypothetical doubled-ended rupture of one of the primary heat transport system (PHTS) pipes within a section near the reactor vessel inlet could produce HCDA initiating conditions. Means to prevent such rupture are included in the design and are discussed in the paragraphs that follow.

The inherent characteristics of the CRBRP PHTS coolant, the mechanical properties of the PHTS piping, the compatibility of the piping with the surrounding environment, PHTS operating conditions, and a sensitive leak detection system limit the potential for large PHTS piping leaks.

Sodium is a coolant with a high boiling temperature, thus allowing operation near atmospheric pressure. This reduces the internal force acting on the piping, thus reducing the mechanism that could cause a small piping flaw to grow to become a crack and cause a small crack to develop into a major leak.

Stainless steel was chosen as the PHTS piping material because it is tough (resists tearing), it is ductile, and it is able to accommodate high service temperatures. Stainless steel

is compatible with sodium. The outside of the pipe will operate in a nitrogen-inerted cell atmosphere with a low oxygen content. The inert cell environment is low in water vapor content and, in combination with the piping insulation which has a low residual chloride content, assures that crack growth rates will be low. Although stainless steel can lose toughness in a pure nitrogen environment, the small amount of oxygen in the cell atmosphere is adequate to assure that such nitrogen embrittlement will not occur in the PHTS piping. If any unexpected change in stainless steel properties were to occur during plant life, it would be detected by the materials surveillance program and would result in appropriate corrective action.

The PHTS is located in sealed, inerted cells which precludes access to the piping during power operation, eliminating the possibility of accidental human interaction resulting in mechanical damage. Insulation with double stainless steel sheathing further shields the piping from external loads. Further, the piping will retain its integrity even if one or two snubbers were to fail during plant operational loadings, including the loadings from a Safe Shutdown Earthquake. This assures the likelihood of occurrence of pipe leaks from external loads is low.

A redundant, diverse and sensitive leak detection system monitors each section of PHTS piping and each of the cells in which the piping is located. This system can detect leaks as small as 100 grams per hour (orders of magnitude below the Design Basis leakage rate) and alert the operator to take action.

Four levels of protection assure that the combination of operating and accident loads combined with material flaws will not result in double-ended rupture of the inlet piping.

1. The highest quality engineering standards are specified for design, analysis, materials, fabrication, examination, and testing. The specifications for allowable indications of flaws are more restrictive than

the ASME Code. A comprehensive quality assurance program ensures that the specified standards are met. There is little potential for initial flaws in the piping. A comprehensive inservice inspection program will assure that there is little potential for initiating flaws during plant life.

2. A detailed fracture mechanics evaluation has shown that, even if a large initial flaw were to exist, the toughness of the piping prevents significant growth of the flaw. Growth of a flaw to become a crack will not occur during the entire plant lifetime.

3. A comprehensive technology program has shown that even if a crack did grow significantly, it would penetrate the pipe and be detected as a small leak (i.e., by the leak detection system, with 100 grams per hour detection capability) prior to developing potential for a large pipe break.

4. Analysis and testing have demonstrated that, even if a small leak is not detected and corrective action taken, toughness and ductility of the stainless steel pipe along with the low coolant operating pressure would limit the maximum crack length. This limited crack length would be very short compared with that crack which could cause a double-ended pipe rupture.

Detailed discussion of these four levels of protection is provided in WARD-D-0185 "CRBRP; Integrity of Primary and Intermediate Heat Transport System Piping in Containment".

The overall conclusion that the likelihood of double-ended pipe rupture is low is strongly supported by worldwide operating experience with sodium systems. There have been no occurrences of double-ended sodium pipe rupture even though some of these facilities have not been designed, constructed or operated with the strict controls on piping used for CRBRP.

The inherent coolant characteristics, piping properties, operating conditions and leak detection system in CRBRP assure that the occurrence of PHTS leaks greater than the Design Basis leak are highly unlikely. The Design Basis leak does not result in a significant imbalance between heat generation and heat removal. Thus there is a low likelihood that HCDA initiating conditions would occur as a result of inlet pipe rupture.

Maintenance of Individual Subassembly Heat Generation and Removal Balance

A local imbalance between heat generation and heat removal could theoretically result from mispositioning a core subassembly in a location where it would receive inadequate coolant flow, or from blockage of flow to an individual subassembly. If the imbalance were large enough, HCDA initiating conditions could occur. The CRBRP design includes features and inherent capabilities to prevent the occurrence of these theoretical HCDA initiators.

A coordinated mechanical design of the core assemblies, the core support and the fuel handling system ensures that a subassembly will not be positioned in a location which would cause increased heat generation or reduced coolant flow. The design includes mechanical interlocks to prevent such interchanges.

Design features have been provided to maintain the balance between heat generation and removal in individual subassemblies. Two types of features are provided:

1. Features that preclude a rapid reduction of flow to a limited region of the core (e.g., a single fuel subassembly) that could result in fuel or clad melting.

2. Features that ensure that local failures (e.g., fuel rod failures) would not propagate to wide-spread failures.

The principal considerations in each of these two types of features are summarized below.

With respect to the first type of features, a rapid reduction of flow to a fuel subassembly is precluded by the multiplicity of flow paths in the fuel subassembly inlet, in the inlet modules that hold groups of subassemblies, and in the core support structure that holds and supports the inlet modules. The redundant flow paths resulting from the primary inlet ports and the auxiliary inlet ports in the inlet modules are illustrated in Figure 3-15.

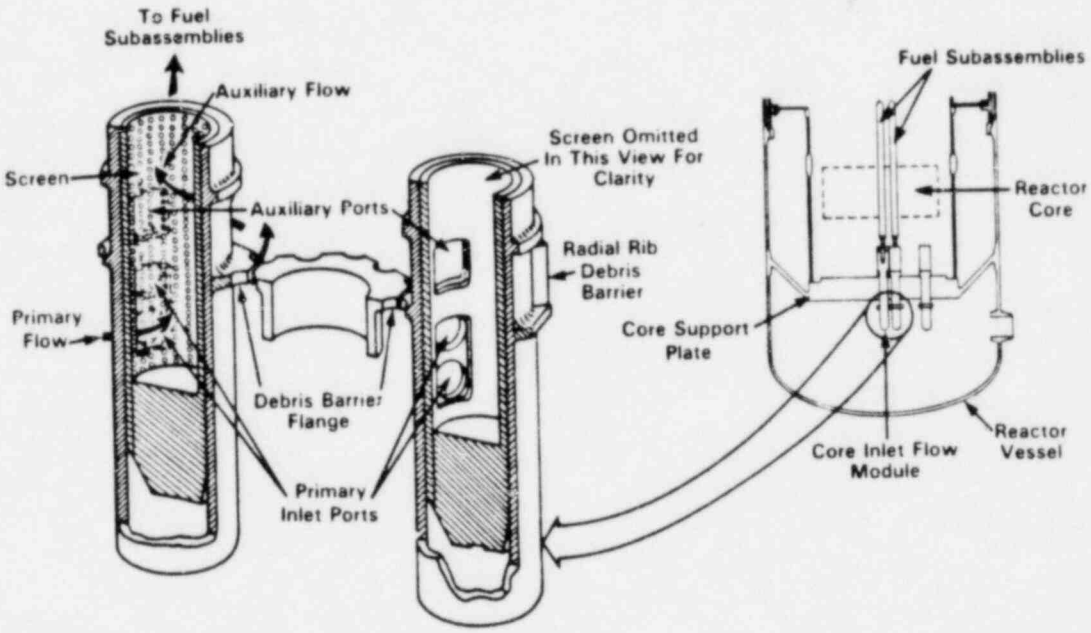

Figure 3-15: Features to Prevent Rapid Reduction of Flow to a Limited Region of the Core.

Because of the arrangement of these flow paths and the cross flow that would exist among the inlets to the various subassemblies, no object could block enough passages to starve the flow to any subassembly.

During the pre-startup acceptance testing, any particles larger than 100 microns will be removed from the sodium by filters. This will ensure that foreign material will be removed prior to loading the core subassemblies. During operation, high

quality purity levels will be maintained by the cold trap purification system.

Although substantial quantities of particles are not anticipated, the flow paths are arranged so that smaller and smaller particles would be successively removed from the flow stream as it approaches the subassembly inlet. Thus, only very small particles (less than 0.25 inch diameter) could enter the subassembly inlet. Such particles would be trapped at the bottom of the bundle of fuel rods. Analyses show that even if a major buildup of such particles is assumed (more than 80% of the flow area blocked), the sodium coolant temperature would not increase by more than 200°F. This increase would not result in boiling in the hottest fuel assembly. Thus, the design has margin to accommodate a very substantial blockage, in addition to the provisions to prevent such blockages.

With respect to the second type of features, extensive analyses supported by experimental data show that local fuel rod failures would not propagate beyond their immediate vicinity. PSAR Section 15.4 discusses these features and provides evaluations to show that local failures would not propagate. Thus, fuel propagation throughout a fuel subassembly is not anticipated. Further, inherent protection to prevent propagation from one subassembly to a second subassembly is provided by the steel hexagonal subassembly ducts that enclose each fuel rod bundle.

Fuel failures will be detected by fission gas detectors monitoring the cover gas and by delayed neutron detectors monitoring the sodium, as described in PSAR Section 7.5.4. The fission gas detectors will detect a single fuel rod failure. The delayed neutron detectors will detect fuel contact with sodium at levels below those that could result in local blockages. This instrumentation will provide information to the operator in the event of localized failures so that appropriate action can be taken to ensure that the condition remains localized.

The features to assure proper reactor subassembly location and to prevent local flow blockages, along with the inherent limitation of local failure propagation within a subassembly, assure the low likelihood of significant local imbalances between heat generation and heat removal. The means to detect any local fuel rod failure and the inherent limitation of propagation between subassemblies assure the high likelihood that any fuel failure would remain localized. Thus HCDA initiation due to local imbalance between heat generation and heat removal is of low likelihood.

Conclusion

Features are incorporated in the CRBRP to prevent progression of an accident to an HCDA. These features, which involve the application of proven technology, provide for two redundant, diverse, independent, fast-acting shutdown systems for the CRBRP and for removal of reactor decay heat by a SHRS which has four independent heat removal paths. These features also include means to prevent double-ended inlet pipe rupture and methods to maintain the balance between heat generation and heat removal in individual subassemblies. Inclusion of these features assures that initiation of an HCDA will be prevented, and thus, that HCDAs need not be included within the DBAs for the CRBRP.

4.0 RADIOLOGICAL SOURCE TERM AND CONTAINMENT OF DBAs

As discussed in this section of the testimony:

1. Contrary to NRDC Contentions 2(a) and 2(b), the radiological source term used by the Applicants to assess site suitability envelops the potential hazards from any accident considered credible, in accordance with 10CFR100.11(a).

2. Contrary to NRDC Contention 2(c), the radiological source term used by the Applicants appropriately considers the release of fission products, core materials and sodium.

3. Contrary to NRDC Contention 2(d), the 10CFR100 whole body and thyroid dose guidelines are met at the Exclusion Boundary and at the Low Population Zone, based on the expected demonstrable leak rate from the containment and the meteorological conditions pertinent to the CRBRP site. Guidelines for bone and lung specified by the NRC staff to be equivalent to 10CFR100 guidelines are also met.

4.1 RADIOLOGICAL SOURCE TERM ENVELOPS CREDIBLE ACCIDENTS

For the purposes of site suitability evaluation under 10CFR100, the Applicants must assume a Site Suitability Source Term (SSST) - a fission product release from the core to the containment - and calculate the radiological consequences of that release. Table 4-1 compares the consequences of the SSST release to the maximum consequences of the releases to containment associated with DBAs.

Table 4-1
Comparison of SSST and DBA Consquences

Organ	Construction Permit Guidelines (REM)	Exclusion Boundary (2 Hour) Bounding Design Basis Accident (REM)	Exclusion Boundary (2 Hour) SSST (REM)	Low Population Zone (30 days) Bounding Design Basis Accident (REM)	Low Population Zone (30 days) SSST (REM)
Whole Body	20	0.02	3.7	0.003	1.7
Thyroid	150	0.08	23.1	0.01	12.6
Lung	35	0.02	1.6	0.003	0.9
Bone	150	0.29	7.2	0.05	4.1

In this comparison, the maximum consequences are identified for each pertinent organ for both the 2-hour Exclusion Boundary and the 30-day Low Population Zone doses. This comparison shows that the consequences of the SSST release are bounding.

In Contention 2(b) the Intervenors contend that the radiological source term analysis should be based on the assumption that CDAs are credible accidents within the DBA envelope. As indicated in Section 3.2 of this testimony, HCDAs have been excluded from the DBA spectrum. Therefore, there is no requirement to include such accidents in the SSST and Contention 2(b) is invalid.

4.2 RADIOLOGICAL SOURCE TERM ADEQUATELY CONSIDERS RADIOACTIVE MATERIAL RELEASES

The radiological source term specified by the NRC staff for site suitability assessment includes the following radioactive materials assumed to be released to the Reactor Containment Building:

Noble gases	100%
Halogens	50% (25% airborne)
Other fission products	1%
Plutonium	1%

This specification is the same as that applied to light water reactors except that it contains the addition of 1% of the plutonium.

These percentages were applied to the radioactive inventory (including fuel) at the end of an equilibrium fuel cycle, which maximizes both the fission product and plutonium inventories.

In establishing the SSST, the appropriate specification for sodium was also considered. (Some credible accidents would release sodium; see Section 15.6 of the PSAR.) Zero sodium was specified since the addition of sodium to the SSST would reduce the radiological consequences. Physically, this would result because the sodium (or sodium reaction products) would increase the density of aerosols in the Reactor Containment Building. A higher aerosol density would increase the rate of agglomeration and fallout of the aerosols. This would result in a lower concentration of other materials such as halogens and plutonium in the Reactor Containment Building atmosphere and, consequently, less leakage of these materials to the environment. The decrease in dose attributable to the increased rate of agglomeration and fallout is greater than the added dose from the addition of radioactive sodium, thus resulting in a lower total dose. Therefore, it is most conservative to specify zero sodium in the SSST.

Contention 2(c) states in part that the radiological source term analysis has not adequately considered the environmental conditions in the Reactor Containment Building created by the release of substantial quantities of sodium. Contrary to this contention, the Applicants have considered design basis events involving the release of sodium, as described in Section 15.6 of the PSAR. The containment environmental conditions are within

the design requirements of the Reactor Containment Building. In particular, the maximum predicted pressure for any design basis accident involving sodium release is less than 2 psig, while the design pressure is 10 psig. The analysis of the SSST conservatively assumes that the design leak rate of 0.1 volume percent per day (corresponding to the design pressure of 10 psig) occurs over the full 30 day period.

Therefore, Contention 2(c), which alleges that the radiological source term analysis inadequately addresses the release of fission products, core materials, and sodium and the environmental conditions in the Reactor Containment Building created by the release of substantial quantities of sodium, is invalid.

4.3 CONTAINMENT REDUCES OFFSITE DOSES TO ACCEPTABLE LEVEL

The CRBRP containment system is described in Section 6.2 of the PSAR. As indicated in the Figure 4-1, the design incorporates a welded steel containment vessel enclosed by an outer reinforced concrete confinement.

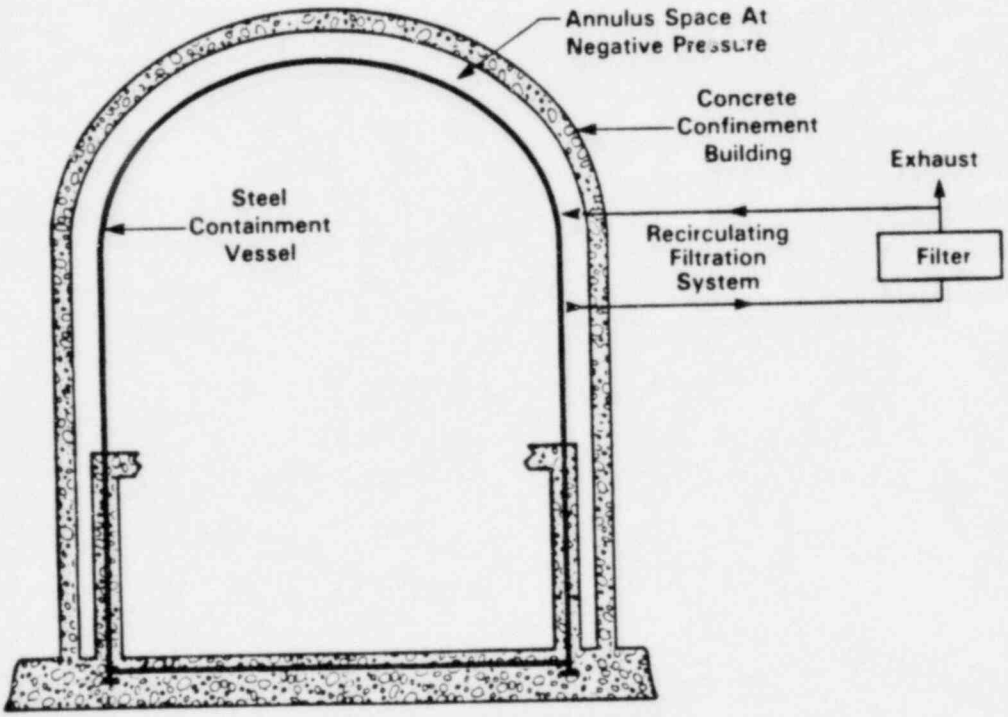

Figure 4-1: Containment/Confinement for Mitigating the SSST

The air in the annular airspace between the steel containment and the confinement building (the annulus) is recirculated and filtered. The annulus is maintained at a negative pressure relative to the external environment. The purpose of the negative pressure is to direct the leakage from the steel containment vessel into the annulus, where it would be confined and filtered. All of these containment system features have been used in light water reactors. The steel containment vessel is designed for a leak rate of 0.1 volume percent per day at the design pressure of 10 psig. Pressure capability and leak rate for this containment concept have been demonstrated by tests in light water reactors and FFTF.

Meteorological data have been obtained for the CRBRP site and have been used to establish dispersion characteristics, as reported in Section 2 of the PSAR. The data collection and reduction meet the requirements of Regulatory Guide 1.145.

Using the SSST specified by the NRC staff, the containment and confinement design parameters, the site meteorology, and the analysis methods described in Section 15A of the PSAR, the dose consequences in Table 4-2 were determined.

Table 4-2

SSST Guidelines and Doses

Organ	10CFR100 Guidelines (REM)	Construction Permit Guidelines (REM)	Exclusion Boundary (2 Hour) (REM)	Low Population Zone (30 Day) (REM)
Whole Body	25	20	3.7	1.7
Thyroid	300	150	23.1	12.6
Lung	75*	35	1.6	0.9
Bone	300*	150	7.2	4.1

*These values are considered by the NRC Staff to be equivalent to 10CFR100 guidelines. (See NUREG-0786, "Site Suitability Report in the matter of Clinch River Breeder Reactor Plant," pages III-9,10.)

These consequences are less than the 10CFR100 guidelines for whole body and thyroid doses and the equivalent guidelines determined by the NRC Staff for lung and bone doses.

Since the calculated doses are less than the guideline values in all cases, Applicants have demonstrated that the containment is adequate to reduce SSST doses to an acceptable level, thereby refuting Contention 2(d).

5.0 HCDA EVALUATIONS

As discussed in this section of the testimony, contrary to NRDC Contentions 2(f), 2(g), 2(h), and 3(c), the HCDA progressions, including accident energetics (if any), core meltthrough following loss of core geometry, sodium-concrete interactions, and radiological consequences, have been adequately analyzed for the purposes of considering residual risks associated with HCDAs.

5.1 HCDA OVERVIEW

Even though the Applicants have demonstrated that HCDAs are beyond the design basis, the Applicants nonetheless have included features in the design to provide additional margin for mitigation of these hypothetical accidents. The Applicants have evaluated HCDAs and have shown that these features ensure that the residual risk is low.

Applicants' analysis of HCDAs focused on an assessment of mechanical and thermal challenges posed by the HCDA on the primary system boundary and on the containment, and further focused on the adequacy of margin provided to mitigate such challenges.

Realistic assessments of HCDA sequences, including best estimate analysis and consideration of uncertainties, have been performed and predict a non-energetic outcome (that is, there is no early mechanical challenge to primary system integrity). Further analyses involving significant deviations from best-estimate understanding of accident physics have been performed. Pessimistic assumptions, well beyond those appropriate for a realistic assessment, must be invoked to predict energetics. The structural margin provided in CRBRP is adequate to contain the energetics predicted in these analyses.

HCDAs that involve whole core melting could thermally challenge structures, including the reactor vessel and guard vessel. If the reactor vessel and guard vessel eventually fail, material would be released into the reactor cavity cell. The release of material into the reactor cavity could result in increasing pressure and temperature in containment from chemical reactions and heat input. Realistic assessments were performed considering sodium-concrete interactions, sodium-water reactions, decay heat, sodium burning, and hydrogen burning. These assessments show that the features provided would prevent uncontrolled release of radioactivity to the environment. These features maintain temperature, pressure, and hydrogen concentration in the Reactor Containment Building at acceptable levels in concert with the venting of the containment through cleanup systems. Best-estimate analyses show that the initiation of venting would not be required for more than a day after initiation of the HCDA. These analyses show that the radiological consequences of venting through the cleanup system would be acceptably low.

Sensitivity analyses have been performed relating the radiological consequences of HCDAs to the time of venting and show that the consequences would remain acceptably low for substantially earlier vent times than predicted in the best estimate analyses. Additional sensitivity analyses have shown that containment temperature and pressure margins would accommodate a wide range of material releases to containment in excess of those predicted from realistic assessment. Therefore, the design provides additional margins beyond those discussed in the preceding paragraphs.

5.2 REQUIREMENTS FOR ACCOMMODATING HCDAS

The Applicants have identified criteria and requirements for features to mitigate the mechanical and thermal challenges resulting from HCDAs.

The potential mechanical challenges from HCDAs are accommodated by designing to meet the Structural Margin Beyond the Design Base (SMBDB) requirements in "Hypothetical Core Disruptive Accident Considerations in CRBRP" (CRBRP-3), Volume 1, Section 5.2.

The potential thermal challenges from HCDAs (including whole-core melting) are accommodated by designing to meet the Thermal Margin Beyond the Design Base (TMBDB) requirements in CRBRP-3, Volume 2, Section 2.1.

Design approaches to meet the HCDA requirements are within the state of technology and are identified in CRBRP-3, Volume 1, Section 5.4 and in CRBRP-3, Volume 2, Section 2.2. To meet the Structural Margin Beyond the Design Base requirements, the reactor coolant boundary has been strengthened and seals have been added to the reactor vessel closure head to accommodate HCDA loadings and limit the leakage of sodium, gases and vapors to the containment. To meet the Thermal Margin Beyond the Design Base Requirements, design features have been added, including a vent between the reactor cavity cell and the containment, a system to vent and purge the containment through a cleanup system, a system to cool the containment vessel and the confinement building, and containment instrumentation to permit the operator to follow the course of the accident.

5.3 HCDA ANALYSIS

Two generic classes of HCDA initiators were considered: 1) excessive heat generation, and 2) reduced heat removal. Within these classes, candidate HCDA initiators were compared in terms of their potential for causing cladding failures and fuel melting, and their relative likelihood of occurrence. Anticipated events were considered in combination with the assumption of complete failure of both shutdown systems in the review of candidate initiators. From this review, it was

concluded that a continuous rod withdrawal with assumed failure to scram - Transient Overpower (TOP) - would envelop the generic case of excessive heat generation. Similarly, it was concluded that a pump coastdown in all three loops with assumed failure to scram -Loss of Flow (LOF)- would envelop the generic case of reduced heat removal. These cases were selected as the basis for analysis.

Analysis of HCDAs includes consideration of three areas: HCDA energetics, accommodation of whole core melting, and radiological consequences.

HCDA Energetics

An energetic HCDA in CRBRP would be predicted only when coolant, cladding, and fuel relocation occur in such a way that the reactor undergoes a sustained, super-prompt-critical[6] power excursion which produces significant fuel vaporization. If significant quantities of fuel vapor are produced, expansion of this vapor may produce dynamic loadings on the primary system boundary.

HCDA energetics has been a subject of intensive investigation for more than a decade. Numerous experiments, using both real and simulant materials, have been performed to address the fundamental physics and the integrated behavior of reactor materials under HCDA conditions. These experiments have been complemented by analytical work and model development

[6]Super-prompt-criticality is a condition when the power level of the reactor would increase considering only prompt neutrons (not considering delayed neutrons). If sustained, this condition would result in a very high reactor power level.

related to important accident physics. Computer codes have been developed to facilitate application of physical understanding in evaluation of HCDA energetics. Analysis of the consequences of HCDAs in the CRBRP is supported by the existence of a large body of experimental data, analyses, models and codes.

(1) Evaluation of HCDA Energetics

Evaluation of HCDA energetics involves consideration of three accident phases: the initiating phase; a meltout phase which is entered if the damaged core is not stable and coolable at the end of the initiating phase; and a large-scale pool phase which may occur in the pessimistic case in which permanent subcriticality is not achieved in the earlier phases. A fourth accident phase, hydrodynamic disassembly, would occur if a sustained, super-prompt-critical excursion were to occur in any of the other three phases.

Initiating Phase. During the initiating phase, gross imbalance between energy production and removal results in fuel melting and relocation within the subassembly boundary. The two sequences considered in detail - transient overpower without scram (TOP) and loss-of-flow without scram (LOF) - differ primarily in the initiating phase.

The major physical considerations in the TOP HCDA initiating phase include:

1. Continuous reactivity addition, with assumed failure of the shutdown systems, leading to rising power at full coolant flow, with axial fuel expansion and Doppler feedback mitigation.

2. Cladding failure due to internal loading. The axial location of failure is a key parameter in energetics evaluation. Failure at the axial location of peak

reactivity worth (normally the midplane) would produce the maximum potential for an energetic TOP HCDA, but this is not the expected behavior.

3. Ejection of pressurized molten fuel through the cladding rupture.

4. Motion of the ejected fuel within the coolant channel driven by hydraulic forces (termed sweepout) leading to fuel removal and, in certain cases, shutdown.

5. Possible failure of blanket rods and relocation of blanket material.

Depending on the initial conditions assumed, the best estimate evaluation of the TOP HCDA for CRBRP predicts a stable, partially damaged core having a power level which varies between well below nominal to slightly above nominal, or a permanently shutdown core, considering a reasonable range of fuel ejection and fuel sweepout assumptions. In both cases the HCDA is predicted to be non-energetic, and is not predicted to proceed beyond the initiating phase.

Sensitivity studies for the TOP HCDA initiating phase have been performed, in which parameters such as failure location, material reactivity worths, reactivity addition rate, and blockage assumptions are varied. One case, involving a specific higher-than-nominal reactivity addition rate, forced mid-plane failures, and a pessimistic treatment of fuel motion, produced mild energetics, well within the CRBRP capability. There is a remote possibility of entering a meltout phase (defined below) following a non-energetic TOP sequence.

The major physical considerations for the LOF accident initiating phase include:

1. Flow coastdown from normal, with assumed failure of the shutdown systems, until sodium boiling and coolant voiding begin. Doppler, axial expansion, and sodium density changes would determine the net reactivity. Power is expected to remain near its nominal value.

2. Cladding melting and relocation would take place, forming blockages at the inlet and outlet of the core. Removal of cladding from the core would introduce positive reactivity and increase the power.

3. Fuel melting, disruption, and relocation would take place. Fuel dispersal driven by sodium or steel vapor streaming, fission gas, or fuel vapor would eventually lead to neutronic shutdown.

4. Possible occurrence of fuel rod disruption in subassemblies still containing liquid sodium.

The best-estimate evaluation of the LOF HCDA in the CRBRP predicts a non-energetic entry into the meltout phase. For a beginning-of-life core (BOC-1), the principal uncertainty in the best-estimate evaluation is the rate of fuel collapse between disruption and its ultimate dispersal by fuel vapor pressure. Collapse rates up to the full acceleration of gravity (1 g) were considered, with similar results, i.e., a non-energetic termination of the initiating phase. For an end-of-life core (EOC-4), uncertainties in the behavior of the irradiated fuel in the first subassemblies to undergo disruption (the lead subassemblies) and in the criterion for disruption of fuel in the other subassemblies were investigated. Non-energetic termination of the initiating phase was predicted for each case investigated.

Sensitivity studies for the LOF HCDA initiating phase have been performed to examine variations in key parameters, such as fuel vapor pressure, cladding worth, fuel axial expansion reactivity feedback, and fission-gas-driven fuel dispersal. A non-energetic initiating phase termination was predicted for each case investigated.

The analysis of the LOF HCDA included some cases having highly pessimistic assumptions. For the BOC-1 case, a calculation combining initial collapse of disrupted fuel at 1g, reduced fuel vapor pressure, no fuel axial expansion reactivity feedback, and pessimistic cladding worth predicted a non-energetic initiating phase. For the EOC-4 case, a calculation in which fission-gas-driven fuel dispersal was neglected entirely and the fuel vapor pressure was reduced predicted a non-energetic initiating phase. These results increase confidence that the LOF initiating phase in the CRBRP is inherently non-energetic.

Meltout Phase. The meltout phase is that time interval during which the remaining rod structure internal to the individual subassemblies and the subassembly can walls (hexcans) are disrupted. Some subassemblies will enter the meltout phase while others are still in initiating phase conditions. Entry into the meltout phase is the best-estimate accident path for LOF HCDAs, and is a possible, but not best-estimate, outcome for TOP HCDAs. Motion of core materials in the meltout phase is essentially confined to a single subassembly, a small group of adjacent subassemblies, or the intersubassembly gaps.

The key consideration in the meltout phase is determining that sufficient fuel can be relocated from the core region to render the system permanently subcritical before widespread

hexcan melting leads to formation of a large-scale pool, the behavior of which dominates the reactivity feedbacks. Several possible fuel removal paths exist:

1. Into the axial blanket regions within the subassembly boundaries.

2. Into the gaps between subassemblies in the axial and radial blanket regions, where there is sufficient volume to accommodate enough fuel to ensure permanent subcriticality.

3. Axially through the large open region at the bottom of the control assembly after failure of control assembly hexcans. This path provides a large flow area for fuel removal downwards out of the core region of the CRBRP.

For the CRBRP, the best estimate is that fuel removal into the gap between the subassemblies and through the control assemblies would produce permanent subcriticality, thereby precluding formation of a large-scale pool with criticality potential.

Reactivity insertion rates which result from a range of assumptions reflecting uncertainties in the behavior of the fuel in the disrupted subassemblies are in the range of a few tens of dollars per second. Based on the large incoherency[7] in fuel conditions and scoping reactivity calculations, it is concluded that the CRBRP provides a wide margin for uncertainties in fuel behavior at the beginning of the meltout phase.

---

[7]Incoherency refers to differences in the fuel conditions within various subassemblies.

Large-scale Pool Phase. The large-scale pool phase is a portion of an HCDA sequence in which the reactivity of the system is dominated by behavior of a contiguous pool of molten core material. This phase would not be expected to occur in a CRBRP HCDA sequence, but is considered to bound uncertainties in fuel removal leading to permanent shutdown in the meltout phase.

During the large-scale pool phase, a pool of molten fuel and steel is assumed to be surrounded by cooler core structure. The heat generation within the pool would be sufficient to maintain a strongly dispersive pool as a result of steel vaporization down to a decay heat power level of 1 to 2% of nominal. While the pool is in the boiled up state, pool boundaries would be attacked and weakened. Eventually, a failure of the boundary would occur leading to fuel relocation which, along with continued dilution of the pool by steel and blanket material, would render the system permanently subcritical. Physical mechanisms leading to energetic recriticality would not be realized.

Hydrodynamic Disassembly. A hydrodynamic disassembly may occur during any of the three phases described above if a rapid, sustained insertion of positive reactivity occurs with the reactor at or near prompt criticality. The result of such a reactivity insertion could be a sustained super-prompt critical power excursion. During hydrodynamic disassembly, fuel would melt and vaporize quickly due to high power. Pressures would be generated that are great enough to cause distortion of the core internal structure and displacement of the fuel. The resulting negative reactivity combined with the negative Doppler feedback would counteract the positive reactivity insertion, terminate the power burst, and bring the core to a subcritical condition.

Only one case was found in which a hydrodynamic disassembly was predicted to follow the initiating phase of an HCDA. This pessimistic case was not sufficiently energetic to approach the CRBRP system capability. Parametric calculations which examined

the effects of variations in fuel vapor pressure did not alter the conclusion. Disassembly calculations were also done to model recriticality during the meltout phase. It was determined that substantial margin exists between estimated reactivity insertion rates and those necessary to approach the CRBRP system capability.

Summary Results - Energetics Evaluation. The TOP and LOF HCDAs have been evaluated in detail for the beginning-of-life and end-of-life cores of the CRBRP. Effects of uncertainties in data and in physics were addressed by evaluating parametric variations from the best-estimate cases. The summary results of these HCDA analyses are:

1. Realistic assessments of HCDA sequences, including best estimate analysis and consideration of uncertainties, predict a non-energetic outcome.

2. Pessimistic assumptions, well beyond those appropriate for a realistic assessment, must be invoked to predict energetics.

3. The structural margin provided in the CRBRP is adequate to contain the energetics predicted in these analyses.

Additional detail on the HCDA energetics phenomenology and evaluations for CRBRP can be found in Section 4 of CRBRP-3, Volume 1.

(2) Accommodation of HCDA Energetics

Although HCDAs are predicted to result in a non-energetic outcome based on best estimate analyses, Structural Margin Beyond the Design Base (SMBDB) requirements have been imposed to assure that structural margin exists to accommodate a wide range of HCDA consequences.

The SMBDB requirements are based on an assumed energetic HCDA which produces a fuel vapor bubble in the core having a work potential of about 100 MJ based on isentropic expansion of the fuel vapor to the free volume within the reactor vessel. The pressure-volume relationship for this isentropic bubble expansion is used to define the loads for assessment of the reactor and Primary Heat Transport System structural response, despite the fact that expansion of the fuel vapor bubble and displacement of sodium would be a highly dissipative, non-isentropic process.

As the fuel bubble expands, it would first load the structures surrounding the core (blankets, upper fuel rod segments, shields, etc.). As it expands further, it would displace the core support structure downward, load the core barrel and vessel wall radially, and accelerate the sodium above the core upwards. The moving sodium slug would impact the upper vessel wall and shielding below the reactor vessel head. Some of the available energy would be dissipated by plastic strain in portions of the vessel wall, core barrel, and other structures. In addition, a substantial amount of energy would be dissipated through fluid turbulence and throttling in the in-vessel structures.

The reactor vessel and in-vessel components have been conservatively modeled to predict impact loadings on the head, downward thrust on the core support structure, pressure loading on the walls, and deformation of the core barrel and reactor vessel resulting from expansion of the fuel vapor bubble according to the prescribed pressure-volume relationship. As a result of the transient loads within the reactor vessel, pressure pulses would be introduced into the primary heat transport system piping through the inlet and outlet nozzles. The pressure histories within the system components and piping were determined and used for structural analysis.

Analyses of reactor components including reactor vessel, head, and piping show that the SMBDB requirements have been met using the established criteria. These analyses provide confidence that it is possible to provide reasonable structural margin for the primary coolant boundary components.

Additional details on energetics accommodation and SMBDB can be found in Section 5 of CRBRP-3, Volume 1.

Accommodation of Whole Core Melting

Although some HCDA sequences leave the reactor core in a damaged but coolable condition, there is a possibility of core melting and thermal penetration of the reactor vessel and guard vessel. Margin has been provided external to the reactor and guard vessels to accommodate release of material into the reactor cavity and ensure that the radiological consequences of an HCDA are acceptably low. In particular, requirements have been established to ensure that containment integrity can be maintained without venting for a sufficient time to implement evacuation procedures, and to provide long-term mitigation of HCDA consequences. Venting and purging of the containment would prevent containment structural failure, so that the long term structural integrity of the containment above the basemat would be maintained. Thermal analysis of core debris melting into the concrete basemat indicates that total penetration of the basemat is not likely. The Thermal Margin Beyond the Design Base (TMBDB) design features and the assessment of thermal margin are discussed in detail in Sections 2 and 3 of CRBRP-3, Volume 2.

The general characteristics of HCDA sequences that include penetration of the reactor and guard vessels and operation of the containment features which provide margin for this eventuality are:

1. Fuel and other reactor materials penetrate the reactor and guard vessels at approximately 1000 seconds and enter the reactor cavity, along with the sodium.

2. The reactor cavity steel floor liner was assumed to fail, resulting in sodium-concrete and sodium-water reactions within the reactor cavity.

3. Sodium would begin boiling in the reactor cavity in approximately 9 hours and would be vented above the operating floor where it would react with air and water vapor.

4. After about a day, the annulus cooling system would be actuated and containment would be vented down to atmospheric pressure through the containment cleanup system.

5. Subsequently, the containment would be purged to dilute the hydrogen by drawing air through it, resulting in a slightly subatmospheric pressure in the containment.

6. The sodium in the reactor cavity would boil dry at some time of the order of 100 hours.

7. Fuel penetration into the concrete basemat would begin after the sodium boils dry.

8. Maximum penetration into the basemat would occur some months after the HCDA and the materials would subsequently solidify.

A particularly important aspect of the behavior of materials in the reactor cavity is the degree to which sodium reacts with and penetrates into concrete. Reactions of sodium with concrete and gases released by heating concrete (principally water and carbon dioxide) add energy and hydrogen to the system that could potentially challenge containment. Such reactions have been studied experimentally for years. For limestone concrete, most of the data fall within a band of 0 to 2 inches penetration, with a few points in the 6 to 12 inches penetration range. Many of the tests have been run for as long as 100 hours. Details can be found in CRBRP-3, Volume 2, Appendix A. The full range of experimentally observed penetrations can be accommodated without venting the containment before a day. It has been found that the radiological consequences are not sensitive to the vent time over a wide range.

The summary results on Thermal Margin Beyond the Design Base are:

1. Containment integrity (without venting) would be maintained for more than a day following penetration of the reactor vessel and guard vessel.

2. Containment capability above the basemat would be maintained indefinitely by controlled venting and purging.

Radiological Consequences

This section of the testimony demonstrates that the atmospheric releases from HCDAs would result in radiological dose consequences that are acceptably low and insensitive to the initial release of material through the reactor closure seals.

In addition, the radioactivity release compares favorably to WASH-1400 values for similar beyond the design base events in LWRs.

To assess the radiological consequences of an HCDA, four cases were calculated using the following bases:

Three separate phases of radioactivity releases are considered in the analysis of each accident scenario - an initial release phase, a sodium boil-up phase, and a post boildry phase. Release during the initial release phase consists of those radioactive materials assumed to be released to the Reactor Containment Building from the reactor vessel or the reactor cavity at the onset of the accident. Included are materials that could leak though the reactor vessel head prior to meltthrough of the reactor vessel (assumed to be at 1000 seconds) and materials that could be vented from the reactor cavity to the Reactor Containment Building shortly after meltthrough but prior to boiling of sodium in the reactor cavity. In the analysis, all of these materials were conservatively assumed to be released to the Reactor Containment Building at the onset of the accident. Releases during the sodium boil-up interval consist of the non-gaseous radioactive materials trapped in the sodium pool that enter the Reactor Containment Building atmosphere as the sodium pool boils. The post boildry phase starts after all sodium has been boiled away and considers the release of fuel from a molten pool of fuel, steel and concrete by gas sparging (carryout of fuel along with the gas that bubbles through the pool).

While in the Reactor Containment Building atmosphere, the radioactive materials, except the noble gases, would be depleted by aerosol fallout and plateout. Prior to release from the Reactor Containment Building, all radioactive material, except the noble gases, would be filtered by the TMBDB cleanup system. The efficiency of the TMBDB cleanup system used in the analyses was confirmed in testing of a prototype cleanup system. Based on

the given source term, Reactor Containment Building vent rate, aerosol depletion rate, cleanup system efficiency, and radioactive decay rates, the radioactive materials released from the Reactor Containment Building are calculated as a function of time.

Doses were calculated for four cases, using successively more pessimistic assumptions regarding the rel ases to the Reactor Containment Building during the initial interval.

1. Case 1 is based on realistic evaluation of the HCDA sequence - a non-energetic accident. Consequently, no significant immediate release of sodium or fission products through the reactor vessel closure seals is considered. Meltthrough of the reactor vessel and guard vessel is assumed to occur at 1000 seconds. At that time, all of the noble gases and the most volatile fission products (Cs and Rb) were assumed to be vented from the reactor cavity to the Reactor Containment Building. Containment venting and purging through filters is assumed to begin at 36 hours.

2. Case 2 is similar to Case 1, except that an energetic HCDA is assumed, such that the available work energy from fuel vapor expanded to the free volume of the reactor vessel would be approximately 100 MJ. Since the reactor vessel, head and primary system are designed to retain their structural integrity for the dynamic loadings corresponding to the 100 MJ condition, the immediate releases would still be limited. To represent this condition, an immediate release of 1000 pounds of sodium and a gas leak rate of 1000 standard cubic centimeters per second for the first 1000 seconds are used. Following meltthrough, the releases to the Reactor Containment Building were similar to those in Case 1.

3. Case 3 is similar to Case 2, except that a large immediate release of fuel, fission products, and sodium to the reactor containment is assumed in order to examine the sensitivity of the consequences to assumed releases that are much larger than expected. An immediate release of 1000 pounds of sodium, 1% of the fuel and solid fission products and 100% of the noble gases, halogens, and volatile fission products was assumed.

4. Case 4 is similar to Case 3, except that the amount of sodium immediately released is increased to 3300 pounds and the amount of fuel and solid fission products is increased to 5%.

The results of the four CRBRP cases are shown in terms of dose in Table 5-1.

TABLE 5-1

Dose Summary for Hypothetical Accident Scenarios Considered (Rem)

	Organ	Case 1	Case 2	Case 3	Case 4
Exclusion Boundary (2 Hour)	Bone	0.0043	0.028	0.93	3.83
	Lung	0.0035	0.0055	0.15	0.39
	Thyroid	0.0067	0.0096	11.3	9.51
	W. Body	0.16	0.16	0.24	0.32
Low Population Zone (30 Day)	Bone	55.1	55.1	55.7	56.2
	Lung	3.95	3.96	3.02	3.02
	Thyroid	99.2	99.2	5.31	1.72
	W. Body	3.51	3.50	3.07	2.94

The environmental impacts are not sensitive to the range of immediate releases through the head considered. This result is due to the fact that aerosol fallout and plate-out effectively deplete the materials released through the head (except for noble gases) prior to containment venting. These calculations are

based on venting at 36 hours. However, the doses are not very sensitive to vent times over a range of times between about 10 and 36 hours because of the effectiveness of the cleanup system.

Table 5-2 compares isotopic releases for comparable meltdown accidents in CRBRP and two LWRs.

TABLE 5-2

Comparison of Radionuclide Releases to Atmosphere for CRBRP with LWRs for a Comparable Meltdown Scenario

	Radioactivity Released (curies)		
Element	CRBRP	PWR(3)	BWR(3)
Xe-Kr	2.4×10^7	1.0×10^8	2.1×10^8
I	1.6×10^5	2.0×10^6	1.1×10^6
Cs, Rb	5.4×10^0	1.2×10^4	7.6×10^4
Te, Sb	3.5×10^4	2.2×10^5	8.6×10^5
Ba, Sr	6.5×10^2	3.3×10^4	2.2×10^5
Ru(1)	1.5×10^3	3.9×10^4	3.3×10^5
La(2)	4.2×10^3	2.9×10^4	2.9×10^5

(1) Includes: Ru, Rh, Co, Mo, Te

(2) Includes: Y, La, Zr, Nb, Ce, Pr, Nd, Np, Pu, Am, Cm

(3) From WASH-1400 Appendix VI, Calculation of Reactor Accident Consequences, October 1975. The LWR scenarios used for comparison here are PWR-6 and BWR-4 described in Section 2 of WASH-1400 Appendix VI.

The CRBRP release given for each element group is the largest release for that group considering all four cases listed in Table 5-1. The radioactivity released for CRBRP is lower than for the LWRs.

The low releases and low off-site doses confirm that the applicants have provided features in CRBRP to accommodate an HCDA and that the residual risk from an HCDA is acceptably low.

STATEMENT OF QUALIFICATIONS

Neil W. Brown

Specialist, CRBRP Licensing
General Electric Company
Advanced Reactor Systems Department
Sunnyvale, California

I was recently named Specialist, CRBRP Licensing for the General Electric Company on assignment to Westinghouse LMFBR Licensing Coordination Office in Bethesda, Maryland. In this position I have been coordinating CRBRP project safety and licensing information for communication to NRC and ASLB.

I received a Bachelor of Science degree in Mechanical Engineering from University of Washington, Seattle, Washington in 1960 and a Master of Science degree in Mechancial Engineering from University of Santa Clara in 1968.

Following graduation from the University of Washington, I joined General Electric in 1960 as a member of their Advanced Engineering Training Program. Following completion of this three year training program, during which I had a variety of engineering assignments, I accepted a permanent assignment at the Hanford Atomic Products Operation as a Staff Engineer in the Hanford Laboratories. In this position I coordinated experiments conducted with plutonium reactor fuel in the Plutonium Recycle Test Reactor and performed analysis of these experiments.

From 1964 to 1965 I worked as a staff member of GE Technical Military Planning Operation (TEMPO) which supported U.S. Government Military agencies in planning and evaluation. Most of my work was in reliability analysis of mechanical systems for space and military application.

In 1965 I joined what is now the Advanced Reactor Systems Department. Initially I worked on power plant concepts for maritime nuclear marine propulsion systems. In this position I performed thermal-hydraulic systems analysis and mechanical design of the reactor systems. In 1966 I became a member of the Safety Analysis and Licensing group working on the Southwest Experimental Fast Oxide Reactor (SEFOR). My principal function was performing radiological consequence analysis, but I also coordinated the compilation of the SEFOR FSAR and participated in other licensing tasks.

In 1972 I was named Manager, Systems Criteria and Conformance with responsibility for developing safety criteria and performing safety evaluations of advanced reactor concepts. The evaluations were in the radiological, sodium fire and system reliability areas.

In 1974 I was named Manager, Safety Evaluations and Reliability with responsibility for HCDA, radiological, sodium fire and reliability evaluations, including performing CRBRP analysis in these areas. The group also developed radiological source term models and reliability models appropriate for shutdown and heat removal systems. This included performing reliability analysis of the CRBRP shutdown heat removal systems.

In 1976 I was named Manager, Safety Methods and Analysis with responsibility for HCDA analysis of LMFBR projects. The major work was HCDA analysis of CRBRP.

In 1979 I was named Manager, Licensing and Systems Engineering with responsibility for coordinating General Electric interfaces with other project participants on the Department of Energy's large plant studies. From 1981 to 1982 I was Manager, LDP Control Systems in the same project management organization. My responsibilities were to perform project management of the design of the LDP Plant Control and Protection Systems.

I am a Professional Engineer (M 015397) registered in the State of California.

STATEMENT OF QUALIFICATIONS

George H. Clare
Westinghouse Advanced Reactors Division
Oak Ridge, Tennessee 37830

From 1980 to the present I have served as Manager of Licensing at Westinghouse - Oak Ridge (CRBRP), with responsibility for managing assessment of CRBRP designs and the preparation of licensing material. These activities include consideration of features to prevent accidents, features to mitigate Design Basis Accidents, and margins to mitigate hypothetical core disruptive accidents.

I received a Bachelor of Science in Engineering Physics from Cornell University in 1972 and a Master of Engineering (Nuclear) from Cornell University in 1974.

After receiving my degrees I joined Westinghouse Electric Corporation as an Engineer at the Advanced Reactors Division. Between 1974 and 1979 my position changed from Engineer to Senior Engineer. I was involved in licensing, safety analysis, and systems integration activities for the Clinch River Breeder Reactor Plant.

From 1979 to 1980, I served as Westinghouse Representative at the Fast Reactor Safety Technology Management Center at Argonne National Laboratory. There I participated in the management of activities in the Fast Reactor Safety Base Technology Program. This included monitoring and integration of safety research and development activities of DOE contractors throughout the US.

I am a member of the American Nuclear Society.

STATEMENT OF QUALIFICATIONS

L. Walter Deitrich
Associate Director
Reactor Analysis and Safety Division
Argonne National Laboratory
Argonne, Illinois 60439

In 1980, I became Associate Director, Reactor Analysis and Safety Division, Argonne National Laboratory. My resposibility includes technical direction and administrative guidance of the fuel behavior and accident analysis activities, including phenomenology and code development related to LMFBR HCDAs. In addition, I have responsibility for analysis and phenomenology activities for LWRs.

I received a Bachelor of Mechanical Engineering degree from Cornell University in 1961, a Master of Science degree in Mechanical Engineering from Rensselear Polytechnic Institute in 1963, and a Doctor of Philosophy degree in Mechanical Engineering from Stanford University in 1969.

Following graduation from Cornell, I joined the General Electric Company, Knolls Atomic Power Laboratory, as Engineer -- Thermal-Hydraulic Design, in which position I remained until 1964, when I left to enter graduate school at Stanford.

I joined Argonne National Laboratory in 1969 as an Assistant Mechanical Engineer in the Reactor Physics Division. I was assigned as a Lead Experimenter in the In-pile Experiments Section, with responsibility for preparation, execution and analysis of TREAT experiments on behavior of fast reactor fuel under accident conditions. In 1970, this program was transferred to the newly formed Reactor Analysis and Safety Division (RAS).

In 1972, I was promoted to Mechanical Engineer and assigned as Group Leader -- Analysis, In-pile Experiments Section. My responsibilities included leading a group responsible for analysis and reporting of TREAT experiments simulating loss-of-flow and transient overpower HCDAs.

From 1974 to 1979, I served as Manager of the Fuel Behavior Section in RAS, with responsibility for modeling of fuel behavior and related phenomenogical studies and code development.

From 1979 to 1980, I served as Special Assistant to the Associate Laboratory Director for Engineering Research and Development, providing technical assistance in management and direction of the reactor development programs at ANL.

I was promoted to Senior Mechanical Engineer in 1982.

I am a member of the American Socity of Mechanical Engineers, the American Nuclear Society, and Sigma Xi.

STATEMENT OF QUALIFICATION

Vencil S. O'Block
Westinghouse Electric Corporation
Advanced Power Systems Division
Advanced Reactors Division
Oak Ridge, Tennessee 37830

Since early 1980, I have been Technical Assistant to the Westinghouse Oak Ridge (CRBRP) Manager of Systems Integration. In this position I am responsible for Systems Integration NRC licensing coordination, resolution of key technical issues and review and concurrence of CRBRP Engineering Change Proposals.

I received a Ph.D. degree in Nuclear Engineering from the University of Wisconsin in 1967, a Master of Science degree in Nuclear Engineering from Pennsylvania State University in 1962, a Bachelor of Science degree in Mechanical Engineering from the Carnegie Institute of Technology in 1960 and a Bachelor of Arts degree from Washington and Jefferson College in 1960.

From February to September 1962, I worked for Westinghouse Electric Corporation as an Associate Engineer in the Astronuclear Division. In this position, I performed experiments to support calculations of reactivity insertions rates due to immersion of a Nuclear Engine Rocket for Vehicle Application (NERVA) core in water. I then left Westinghouse to attend the University of Wisconsin.

I rejoined Westinghouse Electric Corporation in 1966, as a Senior Engineer in the Astronuclear Division. In this position, I performed and analyzed nuclear and shielding experiments.

From 1971 to 1974, I was with the Westinghouse Hanford Company on the Fast Flux Test Facility (FFTF) Project. For approximately one-half of the service, I was a Senior Development Engineer responsible for the technical and programmatic management of the FFTF Heating and Ventilating and Radioactive Waste Systems. The remainder of the time I was an Engineering Associate responsible for performing radiological dose calculations due to the accidental release of radioactivity from FFTF and supported the review and maintenance of the FFTF PSAR.

From 1974 to 1975, I was a Senior Engineer with Westinghouse Advanced Reactors Division on the Clinch River Breeder Reactor Plant (CRBRP) Project in Plant Systems. In this position I performed special technical and programmatic tasks for the Manager of Plant Systems.

In 1975, upon formation of the Westinghouse Lead Reactor Manufacturer (LRM) organization for CRBRP, I was named Manager of General Electric (GE) Plant Systems. In this position I was responsible for the technical and programmatic management of the GE design and procurement activities for the CRBRP main sodium coolant pumps and drives and for the following: Piping and Equipment Electrical Heating and Control System, Reactor Heat Transport Instrumentation and Control System, Steam Generator Auxiliary Heat Removal System, Intermediate Heat Transport System and the Reactor Heat Transport Instrumentation and Control System. I continued in this position until mid 1978.

During the remainder of 1978 and early part of 1979, I was Technical Assistant to the LRM Manager of GE Programs and subsequently Technical Assistant to the Manager of AI Programs. In these positions, I was responsible for resolving key technical issues, reviewing Engineering Change Proposals and conducting a Key Systems Review on the Spent Fuel Transport, Storage and Cooling Systems.

From the latter part of 1979 to early 1980, I was the LRM Acting Manager of Systems Engineering. In this position I was responsible for the CRBRP reliability and Nuclear Steam Supply System (NSSS) availability programs, liquid metal insulation design contract, maintenance of the Overall Plant Design Description document and overall Systems Engineering function.

STATEMENT OF QUALIFICATIONS

Lee E. Strawbridge
Manager, Nuclear Safety and Licensing
Westinghouse Advanced Reactors Division
Madison, Pennsylvania 15663

Since 1980, I have been Manager, Nuclear Safety and Licensing with responsibility for directing safety analyses and licensing activities performed at the Westinghouse Advanced Reactors Division, Waltz Mill site for CRBRP and other nuclear projects.

I received a Bachelor of Science degree in Electrical Engineering from Pennsylvania State University in 1958 and a Master of Science degree in Nuclear Engineering from Massachusetts Institute of Technology in 1959.

Following graduation from M.I.T., I joined Westinghouse Electric Corporation in 1959 as a Scientist in the Atomic Power Division and was in the position of Senior Scientist from 1962 to 1964. In these positions, I performed nuclear design analysis for Pressurized Water Reactors and a wide range of advanced reactor concepts including thermal, epi-thermal and fast reactors.

From 1964 to 1966, I was Manager of Nuclear Development with responsibility for developing analytic techniques and applying them to the nuclear analysis of Pressurized Water Reactors and advanced reactors concepts. This included conceptual nuclear design analyses of a modular 1000 MWe LMFBR.

Upon formation of the Westinghouse Advanced Reactors Division in 1966, I was named Manager of Nuclear Development, with responsibility for all nuclear design analyses within the division. This consisted totally of work on sodium cooled fast reactors. I continued in this position until 1968.

From 1968 to 1971, I was Manager of LMFBR Safety and Licensing, with responsibility for the safety and licensing activities associated with the LMFBR Project Definition Phase, which formed the basis for the Westinghouse proposal for CRBRP. The conceptual design activities for CRBRP were completed during this period and the initial specification of structural margin beyond the design base loads was made.

From 1974 to 1976, I was Manager of Safety Analysis with responsibility for directing many of the safety analyses reported in the CRBRP Environmental Report and the Preliminary Safety Analysis Report. In addition, safety analyses were performed and substantial input was provided to the FFTF Final Safety Analysis Report.

From 1976 to 1980, I was Manager of CRBRP Margin Analysis and Design, with responsibility for directing the analyses of hypothetical core disruptive accidents. This included the specification of structural and thermal margin requirements to mitigate the consequences of accidents beyond the design base and the preparation and submittal to NRC of the document CRBRP-3, "Hypothetical Core Disruptive Accident Considerations in CRBRP."

I am a Professional Engineer, registered in the Commonwealth of Pennsylvania since 1967.

UNITED STATES OF AMERICA

NUCLEAR REGULATORY COMMISSION

In the Matter of UNITED STATES DEPARTMENT OF ENERGY PROJECT MANAGEMENT CORPORATION TENNESSEE VALLEY AUTHORITY (CLINCH RIVER BREEDER REACTOR PLANT)	Docket No. 50-537

CERTIFICATE OF SERVICE

Service has been effected on this date by personal delivery or first-class mail to the following:

***Marshall E. Miller, Esquire
Chairman
Atomic Safety & Licensing Board
U. S. Nuclear Regulatory Commission
Washington, D.C. 20545

***Ruthanne G. Miller, Esq.
Atomic Safety and Licensing Board
U. S. Nuclear Regulatory Commission
Washington, D.C. 20545

****Dr. Cadet H. Hand, Jr.
Director
Bodega Marine Laboratory
University of California
P. O. Box 247
Bodega Bay, California 94923

***Mr. Gustave A. Linenberger
Atomic Safety & Licensing Board
U. S. Nuclear Regulatory Commission
Washington, D.C. 20545

*Daniel Swanson, Esquire
*Stuart Treby, Esquire
Office of Executive Legal Director
U. S. Nuclear Regulatory Commission
Washington, D. C. 20545 (2 copies)

*Atomic Safety & Licensing Appeal Board
U. S. Nuclear Regulatory Commission
Washington, D. C. 20545

*Atomic Safety & Licensing Board Panel
U. S. Nuclear Regulatory Commission
Washington, D. C. 20545

*Docketing & Service Section
Office of the Secretary
U. S. Nuclear Regulatory Commission
Washington, D. C. 20545 (3 copies)

William M. Leech, Jr., Attorney General
Willaim B. Hubbard, Chief
Deputy Attorney General
Lee Breckenridge, Assistant
Attorney General
State of Tennessee
Office of the Attorney General
450 James Robertson Parkway
Nashville, Tennessee 37219

Oak Ridge Public Library
Civic Center
Oak Ridge, Tennessee 37820

Herbert S. Sanger, Jr., Esquire
Lewis E. Wallace, Esquire
W. Walter LaRoche, Esquire
James F. Burger, Esquire
Edward J. Vigluicci, Esquire
Office of the General Counsel
Tennessee Valley Authority
400 Commerce Avenue
Knoxville, Tennessee 37902 (2 copies)

**Dr. Thomas Cochran
Barbara A. Finamore, Esquire
Natural Resources Defense Council
1725 Eye Street, N.W., Suite 600
Washington, D. C. 20006 (2 copies)

Ellyn R. Weiss, Esquire
Harmon & Weiss
1725 Eye Street, N. W., Suite 506
Washington, D. C. 20006

Lawson McGhee Public Library
500 West Church Street
Knoxville, Tennessee 37902

William E. Lantrip, Esq.
Attorney for the City of Oak Ridge
Municipal Building
P. O. Box 1
Oak Ridge, Tennessee 37830

Leon Silverstrom, Esq.
Warren E. Bergholz, Jr., Esq.
U. S. Department of Energy
1000 Independence Ave., S. W.
Room 6-B-256, Forrestal Building
Washington, D. C. 20585 (2 copies)

**Eldon V. C. Greenberg
Tuttle & Taylor
1901 L Street, N.W., Suite 805
Washington, D. C. 20036

Commissioner James Cotham
Tennessee Department of Economic
and Community Development
Andrew Jackson Building, Suite 1007
Nashville, Tennessee 37219

George L. Edgar
Attorney for
Project Management Corporation

DATED: August 16, 1982

---

*/ Denotes hand delivery to 1717 "H" Street, N.W., Washington, D. C.

**/ Denotes hand delivery to indicated address.

***/ Denotes hand delivery to 4350 East-West Highway, Bethesda, Md.

****/ Denotes Air Express