INSERTION INSTRUCTIONS FOR AMENDMENT 17

Correction pages to the Preliminary Safety Analysis Report (Volumes 1-9) are identified by "Amendment 17, 2/79" and are printed on green stock.

Vertical bars, with the numeral 17, have been placed in the outside margins of revised text pages and tables to show the location of any technical changes originating with this amendment. A few unrevised pages have been reprinted because they fall within a run of closely spaced revised pages. No change bars are used on figures or new questions and responses.

Entries herein beginning with T or F designate tables and figures, respectively. EP and Q designate effective pages and questions. All other entries are page numbers. In the location column, CH-Chapter, and AP-Appendix.

Remove	Insert	Location
	VOLUME I	
-	WE letter to Harold R. Denton for Amendment 17/blank	Before WE letter to Harold R. Denton for Amendment 16
-	USNRC Attachment-Amendment 17/blank	
-	Sol Burstein Affadavit/blank	
MEP-1/2	MEP-1/2	After title page
EP.1-1/blank	EP.1-1/blank	CH1, after tab
T1.3-1 (9 of 13)	T1.3-1 (9 of 13)	After T1.3-1 (8 of 13)
F1.2-3J	F1.2-3J	After F1.2-3I
EP.3-1/2	EP.3-1/2	CH3, after tab
3.1-41/42	3.1-41/42	
3.1-53 thru 3.1-56	3.1.53 thru 3.1-56	
3.8-37 thru 3.8-40	3.8-37 thru 3.8-40a/blank	
F3.8.1-1 thru 3.8.1-4	F3.8.1-1 thru 3.8.1-4	After F3.7.3-5
F3.8.1-6 thru 3.8.1-8	F3.8.1-6 thru 3.8.1-8	After F3.8.1-5
F3.8.1-22	F3.8.1-22	After F3.8.1-21
-	F3.8.1-25a and 3.8.1-25b	After F3.8.1-25
	VOLUME 2	
EP.5-1/blank	EP.5-1/blank	CH5, after tab
5-iii/iv	5-iii/iv	
5-vii/viii	5-vii/viii	
-	5-viiia	
5-xi thru 5-xiv	5-xi thru 5-xiv	
5.2-31/32	5.2-31/32	
5.2-37 thru 5.2-40b	5.2-37 thru 5.2-40c/blank	
5.5-7 thru 5.5-12	5.5-7 thru 5.5-12	
-	5.5-12a thru 5.5-12h	
5.5-13/14	5.5-13/14	
T5.1-1 (2 pages)	T5.1-1 (2 pages)	After page 5.6-9
T5.2-7 (3 pages)	T5.2-7 (3 pages)	After T5.2-6
T5.5-3	T5.5-3	After T5.5-2
T5.5-4 (2 pages)	Delete sheet for T5.5-4/blank	
T5.5-5 (2 pages)	T5.5-5 (2 pages)	
F5.5-3	F5.5-3 and 5.5-3a	After F5.5-2

7902150234

Remove	Insert	Location
	VOLUME 3	
EP.6-1/2	EP.6-1/2	CH6, after tab
6-i/ii	6-i/ii	
6-ix/x	6-ix/x	
-	6-xa/blank	
6-xiii/xiv	6-xiii/xiv	
6.2-3/4	6.2-3/4	
6.2-4e/4f	6.2-4e/4f	
-	6.2-4g/blank	
6.2-5/6	6.2-5/6	
6.2-15 thru 6.2-16a/blank	6.2.15 thru 6.2-16d	
6.2-28c/28d	6.2-28c/28d	
6.2-29 thru 6.2-32	6.2-29 thru 6.2-32	
-	6.2.32a/32b	
6.2-35/36	6.2-35/36	
-	6.2-36a/blank	
6.2-52c thru 6.2-52f	6.2-52c thru 6.2-52f	
6.2-55.56	6.2-55/56	
-	6.2-56a/blank	
6.4-9/10	6.4-9/10	
6.5-7/8	6.5-7/8	
T6.2.1-22	Delete sheet for T6.2.1-22/blank	After T6.2.1-21
T6.2.1-24	T6.2.1-24	After T6.2.1-23
T6.2.1-25	Delete sheet for T6.2.1-25/blank	
-	T6.2.1-27	After T6.2.1-26
-	T6.2.1-28	
-	T6.2.1-29 (2 pages)	
-	T6.2.1-30 (2 pages)	
-	T6.2.1-31	
-	T6.2.1-32	
-	T6.2.1-33	
T6.2.3-1 (1 of 2)	T6.2.3-1 (1 of 2)	After T6.2.2-3
T6.2.4-1 (5 pages)	T6.2.4-1 (5 pages)	After T6.2.3-10
-	T6.2.4-2	
F6.2.1-52 thru 6.2.1-54	F6.2.1-52 thru 6.2.1-55	After F6.2.1-51
F6.2.4-1	F6.2.4-1 thru 6.2.4-41	After F6.2.2-10
F6.5.2-1	F6.5.2-1	After F6.5.1-1
	VOLUME 4	
EP.8-1/blank	EP.8-1/blank	CH8, after tab
8-i/ii	8-i/ii	
8.3-17 thru 8.3-22a/blank	8.3-17 thru 8.3-22	
T8.3.1-3 (6 of 9)	T8.3.1-3 (6 of 9)	After T8.3.1-3 (5 of 9)
EP.9-1/2	EP.9-1/2	CH9, after tab
9-ix/x	9-ix/x	
9.4-1 thru 9.4-6a/blank	9.4-1 thru 9.4-6a/blank	
9.4-19 thru 9.4-26a/blank	9.4-19 thru 9.4-26a/ blank	
F9.4.1-1	F9.4.1-1	After delete sheet for F9.3.6-2 and 9.3.6-3
F9.4.7-1 and 9.4.7-2	F9.4.7-1 and 9.4.7-2	After F9.4.6-1
	VOLUME 5	
EP.10-1/blank	EP.10-1/blank	CH10, after tab
10.3-1 thru 10.3-2a/blank	10.3-1 thru 10.3-2a/blank	
10.3-3/4	10.3-3/4	
F10.3-1 thru 10.3-3	F10.3-1 thru 10.3-3	After F10.2-9

Remove	Insert	Location
EP.11-1/blank	EP.11-1/blank	CH11, after tab
11-iii/iv	11-iii/iv	
11.4-5 thru 11.4-9/blank	11.4-5 thru 11.4-9/blank	
T11.4-1 (1 of 2)	T11.4-1 (1 of 2)	After delete sheet for T11.3.9-1
	VOLUME 6	
EP.12-1/blank	EP.12-1/blank	CH12, after tab
F12.1-7	F12.1-7	After F12.1-6
F12.1-10	F12.1-10	After F12.1-9
F12.2-1	F12.2-1	After F12.1-23
EP.13-1/blank	EP.13-1/blank	CH13, after tab
13-iii/iv	13-iii/iv	
13.2-3 thru 13.2-5/blank	13.2-3 thru 13.2-7/blank	
EP.14-1/blank	EP.14-1/blank	CH14, after tab
14.1-1/2	14.1-1/2	
14.1-2a/blank	14.1-2a/blank	
EP.15-1/2	EP.15-1/2	CH15, after tab
15-iii/iv	15-iii/iv	
15-vii/viii	15-vii/viii	
-	15-viiia/blank	
15-xiii thru 15-xvi	15-xiii thru 15-xvii/blank	
15.4-3 thru 15.4-4g/blank	15.4-3 thru 15.4-4j	
T15.4-1	T15.4-1	After T15.3.5-1
T15.4.1-1 thru 15.4.1-5	T15.4.1-1 thru 15.4.1-5a	
-	T15.4.1-9	After T15.4.1-8
-	T15.4.1-10	
F15.4.1-1a thru 15.4.1-17	F15.4.1-1a thru 15.4.1-17	After delete sheet F15.3.5-1 and 15.3.5-2
	VOLUME 7	
EP.16-1/blank	EP.16-1/blank	CH16, after tab
16.4-7/8	16.4-7/8	
EP.17-1/blank	EP.17-1/blank	CH17, after tab
17.1-33/blank	17.1-33/blank	
EP.A-1/blank	EP.A-1/blank	AP A, after tab
A.1-11/12	A.1-11/12	
A.1-13/14	A.1-13.14	
-	A.1-14a/blank	
EP.B-1/blank	EP.B-1/blank	AP B, after tab
B.3-9 thru B.3-12	B.3-9 thru B.3-12	
B.3-16e/16f	B.3-16e/16f	
B.3-19/20	B.3-19/20	
B.3-25 thru B.3-28	B.3-25 thru B.3-28	
B.3-39 thru B.3-43/blank	B.3-39 thru B.3-48	
	VOLUME 8	
EP.Q-1 thru EP.Q-3/blank	EP.Q-1 thru EP.Q-3/blank	After tab, Acceptance Review, Questions and Responses
AEC-iii/iv	AEC-iii/iv	After AEC Questions and Responses, page AEC- i/ii
AEC-vii thru AEC-ix/blank	AEC-vii thru AEC-x	

Remove	Insert	Location
Q042.1-1/2	Q042.1-1/2	After tab 040
FQ042.1-1	FQ042.1-1	
Q042.47-1/blank	Q042.47-1/2	
-	Q110.17-1/blank	After Q110.16-1/ blank
	VOLUME 9	
-	Q221.47-1 thru Q221.49-4	After Q221.46-1/ blank
-	Q413.11-1 and 4.13.12-1/blank	After Q413.10-1/ blank
-	Q430.3-1/blank	After Q430.2-1/2

BEFORE THE

UNITED STATES NUCLEAR REGULATORY COMMISSION

In the Matter of

WISCONSIN ELECTRIC POWER COMPANY
WISCONSIN POWER AND LIGHT COMPANY, and
WISCONSIN PUBLIC SERVICE CORPORATION

Docket No.
STN 50-502

AMENDMENT NO. 17
PRELIMINARY SAFETY ANALYSIS REPORT

Wisconsin Electric Power Company, on its own behalf and on behalf of Wisconsin Power and Light Company and Wisconsin Public Service Corporation (all hereinafter collectively referred to as "Applicants"), hereby amends the Preliminary Safety Analysis Report (PSAR), filed as part of the Application for Licenses in this docket. This amendment consists of Applicants' responses to the Nuclear Regulatory Commission's requests for additional information forwarded by Mr. Olan D. Parr's letters dated October 24, 1978, November 8, 1978, and December 18, 1978. The amendment also contains information on the main steam line break analysis, emergency core cooling analysis, the Model F Steam generator and the containment purge analysis. Applicants have also addressed and clarified several qualification review items in this amendment.

The changes mentioned herein are contained on the replacement pages enclosed herewith and made part hereof, which pages are to be inserted in the PSAR in accordance with the accompanying instructions.

Dated January 18, 1979.

Respectfully submitted,

WISCONSIN ELECTRIC POWER COMPANY

By _____

STATE OF WISCONSIN)
MILWAUKEE COUNTY) ss.

SOL BURSTEIN, being first duly sworn, on oath says that he has read the foregoing statement and knows the contents thereof, that the same is true to the best of his knowledge and belief, and that this verification is made by affiant for the reason that Wisconsin Electric Power Company is a corporation, and he is an officer of such corporation, to-wit, Executive Vice President of such corporation, and is duly authorized to make this verification for and on its behalf.

Subscribed and sworn to before me
this 18th day of January, 1979.

Notary Public, State of Wisconsin

My Commission expires July 6, 1980

INSERTION INSTRUCTIONS FOR AMENDMENT 17

Correction pages to the Preliminary Safety Analysis Report (Volumes 1-9) are identified by "Amendment 17, 2/79" and are printed on green stock.

Vertical bars, with the numeral 17, have been placed in the outside margins of revised text pages and tables to show the location of any technical changes originating with this amendment. A few unrevised pages have been reprinted because they fall within a run of closely spaced revised pages. No change bars are used on figures or new questions and responses.

Entries herein beginning with T or F designate tables and figures, respectively. EP and Q designate effective pages and questions. All other entries are page numbers. In the location column, CH-Chapter, and AP-Appendix.

Remove	Insert	Location
	VOLUME I	
-	WE letter to Harold R. Denton for Amendment 17/blank	Before WE letter to Harold R. Denton for Amendment 16
-	USNRC Attachment-Amendment 17/blank	
-	Sol Burstein Affadavit/blank	
MEP-1/2	MEP-1/2	After title page
EP.1-1/blank	EP.1-1/blank	CH1, after tab
T1.3-1 (9 of 13)	T1.3-1 (9 of 13)	After T1.3-1 (8 of 13)
F1.2-3J	F1.2-3J	After F1.2-3I
EP.3-1/2	EP.3-1/2	CH3, after tab
3.1-41/42	3.1-41/42	
3.1-53 thru 3.1-56	3.1.53 thru 3.1-56	
3.8-37 thru 3.8-40	3.8-37 thru 3.8-40a/blank	
F3.8.1-1 thru 3.8.1-4	F3.8.1-1 thru 3.8.1-4	After F3.7.3-5
F3.8.1-6 thru 3.8.1-8	F3.8.1-6 thru 3.8.1-8	After F3.8.1-5
F3.8.1-22	F3.8.1-22	After F3.8.1-21
-	F3.8.1-25a and 3.8.1-25b	After F3.8.1-25
	VOLUME 2	
EP.5-1/blank	EP.5-1/blank	CH5, after tab
5-iii/iv	5-iii/iv	
5-vii/viii	5-vii/viii	
-	5-viiia	
5-xi thru 5-xiv	5-xi thru 5-xiv	
5.2-31/32	5.2-31/32	
5.2-37 thru 5.2-40b	5.2-37 thru 5.2-40c/blank	
5.5-7 thru 5.5-12	5.5-7 thru 5.5-12	
-	5.5-12a thru 5.5-12h	
5.5-13/14	5.5-13/14	
T5.1-1 (2 pages)	T5.1-1 (2 pages)	After page 5.6-9
T5.2-7 (3 pages)	T5.2-7 (3 pages)	After T5.2-6
T5.5-3	T5.5-3	After T5.5-2
T5.5-4 (2 pages)	Delete sheet for T5.5-4/blank	
T5.5-5 (2 pages)	T5.5-5 (2 pages)	
F5.5-3	F5.5-3 and 5.5-3a	After F5.5-2

Remove	Insert	Location
	VOLUME 3	
EP.6-1/2	EP.6-1/2	CH6, after tab
6-i/ii	6-i/ii	
6-ix/x	6-ix/x	
-	6-xa/blank	
6-xiii/xiv	6-xiii/xiv	
6.2-3/4	6.2-3/4	
6.2-4e/4f	6.2-4e/4f	
-	6.2-4g/blank	
6.2-5/6	6.2-5/6	
6.2-15 thru 6.2-16a/blank	6.2.15 thru 6.2-16d	
6.2-28c/28d	6.2-28c/28d	
6.2-29 thru 6.2-32	6.2-29 thru 6.2-32	
-	6.2.32a/32b	
6.2-35/36	6.2-35/36	
-	6.2-36a/blank	
6.2-52c thru 6.2-52f	6.2-52c thru 6.2-52f	
6.2-55.56	6.2-55/56	
-	6.2-56a/blank	
6.4-9/10	6.4-9/10	
6.5-7/8	6.5-7/8	
T6.2.1-22	Delete sheet for T6.2.1-22/blank	After T6.2.1-21
T6.2.1-24	T6.2.1-24	After T6.2.1-23
T6.2.1-25	Delete sheet for T6.2.1-25/blank	
-	T6.2.1-27	After T6.2.1-26
-	T6.2.1-28	
-	T6.2.1-29 (2 pages)	
-	T6.2.1-30 (2 pages)	
-	T6.2.1-31	
-	T6.2.1-32	
-	T6.2.1-33	
T6.2.3-1 (1 of 2)	T6.2.3-1 (1 of 2)	After T6.2.2-3
T6.2.4-1 (5 pages)	T6.2.4-1 (5 pages)	After T6.2.3-10
-	T6.2.4-2	
F6.2.1-52 thru 6.2.1-54	F6.2.1-52 thru 6.2.1-55	After F6.2.1-51
F6.2.4-1	F6.2.4-1 thru 6.2.4-41	After F6.2.2-10
F6.5.2-1	F6.5.2-1	After F6.5.1-1
	VOLUME 4	
EP.8-1/blank	EP.8-1/blank	CH8, after tab
8-i/ii	8-i/ii	
8.3-17 thru 8.3-22a/blank	8.3-17 thru 8.3-22	
T8.3.1-3 (6 of 9)	T8.3.1-3 (6 of 9)	After T8.3.1-3 (5 of 3)
EP.9-1/2	EP.9-1/2	CH9, after tab
9-ix/x	9-ix/x	
9.4-1 thru 9.4-6a/blank	9.4-1 thru 9.4-6a/blank	
9.4-19 thru 9.4-26a/blank	9.4-19 thru 9.4-26a/ blank	
F9.4.1-1	F9.4.1-1	After delete sheet for F9.3.6-2 and 9.3.6-3
F9.4.7-1 and 9.4.7-2	F9.4.7-1 and 9.4.7-2	After F9.4.6-1
	VOLUME 5	
EP.10-1/blank	EP.10-1/blank	CH10, after tab
10.3-1 thru 10.3-2a/blank	10.3-1 thru 10.3-2a/blank	
10.3-3/4	10.3-3/4	
F10.3-1 thru 10.3-3	F10.3-1 thru 10.3-3	After F10.2-9

Remove	Insert	Location
EP.11-1/blank	EP.11-1/blank	CH11, after tab
11-iii/iv	11-iii/iv	
11.4-5 thru 11.4-9/blank	11.4-5 thru 11.4-9/blank	
T11.4-1 (1 of 2)	T11.4-1 (1 of 2)	After delete sheet for T11.3.9-1
	VOLUME 6	
EP.12-1/blank	EP.12-1/blank	CH12, after tab
F12.1-7	F12.1-7	After F12.1-6
F12.1-10	F12.1-10	After F12.1-9
F12.2-1	F12.2-1	After F12.1-23
EP.13-1/blank	EP.13-1/blank	CH13, after tab
13-iii/iv	13-iii/iv	
13.2-3 thru 13.2-5/blank	13.2-3 thru 13.2-7/blank	
EP.14-1/blank	EP.14-1/blank	CH14, after tab
14.1-1/2	14.1-1/2	
14.1-2a/blank	14.1-2a/blank	
EP.15-1/2	EP.15-1/2	CH15, after tab
15-iii/iv	15-iii/iv	
15-vii/viii	15-vii/viii	
-	15-viiia/blank	
15-xiii thru 15-xvi	15-xiii thru 15-xvii/blank	
15.4-3 thru 15.4-4g/blank	15.4-3 thru 15.4-4j	
T15.4-1	T15.4-1	After T15.3.5-1
T15.4.1-1 thru 15.4.1-5	T15.4.1-1 thru 15.4.1-5a	
-	T15.4.1-9	After T15.4.1-8
-	T15.4.1-10	
F15.4.1-1a thru 15.4.1-17	F15.4.1-1a thru 15.4.1-17	After delete sheet F15.3.5-1 and 15.3.5-2
	VOLUME 7	
EP.16-1/blank	EP.16-1/blank	CH16, after tab
16.4-7/8	16.4-7/8	
EP.17-1/blank	EP.17-1/blank	CH17, after tab
17.1-33/blank	17.1-33/blank	
EP.A-1/blank	EP.A-1/blank	AP A, after tab
A.1-11/12	A.1-11/12	
A.1-13/14	A.1-13.14	
-	A.1-14a/blank	
EP.B-1/blank	EP.B-1/blank	AP B, after tab
B.3-9 thru B.3-12	B.3-9 thru B.3-12	
B.3-16e/16f	B.3-16e/16f	
B.3-19/20	B.3-19/20	
B.3-25 thru B.3-28	B.3-25 thru B.3-28	
B.3-39 thru B.3-43/blank	B.3-39 thru B.3-48	
	VOLUME 8	
EP.Q-1 thru EP.Q-3/blank	EP.Q-1 thru EP.Q-3/blank	After tab, Acceptance Review, Questions and Responses
AEC-iii/iv	AEC-iii/iv	After AEC Questions and Responses, page AEC- i/ii
AEC-vii thru AEC-ix/blank	AEC-vii thru AEC-x	

Remove	Insert	Location
Q042.1-1/2	Q042.1-1/2	After tab 040
FQ042.1-1	FQ042.1-1	
Q042.47-1/blank	Q042.47-1/2	
-	Q110.17-1/blank	After Q110.16-1/ blank
	VOLUME 9	
-	Q221.47-1 thru Q221.49-4	After Q221.46-1/ blank
-	Q413.11-1 and 4.13.12-1/blank	After Q413.10-1/ blank
-	Q430.3-1/blank	After Q430.2-1/2

PRELIMINARY SAFETY ANALYSIS REPORT

MASTER LIST OF EFFECTIVE PAGES

The Lists of Effective Pages for the Preliminary Safety Analysis Report are compiled for each chapter and appendix in Volumes 1 through 7 and the NRC Questions and Responses in Volumes 8 and 9.

The Master List of Effective Pages presents the dates of issue for each amendment, and the revision number of the General Table of Contents (found at the front of each volume), and each list of effective pages (found immediately after the respective tab).

Issue	Date	Issue	Date	Issue	Date
Original	5/23/74	Amendment 8	6/16/75	Amendment 17	2/79
Amendment	8/9/74	Amendment 9	9/8/75		
Amendment 1	9/27/74	Amendment 10	10/6/75		
Amendment 2	1/3/75	Amendment 11	11/24/75		
Amendment 3	1/20/75	Amendment 12	2/16/76		
Amendment 4	2/10/75	Amendment 13	7/15/76		
Amendment 5	3/17/75	Amendment 14	5/26/78		
Amendment 6	5/2/75	Amendment 15	9/22/78		
Amendment 7	6/6/75	Amendment 16	11/78		

PRELIMINARY SAFETY ANALYSIS REPORT

MASTER LIST OF EFFECTIVE PAGES (CONT'D)

Page	Revision Number
Chapter 17	
EP.17-1	17
Appendix A	
EP.A-1	17
Appendix B	
EP.B-1	17
Questions and Responses	
EP.Q-1 through EP.Q-3	17

PRELIMINARY SAFETY ANALYSIS REPORT

LIST OF EFFECTIVE PAGES

Chapter 1

Page, Table (T) or Figure (F)	Revision Number
1-i through 1-ii	7
1-iii through 1-iv	10
1-v	-
1-vi	10
1.1-1 through 1.1-2	-
1.2-1 through 1.2-12	-
1.3-1	-
1.4-1 through 1.4-5	-
1.5-1 through 1.5-27	10
1.6-1	-
T.1.1-1 (4 pages)	9
T.1.3-1 (page 1)	15
(page 2)	12
(page 3)	11
(page 4)	4
(page 5)	15
(page 6)	-
(page 7)	15
(page 8)	-
(page 9)	17
(page 10)	-
(page 11)	15
(pages 12 and 13)	-
T.1.6-1 (12 pages)	-
F.1.1-1	-
F.1.2-1	15
F.1.2-2	-
F.1.2-3A through F.1.2-3I	-
F.1.2-3J	17
F.1.2-3K	-
F.1.2-4 through F.1.2-5	-
F.1.5-1	-
F.1.5-2 through F.1.5-3	10

TABLE 1.3-1 (CONT'D)

DESIGN COMPARISON

Chapter Number	Chapter Title System/Component	References	Significant Similarities	Significant Differences
9.0 (Cont'd)	Containment Air Filtration	Section 9.4.7.1	Beaver Valley Unit 1 North Anna Units 1 & 2	None
	Containment Purge Air System	Section 9.4.7.2	Beaver Valley Unit 1 North Anna Units 1 & 2	North Anna Units 1 & 2 and Beaver Valley Unit 1 do not incorporate a flow nozzle and debris screen into the purge supply and exhaust lines.
	Containment Air Recirculation System	Section 9.4.7.3	Beaver Valley Unit 1 North Anna Units 1 & 2	North Anna Units 1 & 2 and Beaver Valley Unit 1 use 3-50 percent capacity fan coolers; fan coolers are NNS. North Anna Units 1 & 2 use service water and Beaver Valley Unit 1 uses river water as back-up cooling medium.
	CRDM Cooling	Section 9.4.7.4	Beaver Valley Unit 1 North Anna Units 1 & 2	North Anna Units 1 & 2 and Beaver Valley Unit 1 use cooling coils and component cooling water. North Anna Units 1 & 2 have 6 fans (3 standbys) and Beaver Valley uses 3 fans.
	Diesel Generator Building Heating and Ventilation	Section 9.4.8	Beaver Valley Unit 1 North Anna Units 1 & 2	North Anna Units 1 & 2 and Beaver Valley Unit 1 do not have recirculation capability.
	Service Water Pumphouse Ventilation	Section 9.4.9	Beaver Valley Unit 1 North Anna Units 1 & 2	North Anna Units 1 & 2 and Beaver Valley Unit 1 have fan on exhaust duct.

PRELIMINARY SAFETY ANALYSIS REPORT

LIST OF EFFECTIVE PAGES

Chapter 3

Page, Table (T) or Figure (F)	Revision Number
3-i through 3-xviii	8
3-xix	16
3-xx	13
3-xxi through 3-xxii	8
3-xxiii	15
3.1-1	-
3.1-2 through 3.1-3	7
3.1-4 through 3.1-8	-
3.1-9	14
3.1-10 through 3.1-15	-
3.1-16	2
3.1-16a	3
3.1-17 through 3.1-41	-
3.1-42	17
3.1-43 through 3.1-52	-
3.1-53	6
3.1-54 through 3.1-55	17
3.1-56	2
3.1-57 through 3.1-61	-
3.2-1 through 3.2-2a	2
3.2-3 through 3.2-4	-
3.3-1	-
3.3-2 through 3.3-2a	1
3.3-3 through 3.3-4	2
3.3-4a	13
3.3-5	2
3.4-1	2
3.4-2	9
3.5-1 through 3.5-2	6
3.5-2a	7
3.5-3 through 3.5-4	-
3.5-5 through 3.5-7	6
3.6-1	7
3.6-2 through 3.6-3	6
3.6-4 through 3.6-4a	7
3.6-5 through 3.6-6f	6
3.6-7 through 3.6-8b	2
3.6-9	1
3.6-10	2
3.7-1	13
3.7-2	15
3.7-2a	3
3.7-3 through 3.7-8	-
3.7-9 through 3.7-12a	1
3.7-12b	6
3.7-13	-
3.7-14	2
3.7-15	-
3.7-16 through 3.7-18b	4
3.7-19 through 3.7-20c	13
3.7-21 through 3.7-25	-
3.7-26	13
3.7-27 through 3.7-30	-
3.7-31	14
3.7-32	-
3.7-33 through 3.7-34	6
3.7-34a	2
3.7-35 through 3.7-37	-
3.8-1 through 3.8-2a	15
3.8-3 through 3.8-5	-
3.8-6 through 3.8-6a	1
3.8-7	-
3.8-8	4
3.8-9	10
3.8-10	11
3.8-11 through 3.8-16	10
3.8-17 through 3.8-19	-
3.8-20	16
3.8-21 through 3.8-22	-
3.8-23	4
3.8-24	-
3.8-25 through 3.8-26a	4
3.8-27 through 3.8-28	6
3.8-29	-
3.8-30	16
3.8-31	11
3.8-32 through 3.8-35	10
3.8-36 through 3.8-37	11
3.8-38 through 3.8-40a	17
3.8-41	-
3.8-42	13
3.8-43	-
3.8-44	1
3.8-44a through 3.8-45	10
3.8-46 through 3.8-49	6
3.8-50	10
3.8-50a	6
3.8-51	-
3.8-52	10
3.8-53	8
3.8-54	7
3.8-54a	15
3.8-55	9
3.8-56	8
3.8-56a	10
3.8-57	-
3.8-58 through 3.8-60	15
3.8-61	-
3.8-62 through 3.8-63	15
3.8-64	4
3.9-1	13

PRELIMINARY SAFETY ANALYSIS REPORT

LIST OF EFFECTIVE PAGES (CONT'D)

Chapter 3

Page, Table (T) or Figure (F)	Revision Number
3.9-2 through 3.9-4a	4
3.9-5 through 3.9-16	-
3.9-17	1
3.9-18 through 3.9-25	-
3.10-1	14
3.10-2	2
3.10-3	14
3.10-4	2
3.11-1 through 3.11-2a	16
3.11-3	12
3.11-4	13
3.11-4a	16
3.11-4b	13
3.11-5 through 3.11-6a	7
3.11-7	16
T.3.1.2-1	-
T.3.2.5-1 (page 1 and 2)	8
(page 3)	10
(page 4)	9
(page 5 and 6)	2
(page 7)	4
(page 8)	15
(page 9 and 10)	4
(page 11 through 13)	6
(page 14 through 17)	4
(page 18)	2
T.3.3.1-1 through T.3.3.1-7	-
T.3.5.1-1 (2 pages)	7
T.3.5.2-1	7
T.3.5.3-1 through T.3.5.3-6	-
T.3.5.4-1	6
T.3.6-1	4
T.3.6-2 (page 1)	4
(page 2)	1
T.3.6-3 (2 pages)	4
T.3.7-1 through T.3.7-6	-
T.3.8.1-1 through T.3.8.1-2	-
T.3.8.1-3 (page 1)	2
(page 2 through 4)	-
T.3.8.1-4 through T.3.8.1-5	-
T.3.8.1-6	2
T.3.8.1-7	-
T.3.9-1 (2 pages)	-
T.3.9-2 (2 pages)	6
T.3.9-3 through T.3.9-6	-
T.3.9-7 (2 pages)	-
T.3.11-1 through T.3.11-2	16
F.3.6-1 through F.3.6-2	2
F.3.7.1-1 through F.3.7.1-2	13
F.3.7.1-3	-
F.3.7.1-4 through F.3.7.1-14	13
F.3.7.2-1	-
F.3.7.3-1 through F.3.7.3-5	-
F.3.8.1-1 through F.3.8.1-4	17
F.3.8.1-5	8
F.3.8.1-6 through F.3.8.1-8	17
F.3.8.1-9	4
F.3.8.1-10 through F.3.8.1-13	-
F.3.8.1-14	5
F.3.8.1-15	4
F.3.8.1-16 through F.3.8.1-21	-
F.3.8.1-22	17
F.3.8.1-23	-
F.3.8.1-24	4
F.3.8.1-25	-
F.3.8.1-25a through F.3.8.1-25b	17
F.3.8.1-26	-
F.3.8.4-1	15
F.3.8.4-2 through F.3.8.4-7	15
F.3.8.4-8 (3 pages)	15
F.3.8.4-9	15
F.3.8.4-9A	15
F.3.8.4-10	15
F.3.8.4-10A	15
F.3.8.4-11 through F.3.8.4-12	15
F.3.8.4-13 (deleted)	15
F.3.8.4-14 through F.3.8.4-15	8
F.3.8.4-16 (deleted)	8
F.3.8.4-17	2
F.3.8.5-1	-

the ASME Boiler and Pressure Vessel Code for Class 2 systems. Such components may require disassembly and nondestructive testing as well as visual examination per the requirements of the Code.

Reference

Title	Section
Containment Heat Removal Systems	6.2.2

3.1.2.40 Testing of Containment Heat Removal System (Criterion 40)

Criterion

The containment heat removal system shall be designed to permit appropriate periodic pressure and functional testing to assure (1) the structural and leaktight integrity of its components, (2) the operability and performance of the active components of the system, and (3) the operability of the system as a whole, and, under conditions as close to the design as practical, the performance of the full operational sequence that brings the system into operation, including operation of applicable portions of the protection system, the transfer between normal and emergency power sources, and the operation of the associated cooling water system.

Discussion

The containment heat removal system design permits periodic pressure and functional testing as described in Section 6.2.2.

References

Title	Section
Containment Heat Removal Systems	6.2.2
Reactor Trip System	7.2
Engineered Safety Features Actuation System	7.3
D-C Power Systems	8.3.2

3.1.2.41 Containment Atmosphere Cleanup (Criterion 41)

Criterion

Systems to control fission products, hydrogen, oxygen, and other substances which may be released into the reactor containment shall be provided as necessary to reduce, consistent with the functioning of other associated systems, the concentration and quantity of fission products released to the environment following postulated accidents, and to control the concentration of hydrogen or oxygen and other substances in the containment atmosphere following postulated accidents to assure that containment integrity is maintained.

Each system shall have suitable redundancy in components and features, and suitable interconnections, leak detection, isolation, and containment capabilities to assure that for onsite electric power system operation (assuming offsite power is not available) and for offsite electric power system operation (assuming onsite power is not available) its safety function can be accomplished, assuming a single failure.

Discussion

The containment spray system, described in Section 6.2.2, provides a means of spraying borated water containing sodium hydroxide into the containment atmosphere following a major LOCA, thereby reducing the concentration and quantity of airborne fission products, notably iodine. Sodium hydroxide is added to
17 the borated water from the refueling water storage tank from an adjacent storage tank by use of the chemical addition pumps.

The containment hydrogen control system, described in Section 6.2.5, consists of a redundant recombiner subsystem and a backup purge subsystem. Either recombiner or the purge keeps the hydrogen concentration below the combustible limit of four percent.

17 These systems are sufficiently redundant to withstand a single active failure in the short term and a single active or passive failure in the long term and will be operable with either onsite or offsite power.

17

References

Title	Section
Containment Functional Design	6.2.1
Containment Isolation System	6.2.4

3.1.2.56 Primary Containment Isolation (Criterion 56)

Criterion

Each line that connects directly to the containment atmosphere and penetrates primary reactor containment shall be provided with containment isolation valves as follows, unless it can be demonstrated that the containment isolation provisions for a specific class of lines, such as instrument lines, are acceptable on some other defined basis:

1. One locked closed isolation valve inside and one locked closed isolation valve outside containment; or

2. One automatic isolation valve inside and one locked closed isolation valve outside containment; or

3. One locked closed isolation valve inside and one automatic isolation valve outside containment. A simple check valve may not be used as the automatic isolation valve outside containment; or

4. One automatic isolation valve inside and one automatic isolation valve outside containment. A simple check valve may not be used as the automatic isolation valve outside containment.

Isolation valves outside containment shall be located as close to the containment as practical and upon loss of actuating power, automatic isolation valves shall be designed to take the position that provides greater safety.

Discussion

All lines that connect to the containment atmosphere are provided with containment isolation valves in accordance with the above criterion, as described in Section 6.2.4, with the following exceptions: the suction lines from the containment recirculation sump for the residual heat removal and containment spray pumps, the containment spray pump discharge lines, and containment atmosphere radiation monitoring suction lines and certain instrument lines. The containment recirculation sump suction lines are sealed in concrete over their entire length within containment and thus have no valves inside the containment

structure. The isolation valves in these lines, which are outside the containment structure, are located as close as practicable to that structure, with the isolation valves and piping upstream of the isolation valves engineered and built with
5 conservatism and features consistent with applicable letters from the Advisory Committee on Reactor Safeguards to the U.S.A.E.C as described in Section 6.2.4. The containment spray pump discharge isolation valves open on the CIB signal to accomplish the system safety function. The containment atmosphere radiation monitoring
6 suction lines have two isolation valves outside containment as described in Section 6.2.4. Instrument line penetrations are in accordance with Regulatory Guide 1.11 and have either a power
17 operated valve or a manual isolation valve outside of the containment structure.

References

Title	Section
Containment Functional Design	6.2.1
Containment Isolation Systems	6.2.4

3.1.2.57 Closed System Isolation Valves (Criterion 57)

Criterion

Each line that penetrates primary reactor containment and is neither part of the reactor coolant pressure boundary nor connected directly to the containment atmosphere shall have at least one containment isolation valve which shall be either automatic, or locked closed, or capable of remote manual operation. This valve shall be outside containment and located as close to the containment as practical. A simple check valve may not be used as the automatic isolation valve.

Discussion

With the exception of the residual heat removal (RHR) system, all lines connected to closed systems are provided with at least one containment isolation valve located as close as possible to the outside of the containment structure as described in Section 6.2.4.

The lines from the reactor coolant system (RCS) hot legs (inside the containment) to the residual heat removal (RHR) pump suctions each contain two remote manual normally closed (motor operated) valves inside the containment. The valves are interlocked such that they cannot be opened when the RCS pressure is greater than the design pressure of the RHR system. The valves closest to the RCS are interlocked with one pressure transmitter while the valves closest to containment are interlocked with a separate transmitter. In addition to this, a temperature interlock is

provided on the valve closest to the containment. The valve which is closest to the RCS inside the missile barrier is not considered a containment isolation valve. The second valve provides the containment isolation barrier inside the containment and is normally closed and interlocked to remain closed, by both a pressure and temperature interlock. A motor operated valve is used outside the containment to isolate the connection to the refueling water storage tank. The valve is closed following the injection phase of an accident. A further discussion of these valves is presented in Sections 5.5.7 and 6.2.4. 17

These lines also connect to the recirculation loops which are filled with sump water and at least one of which is in operation post-accident therefore, there is no need for containment isolation valves in these lines outside containment. If a leak occurs in the line upstream (toward the RCS) of the valve inside containment, the closed valve isolates the lines.

References

Title	Section
Residual Heat Removal System	5.5.7
Containment Functional Design	6.2.1
Containment Isolation Systems	6.2.4

3.1.2.58 Criterion 58

Number not used.

3.1.2.59 Criterion 59

Number not used.

3.1.2.60 Control of Releases of Radioactive Materials to the Environment (Criterion 60)

Criterion

The nuclear power unit design shall include means to control suitably the release of radioactive materials in gaseous and liquid effluents and to handle radioactive solid wastes produced during normal reactor operation, including anticipated operational occurrences. Sufficient holdup capacity shall be provided for retention of gaseous and liquid effluents containing radioactive materials, particularly where unfavorable site environmental conditions can be expected to impose unusual

operational limitations upon the release of such effluents to the environment.

Discussion

In all cases, the design for radioactivity control is based on the requirements of 10CFR20, 10CFR50, Regulatory Guide 1.42, and Appendix I to 10CFR50 for normal operations and for any transient situation that might reasonably be anticipated to occur.

2 The radioactivity level of process gas effluents is substantially reduced by continuous removal from the primary coolant noble gas inventory and by differential holdup of noble gases in charcoal decay beds prior to release or recycle to the primary system.
2 Low radioactivity aerated process gas streams are filtered and monitored before venting.

2 Control of liquid waste effluents is maintained by processing or sampling all liquids prior to release. Liquid effluents are monitored for radioactivity and rate of flow. Radioactive liquid waste system tankage and evaporator capacity are sufficient to handle any expected transient in the processing of liquid waste volume.

2 Solid wastes are prepared for shipment in containers which meet applicable AEC and Department of Transportation requirements, as described in Section 11.5.

Any unexpected leakage of radioactive gases and particulates from spent fuel or from components containing radioactive fluids are collected and treated by the emergency filtration systems located in the auxiliary and fuel buildings.

References

Title	Section
Emergency Filtration Systems	6.5
Liquid Waste Systems	11.2
Gaseous Waste Systems	11.3
Process and Effluent Radiological Monitoring Systems	11.4
Solid Waste System	11.5
Offsite Radiological Monitoring Program	11.6

D1.1, "Structural Welding Code." Procedures for all welding operations and for the care and distribution of electrodes are approved by the engineers.

Mill test reports of reinforcing steel are obtained. Mill test reports of welding electrodes are obtained from the electrode manufacturer.

The ends of the bars to be jointed by butt welding are prepared by sawing or flame cutting and dressed by grinding, where necessary, to form a single or double bevel vee butt joint.

In order to qualify welders for work on the reinforcing steel bars, each welder makes test welds in each position he is required to use during production. Each test weld is tension tested and each is required to meet or exceed the minimum tensile strength of the reinforcing bar.

Structural ductility is maintained by staggering critical splices wherever possible to assure that small adverse effects of multiple splices in the same plane do not occur. Full scale pressure tests conducted on completed concrete containment structures in which Cadweld splices and welded splices were used in a similar manner to that proposed here showed no stress concentrations or lack of structural ductility. Locations of splice groups were not discernable from inspection of the test crack patterns.

All welds are visually inspected. Any cracks, porosity, or other defects are removed by chipping or grinding until sound metal is reached, and then repaired by welding. Peening is not permitted.

Completed welded joints in reinforcing steel are selected on a random basis from each Seismic Category I structure and tensile tested in accordance with the following schedule:

1. One out of first 10 splices
2. One out of next 90 splices
3. Two out of the next and each subsequent units of 100 splices 11

Cracks and any excessive amount of contained voids are cause for repair or removal and replacement. Replaced welds are examined.

Reinforcing steel bars welded to steel plate are tested by sister splices, in accordance with the following schedules:

1. One sister splice out of the first 10 production splices
2. Four sister splices for the next 90 production splices
3. One sister splice for the next and subsequent units of 33 splices. 11

3.8.1.6.3 Structural Steel

Structural steel material, erection, and fabrication tolerances are in accordance with the AISC "Specification for the Design, Fabrication, and Erection of Structural Steel for Buildings" (February 12, 1969), Supplement No. 1 (November 1, 1970), 10 Supplement No. 2 (December 8, 1971), and Supplement No. 3 (June 12, 1974). In general, steel used for structural framing conforms to ASTM A36. In areas where the design indicates that a higher strength steel is required, ASTM A440 or A441 steel is used.

Certified copies of mill test reports showing actual chemical and physical properties are furnished for each heat of steel used in making Seismic Category I structural steel.

Welding of structural steel is in accordance with AWS D 1.1.

The material, installation, and inspection of high strength bolts conforms to the requirements of the Research Council Specification for Structural Joints using bolts approved April 18, 1972.

3.8.1.6.4 Waterproofing Membrane

The waterproofing membrane is either a flexible polyvinyl chloride sheet, a butyl rubber membrane, or a material providing equivalent protection. Adhesives and tapes used for joints and seals in the membrane are the membrane manufacturer's recommended material for the applicable conditions.

3.8.1.6.5 Steel Liner and Penetrations

Materials

a. Liner Plate

All steel materials used in the fabrication of the liner plate are in accordance with ASME III, Division 2, and ASME II

17 Material for the liner plates, insert and overlay plates is SA-516, Grades 60 or 70, fine grained and normalized that has a specified minimum tensile strength of 60,000 psi or 70,000 psi respectively, a minimum guaranteed yield strength of 32,000 psi or 38,000 psi respectively, and a guaranted minimum elongation of 25 percent or 21 percent, respectively, in a standard 2-in. specimen.

These plates are ordered to conform with SA-20 with regard to thickness tolerances.

All plate materials are fined grained and normalized. In addition, they are impact tested as required by ASME III, Division 2 to determine embrittlement characteristics.

All steel materials as stated above are tested and certified to verify that their mechanical properties meet the requirements specified in the ASME Code, Section II.

Stud welding material conforms with ASME III, Division 2, Subarticle CC-2620 which requires one prequalification test of each size stud. The duration of prequalification is indefinite so long as materials, fluxes, arc shields, and stud base geometry are unchanged. In addition, manufacturer's certification that studs conform to the prequalification requirements is obtained.

b. Penetrations

The materials for the different components for the penetrations are listed below:

Materials for Penetrations

Carbon steel plates	SA-516, Grades 60 or 70, Normalized
Carbon steel forgings	SA350 GR LF2 or SA105
Carbon steel pipe	SA333 GR 6 or SA155 GR KCF70
Carbon steel pipe sleeves	SA333 GR 6 or ASTM A516-GR 60 or 70 normalized
Stainless steel Forgings	SA182 F304
Stainless steel pipe	SA312, Type 304/316 or SA240, Type 304/316
Bellows expansion joint	SA240, Type 304 or 321

17

Steel items such as reinforcement plates around containment openings, etc., except backing plates and anchors, gas testing channels, equipment hatch bolts, and equipment hatch nuts, are fine grained and normalized.

c. Access Openings

The materials listed below are used for the equipment hatch and personnel air locks:

Cylindrical shells)	
Reinforcement plates)	SA537 CL.2 or
Hatch covers)	SA516 GR 60 or 70
Hatch cover flanges)	

17 Steel materials as stated above are tested and certified to verify that their mechanical properties meet the requirements as specified in ASME II.

Plate materials are quenched and tempered or fined grained and normalized. In addition, the materials are impact tested as required by ASME III, Class MC to determine embrittlement characteristics.

These plates are ordered to conform with SA-20 with regard to thickness tolerances.

3.8.1.6.5.1 Liner Plate

Special Construction Techniques

Erection of the cylindrical portion of the liner plate follows completion of the concrete mat. The 3/8-in. thick cylindrical portion is erected to approximately 90 ft above the mat. The liner plate serves as the internal form for the concrete containment during construction. Liner seams are double butt welds, except for the lower 30 ft of the cylindrical shell liner where the liner plates are welded using backing plates. Details are shown on Fig. 3.8.1-26. The liner plate is continuously anchored to the concrete shell with steel anchor studs.

The 1/4-in. thick floor liner plates are installed on top of the concrete foundation mat during this period.

The cylindrical portion is then completed, finished with construction of the 1/2-in. thick steel dome, weld inspected, and gas tested.

The liner is plumb within 3-in. at any height of the liner, measured from a theoretical vertical line extending up from the base of the liner. The maximum plus or minus deviation from true circular or hemispherical form does not exceed 1/2 percent of the nominal radius. The maximum misalignment between liner plates is in accordance with paragraph CC-4522 of the ASME Boiler and Pressure Vessel Code, Section III, Division 2. All measurements are taken on parent metal and not at welds. Flat spots or sharp angles are not allowed.

Careful attention is given to the actual circumference of the shell to ensure that all shell rings match properly.

The allowable deviation from true circular form does not affect the elastic stability of the containment liner because of the restraint provided by the anchor studs tying it to the reinforced concrete shell.

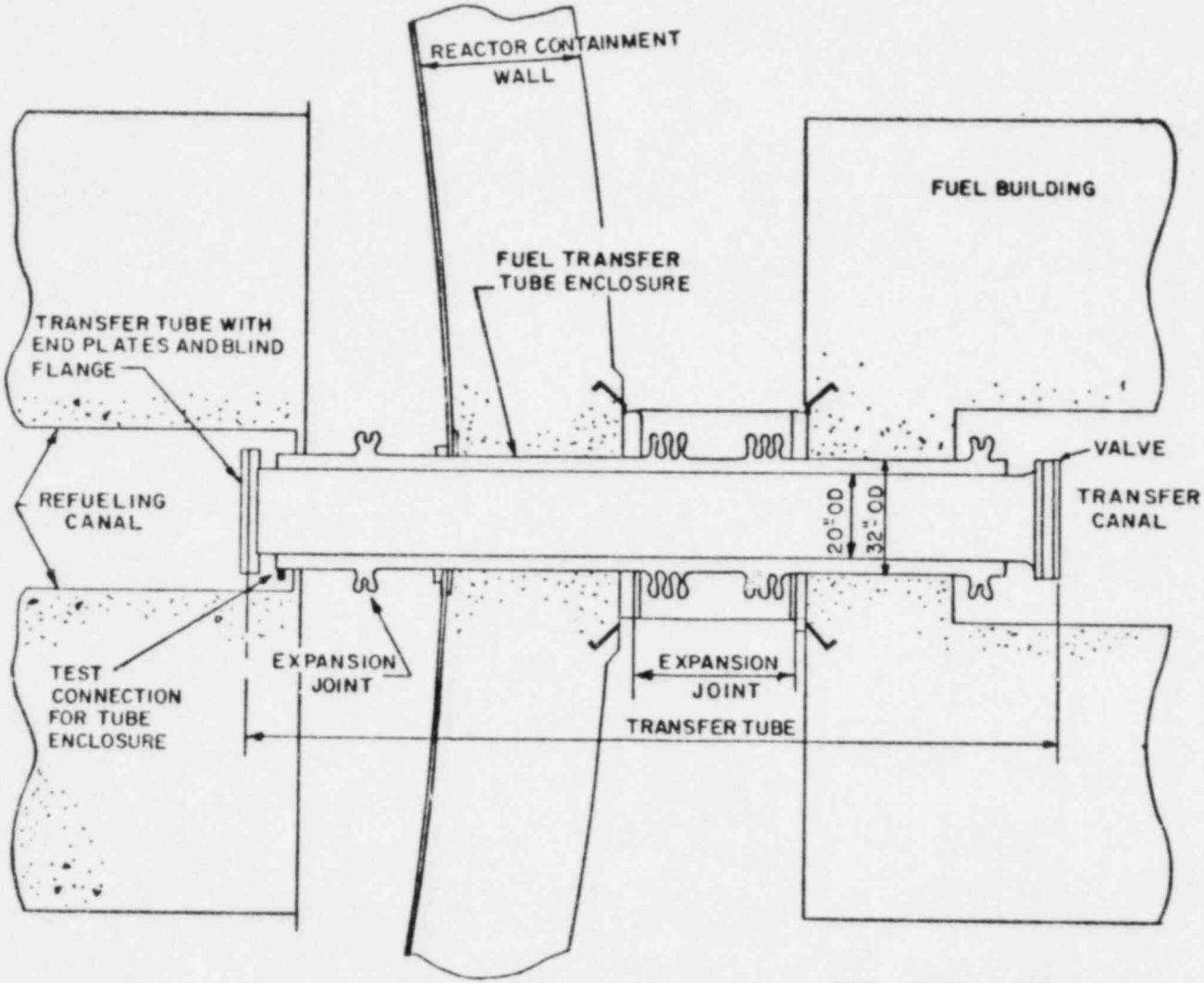

FIG. 3.8.1-22

FUEL TRANSFER TUBE ENCLOSURE

WISCONSIN UTILITIES PROJECT

PRELIMINARY SAFETY ANALYSIS REPORT

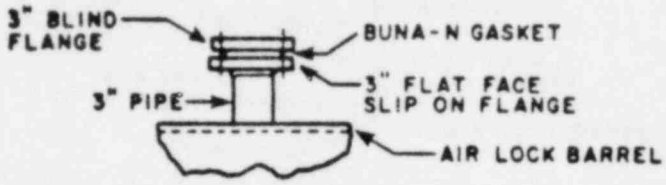

DETAIL 1
EMERGENCY AIR CONNECTION

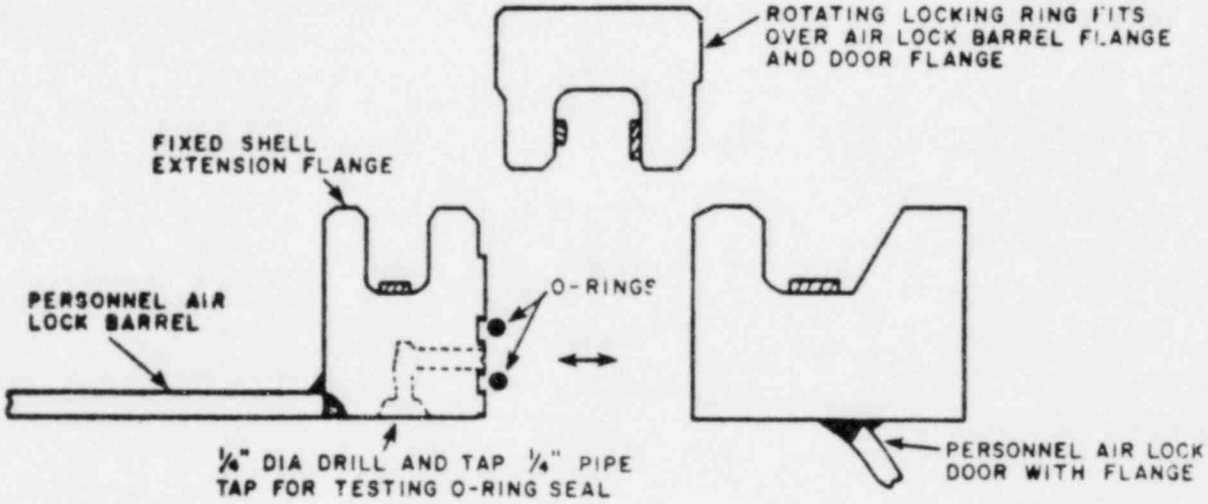

DETAIL 2

NOTES:

O-RINGS ON BOTH INNER AND OUTER DOOR SHALL BOTH HAVE CAPABILITY OF BEING TESTED FROM TEST PORT OUTSIDE CONTAINMENT.

LOCKING RING PREVENTS GASKETS FROM UNSEATING DURING PERSONNEL ACCESS LOCK TEST.

FIG. 3.8.1-25a
EMERGENCY AIR CONNECTION AND DOOR SEALS OF PERSONNEL ACCESS LOCK
WISCONSIN UTILITIES PROJECT
PRELIMINARY SAFETY ANALYSIS REPORT

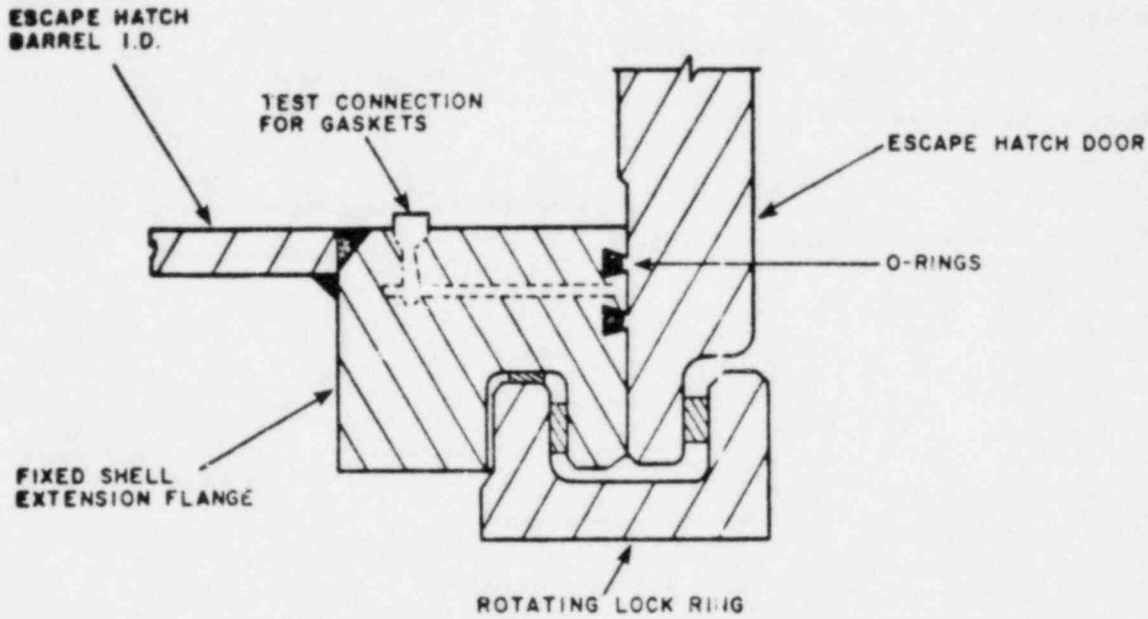

DETAIL 3

ESCAPE HATCH DOOR SEAL DETAIL

FIG. 3.8.1-25b
PERSONNEL ACCESS LOCK
ESCAPE HATCH DOOR
TO BARREL SEAL

WISCONSIN UTILITIES PROJECT
PRELIMINARY SAFETY ANALYSIS REPORT

PRELIMINARY SAFETY ANALYSIS REPORT

LIST OF EFFECTIVE PAGES

Chapter 5

Page, Table (T) or Figure (F)	Revision Number
5-i	-
5-ii	8
5-iii	17
5-iv through 5-vi	8
5-vii through 5-viiia	17
5-ix through 5-x	14
5-xi through 5-xiii	17
5-xiv	8
5.1-1 through 5.1-6	-
5.2-1 through 5.2-4a	-
5.2-5 through 5.2-24	-
5.2-25 through 5.2-26c	4
5.2-27	-
5.2-28 through 5.2-28a	4
5.2-29 through 5.2-30	-
5.2-31 through 5.2-32	17
5.2-33	6
5.2-34	7
5.2-35	16
5.2-36 through 36a	7
5.2-37 through 5.2-40c	17
5.2-41	-
5.2-42 through 5.2-42a	2
5.2-43	-
5.2-44 through 5.2-46a	2
5.2-47 through 5.2-51	-
5.2-52	6
5.3-1	-
5.4-1 through 5.4-7	-
5.5-1 through 5.5-7	-
5.5-8 through 5.5-13	17
5.5-14 through 5.5-20	-
5.5-21	13
5.5-22 through 5.5-25	-
5.5-26	1
5.5-26a	7
5.5-27	14
5.5-28	-
5.5-28a	14
5.5-29 through 5.5-43	-
5.6-1 through 5.6-9	-
T.5.1-1 (2 pages)	17
T.5.2-1 (deleted)	6
T.5.2-2 (3 pages)	-
T.5.2-3	-
T.5.2-4	4
T.5.2-5 (2 pages)	-
T.5.2-6	-
T.5.2-7 (3 pages)	17
T.5.2-8 (3 pages)	-
T.5.2-9	2
T.5.2-10 through T.5.2-11	-
T.5.4-1 through T.5.4-2	-
T.5.5-1 through T.5.5-2	-
T.5.5-3	17
T.5.5-4 (deleted)	17
T.5.5-5 (2 pages)	17
T.5.5-6 through T.5.5-16	-
F.5.1-1	2
F.5.1-2 through F.5.1-7	-
F.5.2-1 through F.5.2-5	-
F.5.3-1	-
F.5.5-1 through F.5.5-2	-
F.5.5-3 through F.5.5-3A	17
F.5.5-4 through F.5.5-8	-
F.5.5-9	8

CHAPTER 5

TABLE OF CONTENTS (CONT'D)

CHAPTER 5

TABLE OF CONTENTS (CONT'D)

CHAPTER 5

TABLE OF CONTENTS (CONT'D)

CHAPTER 5

TABLE OF CONTENTS (CONT'D)

CHAPTER 5

TABLE OF CONTENTS (CONT'D)

CHAPTER 5

LIST OF TABLES (CONT'D)

CHAPTER 5

LIST OF TABLES

CHAPTER 5

LIST OF FIGURES (CONT'D)

CHAPTER 5

LIST OF FIGURES

are used in the solution anneal heat treat condition. These heat treatments are as required by the material specifications. During subsequent fabrication, these materials are not heated above 800 F other than instantaneously and locally by welding operations. The solution annealed surge line material is subsequently formed by hot bending followed by an additional solution annealing heat treatment. All other pipe bending is outside of Westinghouse PWR scope. 17

5.2.3.3 Compatibility with External Insulation and Environmental Atmosphere

In general, all of the materials listed in Tables 5.2-7 and 5.2-8, which are used in principal pressure retaining applications and which are subject to elevated temperature during system operation, are in contact with thermal insulation that covers their outer surfaces.

The thermal insulation used on the RCPB is specified to be either reflective stainless steel type or to be made of compounded materials which yield low leachable chloride and/or fluoride concentratons. The compounded materials in the form of blocks, boards, cloths, tapes, adhesives, cements, etc. are silicated to provide protection of austenitic stainless steels against stress corrosion which may result from accidental wetting of the insulation by spillage, minor leakage, or other contamination from the environmental atmosphere. Each lot of insulation material is qualified and analyzed in accordance with the provisions of Regulatory Guide 1.36 to ensure that all of the materials provide a compatible combination for the RCPB.

In the event of coolant leakage, the ferritic materials will show increased general corrosion rates. Where minor leakage is anticipated from service experience, such as valve packing, pump seals, etc., only materials which are compatible with the coolant are used. These are as shown in Tables 5.2-7 and 5.2-8. Ferritic materials exposed to coolant leakage can be readily observed as part of the inservice visual and/or nondestructive inspection program to ensure the integrity of the component for subsequent service.

5.2.3.4 Chemistry of Reactor Coolant

The RCS chemistry specifications are given in Table 5.2-9.

The RCS water chemistry is selected to minimize corrosion. A periodic analysis of the coolant chemical composition is performed to verify that the reactor coolant quality meets the specifications.

Element	Base Metal	As Deposited Weld Metal
Copper	0.10% (Ladle) 0.12% (Check)	0.10%
Phosphorous	0.012% (Ladle) 0.017% (Check)	0.015%
Vanadium	0.05%	0.05%

The welding materials used for joining the austenitic stainless steel base materials of the RCPB conform to ASME Material Specifications SFA 5.4 and 5.9. They are tested and qualified according to the requirements stipulated in Section 5.2.5.

The welding materials used for joining nickel-chromium-iron alloy in similar base material combination and in dissimilar ferritic or austenitic base material combination of the RCPB conform to ASME Material Specifications SFA 5.11 and 5.14. They are tested and qualified to the requirements of ASME Section III rules and are used only in procedures which have been qualified to these same rules.

5.2.3.2 Compatibility with Reactor Coolant

The ferritic low alloy and carbon steel base materials with primary pressure retaining applications are used in the quenched and tempered or normalized condition. These heat treatments are as required by the material specifications. In addition, stress relieving operations are performed as required by the ASME Code.

All of the ferritic low alloy and carbon steels which are used in principal pressure retaining applications are provided with a 0.125-in. nominal thickness of corrosion resistant cladding on all surfaces that are exposed to the reactor coolant. Cladding thickness is determined during the overlay welding procedure qualifications. The corrosion resistance of this cladding material is at least equivalent to the corrosion resistance of Types 304 and 316 austenitic stainless steel alloys or nickel-chromium-iron alloy. The other base materials which are used in principal pressure retaining applications which are exposed to the reactor coolant are austenitic stainless steel, nickel-chromium-iron alloy, martensitic stainless steel, and precipitation hardened stainless steel. Ferritic low alloy and carbon steel nozzles are safe ended with stainless steel weld metal analysis A-8 (1974 Code Ed.) or nickel-chromium-iron alloy weld metal F-Number 43 using weld buttering techniques followed by a post-weld heat treatment. The latter buttering material requires further safe ending with austenitic stainless steel base material after completion of the post-weld heat treatment when the nozzle is larger than 4 in. nominal I.D. and/or the wall thickness is greater than 0.531 in.

The cladding of ferritic type base materials receives a post-weld heat treatment, as required by the ASME code.

All of the austenitic stainless steel and nickel-chromium-iron alloy base materials with primary pressure retaining applications

controlled to prevent the intrusion of aggressive species. The water chemistry specifications are presented in Table 5.2-9. WCAP-7735 describes the precautions taken to prevent the intrusion of chlorides into the system during fabrication, shipping, and storage (Ref.1). The use of hydrogen overpressure precludes the presence of oxygen during operation. The effectiveness of these controls has been demonstrated by both laboratory tests and operating experience. The long time exposure of severely sensitized stainless in early plants to PWR coolant environments has not resulted in any sign of intergranular attack. WCAP-7735 described the laboratory experimental findings and the Westinghouse operating experience (Ref.1). The additional years of operation since the issuing of Ref. 1. have provided further confirmation of the earlier conclusions. Severely sensitized stainless steels do not undergo intergranulaar attack in Westinghouse PWR coolant environments.

In spite of the fact there never has been any evidence that PWR coolant water attacks sensitized stainless steels, Westinghouse considers it good metallurgical practice to avoid the use of sensitized stainless steels in the NSSS components. Accordingly, measures are taken to prohibit the purchase of sensitized
17 stainless steels and to prevent sensitization during component fabrication. Wrought austenitic stainless steel stock used for components that are part of (1) the reactor coolant pressure boundary, (2) systems required for reactor shutdown, (3) systems required for emergency core cooling, and (4) reactor vessel internals (relied upon to permit adequate core cooling for normal operation or under postulated accident conditions) is utilized in one of the following conditions:

1. Solution annealed and water quenched, or

2. Solution annealed and coole[illegible] h the sensitization temperature range within less than [illegible]proximately 5 min.

It is generally accepted that these practices will prevent sensitization. Westinghouse has verified this by performing corrosion tests on as-received wrought material.

In some cases, an intermediate or post manufacturing heat treatment is performed. For example, some stainless steel components (i.e., core support structures and RCP casings) receive a post manufacturing relaxation heat treatment between 750 F and 780 F to improve dimensional stability. In these cases, the heat treatment is not performed in the sensitization temperature range of 800 F to 1,500 F.

Westinghouse recognizes that the heat affected zones of welded components must, of necessity, be heated into the sensitization temperature range, 800 F to 1,500 F. However, severe sensitization, i.e., continuous grain boundary precipitates of chromium carbide, with adjacent chromium depletion, can still be

5.2.5.2 Solution Heat Treatment Requirements

All of the austenitic stainless steels listed in Tables 5.2-7, 5.2-8, and 5.2-10 are utilized in the final heat treated condition required by the respective ASME Code Section II material specification for the particular type or grade of alloy. 17

5.2.5.3 Material Inspection Program

The Westinghouse practice is that austenitic stainless steel materials of product forms with simple shapes need not be corrosion tested provided that the solution heat treatment is followed by water quenching. Simple shapes are defined as all plates, sheets, bars, pipe and tubes, as well as forgings, fittings, and other shaped products which do not have inaccessible cavities or chambers that would preclude rapid cooling when water quenched. When testing is required, the tests are performed in accordance with ASTM A262, Practice A or E, as amended by Westinghouse Process Specification 84201 MW. 17

5.2.5.4 Unstabilized Austenitic Stainless Steels

The unstabilized austenitic stainless steels used in the reactor coolant pressure boundary and components are listed in Tables 5.2-7 and 5.2-8.

The materials are used in the as-welded condition as discussed in Section 5.2.5.2. The control of the water chemistry is stipulated in Section 5.2.3.4.

5.2.5.5 Prevention of Intergranular Attack of Unstabilized Austenitic Stainless Steels

Unstabilized austenitic stainless steels are subject to intergranular attack (IGA) provided that three conditions are present simultaneously. These are:

1. An aggressive environment (e.g., an acidic aqueous medium containing chlorides or oxygen),

2. A sensitized steel, 17

3. A high temperature.

If any one of the three conditions described above is not present, intergranular attack will not occur. Since high temperatures cannot be avoided in all components in the NSSS, Westinghouse relies on the elimination of conditions 1 and 2 to prevent intergranular attack on wrought stainless steel components.

The water chemistry in the Reactor Coolant System of a Westinghouse Pressurized Water Reactor (PWR) is rigorously

1. Control of reactor coolant chemistry to ensure a benign environment,

2. Utilization of materials in the final heat treated condition and the prohibition of subsequent heat treatments in the 800 F to 1,500 F temperature range,

3. Control of welding processes and procedures to avoid HAZ sensitization in the heat affected zone,

4. Confirmation that the welding procedures used for the manufacture of components in the primary pressure boundary and of reactor internals do not result in the sensitization of heat affected zones.

Both operating experience and laboratory experiments with reactor coolant have conclusively demonstrated that this program is 100 percent effective in preventing intergranular attack in Westinghouse NSSS utilizing unstabilized austenitic stainless steel.

17 5.2.5.6 Retesting Unstabilized Austenitic Stainless Steels Exposed to Sensitization Temperatures

It is not normal Westinghouse practice to expose unstabilized austenitic stainless steels to the sensitization range of 800 F to 1,500 F during fabrication into components except as described in Section 5.2.3.2. If, during the course of fabrication, the steel is inadvertently exposed to the sensitization temperature range, 800 F to 1,500 F, the material may be tested in accordance with ASTM A262, Practice A or E, as amended by Westinghouse Process Specification 84201 MW, to verify that it is not susceptible to intergranular attack, except that testing is not required for:

1. Cast metal or weld metal with a ferrite content of 5 percent or more,

2. Material with a carbon content of 0.03 percent or less that is subjected to temperatures in the range of 800 F to 1,500 F for less than 1 hr,

3. Material exposed to special processing provided the processing is properly controlled to develop a uniform product and provided that adequate documentation exists of service experience and/or test data to demonstrate that the processing will not result in increased susceptibility to intergranular stress corrosion.

If it is not verified that such material is not susceptible to intergranular attack, the material will be resolution annealed and water quenched or rejected.

avoided by control of welding parameters and welding processes. The heat input and associated cooling rate through the carbide precipitation range are of primary importance. Westinghouse has demonstrated this by corrosion testing a number of weldments.

Of 25 production and qualification weldments tested, representing all major welding processes, a variety of components, and incorporating base metal thicknesses from 0.10 to 4.0 in., only portions of two were severely sensitized. Of these, one involved a heat input of 120,000 joules, and the other involved a heavy socket weld in relatively thin walled material. Heat input is calculated according to the formula:

$$H = \frac{(E)\ (I)\ (60)}{S}$$

where: H = joules/in.; E = volts; I = amperes; and S = travel speed in in./min

In both cases, sensitization was caused primarily by high heat inputs relative to the section thickness. However, in only the socket weld did the sensitized condition exist at the surface, where the material is exposed to the environment. A material change has been made to eliminate this condition. 17

Westinghouse controls the heat input in all austenitic pressure boundary weldments by:

1. Prohibiting the use of block welding,

2. Limiting the maximum interpass temperature to 350 F,

3. Exercising approval rights on all welding procedures.

To further assure that these controls are effective in preventing sensitization, Westinghouse will, if necessary, conduct additional intergranular corrosion tests of qualification mock-ups of primary pressure boundary and core internal component welds, including the following:

Reactor Vessel Nozzle Safe Ends
Pressurizer Nozzle Safe Ends
Surge Line and Reactor Coolant Pump Nozzles
Control Rod Drive Mechanisms Head Adaptors
Control Rod Drive Mechanisms Seal Welds
Control Rod Extensions
Lower Instrumentation Penetration Tubes

To summarize, Westinghouse has a four-point program designed to prevent intergranular attack of austenitic stainless steel components.

The results of all destructive and non-destructive tests are reported in the procedure qualification record in addition to the information required by ASME III. 2

The starting welding materials used for fabrication and installation welds of austenitic stainless steel materials and components meet the requirements of ASME III. The welding material used for joining applications is described in Section 5.2.3.1. The austenitic stainless steel welding material conforms to ASME weld metal analysis A-8 (1974 Code Ed.), type 308 or 308L for all applications. Bare weld filler metal, including consumable inserts, used in inert gas welding processes conform to ASME SFA-5.9, and are procured to contain not less than 5 percent delta ferrite according to ASME III. Weld filler metal materials used in flux shielded welding processes conform to ASME SFA-5.4 or SFA-5.9 and are procured in a wire-flux combination to be capable of providing not less than 5 percent delta ferrite in the deposit according to ASME III. Welding materials are tested using the welding energy inputs to be employed in production welding. 17 2

Combinations of approved heats and lots of starting welding materials are used for all welding processes. The welding quality assurance program includes identification and control of welding material by lots and heats as appropriate. All of the weld processing is monitored according to approved inspection programs which include review of starting materials, qualification records, and welding parameters. Welding systems are also subject to quality assurance audit including calibration of gages and instruments; identification of starting and completed materials, welder and procedure qualifications; availability and use of approved welding and heat treating procedures; and documentary evidence of compliance with materials, welding parameters, and inspection requirements. Fabrication and installation welds are inspected using non-destructive examination methods according to ASME III rules.

To assure the reliability of these controls, Westinghouse has completed a delta ferrite verification program (Ref.2), which has been approved as a valid approach to verify the Westinghouse hypothesis and is considered an acceptable alternative for conformance with the NRC Interim Position on Regulatory Guide 1.31. The NRC acceptance letter and topical report evaluation were received on December 30, 1974. The program results, which do support the hypothesis presented in WCAP-8324-A (Ref.2), are summarized in Ref.3. 17

5.2.6 Pump Flywheels

The integrity of the reactor coolant pump flywheel is assured on the basis of the following design and quality assurance procedures.

5.2.5.7 Control of Delta Ferrite in Austenitic Stainless Steel Welding

Regulatory Guide 1.31, Control of Stainless Steel Welding, describes a method for implementing General Design Criterion 1 of Appendix A to 10CFR50 and Appendix B to 10CFR50 with regard to control of welding austenitic stainless steel components and systems. The interim regulatory position on this guide, March 1974, describes an alternative method of control. The following paragraphs describe the methods to be used and the verification of these methods for austenitic stainless steel welding on this application.

The welding of austenitic stainless steel is controlled to mitigate the occurrence of microfissuring or hot cracking in the weld. Although published data and experience have not confirmed that fissuring is detrimental to the quality of the weld, it is recognized that such fissuring is undesirable in a general sense. Also, it has been well documented in the technical literature that the presence of delta ferrite is one of the mechanisms for reducing the susceptibility of stainless steel welds to hot cracking. However, there are insufficient data to specify a minimum delta ferrite level below which the material will be prone to hot cracking. It is assumed that such a minimum lies somewhere between 0 and 3 percent delta ferrite. 2

The scope of these controls discussed herein encompasses welding processes used to join stainless steel parts in components designed, fabricated, or stamped in accordance with ASME III Class 1, 2, and Cs components. Delta ferrite control is appropriate for the above welding requirements except where no filler metal is used or for other reasons when such control is not applicable. These exceptions include electron beam welding, autogenous gas shielded tungsten arc welding, explosive welding, and welding using fully austenitic welding materials.

The qualification of welding procedures is discussed in Section 5.2.5.5. The fabrication and installation specifications require welding procedure and welder qualification in accordance with ASME III, and include the delta ferrite determinations for the austenitic stainless steel welding materials that are used for welding qualification testing and for production processing. Specifically, the undiluted weld deposits of the starting welding materials are required to contain a minimum of 5 percent delta ferrite (the equivalent ferrite number may be substituted for percent delta ferrite) as determined by chemical analysis and calculation using the appropriate weld metal constitution diagrams in ASME III or as measured by using a magnetic measuring device. New welding procedure qualification tests are evaluated for these applications, including repair welding of raw materials. 17 2

5.2.6.1 Design Bases

The calculated stresses at operating speed are based on stresses due to centrifugal forces. The stress resulting from the interference fit of the flywheel on the shaft is less than 2,000 psi at zero speed, but this stress becomes zero at approximately 600 rpm because of radial expansion of the hub. 9 The primary coolant pumps run at approximately 1,190 rpm and may operate briefly at overspeeds up to 109 percent (1,295 rpm) during loss of outside load. For conservatism, however, 125 percent of operating speed was selected as the design speed for the primary coolant pumps. The flywheels are given a preoperational test at 125 percent of the maximum synchronous speed of the motor.

References

1. Hazelton, W. S. "Sensitized Stainless Steel in Westinghouse 17 PWR NSS," WCAP-7735, August 1971.

2. "Control of Delta Ferrite in Austenitic Stainless Steel Weldments," WCAP-8324-A, June 1975.

3. Enrietto, J. F. "Delta Ferrite in Austenitic Stainless Steel Weldments," WCAP-8693, January 1976.

5.5.2 Steam Generators

5.5.2.1 Steam Generator Materials

5.5.2.1.1 Selection and Fabrication of Materials

All pressure boundary materials used in the steam generator are selected and fabricated in accordance with the requirements of Section III of the ASME Code. A general discussion of materials specifications is given in Section 5.2 with types of materials listed in Table 5.2-7.

Fabrication of reactor coolant pressure boundary materials is also discussed in Section 5.2.

Testing has justified the selection of corrosion resistant Inconel-600, a nickel-chromium-iron alloy (ASME SB-163), for the steam generator tubes. The channel head divider plate is Inconel (ASME SB-168). The interior surfaces of the reactor coolant channel head, nozzles, and manways are clad with austenitic stainless steel. The primary side of the tube sheet is weld clad with Inconel (ASME SFA-5.14). The tubes are then seal welded to the tube sheet cladding. These fusion welds are performed in compliance with Sections III and IX of the ASME Code and are dye penetrant inspected and leakproof tested before each tube is expanded the full depth of the tube sheet bore. 17

Code cases used in material selection are discussed in Section 5.2. The extent of conformance with Regulatory Guide 1.84 and 1.85 is discussed in Appendix A.1.

During manufacture, cleaning is performed on the primary and secondary sides for the steam generator in accordance with written procedures which follow the guidance of Regulatory Guide 1.37, "Quality Assurance Requirements for Cleaning of Fluid Systems and Associated Components of Water-Cooled Nuclear Power Plants," and the ANSI Standard N45.2.1-1973, "Cleaning of Fluid Systems and Associated Components for Nuclear Power Plants." Onsite cleaning and cleanliness control also follow the guidance of Regulatory Guide 1.37 as discussed in Appendix A.1.

The fracture toughness of the materials is discussed in Section 5.2. Adequate fracture toughness of ferritic materials in the reactor coolant pressure boundary is provided by compliance with Appendix G of 10CFR50 and with paragraph NB-2300 of Section III of the ASME Code. As discussed in Section 5.2.4, consideration of fracture toughness is only necessary for materials in Class 1 components.

Considerable shop testing and plant experience with the design of these pawls have shown high reliability of operation.

5.5.1.3.11 Shaft Seal Leakage

Leakage along the reactor coolant pump shafts is controlled by three shaft seals arranged in a series such that reactor coolant leakage to the containment is essentially zero. Charging flow is directed to each reactor coolant pump via a 5 micron seal water injection filter. It enters the pumps through the seal housing. Here the flow splits and a portion enters the RCS via the pump shaft bearing and the thermal barrier cooler cavity. The remainder of the flow flows up the pump shaft (cooling the lower bearing) and leaves the pump via the number 1 seal where its pressure is reduced to that of the volume control tank. The water from each pump seal assembly is piped to a common manifold and then via a seal water filter through a seal water heat exchanger where the temperature is reduced to about that of the volume control tank. Leakage past the number 1 seal provides a constant backpressure on the number 2 seal and constant pressure on the number 3 seal. A standpipe is provided to assure a backpressure of at least 7 ft of water on the number 3 seal and warn of excessive number 2 seal leakage. The first outlet from the standpipe has an orifice to permit normal number 2 seal leakage to flow to the reactor coolant drain tank; excessive number 2 leakage results in a rise in the standpipe level and eventually overflows to the reactor coolant drain tank via a second overflow connection.

5.5.1.3.12 Seal Discharge Piping

Discharge pressure from the number 1 seal is reduced to that of the volume control tank. Water from each pump number 1 seal is piped to a common manifold, and through the seal water return filter and through the seal water heat exchanger where the temperature is reduced to that of the volume control tank. The number 2 and number 3 leakoff lines pump normal number 2 and 3 seal leakage to flow to the containment drains transfer tank.

5.5.1.4 Test and Inspection Requirements

The reactor coolant pump pressure boundary parts can be inspected in accordance with ASME Section XI, Code for Inservice Inspection of Nuclear Reactor Coolant systems. The reactor coolant pump quality assurance program is given in Table 5.5-2.

The amplitudes of turbulence induced vibration are one order of magnitude less than those from vortex shedding induced vibration. Therefore, vortex shedding is considered the predominant mechanism of flow induced tube vibration. Combining both vortex shedding and turbulence effects in a conservative manner, the maximum predicted local tube wear depth over 40 years of operational life is less than 0.006 in. This value is considerably below the limit requiring a plug for a Model F steam generator tube.

This model steam generator is also provided with a flow distribution baffle in the region of the tube sheet to control where the flow enters the bundle. The baffle also determines the location of the blowdown pipe inlet in order to effectively remove any impurities that might accumulate at the point of zero horizontal velocity (i.e., due to the 90 degree turn upward). Blocking devices located adjacent to the downcomer region and at the innermost U-bend tube row, at the tube sheet, minimize bypass flow, promoting flow into the central regions of the bundle. To avoid extensive crevice areas at the tube sheet, the tubes are roll expanded within the tube sheet bore.

17

5.5.2.1.3 Compatibility of Steam Generator Tubing with Primary and Secondary Coolants

Corrosion tests, which subjected the steam generator tubing material, Inconel-600 (ASME SB-163), to simulated steam generator water chemistry, have indicated that the loss due to general corrosion over the 40-yr plant life is insignificant compared to the tube wall thickness. Testing to investigate the susceptibility of heat exchanger construction materials to stress corrosion in caustic and chloride aqueous solutions has indicated that Inconel-600 has excellent resistance to general and pitting type corrosion in severe operating water conditions. Many reactor years of successful operation have shown the same low general corrosion rates as indicated by the laboratory tests.

Recent operating experience, however, has revealed areas on secondary surfaces where localized corrosion rates are significantly greater than the low general corrosion rates. Both intergranular stress corrosion and tube wall thinning were experienced in localized areas, although not at the same location or under the same environmental conditions (water chemistry, sludge composition).

Localized steam generator tube diameter reductions were first discovered during the April 1975 steam generator inspection at the Surry Unit No. 2 plant. This discovery was evidenced by eddy current signals, resembling those produced by scanning dents, and by difficulty in passing the standard 0.715 in. diameter eddy current probe through the tubes at the intersections with the support plates. Subsequent to the initial finding, steam

5.5.2.1.2 Steam Generator Design Effects on Materials

Several features have been introduced into the Model F steam generator to minimize the deposition of contaminants from the secondary side flow. Such deposits could otherwise produce a local environment in which adverse conditions could develop and result in material attack. The support plates are made of corrosion resistant stainless steel 405 alloy and incorporate a four lobe, shaped tube hole design that provides greater flow area adjacent to the tube outer surface and eliminates the need for interstitial flow holes. The resulting increase in flow provides higher sweeping velocities at the tube/tube support plate intersections. Fig. 5.5-3a is an illustration of the quatrefoil broached holes. This modification in the support plate design is a major factor contributing to the increased circulation ratio. The increased circulation results in better flow in the interior of the bundle, as well as increased horizontal velocity across the tube sheet which reduces the tendency for sludge deposition there. The effect of the increased circulation on the vibrational stability of the tube bundle has been analyzed with consideration given to flow induced excitation frequencies.

The unsupported span length of tubing in the U-bend region and the corresponding optimum number of anti-vibration bars has been determined. The anti-vibration bars are fabricated from square Inconel barstock which is then chromium plated to improve frictional characteristics. Also, due to the increased circulation ratio, the moisture separating equipment has been modified to maintain an adequate margin with respect to the allowed moisture carryover. To provide added strength as well as resistance to vibration, the quatrefoil tube support plate thickness has been increased. In addition, 14 peripheral supports also provide stability to the plates so that tube fretting or wear due to flow induced plate vibrations at the tube support contact regions is abated. 17

Assurance against damaging flow induced tube vibration has been accomplished by a combination of analysis and testing. Cross and parallel flow velocities were calculated from thermal-hydraulic analysis of the secondary flow. Three possible vibrational mechanisms, vortex shedding, fluid-elastic excitation, and turbulence were studied.

For vortex shedding, resonance conditions were conservatively assumed, and amplitudes for different resonant modes were computed.

For fluid-elastic excitation, the ratios of the effective cross flow velocity to the critical velocity of the first twenty vibration modes were calculated. The results indicate that no fluid-elastic vibration will occur during steady state conditions or operational transients.

of the top support plate flow slots occurs, resulting in leg displacement, ovalization, and high strains.

The tube leakage and support plate effects do not pose a safety problem with respect to release of radioactivity or effects on accident calculations, but the frequency of leakage and resultant repair shutdowns does present an economic concern to the operators. The utilization of preventive plugging therefore serves to maintain availability and to permit orderly planning for long-term corrective action.

The occurrence of denting has thus far been associated exclusively with plants having a history of chloride contamination due to condenser leakage. Moreover, it has recently been noted that Maine Yankee and Millstone No. 2, non-Westinghouse plants, which have used all volatile treatment (AVT) exclusively, have apparently incurred denting. Sea water is used for cooling the condensers at both of these plants.

Research into the causes of denting was initiated shortly after the discovery of the denting condition. Initially dented tubes were removed for laboratory examination. Subsequently, tube support plate samples containing sections of tubing were also removed for analysis from operating plants.

17 The initial hard data on the nature of the denting phenomenon were derived from these tube/support plate samples which revealed the thick oxide buildup, the tube diameter reduction, and chemical makeup of the crevice-filling materials. It was observed that there was only minor corrosive attack on the tube material, approximately 0 to 0.002 in. circumferential thinning, and that the crevice contained a thick layer of almost pure magnetite (Fe_3O_4); other chemical constituents included Inconel-metal-phosphate corrosion products close to the tube, and general secondary system contaminants between the Fe_3O_4 and the phosphate layer. There was evidence of copper deposits and the oxide was laced with chlorides.

Armed with those general observations, a series of crevice-with-contaminants test geometries were evaluated; denting was produced first in reverse as bulging when a carbon steel plug was inserted into an Inconel tube to form the crevice; later heated crevice assemblies with heat transfer were shown to be effective dent simulators; finally denting in model boilers equipped with plant type geometrical configurations was demonstrated. While pure, uncontaminated AVT environments have to date been found to be innocuous, it has been shown that the PO_4 to AVT transition was unnecessary to initiate the denting process. Only the presence of acid chloride solutions has been found to be a common factor. Nickel chloride, ferrous or cupric chloride solutions have been shown to be corrosive, and have also produced measurable denting. Thus far, test data indicate that phosphates, calcium hydroxide, and borates seem to retard the denting process; morpholine, among

generator inspections at other operating plants revealed indications of denting to various degrees.

Denting is a term which describes a group of related phenomena resulting from corrosion of carbon steel in the crevices formed between the tubes and the tube support plates. The term denting has been applied to the secondary effects which include:

1. Tube diameter reduction,

2. Tube support plate hole dilation,

3. Tube support plate flow hole distortion, flow slot hourglassing,

4. Tube support plate expansion,

5. Tube leakage,

6. Wrapper distortion.

The mechanism which produces the effects cited involves an acid chloride environment in the tube crevices. In sequence, the process appears to occur as follows: 17

The crevice between the tube and the support plate is blocked as a result of deposition of chemical species present in the bulk water, including phosphate compounds, secondary system corrosion products, and minimal tube corrosion products. Once plugged, the annulus provides a site for concentration of various nominally soluble contaminants, such as chlorides, sulfates, etc. Recent studies indicate that in the absence of nonvolatile alkalizing species, there may exist the potential for production of an acid solution by hydrolysis of such compounds as magnesium chloride, nickel phosphate, copper chloride, various ferrous salts, etc. In an acid chloride solution, the corrosion film on the carbon steel is converted from protective in character to a thick, nonprotective oxide of low density which assumes a laminar configuration subject to disruption due to the volume mismatch between the oxide and the base metal. The buildup of the thick oxide in the nominal 0.014 in. radial gap between the tube and the support plate causes sufficient force to be exerted against the tube to cause plastic deformation locally. The reaction to these forces can cause distortion of the circulation holes in the plate, and both the flow holes between the inlet and outlet halves of the tube bundle. In the most extreme cases, as corrosion proceeds and in-plate forces accumulate, the entire plate increases in diameter and the ligaments between the holes in the plate may crack. Ovalization of the tubes at the intersections results in high strains, leading to tensile stress on the tube inside diameter and possible leakage by intergranular cracking. A similar result may occur at the apex of the first row; i.e., the smallest radius U-bends, if sufficient distortion

close monitoring of the condenser integrity will assure the continued good performance of the steam generator tubing.

To eliminate these localized areas of corrosion over the long-term operation of the unit, it was decided that the use of phosphates for steam generator water chemistry control would be eliminated. The adoption of the AVT control program eliminates the possibility for recurrence of the tube wall thinning phenomenon related to phosphate chemistry control. Successful AVT operation requires maintenance of low concentrations of impurities in the steam generator water, thus reducing the potential for formation of highly concentrated solutions in low flow zones, which is the precursor of corrosion. By restriction of the total alkalinity in the steam generator and prohibition of extended operation with free alkalinity, the AVT program minimizes the possibility for recurrence of intergranular corrosion in localized areas due to excessive levels of free caustic.

Laboratory testing has shown that the Inconel-600 tubing is compatible with the AVT environment. Isothermal corrosion
17 testing in high purity water has shown that commercially produced Inconel-600 exhibiting normal microstructures tested at normal engineering stress levels does not suffer integranular stress corrosion cracking in extended exposure to high temperature water. These tests also showed that no general type of corrosion occurred. A series of autoclave tests in reference secondary water with planned excursions have produced no corrosion attacks after 1,938 days of testing on any as produced Inconel-600 tube samples.

AVT chemistry control has been employed successfully in plant operations for considerable periods. Plants with stainless steel tubes which have demonstrated successful AVT operation include Selni, Sena, and Yankee-Rowe. Selni has operated with AVT since 1964, Sena since 1966, and Yankee-Rowe since 1967.

Among the plants with Inconel tubes which have operated successfully with AVT, without evidence of tubing corrosion, are the Hanford N-Reactor and Prairie Island No. 2. The Hanford N-Reactor has operated with AVT since 1964; there have been no tube leaks, and annual eddy current inspections have revealed no corrosion defects.

Additional extensive operating data are presently being accumulated with the conversion to AVT chemistry. A comprehensive program of steam generator inspections, inc' 'ing the recommendation of Regulatory Guide 1.83, with the exc .ons as stated in Appendix A.1, will ensure detection and corr .tion of any unanticipated degradation that might occur in the steam generator tubing.

the common volatile amines, shows a beneficial effect on the corrosion rate of carbon steel.

Model boiler tests have been used to evaluate the adequacy of the AVT chemistry specifications adopted in 1974. With one significant alteration, the specifications appear to be adequate to preserve tube integrity; the frequency and the length of time above the chloride limit for normal operation (0.15 ppm) must be limited. Westinghouse is working to prepare a uniform specification to be applied to all plants, which will limit the chloride concentration, the number of consecutive days beyond the normal specification, and the number of incidents per year.

As has been discussed, tube denting is a result of support plate corrosion products compressing the tube while dilating the tube hole. Therefore, measures to inhibit denting have concentrated on removing the corrosion mechanisms, medium, and materials.

The tube support plates used in the Model F are ferritic stainless steel which has been shown in laboratory tests to be resistant to corrosion in the AVT environment. When corrosion of ferritic stainless steel does occur, the volume of the corrosion products is equivalent to the volume of the parent material. The support plates are also designed with broached tube holes rather than drilled holes. The broached tube hole design promotes high velocity flow along the tube, sweeping any impurities away from the support plate location. 17

Additional measures are incorporated in the Model F design to prevent areas of dryout in the steam generator and accumulations of sludge in low velocity areas. Modifications to the wrapper have increased water velocities across the tube sheet. A flow distribution baffle is provided which forces the low flow area to the center of the bundle. Increased capacity blowdown pipes have been added to enable continuous blowdown of the steam generators at a high volume. The intakes of these blowdown pipes are located below the center cut-out section of the flow distribution baffle in the low velocity region where sludge may be expected to accumulate. Continuous blowdown provides maximum protection against inleakage of impurities from the condenser.

Although the tubes themselves are not significantly corroding, they are affected by the results of the tube support plate corrosion. The continued corrosion of the carbon steel support plates results in stresses being induced in the tubes at the location of the deformation. Stress may also be induced in the U-bend section when support plate movement results from the tube hole dilation.

Operating experience, verified in numerous steam generator inspections, indicates that the tube degradation associated with phosphate water treatment is not occurring where only AVT has been utilized. Adherence to the AVT chemical specifications and

thus both the primary and secondary pressure boundaries, to satisfy the criteria specified in Section III of the ASME Code for Class 1 components. The design stress limits, transient conditions and combined loading conditions applicable to the steam generator are discussed in Section 3.2. Estimates of radioactivity levels anticipated in the secondary side of the steam generators during normal operation, and the basis for the estimates are given in Chapter 11. The accident analysis of a steam generator tube rupture is discussed in Chapter 15.

The internal moisture separation equipment is designed to ensure that moisture carryover does not exceed 0.25 percent by weight under the following conditions:

1. Steady state operation up to 100 percent of full load steam flow, with water at the normal operating level,

2. Loading or unloading at a rate of 5 percent of full power steam flow per minute in the range from 15 to 100 percent of full load steam flow,

3. A step load change of 10 percent of full power in the range from 15 to 100 percent full load steam flow.

17 The water chemistry on the reactor side is selected to provide the necessary boron content for reactivity control and to minimize corrosion of RCS surfaces. Compatibility of steam generator tubing with both primary and secondary coolants is discussed further in Section 5.5.2.1.3.

The steam generator is designed to prevent unacceptable damage from mechanical or flow induced vibration. Tube support adequacy is discussed in Section 5.5.2.5.3. The tubes and tube sheet are analyzed and confirmed to withstand the maximum accident loading conditions as they are defined in Section 5.2. Further consideration is given in Section 5.5.2.5.4 to the effect of tube wall thinning on accident condition stresses.

5.5.2.4 Design Description

The steam generator is a Model F, vertical shell and U-tube evaporator, with integral moisture separating equipment. Fig. 5.5-3 shows the model, indicating several of its improved design features which are described in the following paragraphs.

On the primary side, the reactor coolant flows through the inverted U-tubes, entering and leaving through nozzles located in the hemispherical bottom head of the steam generator. The head is divided into inlet and outlet chambers by a vertical divider plate extending from the apex of the head to the tube sheet.

Steam is generated on the shell side, flows upward and exits through the outlet nozzle at the top of the vessel. Feedwater

5.5.2.1.4 Cleanup of Secondary Side Materials

Several methods are employed to clean operating steam generators of corrosion causing secondary side deposits. Sludge lancing, a procedure in which a hydraulic jet inserted through an access opening (handhole) loosens deposits which are removed by means of a suction pump, can be performed when the need is indicated by the results of steam generator tube inspection. Six 6-in. access ports are provided for sludge lancing and inspection. Three of these are located above the tube sheet and three above the flow distribution baffle. Continuous blowdown is performed to regulate water chemistry. The location of the blowdown piping suction, adjacent to the tube sheet and in a region of relatively low flow velocity, facilitates the efficient removal of impurities that have accumulated on the tube sheet.

5.5.2.2 Steam Generator Inservice Inspection

The steam generator is designed to permit inspection of Class 1 and 2 parts, including individual tubes. The design includes a number of openings to provide access to both the primary and secondary sides of the steam generator, and the inspection program followed complies with the edition of the ASME Code, Division 1, Section XI required by 10CFR50.55a, effective January 5, 1977. These openings include four manways: two for access to both chambers of the reactor coolant channel head inlet and outlet sides; two in the steam drum for inspection and maintenance of the moisture separators; and six 6-in. handholes; three located just above the tube sheet secondary surface and three located just above the flow distribution baffle. Access to the tube U-bend is provided through each of the three deck plates. For proper functioning of the steam generator some of the deck plate openings are covered with welded, but removable, hatch plates. Inspection/access to the primary side is provided by two 16-in. manways located in the channel head. 17

Regulatory Guide 1.83 provides recommendations concerning the inspection of tubes, which cover inspection equipment, baseline inspections, tube selection, sampling and frequency of inspection, methods of recording, and required actions based on findings. Agreement with Regulatory Guide 1.83 is discussed in Appendix A.1. Regulatory Guide 1.121 provides recommendations concerning tube plugging. The minimum requirements for inservice inspection of steam generators, including tube plugging criteria, are established as part of the Technical Specifications.

5.5.2.3 Design Bases

Steam generator design data are given in Table 5.5-3. Code classifications of the steam generator components are given in Section 3.2. Although the ASME classification for the secondary side is specified to be Class 2, the current philosophy is to design all pressure retaining parts of the steam generator, and

5.5.2.5.2 Natural Circulation Flow

The driving head created by the change in coolant density as it is heated in the reactor core and rises to the reactor outlet nozzle initiates convection circulation. This circulation is enhanced by the fact that the steam generators, which provide a heat sink, are at a higher elevation than the reactor core which is the heat source. Thus, natural circulation is assured for the removal of decay heat during hot shutdown in the unlikely event of a loss of forced circulation.

5.5.2.5.3 Mechanical and Flow Induced Vibration Under Normal Conditions

In the design of the steam generators, the possibility of vibratory failure of tubes due to either mechanical or flow induced excitation is thoroughly evaluated. This evaluation includes detailed analysis of the tube support systems as well as an extensive research program with tube vibration model tests.

In evaluating failure due to vibration, consideration is given to such sources of excitation as those generated by the primary fluid flowing within the tubes. The effects of these as well as any other mechanically induced vibrations are considered to be negligible and should cause little concern. 17

Another source of vibratory failure in heat exchanger components could be the effect of hydrodynamic excitation by the secondary fluid on the outside of the tubes.

Consideration of secondary flow induced vibration involves two types of flow, parallel and cross; and it is evaluated in three regions:

1. At the entrance of the downcomer feed to the tube bundle (cross flow),

2. Along the straight sections of the tube (parallel flow),

3. In the curved tubed section of the U-bend (cross flow).

For the case of parallel flow, analysis is done to determine the vibratory deflections in order to verify that the flow velocities are sufficiently below those required for damaging fatigue or impacting vibratory amplitude. Thus, the support system is deemed adequate to preclude parallel flow excitation.

For the case of cross flow excitation, several possible mechanisms of tube vibration exist. For the Model F steam generator design and conditions, only two of these mechanisms are deemed significant enough to merit extensive evaluation: 1) Von Karman vortex shedding and 2) fluid-elastic vibration. The steam generator is analyzed to ensure that the tube natural frequency

enters the steam generator at an elevation above the top of the U-tubes, through a feedwater nozzle. The water is distributed circumferentially around the steam generator by means of a feedwater ring and then flows through an annulus between the tube wrapper and shell. The ring is offset, with respect to the tube bundle, in order to distribute the colder feedwater in a manner to maximize heat transfer in the bundle. The feedwater enters the ring via a welded thermal sleeve connection and leaves it through inverted J-tubes located at the flow holes which are at the top of the ring. These features are designed to prevent a condition which can result in water hammer occurrences in the feedwater piping.

At the bottom of the wrapper, the water is directed toward the center of the tube bundle by a flow distribution baffle. This baffle arrangement serves to minimize the tendency for sludge deposition in areas of the relatively low fluid velocity. Four blockers discourage the feedwater from flowing up the bypass lane, as it enters the tube bundle where it is converted to a steam-water mixture. Subsequently, the steam-water mixture from the tube bundle rises into the steam drum section, where 16 individual centrifugal moisture separators remove most of the entrained water from the steam. The steam continues to the secondary separators for further moisture removal, increasing its quality to a minimum of 99.75 percent. The moisture separators reintroduce the separated water, which is combined with entering feedwater to flow back down the annulus between the wrapper and shell for another recirculation through the steam generator. The dry steam exits from the steam generator through the outlet nozzle which is provided with a steam flow restriction, described in Section 5.5.4. 17

5.5.2.5 Design Evaluation

5.5.2.5.1 Forced Convection

The limiting case for heat transfer capability is the nominal 100 percent design case. The steam generator effective heat transfer coefficient is based on the coolant conditions of temperature and flow for this case. The best estimate for the heat transfer coefficient applied in steam generator design calculations and plant parameter selection is 1,503 Btu/hr-ft^2-F. This coefficient is approximately 5 to 10 percent less than the heat transfer performance experienced at a number of operating plants. The coefficient incorporates a specified fouling factor resistance of 0.00005 hr-ft^2-F/Btu, which is the value selected to account for the differences in the measured and calculated heat transfer performance as well as provide the margin indicated above. Although margin for tube fouling is available, operating experience to date has not indicated that steam generator performance decreases over a long time period. Adequate tube area is selected to ensure that the full design heat removal rate is achieved.

The results of a study made on D series (0.75 in. nominal diameter, 0.043 in. nominal wall thickness) tubes under accident loadings are discussed in Ref. 3. These results demonstrate that a minimum wall thickness of 0.026 in. would have a maximum faulted condition stress (i.e., due to combined LOCA and SSE loads) that is less than the allowable limit. This thickness is 0.010 in. less than the minimum D series tube wall thickness of 0.039 in. which is reduced to 0.036 in. by the assumed general corrosion and erosion rate. Thus, an adequate safety margin is exhibited. The corrosion rate is based on a conservative weight loss rate for Inconel tubing in flowing 650 F primary side reactor coolant fluid. The weight loss, when equated to a thinning rate and projected over a 40-year plant life with appropriate reduction after initial hours, is equivalent to 0.000083 in. thinning. The assumed corrosion rate of 0.003 in. leaves a conservative 0.002917 in. for general corrosion thinning on the secondary side.

The Model F steam generator will be analyzed using similar assumptions of general corrosion and erosion rates. The overall similarity between the tubes studies and the Model F tubes makes
17 it reasonable to expect the same general results, that is, to conclude that the ability of the Model F steam generator tubes to withstand accident loadings is not impaired by a lifetime of general corrosion losses. The results of the specific analysis will be presented as they become available.

5.5.2.6 Quality Assurance

The steam generator quality assurance program is given in Table 5.5-5.

Radiographic inspection and acceptance standard shall be in accordance with the requirements of Section III of the ASME Code.

Liquid penetrant inspection is performed on weld deposited tube sheet cladding, channel head cladding, divider plate to tube sheet and to channel head weldments, tube to tube sheet weldments, and weld deposit cladding. Liquid penetrant inspection and acceptance standards are in accordance with the requirements of Section III of the ASME Code.

Magnetic particle inspection is performed on the tube sheet forging, channel head casting, nozzle forgings, and the following weldments:

is well above the anticipated vortex shedding frequency and that unstable fluid-elastic vibration does not exist. In order to achieve this, adequate tube supports must be provided. Evaluation using the specific parameters for the appropriate steam generator model confirms the integrity of the support system.

While the behavior of tube arrays under cross flow in actual operating units is given consideration, the high temperature and pressure limit the amount and quality of information obtained. As a result, it was deemed prudent to undertake a research program that would allow in-depth study and testing in this area of interest. Facilities included a water tunnel and wind tunnel, which were specifically built to study the vibration behavior of tubes in arrays.

The results of this research confirm both the vortex shedding and the fluid-elastic mechanisms. Both mechanisms have been considered in the steam generator design. Testing is also conducted using specific parameters of the steam generator in order to show that the support system is adequate.

Summarizing the results of analysis and tests of steam generator tubes for flow induced vibration, it can be stated that a check of support adequacy has been made using all published techniques believed appropriate to heat exchanger tube support design. In addition, the tube support system is consistent with accepted standards of heat exchanger design utilized throughout the industry (spacing, clearance, etc.). Furthermore, the design techniques are supplemented with a continuing research and development program to understand the complete mechanism of fluid-structural interaction, and it should be noted that successful operational experience with several steam generator designs has given confidence in the overall approach to the tube support design problem. 17

5.5.2.5.4 Allowable Tube Wall Thinning Under Accident Conditions

An evaluation is performed to determine the extent of tube wall thinning that can be tolerated under accident conditions. The worst case loading conditions are assumed to be imposed upon uniformly thinned tubes, at the most critical location in the steam generator. Under such a postulated design basis accident, vibration is of short enough duration that there is no endurance problem to be considered. The steam generator tubes, existing originally at their minimum wall thickness and reduced by a conservative general corrosion and erosion loss, can be shown to provide an adequate safety margin, that is, sufficient wall thickness, in addition to the minimum required for a maximum stress less than the allowable stress limit, as it is defined by the ASME Code.

The minimum wall thicknesses of the loop pipe and fittings are not less than that calculated using the ASME III Class 1 formula of paragraph NB-36.41.1(3) with an allowable stress value of 17,550 psi. The pipe wall thickness of the RTD bypass and pressurizer surge lines are Schedule 160. The minimum pipe bend radius is 5 nominal pipe diameters; ovality does not exceed 6 percent.

All butt welds, nozzles, welds, and boss welds shall be of a full penetration design.

The mechanical properties of representative material heats in the final heat treat conditions are determined by test at 650 F design temperature per ASTM E-21 or equivalent. In particular, the hot yield strength (0.2 percent offset) at 650 F equals or exceeds 19,850 psi. Processing and minimization of sensitization are discussed in Section 5.2.3.

Flanges conform to ANSI B16.5.

Socket weld fittings and socket joints conform to ANSI B16.11.

Inservice inspection is discussed in Section 5.2.8.

5.5.3.2 Design Description

Principal design data for the reactor coolant piping are given in Table 5.5-6.

Pipe and fittings are cast, seamless without longitudinal welds, and electroslag welds, and comply with the requirements of ASME Section II, Parts A and C, Section III, and Section IX.

The RCS piping is specified in the smallest sizes consistent with system requirements. In general, high fluid velocities are used to reduce piping sizes. This design philosophy resumes in the reactor inlet and outlet piping diameters given in Table 5.5-6. The line between the steam generator and the pump suction is larger to reduce pressure drop and improve flow conditions to the pump suction.

The reactor coolant piping and fittings which make up the loops are austenitic stainless steel. There will be no electroslag welding on these components. All smaller piping which comprise part of the RCS boundary, such as the pressurizer surge line, spray and relief line, loop drains and connecting lines to other systems are also austenitic stainless steel. All joints and connections are welded, except for the pressurizer relief and the pressurizer code safety valves, where flanged joints are used. Thermal sleeves are installed at points in the system where high thermal stresses could develop due to rapid changes in fluid temperature during normal operational transients. These points include:

1. Nozzle to shell,

2. Support brackets,

3. Instrument connection (secondary),

4. Temporary attachments after removal,

5. All accessible pressure retaining welds after hydrostatic test.

Magnetic particle inspection and acceptance standards are in accordance with requirements of Section III of the ASME Code. 17

Ultrasonic tests are performed on the tube sheet forging, tube sheet cladding, secondary shell and heat plate, and nozzle forgings.

The heat transfer tubing is subjected to eddy current testing and ultrasonic examination.

Hydrostatic tests are performed in accordance with Section III of the ASME Code.

In addition, the heat transfer tubes shall be subjected to a hydrostatic test pressure prior to installation into the vessel, which is not less than 1.25 times the primary side design pressure.

5.5.3 Reactor Coolant Piping

5.5.3.1 Design Bases

The Reactor Coolant System (RCS) piping is designed and fabricated to accommodate the system pressures and temperatures attained under all expected modes of plant operation or anticipated system interactions. Stresses are maintained within the limits of Section III of the ASME Nuclear Power Plant Components Code. Code and material requirements are provided in Section 5.2.

Materials of construction are specified to minimize corrosion/erosion and ensure compatibility with operating environment.

The piping in the RCS is Safety Class 1 and is designed, fabricated, tested, and inspected in accordance with ASME Section III.

Stainless steel pipe conforms to ANSI B36.19 for sizes 1/2 in. through 12 in. and wall schedules 40S through 80S. Stainless steel pipe outside of the scope of ANSI B26.19 conforms to ANSI B36.10.

TABLE 5.1-1

SYSTEM DESIGN AND OPERATING PARAMETERS

Plant design life (yr)	40
Nominal operating pressure (psig)	2,235
Total system volume including pressurizer and surge line (cu ft)	9,410
System liquid volume including pressurizer water at maximum guaranteed power (cu ft)	8,833
Pressurizer spray rate (max gpm)	700
Pressurizer heater capacity (kW)	1,400
Pressurizer relief tank volume (cu ft)	1,300

17

System Thermal and Hydraulic Data (Based on Thermal Design Flow)

	3 Pumps Running	2 Pumps Running
NSSS power (MWt)	2,785	1,671
Reactor power (MWt)	2,775	1,666
Thermal design flows (gpm)		
Active loop	96,000	102,100
Idle loop	-	24,300
Reactor	280,000	179,900
Total reactor flow (10^6 lb/hr)	107.5	67.1
Temperature (F)		
Reactor vessel outlet	619.2	603.0
Reactor vessel inlet	555.2	547.2
Steam generator outlet	555.0	547.1
Steam generator steam	540.2	537.0
Feedwater	435.0	380
Steam pressure (psia)	964	939
Total steam flow (10^6 lb/hr)	12.20	6.80

17

TABLE 5.1-1 (CONT'D)

SYSTEM DESIGN AND OPERATING PARAMETERS

Flows, gpm	Thermal Design	Best Estimate	Mechanical Design
Three pumps running, each loop	96,000	103,000	107,500
Two pumps running			
Active loop	102,100	109,300	113,700
Idle loop	24,300	22,300	24,500
Reactor	179,900	196,300	202,200

17

System Pressure Drops
(Based on 3-Loop Best Estimate Flow)

Reactor vessel pressure differential (psi)	39.7
Steam generator pressure differential (psi)	41.8
Hot leg piping pressure differential (psi)	2.0
Pump suction piping pressure differential (psi)	3.6
Cold leg piping pressure differential (psi)	2.0
Pump head (ft)	279

17

TABLE 5.2-7

REACTOR COOLANT BOUNDARY MATERIALS
CLASS 1 PRIMARY COMPONENTS

Reactor Vessel Components

Shell & Head Plates (other than core region)	SA533 Gr A, B or C, Class 1 or 2 (vacuum treated)
Shell Plates (core region)	SA533 Gr A or B, Class 1 (vacuum treated)
Shell, Flange & Nozzle Forgings	SA508 Class 2 or 3
Nozzle Safe Ends	SA182 Type F304 or F316
CRDM and/or ECCS Appurtenances Upper Head	SB166 or 167 and SA182 Type F304
Instrumentation Tube Appurtenances - Lower Head	SB166 or 167 and SA182 Type F304, F304L or F316
Closure Studs	SA540 Class 3 Gr B23 or B24
Closure Nuts	SA540 Class 3 Gr B23 or B24
Closure Washers	SA540 Class 3 Gr B23 or B24
Core Support Pads	SB166 with carbon less than 0.10%
Monitor Tubes & Vent Pipe	SA312 or 376 Type 304 or 316 or SB167
Vessel Supports, Seal Ledge & Heat Lifting Lugs	SA516 Gr 70 Quenched & Tempered or SA533 Gr A, B or C, Class 1 or 2. (Vessel supports may be of weld metal buildup of equivalent strength)
Cladding & Buttering	Stainless Steel Weld Metal Analysis A-7 and Ni-Cr-Fe Weld Metal F-Number 43

TABLE 5.2-7 (CONT'D)

REACTOR COOLANT BOUNDARY MATERIALS
CLASS 1 PRIMARY COMPONENTS

Steam Generator Components		
Pressure Plates	SA533 Gr A, B or C, Class 1 or 2	
Pressure Forgings	SA508 Class 2, 2a, or 3	
Nozzle Safe Ends	Stainless Steel Weld Metal Analysis A-8 (1974 Code Ed.)	
Channel Heads	SA216 Gr WCC or SA533 Gr A, B or C, Class 1 or 2	17
Tubes	SB163 Ni-Cr-Fe, Annealed	
Cladding and Buttering	Stainless Steel Weld Metal Analysis A-8 and Ni-Cr-Fe Weld Metal F-Number 43	
Closure Bolting	SA193 Gr B-7	
Pressurizer Components		
Pressure Plates	SA533 Gr A, B or C, Class 1 or 2	
Pressure Forgings	SA508 Class 2, 2a, or 3	17
Nozzle Safe Ends	SA182 or 376 Type 316 or 316L and Ni-Cr-Fe Weld Metal F-Number 43	
Cladding and Buttering	Stainless Steel Weld Metal Analysis A-8 and Ni-Cr-Fe Weld Metal F-Number 43	
Closure Bolting	SA193 Gr B-7	
Pressurizer Safety Valve Forgings	SA182 Type F316	
Reactor Coolant Pump		
Pressure Forgings	SA182 Type F 304, F316 or F 348	
Pressure Casting	SA351 Gr CF8, CF8A or CF8M	17
Tube & Pipe	SA213, SA376 or SA312 - Seamless Type 304 or 316	
Pressure Plates	SA240 Type 304 or 316	
Bar Material	SA479 Type 304 or 316	
Closure Bolting	SA193 Gr B7 or B8, or SA540 Gr B23 or B24, or SA453 Gr 660	
Flywheel	SA533 Gr B, Class 1	

Amendment 17
2/79

TABLE 5.2-7 (CONT'D)

REACTOR COOLANT BOUNDARY MATERIALS
CLASS 1 PRIMARY COMPONENTS

Reactor Coolant Piping	
Reactor Coolant Pipe	Code Case 1423-2 Gr F304N or 316N, or SA351 Gr CF8A or CF8M centrifugal casting
Reactor Coolant Fittings	SA351 Gr CF8A or CF8M
Branch Nozzles	SA182 Gr F304 or 316 or Code Case 1423-2 Gr F304N or 316N
Surge Line & Loop Bypass	SA376 Type 304 or 316 or Code Case 1423-2 Gr F304N or 316N
Auxiliary Piping 1/2" through 12" and wall schedules 40S through 80S (ahead of second isolation valve)	ANSI B36.19
All other Auxiliary Piping (ahead of second isolation valve)	ANSI B36.10
Socket Weld Fittings	ANSI B16.11
Piping Flanges	ANSI B16.5
Control Rod Drive Mechanism (Full and Part Length)	
Pressure Housing	SA182 Gr F304 or SA351 Gr CF8
Pressure Forgings	SA182 Gr F304 or SA336 Gr F8
Bar Material	SA479 Type 304
Welding Materials	SFA 5.4 and 5.9 Type 308 or 308L

TABLE 5.5-3

STEAM GENERATOR DESIGN DATA

Design pressure, reactor coolant side, psig	2,485	
Design pressure. steam side, psig	1,185	
Design temperature, reactor coolant side, F	650	
Design temperature, steam side, F	600	17
Total heat transfer surface area, ft^2	55,000	
Maximum moisture carryover, weight percent	0.25	
Overall height, ft-in.	67-8	
Number of U-tubes	5,626	
U-tube nominal diameter, in.	0.688	17
Tube wall thickness, nominal, in.	0.040	
Number of manways	4	
ID of manways, in.	16	17
Number of handholes	4	
ID of handholes, in.	6	
Design fouling factor	0.00005	
Steam flow, lb/hr	4.07×10^6	17

TABLE 5.5-4

This Table Has Been Deleted.

TABLE 5.5-5

STEAM GENERATOR QUALITY ASSURANCE PROGRAM

	RT(1)	UT(1)	PT(1)	MT(1)	ET(1)
Tube Sheet					
1. Forging		Yes		Yes	
2. Cladding		Yes(2)	Yes		
Channel Head					
1. Fabrication	Yes(3)	Yes(4)		Yes	
2. Cladding			Yes		
Secondary Shell and Head					
1. Plates		Yes			
Tubes	Yes				Yes
Nozzles (Forgings)		Yes		Yes	
Weldments					
1. Shell, longitudinal	Yes			Yes	
2. Shell, circumferential	Yes			Yes	
3. Cladding (channel head-tube sheet joint cladding restoration)			Yes		
4. Primary nozzle to fab head	Yes			Yes	
5. Manways to fab head	Yes			Yes	
6. Steam and feedwater nozzle to shell	Yes			Yes	
7. Support brackets				Yes	
8. Tube to tube sheet			Yes		
9. Instrument connections (primary and secondary)					Yes

17

TABLE 5.5-5 (CONT'D)

STEAM GENERATOR QUALITY ASSURANCE PROGRAM

	RT(1)	UT(1)	PT(1)	MT(1)	ET(1)
Weldments (Cont'd)					
10. Temporary attachments after removal					Yes
11. After hydrostatic test (all major pressure boundary welds and complete channel head - where accessible)				Yes	
12. Nozzle safe ends (if weld deposit)	Yes		Yes		

NOTES:

(1) RT - Radiographic
UT - Ultrasonic
PT - Dye Penetrant
MT - Magnetic Particle
ET - Eddy Current
(2) Flat surfaces only
(3) Weld deposit areas only
(4) Base material only

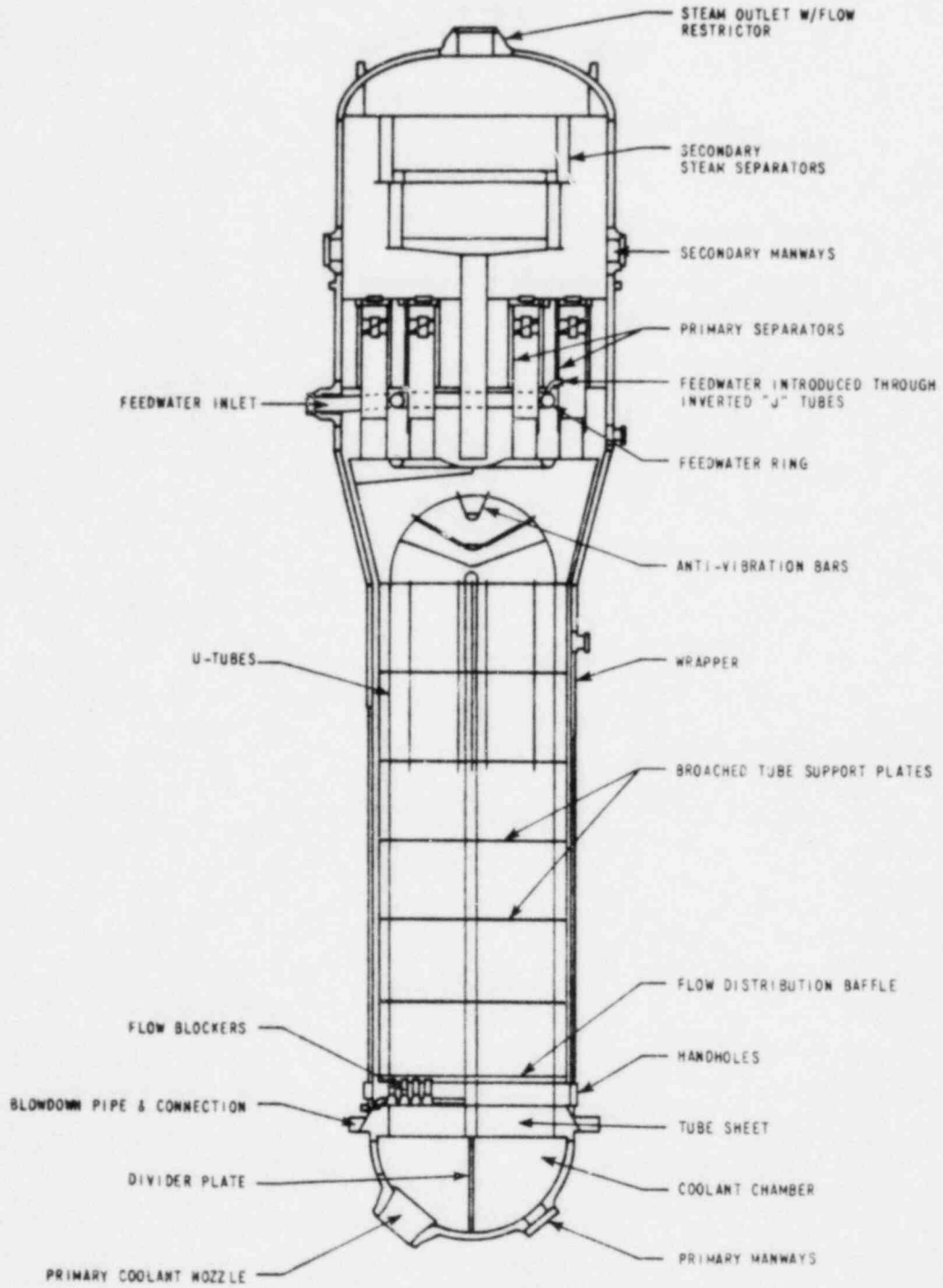

FIG. 5.5-3
MODEL F STEAM GENERATOR
WISCONSIN UTILITIES PROJECT
PRELIMINARY SAFETY ANALYSIS REPORT

PRELIMINARY SAFETY ANALYSIS REPORT

LIST OF EFFECTIVE PAGES (CONT'D)

Chapter 6

Page, Table (T) or Figure (F)	Revision Number
T.6-2 (page 1)	2
(page 2)	11
(page 3)	2
T.6.2.1-1 through T.6.2.1-3	-
T.6.2.1-4 through T.6.2.1-6	8
T.6.2.1-7	11
T.6.2.1-8 (3 pages)	8
T.6.2.1-9 through T.6.2.1-19	8
T.6.2.1-20 (2 pages)	8
T.6.2.1-21	8
T.6.2.1-22 (deleted)	17
T.6.2.1-23	8
T.6.2.1-24	17
T.6.2.1-25 (deleted)	17
T.6.2.1-26	9
T.6.2.1-27 through 6.2.1-33	17
T.6.2.2-1 (2 pages)	15
T.6.2.2-2 (3 pages)	15
T.6.2.2-3	5
T.6.2.3-1 (page 1)	17
(page 2)	15
T.6.2.3-2 through T.6.2.3-4	15
T.6.2.3-5 through T.6.2.3-9 (deleted)	11
T.6.2.3-10	15
T.6.2.4-1 (5 pages)	17
T.6.2.4-2	17
T.6.2.5-1 (2 pages)	-
T.6.3-1 (page 1)	11
(page 2)	-
(page 3)	-
T.6.3-2 (2 pages)	-
T.6.3-3	14
T.6.3-4	11
T.6.3-5	-
T.6.3-6	4
T.6.3-7	-
T.6.3-8 (page 1)	14
(page 2)	11
T.6.3-9	-
T.6.5-1 through T.6.5-3	16
F.6.2.1-1 through F.6.2.1-2	11
F.6.2.1-3 through F.6.2.1-8	-
F.6.2.1-9 (2 pages)	-
F.6.2.1-10	-
F.6.2.1-11	4
F.6.2.1-12 through F.6.2.1-15 (deleted)	4
F.6.2.1-16 through F.6.2.1-22	-
F.6.2.1-23 through F.6.2.1-25	8
F.6.2.1-26	1
F.6.2.1-27 through F.6.2.1-30	
F.6.2.1-31 through F.6.2.1-35	4
F.6.2.1-36	11
F.6.2.1-37	10
F.6.2.1-38	6
F.6.2.1-39 through F.6.2.1-51	8
F.6.2.1-52 through F.6.2.1-55	17
F.6.2.2-1	15
F.6.2.2-2 through F.6.2.2-3	11
F.6.2.2-4	4
F.6.2.2-5 through F.6.2.2-6	11
F.6.2.2-7 through F.6.2.2-8	4
F.6.2.2-9	11
F.6.2.2-10	15
F.6.2.4-1 through F.6.2.4-41	17
F.6.2.5-1	6
F.6.2.5-2	-
F.6.2.5-3	2
F.6.3-1	9
F.6.3-2	-
F.6.3-3	11
F.6.3-4 through F.6.3-5	-
F.6.3-6	11
F.6.3-7 through F.6.3-8	1
F.6.3-9	14
F.6.5.1-1	13
F.6.5.2-1	17

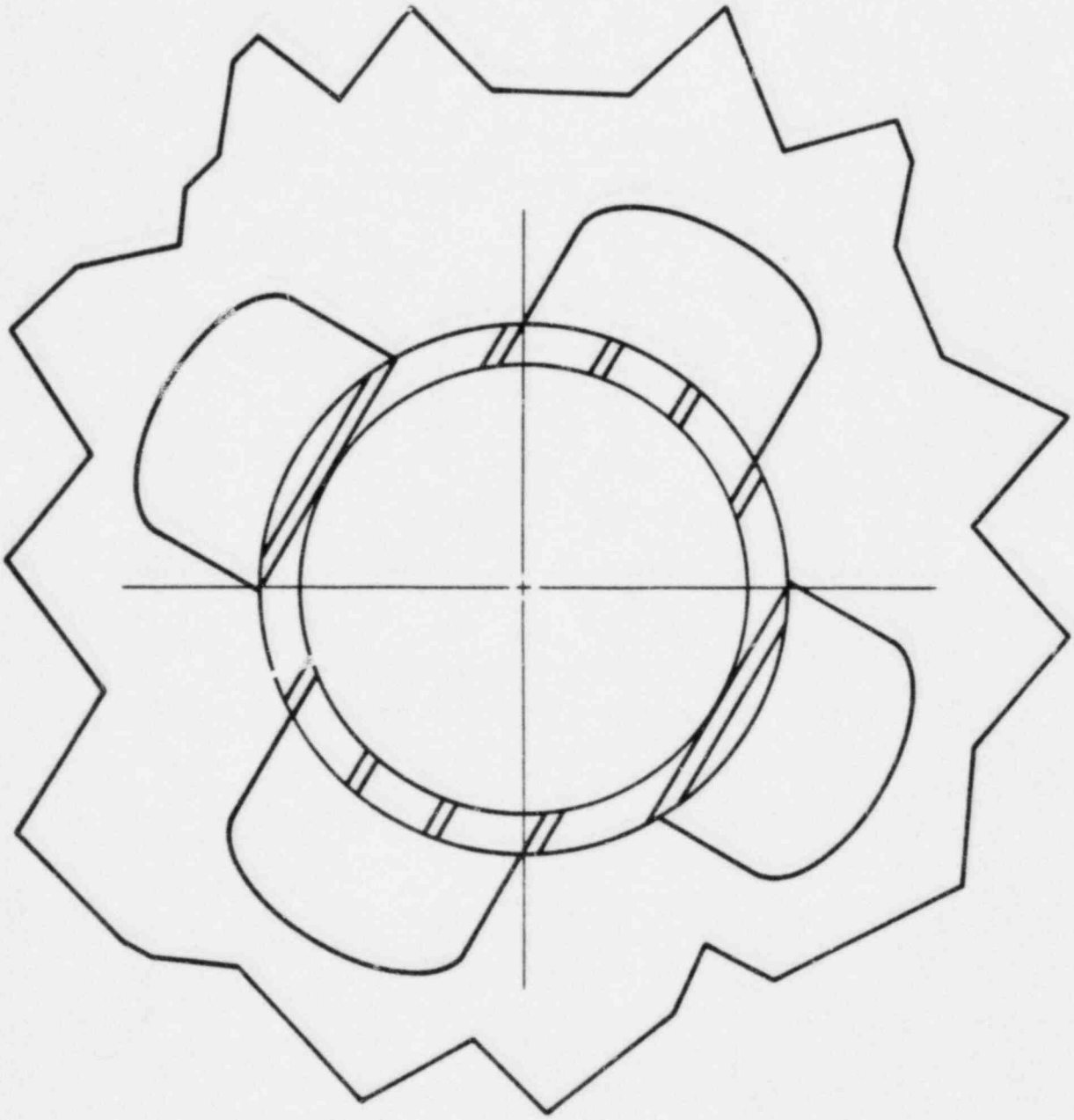

FIG. 5.5-3A
QUATREFOIL BROACHED HOLES
WISCONSIN UTILITIES PROJECT
PRELIMINARY SAFETY ANALYSIS REPORT

CHAPTER 6

TABLE OF CONTENTS (CONT'D)

PRELIMINARY SAFETY ANALYSIS REPORT

LIST OF EFFECTIVE PAGES

Chapter 6

Page, Table (T) or Figure (F)	Revision Number
6-i	8
6-ii	17
6-iii through 6-vi	15
6-vii	16
6-viii	8
6-ix through 6-xa	17
6-xi through 6-xii	8
6-xiii through 6-xiv	17
6-xv	11
6.1-1	-
6.1-2	10
6.1-3	14
6.1-4	-
6.2-1	-
6.2-2	6
6.2-2a	10
6.2-3	8
6.2-4	17
6.2-4a through 6.2-4c	3
6.2-4d	8
6.2-4e through 6.2-4g	17
6.2-5 through 6.2-6	17
6.2-6a through 6.2-6g	8
6.2-7	4
6.2-8 through 6.2-10	-
6.2-11	4
6.2-12 through 6.2-13	-
6.2-14 through 6.2-14c	1
6.2-14d through 6.2-14e	8
6.2-15 through 6.2-16d	17
6.2-17 through 6.2-22	8
6.2-23 through 6.2-27	-
6.2-28	9
6.2-28a through 6.2-28c	8
6.2-28d through 6.2-32b	17
6.2-33	-
6.2-34	8
6.2-35 through 6.2-36a	17
6.2-37 through 6.2-52b	15
6.2-52c through 6.2-52e	17
6.2-52f through 6.2-52g	15
6.2-53	-
6.2-54	5
6.2-55 through 6.2-56a	17
6.2-57 through 6.2-58	-
6.2-59	5
6.2-60	6
6.2-60a	5
6.2-61	3
6.2-62 through 6.2-62a	6
6.2-63	1
6.3-1 through 6.3-2	2
6.3-3	-
6.3-4 through 6.3-5	2
6.3-6	-
6.3-7 through 6.3-10	2
6.3-11 through 6.3-13	-
6.3-14	14
6.3-14a	1
6.3-15	-
6.3-16	14
6.3-17 through 6.3-18a	2
6.3-19 through 6.3-20	-
6.3-21	1
6.3-22 through 6.3-22a	14
6.3-23	14
6.3-24 through 6.3-24a	9
6.3-25	-
6.3-26 through 6.3-28	16
6.3-29	1
6.3-30	7
6.3-30a	11
6.3-31 through 6.3-32	2
6.3-32a	11
6.3-33	11
6.3-34	-
6.4-1	14
6.4-2	2
6.4-3	1
6.4-4 through 6.4-4a	7
6.4-5	7
6.4-6	14
6.4-7	15
6.4-8	7
6.4-9	17
6.4-10	14
6.4-11 through 6.4-13	7
6.4-14 through 6.4-15	14
6.4-16	7
6.4-17	14
6.5-1 through 6.5-2	-
6.5-3 through 6.5-4a	16
6.5-5	14
6.5-6 through 6.5-7	-
6.5-8	17
6.5-9 through 6.5-11	16
T.6-1 (page 1)	15
(page 2) (page 3)	11
(page 4)	10
(page 5)	6
(page 6)	11
(page 7) (page 8)	6
(page 9)	10
(page 10 through page 12b)	6
(page 13) (page 14)	4
(page 15) (page 16)	11
(page 17) (page 18)	-

CHAPTER 6

LIST OF TABLES (CONT'D)

CHAPTER 6

ENGINEERED SAFETY FEATURES

TABLE OF CONTENTS

CHAPTER 6

LIST OF TABLES (CONT'D)

CHAPTER 6

LIST OF TABLES (CONT'D)

Pressurizer Relief Tank Cubicle

A surge line DER is also postulated in the pressurizer relief tank cubicle. The cubicle wall design pressures are based on this break.

Pressurizer Cubicle

The walls of the pressurizer cubicle may become pressurized following a surge line DER in the pressurizer support skirt or from a spray line DER. The more severe break is the spray line DER. The pressurizer cubicle walls are, therefore, designed to withstand a spray line DER.

Operating Floor

A main steam line DER and a feedwater line DER are considered in the analysis of pressure differential across the operating floor. The operating floor is designed to withstand both breaks.

6.2.1.2 System Design

The containment consists of a steel-lined, reinforced concrete
10 structure, designed to withstand an internal pressure of 48 psig
17 and a containment line temperature of 275 F. The net free volume within the containment is 2,320,000 ft^3.

10 The containment size is based on a study of equipment space and installation criteria, shielding requirements, and expected maintenance considerations. An additional volume is added to provide a margin between the design pressure and the calculated peak pressure. The design basis leakage rate is 0.2 volume percent of the containment atmosphere per day at the calculated
17 peak pressure within the containment.

For further details of the containment design, refer to Section 3.8.

6.2.1.3 Design Evaluation

6.2.1.3.1 Description of the Models Used for Containment Analysis

6.2.1.3.1.1 Description of LOCTIC Code

The LOCTIC computer program which models the containment system, the reactor coolant system (RCS), the heat sources and sinks, and the containment heat removal systems was developed by the Stone & Webster Engineering Corporation. A topical report (Ref. 1)

CHAPTER 6

LIST OF FIGURES (CONT'D)

The equation for mass rate of steam removed by condensation on fan coolers is presented below in the discussion of the containment atmosphere circulation system.

8 The mass and energy inventories of the containment atmosphere are corrected for the loss of mass and energy due to condensing heat transfer.

ECCS Spillage

6 During the blowdown phase of the accident, the accumulator spillage is included in the mass and energy release rates calculated with the SATAN-V computer code. During the reflood phase of the accident, the spillage rates are not included in the 3 WREFLOOD calculation of mass and energy release rates. Thus, the spillage must be accounted for separately after the blowdown phase of the accident.

6 The spillage rate and temperature during the accident are shown on Fig. 6.2.1-1 and 6.2.1-2, respectively.

Spillage during the post-reflood period is calculated as the difference between the pumped injection flow rate and the break effluent flow rate. For the two-phase post-reflood calculation, 3 this spillage is saturated at the reference pressure of 69.7 psia used by Westinghouse in performing the two-phase post-reflood calculation of mass and energy releases to the containment. The spillage must be corrected to correspond to the saturation temperature at the calculated pressure. The remaining spillage is added as steam to the inventory in the containment atmosphere.

This is conservative since the steam portion of the spillage is 6 added directly to the containment atmosphere which tends to raise the containment pressure. This is consistent with the assumption that the ECCS spillage will be saturated at the containment pressure during the post-reflood period. The mass and energy releases shown in Table 6-1, item IV include the portion of spillage added to the containment atmosphere during the post-reflood period.

17 Condensing Heat Transfer Coefficient - Loss-of-Coolant Accident

The Tagami heat transfer correlation is used in the containment analysis as the heat transfer coefficient for condensation on surfaces inside the containment. The use of the Tagami coefficient differs slightly from Ref. 7 in that the peak 2 condensing coefficient is taken to occur at the time of the first peak pressure rather than at the end of blowdown. This is logical, since the steam/air ratio is greater at the time of peak pressure than at the end of blowdown. The maximum heat transfer coefficient, which occurs at the first containment peak pressure, is given by:

6.2.1.1.2 Subcompartment Design

The containment subcompartment walls are designed to withstand the maximum differential pressure that could develop across them.

The design pressure for subcompartments is 1.4 times the calculated peak differential pressure.

Reactor Cavity

A 150-in.^{2} pump discharge limited displacement rupture (LDR) and a 150-in.^{2} hot leg LDR have been analyzed in the upper reactor cavity. The above break areas are greater than the actual break areas calculated by analysis of the displacements and are, therefore, conservative. The pump discharge break is the more severe of these two breaks. Thus, the upper reactor cavity is designed for the 150 in.^{2} pump discharge LDR.

Primary Shield Wall Pipe Penetrations

No breaks are postulated within the primary shield wall pipe penetrations. The design pressure differential for the penetrations is conservatively taken as the maximum design pressure differential within the upper reactor cavity.

Steam Generator Compartment Below Operating Floor

A hot leg single ended split (SES), a 92-in.^{2} pump discharge LDR, a 4.88-ft^2 pump suction LDR, and a feedwater line DER are postulated in the steam generator compartment. The pump suction break is the most severe. Thus, the design pressures for the steam generator compartment walls below the operating floor are based on a 4.88-ft^2 pump suction DER. 8

Steam Generator Shield Wall Above Operating Floor

High energy pipes are not routed through this region. However, the steam generator shield walls above the operating floor may become pressurized following a high energy pipe break below the operating floor. The most severe pressurization would occur following a 4.88-ft^2 pump suction LDR below the operating floor. Thus, the shield wall is designed to withstand a 4.88-ft^2 pump suction LDR.

Pressurizer Support Skirt

A surge line DER is postulated inside the pressurizer support skirt. The skirt design pressure is based on this break.

floor, without mixing with the containment atmosphere, at the saturation temperature corresponding to the containment total pressure which exists during the time interval (pressure flash). 8

The LOCTIC computer code accounts for the removal of steam from the atmosphere by condensation on the passive heat sinks and the fan cooler coils. In particular, the condensation heat transfer rate, q_i to the i-th passive heat sink is obtained from: 10

$$q_i = hA_i \ (T_{Sat} - T_{w_i})$$

where:

h = Condensing heat transfer coefficient, Btu/hr-ft²-F

A_i = Surface area of the i-th heat sink, ft² 8

T_{Sat} = Saturation temperature corresponding to the partial pressure of the vapor, F

T_{w_i} = Surface temperature of the i-th heat sink, F

The mass rate of steam removed by condensation on the i-th heat sink, m, becomes 10

$$m = q_i/(h_{su} - (h_f - \Delta h_{sub(i)}) \qquad (2)$$ 17

where: h_{su} = Specific enthalpy of superheated vapor, Btu/lbm 10

h_f = Specific enthalpy of saturated liquid at the vapor pressure, Btu/lbm

$\Delta h_{sub(i)}$ = 3/8 Cp $(T_{Sat} - T_{w_i})$ = Difference between the subcooled condensate enthalpy and saturated liquid enthalpy on the i-th heat sink 17 10

The denominator of Equation 2 describes the specific enthalpy change of the condensed steam from the superheated state to a subcooled liquid state. The subcooled liquid state is based on a linear temperature gradient through the film and subcooling to the average liquid temperature of the condensate film (Ref. 38). 8

The total mass condensed on all heat sinks is then:

$$M = \sum_{\text{all } i} m_i$$ 10

The energy transferred to the floor with the condensed liquid is

$$E = \sum_{\text{all } i} m_i \ (h_f - h_{sub(i)})$$

Each case is assumed to be exposed to the containment atmosphere
3 on one or both sides, as appropriate. Heat conduction through the containment structure to the ambient air is also considered but is of minor significance.

The model used considers transient heat conduction to the containment structure through the composite thermal resistance made up of the paint film on the steel liner, the liner itself, and
3 the concrete. The LOCTIC computer program uses the explicit method of Dusinberre (Ref. 14) for calculating heat absorbed by the static heat sinks. Since the program allows input of the time increment to be used in the calcualtion, the maximum heat

$$hmax = 75 \left(\frac{Ep}{V\ tp} \right)^{0.6}$$

where:

hmax = Tagami heat transfer coefficient, Btu/hr-ft²-F

Ep = Energy released to the containment atmosphere at the time the first peak pressure, Btu

V = Containment free volume, ft³

tp = Time of first peak pressure, sec

Before the first peak pressure is reached, the heat transfer coefficient is calculated as:

$$h = hmax \left(\frac{t}{tp} \right)$$

where t is the time in seconds, after the accident.

After the first peak pressure is reached, the heat transfer coefficient equation takes the following form:

$$h = hstag + (hmax - hstag)e^{-0.05(t-tp)}$$

where:

hstag = 2 + 50x

and x = Steam/air mass ratio

When the temperature of the containment atmosphere is less than or equal to the heat sink surface temperature, a natural convection coefficient of 1.8 Btu/hr-ft²-F is used. The program checks the surface temperature of each heat sink case and chooses the condensing coefficient or natural convection coefficient on a case by case basis. The coefficients used in the containment analysis are shown on Fig. 6.2.1-31 through 6.2.1-35. No distinction is made between the condensing coefficients for water vapor on steel or on painted concrete surfaces. Although Ref. 7 states that the experimentally measured heat transfer coefficient on concrete surfaces was found to be 40 percent of the value measured on steel surfaces, the same reference also states that "a painted concrete surface can allow dropwise condensation and, therefore, have a heat transfer coefficient comparable to the value for steel." All concrete surfaces which would be exposed to the containment atmosphere following a LOCA are painted.

A thermal conductance of 250 Btu/hr-ft²-F, based upon an assumed paint film thickness of 0.006 in., is also used in the heat

Because of the opposing effects of changing power level on steam line break mass and energy releases, no single power level can be singled out as a worst case initial condition for a steam line break. Therefore, a spectrum of power levels spanning the operating range (102 percent, 75 percent, 50 percent, and 25 percent), as well as the hot shutdown condition, has been analyzed.

There are two possible types of pipe ruptures which must be considered in evaluating steam line breaks.

The first is a split rupture in which a hole opens at some point on the side of the steam pipe or steam header but does not result in a complete severance of the pipe. A single, distinct break area is fed uniformly by all steam generators until steam line isolation occurs. The blowdowns from the individual steam generators are not independent since fluid coupling exists among all steam lines. Because of the flow limiting orifices in each steam generator outlet nozzle, the largest possible split rupture can have an effective area prior to isolation that is not greater than the throat area of the flow restrictor times the number of restrictors. Following isolation the effective break area for the steam generator with the broken line can be no greater than
17 the flow restrictor throat area.

The second break type is the double-ended guillotine rupture in which the steam pipe is completely severed and the ends of the break displace from each other. For the largest possible guillotine rupture, each end of the break has an effective flow area equal to the total flow restrictor throat area upstream of the break end.

The breaks analyzed include three break areas (one full double-ended, one small double-ended, and one split rupture) at each of the five initial power levels, as follows:

1. A full double-ended pipe rupture downstream of the steam line flow restrictor. For this case, the actual break area equals the cross sectional area of the steam line, but the blowdown from the steam generator with the broken line is controlled by the flow restrictor throat area (1.4 ft^2). The reverse flow from the intact steam generators is controlled by the smaller of the pipe cross section, or the total flow restrictor throat area in the intact loops.

2. A small double-ended rupture having an area just larger than the area at which water entrainment ceases. For this break, water entrainment is assumed in the forward flow. The reverse flow is assumed to occur through the same break area; it is assumed that moisture entrainment does not occur in the reverse flow so that water release is minimized.

transfer model. The thermal resistance of the paint film is in the same series as the condensing film. 2

Condensing Heat Transfer Coefficient - Steam Line Break Accident

The Uchida condensing heat transfer correlation (Ref. 39) is used to calculate the heat transfer from the containment atmosphere to the passive heat sinks following a steam pipe break. The heat transfer coefficient is calculated with the following expression:

$$h = AP_s/(3.25\ P_t) \text{ if } 0.01 \leq P_s/P_t \leq 0.19$$

or

$$h = Ae^{-3.5\ (1-P_s/P_t)} \text{ if } P_s/P_t > 0.19$$ 17

where:

h = Uchida condensing heat transfer coefficient, Btu/hr-ft²-F

A = Heat transfer coefficient for pure steam/ 300 Btu/hr-ft²-F)

P_s = Partial pressure of the steam, psia

P_t = Total pressure of containment atmosphere, psia

Fig. 6.2.1-54 presents the Uchida heat transfer coefficient for the most severe steam line break accident as a function of time.

Static Heat Sinks

The static heat sinks include the containment structure, internal concrete, and metal within the containment. The containment heat sinks are divided into 20 cases. The thicknesses and areas for the containment heat sinks are shown in Table 6-1, item VI. 3

Resistance to heat transfer at the liner-concrete interface is considered in the containment analysis by use of a conservatively low value of thermal contact conductance of 100 Btu/hr-ft²-F (Ref. 32, 33, 34). Since the steel liner is used as a form for pouring of the concrete, and since the concrete mix is very wet, the liner, in effect, becomes glued to the concrete. In fact, the bond is so intimate that in an initial attempt to determine the shear strength of the concrete anchor studs, the load applied to the edge of the steel plate exceeded the stud shear strength by about a factor of four before the concrete finally failed in shear (Ref. 35). In order to obtain a configuration with which the stud shear could be successfully measured, it became necessary to oil the steel plate to prevent bond development when the concrete was poured. The steel plates used in the list were 3/8 in. thick by 2 ft x 3 ft ; the concrete blocks were 1 1/2 ft thick by 2 ft x 3 ft; and the anchor studs were 5/8 in. diameter and 6 9/16 in. long. 6

(MSIV) are conservatively assumed to remain fully open until the tim that the appropriate isolation setpoint is reached, plus instrument response, signal processing delay, and valve closure time. At this time, the MSIV are assumed to close instantaneously.

Reverse flow from the steam piping and the intact steam generators is calculated using the method described in Ref. 37 with the necessary parameters from Ref. 40 and Table 6.2.1-33. The steam piping volume includes all piping back to the turbine valves discussed in item D.37 of Appendix B. For all DER's, steam remaining in the steam line between the break and the MSIV after the MSIV has shut is assumed to exhaust to the containment at a linearly decreasing rate from the value at isolation to zero.

The steam generator dryout time is calculated for each break size and power level from the data in Ref. 40 and Table 6.2.1-33 as specified in Ref. 37. The dryout time is the point at which all the initial fluid inventory of the steam generator plus that added from outside sources is depleted. At this time, the blowdown rate out of the break is limited by the rate at which water is added to the steam generator from the auxiliary feedwater system.

17

Final mass and energy release rates from the limiting cases for containment pressure and temperature are presented in Tables 6.2.1-29 and 6.2.1-30, respectively. The contribution from each source is listed separately. After steam generator dryout, the mass release rate is equal to the auxiliary feedwater flow rate. The energy release rate is based on conservatively high blowdown enthalpy of 1,205 Btu/lbm.

The results of the spectrum of breaks analysis are presented in Table 6.2.1-27. A failure of one emergency bus to energize, causing the loss of one engineered safety feature (ESF) train is assumed for this analysis. A detailed single failure analysis is presented below. The initial containment pressure is assumed to be 14.7 psia. An analysis of initial containment conditions is also presented. Note that for every case, the peak containment temperature is reached just as the spray is introduced into the containment atmosphere. The peak containment presssure occurs at steam generator dryout time.

The containment spray system is actuated upon reaching the HI-3 containment pressure setpoint. The time required to start the pumps and fill the headers is listed in Table 6.2.1-33. Although the fan coolers are normally operating, for this analysis it is assumed that they switch to the emergency mode of operation after the SIS signal is generated at the time listed in Table 6.2.1-33. The fan coolers are assumed not to remove any heat from the containment while in the normal cooling mode. The starting times for the containment heat removal systems are based on maintaining

passive heat sinks are removing heat from the containment atmosphere by convection and condensation.

The distribution of energy in the containment before and after the pump suction DER is shown in Table 6.2.1-3. Also shown in the table is the heat generated by the various sources and the heat removed from the containment by the various heat removal systems. 4

6.2.1.3.2.2 Steam Line and Feedwater Line Breaks

The pressure responses resulting from a main steam pipe break accident and a main feedwater pipe break accident are calculated with the containment analysis computer program LOCTIC. The program is used to calculate the thermodynamic state of the containment due to the mass and energy addition to the containment atmosphere as described in Section 6.2.1.3.1.1. The Uchida condensing heat transfer coefficient is used in the steam line break analysis. A peak condensing coefficient of 300 Btu/hr-ft^2-F is used. The condensing coefficient transient is shown on Fig. 6.2.1-54. The mass and energy addition rates are input to LOCTIC in tabular form. Containment parameters used in this analysis are presented in Table 6-1. 8 17 8

A spectrum of main steam line break accidents covering different break areas and reactor operating power levels are analyzed. WUP mass and energy release data for the Model F steam generators for the limiting cases are presented in Ref. 40. Generic mass and energy release data for all breaks analyzed were determined using the methods described in Ref. 41.

Additional calculations were performed with the mass and energy release data presented in Ref. 40 and pertinent balance of plant parameters in order to obtain mass and energy release rates for use in LOCTIC. The method used for this purpose is described in Ref. 37. The balance of plant parameters used in the analysis are listed in Table 6.2.1-33. 17

Steam line breaks can be postulated to occur with the plant in any operating condition ranging from hot shutdown to full power. Since steam generator mass decreases with increasing power level, breaks occurring at lower power generally result in a greater total mass release to the containment. However, because of increased energy storage in the primary plant, increased heat transfer in the steam generators, and the additional energy generation in the nuclear fuel, the energy release to the containment from breaks postulated to occur during power operation may be greater than for breaks occurring with the plant in a hot shutdown condition. Additionally, steam pressure and the dynamic conditions in the steam generators change with increasing power and have significant influence on both the rate of blowdown and the amount of moisture entrained in the fluid leaving the break following a steam line break event.

piping. The results show, however, that the additional heat removal capability of the fan coolers provided when both ESF trains operate causes the peak temperature to be lower for the MSIV failure than for the failure of an ESF train. The failure of a FWIV to close is not analyzed since it only affects the dryout time which occurs at a later time than the maximum containment temperature.

17 The containment pressure transients for the limiting pressure case (full DER at 25 percent power, ESF train failure, 16.2 psia initial containment pressure) and the limiting temperature case (0.63 ft² split at 75 percent power, ESF train failure, 14.7 psia initial containment pressure) are shown on Fig. 6.2.1-55. The maximum calculated containment pressure is less than the containment design pressure by more than 10 percent. The
8 containment atmosphere, liner, and concrete temperatures for the
17 limiting temperature case are shown on Fig. 6.2.1-53. As shown on this figure, the containment liner and concrete temperatures
17 do not exceed the containment liner design temperature of 275 F while the atmosphere temperature reaches 348 F. For this
17 accident, the peak calculated containment liner and concrete temperatures are 237 F and 225 F, respectively. The liner temperature is taken at the inside surface while the concrete temperature is taken at the liner-concrete interface. The
17 maximum concrete and steel temperatures inside the containment are 237 F and 257 F, respectively.

17 The qualification of safety-related equipment inside the containment is discussed in Section 3.11.

A chronology of events for the limiting containment pressure and
17 temperature cases is given in Tables 6.2.1-31 and 6.2.1-32, respectively.

The feedwater pipe break is not as severe as the main steam pipe break since the break effluent is at a lower specific enthalpy.
8 The feedwater pipe break analysis is performed at the hot standby condition since the steam generator secondary mass inventory and pressure are at maximum at this power level. A DER of a main feedwater pipe is assumed in the analysis. The failure of the
17 feedwater isolation valve to close is assumed in the feedwater pipe break analysis. This failure results in an additional mass and energy source since the liquid between the feedwater
8 isolation and control valve is exhausted to containment. The calculated peak pressure following a feedwater pipe DER accident is given in Table 6.2.1-24. The resultant containment pressure
17 transient for a Model D generator is shown on Fig. 6.2.1-52.

The feedwater pipe DER accident pressure and temperature
17 transients for the Model F generator would also be less severe than for a main steam pipe break.

Failure of a diesel generator to start would not affect the peak pressure following a main feedwater pipe break accident, as the

3. A split break that represents the largest break which will neither generate a steam line isolation signal from the primary protection equipment nor result in moisture entrainment. Steam and feedwater line isolation signals will be generated by high containment pressure signals for these cases. (The total break area for this case is larger than the break area for the largest double-ended rupture for which a dry steam blowdown occurs. Thus, only one small double-ended rupture is presented.)

Break location affects steam line blowdowns by virtue of the pressure losses which would occur in the length of piping between the steam generator and the break. The effect of the pressure loss is to reduce the effective break area seen by the steam generator. Although this would reduce the rate of blowdown, it would not significantly change the total release of energy to the containment. Therefore, piping loss effects have been conservatively ignored in all blowdown results.

The main feedwater flow rate is conservatively assumed to be at system runout. For double-ended ruptures (DER) prior to the feedwater isolation valves (FWIV) receiving a signal to close, two-thirds of the total flow is assumed to flow into the affected steam generator and one-third into the intact steam generators. After receipt of the signal to close, the isolation valves to the unaffected steam generators are assumed to close instantaneously and all flow is diverted to the affected steam generator. After a period of time equal to the FWIV closure time, all main feedwater flow is isolated from the affected steam generator, with the unisolated water downstream of the valve added to the affected steam generator. 17

For split ruptures, initially all three steam generators will blowdown at the same rate until feedwater isolation is initiated. Thus, for split ruptures, prior to the FWIV receiving a signal to close, the main feedwater flow is divided evenly between the three steam generators. After receipt of the signal to close, feedwater flow is determined in the same manner as above.

The time for the isolation signal to reach the FWIV is determined by adding the instrument response and signal processing delay time listed in Table 6.2.1-33 to the time the appropriate isolation setpoint is reached. Isolation signals for the DERs are generated by NSSS systems at times given in Ref. 40. For split ruptures, the isolation signal is generated by containment pressure as given in Table 6.2.1-33.

The portion of the auxiliary feedwater flow to the affected steam generator is conservatively assumed to be delivered from the time of the accident to manual termination 30 min later.

Generation of main steam isolation signals is similar to that of feedwater isolation signals. The main steam isolation valves

Operating Floor

The operating floor is analyzed according to the nodalization schematic of Fig. 6.2.1-50.

Two analyses are performed, the first assuming a steam line DER occurs above the operating floor and the other assuming a feedwater line DER occurs below the floor. The mass and energy release rates for the steam line DER and feedwater line DER are given in Table 6.2.1-18 and 6.2.1-19, respectively.

The K-factors and applicable vent flow models are listed in Table 6.2.1-20 for the steam line analysis and feedwater line analysis. Length-to-area ratios (L/A) are tabulated in Table 6.2.1-21.

The pressure differential transient across the operating floor is shown on Fig. 6.2.1-51 for both breaks.

6.2.1.4 Test and Inspection Requirements

Two types of tests are performed on the containment structure:

1. Structural Acceptance Test: To verify the structural adequacy of the containment structure (described in Section 3.8.1.5).

2. Containment Structure Leakage Test: To verify that the leakage rate of the containment structure is within allowable limits.

Containment Structure Leakage Tests

Containment structure leakage tests are performed in accordance with the requirements of Appendix J to 10CFR50 (Ref. 30) with exceptions as noted in Section 16.4.4.

Containment structure leakage is tested prior to initial operation and periodically throughout the operating life of the plant. Testing includes performance of Type A tests to measure the containment structure overall integrated leakage rate, Type B tests to detect and measure local leakage from certain containment structure components, and Type C tests to measure containment isolation valve leakage rates.

Type A Tests

Preoperational and periodic Type A tests are performed at calculated peak containment internal pressure (P_a). All equipment within the containment structure is designed to withstand periodic testing at P_a without affecting operational capabilities or operating life.

offsite power after the accident. Ref. 37 discusses the loss of offsite power and concludes that maintaining offsite power results in a more severe blowdown transient.

Results from the single failure and initial containment condition analyses are summarized in Table 6.2.1-28. Several failures and a higher initial containment pressure were considered for selected cases.

In all cases analyzed with the higher initial containment pressure of 16.2 psia, the peak containment pressure increased, but the peak containment temperature decreased.

The highest containment pressure is produced by a full DER at 25 percent power with a failure of an ESF train and with an initial containment pressure of 16.2 psia. As previously noted, the peak containment pressure occurs at steam generator dryout time. This time is independent of the containment heat removal systems. Therefore, since the failure of one ESF train results in minimum containment heat removal capability, failure of an individual heat removal system component is less severe and is not analyzed for this case. The failure of the MSIV to close in the broken loop results in a greater amount of reverse flow from the steam piping. The results show, however, that the additional heat removal capability with both ESF trains operating, causes the peak containment pressure to be lower than for the failure of an ESF train. The failure of an FWIV to close results in an additional mass added to the steam generator, which extends dryout time. The main feedwater flow is isolated by the feedwater control valve (FWCV) as indicated in item D.37 of Appendix B. The FWCV is considered to operate similar to the FWIV for the purpose of determining main feedwater flow for this case. Again, the results show that the additional heat removal capability with both ESF trains operating causes the peak pressure to be lower than for the failure of an ESF train. 17

The highest containment temperature is produced by a 0.63 ft^2 split rupture at 75 percent power with the failure of an ESF train and an initial containment pressure of 14.7 psia. A failure of one containment spray pump results in a slight delay in the initiation of the containment spray system. This is due to the additional heat removal available from the operation of the fan coolers of both ESF trains. The results show this failure yields a lower peak containment temperature than the failure of an entire ESF train. The failure of the fan coolers of one ESF train was not analyzed since it would result in the same peak containment temperature as for an ESF train failure. In the case of the failure of the fan coolers of one train, both containment spray pumps will operate. Since the peak containment temperature occurs just before sprays are introduced into the containment atmosphere, the additional spray will not affect the peak temperature. The failure of the MSIV and the broken loop results in a greater amount of reverse flow from the steam

Fluid system penetration design does not include resilient seals, gaskets, sealant components, or expansion bellows and, therefore, does not require Type B testing (paragraph IIG.1 of Appendix J).

In lieu of Type B testing, each electrical penetration (Section 8.3.1.4.4) is provided with a leakage surveillance capability which pressurizes the penetration test chamber to a pressure not less than P_a and monitors the penetration for leakage (paragraph IIIB.1(c) and IIIB.3(b) of Appendix J).

If the pressure maintained is less than P_a, Type B testing will be performed every other refueling shutdown or at an interval not
17 greater than 3 years (10CFR50 Appendix J, paragraph III D.2).

Each component subject to Type B testing is equipped with a double o-ring seal and a test connection between seals. A pressure equal to P_a is applied to the volume between seals and measured for leakage. Repair and retest are required in the event of exceeding allowable leakage.

Views of typical personnel air lock design and identification of its electrical and mechanical penetrations are shown on Fig. 3.8.1-25, 3.8.1-25a, and 3.8.1-25b. Schematics of testing provisions for the pressure testing of the personnel air lock and air lock seals are shown on Fig. 3.8.1-25b. Detail 1 of Fig. 3.8.1-25a depicts a 3-in. emergency air connection which is also used for pressurization of the air lock for the pressure test and leak test. On the same figure, detail 2 shows the fixed shell extension flange, lock ring, and door flange out of position. The locking ring fits over the lips of the shell flange and door flange compressing the o-rings for leaktightness. Also shown in detail 2 is the 1/4-in. tap hole for periodic testing of the o-rings. Fig. 3.8.1-25b shows the detail of the
17 door seals for the escape hatch. The locking ring fits over the lips on fixed shell extension flange and door flange compressing the gaskets. The test connection for pressurization of these gaskets is also shown in detail 3.

The following is a brief description of the personnel air lock, its penetrations, and the required pressure testing.

Two double door personnel air locks are provided (Fig. 3.8.1-25). Both doors are flanged and double gasketed with a leakage test tap between the o-rings and are hydraulically latched and hydraulically swing after the latch is released. The doors consist of three major components: nonrotating head, rotating locking rings, and fixed shell extension flange as shown on Fig. 3.8.1-25b. Both doors swing horizontally.

The inside door of the personnel air lock is provided with a double gasketed emergency manhole and cover. The manhole is similar to a U.S. Navy scuttle hatch, operated by handwheels on

The resulting pressure response for the skirt is shown on Fig. 6.2.1-47.

The peak calculated and design pressure differentials are given in Table 6.2.1-8. The times of peak differential pressure can be read from Fig. 6.2.1-47.

Pressurizer Relief Tank Compartment

The pressurizer relief tank compartment is analyzed according to the nodalization schematic of Fig. 6.2.1-23.

A surge line DER is assumed to occur inside the compartment in the analysis.

The K-factors and vent flow models used in the analysis are listed in Table 6.2.1-16.

The peak calculated and design pressure differentials are given in Table 6.2.1-8.

The pressure response for the compartment is shown on Fig. 6.2.1-48.

8

Pressurizer Cubicle

The pressurizer cubicle is analyzed according to the nodalization schematic of Fig. 6.2.1-23.

A spray line DER in the cubicle and a surge line DER inside the pressurizer support skirt are considered in the pressurizer cubicle analysis. The mass energy release rates for these brakes are given in Table 6.2.1-15 and Table 6.2.1-14, respectively. In order to analyze the surge line DER, the flow to the cubicle through the support skirt vents is conservatively assumed to be frictionless Moody flow.

Plan and section drawings of the pressurizer cubicle are shown on Fig. 6.2.1-39 through 6.2.1-41.

The K-factors and vent flow models used in the analysis are listed in Table 6.2.1-22.

Length-to-area (L/A) ratios for Fig. 6.2.1-23 are tabulated in Table 6.2.1-17.

The pressure response for the pressurizer cubicle is shown on Fig. 6.2.1-49 for a spray line DER.

The peak calculated and design differential pressures for the pressurizer cubicle are given in Table 6.2.1-8. The time of peak differential pressure can be read from Fig. 6.2.1-49.

17 tubes and the tube enclosure to test the bellows for leak tightness.

Type C Tests

Type C tests are performed on the following containment isolation valves:

1. Containment isolation valves which provide, under normal operating conditions, a direct connection between the atmosphere inside the containment structure and the atmosphere outside the containment structure,

2. Containment isolation valves which are required to close automatically on receipt of a containment isolation signal,

3. Containment isolation valves which are required to operate intermittently under post-accident conditions.

A list of all the containment isolation valves is given in Table 6.2.4-1, along with all valves which are Type C leak tested. Fig. 6.2.4-1 through 6.2.4-42 schematically show the arrangements of the isolation valves and the design provisions 17 which permit the valves to be leak tested. The direction in which the valves will be leak tested is provided on each figure. Justification for leak testing with the test pressure applied in the direction opposite to that which would occur under accident conditions is provided below.

A description of the Type C test procedures is given below. The method described in (1) is used for all containment isolation valves with the exception of those specifically described in (2) through (7). In all methods, each valve to be tested is closed by normal operation without any preliminary exercise or adjustment.

1. A section of piping which includes the containment isolation valve(s) is isolated from the remainder of the fluid system, using valves or blanking flanges as necessary, and the piping is drained (if applicable). The inside and/or outside containment isolation valves 7 are tested individually with air at a pressure equal to P_a. Test air is applied at a test connection on the inboard side (toward the inside of the containment structure) of the valve to be tested, and leakage air is vented through a test vent on the outboard side of the valve. A rotameter, connected to the pressure source, is used to measure leakage through the containment isolation valve as a function of time. In this procedure, air flow across the valve seat is always in the inside-to-outside containment structure direction.

Type A tests can be performed with the containment leakage monitoring system (Section 9.5.9) using the reference volume or absolute method. A verification test using the makeup air method is also performed. 17

Fluid lines penetrating the containment which will be vented and drained during the Type A test to ensure exposure of the containment isolation valves to the containment atmosphere are listed in Table 6.2.4-1. Fluid systems which remain fluid-filled for the Type A test are discussed below:

1. The reactor coolant pump seal injection lines will not be vented and drained during the Type A test. These lines would remain fluid-filled after a postulated LOCA. In addition, emergency core cooling system (ECCS) water could be continuously injected through these lines in the event that the postulated LOCA was a small line rupture of the seal injection line itself.

2. The following penetrations will not be vented and drained during Type A testing in accordance with 10CFR50 Appendix J, paragraph IIIA.1.d: 17

   (a) Emergency core cooling system penetrations (penetration number 46, 76, 77, 78, 79, 80, 81, 85, and 86 listed in Table 6.2.4-1).

   (b) Residual heat removal suction line (penetration number 74 and 75 in Table 6.2.4-1).

   (c) Component cooling water in chilled water supply and return lines (penetration number 38, 39, 40, and 41 in Table 6.2.4-1).

   (d) Normal charging line (penetration number 23 in Table 6.2.4-1).

However, in accordance with Appendix J IIIA.1.d, Type C leak tests will be performed. The results will be added to the Type A test.

Type B Tests

Type B tests are performed on the following components:

1. Inboard and outboard personnel air lock doors and seals,

2. Equipment hatch seals,

3. Fuel transfer tube blind flange seals and fuel transfer tube enclosure.

References

Title	Section
Containment Isolation Systems	6.2.4
Containment Leakage Monitoring System	9.5.9

6.2.1.6 Materials

The containment structure is a steel-lined, concrete pressure vessel.

The criteria for the selection of protective coatings and paints for use within the containment are as follows:

1. The coatings are tested in the environment anticipated within the containment in the event of a DBA to demonstrate their ability to maintain their integrity.

2. The DBA simulation tests conducted for the purpose of validating the acceptability of the coatings to be used are, in general, conducted in accordance with Section 4 "Procedures for Testing Coatings at Simulated DBA Conditions," of the proposed American National Standard ANSI N101.2, "Protective Coatings for Light Water Nuclear Reactor Containment Facilities."

The ability of the coatings to meet the above criteria ensures that the coatings do not compromise the efficiency or performance of the engineered safety features.

Painted surfaces are coated with a 0.006-in. or thinner layer of paint. Final choice of paint type depends on the results of testing as described above.

both sides of the air lock door (refer to Fig. 3.8.1-25b for location of manhole and detail of manhole door seals).

An electrical penetration, one sight glass in each door, and one capped emergency air connection are provided (refer to Fig. 3.8.1-25 for approximate locations).

Two pressure gages are provided: one to penetrate the head at the reactor end of the air lock to measure containment pressure; and one to penetrate the head of the opposite end of the air lock to read air lock pressure.

Provision is made to periodically pressurize the personnel air lock and the space between the double gaskets after door closure to test for leak tightness. The test connections for pressurization of the air lock and space between the gaskets on both doors, are provided at a test panel outside the containment.

After complete shop assembly and prior to shipment the personnel air lock is pressure tested for structural integrity. Testing is in accordance with ASME III, Div. 1, Article NE-6000.

After the shop pressure test, a halogenated gas is admitted to the space between the double seals on each door until design pressure is reached. Both seals are then probed and checked for leaks. If a leak is detected at any point, it is repaired and retested. This procedure is also used for the space between the double-sealed plates at each electrical penetration assembly, for the space between the two o-rings on the equalizing valves, between the double seals on the viewports, and for space between the double packing on any shaft penetrating any door. After these individual tests have been completed, a halogenated gas and compressed air is admitted into the air lock until design pressure is reached and all possible sources of leaks are then probed and checked.

The lock ring is designed to maintain adequate pressure on the o-ring seals during the air lock test to prevent leakage. No external force is required on the doors during the test.

The actual personnel air lock design will be added to the FSAR after the air locks have been purchased.

Views of the equipment hatch are shown on Fig. 3.8.1-24. The equipment hatch has a bolted hatch cover which unbolts from the inside of the containment.

The Type B test is performed utilizing the leak test connection between the double-gasketed o-rings.

The fuel transfer tube enclosure is shown on Fig. 3.8.1-22. Provisions are made for applying the test pressure P_a between the

8 38. Rohsenow and Choi, Heat, Mass, and Momentum Transfer, Prentice-Hall, Englewood Cliffs, N.J., (1961).

39. Uchida, H., Oyama, A., Togo, Y., "Evaluation of Post-Incident Cooling Systems of Light-Water Power Reactors," in Proceedings of the Third International Conference of the Peaceful Uses of Atomic Energy Held in Geneva, 31 August - 9 September 1964, Vol. 13, New York: United Nations, 1965, 93-104, (A/CONF.28/P/436).

17 40. Letter forwarded from S. Burstein, Executive Vice President, WEPCO to H. Denton, Director, Nuclear Regulator Commission, January 1979.

41. Westinghouse Electric Corporation," Mass and Energy Releases Following a Steam Line Rupture" WCAP 8822 (Proprietary), WCAP 8860 (Non-proprietary), September 1976.

2. Containment purge air supply and exhaust lines are shown on Fig. 6.2.4-38. The air at a pressure of P_a is applied at the test connection between the isolation valves. A rotameter connected to the pressure source is used to measure the valve leakage rate for both isolation valves. This procedure tests the outside containment isolation valve in the direction as described in (1) above and the inside containment isolation valve is tested in the reverse direction which is justified by the use of butterfly valves. The butterfly valve has the same leakage characteristics when the test pressure is applied in either direction as the same seat is being tested.

3. Containment spray pump suction from the containment sump is shown on Fig. 6.2.4-25.

   The outside containment isolation valves (butterfly type) are tested in the reverse direction by applying the test pressure equal to P_a at the outboard side of the valve. Justification for testing in the reverse direction is provided in (2) above. 17

4. Low head safety injection suction from the containment sump is shown on Fig. 6.2.4-23.

   The outside containment isolation valves are double-disk gate valves which have two seating surfaces. The test pressure, equal to P_a, is supplied between the disks. The area upstream of the inboard disk is vented to containment atmosphere via the sump while the area downstream of outboard disk is vented to atmosphere. The test is conservative as two seats are being tested and at least one seat is normally tested as described in (1) above.

Test Scheduling and Reporting

Test scheduling and subsequent reporting of Type A, B, and C tests shall be in accordance with Appendix J of 10CFR50 as discussed in the Technical Specifications (Section 16.4.4). 17

6.2.1.5 Instrumentation Requirements

Descriptions of the instrumentation provided to monitor the integrity of the containment systems are included in the following sections:

25. Henry, R. E. and Fiske, H. K., "The Two-Phase Critical Flow of One-Component Mixtures in Nozzles, Orifices, and Short Tubes," Journal of Heat Transfer, May 1971, pp. 179-187.

26. Henry, R. E., "A Study of One and Two Component, Two-Phase Critical Flows at Low Qualities," ANL-7430.

27. Henry, R. E., "An Experimental Study of Low Quality Steam-Water Critical Flow at Moderate Pressures," ANL-7740.

28. Kramer, F. W., "FLASH; A Program for Digital Simulation of the Loss-of-Coolant Accident," Westinghouse Atomic Power Division, WCAP-1678, January 1969.

29. Zaloudek, F. R., "The Critical Flow of Hot Water Through Short Tubes," HW-77594, Hanford Works, 1963.

30. "Reactor Containment Leakage Testing for Water-Cooled Power Reactors," as published in the Federal Register Volume 38, No. 30, February 14, 1973.

31. Cunningham, V.P. and H.C. Yeh, "Experiments and Void Correlation for PWR Small-Break LOCA Conditions," Transactions of American Nuclear Society, Vol. 17, November 1973, pp. 369-370. 1

32. Barzelay, M.E., and Holloway, G.F. Effect of an Interface on Transient Temperature Distribution Composite Aircraft Joints, National Advisory Committee for Aeronautics, Technical Note 3824, Washington, D.C., April 1957.

33. Barzelay, M.E., and Holloway, G.F., Interface Thermal Conductance of Twenty-Seven Riveted Aircraft Joints, National Advisory Committee for Aeronautics, Technical Note 3991, Washington, D.C., July 1957.

6

34. Barzelay, M.E., Range of Interface Thermal, Conductance for Aircraft Joints, National Aeronautics and Space Administration, Technical Note D-426, May 1960.

35. Report of Tests for Shear on Concrete Anchor Studs for a Containment Structure Liner, Stone & Webster Engineering Corp. (unpublished).

36. Hinkle, W.D., Experimental Verification of the Analytical Procedure Used to Determine the Heat Removal Capability of the Containment Cooling Units, CYAP 104, 1967.

37. Land, R.E., "Mass-Energy Release to Containment Following a Steamline Rupture for Series 51 and D Steam Generators," Westinghouse Safety Analysis Standard 12.2, Revision 1, December 11, 1975. 17

Decontamination Factor

After a long period of time (> 1 hr), the iodine concentration in the containment atmosphere will be in equilibrium with iodine in the spray liquid. This equilibrium concentration ratio is given by the relationship:

$$\frac{C_e}{C_o} = \frac{1}{1 + \frac{V_s H}{V_c}} \qquad (6)$$

The decontamination factor, DF, is the inverse of this ratio:

$$DF = 1 + \frac{V_s H}{V_c} \qquad (7)$$

A conservative (low) value for DF is calculated by using the most limiting value of each parameter in Equation (7). The calculation is summarized in Table 6.2.3-2.

Particulate Iodine

The rate of removal of particulate iodine from the containment atmosphere is calculated similarly to the elemental iodine removal rate. It can be expressed by the relationship:

17

$$C_{t_p} = C_{o_p} e^{-\lambda_p t} \qquad (8)$$

17 The particulate removal coefficient, λ_p, is calculated by the
15 relationship:

17

$$\lambda_p = \frac{3\ E\ Fh}{2d\ V_c} \qquad (9)$$

17 The overall coefficient is based on the collection efficiency of a single drop, E. This implies the assumption that the spray
15 is a group of noninteracting drops (Ref. 6). Equation (9) can be written as:

17

$$\lambda_p = \frac{3E}{2d\ V_c} \sum_{\substack{\text{each} \\ \text{header}}} Fh \qquad (10)$$

6.2.2 Containment Heat Removal Systems

The containment heat removal systems consist of:

1. The containment spray system,

2. The containment air recirculation fan coolers in the containment structure ventilation system (Section 9.4.7),

3. The residual heat removal (RHR) system (Section 5.5.7).

The containment heat removal systems return the containment pressure to a low value following a break in either the primary or secondary system piping inside containment. Heat is transferred from the containment atmosphere to the spray water and to reactor plant component cooling water by the containment spray system and the containment air recirculation fan coolers, respectively (Fig. 6.2.2-1 and 9.4.7-3). In addition, heat is transferred from the water which has fallen to the containment floor to the reactor plant component cooling water system by the RHR heat exchangers during the recirculation phase.

The containment spray system is shown on Fig. 6.2.2-1 and the system component data are given in Table 6.2.2-1. The iodine removal capability of the containment spray system is discussed in Section 6.2.3.

6.2.2.1 Design Bases

The following are the design bases for the containment heat removal systems:

1. The containment peak pressure after core reflooding following a reactor coolant pump suction double ended rupture (DER) shall be less than the containment design pressure by an adequate margin. This basis applies specifically to the containment spray system.

2. The containment atmosphere pressure 24 hr after the design basis accident (DBA) shall be at an acceptably low value. This basis applies to all heat removal systems.

3. The systems shall be capable of maintaining a low containment pressure indefinitely following the DBA. This basis applies to all heat removal systems.

4. The containment spray headers shall be capable of delivering spray water to the containment atmosphere in sufficient quantity and with an adequate droplet diameter to ensure heat removal to accomplish bases 1, 2, and 3 above.

6.2.3.6 Materials

The ability of the sprays to remove iodine from the containment atmosphere is enhanced by the addition of sodium hydroxide, although experiments indicate that the low pH borate solution from the RWST is almost as effective in removing iodine from the containment atmosphere. The addition of sodium hydroxide to the spray water which subsequently mixes with the water spilled from the reactor coolant system results in a final pH in the containment recirculation sumps of 8.5-9.5.

Radiolytic decomposition and corrosion products do not interfere with the operation of the ESF. Extensive experimental studies (Ref. 8, 10) have been made to determine the corrosion rates and the effect on the materials in the containment from the use of alkaline borate spray solutions. The amount of aluminum in the containment is minimized and, where used, is restricted to equipment not required to function after an accident. Copper is relatively unaffected by alkaline borate spray solutions. Concrete wetted by the spray solution retains its strength. This has been substantiated by several experiments (Ref. 8). The use of protective coatings within the containment is a standard practice, and tests have demonstrated that these coatings can withstand the temperature and chemical action of the sprays (Ref. 8, 9).

The possibility of stress corrosion cracking of the stainless steel piping was also investigated. It was found that the tendency to crack stainless steel specimens was less at higher pH values and lower chloride concentrations. No cracking was observed at a pH of 9.3 and only occasional cracking when the pH was 6.5 to 7.5 for chloride ion concentrations in the range of 5 to 200 ppm. At a low pH of 4.5 with 5 ppm chloride ion concentration, only sensitized U-bend specimens cracked (Ref. 10).

It is conservatively estimated that the entire galvanized coating on carbon steel is consumed during a LOCA. Thereafter, no significant corrosion occurs on the underlying carbon steel (Ref. 8). Typical materials employed in the containment spray system are listed in Table 6-2.

References

1. Spray Analysis on SPRACO Model 1713A Nozzle by Spray Engineering Company, Burlington, Ma.

2. Parsly, L.F., Jr., Removal of Elemental Iodine from Steam-Air Atmospheres by Reactive Sprays, USAEC Report ORNL-TM-1911, 1967.

6.2.3.3.1 Iodine Removal Coefficients

The relationships that follow are indicative of the correlations used in Ref. 2, 3, 4, 5, 6, and 7 and show the methods used for computing the iodine removal coefficients.

Nomenclature for this section is given in Table 6.2.3-1.

Elemental Iodine

The rate of removal of elemental iodine from the containment atmosphere is calculated on the basis of an exponential removal as the spray passes through the containment atmosphere by the relationship: 15

$$C_t = C_o e^{-\lambda t} \tag{1}$$

The elemental iodine removal coefficient, λ , is calculated by the relationship:

$$\lambda = \frac{6\ V_D\ F\ h}{Vd\ V_c} \tag{2}$$ 17

This relationship assumes that iodine is uniformly mixed throughout the containment atmosphere and that all spray drops are spheres of the mean diameter. 15

The overall deposition velocity, V_D, is defined by the following relationship: 17

$$\frac{1}{V_D} = \frac{1}{V_g} + \frac{1}{K_L H} \tag{3}$$

where:

$$K_L = \frac{2\pi^2}{3}\ \frac{D_L}{d} \tag{4}$$

$$V_g = \frac{D_v}{d}\ (2 + 0.6\ Re^{\frac{1}{2}}\ Sc^{1/3}) \tag{5}$$ 15

The elemental iodine removal coefficient, λ , is calculated by using the most limiting value of each parameter in Equation (2). This will result in a conservative low value of λ . The calculation is summarized in Table 6.2.3-2.

injection water to the reactor coolant pumps which may be operating after a containment isolation signal. This
17 arrangement is shown on Fig. 9.3.4-1.

Table 6.2.4-2 lists other fluid system penetrations which do not require Type B or C leak testing. These systems do not communicate with the reactor coolant system or the containment atmosphere after a LOCA. These systems are also designed with the following requirements:

1. Protected from pipe whip and missile following a LOCA,

2. Designated SC-2, ASME Class 2,

3. Seismic Category I,

17 4. Designated to withstand temperatures at least equal to containment design temperature,

5. Designated to withstand the external pressure from the structural acceptance test,

6. Designed to withstand the loss-of-coolant accident transient and environment.

As a result of any leakage between the primary and secondary systems, these systems would be flooded and sealed during a LOCA. A water inventory greater than 30 days can be provided by the auxiliary feedwater system which meets the single-failure criteria.

6.2.4.2 System Design

Table 6.2.4-1 gives details of the design of the containment isolation system for each individual penetration. The penetrations are listed in accordance with class designations as described below. The penetrations are given identifying numbers to facilitate reference to the appropriate valve arrangement shown on Fig. 6.2.4-1 through 6.2.4-42.

Descriptions of the design of piping, electrical, and access containment penetrations are given in Section 3.8.1. Electrical
17 penetrations are also described in Section 8.3.1.4.4.

Containment penetrations are classified in accordance with General Design Criteria 55, 56, and 57 and the functions of the respective fluid systems, as follows:

Class A Penetrations

Class A penetration piping is either connected to the reactor coolant system or is open to the containment atmosphere, and is in use during normal power operation. Any normally-operating

The most limiting value of each parameter is used to calculate λ_p. This will result in a conservative (low) value of λ_p. The calculation is summarized in Table 6.2.3-2. 17

6.2.3.3.2 Range of pH

In order to ensure adequate iodine removal effectiveness and compatibility of the spray solution with the safety-related materials inside the containment, the pH of the spray is maintained between 8.5 and 10.8. The pH is between 10.5 and 10.8 for a short period of time. This is less than the maximum recommended spray pH of 11.0.

The parameters utilized in calculating the minimum and maximum expected spray pH for the system are given in Table 6.2.3-3. The values of these parameters are those proposed technical specification limits which tend to minimize or maximize pH as appropriate.

The spray pH will remain in the range given in the table for all operating modes of the system, except for the case of a failure of one chemical addition pump. In this case, the affected train will spray borated RWST water during the injection phase. However, spray from the unaffected train will always remain in the given range, meeting the system design bases. In the recirculation phase, both trains will spray sump water with a pH in the range given in Table 6.2.3-3. 15

The minimum expected ultimate sump pH is given in Table 6.2.3-4, along with the boric acid and sodium hydroxide sources considered in the analysis. The values of the parameters listed in this table are consistent with the appropriate proposed technical specification limits which minimize the pH.

The sodium hydroxide concentration and boron concentration are found by considering the total amounts of these chemicals present in the total volume of water.

6.2.3.4 Test and Inspection Requirements

The tests and inspections of the containment spray system are described in Section 6.2.2.4.

6.2.3.5 Instrumentation Application

The instrumentation application of the containment spray system is given in Section 6.2.2.5.

still provide the proper isolation capability. The arrangement for these valves is shown on Fig. 6.3-3 and 6.2.2-1.

3. Containment Leakage Monitoring Open Tap Penetrations (Section 9.5.9)

The isolation valve arrangement for these instrument lines is in accordance with the design discussed in NRC Regulatory Guide 1.11, "Instrument Lines Penetrating the Primary Reactor Containment" (Appendix B).

Four lines in the containment leakage monitoring system are directly open to the containment atmosphere in order to sense containment pressure. A normally open, remote-manual containment isolation valve is in each line outside the containment. Immediately downstream, six pressure transmitters are connected into these lines upstream of automatic isolation valves. This arrangement is shown on Fig. 9.5.9-1.

4. Residual Heat Removal Suction from Reactor Coolant System (Section 5.5.7)

Each of two lines from the RCS hot legs to the RHR pump suctions contains two remote manual valves (motor-operated) inside containment which are closed during normal operation and are interlocked with RCS pressure by diverse pressure transmitters. The valve which is located closer to the RCS inside the missile barrier is not considered a containment isolation valve. The second valve defines the limit of the RCPB and provides the containment isolation barrier inside the containment. This valve is locked closed. 17

No outside isolation valve is required. The system is a closed system outside containment designed to safety Class 2 and Seismic Category I requirements. With a single locked closed inside isolation valve, no single or active failure in the RHR system following a LOCA could result in the release of containment atmosphere to the environment. This arrangement is shown on Fig. 5.5.7-1.

5. Reactor Coolant Pump Seal Water Penetrations (Section 9.3.4)

The valves in the lines that supply seal water to the reactor coolant pumps are normally open and do not receive the containment isolation signal. A check valve is provided inside the containment and a remote-manual valve is located outside the containment in each of the seal lines. The lines must remain open to supply seal

Portable equipment such as air samplers, personnel dosimeters, and other radiation analysis equipment applicable to control room habitability are readily available. A description of the equipment provided is given in Section 12.3.2.

6.4.1.3.2 Control Room Emergency Air Filtration

The design, construction, and testing of these systems follow the
14 | recommendations given in ORNL-NSIC-65 (Ref. 1) for ensuring that the system is safe, effective, reliable, and maintainable. These systems employ high-efficiency air cleaning equipment with separate and redundant filtering systems. Each system can sustain a single failure without impairing its functional capability.

Each system is located within a Seismic Category I structure. A
14 | manual deluge system is provided for each filter to control charcoal fires. Each system is powered from emergency buses.

Implementation of the quality assurance, testing, inspection, and maintenance program assures that each air filtering system performs its function reliably under normal and accident conditions.

6.4.1.3.3 Control Room HVAC - Control of Thermal Environment

The control room HVAC systems are operated on a continuous basis to maintain a safe and comfortable environment in the control room. The state of readiness of this system is indicated by the system performance, as demonstrated in the control room temperature and relative humidity. The system meets the single failure criterion by the provision of fully redundant systems, cooling water supplies, and power sources. Protection against damage is provided by the control building. The system is located in areas where the ambient temperature is maintained within design limits. The provision of these redundant temperature control units ensures the integrity and operability of the control room HVAC systems.

Each of the redundant air conditioning systems is sized for its conservatively estimated cooling load, considering extreme climatic conditions of the site. Margin is provided to ensure year-round functional capability of the air conditioning system. The entire system meets the Seismic Category I requirements set forth in Section 3.2 and is designed and constructed to the recognized standards of ASHRAE (Ref. 2). Reliability of operation of the system is further assumed by periodic maintenance, testing, and inspection. The system operability is demonstrated during normal plant operation.

system piping which could become connected to either the reactor coolant system or the containment atmosphere as a result of a LOCA (e.g., a nonnuclear safety class closed system in containment) is also classified as Class A.

Class B Penetrations

Class B penetration piping is separated from the reactor coolant system and the containment atmosphere by a single barrier and is used during normal power operation.

pressure within the building. The air operated isolation valve and the motor-operated dampers are Seismic Category I and safety related.

Prior to operating one of the FBVS emergency filtration trains during refueling, manually operated dampers in the FBVS distribution and collection ductwork are aligned to provide an air sweep across the spent fuel pool as described in Section 9.4.5. Dampers in the distribution ductwork are not safety related, but those in the collection ductwork are Seismic Category I and safety related. Administrative control is exercised over the dampers in the collection ductwork such that during fuel handling operations an open flowpath to the FBVS emergency filtration trains is ensured. The manually operated isolation damper just upstream of the emergency filtration trains is also opened during fuel handling operations.

The manually operated isolation damper just upstream of the FBVS emergency filtration trains is closed only if the trains are to be used to filter the containment purge air. In order to align the system for containment purge:

1. The manually operated isolation damper upstream of the emergency filtration trains is closed.

2. The normally closed valve in the containment purge lines connection to the FBVS is opened. The discharge damper to the normal fuel building vent is remote manually closed and the intake damper downstream of the containment air filtration units is automatically opened as shown on Fig. 9.5.7-2. 17

3. The signal that automatically closes the FBVS normal ventilation flow paths and stops the normal ventilation fans on an FBS emergency filtration system start signal is blocked.

Fuel building ventilation system collection ductwork is Seismic Category I and safety related with the exception of the portion downstream of the isolation dampers in the normal ventilation exhaust flowpath (Fig. 6.5.2-1).

The FBVS emergency filtration trains are Seismic Category I and safety related. The trains are located in the safety-related fuel building which affords the trains protection from externally generated missiles and extreme natural phenomena. Protection from internally generated missiles and biological shielding for plant personnel are provided by the concrete FBVS emergency filtration train cubicles.

The FBVS emergency filtration trains incorporate electric heaters to limit the relative humidity of incoming air to 70 percent. Charcoal bed depth is a minimum of 2 in. Units of this

System	Section
Control Building HVAC Systems	9.4.1
Fire Protection System	9.5.1
Communications Systems	9.5.2
Lighting System	9.5.3
Onsite Power System	8.3
Radiation Monitoring System	6.4.1.2.2 and 12.1.4

These systems are redundant and are supplied from onsite power sources.

The accident analyses in Chapter 15 show that the short term accidents which occur within the containment structure release less radioactivity than the LOCA. Doses calculated to be received by control room personnel are provided in Section 15.2.17. 1

A fuel handling accident occurring in the fuel building would result in radioactivity levels below that of the LOCA. Should the prevailing wind carry this release to the control room air intakes, the radiation monitor located within the air intake would initiate control room isolation of the normal outside supply and activate the control room emergency filter trains. Similarly, the radiation monitors will provide timely isolation and activation of the control room emergency filter trains during the release of radioactivity resulting from a main steam line break outside the containment structure or process gas carbon decay bed rupture. Due to the short time duration of these accidents, the operators are assumed not to leave the control room. Therefore, the ingress and egress doses are not computed.

A summary evaluation of the design of the radiation monitoring, emergency air filtration, HVAC, fire protection, personnel protection, food and water storage, and utilities and sanitation systems and facilities is presented below.

6.4.1.3.1 Radiation Monitoring System (RMS)

The design of the RMS for control room habitability considers all requirements of subsection 6.4.1.2.2. Temperature, pressure, humidity, and radiation are considered in selection of equipment for the control room habitability RMS. Environmental factors to be considered are given in Section 3.11. Area and process monitors are redundant with respect to power supplies. The interlocks and initiating circuit characteristics for the main control room outside air intake monitors are discussed in Section 11.4. 17

inleakage is conservatively estimated to be 2,000 cfm for the slightly negative pressure maintained within the structure.

The extent of compliance of the FBVS emergency filtration trains with Regulatory Guide 1.52 is discussed in Appendix A.

6.5.2.2 System Description

A diagram of fuel building ventilation system emergency filtration is shown on Fig. 6.5.2-1.

The fuel building is normally maintained at a slightly negative pressure by supplying air at a rate of 8,000 cfm while exhausting air through a HEPA filter at a rate of 10,000 cfm (Section 9.4.5). During fuel handling operations (as defined in Section 6.5.2.1), exhaust flow is diverted through one of the 10,000 cfm FBVS emergency filtration trains while maintaining normal supply. Seven thousand cfm are drawn from the spent fuel pool surface area while 3,000 cfm are drawn from general areas in the fuel building. In the event of a fuel handling accident, the supply fan is manually stopped to reduce the fuel building exhaust rate. At times other than during fuel handling operations, the operator manually initiates operation of one of the FBVS emergency filtration trains on a high radioactivity alarm in the fuel building vent.

To meet the single failure criteria for an active failure in the short term, there are two 100 percent capacity FBVS emergency filtration trains. One train is in operation and the other is on automatic standby. If the start switch for a given train is in the ON position and flow is lost (indicating a loss of power, a motor operator failure, or a fan motor failure), the redundant train automatically starts, power is cut off to the failed train and an alarm is actuated in the control room. The automatic controls are designed for a single failure in that no single failure of the control circuitry can stop operation of both trains. The controls are energized by the vital bus (Section 8.3.2).

Actuation of the FBVS emergency filtration trains also actuates the following:

1. An air-operated isolation valve closes downstream of the normally operating HEPA filters. The fuel building normal ventilation exhaust fan is stopped.

2. The motor-operated isolation dampers open in the FBVS emergency filtration train that receives the start signal.

Actuation of the above ensures that an open flowpath exists to the FBVS emergency filtration trains and that all filtered air is exhausted from the fuel building to maintain a slightly negative

TABLE 6.2.1-22

This Table Has Been Deleted.

TABLE 6.2.1-24

PEAK CONTAINMENT CONDITIONS
FEEDWATER LINE BREAK
BASED ON MODEL D GENERATOR

Break Location	Break Type	Percent Full Reactor Power	Single Failure	Peak Temp (F)	Peak Pressure (psig)	
Feedwater line	DER	0	FIV(1)	217.4(2)	21.2(2)	16 17

NOTES:

(1)Feedwater isolation valve fails to open.
(2)Peak containment conditions do not necessarily occur at the same time.

TABLE 6.2.1-25

This Table Has Been Deleted.

TABLE 6.2.1-27

CONTAINMENT PEAK PRESSURE AND TEMPERATURE FOLLOWING
A MAIN STEAM LINE BREAK INSIDE CONTAINMENT

Spectrum of Break Sizes and Power Levels[1]

Power Level (percent)	Break Area (ft^2)	Break Type[2]	Peak Pressure (psig)	Time of Peak Pressure (sec)	Peak Temp (F)	Time of Peak Temp (sec)	Time of[3] Feedwater Isolation (sec)	Time of[3] Steamline Isolation (sec)	Time Fan[4] Coolers Start (sec)	Time[4] Sprays Start (sec)
102	Full	DER	39.56	174	336.2	87	8.0	8.0	8.6	87.5
102	0.60	DER	34.41	389	337.4	235	10.1	10.1	15.5	237
102	0.60	Split	37.21	429	346.6	207	24.0	24.0	23.2	209
75	Full	DER	39.90	191	334.6	85	8.0	8.0	8.6	85.5
75	0.55	DER	34.75	464	335.5	269	9.7	9.7	16.0	271
75	0.63	Split	38.44	424	347.5	199	23.0	23.0	21.9	201
50	Full	DER	40.16	213	329.5	84	8.0	8.0	8.5	84.5
50	0.45	DER	34.87	609	332.5	334	9.5	9.5	17.9	339
50	0.60	Split	38.47	519	344.7	215	23.0	23.0	22.2	217
25	Full	DER	40.74	231	326.5	82	8.0	8.0	8.4	82.5
25	0.33	DER	36.28	959	328.4	489	9.1	9.1	23.5	494
25	0.495	Split	40.53	649	340.8	279	25.0	25.0	24.9	281
0	Full	DER	40.57	273	321.2	89	8.0	8.0	8.4	89.5
0	0.20	DER	34.90	2,299	324.5	1,079	8.5	8.5	45.0	1,089
0	0.30	Split	41.82	2,169	324.5	679	37.0	37.0	36.6	684

NOTES:

(1) With failure of one emergency bus to energize and with initial containment pressure of 14.7 psia.

(2) For full DER, the forward flow area is 1.4 ft^2 and the reverse flow area is 4.87 ft^2.
Subsequent to steam piping blowdown, the effective reverse flow area is 2.8 ft^2.
For smaller DER, the value listed is the flow area to each side of the break.
For split ruptures, the value listed is the total flow area.

(3) For DER, the isolation signals are generated by the NSSS protection system.
For split ruptures, the isolation signals are generated by containment pressure.

(4) The times listed are when the system becomes effective for heat removal.

TABLE 6.2.1-28

CONTAINMENT PEAK PRESSURE AND TEMPERATURE FOLLOWING A MAIN STEAM LINE BREAK INSIDE CONTAINMENT

Single Failure and Initial Condition Analysis

Power Level (percent)	Break Area (ft^2)	Break Type(1)	Single Failure	Initial Containment Pressure (psia)	Peak Pressure (psig)	Time of Peak Pressure (sec)	Peak Temp (F)	Time of Peak Temp (sec)	Time(2) of Feedwater Isolation (sec)	Time(2) of Steamline Isolation (sec)	Time(3) Fan Coolers Start (sec)	Time(3) Sprays Start (sec)
102	Full	DER	ESF Train(4)	14.7	39.56	174	336.2	87	8.0	8.0	8.6	87.5
102	Full	DER	MSIV	14.7	38.42	174	334.4	71.5	8.0	8.0	8.5	72
102	0.60	DER	ESF Train	14.7	34.41	389	337.4	235	10.1	10.1	15.5	237
102	0.60	DER	MSIV	14.7	32.23	389	331.3	181	10.1	10.1	15.5	183
102	0.60	DER	ESF Train	16.2	35.96	389	325.7	209	10.1	10.1	12.7	211
75	0.63	Split	ESF Train	14.7	38.44	424	347.5	199	23.0	23.0	21.9	201
75	0.63	Split	MSIV	14.7	36.21	489	340.1	207	23.0	23.0	21.9	209
75	0.63	Split	Spray Pump	14.7	36.13	424	340.1	207	23.0	23.0	21.9	209
75	0.63	Split	ESF Train	16.2	[illegible].74	394	336.5	181	18.0	18.0	17.1	183
25	Full	DER	ESF Train	14.7	40.74	231	326.5	82	8.0	8.0	8.4	82.5
25	Full	DER	ESF Train	16.2	42.69	231	319.6	74	8.0	8.0	8.0	74.5
25	Full	DER	MSIV	16.2	42.49	231	326.0	67.5	8.0	8.0	8.0	68.5
25	Full	DER	FWIV	16.2	39.36	267	315.7	74.5	8.0	8.0	8.0	75
25	0.495	Split	ESF Train	14.7	40.53	649	340.8	279	25.0	25.0	24.9	281
25	0.495	Split	ESF Train	16.2	40.80	604	330.0	249	20.0	20.0	19.1	251
0	0.30	Split	ESF Train	14.7	41.82	2169	324.5	679	37.0	37.0	36.6	684
0	0.30	Split	ESF Train	16.2	42.10	2069	314.6	574	27.0	27.0	26.6	579

17

NOTES:

(1) For full DER, the forward flow area is 1.4 ft^2 and the reverse flow area is 4.87 ft^2. Subsequent to steam piping blowdown, the effective reverse flow area is 2.8 ft^2.
For smaller DER the value listed is the flow area to each side of the break.
For split ruptures, the value listed is the total flow area.

(2) For DER, the isolation signals are generated by the NSSS protection system.
For split ruptures, the isolation signals are generated by containment pressure.

(3) Failure of one engineered safety features (ESF) train caused by the failure of one emergency bus to energize.

(4) The times listed are when the system becomes effective for heat removal.

TABLE 6.2.1-29

MASS AND ENERGY RELEASE RATES
MAIN STEAM LINE BREAK(1)

Full Double-Ended Rupture At 25 Percent Power Failure Of One Emergency Bus To Energize
Initial Containment Pressure Of 16.2 Psia (Limiting Case For Containment Pressure)

	Forward Flow from Ruptured Loop Steam Generator		Reverse Flow from Turbine Plant Piping		Reverse Flow from Intact Steam Generators		Total	
Time (sec)	Mass Rate (lbm/sec)	Energy Rate (10^6 Btu/sec)	Mass Rate (lbm/sec)	Energy Rate (10^6 Btu/sec)	Mass Rate (lbm/sec)	Energy Rate (10^6 Btu/sec)	Mass Rate (lbm/sec)	Energy Rate (10^6 Btu/sec)

17

NOTE:
(1) THIS TABLE CONTAINS PROPRIETARY DATA AND HAS BEEN FORWARDED TO TO THE STAFF BY S. BURSTEIN, EXECUTIVE VICE PRESIDENT, WISCONSIN ELECTRIC AND POWER CO. TO H. DENTON, DIRECTOR, NUCLEAR REGULATORY COMMISSION, LETTER OF JANUARY 1979.

TABLE 6.2.1-29 (CONT'D)

MASS AND ENERGY RELEASE RATES
MAIN STEAM LINE BREAK

	Forward Flow from Ruptured Loop Steam Generator		Reverse Flow from Turbine Plant Piping		Reverse Flow from Intact Steam Generators		Total	
Time (sec)	Mass Rate (lbm/sec)	Energy Rate (10^6 Btu/sec)	Mass Rate (lbm/sec)	Energy Rate (10^6 Btu/sec)	Mass Rate (lbm/sec)	Energy Rate (10^6 Btu/sec)	Mass Rate (lbm/sec)	Energy Rate (10^6 Btu/sec)

NOTE:
(1) THIS TABLE CONTAINS PROPRIETARY DATA AND HAS BEEN FORWARDED TO TO THE STAFF BY S. BURSTEIN, EXECUTIVE VICE PRESIDENT, WISCONSIN ELECTRIC AND POWER CO. TO H. DENTON, DIRECTOR, NUCLEAR REGULATORY COMMISSION, LETTER OF JANUARY 1979. 17

TABLE 6.2.1-30

MASS AND ENERGY RELEASE RATES
MAIN STEAM LINE BREAK(1)

0.53 Ft^2 Split Rupture At 75 Percent Power Failure Of One Emergency Bus To Energize
Initial Containment Pressure Of 14.7 Psia (Limiting Case For Containment Temperature)

	Forward Flow from Ruptured Loop Steam Generator		Reverse Flow from Turbine Plant Piping and Intact Loop Steam Generators		Total	
Time (sec)	Mass Rate (lbm/sec)	Energy Rate (10^6 Btu/sec)	Mass Rate (lbm/sec)	Energy Rate (10^6 Btu/sec)	Mass Rate (lbm/sec)	Energy Rate (10^6 Btu/sec)

NOTE:
(1) THIS TABLE CONTAINS PROPRIETARY DATA AND HAS BEEN FORWARDED TO THE STAFF BY S. BURSTEIN, EXECUTIVE VICE PRESIDENT, WISCONSIN ELECTRIC AND POWER CO. TO H. DENTON, DIRECTOR, NUCLEAR REGULATORY COMMISSION, LETTER OF JANUARY 1979.

17

TABLE 6.2.1-30 (CONT'D)

MASS AND ENERGY RELEASE RATES
MAIN STEAM LINE BREAK

Time (sec)	Forward Flow from Ruptured Loop Steam Generator		Reverse Flow from Turbine Plant Piping and Intact Loop Steam Generators		Total	
	Mass Rate (lbm/sec)	Energy Rate (10^6 Btu/sec)	Mass Rate (lbm/sec)	Energy Rate (10^6 Btu/sec)	Mass Rate (lbm/sec)	Energy Rate (10^6 Btu/sec)

NOTE:
(1) THIS TABLE CONTAINS PROPRIETARY DATA AND HAS BEEN FORWARDED TO THE STAFF BY S. BURSTEIN, EXECUTIVE VICE PRESIDENT, WISCONSIN ELECTRIC AND POWER CO. TO H. DENTON, DIRECTOR, NUCLEAR REGULATORY COMMISSION, LETTER OF JANUARY 1979. 17

TABLE 6.2.1-31

ACCIDENT CHRONOLOGY MAIN STEAM LINE BREAK

Full Double-Ended Rupture at 25 Percent Power
Failure of One Emergency Bus to Energize
Initial Containment Pressure of 16.2 Psia
(Limiting Case for Containment Pressure)

Time (sec)	Event
0	Accident occurs; ruptured loop steam generator and turbine plant piping blowdown into containment begins.
0.5	NSSS Protection System setpoint for closing the MSIV and FWIV is reached.
3.3	Turbine plant piping blowdown complete; intact loop steam generators begin blowdown into containment.
8.0	Containment air recirculation coolers become effective; MSIV and FWIV fully closed. Intact loop steam generators end blowdown into containment.
8.9	Blowdown of steam line between break and MSIV ends.
16	Containment pressure setpoint for spray initiation is reached.
74	Peak containment temperature is reached; containment spray enters containment atmosphere.
231	Peak containment pressure is reached; steam generator dryout time.
1,800	Auxiliary feedwater to ruptured steam generator manually isolated; steam release to containment ends.

17

TABLE 6.2.1-32

ACCIDENT CHRONOLOGY MAIN STEAM LINE BREAK

0.63 ft² Split Rupture at 75 Percent Power
Failure of One Emergency Bus to Energize
Initial Containment Pressure of 14.7 Psia
(Limiting Case for Containment Temperature)

Time (sec)	Event
0	Accident occurs; all steam generators begin blowdown into containment.
15	Containment pressure setpoint for closing the MSIV and FWIV is reached.
22	Containment air recirculation coolers become effective.
23	MSIV and FWIV are fully closed.
142	Containment pressure setpoint for spray initiation is reached.
199	Peak containment temperature is reached; containment spray enters containment atmosphere.
424	Peak containment pressure is reached; steam generator dryout time.
1,800	Auxiliary feedwater to ruptured steam generator manually isolated; steam release to containment ends.

17

TABLE 6.2.1-33

BALANCE OF PLANT PARAMETERS USED IN
STEAM LINE BREAK MASS AND ENERGY RELEASE CALCULATION

1. Main Feedwater System	
Total runout flow	5,370 lbm/sec
Fraction of flow to broken loop SG prior to FWIV receiving signal to close	
For all DER	2/3
For split ruptures	1/3
Fraction of flow to broken loop SG from receipt of signal to close until FWIV closure	1
Feedwater line volume between the SG and the FWIV	200 ft^3
Feedwater line volume between the SG and the FW control valve (used if FWIV failure assumed)	460 ft^3
FWIV and FWCV closure time	5.0 sec
Instrument response and signal processing delay	2.5 sec
2. Auxiliary Feedwater System	
Flow to broken loop SG	110 lbm/sec
Time of termination	30 min
3. Main Steam System	
Total piping volume	14,780 ft^3
Volume between the break and the nearest MSIV capable of preventing reverse flow	
For broken loop MSIV functioning	800 ft^3
For failure of broken loop MSIV	13,700 ft^3
Steam line minimum cross-sectional area	4.87 ft^2
MSIV closure time	5.0 sec
Instrument response and signal processing delay	2.5 sec

17

TABLE 6.2.3-1

NOMENCLATURE USED FOR EQUATIONS IN SECTION 6.2.3

Symbol	Nomenclature	
C_e	Equilibrium concentration of elemental iodine in the containment atmosphere, curies	
C_o	Amount of initial elemental iodine in containment atmosphere, curies	15
C_{o_p}	Amount of initial particulate iodine in containment atmosphere, curies	
C_t	Amount of elemental iodine at time, t, in containment atmosphere, curies	
C_{t_p}	Amount of particulate iodine at time, t, in containment atmosphere, curies	17
d	Mean surface diameter, cm	
D_L	Diffusivity of iodine in water, cm^2/sec	
D_V	Diffusivity of iodine in steam-air mixture, cm^2/sec	
DF	Decontamination factor (C_o/C_e)	17
E	Single drop collection efficiency for particulate iodine	15
F	Spray flow rate, cm^3/sec	
h	Drop fall height, cm	15
H	Liquid-to-gas iodine partition factor	
K_L	Liquid film gas transfer coefficient, cm/sec	
λ	Elemental iodine removal coefficient, sec^{-1}	15
λ_p	Particulate iodine removal coefficient, sec^{-1}	17
Re	Reynolds number	15
Sc	Schmidt number	17
t	Time, sec	
V	Terminal velocity of drop, cm/sec	15

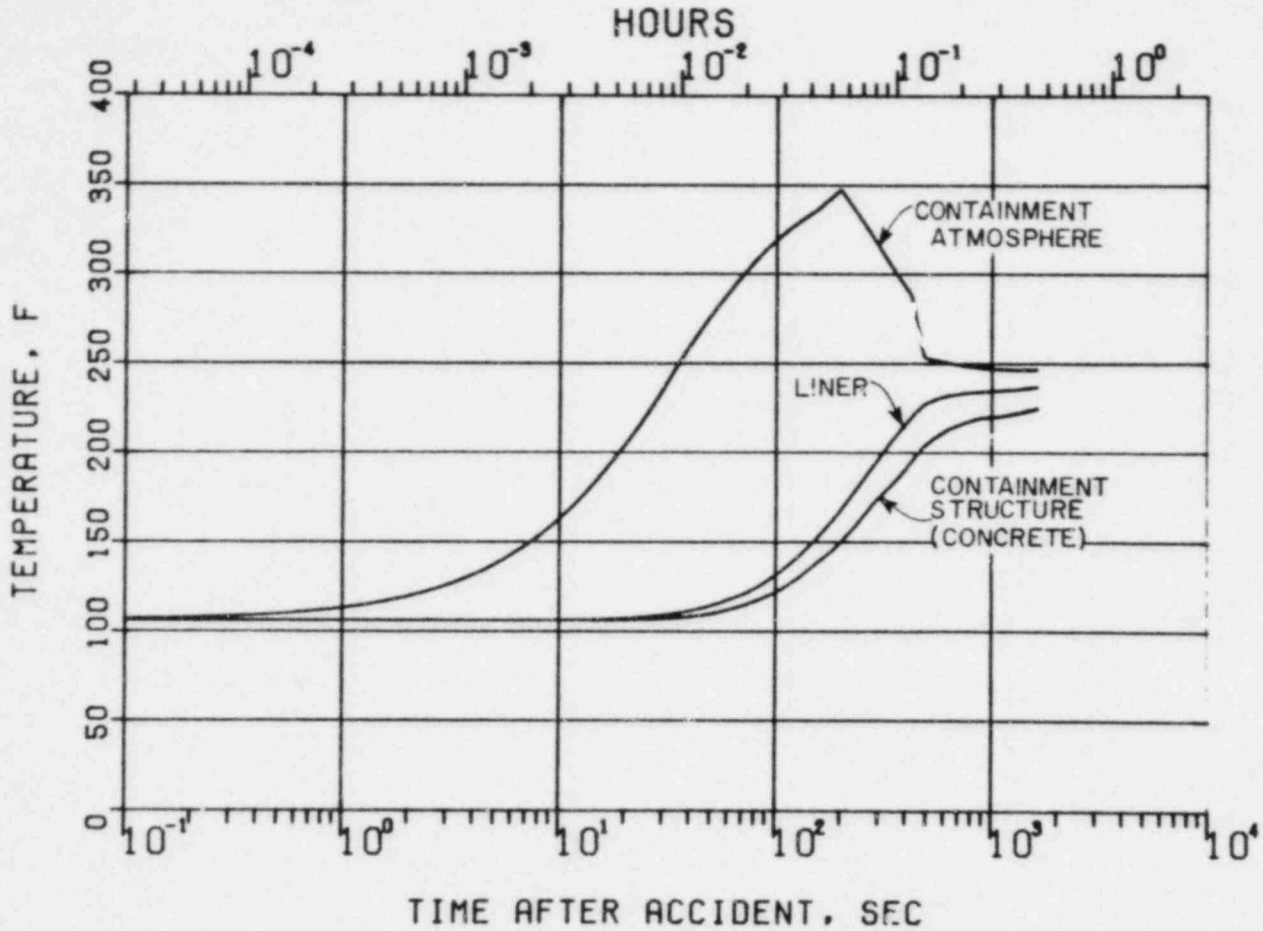

FIG. 6.2.1-53
CONTAINMENT TEMPERATURES FOR A 0.63 FT^2 SPLIT RUPTURE OF A MAIN STEAM LINE; 75% POWER FAILURE OF ONE ESF TRAIN
WISCONSIN UTILILITIES PROJECT
PRELIMINARY SAFETY ANALYSIS REPORT

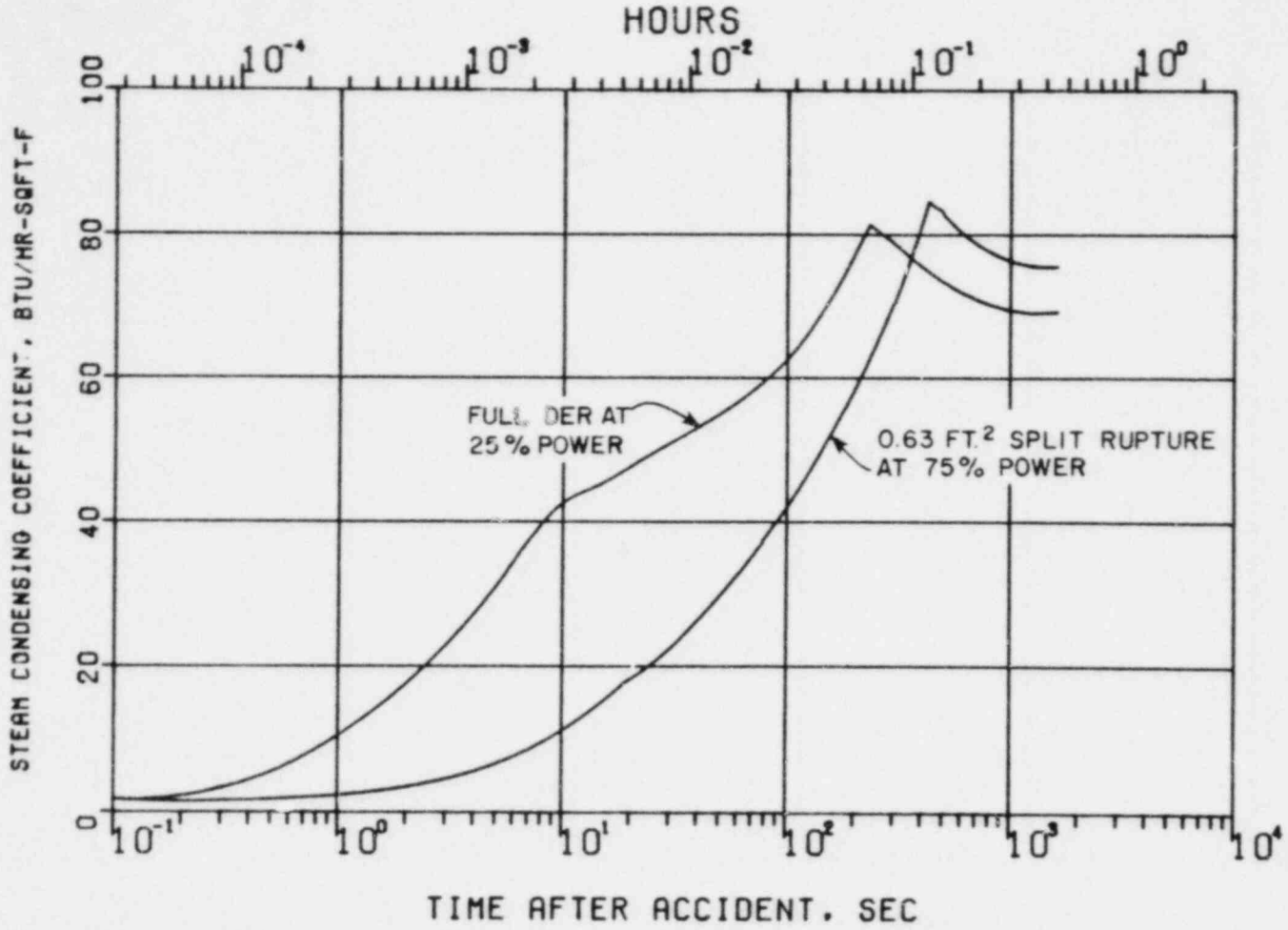

FIG. 6.2.1-54
STEAM CONDENSING COEFFICIENT (UCHIDA)
MAIN STEAM LINE BREAK
FAILURE OF ONE ESF TRAIN
WISCONSIN UTILITIES PROJECT
PRELIMINARY SAFETY ANALYSIS REPORT

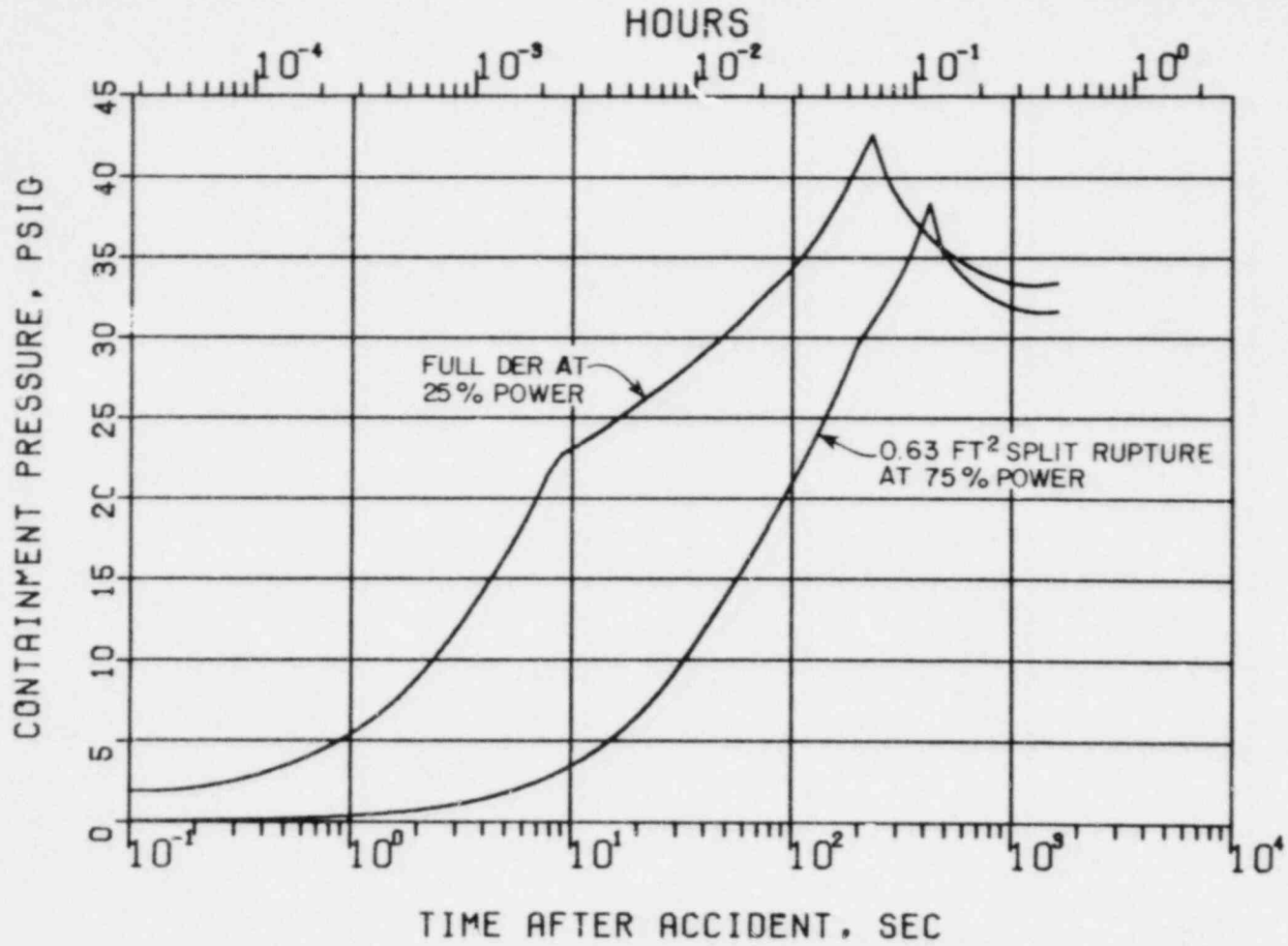

FIG. 6.2.1-55
CONTAINMENT PRESSURE
MAIN STEAM LINE BREAK
FAILURE OF ONE ESF TRAIN
WISCONSIN UTILITIES PROJECT
PRELIMINARY SAFETY ANALYSIS REPORT

AMENDMENT 17

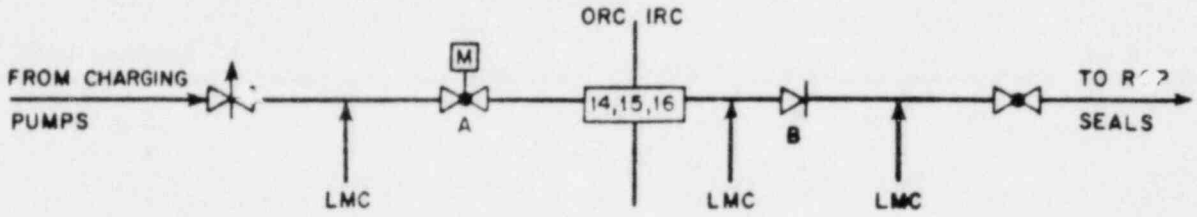

REACTOR COOLANT PUMP SEAL WATER SUPPLY

VALVES A,B-*NORMALLY TESTED-TYPE C
GDC-55

NOTES:

REFER TO TABLE 6.2.4-1

*REFER TO SECTION 6.2.1.4

FIG. 6.2.4-1
ARRANGEMENT FOR TYPE C LEAK TEST
WISCONSIN UTILITIES PROJECT
PRELIMINARY SAFETY ANALYSIS REPORT

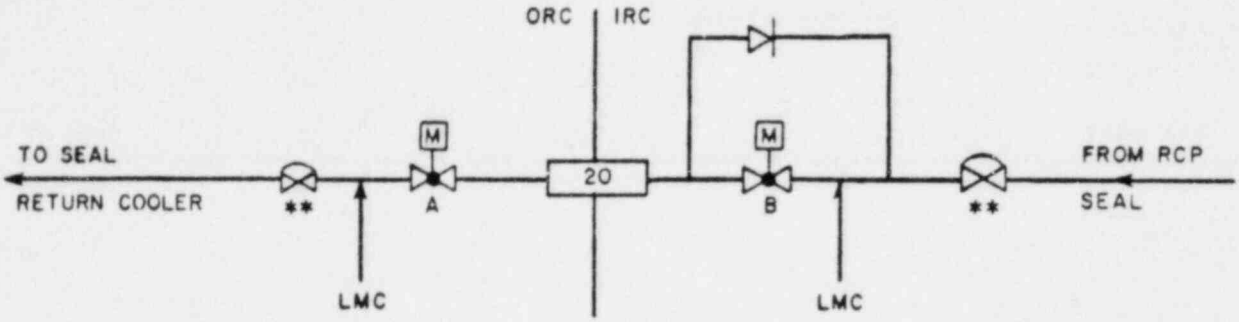

REACTOR COOLANT PUMP SEAL WATER RETURN

VALVES A,B - *NORMALLY TESTED - TYPE C
GDC-55

NOTES:

REFER TO TABLE 6.2.4-1

*REFER TO SECTION 6.2.1.4

** VALVES OR TEST BARRIERS ADDED TO FACILITATE LEAK TESTING

FIG. 6.2.4-2
ARRANGEMENT FOR TYPE C LEAK TEST
WISCONSIN UTILITIES PROJECT
PRELIMINARY SAFETY ANALYSIS REPORT

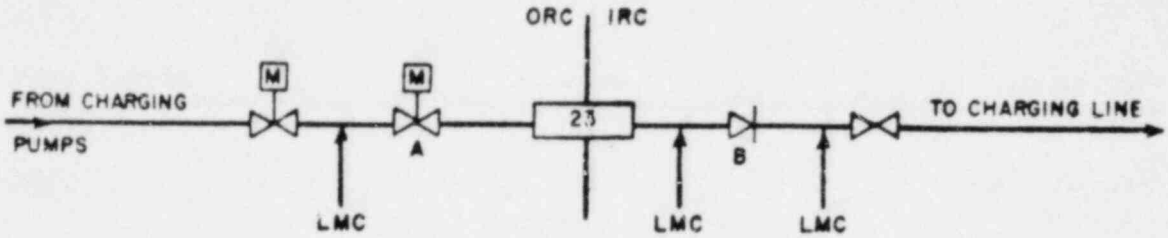

NORMAL CHARGING

VALVES A,B* - NORMALLY TESTED - TYPE C
GDC-55

NOTES:

REFER TO TABLE 6.2.4-1

*REFER TO SECTION 6.2.1.4

FIG. 6.2.4-3
ARRANGEMENT FOR TYPE C LEAK TEST
WISCONSIN UTILITIES PROJECT
PRELIMINARY SAFETY ANALYSIS REPORT

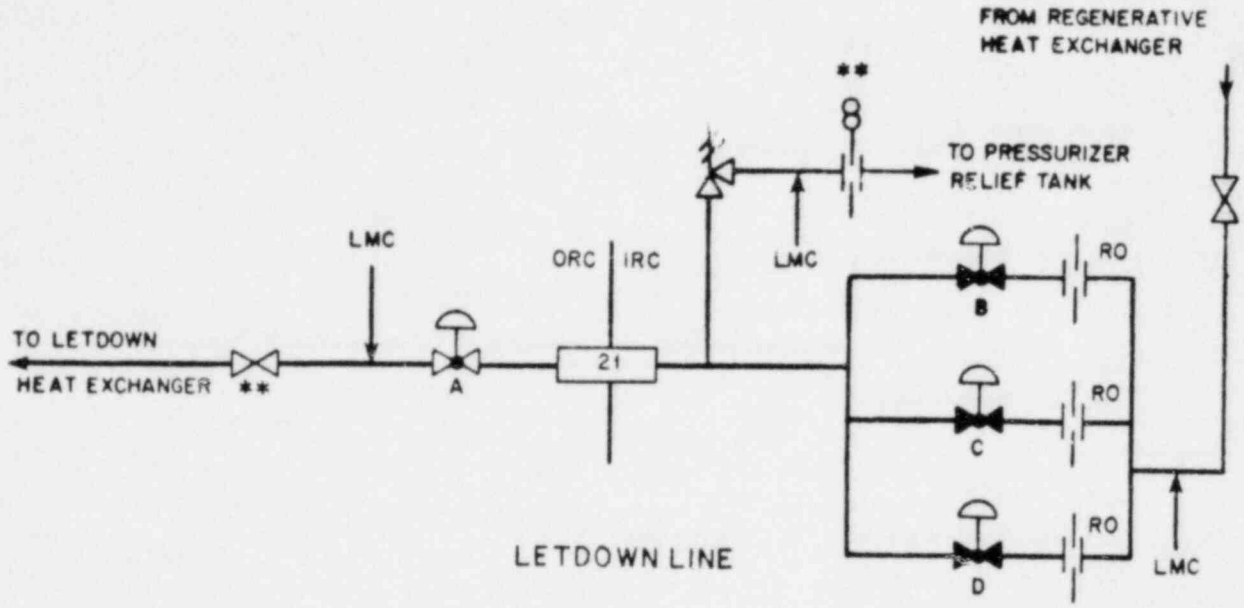

VALVES A, B, C, D - *NORMALLY TESTED - TYPE C
GDC - 55

NOTES:

REFER TO TABLE 6.2.4-1

*REFER TO SECTION 6.2.1.4

**VALVE OR TEST BARRIER ADDED TO FACILITATE LEAK TESTING

FIG. 6.2.4-4
ARRANGEMENT FOR TYPE C LEAK TEST
WISCONSIN UTILITIES PROJECT
PRELIMINARY SAFETY ANALYSIS REPORT

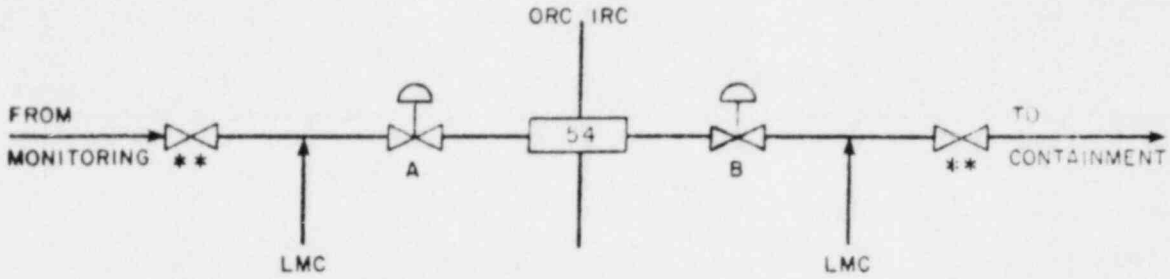

RADIATION MONITORING RETURN

VALVES A, B - *NORMALLY TESTED - TYPE C
GDC-56

NOTES:

REFER TO TABLE 6.2.4-1
*REFER TO SECTION 6.2.1.4
**VALVES OR TEST BARRIER ADDED TO FACILITATE LEAK TESTING

FIG. 6.2.4-5
ARRANGEMENT FOR TYPE C LEAK TEST
WISCONSIN UTILITIES PROJECT
PRELIMINARY SAFETY ANALYSIS REPORT

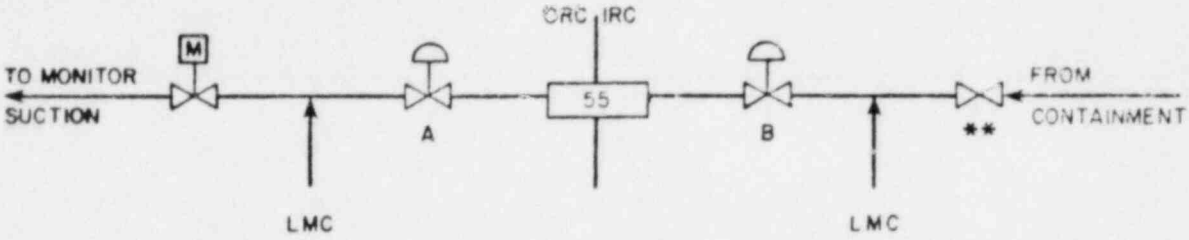

RADIATION MONITORING SUCTION

VALVES A, B - *NORMALLY TESTED - TYPE C
GDC - 56

NOTES:

REFER TO TABLE 6.2.4 - 1

*REFER TO SECTION 6.2.1.4

** VALVE OR TEST BARRIER ADDED TO FACILITATE LEAK TESTING

FIG. 6.2.4 - 6
ARRANGEMENT FOR TYPE C LEAK TEST
WISCONSIN UTILITIES PROJECT
PRELIMINARY SAFETY ANALYSIS REPORT

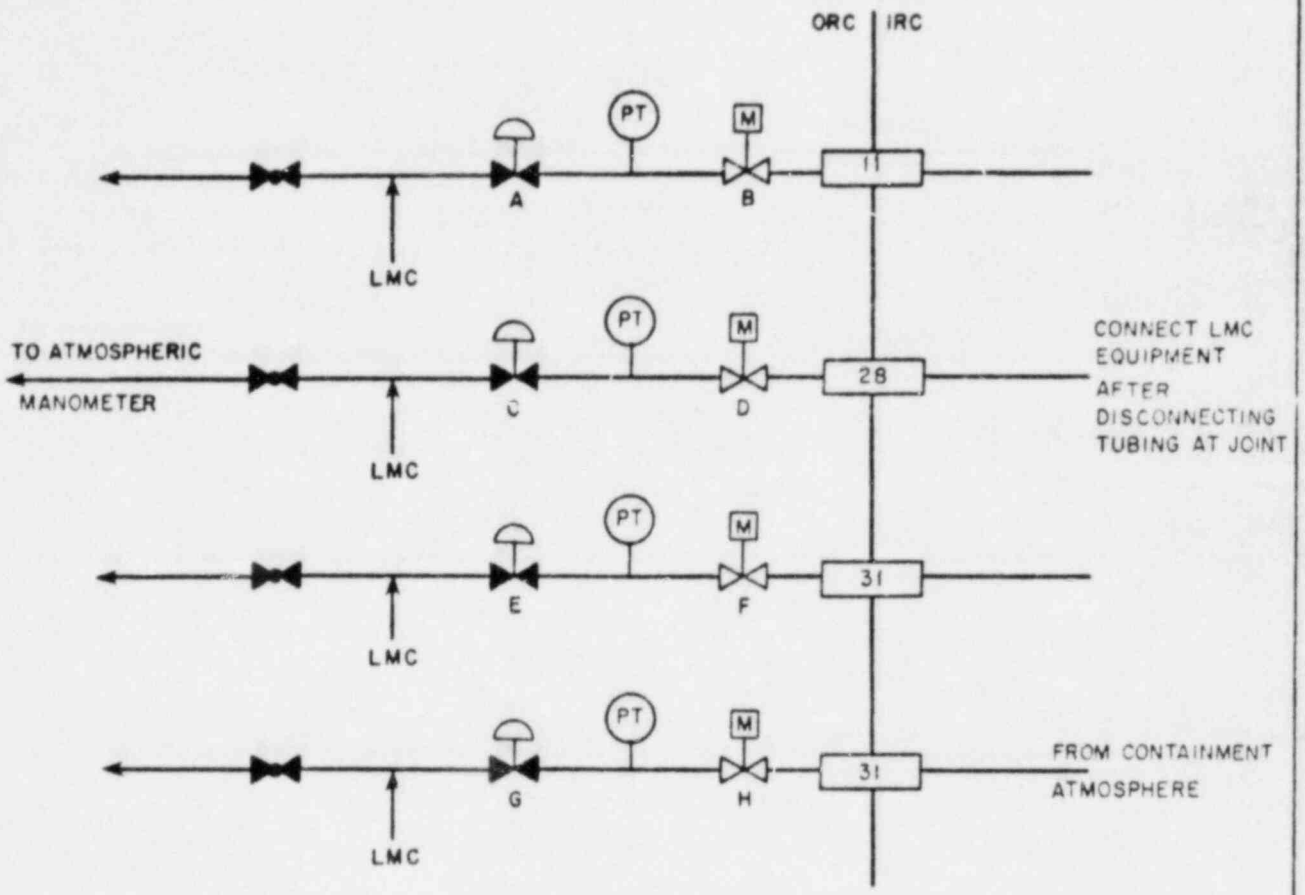

REACTOR CONTAINMENT LEAKAGE
MONITORING LINES TO OPEN TAPS

VALVES A,C,E,G - *NORMALLY TESTED - TYPE C
VALVES B,D,F,D - *NORMALLY TESTED - TYPE C
GDC-56

NOTES:
REFER TO TABLE 6.2.4-1
*REFER TO SECTION 6.2.1.4

FIG. 6.2.4-7
ARRANGEMENT FOR TYPE C LEAK TEST
WISCONSIN UTILITIES PROJECT
PRELIMINARY SAFETY ANALYSIS REPORT

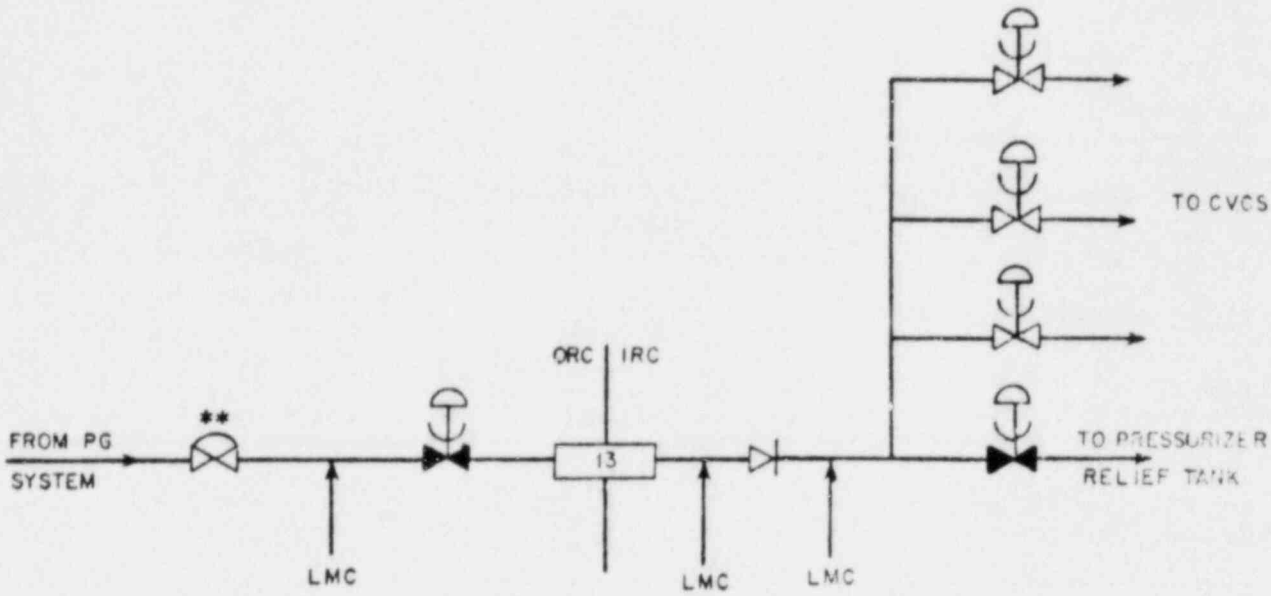

PRIMARY GRADE WATER TO REACTOR CONTAINMENT

VALVES A,B* - NORMALLY TESTED - TYPE C
GDC - 57

NOTES:

REFER TO TABLE 6.2.4-1

*REFER TO SECTION 6.2.1.4

** VALVE OR TEST BARRIER ADDED TO FACILITATE LEAK TESTING

FIG. 6.2.4-6
ARRANGEMENT FOR TYPE C LEAK TEST
WISCONSIN UTILITIES PROJECT
PRELIMINARY SAFETY ANALYSIS REPORT

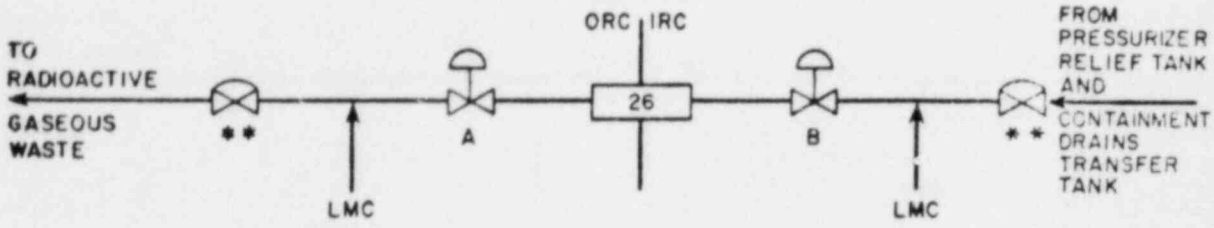

PRESSURIZER RELIEF &
CONTAINMENT DRAINS TRANSFER TANK VENTS

VALVES A, B - *NORMALLY TESTED - TYPE C
GDC - 56

NOTES:

REFER TO TABLE 6.2.4-1

* REFER TO SECTION 6.2.1.4

** VALVE OR TEST BARRIER ADDED
TO FACILITATE LEAK TESTING

FIG. 6.2.4-9
ARRANGEMENT FOR TYPE C LEAK TEST
WISCONSIN UTILITIES PROJECT
PRELIMINARY SAFETY ANALYSIS REPORT

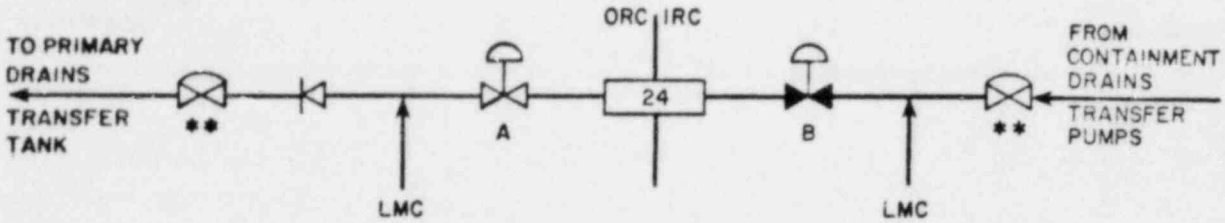

DISCHARGE FROM
CONTAINMENT DRAINS TRANSFER PUMPS

VALVES A, B - *NORMALLY TESTED - TYPE C
GDC - 56

NOTES:

REFER TO TABLE 6.2.4-1

* REFER TO SECTION 6.2.1.4

** VALVE OR TEST BARRIER ADDED
TO FACILITATE LEAK TESTING

FIG. 6.2.4-10
ARRANGEMENT FOR TYPE C LEAK TEST
WISCONSIN UTILITIES PROJECT
PRELIMINARY SAFETY ANALYSIS REPORT

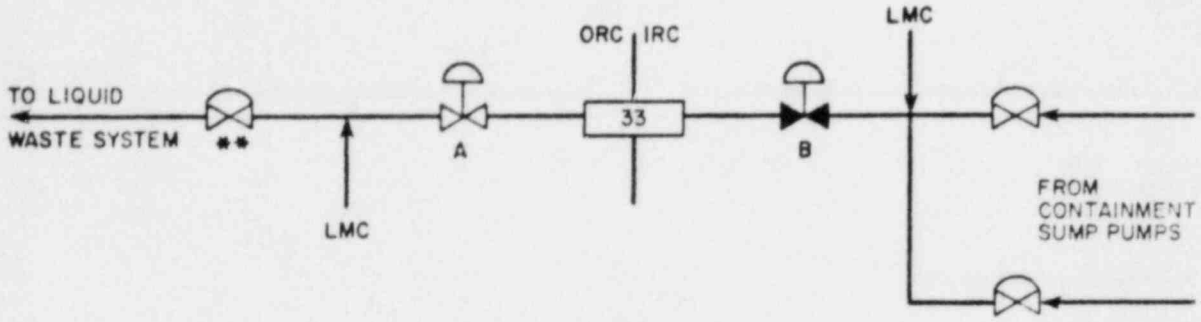

CONTAINMENT SUMP PUMP DISCHARGE

VALVES A, B* NORMALLY TESTED - TYPE C
GDC - 56

NOTES:

REFER TO TABLE 6.2.4-1

* REFER TO SECTION 6.2.1.4

** VALVE OR TEST BARRIER ADDED TO FACILITATE LEAK TESTING

FIG. 6.2.4-11
ARRANGEMENT FOR TYPE C LEAK TEST
WISCONSIN UTILITIES PROJECT
PRELIMINARY SAFETY ANALYSIS REPORT

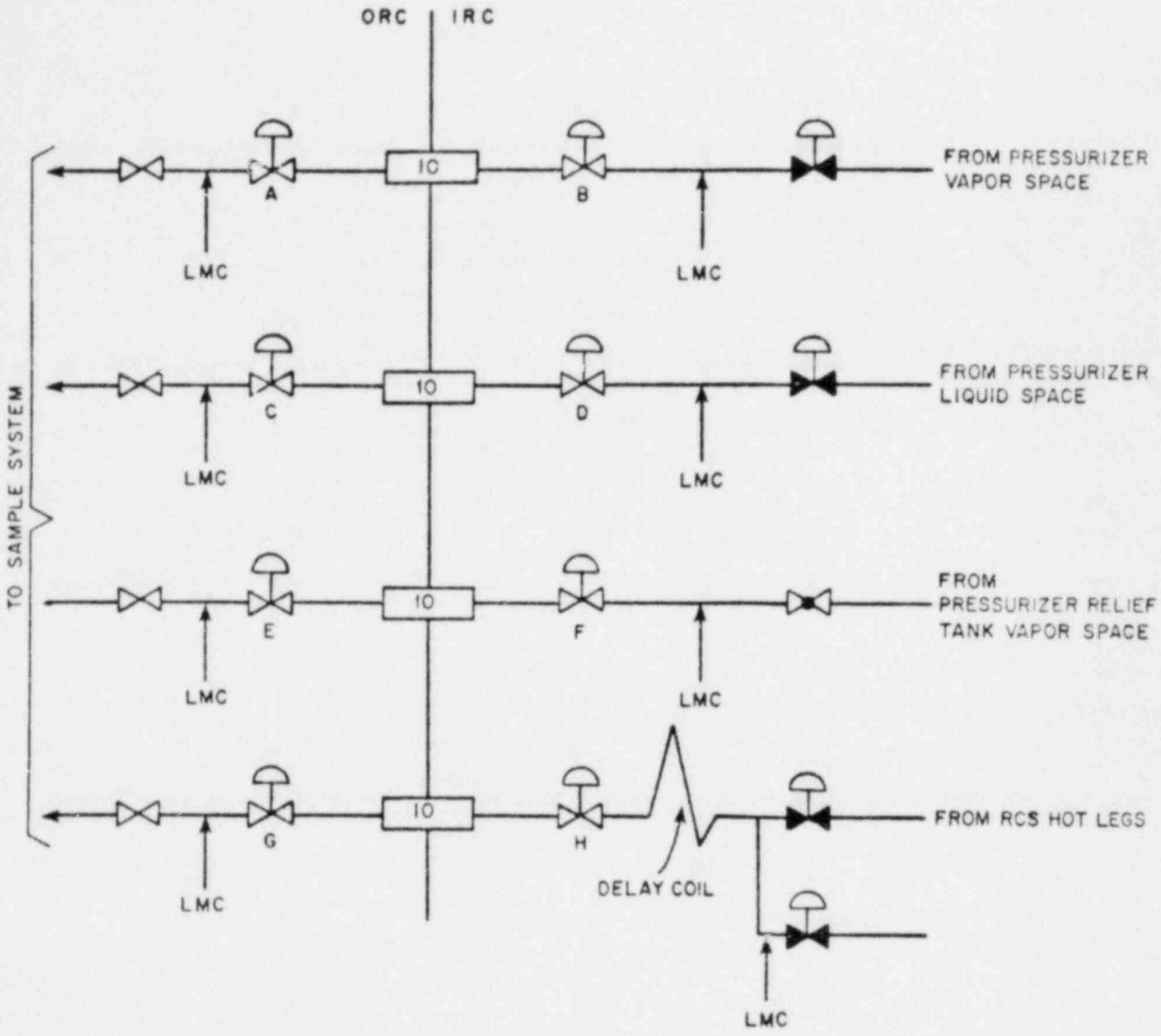

PRESSURIZER VAPOR, LIQUID, RELIEF TANK GAS SPACES & REACTOR COOLANT HOT LEG SAMPLES

VALVES A, C, E, G - *NORMALLY TESTED - TYPE C
VALVES B, D, F, H - *NORMALLY TESTED - TYPE C

NOTES
REFER TO TABLE 6.2.4-1
*REFER TO SECTION 6.2.1.4

FIG. 6.2.4-12
ARRANGEMENT FOR TYPE C LEAK TEST
WISCONSIN UTILITIES PROJECT
PRELIMINARY SAFETY ANALYSIS REPORT

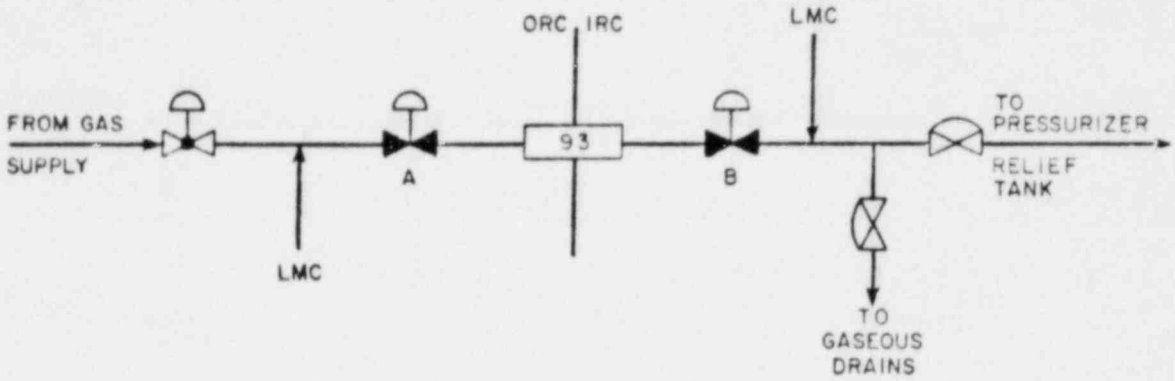

PRESSURIZER RELIEF TANK NITROGEN SUPPLY

VALVES A, B - *NORMALLY TESTED - TYPE C
GDC - 55

NOTES:
REFER TO TABLE 6.2.4-1
*REFER TO SECTION 6.2.1.4

FIG. 6.2.4-13
ARRANGEMENT FOR TYPE C LEAK TEST
WISCONSIN UTILITIES PROJECT
PRELIMINARY SAFETY ANALYSIS REPORT

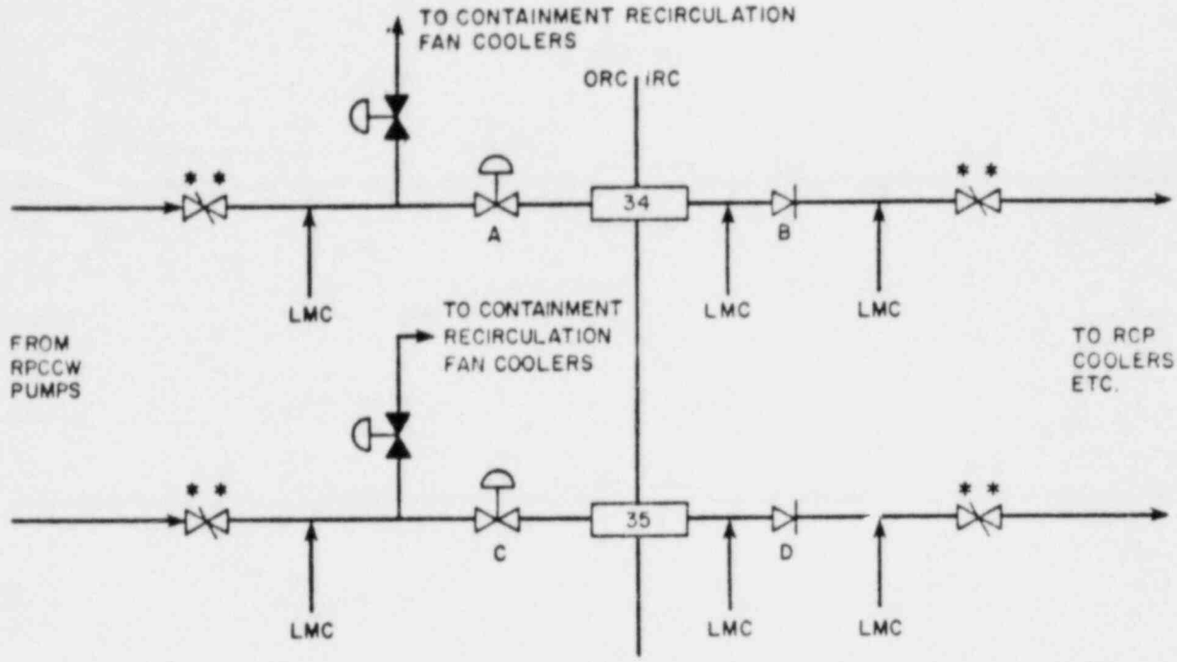

COMPONENT COOLING WATER TO RCP'S AND NONSAFETY - RELATED CONTAINMENT EQUIPMENT

VALVES A,B,C,D - *NORMALLY TESTED - TYPE C
GDC - 57

NOTES:
REFER TO TABLE 6.2.4-1
*REFER TO SECTION 6.2.1.4
* *VALVE OR TEST BARRIER ADDED TO FACILITATE LEAK TESTING

FIG. 6.2.4-14
ARRANGEMENT FOR TYPE C LEAK TEST
WISCONSIN UTILITIES PROJECT
PRELIMINARY SAFETY ANALYSIS REPORT

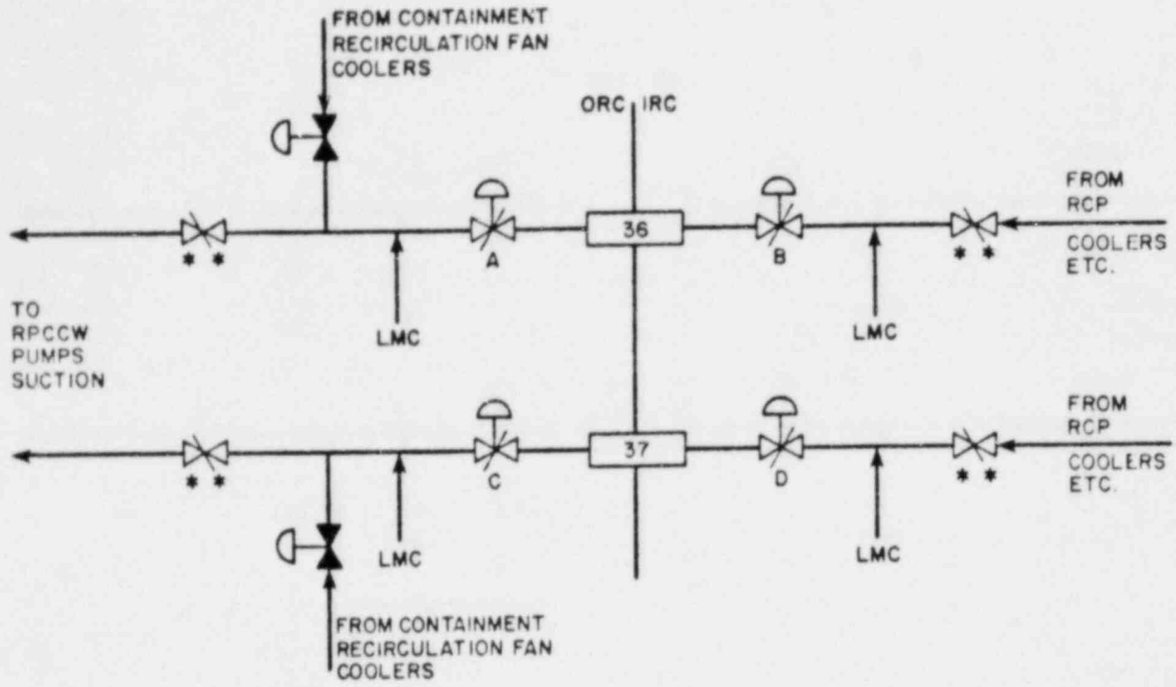

COMPONENT COOLING WATER FROM RCP'S AND
NONSAFETY - RELATED CONTAINMENT EQUIPMENT

VALVES A,B,C,D - *NORMALLY TESTED - TYPE C
GDC - 57

NOTES:

REFER TO TABLE 6.2.4-1
*REFER TO SECTION 6.2.1.4
* *VALVE OR TEST BARRIER ADDED
TO FACILITATE LEAK TESTING

FIG. 6.2.4-15
ARRANGEMENT FOR TYPE C LEAK TEST
WISCONSIN UTILITIES PROJECT
PRELIMINARY SAFETY ANALYSIS REPORT

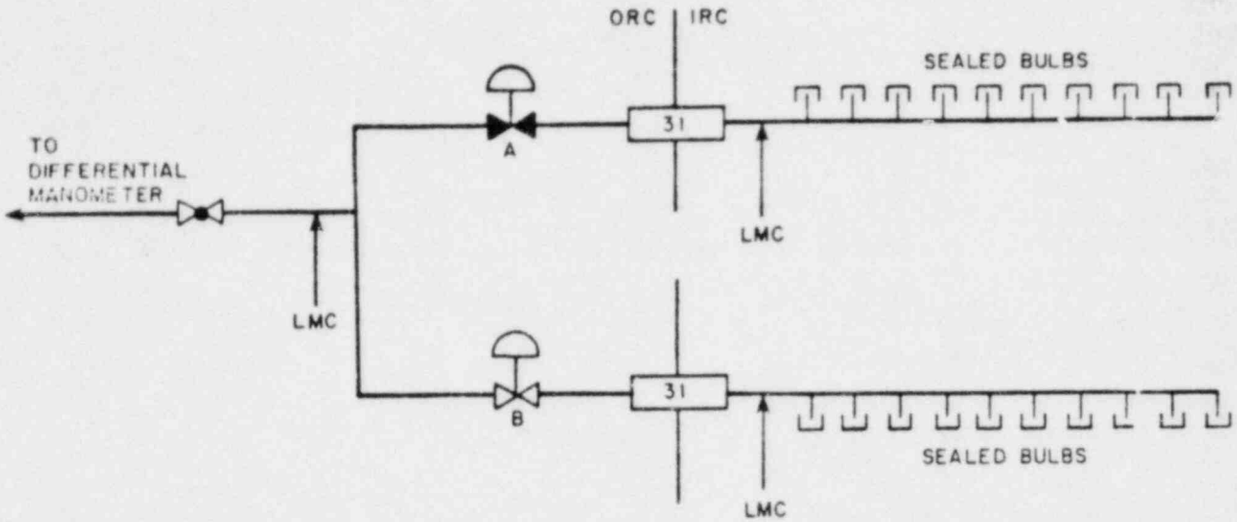

REACTOR CONTAINMENT LEAKAGE MONITORING
LINES TO SEALED BULBS

VALVES A,B:*NORMALLY TESTED - TYPE C
GDC - 57

NOTES:

REFER TO TABLE 6.2.4-1

*REFER TO SECTION 6.2.1.4

FIG. 6.2.4-16
ARRANGEMENT FOR TYPE C LEAK TEST
WISCONSIN UTILITIES PROJECT
PRELIMINARY SAFETY ANALYSIS REPORT

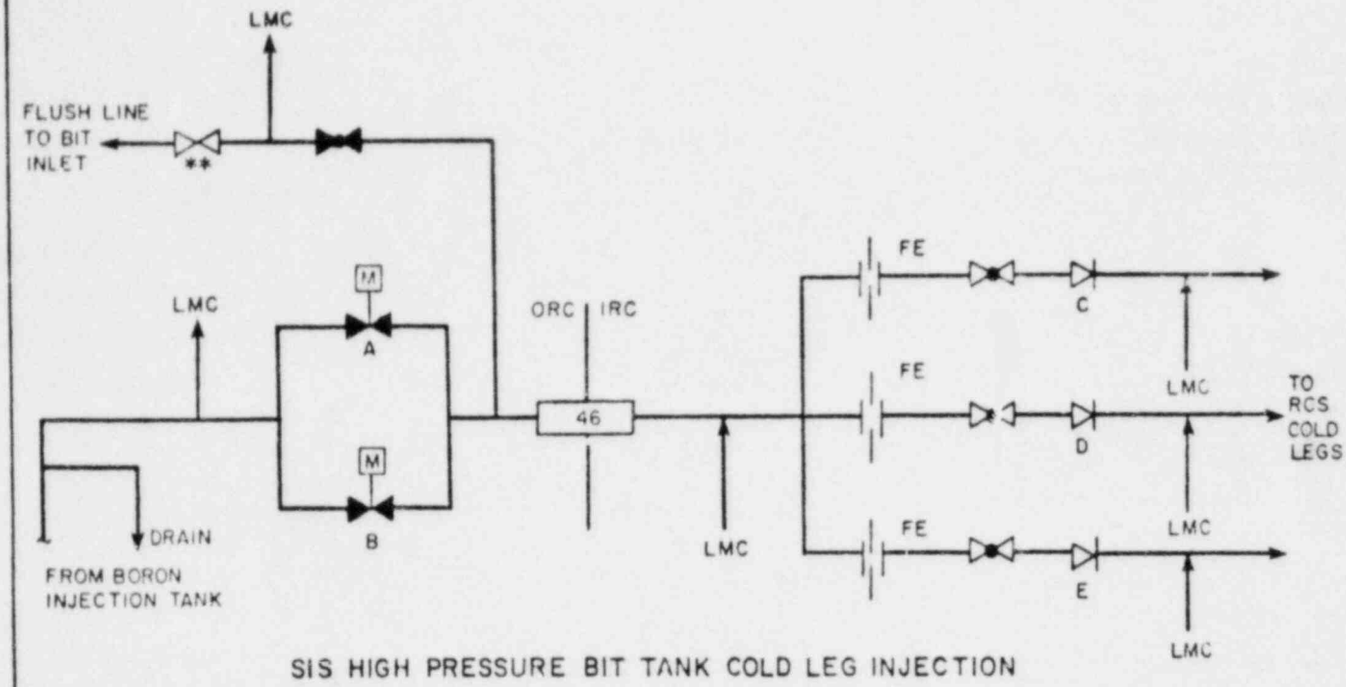

SIS HIGH PRESSURE BIT TANK COLD LEG INJECTION

VALVES A, B, C, D, E - *NORMALLY TESTED - TYPE C
GDC - 55

NOTES:

REFER TO TABLE 6.2.4-1
*REFER TO SECTION 6.2.1.4

FIG. 6.2.4-17
ARRANGEMENT FOR TYPE C LEAK TEST
WISCONSIN UTILITIES PROJECT
PRELIMINARY SAFETY ANALYSIS REPORT

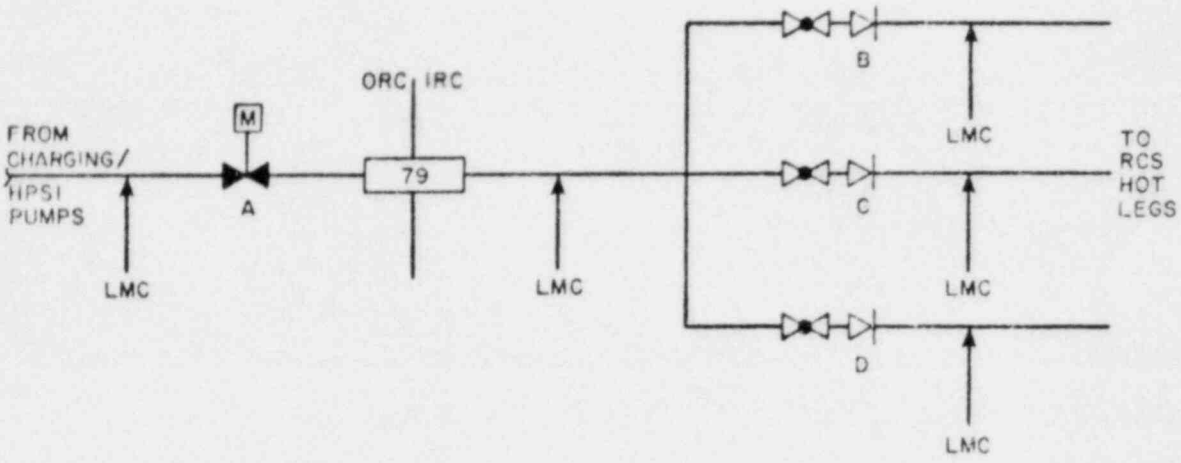

SIS HIGH PRESSURE HOT LEG INJECTION

VALVES A,B,C,D - *NORMALLY TESTED TYPE C
GDC - 55

NOTES
REFER TO TABLE 6 2 4-1
*REFER TO SECTION 6 2 1.4

FIG. 6 2.4 - 18
ARRANGEMENT FOR TYPE C LEAK TEST
WISCONSIN UTILITIES PROJECT
PRELIMINARY SAFETY ANALYSIS REPORT

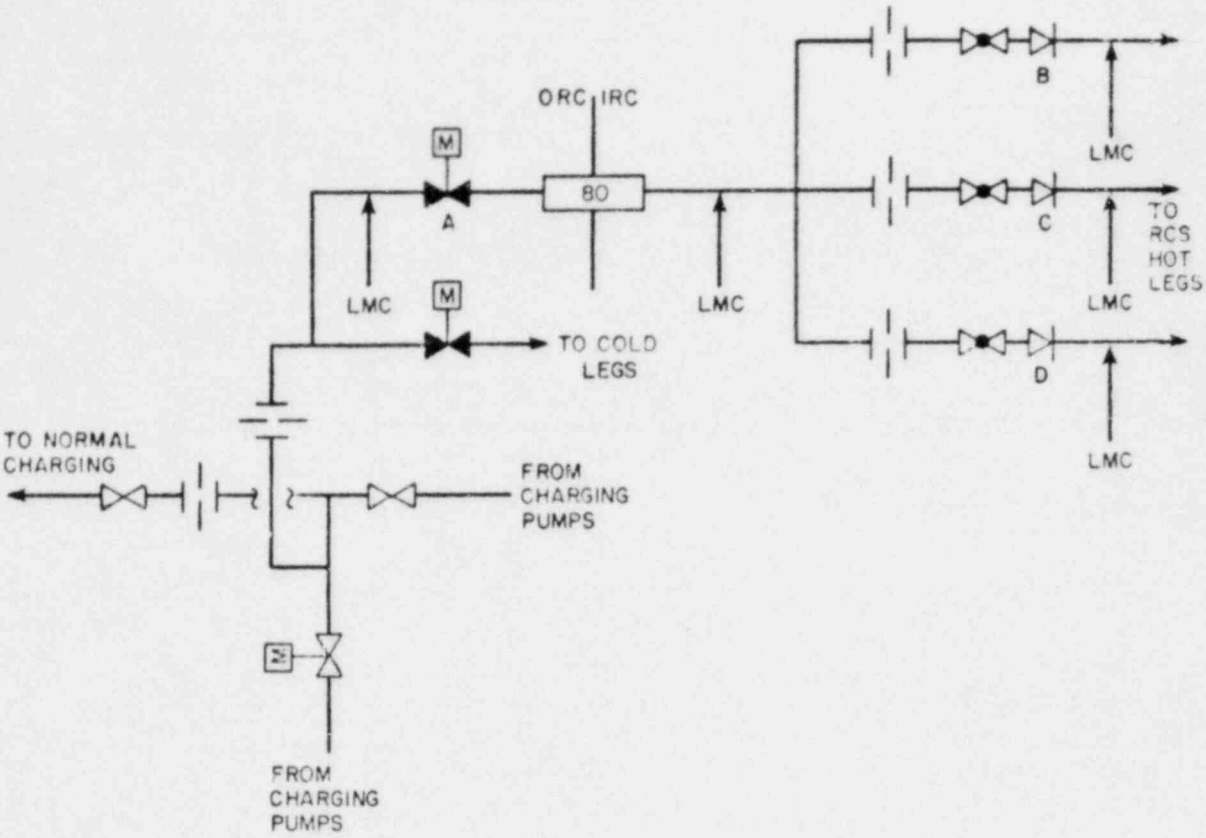

SIS HIGH PRESSURE HOT LEG INJECTION

VALVES A,B,C,D - *NORMALLY TESTED - TYPE C
GDC - 55

NOTES
REFER TO TABLE 6.2.4-1
*REFER TO SECTION 6.2.1.4

FIG. 6.2.4-19
ARRANGEMENT FOR TYPE C LEAK TEST
WISCONSIN UTILITIES PROJECT
PRELIMINARY SAFETY ANALYSIS REPORT

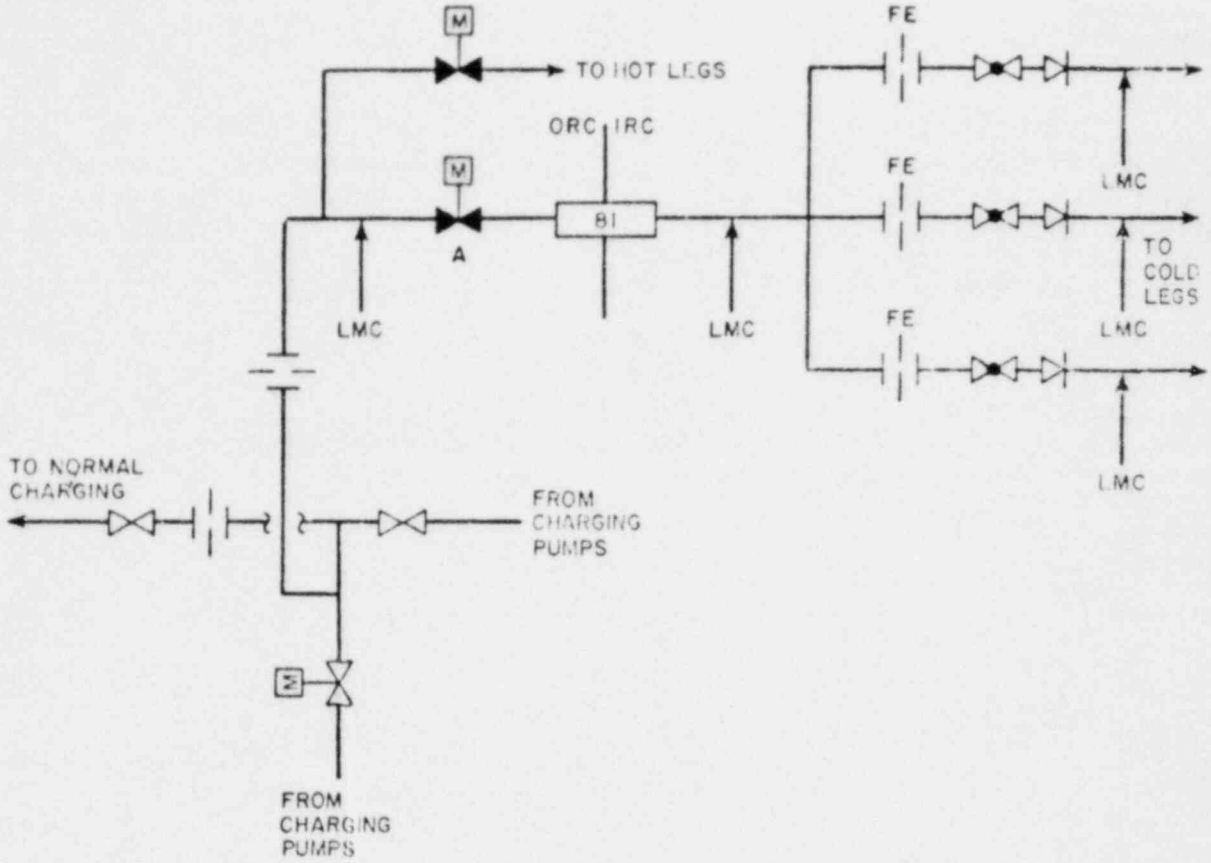

SIS ALTERNATE HIGH PRESSURE COLD LEG INJECTION

VALVES A,B,C,D - *NORMALLY TESTED TYPE C
GDC - 55

NOTES

REFER TO TABLE 6.2.4-1
*REFER TO SECTION 6.2.14

FIG. 6.2.4-20
ARRANGEMENT FOR TYPE C LEAK TEST
WISCONSIN UTILITIES PROJECT
PRELIMINARY SAFETY ANALYSIS REPORT

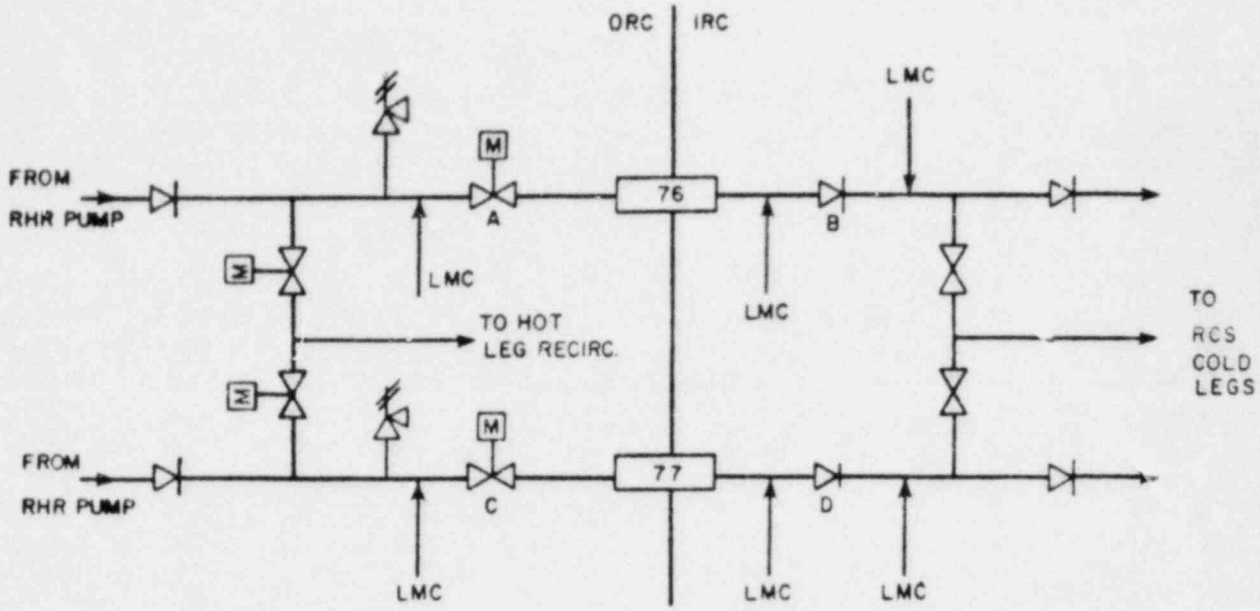

SIS LOW PRESSURE COLD LEG INJECTION

VALVES A,B,C,D* NORMALLY TESTED-TYPE C
GDC - 55

NOTES:

REFER TO TABLE 6.2.4-1
*REFER TO SECTION 6.2.1.4

FIG. 6.2.4-21
ARRANGEMENT FOR TYPE C LEAK TEST
WISCONSIN UTILITIES PROJECT
PRELIMINARY SAFETY ANALYSIS REPORT

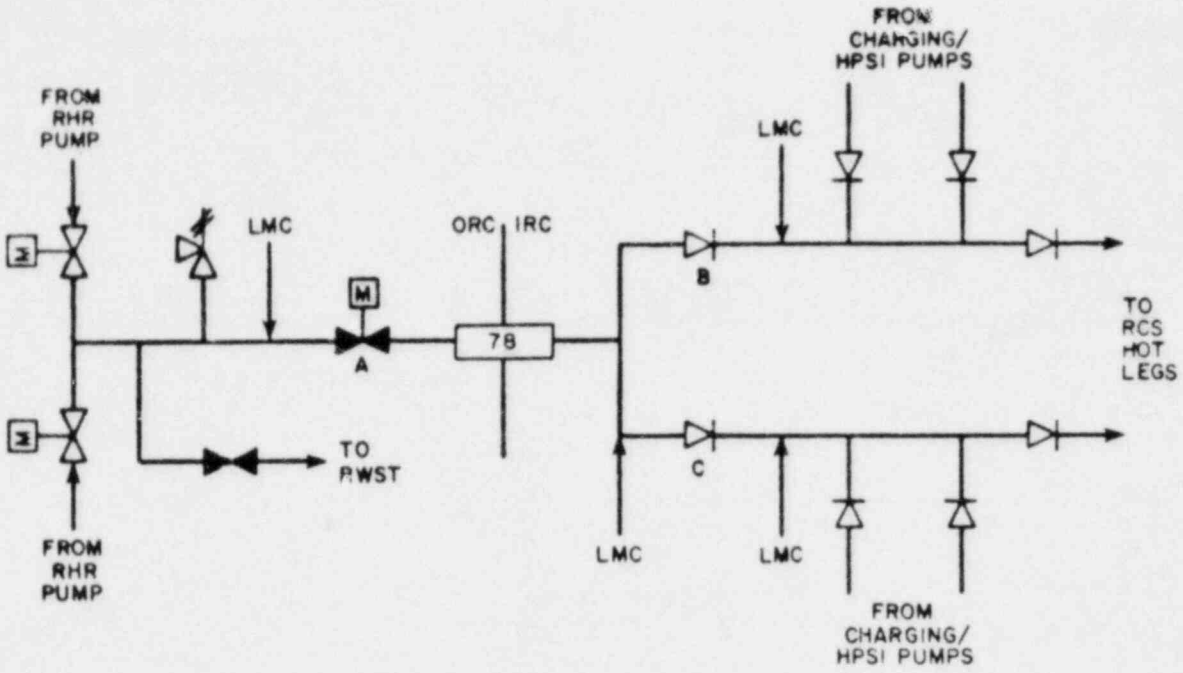

SIS LOW PRESSURE HOT LEG RECIRCULATION

VALVES A, B, C- *NORMALLY TESTED - TYPE C
GDC-55

NOTES

REFER TO TABLE 6.2.4-1

*REFER TO SECTION 6.2.1.4

FIG. 6.2.4-22
ARRANGEMENT FOR TYPE C LEAK TEST
WISCONSIN UTILITIES PROJECT
PRELIMINARY SAFETY ANALYSIS REPORT

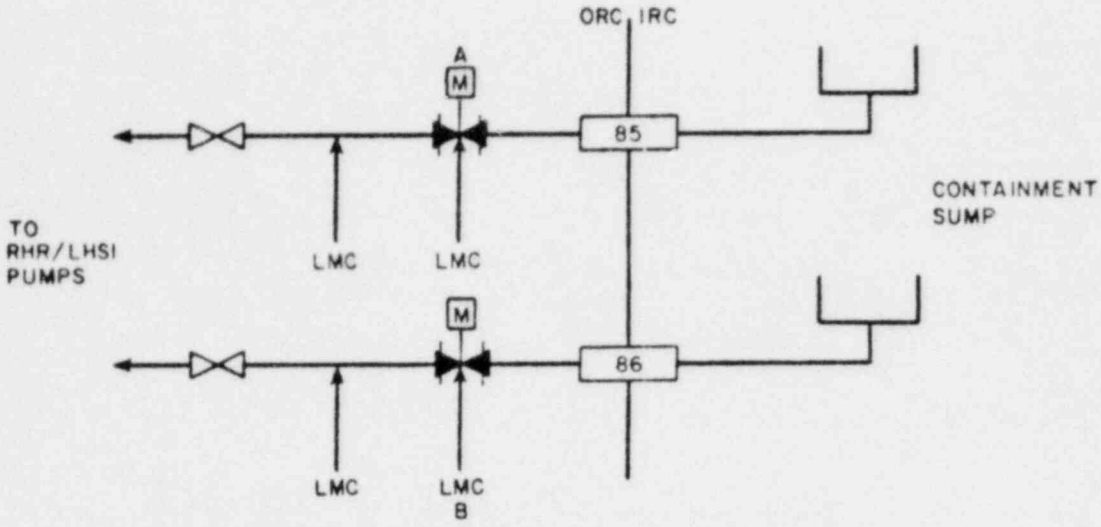

LOW HEAD S.I. SUCTION FROM CONTAINMENT SUMP

VALVES A, B - *SPLIT WEDGE GATE VALVE WITH A TEST CONNECTION BETWEEN SEATS - TYPE C TESTED

GDC - 56

NOTES:

REFER TO TABLE 6.2.4-1

*REFER TO SECTION 6.2.1.4

FIG. 6.2.4-23

ARRANGEMENT FOR TYPE C LEAK TEST

WISCONSIN UTILITIES PROJECT

PRELIMINARY SAFETY ANALYSIS REPORT

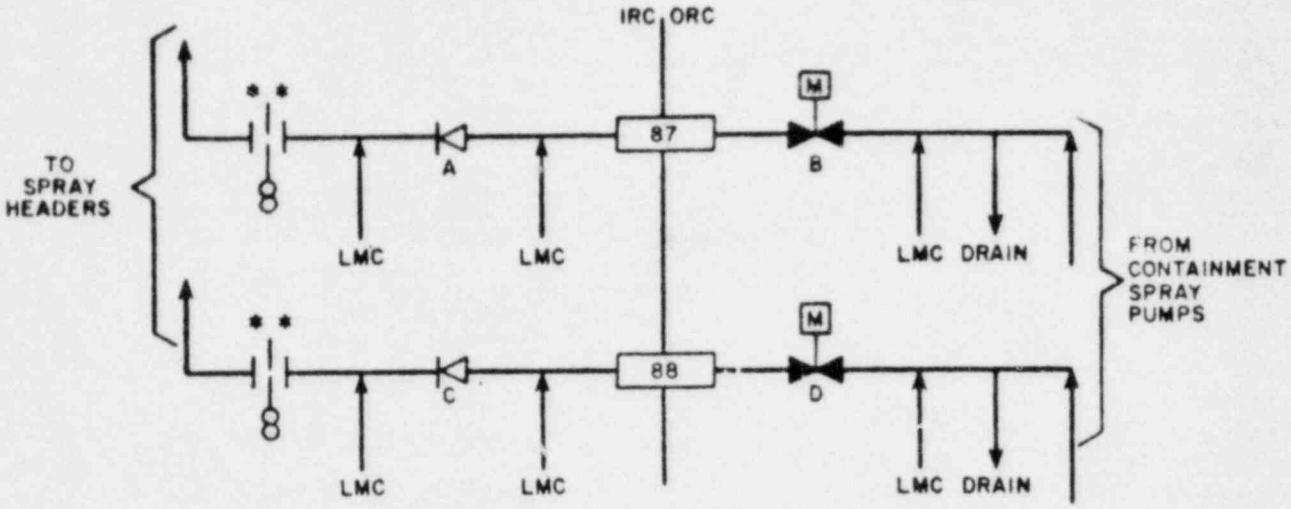

CONTAINMENT SPRAY PUMP DISCHARGE

VALVES A, B, C, D - *NORMALLY TESTED - TYPE C
GDC-56

NOTES:

REFER TO TABLE 6.2.4-1

*REFER TO SECTION 6.2.1.4

**VALVE OR TEST BARRIER ADDED TO FACILITATE LEAK TESTING

FIG. 6.2.4-24
ARRANGEMENT FOR TYPE C LEAK TEST
WISCONSIN UTILITIES PROJECT
PRELIMINARY SAFETY ANALYSIS REPORT

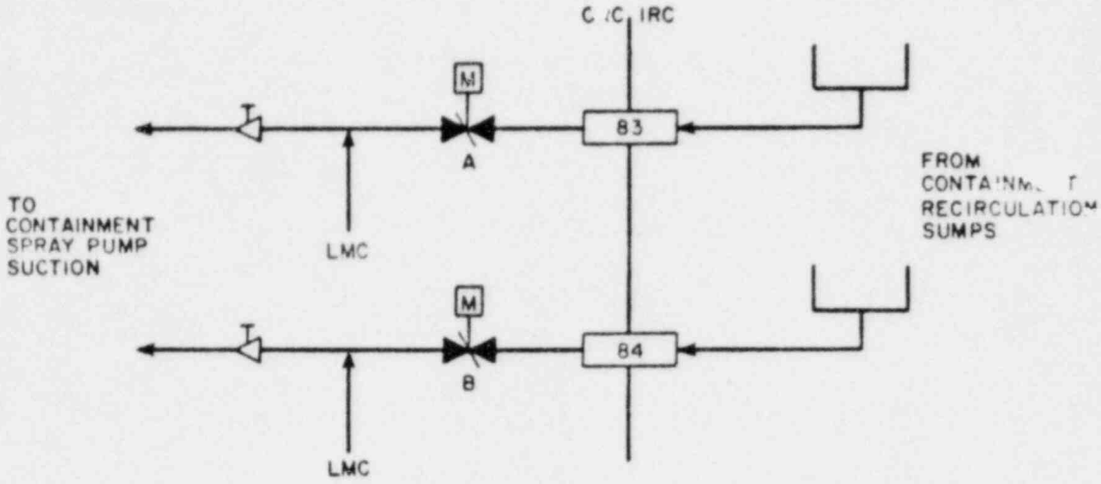

CONTAINMENT SPRAY PUMP SUCTION FROM CONTAINMENT SUMP

VALVES A, B - *REVERSE TESTED - TYPE C

GDC-56

NOTES:

REFER TO TABLE 6.2.4-1

*REFER TO SECTION 6.2.1.4

FIG. 6.2.4-25

ARRANGEMENT FOR TYPE C LEAK TEST

WISCONSIN UTILITIES PROJECT

PRELIMINARY SAFETY ANALYSIS REPORT

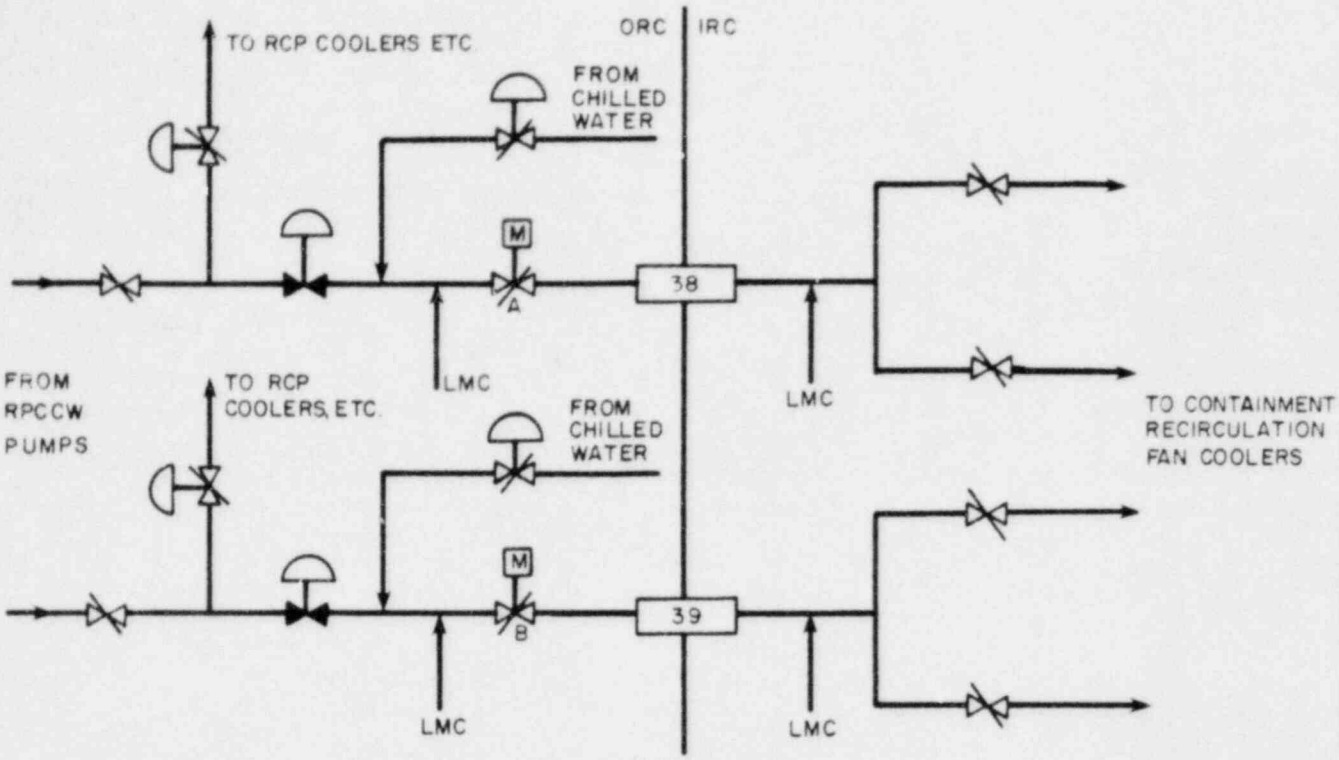

COMPONENT COOLING WATER TO CONTAINMENT FAN COOLING COILS

VALVES A,B* -NORMALLY TESTED-TYPE C
GDC-57

NOTES

*REFER TO SECTION 6.2.1.4
REFER TO TABLE 6.2.4-1

FIG. 6.2.4-26
ARRANGEMENT FOR TYPE C LEAK TEST
WISCONSIN UTILITIES PROJECT
PRELIMINARY SAFETY ANALYSIS REPORT

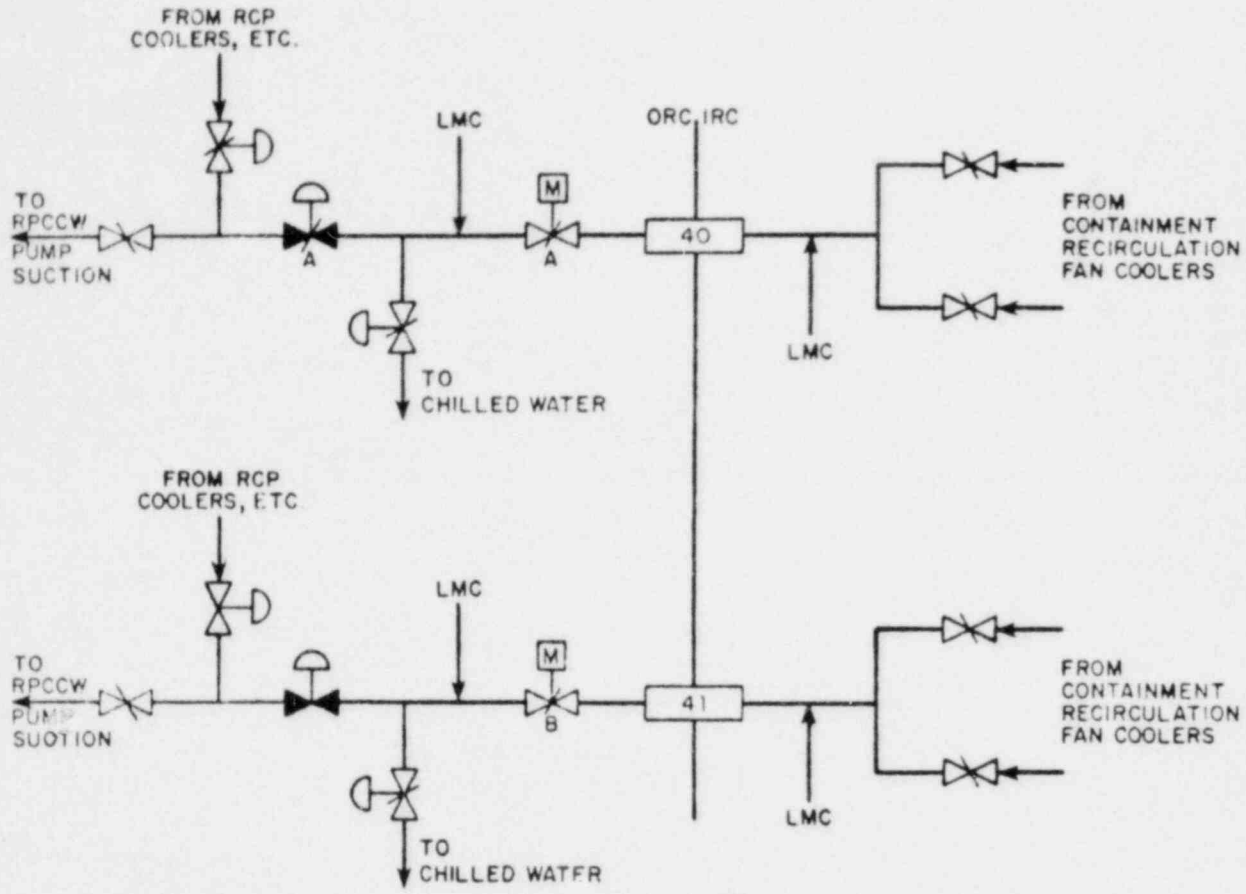

COMPONENT COOLING WATER FROM CONTAINMENT FAN COOLING COILS

VALVES A, B - *NORMALLY TESTED - TYPE C
GDC-57

NOTES:

REFER TO TABLE 6.2.4-1

*REFER TO SECTION 6.2.1.4

FIG. 6.2.4-27
ARRANGEMENT FOR TYPE C LEAK TEST
WISCONSIN UTILITIES PROJECT
PRELIMINARY SAFETY ANALYSIS REPORT

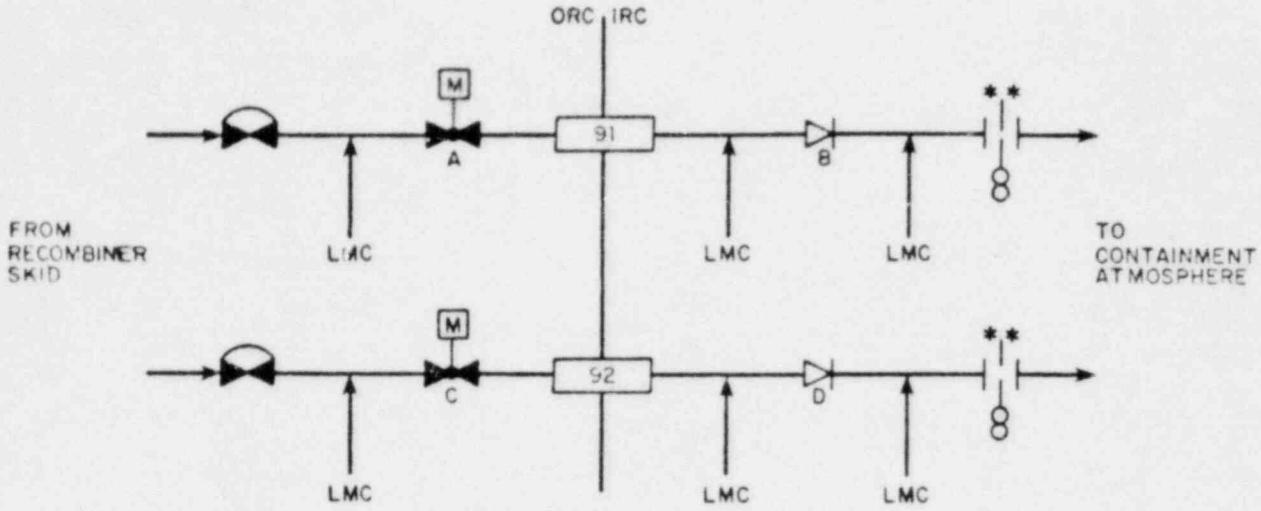

COMBUSTIBLE GAS CONTROL - RETURN

VALVES A, B, C, D - *NORMALLY TESTED - TYPE C

GDC - 56

NOTES:

REFER TO TABLE 6.2.4-1

*REFER TO SECTION 6.2.1.4

**VALVE OR TEST BARRIER ADDED TO FACILITATE LEAK TESTING

FIG. 6.2.4-28

ARRANGEMENT FOR TYPE C LEAK TEST

WISCONSIN UTILITIES PROJECT
PRELIMINARY SAFETY ANALYSIS REPORT

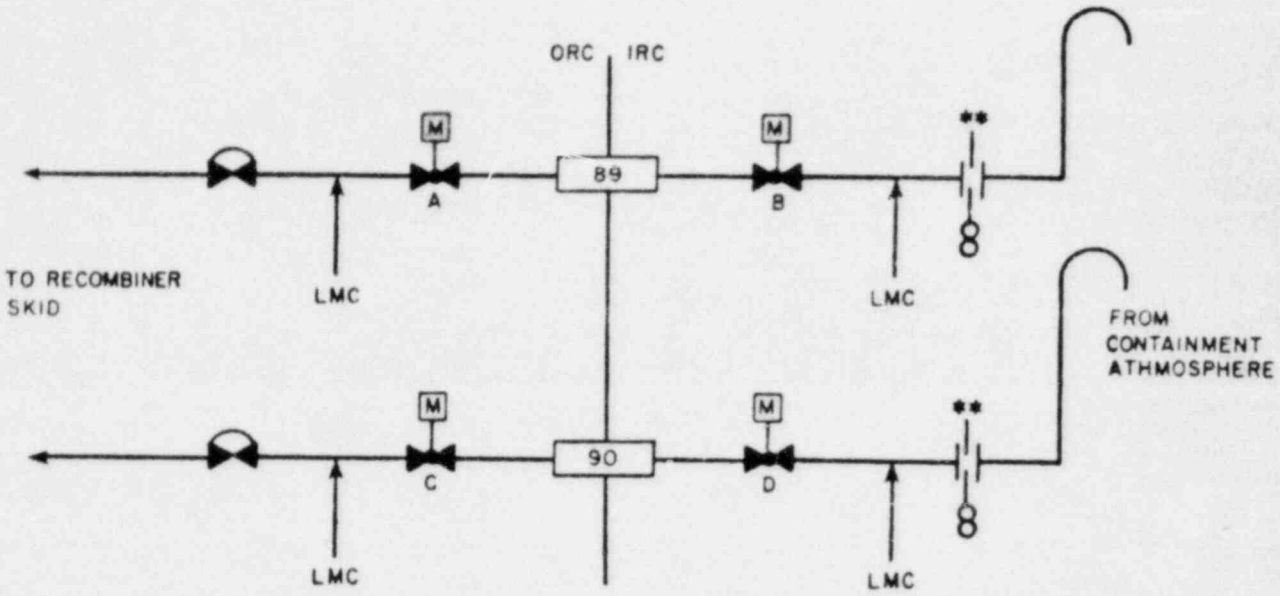

COMBUSTIBLE GAS CONTROL SUCTION

VALVES A,B,C,D-*NORMALLY TESTED TYPE C
GDC-56

NOTES:

REFER TO TABLE 6.2.4-1

*REFER TO SECTION 6.2.1.4

FIG. 6.2.4-29
ARRANGEMENT FOR TYPE C LEAK TEST
WISCONSIN UTILITIES PROJECT
PRELIMINARY SAFETY ANALYSIS REPORT

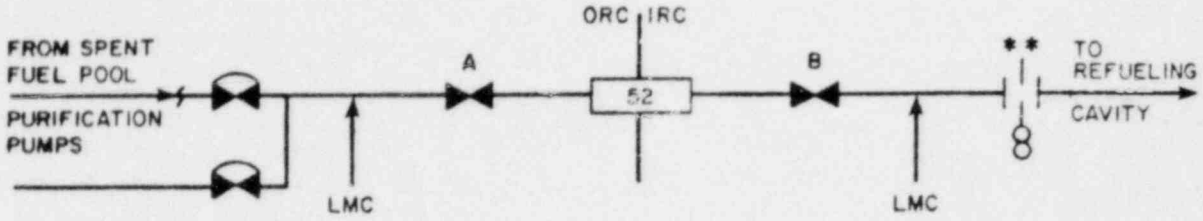

REACTOR CAVITY REFUELING PURIFICATION SUPPLY

VALVES A, B - *NORMALLY TESTED - TYPE C
GDC - 56

NOTES:

REFER TO TABLE 6.2.4-1

*REFER TO SECTION 6.2.1.4

** VALVE OR TEST BARRIER ADDED
TO FACILITATE LEAK TESTING

FIG. 6.2.4-30
ARRANGEMENT FOR TYPE C LEAK TEST
WISCONSIN UTILITIES PROJECT
PRELIMINARY SAFETY ANALYSIS REPORT

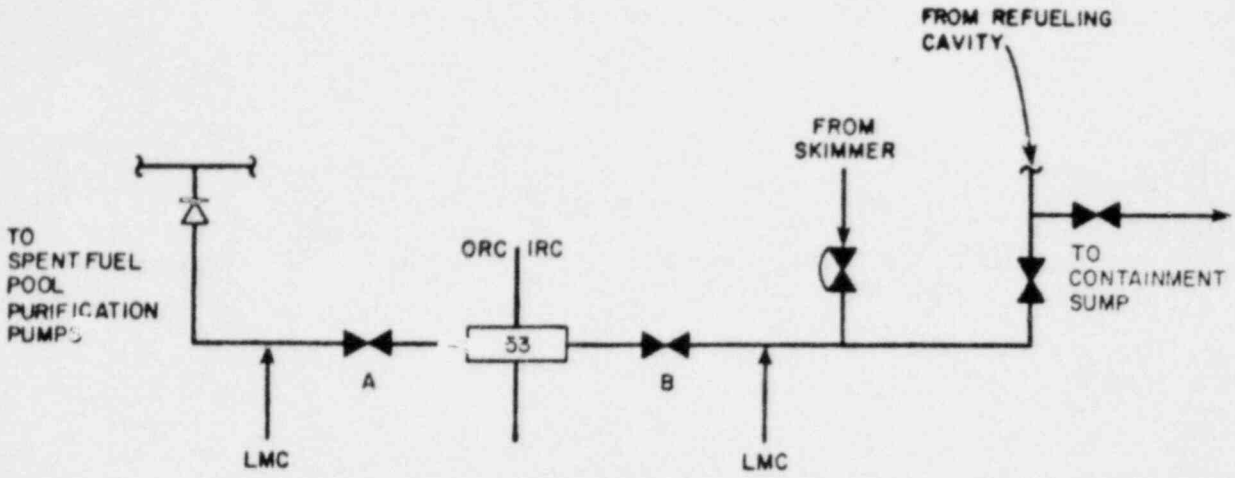

REACTOR CAVITY REFUELING PURIFICATION RETURN

VALVES A,B - *NORMALLY TESTED - TYPE C
GDC - 56

NOTES:
REFER TO TABLE 6.2.4-1
REFER TO SECTION 6.2.1.4

FIG. 6.2.4 - 31
ARRANGEMENT FOR TYPE C LEAK TEST
WISCONSIN UTILITIES PROJECT
PRELIMINARY SAFETY ANALYSIS REPORT

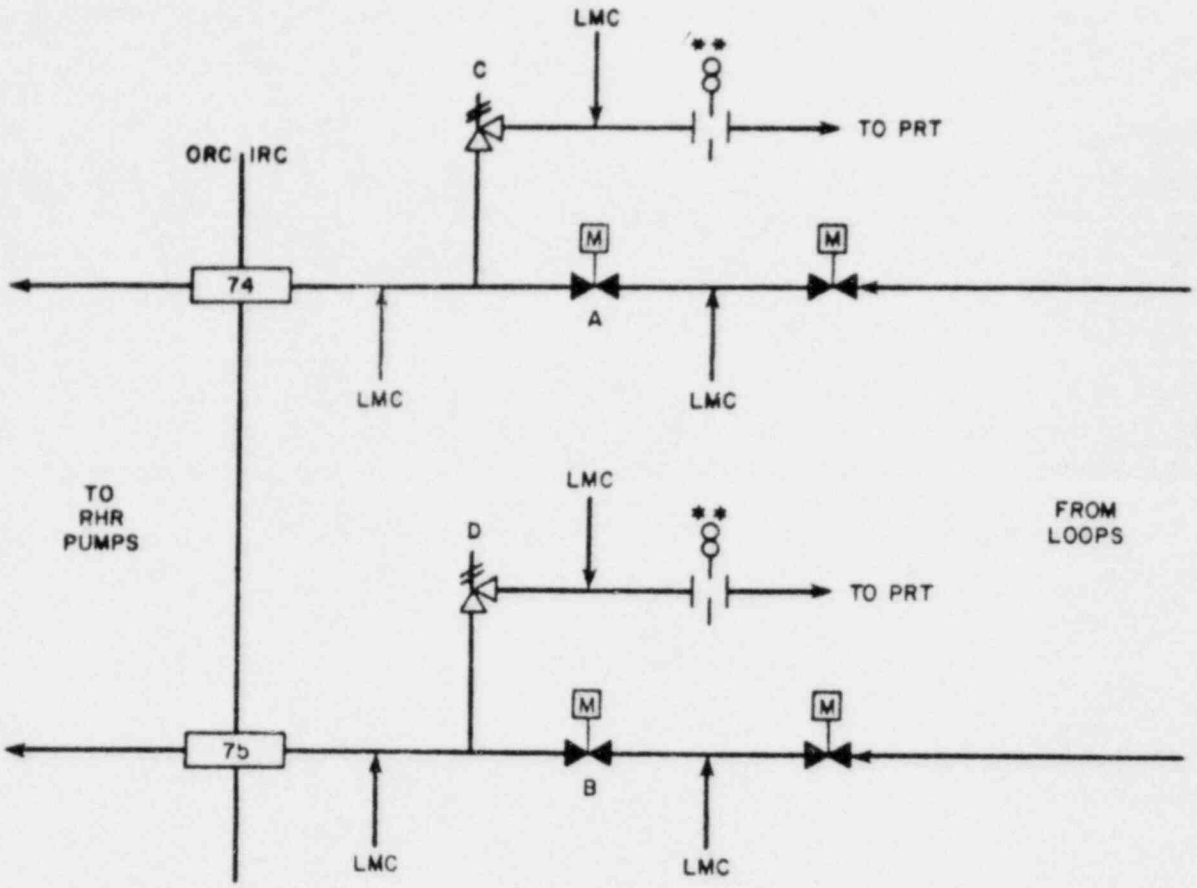

RHR SUCTION FROM REACTOR COOLANT SYSTEM

VALVES A, B, C, D - *NORMALLY TESTED TYPE C
GDC - 57

NOTES:

REFER TO TABLE 6.2.4 - 1

* REFER TO SECTION 6.2.1.4

** VALVE OR TEST BARRIER ADDED TO FACILITATE LEAK TESTING

FIG. 6 2.4 - 32
ARRANGEMENT FOR TYPE C LEAK TEST
WISCONSIN UTILITIES PROJECT
PRELIMINARY SAFETY ANALYSIS REPORT

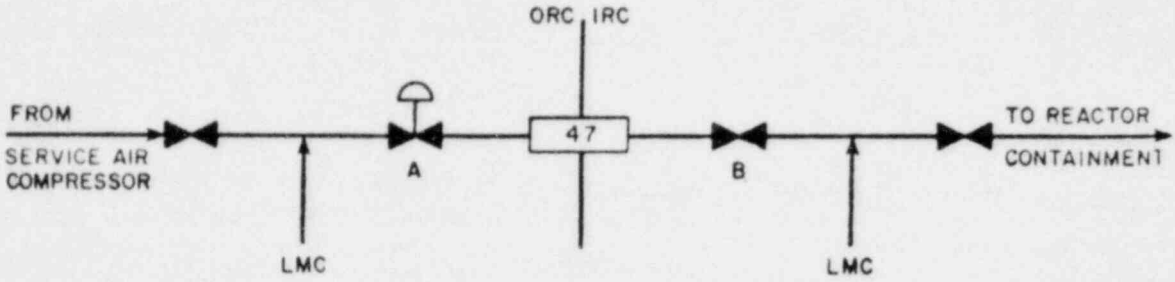

SERVICE AIR

VALVES A, B - *NORMALLY TESTED - TYPE C
GDC-56

NOTES:

REFER TO TABLE 6.2.4-1
*REFER TO SECTION 6.2.1.4

FIG. 6.2.4-33
ARRANGEMENT FOR TYPE C LEAK TEST
WISCONSIN UTILITIES PROJECT
PRELIMINARY SAFETY ANALYSIS REPORT

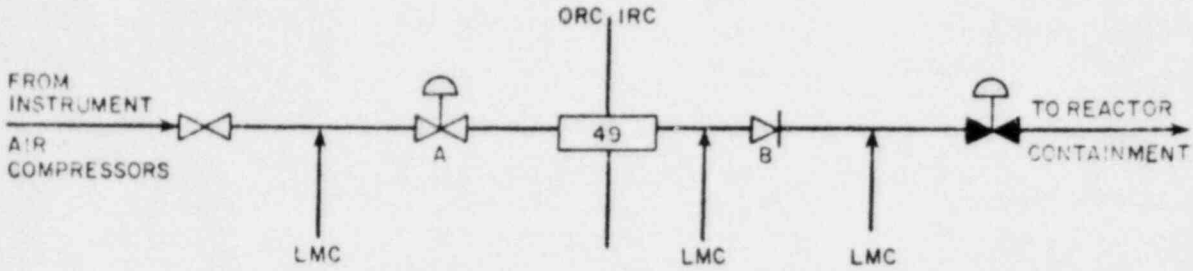

INSTRUMENT AIR

VALVES A, B - *NORMALLY TESTED - TYPE C
GDC-56

NOTES:

REFER TO TABLE 6.2.4-1

*REFER TO SECTION 6.2.1.4

FIG. 6.2.4-34
ARRANGEMENT FOR TYPE C LEAK TEST
WISCONSIN UTILITIES PROJECT
PRELIMINARY SAFETY ANALYSIS REPORT

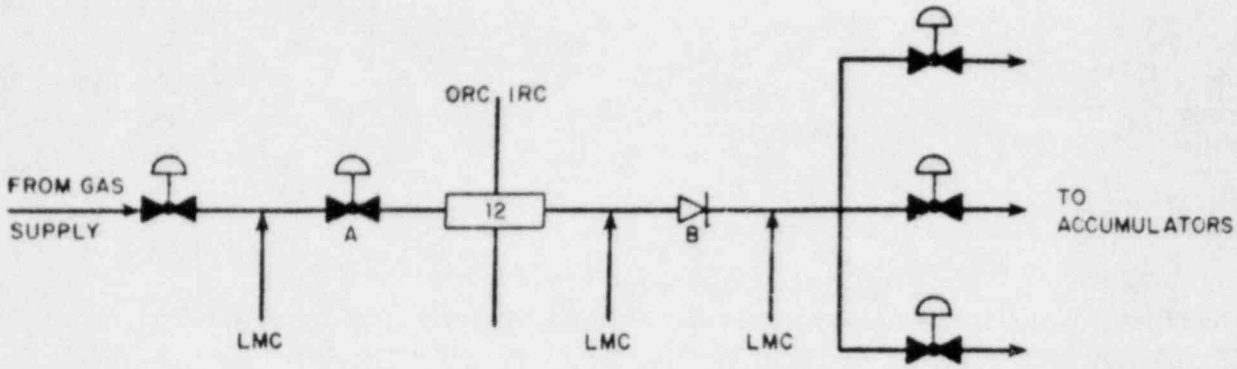

NITROGEN TO SIS ACCUMULATORS

VALVES A, B - *NORMALLY TESTED - TYPE C
GDC-56

NOTES:

REFER TO TABLE 6.2.4-1

*REFER TO SECTION 6.2.1.4

FIG. 6.2.4-35
ARRANGEMENT FOR TYPE C LEAK TEST
WISCONSIN UTILITIES PROJECT
PRELIMINARY SAFETY ANALYSIS REPORT

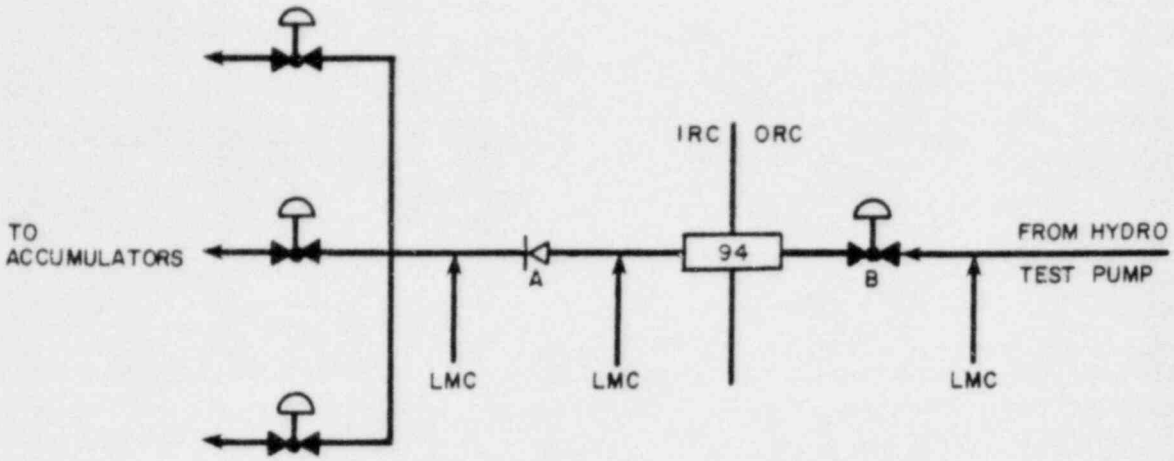

SIS ACCUMULATOR FILL

VALVES A,B-*NORMALLY TESTED-TYPE C
GDC-56

NOTES:

REFER TO TABLE 6.2.4-1

*REFER TO SECTION 6.2.1.4

FIG. 6.2.4-36

ARRANGEMENT FOR TYPE C LEAK TEST

WISCONSIN UTILITIES PROJECT
PRELIMINARY SAFETY ANALYSIS REPORT

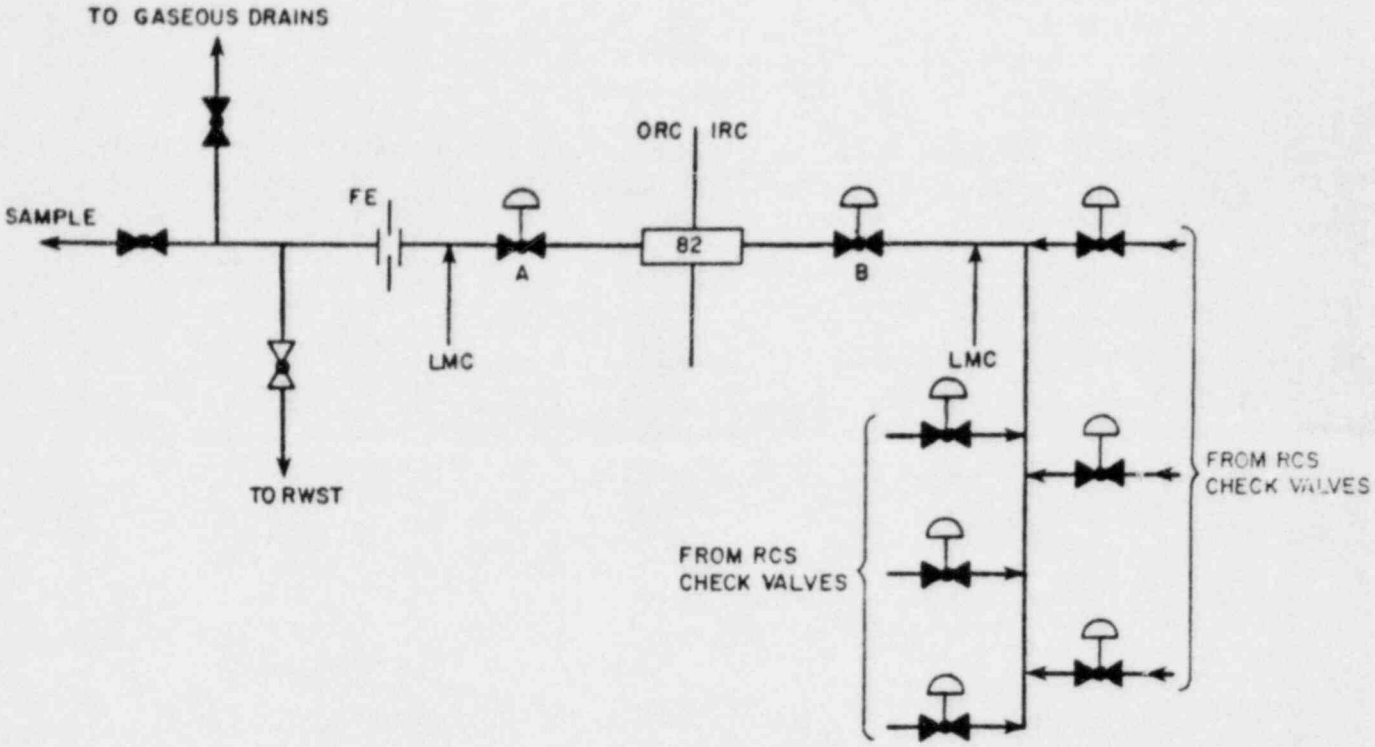

SIS ACCUMULATOR TEST

VALVES A,B* NORMALLY TESTED - TYPE C
GDC - 56

NOTES:

REFER TO TABLE 6.2.4-1

*REFER TO SECTION 6.2.1.4

FIG. 6.2.4-37
ARRANGEMENT FOR TYPE C LEAK TEST
WISCONSIN UTILITIES PROJECT
PRELIMINARY SAFETY ANALYSIS REPORT

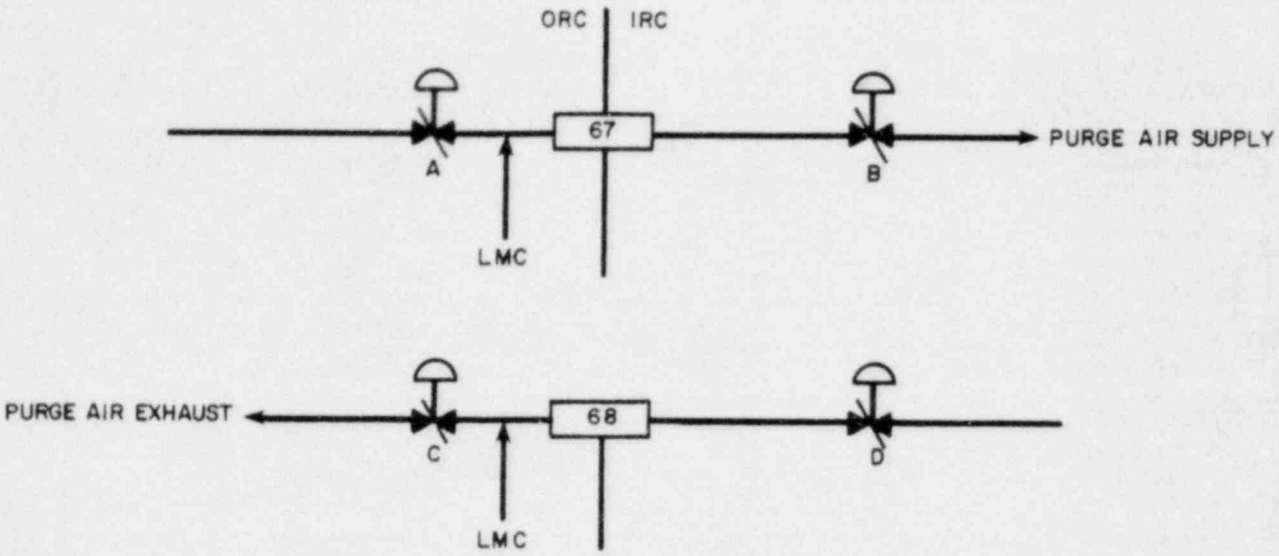

CONTAINMENT PURGE SUPPLY & EXHAUST

VALVES A,C-*NORMALLY TESTED-TYPE C
VALVES B,D-*REVERSE TESTED-TYPE C
GDC-56

NOTES:

REFER TO TABLE 6.2.4-1

*REFER TO SECTION 6.2.1.4

FIG. 6.2.4-38
ARRANGEMENT FOR TYPE C LEAK TEST
WISCONSIN UTILITIES PROJECT
PRELIMINARY SAFETY ANALYSIS REPORT

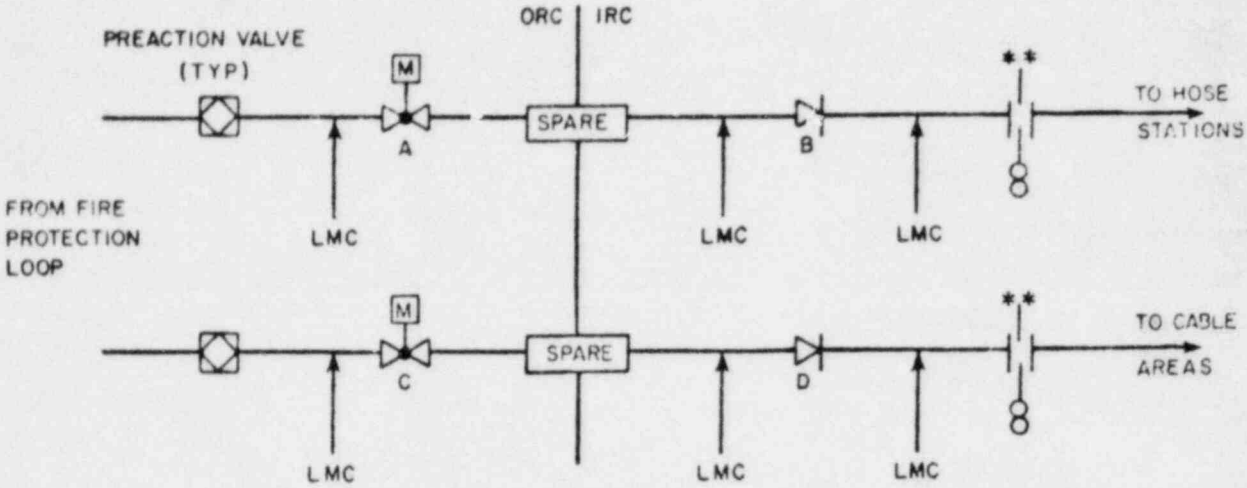

FIRE PROTECTION TO HOSE STATIONS
AND CABLE SPREADING AREAS

VALVES A,B,C,D- NORMALLY TESTED TYPE C*
GDC - 56

NOTES

REFER TO TABLE 6.2.4-1

*REFER TO SECTION 6.2.1.4

**VALVE OR TEST BARRIER ADDED TO FACILITATE LEAK TESTING

FIG. 6.2.4-39
ARRANGEMENT FOR TYPE C LEAK TEST
WISCONSIN UTILITIES PROJECT
PRELIMINARY SAFETY ANALYSIS REPORT

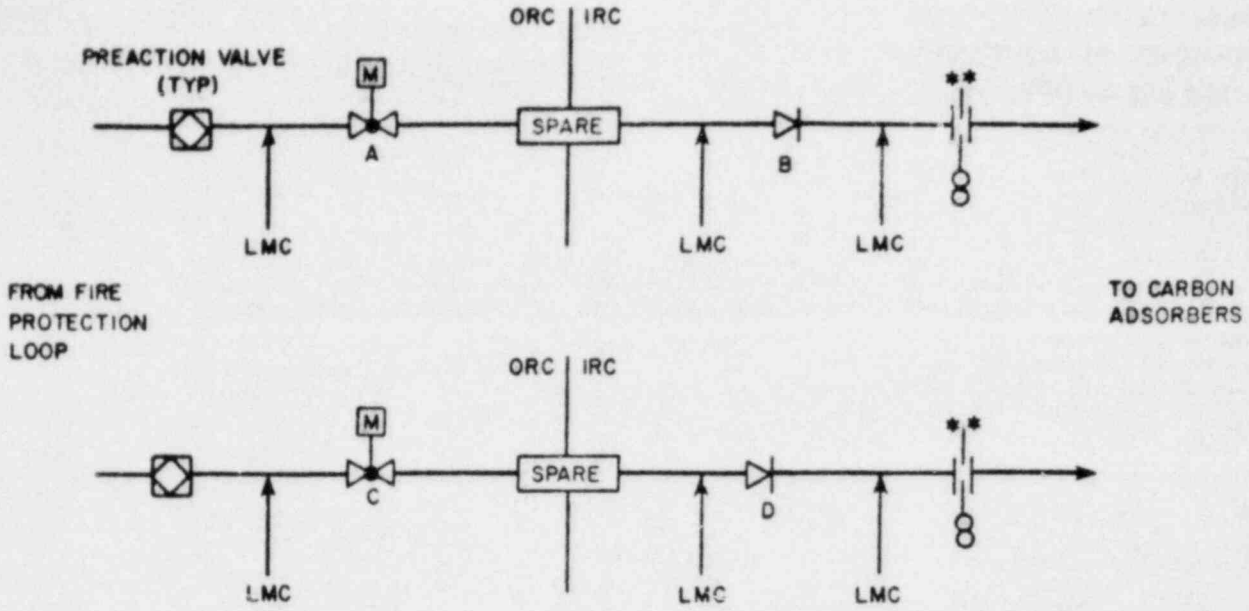

FIRE PROTECTION TO CARBON ADSORBERS

VALVES A,B,C,D- *NORMALLY TESTED TYPE C
GDC-56

NOTES:

REFER TO TABLE 6.2.4-1

*REFER TO SECTION 6.2.1.4

**VALVE OR TEST BARRIER ADDED TO FACILITATE LEAK TESTING

FIG. 6.2.4-40
ARRANGEMENT FOR TYPE C LEAK TEST
WISCONSIN UTILITIES PROJECT
PRELIMINARY SAFETY ANALYSIS REPORT

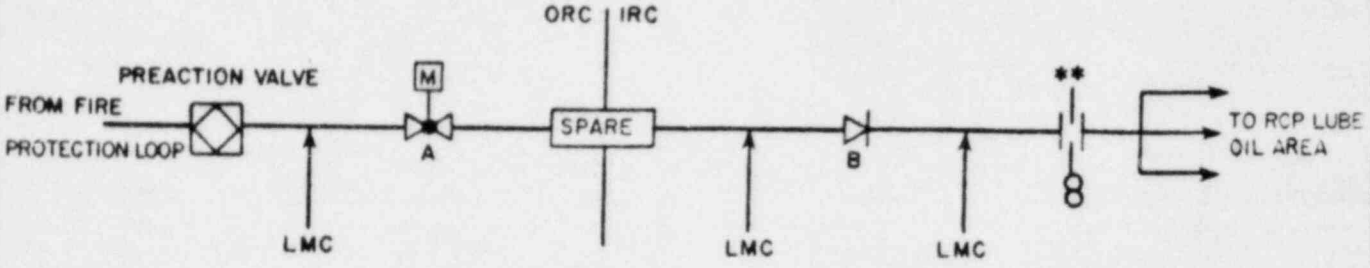

FIRE PROTECTION TO RCP LUBE OIL AREA

VALVES A, B* - NORMALLY TESTED - TYPE C
GDC-56

NOTES:

REFER TO TABLE 6.2.4-1

*REFER TO SECTION 6.2.1.4

**VALVE OR TEST BARRIER ADDED TO FACILITATE LEAK TESTING

FIG. 6.2.4-4

ARRANGEMENT FOR TYPE C LEAK TEST

WISCONSIN UTILITIES PROJECT
PRELIMINARY SAFETY ANALYSIS REPORT

PRELIMINARY SAFETY ANALYSIS REPORT

LIST OF EFFECTIVE PAGES

Chapter 8

Page, Table (T) Figure (F)	Revision Number
8-i through 8-ii	17
8-iii	8
8-iv	16
8.1-1	7
8.1-2 through 8.1-6	-
8.1-7 through 8.1-9	4
8.2-1 through 8.2-2	2
8.3-1	-
8.3-2	7
8.3-2a	6
8.3-3 through 8.3-4	16
8.3-4a	2
8.3-5	-
8.3-6	9
8.3-7	7
8.3-8	6
8.3-9 through 8.3-10	-
8.3-11	2
8.3-12 through 8.3-12a	6
8.3-13 through 8.3-14a	6
8.3-15 through 8.3-16	16
8.3-17 through 8.3-22	17
8.3-23 through 8.3-24b	16
8.3-25	1
8.3-26 through 8.3-28	15
8.3-29 through 8.3-30	1
8.3-31	16
8.3-32	7
8.3-33 through 8.3-34a	2
8.3-35	6
8.3-36	-
T.8.3.1-1	-
T.8.3.1-2	7
T.8.3.1-3 (page 1 through page 5)	5
T.8.3.1-3 (page 6)	17
T.8.3.1-3 (page 7 through page 8)	5
T.8.3.1-3 (page 9)	10
F.8.1-1	-
F.8.1-2	7
F.8.2-1	4
F.8.3.1-1	7
F.8.3.1-2	-
F.8.3.1-3 through F.8.3.1-4	7
F.8.3.1-5 through F.8.3.1-6	16
F.8.3.2-1	-

CHAPTER 8

ELECTRIC POWER

TABLE OF CONTENTS

CHAPTER 8

TABLE OF CONTENTS (CONT'D)

An independent oil bath type air intake system and engine exhaust system are supplied to each diesel engine.

The a-c onsite standby power supply is in compliance with IEEE-308-1971 (Ref. 3).

The Applicants conclude that the auxiliary systems of the diesel generator a-c onsite standby power supply are adequate.

8.3.1.2.2 Hostile Environments

8.3.1.2.2.1 Equipment Identification (Refer to Section 3.11.1)

Components of safety-related systems, and their associated instrumentation and electrical equipment, located inside the containment structure and elsewhere, which are required to function during and subsequent to an accident, will be designed to operate under normal, test, and post-accident environmental conditions that may occur at the locations of their installation. The locations of major components of safety-related systems are given in Table 3.2.5-1 and the environmental qualification conditions for these locations (except for the containment structure which is given in Section 3.11) are listed in Table 7.5-4. 17

The equipment which will be required to function inside the containment during and subsequent to a DBA is listed in Section 3.11, along with the periods of time for which the equipment is required to operate. 17

Systems located outside the containment structure and containing equipment which is exposed to the recirculated containment sump water or which handles post DBA containment atmosphere or air from the contiguous areas are also listed in Section 3.11. 17

The procurement specification for each component of these systems defines the maximum expected radiation level at the place where the equipment is installed and the expected life-time dose under which the equipment is required to function. These procurement specifications also define other environmental design parameters for the specified equipment (e.g., temperature and humidity). Sufficient design margins are incorporated into the procurement specifications so that the equipment is capable of withstanding the most severe environmental conditions without loss of its safety function. Whenever a procurement specification calls for an equipment or materials qualification test, documentation is required from the manufacturer to establish the satisfactory completion of that test. 17

Materials and equipment required to operate inside the containment during and after a DBA are specified to include considerations of pressure, temperature, humidity, chemistry, and radiation levels. The procurement specifications define a

radiation dose equal to the 40-yr normal accumulated dose plus the DBA dose.

Loss of Ventilation (Refer to Section 3.11.4)

To ensure that loss of the air conditioning and/or ventilation system will not adversely affect the operability of safety-related control and electrical equipment located throughout the plant, the environmental system for these areas will meet the single failure criterion (Section 9.4).

8.3.1.2.2.2 Qualification Tests (Refer to Section 3.11.2)

Electrical Penetrations

Electrical penetrations will be designed, tested, and documented
16 in accordance with IEEE-317-1976 (Ref. 4) and Regulatory Guide 1.63.

Containment Isolation Valve Actuators (Refer to Section 3.11)
17

The valve actuators located inside containment are designed to operate at the conditions listed in Section 3.11. The containment isolation valves are air-operated, fail-closed valves with solenoid pilot valves. The solenoid valves are high temperature coils with watertight housings.

Qualification Tests for Cables

Cables in the containment which may be required to function during and after a DBA are qualified in accordance with IEEE-383-1974 for the DBA environment of temperature, pressure, humidity, chemical spray, and radiation.

Cable insulation and jacket material is selected to operate in the environments of normal operation or that of the post-accident period, as required.

Cables inside the containment are designed to withstand the normal radiation dosage and a superimposed DBA radiation dosage, as well as the post-accident environment.

Power cables have either an overall flame retardant jacket or are installed in ducts and conduits.

Control and instrument cables will be single or multiple conductor with an overall flame retardant jacket. Fillers are flame retardant and nonwicking.

Motors

Continuous duty Class I motors located inside the containment, are designed, tested, and documented in accordance with IEEE-334-1974 (Ref. 5). |17

All motors for safety-related equipment located inside the containment have been conservatively rated and will have a service factor of 1.0 or 1.15. The insulation systems are Class B or better. All motors are given at least the standard NEMA, MGI Routine Tests and Class IE motors are certified to start the specified load with 70 percent rated nameplate voltage.

Electric Valve Operators

Electrically-operated valves in the containment which may be required to function during and after a DBA are type tested for the post-accident environment of temperature, pressure, humidity, chemical spray, and radiation.

Electrically-operated valve insulation material is selected to operate in the environment during the post-accident period, as required.

Electrically-operated valves inside the containment are designed to withstand the normal radiation dosage and a superimposed DBA radiation dosage, as well as the post-accident environment.

Stone & Webster scope valve operators will be type tested in accordance with IEEE-382-1972 (Ref. 6) and Regulatory Guide 1.73 and Westinghouse scope valve operators will be qualified in

accordance with the generic resolution being pursued by Westinghouse and the NRC staff.

Qualification Test Results (FSAR) (Refer to Section 3.11.2)

The results of the qualification tests for each type of equipment will be provided in the FSAR.

8.3.1.3 Conformance with Appropriate Quality Assurance Standards

The safety-related portions of the onsite a-c standby power system are classified as QA Category I. The QA procedures used during equipment design, fabrication, shipment, field storage, field installation, system and component checkout, and the records pertaining to each of these during the construction and preoperational test phases of each unit, are described in Chapter 17.

This QA Program, as discussed in Chapter 17, is in conformance with IEEE-336-1971 (Ref. 7).

8.3.1.4 Independence of Redundant Systems

8.3.1.4.1 Principal Criterion

The principal design criterion that establishes the minimum requirements for preserving the independence of redundant Class IE electrical systems through physical arrangement and separation and for assuring the minimum required equipment availability during any design basis event (Class IE electric system and design basis events are as defined in IEEE-308-1971) is as follows:

> Class IE electrical equipment is physically separated from its redundant counterpart or mechanically protected as required to prevent the occurrence of common failure modes.

8.3.1.4.2 Administrative Responsibility for Compliance

The administrative responsibility and control provided to assure compliance with the criteria that establish the minimum requirements for preserving the independence of redundant Class IE electrical systems during design and construction is presented in Chapter 17, particularly the QA procedures described in Section 17.1.1.3.

8.3.1.4.3 Equipment Consideration

Design features of the major components of the Class IE system to ensure conformance with IEEE-308-1971 are described below. This portion of the discussion excludes the criteria and basis for the installation of electrical cable for the systems.

The safety-related portions of the a-c station service system are divided into two load groups; the safety-related actions of each load group are independent of the safety actions provided by its redundant counterpart. Two Class IE a-c power system, each consisting of a diesel generator, a 4,160 V switchgear, 480 V unit substations, and motor control centers are furnished to supply power to the safety-related loads. The redundant components of the Class IE power systems are located in separate
16 | rooms or are separated by barriers (Fig. 8.3.1-5 and 8.3.1-6). These areas are protected from the maximum probable flood as discussed in Section 3.4.4.

One centrifugal charging pump and one reactor plant component cooling water pump may be connected to either 4,160 V emergency bus manually with the use of a key interlock system. A manual transfer switch (Fig. 8.3.1-1), equipped with a key interlock, is provided for each pump breaker in each 4,160 V emergency switchgear. A key is required to operate the transfer switch and also to permit either the train A or train B breaker to be racked into the operating position. The key for the charging pump equipment is not interchangeable with the key for the reactor plant component cooling pump equipment. This design prevents connecting the redundant emergency 4,160 V buses together and satisfies the independence requirements of Regulatory Guide 1.6.

This equipment is not subject to common mode failure through failure of the ventilation system. The two diesels have independent ventilation systems fed from the 480 V emergency motor control center located in the adjacent emergency switchgear room. The ventilation system in the switchgear room is not subject to a single failure which could degrade the environment beyond the point to which the equipment is qualified as discussed in Section 9.4.

The emergency switchgear and diesel generators are located in fire protected areas. The equipment is not subject to failure due to operation of the fire protection system since the fire protection system discharge nozzles do not directly impinge on the equipment. The fire protection system is further discussed and analyzed in Section 9.5.1.

8.3.1.4.4 Cable Considerations

The criteria and basis for the installation of safety-related electrical cables for the Class IE cable system are described below.

Cable Splicing

Cable splicing will not be permitted in trays. If splicing becomes necessary it will be done in an enclosed metal box.

Cable Derating and Cable Tray Fill

Cables are derated to compensate for ambient temperatures and for adjacent power cables. Power cables are sized and derated on the basis of Power Cable Ampacity, published by the Insulated Power Cable Engineers Association (IPCEA publication P-46-426). Six-thousand nine hundred V

PRELIMINARY SAFETY ANALYSIS REPORT

LIST OF EFFECTIVE PAGES

Chapter 9

Page, Table (T) or Figure (F)	Revision Number
9-i through 9-ii	15
9-iii through 9-vi	-
9-vii	15
9-viii	-
9-ix through 9-x	17
9-xi through 9-xii	14
9-xiia	16
9-xiib	14
9-xiii	15
9-xiv through 9-xvi	8
9-xvii	15
9-xviii	8
9-xix	14
9-xx	16
9.1-1 through 9.1-28	15
9.2-1 through 9.2-18	15
9.2-19 through 9.2-22	-
9.2-23 through 9.2-24	5
9.2-25	2
9.2-26 through 9.2-26a	14
9.2-27	6
9.2-28 through 9.2-28d	9
9.2-29	1
9.2-30	2
9.3-1	3
9.3-2	-
9.3-3	2
9.3-4 through 9.3-4a	3
9.3-5	1
9.3-6 through 9.3-6a	3
9.3-7 through 9.3-8	-
9.3-9	16
9.3-10 through 9.3-12	-
9.3-13 through 9.3-14	15
9.3-15 through 9.3-16a	1
9.3-17 through 9.3-46	-
9.3-47	2
9.3-48 through 9.3-51	-
9.3-52	9
9.3-53 through 9.3-54	15
9.4-1 through 9.4-6a	17
9.4-7	2
9.4-8 through 9.4-9	-
9.4-10	3
9.4-11	4
9.4-12 through 9.4-12a	3
9.4-13 through 9.4-14	-
9.4-15 through 9.4-16a	2
9.4-17	0
9.4-18	-
9.4-19 through 9.4-26a	17
9.4-27	2
9.4-28 through 9.4-28a	6
9.4-29	-
9.4-30	14
9.5-1 through 9.5-26	4
9.5-27 through 9.5-30	[illegible]
9.5-31 through 9.5-38	2
9.5-39 through 9.5-40	6
9.5-41	4
9.5-42	6
9.5-42a	3
9.5-43	2
9.5-44 through 9.5-44a	3
9.5-45	3
9.5-46 through 9.5-48a	15
9.5-49 through 9.5-51	2
T.9.1-1	15
T.9.2.1-1	15
T.9.2.1-2	-
T.9.2.1-3	1
T.9.2.2.1-1 (2 pages)	15
T.9.2.2.1-2 (page 1)	1
(page 2)	-
T.9.2.5-1	4
T.9.3.2-1	16
T.9.3.4-1	-
T.9.3.4-2 (7 pages)	-
T.9.3.6-1 through T.9.3.6-7	-
T.9.5.4-1	1
T.9.5.8-1	15
T.9.5.8-2	15
F.9.1.1-1 through F.9.1.1-2	-
F.9.1.2-1	15
F.9.1.3-1	15
F.9.1.3-2 through F.9.1.3-3 (deleted)	15
F.9.1.4-1 through F.9.1.4-3	-
F.9.1.4-4	9
F.9.1.4-5 through F.9.1.4-6	-
F.9.2.1-1 through F.9.2.1-3	15
F.9.2.2.1-1 through F.9.2.2.1-3	15
F.9.2.2.2-1	15
F.9.2.2.2-2	-
F.9.2.2.2-3 (deleted)	15
F.9.2.2.3-1	-
F.9.2.2.5-1	-
F.9.2.4-1	2
F.9.2.5-1	9
F.9.2.5-2	2
F.9.2.5-3 through F.9.2.5-7	4
F.9.2.5-8	6
F.9.2.6-1	0
F.9.3.1-1 through F.9.3.1-2	-
F.9.3.2-1 through F.9.3.2-2	15

PRELIMINARY SAFETY ANALYSIS REPORT

LIST OF EFFECTIVE PAGES (CONT'D)

Chapter 9

Page, Table (T) or Figure (F)	Revision Number
F.9.3.3-1 through F.9.3.3-2	-
F.9.3.3-3	2
F.9.3.3-4	15
F.9.3.4-1	4
F.9.3.4-2 through F.9.3.4-9	-
F.9.3.6-1	15
F.9.3.6-2 through F.9.3.6-3 (deleted)	9
F.9.4.1-1	17
F.9.4.1-2	-
F.9.4.1-3 (deleted)	14
F.9.4.2-1 through F.9.4.2-2	13
F.9.4.4-1	13
F.9.4.5-1	-
F.9.4.6-1	13
F.9.4.7-1	17
F.9.4.7-2	17
F.9.4.7-3	7
F.9.4.7-4	3
F.9.4.8-1	2
F.9.4.9-1	-
F.9.4.10-1 (deleted)	14
F.9.5.1-1	15
F.9.5.1-2	14
F.9.5.1-3	-
F.9.5.1-4	15
F.9.5.1-5	16
F.9.5.4-1	-
F.9.5.5-1	6
F.9.5.6-1	6
F.9.5.7-1	2
F.9.5.8-1	2
F.9.5.9-1	-

CHAPTER 9

AUXILIARY SYSTEMS

TABLE OF CONTENTS

CHAPTER 9

AUXILIARY SYSTEMS

TABLE OF CONTENTS (CONT'D)

9.4 AIR CONDITIONING, HEATING, COOLING, AND VENTILATION SYSTEMS

9.4.1 Control Building Heating, Ventilation, and Air Conditioning

9.4.1.1 Design Bases

The control building heating, ventilation, and air conditioning (HVAC) system is designed to provide air conditioning, heating, and ventilation to the control building, emergency ventilation for the control room, and smoke purge. Cooling for the control building HVAC system is provided by the control building chilled water system. 3

The control building is air conditioned throughout to maintain personnel comfort and remove equipment heat. The design temperature during all seasons for the control room, the instrument rack room, the mechanical room, and the computer room is 75 F with a relative humidity of less than 50 percent. The temperature of the cable spreading room, the switchgear rooms, refrigeration machine mechanical room, and battery rooms will not exceed 90 F during normal operation. The battery rooms are provided with a ventilation rate of 15 air changes per hour to preclude potential hydrogen accumulation. 17

The emergency ventilation function of the control building HVAC system provides the capability to divert intake air and to recirculate a portion of the return air through the control room emergency filter trains in the event of a safety injection signal (SIS). During these conditions the control room is maintained above atmospheric pressure to preclude infiltration of outside air. 13

The smoke purge function of the control building HVAC system exhausts smoke which may be present following a fire. 3

The air conditioning systems for the control building have chilled water as the cooling medium. The chilled water is provided by two 100 percent capacity chillers utilizing service water for the chiller condensers.

The outside ambient air design temperatures (Ref. 1) which provide the design basis for sizing of the air conditioning units are as follows: 17

Summer dry bulb temperature, 92 F

Summer wet bulb temperature, 77 F

Winter dry bulb, -22 F

Winter wet bulb, -23 F

Safety-related portions of the control building HVAC system are Seismic Category I and are designed as Safety Class 3 as indicated on Fig. 9.4.1-1. Safety-related electrically powered motors and controls associated with the control building HVAC system are arranged as redundant units which are operated by emergency power supplied by separate emergency buses, in accordance with the single failure criterion.

9.4.1.2 System Description

The control building air conditioning and ventilation is shown on Fig. 9.4.1-1 and the control building chilled water system is shown on Fig. 9.4.1-2.

The control room, computer room, instrument rack room, and mechanical room heating, ventilation, and air conditioning consist of two 100 percent capacity air conditioning units, each containing one fan and one cooling coil with filters, a duct-inserted electric heating element for each room, and a kitchen and toilet exhaust fan. Each air conditioning unit is rated at approximately 28,000 cfm and each fan at approximately 28,000 cfm. The kitchen exhaust fan is rated at approximately 300 cfm and the toilet exhaust fan at 200 cfm.

The heating, ventilation, and air conditioning for the emergency switchgear rooms, refrigeration machine and mechanical equipment rooms, cable spreading rooms, and battery rooms consist of two 100 percent capacity air conditioning units, each containing one fan, one cooling coil, electric heating coil, and a filter assembly. A return/exhaust fan is provided for each a/c unit. Each air conditioning unit is rated at approximately 30,000 cfm. During operation, a portion of the building air is mixed with outside air prior to passage through the operating air conditioning unit and circulated through the cable spreading rooms, the switchgear rooms, the refrigeration machine mechanical rooms, and battery rooms. Air from the battery rooms and the refrigeration machine mechanical rooms is always discharged. In the event of fumes or smoke in the control building, the recirculation flow may also be exhausted. Upon receipt of an SIS signal, operation of both trains of the emergency switchgear and cable spreading room air conditioning units is automatic.

Air from the refrigeration machine mechanical room is exhausted to preclude the potential buildup of halogenated gases due to leakage from the refrigeration equipment.

Air is drawn into the battery rooms from the switchgear area through wall louvers which are equipped with fire dampers. Ductwork connected to two 100 percent capacity fans exhausts the air from each room to the outside. Each exhaust fan is rated at 1,000 cfm. The exhaust rate is sufficient to assure that hydrogen will not accumulate in the battery rooms. A similar system is provided for battery rooms 3 and 4.

All control building heating, ventilation, and air conditioning equipment is located inside the control building.

In addition to the control room heating, ventilation, and air conditioning equipment, emergency ventilation equipment is provided and includes two 100 percent capacity supply fans and two filter assemblies with demister, electric heating coil, prefilter, carbon adsorbers, and high efficiency particulate air filter. Each filter train is rated at 6,000 cfm which includes 1,500 cfm outside air and 4,500 cfm recirculated air and is designed in accordance with Regulatory Guide 1.52 with the exception of those paragraphs listed in Appendix A. | 3 | 13 | 14

For emergency ventilation of the control room, butterfly valves are used to shut off the normal intake air flow path which bypassed the control room emergency filter trains. The kitchen and toilet exhaust fans are stopped, and their exhaust flow paths are closed with butterfly valves. | 15

To purge the control room, computer room, and instrument rack room of smoke, a vane axial flow exhaust fan is located in the exhaust air ductwork.

The control building chilled water system consists of two 100 percent capacity centrifugal compressor water chillers, two 100 percent capacity chilled water pumps, and two expansion tanks and air separators.

The chilled water piping is arranged in two separate circuits to serve the control building air conditioning unit cooling coils. Each air conditioning unit cooling coil is provided with a flow control valve controlled by a thermostat.

Ducts leading to and from the outside atmosphere are fitted with motor-operated butterfly valves located as close as possible to the outside of the control building wall and are operable from the control room.

9.4.1.3 Safety Evaluation

Control room air conditioning is a completely independent system. The air is a mixture of recirculated air from the control room and outdoor air. Filtration, cooling, and humidity control is provided for air delivered to the control room.

Radiation monitors and smoke detectors in the outside supply air ducts of the control room ventilation will detect and alarm the presence of radioactivity or smoke. Under high radiation levels, emergency ventilation with the normal air supply duct isolated is initiated automatically, thus maintaining a positive pressure within the control room. | 7 | 17

The control room can be isolated from all other areas of the control building if a fire occurs in one of the areas.

With the control room in an isolated state, the control room emergency ventilation supplies 1,500 cfm to maintain a positive pressure and 4,500 cfm recirculating air within the control room,
17 | emergency filter mechanical room, computer room, and instrument rack room. Approximately 4,500 cfm of return air is recirculated
17 | through the control room emergency filtration unit. In the event of a fire in the control room, a smoke purge fan is provided to
3 | exhaust approximately 20,000 cfm to the atmosphere.

Chlorine protection and other toxic chemical hazards analyses are discussed in Section 2.2.3 of the Site Addendum. If chlorine
14 | protection is required, redundant detectors can be provided in the normal outside air intake duct to isolate the control room.

The control building HVAC system is able to withstand a single failure in safety-related portions through the use of redundant equipment and controls which provide the capability to switch
17 | from one piece of redundant equipment to the other ensuring adequate heat removal and fresh air under all modes of operation. The control building chilled water system is arranged so that each control building water chiller and its associated chilled water pump is a complete redundant unit. The two 100 percent capacity control room air conditioning units and the two 100 percent capacity control building chilled water systems ensure the capability to maintain the required ambient temperature level. Battery room exhaust ventilation is assured
17 | through the use of redundant exhaust fans.

9.4.1.4 Test and Inspection Requirements

The control building HVAC system is tested and inspected for air balance and completeness of installation following construction.

14 | The filters for control room emergency ventilation are tested in accordance with ANSI N510-1975 (Ref. 2) after installation to ensure casing tightness, carbon adsorber efficiency, and particulate filter efficiency. In addition, the system is inspected to ensure that the carbon adsorber test cells have been installed properly.

All testing and inspections of systems and equipment not normally in use are performed at intervals not exceeding 12 months.

9.4.1.5 Instrumentation Applications

All motors and motor-operated valves of the control building HVAC system have manual controls and indicating lights on the ventilation system panel in the control room.

The two trains of control building HVAC system components are operated and controlled as follows:

1. During normal unit operation, all components of one train (all fan motors, all motor-operated valves, the compressor, and the chilled water pump motor) are manually started. The components of the other train are on standby. Automatic thermostat control of the control building chilled water flow control valves is provided. All fan motors of the standby control building air conditioning subsystem are provided with an automatic start feature, following a low pressure in the discharge duct, by means of a pressure differential switch. Automatic start of any standby fan motor causes transfer of operation of the control building HVAC system to the standby units. A start or stop signal to a fan motor opens or closes the fan discharge damper.

   A similar transfer of operation occurs if the operating chilled water pump or compressor fails, i.e., high temperature in the water chilled outlet line or low flow in the chilled water pump header automatically starts the standby chilled water system and initiates transfer of operation from the fan motors of the failed train to the standby fan motors of the other train. Failure of the operating component and automatic start of the standby component sounds an alarm in the control room.

2. Following a LOCA or main steam line break, components of both trains start automatically upon receipt of a safety injection signal (SIS). The kitchen and toilet exhausts are automatically isolated from the outside atmosphere upon receipt of an SIS signal. Following a loss of offsite power, the control building air conditioning equipment starts automatically in accordance with the diesel generator loading sequence (Table 8.3-1).

Under conditions of high radiation, or radiation monitor failure, the radiation monitor located in the control room outside air duct initiates an alarm, isolates the normal ventilation inlet, 117
and places control room emergency ventilation into operation. In this operating mode, incoming outside air and recirculated air 113
pass through a filter train before entering the air conditioning units of the control room, instrument rack, mechanical, and computer rooms. For a two-unit complex, a common control room is 117
provided. In the normal operating mode, the control building HVAC system for each unit operates independently to provide heating, ventilation, and air conditioning to the control room for that unit.

In an accident or high radioactivity, a signal in one unit 117
actuates the control room emergency ventilation for both units to

ensure positive pressure and required filtration for the common control room.

The following indications are provided in the control room:

1. Motor trip alarm of any operating air conditioning unit,

2. Fan operation,

3. Pressure differential alarm across the control room emergency ventilation filters,

4. Pressure differential alarm across each filter of HVAC units,

5. Radiation indicator and high radiation alarm,

6. Water chiller outlet high temperature and low flow alarms,

7. Differential pressure gauge between control room and atmosphere,

8. Control room and switchgear room temperature,

9. Smoke detectors.

7 References

1. American Society of Heating, Refrigerating and Air Conditioning Engineers (ASHRAE), 1972 Handbook.

14 2. ANSI-N510-1975, "Testing of Nuclear Air-Cleaning Systems."

9.4.2 Reactor Plant Ventilation

9.4.2.1 Auxiliary Building Ventilation

9.4.2.1.1 Design Bases

Auxiliary building ventilation is designed to maintain a controlled environment for personnel and equipment and to minimize the release of radioactive airborne particulates to the atmosphere.

Cubicles which house equipment that could release radioactivity are maintained at a slightly negative pressure in relation to the areas surrounding the cubicles.

Exhaust air, prior to discharge to the atmosphere, passes through a high efficiency particulate air filter (HEPA), removing radioactive airborne particulates. The HEPA filter is designed

for an efficiency of 99.97 percent when filtering particles 0.3 microns or larger.

When high radioactivity is detected by the reactor plant vent monitor, the exhaust air is manually diverted through a carbon adsorber. The carbon adsorber is the gasketless nontray type, which essentially eliminates bypassed air and reduces adsorbent replacement problems. The carbon adsorber is designed for a 0.25 sec per 2-in. bed depth dwell time for gases at a flow rate of approximately 40,000 cfm. With intake conditions of 70 percent relative humidity, the impregnated carbon of the adsorber is capable of removing in excess of 99 percent of the methyl iodide (CH_3I) and 99 percent of the elemental iodine. Adsorber performance is described in Section 11.1.4.3. 14 14

The design temperature within the auxiliary building is a maximum of 103 F when the outside air temperature is 92 F, based on ASHRAE design temperature for 1 percent occurrence.

Unit coolers are located in selected areas throughout the auxiliary building to remove equipment heat loads and to minimize the quantity of outside air needed for ventilation.

Hot water heating is designed to maintain the auxiliary building at 70 F coincident with an outside temperature of -22 F and shutdown of the unit.

Electric unit heaters, powered from the emergency bus, are provided in the boric acid storage tank cubicle to maintain a minimum temperature of 65 F coincident with loss of power and an outside temperature of -22 F.

The auxiliary building emergency filtration portion of the reactor plant ventilation system is described in Section 6.5.1.

ventilation supply fan and annunciates an alarm on the auxiliary building control panel. A temperature controller located within the SBCA ventilation unit discharge ductwork senses a decrease in temperature and opens the glycol/water control valve to the heating coil.

Pressure differential switches across filtration equipment are interlocked with supply fans to prevent pressurizing the SBCA in the event of low exhaust flow. High pressure differential across the contaminated shop HEPA filter trips the SBCA air-conditioning supply fan. High pressure differential across the chemistry laboratory fume hood filter train trips the chemistry laboratory fume hood supply fan. High pressure differential across the SBCA HEPA filter trips the SBCA ventilation supply fan.

A radiation monitor, located in the service building vent, annunciates in the control room on high radiation.

9.4.7 Containment Structure Ventilation

9.4.7.1 Containment Air Filtration

9.4.7.1.1 Design Bases

The containment air filtration portion of the containment structure ventilation system is designed to recirculate containment air and remove airborne radioactive contaminants from the containment atmosphere, and to ensure access to containment during normal operation and during hot and cold shutdown conditions. The containment air filters and associated fans and ductwork are not safety related. The containment air filters are designed to reduce airborne radioactivity to as low as practicable levels assuming NUREG 0017 values for failed fuel and reactor coolant leakage within containment. A total capacity of 20,000 cfm is provided to reduce airborne radioactivity of I-131, the controlling isotope, to approximately one times the occupational MPC after 16 hr of filter operation. Estimates of radioactive contaminant concentrations are based on reactor coolant concentrations and reactor coolant leakage, as discussed in Sections 11.1 and 12.2.3. | 17

Filters have a minimum filter efficiency of 85 percent as determined by the NBS dust spot method using atmospheric dust. Carbon adsorbers are of the gasketless nontray-type to reduce bypass leakage and to minimize problems encountered during adsorbent replacement. Carbon adsorbers are designed for a 0.25 sec dwell time for gases at a flow rate of 10,000 cfm. The carbon adsorbent is designed to remove in excess of 99 percent of methyl iodide (CH_3I) and 99.9 percent of elemental iodine with inlet conditions of 70 percent relative humidity. Anticipated operational pressure surges will not affect the carbon adsorbers. Adsorber performance is described in Section 11.1.4.3. The HEPA | 17

filters have a minimum filter efficiency of 99.97 percent when filtering particulates 0.3 micron or larger in size.

9.4.7.1.2 System Description

Portions of the containment structure ventilation system used for containment air filtration are shown on Fig. 9.4.7-1.

Containment air filtration includes two 50 percent capacity fans and two 50 percent capacity filter banks which operate in parallel. Each filter bank includes a prefilter, a carbon adsorber, and two high efficiency particulate air (HEPA) filters; one located upstream and one downstream of the carbon adsorber.

17 The fans for each filter bank are rated at 10,000 cfm each, and when operated in parallel, provide a total capacity of 20,000 cfm. Each fan draws air via ductwork from above the operating floor through the filtration units located at the containment lower level. The air, after being filtered, is exhausted through ductwork below the operating floor. The supply inlets are located away from the exhaust inlets so that the exhaust air is not directly returned to the supply duct. The exhaust air can also be diverted to the containment purge by closing the exhaust dampers and opening the purge air dampers (Section 9.4.7.2). Approximately constant flow is maintained
17 during either the recirculation or purge mode of operation by the use of movable inlet vanes on the fan. These vanes are adjusted to maintain a constant differential pressure across the carbon adsorbers.

9.4.7.1.3 Safety Evaluation

Containment air filtration equipment removes both radioactive particulates and gaseous iodine released to the containment atmosphere during normal operation and shutdown conditions. This equipment is not required to operate during accident conditions and is not safety related.

9.4.7.1.4 Test and Inspection Requirements

Each filter unit casing and the associated filters and fans are factory and site tested as follows:

1. The filter casings are factory tested for tightness by subjecting them to both positive and negative pressures of 10 in. W.G. for a 2-hr period with loss of pressure not exceeding 1 in. W.G. This test is also conducted after installation within the containment structure.

2. The HEPA filters are tested for efficiency using the DOP method and are checked for leakage after installation. The efficient test method is described in Section 6.2.3.1.

3. The carbon adsorbers are tested for efficiency and checked for leakage after installation. In addition, each bank of carbon adsorbers contains a test cell which is removed periodically and sent to an offsite laboratory for analysis. Section 6.2.3.1 describes the efficiency test method.

4. The fans are tested following installation. Routine maintenance and surveillance are performed to ensure their operability.

9.4.7.1.5 Instrumentation Applications

The containment air particulate monitor and the containment gas monitor (Section 12.2.4) alert the operator to high airborne particulate or gaseous radioactivity levels. These monitors are indicated and annunciated in the control room.

The fans in the containment air filtration system are manually operated from the control room. Differential pressure alarms are provided to warn the operator of high pressure differentials across the prefilters, the carbon adsorbers, and the HEPA filters. Movable fan inlet vanes are set by the differential pressure in the carbon adsorber in order to maintain an approximate constant flow when either recirculating or purging. 17 17

9.4.7.2 Containment Purge Air

9.4.7.2.1 Design Bases

The containment purge air portion of the containment structure ventilation system is designed to reduce radioactive airborne contaminants within the containment to limit the exposure of operating personnel and to provide outside air during extended periods of occupancy during hot or cold shutdown operations. Containment purge air is supplied at a rate consistent with reducing airborne activity to as low as practicable levels as discussed in Section 9.4.7.1. 17 17

The capacity of the containment purge air system is 20,000 cfm and provides for a change of approximately one-half containment free air volume per hour. Section 12.2 discusses activity levels in the containment following purge operations. 17

The containment penetrations, the containment isolation valves, and the piping between the valves (Section 6.2.4) are Safety Class 2. Debris screens on the purge exhaust line and the supply line are designed as Seismic Category I equipment and are located near the inner side of each inboard isolation valve to ensure that isolation valve closure will not be prevented by debris. The isolation valves are remote manually controlled. Upon receipt of CIA signal or a high radiation signal from the redundant containment purge air vent radiation monitors which are 17

Seismic Category I, Class IE, the valves are automatically closed.

Heating of the containment purge air supply is provided to maintain an incoming air temperature of 70 F coincident with an outside ambient air temperature of -22 F.

In the event that the containment filtration units are out of service or, if required, the purge exhaust air can be manually diverted through the fuel building emergency filter banks (Section 6.5) before being discharged to the atmosphere through the fuel building vent in order to keep releases to the environment as low as practicable.

9.4.7.2.2 System Description

The containment purge air portion of the containment structure ventilation system is shown on Fig. 9.4.7-2, and consists of a supply portion and an exhaust portion. The supply portion includes two 50 percent capacity heating and ventilating units,
17 each of which is equipped with air filters, a heating coil, and a fan. A closed loop glycol/water heating system provides the heating requirement for the supply air portion.

3 The purge exhaust portion uses the containment air filtration units (Section 9.4.7.1) by closing the filtration recirculation dampers and opening the purge air dampers and the purge exhaust isolation valves. The exhaust, after passage through a debris screen, and the containment penetration with associated isolation
17 valves is monitored for radioactivity and is normally discharged directly to the fuel building vent.

The containment purge supply and exhaust isolation valves are pneumatically operated and fail closed. Debris screens are used
17 in each of these lines to ensure closure capability of the containment isolation valves.

9.4.7.2.3 Safety Evaluation

Containment purge reduces the airborne radioactivity level and assists in maintaining a temperature within the containment consistent with the requirements for extended occupancy during refueling and shutdown conditions.

17 When the containment purge air vent monitors sense high radioactivity levels in the purge air leaving the containment, the containment purge air supply and exhaust isolation valves
3 automatically close and the containment air filtration recirculation dampers automatically open.

The analysis of the radiological consequences associated with a
17 loss of coolant accident occurring while purging during hot shutdown is discussed in Section 15.4.1. Maximum potential

containment air loss is also presented. As discussed in Section 15.4.1, purge during hot shutdown does not impair the effectiveness of the ECCS because the initial linear heat rate in the fuel is low, consisting only of the decay heat rate. Also, containment pressure effects on ECCS are minimized by limiting the air loss (in the event a LOCA is concurrent with purge) to a maximum change in containment pressure of 0.3 psi. 17

The fuel building emergency filtration system is isolated from the containment purge air exhaust by a normally closed valve under administrative control and is used to filter purge air exhaust when the containment air filters are ineffective.

The only portions of the containment purge air equipment that are safety related are the containment structure penetrations, the debris screens, the containment isolation valves and associated controls, and the piping between the containment isolation valves and the debris screens. 17 17

The containment purge air supply and exhaust isolation valves fail closed on loss of air supply or electric power.

9.4.7.2.4 Test and Inspection Requirements

The containment purge air isolation valves are leak tested as part of the containment leak testing program (Section 6.2.4).

Operational testing of the fans, containment isolation valves, motor operated dampers, and automatic controls in the containment purge equipment is conducted periodically to ensure their operability. The containment isolation valves are tested for operation before containment purge is put into operation.

9.4.7.2.5 Instrumentation Applications

Containment purge, including the associated containment isolation valves, has manual controls in the control room. Containment purge air vent monitors are provided in the exhaust duct outside the containment structure. If high radioactivity is detected while the purge is operating, the purge air supply and exhaust containment isolation valves close and the containment air filtration recirculation dampers open. 17 17 3

After assessing the cause of high radioactivity, diverting purge air to the fuel building emergency filters can be accomplished manually by opening the normally closed valve. The discharge damper to the normal fuel building vent is remote manually closed and the intake damper downstream of the containment air filtration units is opened. This is accomplished by limit switches. 17 17

The containment purge isolation valves are closed when the purge is not in operation. A CIA signal overrides any manual controls to prevent opening of the containment purge isolation valves.

9.4.7.3 Containment Air Recirculation

9.4.7.3.1 Design Bases

The containment air recirculation portion of the containment structure ventilation system is designed to absorb the heat dissipated from equipment or piping including the control rod drive mechanisms (CRDM) and to prevent the localized buildup of hydrogen within the containment structure. The following temperatures are maintained at specified conditions:

Condition	Temperature	Approx. Heat Rate	Heat Transfer Media
Normal Operating	90 F	5.4×10^6 Btu/hr	Chilled Water at 45 F
17 Loss of Power	120 F	4×10^6 Btu/hr	Component Cooling Water at 105 F
After a DBA	280 F	208×10^6 Btu/hr	Component Cooling Water at 105 F
Cold Shutdown	70 F	1.7×10^6 Btu/hr	Electric Unit Heaters

Portions of the containment structure ventilation system for containment air recirculation are Seismic Category I and Safety Class 2 as shown on Fig. 9.4.7-3.

Safety-related electrically powered motors and controls are arranged as redundant units which are operated by emergency power supplied by separate emergency buses, thus meeting the single failure criteria.

Electric unit heaters for cold shutdown maintain the temperature at a minimum of 70 F with an outside temperature of -22 F.

9.4.7.3.2 System Description

The containment air recirculation system includes four separate cooling coil assemblies, each capable of 50 percent of the total system cooling requirements.

7

Each cooling coil assembly has two axial flow fans. One fan in each assembly serves as the back-up for the other. Under normal conditions, two cooling coil assemblies and one fan in each assembly are in operation.

Each fan takes suction from its associated cooling coil assembly and discharges to a common duct. From the common duct the air is distributed through ducts to all levels of the containment structure and to cubicles which enclose heat generating equipment.

Each cooling coil assembly consists of three coils and is normally supplied with coolant by the chilled water system (Section 9.2.2.2). The coolant is supplied by the reactor plant component cooling water system (Section 9.2.2.1) in the event of loss of electric power or after a DBA. One primary fan in each cooling coil assembly is low speed and is capable of delivering approximately 60,000 cfm after a DBA. The other fan in each cooling coil assembly has two operating speeds, with the higher speed being the normal operating mode, delivering approximately 100,000 cfm of cooled air through the containment air recirculation system with normal containment atmospheric pressure. The lower speed serves as a backup to the primary fans used after a DBA. (One dome recirculating damper delivering 5,000 cfm is connected, via ductwork, to a normally operated cooling coil assembly and the other to a backup cooling coil assembly.) 7 13 17

A safety injection signal (SIS) opens the reactor plant component cooling water control valves and closes the containment chilled water valves. A containment isolation Phase B signal (CIB) automatically starts one fan in each cooling cool assembly at half speed and opens the dome recirculation dampers. 17

9.4.7.3.3 Safety Evaluation

The containment air recirculation system is designed to maintain a controlled environment for personnel and equipment during normal operation. With the loss of power, and only two out of four recirculation fan cooler assemblies available, the design temperature is 135 F maximum, which is below the temperature at which instruments within the containment would require recalibration. A single fan cooler assembled is capable of maintaining the containment temperature below 175 F within an assumed loss of offsite power. After a DBA, the system removes heat to depressurize the containment and minimize localized hydrogen concentration build-up. All safety-related equipment is redundant and supplied with power from different emergency buses. 15 15

A failure of the common supply duct does not jeopardize the function of the system. The cooled air is recirculated within the confines of the containment and large blowdown vent openings in the reactor coolant system cubicles, permit circulation by natural convection.

Electrical unit heaters will maintain the temperature in the containment at 70 F coincident with an outside temperature of -22 F and shutdown of the unit. 15

9.4.7.3.4 Test and Inspection Requirements

The containment air recirculation equipment is inspected during construction and following installation the equipment is tested and air flow is balanced. Two of the eight fans for the containment recirculation system are operated continuously during unit operation. The backup fans are operated periodically to provide equal wear for all fans. Periodic tests of safety-related equipment are performed in accordance with the Technical Specification (Chapter 16).

9.4.7.3.5 Instrumentation Applications

The containment air recirculation system is remote manually controlled from the control room. Cooling water to the coil assemblies in operation is controlled by a temperature sensor within the ring duct located near the fan supply ducts for each coil assembly. If either of the two assemblies in operation fails, a flow switch within the supply duct of each fan, sensing less than minimum required flow, sounds an alarm in the control room. Supply duct temperature for each fan, is also indicated in the control room.

9.4.7.4 Control Rod Drive Mechanism (CRDM) Cooling

9.4.7.4.1 Design Bases

The CRDM cooling portion of the containment structure ventilation system is designed to provide a reliable supply of cooling air to the control rod drive mechanisms during normal and hot shutdown operation. The cooling system permits a maximum temperature rise of 60 F with an air inlet temperature of 90 F by providing a flow rate of 40,000 scfm.

With the loss of normal electric power, the CRDM fans are supplied with electric power from the emergency power buses to prevent damage to the magnetic jack CRDM coil stack windings and the part length CRDM stators when the reactor is maintained at hot shutdown. Insulation in both types of mechanisms is Class H and is designed for temperatures up to 200 C.

9.4.7.4.2 System Description

The CRDM cooling system is shown on Fig. 9.4.7-4.

The CRDM cooling system consists of two 100 percent capacity centrifugal fans, one operating and one a standby. Each fan is rated at approximately 40,000 scfm. The fans take suction from a common plenum located on the reactor missile shield. Three separate intake ducts extend down from the plenum to the CRDM shroud. Discharge ductwork from the fans extends above the operating floor of the containment through a cooling coil assembly, permitting the air to enter the containment fan cooler

units described in Section 9.4.7.3. The coil assembly is supplied by the reactor plant component cooling water system (Section 9.2.2.1). The plenum and ductwork are arranged in portable sections for easy removal and laydown. 3

9.4.7.4.3 Safety Evaluation

The CRDM cooling portion of the containment structure ventilation system is not safety-related. Extra system reliability is provided to ensure capability for CRDM cooling in all normal situations.

The 100 percent redundancy of the fans, with backup power from the emergency buses, maintains the design temperature within the CRDM shroud and ensures a minimum flow rate of 40,000 scfm. 3

A balancing damper is provided in each of the three ducts to ensure that the air flow in each duct does not vary by more than 10 percent of the flow in other ducts.

The flow rate monitors in each duct, with annunciation in the control room, provide continuous supervision of proper system operation.

9.4.7.4.4 Test and Inspection Requirements

System components are functionally tested during startup and are in continual operation, thereafter eliminating the need for periodic testing to ensure operability. Additional checks are made after maintenance to verify function before return to operation. The standby fan is operated periodically to ensure operability and to provide approximately equal wear on both fans.

9.4.7.4.5 Instrumentation Applications

The fans in the CRDM cooling system are started remote manually from the control room. Interlocks are provided such that only one of the fans is in operation at one time.

When the fan is started, the damper in the discharge ductwork of the fan opens and when the fan stops, the damper closes.

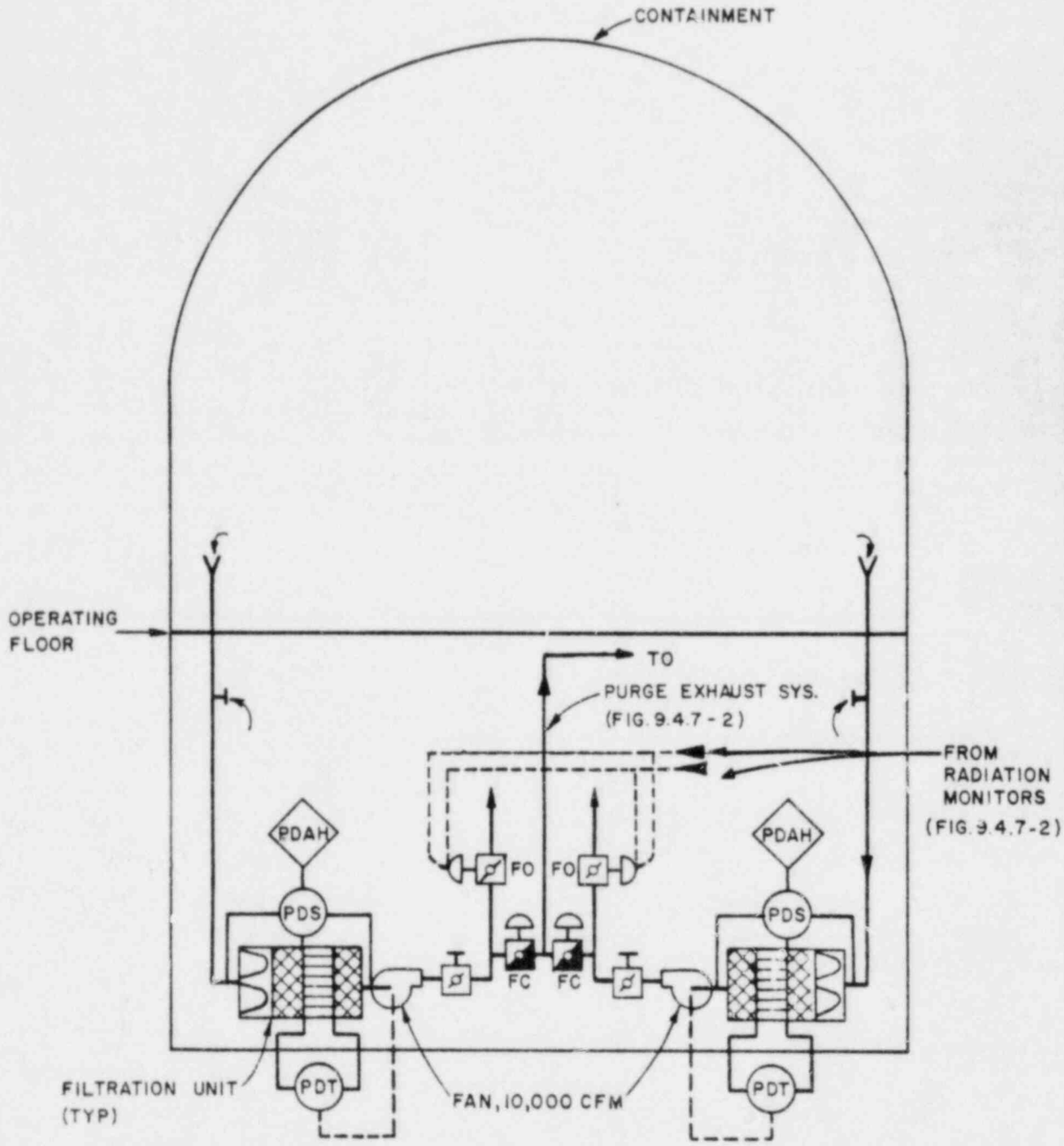

ALL EQUIPMENT IS
NON NUCLEAR SAFETY (NNS)

FIG. 9.4.7-1
CONTAINMENT AIR
FILTRATION SYSTEM
WISCONSIN UTILITIES PROJECT
PRELIMINARY SAFETY ANALYSIS REPORT

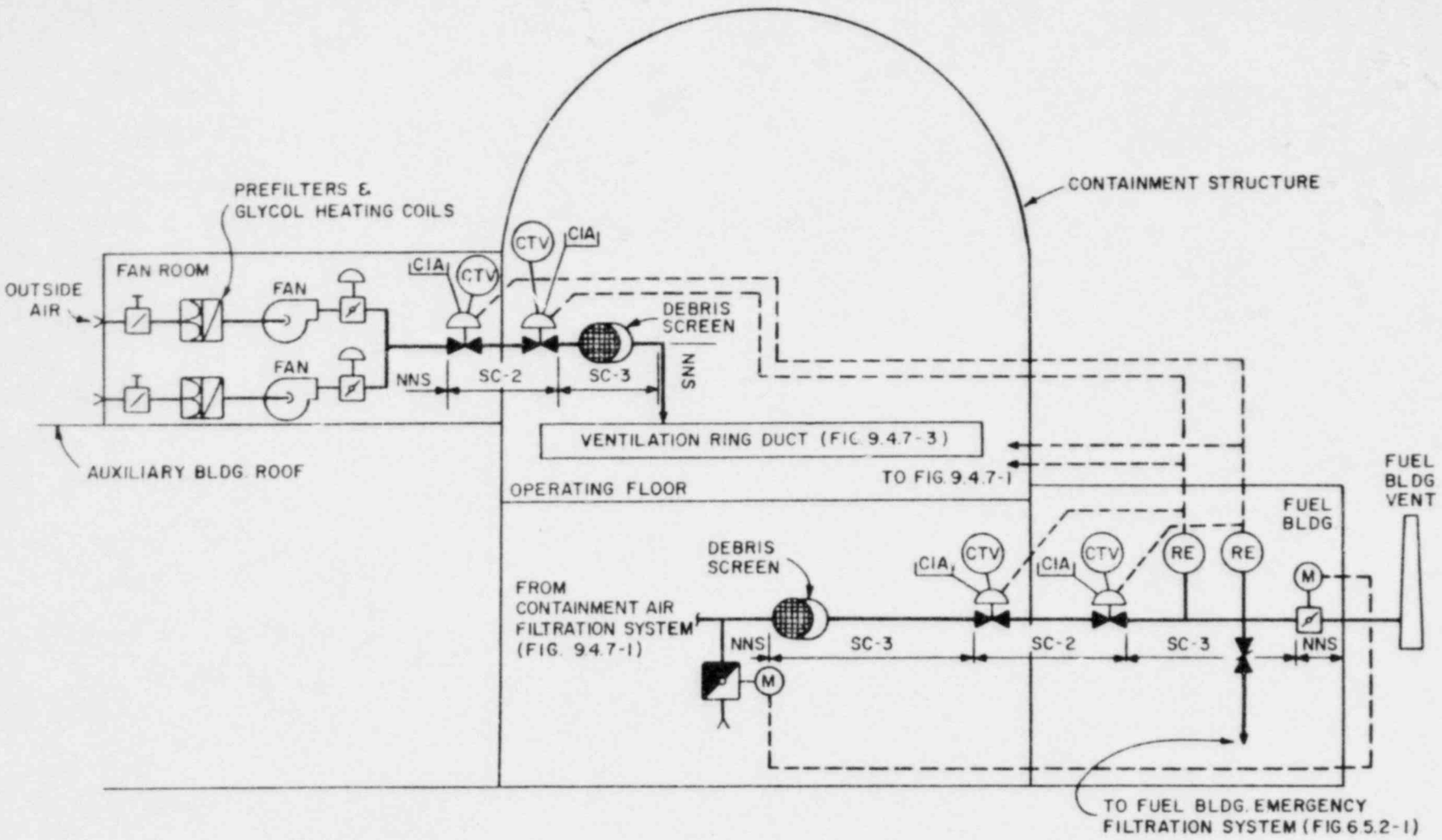

ALL EQUIPMENT IS NON NUCLEAR SAFETY (NNS)
EXCEPT WHERE NOTED

FIG. 9.4.7-2
CONTAINMENT PURGE AIR SYSTEM
WISCONSIN UTILITIES PROJECT
PRELIMINARY SAFETY ANALYSIS REPORT

AMENDMENT 17

PRELIMINARY SAFETY ANALYSIS REPORT

LIST OF EFFECTIVE PAGES

Chapter 10

Page, Table (T) or Figure (F)	Revision Number
10-i through 10-ii	-
10-iii	14
10-iv	8
10-v	14
10-vi	8
10-vii	16
10.1-1	-
10.2-1 through 10.2-3	-
10.2-4 through 10.2-4c	6
10.2-4d	15
10.2-5	-
10.2-6	2
10.2-7	16
10.3-1 through 10.3-2a	17
10.3-3	6
10.3-4	1
10.3-5	-
10.4-1 through 10.4-2	-
10.4-3	15
10.4-4	5
10.4-5 through 10.4-7	-
10.4-8 through 10.4-8a	1
10.4-9	5
10.4-10	6
10.4-10a	2
10.4-11	5
10.4-12 through 10.4-13	-
10.4-14 through 10.4-14a	15
10.4-15	-
10.4-16 through 10.4-20	14
10.4-21	15
10.4-22	3
10.4-23 through 10.4-24	7
10.4-25 through 10.4-26a	9
10.4-27	-
10.4-28	5
10.4-29 through 10.4-30	15
T.10.1-1	-
T.10.2-1 (2 pages)	6
T.10.2-2 (2 pages)	6
T.10.4.8-1 through T.10.4.8-2	14
T.10.4.10-1	-
T.10.4.11-1	-
F.10.1-1 through F.10.1-3	-
F.10.2-1 through F.10.2-6	2
F.10.2-7 through F.10.2-9	6
F.10.3-1 through F.10.3-3	17
F.10.3-4	5
F.10.4.2-1	15
F.10.4.3-1	-
F.10.4.4-1	5
F.10.4.5-1	3
F.10.4.7-1	-
F.10.4.7-2	5
F.10.4.7-3	-
F.10.4.8-1	16
F.10.4.8-2 (deleted)	9
F.10.4.9-1 through F.10.4.9-2	15
F.10.4.9-3	15
F.10.4.10-1	8
F.10.4.11-1 through F.10.4.11-3	-

10.3 MAIN STEAM SYSTEM

10.3.1 Design Bases

The main steam lines extending from each steam generator up to and including the outermost containment isolation valves, the main steam piping within the main steam valve house, and the steam lines up to the steam generator auxiliary feedwater pump turbine drive are safety-related and are designed in accordance with the codes listed in Table 3.2.5-1. These lines, and all valves contained therein, are classified as Seismic Category I (Section 3.2.1). The remainder of the main steam system is not safety-related and is designed in accordance with ANSI B31.1.0-1971. 1

Valves provided in steam lines which penetrate containment include the main steam safety valves, the main steam pressure relieving control valves, main steam stop valves, and the motor-operated isolation valve outside containment in the steam supply to the steam generator auxiliary feedwater pump turbine. 17 2 17

The main steam safety valves are sized in accordance with the ASME Boiler and Pressure Vessel Code, Section III, Nuclear Power Plant Components, to pass 105 percent of the unit design steam flow at 110 percent of the steam generator design pressure. Each main steam line has five main steam safety valves each of which is designed to relieve a maximum of 860,000 lb/hr to the atmosphere. The main steam system design pressure is 1,185 psig. The main steam safety valves are set to open sequentially at 1,185 psig, 1,195 psig, 1,205 psig, 1,220 psig, and 1,235 psig. The relief valves are designed for zero leakage at 90 percent or less of the valve set point. 1 17 1

The main steam pressure relieving control valves are sized to pass at no load pressure 10 percent of the unit design steam flow, and are designed in accordance with ASME Boiler and Pressure Vessel Code, Section III. Each pressure relieving control valve is designed to pass a minimum of 430,000 lb/hr of steam at approximately 1,120 psig. 12

The main steam stop valves are designed in accordance with ASME Boiler and Pressure Vessel Code. The main steam stop valves are designed to close within 5 sec after receipt of an isolation signal. In the event of a full DER of the main steam line these valves will stop flow in either direction within 10 sec after the rupture. The valves will be of the gate, globe, reversed check, or ball type design with pneumatic, hydraulic, or system medium operators designed to fail in the closed position. They are designed for a maximum leakage of 10cc/hr/in. of inside valve diameter at hydrostatic test pressure, 1.5 times the main steam system design pressure. The motor-operated stop check valves and the motor-operated isolation valve in the steam supply line to the auxiliary feedwater pump turbine drive are designed in 1 17 1

accordance with ASME Boiler and Pressure Vessel Code, Section III. The motor-operated isolation valves are designed for a maximum leakage of 10cc/hr/in. of inside valve diameter at hydrostatic test pressure, or at 1.5 times the main steam system design pressure. These valves are normally open and remain open under load rejection conditions to provide steam to drive the auxiliary feedwater pump turbine.

ASME Boiler and Pressure Vessel Code Section VIII safety valves are installed on each moisture separator to protect the separators and crossover system from overpressure. The valves are designed to pass 110 percent of the maximum calculated flow resulting from closure of the low pressure stop and control valves with the turbine stop and control valves wide open.

The main steam system piping supports up to and including the main steam manifold are designed against concurrent turbine trip forces and seismic loads. The main steam system piping supports from the main steam manifold to the turbine are analyzed for turbine trip forces only. The main steam system is also stress analyzed for the forces and moments which result from thermal growth. For the main steam system piping within the containment structure and the valve house structures, sufficient supports, restraints, and guides are provided to prevent damage to the containment liner and adjacent piping, controls, or electric cables should a main steam pipe break. In addition, the main steam system is analyzed to ensure control room integrity should a main steam line fail in the turbine building.

Main steam piping outside the containment structure is designed in accordance with the design criteria discussed in Section 3.7.3. The main steam pipe lines are located as far as possible from safety-related structures, systems, or components required for safe shutdown. Fig. 10.2-1 shows the location of the main steam manifold in the turbine building. There is no safety-related equipment in the turbine building. As shown on the plot plan (Fig. 3.8.4-1), the nearest safety-related structure is the control building. Analyses will be performed to locate supports and restraints in a manner that prevents a whipping pipe or jet impingement from having an adverse effect on Seismic Category I structures, systems, or components necessary for safe shutdown. Analyses that demonstrate the adequacy of these supports and restraints will be provided in the FSAR.

The main steam system is designed to remove heat from the reactor coolant system following sudden load rejection or trip of the turbine generator unit by automatically bypassing main steam to the condenser through the turbine bypass system (Section 10.4.4) and by relieving to the atmosphere through the main steam safety valves and main steam pressure relieving control valves. If the turbine bypass system is unavailable (due to loss of condenser vacuum) the main steam safety valves are capable of relieving the full steam flow.

All safety-related piping and components in the main steam system will be inservice inspected in accordance with the requirements of ASME Boiler and Pressure Vessel Code, Section XI. The design allows for adequate access to perform the required inspection.

10.3.2 System Description

The main steam system is shown on Fig. 10.3-1, 10.3-2, 10.3-3, and 10.3-4.

Steam from each of the three steam generators flows through flow restrictors located in each of the steam generator outlet nozzles, then through separate carbon steel pipes to the main steam stop valves and then to the main steam manifold. Four pipes carry the steam from the main steam manifold to the four high pressure turbine stop and control valves and then to the high pressure turbine. |17

ASME Code Section III safety valves are located on each main steam line outside the reactor containment and upstream of the main steam stop valves.

Main steam pressure relieving control valves are provided in each main steam line outside the containment structure upstream of the main steam stop valves. Under certain conditions, the main steam pressure relieving control valves are used to release reactor coolant system sensible and core decay heat to the atmosphere.

These valves are operated during periods when the steam generators are in service and the turbine generator or condenser are not in service or when the unit is being started up or being shut down. These valves are also operated during core physics testing, when the turbine trips on loss of condenser vacuum, or during loss of electric power to unit auxiliaries. These valves are normally automatically controlled by the steam generator pressure but may be manually positioned from the main control board. The main steam pressure relieving control valves minimize the possibility of operation of the safety valves during normal operating transients by keeping the main steam pressure below the safety valve set points. The main steam pressure relieving control valves are not required for safety of the unit, as the steam generators are protected by the main steam safety valves.

Steam leaving the main high pressure turbine passes through two moisture separator-reheater units in parallel, to the inlets of the two low pressure turbines. Each of the steam lines between the reheater outlet and turbine inlet is provided with low pressure stop and control valves. These valves, operated by the turbine control system, function to control turbine overspeed. Each of the moisture separators is also provided with safety relief valves located on the shell side of the moisture separator.

A steam line is connected to the steam generator auxiliary feedwater pump steam supply header from two of the three main steam lines. The connection is inside the containment, upstream of the main steam stop valves. These two lines which join together inside the containment provide steam to drive the auxiliary feedwater pump turbine. Refer to Section 10.4.10, Auxiliary Feedwater System, for a description of the turbine driven steam generator auxiliary feedwater pump. 6

The single stage reheat of each of the moisture separator reheaters, the auxiliary steam system (Section 10.4.9), and the turbine bypass system (Section 10.4.4) are supplied from the main steam manifold.

10.3.3 Safety Evaluation

If a steam line breaks downstream of its main steam stop valve, this valve closes to stop the flow of steam from the steam generator to the ruptured pipe section. Valve closure checks the sudden release of main steam, preventing rapid cooling of the reactor coolant system (Section 5.2). Valve closure also ensures the availability of a supply of steam to the turbine drive for the steam generator auxiliary feedwater pump.

If a steam line breaks between a main steam stop valve and a steam generator, the affected steam generator continues to blow down; however, blowdown forces and releases are limited by the steam generator integral flow restrictor. This steam line break accident is discussed in Sections 6.2.1 and 15.4.2. The main steam stop valve also provides a means for remote manual shut-off of the steam from its steam generator. 17

In the event of steam line break inside containment, closure of the main steam stop valve in that line prevents the other steam generators from blowing down inside containment (see Fig. 10.3-1, 10.3-2, 10.3-3, and 10.3-4). 17 1

In the event of a main steam pipe rupture upstream of the main steam stop valve, motor-operated stop check valves in the steam supply lines to the steam generator auxiliary feedwater pump turbine prevent the other cross connected steam generator from blowing down through the crosstie. The activation of the motor-operated stop check valve in the line from the ruptured main steam pipe ensures continuous steam supply to the auxiliary feedwater pump turbine. Operating conditions of the steam generator auxiliary feedwater pump and turbine are indicated in the control room to enable the operator to monitor and adjust the feedwater flow.

Operation of the solenoid pilot operated diaphragm valves for the steam generator auxiliary feedwater pump turbine is described in Section 7.4.1. Information on the steam generator auxiliary feedwater pumps is contained in Sections 10.4.10 and 16.4.8.

During operation, excess steam generated by the steam generators is dissipated by the turbine bypass system (Section 10.4.4).

All safety-related piping and components in the main steam system may be inspected in accordance with ASME Section XI to ensure system integrity.

10.3.4 Test and Inspection Requirements

During unit shutdown, the tripping mechanisms for the main steam stop valves are tested for proper operation. Periodically during operation, the stop valves may be tested for partial closure. All motor-operated stop-check valves in the main steam system may also be periodically tested to verify that they are in operable condition.

The steam generator auxiliary feedwater pump turbine and the diaphragm valves can be tested during normal operation.

Code Class 2 and 3 piping within the jurisdiction of ASME III is inspected and tested according to Articles NC-5000 and -6000, respectively, of that code. Non-Nuclear Code (NNC) piping falling within the jurisdiction of ANSI B31.1.0-1971 is inspected

PRELIMINARY SAFETY ANALYSIS REPORT

LIST OF EFFECTIVE PAGES

Chapter 11

Page, Table (T) or Figure (F)	Revision Number
11-i	15
11-ii	14
11-iii	17
11-iv through 11-x	14
11.1-1 through 11.1-10	14
11.2-1 through 11.2-2	14
11.2-3 through 11.2-5	15
11.2-6 through 11.2-10	14
11.3-1 through 11.3-2a	14
11.3-3 through 11.3-6	5
11.3-7 through 11.3-8	14
11.4-1 through 11.4-3	14
11.4-4	-
11.4-5	17
11.4-6 through 11.4-7	14
11.4-8 through 11.4-9	17
11.5-1 through 11.5-7	14
11.6-1 through 11.6-3	-
11.6-4 through 11.6-6	14
T.11.1-1A (4 pages)	16
T.11.1-1B (page 1) (page 2)	14
T.11.1-1B (page 3) (page 4)	16
T.11.1-2A (2 pages)	14
T.11.1-2B	14
T.11.1-3 through T.11.1-4	-
T.11.1-5 (3 pages)	14
T.11.1-6 (3 pages)	14
T.11.1-7	14
T.11.2-1 (2 pages)	14
T.11.2-2 (2 pages)	14
T.11.2-3 (2 pages)	14
T.11.2-4 through T.11.2-24 (deleted)	14
T.11.2-25 through T.11.2-26	-
T.11.2-27	5
T.11.2-28 through T.11.2-29 (deleted)	14
T.11.2-30 (page 1)	2
(page 2)	1
T.11.3.3-1 (2 pages)	5
T.11.3.6-1 (3 pages)	14
T.11.3.6-2 (2 pages)	14
T.11.3.6-3 through T.11.3.6-7	14
T.11.3.9-1 (deleted)	14
T.11.4-1 (page 1)	17
(page 2)	14
T.11.5-1	14
T.11.5-2 (2 pages)	14
T.11.6.1-1 through T.11.6.1-3	-
T.11.6.1-4 (2 pages)	-
T.11.6.1-5	-
T.11.6.1-6 (2 pages)	-
T.11.6.2-1 through T.11.6.2-4 (deleted)	14
T.11.6.3-1 (2 pages)	10
T.11.6.4-1	15
F.11.1-1	-
F.11.2-1 through F.11.2-2	14
F.11.2-3	5
F.11.2-4	14
F.11.2-5 through F.11.2-9	5
F.11.2-10 (deleted)	14
F.11.2-11	15
F.11.2-12 through F.11.2-13 (deleted)	9
F.11.3-1	14
F.11.3-2 through F.11.3-6	5
F.11.3-7 through F.11.3-8	14
F.11.5-1 through F.11.5-3	14
F.11.5-4 through F.11.5-7	5
F.11.6.1-1 through F.11.6.1-3	-
F.11.6.2-1 through F.11.6.2-8 (deleted)	14
F.11.6.2-9 through F.11.6.2-20 (deleted)	9

TABLE OF CONTENTS (CONT'D)

CHAPTER 11

CHAPTER 11

TABLE OF CONTENTS (CONT'D)

11.4.2.1.4 Reactor Plant Vent Particulate Monitor

This channel is identical to the process vent header particulate monitor except that a multiprobe isokinetic sampler is used to obtain a representative sample (Section 9.4). High radioactivity initiates an alarm in the control room which alerts the operators that the release of radioactivity is at the limit specified in Section 16.3.9 and that corrective action is required.

11.4.2.1.5 Reactor Plant Vent Gas Monitor

This channel is identical to the process vent header gas monitor. High radioactivity alerts the operators that the release of radioactivity is at the limit specified in Section 16.3.9 and that corrective action is required.

11.4.2.1.6 Fuel Building Vent Particulate

This channel is identical to the reactor plant particulate monitor. High radioactivity alarm of the fuel building vent particulate monitor initiates an alarm in the control room which alerts the operators to initiate operation of the fuel building emergency filtration system.

11.4.2.1.7 Fuel Building Vent Gas Monitor

This channel is identical to the reactor plant vent gas monitor. High radioactivity alarm of the fuel building vent particulate monitor initiates an alarm in the control room which alerts the operators to initiate operation of the fuel building emergency filtration system.

11.4.2.1.8 Containment Purge Air Vent Monitor

The containment purge exhaust air is monitored by redundant Seismic Category I Class IE inline detectors in the purge exhaust line outside containment. High radioactivity alarm from either channel automatically terminates containment purge and supply (Section 9.4.7.2 and 6.2.4). |17 |17

The containment purge vent monitors, in conjunction with the containment particulate and gas monitors (Section 12.2.4), provide the information required for the conduct of the containment purging operation.

11.4.2.1.9 Reactor Plant Component Cooling Water System Monitor

This channel continually monitors the reactor plant component cooling water (Section 9.2.2.1). A sample is continually withdrawn from the component cooling water system downstream of the component cooling pumps discharge and is monitored by a detector mounted in an offline shielded liquid sampler. After passing through the sampler, the sample is returned to the

component cooling water system. The sample lines and all wetted surfaces of the liquid sampler are austenitic stainless steel.

The detector output is transmitted to the control room for indication, recording, and alarm in a manner identical to that for other monitors. Radioactivities significantly above background are indicative of a leak into the component cooling water system from other systems containing radioactive fluids which are cooled by the reactor plant component cooling water. The detector has a sensitivity of 10^{-5} μCi/cc for gross beta-gamma activity.

High radioactivity alarm closes the reactor plant component cooling water surge tank vent.

11.4.2.1.10 Liquid Wastes Monitor

This channel continually monitors the liquid waste effluent (Section 11.2), downstream of the last possible point of radioactive liquid addition, by means of a detector mounted in a shielded, inline sampler assembly. The detector has a sensitivity of 10^{-5} μCi/cc for gross beta-gamma activity.

The detector output is transmitted to the control room for indication, recording, and alarm in a manner identical to other monitors. High radioactivity release closes a discharge valve, thereby preventing discharge of high radioactivity effluent to the environment.

11.4.2.1.11 Steam Generator Blowdown Sample Monitors

These channels monitor the steam generator blowdown (Section 10.4.5) for radioactivity which is indicative of primary-to-secondary leakage. Samples from each of the three steam generator bottoms are continually monitored by a detector mounted in an inline liquid sampler. The detector has a
14 sensitivity of 10^{-5} μCi/cc for gross beta-gamma activity. Sample lines and wetted surfaces of the sampler are austenitic stainless steel.

The detector output is transmitted to the control room for indication, recording, and alarm in a manner identical to that for other monitors.

14 A high radioactivity alarm terminates steam generator blowdown from that individual steam generator to the blowdown processing system (Section 10.4.12).

11.4.2.1.12 Steam Generator Blowdown Discharge Monitor

14 This channel continually monitors the steam generator blowdown waste effluent (Section 10.4.8), downstream of the last possible point of radioactive liquid addition, by means of a detector

mounted in a shielded, inline sampler assembly. The detector has a sensitivity of 10^{-5} μCi/cc for gross beta-gamma activity.

The detector output is transmitted to the control room for indication, recording, and alarm in a manner identical to other monitors. A high radioactivity signal closes the discharge valve leading to the circulating water system discharge and opens a valve to allow recyling to the main condenser. This action prevents discharge of high radioactivity effluent to the environment. 14

11.4.2.1.13 Reactor Coolant Letdown Monitors

The gross radioactivity of the reactor coolant is continually monitored by low range and high range detectors. The samples are drawn from the reactor coolant letdown line (Section 9.3.4). The N-16 isotope has decayed to insignificant levels in transit from the containment to the auxiliary building. Large variations in radioactivity levels are possible depending on the quantity of fission products in the reactor coolant. The detectors are located adjacent to the offline sample tubing. The ranges and sensitivities of the detectors provide one decade overlap of the highest decade of the low range detector. Collimating plugs are used with the low range detector after the reactor coolant radioactivity builds up to provide redundancy for the high range channel. Sample lines are stainless steel.

The outputs of the detectors are transmitted to the control room for indication, recording, and alarm in a manner identical to that for other monitors.

11.4.2.1.14 Service Water Discharge Monitors 14

These monitors continually analyze samples drawn from the service water discharge headers (Section 9.2.1). During normal operation, radioactivity detected indicates leakage from the component cooling water system (Section 9.2.2) into the service water system.

These two channels are identical to the component cooling water monitor. Wetted surfaces of the liquid sampler are of material suitable to ensure that service water does not cause corrosion or pitting of the sampler.

11.4.2.1.15 Main Condenser Air Ejector Monitor 14

The main condenser air ejector monitor continually analyzes the gaseous effluents from the condenser air ejector discharge (Section 10.4.2). The detector is located in a well of an inline sampler and has a sensitivity of 10^{-6} μCi/cc for X-133.

The detector output is transmitted to the control room for indication, recording, and alarm in a manner identical to that

for other monitors. Radioactivity levels are indicative of primary-to-secondary leakage.

14 **11.4.2.1.16** Turbine Building Drains Monitor

This sample is monitored by a detector mounted in a shielded in line sampler. The detector has a sensitivity of 10^{-6} μCi/cc for gross beta-gamma radioactivity. The sample point is downstream of any possible fluid addition to the turbine building drains discharge line (Section 11.2).

14 **11.4.2.1.17** Turbine Building Vent Particulate Monitor

This channel is identical to the reactor plant vent particulate monitor. A high signal from this monitor informs the operator in the control room of particulate activity in either the main condenser air ejector discharge, turbine gland sealing discharge or condenser air removal pump discharge.

14 **11.4.2.1.18** Turbine Building Vent Gas Monitor

This channel is identical to the reactor plant vent gas monitor. High activity alarm from this monitor informs the operator in the control room of gaseous activity in either the main condenser air ejector discharge, turbine seal steam condenser discharge, or condenser air removal pump discharge.

14 **11.4.2.1.19** Service Building Vent Particulate Monitor

This channel is identical to the reactor plant vent particulate monitor, and monitors potential particulate releases from the contaminated areas and chemical laboratory fume hoods in the service building.

14 **11.4.2.1.20** Service Building Vent Gas Monitor

This channel is identical to the reactor plant vent gas monitor, and monitors potential gas releases from the contaminated areas and chemical laboratory fume hoods in the service building.

11.4.2.1.21 Control Room Air Intake Monitor

The control room air intake is continuously monitored for airborne radioactivity by means of redundant QA Category and Seismic Category I inline airborne radiation detectors. The location of these monitors is shown on Fig. 9.4.1-1. During an airborne release the control room air intake monitors indicate airborne radiation levels at the intake and under conditions of high radiation or monitor failure automatically isolate the normal air intake and initiate control room emergency filtration (Section 4.1 and 9.4.1).

11.4.3 Sampling

Various process and effluent samples for chemical and radiochemical analysis which are taken remotely by the sampling system are discussed in Section 9.3.2.

Local samples periodically taken and monitored for radioactivity are described with the individual system sections. Section 16.4.10 describes various liquid samples analyzed for gross beta-gamma activities, including the sampling frequencies. Section 11.2 presents maximum concentrations of radionuclides expected in the various process and effluent liquid samples.

11.4.4 Calibration and Maintenance

Procedures governing calibration, maintenance, and arrangements for obtaining independent audits and verifications will be discussed in the FSAR.

TABLE 11.4-1

PROCESS AND EFFLUENT RADIATION MONITORS

Total Number For Both Units	Sensitivity (Ci/cc)	Action On High Level	Section Reference
Process Vent Heater Particulate (2)	10^{-10} (I-131)	Local and remote alarm only	11.3
Process Vent Heater Gas (2)	10^{-6} (Kr-85)	Local and remote alarm only	11.3
Process Gas Receiver (2)	10^{-3} (Kr-85)	Terminates decayed process gas release	11.3
Reactor Plant Vent Particulate (2)	10^{-10} (I-131)	Local and remote alarm only	9.4.2
Reactor Plant Vent Gas (2)	10^{-6} (Kr-85)	Local and remote alarm only	9.4.2
Fuel Building Vent Particulate (2)	10^{-10} (I-131)	Local and remote alarm only	9.4.5
Fuel Building Vent Gas (2)	10^{-6} (Kr-85)	Local and remote alarm only	9.4.5
Containment Purge Air Vent (4)	10^{-10} (I-131) 10^{-6} (Kr-85)	Closes containment purge exhaust and supply isolation valves	9.4.7.2, 6.2.4 17
Reactor Plant Component Cooling Water (4)	10^{-5} (Gross beta-gamma)	Closes reactor plant component cooling surge tank vent	9.2.2.1
Liquid Wastes (2)	10^{-5} (Gross beta-gamma)	Terminates liquid waste effluent release	11.2
Steam Generator Blowdown Sample (6)	10^{-5} (Gross beta-gamma)	Terminates steam generator blowdown discharge from affected steam generator to processing system	10.4.8 14
Steam Generator Blowdown Discharge Monitor (2)	10^{-5} (Gross beta-gamma)	Terminates steam generator blowdown effluent to the environment	10.4.8
Reactor Coolant Letdown Gross Activity (4)	10^{-10} (I-131) 10^{-7} (Gross beta-gamma)	Local and remote alarm only	9.3.4

PRELIMINARY SAFETY ANALYSIS REPORT

LIST OF EFFECTIVE PAGES

Chapter 12

Page, Table (T) or Figure (F)	Revision Number
12-i through 12-ii	16
12-iii through 12-iv	14
12-v	16
12-vi	8
12.1-1 through 12.1-2	14
12.1-3	2
12.1-4	-
12.1-5 through 12.1-8b	16
12.1-9	9
12.1-10 through 12.1-12	-
12.1-13	2
12.1-14 through 12.1-14a	9
12.1-15 through 12.1-16	14
12.1-17	16
12.2-1	-
12.2-2 through 12.2-11	14
12.3-1	-
12.3-2 through 2a	16
12.3-3	2
12.3-4 through 12.3-6	-
T.12.1-1	9
T.12.1-2 through T.12.1-4	-
T.12.1-5 (page 1)	0
(page 2)	2
T.12.1-6 (2 pages)	2
T.12.1-7 (2 pages)	2
T.12.1-8 through T.12.1-12	2
T.12.2-1 through T.12.2-4	14
T.12.2-5	6
T.12.2-6 through T.12.2-8	14
F.12.1-1	16
F.12.1-2	11
F.12.1-3 through F.12.1-5	10
F.12.1-6	16
F.12.1-7	17
F.12.1-8 through F.12.1-9	16
F.12.1-10	17
F.12.1-11 through F.12.1-12	16
F.12.1-13 through F.12.1-15	2
F.12.1-16 through F.12.1-20	16
F.12.1-21	-
F.12.1-22	16
F.12.1-23	6
F.12.2-1	17
F.12.2-2	2