NORTH ANNA UNIT 2

LOOSE THERMAL SLEEVE

SAFETY EVALUATION

AUGUST 1982

WESTINGHOUSE ELECTRIC CORPORATION

2616Q:1

LOOSE THERMAL SLEEVE
SAFETY EVALUATION

1.0 SUMMARY

Extensive evaluations were performed to determine the effects of loose reactor coolant pipe thermal sleeves at the Virginia Electric and Power Company (Vepco) North Anna Unit 2 plant. These evaluations assumed all thermal sleeves similar in design to that shown in Figure 3.1 become loose and are transported in the reactor coolant system as single units or fragments. The evaluations considered nozzle integrity without thermal sleeves, the mechanical effects of loose sleeves in the reactor coolant system, and flow blockage effects of loose sleeves during normal operation and transient conditions.

2.0 INTRODUCTION

2.1 PURPOSE

As a result of the discovery of failed welds on certain thermal sleeves, a safety evaluation was performed on the effects of loose and missing reactor coolant pipe nozzle thermal sleeves. This report summarizes and documents that safety evaluation.

2.2 HISTORY

Westinghouse was recently informed by one of its operating plant customers that an underwater television inspection had revealed a loose metal piece under the reactor internals lower core plate. Subsequent investigations by Westinghouse and the utility resulted in the discovery of additional loose parts in the reactor vessel and an eventual conclusion that the sources of the parts were the thermal sleeves from the 10 inch RHR/SIS line nozzles. That conclusion has been verified by radiographic examination of all four such nozzles on the affected unit. The sleeves traveled through the cold leg into the reactor vessel where all missing parts have been accounted for and recovered. Radiographic examination of other similarly designed sleeves on the affected unit have revealed one broken weld and a very slight movement of the 14 inch surge line nozzle sleeve as well as an indication of a possible crack of a thermal sleeve weld in one of the two 3 inch charging lines.

A similar failure was also discovered at another operating plant where one 10 inch nozzle thermal sleeve of the same design was found to be missing and has been demonstrated to be in the reactor vessel lower plenum. The welds of the remaining sleeves of the subject design at this unit were shown to be intact by radiographic inspection.

On North Anna Unit 2, a radiographic examination by Vepco has indicated that four of the subject design thermal sleeves appear to have cracked

welds at the attachment to the pipe, and that the remaining seven, including the 14 inch pressurizer surge line thermal sleeve, have welds that are intact.

2.3 THERMAL SLEEVE INVENTORY

Thermal sleeves are utilized at several locations in the North Anna Unit 2 plant Reactor Coolant System (RCS) to reduce thermal stresses on RCS pipe nozzles. Table 1 provides locations, sizes, and number of the reactor coolant pipe thermal sleeves of the design which have exhibited cracked welds.

TABLE 1

NORTH ANNA 2
THERMAL SLEEVE STATUS

NOZZLE	SIZE	LOOP	WELD CONDITION	COMMENTS
Surge Line	14"	C	Intact	
Accumulator	12"	A	Intact	
		B	Cracked	To be removed
		C	Cracked	To be removed
SI	6"	A	Intact	
		B	Intact	
		C	Cracked	To be removed
Charging	3"	B	Cracked	To be removed

The material of construction of the thermal sleeves is SA 376 stainless steel type 316 or SA 240 stainless steel, type 304.

Thermal sleeves of a different design are also present at the surge line and spray line nozzles at the pressurizer and in the CVCS fill lines on the RCS crossover leg. These sleeves employ welds of 45°, 45° and 360° respectively and have a counter bore geometry to prevent movement of the sleeve. There has been no evidence of failure of these types of sleeves, and they are not considered in this safety evaluation.

2.4 ASSUMPTIONS

To complete the safety evaluation for North Anna Unit 2 certain assumptions were made. These assumptions are based on facts gathered from the first operating plant to discover missing thermal sleeves, engineering judgement, and recommended actions for continued operation. The assumptions are as follows:

1. All reactor coolant piping thermal sleeves of the subject design are assumed to come loose and are transported through the RCS system.

2. The sleeves are assumed to remain intact or split into quarter sections, whichever case provides the most conservative evaluation. The sleeves are attached by two welds at 180° in line with the loop flow on the upstream end. Field examination indicates cracking can occur at the welds allowing an intact sleeve to come loose. Another failure mode which has been observed at another plant is cracking of the sleeve along its length, beginning at one of the notches along the upstream end of the sleeve. Both of these failure modes produce large objects. The ductile nature of the sleeve material also makes it unlikely that small pieces would be generated by impacts within the reactor coolant system. This evaluation specifically considered objects ranging in size from a complete 14 inch

sleeve to one quarter sections of the 3 inch sleeves. Smaller fragments were also addressed in the nuclear fuel evaluation.

3. The plant operators are aware of the potential for loose parts and will monitor plant operations and pertinent equipment characteristics.

3.0 NOZZLE INTEGRITY

3.1 INTRODUCTION

This section summarizes the stress evaluation of the 3" charging nozzles, the 12" accumulator nozzles, the 6" SI nozzles, and the 14" pressurizer surge nozzle on the main reactor coolant loop piping, to insure the structural integrity of the nozzles assuming certain failures of the thermal sleeves. The specific thermal sleeve failure discovered during inspection of the subject nozzles, and considered in this evaluation, included, a three inch charging and 6 inch safety injection thermal sleeve weld failure and rotation of the sleeve, and a 12 inch accumulator injection nozzle thermal sleeve weld failure with the sleeve becoming lodged in the nozzle between 1.0 and 6.0 inches below (downstream) its installed location.

The analysis included an evaluation of the subject nozzles without a thermal sleeve and a "bounding" evaluation of the nozzle at the location of the failed sleeve/nozzle attachment weld. Even though the thermal sleeves have been removed on certain nozzles included in this evaluation, a "bounding" analysis was still performed on all nozzles for conservatism. This evaluation which considered all design transients and mechanical loads specified in the piping design specification demonstrates the structural integrity of the subject nozzles without thermal sleeves.

Due to the similarities in the geometry of all subject nozzles, and the similarities in the thermal sleeve designs (see Figure 3.1) the same analytical techniques were applied to all nozzles. The evaluation was separated into the following three basic regions on the nozzle, (see Figure 3.1), 1) the location of the nozzle to pipe field weld at the "safe-end" of the nozzle, 2) the location of the original sleeve weld to nozzle wall and 3) the remaining body of the nozzle including the crotch region.

3.2 STRESS ANALYSIS

The stress analysis performed on the subject nozzles can be summarized as follows. The detailed geometry and material of the nozzle, without a thermal sleeve, was obtained from the appropriate specifications. (For example, the previously mentioned figure and the plant specific drawings and equipment specifications). Then a detailed 2-dimensional finite element model was developed for the nozzle and appropriate representative portions of the large header pipe and attached branch pipe (Figures 3.2 and 3.3).

Using piping design specifications containing operating transient descriptions developed on the basis of the systems design criteria, the temperature transients, fluid velocities, number of occurrences, etc. were summarized for all applicable transients, and appropriate loading conditions were developed for the heat transfer analysis using the finite element model. The analysis included a time-history thermal loading for a sufficient duration of time to insure the maximum stress intensities were calculated for all locations.

Using the same finite element model, stress intensities were calculated from the pipe wall temperature distribution obtained from the heat transfer analysis for all critical locations. The actual fatigue evaluation of the component incorporates the methods and guidelines specified in the ASME ANSI B31.7 Nuclear Power Piping Code, USA Standard for Pressure Piping, 1969 Edition, including the 1970 and 1971 Addenda.

This rigorous treatment has been applied to the 3" charging nozzle, the 6" safety injection nozzle, and the 14" surge line nozzle without thermal sleeves. Due to design modifications for later plants, the 90°-12" accumulator nozzle was changed to a 45° inclined injection nozzle without a thermal sleeve. A complete set of thermal transient stress analysis was performed for this inclined injection nozzle for the same loading conditions as specified for the 90° injection nozzle. In addition, analysis was also performed on a geometrically similar nozzle

(6-inch) without a thermal sleeve with similar design transients. The results of these two analyses were used in the qualification of the 12-inch accumulator injection nozzle without a thermal sleeve.

In the analysis of the nozzle without thermal sleeves, two locations were found where maximum peak stress intensity and fatigue usage occurred, 1) the th.ck part of the nozzle near the crotch region and 2) the nozzle to the branch pipe field weld. This second region was found to be critical after stress intensification factors were applied to the weld location, as specified in the ANSI Code. Assuming the as-welded conditions, a stress concentration factor of 1.7 was applied on top of the calculated values. At the crotch region, a factor of only 1.1. was applied, due to the ground flush condition at the weld location.

To complete the fatigue calculation, the external loadings on the nozzle, as calculated for the North Anna Unit 2 plant were incorporated, and a usage factor was calculated for each nozzle.

Finally, an evaluation of the failed fillet weld region on the nozzle was performed. Because of the close proximity of the fillet weld location to the pipe/nozzle butt weld (1.0-1.5 inches), the evaluation of the safe-end location could be shown to yield the same usage factor, once the following was considered. An appropriate stress intensification factor was required to simulate the inside surface of the nozzle at this location. Factors of 1.4 for K_3 and 1.5 for K_2 were conservatively used. This was based upon the relative severity of the conditions which resulted in the factors (K_3=1.7 and K_2= 1.8,) for an as-welded butt weld, (i.e., affected inside surface, thin-walled pipe, misalignment of the butted pipe walls,) and the condition actually present at the fillet weld location (affected inside surface, thick wall pipe, perfect alignment). This difference in stress intensification factors more than offset the small increase in stress intensity due to the location being closer to the thick part of the nozzle and resulted in no significant change in stress.

3.3. CONCLUSIONS

The cumulative usage factors calculated on the basis described in the previous sections and the external loadings based on North Anna Unit 2 specific as-built information indicates that all critical locations meet the ANSI Code requirements. Therefore, it is concluded that the nozzles are qualified to withstand all applicable design transients and will maintain their structural integrity without thermal sleeves for the plant design life.

THERMAL SLEEVE
BUTT WELD NOZZLE

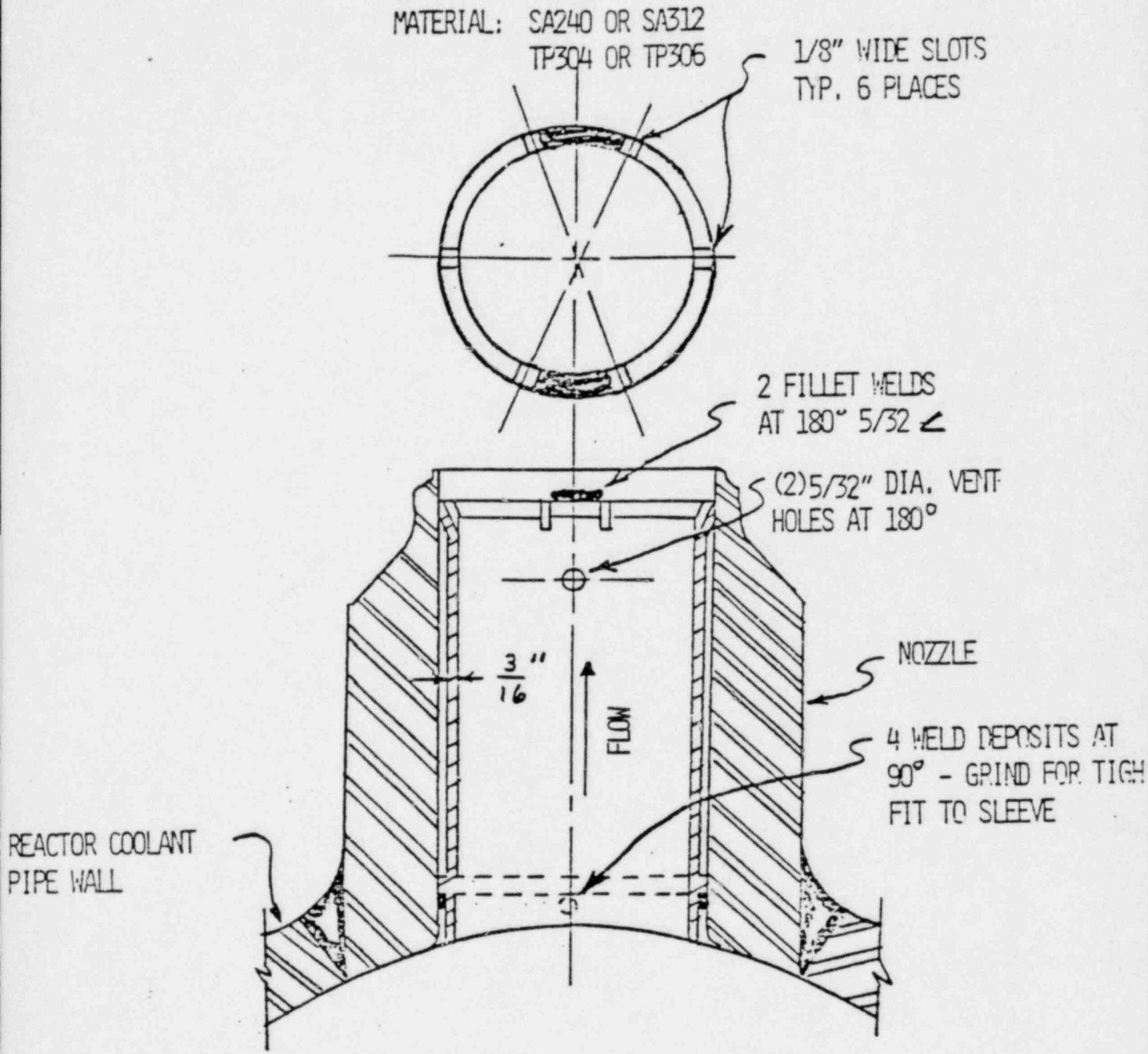

FIGURE 3.1

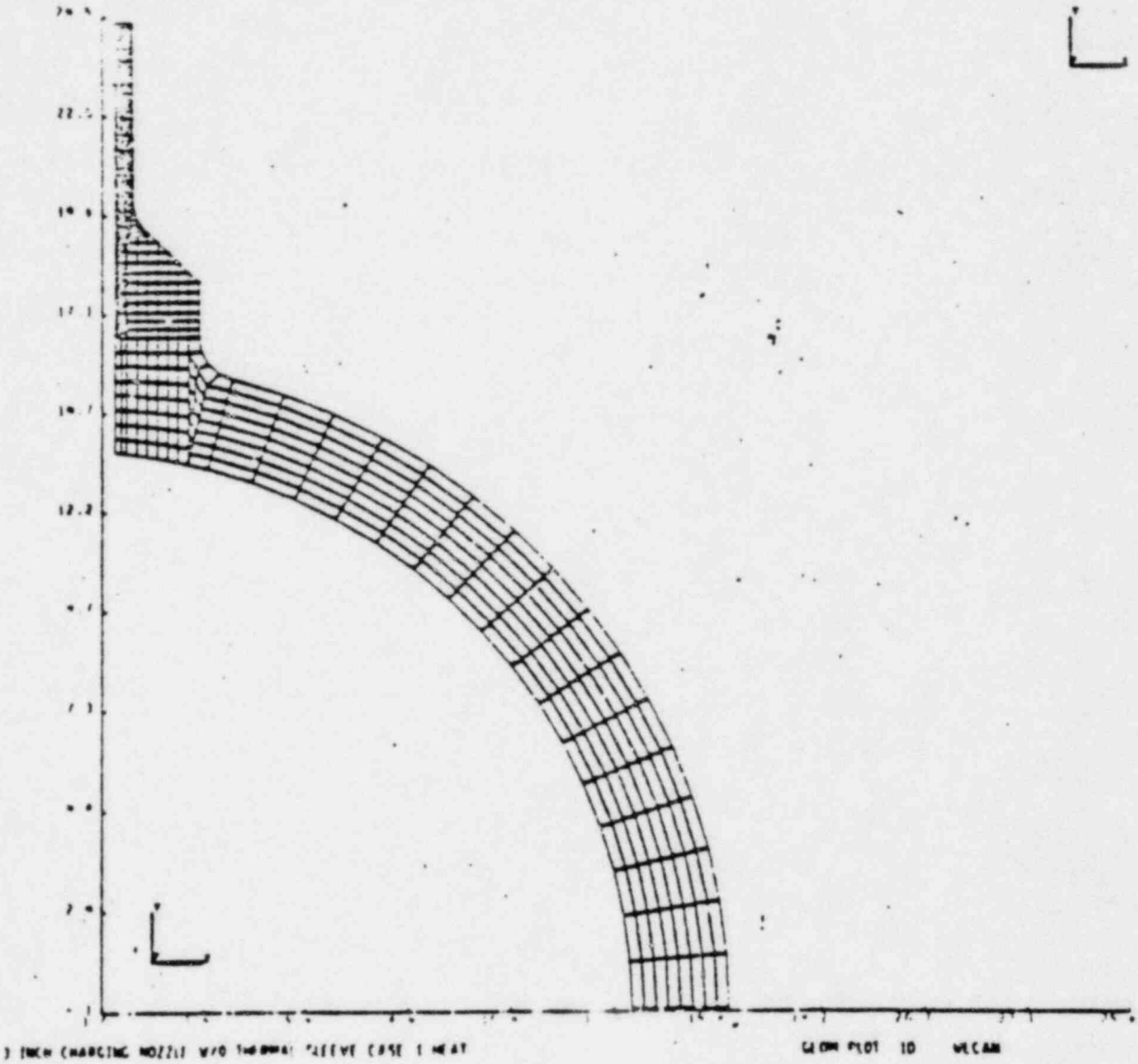

FIGURE 3.2

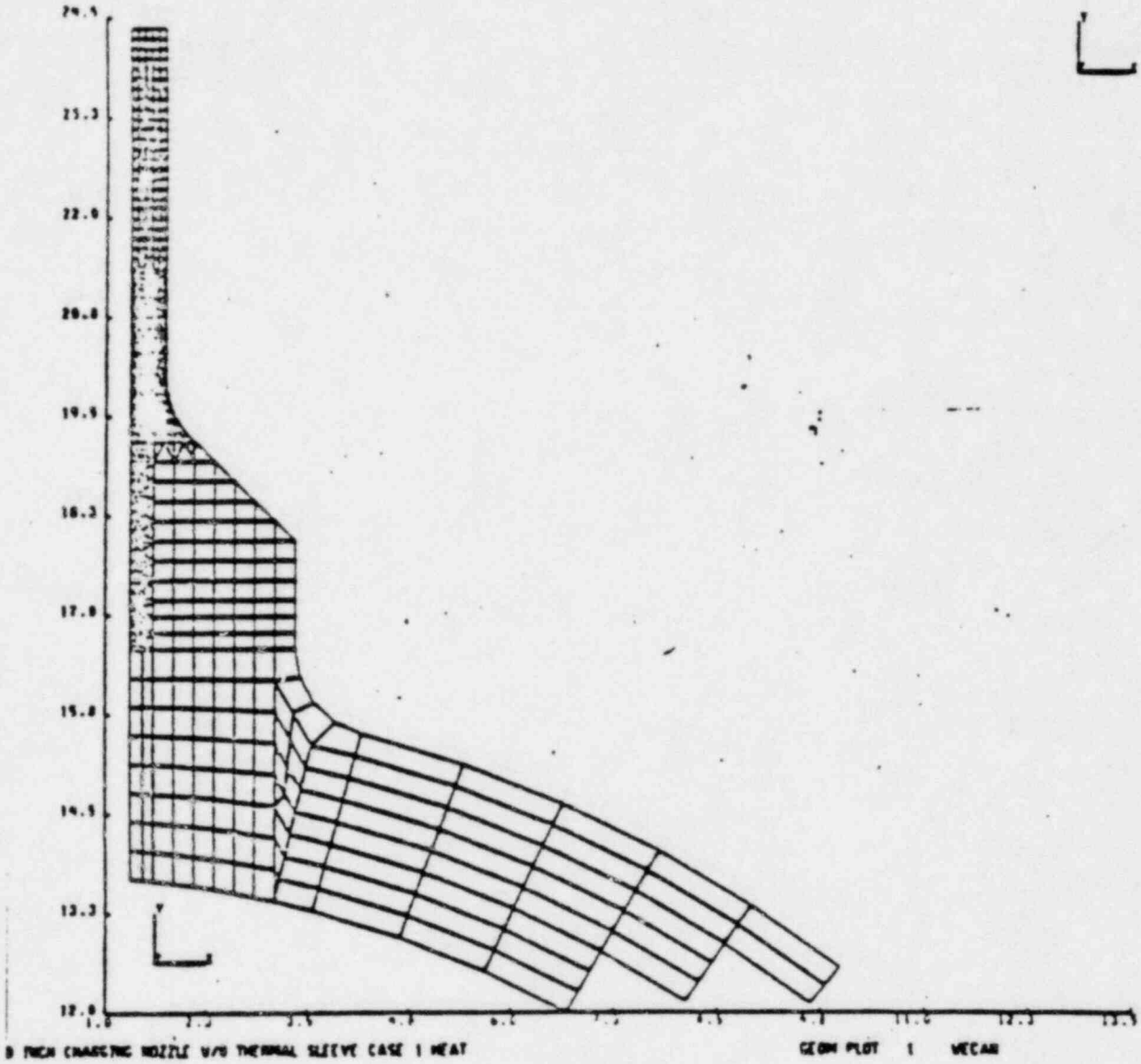
25.3
22.0
20.0
19.5
18.3
17.0
15.0
14.5
13.3
12.0
1.0
2.2
3.5
6.2
7.2
11.0
12.2
13.5
GEOM PLOT 1 WECAN

FIGURE 3.3

4.0 MECHANICAL EFFECTS OF LOOSE OBJECTS

4.1 REACTOR COOLANT PIPE

The effect of the loose thermal sleeves on the primary system piping, either through impact or erosion, is expected to be negligible due to the limited impact energy created by the low radial flow velocities in the piping. The ductile material of the piping and the thermal sleeve would also preclude any sharp impact marks on the piping, thus eliminating any concern regarding possible stress concentration points.

The locations of the RTD bypass scoops and thermowells in the reactor coolant piping are upstream of the thermal sleeves, except for the 14" surge line thermal sleeve which is upstream of the hot leg RTD scoops and T hot thermowell. The effect of a loose 14" thermal sleeve impacting these components during operation has been considered and is discussed below.

There are three RTD bypass scoops at 120° locations which protrude 6 to 8 inches into the flow stream. Upon impact of the thermal sleeve, the scoop is assumed to be sheared off or deformed sufficiently to make it ineffective. The RCS pressure boundary will not be violated. An additional loose part could be generated, but it will be captured in the steam generator channel head along with the sleeve. Damage to one or more scoops could affect the flow rate in the bypass line, thereby increasing the delay time in the temperature measurement. However, a significant change in the flow velocity would actuate a low flow alarm to alert the plant operator.

Deforming or shearing the hot leg RTD scoops has two effects: 1) it will increase the RTD loop flow transport time, and 2) it could cause the RTD to indicate a different coolant temperature than the other loops due to radial temperature distribution in the RCS pipe.

The maximum flow transport time under the worst postulated conditions would be 1.3 seconds. The safety analysis reported in the FSAR assumes a delay of 2 seconds for flow transport time and 2 seconds for the RTD sensor. Thus, the predicted flow transport time is bounded by the safety analysis. Should the scoops be sheared off, the RTD's would be biased by less than 2°F. The overtemperature ΔT trip requires a 2 out of 3 input. Thus a bias in one RTD will not cause a safety concern since two channels remain unaffected.

Damage to the RTD scoops can affect the performance of control systems which use this temperature measurement as input; e.g. rod control system. The performance of these systems could be affected, however, no safety concern is created.

In summary, potential damage to the RTD scoops does not create a safety concern.

The T_{hot} thermowell is located at the 0° centerline of the RCS piping and protrudes approximately 3 inches into the flow stream. Although the profile of the thermowell is small relative to the total flow area, if the 14" thermal sleeve did impact the thermowell it could result in the severance of the well at the RCS pipe wall. An additional loose part would be generated and a leak would result (approximately 15.7 lb/sec) through the connection. The T_{hot} measurement would become unavailable and the potential for a missile (T_{hot} probe) and jet impingement would result.

The RCS safety would not be jeopardized since this size leak is detectable and also is within the makeup capability of one charging pump. This does not present an unanalyzed event nor does it challenge the plant safety systems.

4.2 STEAM GENERATOR

4.2.1 Introduction

This evaluation considers the potential effects of an 11.5" outside diameter thermal sleeve entering the primary side of the Series 51 steam

generators at North Anna Unit 2 from the connection of the pressurizer surge line. Affected components of the steam generator may include the tube sheet, divider plate, channel head, tube-to-tubesheet welds, tubesheet-to-divider plate weld, and the divider plate-to-channel head weld. Damage as a result of the 34 pound sleeve impacting on these components is considered separately in the following sections.

4.2.2 Tube Sheet and Tubes

The tubesheet of Series 51 steam generators is clad with Inconel 600 which is quite ductile. Repeated impacting on the cladding by the 304 stainless steel thermal sleeve, which is also a ductile material, would not be expected to cause the cladding to crack and break loose. The design of the Series 51 steam generator incorporates tube ends which extend approximately 0.22 inches below the primary face of the tubesheet cladding. This configuration exposes the tube ends to potential impacts from the presence of a loose thermal sleeve.

Evidence from a previous incident with a loose part of comparable mass in a Series 51 steam generator shows damaged tube ends. The damage was mainly bending and deformation of the tube ends rather than peening as has been seen resulting from smaller loose parts in the primary side of the steam generator at another unit. The evidence of comparable mass indicates tube end flow restriction due to this ductile deformation of the tube ends. If the pressurizer surge line thermal sleeve were to enter the steam generator the damage would be expected to be similar to the bending and deformation explained above. The resulting flow restriction would have a minimal affect on the primary flow through the loop. A margin would still exist to the conservatively low thermal design flow. If a large flow mismatch did occur, it would be detected by the operator who could then take appropriate actions. The ductility of the inconel material makes it unlikely that small pieces of the tube ends would break off under short-term exposure to impacts by the loose parts.

Operation for a short period of time in the presence of a loose thermal sleeve would be expected only to produce bent and deformed tube ends but not to generate any tube end pieces. Operation for longer time periods could generate tube end pieces that would not affect the steam generator but may affect other components of the reactor coolant system.

The thermal sleeve design contains notches at the upper ends for stress relief. These notches are 90° apart and experience indicates some cracking at these notches on failed sleeves. Thus, if the sleeve were to break apart it is anticipated to break at the notches, forming large sections. No piece small enough to fit into the 0.775" inside diameter opening of the tube is expected to be formed from the break-up of the thermal sleeve.

Therefore, it is concluded that potential damage to the tubesheet and tubes resulting from short-term impacts by a failed thermal sleeve would not violate the integrity of the steam generator components.

4.2.3 Tube-to-Tubesheet Weld

Impacting of the tube-to-tubesheet (TTS) weld by a loose thermal sleeve is considered unlikely due to the presence of the tube-ends extending 0.22" beyond the primary face of the tubesheet, thus protecting the welds from absorbing a large number of direct impacts. Thus, disintegration of the weld from impacting is considered unlikely due to the ductility of the materials and the geometry of the weld.

One design feature of the Series 51 steam generator is the explosive expansion (WEXTEX) of the tube over the entire 21 inch depth of the tubesheet. This feature provides added strength to the tubes in the tubesheet hole and provides an additional margin against primary to secondary leakage.

If it is assumed that some of the welds do completely disintegrate and primary to secondary leakage occurs, the amount of leakage would be

low. Such leakage would be detectable by normal radiation monitoring, and the extent of the leakage could be monitored. This leakage would be expected to be within the allowable technical specification limits and would present no safety concern. Monitoring of the leakage would be possible so that if an increase is detected the plant could be shut down in an orderly manner.

4.2.4 Divider Plate

The 2 inch thick Inconel 600 divider plate is welded both to the channel head and the tubesheet to form a barrier separating the hot leg and cold leg of the steam generator. The rigidity of the plate is highest closest to the welds, and it becomes more flexible toward the middle of the plate. Impacting of a thermal sleeve could be expected to occur in the flexible region of the plate. The geometry of the channel head limits access to areas closest to the welds.

The flexibility of the plate in the most likely impact region along with the flexibility of the thermal sleeve will cause the impact loadings to be sufficiently distributed so as to be of no concern to the integrity of the divider plate.

As mentioned previously, the ductility of the sleeve material would reduce the likelihood that sharp edges would be created. Therefore, any marks that result from thermal sleeve/divider plate impacts would most likely be round-bottom, rather than sharp-pointed. It is therefore unlikely that stress riser areas would be created.

The effect of impacts near the welds of the divider plate are discussed in the next section.

4.2.5 Tubesheet-to-Divider Plate and Divider Plate-to-Channel Head Welds

Because of the location of these welds, the number of direct impacts they would receive from a loose thermal sleeve is low. In previous

circumstances involving loose parts on the primary side of the steam generator at other plants, inspection of these welds showed no evidence of degradation due to impact forces.

Long-term fatigue induced by forces being transmitted to the welds by continual impacting of the divider plate and/or channel head in the region close to the welds is of no concern, due to the flexibility of the divider plate and the low stresses induced in the welds.

4.2.6 Channel Head

The inside of the channel head is weld clad with a ductile, austenitic stainless steel. Impacting of the thermal sleeve on the channel head would thus not cause any sharp dents where a point of stress concentration would form. The ductility of the clad material makes it unlikely that enough impacts will occur on a particular spot to cause cracking and loose cladding. Therefore, impacting of the thermal sleeve would not be expected to adversely affect the channel head and cladding.

4.2.7 Conclusions

The potential entry of a 14 inch thermal sleeve from the pressurizer surge line into the primary side of the steam generator is not expected to adversely affect the continued safe operation of the steam generator. Short-term operation with the sleeve present in the steam generator will not create loose tube end pieces.

4.3 REACTOR INTERNALS

The reactor internals were evaluated to determine the effects of impact and wedging loads on reactor guide and support structures due to the presence of loose thermal sleeves in the reactor coolant system.

4.3.1 Upper Internals

The 3 inch charging injection line thermal sleeve, the 6 inch safety injection line thermal sleeves and the 12 inch accumulator injection line thermal sleeves will be confined between the lower core plate in the reactor vessel, and the steam generator cold leg plenum. As such, these thermal sleeves will have no impact consideration on reactor upper internals. The thermal sleeve located in the 14 inch hot leg pressurizer surge line does have the capability of becoming lodged in the upper internals. In a back flow or alternate leg blowdown situation, a loose surge line thermal sleeve could travel back through the hot leg into the upper internals. The following assessment utilizes plastic analysis to determine impact loads on support columns and guide tubes in the reactor upper internals.

<u>Support Columns</u>

Length 78.77"
O.D. 7.49"
I.D. 6.53"

Thickness = 0.4875"

$A = 10.72\ in^2$

Material: ASTM A 479 Type 304 stainless steel, cold finished.

Guide Tubes 17 x 17

Length 125"
Thickness 0.25"
Size 7.34" x 7.34"

$A = 7.09\ in^2$

Back Flow Velocity

Mass back flow 935 lbm/sec
Density 9.34 lbm/ft^3
Area 4.587 ft^2

V - 21.8 ft/sec

UPPER INTERNAL STRESS SUMMARY

	LOAD (KIP)	STATIC COLLAPSE LOAD (KIP)	DEFLECTION (INCH)
Support Column	17.45	22.1	0.266
Guide Tube	12.3	25.9	0.360

As seen from this table, the loads exerted are less than the static collapse load, therefore, impact loadings on reactor internals upper support columns and guide tubes are acceptable.

Objects in the bottom of the reactor vessel would not be expected to reach the upper internals due to the filtering action of the lower

internals and fuel assemblies. The close spacing of the rods, the configuration of the grids and the flow deflectors, and the configuration of the nozzles should prevent large particles and most other particles from reaching the upper internals. Small particles which could pass through the fuel assemblies are likely to pass through the upper internals or to be forced clear during operation of the drive line. In order for a foreign object to cause interference, it would have to be preferentially oriented.

As part of the normal startup tests, control rod drop times are recorded and evaluated to confirm proper driveline performance. In the unlikely event that a foreign object would become lodged in the upper package during operation and cause a driveline to become inoperable, the existing FSAR analyses assumption of one stuck control rod assembly would not be exceeded.

4.3.2 LOWER INTERNALS

The reactor vessel and lower internals were analyzed for structural integrity with thermal sleeves from the 3 inch charging line, 6 inch safety injection line and 12 inch accumulator lines within the reactor vessel. The thermal sleeve from the 14 inch pressurizer surge line is unable to reach the reactor vessel lower internals.

4.3.2.1 Core Barrel

It was assumed that a complete 12" sleeve strikes the core barrel at the inlet nozzle velocity. Since the sleeve is thin it will deform before the core barrel deforms. Therefore, the load applied to the core barrel is determined by the load capacity of the piece. Assuming an ultimate strength of 63.5 ksi for the piece, and an impact area of 5.84 in^2 for the end of the sleeve, the maximum load applied to the core barrel is 371 kips. Assuming the core barrel responds as a cantilever beam, the impact stresses in the core barrel are calculated to be small. (σ_{max} = 1120 psi and τ_{max} = 435 psi).

The method used for the minimum missile energy required to perforate a target plate per WCAP 9934 results in a maximum depth of dent equal to .034 in.

Due to the low magnitude of the impact stresses and the short time duration of impact loads, the core barrel is unaffected by impacting loose parts.

4.3.2.2 IRRADIATION SPECIMEN GUIDES

The irradiation specimen guides are welded to the outside of the thermal shield panels. The top portion is welded using a .38" groove joint, 4.56" long on each side. The middle portion is intermittent 0.11" bevel welds totaling 70.57" long on each side. The contact area is calculated by assuming the face of a quarter section of a 12" sleeve strikes the top of the specimen guide at 34 ft/sec. The impact force is calculated to be 63,400 lb. The maximum shear stress is 3,340 psi. In view of the small magnitude of the shear stress, the specimen guide will not be affected by the impact.

4.3.2.3 BOTTOM MOUNTED INSTRUMENTATION TUBES

The instrumentation tubes in the bottom head of the vessel were evaluated for impacting of thermal sleeves or thermal sleeve sections which may be loose in the system. The cases evaluated were for an impact at the tube/bottom head intersection (shear strike) and for an impact at the highest point on the instrument tube which could be struck without first striking the internals. Resulting values were compared to appropriate shear and collapse load allowables.

The shear strike was evaluated only for the largest thermal sleeve (one-half of a 12 inch thermal sleeve) which could impact the instrument tubes. The maximum shear stress was found to be only 1.13 KSI which gave a margin of safety of 36.8 compared to the allowable of 0.6 Sm.

The loads on the instrument tubes resulting from the bending strike of a half section of the 12 inch thermal sleeve were evaluated as exceeding the instrumentation tube collapse load. This result indicates that plastic deformation of an instrumentation tube could result if the tube were struck in an unfavorable manner by the loose thermal sleeves. However, due to the ductility of the Ni-Cr-Fe alloy tube, deformation could occur, but the tubes will not rupture and will continue to protect the thimble guide tubes. The thimble tubes would therefore not rupture and the pressure boundary will not be violated.

In the unlikely event that the failure of a bottom mounted instrumentation tube leads to leakage, the double ended break of this tube results in a leak area of 0.00024 Ft^2. Assuming a discharge coefficient of 1.0 and using the Zaloudek subcooled critical flow model which overpredicts leak flow, one charging pump in the normal charging mode can provide makeup for at least 3 broken tubes.

This would be classified as a leak, not a LOCA, and RCS pressure would be maintained at 2250 psia. If both charging pumps were available, additional tube leaks could be tolerated.

Small break LOCA analyses with minimum safeguards SI have demonstrated that full instrument line breaks in as many as 5 instrument tubes will not result in core uncovery. RCS depressurization and automatic SI initiation will occur, however, this small break LOCA will maintain forced or natural circulation, and the RCS will reach equilibrium conditions.

Therefore, the loose thermal sleeves striking the instrumentation tubes in the bottom head of the vessel does not constitute a safety hazard.

4.4 REACTOR VESSEL

During plant heatup, the gap between the reactor vessel bottom head inside surface and the bottom of the secondary core support structure will decrease. A foreign object present in this area could impose mechanical loadings on the vessel. Due to the size of the gaps a full "3" sleeve could not enter the gap. A quarter section of a 3" sleeve could enter the gap, and the force necessary to deflect the piece to the minimum gap size was calculated to be approximately 6,460 pounds. This load is acceptable.

The effect of impacts on the radial key was also evaluated. The largest piece that could enter the outer annulus of thermal shield is determined to be one half of a 12" thermal sleeve. The impact velocity is assumed to be 36 ft/sec. and the impact force is determined to be 42,300 lb. Assuming all the impact load is carried by the six 1" dia. dowel pins, the resulting stresses is 8980 psi. Comparing to the allowable stress intensity, this gives a margin of safety of approximately 4.7.

4.5 NUCLEAR FUEL

Foreign objects in the primary system have two potential effects on the nuclear fuel: 1) partial flow blockage of fuel assemblies due to an object becoming wedged in the fuel assembly flow paths, and 2) clad wear due to pieces becoming lodged in the assembly or between two assemblies. Flow blockage effects are discussed in Section 5 of this report.

From a fuel mechanical design viewpoint, loose pieces should not pose an operational problem when the fuel assemblies are seated properly on the core plate. The loose pieces should be stopped by the bottom nozzle or the lower core plate due to dimensional considerations. Although highly unlikely, it is possible for a very small piece to wedge between fuel assemblies and cause fretting and/or grid damage. This is highly improbable due to the fact that space between fuel assemblies is approximately 40 mils, i.e. approximately one third the thickness of the

thermal sleeve material. Should a fretting mechanism cause clad failure on a fuel rod it is unlikely that any radiation release would approach the technical specification limit, and as such no safety concern would exist.

Due to the relatively large fragments expected from the thermal sleeves, the transport of loose pieces into and through the fuel assemblies is unlikely.

4.6 REACTOR COOLANT PUMP

There are no thermal sleeves of the subject design located in piping connections between the reactor coolant pump (RCP) and the steam generator. A loose thermal sleeve can enter the RCP only when a reverse flow condition occurs, in which case the plant is not operating at power. If this occurs a thermal sleeve or portion of one will not affect the pressure boundary integrity due to the geometry, mass and low impact energy of the pieces.

An intact 3 inch thermal sleeve or similar size fragments of a larger thermal sleeve can pass through the pump internals without significant deformation.

The larger thermal sleeves would not pass through the pump diffuser and impeller during a non rotating impeller condition. During RCP startup the forward flow would eject any fragments.

If thermal sleeve fragments did lodge between the impeller and diffuser in such a way as to cause interference, the material may be pinched or sheared between the impeller and diffuser vanes due to the very high torque of the RCP. A consequence may be an increase in shaft vibration with continued RCP operation, i.e., no locked rotor or pressure boundary violation is expected to occur. Increased vibration could be observed by the operator and corrective action could be taken.

A similar safety evaluation of larger material (1 1/16 inch thick, 304 SS) that was postulated to enter the RCP in various size fragments was previously performed, and it also concluded that there was no safety concern.

In summary, the loose thermal sleeves are not considered a safety concern for RCP integrity and operation.

4.7 PRESSURIZER

The thermal sleeves in the 4 inch spray line and the 14 inch surge line connections in the pressurizer proper are attached in a different manner than the reactor coolant piping nozzle thermal sleeves. On the pressurizer thermal sleeves the upstream end of each sleeve is welded over an arc of 45 degrees. The sleeves themselves are of larger diameter than the nozzle safe ends, thus preventing sleeve movement away from the pressurizer. The flow distribution screen inside the pressurizer at the surge line connection prevents that sleeve from entering the pressurizer. Similarly, the spray header traps the sleeve on the spray line connection.

Due to their method of attachment, it is also very unlikely that these sleeves would become loose within the reactor coolant system. In addition operating experience has indicated no evidence of failure of these sleeves, and thus they are not considered in this loose sleeve safety evaluation.

Based on the most probable movement of any dislodged thermal sleeves from the 12 inch SI lines or the 3 inch charging line it is extremely unlikely that any piece would cause mechanical damage or become lodged in the pressurizer inlet piping or the pressurizer.

4.8 PRIMARY LOOP STOP VALVES

The effect of loose thermal sleeves on the primary loop stop valves either through impact or erosion is expected to be negligible since

there are low radial flow velocities and no appurtenances extending into the flow path during plant operation. The remote possibility exists that the disc guides, located outside the flow path, could deform if impacted by a thermal sleeve. If this were to occur, the valve may not reach its fully closed position; however, the primary coolant pressure boundary would not be violated. The loop stop valve has no safety function, and any restrictions to closing would not present a safety concern.

4.9 OTHER REACTOR COOLANT SYSTEM COMPONENTS

Due to the physical separation from the remainder of the reactor coolant system of such components as control rod drive mechanisms and safety, relief and block valves, no adverse effect is expected to result from loose thermal sleeves in the reactor coolant system.

4.10 AUXILIARY SYSTEMS

The possibility of the potentially loose thermal sleeves affecting the operation of other systems connected to the RCS was also investigated in this safety evaluation. The evaluation below considers each thermal sleeve location and the possible paths to systems or components interfacing the RCS.

4.10.1 SURGE LINE THERMAL SLEEVE

If the surge line thermal sleeve came loose during operation, it would be moved by the loop flow to the steam generator inlet plenum. The sleeve could impact the RTD bypass line scoops or the thermowell. The potential effects on these components is discussed in Section 4.1. The SIS, drain line, and loop stop valve bypass line connections and the pressure tap in the hot leg do not protrude into the loop flow and are not vulnerable to impact damage. Entry of a piece of sleeve into the SI nozzle would be highly unlikely due to the location, orientation and stagnant flow conditions of the line.

4.10.2 NORMAL CHARGING LINE THERMAL SLEEVES

The 3" charging line enters loop B downstream of the 12" accumulator discharge line and the 6" safety injection line. The normal flow is toward the reactor vessel. There are no other connections to the RCS piping between this line and the vessel. Thus the thermal sleeve or parts thereof if dislodged would be expected to migrate to the reactor vessel. With reverse flow in loop B it could be postulated that the sleeve from the charging line, or parts thereof, might enter the accumulator discharge line or the safety injection line. However, the parts would not migrate up these lines due to the geometry and stagnant flow conditions in the lines. In order to enter the lines the sleeve would have to travel against gravity since both connections are in the upper half of the RCS pipe. This would create no safety concern.

4.10.3 ACCUMULATOR DISCHARGE THERMAL SLEEVES

The 12" accumulator discharge line is located upstream of the 3" charging line and downstream of the 6" safety injection line. In loop B a dislodged accumulator line sleeve or parts thereof would be expected to migrate toward the reactor vessel. Since the charging line has an ID of about 2.1" with a sleeve and 2.7" without a sleeve it is impossible for the entire sleeve or fragments to enter this line with its sleeve intact. Even if the sleeve were missing it is improbable that fragments at most .1" smaller would enter the line.

In loop A and C the accumulator discharge line enters the RCS upstream of the 6" safety injection line and the 4-inch spray line. There is no other connection downstream between the accumulator discharge and the vessel. Thus dislodged sleeves or fragments would migrate toward the vessel. If reverse flow is postulated, it would be impossible for an entire accumulator discharge line thermal sleeve to enter either a safety injection line or a spray line since the outside diameter of the sleeve is about 10.5" while the ID's of the SI lines and spray lines (without sleeves) are on the order of 5.1" and 3.4", respectively. It

could be postulated that fragments might enter the SI line or the spray line. Entry into the SI line would be of little consequence since there is no flow in the line and the fragments would be dislodged on safety injection. Should a fragment enter the spray line it could be postulated that the fragment could migrate against gravity and possibly damage the pressure control valve. Should the valve stick open a premature plant shutdown would be the worst consequence. There would not be any safety significance.

4.10.4 SAFETY INJECTION LINE THERMAL SLEEVES

The 6" safety injection discharge line enters the RCS in Loop B upstream of the accumulator discharge line and the normal charging line and upstream of the accumulator discharge and spray line in loops A and C. A dislodged sleeve or part would normally travel to the reactor vessel if it fell into the RCS. If it simply became loose, it would be unlikely to migrate up the SI lines as there is no flow in these lines. On safety injection such parts would be expected to migrate with the flow toward the reactor vessel. It could be postulated that a sleeve or part thereof enters an accumulator discharge line. From this line it would be flushed toward the reactor vessel on accumulator discharge. It would be impossible for an entire safety injection line thermal sleeve to enter the normal charging line and improbable for a fragment to enter the line due to the size and construction of the line. For the same reason it is also improbable that a fragment would enter the spray line. As described above, should this occur it would be of no safety significance.

To summarize, it is unlikely that failed sleeves or parts thereof would enter SI, accumulator discharge or spray lines since for this to occur the parts would have to travel against gravity as all of the connections are in the upper half of the RC piping. If parts did enter any of the lines, they would not migrate to places that would adversely impact plant safety.

4.11 MATERIALS

No unacceptable material would be introduced into the reactor systems as a result of the failure of a thermal sleeve. Minor clad damage could occur on the surfaces of carbon steel components, however, this would present no safety or operational concern due to the very slow corosion rate of the carbon steel in the reactor coolant environment.

5.0 FLOW BLOCKAGE

5.1 INTRODUCTION

In postulating the presence of loose thermal sleeves in the reactor coolant system, an evaluation was made of the effect of the sleeves or parts of the sleeves blocking flow in the core and in various locations in the reactor coolant system. The evaluation considered that all thermal sleeves come loose in the reactor coolant system and are moved by RCS flow to the following locations:

A. The 3", 6" and 12" sleeves protrude into the cold leg flow. This case bounds the case where they lodge in the lower internals and block flow at the lower core plate.

B. The 14" sleeve from the pressurizer surge line blocks flow at the steam generator tube sheet. (The case of the intact 14" sleeve partially blocking flow in the hot leg was also analyzed, however, blockage at the steam generator tube sheet was determined to be more conservative).

The evaluations considered the effect of blockage on reactor coolant system total flow, local flow distributions in the core during normal operation, and the effect on LOCA and non-LOCA accident analyses.

5.1 REACTOR COOLANT SYSTEM TOTAL FLOW

For the analysis of reactor coolant system flow reduction, the loose 3", 6" and 12" thermal sleeves were modeled as protruding fully into the cold leg flow.

The 14" sleeve segments in the steam generator were assumed to completely block flow in 10 percent of the tubes. This is a very conservative assumption since it is extremely likely that the segments will retain their curvature and only cause a flow restriction rather than total flow blockage.

The results of this conservative analysis showed that the total reduction in RCS flow was approximately 1.13 percent. This still results in the RCS flow being greater than thermal design flow, which is a conservatively low value of flow rate upon which the core thermal-hydraulic design is based. Thus, this flow reduction will have no effect on the thermal-hydraulic design and DNB margin in normal operation at rated power. Based on the above evaluations it was concluded that the reduction in RCS flow would not affect design margins in normal operation.

5.2 LOCAL CORE FLOW DISTRIBUTION

Although at North Anna 2 no fragments have been generated, experience at other plants has indicated fragments can occur. Due to the wide distribution in the size of the potential pieces, the evaluation involved three postulated conditions: 1) the effects of material entrapped by the lower core plate, 2) the effects of material entrapped by the bottom nozzle plate, and 3) the effects of material carried upward into the assemblies. Information and discussions pertinent to each condition are given below. Note that the response given in Section 5.2.2 is consistent with the North Anna FSAR Chapter 4.4 dealing with the flow blockage.

5.2.1 Material Entrapped by the Lower Core Plate

The segments from the sleeves remaining below the lower core plate would result in greater core blockage than the smaller segments reaching the fuel nozzles, since the smaller pieces could only reach the fuel nozzles in a lengthwise orientation. In performing this evaluation, it was assumed that the sleeve segments remain curved, and thus do not completely block flow, but do cause restrictions in the flow to the core.

The information available on thermal effects due to flow blockage indicates that there will be no significant increase in the likelihood of DNB at normal operating conditions. WCAP-7956 shows results from a blocked assembly flow recovery test and WCAP-8054 shows that a 10 percent flow reduction in the hot assembly and its 8 surrounding assemblies reduces DNBR by only 0.3 percent. Since the thermal sleeve pieces will

remain curved, there will always be some flow through all of the lower core plate holes. This, along with the fact that the total core thermal design flow will remain unchanged, will insure that the DNBR will not be reduced by more than a few percent.

Thus, the effect of blockage on local core flow distribution and DNBR is judged to be insignificant.

5.2.2 Material Entrapped by the Bottom Nozzle Plate

Because of the limiting flow holes in the bottom nozzle plate, only small pieces could pass through the bottom nozzle plates and up into the fuel assembly. The size and shape of the smallest thermal sleeve sections would prevent them from moving completely through the lower core plate, but could allow them to locate against the bottom nozzle adapter plate in an upright position.

It is considered unlikely that pieces which are small enough to be trapped by the bottom nozzles in this manner would totally block the flow to any one assembly. However, THINC IV predictions (Reference 1) indicate that, even when blockage covers the complete nozzle, full recovery of flow occurs about 30 inches down stream of the blockage. Thus inlet blockage effects would be limited to the lower portion of the active core, where DNB and LOCA are not limiting concerns.

5.2.3 Material Within the Fuel Assembly

Because of the size of the majority of loose parts considered, most of the parts could not pass through the bottom nozzle plate. Those pieces that could pass through the bottom nozzle would not pass through the lower grid. This would not affect the DNB evaluations for this core. Tests (Reference 2) on open lattice fuel assemblies indicate that a 41 percent blockage is acceptable, with disappearance of the stagnant zone behind the flow blockage after 1.65 L/DE. These types of local blockages have little effect on subchannel enthalpy rise and cause only

minor perturbations in local mass velocity. In reality, a local flow blockage is expected to promote turbulence, and thus, would likely not affect DNB.

REFERENCES

1. Hockreiter, L. E., Chelemer, H. and Chu, P. T., "THINC IV - An Improved Program for Thermal-Hydraulic Analysis of Rod Bundle Cores," WCAP-7956. June 1973.

2. Basmer, P., Kirsh, D. And Schultheiss, G. F., "Investigation of the Flow Pattern in the Recirculation Zone Down Stream of Local Coolant Blockages in Pin Bundles, "ATOMWIRTSHAFT, 17, No. 8, 416-417, (1972).

5.3 NON-LOCA TRANSIENT ANALYSIS

Flow blockage by loose thermal sleeves in the reactor coolant system potentially affects non-LOCA transients only in that there is a slight reduction in total RCS flow, as discussed previously in Section 5.1.

An evaluation was performed on the effect of the RCS flow reduction on the non-LOCA transients. In non-LOCA transient analysis, it is conservatively assumed that accidents are initiated with the reactor coolant system operating at thermal design flow (TDF). A reduction of 1.13 percent due to the thermal sleeve flow blockage effect on RCS flow still results in a measured flow greater than TDF. This assures that all the current safety analyses remain valid.

5.4 LOCA EVALUATION

One may postulate that thermal sleeve material may in the future become located beneath the lower core plate or in the upper plenum of the North Anna reactor vessel. An evaluation of the impact of such material in the lower and upper plenums on the limiting case break ECCS performance analysis (C_D = 0.4 DECLG) for North Anna follows:

A. Overall system thermal performance at 100 percent power has been shown to be negligibly different with large pieces present in the RCS. Since thermal design RCS flow can still be demonstrated for North Anna, the ECCS performance analysis previously performed remains applicable with regard to RCS flow conditions.

B. Thermal sleeves impinged against the lower core plate will remain curved, so there will always be some flow through all of the lower core plate holes, and no assembly will be starved of flow.

Flow redistribution above a postulated sleeve location will occur in the first several inches of the fuel during normal operation, and that therefore reduced minimum DNBR is not of concern in the hot assembly. In a LOCA analysis, post-LOCA thermal-hydraulics predicted for the hot assembly directly define the calculated PCT. Core flow post-LOCA is characterized by positive (normal direction) and negative core flow periods, in that order. From the above, during positive core flow when RCP performance determines flow magnitude and direction as during normal operation, thermal-hydraulics should be equivalent to those computed in the existing LOCA analysis. When the flow reverses any pieces impinged against the core plate will fall off into the lower plenum and thus not be in a position to impact the calculated core flow. Thus, calculated performance of the ECCS system will not be impaired by the presence of loose thermal sleeve material in the vessel lower plenum.

C. One might postulate, in an ECCS performance evaluation, breakup of sleeve material into smaller pieces which become lodged within the fuel and provide additional blockage during core reflood following a LOCA event.

The limiting case ECCS performance analysis for North Anna exhibits its maximum calculated PCT when the core flooding rate is less than one inch/second. Appendix K requires a fuel blockage flow penalty to be considered during reflood at such flooding rates so any postulated added blockage from thermal sleeve material within the North Anna Plant hot assembly will adversely impact the calculated PCT.

The currently-docketed large break LOCA analysis for North Anna utilizes the February, 1978 Westinghouse ECCS Evaluation Model as amended with an evaluation of the impact of NUREG-0630 fuel rod models. In that evaluation a flow reduction penalty based on 75 percent blockage in the hot assembly is assessed. In fact, the maximum blockage possible with NUREG-0630 is 71.5 percent, so a

blockage level 3.5 percent in excess of the NUREG-0630 maximum is presently being considered for North Anna. If a small particle of material from a failed thermal sleeve were conservatively postulated to enter the hot assembly at North Anna during a LOCA and become lodged at the coplanar locus of blockage from fuel rod ruptures, the maximum additional blockage over and above the NUREG-0630 defined value would be that due to completely closing the limited flow area remaining between two adjacent rows of rods in the assembly or roughly 1.8 percent. This added blockage from a postulated thermal sleeve particle is more than accomodated by the excess blockage assumed in the existing NUREG-0630 evaluation for North Anna; no further PCT penalty need be imposed.

To summarize the above, predicted core thermal-hydraulics post-LOCA are independent of the postulated presence of thermal sleeve pieces against the lower core plate at time zero. The presence of small pieces within the hot assembly could adversely affect the calculated PCT in the 10CFR50.46 Appendix K analysis, but such an effect has been shown to be accounted for in the existing North Anna analysis as docketed.

The hot leg might also contain loose parts caused by a breakup of the pressurizer themal sleeve. Due to the plethora of guide tubes, support columns, etc. in the upper plenum it is highly unlikely that any piece could orient itself in such a way as to significantly block flow exiting any particular fuel assembly. The pieces in the hot leg are not of concern from the standpoint of ECCS performance.

One might postulate that a pressurizer surge line thermal sleeve propelled by post-LOCA blowdown forces might damage a particular guide tube in the North Anna Unit 2 upper internals as discussed in Section 4.3.1. In the Westinghouse large break LOCA Evaluation Model the conservative assumption is made that no credit be taken for insertion of the control rods. Thus, failure of a guide tube will have no significant impact on the North Anna Plant ECCS performance analysis limiting case.

Finally, the blockage of steam generator tubes in the loop containing the pressurizer surge line was also considered. In this case, it is assumed that segments of the pressurizer surge line thermal sleeve are held against the steam generator tube sheet by reactor coolant pump flow prior to a LOCA. In this situation, during the initial part of the LOCA transient when the RCS is still in forward flow due to the influence of the RCPs, the core thermal-hydraulics should be equivalent to the existing LOCA analysis. When the steam generator channel head voids, the thermal sleeve pieces held against the tube sheet will fall off into the channel head and not be in a position to affect flows in the reactor coolant system. Thus, the effect of the postulated sleeve segments at the steam generator tubesheet will not significantly affect the 10CFR50.46 Appendix K ECCS analysis for North Anna.