SUPERSEDED
ON 2-28-90

TECHNICAL REVIEW AND CONTROL

SUMMARY

DOCUMENT No. — Rev. No. 4 *Prd Rev, NC ☐

TITLE NMP-2 Off-site Dose Calculation Manual

FOR INFORMATION ONLY

Author [illegible] Date 2/88

Description of Changes (Itemize the nature/reason of general changes)

① Changes made to make Unit 2 and Unit 1 ODCMs more consistent (open item from SRAB Audit) ② Changes made to reflect recent changes in the environ. monitoring program

* SEE THE ATTACHED FOR DETAILS *

MODIFICATION RELATED CHANGES YES ☐ NO ☑ MOD. CONTROL NO. 7

* IF PERIODIC REVIEW WITH NO CHANGES (Prd Rev, NC), USE THE LAST PUBLISHED REVISION NUMBER AND CONTINUE REVIEW PROCESS.

INTRADISCIPLINARY REVIEW (minimum of one person required)

DEPT. NAME	TITLE	SIGNATURE	DATE
C&RP	Assist. Env. Prot. Coord.	[signature]	2-3-88
C&RP	Unit Chem. Supv.	[signature]	2/5/88

CROSS DISCIPLINARY REVIEW (if not required, use lines for justification statement)

DEPT. NAME	TITLE	SIGNATURE	DATE
Not Req'd - No effect on cross-disciplinary groups.			

IF NOT IN CONCURRENCE, DO NOT SIGN BUT RETURN DOCUMENT TO THE AUTHOR WITH COMMENTS

Routed to Quality Assurance for review: Yes ☐, No ☑. If No, reason No effect on safety

Q. A. Representative _____ Date _____ & comments are attached. ☐.

Routed to A.L.A.R.A. for review: Yes ☐, No ☑. If No, reason No effect on dose exposure.

A.L.A.R.A. Representative _____ Date _____ & comments are attached. ☐.

>>>>>>>>>>>>>>>>>>>>>>>>>>>>>>> Route to AUTHOR / UNIT SUPV.

SAFETY ANALYSIS REQUIRED: NO ☑, YES ☐ (SEE ATTACHED)
IF YES, ANALYSIS ASSIGNED TO: SITE ☐, OR TO ENGINEERING ☐, DATE _____

REVIEW OF THE SUBJECT DOCUMENT HAS BEEN COMPLETED AND APPROVAL IS RECOMMENDED. (Approvers shall signify approval on the procedure cover sheet) . . ☑

DOCUMENT HELD FOR SORC (MEETING * .....). APPROVED, YES ☐, NO ☑.

OWNERSHIP DEPT SUPV [signature] DEPT C&RP DATE 2/5/88

FIG 2.0.4 SHEET 1 OF 4
AP-2.0 DEC. 85

9009120041 900830
PDR ADOCK 05000410
R PNU

TECHNICAL REVIEW AND CONTROL

EVALUATION OF NEED FOR SAFETY ANALYSIS IN ACCORDANCE WITH 10 CFR 50.59

(Documents that require General Supt. approval per Tech Spec. 6.8)

FOR DOCUMENT NO. Unit 2 ODCM REV 4 DATE 3/88

The Author (A) and four SORC Members (Minimum - 2 regular members, 2 alternates) are to respond to each of the questions below.

		NO	YES*
Does the document/revision result in a change to the facility or procedures described in the FSAR ?	A	☒	☐
	1	☒	☐
	2	☒	☐
	3	☒	☐
	4	☒	☐
Does the document/revision deviate from compliance to Tech Specs. or is the margin of safety defined in the basis reduced ?	A	☒	☐
	1	☒	☐
	2	☒	☐
	3	☒	☐
	4	☒	☐
Does the document/revision increase the probability of occurrence, ot the consequences of an accident, or malfunction of equipment important to safety (Class 1) evaluated in the FSAR increased ?	A	☒	☐
	1	☒	☐
	2	☒	☐
	3	☒	☐
	4	☒	☐
Does the document/revision create the possibility for an accident or malfunction of a different type than any evaluated in the FSAR ?	A	☒	☐
	1	☒	☐
	2	☒	☐
	3	☒	☐
	4	☒	☐

* A "MAYBE" constitutes a "YES" response.

SORC MEMBERS RECOMMENDATIONS TO GENERAL SUPERINTENDENT

	1	2	3	4
Recommended Nuclear Engineering or Tech Services perform a safety ANALYSIS to present to SORC (noted by a "YES" response to any of the above questions)	☐	☐	☐	☐
Recommended full SORC committee review this Evaluation of need for Safety Analysis.	☐	☐	☐	☐
Recommended approval - This document does not involve an unreviewed safety question.	☒	☐	☐	☒

	SORC Member Name	SORC Member Signatures	Date
1	C. L. Stuart	C. L. Stuart	2-11-88
2	K. Dahlberg	K. Dahlberg	2/12/88
3	R. Randall	[redacted]	2-12-88
4	T. W. Rowan	T. W. Rowan	2/13/88

SORC meeting number (if Required) _____

Figure 2.0.4 SH 2 OF 4

TECHNICAL REVIEW AND CONTROL
REFERENCE DOCUMENTS

The items entered below have been included in the preparation and/or review of the attached reference document and are presented in place of a specific check sheet for the document.

The following persons were consulted about this procedure

NAME	TITLE	BY
NONE		

Procedure is in compliance with the following Technical Specifications

SECTION	AMENDMENT	BY
4-1	3.6.3.0	HF
4-2	3.4.2.1	HF

Compliance with: CFR / US-NRC REGULATORY GUIDES(s)

	DATED	BY
N/A		

Compliance with ANSI STANDARD(s)

	DATED	BY
N/A		

Compliance with: ASME Boiler and Pressure Vessel Code(s)

SECTION	DATE	ADDENDUM	BY
N/A			

is consistent with the following Station or Site procedures:

NUMBER	REV.	BY
N/A		

OTHER INFORMATION SOURCES CONSULTED

	BY
Unit 1 DRCNs	HF

AUTHOR Hugh Flanagan DATE 1-29-88
REVIEWED BY T. ROSS DATE 1-29-88

COMMENTS

FIGURE 2.0.4 SHEET 3 OF 4

TECHNICAL REVIEW AND CONTROL
REVIEW CHECK LIST
TO BE PREPARED BY AUTHOR

CHECK LIST FOR DOCUMENT NO. Unit 2 OSCM REV 4 DATE 2/88

"✓" ONLY BOXES THAT APPLY

	YES	NA
All references needed to implement the procedure are clearly identified and available	☑	☐
The procedure contains adequate equipment lists, precautions and limitations, prerequisites, graphs, diagrams or data sheets as required	☑	☐
Surveillance and Maintenance Procedure utilises PLANT IMPACT statement associated with approval/permission for use	☐	☑
As appropriate, procedure addresses use of MARK - UPs	☐	☑
If appropriate, procedure requires use of fire protection measures. ie, burning permits etc	☐	☑
If leads are lifted, jumpers placed or blocks used in the procedure, the PLANT IMPACT statement acknowledges such use	☐	☑
As appropriate, procedure notifies other affected departments such as Q.C., Operations, I&C, Maintenance, Rad Protection etc	☐	☑
If Technical Specification is exceeded, appropriate action is identified	☑	☐
The procedure references valve numbers, motor control numbers, power supplies, instrumentation identification is clear and correct	☐	☑
When encountered, E.Q. related equipment is identified as such	☐	☑
Procedure steps are clear and accurate. They are not unnecessarily difficult to implement	☑	☐
The procedure reflects the latest system or component configuration	☐	☑
The procedure reflects work as it is to be done at the station	☑	☐
Procedure removes any jumpers or blocks and restores lifted leads used to effect the work	☐	☑
"RETURN TO SERVICE" uses double verification and identifies specifics being verified	☐	☑
For maintenance procedures, "RETURN TO SERVICE" either performs a POST MAINTENANCE TEST or references a required test	☐	☑
MARK - UPs are cleared or surrendered	☐	☑
"ACCEPTANCE CRITERIA" identifies accomplishment of specific goals	☐	☑

FORM PREPARED BY H. Flanagan DATE 1/28/88

FIGURE 2.0.4 SHEET 4 OF 4

TEMPORARY CHANGE NOTICE

This temporary change shall be documented and approved by The General Superintendent-Nuclear Generation based upon recommendation of SORC members within 14 days in accordance with Technical Specification 6.8.3.

TCN-5

TO: STATION SUPERINTENDENT, UNIT 2

The attached Temporary Change was made to
Procedure No. ODCM Rev. ~~3~~ 4 (p. 10)
Title OFF-SITE DOSE CALCULATION MANUAL

MODIFICATION RELATED CHANGE ☐ YES ☒ NO
MOD CONTROL NUMBER _____

Reason Revise time to perform and method of performing effluent monitor response to reflect proposed NL-RSP-RMS-V116

And is recommended to be: ONE TIME ONLY . . . . . ☐
PERMANENT CHANGE . . . . . ☒

The intent of the original procedure is not altered.
Author Signature S. W. Leach Date 2/29/88

The temporary procedure revision was approved by:

Dept. Supv. Signature [signature] Date 2/29/88
SRO Signature [signature] Date 2-29-88
Station Supt. [signature] Date 3/1/88

SORC MEMBER RECOMMENDATIONS (Minimum 2 regular members, 2 alternates)

	1	2	3	4
Recommend full SORC committee review this temporary change	☐	☐	☐	☐
Recommend Approval - this temporary change does not change the intent of the original procedure and does not involve an unreviewed safety question.	☒	☒	☒	☒

	SORC Member Signatures	Date
1	[signature]	3-2-88
2	[signature]	3/2/88
3	[signature]	3/2/88
4	John T. Conway	3/4/88

or SORC Meeting number (if required) _____

GENERAL SUPERINTENDENT (or designee) APPROVAL

The temporary change is approved in accordance with Technical Specification 6.8.3.

[signature] 3/8/88
Signature Date

FIGURE 2.0.5 SH 1 OF 1

2.1.3.2 Service Water and Cooling Tower Blowdown Effluent Monitor

Service Water A and B and the Cooling Tower Blowdown are pumped to the discharge tunnel which in turn flows directly to Lake Ontario. Normal flow rates for each Service Water Pump is 15,000 gpm while that for the Cooling Tower Blowdown is 10,200 gpm. Credit is not taken for any dilution of these individual effluent streams.

The radiation detector is a sodium iodide crystal. It is a scintillation device. The crystal is sensitive to gamma and beta radiation. However, because of the metal walls in its sample chamber and the absorption characteristics of water, the monitor is not particularly sensitive to beta radiation.

Detector response Σi(Ci*CFi) will initially be assumed to correspond to that calculated by the manufacturer. However, this will be evaluated ~~prior to~~ within 90 days after Commercial Operation and during every fuel cycle by placing a diluted sample of Reactor Coolant (after a two hour decay) in ~~the~~ monitor and noting its gross count rate. Reactor Coolant is chosen because it represents the most likely contaminate of Station Waters.

DD 2/27/86
EF 2-29-87

A two hour decay is chosen by judgement of the staff of Niagara Mohawk Power Corporation: Reactor Coolant with no decay contains a considerable amount of very energetic nuclides which would bias the detector response term high. However assuming a longer than 2 hour decay is not realistic as the most likely release mechanism is a leak through the Residual Heat Removal Heat Exchangers which would contain Reactor Coolant during shutdowns.

a representative

The initial setpoint calculation is presented as both an example and for the purposes of documenting the calculation. It will be recalculated prior to commercial operation and during every fuel cycle when a Radiochemical analysis of Reactor Coolant is completed for E bar determination as required by TS Table 4.4.5-1 or when activity is detected in the respective effluent stream.

DD 2/27/86
EF 2-29-87

ISOTOPE NAME	2 HR DECAY ACTIVITY CONCENTRATION uCi/ml	MPC uCi/ml	FRACTION OF MPC B/C	DETECTOR RESPONSE cpm/uCi/ml	CPM TOTAL cpm
A	B (Ci)	C (MPCi)	D (Ci/MPCi)	E (CFi)	F (CiCFi)
H3	1.0E-2	3E-3	3.3	--------	--------
F18	1.9E-3	5E-4	3.8	--------	--------
NA24	3.7E-3	3E-5	1.2E-2	--------	--------
P32	7.8E-5	2E-5	3.9	--------	--------
CR51	2.3E-3	2E-3	1.2	--------	--------
MN54	4.0E-5	1E-4	4.0E-1	8.42E7	3.4E3
MN56	2.9E-2	1E-4	2.9E-2	1.2E8	3.5E6
FE55	3.9E-4	8E-4	4.9E-1	--------	--------
FE59	8.0E-5	5E-5	1.6	8.63E7	6.9E3
CO58	5.0E-3	9E-5	5.6E-1	1.14E8	5.7E5
CO60	5.0E-4	3E-5	1.7E-1	1.65E8	8.3E4
NI63	3.9E-7	3E-5	1.3E-2	--------	--------

Changes to the Unit-2 Off-Site Dose Calculation Manual
February 1998

Page	Description	Reason
Page 10, Section 4.1	Revised wording of first two paragraphs to be consistent with Unit 1 ODCM. No actual changes in text. Revised per SERS audit.	Revised to be consistent with Unit 1 ODCM. No changes. No effect on dose calculation.
Page 91	Added reference to shoreline sediment dose calculation that dose may be applicable to teenager or adult. Added reference to adult. Adds consistency with other dose sections but noting "or adult". Doses are the same for teenager or adult.	Revised for clarification. No effect on dose calculation.
Page 93-95 Section 4.4	Replaced section 4.4 with wording from Unit 1 ODCM for consistency. Dose methodology is the same.	Revised for consistency between Unit 1 and Unit 2

	Wording from Unit 1 used per SRAB and't Item. Minor changes as follows.	ODCMs no change to dose methodology
Page 94	Added reference to boating as an activity prohibited at the Energy Information Center.	No change to dose equations. More accurately describes pathway not effected by the facilities.
Page 94	X/Q dispersion values were revised slightly to more accurately reflect distance between Unit 2 stack and vent and the receptor location. Explaination is provided for the revised X/Q dispersion values.	Change increased accuracy of dose equation. Change had only minor effect on final calculated dose.
Page 94	Reference to Regulatory Guide Table was changed to E-7 to correct a typographical error. Original reference said Table E-8.	Change corrected typographical error. No effect on dose calculations.

Page 15, [illegible]	Added statement that noted that an attempt will be made to obtain a QC sample to program sample ratio of [illegible] or better. This statement makes the NMP-2 and NMP-1 ODCMs consistent [illegible] section 5.2.	Addition increased the [illegible] of the [illegible] on QA/QC. No actual changes have occurred.
Page 100, Table 5.1	Added "Environmental Program No." to the heading of page 100 to Table 5.1. Environmental monitoring program numbers added to each line item where applicable. Page 100 is now consistent with the NMP-1 ODCM.	The addition increased the clarity of page 100 to Table 5.1. No actual changes have occurred.
Page 101, Table 5.1	Added "Environmental Program No." to the heading of page 101 to Table 5.1. Environmental monitoring program numbers added to each line item where	The addition increased the clarity of page 101 to Table 5.1. No actual

	applicable. Page 2 is now consistent with the NMP-1 ODCM.	changes have occurred.
Page 101, Table 5.1 (cont'd)	added Food Product location #59 to Table 5.1. This location was added because of the close proximity to site. This is a new location.	The addition increases the accuracy of the environmental sampling program.
Page 101, Table 5.1 (cont'd)	added footnote "CR = control result (location)". The designation CR on Table 5.1 indicates which locations are control locations. This designation makes the NMP-2 ODCM consistent with the NMP-1 ODCM.	The addition adds clarity to Table 5.1. No actual changes have occurred to the sampling program.
Figure 5.1-2 (Off-site map)	added Food Product location #59 to be consistent with the new sampling location	The addition increases the accuracy of the environmenta

Notes on Table 2.1. Sampling program.

NINE MILE POINT NUCLEAR STATION

NINE MILE POINT UNIT 2

OFF-SITE DOSE CALCULATION MANUAL (ODCM)

	SIGNATURE	DATE AND INITIALS REVISION 4	REVISION 5	REVISION 6
Chemistry & Radiochemistry Supervisor C. R. Duell				
Chemistry & Radiation Management Superintendent C. D. Stuart				
Station Superintendent Nine Mile 2 F. R. Abbott				
Division Superintendent Nuclear Generation T. J. Perkins				

Summary of Pages

Revision 4 (Effective 2/25/88)

PAGE	DATE
i-iii,1-4,6,8,10-14,17-18, 20-35,37-53,55-89,92	May 1986
5	August 1986
9	October 1986
15,16	May 1987 —
54	May 1987 (TCN-1)
19	June 1987 (TCN-2)
7	June 1987 (TCN-3)
36	September 1987 (TCN-4)
90-91,93-104	February 1988

NIAGARA MOHAWK POWER CORPORATION

THIS PROCEDURE NOT TO BE USED AFTER February 1990
SUBJECT TO PERIODIC REVIEW.

2.1.3.2 Service Water and Cooling Tower Blowdown Effluent Monitor

Service Water A and B and the Cooling Tower Blowdown are pumped to the discharge tunnel which in turn flows directly to Lake Ontario. Normal flow rates for each Service Water Pump is 15,000 gpm while that for the Cooling Tower Blowdown is 10,200 gpm. Credit is not taken for any dilution of these individual effluent streams.

The radiation detector is a sodium iodide crystal. It is a scintillation device. The crystal is sensitive to gamma and beta radiation. However, because of the metal walls in its sample chamber and the absorption characteristics of water, the monitor is not particularly sensitive to beta radiation.

Detector response Σi(Ci*CFi) will initially be assumed to correspond to that calculated by the manufacturer. However, this will be evaluated prior to Commercial Operation and during every fuel cycle by placing a diluted sample of Reactor Coolant (after a two hour decay) in the monitor and noting its gross count rate. Reactor Coolant is chosen because it represents the most likely contaminate of Station Waters.

A two hour decay is chosen by judgement of the staff of Niagara Mohawk Power Corporation: Reactor Coolant with no decay contains a considerable amount of very energetic nuclides which would bias the detector response term high. However assuming a longer than 2 hour decay is not realistic as the most likely release mechanism is a leak through the Residual Heat Removal Heat Exchangers which would contain Reactor Coolant during shutdowns.

The initial setpoint calculation is presented as both an example and for the purposes of documenting the calculation. It will be recalculated prior to commercial operation and during every fuel cycle when a Radiochemical analysis of Reactor Coolant is completed for E bar determination as required by TS Table 4.4.5-1 or when activity is detected in the respective effluent stream.

ISOTOPE NAME	2 HR DECAY ACTIVITY CONCENTRATION µCi/ml	MPC µCi/ml	FRACTION OF MPC B/C	DETECTOR RESPONSE cpm/µCi/ml	CPM TOTAL cpm
A	B (Ci)	C (MPCi)	D (Ci/MPCi)	E (CFi)	F (CiCFi)
H3	1.0E-2	3E-3	3.3	--------	--------
F18	1.9E-3	5E-4	3.8	--------	--------
NA24	3.7E-3	3E-5	1.2E-2	--------	--------
P32	7.8E-5	2E-5	3.9	--------	--------
CR51	2.3E-3	2E-3	1.2	--------	--------
MN54	4.0E-5	1E-4	4.0E-1	8.42E7	3.4E3
MN56	2.9E-2	1E-4	2.9E-2	1.2E8	3.5E6
FE55	3.9E-4	8E-4	4.9E-1	--------	--------
FE59	8.0E-5	5E-5	1.6	8.63E7	6.9E3
CO58	5.0E-3	9E-5	5.6E-1	1.14E8	5.7E5
CO60	5.0E-4	3E-5	1.7E-1	1.65E8	8.3E4
NI63	3.9E-7	3E-5	1.3E-2	--------	--------

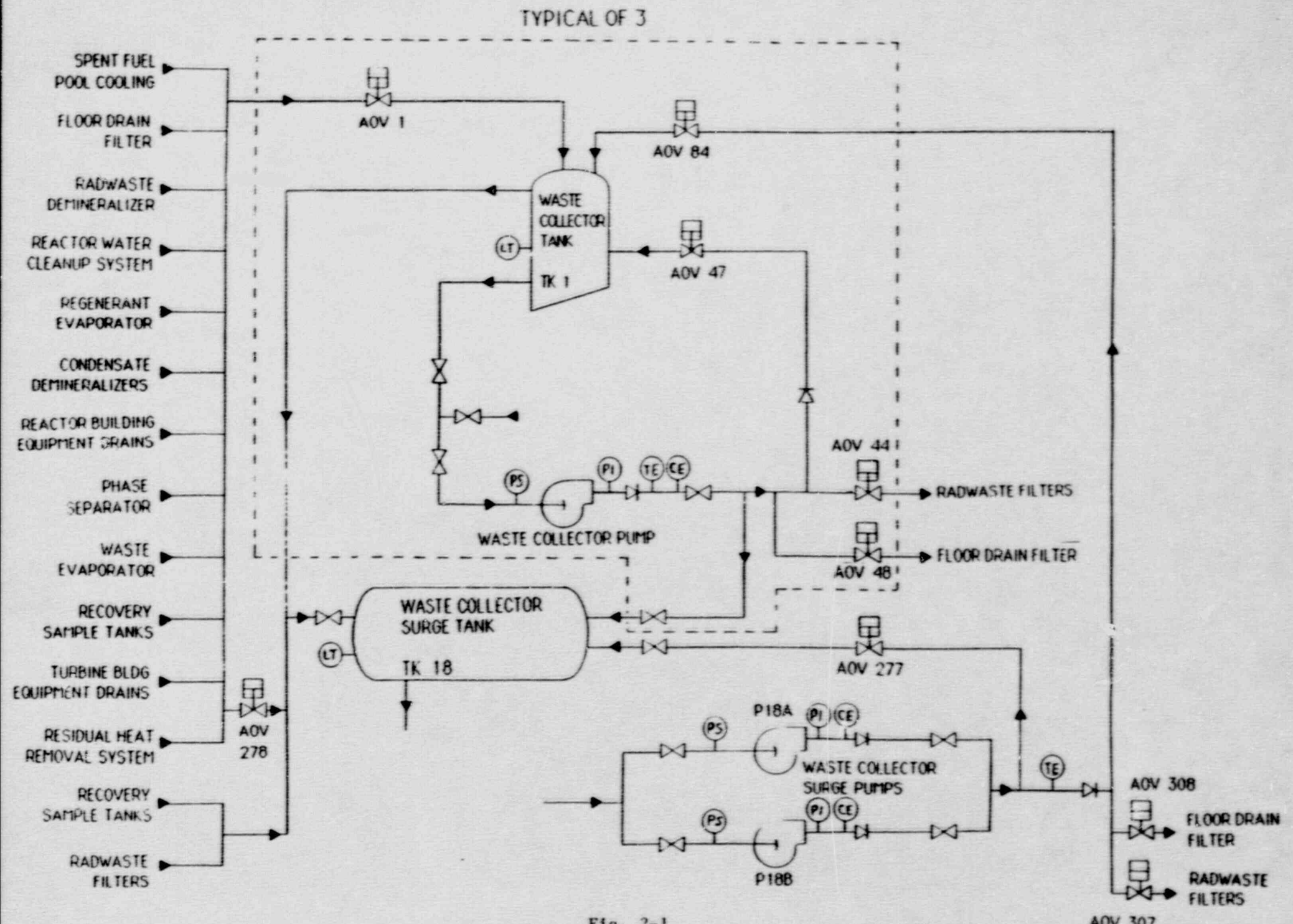

Fig. 2-1

WASTE COLLECTION

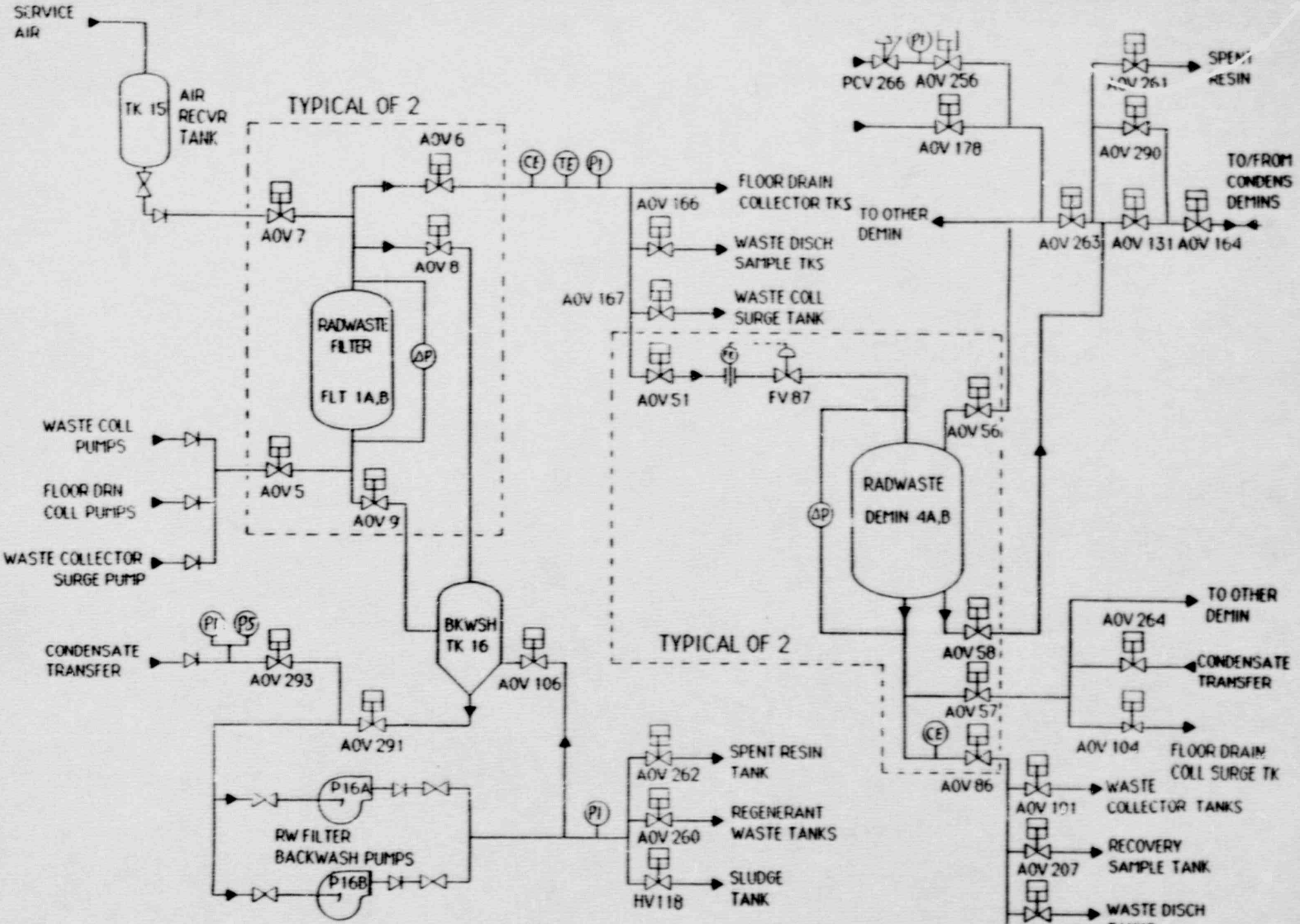

Fig. 2-2

WASTE COLLECTOR TREATMENT SYSTEM

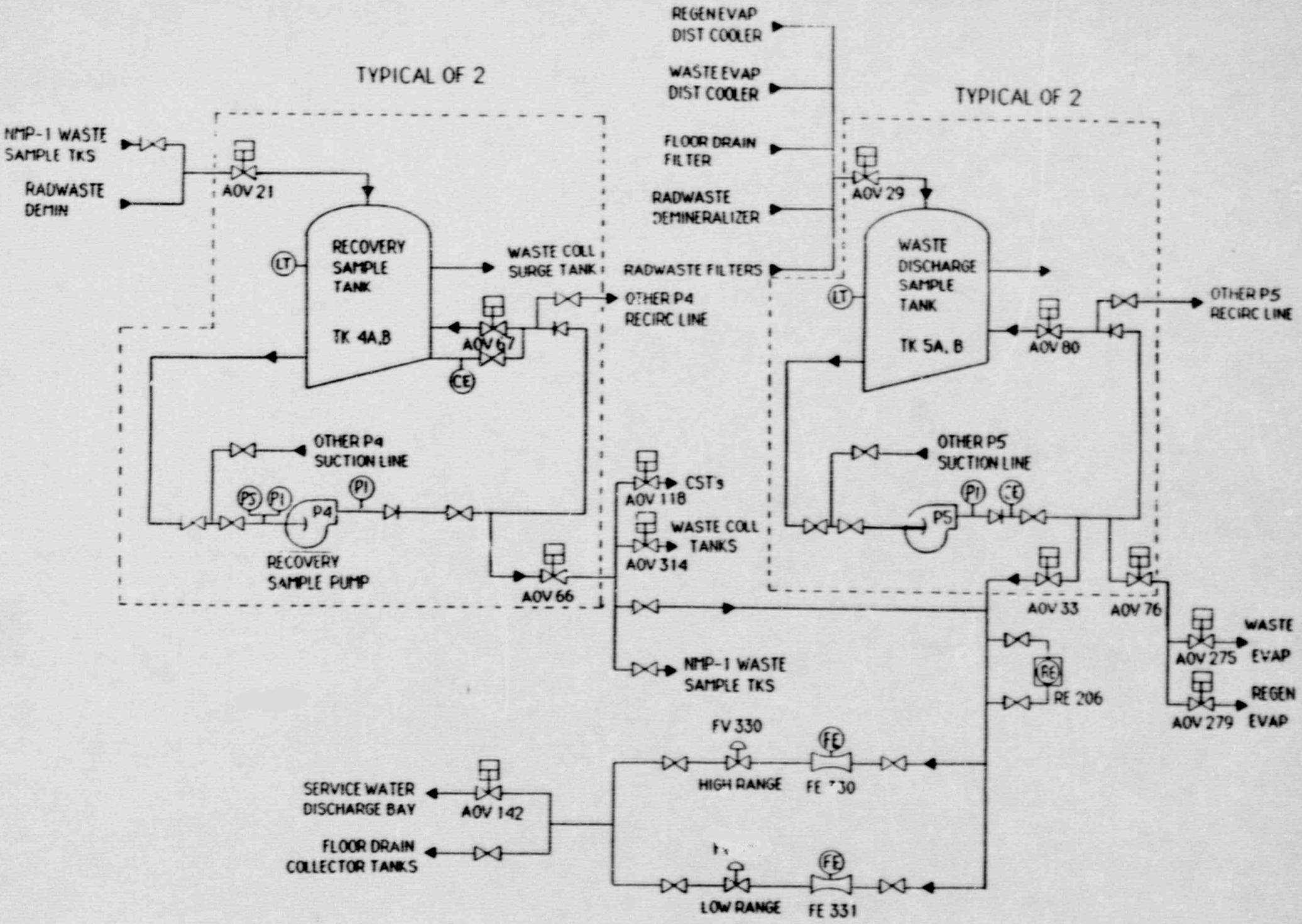

Fig. 2-3 **RECOVERY SAMPLE SYSTEM and WASTE**

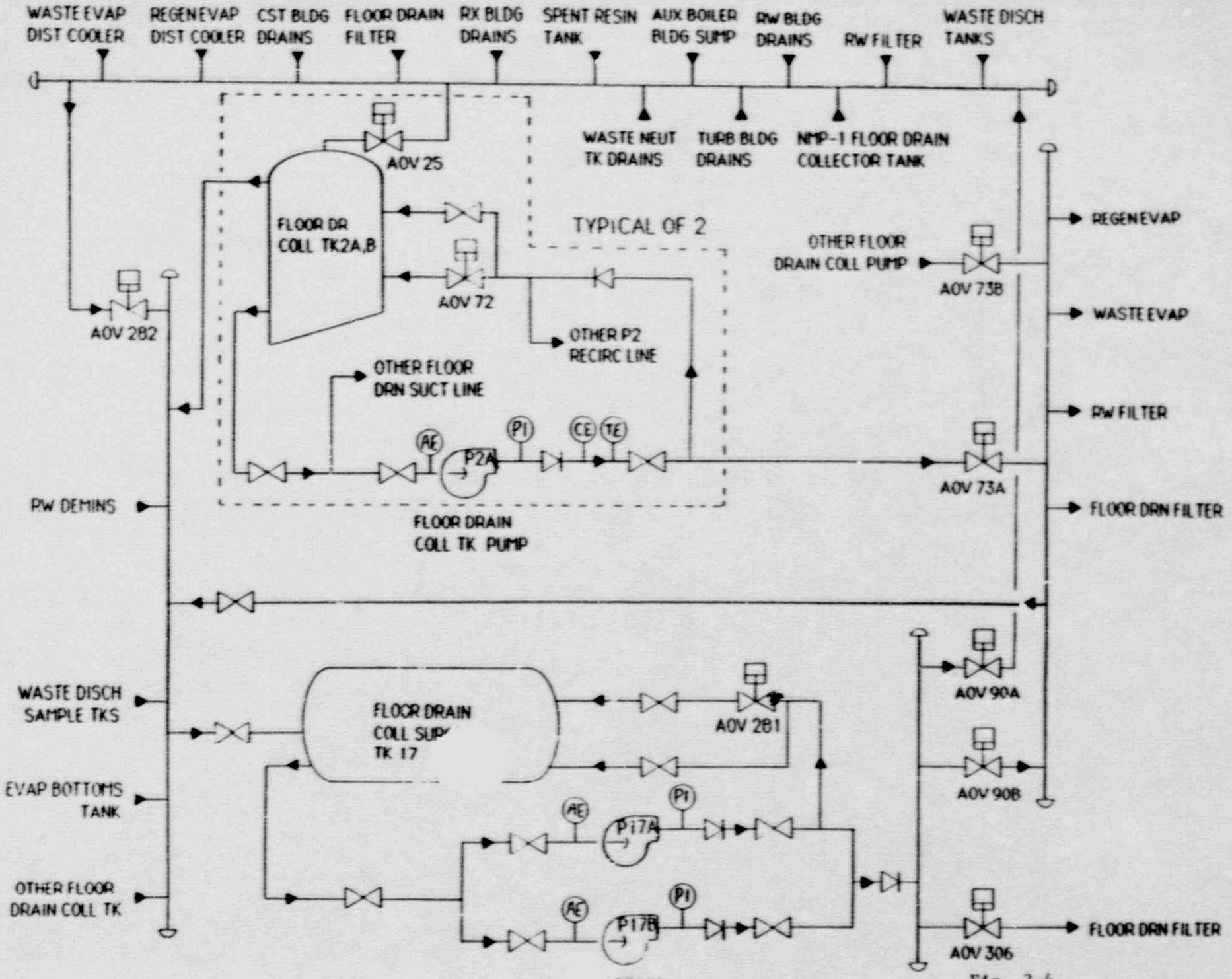

Fig. 2-4

FLOOR DRAIN COLLECTION SYSTEM

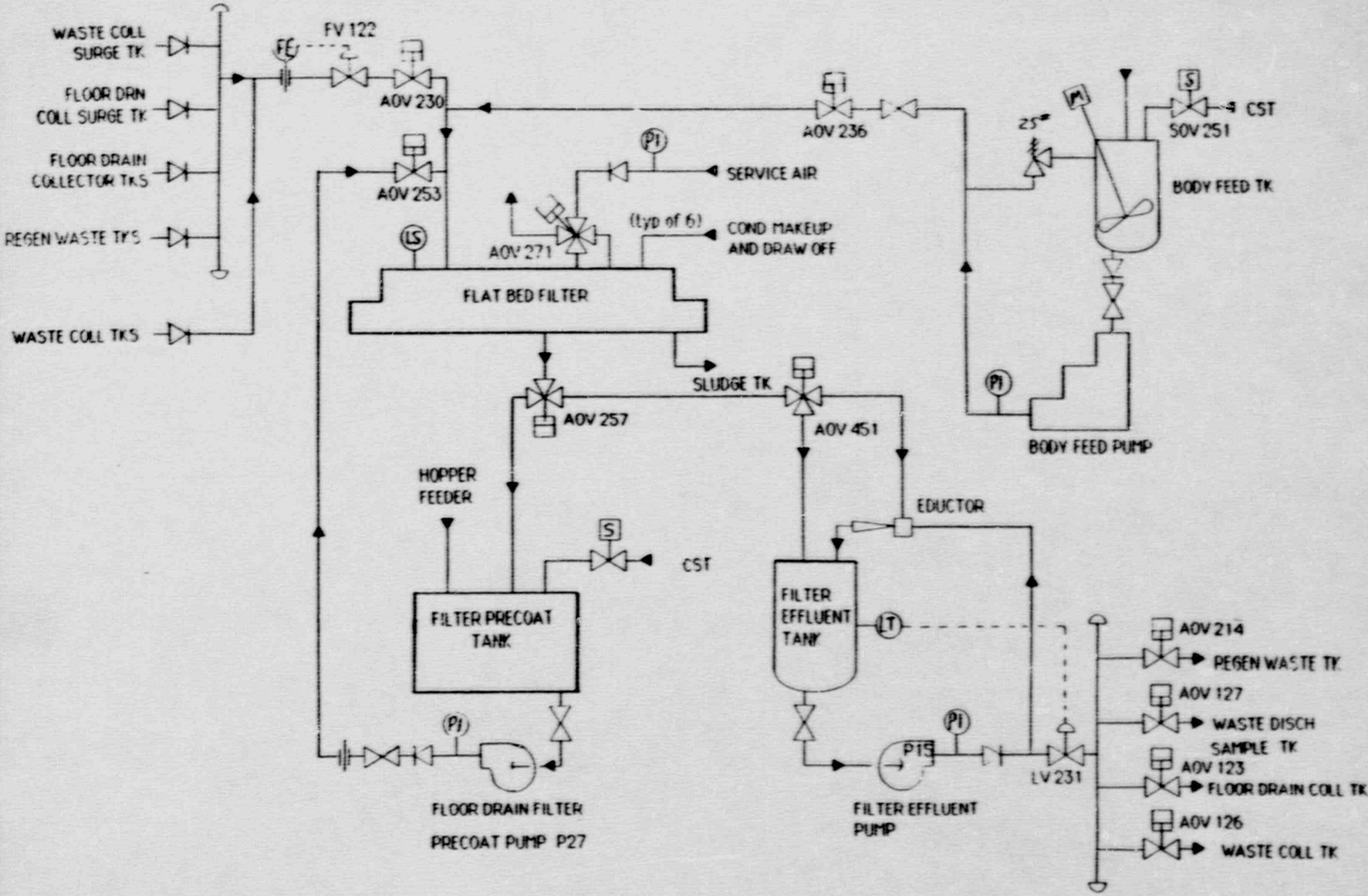

Fig. 2-5

FLOOR DRAIN FILTER SYSTEM

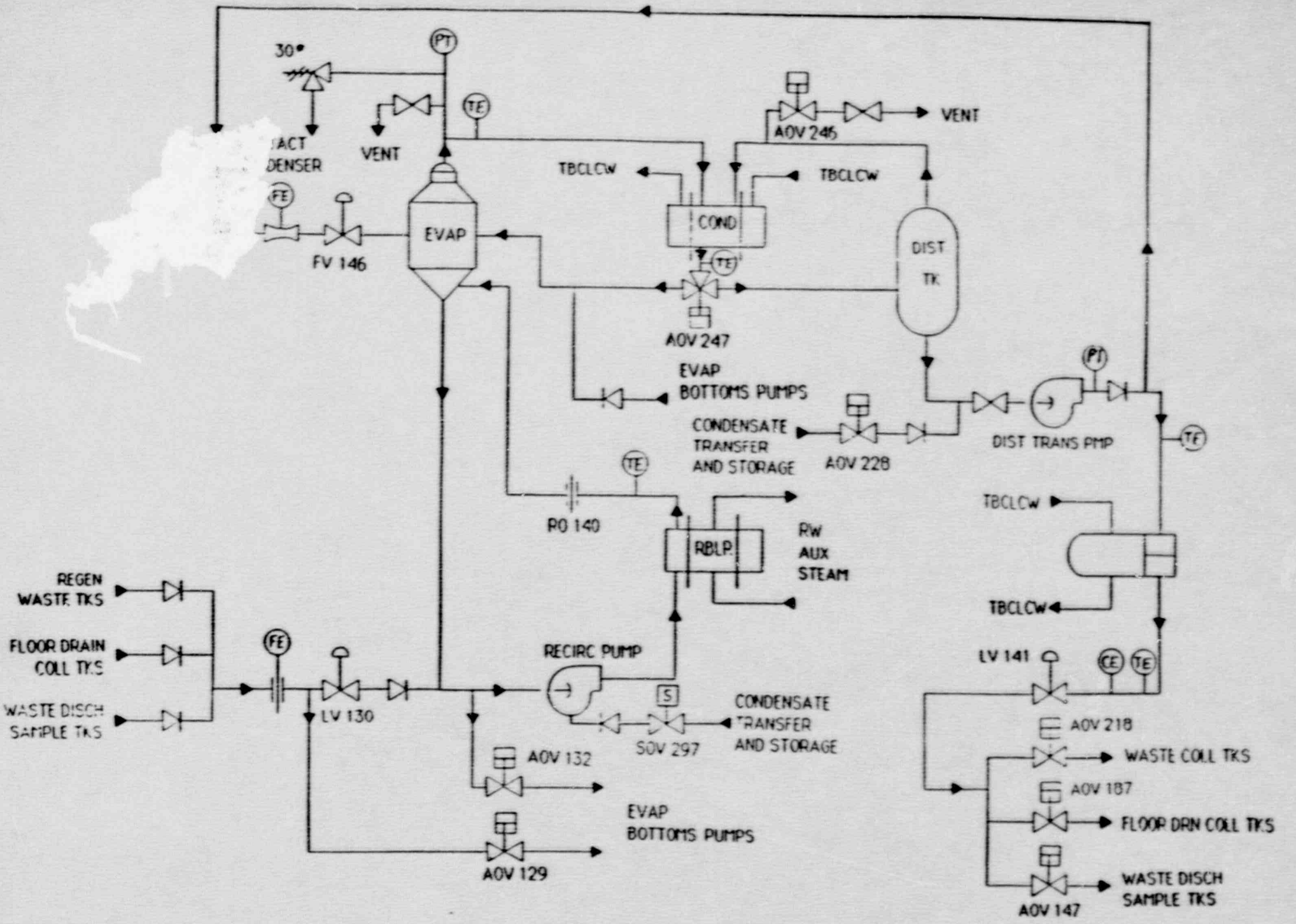

Fig. 2-6

WASTE EVAPORATOR SYSTEM

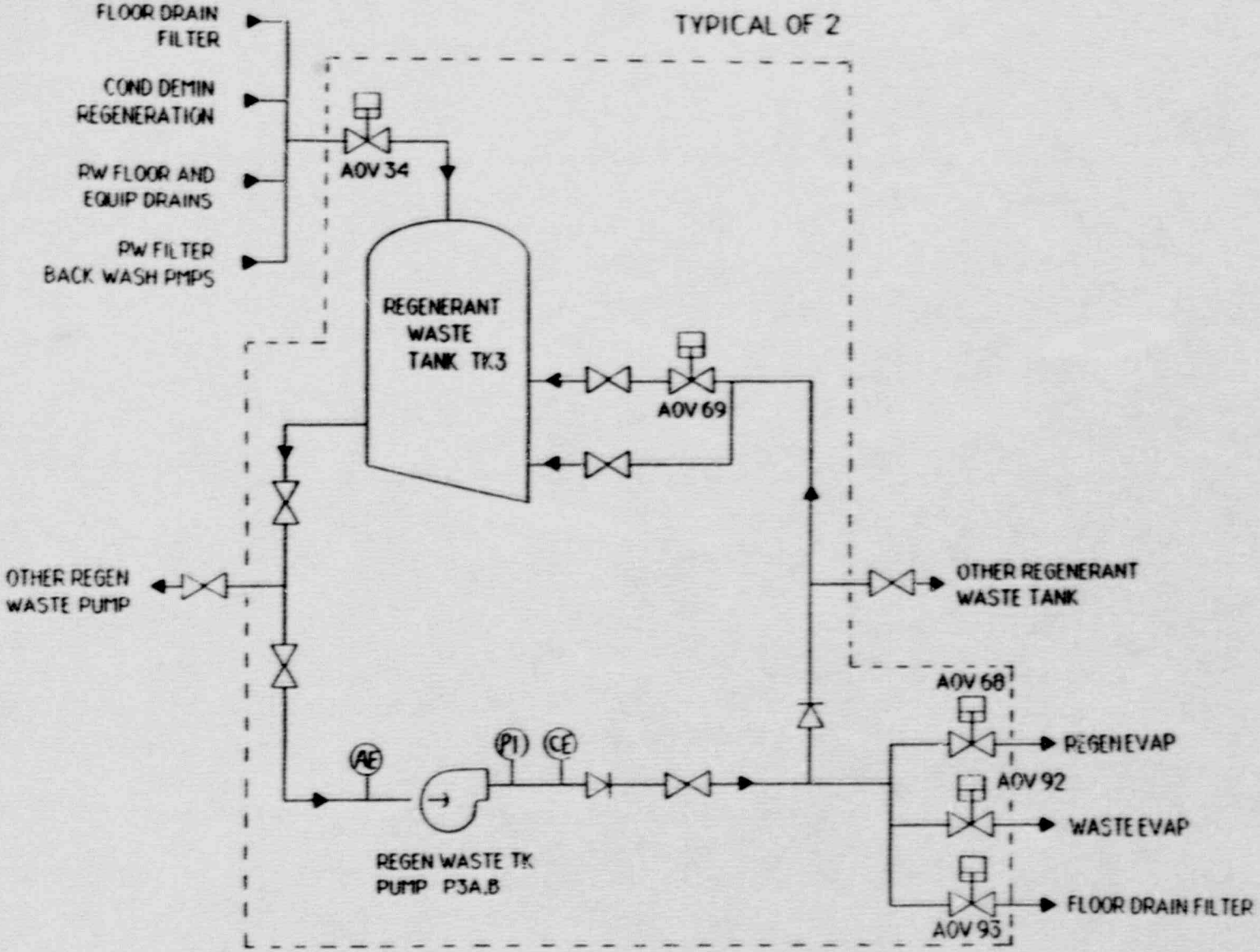

Fig. 2-7

REGENERANT WASTE SYSTEM

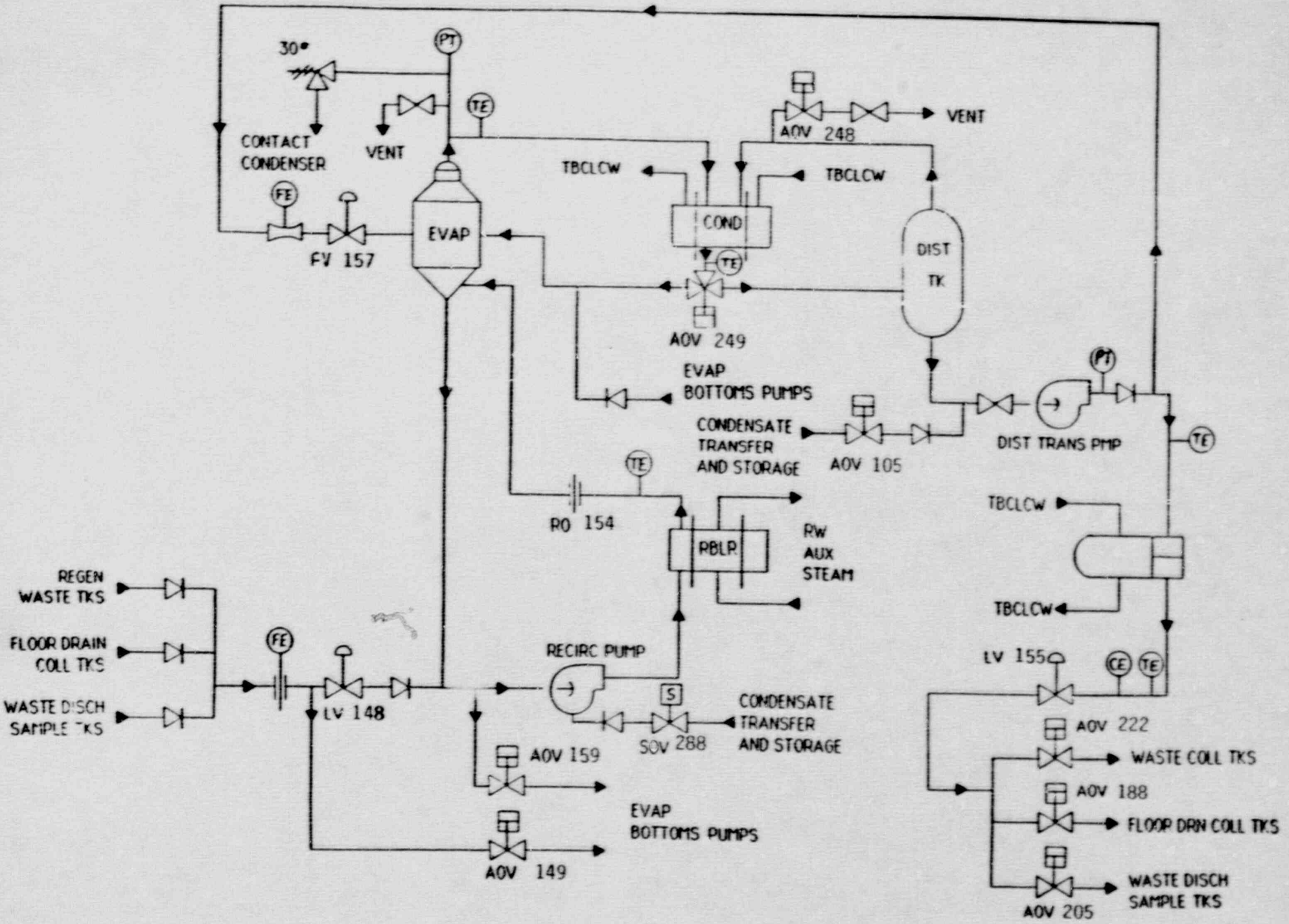

Fig. 2-8

REGENERANT EVAPORATOR SYSTEM

SUPERSEDED

NINE MILE POINT NUCLEAR STATION

NINE MILE POINT UNIT 2

OFF-SITE DOSE CALCULATION MANUAL (ODCM)

APPROVALS	SIGNATURES	DATE AND INITIALS REVISION 4	REVISION 5	REVISION 6
Chemistry & Radiochemistry Supervisor J. N. Duell	J N Duell	2/24/88		
Chemistry & Radiation Management Superintendent C. L. Stuart	C. L. Stuart	2/24/88		
Station Superintendent NMPNS Unit 2 R. B. Abbott	R B Abbott	2/25/88		
General Superintendent Nuclear Generation T. J. Perkins	T J Perkins	2/27/88		

FOR INFORMATION ONLY

Summary of Pages

Revision 4 (Effective 2/25/88)

PAGE	DATE
i-iii,1-4,6,8,11-14,17-18, 28-35,37-53,55-82,87-89,92	May 1986
5	August 1986
9	October 1986
15,16	May 1987 —
54	May 1987 (TCN-1)
19	June 1987 (TCN-2)
7	June 1987 (TCN-3)
36	September 1987 (TCN-4)
90-91,93-104	February 1988
10	March 1988 (TCN-5)
*20-27,83-86	April 1988 (Reissue)

NIAGARA MOHAWK POWER CORPORATION

THIS PROCEDURE NOT TO BE USED AFTER February 1990 SUBJECT TO PERIODIC REVIEW.

*Changes per Section 11.5 AP-2.0

Signed

18APR88
Date

TABLE OF CONTENTS

SECTION or TABLE	SUBJECT	TS SECTION or TABLE	PAGE
1.0	INTRODUCTION		1
2.0	LIQUID EFFLUENTS		2
2.1	Liquid Effluent Monitor Alarm Setpoints		2
2.1.1	Basis	3.11.1.1	2
2.1.2	Setpoint Determination Methodology	3.3.7.10	2
2.1.2.1	Liquid Radwaste Effluent Radiation Alarm Setpoint		2-3
2.1.2.2	Contaminated Dilution Water Radwaste Effluent Monitor Alarm Setpoint Calculations		4
2.1.2.3	Service Water and Cooling Tower Blowdown Effluent Radiation Alarm Setpoint		5
2.1.3	Discussion		5
2.1.3.1	Liquid Radwaste Effluent		6-9
2.1.3.2	Service Water and Cooling Tower Blowdown		10-12
2.2	Liquid Effluent Concentration Calculation	3.11.1.1 4.11.1.1.2	12
2.3	Liquid Effluent Dose Calculation	3.11.1.2 3.11.1.3 4.11.1.2 4.11.1.3.1	13-14
2.4	Liquid Effluent Dose Factor Derivation - Ait		14-15
2.5	Liquid Effluent Sampling Representativeness	4.11-1 note b	15-16
2.6	Liquid Radwaste System Operation	3.11.1.3	16-17
Table 2-1	Liquid Effluent Detector Response		18
Table 2-2	Ait Liquid Effluent Dose Factor		19
Figure 2-1 thru 2-8	Liquid Radwaste Treatment System Flow Diagrams	3.11.1.3 3.11.3	20-27
Figure 2-9	Liquid Radiation Monitoring		28
Figure 2-10	Off-line Liquid Monitor		29
3.0	GASEOUS EFFLUENTS		30
3.1	Gaseous Effluent Monitor Alarm Setpoints		30
3.1.1	Basis	3.11.2.1	30
3.1.2	Setpoint Determination Methodology	3.3.7.11	30
3.1.2.1	Stack Noble Gas Radiation Alarm Setpoint		30-31
3.1.2.2	Vent Noble Gas Radiation Alarm Setpoint		31-32
3.1.2.3	Offgas Pretreatment Radiation Alarm Setpoint		32
3.1.3	Discussion		33
3.1.3.1	Stack Effluent		34
3.1.3.2	Vent Effluent		35
3.1.3.3	Offgas Process		36
3.2	Gaseous Effluent Dose Rate Calculation	3.11.2.1	37
3.2.1	Total Body Dose Rate Due to Noble Gases	3.11.2.1.a 4.11.2.1.1	37-38
3.2.2	Skin Dose Rate Due to Noble Gases	3.11.2.1.a 4.11.2.1.1	38-39

TABLE OF CONTENTS

SECTION or TABLE	SUBJECT	TS SECTION or TABLE	PAGE
3.2.3	Organ Dose Rate Due to I-131 I-133, Tritium and Particulates with half-lives greater than 8 days	3.11.2.1.b 4.11.2.1.2	39-41
3.3	Gaseous Effluent Dose Calculation Methodology	3.11.2.2 3.11.2.3 3.11.2.5	41-42
3.3.1	Gamma Air Dose Due to Noble Gases	3.11.2.2.a 4.11.2.2	42
3.3.2	Beta Air Dose Due to Noble Gases	3.11.2.2.b	43
3.3.3	Organ Dose Due to I-131, I-133, Tritium and Particulates with half-lives greater than 8 days.	3.11.2.3 3.11.2.5 4.11.2.3 4.11.2.5.1	43-45
3.4	Gaseous Effluent Dose Factor Definition and Derivation		45
3.4.1	Bi- Plume Shine Gamma Air Dose Factor Vi- Plume Shine Total Body Dose Factor		45-47
3.4.2	Ki, Li, Mi and Ni- Immersion Dose Factors		47
3.4.3	Pi- Iodine, Particulate and Tritium Organ Dose Rate Factors		47-51
3.4.4	Ri- Iodine, Particulate and Tritium Organ Dose Factors		51-57
3.4.5	X/Q and Wv- Dispersion Factors for Dose Rate		58
3.4.6	Ws and Wv- Dispersion Factors for Dose		59
3.5	Gaseous Effluent I-133 Estimation		59
3.6	Use of Concurrent Meteorological Data vs. Historical Data		59
3.7	Gaseous Radwaste Treatment System Operation	3.11.2.4	59
3.8	Ventilation Exhaust Treatment System Operations	3.11.2.5	60
Table 3-1	Offgas Noble Gas Detector Response		61
Table 3-2	Bi and Vi- Plume Shine Dose Factors		62
Table 3-3	Ki, Li, Mi and Ni- Immersion Dose Factors		63
Ta le 3-4	Pi- Ground Plane Dose Rate Factors		64
Table 3-5	Pi- Inhalation Dose Rate Factors		65
Table 3-6	Pi- Food (Cow Milk) Dose Rate Factors		66
Table 3-7 to 3-10	Ri- Inhalation Dose Factors for Infant Child, Teen and Adult		67-70
Table 3-11	Ri- Ground Plane Dose Factors		71
Table 3-12 to 3-15	Ri- Cowmilk Ingestion Dose Factors for Infant, Child, Teen and Adult		72-75
Table 3-16 to 3-18	Ri- Cowmeat Ingestion Dose Factors for Child, Teen and Adult		76-78
Table 3-19 to 3-21	Ri- Vegetation Ingestion Dose Factors for Child, Teen and Adult		79-81

OFF-SITE DOSE CALCULATION MANUAL (ODCM)

1.0 INTRODUCTION

This is the OFFSITE DOSE CALCULATION MANUAL (ODCM), referenced in the Nine Mile Point - Unit 2 Technical Specification. It describes the methodology for liquid and gaseous effluent monitor alarm setpoint calculations, the methodology for computing the offsite dose due to liquid effluents, gaseous effluents, and the uranium fuel cycle as well as the radiological environmental monitoring and interlaboratory comparison programs.

The ODCM will be reviewed and approved by the NRC. Changes shall be provided in the semi annual radioactive effluent release reports submitted to the NRC.

Section 2 establishes methods used to calculate the Liquid Effluent Monitor Alarm setpoints and to demonstrate compliance with TS Section 3.11.1.1 limits on concentration of releases to the environment as required in TS Section 3.3.7.10 and 4.11.1.1.2 respectively. Additionally, the method used to calculate the cumulative dose contributions from liquid effluents and the methods used to assure thorough mixing and sampling of liquid radioactive waste tanks to be discharged as required in TS Section 4.11.1.2, 4.11.1.3.1 and Table 4.11-1 note b respectively are presented.

Section 3 establishes calculational methods used to calculate the Gaseous Effluent Monitor Alarm setpoints and to demonstrate compliance with TS Section 3.11.2.1 limits on dose rates due to gaseous releases to the environment as required in TS Section 3.3.7.11, 4.11.2.1.1 and 4.11.2.1.2 respectively. Additionally, the calculational methods used to calculate cumulative dose contributions from gaseous effluents as required in TS Section 4.11.2.2, 4.11.2.3 and 4.11.2.5 are presented.

Section 4 establishes the method used to determine cumulative dose contributions from the Uranium Fuel Cycle as required by TS Section 4.11.4.1, 4.11.4.2 and 6.9.1.8.

Section 5 establishes the environmental monitoring program as required by TS Section 3.12 and 4.12 including the Interlaboratory Comparison Program required by TS Section 4.12.3.

Section 6 discusses some of the references contained in TS Table 3.12-1, Radiological Environmental Monitoring Program.

SUPERSEDED ON 2-28-90

NINE MILE POINT NUCLEAR STATION

NINE MILE POINT UNIT 2

OFF-SITE DOSE CALCULATION MANUAL (ODCM)

APPROVALS	SIGNATURES	DATE AND INITIALS REVISION 4	REVISION 5	REVISION 6
Chemistry & Radiochemistry Supervisor J. N. Duell	J N Duell	2/24/88		
Chemistry & Radiation Management Superintendent C. L. Stuart	C L Stuart	2/24/88		
Station Superintendent NMPNS Unit 2 R. B. Abbott	R B Abbott	2/25/88 RBA		
General Superintendent Nuclear Generation T. J. Perkins	T J Perkins	2/25/88 TJP		

Summary of Pages

Revision 4 (Effective 2/29/88)

PAGE	DATE
iii,2-4,6,8,11-14,17-18, 28-35,37-53,55-82,87-89,92	May 1986
5	August 1986
9	October 1986
15,16	May 1987
54	May 1987 (TCN-1)
19	June 1987 (TCN-2)
7	June 1987 (TCN-3)
36	September 1987 (TCN-4)
90-91,93-104	February 1988
10	March 1988 (TCN-5)
*20-27,83-86	April 1988 (Reissue)
*i,ii,1	November 1988 (Reissue)

NIAGARA MOHAWK POWER CORPORATION

THIS PROCEDURE NOT TO BE USED AFTER February 1990 SUBJECT TO PERIODIC REVIEW.

*Changes per Section 11.5 AP-2.0 — Signed — Date 18APR88

*Changes per Section 11.5, AP-2.0 — Signed — Date 28 Nov 88

TABLE OF CONTENTS

SECTION or TABLE	SUBJECT	TS SECTION or TABLE	APPLICABLE PROCEDURE	PAGE
1.0	INTRODUCTION			1
2.0	LIQUID EFFLUENTS		N/A	2
2.1	Liquid Effluent Monitor Alarm Setpoints		N/A	2
2.1.1	Basis	3.11.1.1	N/A	2
2.1.2	Setpoint Determination Methodology	3.3.7.9	N/A	2
2.1.2.1	Liquid Radwaste Effluent Radiation Alarm Setpoint		N2-CSP-4V	2-3
2.1.2.2	Contaminated Dilution Water Radwaste Effluent Monitor Alarm Setpoint Calculations		N/A	4
2.1.2.3	Service Water and Cooling Tower Blowdown Effluent Radiation Alarm Setpoint		N2-CSP-13 App. D	5
2.1.3	Discussion		N/A	5
2.1.3.1	Liquid Radwaste Effluent		N/A	6-9
2.1.3.2	Service Water and Cooling Tower Blowdown			10-12
2.2	Liquid Effluent Concentration Calculation	3.11.1.1 4.11.1.1.2	N2-CSP-4V	12
2.3	Liquid Effluent Dose Calculation	3.11.1.2 3.11.1.3 4.11.1.2 4.11.1.3.1	N2-CSP-4V	13-14
2.4	Liquid Effluent Dose Factor Derivation - Ait			14-15
2.5	Liquid Effluent Sampling Representativeness	4.11.1-1 note b	N2-CSP-4V	15-16
2.6	Liquid Radwaste System Operation	3.11.1.3		16-17
Table 2-1	Liquid Effluent Detector Response			18
Table 2-2	Ait Liquid Effluent Dose Factor			19
Figure 2-1 thru 2-8	Liquid Radwaste Treatment System Flow Diagrams	3.11.1.3 3.11.3		20-27
Figure 2-9	Liquid Radiation Monitoring			28
Figure 2-10	Off-line Liquid Monitor			29
3.0	GASEOUS EFFLUENTS			30
3.1	Gaseous Effluent Monitor Alarm Setpoints			30
3.1.1	Basis	3.11.2.1		30
3.1.2	Setpoint Determination Methodology	3.3.7.10		30
3.1.2.1	Stack Noble Gas Radiation Alarm Setpoint		N2-CSP-13 App. D	30-31
3.1.2.2	Vent Noble Gas Radiation Alarm Setpoint		N2-CSP-13 App. D	31-32
3.1.2.3	Offgas Pretreatment Radiation Alarm Setpoint			32
3.1.3	Discussion			33
3.1.3.1	Stack Effluent			34
3.1.3.2	Vent Effluent			35
3.1.3.3	Offgas Process			36
3.2	Gaseous Effluent Dose Rate Calculation	3.11.2.1	N2-CSP-7V	37
3.2.1	Total Body Dose Rate Due to Noble Gases	3.11.2.1.a 4.11.2.1.1	N2-CSP-7V	37-38
3.2.2	Skin Dose Rate Due to Noble Gases	3.11.2.1.a 4.11.2.1.1	N2-CSP-7V	38-39

TABLE OF CONTENTS

SECTION or TABLE	SUBJECT	TS SECTION or TABLE	APPLICABLE PROCEDURE	PAGE
3.2.3	Organ Dose Rate Due to I-131, I-133, Tritium and Particulates with half-lives greater than 8 days	3.11.2.1.b 4.11.2.1.2	N2-CSP-7V	39-41
3.3	Gaseous Effluent Dose Calculation Methodology	3.11.2.2 3.11.2.3 3.11.2.5	N2-CSP-7V	41-42
3.3.1	Gamma Air Dose Due to Noble Gases	3.11.2.2.a 4.11.2.2	N2-CSP-7V	42
3.3.2	Beta Air Dose Due to Noble Gases	3.11.2.2.b	N2-CSP-7V	43
3.3.3	Organ Dose Due to I-131, I-133, Tritium and Particulates with half-lives greater than 8 days.	3.11.2.3 3.11.2.5 4.11.2.3 4.11.2.5.1	N2-CSP-7V	43-45
3.4	Gaseous Effluent Dose Factor Definition and Derivation			45
3.4.1	Bi- Plume Shine Gamma Air Dose Factor Vi- Plume Shine Total Body Dose Factor			45-47
3.4.2	Ki, Li, Mi and Ni- Immersion Dose Factors			47
3.4.3	Pi- Iodine, Particulate and Tritium Organ Dose Rate Factors			47-51
3.4.4	Ri- Iodine, Particulate and Tritium Organ Dose Factors			51-57
3.4.5	X/Q and Wv- Dispersion Factors for Dose Rate			58
3.4.6	Ws and Wv- Dispersion Factors for Dose			59
3.5	Gaseous Effluent I-133 Estimation		N2-CSP-78Q	59
3.6	Use of Concurrent Meteorological Data vs. Historical Data			59
3.7	Gaseous Radwaste Treatment System Operation	3.11.2.4		59
3.8	Ventilation Exhaust Treatment System Operations	3.11.2.5		60
Table 3-1	Offgas Noble Gas Detector Response			61
Table 3-2	Bi and Vi Plume Shine Dose Factors			62
Table 3-3	Ki, Li, Mi and Ni- Immersion Dose Factors			63
Table 3-4	Pi- Ground Plane Dose Rate Factors			64
Table 3-5	Pi- Inhalation Dose Rate Factors			65
Table 3-6	Pi- Food (Cow Milk) Dose Rate Factors			66
Table 3-7 to 3-10	Ri- Inhalation Dose Factors for Infant Child, Teen and Adult			67-70
Table 3-11	Ri- Ground Plane Dose Factors			71
Table 3-12 to 3-15	Ri- Cowmilk Ingestion Dose Factors for Infant, Child, Teen and Adult			72-75
Table 3-16 to 3-18	Ri- Cowmeat Ingestion Dose Factors for Child, Teen and Adult			76-78
Table 3-19 to 3-21	Ri- Vegetation Ingestion Dose Factors for Child, Teen and Adult			79-81

TABLE OF CONTENTS

SECTION or TABLE	SUBJECT	TS SECTION or TABLE	PAGE
Table 3-22	X/Q, Wv and Ws- Dispersion Factors for Receptor Locations		82
Figure 3-1 thru 3-3	Gaseous Radwaste Treatment System Flow Diagrams	3.11.2.4	83-85
Figure 3-4	Ventilation Exhaust Treatment System Flow Diagrams	3.11.2.5	86
Figure 3-5	Gaseous Radiation Monitoring		87
Figure 3-6	Gaseous Effluent Monitoring System		88
4.0	URANIUM FUEL CYCLE	3.11.4	89-90
4.1	Evaluation of Doses From Liquid Effluents	4.11.4.1	90-91
4.2	Evaluation of Doses From Gaseous Effluents	4.11.4.1	92
4.3	Evaluation of Doses From Direct Radiation	4.11.4.2	92
4.4	Doses to Members of the Public Within Site Boundary	6.9.1.8	93-94
5.0	ENVIRONMENTAL MONITORING PROGRAM	3.12 4.12	95
5.1	Sampling Stations	3.12.1 4.12.1	95
5.2	Interlaboratory Comparison Program	4.12.3	95
5.3	Capabilities for Thermoluminescent Dosimeters Used for Environmental Measurements		97-97
Table 5.1	Radiological Environmental Monitoring Program Sampling Locations	3.12.1 4.12.1 Table 3.12-1 Note (a)	98-100
6.0	DISCUSSION OF TECHNICAL SPECIFICATION REFERENCES		101
6.1	Table 3.12-1 note g		101
6.2	Table 3.12-1 note h		101
6.3	Table 3.12-1 note i		102
6.4	Table 3.12-1 note l		102
Figure 5.1-1	Nine Mile Point On-Site Map		---
Figure 5.1-2	Nine Mile Point Off-Site Map		---
Figure 5.1.3-1	Site Boundaries		---

OFF-SITE DOSE CALCULATION MANUAL (ODCM)

1.0 INTRODUCTION

This is the OFFSITE DOSE CALCULATION MANUAL (ODCM), referenced in the Nine Mile Point - Unit 2 Technical Specification. It describes the methodology for liquid and gaseous effluent monitor alarm setpoint calculations, the methodology for computing the offsite dose due to liquid effluents, gaseous effluents, and the uranium fuel cycle as well as the radiological environmental monitoring and interlaboratory comparison programs.

The ODCM will be reviewed and approved by the NRC. Changes shall be provided in the semi annual radioactive effluent release reports submitted to the NRC.

Section 2 establishes methods used to calculate the Liquid Effluent Monitor Alarm setpoints and to demonstrate compliance with TS Section 3.11.1.1 limits on concentration of releases to the environment as required in TS Section 3.3.7.9 and 4.11.1.1.2 respectively. Additionally, the method used to calculate the cumulative dose contributions from liquid effluents and the methods used to assure thorough mixing and sampling of liquid radioactive waste tanks to be discharged as required in TS Section 4.11.1.2, 4.11.1.3.1 and Table 4.11.1-1 note b respectively are presented. | *

Section 3 establishes calculational methods used to calculate the Gaseous Effluent Monitor Alarm setpoints and to demonstrate compliance with TS Section 3.11.2.1 limits on dose rates due to gaseous releases to the environment as required in TS Section 3.3.7.10, 4.11.2.1.1 and 4.11.2.1.2 respectively. Additionally, the calculational methods used to calculate cumulative dose contributions from gaseous effluents as required in TS Section 4.11.2.2, 4.11.2.3 and 4.11.2.5 are presented. | *

Section 4 establishes the method used to determine cumulative dose contributions from the Uranium Fuel Cycle as required by TS Section 4.11.4.1, 4.11.4.2 and 6.9.1.8.

Section 5 establishes the environmental monitoring program as required by TS Section 3.12 and 4.12 including the Interlaboratory Comparison Program required by TS Section 4.12.3.

Section 6 discusses some of the references contained in TS Table 3.12-1, Radiological Environmental Monitoring Program.

2.0 LIQUID EFFLUENTS

Service Water A and B, Cooling Tower Blowdown and the Liquid Radioactive Waste Discharges comprise the Radioactive Liquid Effluents at Unit 2. (See figure 2-9) Presently there are no temporary outdoor tanks containing radioactive water capable of affecting the nearest known or future water supply in an unrestricted area. NUREG 0133 and Regulatory Guide 1.109, Rev. 1 were followed in the development of this section.

2.1 Liquid Effluent Monitor Alarm Setpoints

2.1.1 Basis

Technical Specification 3.11.1.1 provide the basis for the alarm setpoints: The concentration of radioactive material released in liquid effluents to UNRESTRICTED AREAS (see Figure 5.1.3-1) shall be limited to the concentrations specified in 10 CFR 20, Appendix B, Table II, Column 2, for radionuclides other than dissolved or entrained noble gases. For dissolved or entrained nobles gases, the concentration shall be limited by 2 x 10-4 microcurie/ml total activity.

2.1.2 Setpoint Determination Methodology

2.1.2.1 Liquid Radwaste Effluent Radiation Alarm Setpoint

This monitors setpoint takes into account the dilution of Radwaste Effluents provided by the Service Water and Cooling Tower Blowdown flows. Detector response for the nuclides to be discharged (cpm) is multiplied by the Actual Dilution Factor (dilution flow/waste stream flow) and divided by the Required Dilution Factor (total fraction of MPC in the waste stream). A safety factor is used to ensure that the limit is never exceeded. Service Water and Cooling Tower Blowdown are normally non-radioactive. If they are found to be contaminated prior to a Liquid Radwaste discharge then an alternative equation is used to take into account the contamination. If they become contaminated during a Radwaste discharge, then the discharge will be immediately terminated and the situation fully assessed.

Normal Radwaste Effluent Alarm Setpoint Calculation:

$$\text{Alarm Setpoint} \leq [0.8*(F/f)*\Sigma(Ci*CFi)]/[\Sigma(Ci/MPCi)] + \text{Background}.$$

Where:

Alarm Setpoint	=	The Radiation Detector Alarm Setpoint, cpm
0.8	=	Safety Factor, unitless
F	=	Nonradioactive dilution flow rate, gpm. Service

		Water Flow ranges from 30,000 to 58,000 gpm. Blowdown flow is typically 10,200 gpm.
Ci	=	Concentration of isotope i in Radwaste tank prior to dilution, μCi/ml
CFi	=	Detector response for isotope i, net cpm/μCi/ml See Table 2-1 for a list of nominal values
f	=	The permissible Radwaste Effluent Flow rate, gpm
*	=	Symbol to denote multiplication.
MPCi	=	Concentration limit for isotope i from 10CFR20 Appendix B, Table II, Column 2, μCi/ml
Background	=	Detector response when sample chamber is filled with nonradioactive water, cpm
Σi(Ci*CFi)	=	The total detector response when exposed to the concentration of nuclides in the Radwaste tank, cpm
Σi(Ci/MPCi)	=	The total fraction of the 10CFR20, Appendix B, Table II, Column 2 limit that is in the Radwaste tank, unitless. This is also known as the Required Dilution Factor (RDF)
CR*ΣiCi	=	An approximation toΣi(CiCFi) determined, at each calibration of the effluent monitor, by recording monitor cpm response to a typical radwaste tank mixture analyzed by multichannel analyzer (traceable to NBS). CR is a weighted summation of CF.
F/f	=	An approximation to (F+f)/f, the Actual Dilution Factor in effect during a discharge.

Permissible effluent flow, f, shall be calculated to determine that MPC will not be exceeded in the discharge canal.

$$f = \frac{(\text{Dilution Flow}) * (1 - \text{Fraction Tempering})}{(\text{RDF}) * 1.5}$$

Fraction Tempering = A diversion of some fraction of discharge flow to the intake canal for the purpose of temperature control.

NOTE: If Actual Dilution Factor is set equal to the Required Dilution Factor, then the alarm points required by the above equations correspond to a concentration of 80% of the Radwaste Tank concentration. No discharge could occur, since the monitor would be in alarm as soon as the discharge commenced. To avoid this situation, maximum allowable radwaste discharge flow is calculated using a multiple (usually 1.5 to 2) of the Required Dilution Factor, resulting in discharge canal concentration of 2/3 to 1/2 of MPC.

2.1.2.2 Contaminated Dilution Water Radwaste Effluent Monitor Alarm Setpoint Calculation:

The allowable discharge flow rate for a Radwaste tank, when one of the normal dilution streams (Service Water A, Service Water B, or Cooling Tower Blowdown) is contaminated, will be calculated by an iterative process. Using Radwaste tank concentrations with a nominal radwaste effluent flow rate (200 gpm, for example) the resulting fraction of MPC in the discharge canal will be calculated.

$$FMPC = \Sigma i \left[\Sigma s(Fs*Cis)/(MPCi*\Sigma s[Fs])\right]$$

Then the permissible radwaste effluent flow rate is given by:

$$f = \frac{\text{Nominal Flow}}{FMPC*2}$$

The corresponding Alarm Setpoint will then be calculated using the following equation, with f limited as above.

$$\text{Alarm Setpoint} \leq \frac{0.8*\Sigma i(Ci*CFi)}{\Sigma i\left[\Sigma s(Fs*Cis)/(MPCi*\Sigma s[Fs])\right]} + \text{Background}$$

Where:

Alarm Setpoint	=	The Radiation Detector Alarm Setpoint, cpm
0.8	=	Safety Factor, Unitless
Fs	=	An Effluent flow rate for stream s, gpm
Ci	=	Concentration of isotope i in Radwaste tank prior to dilution, uCi/ml
Cis	=	Concentration of isotope i in Effluent stream s including the Radwaste Effluent tank undiluted, uCi/ml
CFi	=	Detector response for istope i, net cpm/uCi/ml See Table 2-1 for a list of nominal values
MPCi	=	Concentration limit for isotope i from 10CFR20 Appendix B, Table II, Column 2, uCi/ml
f	=	The permissible Radwaste Effluent Flow rate, gpm
Background	=	Detector response when sample chamber is filled with nonradioactive water, cpm
$\Sigma i(Ci*CFi)$	=	The total detector response when exposed to the concentration of nuclides in the Radwaste tank, cpm
$\Sigma s[Fs*Cis]$	=	The total activity of nuclide i in all Effluent streams, uCi-gpm/ml
$\Sigma s[Fs]$	=	The total Liquid Effluent Flow rate, gpm (Service Water & CT Blowdown & Radwaste)

2.1.2.3 Service Water and Cooling Tower Blowdown Effluent Alarm Setpoint

These monitor setpoints do not take any credit for dilution of each respective effluent stream. Detector response for the distribution of nuclides potentially discharged is divided by the total MPC fraction of the radionuclides potentially in the respective stream. A safety factor is used to ensure that the limit is never exceeded.

Service Water and Cooling Tower Blowdown are normally non-radioactive. If they are found to be contaminated by statistically significant increase in detector response then grab samples will be obtained and analysis meeting the LLD requirements of Table 4.11-1 completed so that an estimate of offsite dose can be made and the situation fully assessed.

Service Water and Cooling Tower Blowdown Alarm Setpoint Equation:

Alarm Setpoint < [0.8*Σi (Ci*CFi)]/[Σi (Ci/MPCi)] + Background.

Where:

Alarm Setpoint	=	The Radiation Detector Alarm Setpoint, cpm
0.8	=	Safety Factor, unitless
Ci	=	Concentration of isotope i in potential containment, uCi/ml
CFi	=	Detector response for isotope i, net cpm/uCi/ml See Table 2-1 for a list of nominal values
MPCi	=	Concentration limit for isotope i from 10CFR20 Appendix B, Table II, Column 2, uCi/ml
Background	=	Detector response when sample chamber is filled with nonradioactive water, cpm
Σi(Ci*CFi)	=	The total detector response when exposed to the concentration of nuclides in the potential contaminant, cpm
Σi(Ci/MPCi)	=	The total fraction of the 10CFR20, Appendix B, Table II, Column 2 limit that is in the potential containment, unitless.
CR*ΣiCi	=	An approximation to Σi(CiCFi) determined, at each calibration of the effluent monitor, by recording monitor cpm response to a typical contaminant mixture analyzed by multichannel analyzer (traceable to NBS). CR is a weighted summation of Cfi.

2.1.3 Discussion

2.1.3.1 Liquid Radwaste Effluent Monitor

The Liquid Radioactive Waste System Tanks are pumped to the discharge tunnel which in turn flows directly to Lake Ontario. At the end of the discharge tunnel in Lake Ontario, a diffuser structure has been installed. Its purpose is to maintain surface water temperatures low enough to meet thermal pollution limits. However, it also assists in the near field dilution of any activity released. Service Water and the Cooling Tower Blowdown are also pumped to the discharge tunnel and will provide dilution. If the Service Water or the Cooling Tower Blowdown is found to be contaminated, then its activity will be accounted for when calculating the permissible radwaste effluent flow for a Liquid Radwaste discharge. The Liquid Radwaste System Monitor provides alarm and automatic termination of release if radiation levels above its alarm setpoint are detected.

The radiation detector is a sodium iodide crystal. It is a scintillation device. The crystal is sensitive to gamma and beta radiation. However, because of the metal walls of the sample chamber and the absorption characteristics of water, the monitor is not particularly sensitive to beta radiation. Actual detector response $\Sigma i(Ci*CFi)$, cpm, will be evaluated by placing a sample of typical radioactive waste into the monitor and recording the gross count rate, cpm. A calibration ratio, CR, cpm/μCi/ml, will be developed by dividing the noted detector response, $\Sigma i(Ci*CFi)$ cpm, by total concentration of activity $\Sigma i(Ci)$, μCi/cc. The quantification of the activity will be completed with gamma spectrometry equipment whose calibration is traceable to NBS. This calibration ratio will be used for subsequent setpoint calculations in the determination of detector response:

$$\Sigma i(Ci*CFi) = CR * \Sigma i(Ci)$$

Where the factors are all as defined above.

For the calculation of $\Sigma i(Ci/MPCi)$ the contribution from non gamma emitting nuclides except tritium will be initially estimated based on the expected ratios to quantified nuclides as listed in the FSAR Table 11.2.5. Fe-55, Sr-89 and Sr-90 are 2.5, 0.25 and 0.02 times the concentration of Co-60. Periodic analysis of waste for these non gamma emitting nuclides by offsite analysis will provide a better estimate once sufficient activity is present.

Tritium concentration is assumed to equal the latest concentration detected in the monthly Tritium analysis (performed offsite) on liquid radioactive waste tanks discharged or based on the latest tritium detected in the spent fuel pool if liquid radioactive waste tank discharges have not been made within the last 6 months.

Nominal flow rates of the Liquid Radioactive Waste System Tanks discharged is 165 gpm while dilution flow from the minimum number of Service Water Pumps always in service is over 30,000 gpm, and Cooling Tower Blowdown is 10,200 gpm. Because of the large amount of dilution the alarm setpoint could be substantially greater than that which would correspond to the concentration actually in the tank. Potentially a discharge could continue even if the distribution of nuclides in the tank were substantially different from the grab sample obtained prior to discharge which was used to establish the detector alarm point. To avoid this possibility of "Non representative Sampling" resulting in erronous assumptions about the discharge of a tank, the tank is recirculated for a minimum of 2.5 tank volumes prior to sampling.

A setpoint of 355 cpm above background will be used until grab sample analysis with the required LLD sensitivity on TS Table 4.11-1 detects activity at such a level that it cannot be discharged with the nominal setpoint. 355 cpm is the same nominal setpoint as for the service water and cooling tower blowdown radiation monitors. These are all identical detectors. TCN-3

A sample calculation is presented below assuming tank concentrations equivalent to the diluted concentration presented in FSAR Table 11.2.5 which is the expected concentration of effluent waste after dilution that are discharged with the design limit for fuel failure (the table below is the undiluted concentration corresponding to a tank 2040 gal per day discharge with only cooling tower blowdown dilution of 10,200 gpm).

ISOTOPE NAME	ACTIVITY CONCENTRATION µCi/ml	MPC µCi/ml	FRACTION OF MPC (B/C)	DETECTOR RESPONSE cpm/µCi/ml	CPM TOTAL cpm
A	B (Ci)	C (MPCi)	D (Ci/MPCi)	E (CFi)	F (CiCFi)
H3	8.4E-3	3E-3	2.8	--------	--------
NA24	1.7E-6	3E-5	5.7E-2	--------	--------
P32	6.8E-8	2E-5	3.4E-3	--------	--------
CR51	2.0E-6	2E-3	1.03-3	--------	--------
MN54	2.4E-8	1E-4	2.4E-4	8.42E7	1.98E+0
MN56	3.2E-7	1E-4	3.2E-3	1.2E7	3.9E+1
FE55	3.5E-7	8E-4	4.3E-4	--------	--------
FE59	1.0E-8	5E-5	2.1E-4	8.63E7	9.0E-1
CO58	6.8E-8	9E-5	7.6E-4	1.14E8	7.8E+0
CO60	1.4E-7	3E-5	4.7E-3	1.65E8	2.4E+1
NI63	3.5E-10	3E-5	1.1E-5	--------	--------
NI65	1.8E-9	1E-4	1.8E-5	--------	--------
CU64	4.3E-6	2E-4	2.1E-2	--------	--------
ZN65	6.8E-8	1E-4	6.8E-4	--------	--------
BR83	3.3E-8	3E-6	1.1E-2	--------	--------
BR84	8.9E-14	----	------	1.12E8	1.0E-5
SR89	3.6E-8	3E-6	1.2E-3	7.8E3	2.8E-4
SR90	2.4E-9	3E-7	7.8E-3	--------	--------
SR91	4.6E-7	5E-5	9.3E-3	1.22E8	5.7E+1
SR92	7.6E-8	6E-5	1.2E-3	8.17E7	6.1E+0
Y91	1.7E-8	3E-5	5.7E-4	2.47E8	4.2E+0
Y92	4.6E-7	6E-5	7.8E-3	2.05E7	9.5
Y93	5.1E-7	3E-5	1.7E-3	--------	--------
ZR95	2.7E-9	6E-5	4.5E-5	8.35E7	2.3E-1
ZR97	1.0E-9	2E-5	5.2E-5	--------	--------
NB95	2.7E-9	1E-4	2.7E-5	8.5E7	2.4E-1
MO99	6.0E-7	4E-5	1.6E-2	2.32E7	1.4E+1
TC99M	1.2E-6	3E-3	4.1E-4	2.32E7	2.8E+1
RU103	6.8E-9	8E-5	8.5E-5	--------	--------
RU105	6.8E-8	1E-4	6.3E-4	--------	--------
RU106	1.0E-13	1E-5	1.0E-4	--------	--------
AG110M	3.5E-10	3E-3	1.1E-5	--------	--------
TE129M	1.4E-8	2E-5	7.4E-5	--------	--------
TE131M	2.4E-8	4E-5	6.0E-4	--------	--------

ISOTOPE NAME	ACTIVITY CONCENTRATION µCi/ml	MPC µCi/ml	FRACTION OF MPC B/C	DETECTOR RESPONSE cpm/ µCi/ml	CPM TOTAL cpm
A	B (Ci)	C (MPCi)	D (Ci/MPCi)	E (CFi)	F (CiCFi)
TE132	2.9E-9	2E-5	1.5E-4	1.12E8	3.3E-1
I131	1.4E-6	3E-7	4.7	1.01E8	1.4E+2
I132	2.5E-7	8E-6	3.2	2.63E8	6.7E+1
I133	1.2E-5	1E-6	12.3	9.67E7	1.2E+3
I134	7.2E-10	2E-5	3.6E-5	2.32E8	1.7E-1
I135	3.8E-6	4E-6	9.4E-1	1.17E8	4.4E+2
CS134	5.1E-6	9E-6	5.7E-2	1.97E8	1.0E+2
CS136	3.3E-7	6E-5	5.5E-3	2.89E8	9.4E+1
CS137	1.3E-6	2E-5	6.6E-2	7.32E7	9.4E-1
CS138	8.4E-12	----	------	1.45E8	1.2E-3
BA140	1.3E-7	2E-5	6.6E-2	4.99E7	6.6E+0
LA142	3.2E-9	3E-6	1.0E+3	------	------
CE141	1.0E-8	9E-5	1.1E-4	------	------
CE143	7.6E-9	4E-5	1.9E-4	------	------
CE144	7.6E-9	1E-5	1.9E-4	1.03E7	1.0E-2
PR143	1.4E-8	5E-5	2.8E-4	------	------
ND147	1.0E-9	6E-5	1.7E-9	------	------
W187	6.3E-8	6E-5	1.0E-3	------	------
NP239	2.3E-6	1E-4	2.3E-2	------	------
TOTALS			2.1E+1		2.4E+3

For the example tank, permissible discharge flow to ensure a concentration less than MPC in the discharge canal would be:

$$f = \frac{10{,}200 * 1}{2.1E1 * 1.5} = 324 \text{ gpm}$$

Since maximum obtainable Liquid Radwaste discharge flow is 165 gpm, this value would be used for the discharge, and for calculation of the alarm setpoint.

The Liquid Radwaste Effluent Radiation Monitor Alarm Setpoint equation is:

Alarm Setpoint = $[0.8*F/f*\Sigma i(Ci*CFi)]/[\Sigma i(Ci/MPCi)]$ + Background.

Where the Alarm Setpoint is in cpm, F is 10,200 gpm, $\Sigma i(Ci*CFi)$ is 2.4E+3 cpm, f is 165 gpm and $\Sigma i(Ci/MPCi)$ is 2.1E+1 unitless. These values yield an Alarm Setpoint of 5.7E+3 cpm above background, while the expected detector response is 2.4E+3 cpm. It should be noted that the lack of detector response data for many of the nuclides makes this calculation conservative. Additionally it should be noted that if grab sample analysis of the tank indicates that no activity detectable above the LLD requirements of Table 4.11-1 then the Liquid Radwaste Effluent Radiation Monitor Alarm Setpoint will be set at less than 355 cpm above Background, cpm. This is the same as the service water monitors initial alarm setpoint, see section 2.1.3.2.

2.1.3.2 Service Water and Cooling Tower Blowdown Effluent Monitor

Service Water A and B and the Cooling Tower Blowdown are pumped to the discharge tunnel which in turn flows directly to Lake Ontario. Normal flow rates for each Service Water Pump is 15,000 gpm while that for the Cooling Tower Blowdown is 10,200 gpm. Credit is not taken for any dilution of these individual effluent streams.

The radiation detector is a sodium iodide crystal. It is a scintillation device. The crystal is sensitive to gamma and beta radiation. However, because of the metal walls in its sample chamber and the absorption characteristics of water, the monitor is not particularly sensitive to beta radiation.

Detector response Σi(Ci/CFi) will initially be assumed to correspond to that calculated by the manufacturer. However, this will be evaluated within 90 days after Commercial Operation and during every fuel cycle by placing a diluted sample of Reactor Coolant (after a two hour decay) in a representative monitor and noting its gross count rate. Reactor Coolant is chosen because it represents the most likely contaminate of Station Waters.

A two hour decay is chosen by judgement of the staff of Niagara Mohawk Power Corporation: Reactor Coolant with no decay contains a considerable amount of very energetic nuclides which would bias the detector response term high. However assuming a longer than 2 hour decay is not realistic as the most likely release mechanism is a leak through the Residual Heat Removal Heat Exchangers which would contain Reactor Coolant during shutdowns.

The initial setpoint calculation is presented as both an example and for the purposes of documenting the calculation. It will be recalculated prior to commercial operation and during every fuel cycle when a Radiochemical analysis of Reactor Coolant is completed for E bar determination as required by TS Table 4.4.5-1 or when activity is detected in the respective effluent stream.

ISOTOPE NAME	2 HR DECAY ACTIVITY CONCENTRATION µCi/ml	MPC µCi/ml	FRACTION OF MPC B/C	DETECTOR RESPONSE cpm/µCi/ml	CPM TOTAL cpm
A	B (Ci)	C (MPCi)	D (Ci/MPCi)	E (CFi)	F (CiCFi)
H3	1.0E-2	3E-3	3.3	--------	--------
F18	1.9E-3	5E-4	3.8	--------	--------
NA24	3.7E-3	3E-5	1.2E-2	--------	--------
P32	7.8E-5	2E-5	3.9	--------	--------
CR51	2.3E-3	2E-3	1.2	--------	--------
MN54	4.0E-5	1E-4	4.0E-1	8.42E7	3.4E3
MN56	2.9E-2	1E-4	2.9E-2	1.2E8	3.5E6
FE55	3.9E-4	8E-4	4.9E-1	--------	--------
FE59	8.0E-5	5E-5	1.6	8.63E7	6.9E3
CO58	5.0E-3	9E-5	5.6E-1	1.14E8	5.7E5
CO60	5.0E-4	3E-5	1.7E-1	1.65E8	8.3E4
NI63	3.9E-7	3E-5	1.3E-2	--------	--------

ISOTOPE NAME	2 HR DECAY ACTIVITY CONCENTRATION µCi/ml	MPC µCi/ml	FRACTION OF MPC B/C	DETECTOR RESPONSE cpm/µCi/ml	CPM TOTAL cpm
A	B (Ci)	C (MPCi)	D (Ci/MPCi)	E (CFi)	F (CiCFi)
NI65	3.0E-4	1E-4	3.0	--------	--------
CU64	1.1E-2	2E-4	5.5E1	--------	--------
ZN65	7.8E-5	1E-4	7.8E-1	--------	--------
ZN69M	7.4E-4	6E-5	1.2E1	--------	--------
BR83	1.3E-2	3E-6	4.3E3	--------	--------
BR84	2.1E-3	----	------	1.12E8	2.4E5
RB89	1.0E-4	----	------	--------	--------
SR89	3.1E-3	3E-6	1.0E3	7.8E3	2.4E1
SR90	2.3E-4	3E-7	7.7E2	--------	--------
SR91	6.0E-2	5E-5	1.2E3	1.22E8	7.3E6
SR92	6.6E-2	6E-5	1.1E3	8.17E7	5.4E6
Y91	1.1E-4	3E-5	3.7	2.47E8	2.7E4
Y92	1.3E-2	6E-5	2.2E2	2.05E7	2.7E5
Y93	1.0E-2	3E-5	3.3E2	--------	--------
ZR95	4.0E-5	6E-5	6.7E-1	8.35E7	3.3E3
ZR97	2.9E-5	2E-5	1.5	--------	--------
NB95	4.1E-5	1E-4	4.1E-1	8.5E7	3.5E3
MO99	2.2E-2	4E-5	5.5E-1	2.32E7	5.1E5
TC99M	2.2E-1	3E-3	7.3E1	2.32E7	5.1E6
RU103	5.4E-5	8E-5	6.8E-1	--------	-- ----
RU105	4.5E-3	1E-4	4.5E1	--------	-
RU106	8.4E-6	1E-5	8.4E-1	--------	-
AG110M	6.0E-5	3E-5	2.0	--------	-
TE129M	1.1E-4	2E-5	5.5	--------	-
TE131M	2.7E-4	4E-5	6.8	--------	----------
TE132	.8E-2	2E-5	2.4E3	1.12E8	5.4E6
I131	1.3E-2	3E-7	4.3E4	1.01E8	1.3E6
I132	1.2E-1	8E-6	1.5E4	2.63E8	3.2E7
I133	1.5E-1	1E-6	1.5E5	9.67E7	1.45E7
I134	8.0E-2	2E-5	4.0E3	2.32E8	1.86E7
I135	1.4E-1	4E-6	3.5E4	1.17E8	1.6E7
CS134	1.6E-4	9E-6	1.8E1	1.97E8	3.2E4
CS136	1.1E-4	6E-5	1.8	2.89E8	3.2E4
CS137	2.4E-4	2E-5	1.2E1	7.32E7	1.8E4
CS138	1.4E-2	----	------	1.45E8	2.0E6
BA140	9.0E-3	2E-5	4.5E2	4.99E7	4.5E5
LA142	7.1E-3	3E-6	2.4E3	------	-----
CE141		9E-5			
CE143		4E-5			
CE144	8.1E-5	1E-5	3.5	1.03E7	3.6E2
PR143		5E-5			
ND147		6E-5			
W187		6E-5			
NP239	2.3E-1	1E-4	2.3E3	------	-----
TOTALS			2.7E5		1.2E8

The Service Water Effluent Radiation Monitor Alarm Setpoint equation is:

Alarm Setpoint = [0.8*Σi(Ci*CFi)]/[Σi(Ci/MPCi)] + Background.

Where the Alarm Setpoint is in cpm, Σi(Ci*CFi) is 1.2E8 cpm, and Σi(Ci/MPCi) is 2.7E5 unitless. These values yield an Alarm Setpoint of 3.55E2 cpm above background. It should be noted that the lack of detector response data for many of the nuclides makes this calculation conservative.

2.2 Liquid Effluent Concentration Calculation

This calculation documents compliance with TS Section 3.11.1.1:

The concentration of radioactive material released in liquid effluents to UNRESTRICTED AREAS (see Figure 5.1.3-1) shall be limited to the concentrations specified in 10 CFR 20, Appendix B, Table II, Column 2, for radionuclides other than dissolved or entrained noble gases. For dissolved or entrained noble gases, the concentration shall be limited to 2 x 10E-4 microcurie/ml total activity.

The concentration of radioactivity from Liquid Radwaste, Service Water A and B and the Cooling Tower Blowdown are included in the calculation. The calculation is performed for a specific period of time. No credit taken for averaging or totaling. The limiting concentration is calculated as follows:

MPC Fraction = Σi [Σs(Cis*Fs)/(MPCi*Σs(Fs))]

Where:

MPC Fraction	=	The limiting concentration of 10 CFR 20, Appendix B, Table II, Column 2, for radionuclides other than dissolved or entrained noble gases. For noble gases, the concentration shall be limited to 2 x 10E-4 microcurie/ml total activity, unitless
Cis	=	The concentration of nuclide i in particular effluent stream s, μCi/ml
Fs	=	The flow rate of a particular effluent stream s, gpm
MPCi	=	The limiting concentration of a specific nuclide i from 10CFR20, Appendix b, Table II, Column 2 (noble gas limit is 2E-4), μCi/ml
Σs(Cis*Fs)	=	The total activity rate of nuclide i, in all the effluent streams s, μCi/ml *gpm
Σs(Fs)	=	The total flow rate of all effluent streams s, gpm.

A value of less than one for MPC fraction is considered acceptable for compliance with TS Section 3.11.1.1.

2.3 Liquid Effluent Dose Calculation Methodology

This calculation documents compliance with TS Section 4.11.1.2 and 4.11.1.3.1 for doses due to liquid releases. It is completed once per month to assure that TS Section 3.11.1.2 and 3.11.1.3 are not exceeded:

The dose or dose commitment to a MEMBER OF THE PUBLIC from radioactive materials in liquid effluents released, from each unit, to UNRESTRICTED AREAS (see Figure 5.1.3-1) shall be limited:

a. During any calendar quarter to less than or equal to 1.5 mrem to the whole body and to less than or equal to 5 mrem to any organ, and

b. During any calendar year to less than or equal to 3 mrem to the whole body and to less than or equal to 10 mrem to any organ.

The liquid radwaste treatment system shall be OPERABLE, and appropriate portions of the system shall be used to reduce releases of radioactivity when the projected doses due to the liquid effluent, from the unit, to UNRESTRICTED AREAS (see figure 5.1.3-1) would exceed 0.06 mrem to the whole body or 0.2 mrem to any organ in a 31-day period.

Doses due to Liquid Effluents are calculated monthly for the fish ingestion and drinking water pathways from all detected nuclides in liquid effluents released to the unrestricted areas using the following expression from NUREG 0133, Section 4.3.

$$Dt = \sum_1 [Ait * \sum_1 * (dT1 * Ci1 * F1)]$$

Where:

Dt = The cumulative dose commitment to the total body or any organ, t from the liquid effluents for the total time period $\sum_1(dT1)$, mrem

dT1 = The length of the 1 th time period over which Ci1 and F1 are averaged for all liquid releases, hours

Ci1 = The average concentration of radionuclide, i, in undiluted liquid effluents during time period dT1 from any liquid release, uCi/ml

Ait = The site related ingestion dose commitment factor to the total body or any organ t for each identified principal gamma or beta emitter, mrem/hr per uCi/ml. Table 2-2.

F1 = The near field average dilution factor for Ci1 during any liquid effluent release. Defined as the ratio of the maximum undiluted liquid waste flow during release to the product of the average flow from the site discharge structure to unrestricted receiving waters times 5.9. (5.9 is the site specifice applicable factor for the mixing effect of the discharge structure.) See the Nine Mile Point Unit 2 Environmental Report - Operating License Stage, Table 5.4-2 footnote 1.

Example Calculation - Thyroid

A sample of a radwaste tank indicates I-131 and H-3 concentrations of 1.5E-6 and 8.9E-3 μCi/cc respectively. The tank contains 20,000 gallons of waste to be discharged. The tank is discharged at 165 gpm and there is 30,000 gpm of available dilution water:

$$Dt = \sum i[Ait * \sum 1(dT1 * Ci1 * F1)].$$

Where Dt mrem is the dose to organ t, Ait mrem/hr per μCi/ml is the ingestion dose commitment factor, dT hours is the time interval over which the release occurs, Ci μCi/ml is the undiluted concentration of nuclide i in the release and F1 unitless is the dilution factor for the release. From Table 2-2 Ait is 7.21E4 and 3.37E-1 mrem/hr per μCi/ml respectively for I-131 and H-3 dose to the thyroid. From the discharge and dilution flow rate, F1 unitless can be calculated:

$$F1 = 165gpm/(30,000gpm * 5.9) = 9.32E-04.$$

From the tank volume and discharge rate the length of time required for the discharge is:

$$dT = 20,000 \text{ gal}/165 \text{ gpm} = 121.2 \text{ min} = 2.02 \text{ hr}$$

These values will yield 2.04E-4 and 5.65E-6 mrem for I-131 and H-3 respectively for the thyroid when inserted into the equation for Dt. Thus the total dose from the tank is 2.06E-4 mrem to the thyroid. The dose limit to the maximum exposed organ is specified by TS Section 3.11.1.2 and 3.11.1.3.

2.4 Liquid Effluent Dose Factor Derivation Ait

Ait mrem/hr per μCi/ml takes into account the dose from ingestion of fish and drinking water. It should be noted that the fish ingestion pathway is the most significant pathway for dose from liquid effluents. The water consumption pathway is included for consistancy with NUREG 0133. Drinking water is not routinely sampled as part of the Environmental Monitoring Program because of its insignificance.

The above equation for calculating dose contributions requires the use of dose factor Ait for each nuclide, i, which embodies the dose factors, pathway transfer factors (e.g., bioaccumulation factors), pathway usage factors, and dilution factors for the points of pathway origin. The adult total body and organ dose factor for each radionuclide will be used from Table E-11 of Regulatory Guide 1.109. The dose factor equation for a fresh water site is:

$$Ait = Ko * (Uw/Dw + Uf * BFi) * DFi$$

Where:

Ait = Is the composite dose parameter for the total body or organ of an adult for nuclide, i, for all appropriate pathways, mrem/hr per µCi/ml

Ko = Is the unit conversion factor, 1.14E5=1X10E6pCi/µCi x 1E3 ml/kg -:- 8760 hr/hr

Uw = 730 kg/yr, adult water consumption

Uf = 21 kg/yr, adult fish consumption

BFi = Bioaccumulation factor for nuclide, i, in fish, pCi/kg per pCi/l, from Table A-1 of RG 1.109

DFi = Dose conversion factor for nuclide, i, for adults in respective organ, t, in mrem/pCi, from Table E-11 of RG 1.109.

Dw = Dilution factor from the near field area within one-quarter mile of the release point to the potable water intake for the adult water consumption. This is the Metropolitian Water Board, Onondaga County intake structure located west of the City of Oswego. From the NMP-2 ER-OLS Table 5.4-2 footnote 3 this value is 463.8. However the near field dilution factor, footnote 1 is 5.9. So as to not take double account of the near field dilution the value used for Dw is 463.8/5.9 or 78.6, unitless.

Inserting the usage factors of RG 1.109 as appropriate into the equation gives the following expression:

$$Ait = 1.14E5*(730/Dw + 21*BFi)*DFi.$$

Example Calculation
For I-131 Thyroid Dose Factor for exposure from Liquid Effluents:

DFi	= 1.95E-3	mRem/pCi
BFi	= 1.5E1	pCi/Kg per pCi/l
UF	= 21	Kg/yr
Dw	= 78.6	unitless
Ko	= 1.14E5	

These values will yield an Ait Factor of 7.21E4 mRem-ml per µCi-hr as listed on Table 2-2. It should be noted that only a limited number of nuclides are listed on Table 2-2. These are the most common nuclides encountered in effluents. If a nuclide is detected for which a factor is not listed, then it will be calculated and included in a revision to the ODCM.

2.5 Sampling Representativeness

This section covers TS Table 4.11.1-1 note b concerning thoroughly mixing each batch of liquid radwaste prior to sampling.

There are four tanks in the radwaste system designed to be discharged to the discharge canal. These tanks are labeled 4A, 4B, 5A, and 5B.

Liquid Radwaste Tank 5A and 5B at Nine Mile Point Unit 2 contain a sparger spray ring which assist the mixing of the tank contents while it is being recirculated prior to sampling. This sparger effectively mixes the tank four times faster than simple recirculation.

Liquid Radwaste Tank 4A and 4B contain a mixing ring but no sparger. No credit is taken for the mixing effects of the ring. Normal recirculation flow is 150 gpm for tank 5A and 5B, 110 gpm for tank 4A and 4B while each tank contains up to 25,000 gallons although the entire contents are not discharged. To assure that the tanks are adequately mixed prior to sampling, it is a plant requirement that the tank be recirculated for the time required to pass 2.5 times the volume of the tank: 3

$$\text{Recirculation Time} = 2.5*T/R*M$$

Where: 3

Recirculation Time	Is the minimum time to recirculate the Tank, min
2.5	Is the plant requirement, unitless
T	Is the tank volume, gal
R	Is the recirculation flow rate, gpm.
M	Is the factor that takes into account the mixing of the sparger, unitless, four for tank 5A and B, one for tank 4A and B. 3

Additionally the Alert Alarm setpoint of the Liquid Radwaste Effluent Radiation Monitor is set at a value corresponding to not more than twice its calculated response to the grab sample. Thus this radiation monitor will alarm if the grab sample is significantly lower in activity than any part of the tank contents being discharged.

Service Water A and B and the Cooling Tower Blowdown are sampled from the radiation monitor on each respective stream. These monitors continuously withdraw a sample and pump it back to the effluent stream. The length of tubing between the continuously flowing sample and the sample spigot contains less than 200ml which is adequately purged by requiring a purge of at least 1 liter when grabbing a sample.

2.6 Liquid Radwaste System Operation

Technical Specification 3.11.1.3 requires the Liquid Radwaste Treatment System to be OPERABLE and used when projected doses due to liquid radwaste would exceed 0.06 mrem to the whole body or 0.2 mrem to any organ in a 31-day period. Cumulative doses will be determined at least once per 31 days (as indicated in Section 2.3) and doses will also be projected if the radwaste treatment systems are not being fully utilized.

Full utilization will be determined on the basis of utilization of the indicated components of each process stream to process contents of the respective system collection tanks:

1) Low Conductivity (Waste Collector): Radwaste Filter (see Fig. 2-2) and Radwaste Demin. (see Fig. 2-3)

2) High Conductivity (Floor Drains) Floor Drain Filter (see Fig. 2-5) or Waste Evaporator (see Fig. 2-6)

3) Regenerant Waste: Regenerant Evaporator (see Fig. 2-8)

NOTE: Regenerant Evaporator and Waste Evaporator may be used interchangeably.

The dose projection indicated above will be performed in accordance with the methodology of Section 2.3 when ever Liquid Waste is being discharged without treatment in order to determine that the above dose limits are not exceeded.

TABLE 2-1

LIQUID EFFLUENT DETECTORS RESPONSES*

NUCLIDE	(CPM/ μCi/ml) x 10^8
Sr 89	0.78E-04
Sr 91	1.22
Sr 92	0.817
Y 91	2.47
Y 92	0.205
Zr 95	0.835
Nb 95	0.85
Mo 99	0.232
Tc 99m	0.232
Te 132	1.12
Ba 140	0.499
Ce 144	0.103
Br 84	1.12
I 131	1.01
I 132	2.63
I 133	0.967
I 134	2.32
I 135	1.17
Cs 134	1.97
Cs 136	2.89
Cs 137	0.732
Cs 138	1.45
Mn 54	0.842
Mn 56	1.2
Fe 59	0.863
Co 58	1.14
Co 60	1.65

* Values from SWEC purchase specification NMP2-P281F.

TABLE 2-2

$A_{i,\tau}$ VALUES - LIQUID*

$$\frac{\text{mrem - ml}}{\text{hr - }\mu\text{Ci}}$$

NUCLIDE	T BODY	GI-TRACT	BONE	LIVER	KIDNEY	THYROID	LUNG	
H 3	3.37E-1	3.37E-1	--	3.37E-1	3.37E-1	3.37E-1	3.37E-1	
Cr 51	1.28	3.21E2	--	--	2.81E-1	7.63E-1	1.69	
Cu 64	4.72	8.57E2	--	1.01E1	2.54E1	--	--	TCN-2
Mn 54	8.36E2	1.34E4	--	4.38E3	1.30E3	--	--	
Fe 59	9.40E2	8.18E3	1.04E3	2.45E3	--	--	6.85E2	
Co 58	2.01E2	1.82E3	--	9.00E1	--	--	--	
Co 60	5.70E2	4.85E3	--	2.58E2	--	--	--	
Zn 65	3.33E4	4.65E4	2.32E4	7.38E4	4.93E4	--	--	
Sr 89	6.44E2	3.60E3	2.24E4	--	--	--	--	
Sr 90	1.36E5	1.60E4	5.52E5	--	--	--	--	
Zr 95	5.91E-2	2.77E2	2.72E-1	8.74E-2	1.37E-1	--	--	
Mn 56	1.96E1	3.52E3	--	1.10E2	1.40E2	--	--	TCN-2
Mo 99	2.05E1	2.50E2	--	1.08E2	2.44E2	--	--	
Na 24	4.09E2	4.09E2	4.09E2	4.09E2	4.09E2	4.09E2	4.09E2	TCN-2
I 131	1.26E2	5.80E1	1.54E2	2.20E2	3.77E2	7.21E4	--	
Ni 65	7.53	4.18E2	1.27E2	1.65E1	--	--	--	TCN-2
I 133	2.78E1	8.21E1	5.25E1	9.13E1	1.59E2	1.34E4	--	
Cs 134	5.79E5	1.24E4	2.98E5	7.09E5	2.29E5	--	7.61E4	
Cs 136	8.86E4	1.40E4	3.12E4	1.23E5	6.85E4	--	9.39E3	
Cs 137	3.42E5	1.01E4	3.82E5	5.22E5	1.77E5	--	5.89E4	
Ba 140	1.41E1	4.45E2	2.16E2	2.71E-1	9.22E-2	--	1.57E-1	
Ce 141	2.48E-3	8.36E1	3.23E-2	2.19E-2	1.02E-2	--	--	
Nb 95	1.34E2	1.51E6	4.47E2	2.49E2	2.46E2	--	--	
La 140	2.03E-2	5.63E3	1.52E-1	7.67E-2	--	--	--	
Ce 144	9.05E-2	5.70E2	1.69	7.04E-1	4.18E-1	--	--	

* Calculated in accordance with NUREG 0133, Section 4.3.1

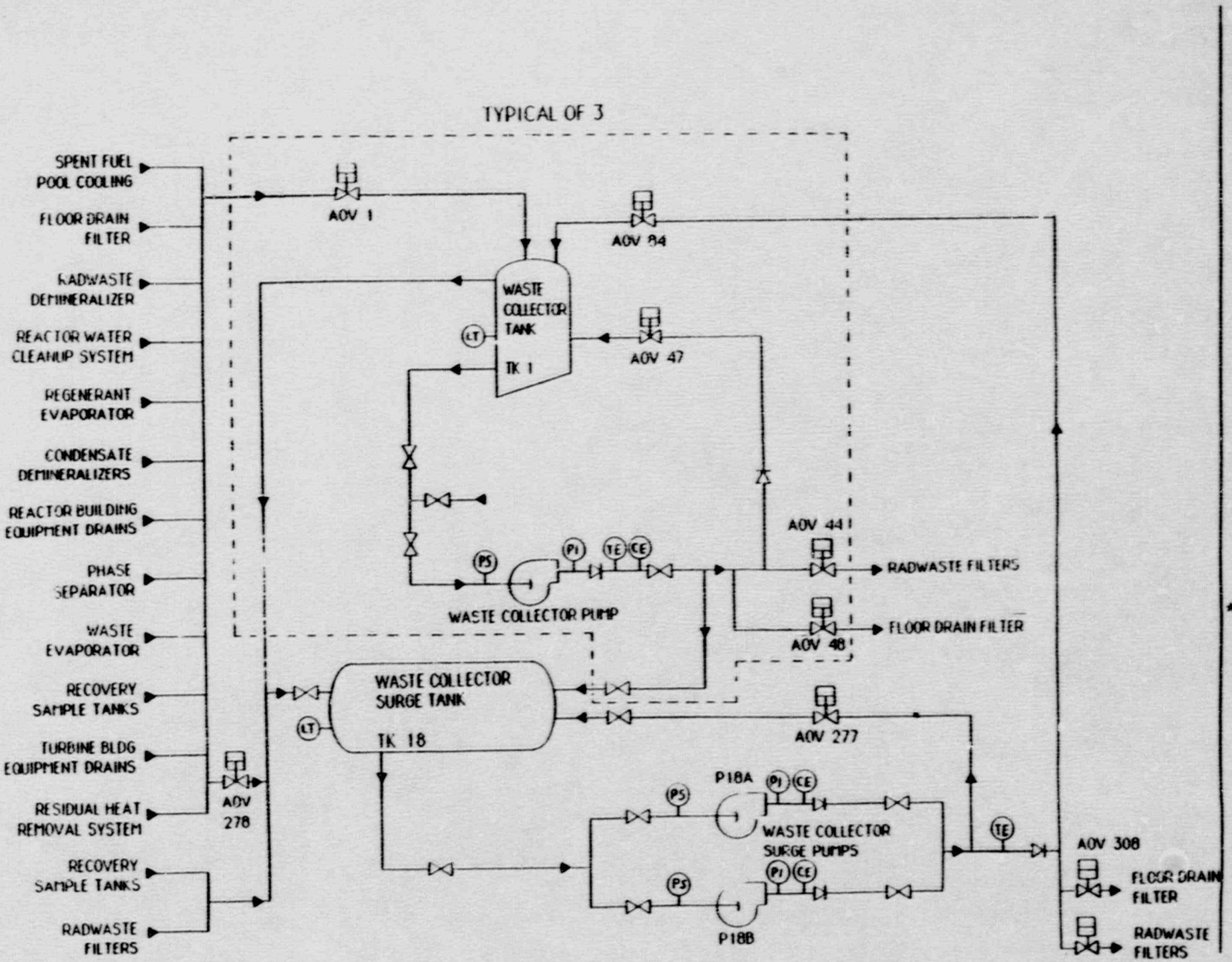

Fig. 2-1

WASTE COLLECTION

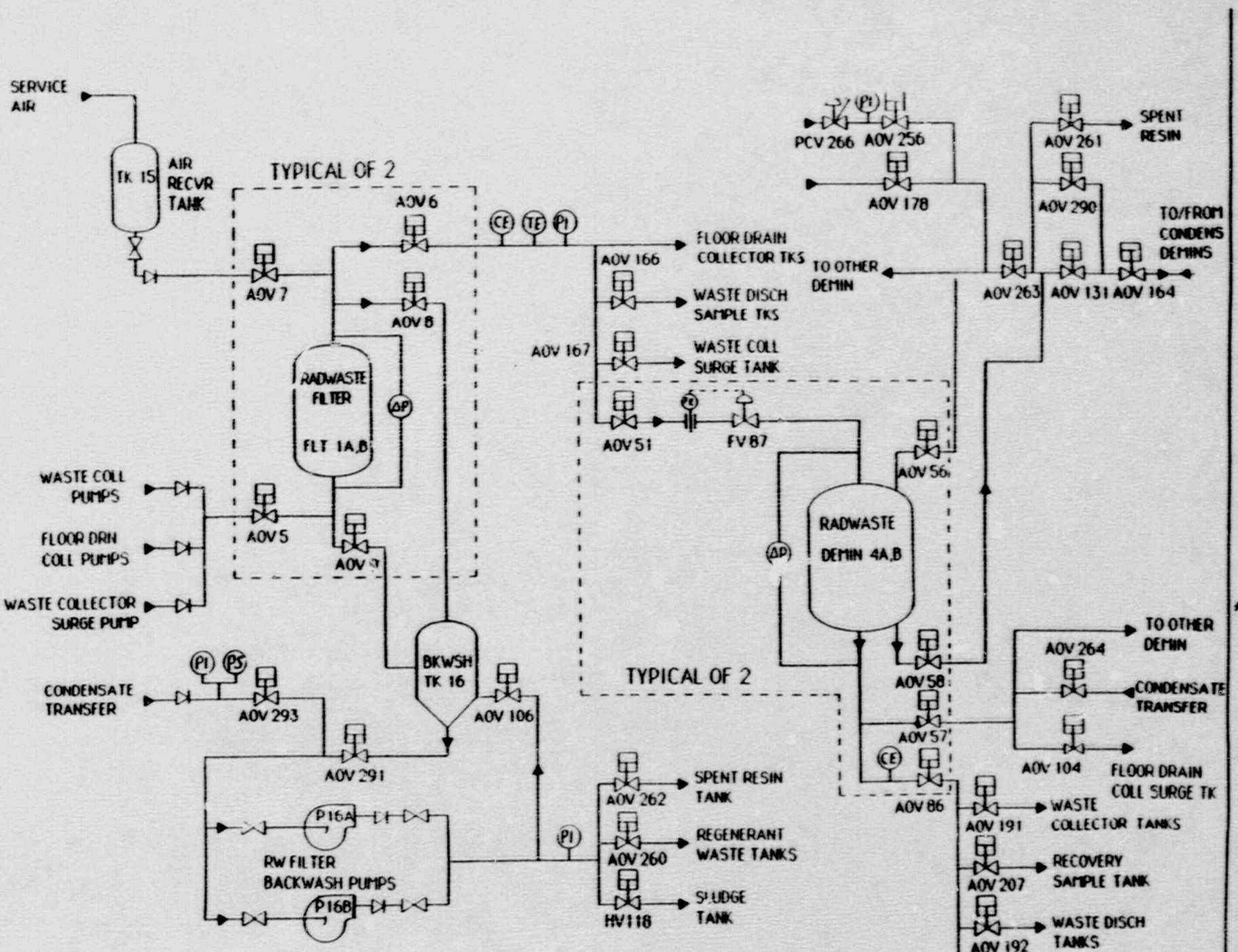

Fig. 2-2

WASTE COLLECTOR TREATMENT SYSTEM

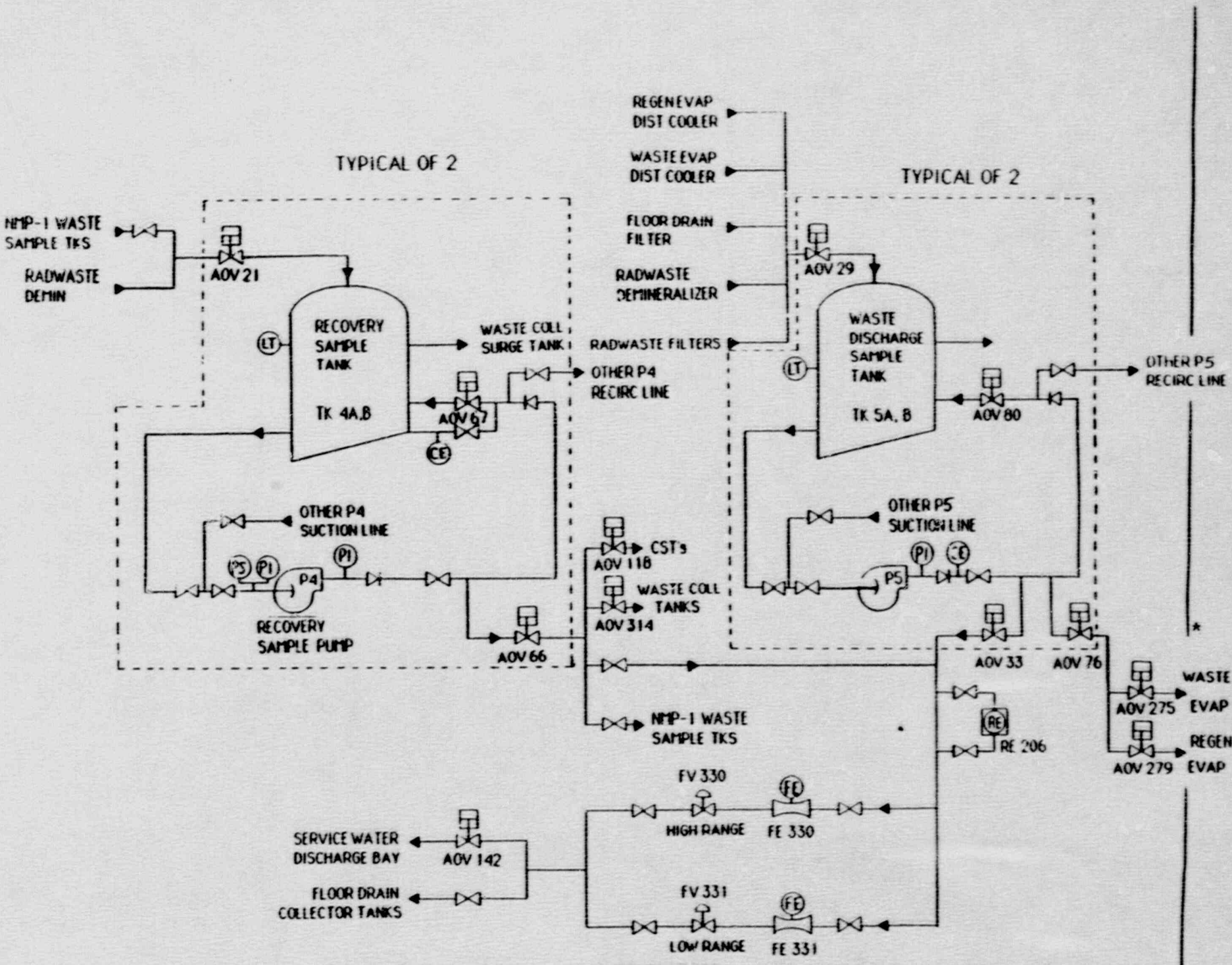

Fig. 2-3 **RECOVERY SAMPLE SYSTEM and WASTE**

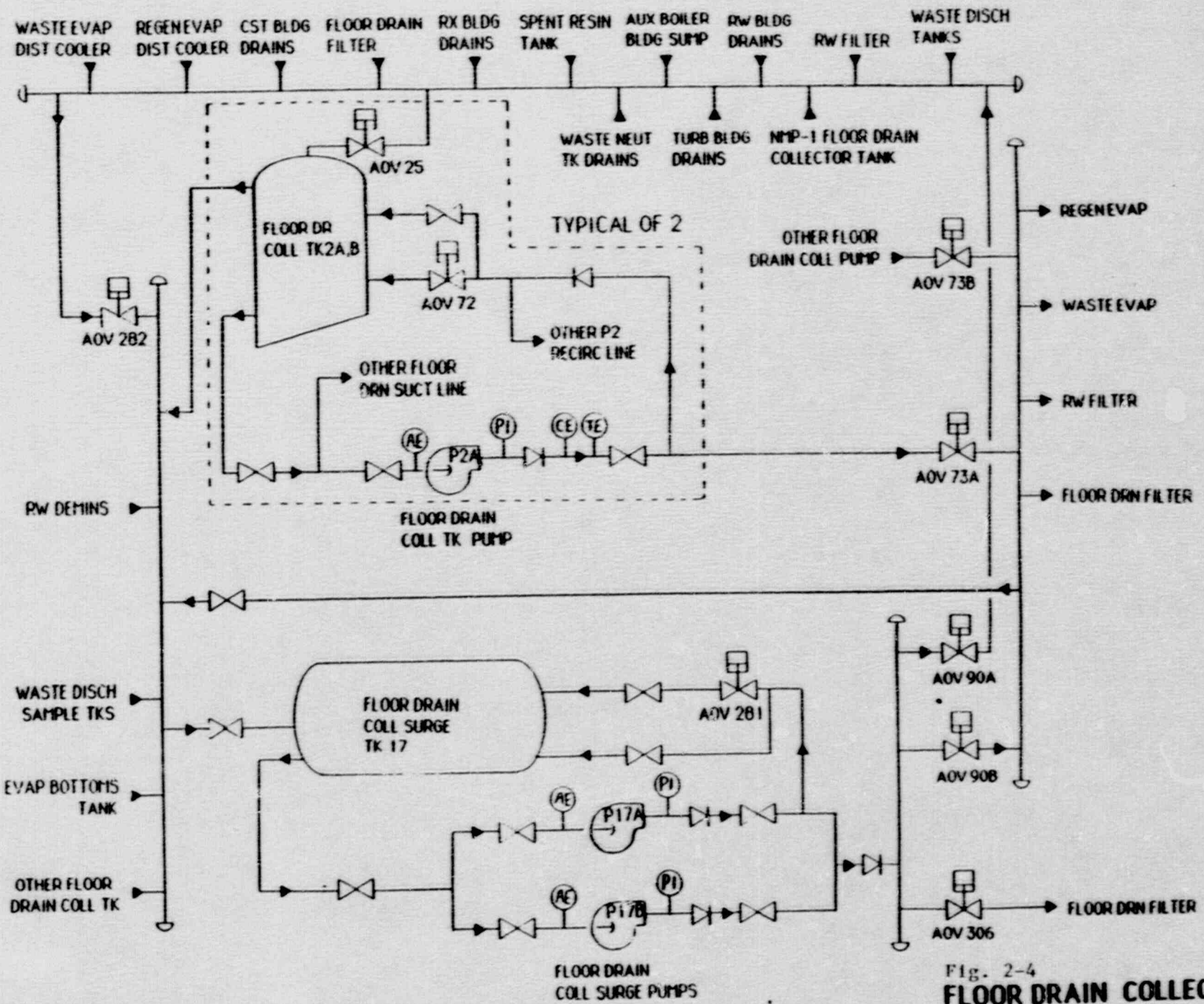

Fig. 2-4
FLOOR DRAIN COLLECTION

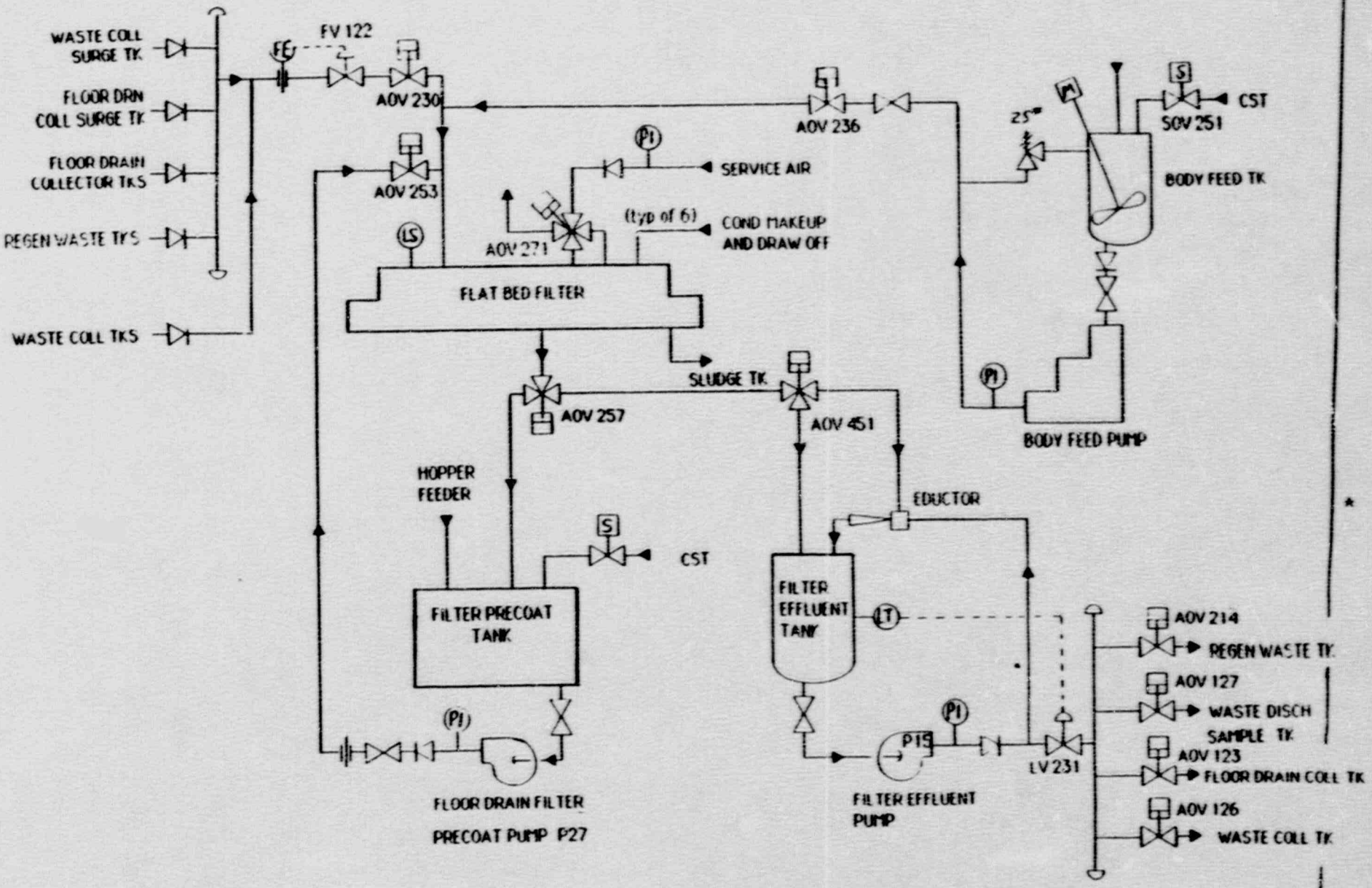

Fig. 2-5

FLOOR DRAIN FILTER SYSTEM

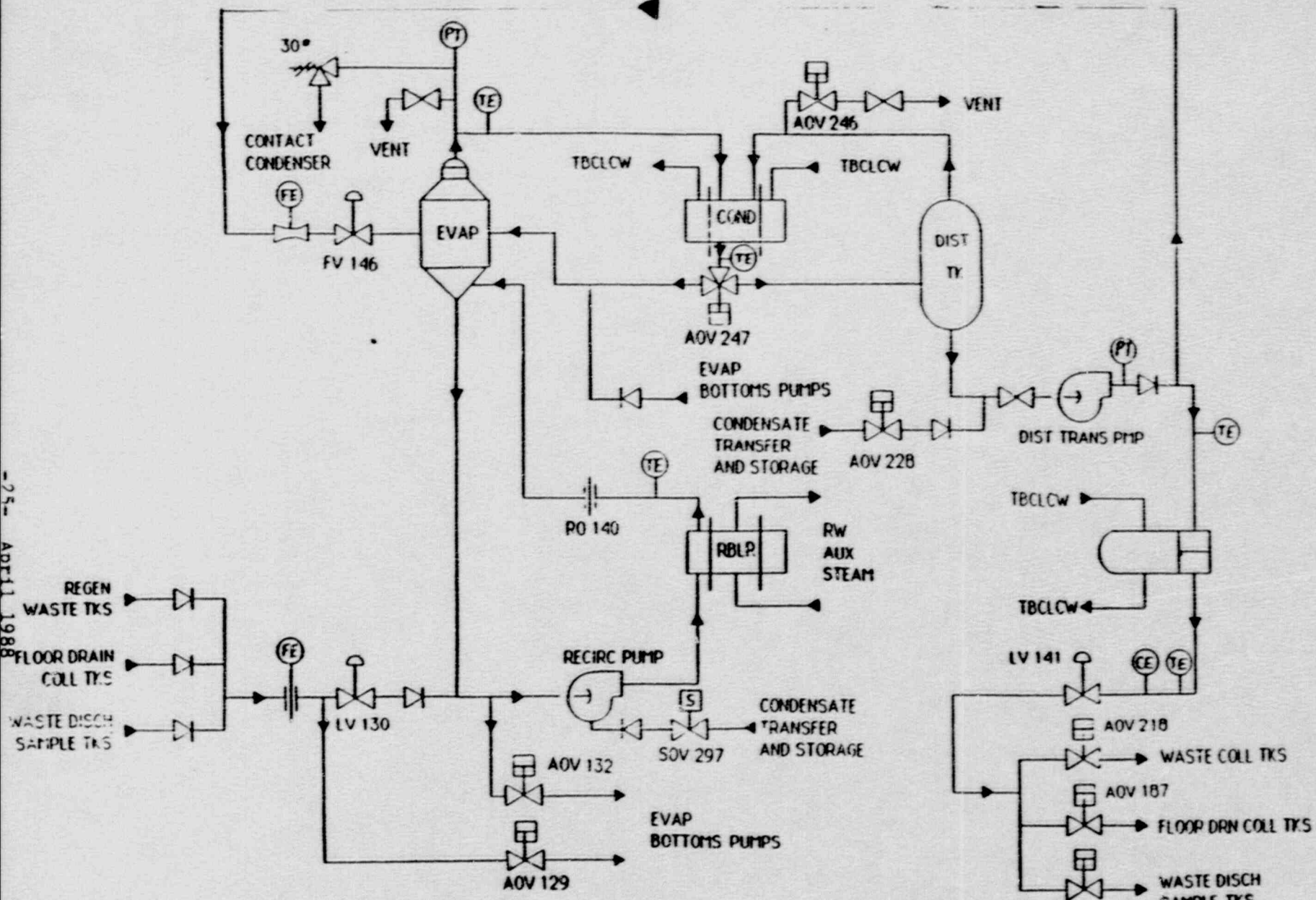

Fig. 2-6

WASTE EVAPORATOR SYSTEM

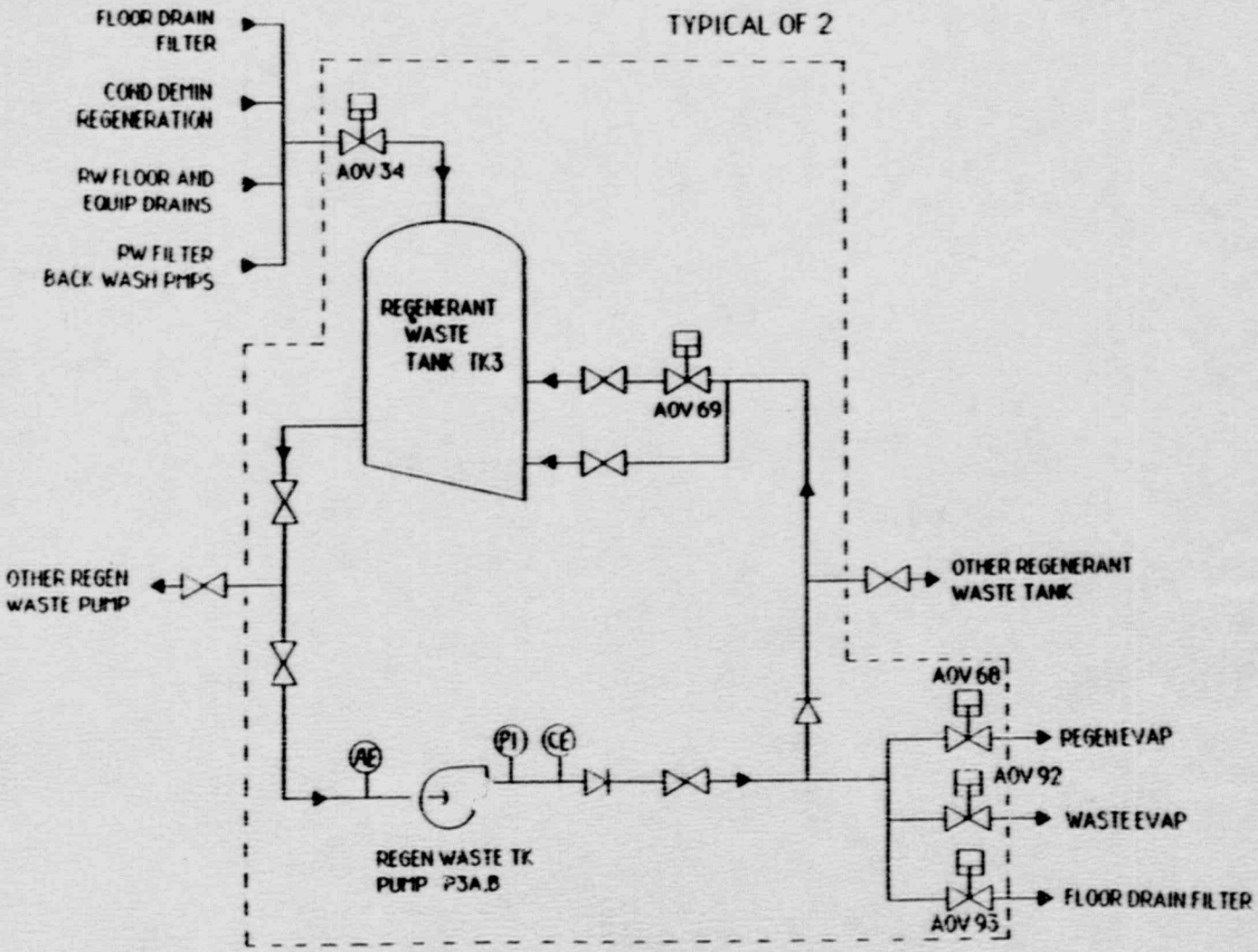

Fig. 2-7

REGENERANT WASTE SYSTEM

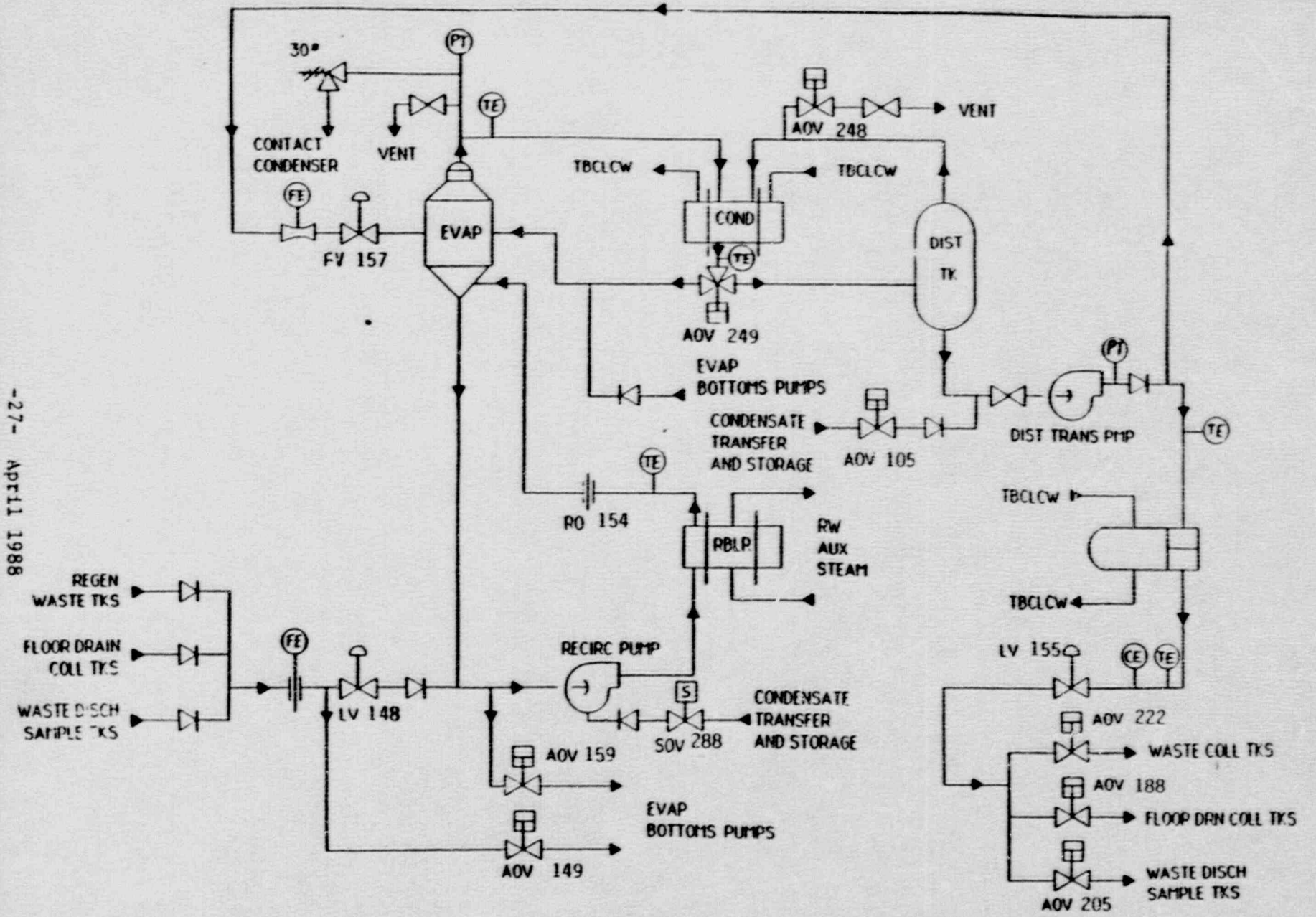

Fig. 2-8

REGENERANT EVAPORATOR SYSTEM

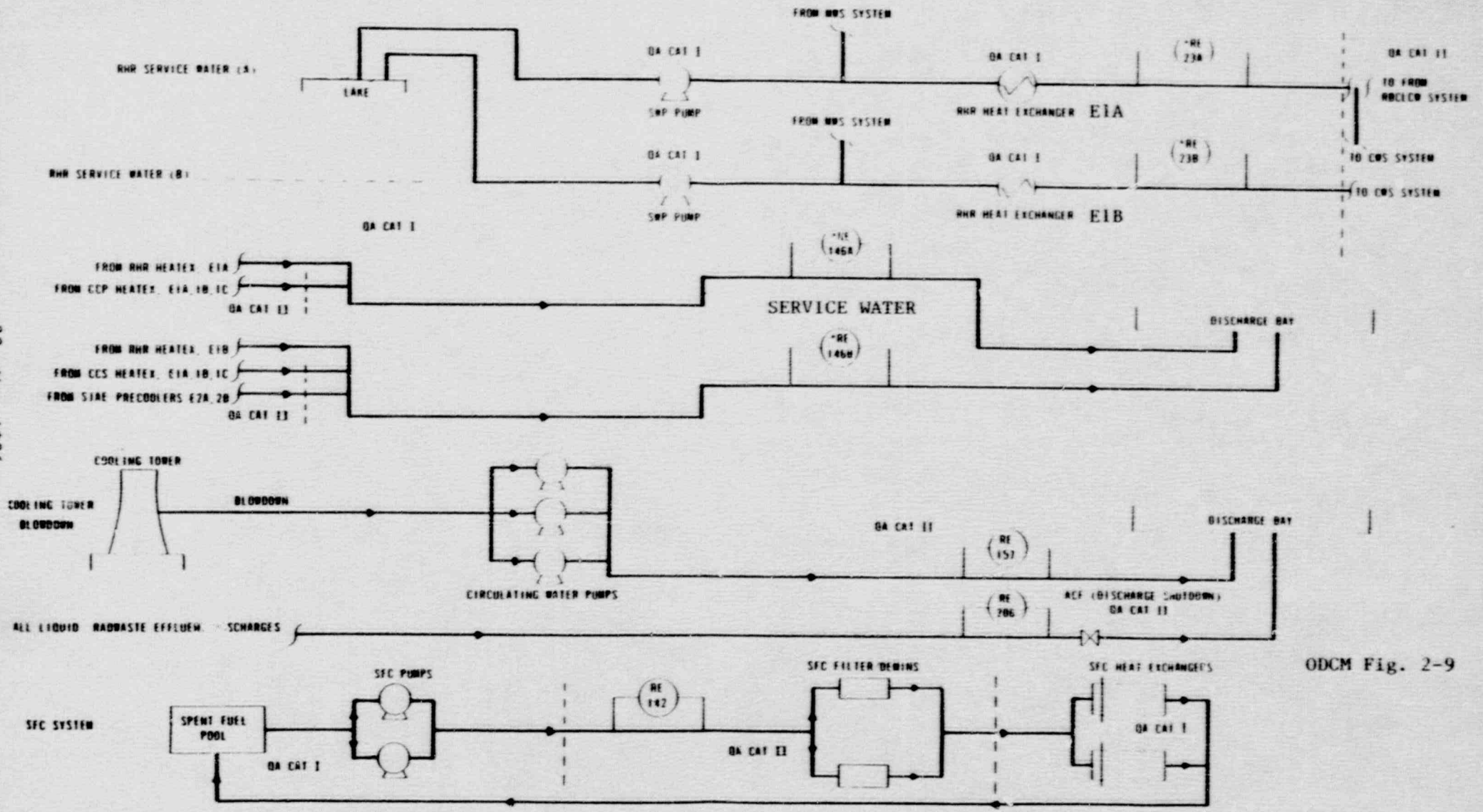

ODCM Fig. 2-9

FIGURE 11.5-8

LIQUID RADIATION MONITORING
SHEET 2 OF 2

NIAGARA MOHAWK POWER CORPORATION
NINE MILE POINT-UNIT 2
FINAL SAFETY ANALYSIS REPORT

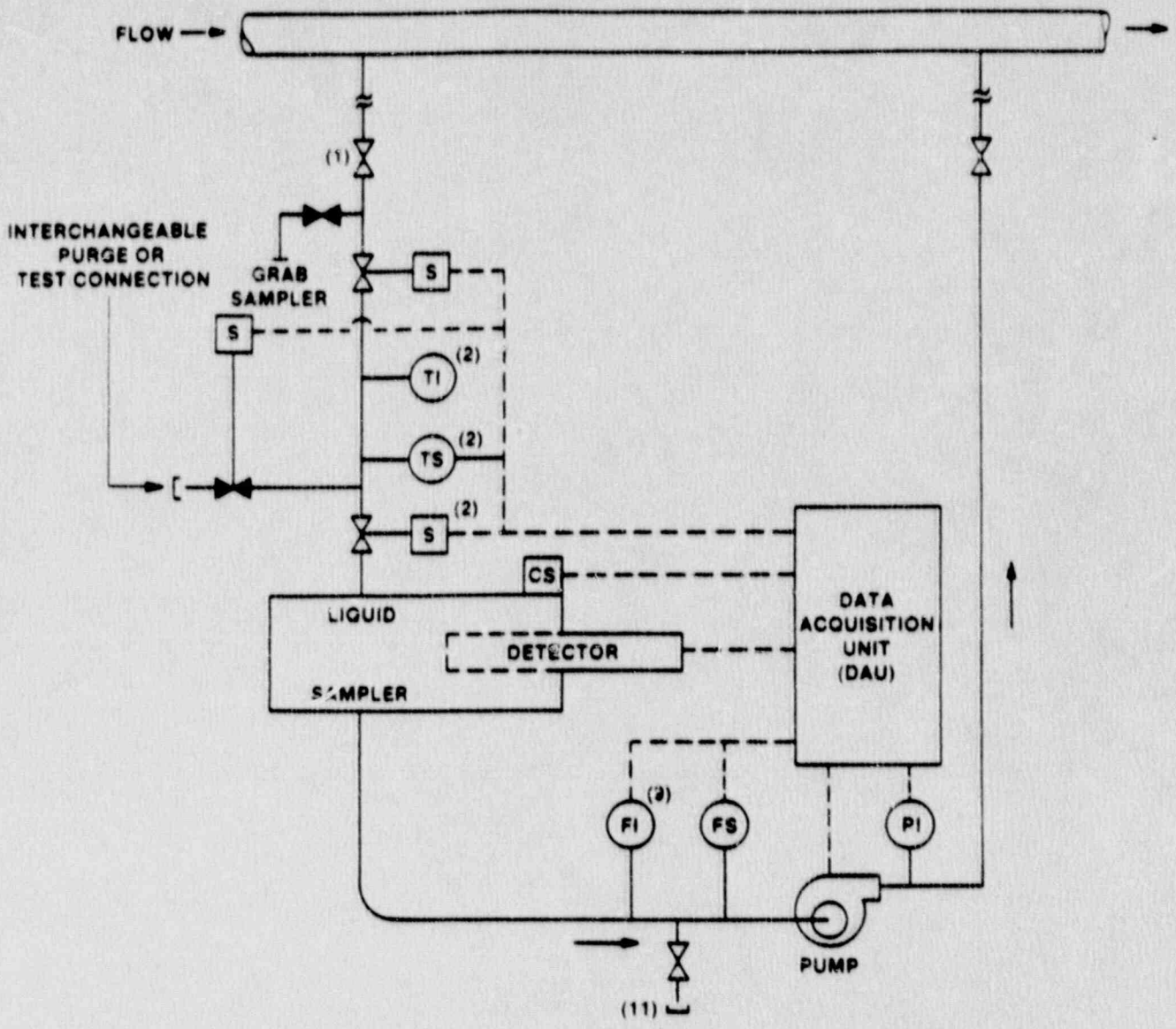

NOTES:

(1) GLOBE VALVE. ALL OTHER MANUALLY OPERATED VALVES ARE BALL VALVES

(2) REQUIRED ONLY IF SAMPLE FLUID TEMPERATURE EXCEEDS SELLERS DETECTOR TEMPERATURE REQUIREMENTS

(3) NORMALLY CLOSED

(4) NORMALLY OPEN

(5) TI-TEMPERATURE INDICATION

(6) TS-TEMPERATURE SWITCH

(7) CS-CHECK SOURCE

(8) PI-PRESSURE INDICATOR

(9) FI-FLOW INDICATOR

(10) FS-FLOW SWITCH

(11) DRAIN CONNECTION

ODCM Fig. 2-10

FIGURE 11.5-3

OFF-LINE LIQUID MONITOR

NIAGARA MOHAWK POWER CORPORATION
NINE MILE POINT-UNIT 2
FINAL SAFETY ANALYSIS REPORT

3.0 GASEOUS EFFLUENTS

The gaseous effluent release points are the stack and the combined Radwaste/Reactor Building vent. (See Figure 3.5) The stack effluent point includes Turbine Building ventilation, main condenser offgas (after charcoal bed holdup), and Standby Gas Treatment System exhaust. NUREG 0133 and Regulatory Guide 1.109, Rev. 1 were followed in the development of this section.

3.1 Gaseous Effluents Monitor Alarm Setpoints

3.1.1 Basis

Technical Specification Section 3.11.2.1 and 3.11.2.7 provide the basis for the gaseous effluent monitor alarm setpoints.

TS Section 3.11.2.1:
The dose rate from radioactive materials released in gaseous effluents from the site to areas at or beyond the SITE BOUNDRY (see Figure 5.1.3-1) shall be limited to the following:

a. For noble gases: Less than or equal to 500 mrem/yr to the whole body and less than or equal to 3000 mrem/yr to the skin, and

b. For iodine-131, for iodine-133, for tritium, and for all radionuclides with half-lives greater than 8 days: Less than or equal to 1500 mrem/yr to any organ.

TS Section 3.11.2.7:
The radioactivity rate of noble gases measured downstream of the recombiner shall be limited to less than or equal 350,000 microcuries/second during offgas system operation.

3.1.2 Setpoint Determination Methodology

The alarm setpoint for Gaseous Effluent Noble Gas Monitors are based on a dose rate limit of 500 mrem/yr to the Whole Body. These monitors are sensitive to only noble gases. Because of this it is considered impractical to base their alarm setpoints on organ dose rates due to iodines or particulates. Additionally skin dose rate is never significantly greater than the whole body dose rate. The alarm setpoint for the Offgas Noble Gas monitor is based on a limit of 350,000 uCi/sec. This is the release rate for which a FSAR accident analysis was completed. At this rate the Offgas System charcoal beds will not contain enough activity so that their failure and subsequent release of activity will present a significant offsite dose assuming accident meterology.

3.1.2.1 Stack Noble Gas Detector Alarm Setpoint Equation:

$$\text{Alarm Setpoint} < \frac{0.8 * R * \Sigma i(Ci)}{\Sigma i(Ci * Vi)}$$

Alarm Setpoint Is the alarm setpoint of the Stack Effluent Monitor, uCi/sec

0.8 Is a Safety Factor, unitless

R Is a value of 500 mrem/yr or less depending upon the dose rate from other release points within the site such that the total rate corresponds to <500 mrem/yr

Ci Is the concentration of nuclide i, uCi/ml

F Is the Stack effluent flow rate, ml/sec

Vi Is the constant for each identified noble gas nuclide accounting for the whole body dose from the elevated finite plume listed on Table 3-2, mrem/yr per uCi/sec

Σi(Ci) Is the total concentration of noble gas nuclides in the Stack effluent, uCi/ml

Σi(Ci*Vi) Is the total of the product of the each isotope concentration times its respective whole body plume constant, mrem/yr per ml/sec.

It should be noted that the flow rate of the Stack effluent has been canceled out of the above expression. The equation ratios the basis, R, to the actual dose rate from the effluent, F*Σi (Ci*Vi), and multiplies the unitless result by the actual effluent release rate, F*Σi(Ci). Since the Stack Effluent Monitor actually measures release rate in uCi/sec the detector response does not enter in.

3.1.2.2 Vent Noble Gas Detector Alarm Setpoint Equation:

$$\text{Alarm Setpoint} < \frac{0.8*R*\Sigma i\ (Ci)}{(X/Q)v*\Sigma i(Ci*Ki)}$$

Where:

Alarm Setpoint Is the alarm setpoint of the Vent Effluent Monitor, uCi/sec

0.8 Is a Safety Factor

R Is a value of 500 mrem/yr or less depending upon the dose rate from other release points within the site such that the total rate corresponds to < 500 mrem/yr

Ci Is the concentration of nuclide i, uCi/ml

F Is the Vent effluent flow rate, ml/sec

(X/Q)v Is the highest annual average atmospheric dispersion coefficient at the site boundry as listed in the Final Environmental Statement, NUREG 1085, Table D-2, 2.0E-6 sec/m3

Ki Is the constant for each identified noble gas nuclide accounting for the whole body dose from the semi-infinite cloud listed on Table 3-3, mrem/yr per uCi/m3

$\Sigma i(Ci)$	Is the total concentration of noble gas nuclides in the Vent effluent, uCi/ml
$\Sigma i(Ci*Ki)$	Is the total of the product of the each isotope concentration times its respective whole body immersion constant, mrem/yr per ml/m3

It should be noted that the flow rate of the Vent effluent has been canceled out of the above expression. The equation ratios the basis, R, to the actual dose rate from the effluent, $F*(X/Q)v*\Sigma i(Ci*Ki)$ and multiplies the unitless result by the actual effluent release rate, $F*\Sigma i(Ci)$. Since the Vent Effluent Monitor actually measures release rate in uCi/sec the detector response does not enter in.

3.1.2.3 Offgas Pretreatment Noble Gas Detector Alarm Setpoint Equation:

$$\text{Alarm Setpoint} < \frac{0.8*350{,}000*2.1E\text{-}3*\Sigma i(Ci*CFi)}{f*\Sigma i(Ci)} + \text{Background}$$

Where:

Alarm Setpoint	Is the alarm setpoint for the offgas pretreatment Noble Gas Detector, cpm
0.8	Is a Safety Factor, unitless
350,000	Is the Technical Specification Limit for Offgas Pretreatment, uCi/sec
2.1E-3	Is a unit conversion, 60 sec/min / 28317 ml/CF
Ci	Is the concentration of nuclide, i, in the Offgas, uCi/ml
CFi	Is the Detector response to nuclide i, net cpm/uCi/ml See Table 3-1 for a list of nominal values. See section 3.1.3.3 for discussion
f	Is the Offgas System Flow rate, CFM
Background	Is the detector response when its chamber is filled with nonradioactive air, cpm
$\Sigma i(CiCFi)$	Is the summation of the product of the nuclide concentration and corresponding detector response, net cpm
$\Sigma i(Ci)$	Is the summation of the concentration of nuclides in offgas, uCi/ml

3.1.3 Discussion

The Stack at Nine Mile Point Unit 2 receives the Offgas after charcoal bed delay, Turbine building ventilation and the Standby Gas Treatment system exhaust. The Standby Gas Treatment system exhaust the primary containment during normal shutdowns and maintains a negative pressure on the Reactor Building during secondary containment isolation. The Standby Gas Treatment will isolate on high radiation during primary containment purges. The Stack is considered an elevated release because its height (131m) is more than 2.5 times the height of any adjacent buildings. Nominal flow rate for the stack is 102,000 CFM.

The Offgas system has a radiation detector downstream of the recombiners and before the charcoal decay beds. The offgas, after decay, is exhausted to the main stack. The system will automatically isolate if its pretreatment radiation monitor detects levels of radiation above the alarm setpoint.

The Vent contains the Reactor Building ventilation above and below the refuel floor and the Radwaste Building ventilation effluents. The Reactor Building Ventilation will isolate when radiation monitors detect high levels of radiation (these are seperate monitors, not otherwise discussed in the ODCM). It is considered a combined elevated/ground level release because even though it is higher than any adjacent buildings it is not more than 2.5 times the height. Nominal flow rate for the vent is 237,310 CFM.

Nine Mile Point Unit 1 and the James A Fitzpatrick nuclear plants occupy the same site as Nine Mile Point Unit 2. Because of the independance of these plants safety systems, control rooms and operating staffs it is assumed that simultaneous accidents are not likely to occur at the different units. However, there are two release points at Unit 2. It is assumed that if an accident were to occur at Unit 2 that both release points could be involved. Thus the factor R which is the basis for the alarm setpoint calculation is nominally taken as equal to 250 mRem/yr. If there are significant releases from any gaseous release point on the site (>25mRem/yr) for an extended period of time then the setpoint will be recalculated with an appropriately smaller value for R.

Initially, and in accordance with Specification 4.3.7.11, the Germanium multichannel analysis systems of the Stack and Vent will be calibrated with gas, or with cartridge standards (traceable to NBS) in accordance with Table 4.3.7.11-1, note (c). The quarterly Channel Functional Test will include operability of the 30cc chamber and the dilution stages to confirm monitor high range capability. (See Figure 3-6).

3.1.3.1 Stack Noble Gas Detector Alarm Setpoint

This detector is made of germanium. It is sensitive to only gamma radiation. However, because it is a computer based multichannel analysis system it is able to acurately quantify the activity released in terms of µCi of specific nuclides. Only pure alpha and beta emitters are not detectable, of which there are no common noble gases. A distribution of Noble Gases corresponding to offgas is chosen for the nominal alarm setpoint calculation.
Offgas is chosen because it represents the most significant contaminate of gaseous activity in the plant. The following calculation will be used for the initial Alarm Setpoint. It will be recalculated if a significant release is encountered. In that case the actual distribution of noble gases will be used in the calculation. The listed activity concentrations Ci, correspond to offgas concentration expected with the plant design limit for fuel failure.

ISOTOPE NAME	ACTIVITY CONCENTRATION µCi/ml	PLUME FACTOR mrem-sec / yr-µCi	PLUME FACTOR mrem/yr / ml/sec
A	B (Ci)	C (Vi)	D=(B*C) (Ci*Vi)
KR83	8.74E-2	-------	-------
KR85	4.90E-4	3.28E-5	1.61E-8
KR85M	1.56E-1	3.21E-3	5.01E-3
KR87	5.23E-1	9.98E-3	5.22E-3
KR88	5.32E-1	2.21E-2	1.18E-2
KR89	1.63	1.92E-2	3.13E-2
KR90	------	1.51E-2	-------
XE131M	3.82E-4	6.55E-5	2.50E-8
XE133	2.06E-1	5.93E-4	1.22E-4
XE133M	7.35E-3	3.44E-4	2.53E-6
XE135	5.88E-1	6.12E-3	3.60E-3
XE135M	5.91E-1	6.12E-3	3.62E-3
XE137	2.11	2.88E-3	6.08E-3
XE138	1.93	1.33E-2	2.57E-2
AR41	-------	1.61E-2	-------
TOTALS	8.36		9.28E-2

The alarm setpoint equation is:

$$\text{Alarm Setpoint} = 0.8*R*\Sigma i(Ci)/\Sigma i(Ci*Vi).$$

Where the Alarm Setpoint is in µCi/sec, R is taken as 250mrem/yr, Σ(Ci) is 8.36 µCi/ml and Σ(Ci*Vi) is 9.28E-2 mrem/yr per ml/sec. These values yield an alarm setpoint of 1.80E4 µCi/sec.

3.1.3.2 Vent Effluent Noble Gas Detector Alarm Setpoint

This detector is made of germanium. It is sensitive to only gamma radiation. However, because it is a computer based multichannel analysis system it is able to accurately quantify the activity released in terms of μCi of specific nuclides. Only pure alpha and beta emitters are not detectable, of which there are no common noble gases. A distribution of Noble Gases corresponding to that expected with the design limit for fuel failure offgas is chosen for the nominal alarm setpoint calculation. Offgas is chosen because it represents the most significant contaminate of gaseous activity in the plant. The following calculation will be used for the initial Alarm Setpoint. It will be recalculated if a significant release is encountered. In that case the actual distribution of noble gases will be used in the calculation.

ISOTOPE NAME	ACTIVITY CONCENTRATION μCi/ml	IMMERSION FACTOR $\frac{mrem-m3}{yr-\mu Ci}$	IMMERSION FACTOR $\frac{mrem-m3}{yr-ml}$
A	B	C	D=(B*C)
KR83	8.74E-2	7.56E-2	6.61E-3
KR85	4.90E-4	1.61E-1	7.90E-3
KR85M	1.56E-1	1.17E-3	1.82E2
KR87	5.23E-1	5.92E3	3.10E3
KR88	5.32E-1	1.47E4	7.82E3
KR89	1.63	1.66E4	2.71E4
KR90	-------	1.56E4	-------
XE131M	3.82E-4	9.15E1	3.50E-2
XE133	2.06E-1	2.94E2	6.06E1
XE133M	7.35E-3	2.51E2	1.84
XE135	5.88E-1	1.81E3	1.06E3
XE135M	5.91E-1	3.12E3	1.84E3
XE137	2.11	1.42E3	3.00E3
XE138	1.93	1.83E3	1.70E4
AR41	-------	8.84E3	-------
TOTALS	8.36		6.12E4

The Vent Effluent Noble Gas Monitor Alarm Setpoint equation is:

$$\text{Alarm Setpoint} = 0.8*R*\Sigma(Ci)/[(X/Q)v*\Sigma(Ci*Ki)].$$

Where the Alarm Setpoint is in μCi/sec, R is 250mrem/yr, Σ(Ci) is 8.36 μCi/ml, (X/Q) is 2.0E-6 sec/m3 and Σ(Ci*Ki) is 6.12E4 mrem/yr per ml/m3. This will yield an alarm setpoint of 1.41E4 μCi/sec.

3.1.3.3 Offgas Noble Gas Detector Alarm Setpoint

The Radiation Detector is a sodium iodide crystal. It is a scintillation device and has a thin mylar window so that it is sensitive to both gamma and beta radiation. Detector response Σi(Ci*CFi) will be evaluated from isotopic analysis of offgas analyzed on a multichannel analyzer, traceable to NBS, prior to commercial operation. A distribution of offgas corresponding to that expected with the design limit for fuel failure is used to establish setpoint initially, assuming the nominal response listed on Table 3-1. The monitor nominal response values will be confirmed during initial calibration using a Transfer Standard source traceable to the primary calibration performed by the vendor. However, a revision to the ODCM will contain an updated distribution and total detector response based on actual plant experiences. The initial calculation is presented below.

ISOTOPE NAME	ACTIVITY CONCENTRATION µCi/ml	DETECTOR RESPONSE cpm/µCi/ml	DETECTOR CPM cpm
A	B (Ci)	C (CFi)	D (Ci*CFi)
KR83	8.74E-2	------	-------
KR85	4.90E-4	4.30E3	2.11
KR85M	1.56E-1	4.80E3	7.50E3
KR87	5.23E-1	8.00E3	4.18E3
KR88	5.32E-1	7.60E3	4.04E3
KR89	1.63	------	-------
KR90	------	------	-------
XE131M	3.82E-4	------	-------
XE133	2.06E-1	1.75E3	3.60E2
XE133M	7.35E-3	------	-------
XE135	5.88E-1	5.10E3	3.00E3
XE135M	5.91E-1	------	------
XE137	2.11	8.10E3	1.71E4
XE138	1.93	7.10E3	1.37E4
AR41	-------	------	-------
TOTALS	8.36		4.99E4

The Offgas Noble Gas Monitor Alarm Setpoint equation is:

Alarm Setpoint = 0.8*350,000*2.1E-3*Σi(Ci*CFi)/[f*Σi(Ci)] + Bkg.

Where the Alarm Setpoint is in cpm, Σi(Ci*CFi) is 4.99E4 cpm, f is 25CFM and Σi(Ci) is 8.36 µCi/cc. This will yield an alarm setpoint of 1.40E5 cpm above background. Particulates and Iodines are not included in this calculation because this is a noble gas monitor.

To provide an alarm in the event of failure of the offgas system flow instrumentation, the low flow alarm setpoint will be set at or above 10 scfm, (well below normal system flow) and the high flow alarm setpoint will be set at or below 120 scfm, which is well above expected steady-state flow rates with a tight condenser. TCN-

3.2 Gaseous Effluents Dose Rate Calculation

This section covers TS Section 4.11.2.1.1 and 4.11.2.1.2 concerning the calculation of dose rate from gaseous effluents for compliance with TS Section 3.11.2.1.

TS Section 3.11.2.1:

The dose rate from radioactive materials released in gaseous effluents from the site to areas at or beyond the SITE BOUNDARY (see Figure 5.1.3-1) shall be limited to the following:

a. For noble gases: Less than or equal to 500 mrem/yr to the whole body and less than or equal to 3000 mrem/yr to the skin, and

b. For iodine-131, iodine-133, for tritium, and for all radionuclides in particulate form with half-lives greater than 8 days: Less than or equal to 1500 mrem/yr to any organ:

3.2.1 Whole Body Dose Rate Due to Noble Gases

This calculation covers TS Section 3.11.2.1.a (for whole body) and 4.11.2.1.1. The dose from the plume shine of elevated releases is taken into account with the factor Vi. The dose from Vent releases takes into account the exposure from immersion in the semi-infinite cloud and the dispersion from the point of release to the receptor which is at the East site boundary. The release rate is averaged over the period of concern. The factors are discussed in greater detail later.

Whole body dose rate due to noble gases:

$$\text{mrem/yr} = \Sigma i \, [Vi * Qi_s + Ki \, (X/Q)v * Qiv]$$

Where:

Vi — Is the constant accounting for the gamma radiation from the elevated finite plume of the Stack releases for each identified noble gas nuclide, i. Listed on Table 3-2, mrem/yr per uCi/sec

Qis — Is the release rate of each noble gas nuclide, i, from the Stack release averaged over the time period of concern, uCi/sec

Ki — Is the constant accounting for the whole body dose rate from immersion in the semi-infinite cloud for each identified noble gas nuclide, i. Listed on Table 3-3, mrem/yr per uCi/m3

(X/Q)v Is the highest calculated annual average relative concentration at or beyond the site boundry for the Vent. Final Environmental Statement, NUREG 1085, Table D-2, 2.0E-6 sec/m3

Qiv Is the release rate of each noble gas nuclide, i, from the Vent release averaged over the time period of concern, uCi/sec

Example Calculation:

Assume an analysis of the Stack and Vent Effluents indicate that 1.81E4 and 1.26E4 uCi/sec of Xe-133 are being released from each point respectively. From Table 3-2, Vi is 5.93E-4 mrem/yr per uCi/sec. From Table 3-3 Ki is 2.94E2 mrem/yr per uCi/m3. (X/Q)v is 2.0E-6 sec/m3. These values yield a whole body dose rate of 10.7 and 7.41 mrem/yr from the Stack and Vent respectively for a total of 18.1 mrem/yr. This value is added to the whole body dose rates obtained from the Nine Mile Point-Unit 1 and James A. Fitzpatrick plants to obtain the site dose rate to the whole body from noble gas releases. The whole body dose rate due to noble gases is specified by TS Section 3.11.2.1.a.

3.2.2 Skin Dose Rate Due to Noble Gases

This calculation covers TS Section 3.11.2.1.a (for skin) and 4.11.2.1.1. For Stack releases this calculation takes into account the exposure from beta radiation of a semi infinite cloud by use of the factor Li. Additionally the dispersion of the released activity from the stack to the receptor is taken into account by use of the factor (X/Q). Gamma radiation exposure from the overhead plume is taken into account by the factor 1.1Bi.
For vent releases the calculations also take into account the exposure from the beta and gamma radiation of the semi infinate cloud by use of the factors Li and 1.1Mi respectively. Dispersion is taken into account by use of the factor (X/Q). The release rate is averaged over the period of concern. The factors are discussed in greater detail later.

Skin dose rate due to noble gases:

$$\text{mrem/yr} = \Sigma i \left[(Li*(X/Q)s + 1.1*Bi)*Qis + (Li + 1.1*Mi)*(X/Q)v*Qiv \right]$$

Where:

Li Is the constant to take into account the skin dose due to each noble gas nuclide, i, from immersion in the semi-infinite cloud, mrem/yr per uCi/m3

Mi Is the constant accounting for the air gamma dose rate from immersion in the semi-infinite cloud for each identified noble gas nuclide, i. Listed on Table 3-3, mrad/yr per uCi/m3 1.1 is a unit conversion constant, mrem/rad

Bi — Is the constant accounting for the air gamma dose rate from exposure to the overhead plume of elevated releases of each identified noble gas nuclide, i. Listed on Table 3-2, mrad/yr per uCi/sec.

(X/Q)v — Is the highest calculated annual average relative concentration at or beyond the site boundary for the Vent. Final Environmental Statement, NUREG 1085, Table D-2, 2.0E-6 sec/m3

(X/Q)s — Is the highest calculated annual average relative concentration at or beyond the site boundary for the Stack. Final Environmental Statement, NUREG 1085, Table D-2, 4.5E-8 sec/m^3

Qiv — Is the release rate of each noble gas nuclide, i, from the Vent release averaged over the time period of concern, uCi/sec

Qis — Is the release rate of each noble gas nuclide, i, from the Stack release averaged over the time period of concern, uCi/sec

Example Calculation:

Assume an analysis of the Stack and Vent Effluents indicate that 1.81E4 and 1.26E4 uCi of Xe-133 are released from each point. From Table 3-2, Bi is 6.12E-4 mrad/yr per uCi/sec. From Table 3-3, Li and Mi are 3.06E2 and 3.53E2 mrem.mrad/yr per uCi/m3 respectively. (X/Q) for the Stack and Vent is 4.5E-8 and 2.0E-6 sec/m3 respectively. These values yield a skin dose rate of 12.6 and 17.5 mrem/yr for the Stack and Vent respectively for a total rate of 30.1 mrem/yr. This value is added to the skin dose rates obtained from Nine Mile Point-Unit 1 and the James A. Fitzpatrick plants to obtain the site dose rate to the skin from noble gas releases. The skin dose rate limit due to noble gases is specified by TS Section 3.11.2.1.a.

3.2.3 Organ Dose Rate Due to I-131, I-133, Tritium, and Particulates with Half-lives greater than 8 days.

This calculation covers TS Section 3.11.2.1.b and 4.11.2.1.2. The factor Pi takes into account the dose rate received from the ground plane, inhalation and food (cow milk) pathways. Ws and Wv take into account the atmospheric dispersion from the release point to the location of the most conservative receptor for each of the respective pathways. The release rate is averaged over the period of concern. The factors are discussed in greater detail later.

Organ dose rates due to iodine-131, iodine-133, tritium and all radionuclides in particulate form with half-lives greater than 8 days:

mrem/yr = Σp [Σi Pip [WsQis + WvQiv]]

Where:

Pip — Is the factor that takes into account the dose to an individual organ from nuclide i through pathway p. For inhalation pathway, mrem/yr per $\mu Ci/m^3$. For ground and food pathways, m^2-mrem/yr per $\mu Ci/sec$.

Σi — Is the summation over all nuclides, i

Σp — Is the summation over all pathways

Ws, Wv — Are the dispersion parameters for stack and vent release respectively for each pathway as approriate sec/m^3 or $1/m^2$. See Table 3-22.

Qis, Qiv — Are the release rates for nuclide i, from the stack and vent respectively $\mu Ci/sec$.

Example Calculation

Assume an analysis of the Stack and Vent Effluents indicate that 1.84E-1 and 1.26E-1 $\mu Ci/sec$ of I-131 are released from each point respectively. From Table 3-4 thru 3-6 and 3-22 the following table can be made:

ORGAN or FACTOR	Pi GROUND m2-mrem/yr uCi/sec	Pi INHALATION mrem/yr uCi/m3	Pi FOOD m2-mrem/yr uCi/sec
T BODY	2.46E7	1.96E4	1.43E9
SKIN	2.98E7	------	------
BONE	------	3.79E4	2.77E9
LIVER	------	4.44E4	3.26E9
THYROID	------	1.48E7	1.07E12
KIDNEY	------	5.18E4	3.81E9
LUNG	------	------	------
GI-LLI	------	1.06E3	1.16E8
Ws	1.34E-9	8.48E-9	3.64E-10
Wv	2.90E-9	1.42E-7	4.73E-10
WsQs+WvQv	6.12E-10	1.95E-8	1.27E-10

NOTE: The Dispersion Parameters given in Table 3-22 will be revised based on the results of environmental surveys and meteorological data.

From these values the following table of dose rates (mrem/yr) can be calculated:

ORGAN	GROUND	INHALATION	FOOD	TOTAL
T BODY	1.51E-2	3.82E-4	1.82E-1	1.97E-1
SKIN	1.82E-2	-------	-------	1.82E-2
BONE	-------	7.39E-4	3.52E-1	3.53E-1
LIVER	-------	8.66E-4	4.14E-1	4.15E-1
THYROID	-------	2.89E-1	1.36E+2	1.36E+2
KIDNEY	-------	1.01E-3	4.84E-1	4.85E-1
LUNG	-------	-------	-------	-------
GI-LLI	-------	2.07E-5	1.47E-2	1.47E-2

In this case the maximum dose rate to an organ is 136 mrem/yr to the thyroid from I-131. This calculation would be repeated for all nuclides and age groups then summed for each age group to obtain the dose rates to all organs. The dose rate limit to the maximum exposed organ is specified by TS Section 3.11.2.1.b.

3.3 Gaseous Effluent Dose Calculation Methodology

TS Section 3.11.2.2:

The air dose from noble gases released in gaseous effluents, from each unit, to areas at or beyond the SITE BOUNDARY (see Figure 5.1.3-1) shall be limited to the following.

a. During any calendar quarter: Less than or equal to 5 mrad for gamma radiation and less than or equal to 10 mrad for beta radiation, and

b. During any calendar year: Less than or equal to 10 mrad for gamma radiation and less than or equal to 20 mrad for beta radiation.

TS Section 3.11.2.3:

The dose to a MEMBER OF THE PUBLIC from iodine-131, iodine-133, tritium, and all radioactive material in particulate form with half-lives greater than 8 days in gaseous effluents released, from each unit, to areas at or beyond the SITE BOUNDARY (see Figure 5.1.3-1) shall be limited to the following:

a. During any calendar quarter: Less than or equal to 7.5 mrem to any organ and,

b. During any calendar year: Less than or equal to 15 mrem to any organ.

TS Section 3.11.2.5:

The VENTILATION EXHAUST TREATMENT SYSTEM shall be OPERABLE and appropriate portions of this system shall be used to reduce releases of radioactivity when the projected doses in 31 days from iodine and particulate releases, from each unit, to areas at or beyond the SITE BOUNDARY (see Figure 5.1.3-1) would exceed 0.3 mrem to any organ of a MEMBER OF THE PUBLIC.

3.3.1 Gamma Air Dose Due to Noble Gases

This calculation covers TS Section 3.11.2.2 and 4.11.2.2.

Gamma air dose due to noble gases released is calculated monthly. The factor Mi takes into account the dose from immersion in the semi-infinite cloud of the vent release. The factor X/Q takes into account the dispersion of vent releases to the most conservative location. The factor Bi takes into account the dose from exposure to the plume of the stack releases. The release activity is totaled over the period of concern. The factors are discussed in greater detail later.

Gamma air dose due to noble gases:

$$\text{mrad} = \Sigma i \left[M_i (X/Q)_v Q_{iv} + B_i Q_{is} \right]$$

Where the constants have all been previously defined. Note that since Q is expressed as uCi/sec, the constant 3.17E-8 sec^{-1} given in NUREG-0133, section 5.3.1 may be omitted, provided that the annual dose calculated is divided by 4 to yield quarter dose, or 12 to yield monthly dose, as applicable.

Example Calculation

Assume an analysis of the Stack and Vent Effluents indicate that 1.42E11 and 9.91E10 uCi of Xe-133 are released from each point respectively over the last quarter. This correlates to 1.81E4 and 1.26E4 uCi/sec respectively. From Table 3-2, Bi is 6.12E-4 mrad/yr per uCi/sec. From Table 3-3 Mi is 3.53E2 mrad/yr per uCi/m3. (X/Q)v is 2.0E-6 sec/m3. These values yield a gamma air dose rate of 11.1 and 8.9 mrad/yr from the Stack and Vent respectively for a total of 20.0 mrad/yr or 5.0 mrad for the quarter. The gamma air dose limit due to noble gases is specified by TS Section 3.11.2.2.

3.3.2 Beta Air Dose Due to Noble Gases

This calculation covers TS Section 3.11.2.2 and 4.11.2.2.

Beta air dose due to noble gases released is calculated monthly. The factor Ni takes into account the dose from immersion in the cloud of all the releases. The factor X/Q takes into account the dispersion of releases to the most conservative location. The factors are discussed in greater detail later.

Beta air dose due to noble gases:

$$\text{mrad} = \Sigma i N_i [(X/Q)_v \, Q_{iv} + (X/Q)_s \, Q_{is}]$$

Where the constants have all been previously defined.

Example Calculation

Assume an analysis of the Stack and Vent Effluents indicate that 1.42E11 and 9.91E10 Ci of Xe-133 are released from each point respectively over the last month. This correlates to 1.81E4 and 1.26E4 Ci/sec respectively. From Table 3-3, Ni is 1.05E3 mrad/yr per Ci/m3. (X/Q) for the Stack and Vent is 4.5E-8 and 2.0E-6 sec/m3 respectively. These values yield a beta air dose of 0.9 and 26.5 mrad/yr for the Stack and Vent respectively for a total of 27.4 mrad/yr or 6.8 mrad over the last quarter. The beta air dose limit due to noble gases is specified by TS Section 3.11.2.2.

3.3.3 Organ Dose Due to I-131, I-133, Tritium and Particulates with half-lives greater than 8 days.

This calculation covers TS Section 3.11.2.3, 3.11.2.5, 4.11.2.3, and 4.11.2.5.1. Organ dose due to I-131, I-133, Tritium and Particulates with half-lives greater than 8 days released is calculated monthly. The factor Ri takes into account the dose received from the ground plane, inhalation, food (cow milk, cow meat and vegetation) pathways. Ws and Wv take into account the atmospheric dispersion from the release point to the location of the most conservative receptor for each of the respective pathways. The release is totaled over the period of concern. The factors are discussed in greater detail later.

Organ dose due to iodine-131, iodine-133, tritium radionuclides in particulate form with half-lives greater than 8 days

$$\text{mrem} = 3.17\text{E-}8 \; \Sigma p \; [\; \Sigma i \; Rip \; [Ws \; Qis + Wv \; Qiv] \;]$$

Where:

3.17E-8	Is the inverse of the number of seconds in a year
Rip	Is the factor that takes into account the dose to an individual organ from nuclide i through pathway p.

Σi	Is the summation over all nuclides i.
Σp	Is the summation over all pathways p.
Ws, Wv	Are the dispersion parameters for the stack and vent respectively for each pathway as appropriate sec/m^3 or $1/m^2$. See Table 3-22.
Qis, Qiv	Are the amount of activity of nuclide i released from the stack or vent respectively over the period of concern, μCi. If activity released is given in terms of release rate, μCi/sec, then the constant 3.17E-8 sec^{-1} may be omitted, provided that the annual dose calculated is divided by 4 to yield quarter dose, or 12 to yield monthly dose, as applicable.

Example Calculation

Assume an analysis of the Stack and Vent Effluents indicate that 1.45E6 and 9.9E5 μCi of I-131 are released from each point respectively over the last quarter. This correlates 1.84E-1 and 1.26E-1 μCi/sec respectively. Calculate the dose to a childs organs. From Tables 3-8,11,13,16 and 19 the following table can be made:

ORGAN or FACTOR	Ri-GROUND m2-mrem/yr / μCi/sec	Ri-INHALATION mrem/yr / μCi/m3	Ri-MILK	Ri-MEAT m2-mrem/yr / μCi/sec	Ri-VEGETATION
T BODY	1.72E7	2.73E4	3.72E8	4.73E6	8.16E7
SKIN	2.09E7	------	------	------	------
BONE	------	4.81E4	6.51E8	8.26E6	1.43E8
LIVER	------	4.81E4	6.55E8	8.32E6	1.44E8
THYROID	------	1.62E7	2.17E11	2.75E9	4.75E10
KIDNEY	------	7.88E4	1.08E9	1.37E7	2.36E8
LUNG	------	------	------	------	------
GI-LLI	------	2.84E3	5.83E7	7.40E5	1.28E7
Ws	1.34E-9	8.48E-9	3.64E-10	1.15E-9	9.[illegible]2E-10
Wv	2.90E-9	1.42E-7	4.73E-10	1.86E-9	1.5[illegible]E-9
WsQs+WvQv	6.12E-10	1.95E-8	1.29E-10	4.46E-10	3.6[illegible]-10

From these values the following table of annual dose (mrem) can be calculated:

ORGAN	GROUND	INHALATION	MILK	MEAT	VEGE.	TOTAL
T BODY	1.05E-2	5.32E-4	4.80E-2	2.10E-3	2.95E-2	9.06E-2
SKIN	1.28E-2	-------	-------	-------	-------	1.28E-2
BONE	-------	9.38E-4	8.40E-2	3.69E-3	5.18E-2	1.40E-1
LIVER	-------	9.38E-4	8.45E-2	3.71E-3	5.21E-2	1.41E-1
THYROID	-------	3.16E-1	28.0	1.23	17.2	46.7
KIDNEY	-------	1.54E-3	1.39E-1	6.11E-3	8.54E-2	2.32E-1
LUNG	-------	-------	-------	-------	-------	-------
GI-LLI	-------	5.54E-5	7.52E-3	3.30E-4	4.63E-3	1.25E-2

In this case the maximum quarterly dose to the child organ is 46.7/4 = 11.7 mrem to the thyroid from I-131. The calculation would be repeated for all nuclides and age groups and summed to find the maximum dose to any organ. The dose limit to the maximum exposed organ is specified by TS Section 3.11.2.3 and 3.11.2.5.

3.4 Gaseous Effluent Dose Factor Definition and Derivation

3.4.1 Bi and Vi- Plume Shine Factor For Gamma and Beta Doses (Table 3-2)

Bi (mrad/yr per μCi/sec) is calculated by modeling the effluent from the Stack as a line source with an elevation above ground equal to the stack height (131m).

From "Introduction to Nuclear Engineering" by Lamarsh, page 410, the flux o at a point a distance of x from an infinite line emitting S gammas/sec per cm is:

$$o = S/4x.$$

S is proportional to release rate Q (μCi/sec) and inversly to wind speed U (cm/sec):

$$S = Q/U.$$

The distance of an individual on the ground from the elevated plume is approximately equal to the height of the stack h (meters). The gamma radiation from the plume is attenuated by the air. This is proportional to the exponential of the negative product of the stack height h (m) and the air attenuation coefficient Uo, 1/m:

$$\exp(-Uo*h).$$

This is a conservative assumption because only the portion of the plume directly overhead is at a distance of h. The bulk is much further away.

Additionally, there is a dose buildup factor which, from RG 1.109 Appendix F-11, 12, is equal to:

$$1+[(Uo-Ua)*Uo*h]/Ua$$

where Ua (1/m) is the air energy absorption coefficient.

The dose D at a point is proportional to the flux o, energy E (Mev) of the radiation, air energy absorption coefficient Ua (m-1) and unit conversion constant K:

$$D = K*o*E*Ua.$$

Substitution in the above formula for flux from an infinite line source yields:

$$D = K*S*E*Ua/[4*x].$$

Substitution for S yields:

$$D = K*Q*E*Ua/[4*x*U].$$

Substitution for x of Stack height h yields:

$$D = K*Q*E*Ua/[4*h*U].$$

Factoring in the air attenuation and corresponding dose buildup factors yields.

$$D = K*Q*E*[Ua+(Uo-Ua)*Uo*h]exp(-Uo*h)/[4*h*U].$$

Bi is the gamma air dose received on the ground for a given release rate Q. Thus:

$$B = D/Q = K*E*[Ua+(Uo-Ua)*Uo*h]*exp(-Uo*h)/[4*h*U].$$

Where:

K = 1.447E4 mrad-dis-m^3/Mev-uCi-yr, U is 5.71 m/sec and the other symbols are as discussed above.

To calculate Vi (mrem/yr per uCi/sec), the factor to account for the Total Body dose rate for a given release rate Q (uCi/sec) a conversion ratio of 1.1 mrem/mrad is assumed between tissue and air doses. If the Total Body tissue density Td (gm/cc) is assumed to be 5gm/cc (like a rock) and Ut (cm2/gm) is the energy absorption for tissue then:

$$V = 1.1*B*exp(-Td*Ut).$$

Example Calculation

Ua, Ue and Ut all vary with the energy of the radiation. Figure 3.5-6 and Table 3.5-1 (b-muscle) of the "CRC Handbook of Radiation Measurement and Protection" list values for the variables. For a 0.25 Mev gamma:

Uo = 0.0145 m-1
Ua = 0.0036 m-1
Ut = 0.0306 cm2/gm.

These values will yield a factor of 4.38E-3 and 4.14E-3 mrad, mrem/yr per uCi/sec respectively for B and V. Similarily for the primary energies of Xe135 the following table is obtainable:

ENERGY MEV	YIELD	B mrad/yr/uCi/sec	V mrem/yr/uCi/sec
0.25	0.9	4.38E-3	4.14E-3
0.6	0.03	9.38E-3	8.77E-3
0.7	0.01	1.06E-2	9.97E-3
TOTALS	FACTORING IN THE YEILDS:	4.31E-3	4.07E-3

These values correspond to those listed on Table 3-2. It should be noted that only a limited number of nuclides are listed on Table 3-2. These are the most common noble gas nuclides encountered in effluents. If a nuclide is detected for which a factor is not listed, then it will be calculated and included in a revision to the ODCM.

3.4.2 Semi-Infinite Cloud Immersion Dose Factors (Table 3-3)

Ki, Li, Mi and Ni are the factors which take into account the dose from immersion in the semi-infinite cloud of gaseous releases. These are taken from RG 1.109, Table B-1, and multiplied by 1E6 to convert from units of mrem,mrad/yr per pCi/m3 to mrem,mrad/yr per uCi/m3.

3.4.3 Dose Rate Factor for I-131, I-133, Tritium and Particulates with Half-lives greater than 8 days.

Table 3-4, Ground Plane

Pi (m2-mrem/yr per uCi/sec) takes into account several factors among these are the dose rate to the total body from exposure to radiation deposited on the ground. (From NUREG 0133, section 5.2.1.2)

INSERT SYMBOLS

Where:

K' = a constant of unit coversion, 10^6 pCi/uCi.

K" = a constant of unit conversion, 8760 hr/year.

λ_i = the decay constant for the ith radionculide, sec $^{-1}$.

t = the exposure period, 3.15 x 10^7 sec (1 year).

DFG_i = the ground plane dose conversion factor the the ith radionuclide (mrem/hr per pCi/m^2).

The deposition rate onto the ground plane results in a ground plane concentration that is assumed to persist over a year with radiological decay the only operating removal mechanism for each radionuclide. The ground plane dose conversion factors for the ith radionuclide, DFG_i, are presented in Table E-6 of Regulatory Guide 1.109, in units of mrem/hr per pCi/m^2

Resolution of the units yields:

P_i (Ground) = 8.76×10^9 DFG_i $(1-e^{-\lambda_i t})/\lambda_i$

Example Calculation

For the I-131 total body dose rate factor for exposure from the ground:

λ_i = 9.98E-7 sec-1
DFGi = 2.90E-9 mrem/hr per Ci/m2

These values will yield a Pi factor of 2.46E7 m2-mrem/yr per uCi/sec as listed on Table 3-4. It should be noted that only a limited number of nuclides are listed on Table 3-4. These are the most common nuclides encountered in effluents. If a nuclide is detected for which a factor is not listed, then it will be calculated and included in a revision to the ODCM.

Pi (m2-mrem/yr per uCi/sec) also takes into account the dose rate to the skin from exposure to the ground.

Example Calculation

For the I-131 skin dose rate factor for exposure from the ground:

λ_i = 9.98E-7 sec-1
DFGi = 3.40E-9 mrem/hr per pCi/m2

These values will yield a Pi factor of 2.98E7 m2-mrem/yr per uCi/sec as listed on Table 3-4. It should be noted that only a limited nubmer of nuclides are listed on Table 3-4. These are the most common nuclides encountered in effluents. If a nuclide is detected for which a factor is not listed, then ith will be calculated and included in a revision to the ODCM.

Table 3-5, Inhalation

Pi (mrem/yr per uCi/m3) also takes into account the dose rate to various organs from inhalation exposure. (From NUREG 0133, section 5.2.1.1)

$$P_i = K'(BR)\ DFA_i \text{ (mrem/yr per uCi/m}^3\text{)}$$

Where:

K' = a constant of unit conversion, 10^6 pCi/uCi.

BR = the breathing rate of the infant age group, in m^3/yr.

DFA_i = the organ inhalation dose factor for the infant age group for the ith radionuclide, in mrem/pCi. The total body is considered as an organ in the selection of DFA_i.

The age group considered is the infant group. The infant's breathing rate is taken as 1400 m^3/yr from Table E-5 of Regulatory Guide 1.109. The inhalation dose factors for the infant, DFA_i are presented in Table E-10 of Regulatory Guide 1.109, in units of mrem/pCi.

Resolution of the units yeilds:

P_i (inhalation) = 1.4×10^9 DFA_i.

Example Calculation:

For the I-131 thyroid dose rate factor for exposure from inhalation:

DFAi = 1.06E-2 mrem per pCi

This value will yield a Pi factor of 1.48E7 mrem/yr per uCi/m3 as listed on Table 3-5. It should be noted that only a limited number of nuclides are listed on Table 3-5. These are the most common nuclides encountered in effluents. If a nuclide is detected for which a factor is not listed, then it will be calculated and included in a revision to the ODCM.

Table 3-6, Food (Cow Milk)

Pi (m2-mrem/yr per uCi/sec) also takes into account the dose rate to various organs from the ingestion of cow milk. (From NUREG 0133, section 5.2.1.3)

INSERT SYMBOLS HERE

Where:

K' = a constant of unit conversion, 10^6 pCi/uCi.

Q_p = the cow's consumption rate, in kg/day (wet weight).

U_{ap} = the infant's milk consumption rate, in liters/yr.

Y_p = the agricultural productivity by unit area, in kg/m^2

F_m = the stable element transfer coefficients, in days/liter.

r = fraction of deposited activity retained on cow's feed grass.

DFL_i = the maximum organ ingestion dose factor for the ith radionuclide, in mrem/pCi.

λ_i = the decay constant for the ith radionuclide, in sec^{-1}.

λ_w = the decay constant for removal of activity on leaf and plant surfaces by weathering, 5.73×10^{-7} sec^{-1} (corresponding to a 14 day half-time).

t_f = the transport time from pasture to cow, to milk, to infant, in sec.

A fraction of the airborne deposition is captured by the ground plane vegetation cover. The captured material is removed from the vegetation (grass) by both radiological decay and weathering processes.

The values of Q_p, U_{ap}, and Y_p are provided in Regulatory Guide 1.109, Tables E-3, E-5, and E-15, as 50 kg/day, 330 liters/day and 0.7 kg/m^2, respectively. The value t_f is provided in Regulatory Guide 1.109, Table E-15, as 2 days (1.73×10^5 seconds). The fraction, r, has a value of 1.0 for radioiodines and 0.2 for particulates, as presented in Regulatory Guide 1.109, Table E-15.

Table E-1 of Regulatory Guide 1.109 provides the stable element transfer coefficients, F_m, and Table E-14 provides the ingestion dose factors, DFL_i, for the infant's organs.

Resolution of the units yields:

$$P_i \text{ (food)} = 2.4 \times 10^{12} \frac{r f_m}{\lambda_i + \lambda_w} DFL_i \left[e^{-\lambda_i t_f}\right] \text{ (m}^3\text{-mrem/yr per } \mu\text{Ci/sec)}$$

for all radionuclides, except tritium.

The concentration of tritium in milk is based on its airborne concentration rather than the deposition rate.

$$P_i = K'K''F_m Q_p U_{ap} DFL_i \left[0.75(0.5/H)\right] \text{ (mrem/yr per } \mu\text{Ci/m}^3\text{)}$$

Where:

K'" = a constant of unit conversion, 10^3 gm/kg.

H = absolute humidity of the atmosphere, in gm/m^3/

0.75 = the fraction of total feed that is water.

0.5 = the ration of the specific activity of the feed grass water to atmospheric water.

From Table E-1 and E-14 of Regulatory Guide 1.109, the values of F_m and DFL_i for tritium are 1.0×10^{-2} day/liter and 3.08×10^{-7} mrem per pCi, respectively. Assuming an average absolute humidity of 8 grams/meter^3, the resolution of units yields:

$$P_i \text{ (food)} = 2.4 \times 10^3 \text{ mrem/yr per } \mu\text{Ci/m}^3$$

for tritium, only

Example Calculation:

For I-131 thyroid does rate factor for exposure from cow milk ingestion:

r = 1.0 unitless for Iodines
Fm = 6E-3 days/liter
DFL_i = 1.39E-2 mrem/pCi
λ_i = 9.98E-7 sec-1
λ_w = 5.73E-7 sec-1
tf = 1.73E+5 sec

These values will yield a Pi factor of 1.07E12 mrem/yr per uCi/sec as listed on Table 3-6. It should be noted that only a limited number of nuclides are listed on Table 3-6. These are the most common nuclides encountered in effluents. If a nuclide is detected for which a factor is not listed, then it will be calculated and included in a revision to the ODCM.

3.4.4 Dose Factor for I-131, I-133, Tritium and Particulates with half-lives greater than 8 days.

TABLES 3.7 to 3.10, Ri VALUES - INHALATION

R_i (mrem/yr per uCi/m3) takes into account several factors, among these are the dose rate to various organs from inhalation exposure. (From NUREG 0133, Section 5.3.1.1).

$$R_i = K'(BR)_a (DFA_i)_a \text{ (mrem/yr per uCi/m}^3\text{)}$$

Where:

K' = a constant of unit conversion, 10^6 pCi/uCi.

$(BR)_a$ - the breathing rate of the receptor of age group (a), in m^3/yr.

$(DFA_i)_a$ = the organ inhalation dose factor for the receptor of age group (a) for the ith radionuclide, in mrem/pCi. The total body is considered as an organ in the selection of $(DFA_i)_a$.

The breathing rates $(BR)_a$ for the various age groups are tablulated below, as given in Table E-5 of the Regulatory Guide 1.109.

Age Group (a)	Breathing Rate (m^3/yr)
Infant	1400
Child	3700
Teen	8000
Adult	8000

Inhalation dose factors $(DFA_i)_a$ for the various age groups are given in Tables E-7 throught E-10 of Regulatory Guide 1.109.

Example Calculation:

For the I-131 infant thyroid dose factor for exposure from inhalation:

DFAi = 1.06E-2 mrem per pCi

These values will yield a Ri factor of 1.48E7 mrem/yr per uCi/m3 as listed on Table 3-7. It should be noted that only a limited number of nuclides are listed on Table 3-7 thru 3-10. These are the most common nuclides encountered in effluents. If a nuclide is detected for which a factor is not listed, then it will be calculated nd included in a revision to the ODCM.

TABLE 3-11, Ri VALUES - GROUND PLANE

Ri (m2-mrem/yr per uCi/sec) also takes into account the dose from exposure to radiation deposited on the ground. (From NUREG 0133, Section 5.3.1.2).

$$R_i = K'K''(SF)DFG_i[(1-e^{\lambda_i t})/\lambda_i] \ (m^2 \cdot mrem/yr \text{ per } uCi/sec)$$

Where:

K' = a constant of unit conversion, 10^6 pCi/uCi.

K" = a constant of unit conversion, 8760 hr/year.

λ_i = the decay constant for the ith radionuclide, sec^{-1}.

t = the exposure time, 4.73×10^8 sec (15 years).

DFG_i = the ground plane dose conversion factor for the ith radionuclide (mrem/hr per pCi/m^2).

SF = the shielding factor (dimensionless).

A shielding factor of 0.7 is suggested in Table E-15 of Regulatory Guide 1.109. A tabulation of DFG_i values is presented in Table E-6 of Regulatory Guide 1.109.

Example Calculation:

For the I-131 total body dose factor for exposure to the ground:

λ_i = 9.98E-7 sec-1
DFGi = 2.80E-9 mrem/hr per pCi/m2

These values will yield a Ri factor of 1.72E7 m2-mrem/yr per uCi/sec as listed on Table 3-11. It should be noted that only a limited number of nuclides are listed on Table 3-11. These are the most common nuclides encountered in effluents. If a nuclide is detected for which a factor is not listed, then it will be calculated and included in a revision of the ODCM.

Ri (m2-mrem/yr per uCi/sec) also takes into account the dose to the skin from exposure to the ground.

Example Calculation:

For the I-131 skin dose factor for exposure to the ground:

λ_i = 9.98E-7 sec-1
DFGi = 3.40E-9 mrem/hr per pCi/m2.

These values will yield a Ri factor of 2.09E7 m2-mrem/yr per uCi/sec as listed on Table 3-11. It should be noted that only a limited number of nuclides are listed on Table 3-11. These are the most common nuclides encountered in effluents. If a nuclide is detected for which a factor is not listed, then it will be calculated an included in a revision to the ODCM.

TABLES 3-12 to 3-15, Ri VALUES - COW MILK

Ri (m2-mrem/yr per uCi/sec) also takes into account the dose rate to various organs from the ingestion of milk for all age groups. (From NUREG 0133, Section 5.3.1.3).

$$R_i = K' \frac{Q_p (U_{ap})}{\lambda_i + \lambda_w} F_m (r)(DFL_i)_a \left[\frac{f_g f_s}{Y_p} + \frac{(1 - f_g f_s) e^{-\lambda_i t_h}}{Y_s} \right] e^{-\lambda_i t_f}$$

(m^2-mrem/yr per uCi/sec)

Where:

K' = a constant of unit conversion, 10^6 pCi/uCi.

Q_p - the cow's consumption rate, in kg/day (wet weight).

U_{ap} = the receptor's milk consumption rate, in liters/yr.

Y_p = the agricultural productivity by unit area of pasture feed grass, in kg/m^2

Y_s = the agricultural productivity by unit area of stored feed, in kg/m^2.

F_m = the stable element transfer coefficients, in days/liter.

r = fraction of deposited activity retained on cow's feed grass.

$(DFL_i)_a$ = the organ ingestion dose factor for the ith radionuclide for the receptor in age group (a), in mrem/pCi.

λ_i = the decay constant for the ith radionuclide, in sec $^{-1}$.

λ_w = the decay constant for removal of activity on leaf and plant surfaces by weathering, 5.73×10^{-7} sec $^{-1}$ (corresponding to a 14 day half-time).

t_f = the transport time from pasture to cow, to milk, to receptor, in sec.

t_h = the transport time from pasture, to harvest, to cow, to milk, to receptor, in sec.

f_p = fraction of the year that the cow is on pasture (dimensionless).

f_s = fraction of the cow feed that is pasture grass while the cow is on pasture (dimensionless).

SPECIAL NOTE: The above equation is applicable in the case that the milk animal is a goat.

Milk cattle are considered to be fed from two potential sources, pasture grass and stored feeds. Following the development in Regulatory Guide 1.109, the value of f_s will be considered unity. f_p will be considered to be 0.5 for a May to October grazing season. TCN-1

Tabulated below are the appropriate parameter values and their reference to Regulatory Guide 1.109. In case that the milk animal is a goat, rather than a cow, refer to Regulatory Guide 1.109 for the appropriate parameter values.

Parameter		Value	Table
r (dimensionless)		1.0 for radioiodine	E-15
		0.2 for particulates	E-15
F_m (days/liter)		Each stable element	E-1
U_{ap} (liters/yr)	- Infant	330	E-5
	- Child	330	E-5
	- Teen	400	E-5
	- Adult	310	E-5
$(DFL_i)_a$ (mrem/pCi)		Each radionuclide	E-11 to E-14
Y_p (kg/m^2)		0.7	E-15
Y_s (kg/m^2)		2.0	E-15
t_f (seconds)		1.73×10^5 (2 days)	E-15
t_h (seconds)		7.78×10^6 (90 days)	E-15
Q_p (kg/day)		50	E-3

The concentration of tritium in milk is based on the airborne concentration rather than the deposition. Therefore, the R_i is based on [x/Q]:

$$R_i = K'K''F_m Q_p U_{ap} DFL_i [0.75(0.5/H)] \text{ (mrem/yr per } \mu Ci/m^3)$$

Where:

K" = a constant of unit conversion, 10^3 gm/kg.

H = absolute humidity of the atmosphere, in gm/m^3

0.75 = the fraction of total feed that is water.

0.5 = the ratio of the specific activity of the feed grass water to atmospheric water.

and other parameters and values are given above. The value of H is considered as 8 grams/$meter^3$, in lieu of site specific information.

Example Calculation:

For I-131 infant thyroid dose factor from milk ingestion:

r = 1.0 unitless for Iodines
Fm = 6 E-3 days/liter for cows and 6E-2 for goats
DFLi = 1.39E-2 mrem/pCi
λ_i = 9.98E-7 sec -1
λ_w = 5.73E-7 sec -1
tf = 1.73E+5 sec.

These values will yield a factor of 5.26E11 and 6.31E11 mrem/yr per uCi/sec respectively for cow and goat milk. However, the actual dose to the infant thyroid is also dependant on the highest relative deposition at respective cow and goat locations. At the Nine Mile Point Nuclear Station these deposition coefficients are 4.73E-10 and 1.33E-10 m-2 respectively for cows and goats. Because the goat deposition is relatively so much smaller than the slightly larger Ri factor, cow milk is the limiting milk. If the location of the cow and goat milk receptors changes so that this is no longer true then the Ri factor will be revised accordingly. Table 3-12 list the infant thyroid dose factor from I-131 as 5.26E11 mrem/yr per uCi/sec. It should be noted that only a limited number of nuclides are listed on Table 3-12 thru 3-15. These are the most common nuclides encountered in effluents. If a nuclide is detected for which a factor is not listed, then it will be calculated and included in a revision to the ODCM.

TABLES 3-16 - 3-18, Ri VALUES - COW MEAT

R_i (m2-mrem/yr per uCi/sec) also takes into account the dose rate to various organs from the ingestion of cowmeat for all age groups except infant. (From NUREG 0133, Section 5.3.1.4)

$$R_i^{M}[D/Q] = K' \frac{Q_F(U_{ap})}{\lambda_i + \lambda_w} F_f(r)(DFL_i)_a \left[\frac{f_p f_s}{Y_p} \cdot \frac{(1-f_p f_s)e^{-\lambda_i t_h}}{Y_s} \right] e^{-\lambda_i t_f}$$

(m^2-mrem/yr per uCi/sec)

Where:

F_f = the stable element transfer coefficients, in days/kg.

U_{ap} = the receptor's meat consumption rate for age (a), in kg/yr.

t_f = the transport time from pasture to receptor, in sec.

t_h = the transport time from crop field to receptor, in sec.

Tabulated below are the appropriate parameter values and their reference to Regulatory Guide 1.109.

Parameter		Value	Table(RG1.109)
r (dimensionless)		1.0 for radioiodine	E-15
		0.2 for particulates	E-15
F_f (days/kg		Each stable element	E-1
U_{ap} (kg/yr	- Infant	0	E-5
	- Child	41	E-5
	- Teen	65	E-5
	- Adult	110	E-5
$(DFL_i)_g$ (mrem/pCi)		Each radionuclide	E-11 to E-14
Y_p (kg/m^2)		0.7	E-15
Y_s (kg/m^2)		2.0	E-15
t_f (seconds)		1.73 x 10^6 (20 days)	E-15
t_h (seconds)		7.78 x 10^6 (90 days)	E-15
Q_F (kg/day)		50	E-3

The concentration of tritium in meat is based on the airborne concentration rather than the deposition. Therefore, the R_i is based on [x/Q]:

$$R_i = K'K''F_f Q_F U_{ap} (DFL_i)_g [0.75(0.5/H)] \text{ (mrem/yr per uCi/m}^3\text{)}$$

where all terms are defined above in this manual.

Example Calculation:

For I-131 child thyroid dose factor from cow meat ingestion.

Ff = 2.9E-3 days
r = 1.0 unitless for Iodines
DFLi = 5.72E-3 mrem/pCi.

These values will yield a Ri factor of 2.75E9 m2-mrem/yr per uCi/sec as listed on Table 3-16. It should be noted that only a limited number of nuclides are listed on Table 3-16 thru 3-18. These are the most common nuclides encountered in effluents. If a nuclide is detected for which a factor is not listed, then it will be calculated in a revision to the ODCM.

TABLES 3-19 to 3-21, Ri VALUES - VEGETATION

Ri (m2-mrem/yr per uCi/sec) also takes into account the dose to various organs from the ingestion of vegetation for all age groups except infant. (From NUREG 0133, Section 5.3.1.5).

The integrated concentration in vegetation consumed by man follows the expression developed in the derivation of the milk factor. Man is considered to consume two types of vegetation (fresh and stored) that differ only in the time period between harvest and consumption, therefore:

$$R_i = K' \left[\frac{(r)}{Y_v(\lambda_i + \lambda_w)} \right] (DFL_i)_a \left[U_a^L f_L e^{-\lambda_i t_L} + U_a^S f_g e^{-\lambda_i t_h} \right]$$

$(m^2 \cdot mrem/yr \text{ per } \mu Ci/sec)$

where:

K' = a constant of unit conversion, 10^6 pCi/uCi.

U_a^L = the consumption rate of fresh leafy vegetation by the receptor in age group (a), in kg/yr.

U_a^S = the consumption rate of stored vegetation by the receptor in age group (a), in kg/yr.

f_L = the fraction of the annual intake of fresh leafy vegetation grown locally.

f_g = the fraction of the annual intake of stored vegetation grown locally.

t_L = the average time between harvest of leafy vegetation and its consumption, in seconds.

t_h = the average time between harvest of stored vegetation and its consumption, in seconds.

Y_v = the vegetation areal density, in kg/m^2.

and all other factors are defined in this manual.

Tabulated below are the appropriate parameter values and their reference to Regulatory Guide 1.109.

Parameter	Value	Table
r (dimensionless)	1.0 for radioiodines	E-1
	0.2 for particulates	E-1
$(DFL_i)_a$ (mrem/pCi)	Each radionuclide	E-11 to E-14
U_a^L (kg/yr) - Infant	0	E-5
- Child	26	E-5
- Teen	42	E-5
- Adult	64	E-5
U_a^S (kg/yr) - Infant	0	E-5
- Child	520	E-5
- Teen	630	E-5
- Adult	520	E-5
f_L (dimensionless)	site specific (default = 1.0)	
f_g (dimensionless)	site specific (default = 0.76) (see RG 1.109 page 28)	
t_L (seconds)	8.6×10^4 (1 day)	E-15
t_h (seconds)	5.18×10^6 (60 days)	E-15
Y_v (kg/m^2)	2.0	E-15

The concentration of tritium in vegetation is based on the airborne concentration rather than the deposition. Therefore, the R_i is based on [x/Q]:

$$R_i[x/Q] = K'K'' \; U^L_a r_L + U^S_a r_g \; (DFL_i)_a \; [0.75(0.5/H)] \; (\text{mrem/yr per } \mu Ci/m^3).$$

where all terms have been defined above and in this manual.

Example Calculation

For I-131 child thyroid dose factor to the from vegetation ingestion:

r = 1.0 unitless for Iodines
DFLi = 5.72E-3 mrem.pCi.

These values will yield a Ri factors of 4.75E10 m2-mrem/yr per uCi/sec as listed on Table 3-19. It should be noted that only a limited number of nuclides are listed on Table 3-19 thru 3-21. These are the most common nuclides encountered in effluents. If a nuclide is detected for which a factor is not listed, then it will be calculated and included in a revision to the ODCM.

3.4.5 X/Q and Wv - Dispersion Parameters for Dose Rate, Table 3-22

The dispersion parameters for the whole body and skin dose rate calculation correspond to the highest annual average dispersion parameters at or beyond the unrestricted area boundary. This is at the East Site boundary. These values were obtained from the Nine Mile Point Unit 2 Final Environmental Statement, NUREG 1085 Table D-2 for the Vent and stack. These were calculated using the methodology of Regulatory Guide 1.111, Rev. 1. The Stack was modeled as an elevated release point because its height is more than 2.5 times than any adjacent building. The Vent was modeled as a ground level release because even though it is higher than any adjacent building it is not more than 2.5 times the height.

The NRC Final Environmental Statement values for the Site Boundary X/Q and D/Q terms were selected for use in calculating Effluent Monitor Alarm Points and compliance with Site Boundary Dose Rate specifications because they are conservative when compared with the corresponding NMPC Environmental Report values. In addition, the Stack "intermittent release" X/Q was selected in lieu of the "continuous" value, since it is slightly larger, and also would allow not making a distinction between long term and short term releases.

The dispersion parameters for the organ dose calculations were obtained from the Environmental Report, Figures 7B-4 (Stack) and 7B-8 (Vent) by locating values corresponding to currently existing (1985) pathways. It should be noted that the most conservative pathways do not all exist at the same location. It is conservative to assume that a single individual would actually be at each of the receptor locations.

3.4.6 Wv and Ws - Dispersion Parameters for Dose, Table 3-22

The dispersion parameters for dose calculations were obtained chiefly from the Nine Mile Point Unit 2 Environmental Report Appendix 7B, as noted in Section 3.4.5. These were calculated using the methodology of Regulatory Guide 1.111 and NUREG 0324. The Stack was modeled as an elevated release point because its height is more than 2.5 times than any adjacent building. The Vent was modeled as a combined elevated/ground level release because even though it is higher than any adjacent building it is not more than 2.5 times the height. Average meterology over the appropriate time period was used. Dispersion parameters not available from the ER were obtained from C.T. Main Data report dated November, 1985, or as described in Section 3.4.5, the FES.

3.5 I-133 Estimation

The Stack and Vent Effluent Monitor at Nine Mile Point-Unit 2 are on line isotopic monitors. They are designed to automatically collect iodine samples on charcoal cartridges and isotopically analyze them with a sensitivity which exceeds the LLD requirement on TS Table 4.11-2 of 1E-12 uCi/cc. During those time periods in which the I-133 analysis cannot meet the LLD requirement, the I-133 concentration will be estimated as 4 times the I-131 concentration, or by ratio applied to the I-131 concentration. The ratio will be determined at least quarterly by analysis of short duration samples.

3.6 Use of Concurrent Meteorological Data vs. Historical Data

It is the intent of NMPC to use dispersion parameters based on historical meteorological data to set alarm points and to determine or predict dose and dose rates in the environment due to gaseous effluents. When the methodology becomes available, it is the intent to use meteorological conditions concurrent with the time of release to determine gaseous pathway doses. Alarm points and dose predictions or estimates will still be based on historical data. The ODCM will be revised at that time.

3.7 Gaseous Radwaste Treatment System Operation

Technical Specification 3.11.2.4 requires the Gaseous Radwaste Treatment System to be in operation whenever the main condenser air ejector system is in operation. Since the system was designed without a bypass, station design results in compliance with the specification. The components of the system which must operate to treat offgas are the Preheater, Recombiner, Condenser, Dryer, Charcoal Adsorbers, HEPA Filter, and Vacuum Pump. See Figures 3-1, 3-2, and 3-3, Offgas System.

3.8 Ventilation Exhaust Treatment System Operation

Technical Specification 3.11.2.5 requires the Ventilation Exhaust Treatment System to be OPERABLE when projected doses in 31 days due to iodine and particulate releases would exceed 0.3 mrem to any organ of a member of the public. The appropriate components, which affect iodine or particulate release, to be OPERABLE are:

1) HEPA Filter - Radwaste Decon Area
2) HEPA Filter - Radwaste Equipment Area
3) HEPA Filter - Radwaste General Area

Whenever one of these filters is not OPERABLE, iodine and particulate dose projections will be made for the remainder of the current calendar month, and for each month (at the time of calculating cumulative monthly dose contributions) that the filter remains inoperable, in accordance with 4.11.2.5.1. Predicted release rate will be used, with the methodology of Section 3.3.3. See Figure 3-5, Gaseous Radiation Monitoring.

TABLE 3-1

OFFGAS PRETREATMENT*
DETECTOR RESPONSE

NUCLIDE	NET CPM/ μCi/cc
Kr 85	4.30E+3
Kr 85m	4.80E+3
Kr 87	8.00E+3
Kr 88	7.60E+3
Xe 133	1.75E+3
Xe 133m	--
Xe 135	5.10E+3
Xe 135m	--
Xe 137	8.10E+3
Xe 138	7.10E+3

*Values from SWEC purchase specification NMP2-P281F

TABLE 3-2

PLUME SHINE PARAMETERS*

NUCLIDE	B_i (mrad/yr ÷ μCi/sec)	V_i (mrem/yr ÷ μCi/sec)
Kr 83m	3.5.1E-5	3.28E-5
Kr 85	3.39E-3	3.21E-3
Kr 85m	1.04E-2	9.98E-3
Kr 87	2.34E-2	2.21E-2
Kr 88	2.01E-2	1.92E-2
Kr 89	1.59E-2	1.51E-2
Xe 131m	6.90E-5	6.55E-5
Xe 133	6.12E-4	5.93E-4
Xe 133m	3.62E-4	3.44E-4
Xe 135	4.31E-3	4.09E-3
Xe 135m	6.55E-3	6.12E-3
Xe 137	3.07E-3	2.88E-3
Xe 138	1.38E-2	1.33E-2
Ar 41	1.69E-2	1.61E-2

*B_i and V_i are calculated for critical site boundary location; 1.6km in the easterly direction.

TABLE 3-3

DOSE FACTORS*

Nuclide	K_i (γ-Body)**	L_i (β-Skin)**	M_i (γ-Air)***	N_i (β-Air)***
Kr 83m	7.56E-02	---	1.93E1	2.88E2
Kr 85m	1.17E3	1.46E3	1.23E3	1.97E3
Kr 85	1.61E1	1.34E3	1.72E1	1.95E3
Kr 87	5.92E3	9.73E3	6.17E3	1.03E4
Kr 88	1.47E4	2.37E3	1.52E4	2.93E3
Kr 89	1.66E4	1.01E4	1.73E4	1.06E4
Kr 90	1.56E4	7.29E3	1.63E4	7.83E3
Xe 131m	9.15E1	4.76E2	1.56E2	1.11E3
Xe 133m	2.51E2	9.94E2	3.27E2	1.48E3
Xe 133	2.94E2	3.06E2	3.53E2	1.05E3
Xe 135m	3.12E3	7.11E2	3.36E3	7.39E2
Xe 135	1.81E3	1.86E3	1.92E3	2.46E3
Xe 137	1.42E3	1.22E4	1.51E3	1.27E4
Xe 138	8.83E3	4.13E3	9.21E3	4.75E3
Ar 41	8.84E3	2.69E3	9.30E3	3.28E3

*From, Table B-1.Regulatory Guide 1.109 Rev. 1

**mrem/yr per $\mu Ci/m^3$.

***mrad/yr per $\mu Ci/m^3$.

TABLE 3-4

P_i VALUES - GROUND PLANE**

$\frac{m^2 - mrem/yr}{Ci/sec}$

NUCLIDE	TOTAL BODY	SKIN
H 3	----	----
C 14	----	----
Cr 51	6.64E6	7.85E6
Mn 54	1.10E9	1.29E9
Fe 59	3.88E8	4.56E8
Co 58	5.27E8	6.18E8
Co 60	4.40E9	5.17E9
Zn 65	6.87E8	7.90E8
Sr 89	3.06E4	3.56E4
Sr 90	----	----
Zr 95	3.44E8	3.99E8
* Nb 95	3.50E8	4.12E8
Mo 99	5.71E6	6.61E6
I 131	2.46E7	2.98E7
I 133	3.50E6	4.26E6
Cs 134	2.81E9	3.28E9
Cs 137	1.15E9	1.34E9
Ba 140	2.93E7	3.35E7
* La 140	2.10E8	2.38E8
Ce 141	1.95E7	2.20E7
Ce 144	5.85E7	6.77E7

*Daughter Decay Product. Activity level and effective half life assumed to equal parent nuclide.

**Calculated in accordance with NUREG 0133, Section 5.2.1.2.

TABLE 3-5

P_1 VALUES - INHALATION**

mrem/yr

$\mu Ci/m^3$

NUCLIDE	BONE	LIVER	T. BODY	THYROID	KIDNEY	LUNG	GI-LLI
H 3	--	6.47E2	6.47E2	6.47E2	6.47E2	6.47E2	6.47E2
C 14	2.65E4	5.31E3	5.31E3	5.31E3	5.31E3	5.31E3	5.31E3
Cr 51	--	--	8.95E1	5.75E1	1.32E1	1.28E4	3.57E2
Mn 54	--	2.53E4	4.98E3	--	4.98E3	1.00E6	7.06E3
Fe 59	1.36E4	2.35E4	9.48E3	--	--	1.02E6	2.48E4
Co 58	--	1.22E3	1.82E3	--	--	7.77E5	1.11E4
Co 60	--	8.02E3	1.18E4	--	--	4.51E6	3.19E4
Zn 65	1.93E4	6.26E4	3.11E4	--	3.25E4	6.47E5	5.14E4
Sr 89	3.98E5	--	1.14E4	--	--	2.03E6	6.40E4
Sr 90	4.09E7	--	2.59E6	--	--	1.12E7	1.31E5
Zr 95	1.15E5	2.79E4	2.03E4	--	3.11E4	1.75E6	2.17E4
*Nb 95	1.57E4	6.43E3	3.78E3	--	4.72E3	4.79E5	1.27E4
Mo 99	--	1.65E2	3.23E1	--	2.65E2	1.35E5	4.87E4
I 131	3.79E4	4.44E4	1.96E4	1.48E7	5.18E4	--	1.06E3
I 133	1.32E4	1.92E4	5.60E3	3.56E6	2.24E4	--	2.16E3
Cs 134	3.96E5	7.03E5	7.45E4	--	1.90E5	7.97E4	1.33E3
Cs 137	5.49E5	6.12E5	4.55E4	--	1.72E5	7.13E4	1.33E3
Ba 140	5.60E4	5.60E1	2.90E3	--	1.34E1	1.60E6	3.84E4
*La 140	5.05E2	2.00E2	5.15E1	--	--	1.68E5	8.48E4
Ce 141	2.77E4	1.67E4	1.99E3	--	5.25E3	5.17E5	2.16E4
Ce 144	3.19E6	1.21E6	1.76E5	--	5.38E5	9.84E6	1.48E5

*Daughter Decay Product. Activity level and effective half life assumed to equal parent nuclide.

**Calculated in accordance with NUREG 0133, Section 5.2.1.1.

TABLE 3-6

P_i VALUES - FOOD (Cow Milk)***

m^2 - mrem/yr ÷ μCi/sec

NUCLIDE	BONE	LIVER	T. BODY	THYROID	KIDNEY	LUNG	GI-LLI
*H 3	--	2.40E3	2.40E3	2.40E3	2.40E3	2.40E3	2.40E3
*C 14	3.23E6	6.89E5	6.89E5	6.89E5	6.89E5	6.89E5	6.89E5
Cr 51	--	--	1.64E5	1.07E5	2.34E4	2.08E5	4.78E6
Mn 54	--	3.97E7	8.99E6	--	8.80E6	--	1.46E7
Fe 59	2.28E8	3.99E8	1.57E8	--	--	1.18E8	1.91E8
Co 58	--	2.47E7	6.16E7	--	--	--	6.15E7
Co 60	--	8.98E7	2.12E8	--	--	--	2.14E8
Zn 65	5.65E9	1.94E10	8.94E9	--	9.40E9	--	1.64E10
Sr 89	1.28E10	--	3.67E8	--	--	--	2.63E8
Sr 90	1.24E11	--	3.15E10	--	--	--	1.55E9
Zr 95	6.93E3	1.69E3	1.20E3	--	1.82E3	--	8.41E5
**Nb 95	7.07E5	2.91E5	1.68E5	--	2.09E5	--	2.46E8
Mo 99	--	2.12E8	4.13E7	--	3.17E8	--	6.98E7
I 131	2.77E9	3.26E9	1.43E9	1.07E12	3.81E9	--	1.16E8
I 133	3.69E7	5.37E7	1.57E7	9.77E9	6.31E7	--	9.09E6
Cs 134	3.71E10	6.92E10	6.99E9	--	1.78E10	7.31E9	1.88E8
Cs 137	5.24E10	6.13E10	4.35E9	--	1.65E10	6.67E9	1.92E8
Ba 140	2.45E8	2.45E5	1.26E7	--	5.83E4	1.51E5	6.03E7
**La 140	3.79E2	1.49E2	3.84E1	--	--	--	1.75E6
Ce 141	4.41E4	2.69E4	3.17E3	--	8.30E3	--	1.39E7
Ce 144	2.37E6	9.69E5	1.33E5	--	3.92E5	--	1.36E8

*mrem/yr per μCi/m^3.

**Daughter Decay Product. Activity level and effective half life assumed to equal parent nuclide.

***Calculated in accordance with NUREG 0133, Section 5.2.1.3.

TABLE 3-7

R_i VALUES - INHALATION - INFANT**

$\frac{\text{mrem/yr}}{\mu Ci/m^3}$

NUCLIDE	BONE	LIVER	T. BODY	THYROID	KIDNEY	LUNG	GI-LLI
H 3	--	6.47E2	6.47E2	6.47E2	6.47E2	6.47E2	6.47E2
C 14	2.65E4	5.31E3	5.31E3	5.31E3	5.31E3	5.31E3	5.31E3
Cr 51	--	--	8.95E1	5.75E1	1.32E1	1.28E4	3.57E2
Mn 54	--	2.53E4	4.98E3	--	4.98E3	1.00E6	7.06E3
Fe 59	1.36E4	2.35E4	9.48E3	--	--	1.02E6	2.48E4
Co 58	--	1.22E3	1.82E3	--	--	7.77E5	1.11E4
Co 60	--	8.02E3	1.18E4	--	--	4.51E6	3.19E4
Zn 65	1.93E4	6.26E4	3.11E4	--	3.25E4	6.47E5	5.14E4
Sr 89	3.98E5	--	1.14E4	--	--	2.03E6	6.40E4
Sr 90	4.09E7	--	2.59E6	--	--	1.12E7	1.31E5
Zr 95	1.15E5	2.79E4	2.03E4	--	3.11E4	1.75E6	2.17E4
*Nb 95	1.57E4	6.43E3	3.78E3	--	4.72E3	4.79E5	1.27E4
Mo 99	--	1.65E2	3.23E1	--	2.65E2	1.35E5	4.87E4
I-131	3.79E4	4.44E4	1.96E4	1.48E7	5.18E4	--	1.06E3
I 133	1.32E4	1.92E4	5.60E3	3.56E6	2.24E4	--	2.16E3
Cs 134	3.96E5	7.03E5	7.45E4	--	1.90E5	7.97E4	1.33E3
Cs 137	5.49E5	6.12E5	4.55E4	--	1.72E5	7.13E4	1.33E3
Ba 140	5.60E4	5.60E1	2.90E3	--	1.34E1	1.60E6	3.84E4
*La 140	5.05E2	2.00E2	5.15E1	--	--	1.68E5	8.48E4
Ce 141	2.77E4	1.67E4	1.99E3	--	5.25E3	5.17E5	2.16E4
Ce 144	3.19E6	1.21E6	1.76E5	--	5.38E5	9.84E6	1.48E5

*Daughter Decay Product. Activity level and effective half life assumed to equal parent nuclide.

**This and following R_i Tables Calculated in accordance with NUREG 0133, Section 5.3.1, excpet C 14 values in accordance with Regulatory Guide 1.109 Equation C-8.

TABLE 3-8

R_1 VALUES - INHALATION - CHILD

$\frac{\text{mrem/yr}}{\mu Ci/m^3}$

NUCLIDE	BONE	LIVER	T. BODY	THYROID	KIDNEY	LUNG	GI-LLI
H 3	--	1.12E3	1.12E3	1.12E3	1.12E3	1.12E3	1.12E3
C 14	3.59E4	6.73E3	6.73E3	6.73E3	6.73E3	6.73E3	6.73E3
Cr 51	--	--	1.54E2	8.55E1	2.43E1	1.70E4	1.08E3
Mn 54	--	4.29E4	9.51E3	--	1.00E4	1.58E6	2.29E4
Fe 59	2.07E4	3.34E4	1.67E4	--	--	1.27E6	7.07E4
Co 58	--	1.77E3	3.16E3	--	--	1.11E6	3.44E4
Co 60	--	1.31E4	2.26E4	--	--	7.07E6	9.62E4
Zn 65	4.26E4	1.13E5	7.03E4	--	7.14E4	9.95E5	1.63E4
Sr 89	5.99E5	--	1.72E4	--	--	2.16E6	1.67E5
Sr 90	1.01E8	--	6.44E6	--	--	1.48E7	3.43E5
Zr 95	1.90E5	4.18E4	3.70E4	--	5.96E4	2.23E6	6.11E4
*Nb 95	2.35E4	9.18E3	6.55E3	--	8.62E3	6.14E5	3.70E4
Mo 99	--	1.72E2	4.26E1	--	3.92E2	1.35E5	1.27E5
I 131	4.81E4	4.81E4	2.73E4	1.62E7	7.88E4	--	2.84E3
I 133	1.66E4	2.03E4	7.70E3	3.85E6	3.38E4	--	5.48E3
Cs 134	6.51E5	1.01E6	2.25E5	--	3.30E5	1.21E5	3.85E3
Cs 137	9.07E5	8.25E5	1.28E5	--	2.82E5	1.04E5	3.62E3
Ba 140	7.40E4	6.48E1	4.33E3	--	2.11E1	1.74E6	1.02E5
*La 140	6.44E2	2.25E2	7.55E1	--	--	1.83E5	2.26E5
Ce 141	3.92E4	1.95E4	2.90E3	--	8.55E3	5.44E5	5.66E4
Ce 144	6.77E6	2.12E6	3.61E5	--	1.17E6	1.20E7	3.89E5

*Daughter Decay Product. Activity level and effective half life assumed to equal parent nuclide.

TABLE 3-9

R_i VALUES - INHALATION - TEEN

mrem/yr

$\mu Ci/m^3$

NUCLIDE	BONE	LIVER	T. BODY	THYROID	KIDNEY	LUNG	GI-LLI
H 3	--	1.27E3	1.27E3	1.27E3	1.27E3	1.27E3	1.27E3
C 14	2.60E4	4.87E3	4.87E3	4.87E3	4.87E3	4.87E3	4.87E3
Cr 51	--	--	1.35E2	7.50E1	3.07E1	2.10E4	3.00E3
Mn 54	--	5.11E4	8.40E3	--	1.27E4	1.98E6	6.68E4
Fe 59	1.59E4	3.70E4	1.43E4	--	--	1.53E6	1.78E5
Co 58	--	2.07E3	2.78E3	--	--	1.34E6	9.52E4
Co 60	--	1.51E4	1.98E4	--	--	8.72E6	2.59E5
Zn 65	3.86E4	1.34E5	6.24E4	--	8.64E4	1.24E6	4.66E4
Sr 89	4.34E5	--	1.25E4	--	--	2.42E6	3.71E5
Sr 90	1.08E8	--	6.68E6	--	--	1.65E7	7.65E5
Zr 95	1.46E5	4.58E4	3.15E4	--	6.74E4	2.69E6	1.49E5
*Nb 95	1.86E4	1.03E4	5.66E3	--	1.00E4	7.51E5	9.68E4
Mo 99	--	1.69E2	3.22E1	--	4.11E2	1.54E5	2.69E5
I 131	3.54E4	4.91E4	2.64E4	1.46E7	8.40E4	--	6.49E3
I 133	1.22E4	2.05E4	6.22E3	2.92E6	3.59E4	--	1.03E4
Cs 134	5.02E5	1.13E6	5.49E5	--	3.75E5	1.46E5	9.76E3
Cs 137	6.70E5	8.48E5	3.11E5	--	3.04E5	1.21E5	8.48E3
Ba 140	5.47E4	6.70E1	3.52E3	--	2.28E1	2.03E6	2.29E5
*La 140	4.79E2	2.36E2	6.26E1	--	--	2.14E5	4.87E5
Ce 141	2.84E4	1.90E4	2.17E3	--	8.88E3	6.14E5	1.26E5
Ce 144	4.89E6	2.02E6	2.62E5	--	1.21E6	1.34E7	8.64E5

*Daughter Decay Product. Activity level and effective half life assumed to equal parent nuclide.

TABLE 3-10

R_i VALUES - INHALATION - ADULT

mrem/yr

$\mu Ci/m^3$

NUCLIDE	BONE	LIVER	T. BODY	THYROID	KIDNEY	LUNG	GI-LLI
H 3	--	1.26E3	1.26E3	1.26E3	1.26E3	1.26E3	1.26E3
C 14	1.82E4	3.41E3	3.41E3	3.41E3	3.41E3	3.41E3	3.41E3
Cr 51	--	--	1.00E2	5.95E1	2.28E1	1.44E4	3.32E3
Mn 54	--	3.96E4	6.30E3	--	9.84E3	1.40E6	7.74E4
Fe 59	1.18E4	2.78E4	1.06E4	--	--	1.02E6	1.88E5
Co 58	--	1.58E3	2.07E3	--	--	9.28E5	1.06E5
Co 60	--	1.15E4	1.48E4	--	--	5.97E6	2.85E5
Zn 65	3.24E4	1.03E5	4.66E4	--	6.90E4	8.64E5	5.34E4
Sr 89	3.04E5	--	8.72E3	--	--	1.40E6	3.50E5
Sr 90	9.92E7	--	6.10E6	--	--	9.60E6	7.22E5
Zr 95	1.07E5	3.44E4	2.33E4	--	5.42E4	1.77E6	1.50E5
*Nb 95	1.41E4	7.82E3	4.21E3	--	7.74E3	5.05E5	1.04E5
Mo 99	--	1.21E2	2.30E1	--	2.91E2	9.12E4	2.48E5
I 131	2.52E4	3.58E4	2.05E4	1.19E7	6.13E4	--	6.28E3
I 133	8.64E3	1.48E4	4.52E3	2.15E6	2.58E4	--	8.88E3
Cs 134	3.73E5	8.48E5	7.28E5	--	2.87E5	9.76E4	1.04E4
Cs 137	4.78E5	6.21E5	4.28E5	--	2.22E5	7.52E4	8.40E3
Ba 140	3.90E4	4.90E1	2.57E3	--	1.67E1	1.27E6	2.18E5
*La 140	3.44E2	1.74E2	4.58E1	--	--	1.36E5	4.58E5
Ce 141	1.99E4	1.35E4	1.53E3	--	6.26E3	3.62E5	1.20E5
Ce 144	3.43E6	1.43E6	1.84E5	--	8.48E5	7.78E6	8.16E5

*Daughter Decay Product. Activity level and effective half life assumed to equal parent nuclide.

TABLE 3-11

R_i VALUES - GROUND PLANE

ALL AGE GROUPS

m^2 - mrem/yr ÷ μCi/sec

NUCLIDE	TOTAL BODY	SKIN
H 3	--	--
C 14	--	--
Cr 51	4.65E6	5.50E6
Mn 54	1.40E9	1.64E9
Fe 59	2.73E8	3.20E8
Co 58	3.80E8	4.45E8
Co 60	2.15E10	2.53E10
Zn 65	7.46E8	8.57E8
Sr 89	2.16E4	2.51E4
Sr 90	--	--
Zr 95	2.45E8	2.85E8
*Nb 95	2.50E8	2.94E8
Mo 99	3.99E6	4.63E6
I 131	1.72E7	2.09E7
I 133	2.45E6	2.98E6
Cs 134	6.83E9	7.97E9
Cs 137	1.03E10	1.20E10
Ba 140	2.05E7	2.35E7
*La 140	1.47E8	1.66E8
Ce 141	1.37E7	1.54E7
Ce 144	6.96E7	8.07E7

*Daughter Decay Product. Activity level and effective half life assumed to equal parent nuclide.

TABLE 3-12

R_i VALUES - COW MILK - INFANT

m^2-mrem/yr ÷ μCi/sec

NUCLIDE	BONE	LIVER	T. BODY	THYROID	KIDNEY	LUNG	GI-LLI
*H 3	--	2.38E3	2.38E3	2.38E3	2.38E3	2.38E3	2.38E3
*C 14	3.23E6	6.89E5	6.89E5	6.89E5	6.89E5	6.89E5	6.89E5
Cr 51	--	--	8.35E4	5.45E4	1.19E4	1.06E5	2.43E6
Mn 54	--	2.51E7	5.68E6	--	5.56E6	--	9.21E6
Fe 59	1.22E8	2.13E8	8.38E7	--	--	6.29E7	1.02E8
Co 58	--	1.39E7	3.46E7	--	--	--	3.46E7
Co 60	--	5.90E7	1.39E8	--	--	--	1.40E8
Zn 65	3.53E9	1.21E10	5.58E9	--	5.87E9	--	1.02E10
Sr 89	6.93E9	--	1.99E8	--	--	--	1.42E8
Sr 90	8.19E10	--	2.09E10	--	--	--	1.02E9
Zr 95	3.85E3	9.39E2	6.66E2	--	1.01E3	--	4.68E5
**Nb 95	3.93E5	1.62E5	9.35E4	--	1.16E5	--	1.37E8
Mo 99	--	1.04E8	2.03E7	--	1.55E8	--	3.43E7
I 131	1.36E9	1.60E9	7.04E8	5.26E11	1.87E9	--	5.72E7
I 133	1.81E7	2.64E7	7.72E6	4.79E9	3.10E7	--	4.46E6
Cs 134	2.41E10	4.49E10	4.54E9	--	1.16E10	4.74E9	1.22E8
Cs 137	3.47E10	4.06E10	2.88E9	--	1.09E10	4.41E9	1.27E8
Ba 140	1.21E8	1.21E5	6.22E6	--	2.87E4	7.42E4	2.97E7
**La 140	1.86E2	7.35E1	1.89E1	--	--	--	8.63E5
Ce 141	2.28E4	1.39E4	1.64E3	--	4.28E3	--	7.18E6
Ce 144	1.49E6	6.10E5	8.34E4	--	2.46E5	--	8.54E7

*mrem/yr per $\mu Ci/m^3$.

**Daughter Decay Product. Activity level and effective half life assumed to equal parent nuclide.

TABLE 3-13

K_i VALUES - COW MILK - CHILD

m^2-mrem/yr ÷ μCi/sec

NUCLIDE	BONE	LIVER	T. BODY	THYROID	KIDNEY	LUNG	GI-LLI
*H 3	--	1.57E3	1.57E3	1.57E3	1.57E3	1.57E3	1.57E3
*C 14	1.65E6	3.29E5	3.29E5	3.29E5	3.29E5	3.29E5	3.29E5
Cr 51	--	--	5.27E4	2.93E4	7.99E3	5.34E4	2.80E6
Mn 54	--	1.35E7	3.59E6	--	3.78E6	--	1.13E7
Fe 59	6.52E7	1.06E8	5.26E7	--	--	3.06E7	1.10E8
Co 58	--	6.94E6	2.13E7	--	--	--	4.05E7
Co 60	--	2.89E7	8.52E7	--	--	--	1.60E8
Zn 65	2.63E9	7.00E9	4.35E9	--	4.41E9	--	1.23E9
Sr 89	3.64E9	--	1.04E8	--	--	--	1.41E8
Sr 90	7.53E10	--	1.91E10	--	--	--	1.01E9
Zr 95	2.17E3	4.77E2	4.25E2	--	6.83E2	--	4.98E5
**Nb 95	2.10E5	8.19E4	5.85E4	--	7.70E4	--	1.52E8
Mo 99	--	4.07E7	1.01E7	--	8.69E7	--	3.37E7
I 131	6.51E8	6.55E8	3.78E8	2.17E11	1.08E9	--	5.83E7
I 133	8.58E6	1.06E7	4.01E6	1.97E9	1.77E7	--	4.27E6
Cs 134	1.50E10	2.45E10	5.18E9	--	7.61E9	2.73E9	1.32E8
Cs 137	2.17E10	2.08E10	3.07E9	--	6.78E9	2.44E9	1.30E8
Ba 140	5.87E7	5.14E4	3.43E6	--	1.67E4	3.07E4	2.97E7
**La 140	8.92E1	3.12E1	1.05E1	--	--	--	8.69E5
Ce 141	1.15E4	5.73E3	8.51E2	--	2.51E3	--	7.15E6
Ce 144	1.04E6	3.26E5	5.55E4	--	1.80E5	--	8.49E7

*mrem/yr per μCi/m^3.
**Daughter Decay Product. Activity level and effective half life assumed to equal parent nuclide.

TABLE 3-14

R_i VALUES - COW MILK - TEEN

m^2-mrem/yr ÷ uCi/sec

NUCLIDE	BONE	LIVER	T. BODY	THYROID	KIDNEY	LUNG	GI-LLI
*H 3	--	9.94E2	9.94E2	9.94E2	9.94E2	9.94E2	9.94E2
*C 14	6.70E5	1.34E5	1.34E5	1.34E5	1.34E5	1.35E5	1.34E5
Cr 51	--	--	2.58E4	1.44E4	5.06E3	3.69E4	4.34E6
Mn 54	--	9.01E6	1.79E6	--	2.69E6	--	1.85E7
Fe 59	2.81E7	6.57E7	2.54E7	--	--	2.07E7	1.55E8
Co 58	--	4.55E6	1.05E7	--	--	--	6.27E7
Co 60	--	1.86E7	4.19E7	--	--	--	2.42E8
Zn 65	1.34E9	4.65E9	2.17E9	--	2.97E9	--	1.97E9
Sr 89	1.47E9	--	4.21E7	--	--	--	1.75E8
Sr 90	4.45E10	--	1.10E10	--	--	--	1.25E9
Zr 95	9.34E2	2.95E2	2.03E2	--	4.33E2	--	6.80E5
**Nb 95	9.32E4	5.17E4	2.85E4	--	5.01E4	--	2.21E8
Mo 99	--	2.24E7	4.27E6	--	5.12E7	--	4.01E7
I 131	2.68E8	3.76E8	2.02E8	1.10E11	6.47E8	--	7.44E7
I 133	3.53E6	5.99E6	1.83E6	8.36E8	1.05E7	--	4.53E6
Cs 134	6.49E9	1.53E10	7.08E9	--	4.85E9	1.85E9	1.90E8
Cs 137	9.02E9	1.20E10	4.18E9	--	4.08E9	1.59E9	1.71E8
Ba 140	2.43E7	2.98E4	1.57E6	--	1.01E4	2.00E4	3.75E7
**La 140	3.73E1	1.83E1	4.87E0	--	--	--	1.05E6
Ce 141	4.67E3	3.12E3	3.58E2	--	1.47E3	--	8.91E6
Ce 144	4.22E5	1.74E5	2.27E4	--	1.04E5	--	1.06E8

*mrem/yr per uCi/m^3.

**Daughter Decay Product. Activity level and effective half life assumed to equal parent nuclide.

TABLE 3-15

R_i VALUES - COW MILK - ADULT

m^2-mrem/yr ÷ uCi/sec

NUCLIDE	BONE	LIVER	T. BODY	THYROID	KIDNEY	LUNG	GI-LLI
*H 3	--	7.63E2	7.63E2	7.63E2	7.63E2	7.63E2	7.63E2
*C 14	3.63E5	7.26E4	7.26E4	7.26E4	7.26E4	7.26E4	7.26E4
Cr 51	--	--	1.48E4	8.85E3	3.26E3	1.96E4	3.72E6
Mn 54	--	5.41E6	1.03E6	--	1.61E6	--	1.66E7
Fe 59	1.61E7	3.79E7	1.45E7	--	--	1.06E7	1.26E8
Co 58	--	2.70E6	6.05E6	--	--	--	5.47E7
Co 60	--	1.10E7	2.42E7	--	--	--	2.06E8
Zn 65	8.71E8	2.77E9	1.25E9	--	1.85E9	--	1.75E9
Sr 89	7.99E8	--	2.29E7	--	--	--	1.28E8
Sr 90	3.15E10	--	7.74E9	--	--	--	9.11E8
Zr 95	5.34E2	1.71E2	1.16E2	--	2.69E2	--	5.43E5
**Nb 95	5.46E4	3.04E4	1.63E4	--	3.00E4	--	1.84E8
Mo 99	--	1.24E7	2.36E6	--	2.81E7	--	2.87E7
I 131	1.48E8	2.12E8	1.21E8	6.94E10	3.63E8	--	5.58E7
I 133	1.93E6	3.36E6	1.02E6	4.94E8	5.86E6	--	3.02E6
Cs 134	3.74E9	8.89E9	7.27E9	--	2.88E9	9.55E8	1.56E8
Cs 137	4.97E9	6.80E9	4.46E9	--	2.31E9	7.68E8	1.32E8
Ba 140	1.35E7	1.69E4	8.83E5	--	5.75E3	9.69E3	2.77E7
**La 140	2.07E1	1.05E1	2.76E0	--	--	--	7.67E5
Ce 141	2.54E3	1.72E3	1.95E2	--	7.99E2	--	6.58E6
Ce 144	2.29E5	9.58E4	1.23E4	--	5.68E4	--	7.74E7

*mrem/yr per uCi/m^3.

**Daughter Decay Product. Activity level and effective half life assumed to equal parent nuclide.

TABLE 3-16

R_i VALUES - COW MEAT - CHILD

m^2-mrem/yr ÷ μCi/sec

NUCLIDE	BONE	LIVER	T. BODY	THYROID	KIDNEY	LUNG	GI-LLI
*H 3	--	2.34E2	2.34E2	2.34E2	2.34E2	2.34E2	2.34E2
*C 14	5.29E5	1.06E5	1.06E5	1.06E5	1.06E5	1.06E5	1.06E5
Cr 5.	--	--	4.55E3	2.52E3	6.90E2	4.61E3	2.41E5
Mn 54	--	5.15E6	1.37E6	--	1.44E6	--	4.32E6
Fe 59	2.04E8	3.30E8	1.65E8	--	--	9.58E7	3.44E8
Co 58	--	9.41E6	2.88E7	--	--	--	5.49E7
Co 60	--	4.64E7	1.37E8	--	--	--	2.57E8
Zn 65	2.38E8	6.35E8	3.95E8	--	4.00E8	--	1.12E8
Sr 89	2.65E8	--	7.57E6	--	--	--	1.03E7
Sr 90	7.01E9	--	1.78E9	--	--	--	9.44E7
Zr 95	1.51E6	3.32E5	2.95E5	--	4.75E5	--	3.46E8
**Nb 95	2.41E6	9.38E5	5.71E5	--	8.82E5	--	1.74E9
Mo 99	--	5.42E4	1.34E4	--	1.16E5	--	4.48E4
I 131	8.27E6	8.32E6	4.73E6	2.75E9	1.37E7	--	7.40E5
I 133	2.87E-1	3.55E-1	1.34E-1	6.60E-1	5.92E-1	--	1.43E-1
Cs 134	6.09E8	1.00E9	2.11E8	--	3.10E8	1.11E8	5.39E6
Cs 137	8.99E8	8.60E8	1.27E8	--	2.80E8	1.01E8	5.39E6
Ba 140	2.20E7	1.93E4	1.28E6	--	6.27E3	1.15E4	1.11E7
**La 140	1 67E2	5.84E1	1.97E1	--	--	--	1.63E6
Ce 141	1.17E4	5.82E3	8.64E2	--	2.55E3	--	7.26E6
Ce 144	1.48E6	4.65E5	7.91E4	--	2.57E5	--	1.21E8

*mrem/yr per μCi/m^3.

**Daughter Decay Product. Activity level and effective half life assumed to equal parent nuclide.

TABLE 3-17

R_i VALUES - COW MEAT - TEEN

m^2-mrem/y ÷ μCi/sec

NUCLIDE	BONE	LIVER	T. BODY	THYROID	KIDNEY	LUNG	GI-LLI
*H 3	--	1.94E2	1.94E2	1.94E2	1.94E2	1.94E2	1.94E2
*C 14	2.81E5	5.62E4	5.62E4	5.62E4	5.62E4	5.62E4	5.62E4
Cr 51	--	--	2.93E3	1.62E3	6.39E2	4.16E3	4.90E5
Mn 54	--	4.50E6	8.93E5	--	1.34E6	--	9.24E6
Fe 59	1.15E8	2.69E8	1.04E8	--	--	8.47E7	6.36E8
Co 58	--	8.05E6	1.86E7	--	--	--	1.11E8
Co 60	--	3.90E7	8.80E7	--	--	--	5.09E8
Zn 65	1.59E8	5.52E8	2.57E8	--	3.53E8	--	2.34E8
Sr 89	1.40E8	--	4.01E6	--	--	--	1.67E7
Sr 90	5.42E9	--	1.34E9	--	--	--	1.52E8
Zr 95	8.50E5	2.68E5	1.84E5	--	3.94E5	--	6.19E8
**Nb 95	1.40E6	7.74E5	4.26E5	--	7.51E5	--	3.31E9
Mo 99	--	3.90E4	7.43E3	--	8.92E4	--	8E4
I 131	4.46E6	6.24E6	3.35E6	1.82E9	1.07E7	--	1.23E6
I 133	1.55E-1	2.62E-1	8.00E-2	3.66E1	4.60E-1	--	1.99E-1
Cs 134	3.46E8	8.13E8	3.77E8	--	2.58E8	9.87E7	1.01E7
Cs 137	4.88E8	6.49E8	2.26E8	--	2.21E8	8.58E7	9.24E6
Ba 140	1.19E7	1.46E4	7.68E5	--	4.95E3	9.81E3	1.84E7
**La 140	9.12E1	4.48E1	1.19E1	--	--	--	2.57E6
Ce 141	6.19E3	4.14E3	4.75E2	--	1.95E3	--	1.18E7
Ce 144	7.87E5	3.26E5	4.23E4	--	1.94E5	--	1.98E8

*mrem/yr per μCi/m^3.

**Daughter Decay Product. Activity level and effective half life assumed to equal parent nuclide.

TABLE 3-18

R_i VALUES - COW MEAT - ADULT

m^2-mrem/yr ÷ uCi/sec

NUCLIDE	BONE	LIVER	T. BODY	THYROID	KIDNEY	LUNG	GI-LLI
*H 3	--	3.25E2	3.25E2	3.25E2	3.25E2	3.25E2	3.25E2
*C 14	3.33E5	6.66E4	6.66E4	6.66E4	6.66E4	6.66E4	6.66E4
Cr 51	--	--	3.65E3	2.18E3	8.03E2	4.84E3	9.17E5
Mn 54	--	5.90E6	1.13E6	--	1.76E6	--	1.81E7
Fe 59	1.44E8	3.39E8	1.30E8	--	--	9.46E7	1.13E9
Co 58	--	1.04E7	2.34E7	--	--	--	2.12E8
Co 60	--	5.03E7	illegible	--	--	--	9.45E8
Zn 65	2.26E8	7.19E6	3.25E8	--	4.81E8	--	4.53E8
Sr 89	1.66E8	--	4.76E6	--	--	--	2.66E7
Sr 90	8.38E9	--	2.06E9	--	--	--	2.42E8
Zr 95	1.06E6	3.40E5	2.30E5	--	5.34E5	--	1.08E9
**Nb 95	1.79E6	9.94E5	5.35E5	--	9.83E5	--	6.04E9
Mo 99	--	4.71E4	8.97E3	--	1.07E5	--	1.09E5
I 131	5.37E6	7.67E6	4.40E6	2.52E9	1.32E7	--	2.02E6
I 133	1.85E-1	3.22E-1	9.81E-2	4.73E1	5.61E-1	--	2.89E-1
Cs 134	4.35E8	1.03E9	8.45E8	--	3.35E8	1.11E8	1.81E7
Cs 137	5.88E8	8.04E8	5.26E8	--	2.73E8	9.07E7	1.56E7
Ba 140	1.44E7	1.81E4	9.44E5	--	6.15E3	1.04E4	2.97E7
**La 140	1.11E2	5.59E1	1.48E1	--	--	--	4.10E6
Ce 141	7.38E3	4.99E3	5.66E2	--	2.32E3	--	1.91E7
Ce 144	9.33E5	3.90E5	5.01E4	--	2.31E5	--	3.16E8

*mrem/yr per uCi/m^3.

**Daughter Decay Product. Activity level and effective half life assumed to equal parent nuclide.

TABLE 3-19

R_i VALUES - VEGETATION - CHILD

m^2-mrem/yr ÷ μCi/sec

NUCLIDE	BONE	LIVER	T. BODY	THYROID	KIDNEY	LUNG	GI-LLI
*H 3	--	4.01E3	4.01E3	4.01E3	4.01E3	4.01E3	4.01E3
*C 14	3.50E6	7.01E5	7.01E5	7.01E5	7.01E5	7.01E5	7.01E5
Cr 51	--	--	1.17E5	6.49E4	1.77E4	1.18E5	6.20E6
Mn 54	--	6.65E8	1.77E8	--	1.86E8	--	5.58E8
Fe 59	3.97E8	6.42E8	3.20E8	--	--	1.86E8	6.69E8
Co 58	--	6.45E7	1.97E8	--	--	--	3.76E8
Co 60	--	3.78E8	1.12E9	--	--	--	2.10E9
Zn 65	8.12E8	2.16E9	1.35E9	--	1.36E9	--	3.80E8
Sr 89	3.59E10	--	1.03E9	--	--	--	1.39E9
Sr 90	1.24E12	--	3.15E11	--	--	--	1.67E10
Zr 95	3.86E6	8.50E5	7.56E5	--	1.22E6	--	8.86E8
**Nb 95	7.50E5	2.92E5	2.09E5	--	2.74E5	--	5.40E8
Mo 99	--	7.70E6	1.91E6	--	1.65E7	--	6.37E6
I 131	1.43E8	1.44E8	8.16E7	4.75E10	2.36E8	--	1.28E7
I 133	3.52E6	4.35E6	1.65E6	8.08E8	7.25E6	--	1.75E6
Cs 134	1.60E10	2.63E10	5.55E9	--	8.15E9	2.93E9	1.42E8
Cs 137	2.39E10	2.29E10	3.38E9	--	7.46E9	2.68E9	1.43E8
Ba 140	2.77E8	2.43E5	1.62E7	--	7.90E4	1.45E5	1.40E8
**La 140	3.37E4	1.18E4	3.97E3	--	--	--	3.28E8
Ce 141	6.56E5	3.27E5	4.85E4	--	1.43E5	--	4.08E8
Ce 144	1.27E8	3.98E7	6.78E6	--	2.21E7	--	1.04E10

*mrem/yr per μCi/m^3.

**Daughter Decay Product. Activity level and effective half life assumed to equal parent nuclide.

TABLE 3-20

R_i VALUES - VEGETATION - TEEN

m^2-mrem/yr ÷ μCi/sec

NUCLIDE	BONE	LIVER	T. BODY	THYROID	KIDNEY	LUNG	GI-LLI
*H 3	--	2.59E3	2.59E3	2.59E3	2.59E3	2.59E3	2.59E3
*C 14	1.45E6	2.91E5	2.91E5	2.91E5	2.91E5	2.91E5	2.91E5
Cr 51	--	--	6.16E4	3.42E4	1.35E4	8.79E4	1.03E7
Mn 54	--	4.54E8	9.01E7	--	1.36E8	--	9.32E8
Fe 59	1.79E8	4.18E8	1.61E8	--	--	1.32E8	9.89E8
Co 58	--	4.37E7	1.01E8	--	--	--	6.02E8
Co 60	--	2.49E8	5.60E8	--	--	--	3.24E9
Zn 65	4.24E8	1.47E9	6.86E8	--	9.41E8	--	6.23E8
Sr 89	1.51E10	--	4.33E8	--	--	--	1.80E9
Sr 90	7.51E11	--	1.85E11	--	--	--	2.11E10
Zr 95	1.72E6	5.44E5	3.74E5	--	7.99E5	--	1.26E9
**Nb 95	3.44E5	1.91E5	1.05E5	--	1.85E5	--	8.16E8
Mo 99	--	5.64E6	1.08E6	--	1.29E7	--	1.01E7
I 131	7.68E7	1.07E8	5.78E7	3.14E10	1.85E8	--	2.13E7
I 133	1.93E6	3.27E6	9.98E5	4.57E8	5.74E6	--	2.48E6
Cs 134	7.10E9	1.67E10	7.75E9	--	5.31E9	2.03E9	2.08E8
Cs 137	1.01E10	1.35E10	4.69E9	--	4.59E9	1.78E9	1.92E8
Ba 140	1.38E8	1.69E5	8.91E6	--	5.74E4	1.14E5	2.13E8
**La 140	1.69E4	8.32E3	2.21E3	--	--	--	4.78E8
Ce 141	2.83E5	1.89E5	2.17E4	--	8.89E4	--	5.40E8
Ce 144	5.27E7	2.18E7	2.83E6	--	1.30E7	--	1.33E10

*mrem/yr per μCi/m^3

**Daughter Decay Product. Activity level and effective half life assumed to equal parent nuclide.

TABLE 3-21

R_i VALUES - VEGETATION - ADULT

m^2-mrem/yr ÷ μCi/sec

NUCLIDE	BONE	LIVER	T. BODY	THYROID	KIDNEY	LUNG	GI-LLI
*H 3	--	2.26E3	2.26E3	2.26E3	2.26E3	2.26E3	2.26E3
*C 14	8.97E5	1.79E5	1.79E5	1.79E5	1.79E5	1.79E5	1.79E5
Cr 51	--	--	4.64E4	2.77E4	1.02E4	6.15E4	1.17E7
Mn 54	--	3.13E8	5.97E7	--	9.31E7	--	9.58E8
Fe 59	1.26E8	2.96E8	1.13E8	--	--	8.27E7	1.02E9
Co 58	--	3.08E7	6.90E7	--	--	--	6.24E8
Co 60	--	1.67E8	3.69E8	--	--	--	3.14E9
Zn 65	3.17E8	1.01E9	4.56E8	--	6.75E8	--	6.36E8
Sr 89	9.96E9	--	2.86E8	--	--	--	1.60E9
Sr 90	6.05E11	--	1.48E11	--	--	--	1.75E10
Zr 95	1.18E6	3.77E5	2.55E5	--	5.92E5	--	1.20E9
**Nb 95	2.41E5	1.34E5	7.20E4	--	1.32E5	--	8.13E8
Mo 99	--	6.14E6	1.17E6	--	1.39E7	--	1.42E7
I 131	8.07E7	1.15E8	6.61E7	3.78E10	1.98E8	--	3.05E7
I 133	2.08E6	3.61E6	1.10E6	5.31E8	6.30E6	--	3.25E6
Cs 134	4.67E9	1.11E10	9.08E9	--	3.59E9	1.19E9	1.94E8
Cs 137	6.36E9	8.70E9	5.70E9	--	2.95E9	9.81E8	1.68E8
Ba 140	1.29E8	1.61E5	8.42E6	--	5.49E4	9.25E4	2.65E8
**La 140	1.58E4	7.9[illegible]E3	2.11E3	--	--	--	5.86E8
Ce 141	1.97E5	1.33E5	1.51E4	--	6.19E4	--	5.09E8
Ce 144	3.29E7	1.38E7	1.77E6	--	8.16E6	--	1.11E10

*mrem/yr per μCi/m^3

**Daughter Decay Product. Activity level and effective half life assumed to equal parent nuclide.

TABLE 3-22
DISPERSION PARAMETERS AT CONTROLLING LOCATIONS*
X/Q, W_y and W_s VALUES

VENT	DIRECTION	DISTANCE (m)	X/Q (sec/m^3)	D/Q (m^{-2})
Site Boundary***	E	1,600	2.00 E-6	2.10E-9
Inhalation and Ground Plane	E (104°)	1,800	1.42E-7	2.90E-9
Cow Milk	ESE (130°)	4,300	4.11E-8	4.73E-10
Goat Milk**	E (89°)	12,500	1.75E-8	1.33E-10
Meat Animal	E (114°)	2,600	1.17E-7	1.86E-9
Vegetation	E (96°)	2,900	1.04E-7	1.50E-9
STACK				
Site Boundary***	E	1,600	4.50E-8	6.00E-9
Inhalation and Ground Plane	E (109°)	1,700	8.48E-9	1.34E-9
Cow Milk	ESE (135°)	4,200	1.05E-8	3.64E-10
Goat Milk**	E (94°)	12,500	1.80E-8	1.84E-10
Meat Animal	E (114°)	2,500	1.13E-8	1.15E-9
Vegetation	E (96°)	2,800	1.38E-8	9.42E-10

NOTE: Inhalation and Ground Plane are annual average values. Others are grazing season only.

*X/Q and D/Q values from NMP-2 ER-OLS.
** - X/Q and D/Q from C.T. Main Data Report dated November 1985.
*** X/Q and D/Q from NMP-2 FES, NUREG-1085, May 1985.

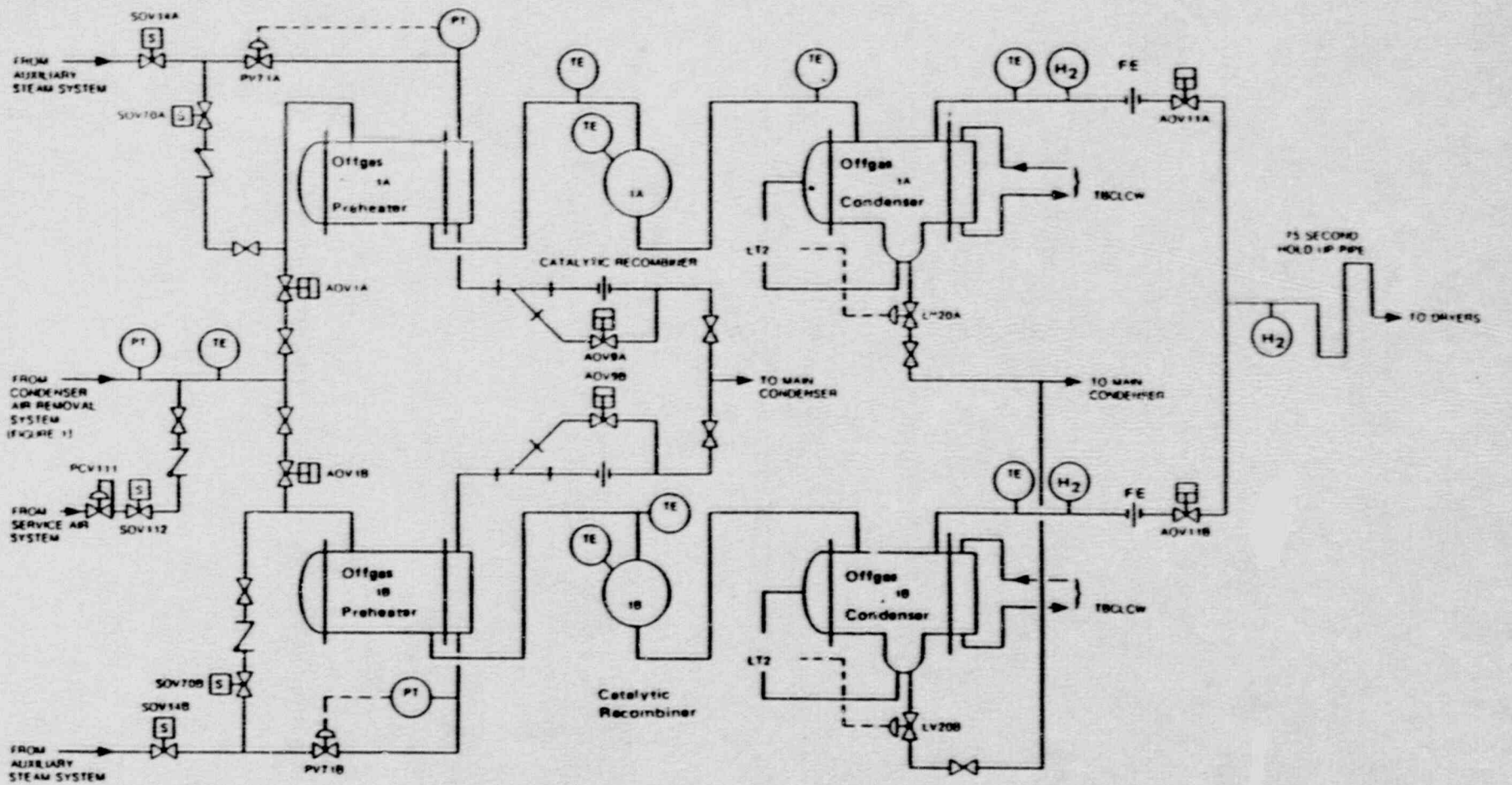

Figure 3-1

Title:

OFFGAS RECOMBINERS

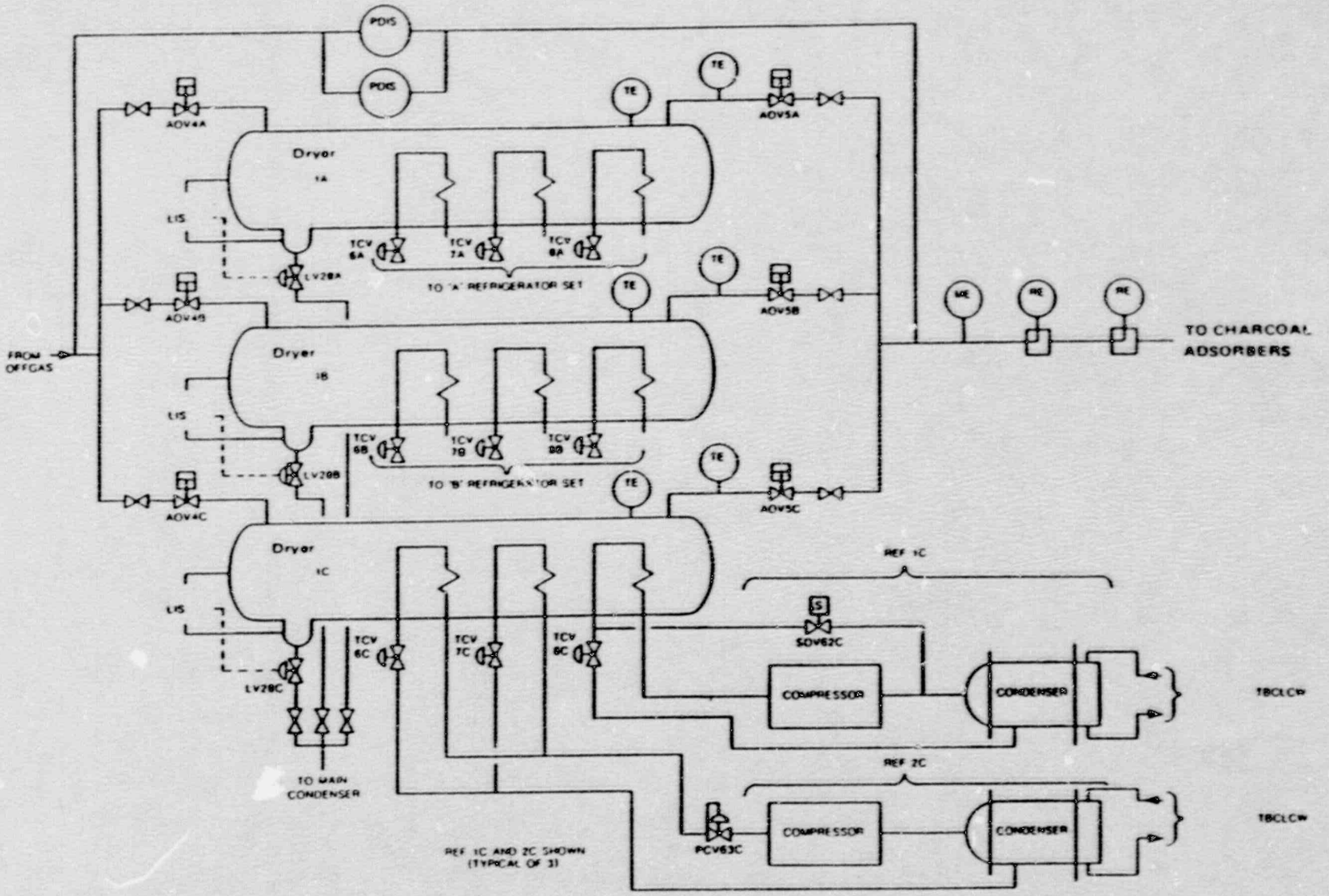

Figure 3-2

Title:

OFFGAS DRYERS

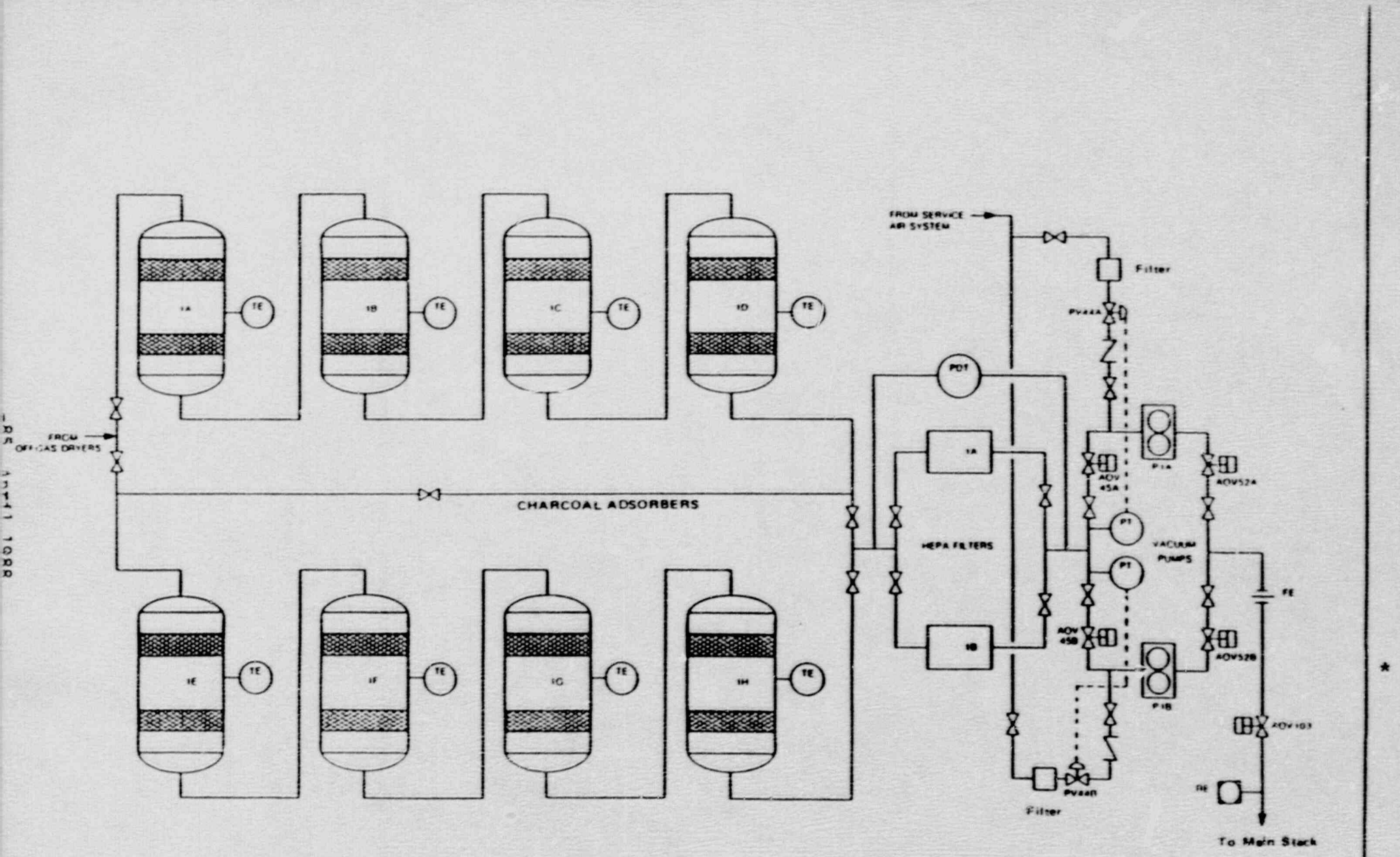

Figure 3-3

Title: OFFGAS SYSTEM
CHARCOAL ABSORBERS

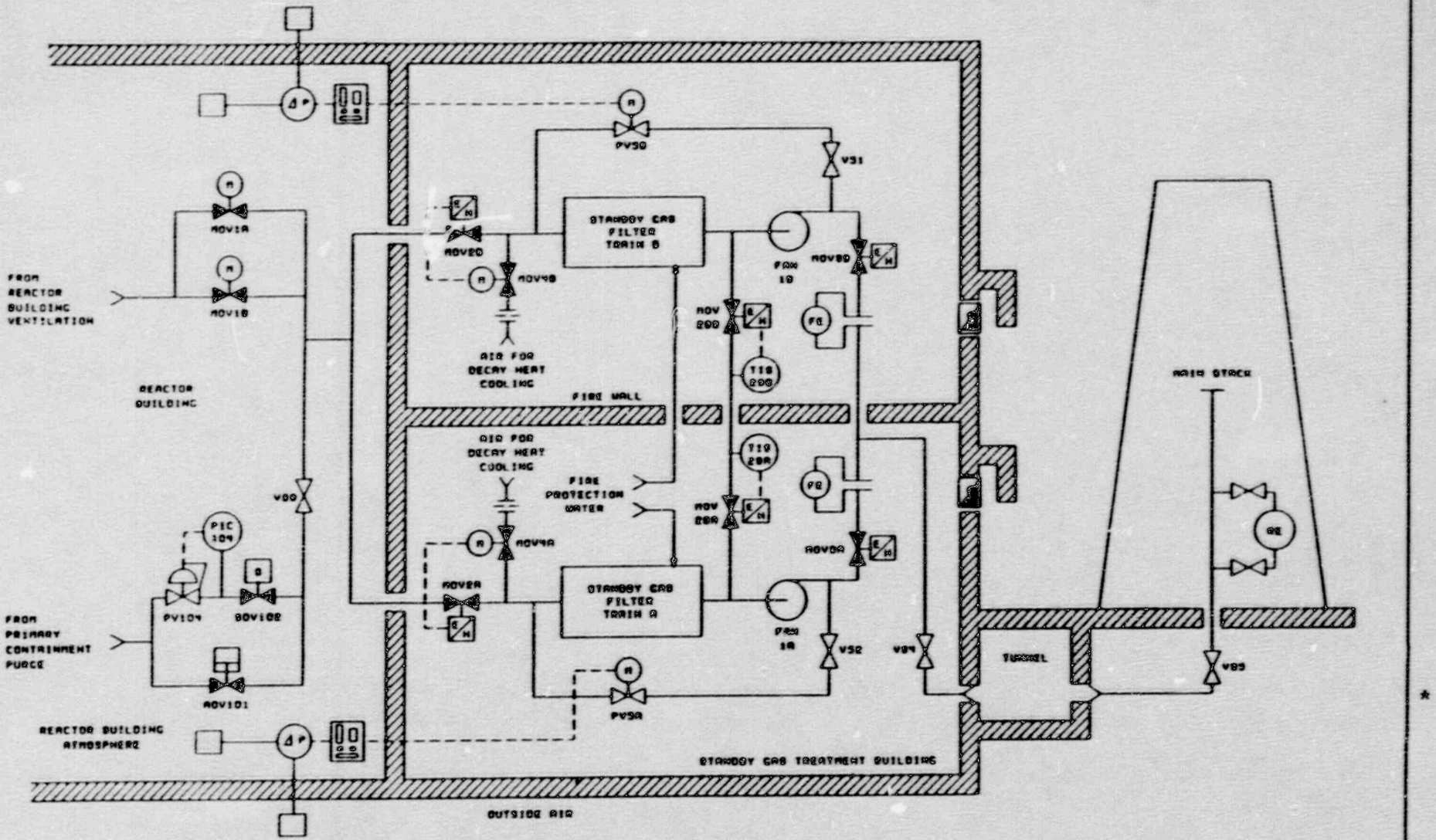

Figure 3-4

Title: STANDBY GAS TREATMENT SYSTEM

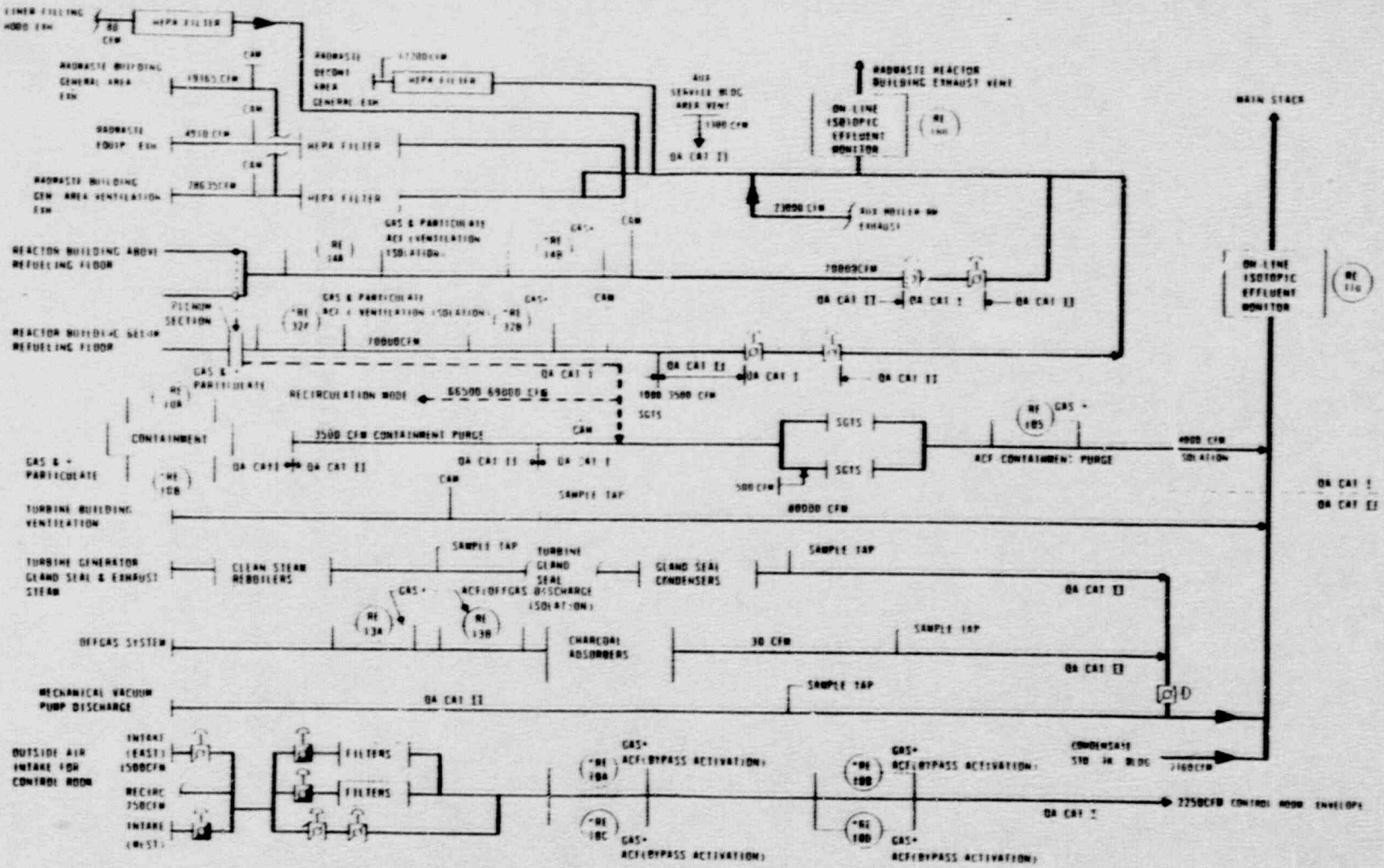

ACF = AUTOMATIC CONTROL FUNCTION
PAM = POST ACCIDENT MONITOR
* = PARTICULATE & IODINE SAMPLING CAPABILITY
CAM = CONTINUOUS AIRBORNE MONITOR
⊕ = SAFETY-RELATED MONITOR

FIGURE 3-5

GASEOUS RADIATION MONITORING

NIAGARA MOHAWK POWER CORPORATION
NINE MILE POINT-UNIT 2
FINAL SAFETY ANALYSIS REPORT

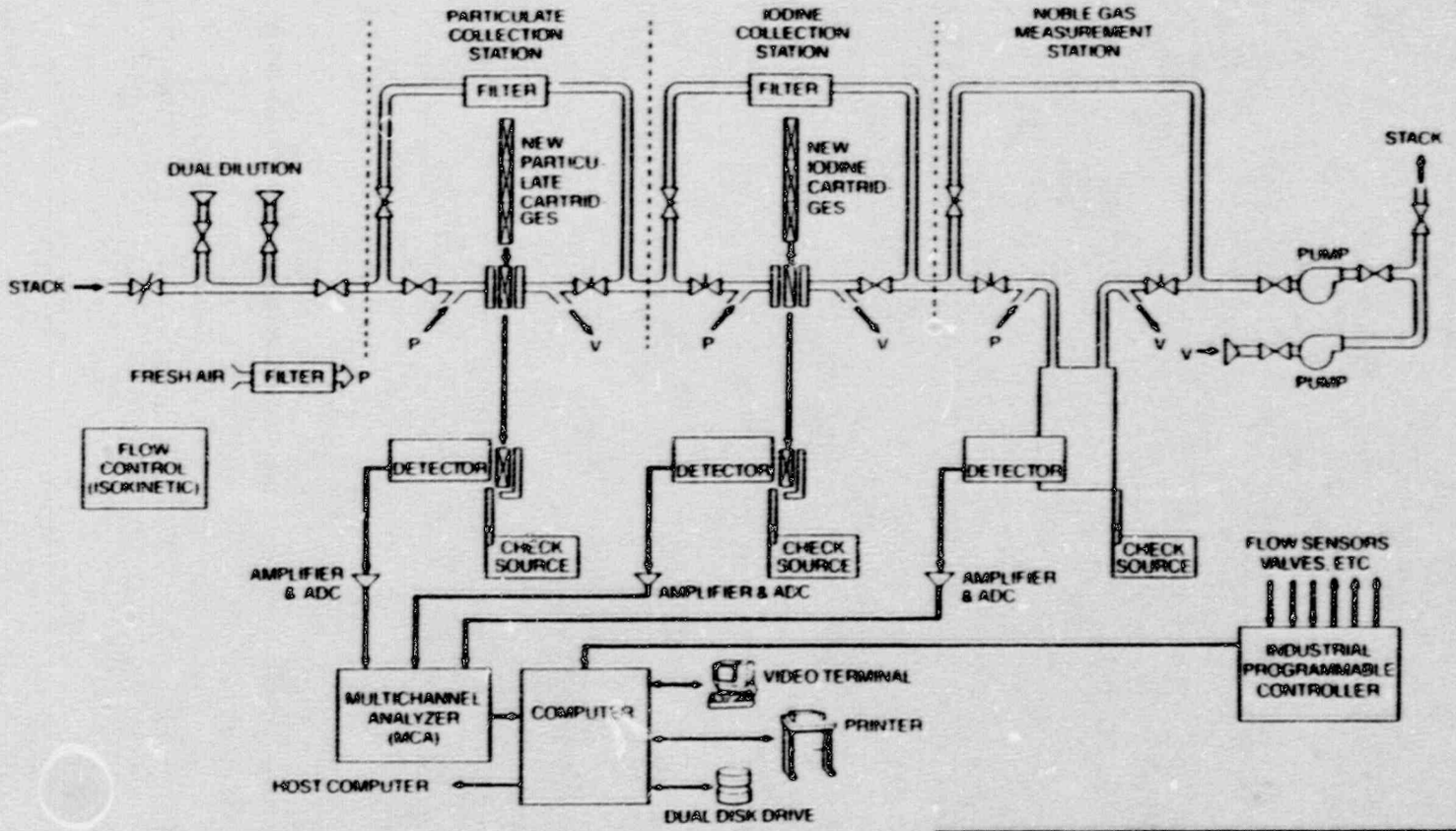

FIGURE 3-6

BLOCK DIAGRAM
TYPICAL GASEOUS EFFLUENT
MONITORING SYSTEM

NIAGARA MOHAWK POWER CORPORATION
NINE MILE POINT-UNIT 2
FINAL SAFETY ANALYSIS REPORT

4.0 URANIUM FUEL CYCLE

The "Uranium Fuel Cycle" is defined in 40 CFR Part 190.02 (b) as follows:

> "Uranium fuel cycle means the operations of milling of uranium ore, chemical conversion of uranium, isotopic enrichment of uranium, fabrication of uranium fuel, generation of electricity by a light-water-cooled nuclear power plant using uranium fuel, and reprocessing of spent uranium fuel, to the extent that these directly support the production of electrical power for public use utilizing nuclear energy, but excludes mining operations, operations at waste disposal sites, transportation of any radioactive material in support of these operations, and the reuse of recovered non-uranium special nuclear and by-product materials from the cycle."

Section 3/4.11.4 of the Technical Specifications requires that when the calculated doses associated with the effluent releases exceed twice the applicable quarter or annual limits, the licensee shall evaluate the calendar year doses and, if required, submit a Special Report to the NRC and limit subsequent releases such that the dose commitment to a real individual from all uranium fuel cycle sources is limited to 25 mrem to the total body or any organ (except the thyroid, which is limited to 75 mrem). This report is to demonstrate that radiation exposures to all real individuals from all uranium fuel cycle sources (including all liquid and gaseous effluent pathways and direct radiation) are less than the limits in 40 CFR Part 190. If releases that result in doses exceeding the 40 CFR 190 limits have occurred, then a variance from the NRC to permit such releases will be requested and if possible, action will be taken to reduce subsequent releases.

The report to the NRC shall contain:

1) Identification of all uranium fuel cycle facilities or operations within 5 miles of the nuclear power reactor units at the site, that contribute to the annual dose of the maximum exposed member of the public.
2) Identification of the maximum exposed member of the public and a determination of the total annual dose to this person from all existing pathways and sources of radioactive effluents and direct radiation.

The total body and organ doses resulting from radioactive material in liquid effluents from Nine Mile Point Unit 2 will be summed with the doses resulting from the releases of noble gases, radioiodines, and particulates. The direct dose components will also be determined by either calculation or actual measurement. Actual measurements will utilize environmental TLD dosimetry. Calculated measurements will utilize engineering calculations to determine a projected direct dose component. In the event calculations are used, the methodology will be detailed as required in Section 6.9.1.8 of the Technical Specifications. The doses from Nine Mile Point Unit 2 will be added to the doses to the maximum exposed individual that are contributed from other uranium fuel cycle operations within 5 miles of the site.

4.0 (Cont'd)

For the purpose of calculating doses, the results of the Environmental Monitoring Program may be included to provide more refined estimates of doses to a real maximum exposed individual. Estimated doses, as calculated from station effluents, may be replaced by doses calculated from actual environmental sample results.

4.1 Evaluation of Doses From Liquid Effluents

For the evaluation of doses to real members of the public from liquid effluents, the fish consumption and shoreline sediment ground dose will be considered. Since the doses from other aquatic pathways are insignificant, fish consumption and shoreline sediment are the only two pathways that will be considered. The dose associated with fish consumption may be calculated using effluent data and Regulatory Guide 1.109 methodology or by calculating a dose to man based on actual fish sample analysis data. The dose associated with shoreline sediment is based on the assumption that the shoreline would be utilized as a recreational area. This dose may be derived from liquid effluent data and Regulatory Guide 1.109 methodology or from actual shoreline sediment sample analysis data. 4

Equations used to evaluate fish and shoreline sediment samples are based on Regulatory Guide 1.109 methodology. Because of the sample medium type and the half-lives of the radionuclides historically observed, the decay corrected portions of the equations are deleted. This does not reduce the conservatism of the calculated doses but increases the simplicity from an evaluation point of view.

The dose from fish sample media is calculated as:

(1) $R_{wb} = \Sigma_i [C_{if} \times \mu \times 1000 \times D_{iwb} \times f]$

Where:

R_{wb} = The total dose to the whole body of an adult in mrem per year

C_{if} = The concentration of radionuclide i in fish samples in pCi/gram

μ = The consumption rate of fish for an adult (21 kg per year)

1000 = Grams per kilogram

D_{iwb} = The dose factor for radionuclide i for the whole body of an adult (R.G. 1.109, Table E-11)

f = The fractional portion of the year over which the dose is applicable.

(2) $R_l = \Sigma_i [C_{if} \times \mu \times 1000 \times D_{il} \times f]$

Where:

R_l = The total dose to the liver of an adult (maximum exposed organ) in mrem per year

C_{if} = The concentration of radionuclide i in fish samples in pCi/gram

μ = The consumption rate of fish for an adult (21 kg per year)

1000 = Grams per kilogram

D_{il} = The dose factor for radionuclide i for the liver of an adult (R.G. Table E-11)

f = The fractional portion of the year over which the dose is applicable.

The dose from shoreline sediment sample media is calculated as:

$$R_{wb} = \Sigma_i [C_{is} \times \mu \times 40{,}000 \times 0.3 \times D_{iwb} \times f]$$

and

$$R_{sk} = \Sigma_i [C_{is} \times \mu \times 40{,}000 \times 0.3 \times D_{isk} \times f]$$

Where:

R_{wb} = The total dose to the whole body of a teenager or adult (maximum exposed age group) in mrem per year | 4

R_{sk} = The total dose to the skin of a teenager or adult (maximum exposed age group) in mrem per year | 4

C_{is} = The concentration of radionuclide i in shoreline sediment in pCi/gram

μ = The usage factor. This is assumed as 67 hours per year by a teenager or adult | 4

40,000= The product of the assumed density of shoreline sediment (40 kilogram per square meter to a depth of 2.5 cm) times the number of grams per kilogram

0.3 = The shore width factor for a lake

D_{iwb}= The dose factor for radionuclide i for the total body (R.G. 1.109, Table E-6)

D_{isk}= The dose factor for radionuclide i for the skin (R.G. 1.109, Table E-6)

f = The fractional portion of the year over which the dose is applicable

NOTE: Because of the nature of the receptor location and the extensive fishing in the area, the critical individual may be a teenager or an adult. | 4

4.2 Evaluation of Doses From Gaseous Effluents

For the evaluation of doses to real members of the public from gaseous effluents, the pathways contained in section 3.0 of the ODCM will be considered and include ground deposition, inhalation, cows milk, goats milk, meat, and food products (vegetation). However, any updated field data may be utilized that concerns locations of real individuals, real time meteorological data, location of critical receptors, etc. Data from the most recent census and sample location surveys should be utilized. Doses may also be calculated from actual environmental sample media, as available. Environmental sample media data such as TLD, air sample, milk sample and vegetable (food crop) sample data may be utilized in lieu of effluent calculational data.

Doses to members of the public from the pathways contained in ODCM section 3.0 as a result of gaseous effluents will be calculated using the dose factors of Regulatory Guide 1.109 or the methodology of the ODCM, as applicable. Doses calculated from environmental sample media will utilize the methodologies found in Regulatory Guide 1.109.

4.3 Evaluation of Doses From Direct Radiation

Section 3.11.4.a of the Technical Specifications requires that the dose contribution as a result of direct radiation be considered when evaluating whether the dose limitations of 40 CFR 190 have been exceeded. Direct radiation doses as a result of the reactor, turbine and radwaste buildings and outside radioactive storage tanks (as applicable) may be evaluated by engineering calculations or by evaluating environmental TLD results at critical receptor locations, site boundary or other special interest locations. For the evaluation of direct radiation doses utilizing environmental TLDs, the critical receptor in question, such as the critical residence, etc., will be compared to the control locations. The comparison involves the difference in environmental TLD results between the receptor location and the average control location result.

4.4 Doses to Members of the Public Within the Site Boundary.

Section 6.9.1.8 of the Nine Mile Point Unit 2 Technical Specifications requires that the Semiannual Radioactive Effluent Release Report include an assessment of the radiation doses from radioactive liquid and gaseous effluents to members of the public due to their activities inside the site boundary as defined by Figure 5.1.3 of the specifications. A member of the public, as defined by the Technical Specifications, would be represented by an individual who visits the sites' Energy Information Center for the purpose of observing the educational displays or for picnicing and associated activities. 4

Fishing is a major recreational activity in the area and on the Site as a result of the salmonid and trout populations in Lake Ontario. Fishermen have been observed fishing at the shoreline near the Energy Information Center from April through December in all weather conditions. Thus, fishing is the major activity performed by members of the public within the site boundary. Based on the nature of the fishermen and undocumented observations, it is conservatively assumed that the maximum exposed individual spends an average of 8 hours per week fishing from the shoreline at a location between the Energy Information Center and the Unit 1 facility. This estimate is considered conservative but not necessarily excessive and accounts for occasions where individuals may fish more on weekends or on a few days in March of the year.

The pathways considered for the evaluation include the inhalation pathway with the resultant lung dose, the ground dose pathway with the resultant whole body and skin dose and the direct radiation dose pathway with the associated total body dose. The direct radiation dose pathway, in actuality, includes several pathways. These include: the direct radiation gamma dose to an individual from an overhead plume, a gamma submersion plume dose, possible direct radiation dose from the facility and a ground plane dose (deposition). Because the location is in close proximity to the site, any beta plume submersion dose is felt to be insignificant.

Other pathways, such as the ingestion pathway, are not applicable. In addition, pathways associated with water related recreational activities, other than fishing, are not applicable here. These include swimming, boating and wading which are prohibited at the facility.

4.4 (Cont'd)

The inhalation pathway is evaluated by identifying the applicable radionuclides (radioiodine, tritium and particulates) in the effluent for the appropriate time period. The radionuclide concentrations are then multiplied by the appropriate X/Q value, inhalation dose factor, air intake rate, and the fractional portion of the year in question. Thus, the inhalation pathway is evaluated using the following equation adapted from Regulatory Guide 1.109.

NOTE: The following equation is adapted from equations C-3 and C-4 of Regulatory Guide 1.109. Since many of the factors are in units of pCi/m^3, $m^3/sec.$, etc., and since the radionuclide decay expressions have been deleted because of the short distance to the receptor location, the equation presented here is not identical to the Regulatory Guide equations.

$$R = \sum_i [C_i F \; X/Q \; DFA_{ija} R_a t]$$

where:

R = the maximum dose for the period in question to the lung (j) for all radionuclides (i) for the adult age group (a) in mrem per time period. 4

C_i = The average concentration in the stack or vent release of radionuclide i in pCi/m^3 for the period in question.

F = Unit 2 average stack or vent flowrate in $m^3/sec.$

X/Q = The plume dispersion parameter for a location approximately 0.50 miles west of NMP-2 (The plume dispersion parameters are 9.6E-07 (stack) and 2.8E-06 (vent) and were obtained from the C.T. Main five year average annual X/Q tables. A X/Q value based on real time meteorology may also be utilized for the period in question, if desired. The vent X/Q (ground level) is ten times the listed 0.50 mile X/Q because the vent is approximately 0.3 miles from the receptor location. The stack (elevated) X/Q is conservative when based on 0.50 miles because of the close proximity of the stack and the receptor location.

DFA_{ija} = the inhalation dose factor for radionuclide i, the lung j, and adult age group a in mrem per pCi found on Table E-7 of Regulatory Guide 1.109.

R_a = annual air intake for individuals in age group a in M^3 per year (this value is 8,000 m^3 per year and was obtained from Table E-5 of Regulatory Guide 1.109).

t = fractional portion of the year for which radionuclide i was detected and for which a dose is to be calculated (in years).

4.4 (Cont'd)

The ground dose pathway (deposition) will be evaluated by obtaining at least one soil or shoreline sediment sample in the area where fishing occurs. The dose will then be calculated using the sample results, the time period in question, and the methodology based on Regulatory Guide 1.109 as presented in Section 4.1. The resultant dose may be adjusted for a background dose by subtracting the applicable off-site control soil or shoreline sediment sample radionuclide activities. In the event it is noted that fishing is not performed from the shoreline, but is instead performed in the water (i.e., the use of waders), then the ground dose pathway (deposition) will not be evaluated. 4

The direct radiation gamma dose pathway includes any gamma doses from an overhead plume, submersion in the plume, possible radiation from the facility and ground plane dose (deposition). This general pathway will be evaluated by average environmental TLD readings. At least two environmental TLDs will be utilized at one location in the approximate area where fishing occurs. The TLDs will be placed in the field on approximately the beginning of each calendar quarter and removed on approximately the end of each calendar quarter (quarter 2, 3, and 4).

The average TLD readings will be adjusted by the average control TLD readings. This is accomplished by subtracting the average quarterly control TLD value from the average fishing location TLD value. The applicable quarterly control TLD values will be utilized after adjusting for the appropriate time period (as applicable). In the event of loss or theft of the TLDs, results from a TLD or TLDs in the area may be utilized.

5.0 ENVIRONMENTAL MONITORING PROGRAM

5.1 Sampling Stations

The current sampling locations are specified in Table 5-1 and Figures 5.1-1, 5.1-2. The meteorological tower location is shown on Figure 5.1-1. The location is shown as TLD location #17. The Environmental Monitoring Program is a joint effort between the Niagara Mohawk Power Corporation and the New York Power Authority, the owners and operators of the Nine Mile Point Units 1 and 2 and the James A.FitzPatrick Nuclear Power Plants, respectively. Sampling locations are chosen on the basis of historical average dispersion or deposition parameters from both units. The environmental sampling location coordinates shown on Table 5-1 are based on the NMP-2 reactor centerline.

The average dispersion and deposition parameters for the three units have been calculated for a 5 year period, 1978 through 1982. The calculated dispersion or deposition parameters will be compared to the results of the annual land use census. If it is determined that a milk sampling location exists at a location that yields a significantly higher (e.g. 50%) calculated D/Q rate, the new milk sampling location will be added to the monitoring program within 30 days. If a new location is added, the old location that yields the lowest calculated D/Q may be dropped from the program after October 31 of that year.

5.2 Interlaboratory Comparison Program

Analyses shall be performed on samples containing known quantities of radioactive materials that are supplied as part of a Commission approved or sponsored Interlaboratory Comparison Program, such as the EPA Crosscheck Program. Participation shall be only for those media, e.g., air, milk, water, etc., that are included in the Nine Mile Point Environmental Monitoring Program and for which cross check samples are available. An attempt will be made to obtain a QC sample to program sample ratio of 5% or better. The Quality Control sample results shall be reported in the Annual Radiological Environmental Operating Report so that the Commission staff may evaluate the results. 4

Specific sample media for which EPA Cross Check Program samples are available include the following:

- gross beta in air particulate filters
- gamma emitters in air particulate filters
- I-131 in milk
- gamma emitters in milk
- gamma emitters in food product
- gamma emitters in water
- tritium in water
- I-131 in water

5.3 Capabilities for Thermoluminescent Dosimeters Used for Environmental Measurements

Required detection capabilities for thermoluminescent dosimeters used for environmental measurements required by the Technical Specifications are based on ANSI Standard N545, section 4.3. TLDs are defined as phosphors packaged for field use.

In regard to the detection capabilities for thermoluminescent dosimeters, only one determination is required to evaluate the above capabilities per type of TLD. Furthermore, the above capabilities may be determined by the vendor who supplies the TLDs. Required detection capabilities are as follows.

5.3.1 Uniformity shall be determined by giving TLDs from the same batch an exposure equal to that resulting from an exposure rate of 10 uR/hr during the field cycle. The responses obtained shall have a relative standard deviation of less than 7.5%. A total of at least 5 TLDs shall be evaluated.

5.3.2 Reproducibility shall be determined by giving TLDs repeated exposures equal to that resulting from an exposure rate of 10 uR/hr during the field cycle. The average of the relative standard deviations of the responses shall be less than 3.0%. A total of at least 4 TLDs shall be evaluated.

5.3.3 Dependence of exposure interpretation on the length of a field cycle shall be examined by placing TLDs for a period equal to at least a field cycle and a period equal to half the same field cycle in an area where the exposure rate is known to be constant. This test shall be conducted under approximate average winter temperatures and approximate average summer temperatures. For these tests, the ratio of the response obtained in the field cycle to twice that obtained for half the field cycle shall not be less than 0.85. At least 6 TLDs shall be evaluated.

5.3.4 Energy dependence shall be evaluated by the response of TLDs to photons for several energies between approximately 30 keV and 3 MeV. The response shall not differ from that obtained with the calibration source by more than 25% for photons with energies greater than 80 keV and shall not be enhanced by more than a factor of two for photons with energies less than 80 keV. A total of at least 8 TLDs shall be evaluated.

5.3.5 The directional dependence of the TLD response shall be determined by comparing the response of the TLD exposed in the routine orientation with respect to the calibration source with the response obtained for different orientations. To accomplish this, the TLD shall be rotated through at least two perpendicular planes. The response averaged over all directions shall not differ from the response obtained in the standard calibration position by more than 10%. A total of at least 4 TLDs shall be evaluated.

5.3.6 Light dependence shall be determined by placing TLDs in the field for a period equal to the field cycle under the four conditions found in ANSI N545, section 4.3.6. The results obtained for the unwrapped TLDs shall not differ from those obtained for the TLDs wrapped in aluminum foil by more than 10%. A total of at least 4 TLDs shall be evaluated for each of the four conditions.

5.3.7 Moisture dependence shall be determined by placing TLDs (that is, the phosphors packaged for field use) for a period equal to the field cycle in an area where the exposure rate is known to be constant. The TLDs shall be exposed under two conditions: (1) packaged in a thin, sealed plastic bag, and (2) packaged in a thin, sealed plastic bag with sufficient water to yield observable moisture throughout the field cycle. The TLD or phosphor, as appropriate, shall be dried before readout. The response of the TLD exposed in the plastic bag containing water shall not differ from that exposed in the regular plastic bag by more than 10%. A total of at least 4 TLDs shall be evaluated for each condition.

5.3.8 Self irradiation shall be determined by placing TLDs for a period equal to the field cycle in an area where the exposure rate is less than 10 uR/hr and the exposure during the field cycle is known. If necessary, corrections shall be applied for the dependence of exposure interpretation on the length of the field cycle (ANSI N545, section 4.3.3). The average exposure inferred from the responses of the TLDs shall not differ from the known exposure by more than an exposure equal to that resulting from an exposure rate of 10 uR/hr during the field cycle. A total of at least 3 TLDs shall be evaluated.

Nine Mile Point Nuclear Station
Radiological Environmental Monitoring Program
Sampling Locations

Table 5.1

Type of Sample	*Map Location	Collection Site (Env. Program No.)	Location
Radioiodine and Particulates (air)	1	Nine Mile Point Road north (R-1)	1.8 mi @ 88° E
Radioiodine and Particulates (air)	2	Co. Rt. 29 & Lake Road (R-2)	1.1 mi @ 104° ESE
Radioiodine and Particulates (air)	3	Co. Rt. 29 (R-3)	1.5 mi @ 132° SE
Radioiodine and Particulates (air)	4	Village of Lycoming, NY (R-4)	1.8 mi @ 143° SE
Radioiodine and Particulates (air)	5	Montario Point Road (R-5)	16.4 mi @ 42° NE
Direct Radiation (TLD)	6	North Shoreline Area (75)	0.1 mi @ 5° N
Direct Radiation (TLD)	7	North Shoreline Area (76)	0.1 mi @ 25° NNE
Direct Radiation (TLD)	8	North Shoreline Area (77)	0.2 mi @ 45° NE
Direct Radiation (TLD)	9	North Shoreline Area (23)	0.8 mi @ 70° ENE
Direct Radiation (TLD)	10	JAF East Boundary (78)	1.0 mi @ 90° E
Direct Radiation (TLD)	11	Rt. 29 (79)	1.1 mi @ 115° ESE
Direct Radiation (TLD)	12	Rt. 29 (80)	1.4 mi @ 133° SE
Direct Radiation (TLD)	13	Miner Road (81)	1.6 mi @ 159° SSE
Direct Radiation (TLD)	14	Miner Road (82)	1.6 mi @ 181° S
Direct Radiation (TLD)	15	Lakeview Road (83)	1.2 mi @ 200° SSW
Direct Radiation (TLD)	16	Lakeview Road (84)	1.1 mi @ 225° SW
Direct Radiation (TLD)	17	Site Meteorological Tower (7)	0.7 mi @ 250° WSW
Direct Radiation (TLD)	18	Energy Information Center (18)	0.4 mi @ 265° W

*Map - See Figures 5.1-1 and 5.1-2

Nine Mile Point Nuclear Station
Radiological Environmental Monitoring Program
Sampling Locations

Table 5.1
(Continued)

Type of Sample	* Map Location	Collection Site (Env. Program No.)	Location
Direct Radiation (TLD)	19	North Shoreline (85)	0.2 mi @ 294° WNW
Direct Radiation (TLD)	20	North Shoreline (86)	0.1 mi @ 315° NW
Direct Radiation (TLD)	21	North Shoreline (87)	0.1 mi @ 341° NNW
Direct Radiation (TLD)	22	Hickory Grove Road (88)	4.5 mi @ 97° E
Direct Radiation (TLD)	23	Leavitt Road (89)	4.1 mi @ 111° ESE
Direct Radiation (TLD)	24	Rt. 104 (90)	4.2 mi @ 135° SE
Direct Radiation (TLD)	25	Rt. 51A (91)	4.8 mi @ 156° SSE
Direct Radiation (TLD)	26	Maiden Lane Road (92)	4.4 mi @ 183° S
Direct Radiation (TLD)	27	Co. Rt. 53 (93)	4.4 mi @ 205° SSW
Direct Radiation (TLD)	28	Co. Rt. 1 (94)	4.7 mi @ 223° SW
Direct Radiation (TLD)	29	Lake Shoreline (95)	4.1 mi @ 237° WSW
Direct Radiation (TLD)	30	Phoenix, NY Control (49)	19.8 mi @ 170° S
Direct Radiation (TLD)	31	S.W. Oswego, Control (14)	12.6 mi @ 226° SW
Direct Radiation (TLD)	32	Scriba, NY (96)	3.6 mi @ 199° SSW
Direct Radiation (TLD)	33	Alcan Aluminum, Rt. 1A (58)	3.1 mi @ 220° SW
Direct Radiation (TLD)	34	Lycoming, NY (97)	1.8 mi @ 143° SE
Direct Radiation (TLD)	35	New Haven, NY (56)	5.3 mi @ 123° ESE
Direct Radiation (TLD)	36	W. Boundary, Bible Camp (15)	0.9 mi @ 237° WSW
Direct Radiation (TLD)	37	Lake Road (98)	1.2 mi @ 101° E
Surface Water	38	OSS Inlet Canal (NA)	.6 mi @ 235° SW
Surface Water	39	JAFNPP Inlet Canal (NA)	0.5 mi @ 70° ENE

*Map - See Figures 5.1-1 and 5.1-2
(NA) - Not applicable

Nine Mile Point Nuclear Station
Radiological Environmental Monitoring Program
Sampling Locations

Table 5.1
(Continued)

Type of Sample	*Map Location	Collection Site	Env. Program No.	Location
Shoreline Sediment	40	Sunset Bay Shoreline (NA)		1.5 mi @ 80° E
Fish	41	NMP Site Discharge Area(NA)		0.3 mi @ 315° NW and/or
Fish	42	NMP Site Discharge Area(NA)		0.6 mi @ 55° NE
Fish	43	Oswego Harbor Area (NA)		6.2 mi @ 235° SW
Milk	44	Milk Location #50		9.3 mi @ 93° E
Milk	45	Milk Location #7		5.5 mi @ 107° ESE
Milk	46	Milk Location #16		5.9 mi @ 190° S
Milk	47	Milk Location #65		17.0 mi @ 220° SW
Food Product	48	Produce Location #6** (Bergenstock)		1.9 mi @ 141° SE
Food Product	49	Produce Location #1** (J. Parkhurst)		1.8 mi @ 96° E
Food Product	50	Produce Location #2** (Vitullo) (NA)		1.9 mi @ 101° E
Food Product	51	Produce Location #5** (C. S. Parkhurst)		1.5 mi @ 114° ESE
Food Product	52	Produce Location #3** (C. Narewski)		1.6 mi @ 84° ESE
Food Product	53	Produce Location #4** (S. Morris) (NA)		2.0 mi @ 110° ESE
Food Product (CR)	54	Produce Location #7** (Mc Millen) (NA)		15.0 mi @ 223° SW

Nine Mile Point Nuclear Station
Radiological Environmental Monitoring Program
Sampling Locations

Table 5.1
(Continued)

Type of Sample	Map Location*	Collection Site	Env. Program No.	Location
Food Product (CR)	55	Produce Location #8** (Denman) (NA)		12.6 mi @ 225° SW
Food Product	56	Produce Location #9** (O'Connor) (NA)		1.6 mi @ 171° S
Food Product	57	Produce Location #10** (C. Lawton) (NA)		2.2 mi @ 123° ESE
Food Product	58	Produce Location #11** (C.R. Parkhurst) (NA)		2.0 mi @ 112° ESE
Food Product	59	Produce Location #12** (Johnson) (NA)		1.9 mi @ 103° ESE

* Map - See Figures 5.1-1 and 5.1-2
** Food Product samples need not necessarily be collected from all listed locations. Collected samples will be of the highest calculated site average D/Q.
(N/A) = not applicable
CR = Control Result (location)

6.0 DISCUSSION OF TECHNICAL SPECIFICATION REFERENCES

Section 3.12.1 of the Technical Specifications, Table 3.12-1 (Radiological Environmental Monitoring Program) references several footnotes to discussions in the ODCM. The following ODCM discussions are an attempt, on the part of the Commission and the licensee, to further clarify several of the requirements of Table 3.12-1.

6.1 Table 3.12-1, Footnote g

Representative composite sample aliquots are obtained from sampling equipment that will obtain sample aliquots over short intervals. An example of a short interval is once per hour. Intervals of less than one hour are also acceptable. In addition, in order to be representative, the aliquot volume must be consistent over the required composite period. Sub-intervals may be designed for sample collection as long as each sub-interval's contribution to the final composite volume is proportional to the duration of the sub-interval. For example, a monthly composite may consist of equal contributions from four weekly sub-intervals, plus a contribution 3/7 of that volume from a fifth weekly sub-interval, to be representative of the monthly composite period.

6.2 Table 3.12-1, Footnote h

Ground water in the vicinity of the site is not currently a drinking water pathway. The hydraulic gradient and recharge properties in the vicinity of the site currently cause ground water to flow in a northerly direction to Lake Ontario. The results of such hydraulic gradient and recharge property studies are documented in the NMP-2 FSAR. Thus, any ground water utilized for drinking water or irrigation purposes is not affected by the site and therefore sampling of ground water is not currently required.

In the event of significant seismic activity, however, the hydraulic gradient and recharge properties in the vicinity of the site may change. In this case it is possible that ground water utilized for drinking water or irrigation purposes may have a potential to become contaminated. Thus, in the event of a significant seismic occurrence, samples from one or two sources will be obtained as noted in Table 3.12-1, Section 3.b of the Technical Specifications until hydraulic investigations conclude that the previous hydraulic gradient and recharge property studies are unchanged. Investigations that conclude that the hydraulic gradient and recharge properties have changed and that there is a potential for contamination of ground water used for drinking water and/or irrigation will result in continuing any applicable ground water sampling.

6.3 Table 3.12-1, footnote i

Currently, there are no drinking water sources (from Lake Ontario) that can be significantly affected by the site under normal operating conditions. The closest drinking water source is near the City of Oswego. This source is located in an "up-current" direction for the majority of the time based on local Lake Ontario currents. In addition, the source is significantly affected by the "plume" from the Oswego River which enters Lake Ontario at a point between the site and the source. The source is located approximately eight miles to the west of the site.

Other drinking water sources within 50 miles of the site range from 20 to 50 miles. These sources are beyond any significant influence of the site.

In the event a drinking water source (other than the source near the City of Oswego) is established within 10 miles of the site (current miles in contrast to air miles), then the new source will be evaluated for any significant dose effects based on dilution criteria. Sources found to be significantly affected by the site will be added to the Radiological Environmental Monitoring Program required by Table 3.12-1, section 3.C of the Technical Specifications.

6.4 Table 3.12-1, footnote 1

Considering the shoreline topography and land development within 10 miles of the site, and the dilution factors beyond 10 miles, only major irrigation projects where food products are irrigated with Lake Ontario water need be considered for specification 4.C of Table 3.12-1.

Major irrigation projects are defined as agricultural projects where food products for human consumption are grown and irrigation water from Lake Ontario is used frequently. Major irrigation projects are not considered to be small private gardens located on the lake shore at summer residences or year-round residences where occasional use of lake water during times of draught has been observed. Major projects include pumps and piping systems, either permanent or temporary, that supply lake water to agricultural projects on a frequent basis. In-frequent use of lake water is not considered to have a significant effect on food products. Therefore, such a situation does not constitute a major irrigation project.

Currently, no major irrigation projects exist within 10 miles of the site (May 1986).

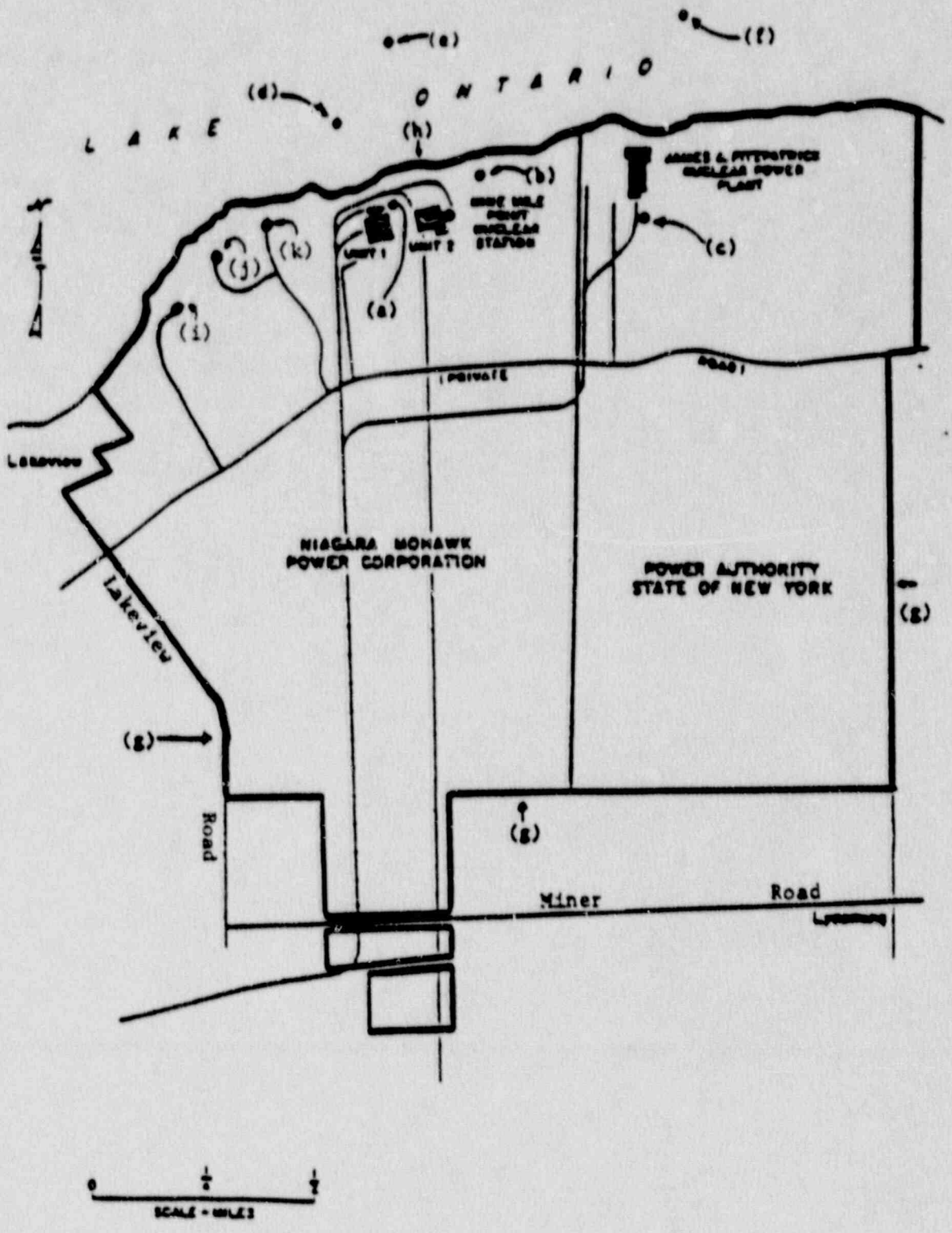

TECHNICAL SPECIFICATIONS
FIGURE 5.1.3-1 SITE BOUNDARIES

NOTES TO FIGURE 5.1.3-1

(a) NMP1 Stack (height is 350')
(b) NMP2 Stack (height is 430')
(c) JAFNPP Stack (height is 38)
(d) NMP1 Radioactive Liquid Discharge (Lake Ontario, bottom)
(e) NMP2 Radioactive Liquid Discharge (Lake Ontario, bottom)
(f) JAFNPP Radioactive Liquid Discharge (Lake Ontario, bottom)
(g) Site Boundary
(h) Lake Ontario Shoreline
(i) Meteorological Tower
(j) Training Center
(k) Energy Information Center

Additional Information:

- NMP2 Reactor Building Vent is located 187 feet above ground level
- JAFNPP Reactor and Turbine Building Vents are located 173 feet above ground level
- JAFNPP Radwaste Building Vent is 112 feet above ground level
- The Energy Information Center and adjoining picnic area are UNRESTRICTED AREAS within the SITE BOUNDARY that are accessible to MEMBERS OF THE PUBLIC
- Lake Road, a private road, is an UNRESTRICTED AREA within the SITE BOUNDARY accessible to MEMBERS OF THE PUBLIC