Long
Island
Power
Authority

Shoreham Nuclear Power Station
P.O. Box 628
North Country Road
Wading River, N.Y. 11792

JUN 1 1 1993

LSNRC-2082

U. S. Nuclear Regulatory Commission
ATTN: Document Control Desk
Washington, D.C. 20555

Licensee Event Report 93-001
Shoreham Nuclear Power Station - Unit 1
Docket No. 50-322

Gentlemen:

In accordance with 10CFR50.73, enclosed is Shoreham Nuclear Power Station's Licensee Event Report 93-001.

Should you have any questions or require additional information, please do not hesitate to call my office.

Very truly yours,

L. M. Hill
Resident Manager

RAP/ab
Enclosure

cc: C. L. Pittiglio
T. T. Martin
R. Nimitz

150196

IE22 1/1

NRC FORM 366 (6-89)

U.S. NUCLEAR REGULATORY COMMISSION

LICENSEE EVENT REPORT (LER)

APPROVED OMB NO. 3150-0104
EXPIRES: 4/30/92

ESTIMATED BURDEN PER RESPONSE TO COMPLY WITH THIS INFORMATION COLLECTION REQUEST: 50.0 HRS. FORWARD COMMENTS REGARDING BURDEN ESTIMATE TO THE RECORDS AND REPORTS MANAGEMENT BRANCH (P-530), U.S. NUCLEAR REGULATORY COMMISSION, WASHINGTON, DC 20555, AND TO THE PAPERWORK REDUCTION PROJECT (3150-0104), OFFICE OF MANAGEMENT AND BUDGET, WASHINGTON, DC 20503.

FACILITY NAME (1)	DOCKET NUMBER (2)	PAGE (3)
Shoreham Nuclear Power Station Unit 1	0 5 0 0 0 3 2 2	1 OF 0 8

TITLE (4) Movement of Heavy Load on Refuel Floor Which Was Outside Design Basis of the Plant

EVENT DATE (5)			LER NUMBER (6)			REPORT DATE (7)			OTHER FACILITIES INVOLVED (8)	
MONTH	DAY	YEAR	YEAR	SEQUENTIAL NUMBER	REVISION NUMBER	MONTH	DAY	YEAR	FACILITY NAMES	DOCKET NUMBER(S)
0 4	2 9	9 3	9 3	— 0 0 1	— 0 0	0 6	1 1	9 3	None	0 5 0 0 0
										0 5 0 0 0

THIS REPORT IS SUBMITTED PURSUANT TO THE REQUIREMENTS OF 10 CFR §: (Check one or more of the following) (11)

OPERATING MODE (9)						
	20.402(b)	20.405(c)	50.73(a)(2)(iv)	73.71(b)
POWER LEVEL (10) 0 0 0	20.405(a)(1)(i)	50.36(c)(1)	50.73(a)(2)(v)	73.71(c)
	20.405(a)(1)(ii)	50.36(c)(2)	50.73(a)(2)(vii)	OTHER (Specify in Abstract below and in Text, NRC Form 366A)
	20.405(a)(1)(iii)	50.73(a)(2)(i)	50.73(a)(2)(viii)(A)	
	20.405(a)(1)(iv)	X 50.73(a)(2)(ii)	50.73(a)(2)(viii)(B)	
	20.405(a)(1)(v)	50.73(a)(2)(iii)	50.73(a)(2)(x)	

LICENSEE CONTACT FOR THIS LER (12)

NAME	TELEPHONE NUMBER (AREA CODE)
Robert A. Pauly, Operational Compliance Engineer	5 1 6 9 2 9 - 1 8 3 0 0

COMPLETE ONE LINE FOR EACH COMPONENT FAILURE DESCRIBED IN THIS REPORT (13)

CAUSE	SYSTEM	COMPONENT	MANUFACTURER	REPORTABLE TO NPRDS	CAUSE	SYSTEM	COMPONENT	MANUFACTURER	REPORTABLE TO NPRDS
B			F 1 7 5	N					

SUPPLEMENTAL REPORT EXPECTED (14)		EXPECTED SUBMISSION DATE (15)	MONTH	DAY	YEAR
YES (If yes, complete EXPECTED SUBMISSION DATE)	X NO				

ABSTRACT (Limit to 1400 spaces, i.e., approximately fifteen single-space typewritten lines) (16)

On 4/29/93, the Shoreham Nuclear Power Station was operated outside of its design basis when a heavy load was moved in the vicinity of the Spent Fuel Pool (SFP) using a lifting attachment that did not comply with NUREG-0612. This condition violated a commitment in the Shoreham Decommissioning Plan and is reportable per 10CFR50.73(a)(2)(ii). The cause of this event was the failure to consider this lifting attachment in the original reviews performed pursuant to NUREG-0612 which identified heavy loads that would be handled over or near fuel or over safety-related equipment. The heavy load was a Refueling Jib Crane (RJC). It was moved by the Reactor Building Polar Crane using a vendor-supplied lifting attachment. In addition, this lifting attachment failed while the jib crane was suspended over the Refuel Floor causing the jib crane to fall to the floor and land between the Reactor Building hatchway and the SFP. Corrective actions included an inspection of the refuel floor, testing and inspection of the Polar Crane, procedure revisions to require Engineering, QA, management and safety representatives to be present during heavy load lifts near the SFP, procedure revisions to require rigging sketches to be prepared and to be reviewed for compliance with NUREG-0612, counseling of the personnel involved and disciplinary action.

PLANT AND SYSTEM IDENTIFICATION

General Electric - Boiling Water Reactor

Energy Industry Identification System (EIIS) codes are identified in the text as [xx].

IDENTIFICATION OF THE EVENT

Refueling Jib Crane 1T31-CRN-008A was moved in the vicinity of the Spent Fuel Pool (SFP) using its vendor-supplied lifting eye. This lifting eye did not meet the guidelines of NUREG-0612. Since the Long Island Power Authority has committed to complying with NUREG-0612 in the vicinity of the SFP during plant decommissioning, the plant was operated outside its design basis.

Event Date: 04/29/93

Report Date: 06/11/93

CONDITIONS PRIOR TO THE EVENT

560 fuel assemblies are stored in the Spent Fuel Pool. Decommissioning and decontamination of the site are in progress.

DESCRIPTION OF THE EVENT

Refueling Jib Crane, 1T31-CRN-008A, which was located near the southwest corner of the Spent Fuel Pool, had to be moved to a new location away from the pool in order to perform maintenance/adjustment of the crane's boom rotation assembly. On 4/29/93, the jib crane was moved with the auxiliary hook of the Reactor Building Polar Crane using previously-established safe load paths and Station Procedure SP 35X001.01, Handling of Heavy Loads with the Reactor Building Polar Crane. The auxiliary hook was connected to the jib crane's vendor-supplied lifting eye. (The lifting eye assembly, which is clamped onto a channel welded onto the top of the boom I-beam, is shown in the attached sketches.) Prior to relocation, to avoid moving the boom out over the fuel pool, the lifting eye assembly was moved from its balanced lift location approximately 10 to 12 inches towards the boom end. To compensate for the unbalanced configuration, a plasma arc welding machine (940 lbs.) was suspended from the jib crane hoist. The jib crane boom was slightly off of the horizontal.

At approximately 1155 hours, which was about 30 minutes into the jib crane relocation, while the jib crane was not in motion, the lifting eye assembly failed. The lifting eye assembly appeared to shift approximately 12" to 18" out towards the end of the boom which allowed the boom to tilt further from the horizontal and the mast to drop down and strike the easternmost new fuel vault floor plug, causing a spall in the plug approximately 6" square and 1/2" deep. The boom then slid through the lifting eye assembly allowing the jib

crane mast to fall onto the floor with the boom in a vertical position. The auxiliary hook, with the lifting eye still attached, sprung upward. The plasma arc welding machine, which was connected to the jib crane trolley and being used as a counterweight, swung along the axis of the boom towards the mast pulling the hoist/trolley assembly down the boom. The plasma arc machine struck and pinned a man to the floor and against the handrail adjacent to the Reactor Building hatchway. The lifting eye was removed from the auxiliary hook and the auxiliary hook was then used to lift the plasma arc machine off of the man and he was able to get up on his own power.

Following the jib crane accident, an engineering analysis was performed to determine the failure mechanism for the lifting eye and to determine whether or not the lifting eye conformed to the guidelines of NUREG-0612, Control of Heavy Loads at Nuclear Power Plants. The investigation was complicated by the fact that the jib crane manufacturer is no longer in business and because the architect-engineer for SNPS did not have any documentation on the design of the lifting eye. This investigation concluded, on May 12, 1993, that the lifting eye assembly did not conform to Section 5.1.6.(3)(b) of NUREG-0612. This conclusion is based on the fact that the lifting eye is a non-redundant or non-dual lift point system with a safety factor less than 10 times the maximum combined concurrent static and dynamic load.

The Long Island Power Authority committed to meeting NUREG-0612 guidelines when using the Reactor Building Polar Crane to handle heavy loads in the vicinity of the Spent Fuel Storage Pool (LIPA letter LSNRC-1874 dated December 6, 1991, from Stanley B. Klimberg to U. S. Nuclear Regulatory Commission, subject: Additional Information In Support of the Decommissioning Plan for Shoreham). Therefore, use of this lifting eye assembly to move the jib crane is a condition which was outside the design basis of the plant and is reportable per 10CFR50.73(a)(2)(ii).

CAUSE OF THE EVENT

The primary cause of operating outside the plant design basis was the failure to identify this refueling jib crane as a heavy load that could be handled over fuel or over safety related equipment in the original reviews performed pursuant to NUREG-0612. This jib crane is limited to a load of 1000 pounds and, therefore, does not handle heavy loads. However, this jib crane has the ability to be moved to various locations around the fuel pool. Thus, this jib crane should have been considered a heavy load itself, and its lifting eye assembly should have been evaluated in the NUREG-0612 review. This conclusion is based on a thorough review of the documents provided by the previous licensee for Shoreham, including engineering, licensing, construction, maintenance and quality assurance documentation.

Following the original NUREG-0612 review described above, Station Procedure SP35.001.01 Handling of Heavy Loads with the Reactor Building Polar Crane, was revised in 1984 by the addition of a section which covered movement of the jib crane. (SP 35.001.01 is a procedure which is supposed to conform to the requirements of NUREG-0612.) This new section specified that the jib crane's lifting eye be used, even though the lifting eye had not been reviewed for compliance with NUREG-0612.

Later, the NRC Staff and its consultant, EG&G Idaho, Inc., reviewed the responses to NUREG-0612 of the previous licensee for Shoreham. This review is documented in the Safety Evaluation Report related to the operation of Shoreham Nuclear Power Station, Unit No. 1 (NUREG-0420, Supplement No. 8, December 1984). The first response (Phase I, based on Section 5.1.1 of NUREG-0612) was to identify the load handling equipment within the scope of NUREG-0612 and describe the associated general load handling operations. The NRC Staff concluded that Phase I of NUREG-0612 for Shoreham had been completed acceptably. Additionally, the NRC Staff concluded that no additional Phase II work was necessary for Shoreham, and that the issue of control of heavy loads was resolved. (Phase II work was to show that either single-failure-proof handling equipment was not needed or that single-failure-proof equipment had been provided.)

Prior to the Shoreham license being acquired by LIPA, the issue of control of heavy loads was resolved, and the steps for moving the jib crane were included in the procedure for handling heavy loads. Thus, LIPA was not aware of any need to evaluate the jib crane lifting eye assembly for compliance with NUREG-0612. In planning the move of the jib crane from its installed location for maintenance, LIPA considered this jib crane as an intact vendor-supplied component with an integral lifting device designed to allow lifting and movement of the jib crane to various locations.

DESCRIPTION OF THE COMPONENT FAILURE

Failure of the lifting eye assembly is not reportable under 10CFR50.73. Also, a potential design deficiency in this assembly is not reportable under 10CFR21. However, 10CFR50.73(b)(2)(ii)(D) and (E) indicates that component failures related to the reportable event be described. Therefore, a description of the failure of the lifting eye assembly has been included in this Licensee Event Report to ensure that the Commission is adequately informed of this condition.

It was concluded that the principle cause for the failure was inadequacies associated with the design of the lifting eye assembly. The assembly's extreme sensitivity to fabrication tolerances and a lack of detailed installation instructions contributed to the assembly being unforgiving to installation alignment. This could have allowed the lifting eye assembly to be misaligned, relative to the upper boom flange centerline, when it was moved from its balanced lift location at the start of the job. Misalignment or excess tolerances could cause the end of the MC-7 channel to come in contact with the underside of the upper boom flange which would ultimately fail the channel. (One of the MC-7 channels was found to be permanently deformed.) This scenario is illustrated in sketch #2.

Contributing causes to the component failure include failure to follow procedures, e.g., unauthorized movement of the lifting eye and installation of a 940 lb. counterweight, inadequate work planning, an inadequate procedure, and poor supervisory judgment in allowing the work to continue rather than stopping the job and initiating procedure changes.

ANALYSIS OF THE EVENT

This event, coupled with the failure of the lifting eye assembly, could have had serious safety consequences for both personnel and station equipment. The jib crane fell onto the Refuel Floor between the Reactor Building hatchway and the Spent Fuel Pool. If the jib crane boom had been oriented in a north-south direction rather than east-west, the crane may have fallen down the hatchway (which would have meant a 135 foot fall) or may have fallen into the Spent Fuel Pool. Another possibility is that the jib crane may have fallen into the fuel handling platform. The equipment in the Spent Fuel Pool and the fuel handling platform are the only safety-related equipment that could have been damaged by the jib crane fall. Shoreham does not have any equipment which is needed to achieve safe shutdown or continue decay heat removal.

If the jib crane had fallen into the Spent Fuel Pool, then it is possible that the fuel pool liner, fuel storage racks, or fuel assemblies would have been damaged. Since the Shoreham fuel is only slightly irradiated (approximately 2 Effective Full Power Days), this potential damage to the fuel assemblies would not have resulted in a significant radiation release. This assessment is based on the Defueled Safety Analysis Report's "Worst Case Fuel Damage Event." This worst case scenario postulated the release of the gaseous activity of the entire core and resulted in an Exclusion Area Boundary dose of 1.08 mrem to the whole body and 93.9 mrem to the skin. The actual doses resulting from the jib crane falling on the spent fuel racks would be a small fraction of these. While an analysis to determine the change in K-effective of the fuel due to a jib crane drop has not been performed, it is unlikely that a critical arrangement of fuel could be produced. The fuel assemblies are only stored in alternate fuel rack rows, with the 6 rows closest to jib crane being empty. Finally, damage to the fuel pool liner would not have allowed the pool to drain significantly since the space between the liner and the pool walls and floor is relatively small.

Personnel safety was another major concern in this event. One person was slightly injured but was able to return to work the day of the accident.

CORRECTIVE ACTIONS

1. Any future jib crane movements across the Refuel Floor will use NUREG-0612 qualified rigging, or use a new lifting device which meets the guidelines of NUREG-0612 and has been load tested away from the Spent Fuel Storage Pool.

2. Prior to moving heavy loads across the Refuel Floor which involve originally installed equipment, LIPA will reconfirm that a safe load path and appropriate instructions are in SP 35X001.01 and that Shoreham licensing correspondence and/or engineering documentation have addressed NUREG-0612 considerations for these loads.

3. Prior to moving heavy loads across the Refuel Floor which were <u>not</u> previously considered in a past NUREG-0612 review, LIPA will ensure that a safe load path and appropriate instructions are specified in SP 35X001.01, and that either a load drop analysis is performed or else the crane, rigging, load attachment points, etc., will meet NUREG-0612 guidelines.

4. An appropriate Decommissioning Department procedure will be revised to require that rigging sketches be reviewed by Engineering to verify that NUREG-0612 is complied with. This review will include vendor supplied lifting eyes.

5. Jib cranes at Shoreham will be examined to determine if they have lifting devices similar to the one that failed. Similar lifting devices will be removed.

6. Station Procedure SP35X001.01, "Handling of Heavy Loads with the Reactor Building Polar Crane," was revised by the addition of requirements to: hold a pre-job briefing and for the preparation of rigging sketches for heavy load lifts on the Refuel Floor. As an interim measure, it was revised to require the presence of a QA Inspector, Nuclear Engineering Division representative, safety representative and a Section Head whenever heavy load lifts are made on the Refuel Floor.

7. The portion of the floor where the crane fell was inspected and determined to be structurally sound.

8. The weekly surveillance test and annual preventive maintenance inspection on the Polar Crane were performed to demonstrate that the Polar Crane was not affected by the jib crane accident.

9. A safety representative with extensive rigging experience and an additional Structural Engineer were added to the staff.

10. A "Near Miss" Report, LIPA Deficiency Reports and an Incident Report were prepared to document the accident.

11. Each Department held meetings to discuss this incident and procedural compliance. Additional "all hands" meetings will be conducted by the Resident Manager.

12. The personnel involved were counseled by their Division Manager, Department Manager and Resident Manager.

13. Disciplinary action, including dismissal, was administered to several individuals involved in the event.

14. A formal Root Cause Analysis was performed.

ADDITIONAL INFORMATION

a. Manufacturer and model number of failed component(s)

Morris, Wheeler & Co., Inc.
Lifting eye for PJBE 1000 1/2 ton capacity jib crane

b. LER numbers of previous similar events

None

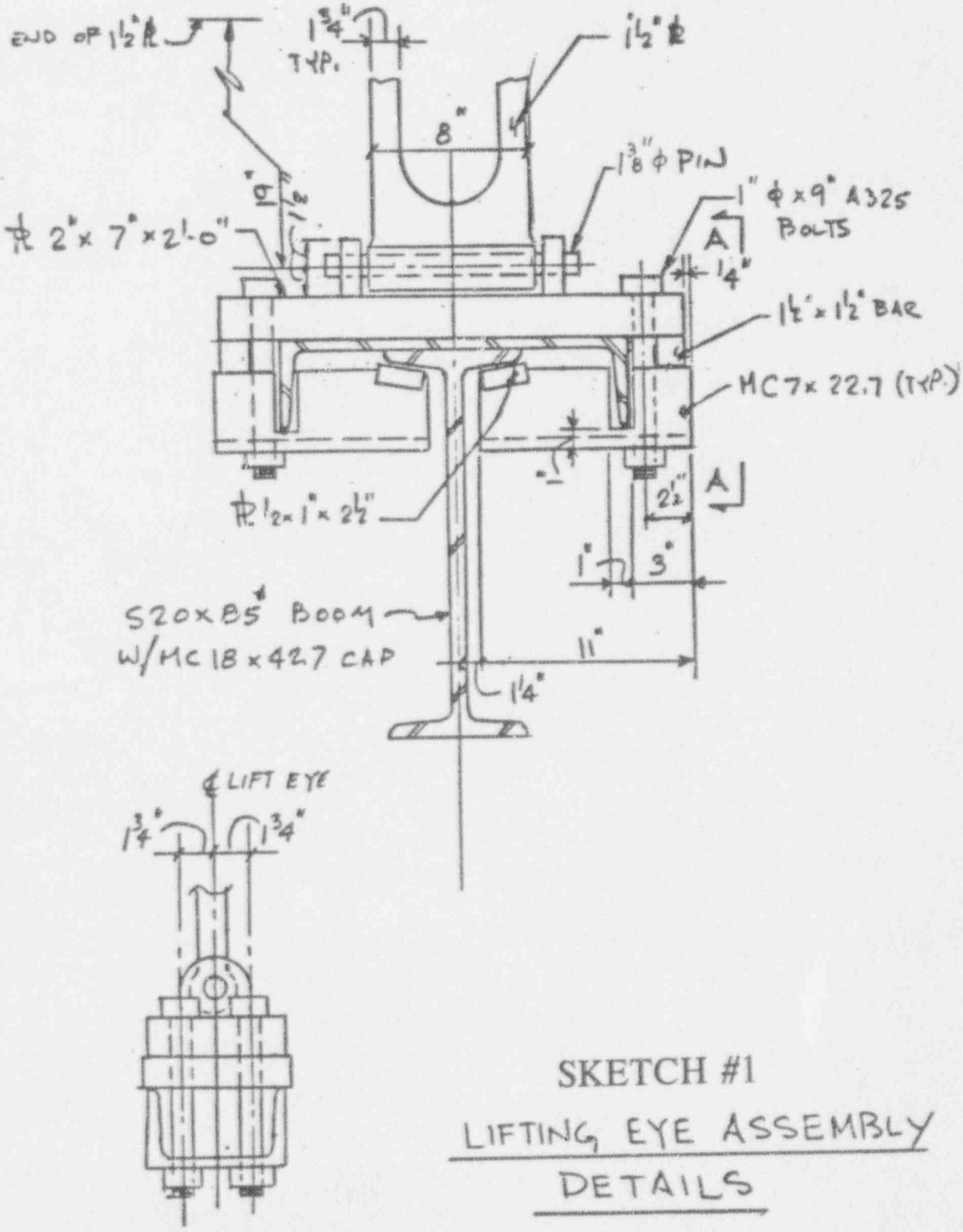

SKETCH #1

LIFTING EYE ASSEMBLY DETAILS

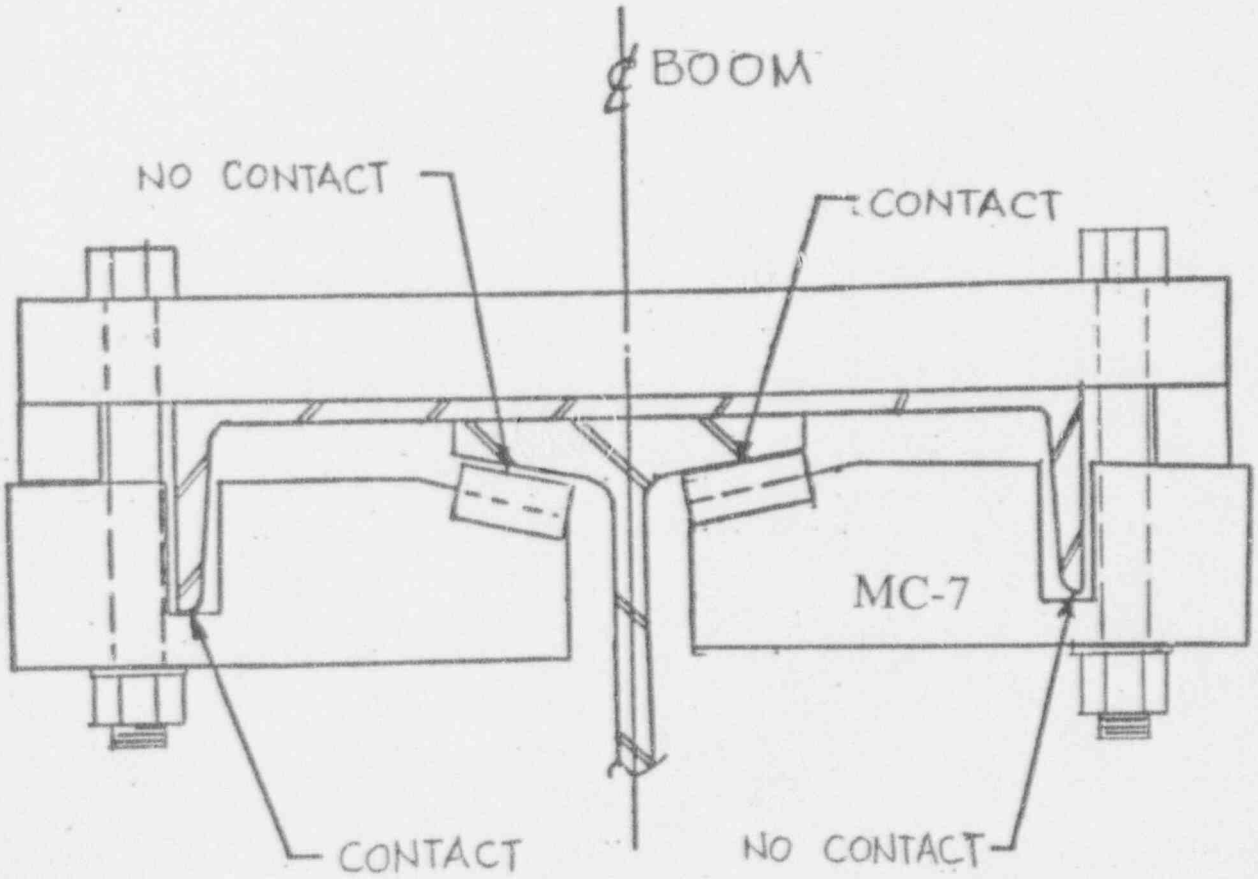

SKETCH #2

MISALIGNMENT OF
LIFTING EYE ASSEMBLY