TECHNICAL SPECIFICATION

FOR

PROCEDURES GOVERNING CONCRETE MASONRY UNIT

WALL ATTACHMENTS

FOR NON-CATEGORY I, NON-SEISMIC INSTALLATIONS

MISSISSIPPI POWER & LIGHT COMPANY

GRAND GULF NUCLEAR STATION UNIT NO. 1

GRAND GULF MISSISSIPPI

8201260374 820119
PDR ADOCK 05000416
Q PDR

Specification No. 9645-A-004.3

TABLE OF CONTENTS

TECHNICAL SPECIFICATION

FOR

PROCEDURES GOVERNING CONCRETE MASONRY UNIT

WALL ATTACHMENTS

FOR NON-CATEGORY I, NON-SEISMIC INSTALLATIONS

rt I Preface

rt II Procedures for Non-Category I, Non-Seismic Support Installations with Concrete Expansion Anchors in Normal Weight Shielding CMU Walls and with Through-bolts in Lightweight Hollow CMU walls.

rt III Procedures for Non-Category I, Non-Seismic Support Installations with Kwik-Bolts, Drop-in Flush Anchor Bolts and Toggle Bolts in Lightweight Hollow CMU Walls.

rt IV Appendix M

PART I

PREFACE

This Specification contains information and technical data in sufficient detail to permit the installation of Field-purchased concrete expansion anchors, through-bolts, Kwik-bolts, drop-in flush anchor bolts, and toggle bolts in normal weight shielding concrete masonry unit (CMU) walls and lightweight hollow CMU walls.

PART II

PROCEDURES FOR NON-CATEGORY I, NON-SEISMIC SUPPORT* INSTALLATIONS WITH CONCRETE EXPANSION ANCHORS IN NORMAL WEIGHT SHIELDING CMU WALLS AND WITH THROUGH-BOLTS IN LIGHTWEIGHT HOLLOW CMU WALLS

*For 2-inch and smaller non-nuclear pipe supports refer to Specification 9645-M-300.3

1. These methods of installation are applicable only to non-Category I items. Category I and seismically supported non-Category I items (e.g., II over I supports) can only be supported by these methods if shown on engineering documents (drawings or specifications).

2. Installations with through-bolts shall be done as shown on Sketches No. 1 and No. 2 of Appendix M.

3. Installation with concrete expansion anchors shall be done as shown on Sketch No. 3 of Appendix M.

4. The total load per support shall not exceed 200 pounds.

5. No anchor or bolt shall be located closer than 9 inches to any wall opening, free edge of any wall or any penetration greater than 6 inches in any dimension except that for loads less than 25 pounds an edge distance of 2 inches may be used.

6. For loads greater than 25 pounds, the minimum center-to-center spacing between supports shall be 5'-0" horizontally and vertically. For loads less than 25 pounds, no more than one support shall be installed on one concrete masonry unit block.

7. The maximum load (including load due to the eccentricity of the attachment) applied to any one through-bolt or concrete expansion anchor shall not exceed 50 pounds in tension and 100 pounds in shear.

8. A through-bolt may be installed in a mortar joint provided there is no joint reinforcing steel.

9. No vertical reinforcing steel shall be cut while drilling for through-bolt installation unless replacement reinforcing steel is provided per Sketch No. 2 of Appendix M.

10. The installation of the concrete expansion anchors shall comply with the applicable requirements of the latest revision of Specification 9645-C-103.1.

11. An expansion anchor may be installed in a mortar joint provided that there is no reinforcing steel in that joint.

12. No installation shall be made on a removable shielding wall.

PART III

PROCEDURES FOR NON-CATEGORY I, NON-SEISMIC SUPPORT* INSTALLATIONS WITH KWIK-BOLTS, DROP-IN FLUSH ANCHOR BOLTS AND TOGGLE BOLTS IN LIGHTWEIGHT HOLLOW CMU WALLS

*For 2-inch and smaller non-nuclear pipe supports, refer to Specification 9645-M-300.3.

1. The above types of bolts shall only be used for non-Category I attachments. Seismically supported non-Category I items, (e.g., II over I supports) shall not be supported by these bolts.

2. The total load per support shall not exceed 25 pounds.

3. All bolts shall be located at least 2 inches away from the edge of mortar joints, wall openings, or the free edge of a wall.

4. No more than one support shall be installed on one CMU block.

5. Toggle bolts shall be as manufactured by one of the following manufacturers or approved equal:

   a. Parker-Kalon Inc., Clifton, N. J.

   b. U. S. Expansion Bolt Co., York, Pa.

   c. Star Expansion Industries, Mountainville, N. Y.

   d. Redhead, ITT Phillips Drill Co., Michigan City, Ind.

   Installation shall conform to the manufacturer's recommendations.

6. Toggle bolts shall be 1/8-inch minimum diameter and 3/8-inch maximum diameter. They shall only be installed in hollow block cells. Minimum distance between two toggle bolts shall be 4 inches at the same support.

7. Drop-in flush or Kwik-bolts shall not be larger than 1/4-inch in diameter. They shall only be installed in grouted (solid) block cells. Minimum distance between 2 drop-in or Kwik-bolts shall be 4 inches at the same support.

8. Kwik-bolt (stud type) and drop-in flush anchors shall be as manufactured by Hilti Fastening Systems. Installation shall adhere to the manufacturer's recommendations and they shall be torqued to 4 ft-lbs when installed.

9. Minimum of two bolts shall be installed per support except that one Kwik-bolt may be used for connecting conduit clamps in balance of plant applications.

10. Reinforcing bars shall not be cut for bolt installation. Supports shall be relocated to avoid cutting reinforcing bars.

11. If cracks larger than 1/16-inch wide are observed on wall surfaces after installation of the bolts, those areas shall be repaired. Repair procedures shall be obtained from Project Engineering.

9645-A-004.3 APPENDIX M

ATTACHMENT OF NON-CATEGORY I AND NON-SEISMIC SUPPORTS TO CONCRETE MASONRY UNIT (CMU) WALLS

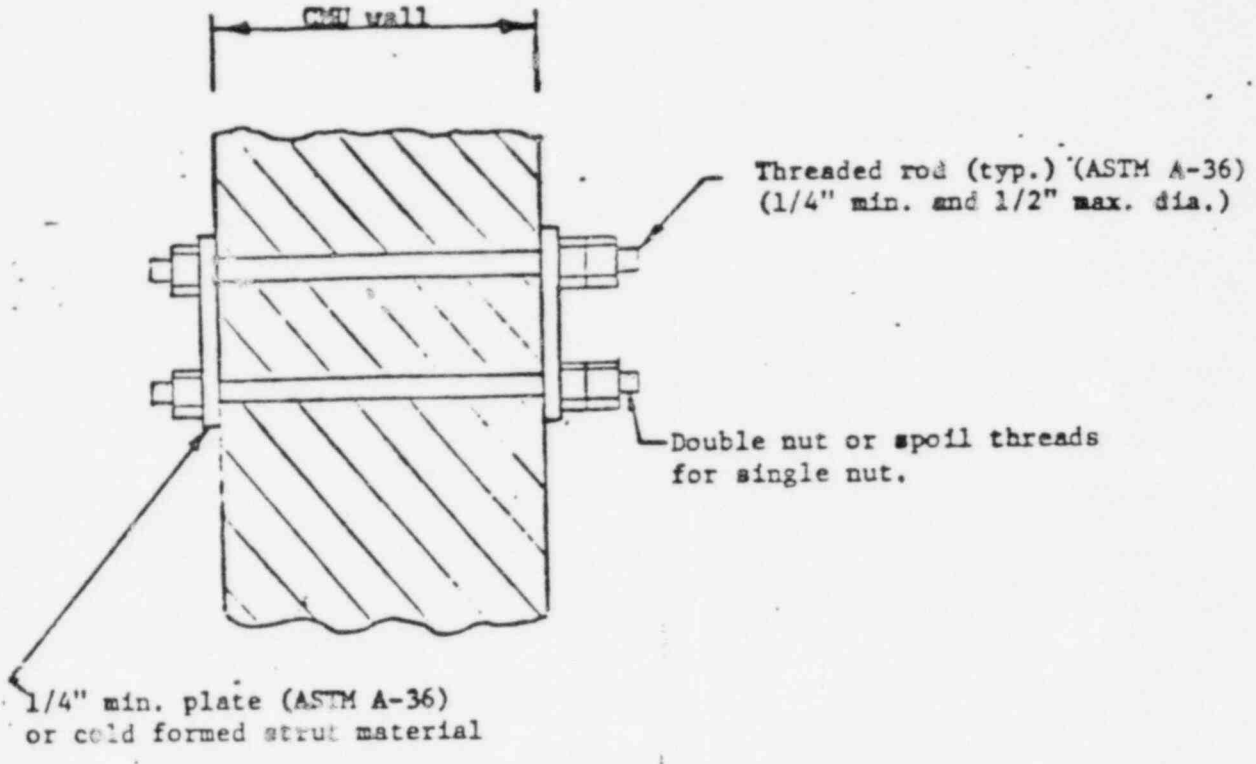

NOTES:

1) Through bolts shall not be installed within 9 inches of any adjacent through bolt, except that one support may be installed per CMU block for loads less than 25 lbs.

2) Torque for through bolts shall be 5 FT-LB for bolts up to 3/8 inch diameter and 10 FT-LB for bolts up to 1/2 inch diameter.

3) Minimum one through bolt shall be installed per support.

SKETCH NO. 1: ATTACHMENTS TO HOLLOW CELL OR SOLID CMU WALLS

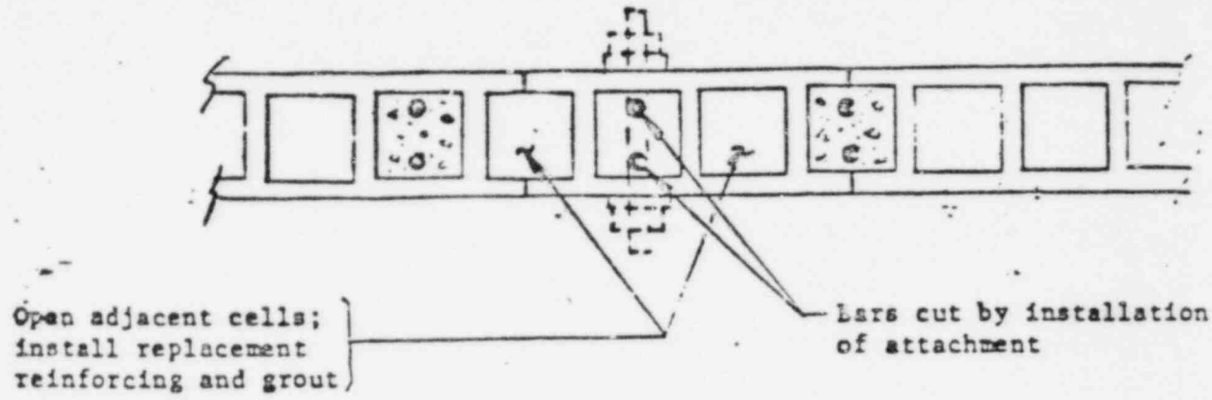

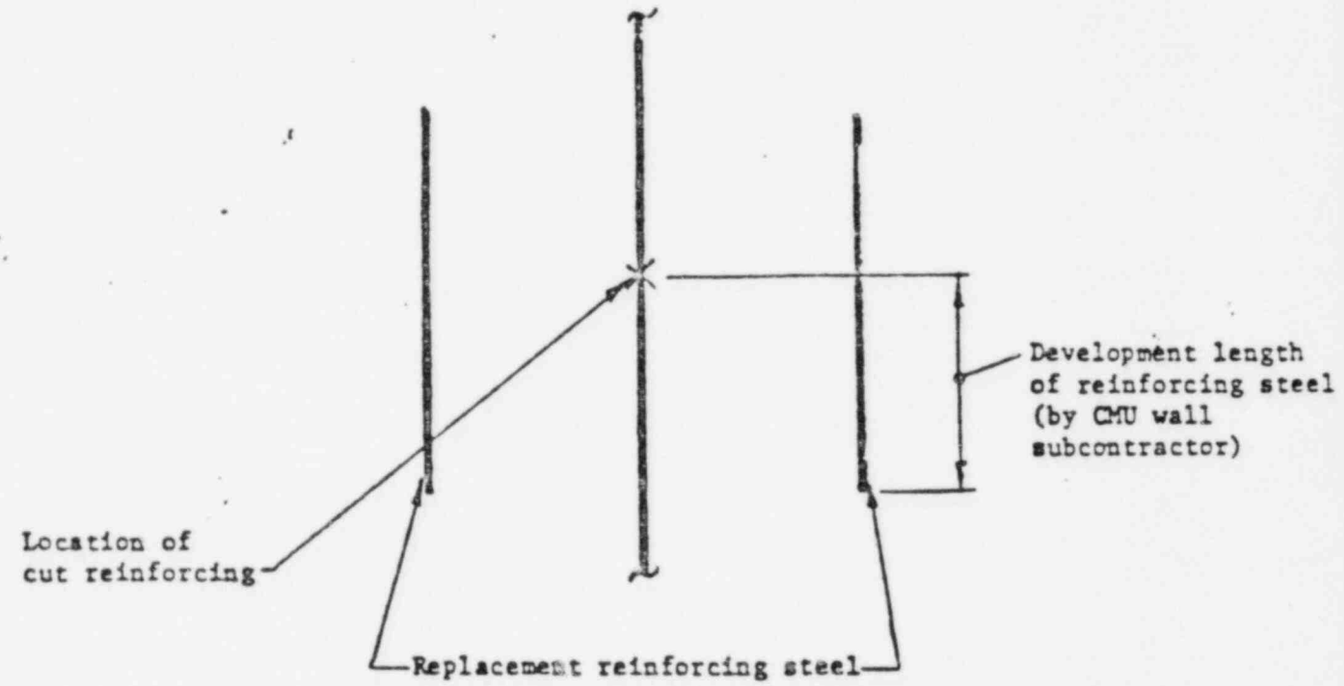

SKETCH NO. 2: REPLACEMENT OF REINFORCING STEEL (WHEN REBAR IS CUT) IN HOLLOW CMU WALLS

NOTE: Every effort shall be made to relocate the through bolt to avoid cutting rebar.

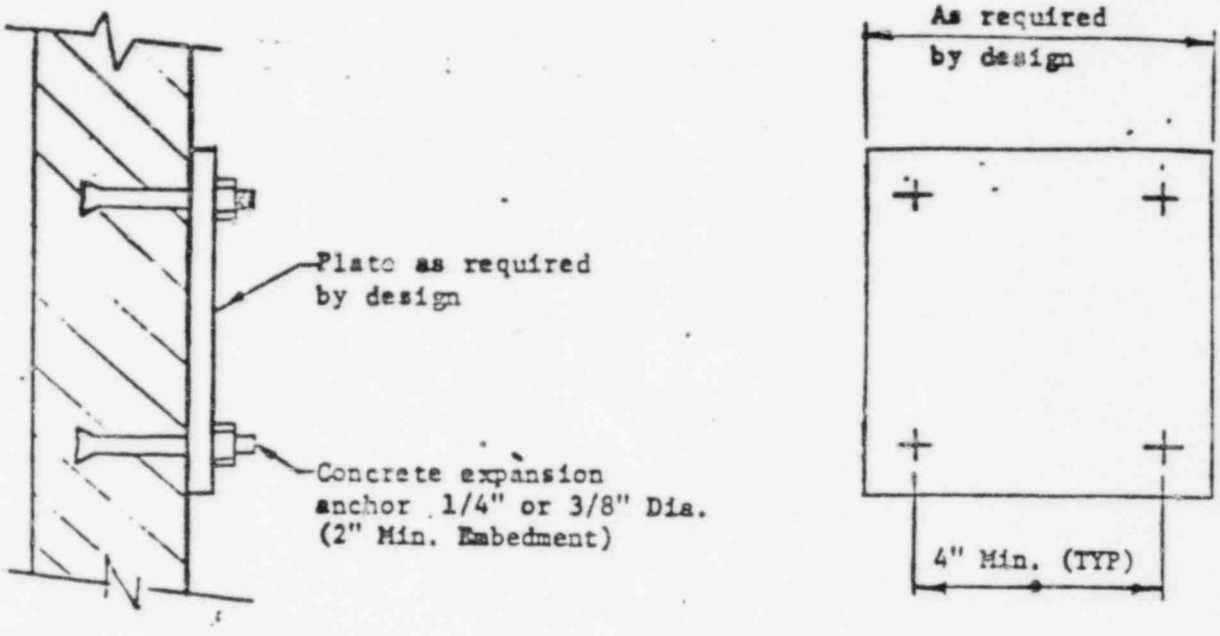

SKETCH NO. 3: TYPICAL EXPANSION ANCHOR CONNECTION TO SOLID CMU WALL (*)

(*) Solid CMU wall is normal weight shielding wall as described in SPEC. 9645-A-004.2. Grouted cells of hollow block walls is not to be considered solid CMU walls.

NOTES

1) Concrete expansion anchors type shall be Kwik-Bolt as manufactured by Hilti-Fastening Systems.
2) Minimum torque at installation shall be 4 FT-LB for 1/4" diameter and 10 FT-LB for 3/8" diameter expansion anchors.
3) Minimum 2 expansion anchors shall be used at each attachment.

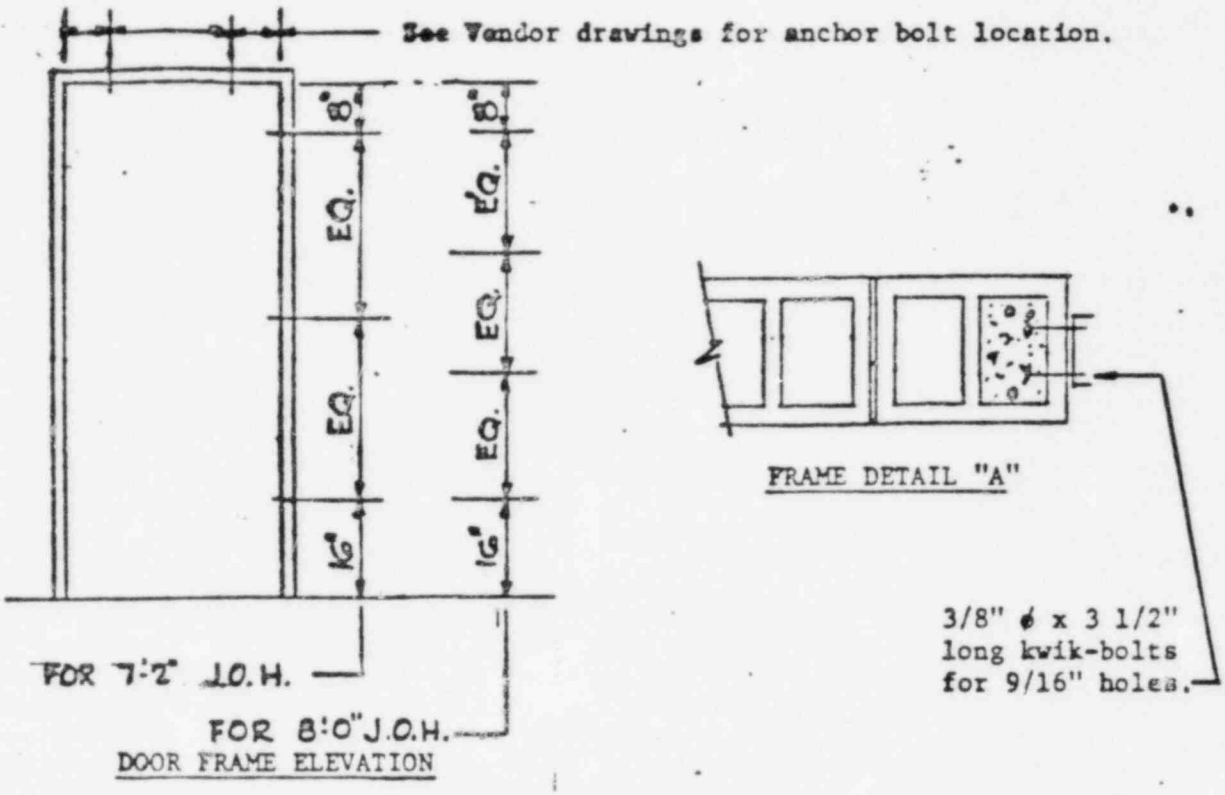

SKETCH NO. 4: TYPICAL (NORMAL) DOOR FRAME INSTALLATION DETAILS

NOTES:

1) Kwik-bolts shall be as manufactured by Hilti Fastening Systems. Installation shall adhere to the manufacturer's recommendations. Bolts shall be torqued to 10 FT-LB.

2) Reinforcing bars shall not be cut for bolt installation; hole shall be relocated.

3) If after the installation of bolts, cracks larger than 1/16" are observed on wall surfaces, those areas shall be repaired.

Repair procedures shall be obtained from Project Engineering.

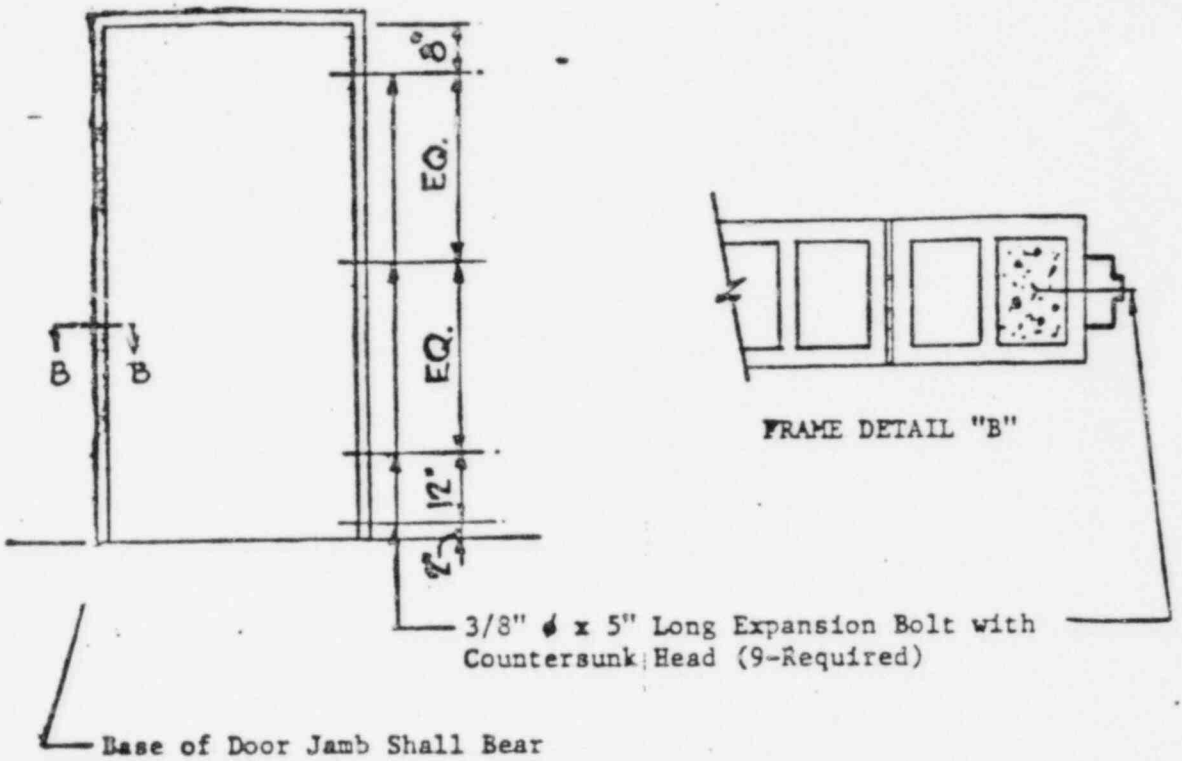

BULLET-RESISTANT DOOR

APPENDIX F

APPENDIX F

FLOOR PLAN LOCATIONS OF MASONRY WALLS

APPENDIX F

FLOOR PLAN LOCATIONS OF MASONRY WALLS

The attached plans show wall numbers for the CMU walls surveyed in the January and October, 1981 field surveys at Grand Gulf, Units 1 and 2. See the survey procedure (Appendix A) for the CMU wall numbering system. Following the floor plans, walls are listed by survey number accompanied by the corresponding architectural wall elevation number.

CONTROL BUILDING

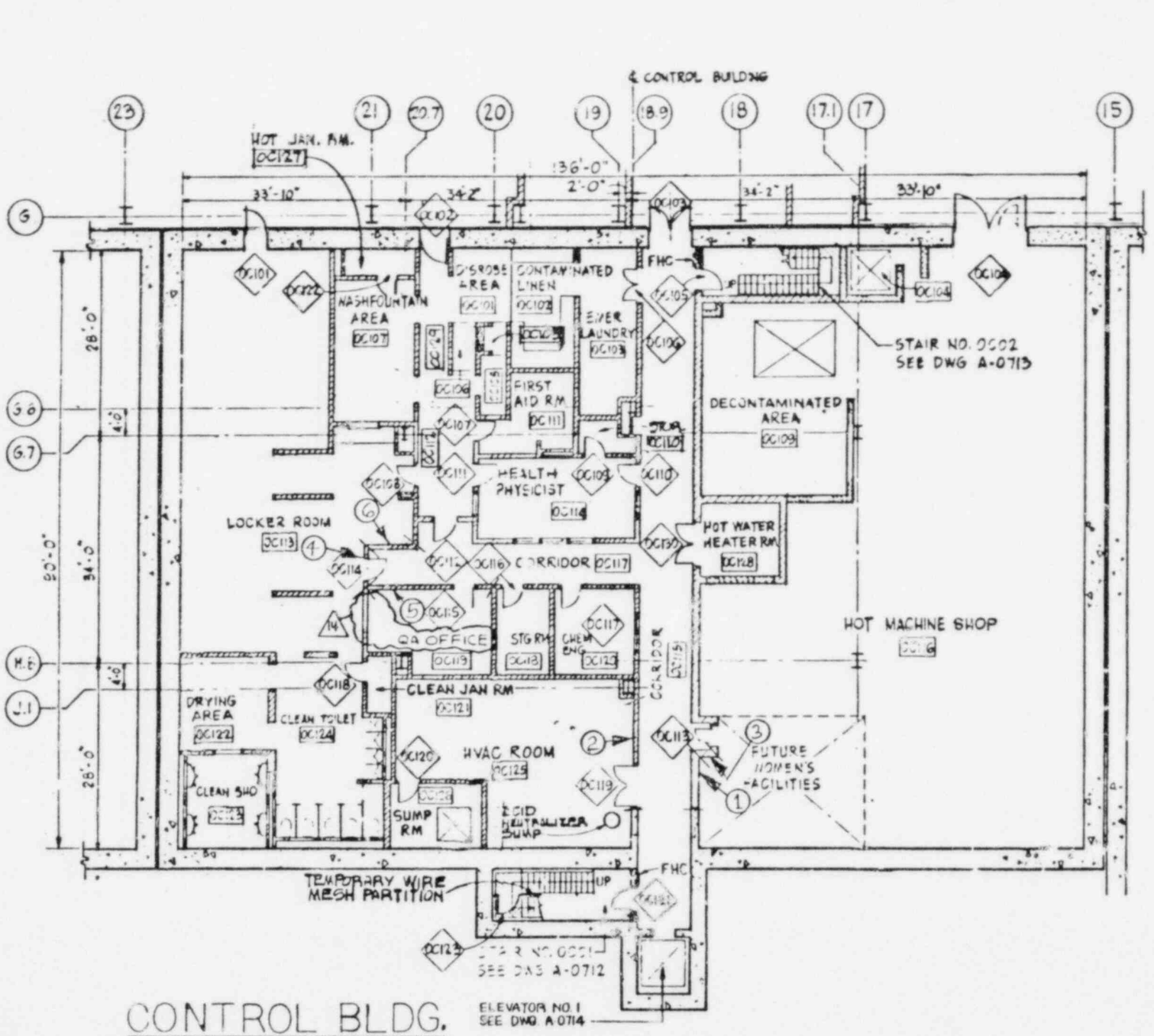

CONTROL BLDG.

ACCESS CONTROL AT EL. 93'-0"

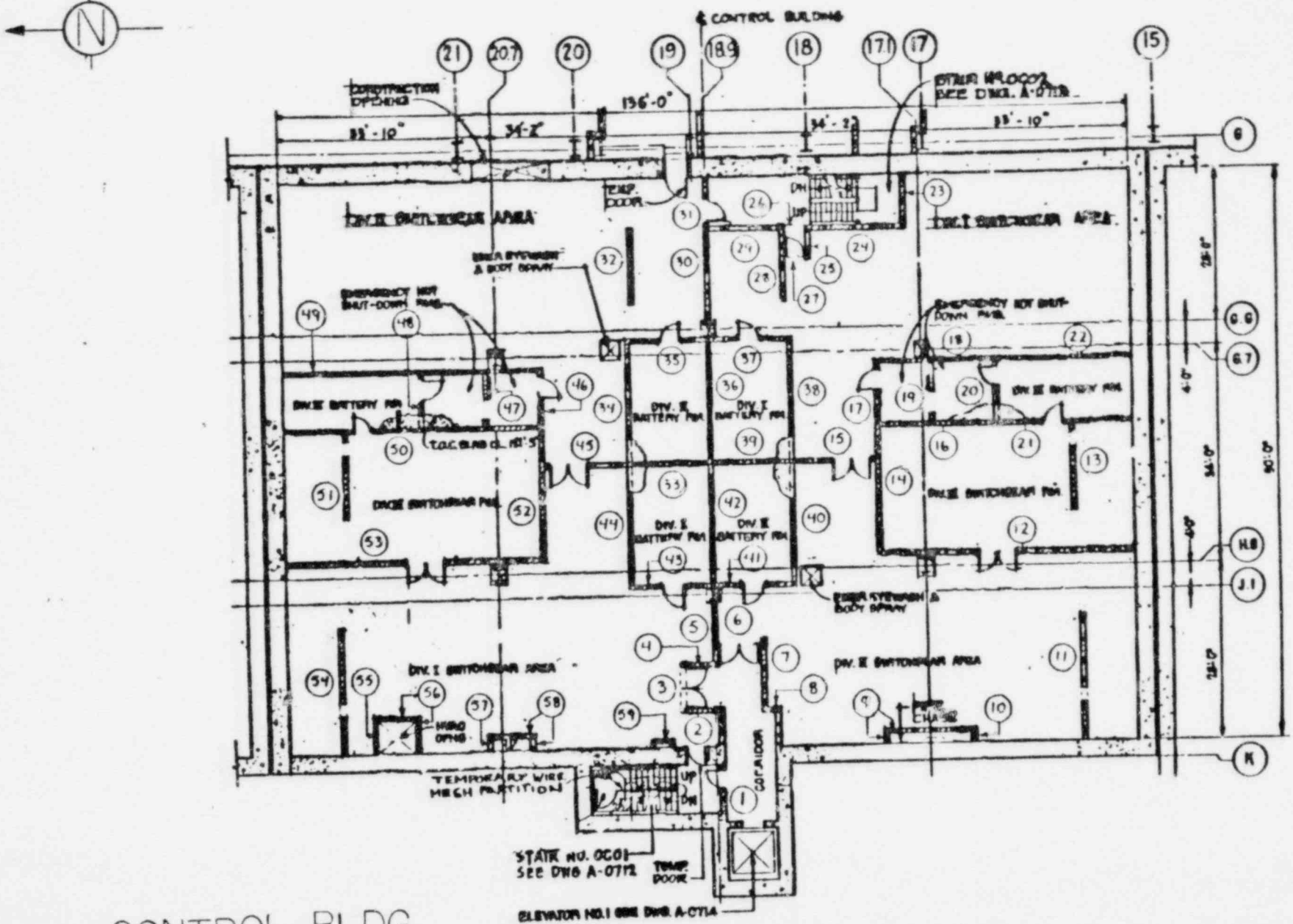

CONTROL BLDG.

SAFEGUARD, SWITCHGEAR & BATTERY RMS.

AT EL. 111'-0"

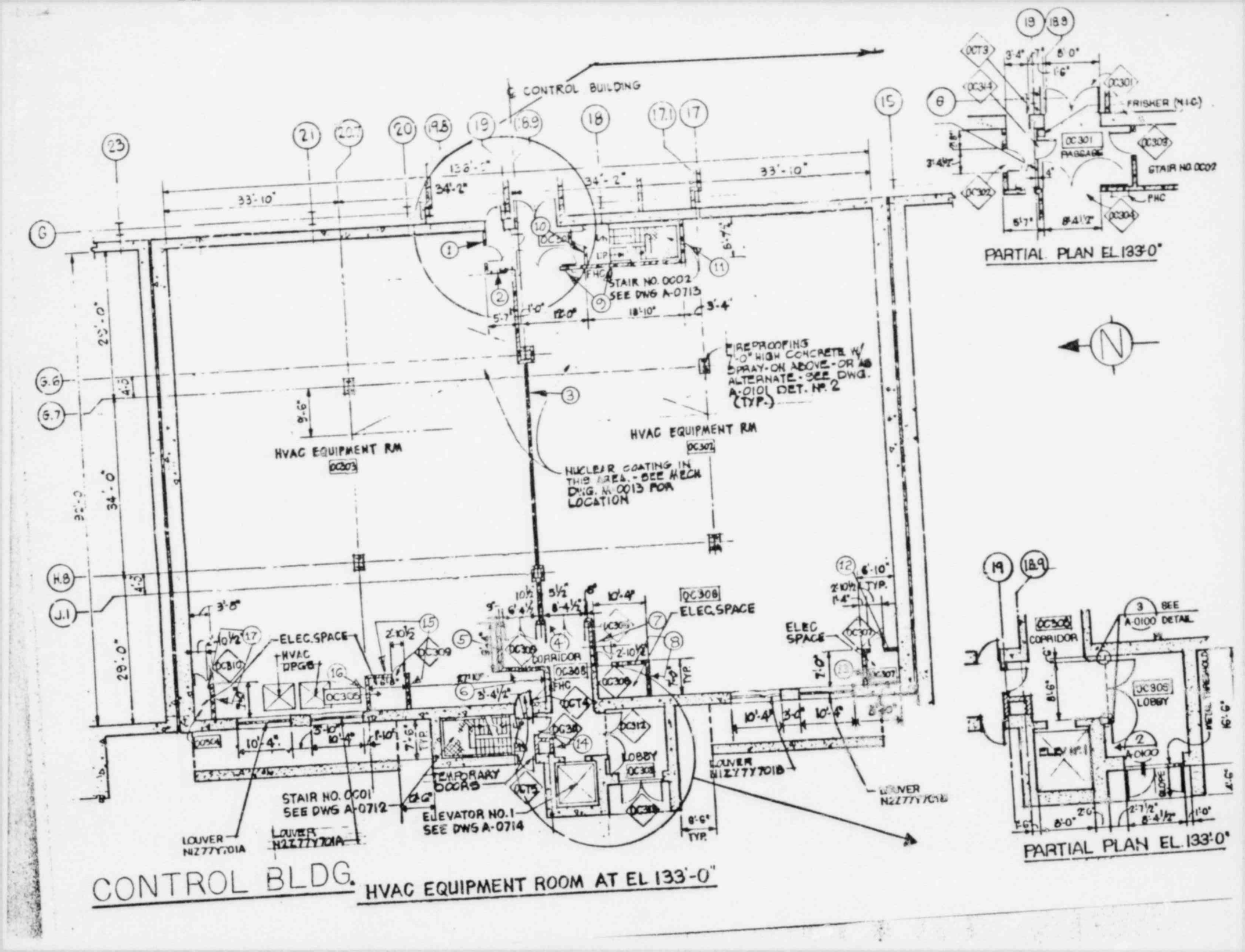

CONTROL BLDG.

HVAC EQUIPMENT ROOM AT EL 133'-0"

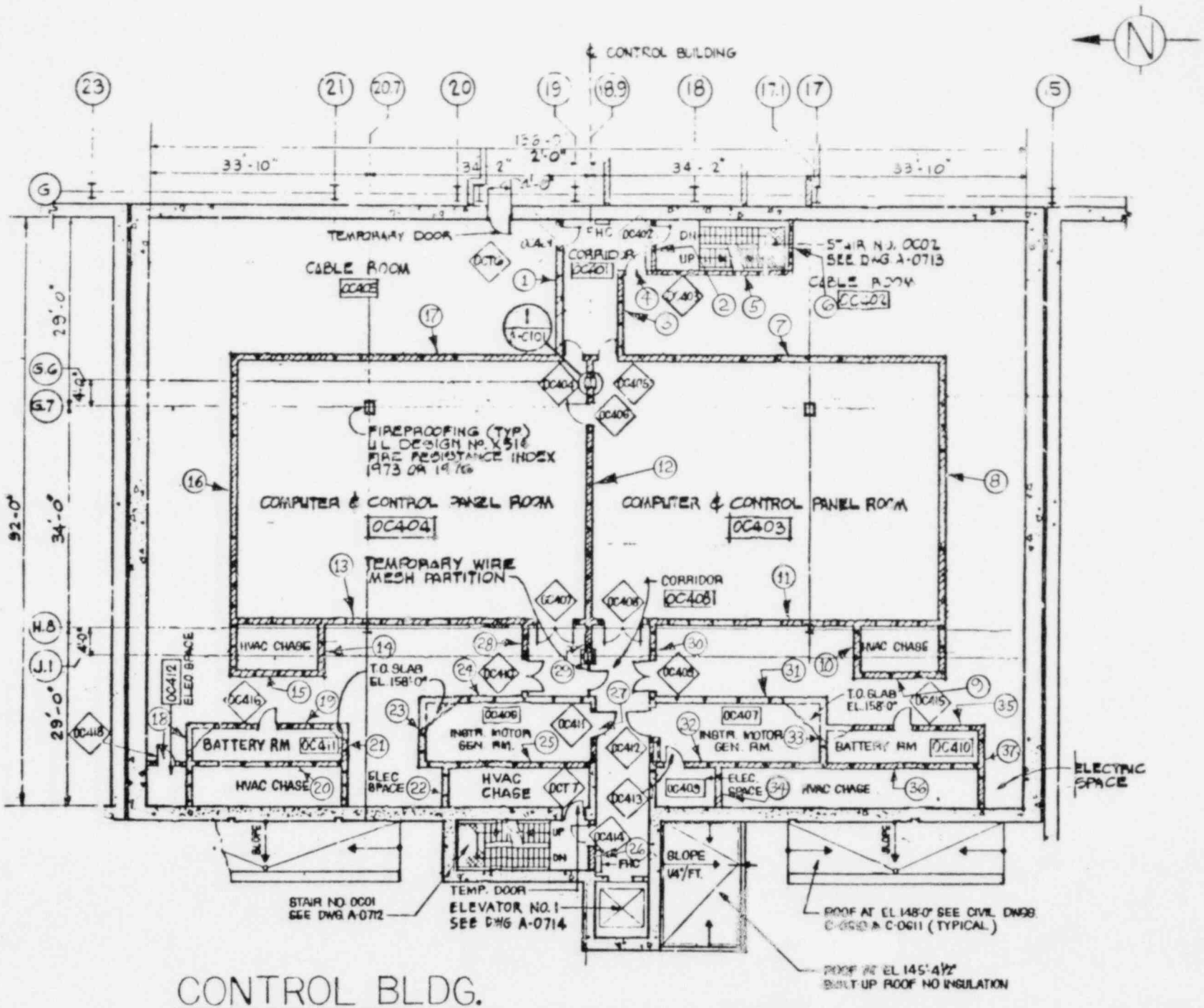

CONTROL BLDG.

LOWER CABLE SPREADING, COMPUTER & T/G CONTROL RMS AT EL 148'-0"

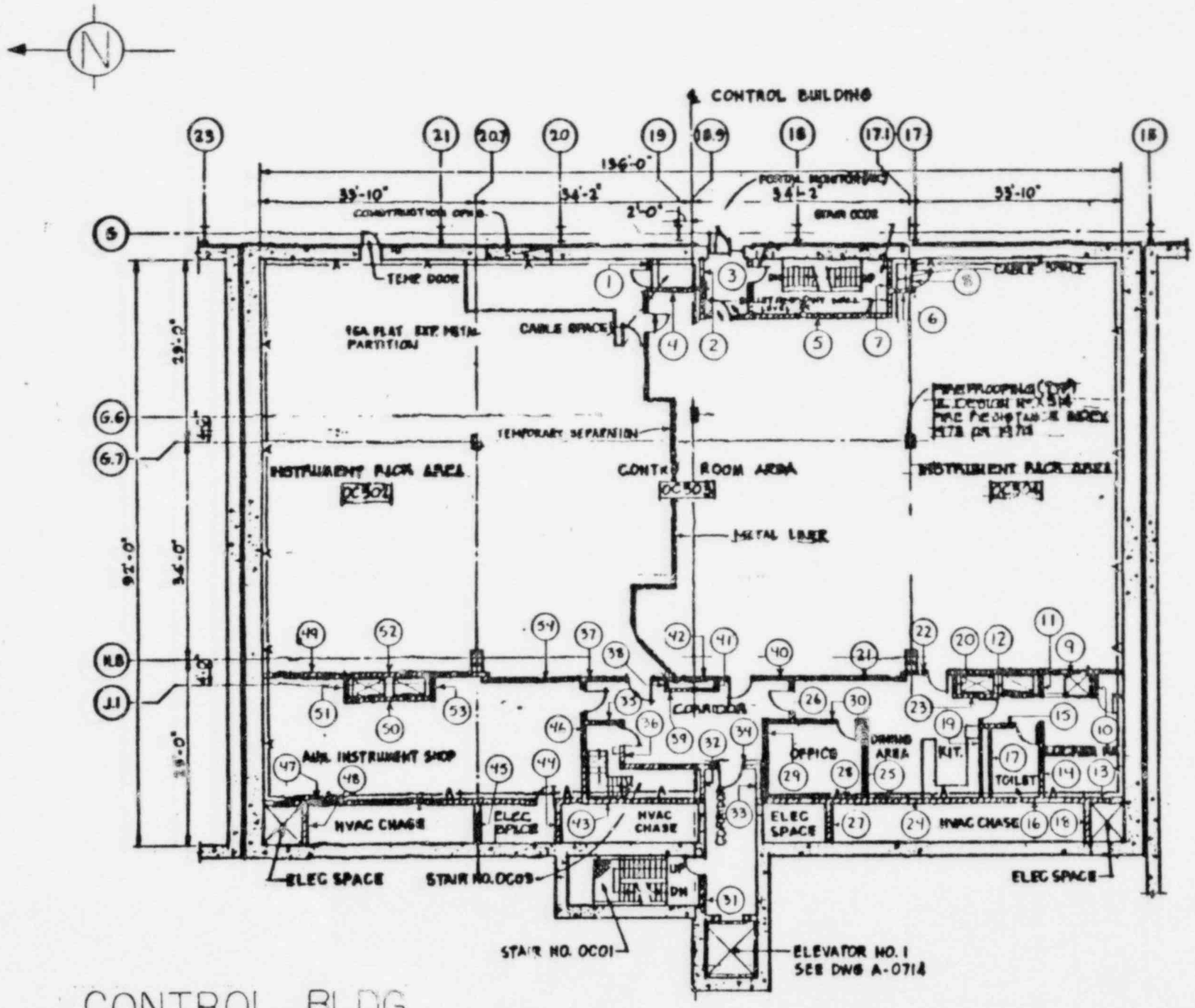

CONTROL BLDG.

MAIN CONTROL ROOM AT EL 166'-0"

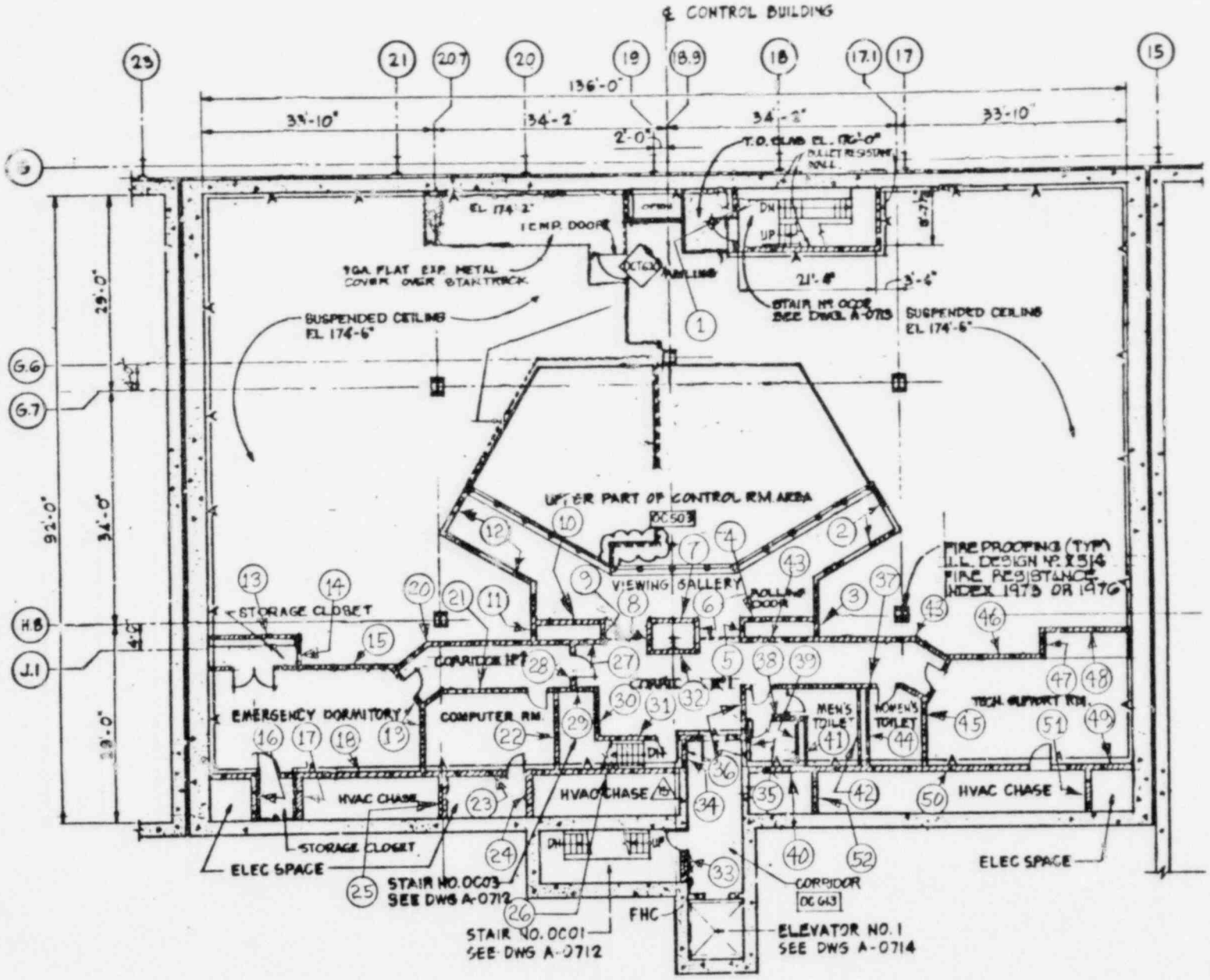

VIEWING GALLERY AT EL 177'-0"

CONTROL BLDG.

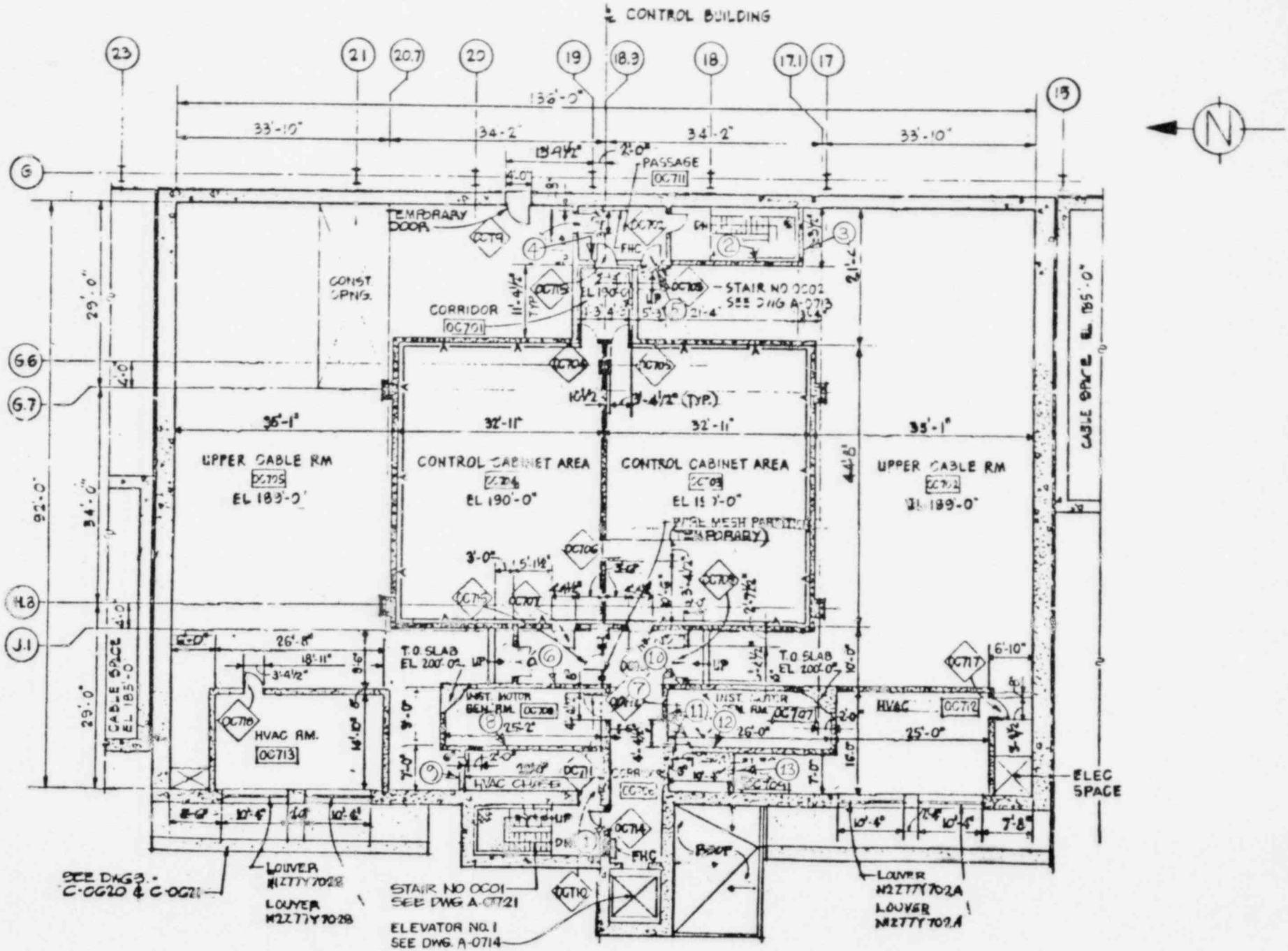

CONTROL BLDG.

UPPER CABLE SPREADING ROOM AT EL 189'-0"

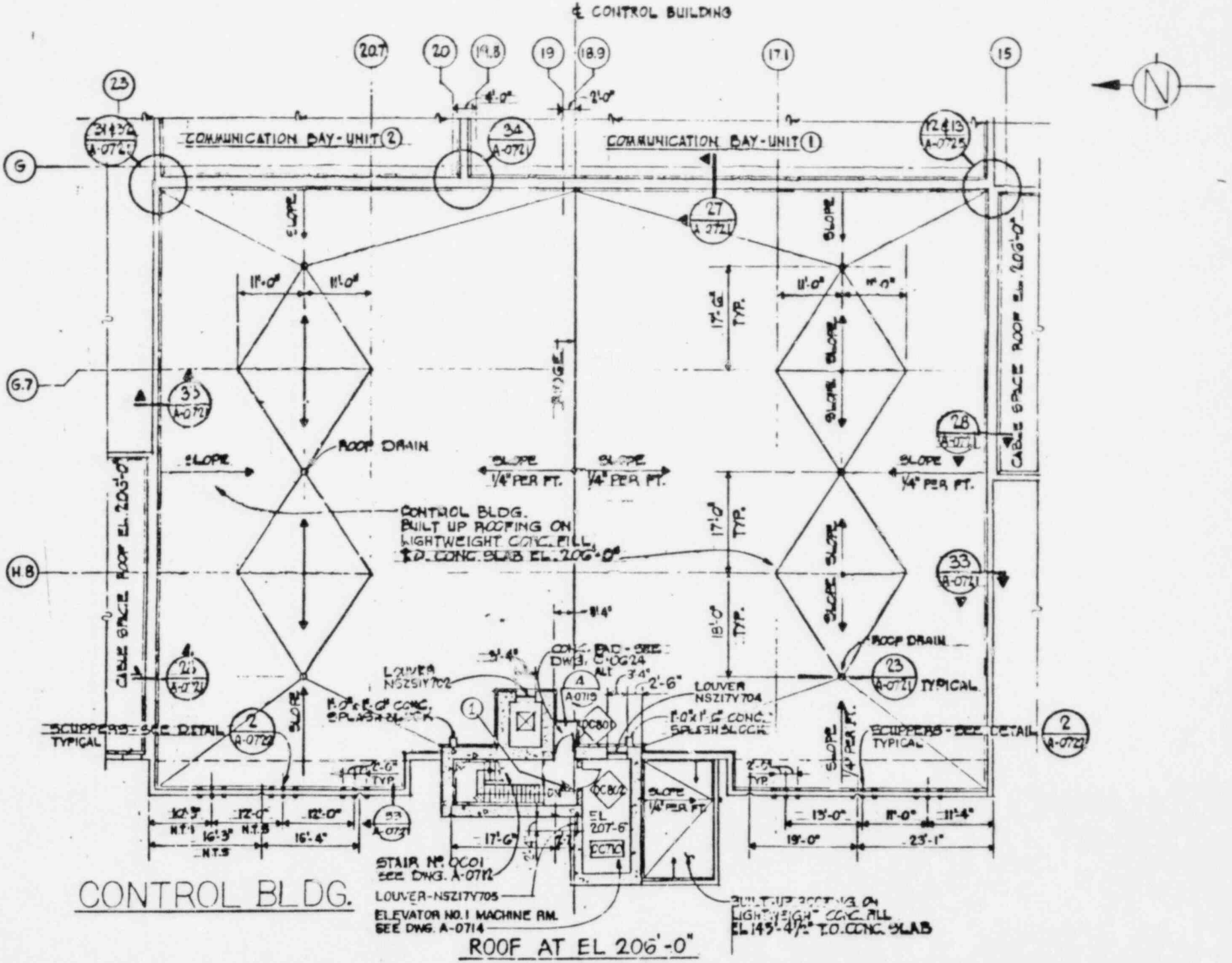
℄ CONTROL BUILDING
COMMUNICATION BAY - UNIT (2)
COMMUNICATION BAY - UNIT (1)
CABLE SPACE ROOF EL. 203'-0"
CABLE SPACE ROOF EL. 203'-0"
ROOF DRAIN
SLOPE 1/4" PER FT.
CONTROL BLDG. BUILT UP ROOFING ON LIGHTWEIGHT CONC. FILL ON CONC. SLAB EL. 206'-0"
SCUPPERS - SEE DETAIL TYPICAL
LOUVER NSZ1TY702
LOUVER NSZ1TY704
LOUVER-NSZ1TY705
STAIR NO. OC01 SEE DWG. A-0712
ELEVATOR NO. 1 MACHINE RM. SEE DWG. A-0714
EL 207'-6"
EL 145'-4 1/2" T.O. CONC. SLAB
CONTROL BLDG.
ROOF AT EL 206'-0"

LISTING OF CONTROL BUILDING CMU WALLS

Elevation	Plan Location Number	Wall Designation Bldg. - Elev.- No., Face	Arch. Elevation No. Elev. No/Dwg., Facing
93'-0"	1	C-93-001, NS	5/A-0877A, S
93'-0"	2	C-93-002, NS	5/A-0877A, N
93'-0"	3	C-93-003, EW	7A/A-0877A, E
93'-0"	4	C-93-004, NS	17/A-0877B, S
93'-0"	5	C-93-005, EW	3/A-0877A, W
93'-0"	6	C-93-006, EW	3/A-0877A, E
111'-0"	1	C-111-001, NS	15/A-0878B, N
111'-0"	2	C-111-002, EW	10B/A-0878A, E
111'-0"	3	C-111-003, NS	10/A-0878A, S
111'-0"	4	C-111-004, EW	15/A-0878B, E
111'-0"	5	C-111-005, NS	10/A-0878A, S
111'-0"	6	C-111-006, EW	15/A-0878B, E
111'-0"	7	C-111-007, NS	13/A-0878A, N
111'-0"	8	C-111-008, EW	15/A-0878B, E
111'-0"	9	C-111-009, NS	13A/A-0878B, S
111'-0"	9	C-111-009, EW	13A/A-0878B, W
111'-0"	10	C-111-010, NS	13A/A-0878B, N
111'-0"	11	C-111-011, NS	13/A-0878A, S
111'-0"	12	C-111-012, EW	14/A-0878B, W
111'-0"	13	C-111-013, NS	14/A-0878B, S
111'-0"	14	C-111-014, NS	14/A-0878B, N
111'-0"	15	C-111-015, EW	13/A-0878A, E
111'-0"	16	C-111-016, EW	7/A-0878A, W
111'-0"	17	C-111-017, NS	7/A-0878A, N

LISTING OF CONTROL BUILDING CMU WALLS (Cont.)

Elevation	Plan Location Number	Wall Designation Bldg. - Elev.- No., Face	Arch. Elevation No. Elev. No/Dwg., Facing
111'-0"	18	C-111-018, EW	7/A-0878A, E
111'-0"	19	C-111-019, NS	7/A-0878A, S
111'-0"	20	C-111-020, NS	8/A-0878A, N
111'-0"	21	C-111-021, EW	8/A-0878A, W
111'-0"	22	C-111-022, EW	8/A-0878A, E
111'-0"	23	C-111-023, NS	16-B/A-0878B, N
111'-0"	24	C-111-024, EW	16A/A-0878B, E
111'-0"	25	C-111-025, NS	16-A/A-0878B, S
111'-0"	26	C-111-026, EW	16-A/A-0878B, E
111'-0"	27	C-111-027, NS	16/A-0878B, E
111'-0"	28	C-111-028, NS	16-A/A-0878B, N
111'-0"	29	C-111-029, EW	16/A-0878B, E
111'-0"	30	C-111-030, NS	16/A-0878B, N
111'-0"	31	C-111-031, NS	1/A-0878A, S
111'-0"	32	C-111-032, NS	1/A-0878A, S
111'-0"	33	C-111-033, EW	5/A-0878A, W
111'-0"	34	C-111-034, NS	5/A-0878A, N
111'-0"	35	C-111-035, EW	5/A-0878A, E
111'-0"	36	C-111-036, NS	6/A-0878A, N
111'-0"	37	C-111-037, EW	6/A-0878A, E
111'-0"	38	C-111-038, NS	6/A-0878A, S
111'-0"	39	C-111-039, EW	6/A-0878A, W
111'-0"	40	C-111-040, NS	12/A-0878A, S
111'-0"	41	C-111-041, EW	12/A-0878A, W
111'-0"	42	C-111-042, NS	11/A-0878A, S

LISTING OF CONTROL BUILDING CMU WALLS (Cont.)

Elevation	Plan Location Number	Wall Designation Bldg. - Elev.- No., Face	Arch. Elevation No. Elev. No/Dwg., Facing
111'-0"	43	C-111-043, EW	11/A-0878A, W
111'-0"	44	C-111-044, NS	11/A-0878A, N
111'-0"	45	C-111-045, EW	10-A/A-0878A, E
111'-0"	46	C-111-046, NS	4/A-0878A, S
111'-0"	47	C-111-047, NS	4/A-0878A, N
111'-0"	48	C-111-048, NS	3/A-0878A, S
111'-0"	49	C-111-049, EW	3/A-0878A, E
111'-0"	50	C-111-050, EW	3/A-0878A, W
111'-0"	51	C-111-051, NS	9/A-0878A, N
111'-0"	52	C-111-052, NS	9/A-0878A, S
111'-0"	53	C-111-053, EW	9/A-0878A, W
111'-0"	54	C-111-054, NS	10/A-0878B, N
111'-0"	55	C-111-055, NS	10-E/A-0878B, S
111'-0"	56	C-111-056, EW	10-E/A-0878B, W
111'-0"	56	C-111-056, NS	10-E/A-0878B, N
111'-0"	57	C-111-057, NS	10-C/A-0878A, S
111'-0"	58	C-111-058, EW	10-C/A-0878B, W
111'-0"	58	C-111-058, NS	10-C/A-0878B, N
111'-0"	59	C-111-059, EW	10-D/A-0878B, W
111'-0"	59	C-111-059, NS	10-D/A-0878B, S
133'-0"	1	C-133-001, NS	2/A-0881A, S
133'-0"	2	C-133-002, EW	2/A-0881A, E
133'-0"	3	C-133-003, NS	2/A-0881A, S

LISTING OF CONTROL BUILDING CMU WALLS (Cont.)

Elevation	Plan Location Number	Wall Designation Bldg. - Elev.- No., Face	Arch. Elevation No. Elev. No/Dwg., Facing
133'-0"	4	C-133-004, EW	4/A-0881A, E
133'-0"	5	C-133-005, NS	4/A-0881A, N
133'-0"	6	C-133-006, EW	4/A-0881A, W
133'-0"	7	C-133-007, NS	4/A-0881A, S
133'-0"	8	C-133-008, EW	7/A-0881A, E
133'-0"	9	C-133-009, EW	3/A-0881A, E
133'-0"	10	C-133-010, NS	1/A-0881A, S
133'-0"	11	C-133-011, NS	10/A-0881A, N
133'-0"	12	C-133-012, EW	8/A-0881A, E
133'-0"	13	C-133-013, NS	8/A-0881A, N
133'-0"	14	C-133-014, NS	9/A-0881A, N
133'-0"	15	C-133-015, EW	6/A-0881A, E
133'-0"	15	C-133-015, NS	6/A-0881A, S
133'-0"	16	C-133-016, NS	6/A-0881A, N
133'-0"	17	C-133-017, EW	5/A-0881A, E
133'-0"	17	C-133-017, NS	5/A-0881A, S
148'-0"	1	C-148-001, NS	2/A-0882A, N
148'-0"	2	C-148-002, NS	2/A-0882A, S
148'-0"	3	C-148-003, NS	2/A-0882A, S
148'-0"	4	C-148-004, EW	1/A-0882A, W
148'-0"	5	C-148-005, EW	22/A-0882C, E
148'-0"	6	C-148-006, NS	21/A-0882C, N
148'-0"	7	C-148-007, EW	5/A-0882A, E
148'-0"	8	C-148-008, NS	6/A-0882A, N
148'-0"	9	C-148-009, EW	11/A-0882B, E

LISTING OF CONTROL BUILDING CMU WALLS (Cont.)

Elevation	Plan Location Number	Wall Designation Bldg. - Elev.- No., Face	Arch. Elevation No. Elev. No/Dwg., Facing
148'-0"	10	C-148-010, NS	20/A-0882C, S
148'-0"	11	C-148-011, EW	5/A-0882A, W
148'-0"	12	C-148-012, NS	5/A-0882A, N
148'-0"	13	C-148-013, EW	4/A-0882A, W
148'-0"	14	C-148-014, NS	8/A-0882B, N
148'-0"	15	C-148-015, EW	9/A-0882B. E
148'-0"	16	C-148-016, NS	3/A-0882A, S
148'-0"	17	C-148-017, EW	4/A-0882A, E
148'-0"	18	C-148-018, NS	17/A-0882C, S
148'-0"	18	C-148-018, EW	17/A-0882C, E
148'-0"	19	C-148-019, EW	16/A-0882B, E
148'-0"	20	C-148-020, EW	16/A-0882B, W
148'-0"	21	C-148-021, NS	15/A-0882B, N
148'-0"	22	C-148-022, NS	15/A-0882B, S
148'-0"	23	C-148-023, NS	15/A-0882B, S
148'-0"	24	C-148-024, EW	14/A-0882B, E
148'-0"	25	C-148-025, EW	14/A-0882B, W
148'-0"	26	C-148-026, NS	10/A-0882B, N
148'-0"	27	C-148-027, NS	10/A-0882B, N
148'-0"	28	C-148-028, NS	10/A-0882B, N
148'-0"	29	C-148-029, NS	7/A-0882B, S
148'-0"	30	C-148-030, NS	10/A-0882B, S
148'-0"	31	C-148-031, EW	13/A-0882B, E
148'-0"	32	C-148-032, EW	13/A-0882B, W
148'-0"	33	C-148-033, NS	13/A-0882B, S

LISTING OF CONTROL BUILDING CMU WALLS (Cont.)

Elevation	Plan Location Number	Wall Designation Bldg. - Elev.- No., Face	Arch. Elevation No. Elev. No/Dwg., Facing
148'-0"	34	C-148-034, NS	18/A-0882C, S
148'-0"	35	C-148-035, EW	12/A-0882B, E
148'-0"	36	C-148-036, EW	12/A-0882B, W
148'-0"	37	C-148-037, NS	19/A-0882C, N
166'-0"	1	C-166-001, NS	1/A-0883A, N
166'-0"	2	C-166-002, NS	2/A-0883A, N
166'-0"	3	C-166-003, NS	3/A-0883A, S
166'-0"	4	C-166-004, EW	4/A-0883A, E
166'-0"	5	C-166-005, EW	4/A-0883A, E
166'-0"	6	C-166-006, EW	4/A-0883A, E
166'-0"	7	C-166-007, NS	3/A-0883A, S
166'-0"	8	C-166-008, NS	5/A-0883A, S
166'-0"	9	C-166-009, EW	6/A-0883A, W
166'-0"	10	C-166-010, NS	7/A-0883A, N
166'-0"	11	C-166-011, NS	N/A
166'-0"	12	C-166-012, EW	15/A-0883B, W
166'-0"	13	C-166-013, EW	15/A-0883B, W
166'-0"	14	C-166-014, NS	14/A-0883B, S
166'-0"	15	C-166-015, EW	14/A-0883B, E
166'-0"	16	C-166-016, EW	14/A-0883B, W
166'-0"	17	C-166-017, NS	14/A-0883B, N
166'-0"	18	C-166-018, NS	16/A-0883B, S

LISTING OF CONTROL BUILDING CMU WALLS (Cont.)

Elevation	Plan Location Number	Wall Designation Bldg. - Elev.- No., Face	Arch. Elevation No. Elev. No/Dwg., Facing
166'-0"	19	C-166-019, NS	13/A-0883B, S
166'-0"	20	C-166-020, NS	13/A-0883B, S
166'-0"	21	C-166-021, EW	13/A-0883B, E
166'-0"	22	C-166-022, EW	13/A-0883B, E
166'-0"	23	C-166-023, EW	13/A-0883B, E
166'-0"	24	C-166-024, EW	13/A-0883B, W
166'-0"	25	C-166-025, NS	13/A-0883B, N
166'-0"	26	C-166-026, NS	13/A-0883B, N
166'-0"	27	C-166-027, NS	16/A-0883B, N
166'-0"	28	C-166-028, EW	12/A-0883B, W
166'-0"	29	C-166-029, NS	12/A-0883B, N
166'-0"	30	C-166-030, EW	12/A-0883B, E
166'-0"	31	C-166-031, NS	17/A-0883B, N
166'-0"	32	C-166-032, NS	17/A-0883B, N
166'-0"	33	C-166-033, EW	17/A-0883B, S
166'-0"	34	C-166-034, EW	11/A-0883A, W
166'-0"	35	C-166-035, EW	11/A-0883A, W
166'-0"	36	C-166-036, NS	11/A-0883A, N
166'-0"	37	C-166-037, EW	11/A-0883A, E
166'-0"	38	C-166-038, NS	N/A
166'-0"	39	C-166-039, EW	11/A-0883A, E
166'-0"	40	C-166-040, EW	11/A-0883A, E
166'-0"	41	C-166-041, NS	N/A
166'-0"	42	C-166-042, EW	N/A
166'-0"	43	C-166-043, EW	10/A-0883A, W

LISTING OF CONTROL BUILDING CMU WALLS (Cont.)

Elevation	Plan Location Number	Wall Designation Bldg. - Elev.- No., Face	Arch. Elevation No. Elev. No/Dwg., Facing
166'-0"	44	C-166-044, NS	18/A-0883B, N
166'-0"	45	C-166-045, NS	19/A-0883B, S
166'-0"	46	C-166-046, NS	8/A-0883A, S
166'-0"	47	C-166-047, EW	8/A-0883A, W
166'-0"	48	C-166-048, NS	19/A-0883B, N
166'-0"	49	C-166-049, EW	8/A-0883A E
166'-0"	50	C-166-050, EW	8/A-0883A, E
166'-0"	51	C-166-051, NS	N/A
166'-0"	52	C-166-052, EW	N/A
166'-0"	53	C-166-053, NS	N/A
166'-0"	54	C-166-054, EW	8/A-883A, E
177'-0"	1	C-177-001, NS	4B/A-0884A, S
177'-0"	2	C-177-002, NS	1/A-0884A, S
177'-0"	3	C-177-003, NS	4C/A-0884C, N
177'-0"	4	C-177-004, EW	1/A-0884A, W
177'-0"	5	C-177-005, NS	1/A-0884A, W
177'-0"	6	C-177-006, NS	4A/A-0884A, S
177'-0"	7	C-177-007, EW	1/A-0884A, W
177'-0"	8	C-177-008, NS	4A/A-0884A, S
177'-0"	9	C-177-009, NS	1/A-0884A, N
177'-0"	10	C-177-010, EW	1/A-0884A, W
177'-0"	11	C-177-011, NS	4C/A-0884C, S
177'-0"	12	C-177-012, NS	1/A-0884A, N
177'-0"	13	C-177-013, EW	2/A-0884A, E
177'-0"	14	C-177-014, NS	2/A-0884A, S

LISTING OF CONTROL BUILDING CMU WALLS (Cont.)

Elevation	Plan Location Number	Wall Designation Bldg. - Elev.- No., Face	Arch. Elevation No. Elev. No/Dwg., Facing
177'-0"	15	C-177-015, EW	10/A-0884B, E
177'-0"	16	C-177-016, NS	10/A-0884C, N
177'-0"	17	C-177-017, NS	11/A-0884B, N
177'-0"	18	C-177-018, EW	10/A-0884B, W
177'-0"	19	C-177-019, NS	10/A-0884B, S
177'-0"	20	C-177-020, EW	3/A-0884A, E
177'-0"	21	C-177-021, EW	3/A-0884A, W
177'-0"	22	C-177-022, NS	9/A-0884B, S
177'-0"	23	C-177-023, EW	9/A-0884B, W
177'-0"	24	C-177-024, NS	12/A-0884B, N
177'-0"	25	C-177-025, NS	4/A-0884B, S
177'-0"	26	C-177-026, EW	12/A-0884B, E
177'-0"	27	C-177-027, EW	4/A-0884A, E
177'-0"	28	C-177-028, NS	4/A-0884A, N
177'-0"	29	C-177-029, EW	4/A-0884A, W
177'-0"	30	C-177-030, NS	4/A-0884A, N
177'-0"	31	C-177-031, EW	4/A-0884A, W
177'-0"	32	C-177-032, EW	4/A-0884A, E
177'-0"	33	C-177-033, NS	13/A-0884B, N
177'-0"	34	C-177-034, NS	13/A-0884B, N
177'-0"	35	C-177-035, NS	13/A-0884B, S
177'-0"	36	C-177-036, NS	4/A-0884A, S
177'-0"	37	C-177-037, EW	4/A-0884A, W
177'-0"	38	C-177-038, EW	8/A-0884B, E
177'-0"	39	C-177-039, NS	8/A-0884B, S

LISTING OF CONTROL BUILDING CMU WALLS (Cont.)

Elevation	Plan Location Number	Wall Designation Bldg. - Elev.- No., Face	Arch. Elevation No. Elev. No/Dwg., Facing
177'-0"	40	C-177-040, EW	14/A-0884B, E
177'-0"	41	C-177-041, NS	7/A-0884B, N
177'-0"	42	C-177-042, NS	7/A-0884B, S
177'-0"	43	C-177-043, EW	4/A-0884A, E
177'-0"	44	C-177-044, NS	6/A-0884B, N
177'-0"	45	C-177-045, NS	5/A-0884B, N
177'-0"	46	C-177-046, EW	5/A-0884B, E
177'-0"	47	C-177-047, NS	5/A-0884B, N
177'-0"	48	C-177-048, EW	5/A-0884B, E
177'-0"	49	C-177-049, EW	15/A-0884B, E
177'-0"	50	C-177-050, EW	15/A-0884B, E
177'-0"	51	C-177-051, NS	15/A-0884B, S
177'-0"	52	C-177-052, NS	15/A-0884B, N
189'-0"	1	C-189-001, NS	1/A-0884C, N
189'-0"	2	C-189-002, EW	2/A-0884C, E
189'-0"	3	C-189-003, NS	2/A-0884C, N
189'-0"	4	C-189-004, EW	9/A-0884C, W
189'-0"	5	C-189-005, EW	9/A-0884C, W
189'-0"	6	C-189-006, EW	3A/A-0884C, W
189'-0"	7	C-189-007, NS	5/A-0884C, N
189'-0"	8	C-189-008, EW	6/A-0884C, W
189'-0"	9	C-189-009, NS	7/A-0884C, N
189'-0"	10	C-189-010, EW	3B/A-0884C, W
189'-0"	11	C-189-011, NS	4/A-0884C, N
189'-0"	12	C-189-012, EW	4/A-0884C, W

LISTING OF CONTROL BUILDING CMU WALLS (Cont.)

Elevation	Plan Location Number	Wall Designation Bldg. - Elev.- No., Face	Arch. Elevation No. Elev. No./Dwg., Facing
189'-0"	13	C-189-013, NS	4/A-0884C, N
207'-5"	1	C-206-001, NS	1/A-0884C, N

AUXILIARY BUILDING

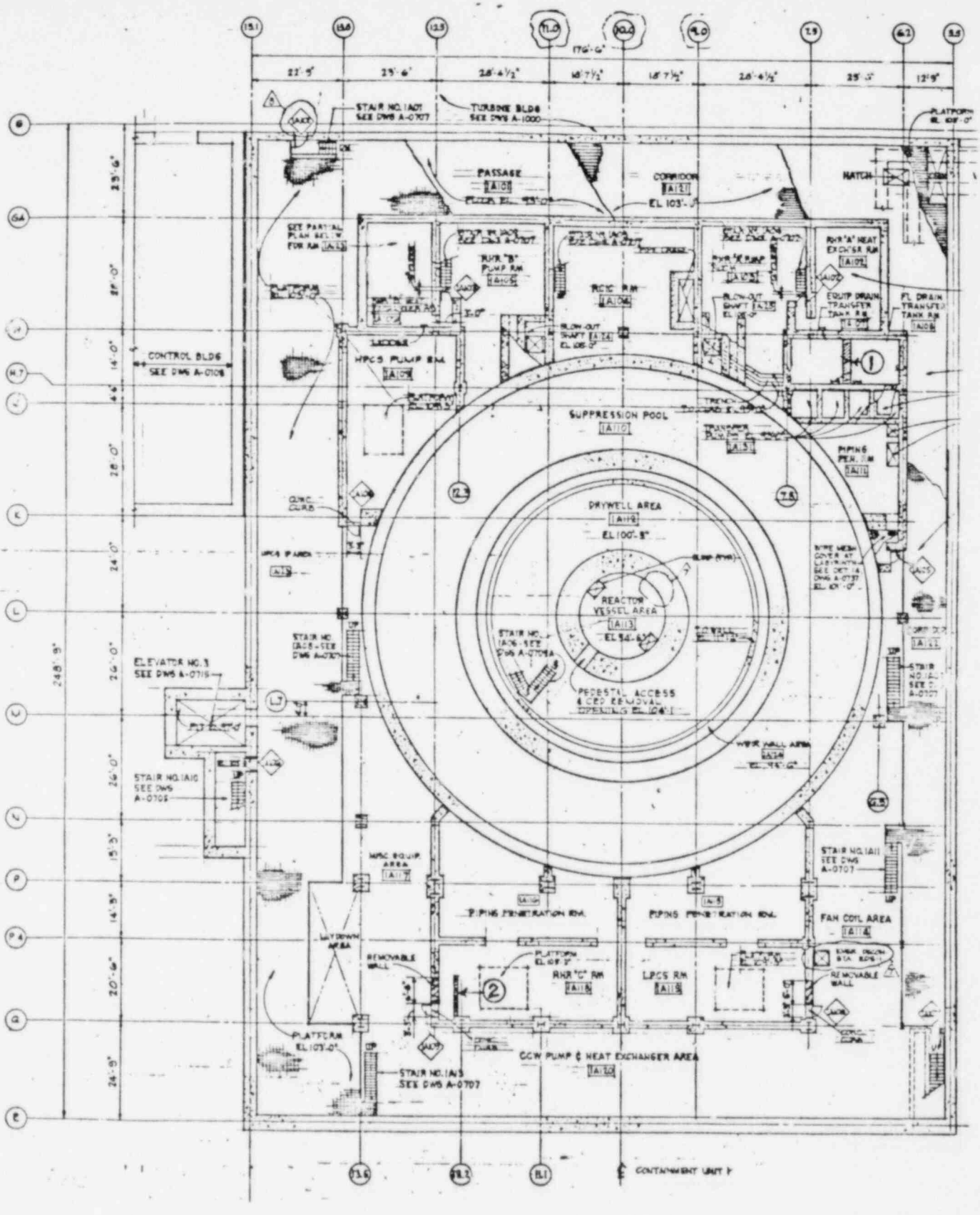

UNIT 1 AUXILIARY BUILDING

FL PLAN AT EL. 93'-0" & 103'-0"

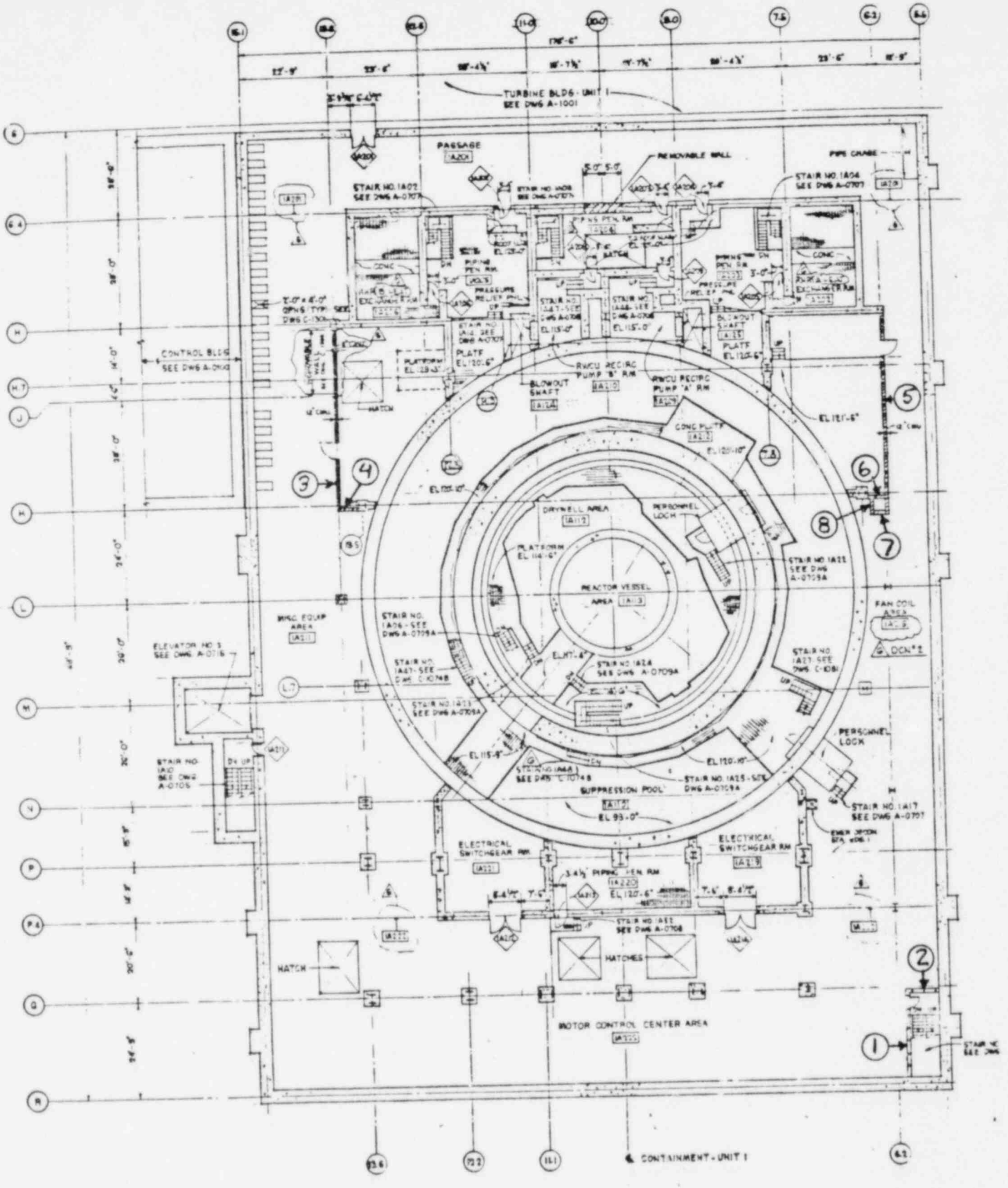

UNIT 1 AUXILIARY BUILDING

FL. PLAN AT EL. 119'-0"

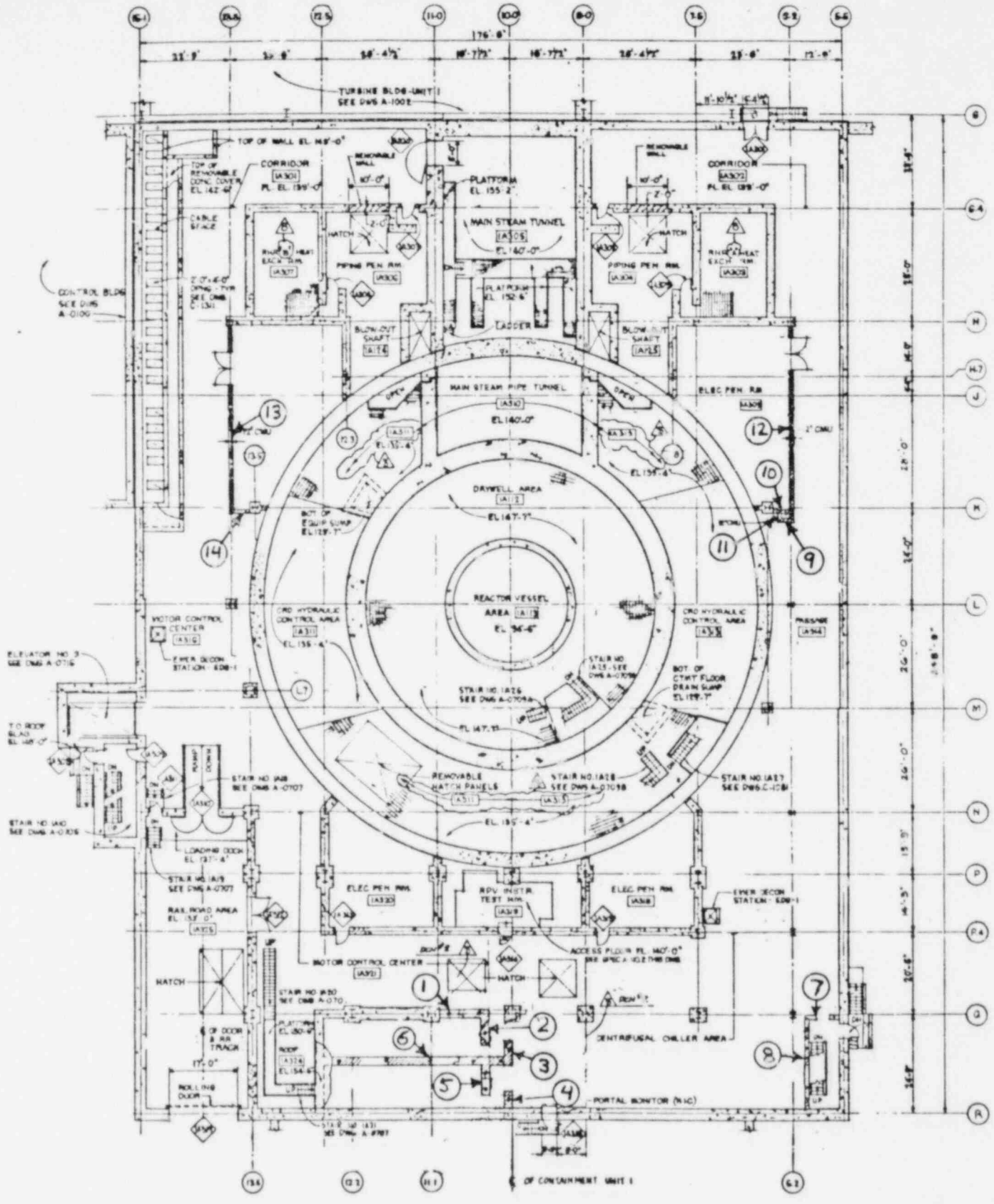

UNIT 1 AUXILIARY BUILDING

FL. PLAN AT EL. 139'-0"

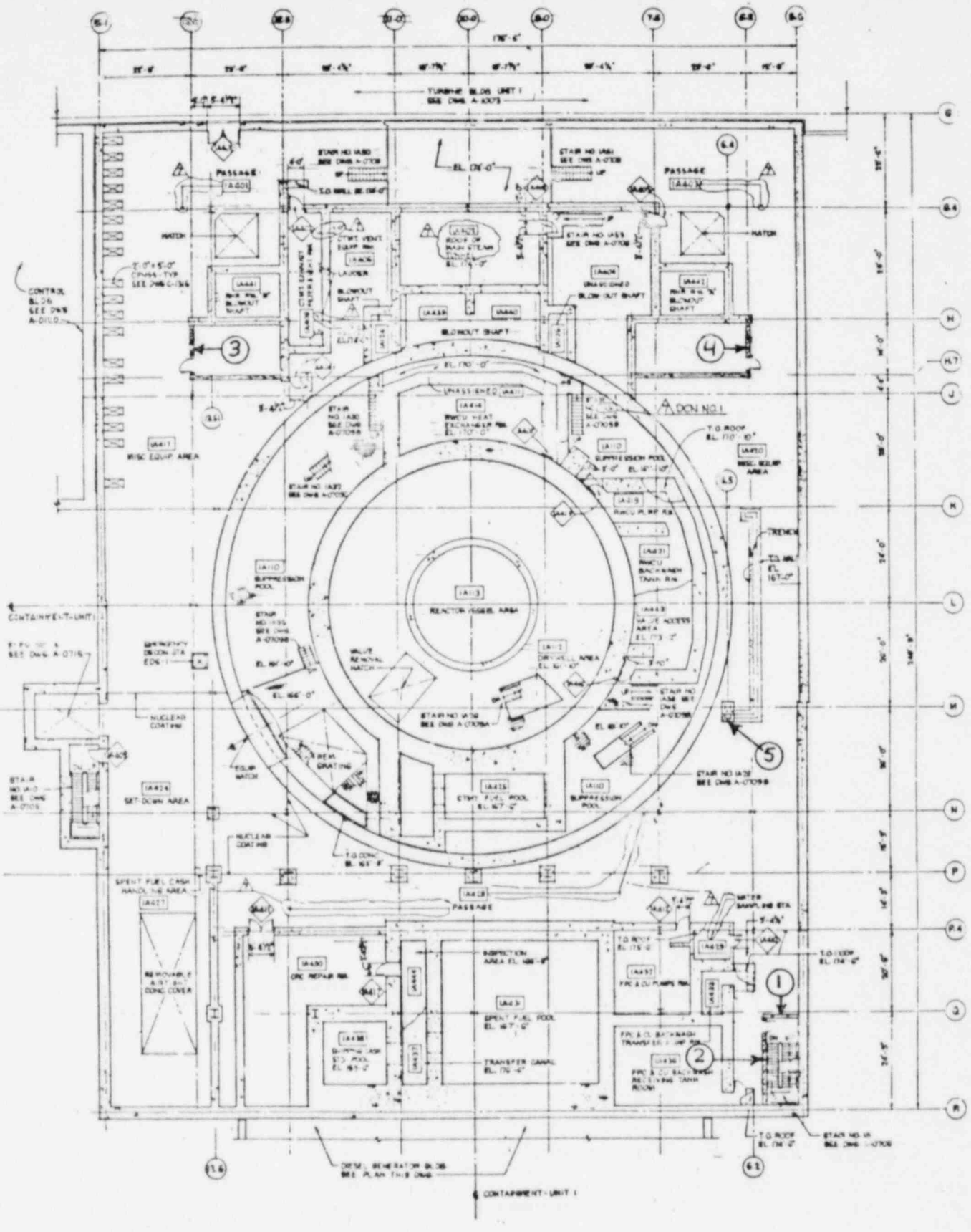

UNIT 1 AUXILIARY BUILDING

FL. PLAN AT EL. 66'-0"

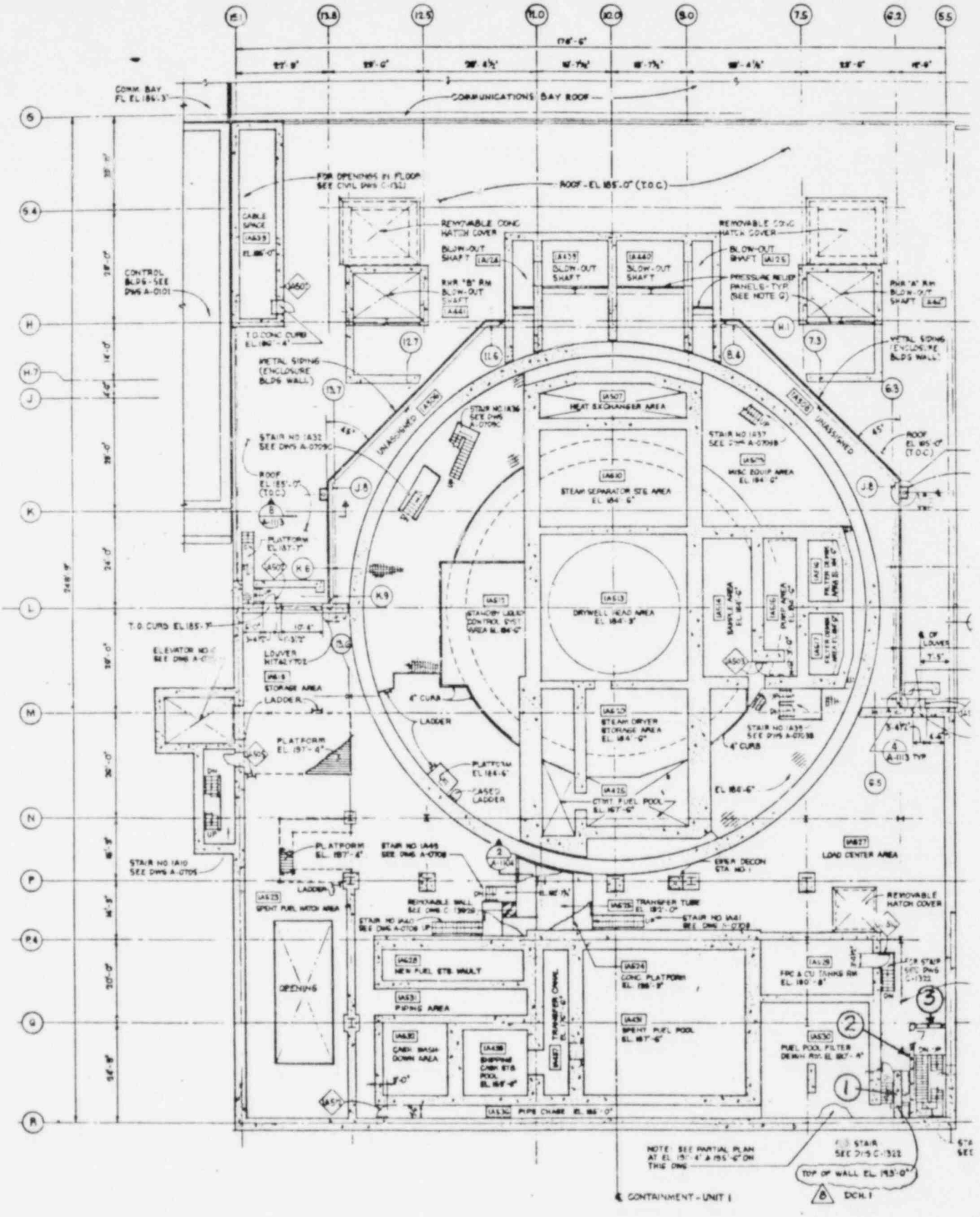

UNIT 1 AUXILIARY BUILDING

FL. PLAN AT EL. 185'-0"

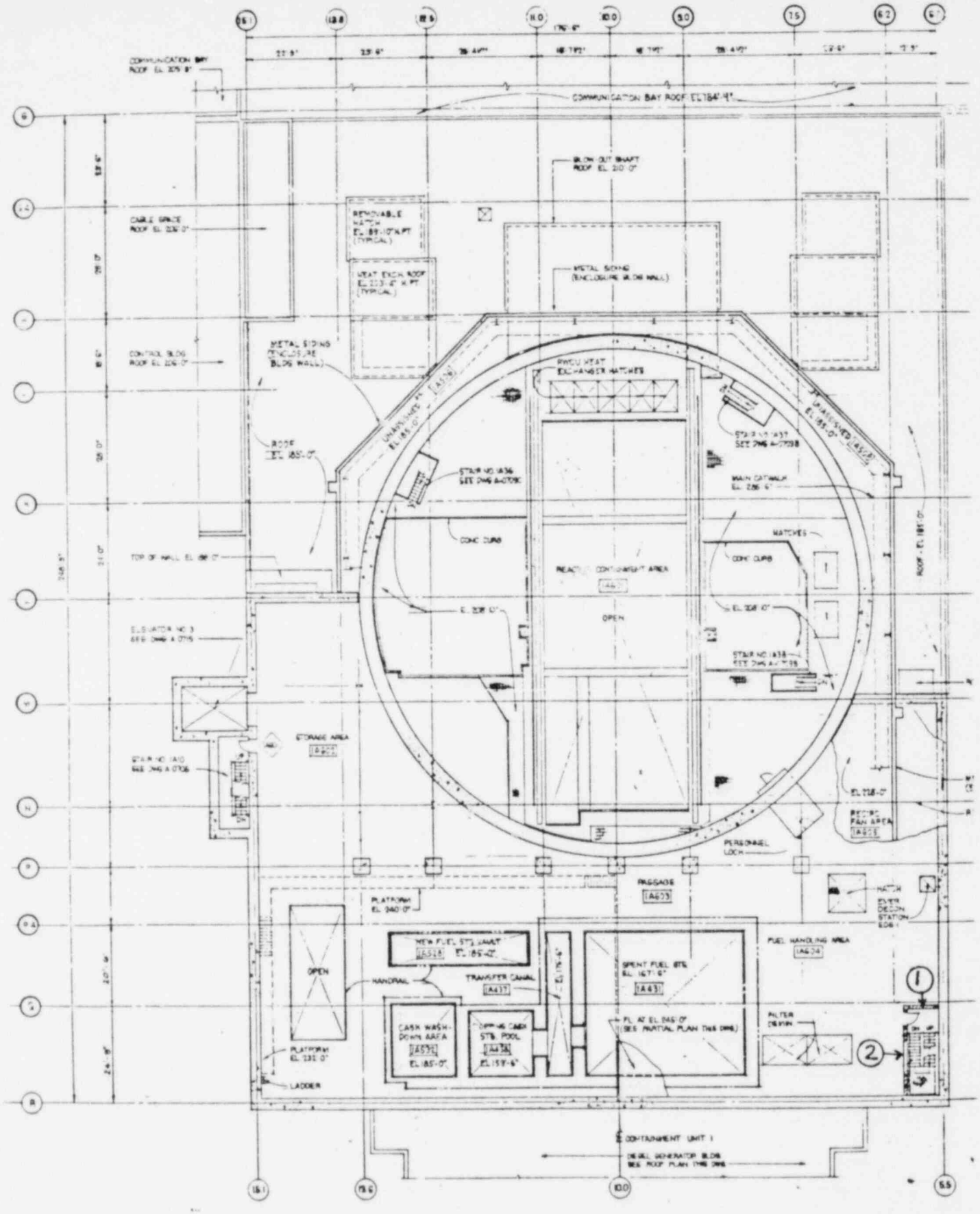

UNIT 1 AUXILIARY BUILDING

FL. PLAN AT EL. 208'-10"

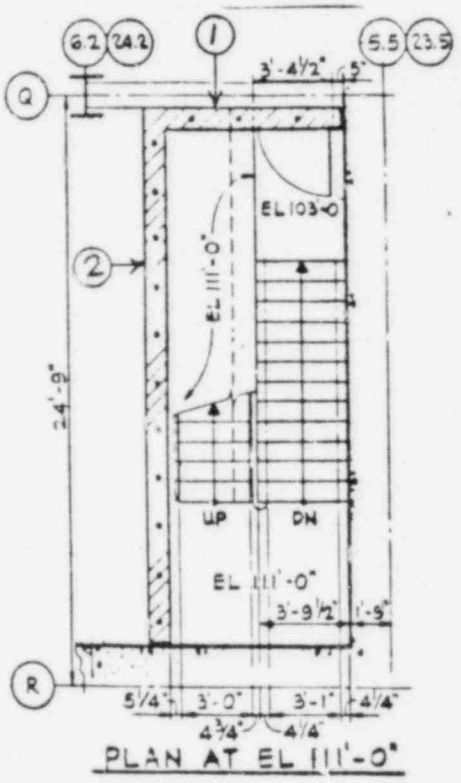

PLAN AT EL 111'-0"

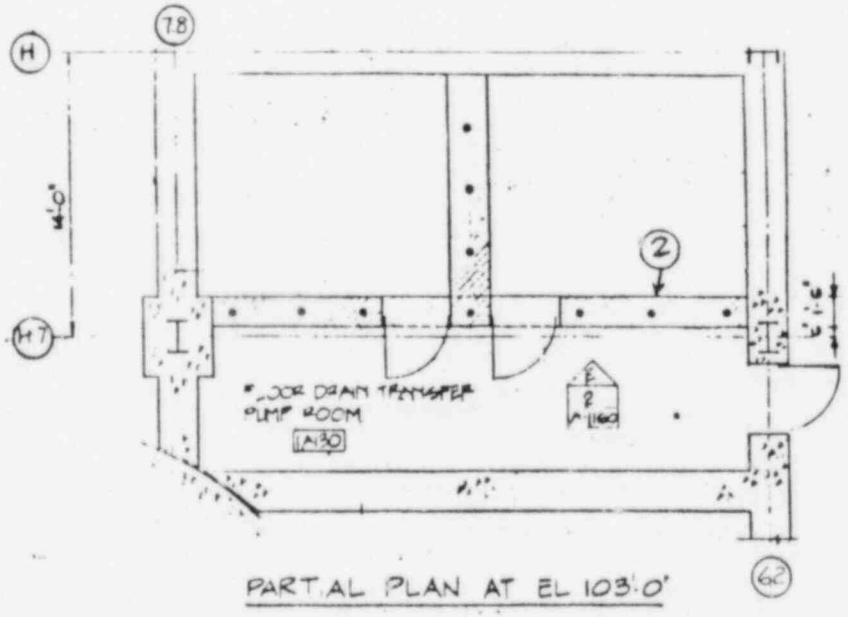

PARTIAL PLAN AT EL 103'-0"

UNIT 1 AUXILIARY BUILDING

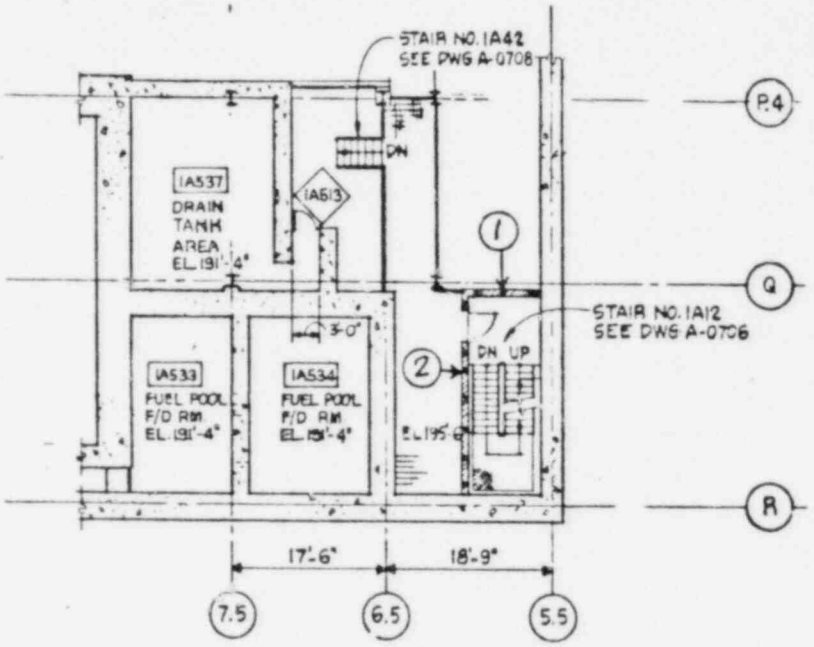

PARTIAL PLAN AT EL. 191'-4" & 195'-6"

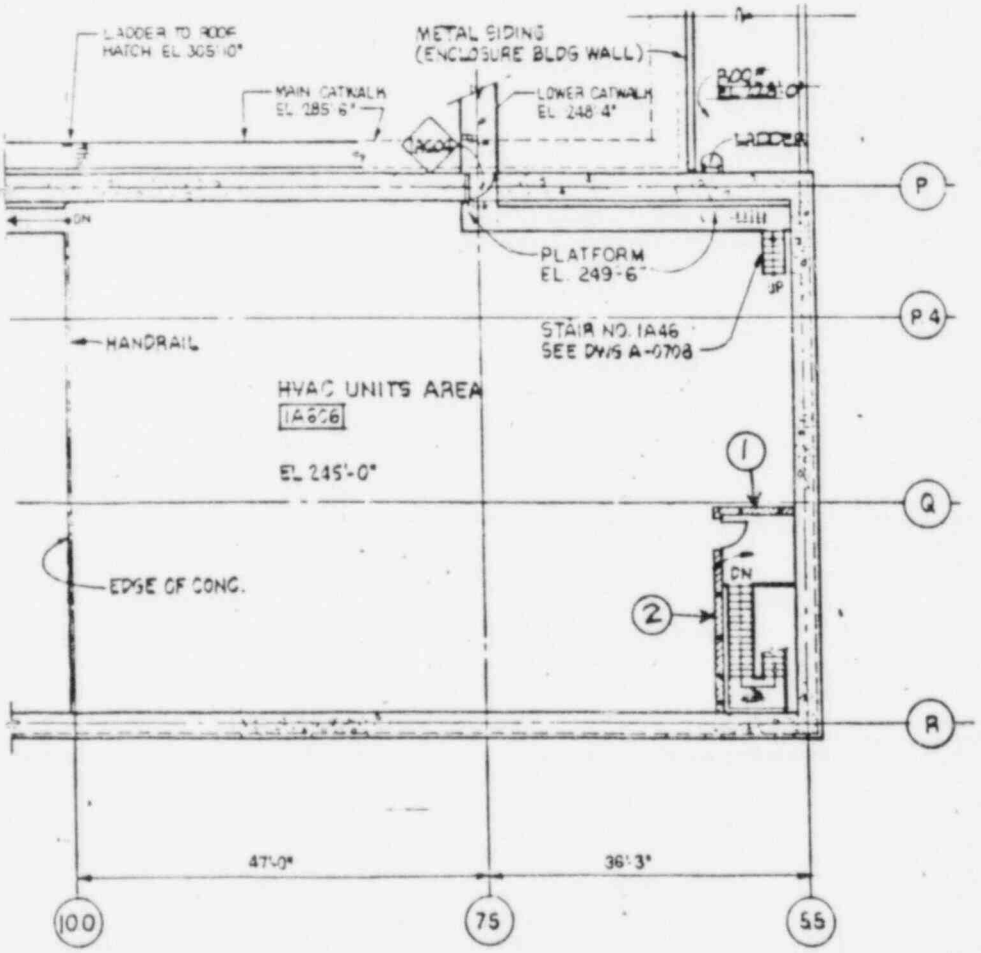

PARTIAL - PLAN AT EL 245'-0"

UNIT 1 AUXILIARY BUILDING

LISTING OF AUXILIARY BUILDING CMU WALLS

Elevation	Plan Location Number	Wall Designation Bldg. - Elev. - No., Face	Arch. Elevation No. Elev. No/Dwg., Facing
93'-0"	1	A-93-001, NS	1/A-1160, N
93'-0"	2	A-93-002, NS	5/A-1160, N
103'-0"	2	A-103-002, NS	2/A-1160, E
111'-0"	1	A-111-001, EW	N/A
111'-0"	2	A-111-002, NS	N/A
119'-0"	1	A-119-001, NS	8/A-1160, S
119'-0"	2	A-119-002, EW	1/A-1161, W
119'-0"	3	A-119-003, NS	3/A-1160, N
119'-0"	4	A-119-004, EW	3/A-1160, W
119'-0"	5	A-119-005, NS	4/A-1160, S
119'-0"	6	A-119-006, EW	4/A-1160, W
119'-0"	7	A-119-007, EW	N/A
119'-0"	8	A-119-008, NS	N/A
139'-0"	1	A-139-001, EW	6/A-1160, E
139'-0"	2	A-139-002, NS	6/A-1160, S
139'-0"	3	A-139-003, NS	6/A-1160, S
139'-0"	4	A-139-004, NS	7/A-1160, S
139'-0"	5	A-139-005, NS	7/A-1160, S
139'-0"	6	A-139-006, EW	6/A-1160, W
139'-0"	7	A-139-007, EW	3/A-1161, W
139'-0"	8	A-139-008, NS	2/A-1161, S
139'-0"	9	A-139-009, EW	3/A-1162, E
139'-0"	10	A-139-010, EW	3/A-1162, W
139'-0"	11	A-139-011, NS	N/A

LISTING OF AUXILIARY BUILDING CMU WALLS (Cont.)

Elevation	Plan Location Number	Wall Designation Bldg. - Elev.- No., Face	Arch. Elevation No. Elev. No/Dwg., Facing
139'-0"	12	A-139-012, NS	3/A-1162, S
139'-0"	13	A-139-013, NS	2/A-1162, N
139'-0"	14	A-139-014, EW	2/A-1162, W
166'-0"	1	A-166-001, EW	5/A-1161, W
166'-0"	2	A-166-002, NS	4/A-1161, S
166'-0"	3	A-166-003, NS	6/A-1161, N
166'-0"	4	A-166-004, NS	7/A-1161, S
166'-0"	5	A-166-005, NS	N/A
166'-0"	5	A-166-005, EW	N/A
185'-0"	1	A-185-001, NS	1/A-1162, N
185'-0"	2	A-185-002, NS	9/A-1161, S
185'-0"	3	A-185-003, EW	8/A-1161, W
195'-6"	1	A-195-001, EW	10/A-1161, W
195'-6"	2	A-195-002, NS	11/A-1161, S
208'-10"	1	A-208-001, EW	12/A-1161, W
208'-10"	2	A-208-002, NS	13/A-1161, S
245'-0"	1	A-208-001, EW	14/A-1161, S
245'-0"	2	A-208-002, NS	15/A-1161, S

APPENDIX G

APPENDIX G

WALL CONFIGURATION AND FUNCTION SUMMARY

APPENDIX G

WALL CONFIGURATION AND FUNCTION SUMMARY

For the purposes of the following tables, the definitions listed below shall apply:

Span	--	Horizontal distance between supports (existing before the block walls re-evaluation) or between intersecting CMU walls
Height	--	Vertical wall height
Thickness	--	Nominal CMU wall thickness
Horizontal Action	--	Bending resisted by bond beams or horizontal reinforcing (acting with masonry)
Vertical Action	--	Bending resisted primarily by vertical reinforcing (acting with grout and masonry)
Partition Wall	--	Walls not classified as fire walls
Fire Wall	--	Walls with at least a 2-hour fire rating

TABLE I

TABLE I

WALL NUMBER	SPAN	HEIGHT	THICKNESS 4"	8"	12"	VERTICAL REINFORCING #5@8"	#5@16"	NONE	HORIZONTAL REINFORCING DUR-O-WALL @8"O.C.	@16"O.C.	BOND BEAMS	CELL GROUT EVERY CELL	ALTER CELL	NONE	ACTION ASSUMED HORIZ	VERT	FUNCTION PARTITION	FIRE	NOTE
C-93-001	8'-3"	16'-4"		X			X		X			X						X	D
C-93-002	19'-5"	16'-9"	X				X		X				X					X	D
C-93-003	3'-1"	16'-6"		X			X		X			X						X	D
C-93-004	6'-0"	16'-9"	X				X		X				X		X			X	
C-93-005	18'-1"	16'-9"	X				X		X				X		X			X	A
C-93-006	7'-6"	16'-9"	X				X		X				X		X			X	A
C-111-001	7'-4"	21'-1"	X				X				@16"OC		X		X			X	
C-111-002	4'-10"	21'-0"	X				X				@16"OC		X		X			X	
C-111-003	6'-4"	20'-8"	X				X				@16"OC		X		X			X	
C-111-004	4'-2"	20'-10"	X				X				@16"OC		X		X			X	
C-111-005	10'-0"	19'-2"	X				X				@16"OC		X		X			X	
C-111-006	7'-1"	20'-10"	X				X				@16"OC		X		X			X	
C-111-007	9'-3"	19'-3"	X				X				@16"OC		X		X			X	
C-111-008	2'-2"	20'-9"	X				X				@16"OC		X		X			X	
C-111-009 NS	2'-4"	19'-3"	X				X				@16"OC		X		X			X	
C-111-009 EW	14'-4"	20'-10"	X				X				@16"OC		X		X	X		X	A
C-111-010	2'-4"	18'-11"	X				X				@16"OC		X		X			X	
C-111-011	19'-8"	10'-0"	X				X				@16"OC		X			X	X		A
C-111-012 (1)	6'-6"	20'-9"	X				X				@16"OC		X		X			X	
C-111-012 (2)	7'-10"	20'-9"	X				X				@16"OC		X		X			X	
C-111-012 (3)	7'-8"	20'-9"	X				X				@16"OC		X		X			X	
C-111-012 (4)	10'-2"	20'-9"	X				X				@16"OC		X		X			X	
C-111-012 (5)	9'-8"	20'-9"	X				X				@16"OC		X		X			X	
C-111-013	13'-5"	10'-1"	X				X				@16"OC		X			X	X		A
C-111-014 (1)	1'-5"	21'-0"	X				X				@16"OC		X		X			X	
C-111-014 (2)	3'-4"	21'-0"	X				X				@16"OC		X		X			X	
C-111-014 (3)	7'-10"	21'-0"	X				X				@16"OC		X		X			X	
C-111-014 (4)	7'-5"	21'-0"	X				X				@16"OC		X		X			X	
C-111-015	11'-8"	20'-7"	X				X				@16"OC		X		X			X	
C-111-016 (1)	19'-7"	10'-9"	X				X				@16"OC		X			X		X	
C-111-016 (2)	19'-7"	9'-3"	X				X				@16"OC		X			X		X	C
C-111-017	9'-0"	9'-5"	X				X				@16"OC		X			X		X	C
C-111-018	21'-6"	9'-4"	X				X				@16"OC		X			X		X	C
C-111-019	9'-1"	9'-3"	X				X				@16"OC		X			X		X	C
C-111-020	9'-2"	9'-4"	X				X				@16"OC		X			X		X	C
C-111-021 (1)	21'-6"	9'-3"	X				X				@16"OC		X			X		X	
C-111-021 (2)	21'-6"	10'-9"	X				X				@16"OC		X			X		X	C
C-111-022	21'-6"	9'-4"	X				X				@16"OC		X			X		X	C
C-111-023	7'-7"	20'-4"	X				X				@16"OC		X		X			X	
C-111-024	15'-4"	20'-8"	X				X				@16"OC		X		X			X	
C-111-025	4'-5"	9'-4"	X				X				@16"OC		X			X		X	C

NOTES: A - Modification implemented
B - Wall analyzed as a vertical cantilever
C - Load-bearing wall
D - Barrier designed to protect Category I equipment
E - 4-inch CMU encasing structural steel column
F - Horizontal action assumed with modification
G - 4-inch CMU section at recess is replaced

TABLE I (Cont.)

WALL NUMBER	SPAN	HEIGHT	THICKNESS 4"	8"	12"	VERTICAL REINFORCING #5@8"	#5@16"	NONE	HORIZONTAL REINFORCING DUR-O-WALL @8"O.C.	@16"O.C.	BOND BEAMS	CELL GROUT EVERY CELL	ALTER CELL	NONE	ACTION ASSUMED HORIZ	VERT	FUNCTION PARTITION	FIRE	NOTE
C-111-026	3'-5"	20'-8"		X			X				@16"OC		X		X			X	
C-111-027	3'-5"	9'-4"		X			X				@16"OC		X		X			X	C
C-111-028	12'-0"	10'-0"		X			X				@16"OC		X		X		X		
C-111-029	11'-2"	20'-8"		X			X				@16"OC		X		X			X	A
C-111-030 (1)	10'-9"	21'-0"		X			X				@16"OC		X		X			X	A
C-111-030 (2)	3'-10"	21'-0"		X			X				@16"OC		X		X			X	
C-111-031	7'-8"	21'-0"		X			X				@16"OC		X		X			X	
C-111-032	8'-0"	10'-0"		X			X				@16"OC		X		X		X		
C-111-033 (1)	12'-3"	9'-5"		X			X				@16"OC		X			X		X	C
C-111-033 (2)	11'-10"	10'-6"		X			X				@16"OC		X		X			X	
C-111-034	19'-0"	9'-6"		X			X				@16"OC		X			X		X	C
C-111-035	12'-2"	9'-5"		X			X				@16"OC		X			X		X	C
C-111-036 (1)	19'-1"	9'-4"		X			X				@16"OC		X			X		X	C
C-111-036 (2)	19'-9"	8'-5"		X			X				@16"OC		X			X		X	
C-111-037	12'-3"	9'-6"		X			X				@16"OC		X			X		X	C
C-111-038	19'-8"	9'-5"		X			X				@16"OC		X			X		X	C
C-111-039 (1)	12'-4"	9'-5"		X			X				@16"OC		X			X		X	C
C-111-039 (2)	11'-10"	10'-6"		X			X				@16"OC		X			X		X	A
C-111-040	19'-8"	9'-5"		X			X				@16"OC		X			X		X	C
C-111-041	12'-4"	9'-5"		X			X				@16"OC		X			X		X	C
C-111-042 (1)	19'-0"	9'-4"		X			X				@16"OC		X			X		X	C
C-111-042 (2)	19'-0"	8'-5"		X			X				@16"OC		X			X		X	
C-111-043	12'-4"	9'-5"		X			X				@16"OC		X			X		X	C
C-111-044	19'-8"	9'-5"		X			X				@16"OC		X			X		X	C
C-111-045	11'-7"	21'-8"		X			X				@16"OC		X		X			X	
C-111-046	9'-3"	9'-2"		X			X				@16"OC		X			X		X	C
C-111-047	9'-2"	9'-3"		X			X				@16"OC		X			X		X	C
C-111-048	9'-3"	9'-2"		X			X				@16"OC		X			X		X	C
C-111-049	42'-3"	9'-2"		X			X				@16"OC		X			X		X	C
C-111-050 (1)	42'-3"	9'-2"		X			X				@16"OC		X			X		X	C
C-111-050 (2)	42'-3"	10'-6"		X			X				@16"OC		X			X		X	
C-111-051	13'-6"	10'-0"		X			X				@16"OC		X			X	X		A
C-111-052 (1)	2'-2"	20'-7"		X			X				@16"OC		X		X			X	
C-111-052 (2)	2'-9"	20'-7"		X			X				@16"OC		X		X			X	
C-111-052 (3)	7'-9"	20'-7"		X			X				@16"OC		X		X			X	
C-111-052 (4)	7'-9"	20'-7"		X			X				@16"OC		X		X			X	
C-111-053 (1)	9'-8"	20'-7"		X			X				@16"OC		X		X			X	
C-111-053 (2)	10'-8"	20'-7"		X			X				@16"OC		X		X			X	
C-111-053 (3)	7'-8"	20'-7"		X			X				@16"OC		X		X			X	
C-111-053 (4)	6'-11"	20'-7"		X			X				@16"OC		X		X			X	
C-111-053 (5)	6'-6"	20'-7"		X			X				@16"OC		X		X			X	

NOTES: A - Modification implemented
B - Wall analyzed as a vertical cantilever
C - Load-bearing wall
D - Barrier designed to protect Category I equipment
E - 4-inch CMU encasing structural steel column
F - Horizontal action assumed with modification
G - 4-inch CMU section at recess is replaced

TABLE I (Cont.)

WALL NUMBER	SPAN	HEIGHT	THICKNESS			VERTICAL REINFORCING			HORIZONTAL REINFORCING			CELL GROUT			ACTION ASSUMED		FUNCTION		NOTE
			4"	8"	12"	#5@8"	#5@16"	NONE	DUR-O-WALL @8"O.C.	DUR-O-WALL @16"O.C.	BOND BEAMS	EVERY CELL	ALTER CELL	NONE	HORIZ	VERT	PARTITION	FIRE	
C-111-054	19'-8"	9'-6"		X			X				@16"OC		X			X	X		A
C-111-055	5'-6"	14'-8"		X			X				@16"OC		X		X			X	
C-111-056 NS	5'-6"	14'-8"		X			X				@16"OC		X		X			X	
C-111-056 EW	9'-6"	14'-8"		X			X				@16"OC		X		X			X	
C-111-057	2'-6"	13'-5"		X			X				@16"OC		X		X			X	
C-111-058 NS	6'-11"	13'-5"		X			X				@16"OC		X		X			X	
C-111-059	3'-10"	21'-0"		X			X				@16"OC		X		X			X	
C-133-001	9'-3"	13'-8"		X			X		X				X		X			X	
C-133-002	4'-11"	13'-4"		X			X		X				X			X		X	
C-133-003 (1)	2'-2"	13'-4"		X			X		X				X		X			X	
C-133-003 (2)	6'-1"	13'-4"		X			X		X				X		X			X	
C-133-003 (3)	7'-7"	13'-4"		X			X		X				X			X		X	
C-133-003 (4)	38'-11"	11'-6"		X			X		X				X		X			X	A
C-133-003 (5)	7'-10"	12'-2"		X			X		X				X		X			X	
C-133-004 (1)	7'-6"	13'-9"		X			X		X				X		X			X	
C-133-004 (2)	9'-2"	13'-9"		X			X		X				X		X			X	
C-133-005	8'-0"	13'-6"		X			X		X				X		X			X	
C-133-006	8'-7"	13'-9"		X			X		X				X		X			X	
C-133-007	8'-0"	13'-8"		X			X		X				X		X			X	
C-133-008 NS	6'-4"	11'-10"		X			X		X				X		X			X	
C-133-008 EW	10'-4"	13'-7"		X			X		X				X		X			X	A
C-133-009 (1)	18'-10"	13'-4"		X			X		X				X			X		X	A
C-133-009 (2)	13'-0"	13'-4"		X			X		X				X			X		X	A
C-133-010	8'-7"	13'-4"		X			X		X				X		X	X		X	
C-133-011	8'-8"	14'-0"		X			X		X				X		X			X	
C-133-012	6'-10"	13'-8"		X			X		X				X		X	X		X	
C-133-013	7'-0"	14'-0"		X			X		X				X		X			X	
C-133-014 EW	3'-2"	13'-9"		X				X		X				X	X		X		
C-133-014 NS	7'-7"	13'-9"		X				X		X				X	X		X		
C-133-015 EW	8'-8"	13'-6"		X			X		X				X			X		X	
C-133-015 NS	7'-8"	12'-8"		X			X		X				X			X		X	
C-133-016	6'-6"	10'-8"		X			X		X				X			X		X	
C-133-017 NS	7'-6"	13'-7"		X			X		X				X		X			X	
C-133-017 EW	3'-8"	13'-7"		X			X		X				X		X			X	
C-148-001	21'-0"	15'-9"		X			X		X				X			X		X	A
C-148-002	8'-8"	15'-11"		X			X		X				X		X			X	
C-148-003	8'-8"	16'-0"		X			X		X				X			X		X	A
C-148-004	4'-9"	13'-4"		X			X		X				X		X			X	
C-144-005	20'-11"	13'-7"		X			X		X				X			X		X	
C-148-006	8'-7"	14'-10"		X			X		X				X		X			X	
C-148-007 (3)	4'-7"	15'-10"		X			X		X			X			X			X	

NOTES: A - Modification implemented
B - Wall analyzed as a vertical cantilever
C - Load-bearing wall
D - Barrier designed to protect Category I equipment
E - 4-inch CMU encasing structural steel column
F - Horizontal action assumed with modification
G - 4-inch CMU section at recess is replaced

TABLE I (Cont.)

WALL NUMBER	SPAN	HEIGHT	THICKNESS 4"	8"	12"	VERTICAL REINFORCING #5@8"	#5@16"	NONE	HORIZONTAL REINFORCING DUR-O-WALL @8"O.C.	@16"O.C.	BOND BEAMS	CELL GROUT EVERY CELL	ALTER CELL	NONE	ACTION ASSUMED HORIZ	VERT	FUNCTION PARTITION	FIRE	NOTE
C-148-007 (2)	49'-5"	13'-10"	X			X			X			X				X		X	A
C-148-008 (1)	7'-3"	14'-1"	X			X			X				X		X			X	
C-148-008 (2)	39'-11"	13'-10"	X			X			X			X				X		X	A
C-148-009	13'-5"	16'-10"	X			X			X				X		X			X	A
C-148-010	7'-3"	13'-4"	X			X			X				X		X			X	
C-148-011 (1)	9'-2"	16'-2"	X			X			X			X				X		X	A
C-148-011 (2)	30'-7"	16'-2"	X			X			X			X				X		X	A
C-148-011 (3)	13'-5"	16'-2"	X			X			X			X				X		X	A
C-148-012 (1)	2'-5"	13'-7"	X			X			X			X			X			X	
C-148-012 (2)	6'-6"	13'-7"	X			X			X			X			X			X	
C-148-012 (3)	29'-2"	13'-7"	X			X			X			X				X		X	A
C-148-013	54'-5"	16'-0"	X			X			X			X				X		X	A
C-148-014	7'-4"	14'-0"	X			X			X				X		X			X	
C-148-015	13'-4"	16'-8"	X			X			X				X		X			X	A
C-148-016 (1)	7'-4"	14'-1"	X			X			X				X		X			X	
C-148-016 (2)	4'-2"	14'-1"	X			X			X			X			X			X	
C-148-016 (3)	4'-8"	14'-1"	X			X			X			X			X			X	
C-148-016 (4)	6'-0"	14'-1"	X			X			X			X			X			X	
C-148-016 (5)	5'-8"	14'-1"	X			X			X			X			X			X	
C-148-016 (6)	15'-0"	14'-1"	X			X			X			X			X			X	A
C-148-016 (7)	4'-8"	14'-1"	X			X			X			X			X			X	
C-148-017 (1)	4'-7"	15'-10"	X			X			X				X		X			X	
C-148-017 (2)	49'-5"	15'-10"	X			X			X			X				X		X	A,F
C-148-018 EW	7'-5"	16'-8"	X			X			X				X		X			X	
C-148-018 NS(1)	6'-1"	9'-0"	X			X			X				X			X		X	C
C-148-018 NS(2)	6'-3"	16'-8"	X			X			X				X		X			X	
C-149-019	24'-9"	9'-1"	X			X			X				X			X		X	C
C-149-020 (1)	24'-9"	9'-1"	X			X			X				X			X		X	C
C-148-020 (2)	24'-9"	6'-8"	X			X			X				X			X		X	
C-148-021 (1)	5'-4"	9'-0"	X			X			X				X			X		X	C
C-148-021 (2)	6'-3"	16'-8"	X			X			X				X		X			X	
C-148-022	6'-4"	16'-8"	X			X			X				X		X			X	
C-148-023	9'-4"	9'-1"	X			X			X				X			X		X	C
C-148-024 (1)	26'-0"	9'-0"	X			X			X				X			X		X	C
C-148-024 (2)	10'-4"	6'-9"	X			X			X				X			X		X	
C-148-025 (1)	25'-9"	9'-0"	X			X			X				X			X		X	C
C-148-025 (2)	22'-8"	6'-10"	X			X			X				X			X		X	
C-148-026	7'-6"	17'-3"	X			X			X				X		X			X	
C-148-027 (1)	9'-5"	9'-1"	X			X			X				X			X		X	C
C-148-027 (2)	9'-5"	6'-10"	X			X			X				X			X		X	A
C-148-028 (1)	5'-2"	15'-11"	X			X			X				X		X			X	
C-148-028 (2)	7'-6"	16'-11"	X			X			X				X		X			X	A

NOTES:
- A - Modification implemented
- B - Wall analyzed as a vertical cantilever
- C - Load-bearing wall
- D - Barrier designed to protect Category I equipment
- E - 4-inch CMU encasing structural steel column
- F - Horizontal action assumed with modification
- G - 4-inch CMU section at recess is replaced

TABLE I (Cont.)

WALL NUMBER	SPAN	HEIGHT	THICKNESS			VERTICAL REINFORCING			HORIZONTAL REINFORCING			CELL GROUT			ACTION ASSUMED		FUNCTION		NOTE
			4"	8"	12"	#5@8"	#5@16"	NONE	DUR-O-WALL #8"O.C.	DUR-O-WALL #16"O.C.	BOND BEAMS	EVERY CELL	ALTER CELL	NONE	HORIZ	VERT	PARTITION	FIRE	
C-148-029 (1)	3'-8"	13'-11"		X			X		X				X		X		X		
C-148-029 (2)	2'-4"	15'-4"	X					X		X				X	X				E
C-148-030 (1)	9'-5"	9'-1"		X			X		X				X			X		X	C
C-148-030 (2)	10'-5"	7'-11"		X			X		X				X			X		X	
C-148-030 (3)	12'-9"	17'-0"		X			X		X				X			X		X	A
C-148-031	26'-1"	9'-1"		X			X		X				X			X		X	C
C-148-032 (1)	25'-8"	9'-1"		X			X		X				X			X		X	C
C-148-032 (2)	25'-8"	7'-5"		X			X		X				X			X		X	
C-148-033	9'-4"	9'-1"		X			X		X				X			X		X	C
C-148-034	6'-4"	13'-7"		X			X		X				X		X			X	
C-148-035	25'-0"	9'-1"		X			X		X				X			X		X	C
C-148-036 (1)	24'-4"	9'-1"		X			X		X				X			X		X	C
C-148-036 (2)	24'-4"	7'-5"		X			X		X				X			X		X	
C-148-037 (1)	5'-4"	9'-1"		X			X		X				X			X		X	C
C-148-037 (2)	6'-4"	14'-3"		X			X		X				X		X			X	
C-166-001	4'-4"	10'-11"		X			X		X				X		X		X		
C-166-002	8'-8"	9'-7"		X			X		X			X				X		X	C
C-166-003	8'-8"	9'-7"		X			X		X				X			X		X	C
C-166-004	7'-4"	9'-7"		X			X		X				X			X	X		A
C-166-005 (1)	7'-1"	9'-7"		X			X		X			X				X		X	C
C-166-005 (2)	21'-4"	21'-9"		X			X		X			X				X		X	A
C-166-006	2'-10"	11'-0"		X			X		X				X		X		X		
C-166-007	8'-8"	20'-11"		X			X		X			X			X			X	A
C-166-008	4'-1"	11'-0"		X			X		X				X		X		X		
C-166-009	26'-9"	10'-3"		X			X		X				X			X		X	A
C-166-011	3'-2"	8'-8"		X			X		X				X		X			X	
C-166-012	18'-3"	10'-3"		X			X		X				X			X		X	A
C-166-013	11'-3"	10'-4"			X		X		X				X		X			X	
C-166-014	11'-0"	8'-3"		X			X		X				X			X	X		A
C-166-015	6'-4"	8'-4"		X			X		X				X			X	X		A
C-166-016	6'-2"	10'-4"			X		X		X				X			X		X	
C-166-018	6'-4"	8'-9"			X		X		X				X		X			X	
C-166-019	4'-4"	10'-2"		X			X		X				X			X	X		A
C-166-020	3'-4"	8'-7"		X			X		X				X		X			X	
C-166-021	18'-9"	8'-4"		X			X		X				X			X		X	
C-166-022	6'-9"	10'-6"		X			X		X				X		X			X	
C-166-023	7'-8"	10'-4"		X			X		X				X			X		X	A
C-166-024	22'-11"	10'-3"			X		X		X				X			X		X	A
C-166-025	11'-8"	10'-3"		X			X		X				X			X	X		A
C-166-026	6'-1"	8'-1"		X			X		X				X		X			X	
C-166-027	6'-4"	8'-9"			X		X		X				X		X			X	
C-166-028 (1)	9'-3"	10'-3"			X		X		X				X		X			X	

NOTES: A - Modification implemented
B - Wall analyzed as a vertical cantilever
C - Load-bearing wall
D - Barrier designed to protect Category I equipment
E - 4-inch CMU encasing structural steel column
F - Horizontal action assumed with modification
G - 4-inch CMU section at recess is replaced

TABLE I (Cont.)

WALL NUMBER	SPAN	HEIGHT	THICKNESS			VERTICAL REINFORCING			HORIZONTAL REINFORCING			CELL GROUT			ACTION ASSUMED		FUNCTION		NOTE
			4"	8"	12"	#5@8"	#5@16"	NONE	DUR-O-WALL @8"O.C.	DUR-O-WALL @16"O.C.	BOND BEAMS	EVERY CELL	ALTER CELL	NONE	HORIZ	VERT	PARTITION	FIRE	
C-166-028 (2)	6'-6"	10'-3"		X			X		X				X		X			X	
C-166-029	6'-3"	8'-5"	X				X		X				X		X			X	
C-166-030 (1)	2'-7"	8'-2"	X				X		X				X		X			X	
C-166-030 (2)	11'-9"	8'-2"	X				X		X				X		X			X	A
C-166-031	7'-8"	10'-6"		X			X		X				X		X			X	
C-166-032	4'-9"	20'-4"	X				X		X			X			X			X	
C-166-033	4'-9"	10'-6"	X				X		X			X			X			X	
C-166-034 (1)	8'-0"	10'-4"	X				X		X			X				X	X		A
C-166-034 (2)	11'-4"	10'-4"	X				X		X				X			X		X	A
C-166-035	5'-4"	10'-6"	X				X		X				X		X			X	
C-166-036	6'-4"	10'-6"	X				X		X				X		X			X	
C-166-037	11'-10"	8'-3"	X				X		X				X			X		X	
C-166-038	2'-3"	10'-4"	X				X		X				X		X			X	
C-166-039	6'-8"	10'-4"	X				X		X				X		X			X	
C-166-040	10'-5"	8'-6"	X				X		X				X			X		X	
C-166-041	2'-3"	10'-4"	X				X		X				X		X			X	
C-166-042	6'-8"	10'-4"	X				X		X				X		X			X	
C-166-043	17'-3"	9'-2"		X			X		X				X			X		X	A
C-166-044	6'-4"	10'-4"		X			X		X				X		X			X	
C-166-045	6'-4"	8'-9"		X			X		X				X		X			X	
C-166-046 (1)	6'-0"	8'-0"	X				X		X				X		X			X	
C-166-046 (2)	11'-8"	10'-8"	X				X		X				X			X		X	A
C-166-047	50'-11"	10'-3"		X			X		X				X			X		X	A
C-166-048	6'-4"	8'-9"		X			X		X				X			X		X	
C-166-049	12'-11"	10'-6"	X				X		X				X			X		X	A
C-166-050	13'-0"	10'-6"	X				X		X				X			X		X	
C-166-051	3'-4"	8'-8"	X				X		X				X			X		X	
C-166-052	13'-0"	10'-6"	X				X		X				X			X		X	A
C-166-053	3'-4"	8'-8"	X				X		X				X			X		X	
C-166-054 (1)	6'-8"	10'-6"	X				X		X				X			X		X	
C-166-054 (2)	16'-11"	9'-5"	X				X		X				X			X		X	
C-177-001	8'-7"	12'-7"	X				X		X			X			X			X	
C-177-002 (1)	4'-8"	8'-2"	X				X		X				X			X	X		
C-177-002 (2)	15'-1"	8'-2"					X		X				X			X	X		
C-177-002 (3)	7'-0"	8'-2"	X				X		X				X			X	X		
C-177-003	2'-4"	8'-4"	X				X		X				X		X			X	
C-177-004	9'-1"	10'-7"	X				X		X				X			X		X	A
C-177-005	2'-4"	10'-8"		X			X		X				X		X			X	A,G
C-177-006	4'-2"	10'-8"		X			X		X				X		X			X	A,G
C-177-007	6'-0"	8'-5"	X				X		X				X		X			X	
C-177-008	4'-2"	10'-8"		X			X		X				X		X			X	A,G

NOTES: A - Modification implemented
B - Wall analyzed as a vertical cantilever
C - Load-bearing wall
D - Barrier designed to protect Category I equipment
E - 4-inch CMU encasing structural steel column
F - Horizontal action assumed with modification
G - 4-inch CMU section at recess is replaced

TABLE I (Cont.)

WALL NUMBER	SPAN	HEIGHT	THICKNESS 4"	THICKNESS 8"	THICKNESS 12"	VERTICAL REINFORCING #5@8"	VERTICAL REINFORCING #5@16"	VERTICAL REINFORCING NONE	HORIZONTAL REINFORCING DUR-O-WALL @8"O.C.	HORIZONTAL REINFORCING DUR-O-WALL @16"O.C.	HORIZONTAL REINFORCING BOND BEAMS	CELL GROUT EVERY CELL	CELL GROUT ALTER CELL	CELL GROUT NONE	ACTION ASSUMED HORIZ	ACTION ASSUMED VERT	FUNCTION PARTITION	FUNCTION FIRE	NOTE
C-177-009	2'-4"	10'-6"			X		X		X				X		X			X	A,G
C-177-010	9'-0"	10'-6"		X			X		X				X			X		X	A
C-177-011	2'-4"	8'-4"		X			X		X				X			X	X		
C-177-012 (1)	4'-7"	8'-3"		X			X		X				X			X	X		
C-177-012 (2)	15'-0"	8'-3"		X			X		X				X			X	X		
C-177-012 (3)	7'-0"	8'-3"		X			X		X				X			X	X		
C-177-013	13'-0"	10'-6"		X			X		X				X			X		X	A
C-177-014	13'-0"	8'-9"		X			X		X				X			X		X	
C-177-015 (1)	13'-4"	7'-10"		X			X		X				X		X		X		B
C-177-015 (2)	13'-0"	10'-6"		X			X		X				X			X		X	A
C-177-016	6'-0"	8'-8"			X		X		X				X		X			X	
C-177-017	6'-0"	8'-8"			X		X		X				X		X			X	
C-177-018	29'-11"	10'-8"			X		X		X				X			X		X	A
C-177-019 (1)	6'-0"	10'-6"		X			X		X				X		X			X	A
C-177-019 (2)	10'-3"	10'-6"		X			X		X				X			X		X	
C-177-020 (1)	7'-2"	10'-6"		X			X		X				X			X		X	
C-177-020 (2)	20'-1"	7'-9"		X			X		X				X			X		X	
C-177-021 (1)	2'-11"	10'-7"		X			X		X				X			X		X	A
C-177-021 (2)	17'-10"	10'-7"		X			X		X				X			X		X	A
C-177-021 (3)	2'-2"	10'-7"		X			X		X				X		X			X	
C-177-022	11'-8"	11'-6"		X			X		X				X			X		X	A
C-177-023 (1)	2'-8"	10'-7"			X		X		X				X		X			X	
C-177-023 (2)	4'-2"	11'-6"			X		X		X				X		X			X	
C-177-023 (3)	11'-6"	11'-6"			X		X		X				X			X		X	A
C-177-024	6'-0"	11'-2"			X		X		X				X		X			X	
C-177-025	6'-0"	7'-6"			X		X		X				X		X			X	
C-177-026	16'-1"	11'-9"			X		X		X				X			X		X	A
C-177-027	2'-0"	7'-10"		X			X		X				X		X			X	
C-177-028	6'-0"	8'-11"		X			X		X				X		X			X	A
C-177-029	3'-0"	11'-8"		X			X		X				X			X		X	A
C-177-030	6'-8"	11'-8"		X			X		X				X		X			X	
C-177-031 (1)	11'-4"	11'-8"		X			X		X				X			X		X	A
C-177-031 (2)	8'-0"	11'-8"		X			X		X			X			X		X		A
C-177-032	6'-0"	10'-7"		X			X		X				X		X			X	
C-177-033	7'-7"	12'-1"			X		X		X				X		X			X	
C-177-034	4'-0"	11'-8"		X			X		X			X			X			X	
C-177-035	4'-0"	11'-7"		X			X		X			X			X			X	
C-177-036	7'-0"	11'-8"		X			X		X				X		X			X	
C-177-037 (1)	2'-8"	11'-8"		X			X		X				X			X		X	A
C-177-037 (2)	25'-3"	10'-6"		X			X		X				X			X		X	A
C-177-040	9'-2"	11'-8"			X		X		X				X		X			X	
C-177-043 (1)	26'-3"	7'-11"		X			X		X				X			X		X	

NOTES: A - Modification implemented
B - Wall analyzed as a vertical cantilever
C - Load-bearing wall
D - Barrier designed to protect Category I equipment
E - 4-inch CMU encasing structural steel column
F - Horizontal action assumed with modification
G - 4-inch CMU section at recess is replaced

TABLE I (Cont.)

WALL NUMBER	SPAN	HEIGHT	THICKNESS 4"	8"	12"	VERTICAL REINFORCING #5@8"	#5@16"	NONE	HORIZONTAL REINFORCING DUR-O-WALL @8"O.C.	@16"O.C.	BOND BEAMS	CELL GROUT EVERY CELL	ALTER CELL	NONE	ACTION ASSUMED HORIZ	VERT	FUNCTION PARTITION	FIRE	NOTE
C-177-043 (2)	4'-8"	10'-8"	X				X		X				X			X		X	A
C-177-045 (1)	5'-10"	10'-7"	X				X		X				X		X			X	
C-177-045 (2)	10'-4"	10'-7"		X			X		X				X			X	X		
C-177-046	13'-1"	10'-6"	X				X		X				X			X		X	A
C-177-047	4'-4"	8'-6"	X				X		X				X		X			X	
C-177-048	13'-0"	10'-6"	X				X		X				X			X		X	A
C-177-049	6'-1"	10'-6"		X			X		X				X		X			X	
C-177-050	39'-11"	11'-8"		X			X		X				X			X		X	A
C-177-051	6'-0"	8'-10"		X			X		X				X		X			X	
C-177-052	6'-0"	8'-8"		X			X		X				X		X			X	
C-189-001	7'-6"	16'-9"	X				X		X				X		X			X	
C-189-002	27'-6"	14'-6"	X				X		X				X			X		X	A
C-189-003	8'-7"	14'-6"	X				X		X				X		X			X	
C-189-004	8'-6"	2'-2"	X		X				X			X				X		X	B
C-189-005	4'-7"	2'-2"	X		X				X			X				X		X	B
C-189-006	13'-10"	3'-4"	X		X				X			X				X		X	B
C-189-007	9'-9"	3'-2"	X					X			@8"OC	X			X			X	
C-189-008	22'-6"	3'-4"	X		X				X			X				X		X	B
C-189-009	6'-3"	8'-3"	X					X			@8"OC	X			X			X	
C-189-010	3'-8"	3'-4"	X		X						@8"OC	X				X		X	B
C-189-011	9'-4"	3'-4"	X					X			@8"OC	X			X			X	
C-189-012	10'-0"	3'-4"	X		X				X			X				X		X	B
C-189-013	6'-4"	1'-3"	X				X		X			X				X		X	B
C-206-01	7'-6"	8'-7"	X				X		X				X			X		X	A

NOTES:
- A - Modification implemented
- B - Wall analyzed as a vertical cantilever
- C - Load-bearing wall
- D - Barrier designed to protect Category I equipment
- E - 4-inch CMU encasing structural steel column
- F - Horizontal action assumed with modification
- G - 4-inch CMU section at recess is replaced

TABLE II

TABLE II

WALL NUMBER	SPAN	HEIGHT	THICKNESS 12"	18"	24"	VERTICAL REINFORCING @5@8"	@5@16"	NONE	HORIZONTAL REINFORCING DUR-O-WALL @8"O.C.	@16"O.C.	BOND BEAMS	CELL GROUT EVERY CELL	ALTER CELL	NONE	ACTION ASSUMED HORIZ	VERT	FUNCTION PARTITION	FIRE	NOTE
A-93-001	11'-0"	25'-8"		X		X				X		X			X		X		
A-93-002	10'-0"	8'-0"	X			X			X			X				X	X		B
A-103-002	17'-4"	12'-6"		X		X				X		X				X	X		
A-111-001	7'-9"	5'-4"	X			X			X			X				X		X	B
A-111-002	21'-6"	4'-2"	X			X			X			X				X		X	
A-119-001	22'-6"	17'-9"	X			X			X			X				X		X	
A-119-002	8'-7"	17'-8"	X			X			X			X			X			X	
A-119-003	45'-10"	16'-0"	X			X			X			X				X		X	
A-119-004	4'-0"	16'-0"	X			X			X			X			X			X	
A-119-005	46'-1"	16'-1"	X			X			X			X				X		X	
A-119-006	4'-5"	13'-7"	X			X			X			X			X			X	
A-119-007	5'-0"	17'-7"	X			X			X			X			X		X		
A-119-008	4'-0"	17'-7"	X			X			X			X			X		X		
A-139-001	10'-8"	12'-11"			X	X				X		X				X	X		A
A-139-002	7'-3"	12'-11"			X	X				X		X			X		X		B
A-139-003	4'-0"	12'-11"			X	X				X		X			X		X		
A-139-004	4'-1"	12'-11"			X	X				X		X			X		X		
A-139-005	7'-2"	12'-4"			X	X				X		X			X		X		B
A-139-006	41'-2"	13'-0"			X	X				X		X				X	X		A
A-139-007	8'-2"	25'-0"	X			X			X			X			X			X	
A-139-008	23'-0"	23'-2"	X			X			X			X				X		X	A
A-139-009	2'-0"	24'-8"	X			X			X			X			X		X		
A-139-010	2'-1"	24'-8"	X			X			X			X			X		X		
A-139-011	1'-0"	24'-8"	X			X			X			X			X		X		
A-139-012	46'-6"	24'-8"	X			X			X			X				X		X	A
A-139-013	44'-10"	23'-1"	X			X			X			X				X		X	A
A-139-014	3'-11"	24'-8"	X			X			X			X			X			X	
A-166-001	8'-1"	15'-0"	X			X			X			X				X		X	A
A-166-002	21'-10"	15'-2"	X			X			X			X				X		X	
A-166-003	12'-2"	15'-2"	X			X			X			X				X		X	A
A-166-004	11'-2"	15'-8"	X			X			X			X				X		X	A
A-166-005 NS	2'-0"	9'-5"			X	X				X		X			X		X		
A-166-005 EW	3'-0"	9'-5"			X	X				X		X			X		X		
A-185-001	8'-0"	8'-0"			X	X				X		X				X	X		B
A-185-002	22'-10"	8'-7"	X			X			X			X				X		X	A
A-185-003	9'-0"	8'-9"	X			X			X			X				X		X	A
A-195-001	8'-1"	10'-11"	X			X			X			X				X		X	
A-195-002	23'-0"	9'-7"	X			X			X			X				X		X	A
A-208-001	8'-0"	33'-7"	X			X			X			X			X			X	
A-208-002	22'-0"	32'-0"	X			X			X			X				X		X	A
A-245-001	8'-0"	18'-4"	X			X			X			X			X		X		
A-245-002	22'-0"	18'-4"	X			X			X			X			X	X	X		A

NOTES: A - Modification implemented
B - Wall analyzed as a vertical cantilever

APPENDIX H

APPENDIX H

MASONRY, REINFORCEMENT, AND LINTEL DETAILS

CONTROL BUILDING DETAILS

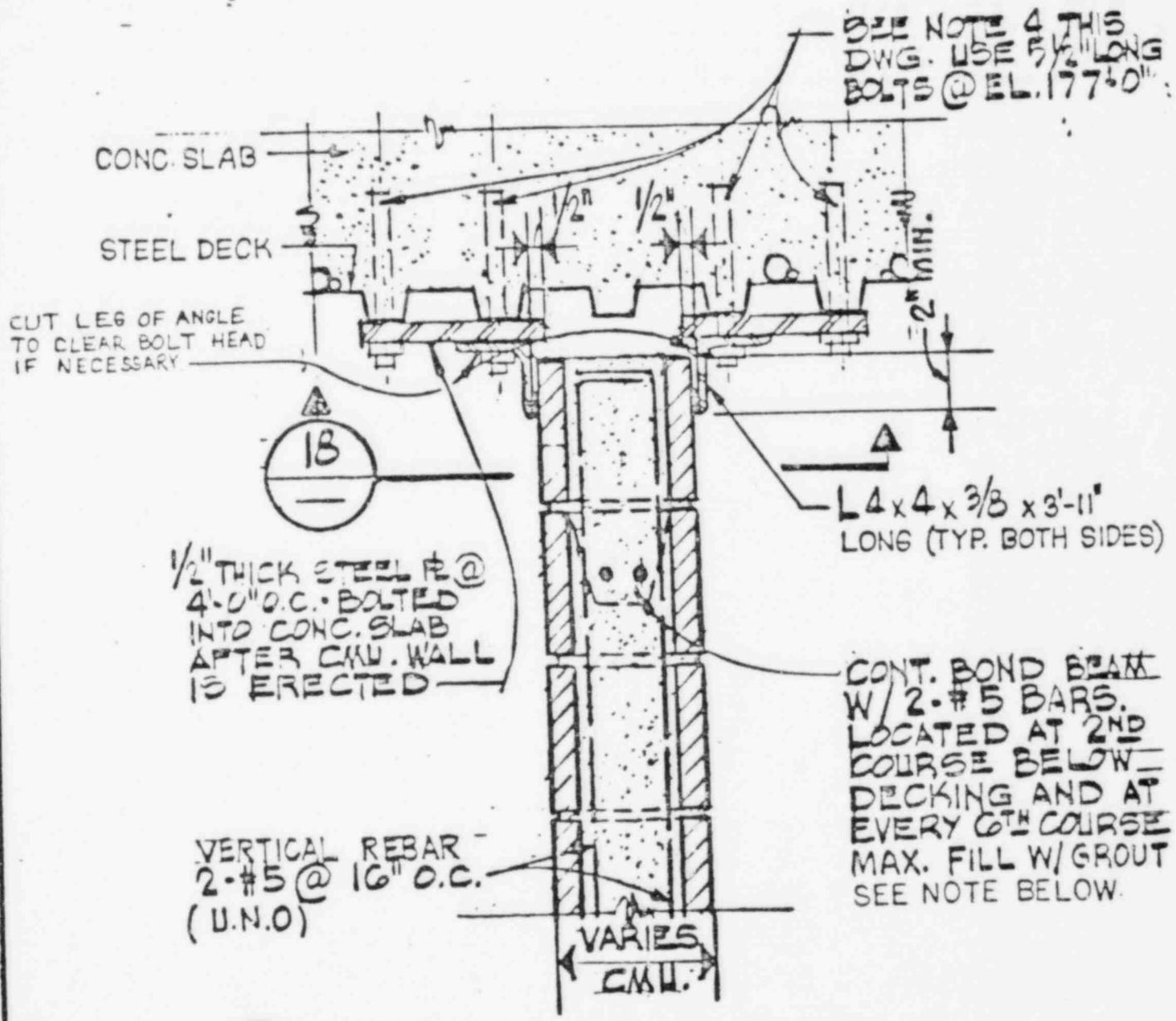

1 — SECTION AT STEEL DECK
CONTROL BUILDING ONLY

NOTE: IN LIEU OF BOND BEAM ALL 8" OR 12" CMU WALLS IN CONTROL BUILDING SHALL HAVE 3/16" x #9 GA HEAVY DUTY HOR. REINF. @ EVERY COURSE AT ALL ELEVATIONS, EXCEPT NOTED OTHERWISE AT EL. 111'-0" IN THE CONTROL BLDG.

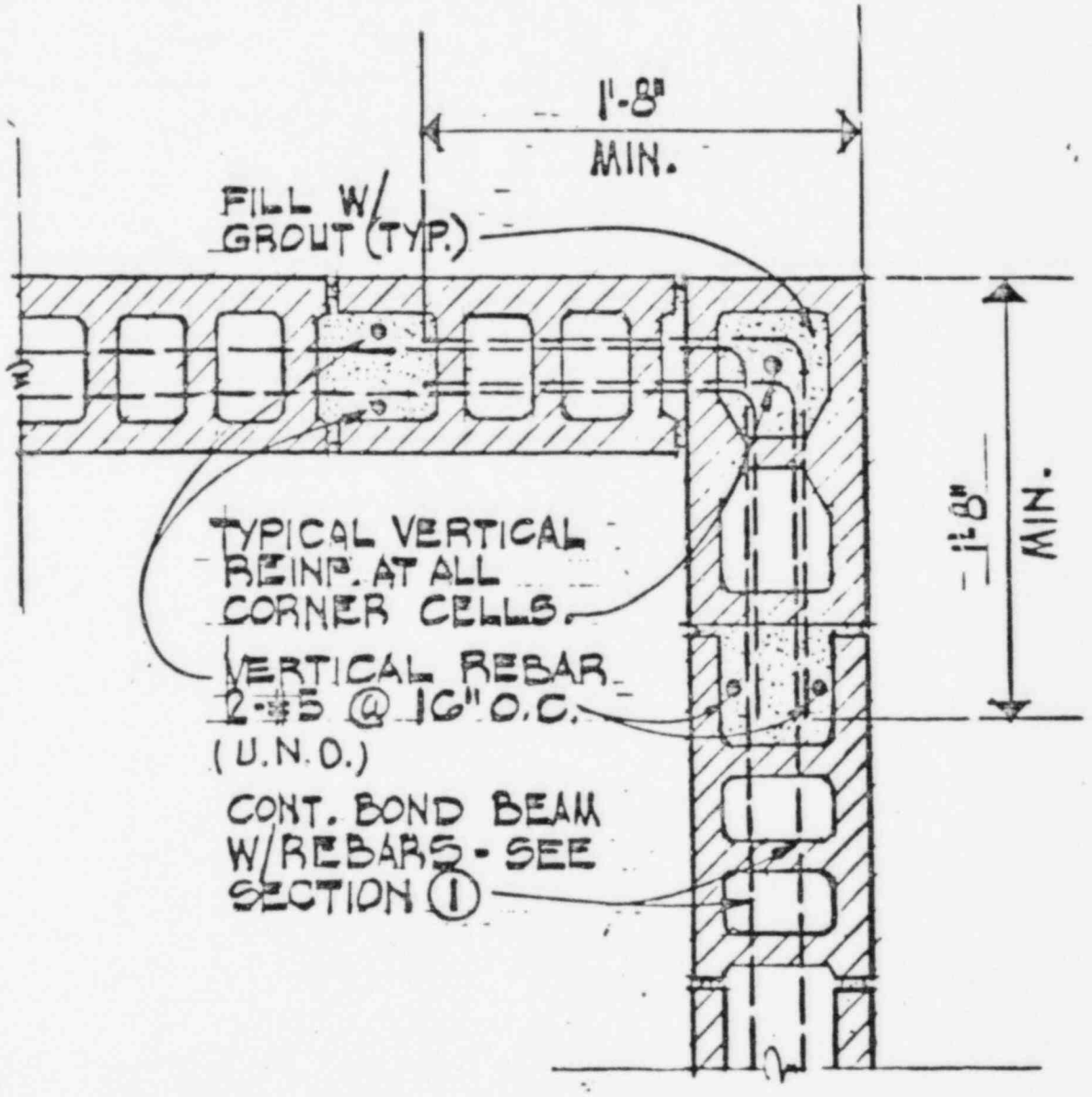

SECTION AT CORNER WALLS

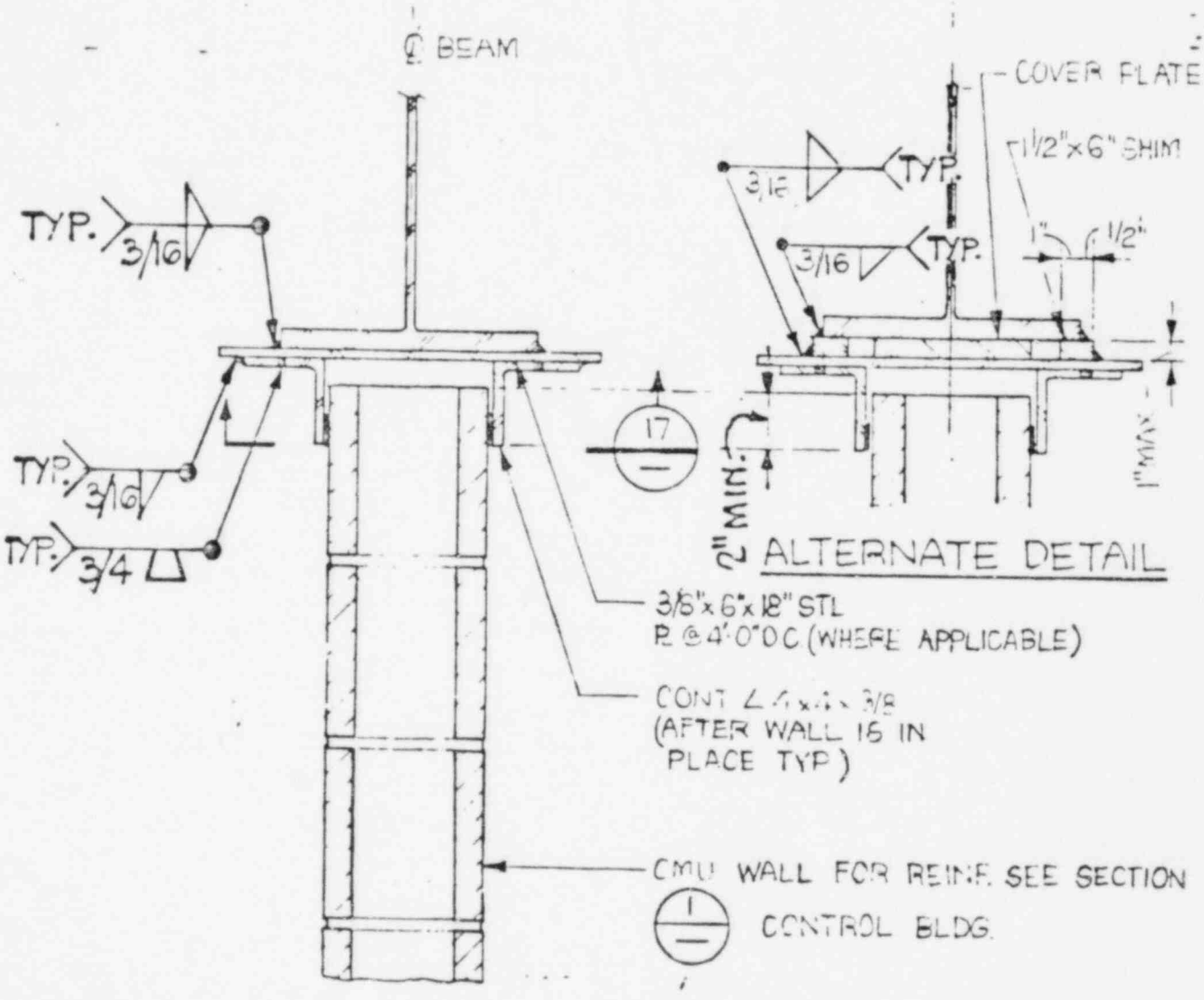

SECTION AT STEEL BEAM

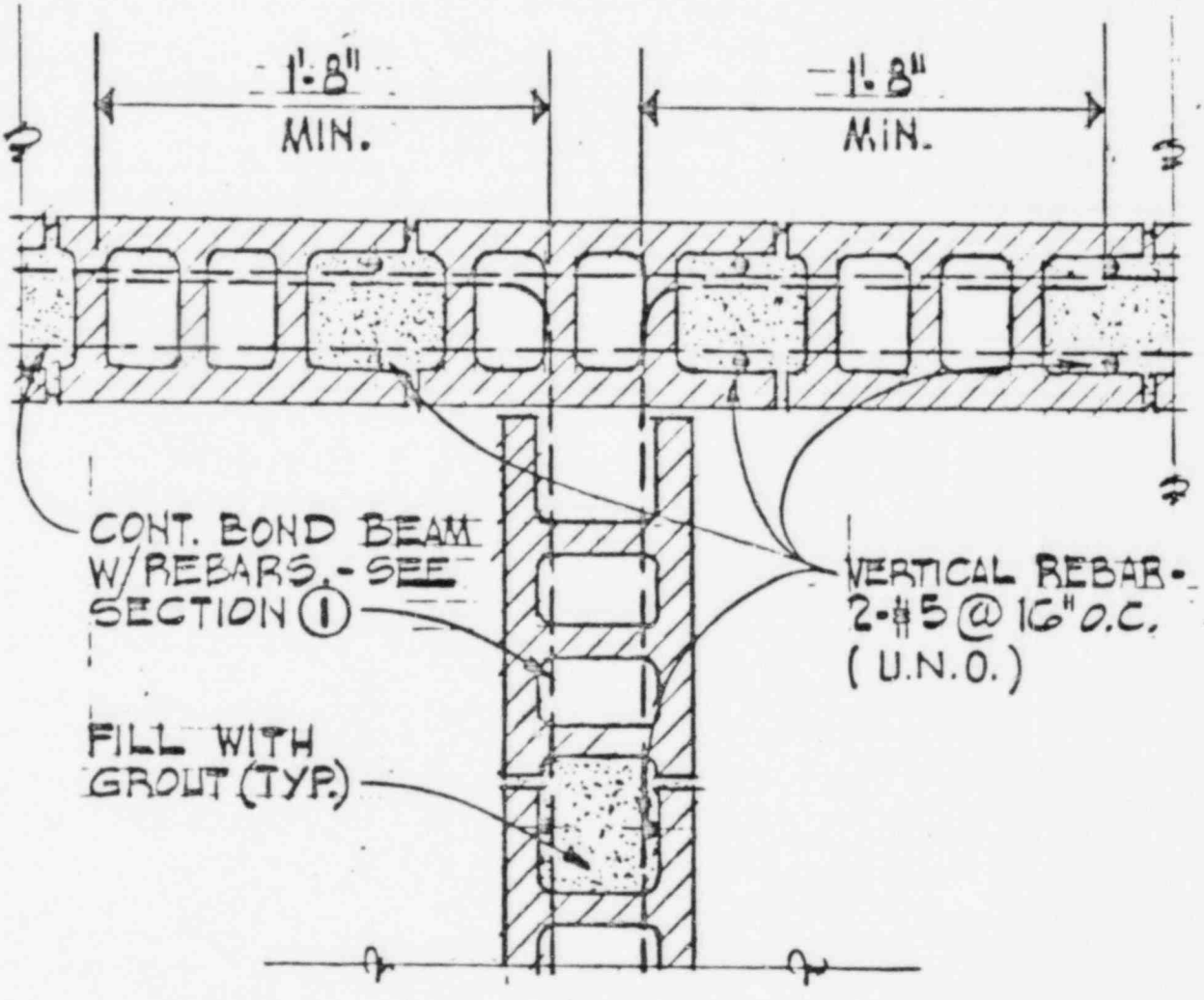

SECTION AT WALL INTERSECTION

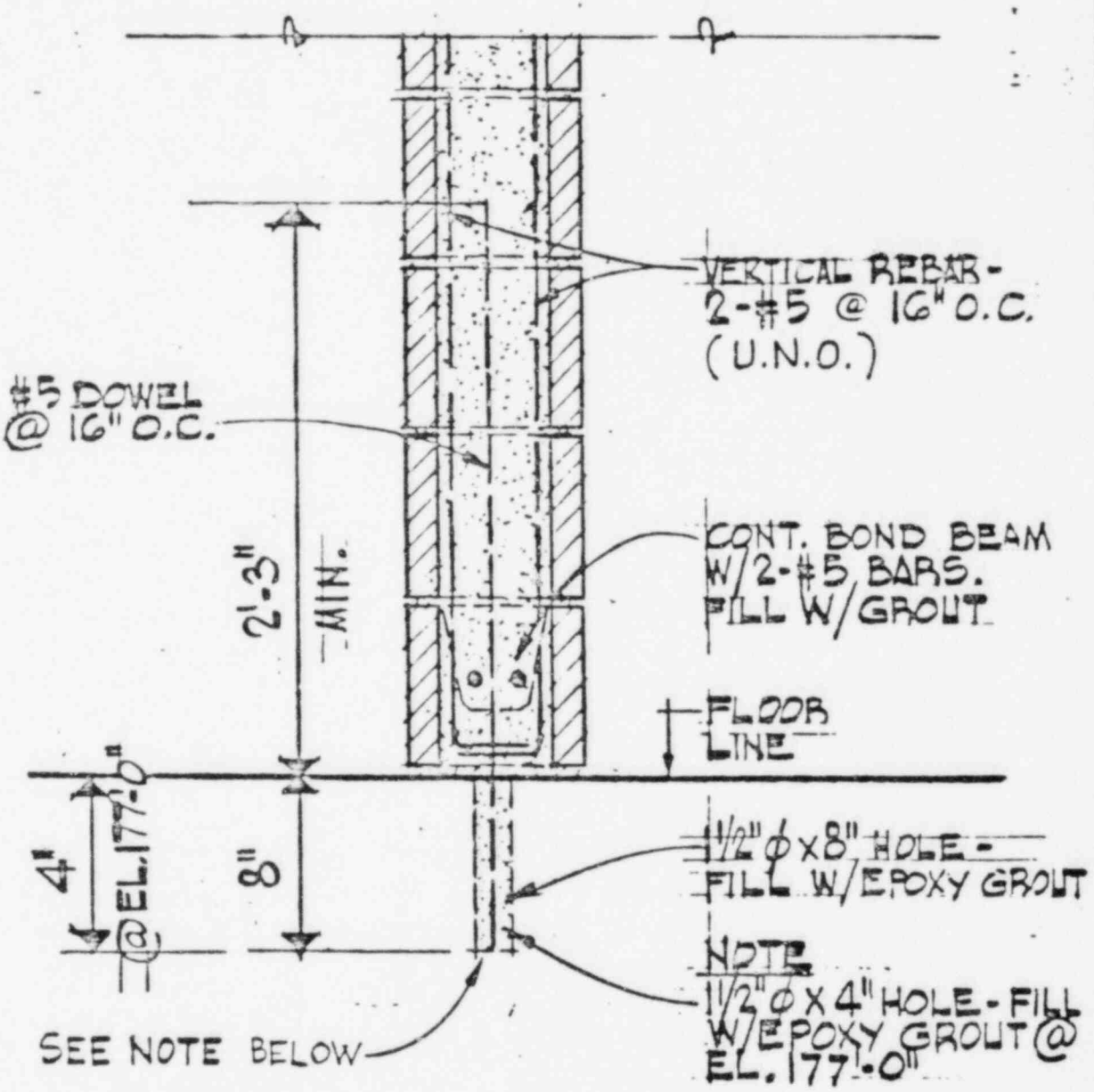

SECTION AT FLOOR LEVEL

NOTE: MAKE MINIMUM OF 3 ATTEMPTS TO DRILL 8" DEEP HOLE. IF UNSUCCESSFUL, USE 1-#8 BAR IN 4" DEEP HOLE AT 16" O.C. WITH EPOXY GROUT, OR 1-#5 BAR IN 4" DEEP HOLE AT 8" O.C WITH EPOXY GROUT.

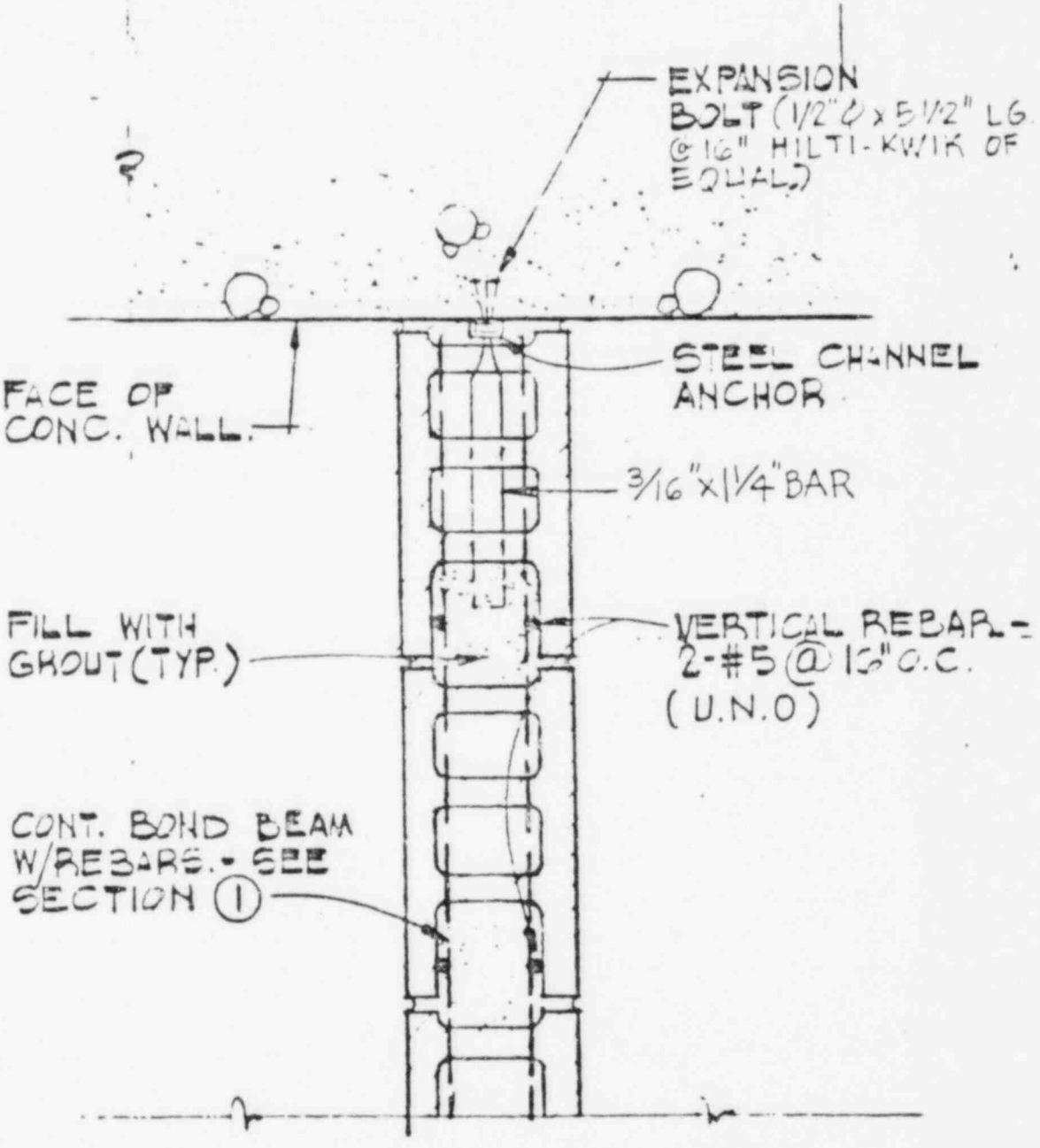

SECTION AT WALL INTERSECTION

ALTERNATE Nº. 1

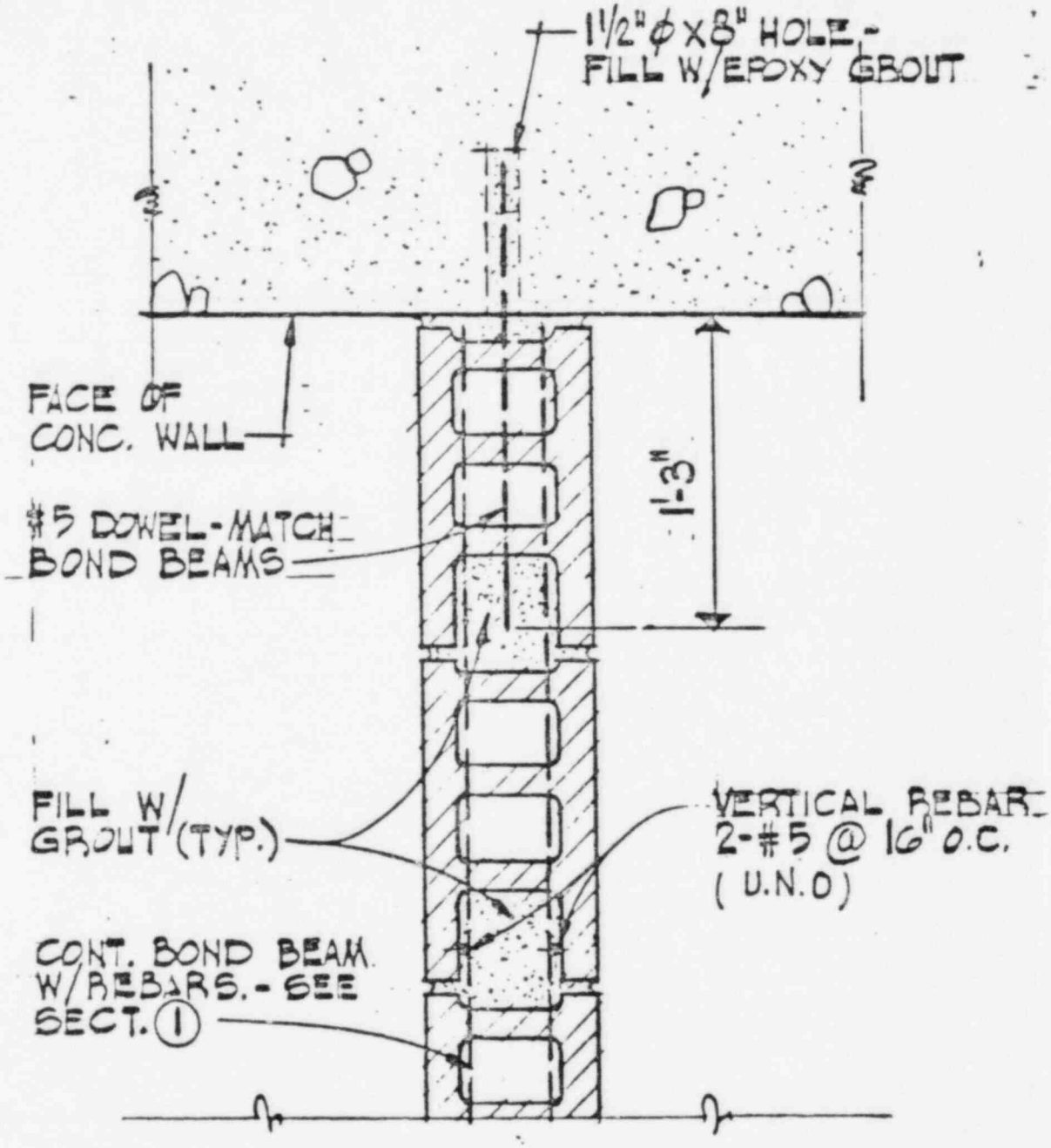

SECTION AT WALL INTERSECTION

ALTERNATE No. 2

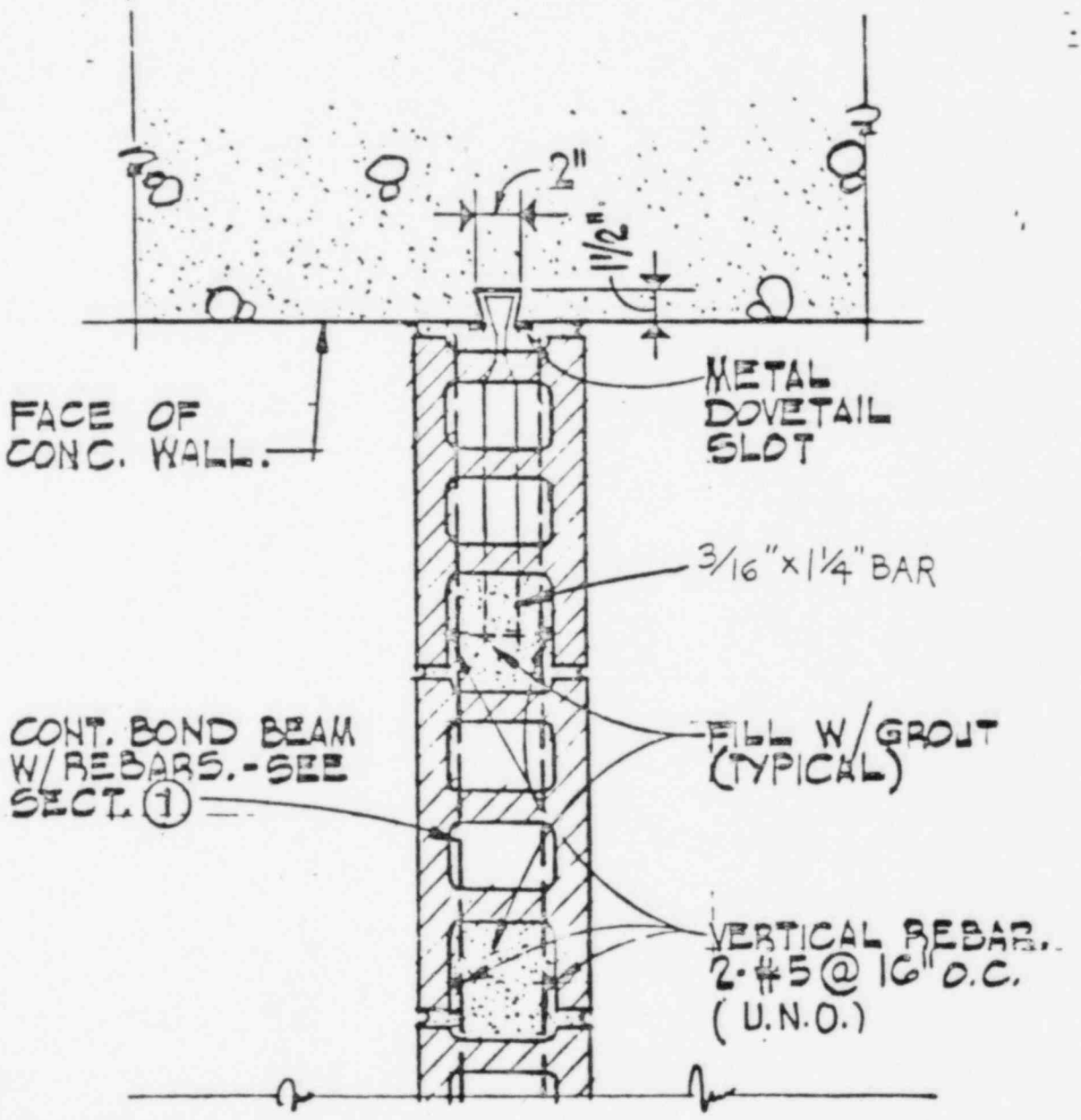

SECTION AT WALL INTERSECTION

ALTERNATE No. 3

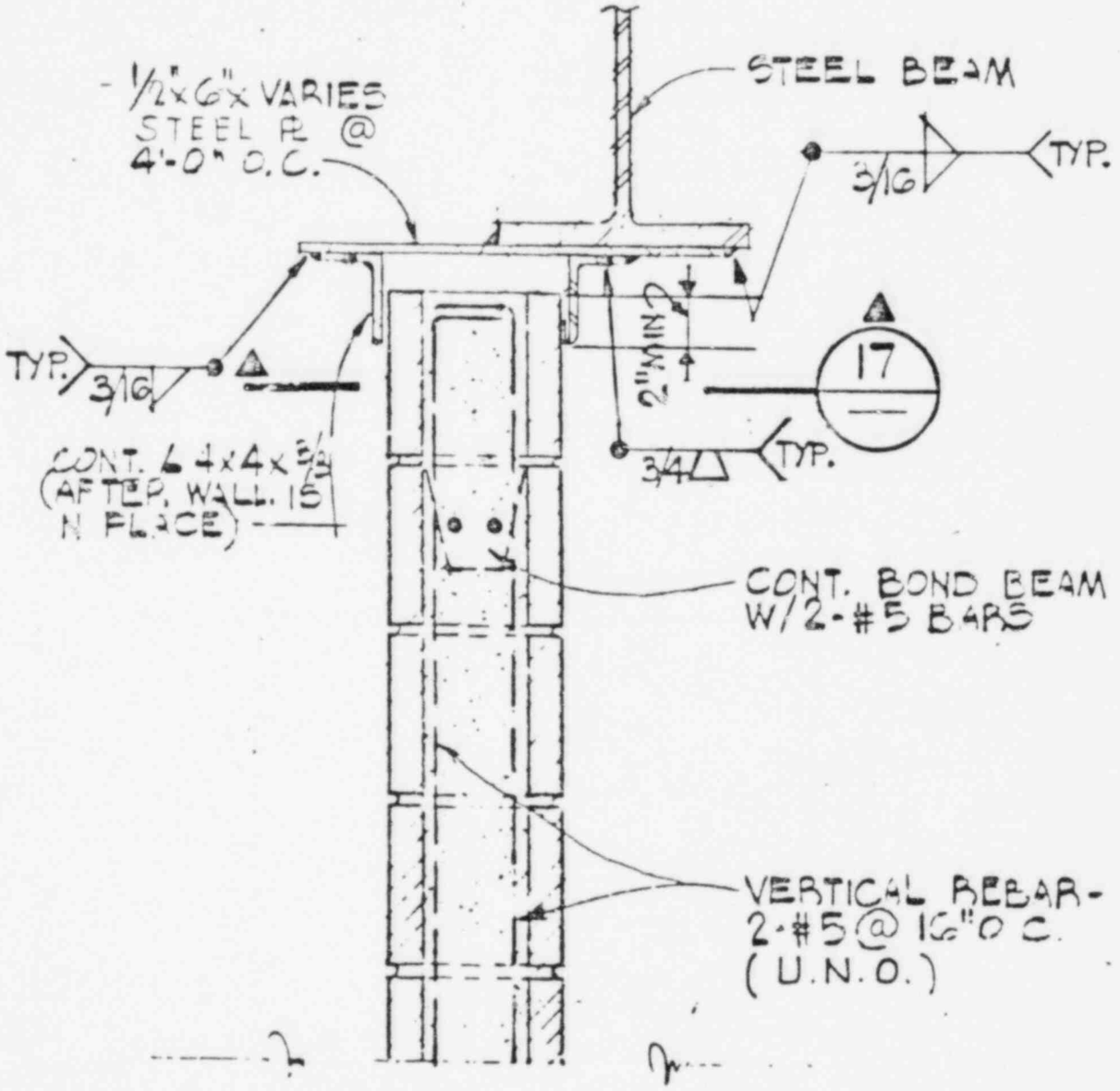

SECTION AT STEEL BEAM

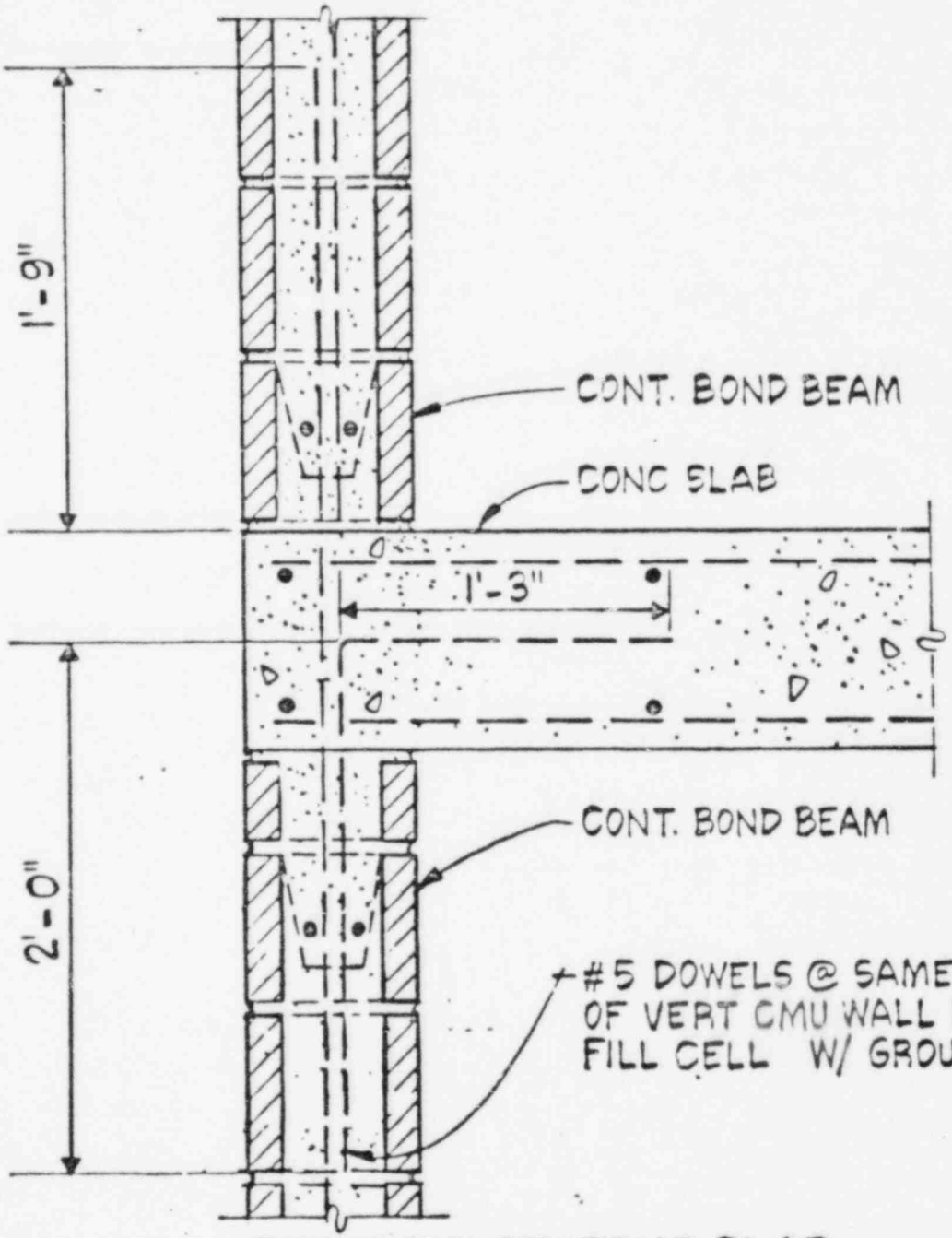

SECTION AT CONC SLAB

(BEARING WALLS ONLY)

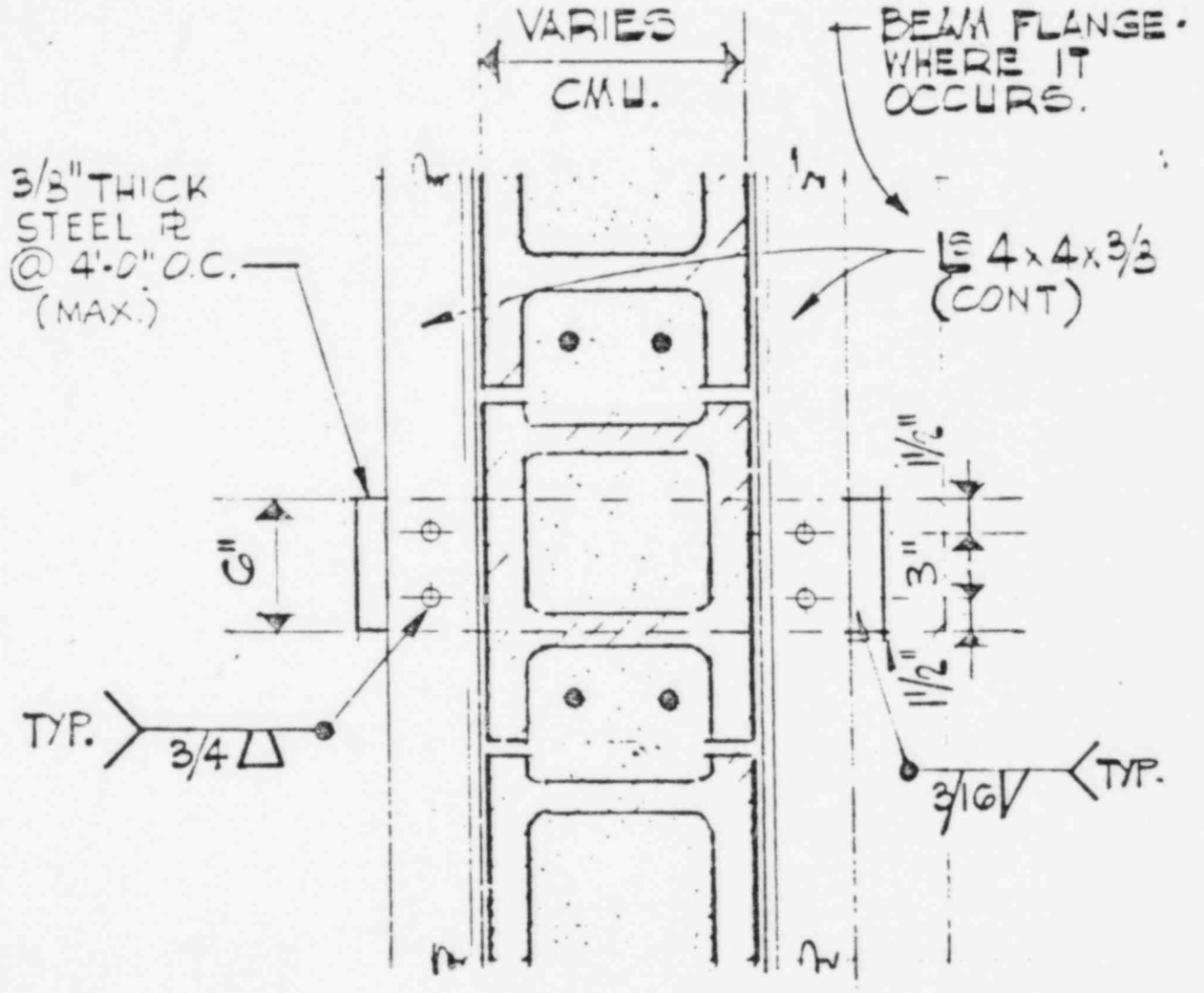

17 — TYPICAL METAL BAR DETAIL @ STL BEAM

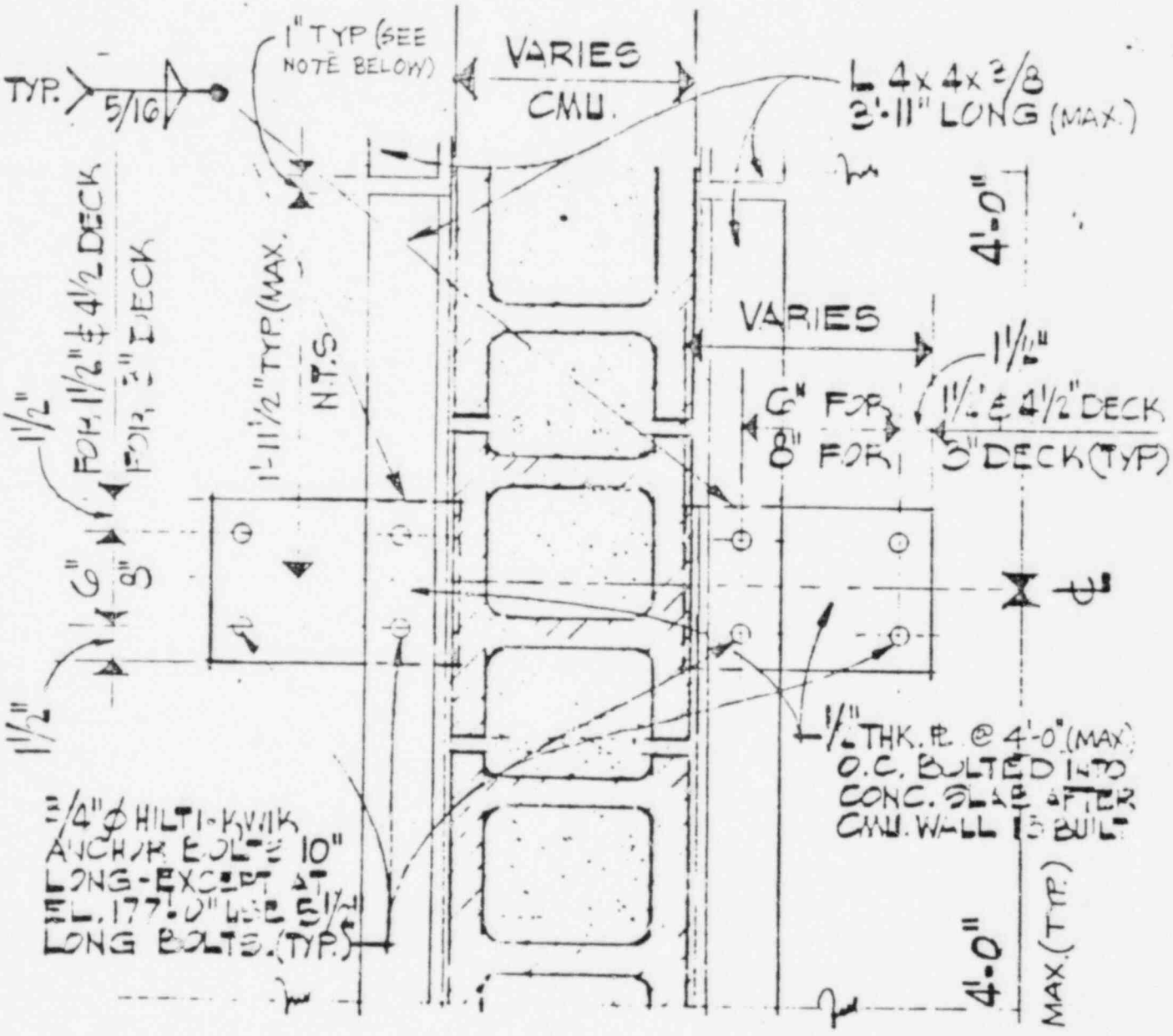

18 / — TYP. PLATE DETAIL @ STEEL DECK

NOTE: 1" GAP MAY BE INCREASED UP TO 4" MAX., ONLY WHERE REQUIRED TO PREVENT INTEFERENCE WITH ITEMS (CONDUITS, SMALL PIPE, ETC.) PENETRATING CMU WALLS AT THESE LOCATIONS.

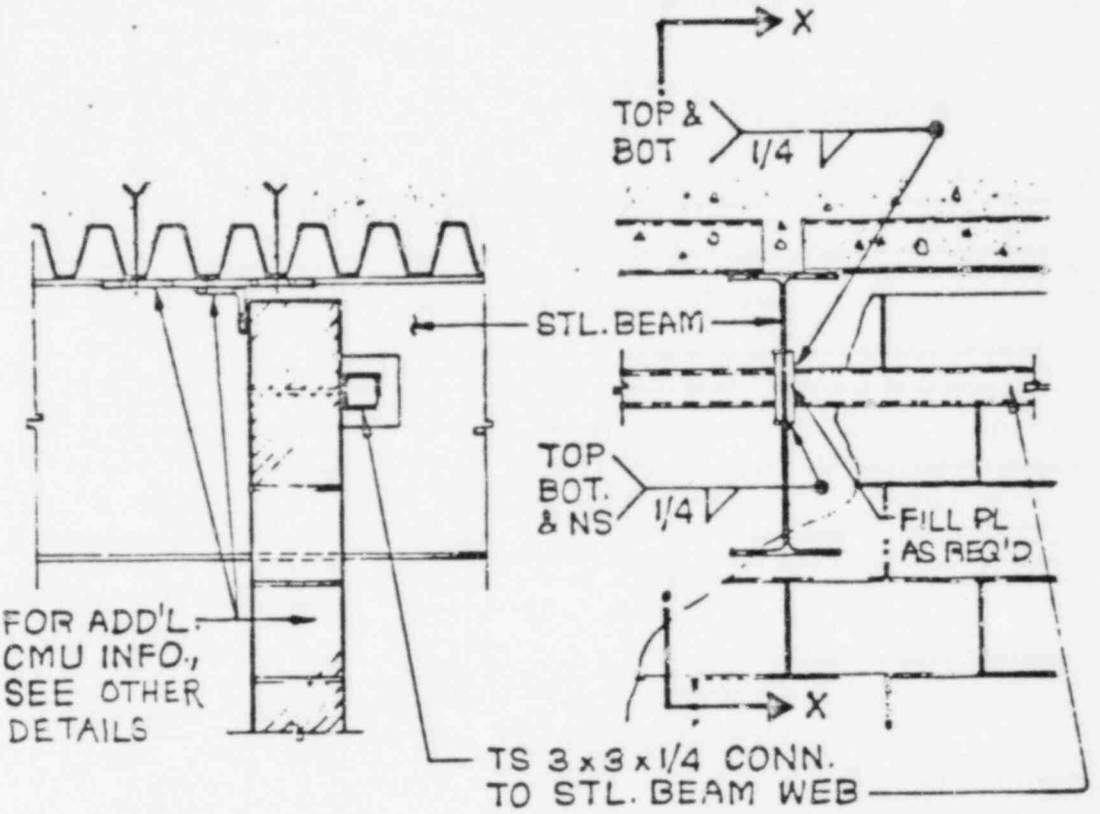

SECTION X-X ELEVATION

ALT. DET. A

ALT. DET. TOP CMU SUPPORT
(STL. BEAM PERPENDICULAR
TO WALL)

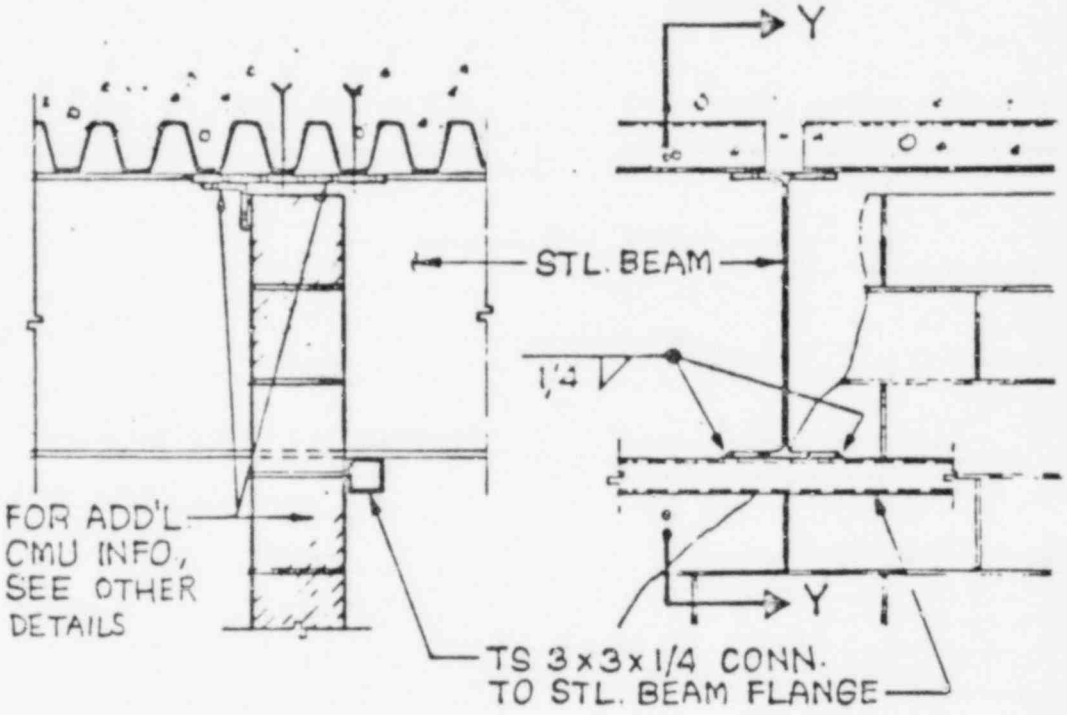

SECTION Y-Y ELEVATION

ALT. DET. B

ALT. DET. TOP CMU SUPPORT
(STL. BEAM PERPENDICULAR TO WALL)

NOTE
EXTEND REINFORCING BARS BEYOND OPNG THE SAME LENGTH AS THE BEARING REQUIRED

WALL OPNG.	BEARING (MIN)
2' TO 8'	8"
9' TO 14'	12"
15' TO 20'	16"

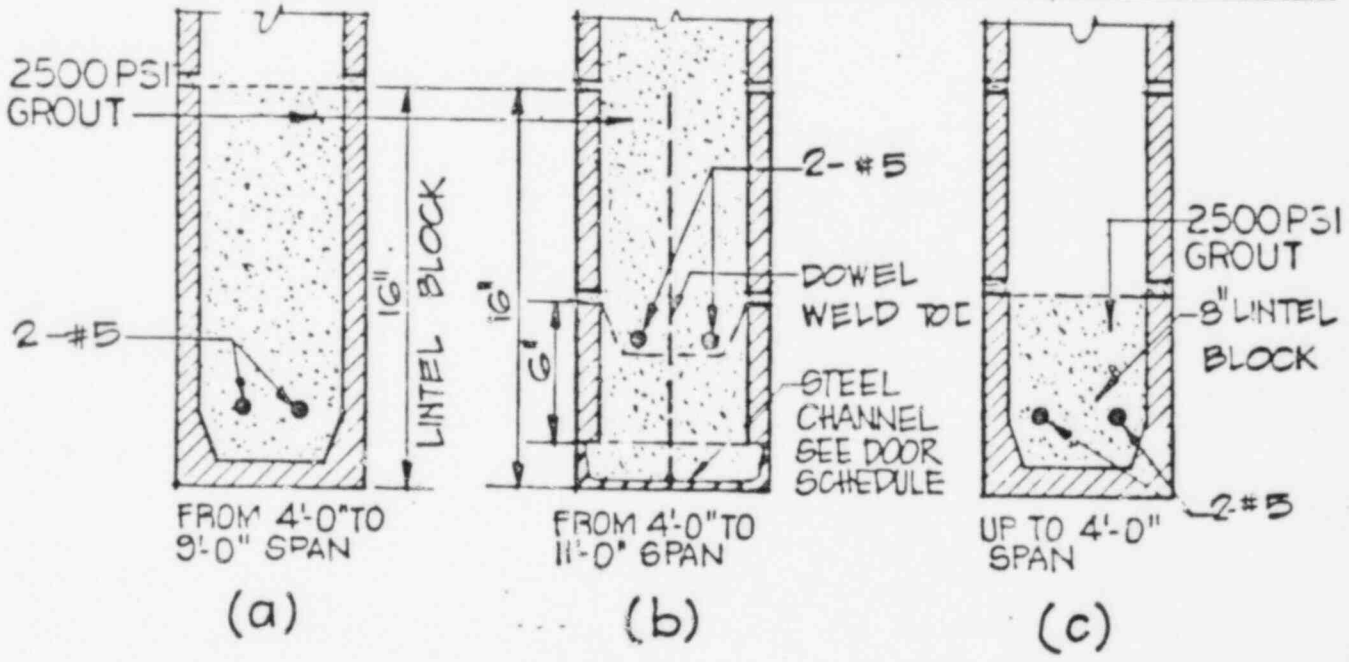

LINTEL SCHEDULE

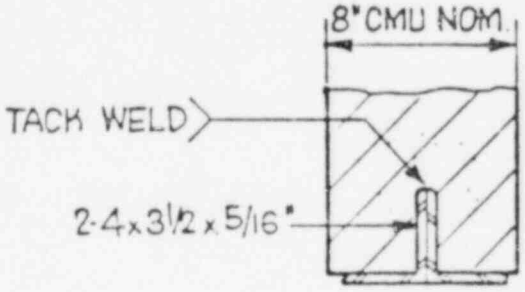

(a)

FROM 2'-6" TO 7'-0" SPAN
MIN. BEARING 9" EA. SIDE

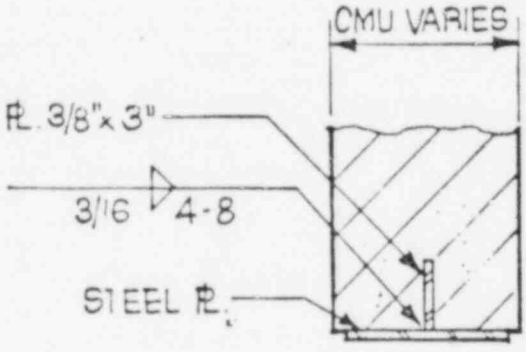

(b)

PL. 3/8"x 7½" FOR 8" CMU
PL. 3/8"x 11½" FOR 12" CMU
MIN. BEARING 6" EA. SIDE
FOR SPAN UP TO 2'-6"

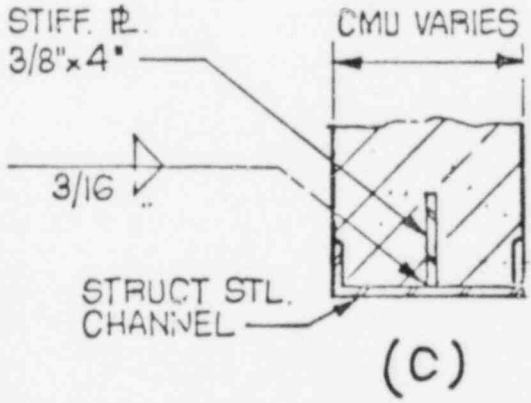

(c)

C8x13.75 SPAN 2'-6" TO 6'-0" (8" CMU)
C12x20.7 SPAN 2'-6" TO 6'-0" (12" CMU)
MC 8x18.7 SPAN 2'-6" TO 8'-0" (8" CMU)
MC12x30.9 SPAN 2'-6" TO 8'-0" (12" CMU)
MIN. BEARING 9" EA. SIDE.

NOTE: MISC. STEEL ANGLES, PLATES & CHANNELS FURNISHED BY FIELD - INSTALLED BY CMU CONTRACTOR.

LINTEL BEAM

AUXILIARY BUILDING DETAILS

SELECTED NOTES FOR AUXILIARY BLDG. DETAILS

1. 12", 18", & 24" CMU. WALLS IN THE AUXILIARY BUILDING SHALL HAVE #5@8" O.C. VERT. REINF. (E.F) W/ GROUT FILLED IN EVERY CELL.
2. ALL 12" CMU WALLS IN AUXILIARY BUILDING SHALL HAVE 3/16"x#9-GA. HEAVY DUTY HORIZ. REINF. @ EVERY COURSE.
3. ALL CMU. WALLS IN RADWASTE BUILDING, AS WELL AS 18" & 24" CMU. WALLS IN AUXILIARY BUILDING SHALL HAVE 3/16"x#9-GA HEAVY DUTY HORIZ. REINF. @ EVERY OTHER COURSE.
4. 1" GAP MAY BE INCREASED UP TO 4" MAX., ONLY WHERE REQUIRED TO PREVENT INTEFERENCE WITH ITEMS (CONDUITS, SMALL PIPE, ETC.) PENETRATING CMU WALLS AT THESE LOCATIONS.

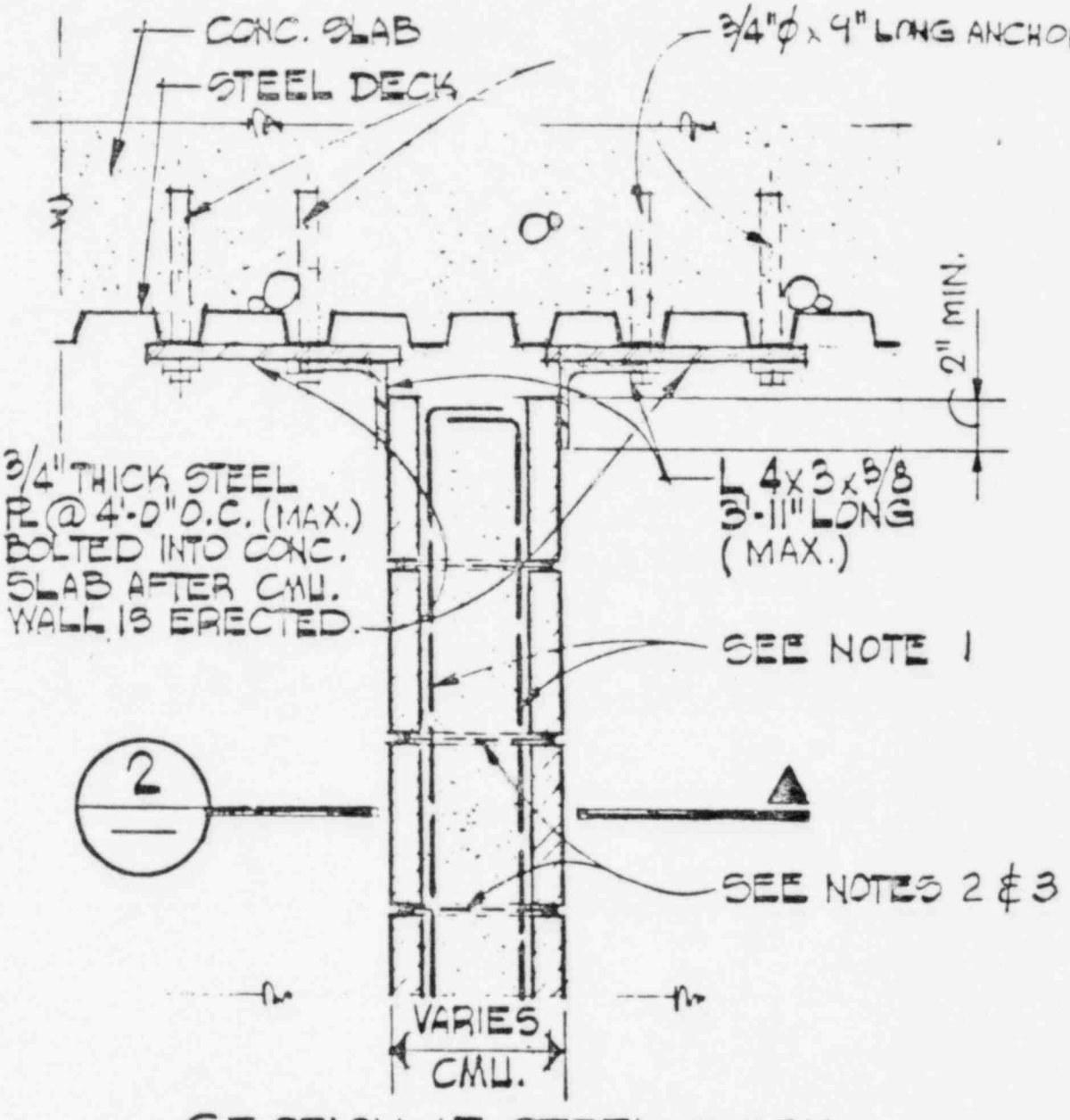

SECTION AT STEEL DECK

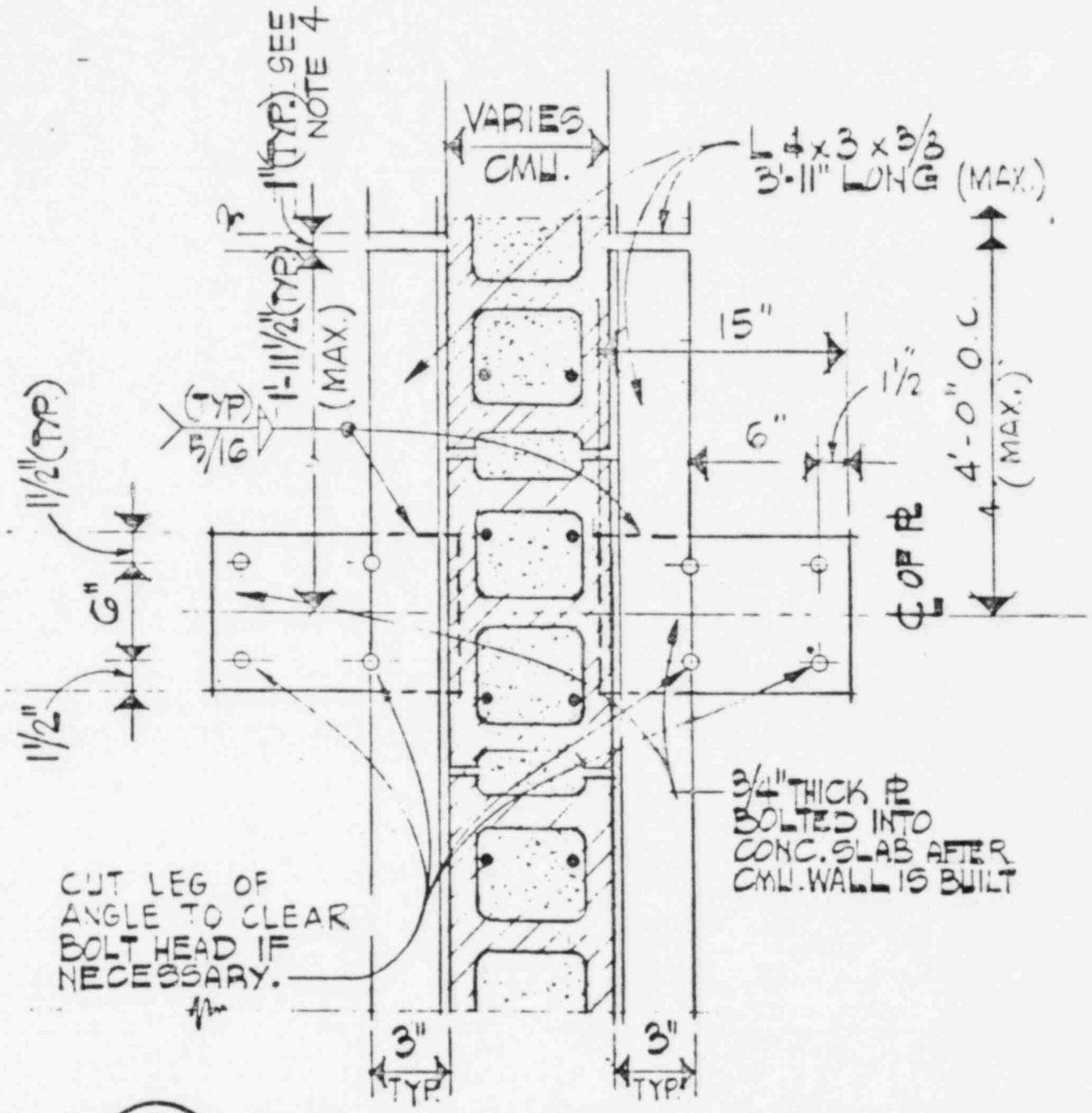

2/1 TYP. PLATE DETAIL @ STEEL DECK

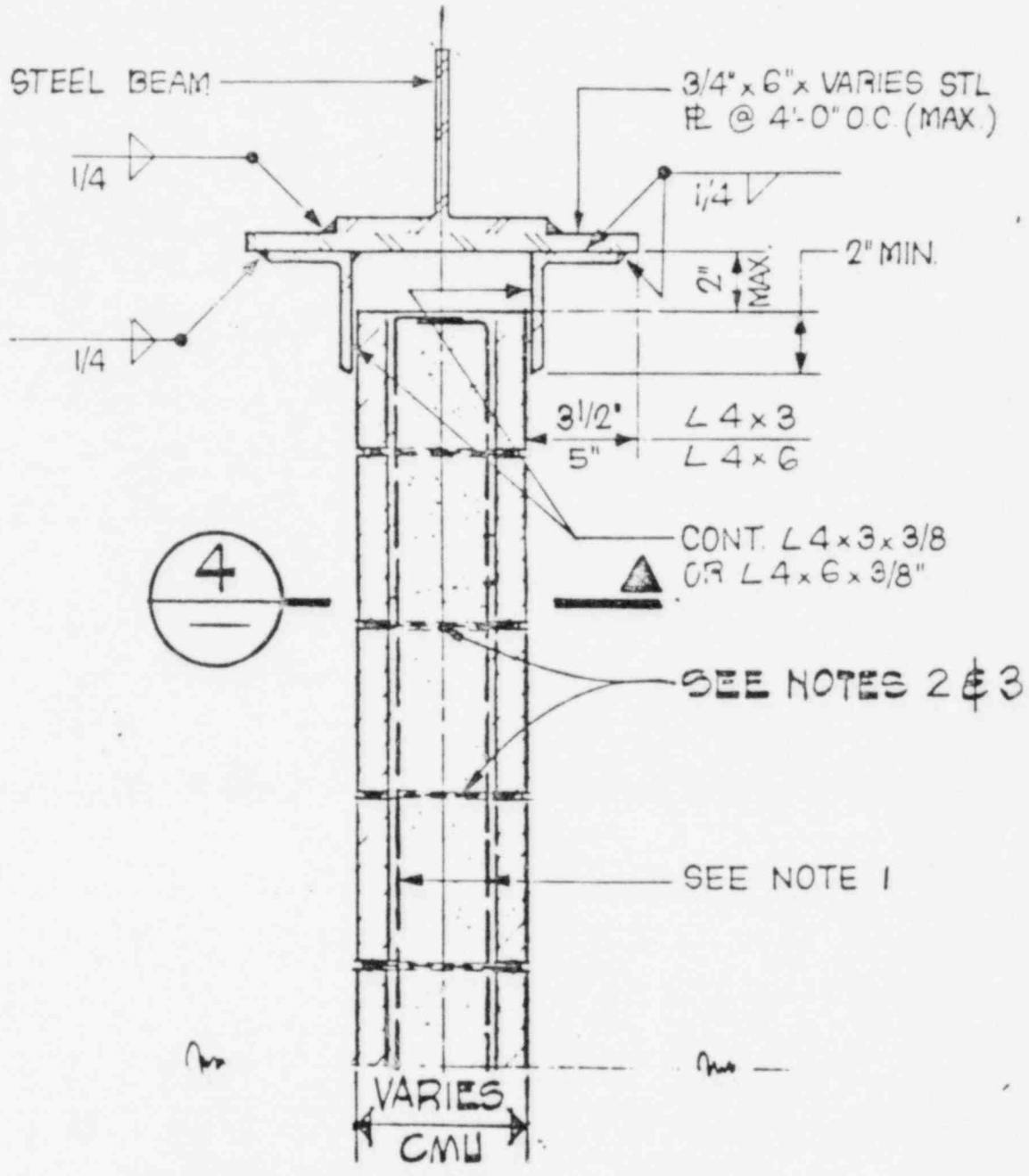

SECTION @ STEEL BEAM

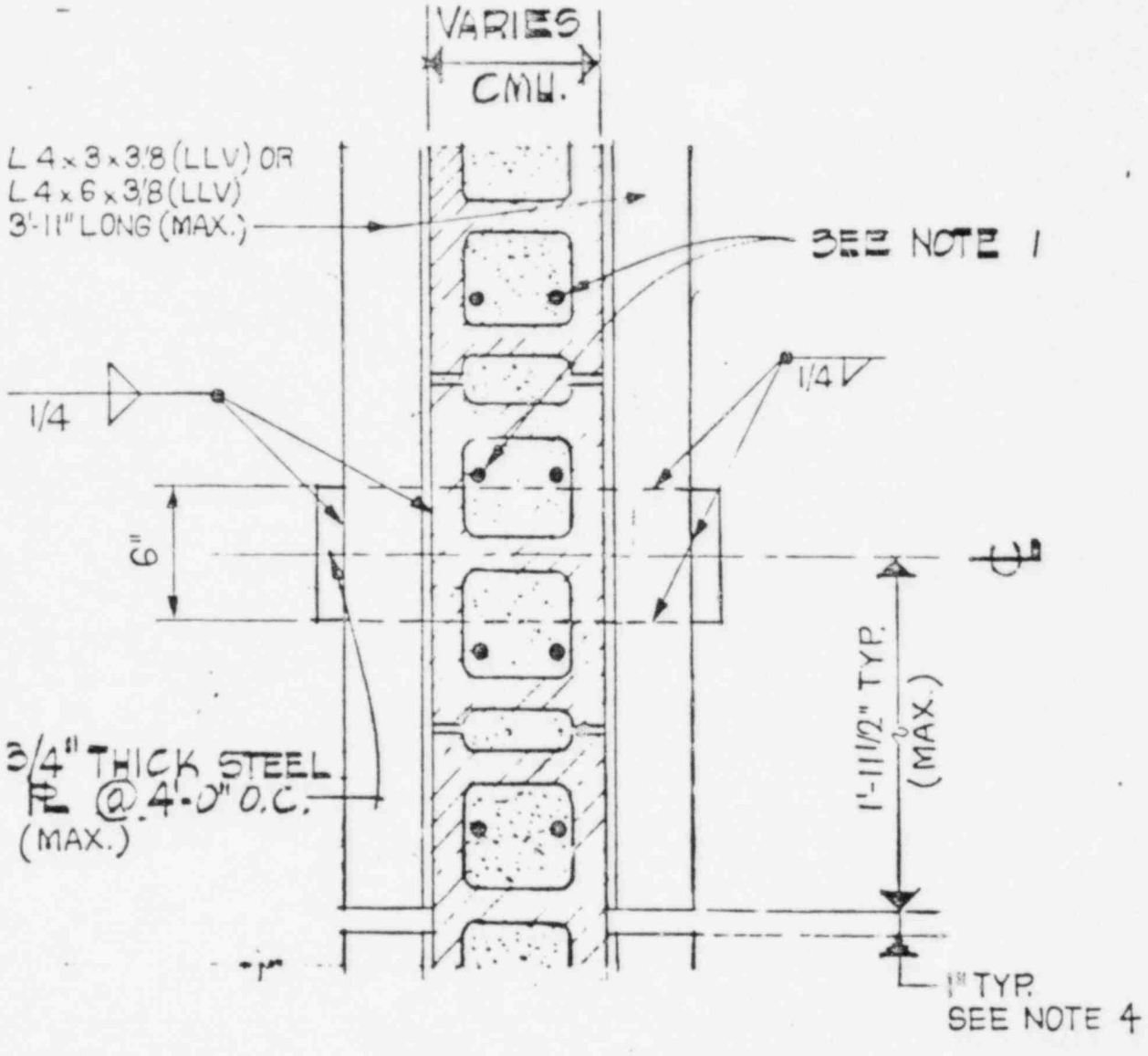

4/— TYP. METAL BAR DET. @ STEEL BEAM

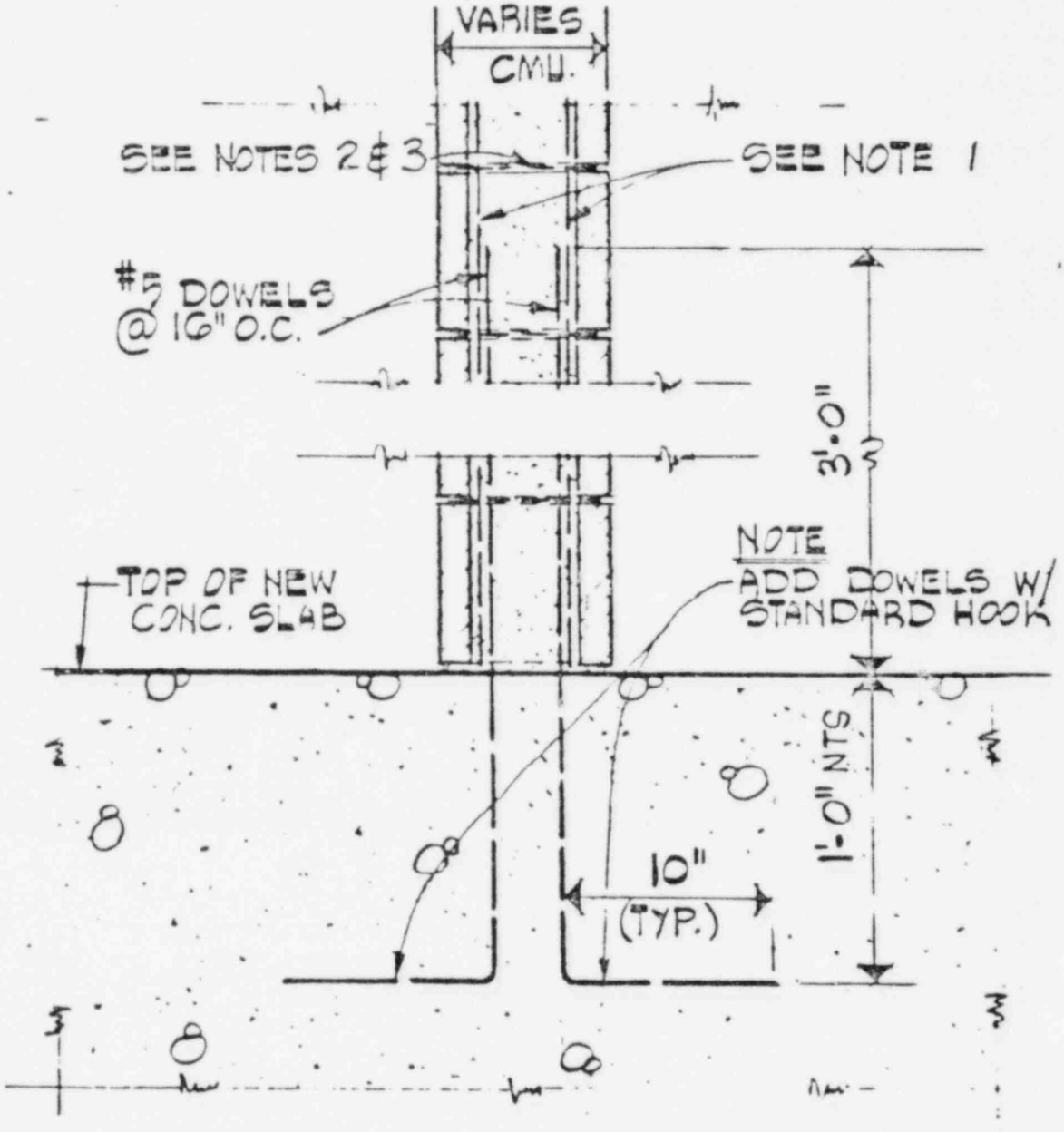

TYP. CMU. WALL @ NEW CONC. SLAB

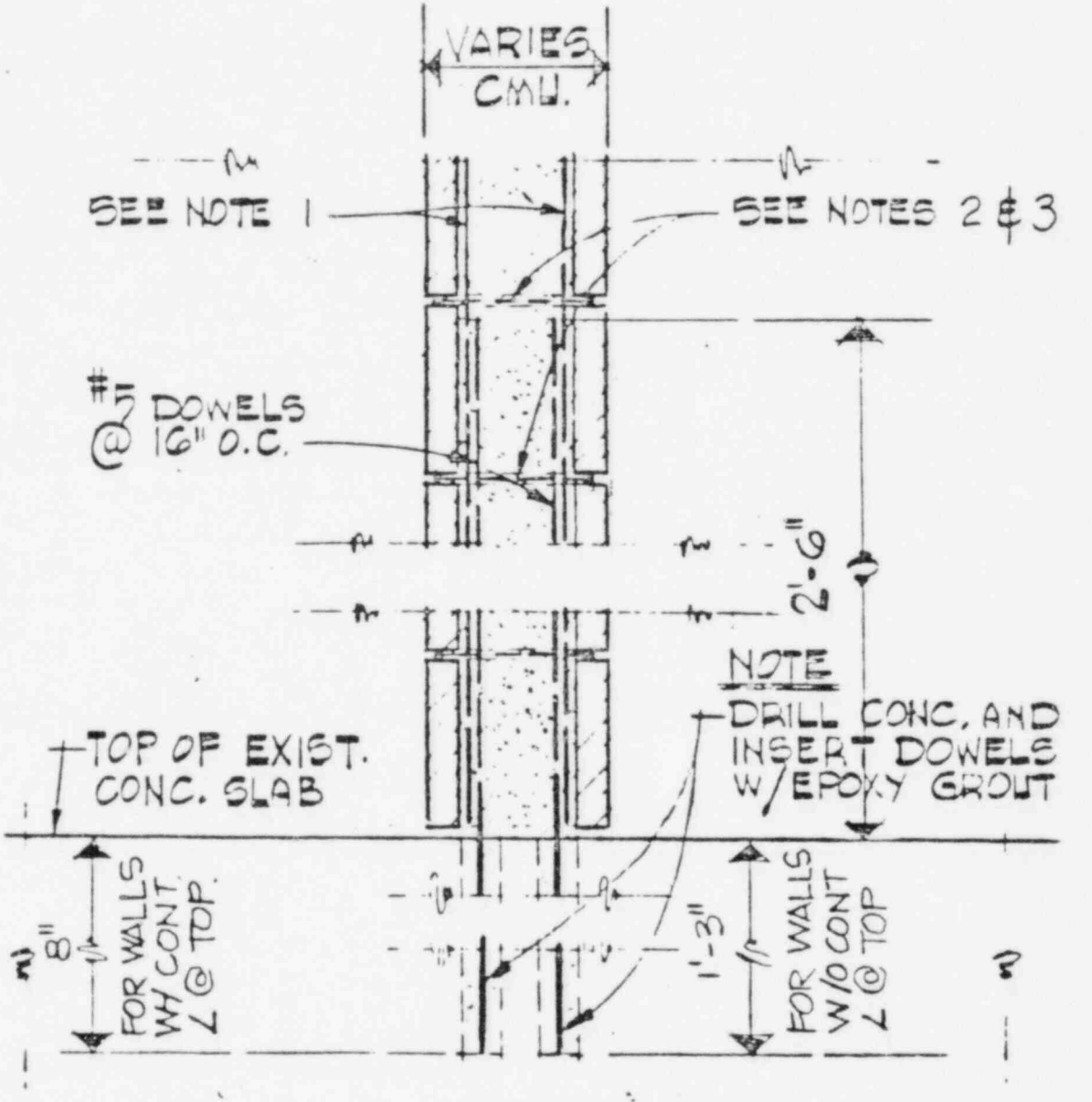

TYP. CMU. WALL @ EXIST. CONC. SLAB

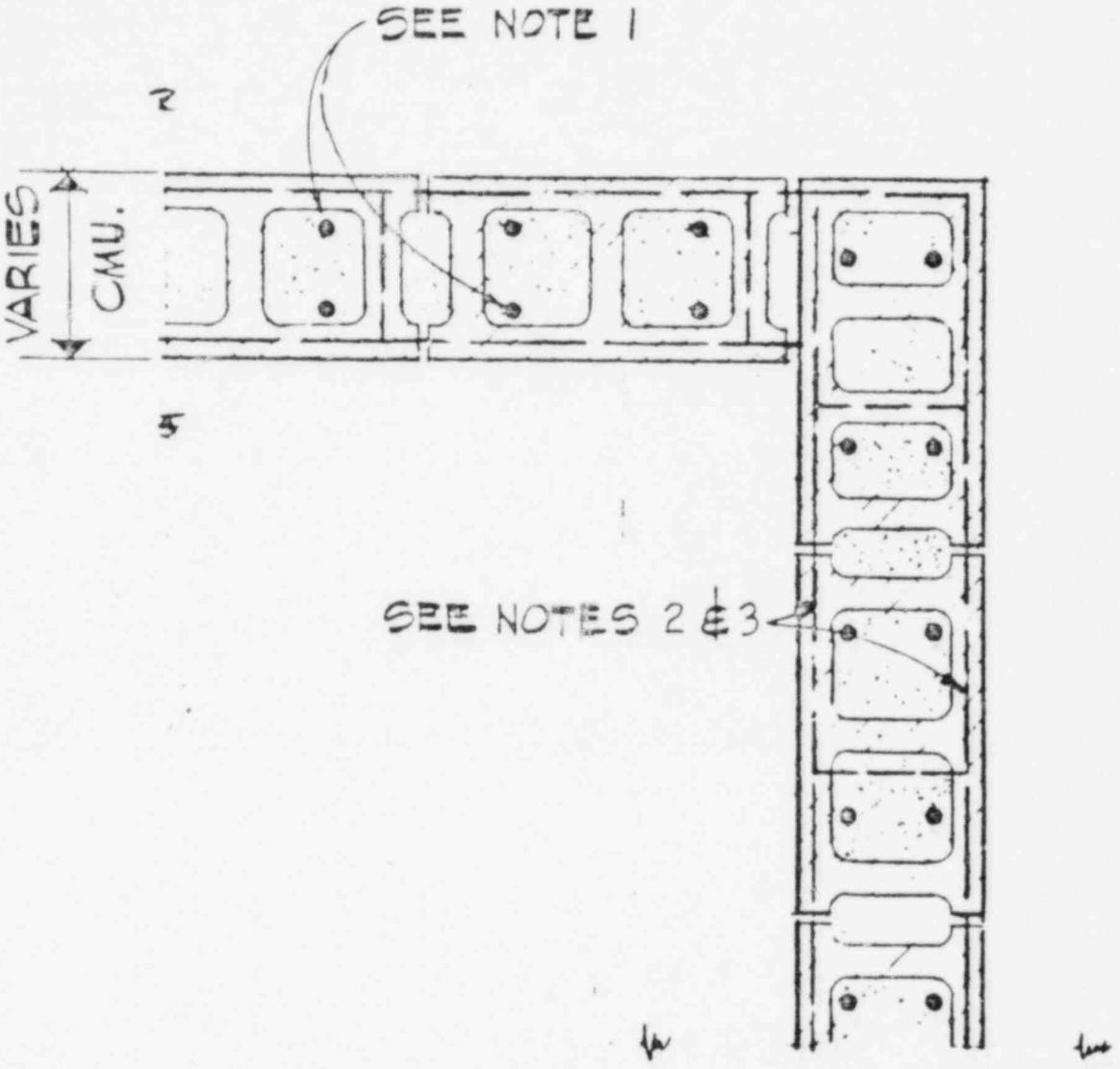

SECTION @ CORNER WALLS

APPENDIX I

APPENDIX I

MODIFICATION DESIGN EXAMPLES

EXAMPLE MODIFICATION TO WALL C-148-015

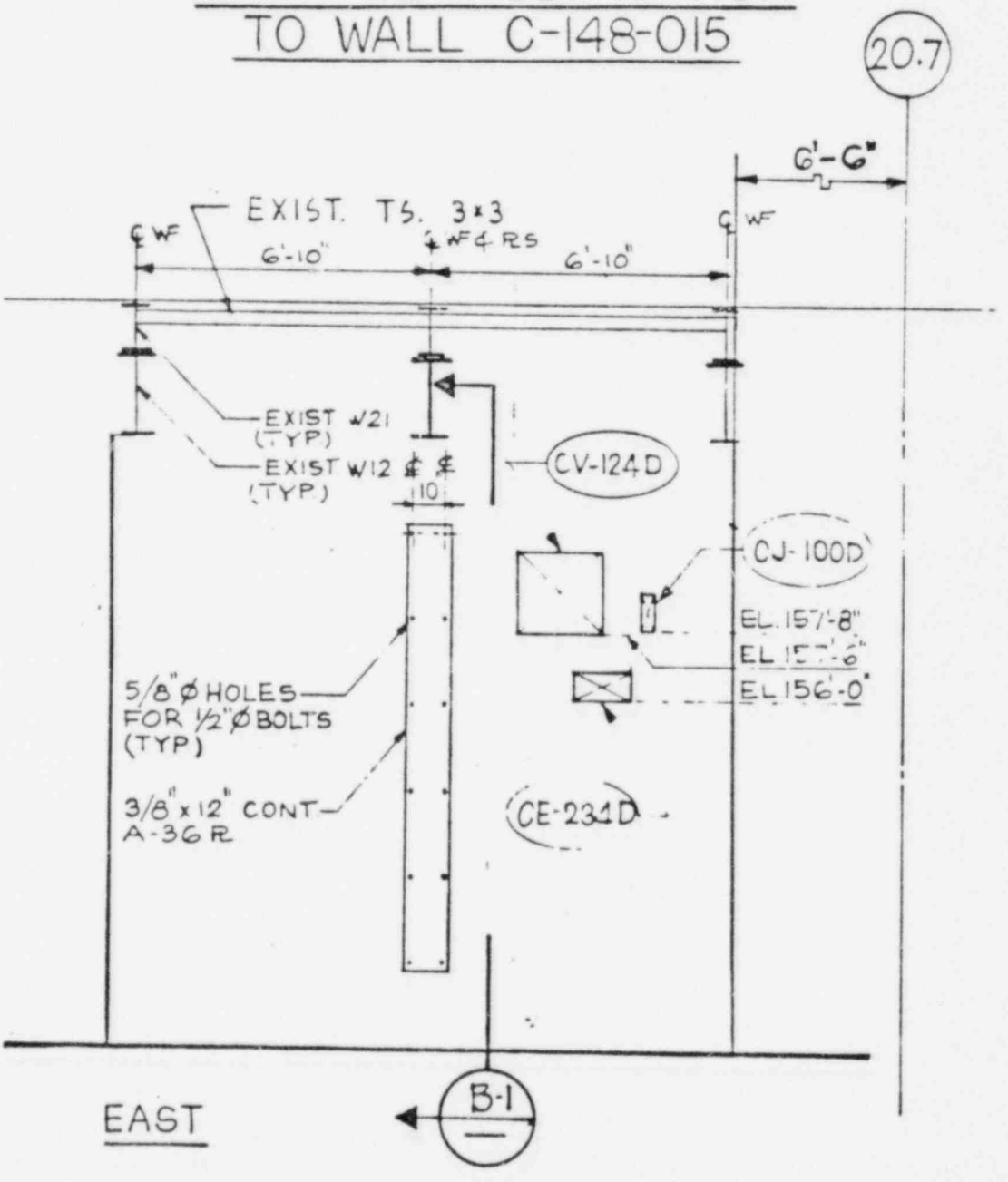

9
A-0882B

CABLE RM. 0C405

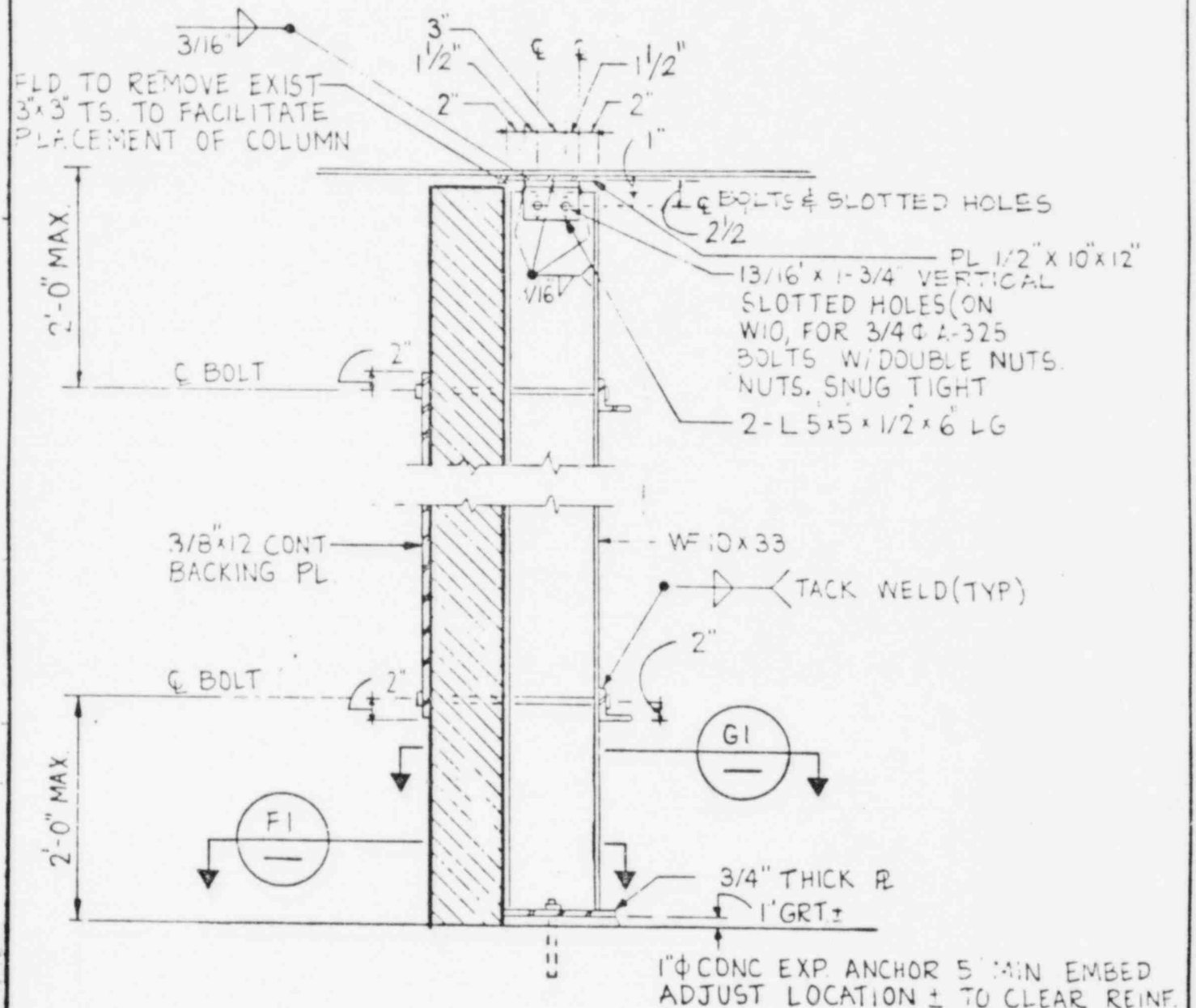
3/16
FLD TO REMOVE EXIST 3"x3" TS. TO FACILITATE PLACEMENT OF COLUMN
3"
1½"
2"
1½"
2"
1"
℄ BOLTS & SLOTTED HOLES
2½
PL 1/2" X 10"x 12"
13/16' x 1-3/4" VERTICAL SLOTTED HOLES (ON W10, FOR 3/4¢ A-325 BOLTS W/ DOUBLE NUTS. NUTS. SNUG TIGHT
2-L 5x5x1/2x6" LG
1/16
2'-0" MAX.
℄ BOLT
2"
3/8"x12 CONT BACKING PL
W 10 x 33
TACK WELD (TYP)
2"
℄ BOLT
2"
G1
F1
2'-0" MAX.
3/4" THICK PL
1" GRT ±
1"¢ CONC EXP. ANCHOR 5" MIN EMBED
ADJUST LOCATION ± TO CLEAR REINF.

B1 SECTION

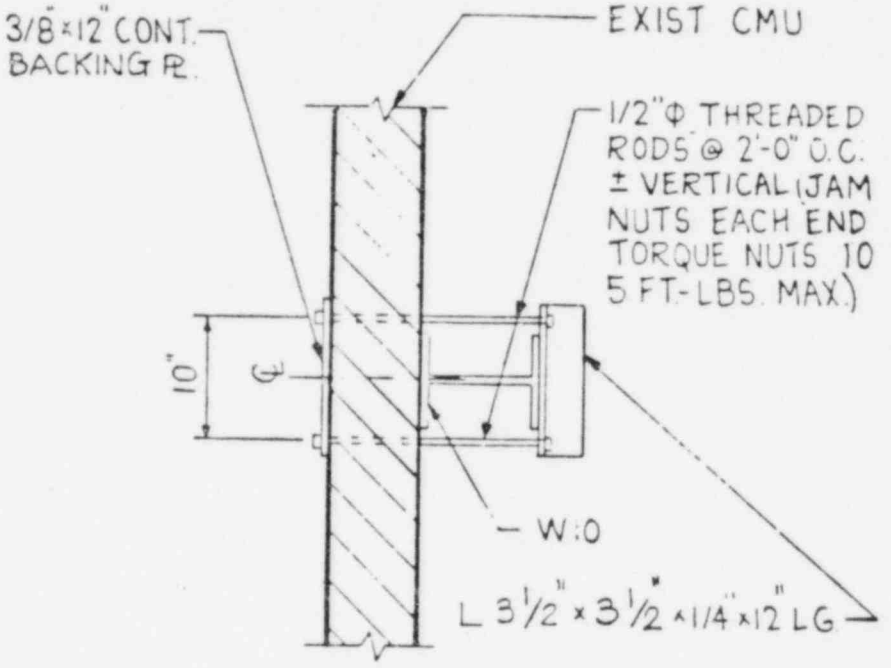

G1 SECTION

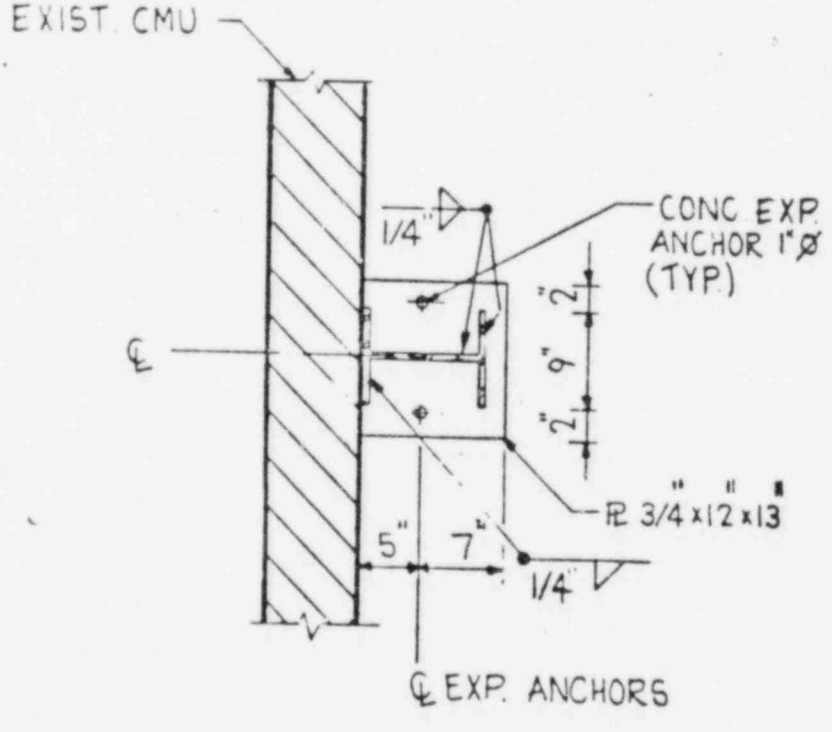

F1 SECTION

EXAMPLE MODIFICATION TO WALL A-166-03

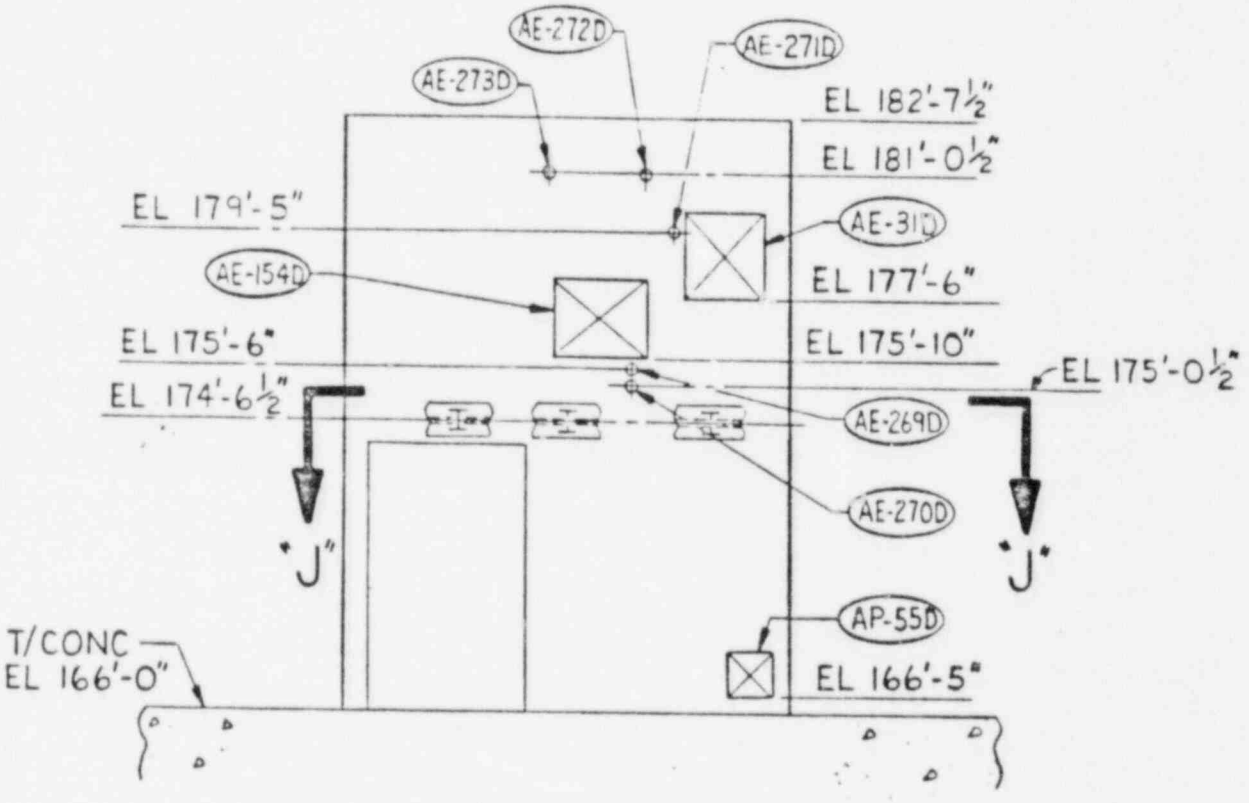

NORTH

6
A-1161

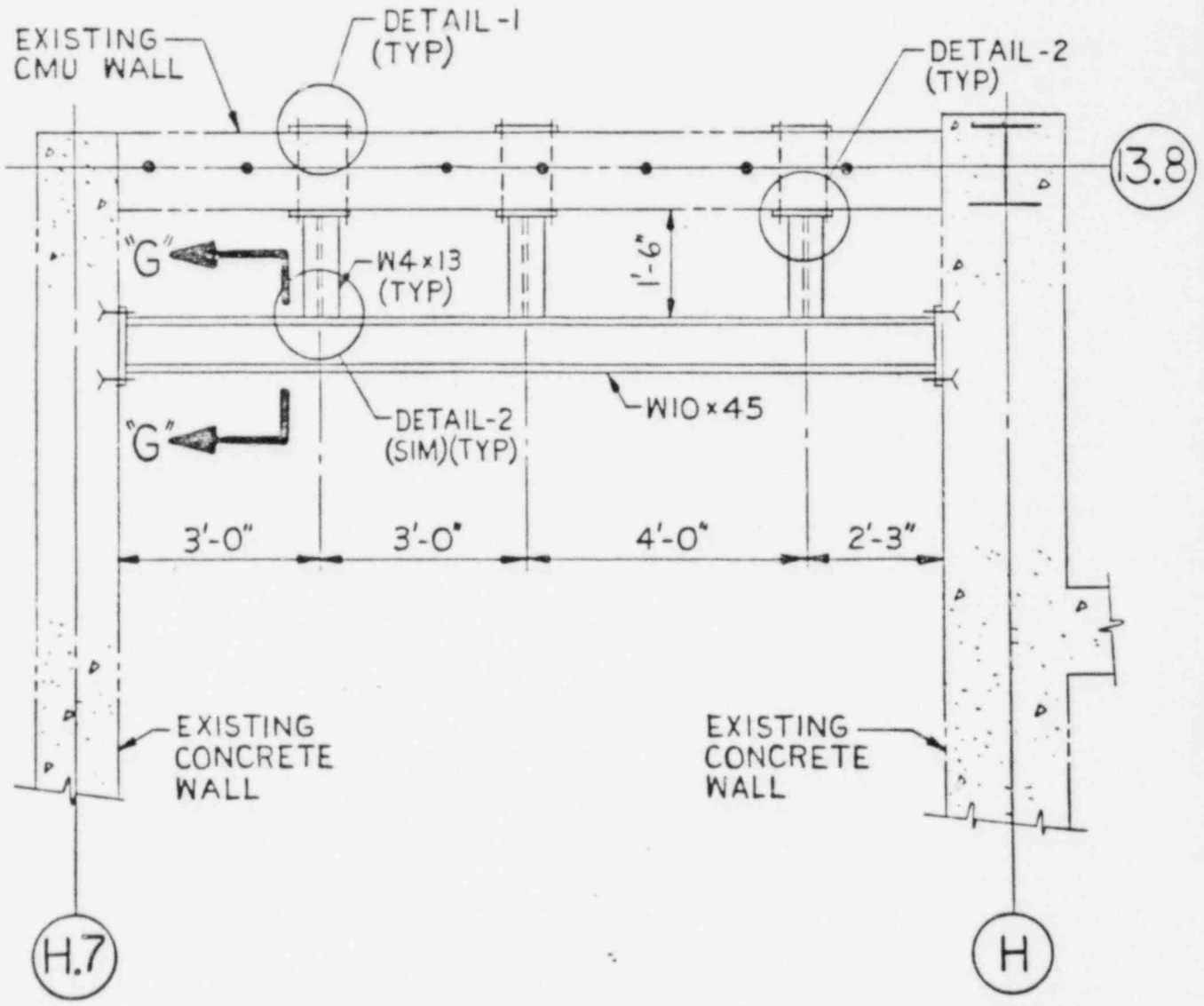
EXISTING CMU WALL
DETAIL-1 (TYP)
DETAIL-2 (TYP)
13.8
"G"
W4×13 (TYP)
1'-6"
"G"
DETAIL-2 (SIM)(TYP)
W10×45
3'-0"
3'-0"
4'-0"
2'-3"
EXISTING CONCRETE WALL
EXISTING CONCRETE WALL
H.7
H

SECTION J-J

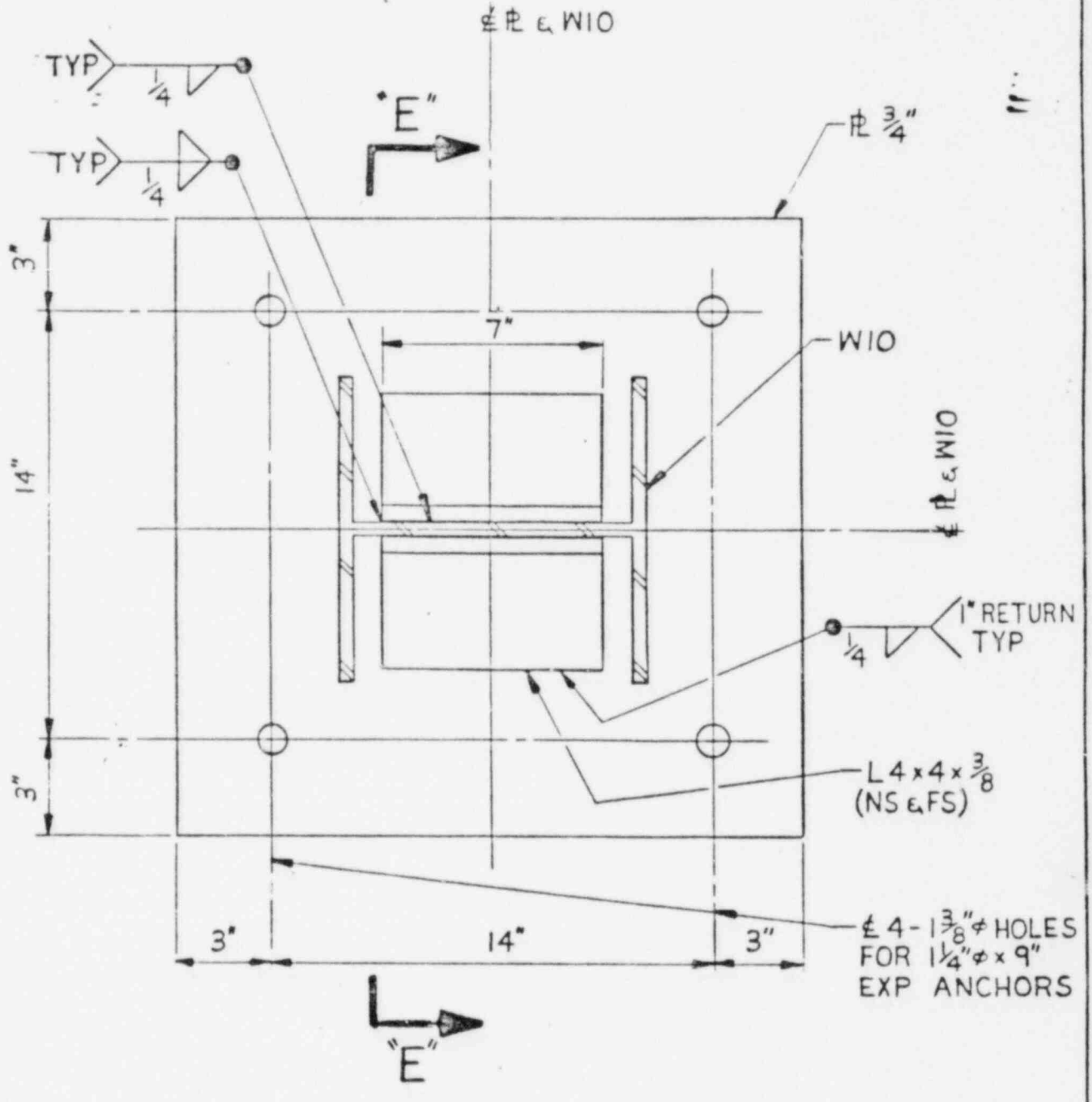
℄ ℄ & W10
TYP
1/4
TYP
1/4
"E"
℄ 3/4"
3"
7"
W10
14"
℄ & W10
1" RETURN
TYP
1/4
3"
L 4 x 4 x 3/8
(NS & FS)
3"
14"
3"
℄ 4 - 1 3/8" ⌀ HOLES
FOR 1 1/4" ⌀ x 9"
EXP ANCHORS
"E"

SECTION G-G

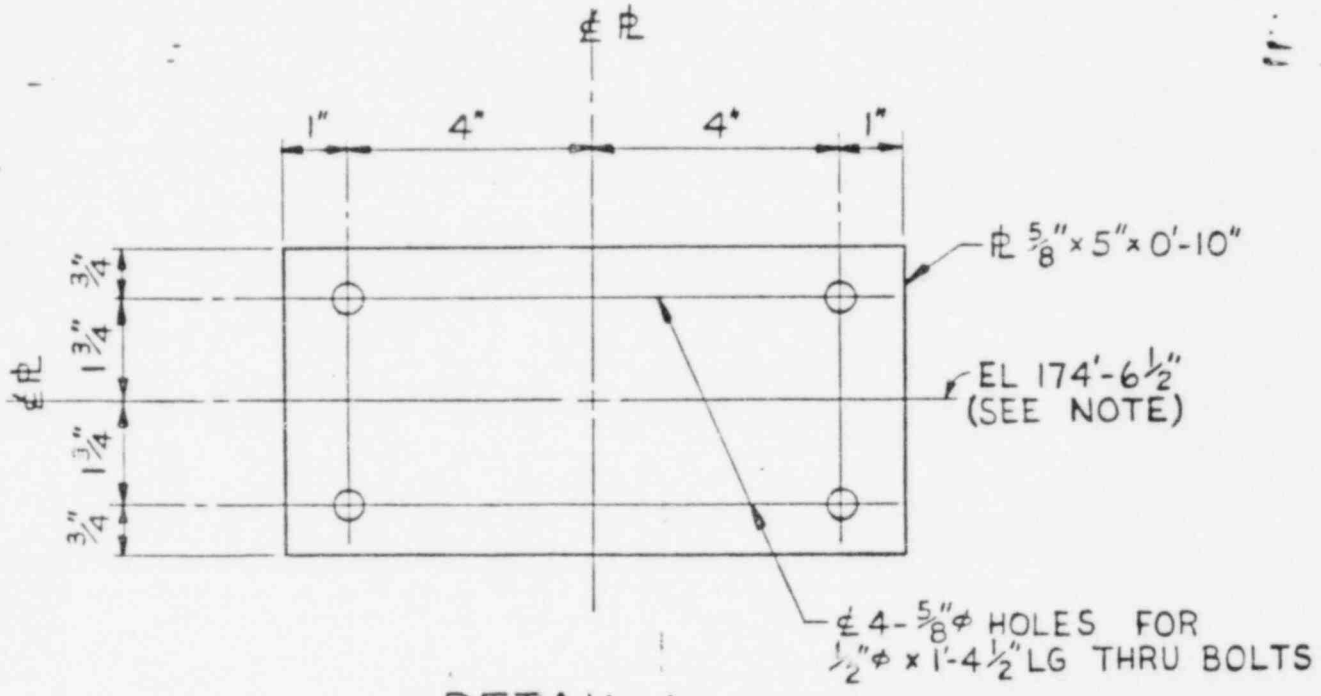

DETAIL-1

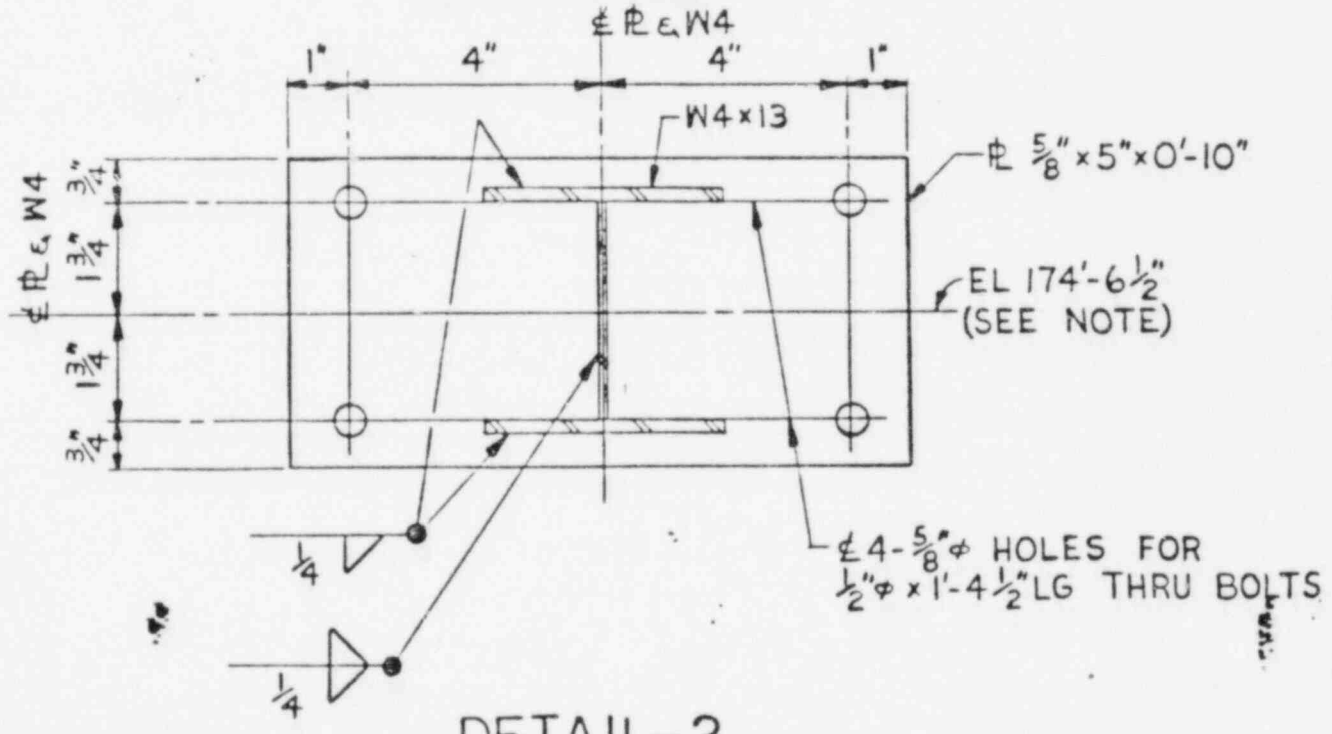

DETAIL-2

NOTE:

RELOCATE ℄ PL UP TO ±2" HORIZ TO AVOID CUTTING REBAR IN CMU WALL

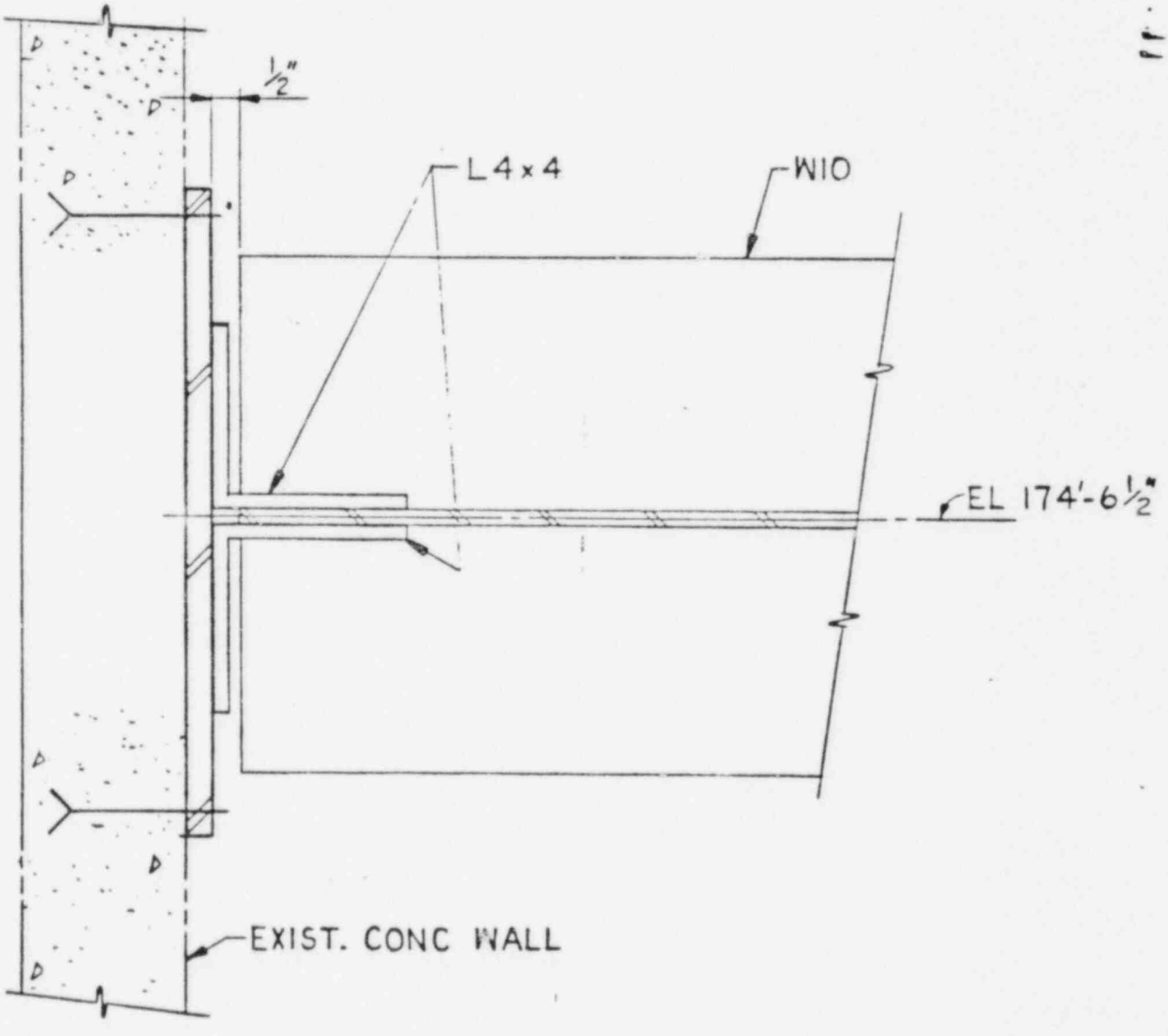

SECTION E-E

APPENDIX J