ENGINEERING EVALUATION OF THE WNP-2

SACRIFICIAL SHIELD WALL

SUPPLEMENT NO. 2

TABLE OF CONTENTS

Washington Public Power Supply System
Richland, Washington 99352

Attachment to letter G02-81-556,
Supply System (RG Matlock) to
NRC (RH Engelken), dated
December 29, 1981

8201130011 811229
PDR ADOCK 05000397
A PDR

ENGINEERING EVALUATION OF THE WNP-2

SACRIFICIAL SHIELD WALL

SUPPLEMENT NO. 2

I. DEVIATIONS FROM ORIGINAL GIRTH WELD PLAN

A. Root Backing Material Installation

1. Original Correction Design (Reference a):

   The joint design presented to the NRC indicated regions where the shim pack installation had significant thickness and indicated the installation of backing material between the ring 3 and ring 4 ring beam webs.

2. Installation Detail:

   Backing bars were installed in accordance with PED 215-W-A217. This PED directed the installation of backing only where NS-1 insulating material or shims were exposed and where the root opening exceeded 1/16 inch. Backing was not used where the root opening was 1/16 or less. The backing bars, where used, did not modify the joint design of the girth weld.

B. Exposed Concrete Backing Material Installation

1. Original Correction Design (Reference a):

   The joint design presented to the NRC indicated regions where the shim pack installation had significant thickness, not indicating that in places, concrete would be exposed in areas with few or no shims between rings 3 and 4.

2. Installation Detail:

   Concrete was exposed during the girth weld joint preparation and weldout in several areas (NCR 6638). In these locations, backing bars were installed meeting the direction of PEDs 215-W-A079 and 215-W-A242. The ring 4 bottom ring beam flange was ground and a limited quantity of concrete removed to enable installation of backing bars above the ring beam web and behind the ring beam flange. The backing bars were seal welded in position, and the area was restored to the original girth weld profile. This restoration was verified by MT prior to commencement or continuation of the girth weld.

II. DEFICIENCIES IDENTIFIED DURING GIRTH WELD

A. Linear Indications Adjacent to Girth Weld

1. Description:

During preparation of the SSW girth weld joint, linear indications were found in base material adjacent to the weld preparation. NCRs 6648, 6649, and 6652 were issued against the deficiencies.

2. Background:

The potential for occurrence of linear indications and their resolution were anticipated in preparation of the SSW girth weld program. Engineering direction was provided by PED 215-W-3830 and the above NCRs, requiring that the linear indication be drilled to prevent propagation and ground past the drill hole prior to base metal repair.

3. Corrective Action:

Excavation, drilling and base metal repairs were performed as described above. The excavation was examined by the magnetic particle method prior to grinding to assure removal of the indication. The base metal repair was made using the approved shielded metal arc welding procedure to restore the SSW girth weld geometry and a MT examination was performed to accept the completed repair.

4. Discussion:

Linear indications associated with electroslag welds in ring #3 were observed on two welds at 135-150°Az and 90-105°Az. Location and extent of the indications suggest that they were corner lack of fusion defects as observed in the sample removed from ring beam #6 and as discussed in the original SSW evaluation. Of the 32 electroslag welds in ring beam #3 which were intersected by the girth weld, indications were only observed in two welds.

a. Linear indications in ring beam #3 between 135 and 150°Az (NCR 6648):

The location of this defect was reported two feet from the 150°Az at the approximate location of an electroslag weld. The area was etched, but the results were not conclusive.

Figure 1 provides an estimate of the size and location of the defect.

Leckenby had experienced problems with lack of fusion in electroslag welds and it is concluded that this defect was of the same type.

b. Linear indications in ring beam #3, 90-105°Az (NCR's 6649 and 6652):

These indications were reported 2'3" from Az 105° in ring beam #3. The first indication was reported on NCR 6649 and the second on NCR 6652. The indications were about 3" apart.

The electroslag weld (ESW) at this location joins the front flange plates of ring beam #3 (Figure 2). The indications were probably at both edges of the ESW; the depth was approximately 3/4"; and the total length of repair down the face of the wall was about 3" (Figure 2).

It is probable that these indications were of the same type as discussed above.

B. Linear Indications and Inclusions in Girth Weld Excavations

1. Description:

During preparation of the SSW girth weld joint, linear indications and slag inclusions were found in the ring 3 top ring beam fabrication weld and ring 4 bottom ring beam segment field connection weld at azimuth 187°-30'. NCR's 6685, 6702, 6703, 6647, and 6640 were issued against these deficiencies.

2. Background:

As described above for the linear indication deficiency, II.A limited extent repairs could be performed, however, these particular indications and inclusions extended past the SSW girth weld preparation. It was not possible to remove sufficient material to meet the requirement to extend repair through the defects, as required by AWS D1.1. Based on the depth of material removal, it was decided that repair completion could not be performed as part of the SSW girth weld.

3. Corrective Action:

The repair was deferred by isolating the SSW girth weld from the unexcavated region by use of backing material. Base material was built up to the SSW girth weld joint configuration using the SMAW process. A final magnetic particle examination was performed for acceptance.

Completion of the defect removal was performed by removing the ring 4 skin plate and concrete above the isolated area (PED 215-CS-A347) and excavating from above the ring 4 bottom ring beam web. When the inclusions have been repaired, material removed for access through ring 4 will be replaced. Inspections will be performed as required by AWS D1.1.

4. Discussion:

Linear indications and inclusions were found during the girth weld excavation of the guide plate welds (Figure 3). These indications occurred at three locations: 67°, 187°, and 307°. Guide plates were installed during the SSW fabrication only at these locations and the indications were in the welds joining the guide plates to the ring beams.

Extensive excavation was required to repair these indications primarily because of the requirement for an MT examination of the excavation and the need to go beyond the end of an MT indication. The indications were slag porosity and linear indications (i.e. slag stringers and lack of fusion).

a. Rounded and linear indications at 67°Az (NCR 6640): the structure at this location is as shown in Figure 3. The indications were in the guide plate to ring beam welds and excavation through to the concrete was required. There was some concern as to the existence of the design fillet welds, therefore, the excavation was extended to confirm their existence. The problem with indications at this location was very similar to that encountered at 187°-30'.

b. Indications at Azimuth 187°-30' (NCR's 6685, 6702, 6703, 6647):

The first indication (1/2" long X 1/16" wide X 1/16" deep) at this location was reported on NCR 6647. This defect was 17" clockwise from 180°Az and running normal to the face of the wall, i.e., in the excavation area and radial with respect to the SSW. An ESW is centered 15-1/2 inches from 180°Az in the front flange of ring #3 (Figure 3), so again this indication may have been at the edge of the ESW.

NCR 6685 shows that grinding in the area of the indication discussed above exposed linear indications and slag inclusions which extended back into the wall along the top of the ring beam. The indications at 187°-30' have resulted in the complete excavation of the bottom plate of ring 4 and the top plate of ring 3 through to the concrete and extending back about 18" to the inside web plates of the beams. A guide plate at this location is set through the bottom plate of ring 4 and the top plate of ring 3 (Figure 3). The indications were in the welds attaching the guide plate to the ring plates (Section BB of Figure 3). During the extensive excavation of the welds to the right of the guide plate, Figure 3 Sections AA and BB, lack of fusion was found just above the backing bar of the lower weld (NCR 6702). NCR 6703 documents a 1" long linear indication also located to the right of the guide plate. NCR 6702 also indicated that grinding occurred to the left of the guide plate. An indication was cleared from this area after grinding into the top corner of ring beam #3 through to concrete. NCR 6647 suggests that the indication was in the guide plate to ring #3 flange weld, <u>not</u> the electroslag weld.

In summary, most of the defects at 187°-30' were associated with the guide plate welds and consisted of slag and linear indications (about 1" long) throughout the welds. The requirement to grind 2" beyond the end of each indication lead quickly to major repairs for a few scattered defects.

c. Porosity slag and linear indications at Az 300-315°:

Again, there is a guide plate at this location with a geometry similar to that shown in Figure 3. Defects (slag, porosity and linear indications) were observed in the guide plate to ring beam welds. Linear indications were observed within the girth weld excavation, oriented in a circumferential direction. It is thought that the linear indications may have been areas where the excavation reached back to the root of the ring and web/flange weld.

C. Partial Penetration Weld in Ring 4

1. Description:

During preparation of the weld joint for the SSW girth weld, it was discovered that the ring 4 bottom beam flange to web weld was partial penetration, not full penetration as required by design. NCR 6643 was issued against this deficiency.

2. Background:

Design of the ring beam as shown on Burns and Roe drawing S782 requires the use of a 3/4" single bevel groove weld to join the 1 1/4" flange to the web of the ring 4 bottom beam. This joint is reflected on fabrication drawing W66, Section A-A, with an additional 1/4" fillet weld inside the beam as a nonstructural, fabrication convenience weld.

3. Corrective Action:

In order to meet the design requirement for a full penetration weld, PED 215-W-A079 was issued to remove material from the ring beam flange to provide full exposure of the edge of the ring beam web. As a base metal repair, the contractor was directed to replace the removed material using the shielded metal arc welding process, restoring the geometry to that required for the SSW girth weld. Upon completion of the repair, the area was inspected by magnetic particle. The balance of the full penetration weld was then completed using the flux cored arc welding process.

4. Discussion:

Partial penetration in the flange-to-web plate weld, ring 4 (Figure 4) was observed at three locations (90-105°, 0-15°, 180-195°). The MT indication resulted from lack of penetration at the root of the weld. Excavation of the girth weld revealed lack of fusion defects at the root of the weld joining the front flange plate of ring 4 to the web plate (Figure 4). The extent of the lack of penetration was estimated to be from 0"-1/4", based on the relationship between the profile of the excavation and the thickness of the web plate.

Linear indications in the girth weld excavation area were also noted at one location (300-315°Az). These defects may have resulted from the interface/lack of fusion observed elsewhere at the weld between the flange and web plate of ring 4, as discussed above.

D. Additional Gaps Between Shims

1. Description:

Reference (a) addressed forty shim gaps and their significance on SSW shielding performance. NCR 5688 was issued against this deficiency. Eleven additional shim gaps were identified during girth weld preparation; nine "gaps" were created during the search process.

2. Background

The original survey of the gaps at the ring 3/ring 4 interface (541'-5" El.) was made prior to any SSW girth weld preparation work. Arc gouging of the ring 3/ring 4 interface provided access for visual inspection behind the splice plates. Inspection of these areas revealed that there were gaps behind some of the splice plates where shims had not been installed. Based on these findings, holes were drilled into existing shims at angles to permit inspection of areas behind the splice plates.

3. Corrective Action

A visual inspection utilizing a borescope was conducted in all areas behind splice plates with any potential for gaps. Using this method, nine gaps were identified behind splice plates. The arc gouging and cleaning operation revealed two gaps within the segments between splice plates. The inspection holes drilled into acceptable splice plate areas created 9 gaps, accounting for a total of 20 additional "gaps".

Due to limited accessibility of gaps located behind splice plates, modifications were made to the techniques used in installing BISCO NS-1. PED 215-M-A046 was issued, to first qualify the modified fill technique by prototype testing and then to fill the splice plate voids. All drill holes were filled with NS-1. The two additional gaps found between splice plates were filled using the methods employed to fill the original forty gaps.

III. EXTERNAL SSW WELD DEFECTS

A. Description

Reference (c) submitted a final summary of weld defects on the external surface of the SSW. As a result of this investigation, certain tabulations submitted in the report entitled "Engineering Evaluation of the WNP-2 Sacrificial Shield Wall", require revision.

B. Background

Tables III.C.7 and III.D.5 were originally prepared and submitted based on investigations of 1170 welds. The revised tables are based on 1700 external SSW welds. These revised tables replace the respective tables supplied in Reference (a).

C. Corrective Action

Defects are currently being repaired per PED 215-W-A368.

D. Discussion

All accessible welds on the external surface of the SSW have been inspected. Repairs required to bring the welds into compliance with AWS D 1.1 will be completed for all deficient welds, except those covered by the hardship exemption (Reference d). Any additional defects identified during or after this repair effort will be dispositioned, utilizing appropriate site procedures.

IV. REFERENCES

(a) G02-80-168, August 1, 1980, DL Renberger (Supply System) to RH Engelken (NRC), "Sacrificial Shield Wall (SSW) Corrective Action Plan"

(b) G02-80-183, August 20, 1980, DL Renberger (Supply System) to RH Engelken (NRC), "Sacrificial Shield Wall (SSW) Corrective Action Plan Supplement Number 1"

(c) G02-81-254, August 27, 1981, RG Matlock (Supply System) to RH Engelken (NRC), "Evaluation of Sacrificial Shield Wall External Weld Defects"

(d) GI2-81-45, March 25, 1981, RL Tedesco (NRC) to RL Ferguson (Supply System), "Evaluation of the Hardship Request Exemptions for Weld Defects in the WNP-2 Sacrificial Shield Wall"

TABLE III.C.7

BURNS AND ROE VISUAL INSPECTION DATA

Total Welds Evaluated	1700	
Total Acceptable Welds	1408	
Total Inaccessible Welds	53	
No. Exceptions by Weld	239	(1)
No. Fillet Welds with Exceptions	196	
No. Groove Welds with Exceptions	43	

Defect Breakdown

Defect Type	No. Recorded (c)	
Cracks	None	
Undercut	32	
Porosity	14	
Crater Fill, Cavity	74	
Underfill	4	
Overlap	9	(1)
Convex Fillet	5	
Excess Reinforcement	38	
LOF (a)	6	
Arc Strikes, Slag, Temporary Attachments	17	
Undersize Fillet[b], Unequal Leg, Weld Profile	101	
Linear indications, file, knife marks	3	

(a) These incomplete fusion defects are less than 1 inch in length and may in actuality be acute fillet re-entrant angles or indications other than lack of fusion between the base metal and weld.

(b) Percentage of fillet weld length affected varies.

(c) Multiple defects exist in certain welds. (1)

TABLE III.D.5

SUMMARY OF WORST CASE DEFECTS IN WELDMENTS

Region	Defect Type	Largest Reported Length x Width x Depth (a) Inches	Potential Failure Mode
Parent Plate	Arc Strike	3/8 x 3/8 x 1/32	F
	Lamellar Tears	None	P, (F)
Heat Affected Zone	H-cracking	None	F, (P)
	Liquation Cracks	None	F
Fusion Boundary	Lack of Fusion	8 x 0 x 0 (b) 39 x 0 x 0 (ESW) (f)	P, F
Weld Metal	Crack	13 x 0 x 1/8 (c)	P, F
	Undercut	8 x 0 x 3/32 24 x 0 x 0 (ESW)	P, (F) (1)
	Undersized Fillet	26 x 0 x 1/4 (d)	P
	Overlap	3 x 0 x 1/8	F
	Underfill	4 x 0 x 1/8 24 x 0 x 0 (ESW)	P
	Excess Reinforcement	72 x 0 x 1/4	--
	Porosity	8 x 0 (boundary area) 19 x 1 (boundary area, ESW)	(P)
	Crater Fill	1 x 1/2 x 3/8	(P)
	Incomplete Penetration	48 x 1/8 (e) x 5/32 (subsurface)	P, F
	Slag Inclusions	1½ x 0 x 0	F

F = Fracture, P = Plastic collapse, ( ) - signifies lower probability

(a) Depth in the thru-thickness direction.
(b) 0 - signifies dimension unknown.
(c) One 2½ inch long crack extended thorugh the 1¼ inch thick electroslag weld. No other such occurrences have been identified in the documentaiton.
(d) Worst case based upon percentage reduction in are from original weld size
(e) Estimated from fit-up requirement.
(f) Available information from industry sources indicates a maximum depth for

AZ. 135-150°

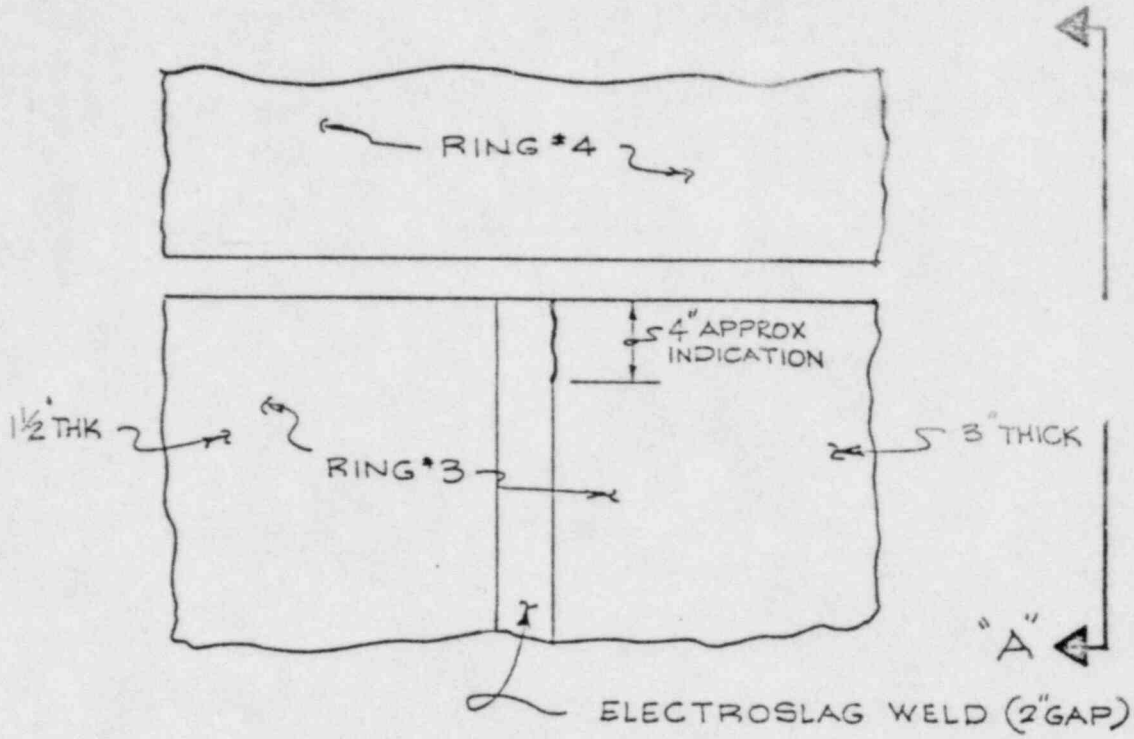

PART ELEVATION
N.T.S.

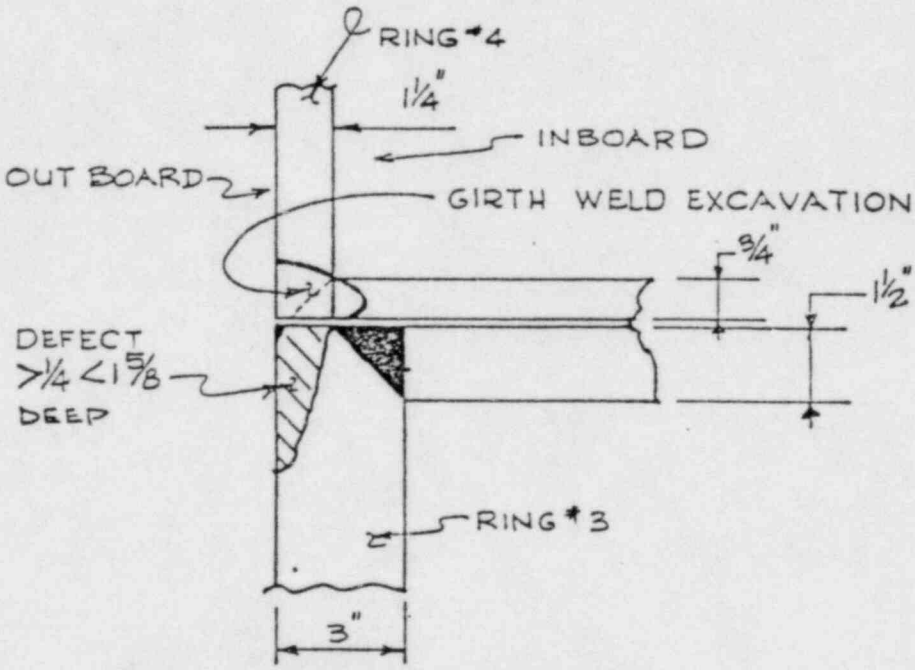

SECT. "A-A"
N.T.S.

FIGURE 1 LINEAR INDICATION IN RING 3 AT 135 -150°AZ

(AZ 90 -105°)

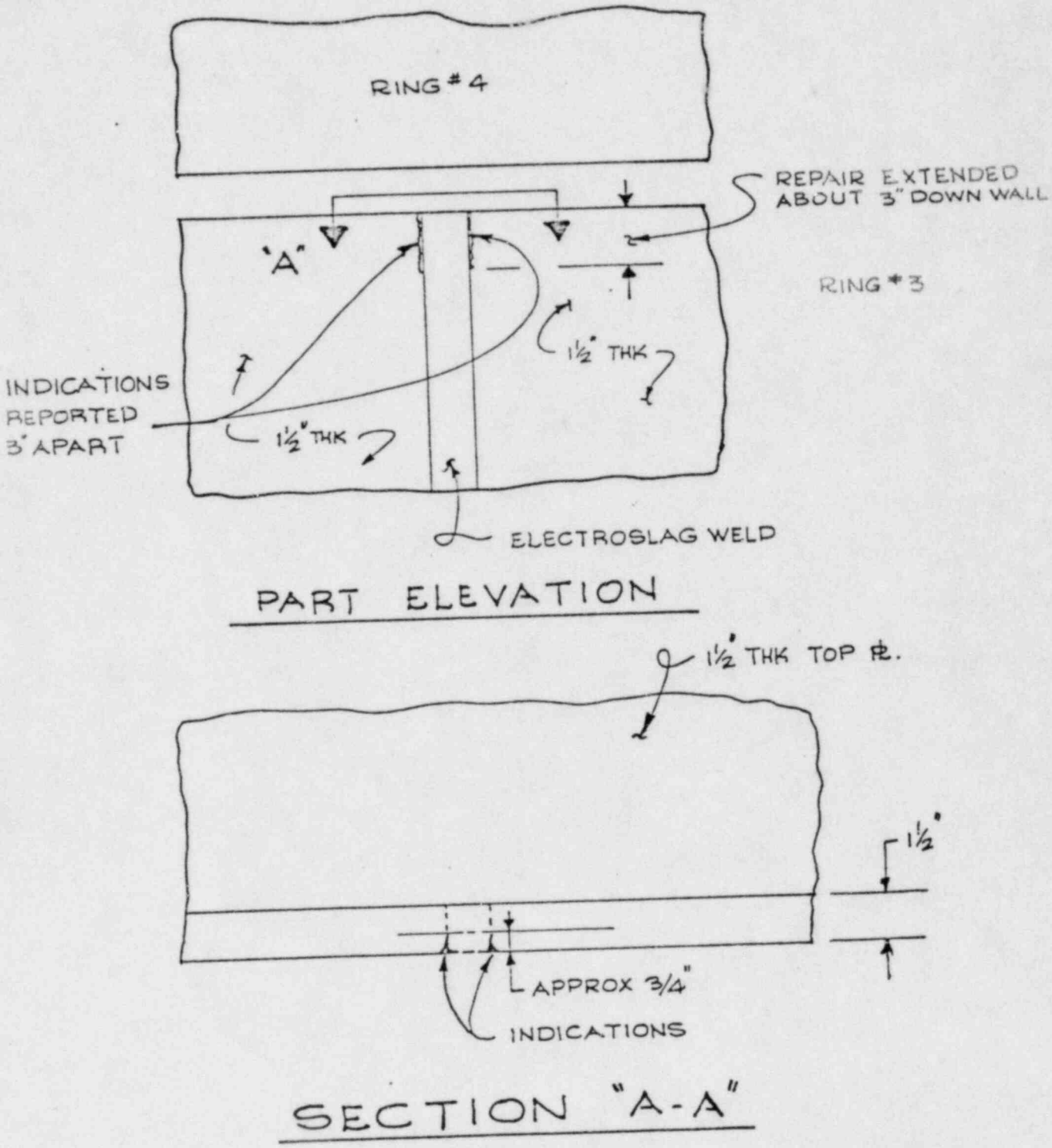

FIGURE 2 LINEAR INDICATIONS IN RING 3 AT 90 -105°AZ

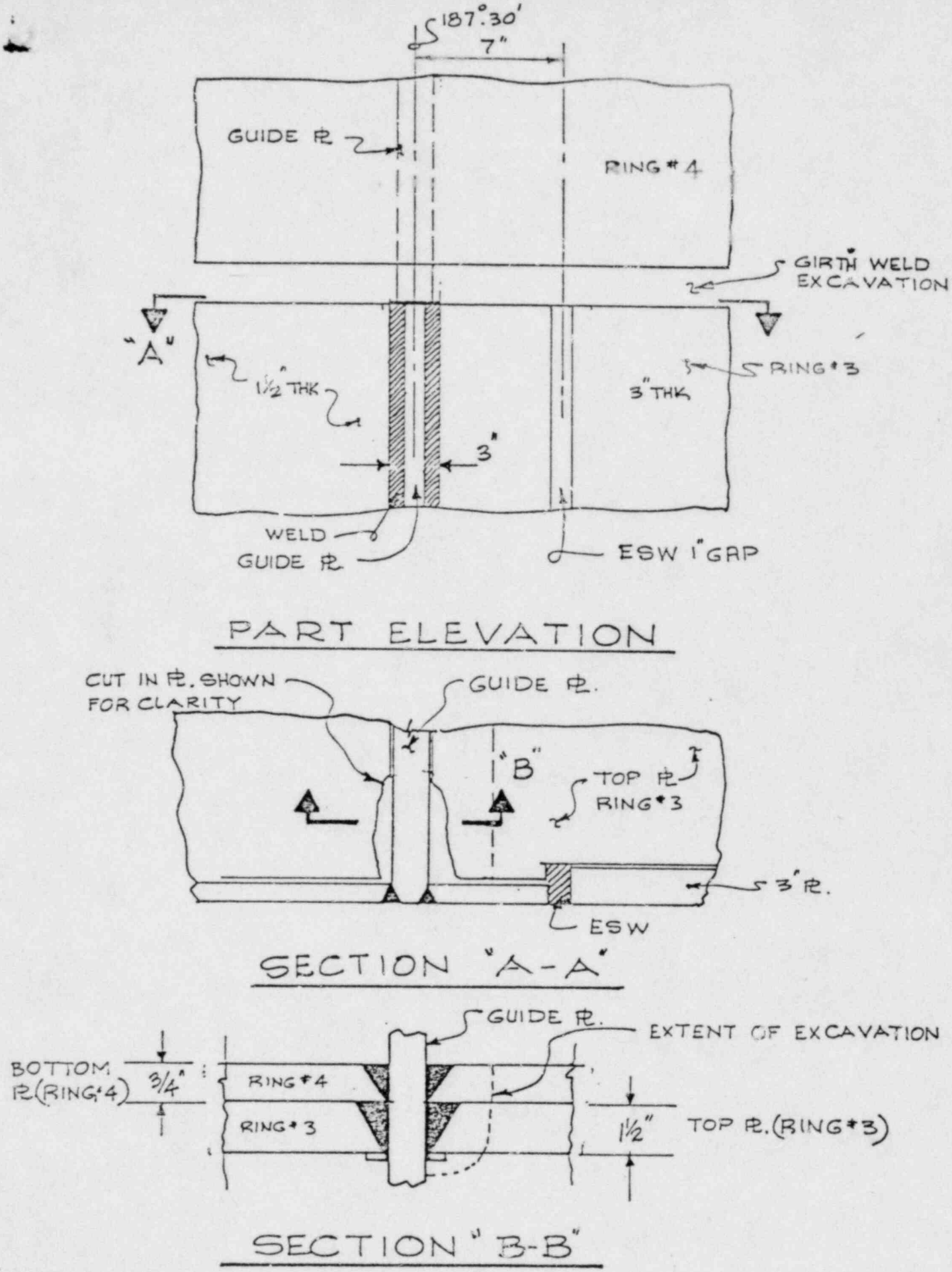

FIGURE 3 GUIDE PLATE WELDS AT AZ 187°-30' (SIMILAR AT 67° AND 300-315°)

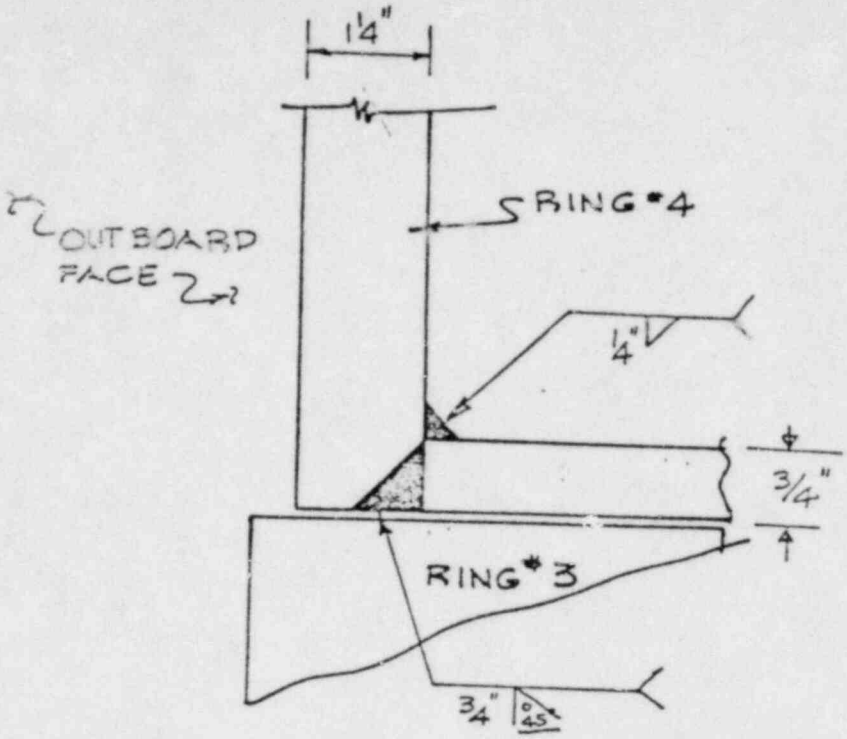

A JOINT REQ'D BY LECKENBY DRAWING #66

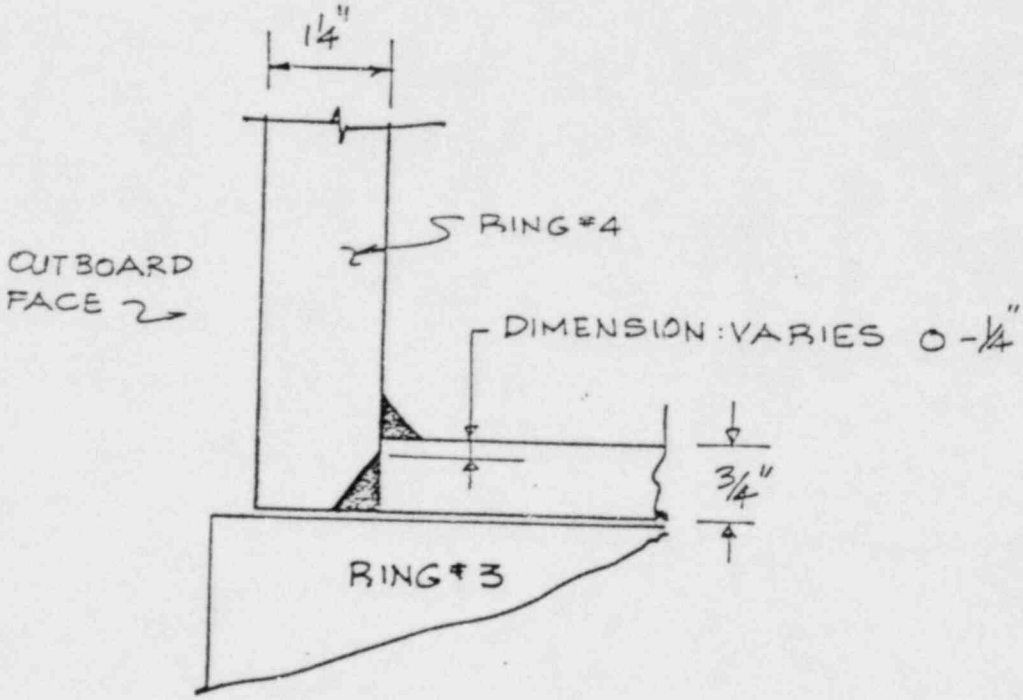

B AS BUILT CONDITION AT AZ. 90-105°, 0-15°, AND 180-195°.

FIGURE 4 LACK OF PENETRATION AT AZ 90-105, 0-15, AND 180-195°